SUBARU

LEGACY

2005 Model Year
PDF Service Manual

GENERAL INFORMATION SECTION (Pub.No.G2350BE1)

ENGINE SECTION 1 (Pub.No.G2350BE2)

ENGINE SECTION 2 (Pub.No.G2350BE3)

TRANSMISSION SECTION (Pub.No.G2350BE4)

CHASSIS SECTION (Pub.No.G2350BE5)

BODY SECTION (Pub.No.G2350BE6)

WIRING SYSTEM SECTION (Pub.No.G2350BE7)

GENERAL INFORMATION SECTION

FOREWORD	FW
HOW TO USE THIS MANUALS	HU
SPECIFICATIONS	SPC
PRECAUTION	PC
NOTE	NT
IDENTIFICATION	ID
RECOMMENDED MATERIALS	RM
PRE-DELIVERY INSPECTION	PI
PERIODIC MAINTENANCE SERVICES	PM

This service manual has been prepared to provide SUBARU service personnel with the necessary information and data for the correct maintenance and repair of SUBARU vehicles.
This manual includes the procedures for maintenance, disassembling, reassembling, inspection and adjustment of components and diagnostics for guidance of experienced mechanics.
Please peruse and utilize this manual fully to ensure complete repair work for satisfying our customers by keeping their vehicle in optimum condition. When replacement of parts during repair work is needed, be sure to use SUBARU genuine parts.

All information, illustration and specifications contained in this manual are based on the latest product information available at the time of publication approval.

FUJI HEAVY INDUSTRIES LTD. G2350BE1

FOREWORD

FW

Page
1. Foreword 2

1. Foreword

A: FOREWORD

These manuals are used when performing maintenance, repair, or diagnosis of the Subaru LEGACY.

Applied model:
BL*****, BP***** from 2005MY

The manuals contain the latest information at the time of publication. Changes in specifications, methods, etc. may be made without notice.

HOW TO USE THIS MANUALS

HU

Page
1. How to Use This Manuals 2

1. How to Use This Manuals

A: HOW TO USE THIS MANUALS

1. STRUCTURE

Each section consists of SCT that are broken down into SC that are divided into sections for each component. The specification, maintenance and other information for the components are included, and the diagnostic information has also been added where necessary.

2. CONTENTS

The first page has an index with tabs.

3. COMPONENT

Illustrations are provided for each component. The information necessary for repair work (tightening torque, grease up points, etc.) is described on these illustrations. Information is described using symbol.
To order parts, refer to parts catalogue.

Example:

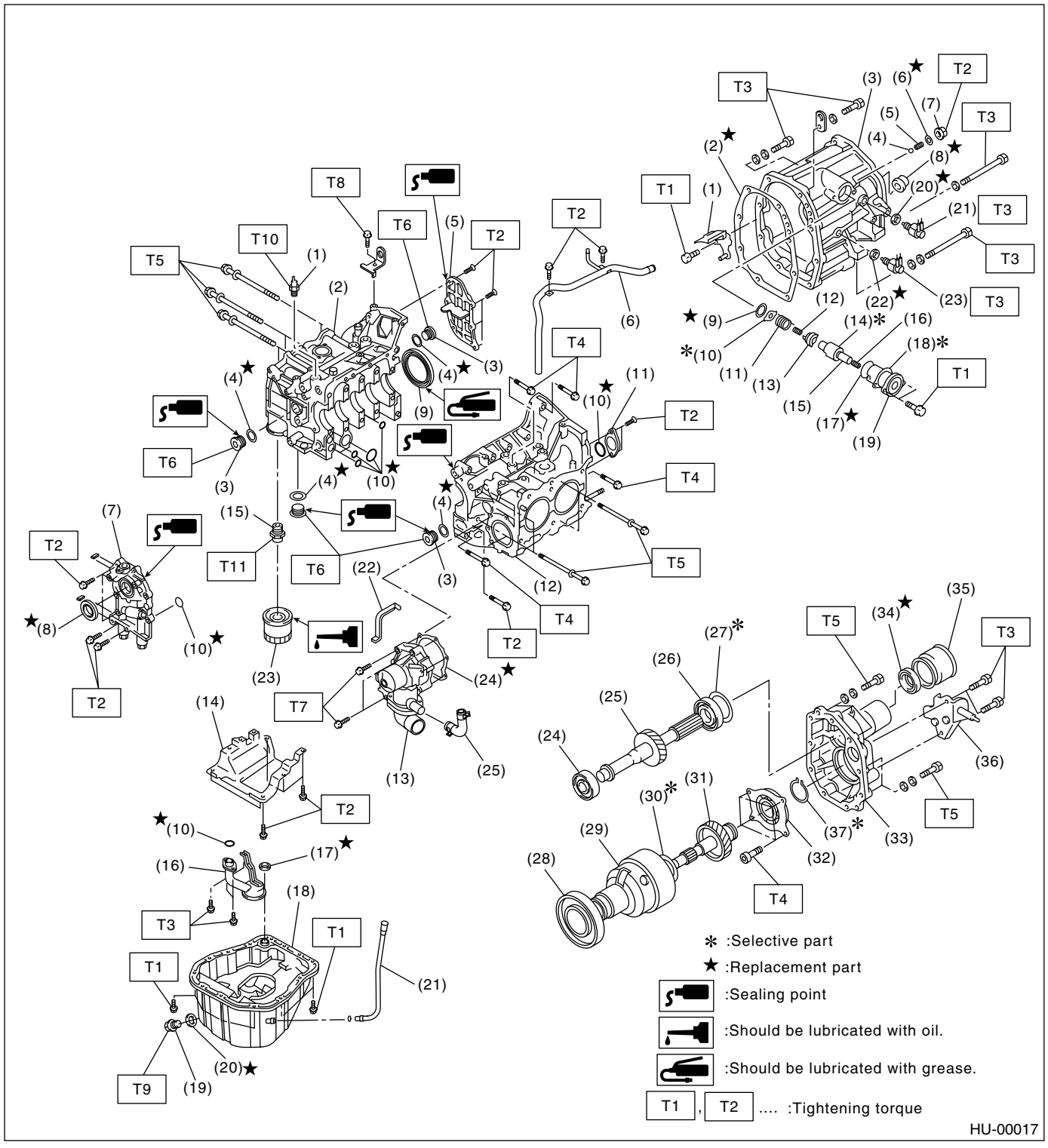

4. SPECIFICATION

If necessary, specifications are also included.

5. INSPECTION

Inspections to be carried out before and after maintenance are included.

6. MAINTENANCE

- Maintenance instructions for serviceable parts describe work area and detailed step with illustration. It also describes the use of special tool, tightening torque, caution for each procedure.
- If many serviceable parts are included in one service procedure, appropriate reference is provided for each parts.

Example:

15.Main Shaft Assembly for Single-Range (A)

A: REMOVAL (B)

1) Remove the manual transmission assembly from vehicie. <Ref. to MT-33, REMOVAL, Manual Transmission Assembly.> (C)

---

11) Tighten the lock nuts to the specified torque using ST1 and ST2.

NOTE: (D)
Secure the lock nuts in two Places affer tightening.

ST1 498937000 TRANSMISSION HOLDER
ST2 499987003 (E) SOCKET WRENCH (35) (F)

Tightening torque:
118 N·m (12.0 kgf-m, 86.8 ft-lb) (G)

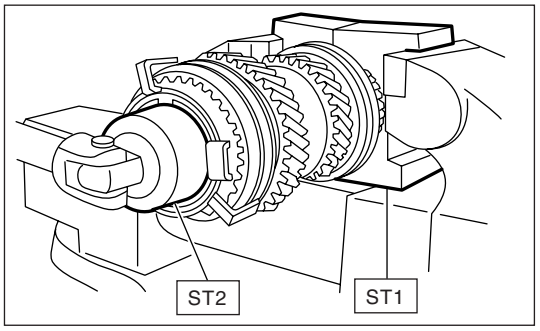

(H)

HU-00020

(A) Component
(B) Process
(C) Reference
(D) Cautions
(E) Tool number of special tool
(F) Name of special tool
(G) Tightening torque
(H) Illustration

7. DIAGNOSIS

Tables showing a step-by-step process make it easy to conduct diagnosis.

8. SI UNITS

Measurements in these manuals are according to the SI units. Metric and yard/pound measurements are also included.

Example:

Tightening torque:
44 N·m (4.5 kgf-m, 33 ft-lb)

Item	SI units	Conventional unit	Remarks
Force	N (Newton)	kgf	1 kgf = 9.80655 N
Mass (Weight)	kg, g	kg, g	
Capacity	ℓ, mℓ or cm^3	ℓ or cc	1 cc = 1 cm^3 = 1 mℓ
Torque	N·m	kgf-m, kgf-cm	1 kgf-m = 9.80655 N·m
Rotating speed	rpm	rpm	
Pressure	kPa (kilopascal)	kgf/cm^2	1 kgf/cm^2 = 98.0655 kPa
		mmHg	1 mmHg = 0.133322 kPa
Power	W	PS	1 PS = 0.735499 kW
Calorie	W·h	cal	1 kcal = 1.16279 W·h
Fuel consumption rate	g/kw·h	g/PS·h	1 g/PS·h=1.3596 g/kW·h

The figure used in these manuals are described in the SI units and conventional units are described in ( ).

9. EXPLANATION OF TERMINOLOGY

- **List**

AAI	:	Air Assist Injection
A/B	:	Airbag
ABS	:	Antilock Brake System
A/C	:	Air Conditioner
A/F	:	Air Fuel Ratio
ALT	:	Generator
ASSY	:	Assembly
AT	:	Automatic Transmission
ATF	:	Automatic Transmission Fluid
BATT	:	Battery
CD-R/RW	:	CD Recordable/Rewritable
CPU	:	Central Processing Unit
DOHC	:	Double Overhead Camshaft
DVD	:	Digital Versatile Disc
ECM	:	Engine Control Module (ECM)
EGR	:	Exhaust Gas Recirculation
ELR	:	Emergency Locking Retractor
EX	:	Exhaust
F/B	:	Fuse & Joint Box
FL	:	Fusible Link
Ft	:	Full-time AWD
FWD	:	Front Wheel Drive
GPS	:	Global Positioning System
H/U	:	Hydraulic Unit
IG	:	Ignition
INT	:	Intermittent
ISC	:	Idle Speed Control
LH	:	LH (Left Hand)
LSD	:	Limited Slip Differential
M/B	:	Main Fuse & Relay Box
MD	:	Mini Disc
MPI	:	Multi Point Injection
MP-T	:	Multi-Plate Transfer
MT	:	Manual Transmission
Non-turbo	:	Natural Aspiration
NC	:	Normal Close (Relay)
NO	:	Normal Open (Relay)
OP	:	Option Parts
P/S	:	Power Steering
P/W	:	Power Window
PCD	:	Pitch Circle Diameter
PCV	:	Positive Crankcase Ventilation
RH	:	RH (Right Hand)
Rr	:	Rear
SOHC	:	Single Overhead Camshaft
SRS	:	Supplemental Restraint System
SSM	:	Subaru Select Monitor
ST	:	Special Tool
SW	:	Switch
TCS	:	Traction Control System
TGV	:	Tumble Generated Valve
T/M	:	Transmission
ViS-C	:	Viscous Coupling
VSV	:	Vacuum Switching Valve
VTD	:	Variable Torque Distribution
W/H	:	Wiring Harness
Pr	:	Primary
2ndr	:	Secondary

SPECIFICATIONS

SPC

Page

1. LEGACY....2
2. OUTBACK....10

1. LEGACY

A: DIMENSION

1. SEDAN MODEL

Model			2.5 L SOHC	2.5 L DOHC turbo
Overall length		mm (in)	4,730 (186.2)	
Overall width		mm (in)	1,730 (68.1)	
Overall height (at C.W.)		mm (in)	1,425 (56.1)	
Compartment	Length	mm (in)	1,900 (74.8)	
	Width	mm (in)	1,445 (56.9)	
	Height	mm (in)	1,165 (45.9), 1,100 (43.3)★1	
Wheelbase		mm (in)	2,670 (105.1)	
Tread	Front	mm (in)	1,495 (58.9)	
	Rear	mm (in)	1,485 (58.5)	
Minimum road clearance		mm (in)	150 (5.9)	

★1: With sunroof

2. WAGON MODEL

Model			2.5 L SOHC	2.5 L DOHC turbo
Overall length		mm (in)	4,795 (188.8)	
Overall width		mm (in)	1,730 (68.1)	
Overall height (at C.W.)		mm (in)	1,475 (58.1)	
Compartment	Length	mm (in)	1,840 (72.4)	
	Width	mm (in)	1,445 (56.9)	
	Height	mm (in)	1,190 (46.9), 1,145 (45.1)★1	
Wheelbase		mm (in)	2,670 (105.1)	
Tread	Front	mm (in)	1,495 (58.9)	
	Rear	mm (in)	1,485 (58.5)	
Minimum road clearance		mm (in)	150 (5.9)	155 (6.1)

★1: With sunroof

B: ENGINE

Model		2.5 L SOHC	2.5 L DOHC turbo
Engine type		Horizontally opposed, liquid cooled, 4-cylinder, 4-stroke gasoline engine	
Valve arrangement		Overhead camshaft	
Bore × Stroke	mm (in)	99.5 × 79.0 (3.917 × 3.110)	
Displacement	cm^3 (cu in)	2,457 (149.9)	
Compression ratio		10.0	8.2
Ignition order		1 — 3 — 2 — 4	
Idle speed at Park or Neutral position	rpm	650 (MT) 700 (AT)	750
Maximum output	kW (HP)/rpm	124 (166)/5,600 (U5 model) 127 (170)/5,600 (Except for U5 model)	186 (250)/6,000
Maximum torque	N·m (kgf-m, ft-lb)/rpm	225 (22.9, 166)/3,600 (U5 model) 225 (22.9, 166)/4,000 (Except for U5 model)	339 (34.5, 250)/3,600

C: ELECTRICAL

Model			2.5 L SOHC	2.5 L DOHC turbo
Ignition timing (at idling) BTDC			13°	MT = 12° AT = 17°
Spark plug	Type and manufacturer		CHAMPION: RC10YC4 NGK: FR5AP-11	NGK: ILFR6B
Generator			12V — 110A	
Battery	Type and capacity (5HR)	MT	12V — 48AH (55D23L)	
		AT	12V — 52AH (75D23L)	

D: TRANSMISSION

Model			2.5 L SOHC		2.5 L DOHC turbo	
Transmission type			5MT	4AT	5MT	5AT
Clutch type			DSPD	TCC	DSPD	TCC
Gear ratio		1st	3.454	2.785	3.166	3.540
		2nd	2.062	1.545	1.882	2.264
		3rd	1.448	1.000	1.296	1.471
		4th	1.088	0.694	0.972	1.000
		5th	0.780	—	0.738	0.834
		Rev.	3.333	2.272	3.333	2.370
Reduction gear (Front)	1st reduction	Type of gear	—	Helical	—	Helical
		Gear ratio	—	1.000	—	1.000
	Final reduction	Type of gear	Hypoid	Hypoid	Hypoid	Hypoid
		Gear ratio	3.900	4.111	4.111	3.272
Reduction gear (Rear)	Transfer reduction	Type of gear	Helical	—	Helical	—
		Gear ratio	1.000	—	1.000	—
	Final reduction	Type of gear	Hypoid	Hypoid	Hypoid	Hypoid
		Gear ratio	3.900	4.111	4.111	3.272

5MT: 5-forward speeds with synchromesh and 1-reverse
4AT: Electronically controlled fully-automatic, 4-forward speeds and 1-reverse
5AT: Electronically controlled fully-automatic, 5-forward speeds and 1-reverse
DSPD: Dry Single Plate Diaphragm
TCC: Torque Converter Clutch

E: STEERING

Model			2.5 L SOHC	2.5 L DOHC turbo
Type			Rack and Pinion	
Turns, lock to lock			3.2	2.8
Minimum turning diameter	m (ft)	Center of tire width to center of tire width	10.8 (35.4)	
		Wall to wall	11.6 (38.1)	

F: SUSPENSION

Front	Macpherson strut type suspension
Rear	Multi-link type suspension

G: BRAKE

Model	2.5 L SOHC	2.5 L DOHC turbo
Service brake system	Dual circuit hydraulic with vacuum suspended power unit	
Front	Ventilated disc brake	
Rear	Disc brake	Ventilated disc brake
Parking Brake	Mechanical on rear brakes	

H: TIRE

Model	2.5 L SOHC	2.5 L DOHC turbo
Wheel size	16 × 6 $^{1}/_{2}$JJ	17 × 7JJ
Tire size	P205/55 R16 89H	215/45 ZR17
Type	Steel belted radial, Tubeless	

I: CAPACITY

Model			2.5 L SOHC		2.5 L DOHC turbo	
			5MT	4AT	5MT	5AT
Fuel tank		ℓ (US gal, Imp gal)	64 (16.9, 14.1)			
Engine oil	Capacity (at overhaul)	ℓ (US qt, Imp qt)	4.4 (4.7, 3.9)		4.9 (5.2, 4.3)	
	Filling amount of engine oil ℓ (US qt, Imp qt)	At replacement of engine oil and oil filter	4.2 (4.4, 3.7)		4.3 (4.5, 3.8)	
		At replacement of engine oil only	4.0 (4.2, 3.5)			
Transmission gear oil		ℓ (US qt, Imp qt)	3.5 (3.7, 3.1)	—	3.5 (3.7, 3.1)	—
ATF		ℓ (US qt, Imp qt)	—	9.5 (10.0, 8.4)	—	9.8 (10.4, 8.6)
Front differential gear oil		ℓ (US qt, Imp qt)	—	1.2 (1.3, 1.1)	—	1.4 (1.5, 1.2)
Rear differential gear oil		ℓ (US qt, Imp qt)	0.8 (0.8, 0.7)			
Power steering fluid		ℓ (US qt, Imp qt)	0.7 (0.7, 0.6)			
Engine coolant		ℓ (US qt, Imp qt)	6.4 (6.8, 5.6)	6.3 (6.7, 5.5)	7.3 (7.7, 6.4)	7.2 (7.6, 6.3)

J: WEIGHT

1. US MODEL

Model			Sedan							
			2.5 L SOHC							
			2.5 i				2.5 i Limited			
			5MT		4AT		5MT		4AT	
Curb weight (C.W.)	Front	kg (lb)	798 (1,760)	806 (1,780)	818 (1,805)	826 (1,825)	813 (1,795)	821 (1,810)	833 (1,840)	841 (1,855)
	Rear	kg (lb)	652 (1,440)	660 (1,455)	652 (1,440)	660 (1,455)	667 (1,470)	675 (1,490)	667 (1,470)	675 (1,490)
	Total	kg (lb)	1,450 (3,200)	1,466 (3,235)	1,470 (3,240)	1,486 (3,280)	1,480 (3,265)	1,496 (3,300)	1,500 (3,310)	1,516 (3,345)
Gross axle weight ratio (G.A.W.R)	Front	kg (lb)	1,040 (2,295)	1,040 (2,295)	1,040 (2,295)	1,040 (2,295)	1,040 (2,295)	1,040 (2,295)	1,040 (2,295)	1,040 (2,295)
	Rear	kg (lb)	1,060 (2,335)	1,060 (2,335)	1,060 (2,335)	1,060 (2,335)	1,060 (2,335)	1,060 (2,335)	1,060 (2,335)	1,060 (2,335)
Gross vehicle weight (G.V.W.)		kg (lb)	1,960 (4,325)	1,960 (4,325)	1,960 (4,325)	1,960 (4,325)	1,960 (4,325)	1,960 (4,325)	1,960 (4,325)	1,960 (4,325)
Option	Vehicle Dynamics Control		—	—	—	—	—	—	—	—
	Power package		—	—	—	—	❍	❍	❍	❍
	Side airbag		❍	❍	❍	❍	❍	❍	❍	❍
	Curtain airbag		❍	❍	❍	❍	❍	❍	❍	❍
	Sunroof		—	—	—	—	❍	❍	❍	❍
	17-in Alminum wheel		—	❍	—	❍	—	❍	—	❍

Model			Sedan			
			2.5 L DOHC turbo			
			2.5 GT		2.5 GT Limited	
			5MT	5AT	5MT	5AT
Curb weight (C.W.)	Front	kg (lb)	828 (1,830)	858 (1,895)	843 (1,860)	873 (1,925)
	Rear	kg (lb)	667 (1,470)	667 (1,470)	682 (1,505)	682 (1,505)
	Total	kg (lb)	1,495 (3,300)	1,525 (3,365)	1,525 (3,365)	1,555 (3,435)
Gross axle weight ratio (G.A.W.R)	Front	kg (lb)	1,040 (2,295)	1,040 (2,295)	1,040 (2,295)	1,040 (2,295)
	Rear	kg (lb)	1,060 (2,335)	1,060 (2,335)	1,060 (2,335)	1,060 (2,335)
Gross vehicle weight (G.V.W.)		kg (lb)	2,010 (4,435)	2,010 (4,435)	2,010 (4,435)	2,010 (4,435)
Option	Vehicle Dynamics Control		—	—	—	—
	Power package		—	—	❍	❍
	Side airbag		❍	❍	❍	❍
	Curtain airbag		❍	❍	❍	❍
	Sunroof		—	—	❍	❍
	17-in Alminum wheel		—	—	—	—

Model			Wagon							
			2.5 L SOHC							
			2.5 i				2.5 i Limited			
			5MT		4AT		5MT		4AT	
Curb weight (C.W.)	Front	kg (lb)	798 (1,760)	806 (1,780)	818 (1,805)	826 (1,825)	813 (1,795)	820 (1,810)	833 (1,840)	841 (1,855)
	Rear	kg (lb)	677 (1,495)	685 (1,510)	677 (1,495)	685 (1,510)	697 (1,540)	705 (1,560)	697 (1,540)	705 (1,560)
	Total	kg (lb)	1,475 (3,255)	1,491 (3,290)	1,495 (3,300)	1,511 (3,335)	1,510 (3,335)	1,525 (3,360)	1,530 (3,380)	1,546 (3,415)
Gross axle weight ratio (G.A.W.R)	Front	kg (lb)	1,040 (2,295)	1,040 (2,295)	1,040 (2,295)	1,040 (2,295)	1,040 (2,295)	1,040 (2,295)	1,040 (2,295)	1,040 (2,295)
	Rear	kg (lb)	1,060 (2,335)	1,060 (2,335)	1,060 (2,335)	1,060 (2,335)	1,060 (2,335)	1,060 (2,335)	1,060 (2,335)	1,060 (2,335)
Gross vehicle weight (G.V.W.)		kg (lb)	1,960 (4,325)	1,960 (4,325)	1,960 (4,325)	1,960 (4,325)	2,010 (4,435)	2,010 (4,435)	2,010 (4,435)	2,010 (4,435)
Option	Vehicle Dynamics Control		—	—	—	—	—	—	—	—
	Power package		—	—	—	—	❍	❍	❍	❍
	Side airbag		❍	❍	❍	❍	❍	❍	❍	❍
	Curtain airbag		❍	❍	❍	❍	❍	❍	❍	❍
	Sunroof		—	—	—	—	❍	❍	❍	❍
	17-in Alminum wheel		—	❍	—	❍	—	❍	—	❍

Model			Wagon			
			2.5 L DOHC turbo			
			2.5 GT		2.5 GT Limited	
			5MT	5AT	5MT	5AT
Curb weight (C.W.)	Front	kg (lb)	828 (1,830)	858 (1,895)	843 (1,860)	873 (1,925)
	Rear	kg (lb)	692 (1,525)	692 (1,525)	712 (1,575)	712 (1,575)
	Total	kg (lb)	1,520 (3,355)	1,550 (3,420)	1,555 (3,435)	1,585 (3,500)
Gross axle weight ratio (G.A.W.R)	Front	kg (lb)	1,040 (2,295)	1,040 (2,295)	1,040 (2,295)	1,040 (2,295)
	Rear	kg (lb)	1,060 (2,335)	1,060 (2,335)	1,060 (2,335)	1,060 (2,335)
Gross vehicle weight (G.V.W.)		kg (lb)	2,015 (4,545)	2,015 (4,545)	2,015 (4,545)	2,015 (4,545)
Option	Vehicle Dynamics Control		—	—	—	—
	Power package		—	—	❍	❍
	Side airbag		❍	❍	❍	❍
	Curtain airbag		❍	❍	❍	❍
	Sunroof		—	—	❍	❍
	17-in Alminum wheel		—	—	—	—

2. CANADA MODEL

Model			Sedan							
			2.5 L SOHC							
			2.5 i				2.5 i Limited			
			5MT		4AT		5MT		4AT	
Curb weight (C.W.)	Front	kg (lb)	798 (1,760)	806 (1,780)	818 (1,805)	826 (1,825)	813 (1,795)	821 (1,810)	833 (1,840)	841 (1,855)
	Rear	kg (lb)	652 (1,440)	660 (1,455)	652 (1,440)	660 (1,455)	667 (1,470)	675 (1,490)	667 (1,470)	675 (1,490)
	Total	kg (lb)	1,450 (3,200)	1,466 (3,235)	1,470 (3,245)	1,486 (3,280)	1,480 (3,265)	1,496 (3,300)	1,500 (3,310)	1,516 (3,345)
Gross axle weight ratio (G.A.W.R)	Front	kg (lb)	1,040 (2,295)	1,040 (2,295)	1,040 (2,295)	1,040 (2,295)	1,040 (2,295)	1,040 (2,295)	1,040 (2,295)	1,040 (2,295)
	Rear	kg (lb)	1,055 (2,330)	1,055 (2,330)	1,055 (2,330)	1,055 (2,330)	1,055 (2,330)	1,055 (2,330)	1,055 (2,330)	1,055 (2,330)
Gross vehicle weight (G.V.W.)		kg (lb)	1,960 (4,325)	1,960 (4,325)	1,960 (4,325)	1,960 (4,325)	1,960 (4,325)	1,960 (4,325)	1,960 (4,325)	1,960 (4,325)
Option	Vehicle Dynamics Control		—	—	—	—	—	—	—	—
	Power package		—	—	—	—	❍	❍	❍	❍
	Side airbag		❍	❍	❍	❍	❍	❍	❍	❍
	Curtain airbag		❍	❍	❍	❍	❍	❍	❍	❍
	Sunroof		—	—	—	—	❍	❍	❍	❍
	17-in Alminum wheel		—	❍	—	❍	—	❍	—	❍

Model			Sedan			
			2.5 L DOHC turbo			
			2.5 GT		2.5 GT Limited	
			5MT	5AT	5MT	5AT
Curb weight (C.W.)	Front	kg (lb)	828 (1,830)	858 (1,895)	843 (1,860)	873 (1,925)
	Rear	kg (lb)	667 (1,470)	667 (1,470)	682 (1,505)	682 (1,505)
	Total	kg (lb)	1,495 (3,300)	1,525 (3,365)	1,525 (3,365)	1,555 (3,435)
Gross axle weight ratio (G.A.W.R)	Front	kg (lb)	1,040 (2,295)	1,040 (2,295)	1,040 (2,295)	1,040 (2,295)
	Rear	kg (lb)	1,055 (2,330)	1,055 (2,330)	1,055 (2,330)	1,055 (2,330)
Gross vehicle weight (G.V.W.)		kg (lb)	2,010 (4,435)	2,010 (4,435)	2,010 (4,435)	2,010 (4,435)
Option	Vehicle Dynamics Control		—	—	—	—
	Power package		—	—	❍	❍
	Side airbag		❍	❍	❍	❍
	Curtain airbag		❍	❍	❍	❍
	Sunroof		—	—	❍	❍
	17-in Alminum wheel		—	—	—	—

Model			Wagon							
			2.5 L SOHC							
			2.5 i				2.5 i Limited			
			5MT		4AT		5MT		4AT	
Curb weight (C.W.)	Front	kg (lb)	798 (1,760)	806 (1,780)	818 (1,805)	826 (1,825)	813 (1,795)	820 (1,810)	833 (1,840)	841 (1,855)
	Rear	kg (lb)	677 (1,495)	685 (1,510)	677 (1,495)	685 (1,510)	697 (1,540)	705 (1,560)	697 (1,540)	705 (1,560)
	Total	kg (lb)	1,475 (3,255)	1,491 (3,290)	1,495 (3,300)	1,511 (3,335)	1,510 (3,335)	1,525 (3,360)	1,530 (3,380)	1,546 (3,415)
Gross axle weight ratio (G.A.W.R)	Front	kg (lb)	1,040 (2,295)	1,040 (2,295)	1,040 (2,295)	1,040 (2,295)	1,040 (2,295)	1,040 (2,295)	1,040 (2,295)	1,040 (2,295)
	Rear	kg (lb)	1,055 (2,330)	1,055 (2,330)	1,055 (2,330)	1,055 (2,330)	1,055 (2,330)	1,055 (2,330)	1,055 (2,330)	1,055 (2,330)
Gross vehicle weight (G.V.W.)		kg (lb)	1,960 (4,325)	1,960 (4,325)	1,960 (4,325)	1,960 (4,325)	2,010 (4,435)	2,010 (4,435)	2,010 (4,435)	2,010 (4,435)
Option	Vehicle Dynamics Control		—	—	—	—	—	—	—	—
	Power package		—	—	—	—	❍	❍	❍	❍
	Side airbag		❍	❍	❍	❍	❍	❍	❍	❍
	Curtain airbag		❍	❍	❍	❍	❍	❍	❍	❍
	Sunroof		—	—	—	—	❍	❍	❍	❍
	17-in Alminum wheel		—	❍	—	❍	—	❍	—	❍

Model			Wagon			
			2.5 L DOHC turbo			
			2.5 GT		2.5 GT Limited	
			5MT	5AT	5MT	5AT
Curb weight (C.W.)	Front	kg (lb)	828 (1,830)	858 (1,890)	843 (1,860)	873 (1,925)
	Rear	kg (lb)	692 (1,525)	692 (1,525)	712 (1,575)	712 (1,575)
	Total	kg (lb)	1,520 (3,360)	1,550 (3,420)	1,555 (3,435)	1,585 (3,500)
Gross axle weight ratio (G.A.W.R)	Front	kg (lb)	1,040 (2,295)	1,040 (2,295)	1,040 (2,295)	1,040 (2,295)
	Rear	kg (lb)	1,055 (2,330)	1,055 (2,330)	1,055 (2,330)	1,055 (2,330)
Gross vehicle weight (G.V.W.)		kg (lb)	2,060 (4,545)	2,060 (4,545)	2,060 (4,545)	2,060 (4,545)
Option	Vehicle Dynamics Control		—	—	—	—
	Power package		—	—	❍	❍
	Side airbag		❍	❍	❍	❍
	Curtain airbag		❍	❍	❍	❍
	Sunroof		—	—	❍	❍
	17-in Alminum wheel		—	—	—	—

3. OPTION

Option	Front kg (lb)	Rear kg (lb)	Total kg (lb)
Vehicle Dinamics Control	6.4 (14.1)	0.2 (0.4)	6.6 (14.5)
Audio	1.8 (4.0)	0.7 (1.5)	2.5 (5.5)
Power package	1.8 (4.0)	3.1 (6.8)	4.9 (10.8)
Side airbag	1.9 (4.2)	1.9 (4.2)	3.8 (8.4)
Curtain airbag (Sedan model)	0.4 (0.9)	5.3 (11.7)	5.7 (12.6)
Curtain airbag (Wagon model)	0.5 (1.1)	5.0 (11.0)	5.5 (12.1)
Sunroof (Sedan model)	8.1 (17.9)	8.9 (19.6)	17.0 (37.5)
Sunroof (Wagon model)	8.3 (18.3)	18.7 (41.3)	27.0 (59.6)

2. OUTBACK

A: DIMENSION

1. SEDAN MODEL

Model			3.0 L DOHC
Overall length		mm (in)	4,730 (186.2)
Overall width		mm (in)	1,770 (67.7)
Overall height (at C.W.)		mm (in)	1,515 (59.6)
Compartment	Length	mm (in)	1,900 (74.8)
	Width	mm (in)	1,445 (56.9)
	Height	mm (in)	1,100 (43.3)
Wheelbase		mm (in)	2,670 (105.1)
Tread	Front	mm (in)	1,495 (58.9)
	Rear	mm (in)	1,490 (58.7)
Minimum road clearance		mm (in)	214.6 (8.44)

2. WAGON MODEL

Model			2.5 L SOHC	2.5 L DOHC turbo	3.0 L DOHC
Overall length		mm (in)	4,795 (188.8)		
Overall width		mm (in)	1,770 (69.7)		
Overall height (at C.W.)		mm (in)	1,580 (62.2)		
Compartment	Length	mm (in)	1,840 (72.4)		
	Width	mm (in)	1,445 (56.9)		
	Height	mm (in)	1,190 (46.9), 1,145 (45.1)★1		
Wheelbase		mm (in)	2,670 (105.1)		
Tread	Front	mm (in)	1,495 (58.9)		
	Rear	mm (in)	1,490 (58.7)		
Minimum road clearance		mm (in)	213.2 (8.4)	220.6 (8.7)	214.6 (8.4)

★1: With sunroof

B: ENGINE

Model		2.5 L SOHC	2.5 L DOHC turbo	3.0 L DOHC
Engine type		Horizontally opposed, liquid cooled, 4-cylinder, 4-stroke gasoline engine		Horizontally opposed, liquid cooled, 6-cylinder, 4-stroke gasoline engine
Valve arrangement		Overhead camshaft		
Bore × Stroke	mm (in)	99.5 × 79.0 (3.917 × 3.110)		89.2 × 80.0 (3.512 × 3.150)
Displacement	cm^3 (cu in)	2,457 (149.9)		3,000 (183.06)
Compression ratio		10.0	8.2	10.7
Ignition order		1 — 3 — 2 — 4		1 — 6 — 3 — 2 — 5 — 4
Idle speed at Park or Neutral position	rpm	650 (MT) 700 (AT)	750	650
Maximum output	kW (HP)/rpm	124 (166)/5,600 (U5 model) 127 (170)/5,600 (Except for U5 model)	186 (250)/6,000	186 (250)/6,600
Maximum torque	N·m (kgf-m, ft-lb)/rpm	225 (22.9, 166)/3,600 (U5 model) 225 (22.9, 166)/4,000 (Except for U5 model)	339 (34.5, 250)/3,600	297 (30.3, 219)/4,200

C: ELECTRICAL

Model			2.5 L SOHC	2.5 L DOHC turbo	3.0 L DOHC
Ignition timing (at idling) BTDC			13°	MT: 12° AT: 17°	15°
Spark plug	Type and manufacturer		NGK: FR5AP-11	NGK: ILFR6B	NGK: ILFR6B
Generator			12V — 110A		
Battery	Type and capacity (5HR)	MT	12V — 48AH (55D23L)		
		AT	12V — 52AH (75D23L)		

D: TRANSMISSION

Model			2.5 L SOHC		2.5 L DOHC turbo		3.0 L DOHC
Transmission type			5MT	4AT	5MT	5AT	5AT
Clutch type			DSPD	TCC	DSPD	TCC	TCC
Gear ratio		1st	3.454	2.785	3.166	3.540	3.540
		2nd	2.062	1.545	1.882	2.264	2.264
		3rd	1.448	1.000	1.296	1.471	1.471
		4th	1.088	0.694	0.972	1.000	1.000
		5th	0.871	—	0.738	0.834	0.834
		Rev.	3.333	2.272	3.333	2.370	2.370
Reduction gear (Front)	1st reduction	Type of gear	—	Helical	—	Helical	Helical
		Gear ratio	—	1.000	—	1.000	1.000
	Final reduction	Type of gear	Hypoid	Hypoid	Hypoid	Hypoid	Hypoid
		Gear ratio	4.111	4.444	4.444	3.583	3.272
Reduction gear (Rear)	Transfer reduction	Type of gear	Helical	—	Helical	—	—
		Gear ratio	1.000	—	1.000	—	—
	Final reduction	Type of gear	Hypoid	Hypoid	Hypoid	Hypoid	Hypoid
		Gear ratio	4.111	4.444	4.444	3.583	3.272

5MT: 5-forward speeds with synchromesh and 1-reverse
4AT: Electronically controlled fully-automatic, 4-forward speeds and 1-reverse
5AT: Electronically controlled fully-automatic, 5-forward speeds and 1-reverse
DSPD: Dry Single Plate Diaphragm
TCC: Torque Converter Clutch

E: STEERING

Model			2.5 L SOHC	2.5 L DOHC turbo	3.0 L DOHC
Type			Rack and Pinion		
Turns, lock to lock			3.2		
Minimum turning diameter	m (ft)	Center of tire width to center of tire width	10.8 (35.4)		
		Wall to wall	11.6 (38.1)		

F: SUSPENSION

Front	Macpherson strut type suspension
Rear	Multi-link type suspension

G: BRAKE

Model	Except for 2.5 L DOHC turbo	2.5 L DOHC turbo
Service brake system	Dual circuit hydraulic with vacuum suspended power unit	
Front	Ventilated disc brake	
Rear	Disc brake	
Parking Brake	Mechanical on rear brakes	

H: TIRE

Model	2.5 L SOHC	2.5 L DOHC turbo	3.0 L DOHC
Wheel size	16 × 6 $^{1}/_{2}$JJ	17 × 7JJ	17 × 7JJ
Tire size	P225/60 R16 89H	P225/55 R17 95V	
Type	Steel belted radial, Tubeless		

I: CAPACITY

Model			2.5 L SOHC		2.5 L DOHC turbo		3.0 L DOHC
			5MT	4AT	5MT	5AT	5AT
Fuel tank		ℓ (US gal, Imp gal)	64 (16.9, 14.1)				
Engine oil	Capacity (at overhaul)	ℓ (US qt, Imp qt)	4.4 (4.7, 3.9)		4.9 (5.2, 4.3)		7.0 (7.4, 6.2)
	Filling amount of engine oil ℓ (US qt, Imp qt)	At replacement of engine oil and oil filter	4.2 (4.4, 3.7)		4.3 (4.5, 3.8)		5.7 (6.0, 5.0)
		At replacement of engine oil only	4.0 (4.2, 3.5)				5.5 (5.8, 4.8)
Transmission gear oil		ℓ (US qt, Imp qt)	3.5 (3.7, 3.1)	—	3.5 (3.7, 3.1)	—	—
ATF		ℓ (US qt, Imp qt)	—	9.5 (10.0, 8.4)	—	9.8 (10.4, 8.6)	9.8 (10.4, 8.6)
Front differential gear oil		ℓ (US qt, Imp qt)	—	1.2 (1.3, 1.1)	—	1.4 (1.5, 1.2)	1.4 (1.5, 1.2)
Rear differential gear oil		ℓ (US qt, Imp qt)	0.8 (0.8, 0.7)				
Power steering fluid		ℓ (US qt, Imp qt)	0.7 (0.7, 0.6)				
Engine coolant		ℓ (US qt, Imp qt)	6.4 (6.8, 5.6)	6.3 (6.7, 5.5)	7.3 (7.7, 6.4)	7.2 (7.6, 6.3)	

J: WEIGHT

1. US MODEL

Model			Sedan		Wagon					
			3.0 L DOHC		2.5 L SOHC				2.5 L DOHC turbo	
			3.0 R		2.5 i		2.5 i Limited		2.5 XT	
			5AT		5MT	4AT	5MT	4AT	5MT	4AT
Curb weight (C.W.)	Front	kg (lb)	907 (2,005)	913 (2,020)	801 (1,770)	821 (1,815)	811 (1,790)	831 (1,835)	848 (1,875)	878 (1,940)
	Rear	kg (lb)	698 (1,540)	698 (1,540)	699 (1,540)	699 (1,540)	714 (1,575)	714 (1,575)	698 (1,540)	698 (1,540)
	Total	kg (lb)	1,605 (3,545)	1,612 (3,560)	1,500 (3,310)	1,520 (3,355)	1,525 (3,365)	1,545 (3,410)	1,546 (3,415)	1,576 (3,480)
Gross axle weight ratio (G.A.W.R)	Front	kg (lb)	1,040 (2,295)	1,040 (2,295)	1,040 (2,295)	1,040 (2,295)	1,040 (2,295)	1,040 (2,295)	1,040 (2,295)	1,040 (2,295)
	Rear	kg (lb)	1,060 (2,335)	1,060 (2,335)	1,060 (2,335)	1,060 (2,335)	1,060 (2,335)	1,060 (2,335)	1,060 (2,335)	1,060 (2,335)
Gross vehicle weight (G.V.W.)		kg (lb)	2,060 (4,545)	2,060 (4,545)	1,960 (4,435)	1,960 (4,435)	2,010 (4,435)	2,010 (4,435)	2,060 (4,545)	2,060 (4,545)
Option	Vehicle Dynamics Control		—	❍	—	—	—	—	—	—
	Power package		❍	❍	—	—	❍	❍	—	—
	Side airbag		❍	❍	❍	❍	❍	❍	❍	❍
	Curtain airbag		❍	❍	❍	❍	❍	❍	❍	❍
	Sunroof		❍	❍	—	—	❍	❍	—	—
	17-in Alminum wheel		—	—	—	—	—	—	—	—

Model			Wagon			
			2.5 L DOHC turbo		3.0 L DOHC	
			2.5 XT Limited		3.0 R, 3.0 R L. L Bean	3.0 R Limited
			5MT	5AT	5AT	
Curb weight (C.W.)	Front	kg (lb)	862 (1,905)	892 (1,970)	907 (2,005)	915 (2,020)
	Rear	kg (lb)	723 (1,595)	723 (1,595)	723 (1,595)	730 (1,610)
	Total	kg (lb)	1,585 (3,500)	1,615 (3,565)	1,630 (3,600)	1,645 (3,630)
Gross axle weight ratio (G.A.W.R)	Front	kg (lb)	1,040 (2,295)	1,040 (2,295)	1,040 (2,295)	1,040 (2,295)
	Rear	kg (lb)	1,060 (2,335)	1,060 (2,335)	1,060 (2,335)	1,060 (2,335)
Gross vehicle weight (G.V.W.)		kg (lb)	2,060 (4,635)	2,060 (4,635)	2,060 (4,635)	2,060 (4,635)
Option	Vehicle Dynamics Control		—	—	—	❍
	Power package		❍	❍	❍	❍
	Side airbag		❍	❍	❍	❍
	Curtain airbag		❍	❍	❍	❍
	Sunroof		❍	❍	❍	❍
	17-in Alminum wheel		—	—	—	—

2. CANADA MODEL

Model			Sedan		Wagon					
			3.0 L DOHC		2.5 L SOHC				2.5 L DOHC turbo	
			3.0 R		2.5 i		2.5 i Limited		2.5 XT	
			5AT		5MT	4AT	5MT	4AT	5MT	
Curb weight (C.W.)	Front	kg (lb)	907 (2,005)	913 (2,020)	811 (1,790)	831 (1,835)	821 (1,810)	841 (1,855)	852 (1,880)	878 (1,940)
	Rear	kg (lb)	698 (1,540)	698 (1,540)	679 (1,500)	679 (1,475)	694 (1,535)	694 (1,535)	701 (1,550)	698 (1,540)
	Total	kg (lb)	1,605 (3,545)	1,612 (3,560)	1,490 (3,290)	1,510 (3,335)	1,515 (3,345)	1,535 (3,390)	1,553 (3,430)	1,576 (3,480)
Gross axle weight ratio (G.A.W.R)	Front	kg (lb)	1,040 (2,295)	1,040 (2,295)	1,040 (2,295)	1,040 (2,295)	1,040 (2,295)	1,040 (2,295)	1,040 (2,295)	1,040 (2,295)
	Rear	kg (lb)	1,055 (2,330)	1,055 (2,330)	1,055 (2,330)	1,055 (2,330)	1,055 (2,330)	1,055 (2,330)	1,055 (2,330)	1,055 (2,330)
Gross vehicle weight (G.V.W.)		kg (lb)	2,010 (4,435)	2,010 (4,435)	2,010 (4,435)	2,010 (4,435)	2,010 (4,435)	2,010 (4,435)	2,060 (4,545)	2,060 (4,545)
Option	Vehicle Dynamics Control		—	❍	—	—	—	—	—	—
	Power package		❍	❍	—	—	❍	❍	—	—
	Side airbag		❍	❍	❍	❍	❍	❍	❍	❍
	Curtain airbag		❍	❍	❍	❍	❍	❍	❍	❍
	Sunroof		❍	❍	—	—	❍	❍	—	—
	17-in Alminum wheel		—	—	—	—	—	—	—	—

Model			Wagon				
			2.5 L DOHC turbo		3.0 L DOHC		
			2.5 XT Limited		3.0 R	3.0 R Limited	3.0 R L.L Bean
			5MT	4AT	5AT		
Curb weight (C.W.)	Front	kg (lb)	862 (1,905)	892 (1,970)	892 (1,970)	915 (2,020)	907 (2,005)
	Rear	kg (lb)	723 (1,595)	723 (1,595)	703 (1,550)	730 (1,610)	723 (1,595)
	Total	kg (lb)	1,585 (3,500)	1,615 (3,565)	1,595 (3,520)	1,645 (3,630)	1,630 (3,600)
Gross axle weight ratio (G.A.W.R)	Front	kg (lb)	1,040 (2,295)	1,040 (2,295)	1,040 (2,295)	1,040 (2,295)	1,040 (2,295)
	Rear	kg (lb)	1,055 (2,330)	1,055 (2,330)	1,055 (2,330)	1,055 (2,330)	1,055 (2,330)
Gross vehicle weight (G.V.W.)		kg (lb)	2,060 (4,545)	2,060 (4,545)	2,100 (4,630)	2,100 (4,630)	2,100 (4,630)
Option	Vehicle Dynamics Control		—	—	—	❍	—
	Power package		❍	❍	—	❍	❍
	Side airbag		❍	❍	❍	❍	❍
	Curtain airbag		❍	❍	❍	❍	❍
	Sunroof		❍	❍	—	❍	❍
	17-in Alminum wheel		—	—	—	—	—

3. OPTION

Option	Front kg (lb)	Rear kg (lb)	Total kg (lb)
Vehicle Dinamics Control	6.4 (14.1)	0.2 (0.4)	6.6 (14.5)
Audio	1.8 (4.0)	0.7 (1.5)	2.5 (5.5)
Power package	1.8 (4.0)	3.1 (6.8)	4.9 (10.8)
Side airbag	1.9 (4.2)	1.9 (4.2)	3.8 (8.4)
Curtain airbag (Sedan model)	0.4 (0.9)	5.3 (11.7)	5.7 (12.6)
Curtain airbag (Wagon model)	0.5 (1.1)	5.0 (11.0)	5.5 (12.1)
Sunroof (Sedan model)	8.1 (17.9)	8.9 (19.6)	17.0 (37.5)
Sunroof (Wagon model)	8.3 (18.3)	18.7 (41.3)	27.0 (59.6)

PRECAUTION

PC

Page
1. Precaution 2

1. Precaution

A: CAUTION

Please clearly understand and adhere to the following general precautions. They must be strictly followed to avoid minor or serious injury to the person doing the work or people in the area.

1. ABS

Handle the ABS as a total system. Do not disassemble or attempt to repair parts which are not instructed in this manual. Follow the instructions in this manual during performing the maintenance of ABSCM&H/U. To disassemble parts without instructions could prevent the ABS system from operating when needed or cause it to operate incorrectly and result in injury.

2. VEHICLE DYNAMICS CONTROL (VDC)

Handle the VDC as a total system. Do not disassemble or attempt to repair individual parts. Doing so could prevent the VDC system from operating when needed or cause it to operate incorrectly and result in injury.

3. BRAKE FLUID

If brake fluid gets in your eyes or on your skin, do the following:

- Wash out your eyes and seek immediate medical attention.
- Wash your skin with soap and then rinse thoroughly with water.

4. RADIATOR FAN

The radiator fan may rotate without warning, even when the engine is not ON. Do not place your hand, cloth, tools or other items near the fan at any time.

5. ROAD TEST

Always conduct road tests in accordance with traffic rules and regulations to avoid bodily injury and interrupting traffic.

6. AIRBAG

To prevent bodily injury from unexpected deployment of airbags and unnecessary maintenance, follow the instructions in this manual when performing maintenance on the airbag components or nearby, around front of the vehicle (radiator panel, front wheel apron, front side frame, front bumper, front hood, front fender), around side of the vehicle (front door, rear door, center pillar, rear fender, side sill, rear wheel apron), and the airbag wiring harnesses or nearby.
To prevent unexpected deployment, turn the ignition switch to OFF and disconnect the ground cable from battery, then wait at least 20 seconds before starting work.

7. AIRBAG AND SEAT BELT PRETENSIONER DISPOSAL

To prevent bodily injury from unexpected airbag deployment, do not dispose airbag modules and seat belt pretensioner in the same way as other refuse. Follow all government regulations concerning disposal of refuse.

8. AIRBAG MODULE

Adhere to the following when handling and storing the airbag module to prevent bodily injury from unexpected deployment:

- Do not hold the harnesses or connectors to carry the module.
- Do not face the bag in the direction that it opens towards yourself or other people.
- Do not face the bag in the direction that it opens towards the floor or walls.

9. AIRBAG SPECIAL TOOL

To prevent unexpected deployment, only use special tools.

10.WINDOW

Always wear safety glasses when working around any glass to prevent glass fragments from damaging your eyes.

11.WINDOW ADHESIVE

Always use the recommended or equivalent adhesive when attaching glass to prevent it from coming falling, resulting in accidents and injury.

12.HOSE REMOVAL/INSTALLATION PROCEDURES

1. Hose Removal/Installation Pre-Procedures

• Be careful to inspect hoses so as not to use damaged or deformed hoses. Using such hoses could cause leakage or loss of oil, with leaked oil splashing on exhaust pipes or other hot parts, resulting in smoke or fire.

• Always remove hoses when performing work. Not removing the hoses and moving parts out of the way when performing procedures may damage the inside of hoses and cause other negative affects.

2. Hose Removal/Installation Procedures and Inspection

• Remove hoses according to the following instructions.

• If using the hose remover (general tool), do not use the sharp-pointed hose remover (hose plucker) as it may damage pipe surfaces or hoses.

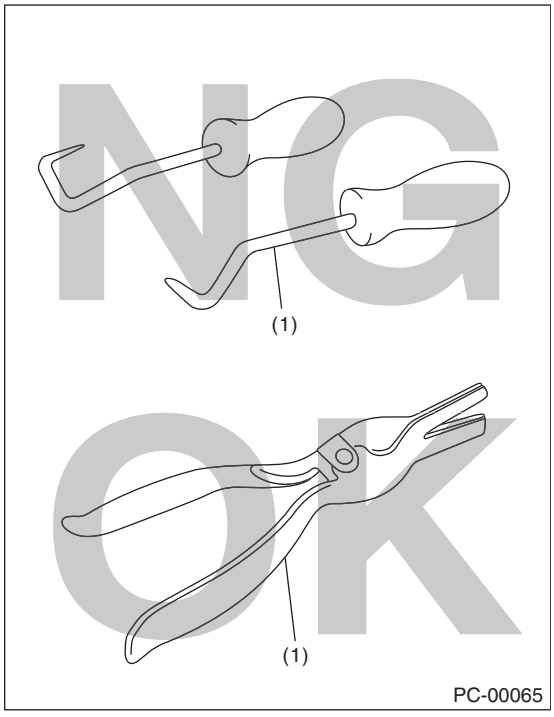

(1) Hose remover

• When using pliers to make hose removal easier, always be sure to use a cloth to protect the hose, slightly rotate the hose, and then pull straight out by hand.

• Inspect the following points in continuous use, and replace any hoses that are damaged or defective with new parts.

• Replace any hoses that are riding over the stay or spool with new parts.

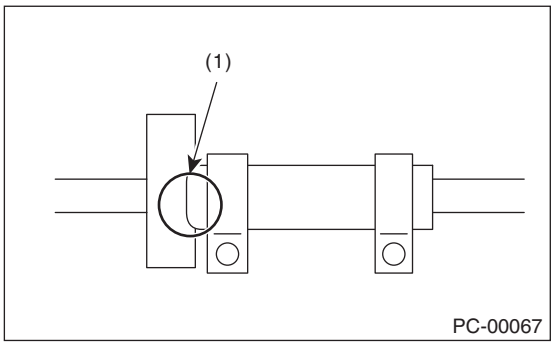

(1) Hose riding over a stay

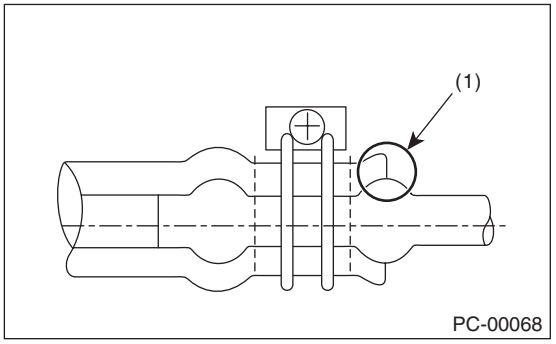

(1) Hose riding over a spool

• Check the inner and outer surfaces of the hose for damage, cracks, breakage, hardening/softening/swelling of rubber, internal peeling, and that there are no deformations caused by infiltration/adhesion of foreign matter, and no twisted hoses. Replace any defective hoses with new parts.

• Install hoses according to the following instructions.

- Carefully check the installation positions.
- Do not use any lubricants.
- Securely insert until the specified positions (until contacting spool).

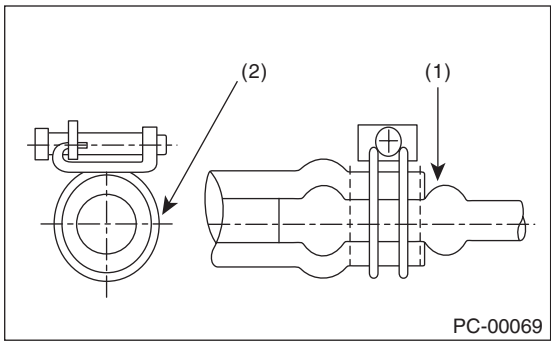

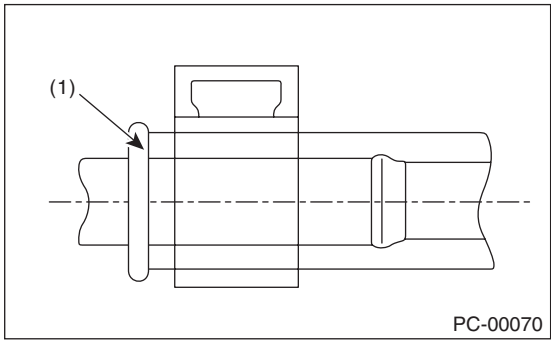

(1) Contacting the spool. (Do not excessively insert the hose to prevent the hose from becoming wrinkled up.)

(2) Apply an equal clamping force all around the hose periphery.

- Check that the position and orientation of hose clamps, and the hose layout are correct. (Check that the position and orientation are matching, they are not excessively short/long, there are no differences with before performing the procedures, and that there is clearance between hoses and surrounding parts.)
- After installing, check that there are no disconnection of hoses or leakage from hoses. (Check that hoses are securely fixed by the clamps.)

• Inspect the hose clips and clamps according to the following points, and replace any parts that are damaged or defective with new parts.

- Check for deformations, rust, damage, and adhering of foreign matter.
- For clips, check that the spring functions and has clamping force.
- For clamps, check that the screw can clinch, the clamp has not become oval shaped, and the screw is not damaged.

• Inspect the pipes according to the following points, and replace any parts that are damaged or defective with new parts.

Check that the pipes do not have any damage, rust, peeling (including peeling plating), foreign matter adhering, twisting, crushing, bending, or cracks.

• Replace the following parts with new parts if the hoses have been removed or their installation positions have been changed.

ATF cooler hose, engine oil cooler hose, MT oil cooler hose, power steering suction hose, and power steering return hose.

NOTE

NT

Page
1. Note.....2

1. Note

A: NOTE

This is the information that can improve the efficiency of maintenance and assure the sound work.

1. FASTENERS NOTICE

Fasteners are used to prevent the parts from damage, dislocation and play due to looseness. Fasteners must be tightened to the specified torque.
Do not apply paint, lubricant, rust retardant or other substance to the surface around bolts, nuts, etc. Doing so will make it difficult to obtain the correct torque and result in looseness and other problem.

2. STATIC ELECTRICITY DAMAGE

Do not touch the control modules, connectors, logic boards and other such parts when there is a possibility of static electricity. Always use a static electricity prevention cord or touch grounded metal for the elimination of static electricity before conducting work.

3. BATTERY

When removing the battery cables, always be sure to turn the ignition switch to OFF to prevent electrical damage of the control module from overcurrent. Be sure to remove the battery ground cable first.

4. SERVICE PARTS

Use genuine parts for maximum performance and maintenance when servicing. Subaru/FHI will not be responsible for poor performance resulting from the use of parts except genuine parts.

5. PROTECTING VEHICLE UNDER MAINTENANCE

Make sure to attach a fender cover, seat covers, etc. before starting work.

6. ENSURING SECURITY DURING WORK

When working in a group of two or more, perform the work with calling each other to ensure mutual safety.

7. LIFTS AND JACKS

When using a lift or shop jack to raise a vehicle, or using rigid racks to support a vehicle, always follow instructions concerning jack-up points and weight limits to prevent the vehicle from falling, which could result in injury. Be especially careful that the vehicle is balanced before raising it. Be sure to set the wheel stoppers to the other side wheels when jacking-up only the front or rear side of the vehicle.

NOTE:
• When using a lift, follow its operation manual before starting work.
• Do not work or leave unattended while the vehicle is supported with jack, support it with rigid racks.
• Be sure to use the rigid racks with rubber attached to cradle to support the vehicle.
• When using a plate lift, use a rubber attachment.

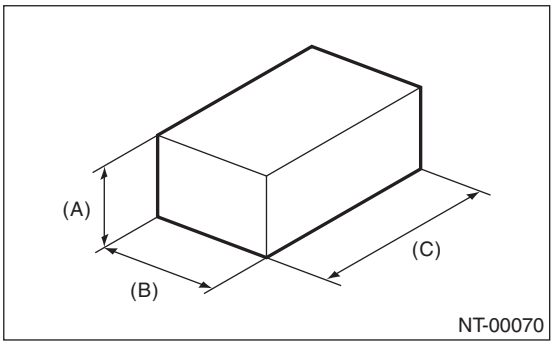

(A) 80 mm (3.1 in) or more
(B) 100 — 150 mm (3.94 — 5.91 in)
(C) 120 — 190 mm (4.72 — 7.48 in)

• Align the cushion rubber end of plate lift with the end of rubber attachment (portion b). Also, align the protrusion portion of the supporting locations with the end of attachment (portion a).
• Do not use the plate lift whose attachment does not reach the supporting locations.

(1)

(2)

(3)

(4)

(5)

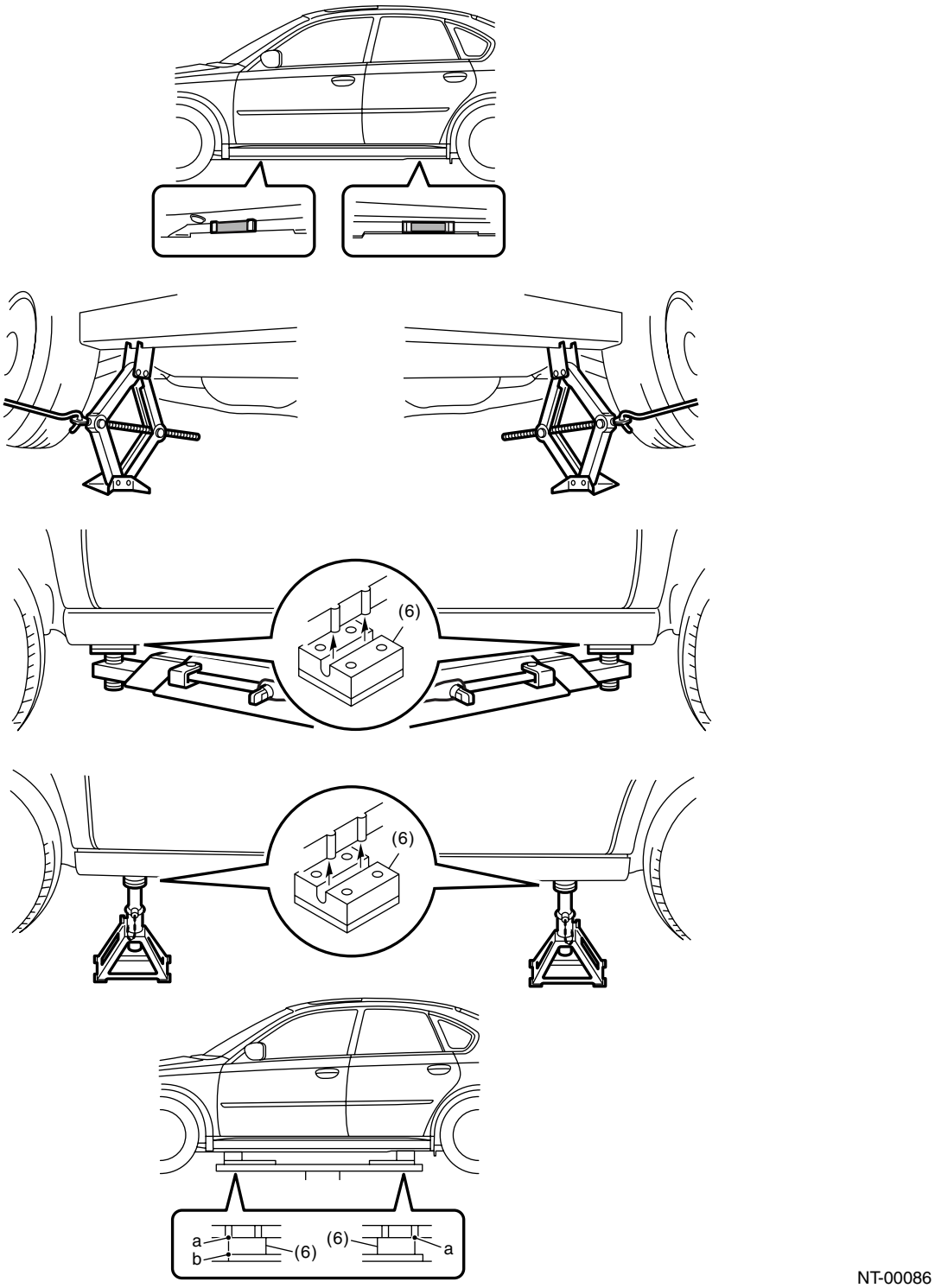

NT-00086

(1) Supporting locations
(2) Pantograph jack
(3) Swing arm lift
(4) Rigid rack
(5) Plate lift
(6) Attachment

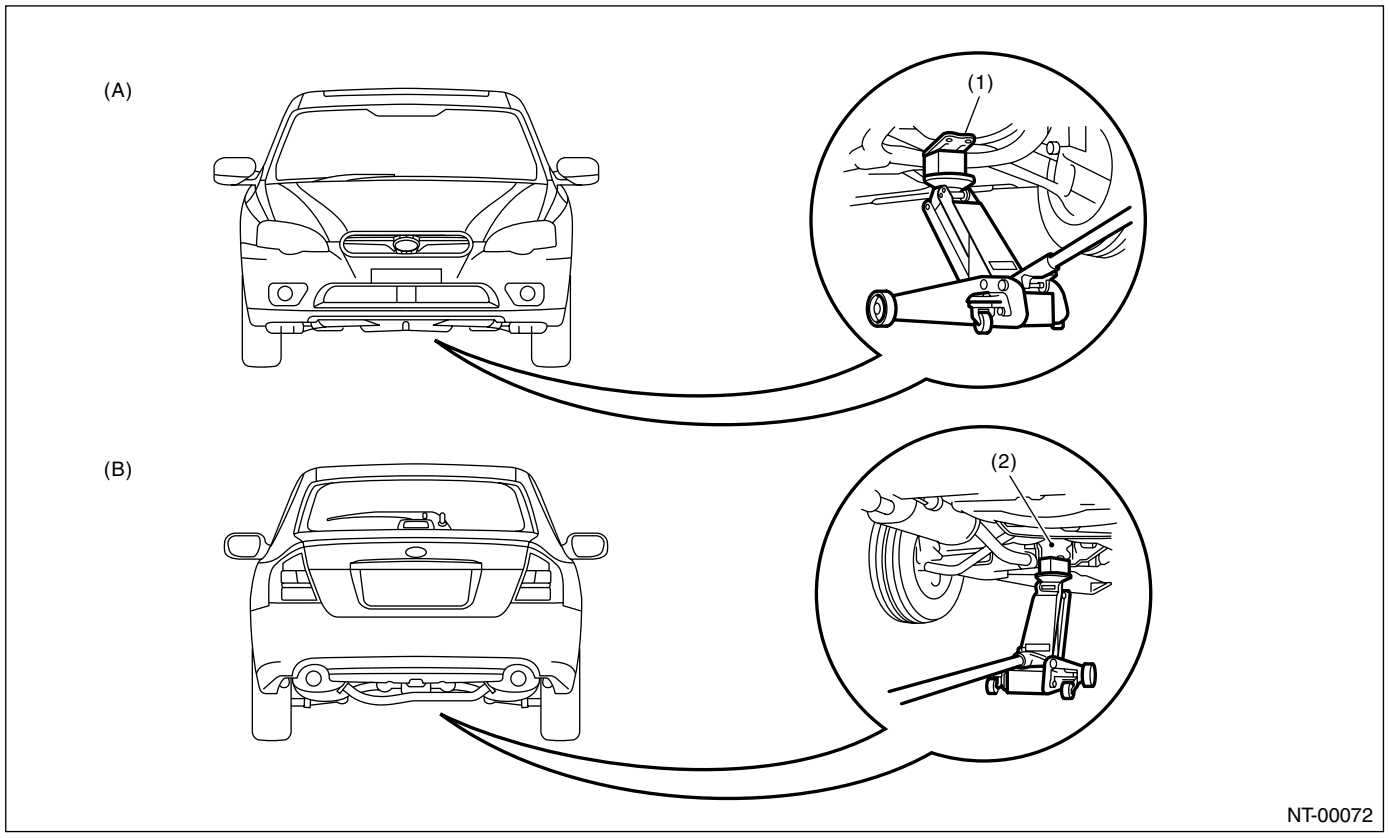

(A) Front
(B) Rear
(1) Front crossmember
(2) Rear differential

8. TIE DOWNS

Tie downs are used when transporting vehicles and when using the chassis dynamo. Attach tie-downs only to the specified locations on the vehicle.

- TIE-DOWN LOCATION

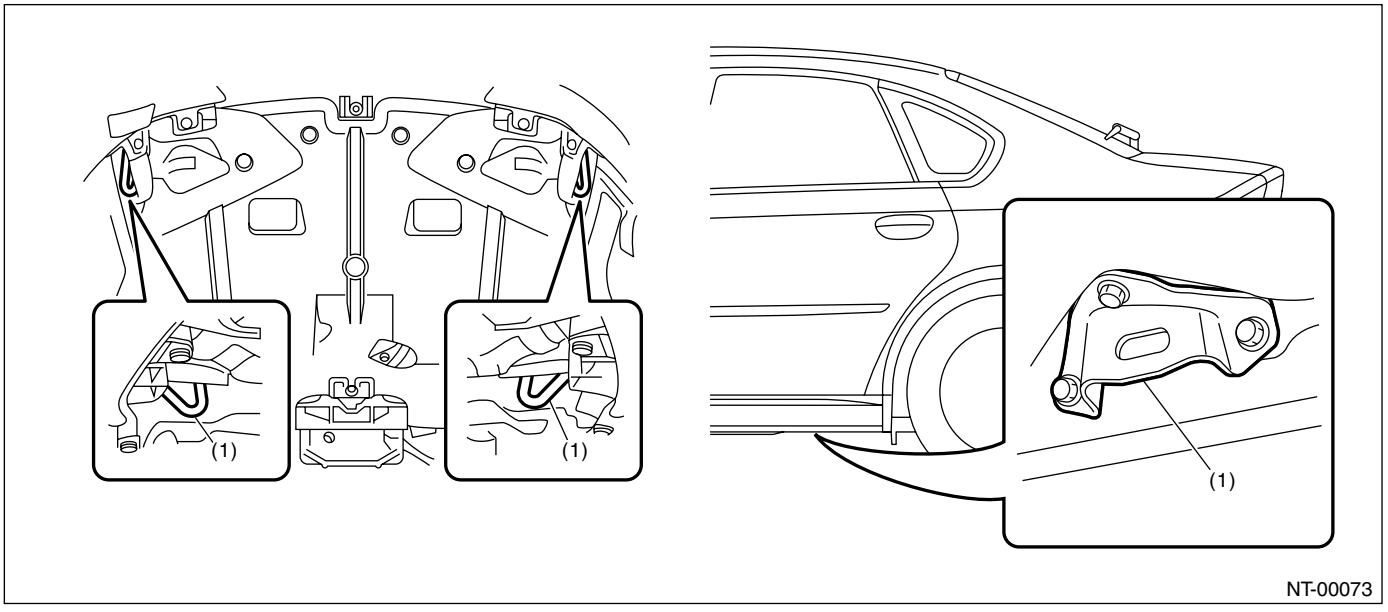

(1) Hook for tie-down

• CHAIN DIRECTION AT TIE-DOWN CONDITION

NOTE:
Pull the chains LH and RH in the same direction, but front and rear side in the counter direction. Pull all the chains in a same moment.

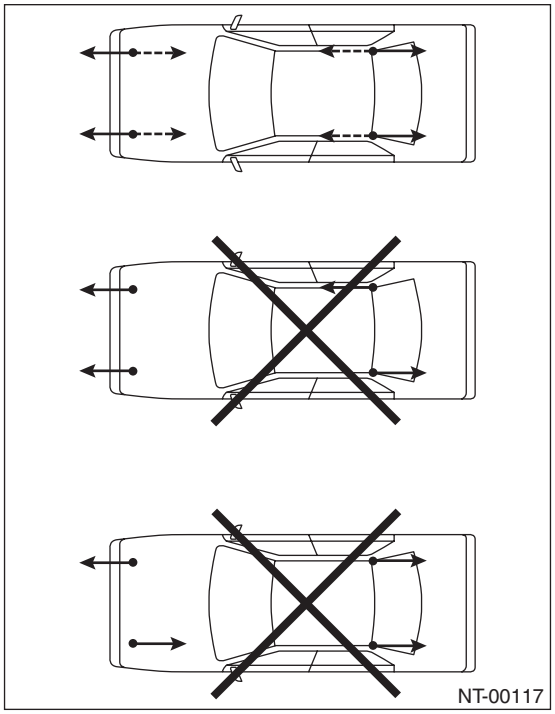

• CHAIN PULLING RANGE AT TIE-DOWN CONDITION

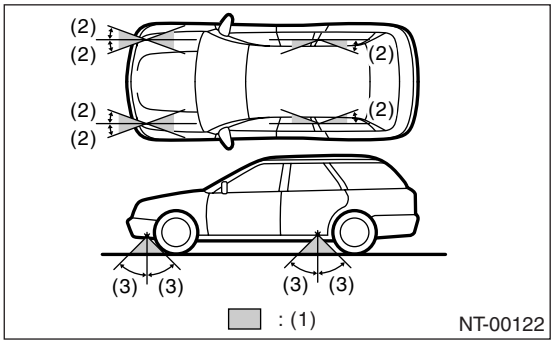

(1) Chain pulling range at tie-down condition
(2) 20°
(3) 45°

• VEHICLE SINKING VOLUME AT TIE-DOWN CONDITION

Measure the distance between the highest tire point and highest arch point before and after tie-down. Make sure to fix the vehicle securely within 50 mm (1.97 in) difference of measured value (sinking amount).

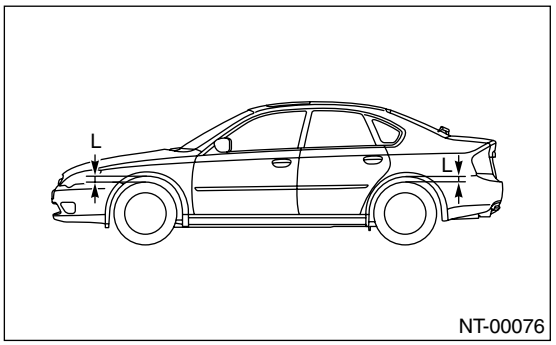

9. TOWING

Avoid towing vehicles except when the vehicle cannot be driven. For models with AWD, AT or VTD, use a loader instead of towing. When towing other vehicles, pay attention to the following to prevent hook or vehicle damage resulting from excessive weight.

- Do not tow other vehicles with a front tie-down hook.
- Make sure the towing vehicle is heavier than the towed vehicle.
- FRONT

Remove the fog light cover (except for OUTBACK model) and hook cover, and then install the hook.

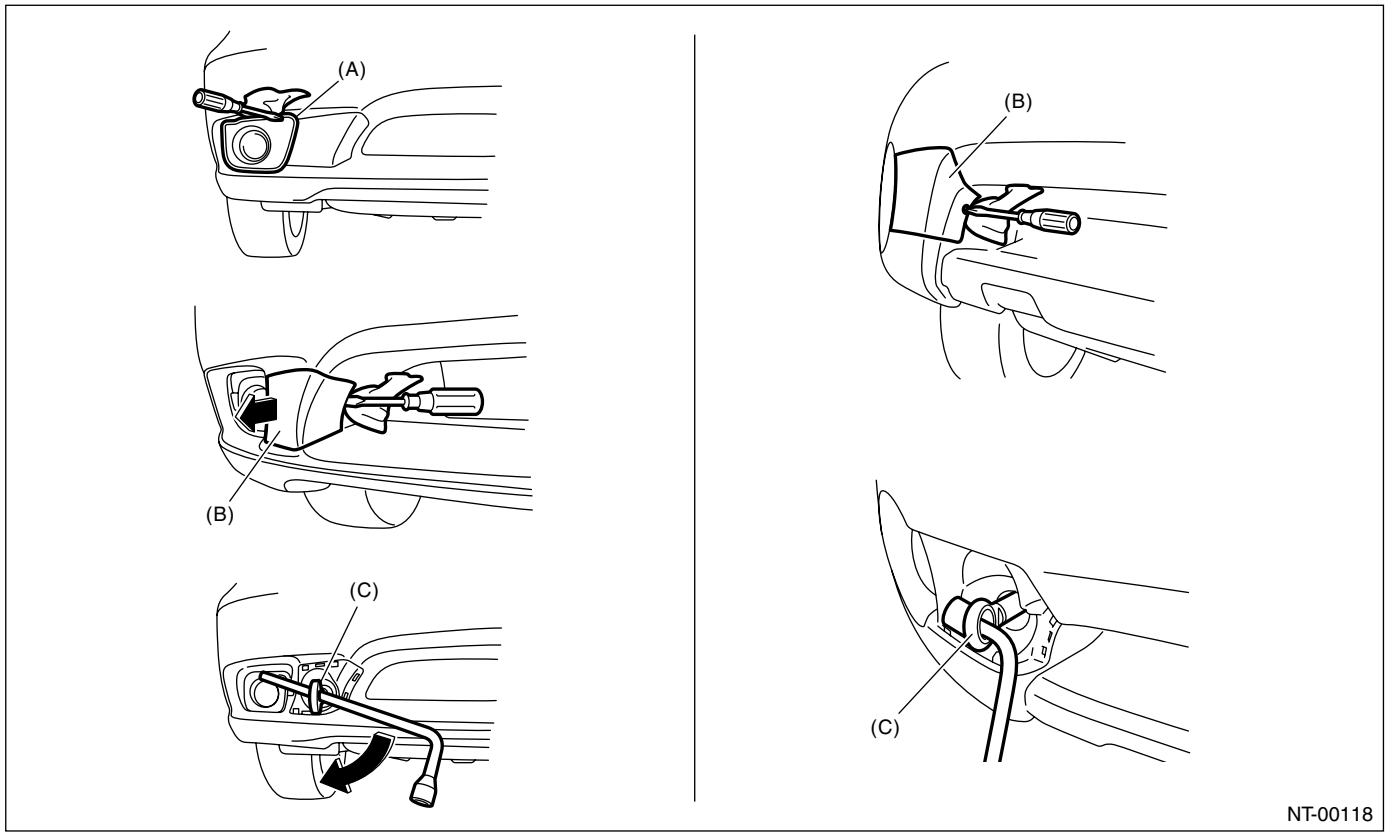

(A) Fog light cover (except for OUTBACK model)
(B) Hook cover
(C) Hook

- REAR

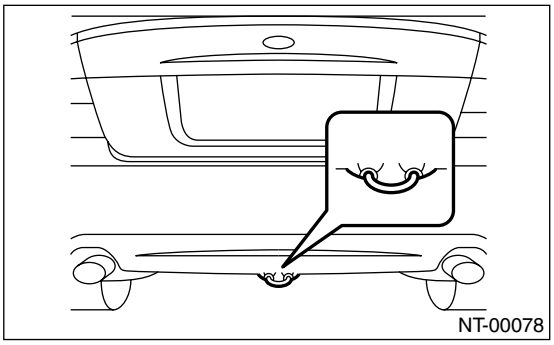

• NOTES

Towing	Notes	MT	AT
Lifting up four wheels (On a trailer) 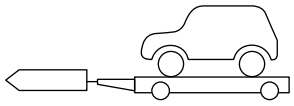 NT-00023	Towing the vehicle with lifting up all four wheels is a basic rule for AWD model.	❍	❍
Rope 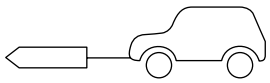 NT-00024	• Check if both front and rear wheels are rotated normally. • AT model driving conditions: Allow driving speed less than 30 km/h (19 MPH). Allow driving distance less than 30 km (19 miles).	❍	▲
Raising the front wheels 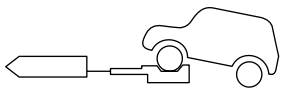 NT-00025	Prohibited for full-time AWD model.	×	×
Lifting up the front wheels 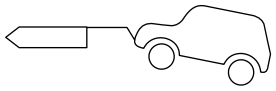 NT-00026	• Prohibited, due to damage on bumper, front grille, etc. • Do not raise the vehicle with bumper.	×	×

Marked ❍: OK, Marked ×: Prohibited, Marked ▲: Conditionally OK

CAUTION:
- **Check ATF, gear oil and rear differential oil before driving.**
- **Place the shift lever in "N" position during towing.**
- **Do not lift up the rear wheels to avoid unsteady rotation.**
- **Turn the ignition key to "ACC", then check the steering wheel moves freely.**
- **Release the parking brake to avoid tire dragging.**
- **Since the power steering does not work, be careful for the heavy steering effort. (When engine is stopped)**
- **Since the servo brake does not work, be careful that the brake is not applied effectively. (When engine is stopped)**
- **In case of the malfunction of internal transmission or drive system, lift up four wheels (on a trailer) for towing.**

10.FRONT HOOD STAY INSTALLATION

- AT A CHECK AND GENERAL MAINTENANCE

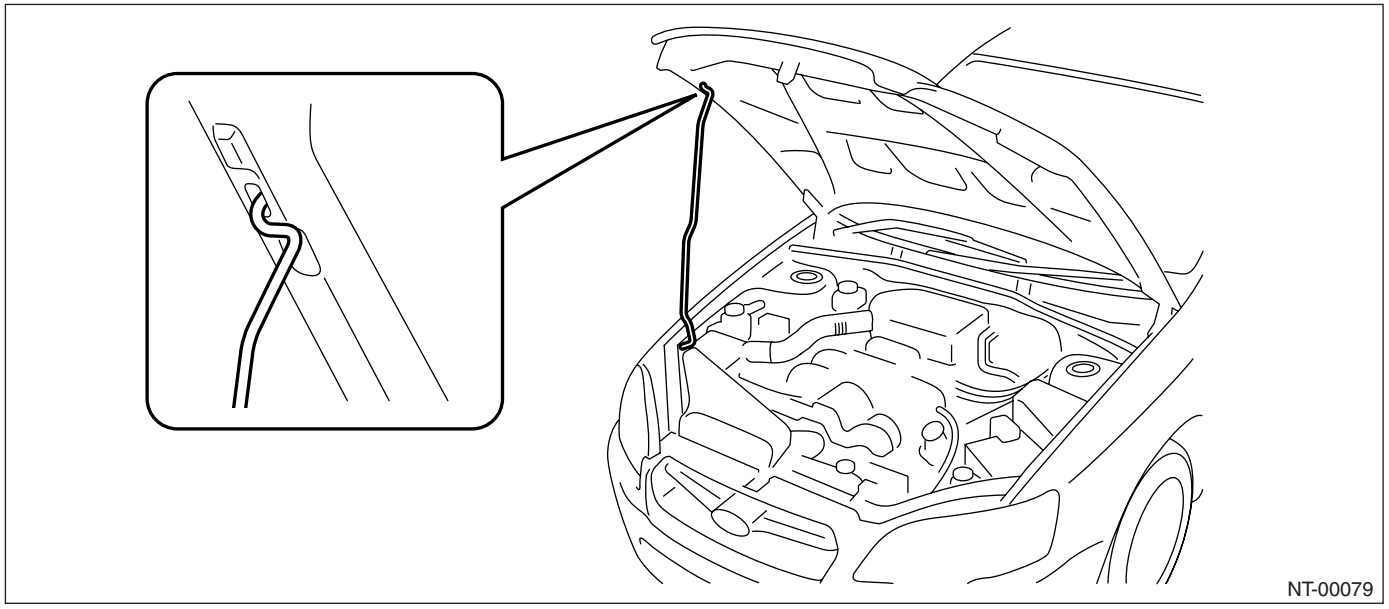

- WHEN WIDER HOOD OPENING IS NECESSARY

Set the stay into the hole of lower hood as shown in the figure below.

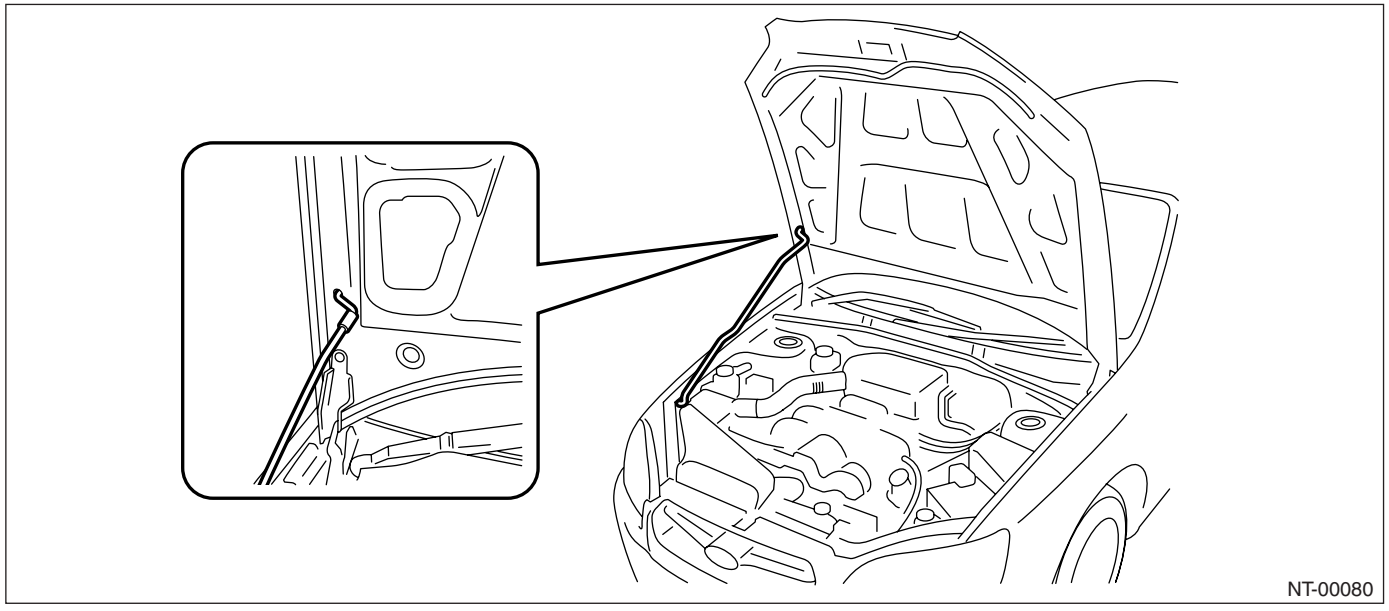

11.GENERAL SCAN TOOL

Using general scan tools will greatly improve the efficiency of repairing engine electronic controls. Subaru Select Monitor can be used to diagnose the engine, ABS, air conditioner and other electronic control parts.

12.AWD CIRCUIT MEASURES

1) Full-time AWD MT model
Since viscous coupling (limited slip differential) is used in the center differential, cut-off of AWD circuit cannot be carried out.
2) Full-time AWD 5AT model
Since VTD type is used in the center differential, cut-off of AWD circuit cannot be carried out.
3) Full-time AWD 4AT model
Insert a spare fuse into FWD fuse holder in the fuse box located in the left side of engine room to select the FWD. Since electronically controlled MT-P hydraulic multi-plate clutch is adapted for center differential, select FWD. When maintenance is performed with jack-up or on the free roller, check the illumination of AWD warning light in the combination meter.

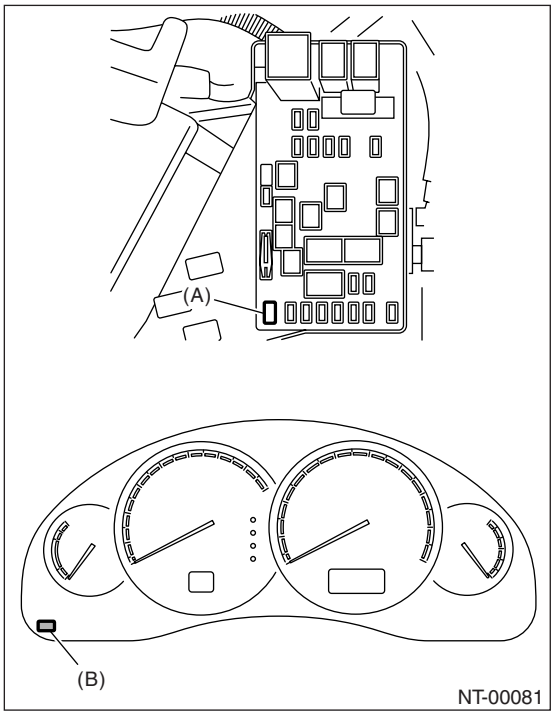

(A) FWD fuse holder
(B) AWD warning light

13.SPEEDOMETER TEST

1) Rear wheel free roller system
(1) Set the free roller on the floor of rear wheel side securely according to the wheel base and rear tread of the vehicle.
(2) Let the vehicle ride on the tester and free roller gently.

CAUTION:
Fix the vehicle using a pulling metal (chain or wire) to the front and rear towing hooks or tie-down hook to prevent the lateral runout of front wheels and springing out of vehicle.

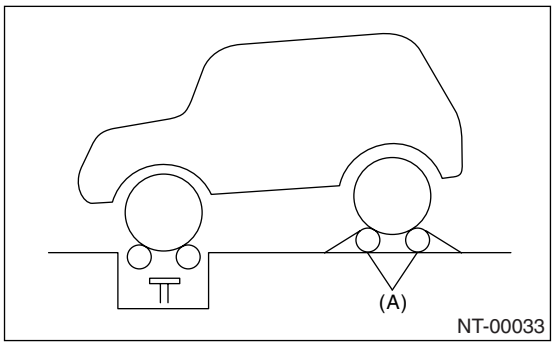

(A) Free roller

(3) Set the speedometer tester.
(4) Conduct the speedometer test work.

CAUTION:
Do not operate the clutch quickly and do not accelerate or decelerate suddenly during work.

2) Rear wheel jack-up system
(1) Set the vehicle on speedometer tester.

CAUTION:
Fix the vehicle using a pulling metal (chain or wire) to the front and rear towing hooks or tie-down hook to prevent the lateral runout of front wheels and springing out of vehicle.

(2) Jack up the rear wheels and set the rigid racks to the specified locations of side sill.

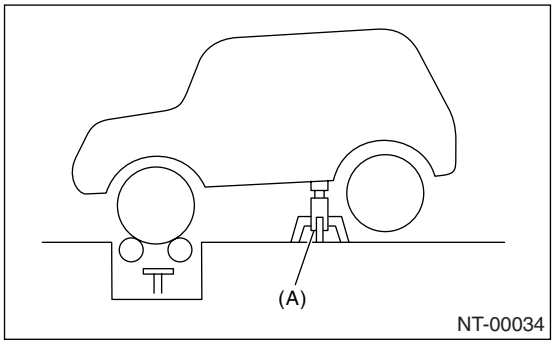

(A) Rigid rack

(3) Conduct the speedometer test work.

CAUTION:
Do not operate the clutch quickly and do not accelerate or decelerate suddenly during work.

14.BRAKE TEST

1) Full-time AWD MT model
   (1) Perform this test after driving the vehicle 2 to 3 km (1.24 to 1.86 miles) on road in order to stabilize the viscous torque of viscous coupling.
   (2) Keep the front or rear wheels on the ground for this test.

NOTE:
Effect of the viscous torque on braking force will be added approx. 25 kg compared with FWD model.

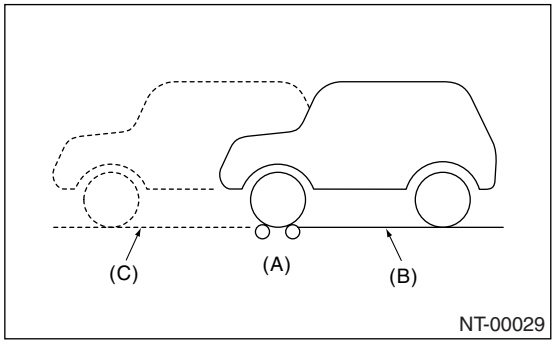

(A) Brake tester
(B) Position for measuring front wheel
(C) Position for measuring rear wheel

(3) When the brake dragging force is large.
• Check the dragging of brake pad or brake shoe.
• Since it may be affected by the viscosity of viscous couping, jack up either of the front or rear two wheels to check the each wheel rotation condition with the viscous coupling affection removed.

2) Full-time AWD AT model
   (1) Keep the front or rear wheels on the ground during measurement.

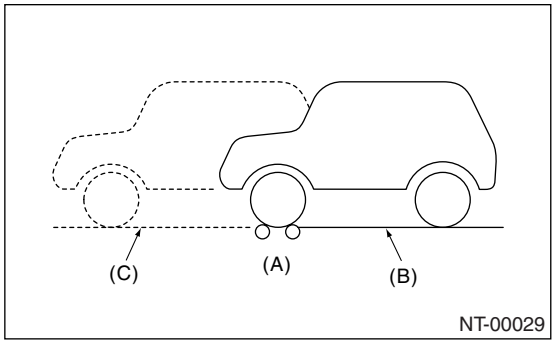

(A) Brake tester
(B) Position for measuring front wheel
(C) Position for measuring rear wheel

(2) When the brake dragging force is large.
• Check the dragging of brake pad or brake shoe.

Specifications:

	Braking force
Rear wheel total	More than 10% of load on front or rear wheels
Difference between right and left wheels	Less than 8% of load on front or rear wheels
Sum total	More than 50% of vehicle weight at the time of test

• When measurement is difficult to carry out because both of front wheels are locked, check if break force measurement in this condition conforms to sum total.

15.ON THE CAR WHEEL BALANCING

CAUTION:
• Carry out this procedures after measuring the balance of each single tire.
• Set the vehicle so that the front and rear wheels are same height.
• Release the parking brake during measurement.
• Rotate each wheel by hands, and make sure it rotates without dragging.
• Do not operate the clutch quickly and do not accelerate or decelerate suddenly during work.
• When an error is indicated during engine drive, do not use the motor drive together.

1) Set rigid racks to the specified locations of side sill, jack up the front or rear two wheels of non-measuring side and set the pickup stands to two wheels of measuring side.

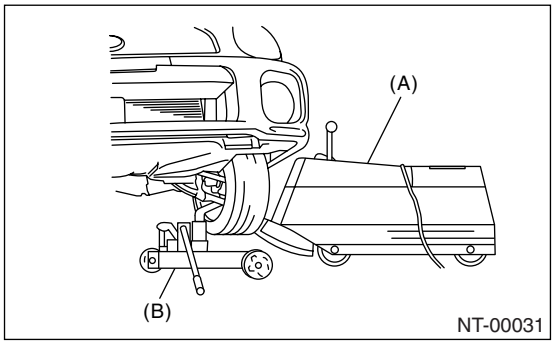

(A) Balancer body
(B) Pickup stand

2) For drive wheel, drive the tires with engine for measurement.
3) For non-drive wheel, drive the tires from the on the car wheel balancer for measurement.

IDENTIFICATION

ID

Page
1. Identification 2

1. Identification

A: IDENTIFICATION

1. IDENTIFICATION NUMBER AND LABEL LOCATIONS

The V.I.N. (Vehicle Identification Numbers) is used to classify the vehicle.

- **POSITIONING OF THE PLATE LABEL FOR IDENTIFICATION**

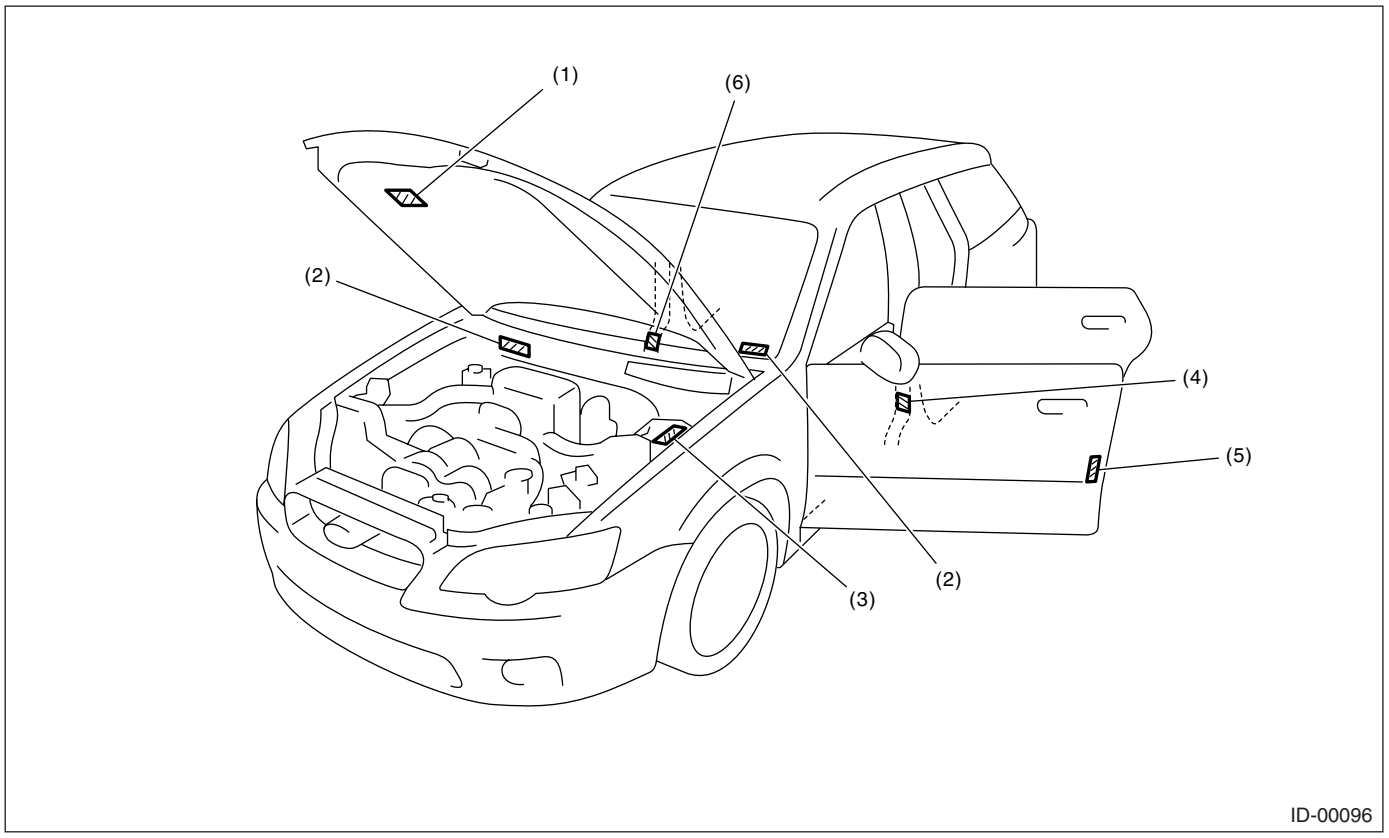

(1) Emission control label
(2) Vehicle identification number (VIN)
(3) Model number plate
(4) Tire inflation pressure label (Driver side)
(5) FMVSS label (U.S. model)
CMVSS label (Canada model)
(6) Radio noise label

- **ENGINE**

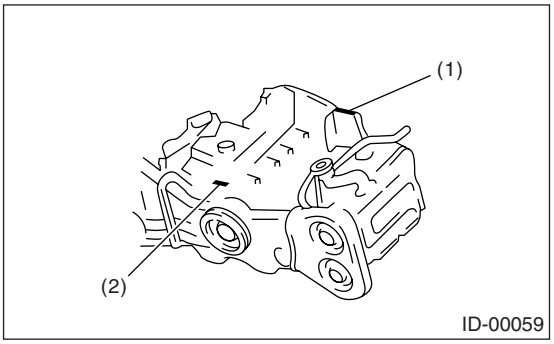

(1) Engine serial number (Punch mark)
(2) Engine type (Crankcase upper side)

- **AUTOMATIC TRANSMISSION**

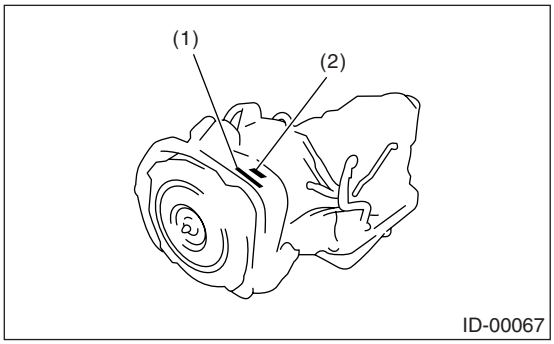

(1) AT type label
(2) Transmission serial number label

- **MANUAL TRANSMISSION**

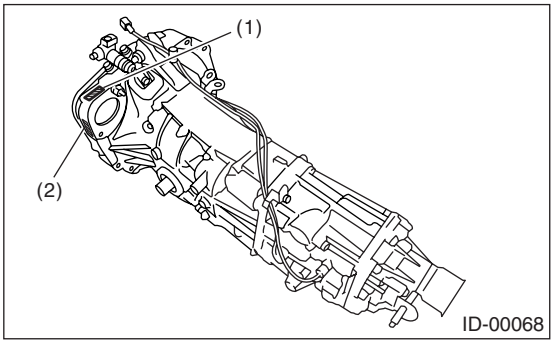

(1) Transmission serial No.
(2) MT type label

- **REAR DIFFERENTIAL**
  T-TYPE

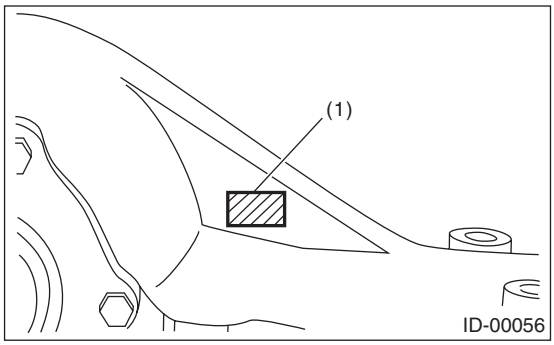

(1) Type (white paint)

VA1-TYPE

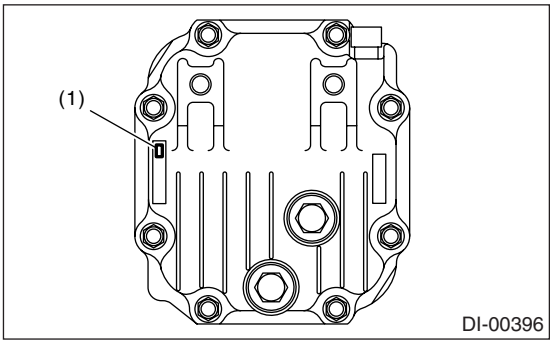

(1) Type (label)

VA2-TYPE

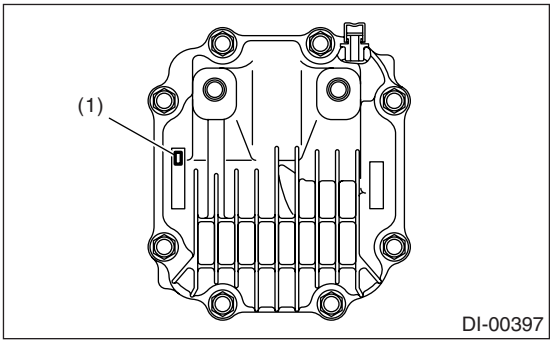

(1) Type (label)

- **MODEL NUMBER PLATE**

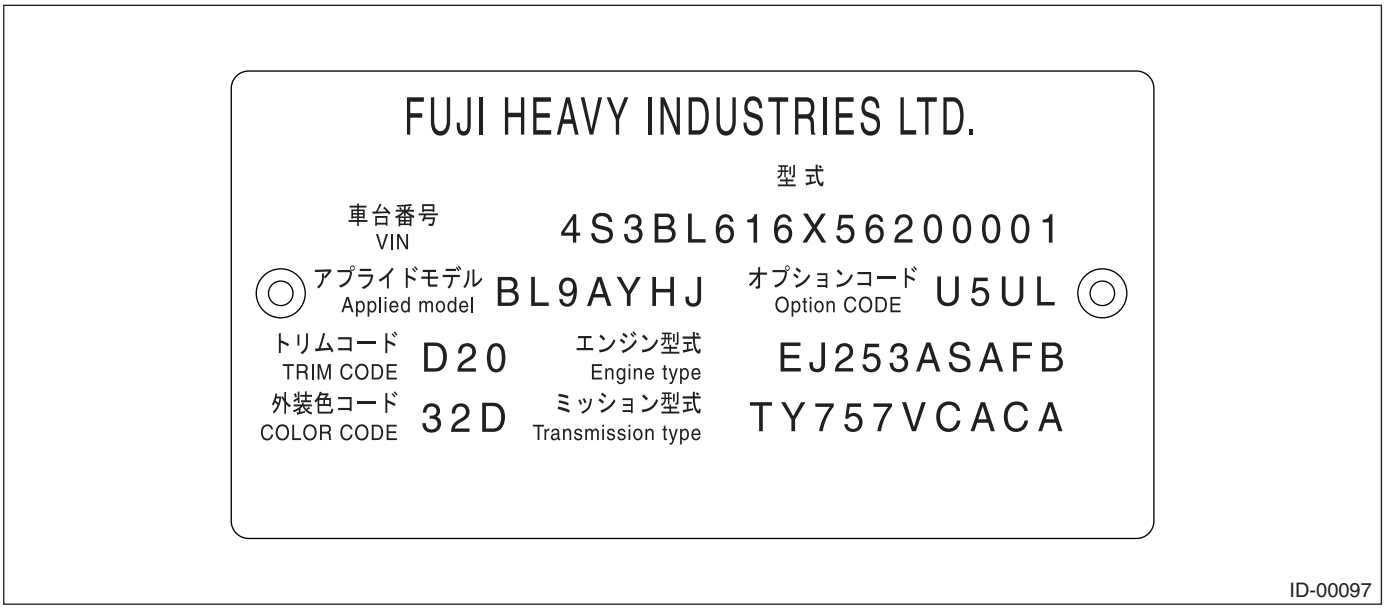

2. MEANING OF V.I.N.

The meaning of the V.I.N. is as follows:
]4S3BL616X56200001[
The starting and ending brackets ( ] [ ) are stop marks.

Digits	Code	Meaning	Details
1 — 3	4S3	Manufacturer body area	4S3: Except for OUTBACK model 4S4: OUTBACK model
4	B	Car line	LEGACY
5	L	Body type	L: Sedan P: Wagon
6	6	Displacement	6: 2.5 L AWD 8: 3.0 L AWD
7	1	Grade	1: i 2: i Limited 4: R 5: R Limited 6: R LL Bean 7: GT Limited or XT Limited 8: GT or XT
8	6	Restraint or GVWR Class	6: Manual belts, Dual airbag, Side airbag (Except for OUTBACK model) C: Class C (GVWR 4001 — 5000 lb) (OUTBACK model)
9	X	Check digit	0 — 9 & X
10	5	Model year	5: 2005MY 6: 2006MY 7: 2007MY
11	6	Transmission type	4: Full-time AWD 5AT 6: Full-time AWD 5MT 7: Full-time AWD 4AT
12 — 17	200001	Serial number	From 200001: Sedan From 300001: Wagon

3. MODEL NUMBER PLATE

The model number plate indicates the type, V.I.N. <Ref. to ID-4, MEANING OF V.I.N., IDENTIFICATION, Identification.>, applied model, option code, trim code, engine type, transmission type and the exterior color code. This information is helpful when placing orders for parts.

• BL9AYHJ

Digits	Code	Meaning	Details
1	B	Series	LEGACY
2	L	Body type	L: Sedan P: Wagon
3	9	Engine displacement Drive system Suspension system	9: 2.5 L AWD E: 3.0 L AWD
4	A	Model year	A: 2005MY
5	Y	Destination	Y: U.S, Canada
6	H	Grade	8: 2.5 GT Limited (Ivory interior) 9: OUTBACK 2.5 XT Limited (Ivory interior) A: OUTBACK 2.5 XT C: 2.5 GT Limited (Black interior) D: OUTBACK 2.5 XT Limited (Black interior) E: 2.5 GT H: 2.5 i K: 2.5 i Limited S: OUTBACK 2.5 i T: OUTBACK 2.5 i Limited U: OUTBACK 3.0 R V: OUTBACK 3.0 R Limited X: OUTBACK 3.0 R LL Bean
7	J	Transmission, fuel feed system	J: SOHC MPI 5MT D: DOHC MPI Turbo 5MT L: SOHC MPI 4AT TIP V: DOHC MPI Turbo 5AT TIP U: DOHC MPI 5AT TIP

The engine and transmission type are as follows:

• ENGINE

EJ253ASAFB

Digits	Code	Meaning	Details
1 and 2	EJ	Engine type	EJ: 4 cylinders EZ: 6 cylinders
3 and 4	25	Displacement	25: 2.5L 30: 3.0L
5	3	Fuel feed system	3: MPI-NA (SOHC) D: MPI-NA (DOHC, H6) 5: MPI turbo
6	A	Emission control	A: For states not using California emission standards B: For USA C: For states using California emission standards
7	S	Transmission	L: 5AT S: 5MT (Flexible type flywheel) T: 5MT (Dual mass type flywheel) V: 4AT (H4), 5AT (H6)
8 — 10	AFB	Detailed specifications	Used when ordering parts. See the parts catalog for details.

• TRANSMISSION

TY757VCACA

Digits	Code	Meaning	Details
1	T	Transmission	T: Transmission
2	Y	Transmission type	Y: Full-time AWD MT center differential G: Full-time AWD AT center differential Z: Full-time AWD AT MPT
3 and 4	75	Classification	75: 5MT 1B: 4AT 5C: 5AT
5	7	Series	LEGACY, OUTBACK
6	V	Transmission specification	C: Full-time AWD VTD 5AT L: Full-time AWD MPT 4AT V: Full-time AWD 5MT Single range with viscous coupling center differential
7	C	Mounted vehicle	C: 2.5 L SOHC M: 3.0 L DOHC W: 2.5 L DOHC Turbo
8 — 10	ACA	Detailed specifications	Used when ordering parts. See the parts catalog for details.

• REAR DIFFERENTIAL

XJ

Code	Reduction gear ratio	LSD
XJ	4.111	None
T1	3.900	None
JP	4.111	Viscous
XU	3.272	Viscous
CF	4.444	Viscous
XW	3.583	Viscous
JE	4.111	Viscous
CD	4.444	Viscous

• OPTION

U5UL

Digits	Code	Meaning	Details
1 — 2	U5	Destination	U5: U.S. For states using California emission standards U6: U.S. For not states using California emission standards U4: U.S. For USA U0: Canada
3	U	Option equipment	E: Vehicle dynamics control (VDC), Cruise control, Power pack U: Cruise control 3: Cruise control, Power pack
4	L	Option equipment	C: A/C, Side airbag, Curtain airbag, Grade up package L: A/C, Side airbag, Curtain airbag W: A/C, Side airbag, Curtain airbag, Sunroof

RECOMMENDED MATERIALS

RM

Page
1. Recommended Materials 2

1. Recommended Materials

A: RECOMMENDED MATERIALS

1. GENERAL

To insure the best performance, always use the specified oil, gasoline, adhesive, sealant, etc. or a substitute of equivalent quality.

2. FUEL

Always use gasoline of the same or higher octane value than specified in the owner's manual. Ignoring the specifications below will result in damage or poor operation of the engine and fuel injection system. Use the specified gasoline to correct performance.

• Unleaded gasoline

Use unleaded gasoline and not leaded gasoline for the vehicle with catalytic converter installed to reduce air pollution. Using leaded gasoline will damage the catalytic converter.

3. LUBRICANTS

Use either the lubricants in the table below or equivalent. See the table below to choose the correct SAE viscosity.

Lubricant	Recommended		Alternative
	API Standard	ILSAC Standard	API Standard
Engine oil	SL Grade "Energy conserving" 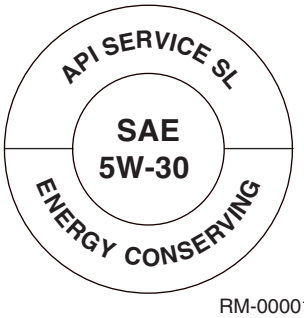 RM-00001 RM-00002	GF-3	SJ
Manual transmission oil	GL-5	—	—
AT front differential gear oil	GL-5	—	—
Rear differential gear oil	GL-5	—	—

SAE viscosity No. and applicable temperature

Engine oil

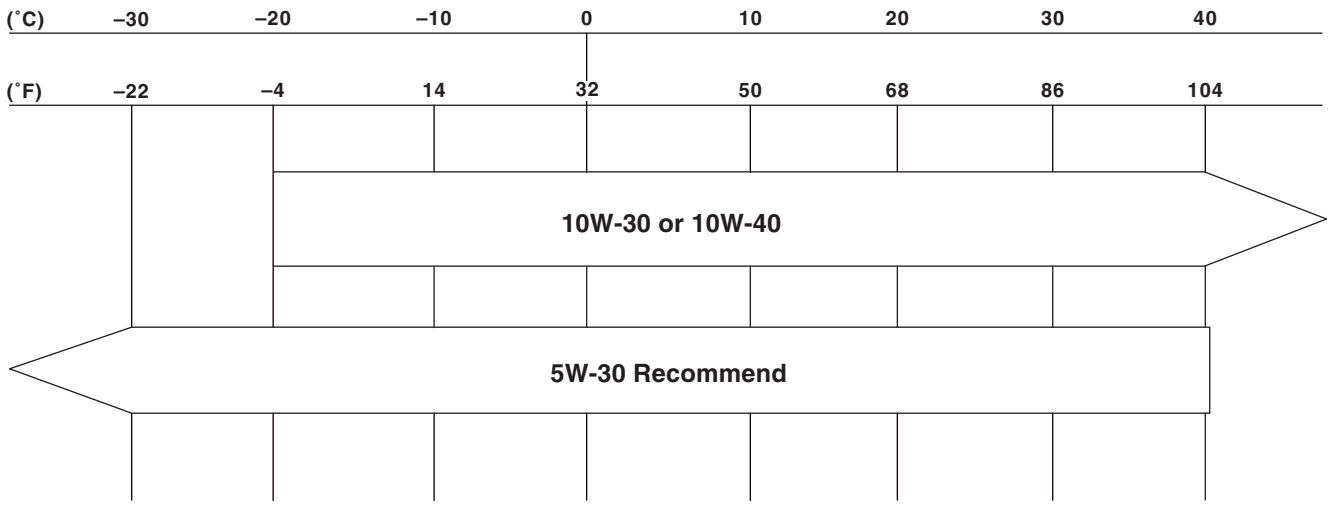

RM-00003

Manual transmission oil, rear differential gear oil and AT front differential gear oil

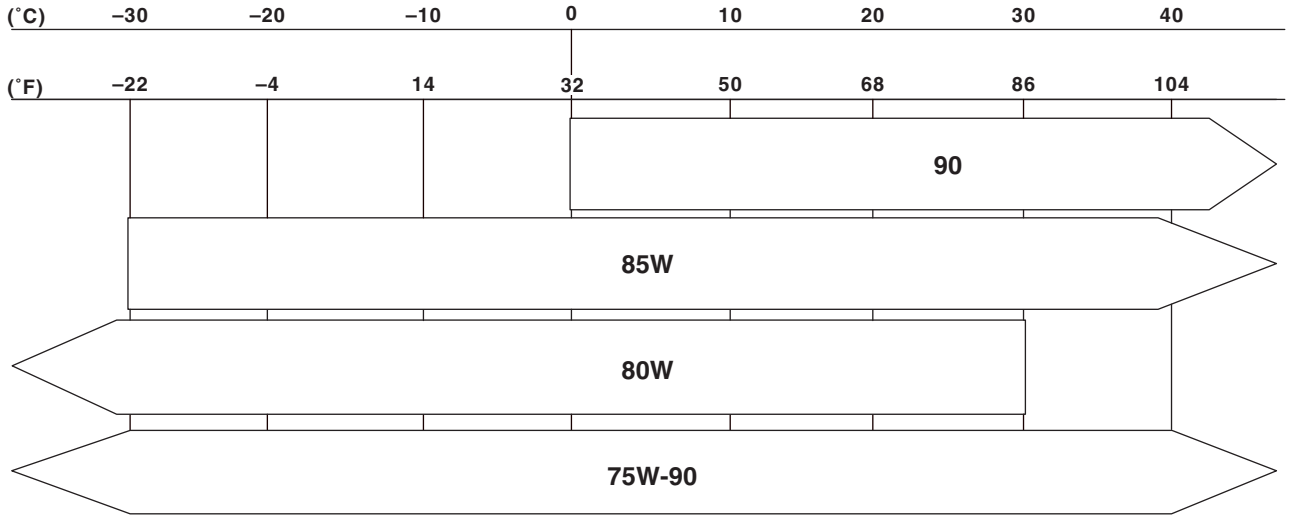

RM-00045

4. FLUID

Use the fluids specified in the table below. Do not mix two different kinds or makes of fluid.

CAUTION:
Be sure to use the recommended or equivalent ATF for 5AT. Using the ATF other than recommended or equivalent would be a trouble cause.

Fluid		Recommended	Alternative	Remarks
Automatic transmission fluid	4AT	SUBARU ATF	IDEMITSU: Apolloil ATF HP Castrol: Transmax J DEXRON III	—
	5AT	SUBARU ATF	IDEMITSU: Apolloil ATF HP Castrol: Transmax J	—
Power steering fluid		DEXRON III	—	—
Brake fluid		FMVSS No. 116 DOT3	—	—
Clutch fluid		FMVSS No. 116 DOT3	—	—

5. COOLANT

Use genuine coolant to protect the engine.

Coolant	Recommended	Item number	Alternative
Coolant	SUBARU coolant	000016218	None
Water for dilution	Distilled water	—	Tap water (Soft water)
Cooling system conditioner	Cooling system conditioner	SOA635071	None

6. REFRIGERANT

Standard air conditioners on Subaru vehicles use HFC134a refrigerant. Do not mix it with other refrigerants. Also, do not use any compressor oil other than DENSO OIL 8.

Air conditioner	Recommended	Item number	Alternative
Refrigerant	HFC134a	—	None
Compressor oil	DENSO OIL 8	—	None

7. GREASE

Use the grease and supplementary lubricants shown in the table below.

Grease	Application point	Recommended	Item number	Alternative
Supplementary lubricants	• Oxygen sensor • Bolts, etc.	Spray type lubricant	—	—
Grease	MT main shaft	NICHIMOLY N-130	—	—
	Clutch master cylinder push rod	SILICONE GREASE G-40M	004404003	—
	• Gear shift lever • Select lever • Clutch operating cylinder • Clutch pedal • Brake pedal • Clutch bearing • Clutch release lever	KOPR-KOTE	003603001	—
	• Door latch • Door striker	SILICONE GREASE G-30M	004404002	—
	Steering gearbox	VALIANT GREASE M2	003608001	—
	Disc brake (Lock pin, guide pin, piston boot)	NIGLUBE RX-2	K0779GA102	—
	Between brake pad and shim	Molykote AS-880N	K0777YA010	—
	Brake pad clip	Molykote M7439	—	—
	Front axle PTJ	NKG302	—	—
	• Front axle EBJ • Rear axle BJ • Rear axle EBJ	NTG2218-M	—	—
	Rear axle DOJ	NKG205	—	—

8. ADHESIVE

Use the adhesives shown in the table below, or equivalent.

Adhesive	Application point	Recommended	Item number	Alternative
Adhesive	Windshield, rear window glass, rear quarter glass, rear gate and body	Dow Automotive's Adhesive: ESSEX U-400HV or equivalent Glass primer: U-401, U-402 Paint surface primer: U-413	—	—
	Rearview mirror base	REPAIR KIT IN MR	65029FC000	—
	Soft vinyl	CEMEDINE 540	—	3M's EC-776, EC-847 or EC-1022 (Spray type)
	Momentary sealant	CEMEDINE 3000	—	ARMSTRONG's Eastman 910

9. SEAL MATERIAL

Use the seal material shown in the table below, or equivalent.

Seal material	Application point	Recommended	Item number	Alternative
Seal material	• MT transmission case • Cylinder block • Converter case • DOHC camshaft cap (Turbo model) • Cylinder head plug (Turbo model) • Oil pump (Except for 3.0 L model)	THREE BOND 1215	004403007	DOW CORNING's No. 7038
	Transmission oil pan (AT model)	THREE BOND 1217B	K0877YA020	—
	Engine oil pan (Except for 3.0 L model)	THREE BOND 1207C	004403012	—
	• Rear differential • Engine oil pressure switch • Connector (Oil hose) (Turbo model) • Cylinder head (Nipple) (3.0 L model) • Camshaft bowl-shape plug (3.0 L model)	THREE BOND 1324	004403042	—
	• Rear differential • PCV valve	THREE BOND 1105	004403010	DOW CORNING's No. 7038
	Steering adjusting screw	THREE BOND 1141	004403006	—
	• SOHC camshaft cap • Cam cap (3.0 L model) • Cylinder head plug (3.0 L model) • Rocker cover (3.0 L model) • Oil pan (Pan upper) (3.0 L model) • Block (Pan upper) (3.0 L model) • Back cover (Front cover, block head, pan upper) (3.0 L model)	THREE BOND 1280B	K0877YA018	THREE BOND 1217G
	• Front sealing cover • Rear sealing cover	3M Butyl Rubber 8626	—	—

PRE-DELIVERY INSPECTION

PI

Page
1. Pre-delivery Inspection.....2

1. Pre-delivery Inspection

A: GENERAL DESCRIPTION

The purposes of the pre-delivery inspection (PDI) are as follows.
- Remove the additional parts used for ensuring the vehicle quality during transportation and restore the vehicle to its normal state.
- Check if the vehicle before delivery is in a normal state.
- Check for any damage to the vehicle or parts that may have taken place during transportation or storage.
- Check if the vehicle after repair is in a normal state.
- Make sure to provide a complete vehicle to the customer.

For the above reasons, all SUBARU dealers (dealerships) carry out the PDIs before delivering a vehicle. Refer to this manual unless otherwise specified.

B: PRE-DELIVERY INSPECTION (PDI) PROCEDURE

STATIC CHECKS JUST AFTER VEHICLE RECEIPT

PROCEDURE	Check point
1. Appearance check	(1) If the vehicle is covered with protective coating, visually check the vehicle body for damage and dents. If the protective coating has been removed, visually check the body paints for damage or stains in detail. (2) Visually check the glass and light lenses for any damage, cracks or excessive gaps to the body sheet metal. (3) Visually check the plated parts for any damage.
2. Tire check	(1) Check the tires for damage, abnormal conditions, and dents on the wheels. (2) Check the tire air pressure.
3. Fuse installation	If the vehicle is about to be delivered to the customer, attach a back-up fuse.
4. Air conditioner harness connection	If the vehicle is about to be delivered to the customer, connect air conditioner harness.
5. Check the doors for lock/unlock and open/close operations.	(1) Using the key, check if the trunk lid can be locked or unlocked normally. (2) Open and close all doors to see that there are no abnormal conditions. (3) Operate the power door lock switch to check that the door (rear gate) is locked and unlocked normally.
6. Check the operation of child safety lock system	Check that the child safety lock system operates normally.
7. Check the trunk lid for open/close operations.	(1) Operate the trunk lock release lever to check that the trunk opens normally. (2) Check that main and sub keys can lock/unlock the release lever, and that valet key can not lock/unlock the release lever. (3) Open and close the trunk lid to see that there are no abnormal conditions.
8. Operation check of trunk lid release lever	Operate the trunk lid release lever to check the trunk lock is unlocked normally.
9. Check the rear gate for lock/unlock and open/close operations.	(1) Check if the rear gate can be unlocked normally through the emergency hole. (2) Open and close the rear gate to see that there are no abnormal conditions.
10. Operation check of fuel lid opener lock release lever	Operate the fuel lid opener to check that the fuel filler flap lid is unlocked normally.
11. Accessory check	Check that the following accessories are provided. • Owner's manual • Warranty booklet • Maintenance note • Spare key • Jack • Tool set • Spare tire
12. Operation check of front hood lock release system	Operate the front hood lock release lever to check that the front hood is unlocked normally.
13. Battery	Check the battery terminals for any abnormal conditions such as rust and trace of battery fluid leaks.

PROCEDURE	Check point
14. Brake fluid	Check that the fluid level is normal.
15. Engine oil	Check that the oil level is normal.
16. Transmission gear oil	Check that the transmission gear oil level is normal.
17. AT front differential oil	Check that the AT front differential oil level is normal.
18. Engine coolant	Check that the engine coolant level is normal.
19. Clutch fluid	Check that the clutch fluid level is normal.
20. Window washer fluid	Check that the window washer fluid level is normal.
21. Front hood latch check	Check that the hood is closed and latched securely.
22. Keyless entry system	Check that the keyless entry system operates normally.
23. Alarm system	Check that the alarm system operates normally.
24. Seat	(1) Check the seat surfaces for stain or dirt. (2) Check the seat installation conditions and functionality. (3) Check that the occupant detection system for passenger's seat operates normally.
25. Seat belt	(1) Check the seat belt installation conditions and functionality. (2) Check that the seat belt warning system operates normally.
26. Wheel alignment	Check that the wheel alignments are properly adjusted.

CHECKS WITH ENGINE RUNNING

PROCEDURE	Check point
27. Test mode connector	Test mode connector
28. Immobilizer system	(1) Check that the engine starts with all keys that are equipped on vehicle. (2) 60 seconds after turning ignition switch from ON to ACC or OFF, or immediately after removing key, check that the security indicator light blinking.
29. Starting condition	Start the engine and check that the engine starts smoothly.
30. Exhaust system	Check that the exhaust noise is normal and no leaks are found.
31. Indicator and warning lights	Check that all the indicator and warning lights are gone out.
32. Clock	Check that the clock operates normally.
33. Audio	Check the radio, CD player for normal operation.
34. Front accessory power supply socket	Check that the front accessory power socket operates normally.
35. Lighting system	Check that the lighting system operates normally.
36. Wiper deicer	Check that the wiper deicer operates normally.
37. Illumination control	Check that the illumination control operates normally.
38. Window washer	Check that the window washer system operates normally.
39. Wiper	Check that the wiper system operates normally.
40. Power window operation check	Check the power window for normal operations.
41. Sunroof	Check that the sunroof operates normally.
42. Door mirror	Check that the remote control mirror operates normally.

DYNAMIC TEST WITH VEHICLE RUNNING

PROCEDURE	Check point
43. Brake test	Check the foot brake for normal operations.
44. Parking brake	Check the parking brake for normal operations.
45. AT shift control	Check that the AT shift patterns are correct.
46. Heater & ventilation	Check that the heater & ventilation system operates normally.
47. Air conditioner	Check that the air conditioner operates normally.
48. Cruise control	Check that the cruise control system operates normally.

CHECKS AFTER DYNAMIC TEST

PROCEDURE	Check point
49. ATF level	Check that the ATF level is correct.
50. Power steering fluid level	Check that the power steering fluid level is normal.
51. Fluid leak check	Check for fluid/oil leaks.
52. Water leak test	Spray the vehicle with water and check for water leaks.
53. Appearance check 2	(1) Remove the protective coating (if any). (2) Check the body paints for damage and stain. (3) Check the plated parts for damage and rust.

1. APPEARANCE CHECK

• If the vehicle is covered with protective coating, visually check the vehicle body for damage and dents.
• When the protective coating is removed, visually check the body paints for damage or stains in detail and repair as necessary.
• Visually check the windshield glass, door glasses and light lenses for any damage, cracks or excessive gaps to the body sheet metal and repair as necessary.
• Visually check the plated parts, such as the grilles and door knobs, for damage or loss of gloss and replace the parts as necessary.

2. TIRE CHECK

• Check the tires for damage, abnormal conditions, and dents on the wheels.
• Check and adjust the tire size, spare tire and tire air pressure described on the tire air pressure label (driver's side).

3. FUSE INSTALLATION

Fuses for the back-up circuit have been removed to prevent battery discharge. If the vehicle is about to be delivered to the customer, attach a 20 A fuse (A) as shown in the figure.

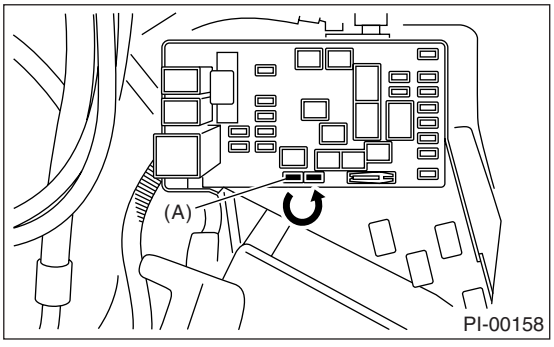

4. CONNECTION OF AIR CONDITIONER HARNESS

A vehicle just delivered has its air conditioner harness disconnected to protect the air conditioner compressor. Connect the harness as shown in the figure. (Except for 3.0 L model)

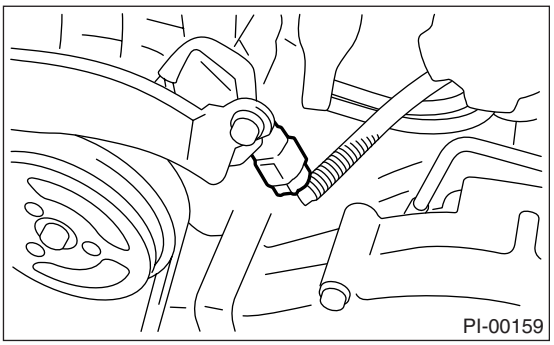

5. CHECK DOORS FOR LOCK/UNLOCK AND OPEN/CLOSE OPERATIONS

1) Using the key, lock and unlock the door several times to check for normal operation. Open and close the door several times for smooth movement.

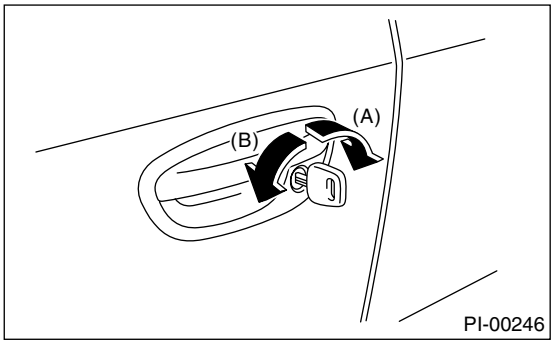

(A) Unlock
(B) Lock

2) Completely close the driver's door, and then check the smooth movement with operating door lock knob from lock to unlock several times.
Set the door lock knob (A) to lock position. Then pull the inner remote (B) to ensure that doors will not open.

For other doors, place the door lock knob (A) to lock position and then pull the inner remote (B) to ensure that doors will not open.

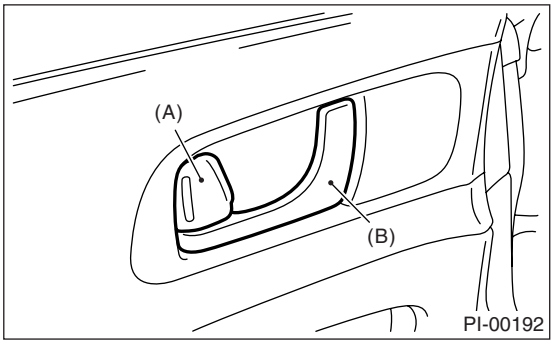

(A) Door lock knob
(B) Inner remote

3) Close all the doors, and then press the lock on power door lock switch at driver's side. Check that all doors including rear gate are locked.

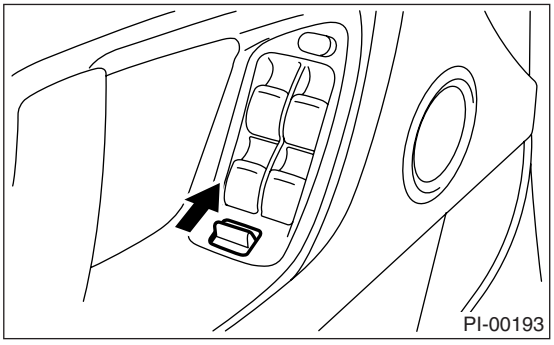

4) Press the driver's side power door lock switch to unlock side. Check that all doors including rear gate are unlocked.

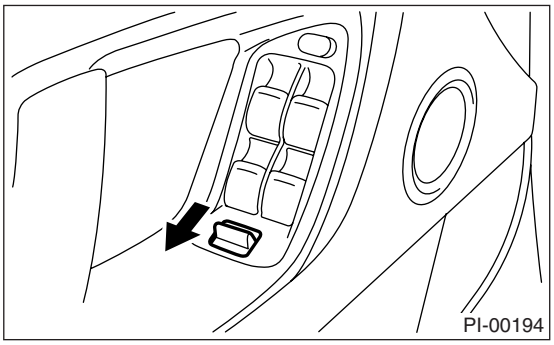

5) Press the passenger's side power door lock switch to lock/unlock also. Check that all doors including rear gate are locked/unlocked.

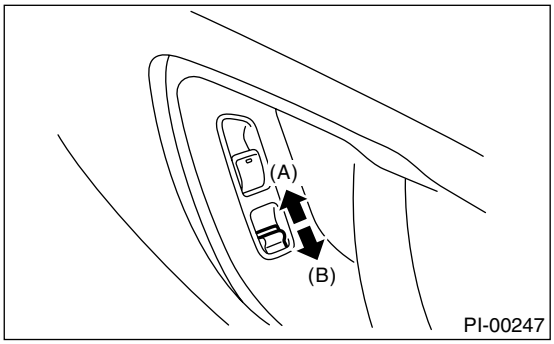

(A) Lock
(B) Unlock

6) Insert the key to ignition switch, and open the driver's side door. Press lock on power door lock. Check that the door is not locked.

6. CHECK OPERATION OF CHILD SAFETY LOCK SYSTEM

1) Set the child safety lock on both rear doors to the lock position.
2) Close the rear doors completely.
3) Check that the lock levers of the rear doors are in the unlock position. Then, pull inner remote of rear doors to ensure that doors will not open.

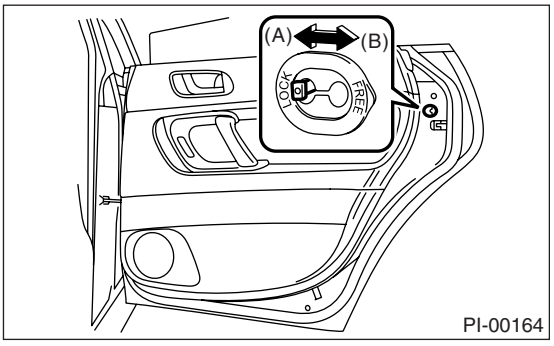

(A) Lock
(B) Unlock

4) Pull the outer handles to ensure that doors will open.

7. CHECK TRUNK LID FOR OPEN/CLOSE OPERATIONS

1) Operate the trunk lock release lever to check that the trunk opens normally.
2) Open and close the trunk lid several times for smooth movement.
3) Lock the trunk lock release lever using main key or sub key.

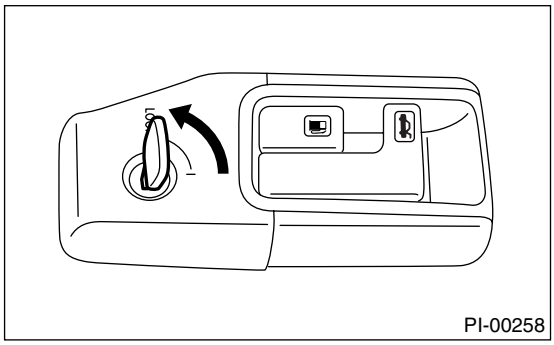
PI-00258

4) Check that the trunk lock release lever does not operate.
5) Check if the trunk lock release lever is not locked and unlocked using valet key.

8. OPERATION CHECK OF TRUNK LID RELEASE HANDLE

1) Use a flat-tip screwdriver. Slide the screwdriver blade from the slit aperture of the lock assembly fully to the end until you hear a click. This places the latch in the locked position.

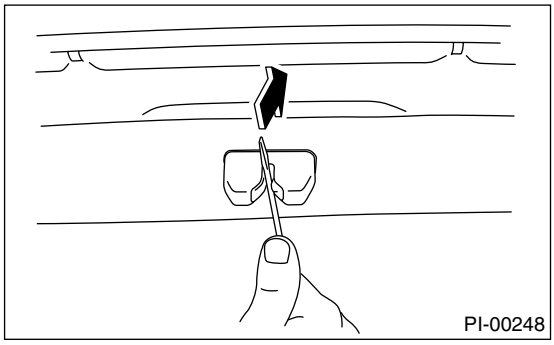
PI-00248

2) Move the release handle from outside the vehicle in the direction of the arrow to check if the latch is released.

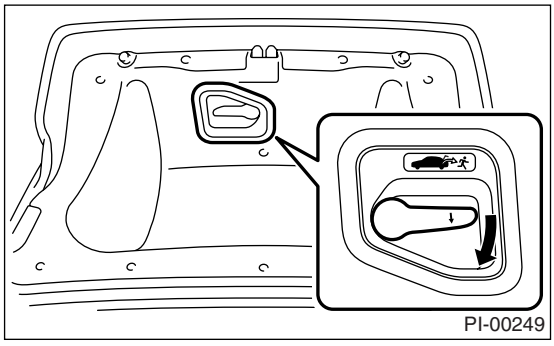
PI-00249

9. CHECK REAR GATE FOR LOCK/UNLOCK AND OPEN/CLOSE OPERATIONS

1) Open and close the rear gate several times for smooth movement.
2) Operate the rear gate lever to check that the rear gate is locked and unlocked normally.
(1) Remove the cover inside the rear gate.

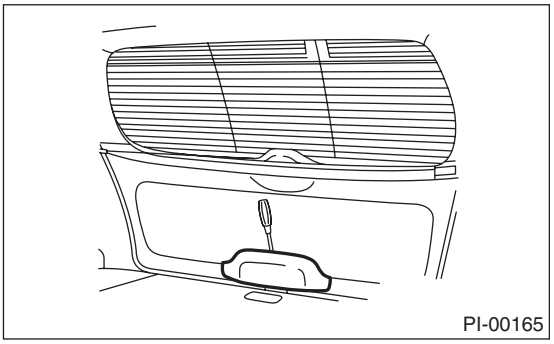
PI-00165

(2) Operate the lever to check that the rear gate is locked and unlocked normally.

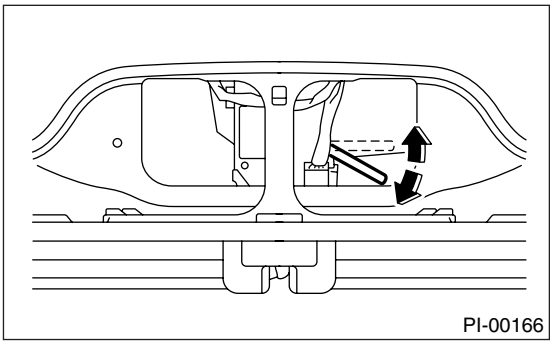
PI-00166

10.OPERATION CHECK OF FUEL LID OPENER LOCK RELEASE LEVER

Operate the fuel lid opener and verify that the fuel filler flap lid is unlocked normally. Check that the filler cap is securely closed.

11.ACCESSORY CHECK

Check that the following accessories are provided.
- Owner's manual
- Warranty booklet
- Maintenance note
- Spare key
- Jack
- Tool set

- Spare tire

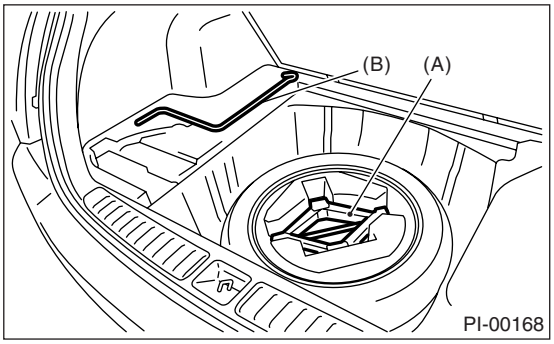

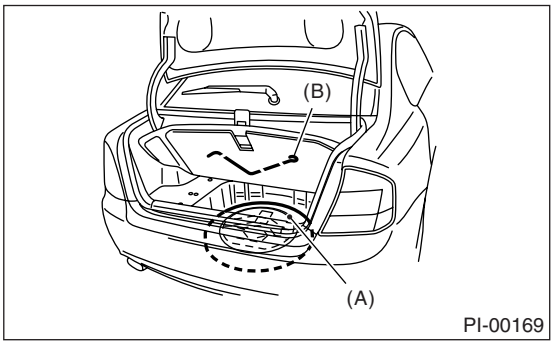

(A) Jack
(B) Jack handle

12.OPERATION CHECK OF FRONT HOOD LOCK RELEASE SYSTEM

Operate the front hood lock release lever (A) to check that the front hood is unlocked normally.

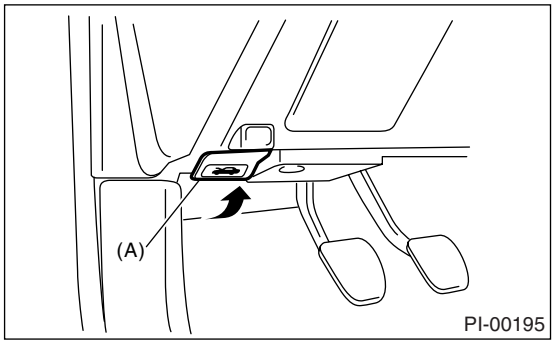

Operate the lever (B) and check that the front hood is opened normally. Support the front hood with hood stay.

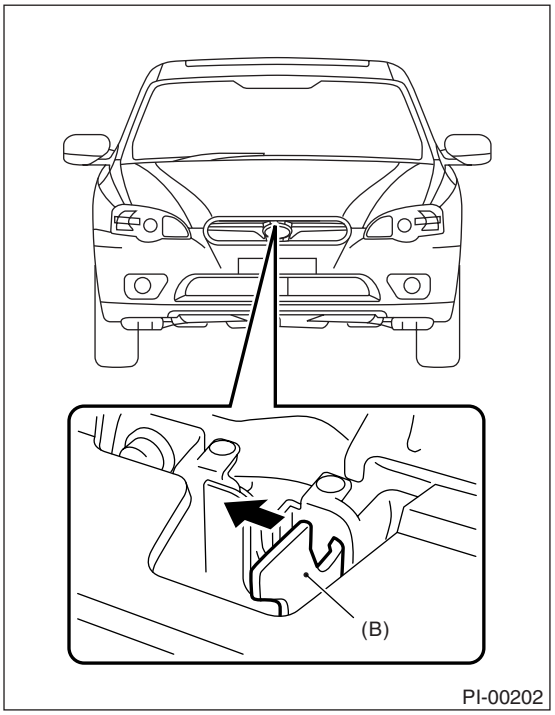

13.BATTERY

Check the battery terminals to make sure that there are no rust or corrosions due to fluid leaks.

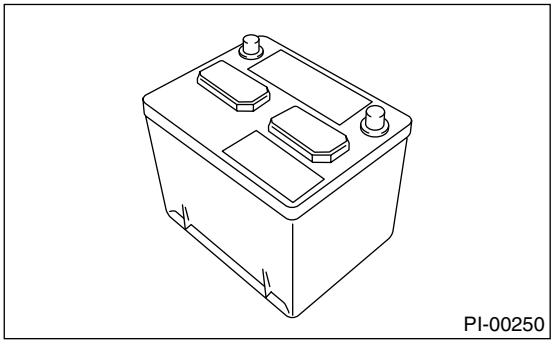

14.BRAKE FLUID

Check that the brake fluid level is normal. If the amount is insufficient, carry out a brake line test to identify brake fluid leaks and check the brake operation. After that, refill the brake fluid tank with the specified type of fluid.

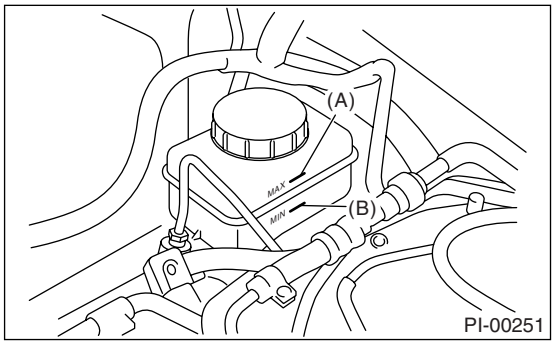

(A) MAX. level
(B) MIN. level

15.ENGINE OIL

Check the engine oil amount. If the amount of oil is insufficient, check that no leaks are found. Then, add the necessary amount of the specified engine oil.

- Except for 3.0 L model

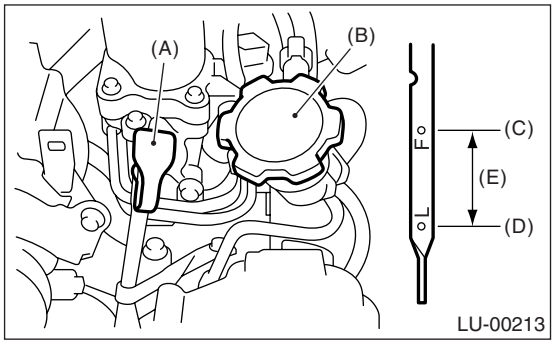

(A) Oil level gauge
(B) Engine oil filler cap
(C) Upper level
(D) Lower level
(E) Approx. 1.0 ℓ (1.1 US qt, 0.9 Imp qt)

- 3.0 L model

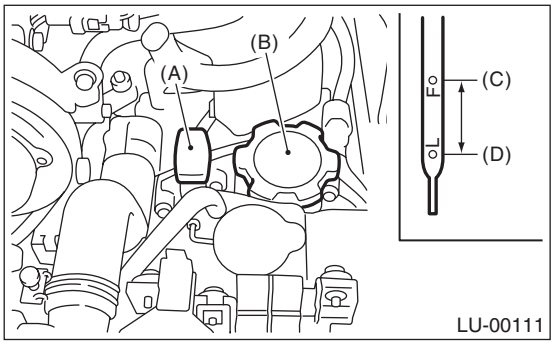

(A) Oil level gauge
(B) Engine oil filler cap
(C) Upper level
(D) Lower level

16.TRANSMISSION GEAR OIL

Check that the transmission gear oil level is normal. If the amount of fluid is insufficient, check that no leaks are found. Then, add the necessary amount of the specified transmission gear oil.

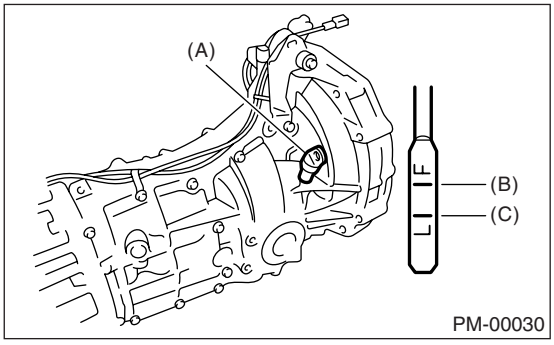

(A) Oil level gauge
(B) Upper level
(C) Lower level

17.AT FRONT DIFFERENTIAL OIL

Check that the AT front differential oil level is normal. If the amount of oil is insufficient, check that no leaks are found. Then, add the necessary amount of the specified AT front differential oil.

- 4AT model

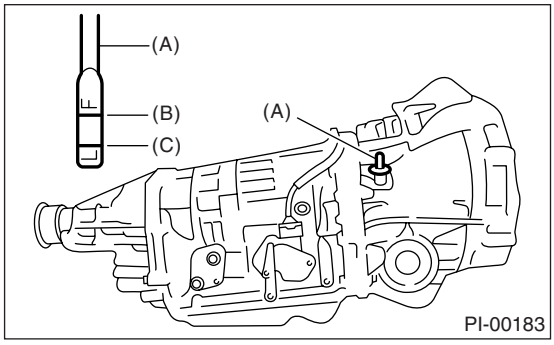

(A) Oil level gauge
(B) Upper level
(C) Lower level

- 5AT model

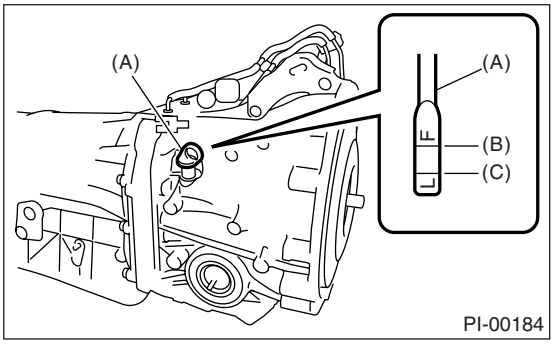

(A) Oil level gauge
(B) Upper level
(C) Lower level

18.ENGINE COOLANT

Check that the engine coolant level on the reservoir tank is normal. If the amount of engine coolant is insufficient, check that no leaks are found. Then, add the necessary amount of coolant with the specified concentration.

19.CLUTCH FLUID

Check that the clutch fluid level is normal. If the amount of fluid is insufficient, check that no leaks are found. Then, add the necessary amount of specified fluid.

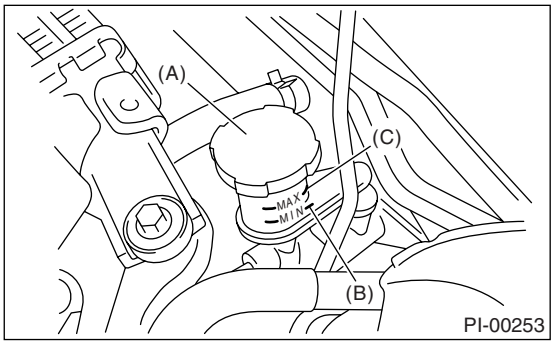

(A) Reservoir tank
(B) MIN. level
(C) MAX. level

20.WINDOW WASHER FLUID

Check that the window washer fluid level is normal. If the amount is insufficient, check that no leaks are found. Then, add the necessary amount of washer fluid.

21.FRONT HOOD LATCH CHECK

Retract the hood stay and close the front hood. Check that the front hood is securely latched.

22.KEYLESS ENTRY SYSTEM

NOTE:
The following inspections show the initial settings. When the settings are different from the initial settings, use Subaru Select Monitor to check the details of each setting for inspections. <Ref. to LAN(diag)-26, OPERATION, Read Current Data.>

1) Fully open all the door windows.
2) Remove the key from the ignition switch and close all the doors including rear gate.
3) Press the trunk and the rear gate open button for more than one second.

- Check if the trunk is opened and the hazard light blinks twice and the buzzer sounds twice. (Sedan Model)

• Check if the rear gate is unlocked and the hazard light blinks twice and the buzzer sounds twice. (Wagon Model)

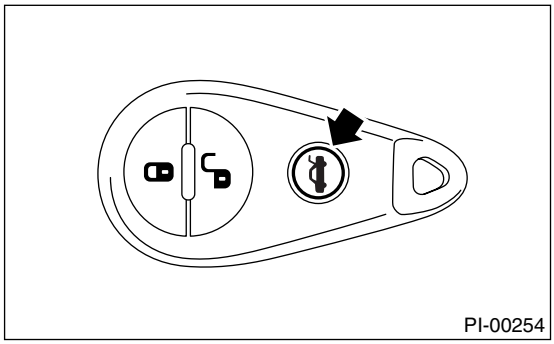
PI-00254

4) Press the “LOCK” button on the keyless transmitter with one of the doors (including rear gate and trunk) opened. Check if all the doors are locked, hazard light blinks five times and the buzzer sounds five times and warning shows one of the doors (including rear gate and trunk) open.
5) Press the “LOCK” button momentarily on the keyless transmitter. Check that all the doors (including rear gate and trunk) are locked, hazard light blinks once and buzzer sounds once.

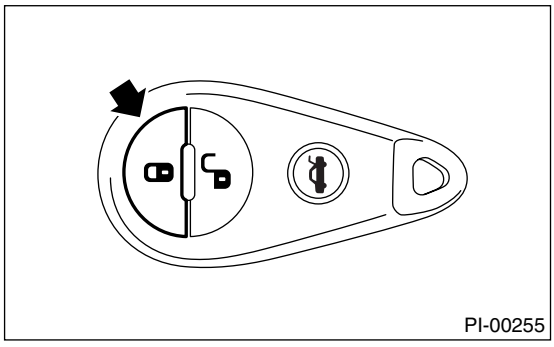
PI-00255

6) Press the “UNLOCK” button momentarily on the keyless transmitter. Check that the driver’s door is unlocked and hazard light blinks twice and the buzzer sounds twice.
And press the “UNLOCK” button momentarily again in 5 seconds. Check that all the doors including rear gate are unlocked.

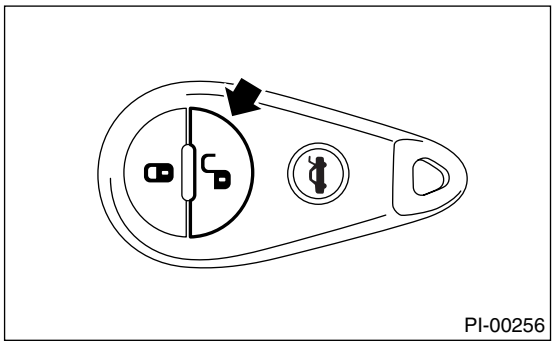
PI-00256

7) Within a distance of 10 m (33 ft) from a vehicle, press keyless transmitter’s “LOCK” button three times within 5 seconds. Confirm that horn sounds once and hazard light blinks three times.
8) Move the power door lock sounds switch to “LOCK” position with any one of the doors including the rear gate open. Then, bring all the doors including the rear gate in the closed condition and check if all the doors are locked, the buzzer sounds once, and the hazard light blinks once.
9) Check selecting audible buzzer operation.
An audible buzzer will be sounded when the doors lock and unlock.
If desired, you may turn the audible buzzer off.
To turn the audible buzzer off, carry out the unlocking procedure of keyless entry system, then simultaneously depress LOCK and UNLOCK buttons for more than two seconds.
The buzzer will sound twice, and hazard light will blink twice to inform you that the audible signal has been turned off.
To turn the audible buzzer on, carry out the unlocking procedure of keyless entry system, then simultaneously depress LOCK and UNLOCK buttons for more than two seconds.
The buzzer will sound once and hazard light will blink once to inform you that the audible buzzer has been turned on.

23.ALARM SYSTEM

NOTE:
The following inspections show the initial settings. When the settings are different from the initial settings, use Subaru Select Monitor to check the details of each setting for inspections. <Ref. to LAN(diag)-27, OPERATION, Function Setting (Customize).>

1) Fully open all the door windows.
2) Remove the key from the ignition switch and close all the doors including rear gate.

3) Press the “LOCK” button momentarily on the keyless transmitter. All doors are locked, and buzzer sound once, hazard blinks once, security indicator light blinks faster (five times per two seconds) for 30 seconds and goes slower (twice per two seconds), then the alarm system is in set condition.

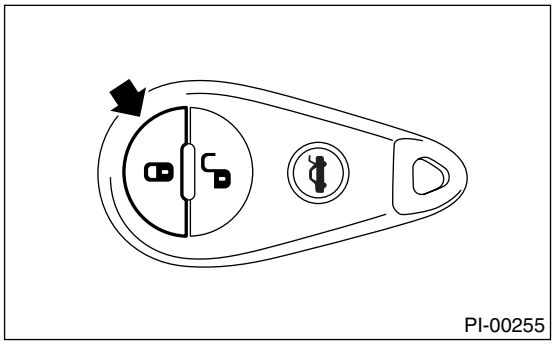
PI-00255

4) Press the “UNLOCK” button momentarily on the keyless transmitter. When the door of driver seat is unlocked, buzzer sounds twice, hazard light blinks twice, room light comes on and security indicator operates (goes off for model without immobilizer, blinks once per three seconds for model with immobilizer), then the alarm system is in release condition.

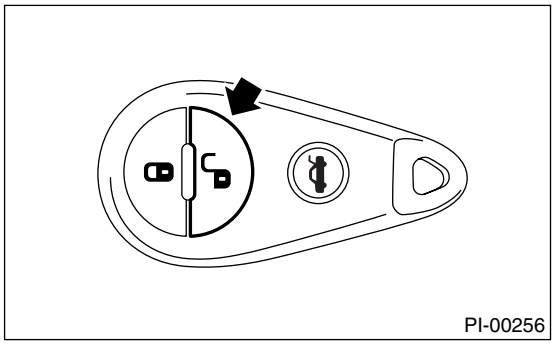
PI-00256

5) Close all the doors including rear gate. Press the “LOCK” button momentarily on the keyless transmitter. When all the doors are locked, buzzer sounds once, hazard blinks once and the alarm system is in set condition in 30 seconds.
6) Unlock a door using the inner lock knob and open the door while the security system is in the set mode. Check if the alarm condition happens (horn sounds continuously, hazard light blinks, security indicator comes on). Check if this condition lasts for Max. three minutes or until the “UNLOCK” button of the keyless transmitter is pressed.

NOTE:
The alarm condition will cease in 30 seconds once the door is closed.

7) Press the “PANIC” button on the backside of keyless transmitter and check if a panicking condition occurs: the horn sounds continuously, the hazard lights blink and the security indicator light comes on. Also, check if that condition lasts until any button of the keyless transmitter is pressed.

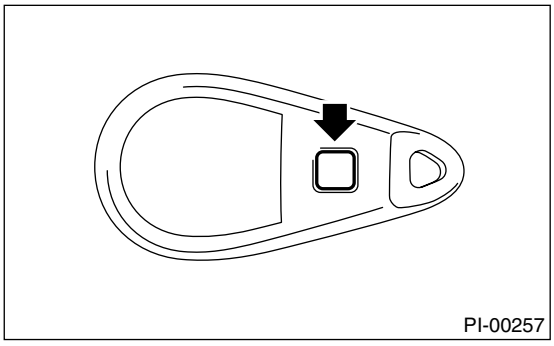
PI-00257

8) When none of above is applicable, perform the troubleshooting of security system.

24.SEAT

1) Check the seat surfaces for stains or dirt.
2) Check that each seat provides full functionality in sliding and reclining. Check all available functions of the rear seat such as a trunk-through center armrest.
3) Check occupant detection system for passenger seat.
(1) Turn the ignition switch to ON.
(2) Check that the ON and OFF of passenger’s airbag indicator light come on simultaneously for about six seconds and go off for two seconds, and then only OFF comes on again.

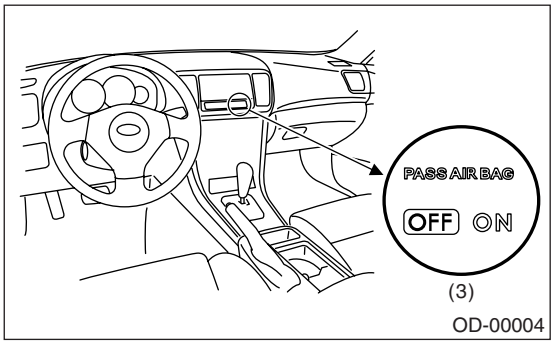

(3)
OD-00004

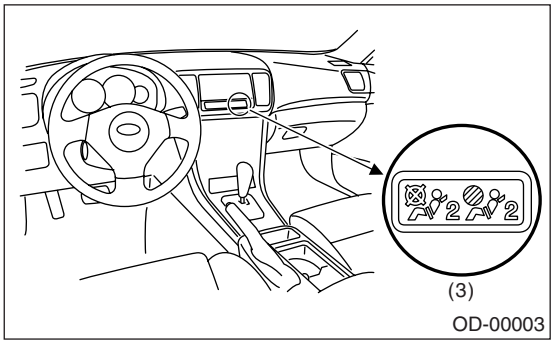
(3)
OD-00003

(3) Put the special tool weights A and B in the passenger seat to check if the ON of passenger's airbag indicator light comes on in about four seconds.
(4) Empty the passenger seat and check if the OFF of passenger's airbag indicator light comes on in about two seconds.

25.SEAT BELT

1) Check installation condition of seat belt.
2) Pull out the seat belt and then release it. Check that the belt retracts smoothly.
3) Check seat belt warning system
(1) Turn the ignition switch to ON without fastening driver's and passenger's seat belts.
(2) Check if the Seat belt warning lights of driver's and passenger's side blink for about six seconds and the buzzer beeps intermittently.
(3) Then, check that the seat belt warning light comes on → blink → buzzer beeps in about 15-second cycles. (If the passenger seat is empty, seat belt warning light for passenger's side does not operate.)

26.WHEEL ALIGNMENT

Check the wheel alignment. <Ref. to FS-7, Wheel Alignment.> <Ref. to RS-8, Wheel Alignment.>

27.TEST MODE CONNECTOR

Turn the ignition switch to ON and check that the malfunction indicator light starts blinking. If the light blinks, return the ignition key to LOCK. Pull out the test mode connector from the back of glove box lower cover, and disconnect the test mode connector. Then, turn the ignition key to ON again. If the malfunction indicator light blinks at that time in spite of the disconnected test mode connector, carry out an engine diagnosis.

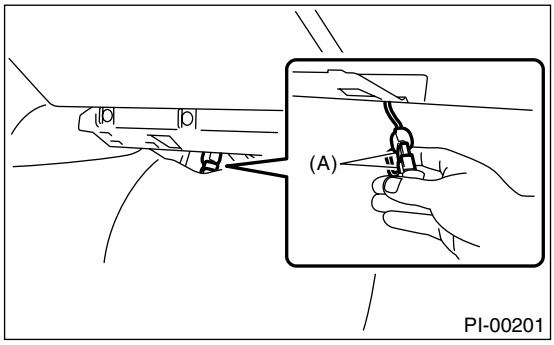

(A) Test mode connector (green)

28.IMMOBILIZER SYSTEM

1) Check that the engine starts with all keys that are equipped on vehicle.
2) 60 seconds after turning the ignition switch from ON to ACC or OFF, or immediately after removing the key, check that the security indicator light blinking.

NOTE:
If malfunctions occur, refer to "IMMOBILIZER (DIAGNOSTICS)".

29.STARTING CONDITION

Start the engine and check that the engine starts smoothly. If the battery voltage is low, recharge or replace the battery. If any noises are observed, immediately stop the engine and check and repair the abnormal components.

30.EXHAUST SYSTEM

Listen to the exhaust sound to see if no noises are observed. Check the exhaust leaks.

31.INDICATOR AND WARNING LIGHTS

Check that all the indicator and warning lights are off.

32.CLOCK

Check the clock for normal operations and enough accuracy.

33.AUDIO

Check the radio for full functionality and normal noise level. Also check the CD unit operations.

34.FRONT ACCESSORY POWER SUPPLY SOCKET

1) Check operation for the front accessory power socket.
2) Check operation of the accessory power socket in console box.

35.LIGHTING SYSTEM

1) Check the headlight operations.
2) Check the stop light operation.
3) Check other lights for normal operations.

36.WIPER DEICER

Check that the wiper deicer operates normally.

37.ILLUMINATION CONTROL

Check that the illumination control operates normally.

38.WINDOW WASHER

Check that the window washer system injects washer fluid to the specified area of the windshield shown in the figure.

Front injection position:
A: 250 mm (9.84 in)
B: 435 mm (17.1 in)

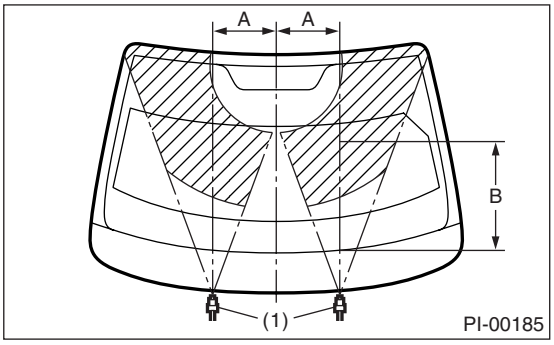

(1) Nozzle

Rear injection position:
Wagon model
A: 70 mm (2.8 in)
B: 70°

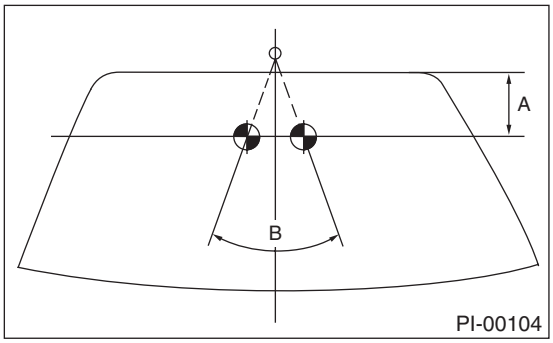

39.WIPER

Check the front and rear wipers for normal operations.

40.POWER WINDOW OPERATION CHECK

Operate the power window switches one by one to check that each of the power windows goes up and down without noises.

41.SUNROOF

Check the sunroof for normal operations.

42.DOOR MIRROR

Check the remote control mirror for normal operations.

43.BRAKE TEST

Check the foot brake for normal operations.

44.PARKING BRAKE

Check the parking brake for normal operations. When applying the parking brake with force of 200 N (20.4 kgf, 45.0 lb), check that the lever stroke of parking brake lever is 5 to 6 notches.

45.AT SHIFT CONTROL

1) Turn the ignition switch to ON.
2) While brake pedal is not depressed, check if the select lever does not move from “P” range.
3) While brake pedal is depressed, check if the select lever moves from “P” range.
4) Set the select lever to other than “P” range.
5) When the ignition switch is turned OFF, check if the ignition key switch cannot be removed.
6) Set the AT select lever to each gear position and check the shifting while driving the vehicle.

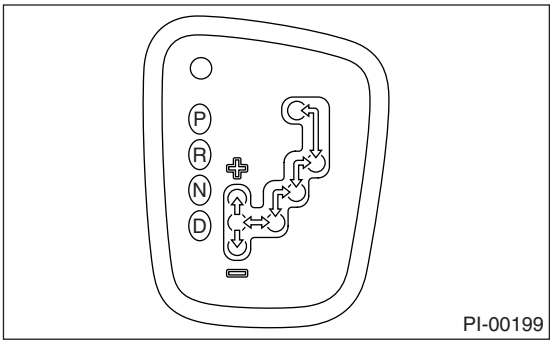

- 4AT

Selector Position	Gear Position			
	1st	2nd	3rd	4th
D	OK	OK	OK	OK
SPORT shift	OK	OK	OK	OK

- 5AT

Selector Position	Gear Position				
	1st	2nd	3rd	4th	5th
D	OK	OK	OK	OK	OK
SPORT shift	OK	OK	OK	OK	OK

46.HEATER & VENTILATION

Operate the heater and ventilation system to check for normal airflow outlet control, air inlet control, airflow capacity and heating performance.

47.AIR CONDITIONER

Operate the air conditioner. Check that the A/C compressor operates normally and enough cooling is provided.

48.CRUISE CONTROL

Operate the cruise control system. Check that the system is activated and deactivated correctly.

49.ATF LEVEL

After selecting all positions (P, R, N, D), set the select lever in “P” range. Measure the ATF level with engine idling for one or two minutes. If the amount is insufficient, check that no leaks are found. Then add the necessary amount of the specified ATF.

- 4AT

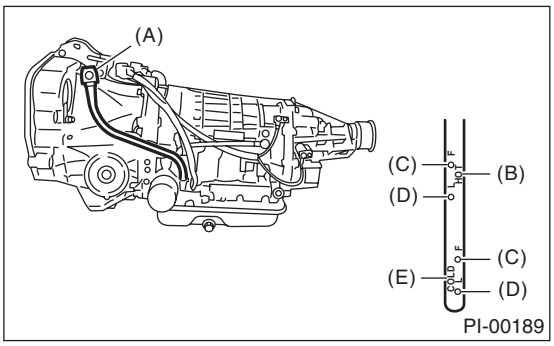

(A) Level gauge
(B) ATF level range [70 — 80°C (158 — 176°F)] at “HOT”
(C) Upper level
(D) Lower level
(E) ATF level range [20 — 30°C (68 — 86°F)] at “COLD”

- 5AT

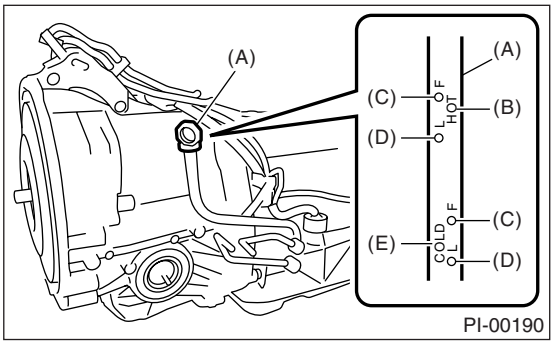

(A) Level gauge
(B) ATF level range [70 — 80°C (158 — 176°F)] at “HOT”
(C) Upper level
(D) Lower level
(E) ATF level range [20 — 30°C (68 — 86°F)] at “COLD”

50.POWER STEERING FLUID LEVEL

Check that the power steering fluid level is normal. If the amount is insufficient, check that no leaks are found. Then add the necessary amount of the specified power steering fluid.

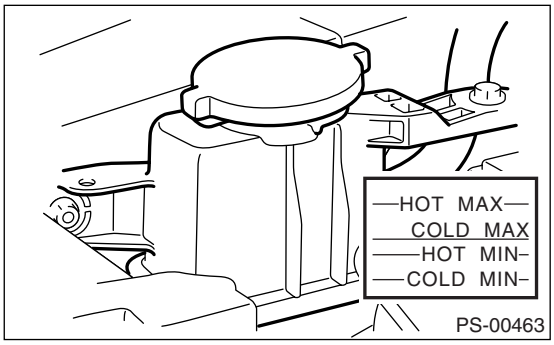

51.FLUID LEAK CHECK

Check entire areas of the vehicle for any trace of coolant/oil/fluid leaks.

52.WATER LEAK TEST

Spray the vehicle with water using a hose and check that no water enters the passenger compartment.

- Before performing the water leakage test, remove anything that may obstruct the operation or which must be kept dry.
- Close all the windows and doors securely. Close the hood and trunk lid before starting the test.
- Spray the vehicle with water using a hose. The rate of water spray must be approx. 20 to 25 ℓ (5.3 to 6.6 US gal, 4.4 to 5.5 Imp gal) per minute.

When spraying water on areas adjacent to the floor and wheel house, increase the pressure. When spraying water on areas other than the floor and wheel house, decrease the pressure. But the force of water must be made strong occasionally by pressing the end of the hose.

NOTE:
Be sure to keep the hose at least 10 cm (3.9 in) from vehicle.

Check the following areas.

- Front window and body framework mating portion
- Door mating portions
- Glass mating portions
- Rear quarter window mating portions
- Rear window and body framework mating portion
- Around roof drips

If any dampness in the compartments is discovered after the water has been applied, carefully check all the areas that may have possibly contributed to the leak.

53.APPEARANCE CHECK 2

1) When vehicle body is covered with protective film, peel it off.

NOTE:
• Use of steam facilitates peeling off the warp guard.
• For the vehicle left for a long time or at low temperature, sprinkle some water heated 50 — 60°C (122 — 140°F) over the vehicle to raise its surface temperature before peeling off the wrap guard. Do not use the water heated to over 60°C (140°F).
• If the adhesive remains exists on the coated surface, soak a flannel rag, etc. with a small amount of coating wax or solvent such as oil benzene and IPA, put the soaked cloth on the remains lightly, and then wipe them off with a flannel rag, etc.
• Keep solvent from touching the resin or rubber parts. Do not use coating wax or solvent while the component surface temperature is high due to hot weather, etc.
• If the coated surface is swollen out due to seams or moisture, expose the vehicle to the sunlight for a few hours or heat the seam and swollen portions using a dryer, etc.
• Dispose of the peeled wrap guard as burnable industrial garbage.

2) Check the whole vehicle body for flaking paint, damage by transportation, corrosion, dirt, cracks or blisters.

NOTE:
• It is better to determine an inspection pattern in order to avoid missing an area, since the total inspection area is wide.
• Do not repair the body paint unless absolutely necessary. Also, if the vehicle is in need of repair to remove scratches or corroded paint, the repair area must be limited to the minimum. Re-painting and spray painting must be avoided as possible.

3) Check each window glass for scratches carefully. Slight damage may be removed by polishing with cerium oxide. (Fill a cup half with cerium oxide, and add warm water to it. Then agitate the content until it turns to wax. Apply this wax to a soft cloth, and polish the glass with it.)
4) Check each portion of the vehicle body and underside components for the formation of rust. If rust is discovered, remove it with sandpaper of #80 to #180 and treat the surface with rust preventive. After this treatment is completed, flush the portion thoroughly, and prepare the surface for repair painting.
5) Check each portion of body and all of the plated parts for deformation or distortion. Also, check each lamp lens for cracks.
6) Peel the protective tape, vinyl wrapping and identification seal attached to the following places.
• Seat
• Door trim
• Floor carpet
• Side sill
• Front hood lock release lever
• Edge rear
• Rear wiper
• Sedan rear combination light (Trunk lid opening portion)
• Roof rail
• Door mirror

PERIODIC MAINTENANCE SERVICES

PM

		Page
1.	General Description	2
2.	Schedule	3
3.	Engine Oil	8
4.	Engine Oil Filter	10
5.	Spark Plug	11
6.	V-belt	12
7.	Timing Belt	15
8.	Fuel Line	18
9.	Air Cleaner Element	19
10.	Cooling System	20
11.	Engine Coolant	22
12.	Clutch System	24
13.	Transmission Gear Oil	25
14.	Automatic Transmission Fluid	26
15.	Front & Rear Differential Gear Oil	28
16.	Brake Line	30
17.	Brake Fluid	32
18.	Disc Brake Pad and Disc	33
19.	Parking Brake	34
20.	Suspension	35
21.	Wheel Bearing	37
22.	Axle Boots & Joints	38
23.	Tire Rotation	39
24.	Steering System (Power Steering)	40
25.	Supplemental Restraint System	43

1. General Description

A: GENERAL DESCRIPTION

Be sure to perform periodic maintenance in order to maintain vehicle performance and find problems before they occur.

2. Schedule

A: MAINTENANCE SCHEDULE 1

1. U.S.

- Except U5 model

			MAINTENANCE INTERVAL [Number of months or km (miles), whichever occurs first]																	
	Months		3	7.5	15	22.5	30	37.5	45	52.5	60	67.5	75	82.5	90	97.5	105	112.5	120	Remarks
	× 1,000 km		4.8	12	24	36	48	60	72	81.4	96	108	120	132	144	156	168	180	192	
	× 1,000 miles		3	7.5	15	22.5	30	37.5	45	52.5	60	67.5	75	82.5	90	97.5	105	112.5	120	
1	Engine oil	3.0 L	R	R	R	R	R	R	R	R	R	R	R	R	R	R	R	R	R	
		2.5 L		R	R	R	R	R	R	R	R	R	R	R	R	R	R	R	R	
2	Engine oil filter	3.0 L	R	R	R	R	R	R	R	R	R	R	R	R	R	R	R	R	R	
		2.5 L		R	R	R	R	R	R	R	R	R	R	R	R	R	R	R	R	
3	Spark plugs						R				R				R				R	For 2.5 L non-turbo
											R								R	For 3.0 L, 2.5 L Turbo
4	Drive belt(s)						I				I				I		R			
5	Camshaft Drive belt						I				I				I		R			
6	Fuel line						(I)				(I)				(I)				I	Note (1)
7	Air cleaner element						R				R				R				R	Note (2)
8	Cooling system						I				I				I				I	
9	Coolant						R				R				R				R	
10	Clutch system			I			I		I		I		I		I		I		I	
11	Transmission oil						I				I				I				I	
12	ATF						I				I				I				I	Note (3)
13	Front & rear differential oil						I				I				I				I	
14	Brake line			I			I		I		I		I		I		I		I	
15	Brake fluid						R				R				R				R	
16	Disc brake pads & discs			I			I		I		I		I		I		I		I	
17	Parking brake			I			I		I		I		I		I		I		I	
18	Suspension			I			I		I		I		I		I		I		I	
19	Wheel bearing										(I)								(I)	
20	Axle boots & joints			I			I		I		I		I		I		I		I	
21	Tire rotation		I	I	I		I	I	I	I	I	I	I	I	I	I	I	I	I	Note (4)
22	Steering system (Power steering)			I			I		I		I		I		I		I		I	
23	Supplement restraint system		Inspect every 10 years																	
24	A/C filter		Replace every 12 months or 12,000 km (7,500 mile)																	Note (5)

Symbols used:
R: Replace
I: Inspection
(R) or (I): Recommended service for safe vehicle operation.

PERIODIC MAINTENANCE SERVICES

NOTE:
(1) This inspection is not required to maintain emission warranty eligibility and it dose not affect the manufacturer's obligations under EPA's in-use compliance program.
(2) When the vehicle is used in extremely dusty conditions, the air cleaner element should be replaced more often.
(3) ATF filter is maintenance free part. ATF filter needs replacement, when it has physically rust, damaged or ATF leaked.
(4) A tire should be replaced when the tread wear indicator appears as a solid band across the tread. The indicators appear when the remaining tread has been worn to 1.6 mm (0.063 in) or less
(5) When the A/C filter is installed.

- U5 model

		MAINTENANCE INTERVAL [Number of months or km (miles), whichever occurs first]												
	Months	3	7.5	15	22.5	30	37.5	45	52.5	60	67.5	75	Continue to next table	Remarks
	× 1,000 km	4.8	12	24	36	48	60	72	81.4	96	108	120		
	× 1,000 miles	3	7.5	15	22.5	30	37.5	45	52.5	60	67.5	75		
1	Engine oil		R	R	R	R	R	R	R	R	R	R		
2	Engine oil filter		R	R	R	R	R	R	R	R	R	R		
3	Spark plugs					R				R				
4	Drive belt(s)					I				I				
5	Camshaft Drive belt					I				I				
6	Fuel line					(I)				(I)				Note (1)
7	Air cleaner element					R				R				Note (2)
8	Cooling system					I				I				
9	Coolant					R				R				
10	Clutch system			I		I		I		I		I		
11	Transmission oil					I				I				
12	ATF					I				I				Note (3)
13	Front & rear differential oil					I				I				
14	Brake line			I		I		I		I		I		
15	Brake fluid					R				R				
16	Disc brake pads & discs			I		I		I		I		I		
17	Parking brake			I		I		I		I		I		
18	Suspension			I		I		I		I		I		
19	Wheel bearing									(I)				
20	Axle boots & joints			I		I		I		I		I		
21	Tire rotation		I	I	I	I	I	I	I	I	I	I		Note (4)
22	Steering system (Power steering)			I		I		I		I		I		
23	Supplement restraint system	Inspect every 10 years												
24	A/C filter	Replace every 12 months or 12,000 km (7,500 mile)												Note (5)

Symbols used:
R: Replace
I: Inspection
(R) or (I): Recommended service for safe vehicle operation.

NOTE:
(1) This inspection is not required to maintain emission warranty eligibility and it dose not affect the manufacturer's obligations under EPA's in-use compliance program.
(2) When the vehicle is used in extremely dusty conditions, the air cleaner element should be replaced more often.
(3) ATF filter is maintenance free part. ATF filter needs replacement, when it has physically rust, damaged or ATF leaked.
(4) A tire should be replaced when the tread wear indicator appears as a solid band across the tread. The indicators appear when the remaining tread has been worn to 1.6 mm (0.063 in) or less
(5) When the A/C filter is installed.

		MAINTENANCE INTERVAL [Number of months or km (miles), whichever occurs first]											
	Months	Continue from previous table	82.5	90	97.5	105	112.5	120	127.5	135	142.5	150	Remarks
	× 1,000 km		132	144	156	168	180	192	204	216	228	240	
	× 1,000 miles		82.5	90	97.5	105	112.5	120	127.5	135	142.5	150	
1	Engine oil		R	R	R	R	R	R	R	R	R	R	
2	Engine oil filter		R	R	R	R	R	R	R	R	R	R	
3	Spark plugs			R				R				R	
4	Drive belt(s)			I		R				I			
5	Camshaft Drive belt			I		R				I			
6	Fuel line			(I)				I				(I)	Note (1)
7	Air cleaner element			R				R				R	Note (2)
8	Cooling system			I				I				I	
9	Coolant			R				R				R	
10	Clutch system			I		I		I				I	
11	Transmission oil			I				I				I	
12	ATF			I				I				I	Note (3)
13	Front & rear differential oil			I				I				I	
14	Brake line			I		I		I		I		I	
15	Brake fluid			R				R				R	
16	Disc brake pads & discs			I		I		I		I		I	
17	Parking brake			I		I		I		I		I	
18	Suspension			I		I		I		I		I	
19	Wheel bearing							(I)				(I)	
20	Axle boots & joints			I		I		I		I		I	
21	Tire rotation		I	I	I	I	I	I	I	I	I	I	Note (4)
22	Steering system (Power steering)			I		I		I		I		I	
23	Supplement restraint system	Inspect every 10 years											
24	A/C filter	Replace every 12 months or 12,000 km (7,500 mile)											Note (5)

Symbols used:
R: Replace
I: Inspection
(R) or (I): Recommended service for safe vehicle operation.

NOTE:
(1) This inspection is not required to maintain emission warranty eligibility and it dose not affect the manufacturer's obligations under EPA's in-use compliance program.
(2) When the vehicle is used in extremely dusty conditions, the air cleaner element should be replaced more often.
(3) ATF filter is maintenance free part. ATF filter needs replacement, when it has physically rust, damaged or ATF leaked.
(4) A tire should be replaced when the tread wear indicator appears as a solid band across the tread. The indicators appear when the remaining tread has been worn to 1.6 mm (0.063 in) or less
(5) When the A/C filter is installed.

2. CANADA

			MAINTENANCE INTERVAL [Number of months or km (miles), whichever occurs first]																	
	Months		3	7.5	15	22.5	30	37.5	45	52.5	60	67.5	75	82.5	90	97.5	105	112.5	120	Remarks
	× 1,000 km		4.8	12	24	36	48	60	72	81.4	96	108	120	132	144	156	168	180	192	
	× 1,000 miles		3	7.5	15	22.5	30	37.5	45	52.5	60	67.5	75	82.5	90	97.5	105	112.5	120	
1	Engine oil	3.0 L	R	R	R	R	R	R	R	R	R	R	R	R	R	R	R	R	R	
		2.5 L	R	R	R	R	R	R	R	R	R	R	R	R	R	R	R	R	R	
2	Engine oil filter	3.0 L	R	R	R	R	R	R	R	R	R	R	R	R	R	R	R	R	R	
		2.5 L	R	R	R	R	R	R	R	R	R	R	R	R	R	R	R	R	R	
3	Spark plugs						R				R				R				R	For 2.5 L non-turbo
											R								R	For 3.0 L, 2.5 L Turbo
4	Drive belt(s)						I				I				I		R			
5	Camshaft Drive belt						I				I				I		R			
6	Fuel line						(I)				(I)				(I)				I	Note (1)
7	Air cleaner element						R				R				R				R	Note (2)
8	Cooling system						I				I				I				I	
9	Coolant						R				R				R				R	
10	Clutch system			I			I		I		I		I		I		I		I	
11	Transmission oil						I				I				I				I	
12	ATF						I				I				I				I	Note (3)
13	Front & rear differential oil						I				I				I				I	
14	Brake line			I			I		I		I		I		I		I		I	
15	Brake fluid						R				R				R				R	
16	Disc brake pads & discs			I			I		I		I		I		I		I		I	
17	Parking brake			I			I		I		I		I		I		I		I	
18	Suspension			I			I		I		I		I		I		I		I	
19	Wheel bearing										(I)								(I)	
20	Axle boots & joints			I			I		I		I		I		I		I		I	
21	Tire rotation		I	I	I		I	I	I	I	I	I	I	I	I	I	I	I	I	Note (4)
22	Steering system (Power steering)			I			I		I		I		I		I		I		I	
23	Supplement restraint system		Inspect every 10 years																	
24	A/C filter		Replace every 12 months or 12,000 km (7,500 mile)																	Note (5)

Symbols used:
R: Replace
I: Inspection
(R) or (I): Recommended service for safe vehicle operation.

NOTE:
(1) This inspection is not required to maintain emission warranty eligibility and it dose not affect the manufacturer's obligations under EPA's in-use compliance program.
(2) When the vehicle is used in extremely dusty conditions, the air cleaner element should be replaced more often.
(3) ATF filter is maintenance free part. ATF filter needs replacement, when it has physically rust, damaged or ATF leaked.
(4) A tire should be replaced when the tread wear indicator appears as a solid band across the tread. The indicators appear when the remaining tread has been worn to 1.6 mm (0.063 in) or less
(5) When the A/C filter is installed.

B: MAINTENANCE SCHEDULE 2

Item	Every	Repeat short distance drive	Repeat rough/muddy road drive	Extremely cold weather area	Salt or other corrosive used or coastal area	High humidity or mountain area	Repeat towing trailer
Engine oil	3.75 months	R		R			R
	6,000 km						
	3,750 miles						
Engine oil filter	3.75 months	R		R			R
	6,000 km						
	3,750 miles						
Fuel line	7.5 months				I		
	12,000 km						
	7,500 miles						
Transmission oil	15 months						R
	24,000 km						
	15,000 miles						
ATF	15 months						R
	24,000 km						
	15,000 miles						
Front & rear differential oil	15 months						R
	24,000 km						
	15,000 miles						
Brake line	7.5 months				I		
	12,000 km						
	7,500 miles						
Brake fluid	15 months					R	
	24,000 km						
	15,000 miles						
Disc brake pads & discs	7.5 months	I	I		I		I
	12,000 km						
	7,500 miles						
Parking brake	7.5 months				I		
	12,000 km						
	7,500 miles						
Suspension	7.5 months		I	I	I		
	12,000 km						
	7,500 miles						
Axle boots & joints	7.5 months	I	I		I		I
	12,000 km						
	7,500 miles						
Steering system (Power steering)	7.5 months		I	I	I		
	12,000 km						
	7,500 miles						

3. Engine Oil

A: REPLACEMENT

1) Open the engine oil filter cap for quick draining of engine oil.

- 2.5 L model

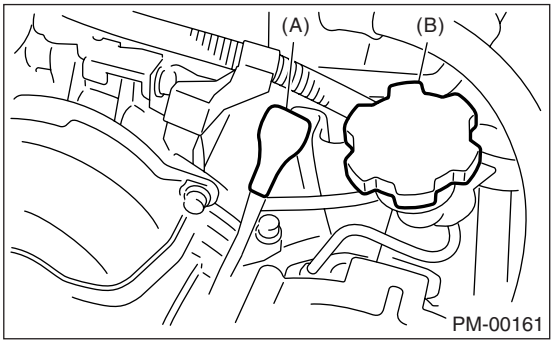

(A) Oil level gauge
(B) Oil filler cap

- 3.0 L model

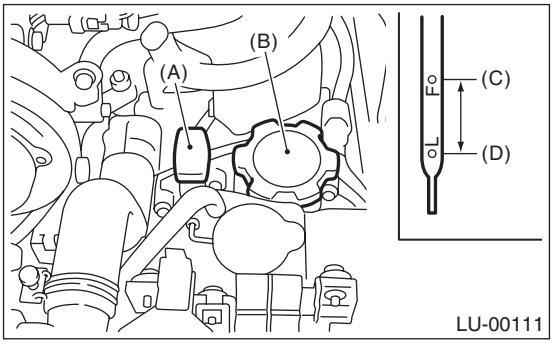

(A) Oil level gauge
(B) Oil filler cap
(C) Upper level
(D) Lower level

2) Drain the engine oil by removing engine oil drain plug.

- 2.5 L turbo model

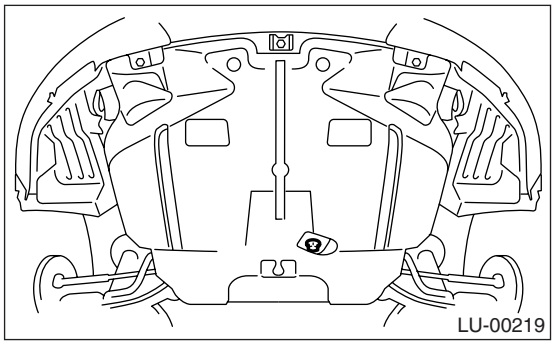

- 2.5 L non-turbo model

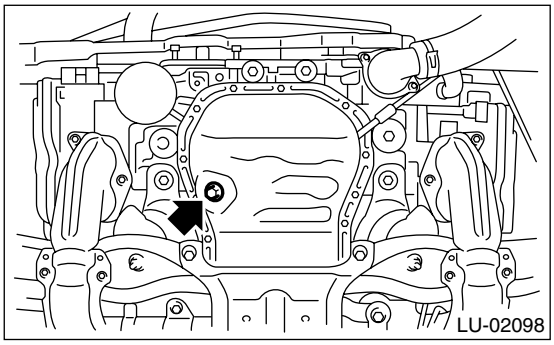

- 3.0 L model

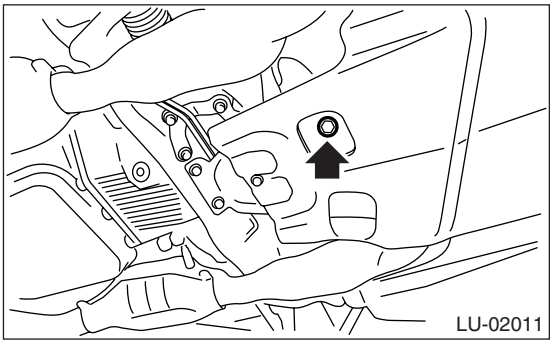

3) Tighten the engine oil drain plug after draining engine oil.

NOTE:
Use a new drain plug gasket.

Tightening torque:
44 N·m (4.5 kgf-m, 33 ft-lb)

- 2.5 L turbo model

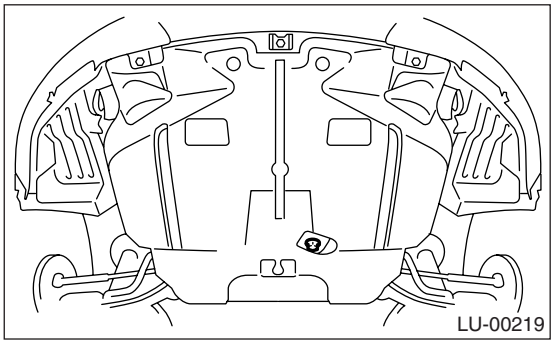

- 2.5 L non-turbo model

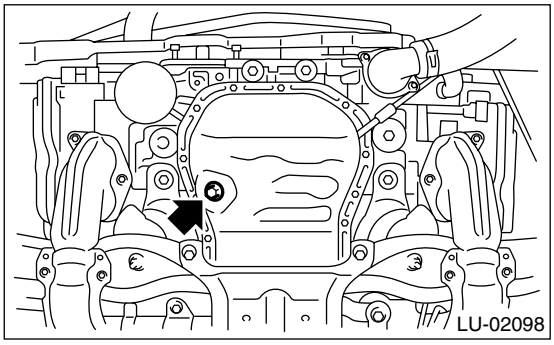

• 3.0 L model

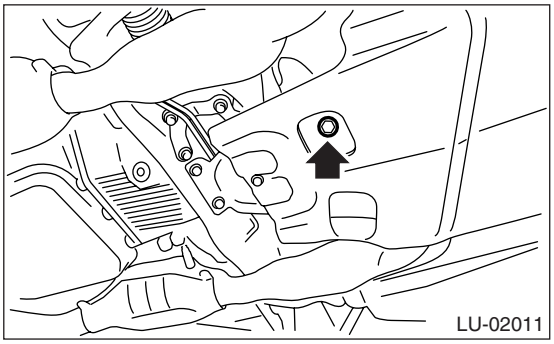

4) Fill engine oil through level gauge up to the upper level. Place the vehicle on a level surface when checking oil level. Use engine oil of proper quality and viscosity, selected in accordance with following.

Recommended oil:
Refer to "RM" section. <Ref. to RM-2, LUBRICANTS, RECOMMENDED MATERIALS, Recommended Materials.>

Engine oil capacity

2.5 L model
Upper level:
Approx. 4.0 ℓ (4.2 US qt, 3.5 Imp qt)
Lower level:
Approx. 3.0 ℓ (3.2 US qt, 2.6 Imp qt)

3.0 L model
Upper level:
Approx. 5.5 ℓ (5.8 US qt, 4.8 Imp qt)
Lower level:
Approx. 4.5 ℓ (4.8 US qt, 4.0 Imp qt)

The proper viscosity oil make the engine ideal temperature, and cranking speed increased by reducing viscous friction in hot condition.

CAUTION:
When replenishing oil, it does not matter if the oil to be added is a different brand from that in the engine; however, use oil having the API standard and SAE viscosity No. designated by SUBARU.

NOTE:
If the vehicle is used in areas with very high temperatures or for other heavy duty applications, use oil having the following viscosity: API standard: SL, SJ or SH
SAE Viscosity No.: 30, 40, 10W-50, 20W-40, 20W-50.

5) Close the engine oil filler cap.
6) Start the engine and warm it up for a time.
7) After the engine stops, recheck the oil level. <Ref. to PM-9, INSPECTION, Engine Oil.>

B: INSPECTION

1) Park the vehicle on a level surface.
2) Remove the oil level gauge and wipe it clean.
3) Reinsert the level gauge all the way. Be sure that the level gauge is correctly inserted and in the proper orientation.
4) Remove it again and note the reading. If the engine oil level is below the "L" line, add oil to bring the level up to the "F" line.

• 2.5 L model

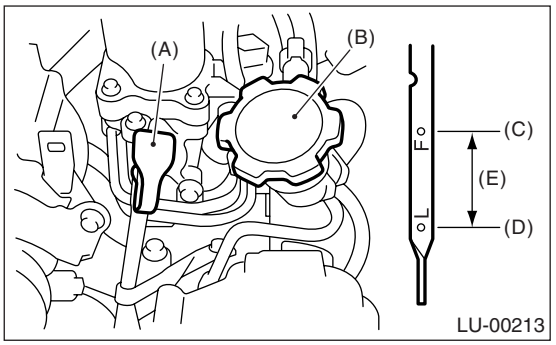

(A) Oil level gauge
(B) Oil filler cap
(C) Upper level
(D) Lower level
(E) Approx. 1 ℓ (1.1 US qt, 0.9 Imp qt)

• 3.0 L model

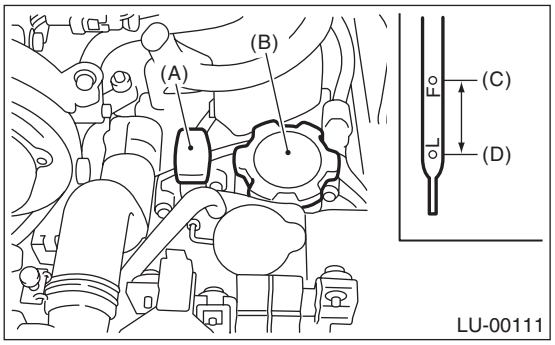

(A) Oil level gauge
(B) Oil filler cap
(C) Upper level
(D) Lower level

5) After turning off the engine, wait a few minutes for the oil to drain back into the oil pan before checking the level.
6) Just after driving or while the engine is warm, engine oil level may show in the range between the "F" line and the notch mark. This is caused by thermal expansion of engine oil (2.5 L model).
7) To prevent overfilling the engine oil, do not add oil above the "F" line when the engine is cold.

4. Engine Oil Filter

A: REPLACEMENT

1) Remove the under cover.
2) Remove the oil filter using ST.
• 2.5 L non-turbo and 3.0 L model
ST 49857000 OIL FILTER WRENCH (Outer diameter: 80 mm (3.15 in))
• 2.5 L non-turbo and Turbo model
ST 18332AA000 OIL FILTER WRENCH (Outer diameter: 68 mm (2.68 in))
ST 18332AA010 OIL FILTER WRENCH (Outer diameter: 65 mm (2.56 in))
• 2.5 L non-turbo model

NOTE:
However, SUBARU genuine oil filter having outer diameter of 80 mm (3.15 in), 68 mm (2.68 in) or 65 mm (2.56 in) can also be used.

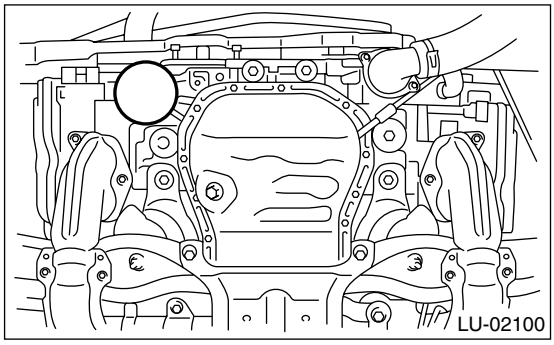

• 2.5 L turbo model

NOTE:
• However, SUBARU genuine oil filter having outer diameter of 68 mm (2.68 in) or 65 mm (2.56 in) can also be used.
• However, SUBARU genuine oil filter having outer diameter of 80 mm (3.15 in) can not be used.

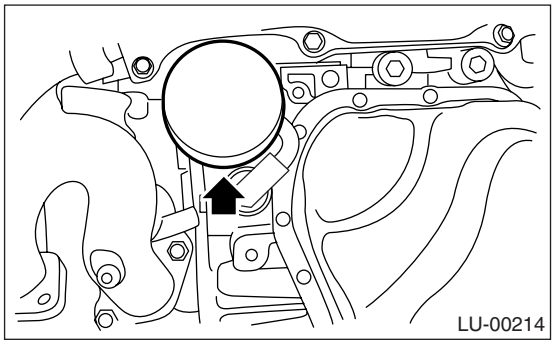

ST 498547000 OIL FILTER WRENCH
• 3.0 L model

NOTE:
However, SUBARU genuine oil filter having outer diameter of 80 mm (3.15 in) can also be used.

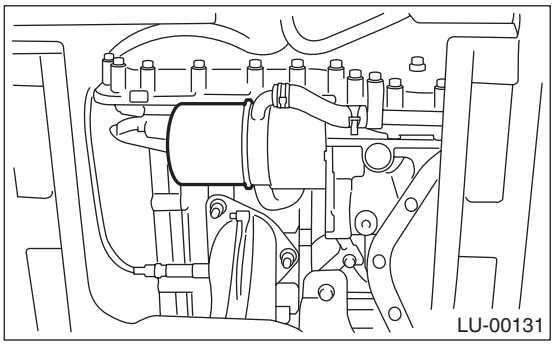

3) Obtain a new oil filter and apply a thin coat of engine oil to the seal rubber.
4) Install the oil filter by turning it by hand, being careful not to damage the seal rubber.
• Tighten the oil filter 80 mm (3.15 in) or 65 mm (2.56 in) in diameter by (2.5 L model: approx. 2/3 — 3/4, 3.0 L model: approx. 3/4) rotation more after the seal rubber of oil filter comes in contact with cylinder block or oil cooler.
• Tighten the oil filter 68 mm (2.68 in) in diameter by approx. 1 rotation more after the seal rubber of oil filter comes in contact with cylinder block or oil cooler.

CAUTION:
Do not tighten excessively, or oil may leak.

5) After installing the oil filter, run the engine and make sure that no oil is leaking around seal rubber.

NOTE:
The filter element and filter case are permanently jointed; therefore, interior cleaning is not necessary.

6) Check the engine oil level. <Ref. to PM-9, INSPECTION, Engine Oil.>

5. Spark Plug

A: REPLACEMENT

1. 2.5 L NON-TURBO MODEL

1) Remove the intake duct and intake chamber.
2) Remove the battery.
3) Disconnect the spark plug cord.
4) Remove the spark plug with a spark plug socket.

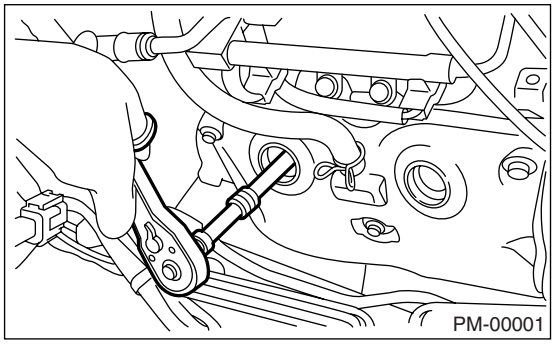

5) Tighten the new spark plug lightly with hand, and then secure with a spark plug socket to the specified torque.

Recommended spark plug:
NGK: PFR5B-11

Tightening torque:
21 N·m (2.1 kgf-m, 15.2 ft-lb)

NOTE:
• Be sure to place the gasket between the cylinder head and spark plug.
• If the torque wrench is not available, tighten the spark plug until gasket contacts cylinder head; then tighten further 1/4 to 1/2 turns.

2. 2.5 L TURBO AND 3.0 L MODEL

1) Remove the battery and battery carrier.
2) Remove the air cleaner case.
3) Detach the connector from ignition coil.
4) Remove the ignition coil.
• 2.5 L turbo model

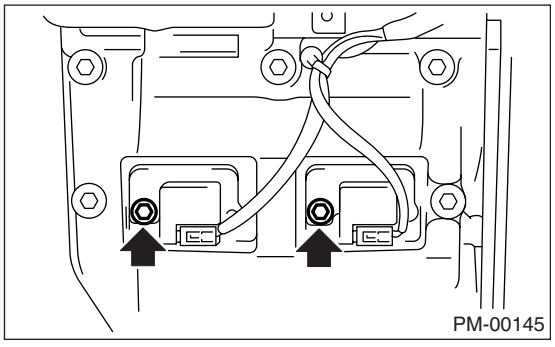

• 3.0 L model

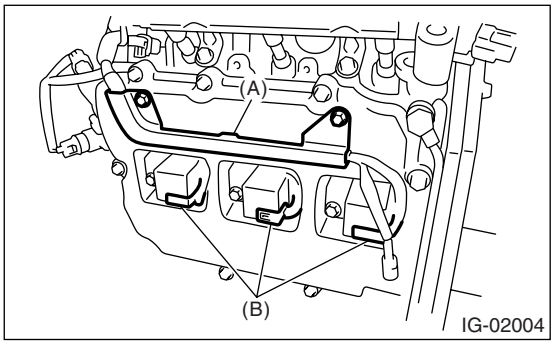

(A) Bracket
(B) Connector

5) Remove the spark plug with a spark plug socket.

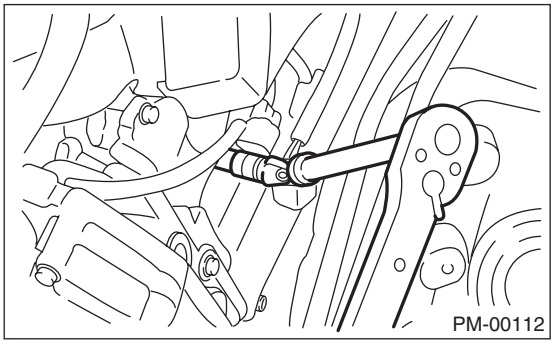

6) Tighten the new spark plug lightly with hand, and then secure with a spark plug socket to the specified torque.

Recommended spark plug:
NGK: ILFR6B

Tightening torque:
21 N·m (2.1 kgf-m, 15.2 ft-lb)

7) Tighten the ignition coil.

Tightening torque:
16 N·m (1.6 kgf-m, 11.7 ft-lb)

NOTE:
• Be sure to place the gasket between the cylinder head and spark plug.
• If the torque wrench is not available, tighten the spark plug until gasket contacts cylinder head; then tighten further 1/4 to 1/2 turns.

6. V-belt

A: INSPECTION

1. 2.5 L NON-TURBO AND 2.5 L TURBO MODEL

1) Replace the belts if crack, fraying or wear is found.
2) Check the V-belt tension and adjust it if necessary by changing the generator installing position or idler pulley installing position. <Ref. to PM-13, REPLACEMENT, V-belt.>

Belt tension (without belt tension gauge):
(A)
When installing new one: 7 — 9 mm (0.276 — 0.354 in)
At inspection: 9 — 11 mm (0.354 — 0.433 in)
(B)
When installing new one: 7.5 — 8.5 mm (0.295 — 0.335 in)
At inspection: 9.0 — 10.0 mm (0.354 — 0.394 in)

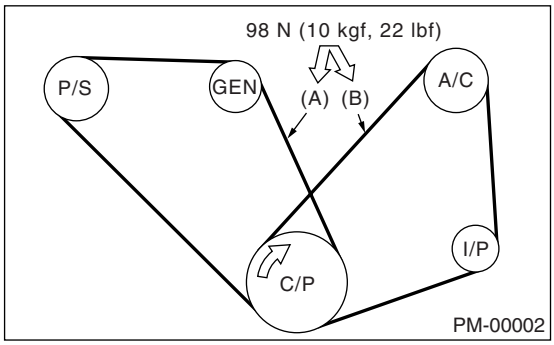

(A) Front side belt
(B) Rear side belt
C/P Crank pulley
GEN Generator
P/S Power steering oil pump pulley
A/C A/C compressor pulley
I/P Idler pulley

Belt tension (with belt tension gauge):
(A)
When installing new one: 640 — 785 N (65.3 — 80.0 kgf, 144 — 176 lbf)
At inspection: 490 — 640 N (50 — 65 kgf, 110 — 144 lbf)
(B)
When installing new one: 620 — 760 N (63 — 77 kgf, 140 — 170 lbf)
At inspection: 350 — 450 N (36 — 46 kgf, 79 — 101 lbf)

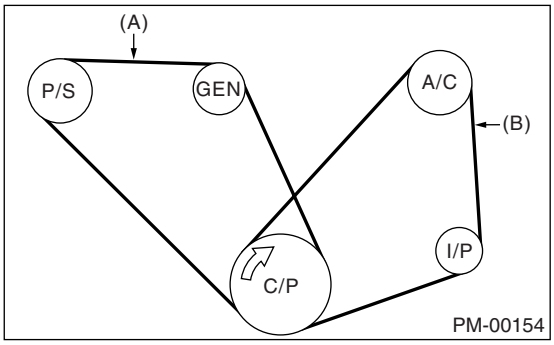

(A) Front side belt
(B) Rear side belt
C/P Crank pulley
GEN Generator
P/S Power steering oil pump pulley
A/C A/C compressor pulley
I/P Idler pulley

2. 3.0 L MODEL

1) Replace the belts if crack, fraying or wear is found.
2) Check that the V-belt automatic tensioner indicator (A) is within the range (D).

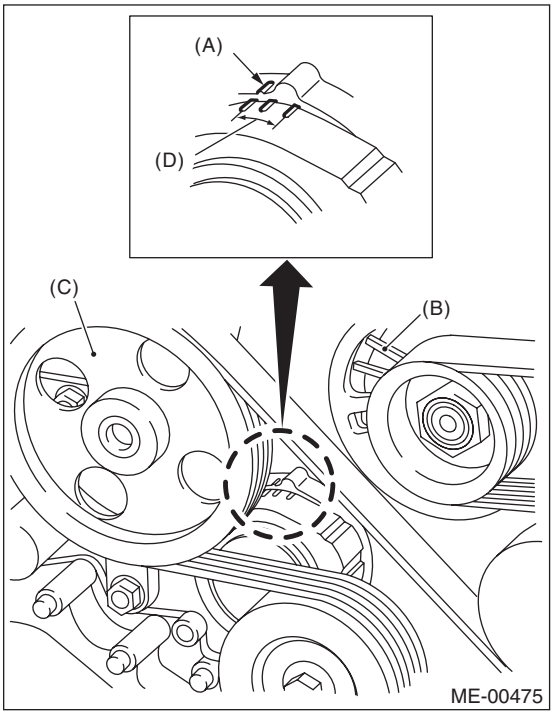

(A) Indicator
(B) Generator
(C) Power steering oil pump
(D) Service limit

B: REPLACEMENT

1. FRONT SIDE BELT (FOR POWER STEERING OIL PUMP AND GENERATOR)

NOTE:
Wipe off any oil and water on the belt and pulley.
1) Remove the collector cover. (If equipped)
2) Remove the V-belt covers.
- 2.5 L non-turbo model

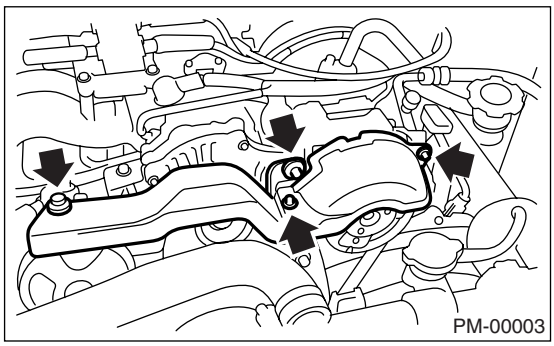

- 2.5 L turbo model

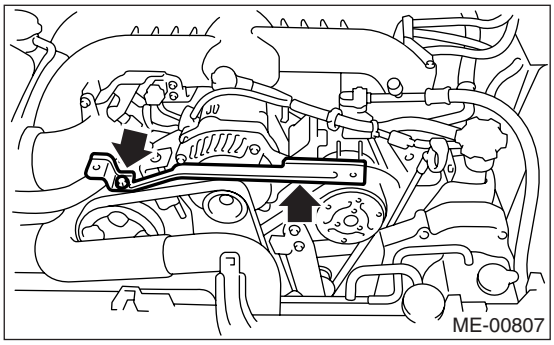

3) Loosen the lock bolt (A).
4) Loosen the slider bolt (B).
5) Remove the front side belt (C).
6) Install a new V-belt, and tighten the slider bolt so as to obtain the specified belt tension.
7) Tighten the lock bolt (A).
8) Tighten the slider bolt (B).

Tightening torque:
Lock bolt
25 N·m (2.5 kgf-m, 18.1 ft-lb)
Slider bolt
8 N·m (0.8 kgf-m, 5.8 ft-lb)

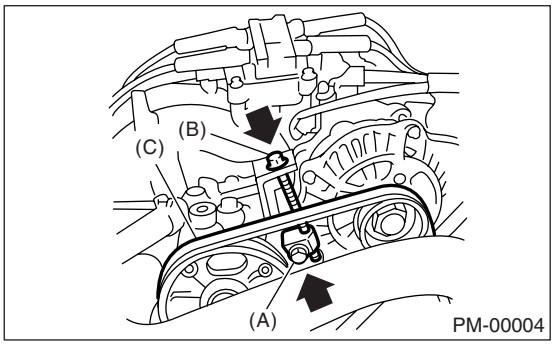

2. REAR SIDE BELT (FOR A/C)

NOTE:
Wipe off any oil and water on the belt and pulley.
1) Remove the front side belt.
2) Loosen the lock nut (A).
3) Loosen the slider bolt (B).
4) Remove the rear side belt.
5) Install a new V-belt, and tighten the slider bolt so as to obtain the specified belt tension.

6) Tighten the lock nut (A).

Tightening torque:
23 N·m (2.3 kgf-m, 17.0 ft-lb)

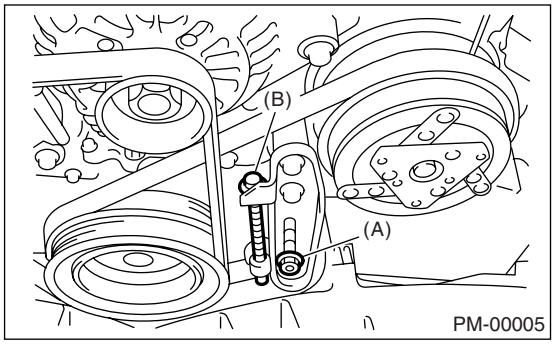

7) Install the front side belt.
• 2.5 L non-turbo model <Ref. to ME(H4SO)-37, FRONT SIDE BELT, INSTALLATION, V-belt.>
• 2.5 L turbo model <Ref. to ME(H4DOTC)-37, FRONT SIDE BELT, INSTALLATION, V-belt.>

3. 3.0 L MODEL

1) Fit the tool to the belt tensioner mounting bolt.
2) Turn the tool clockwise, and loosen the V-belt to remove.

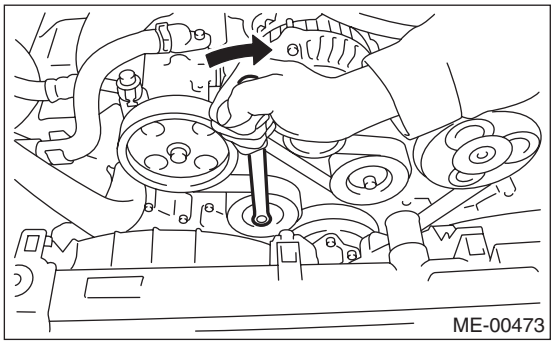

3) Remove the V-belt cover.
4) Install in the reverse order of removal.

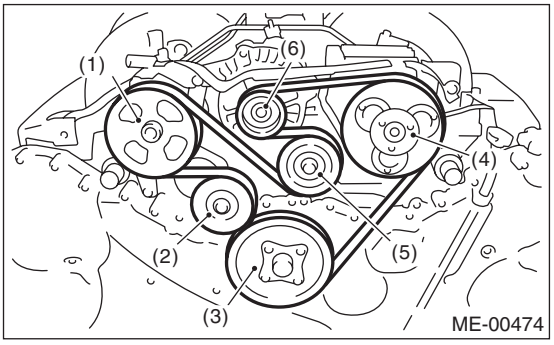

(1) Power steering oil pump
(2) Belt tension adjuster
(3) Crankshaft pulley
(4) A/C compressor
(5) Belt idler
(6) Generator

7. Timing Belt

A: REPLACEMENT

1. 2.5 L NON-TURBO MODEL

1) Protect the radiator with cardboard and blanket.
2) Remove the V-belt covers.

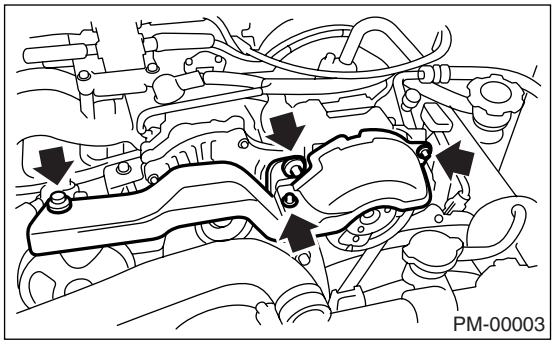

3) Remove the V-belts. <Ref. to ME(H4SO)-37, V-belt.>
4) Remove the A/C compressor V-belt tensioner.
5) Use the ST to lock the crankshaft, and remove the pulley bolt.
ST 499977100 CRANK PULLEY WRENCH

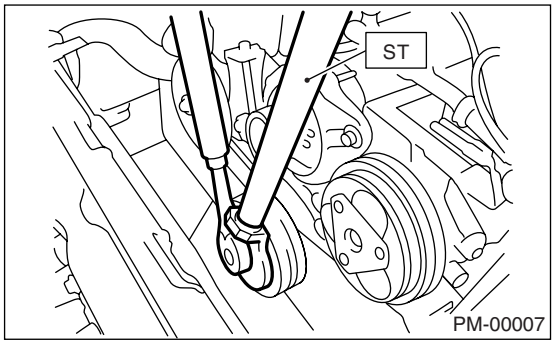

6) Remove the crank pulley.
7) Remove the belt cover (LH).
8) Remove the front timing belt cover.
9) Remove the timing belt guide. (MT model)
10) Turn the crankshaft and align the alignment marks on crankshaft, and left and right cam sprockets with notches of belt cover and cylinder block.

ST 499987500 CRANKSHAFT SOCKET

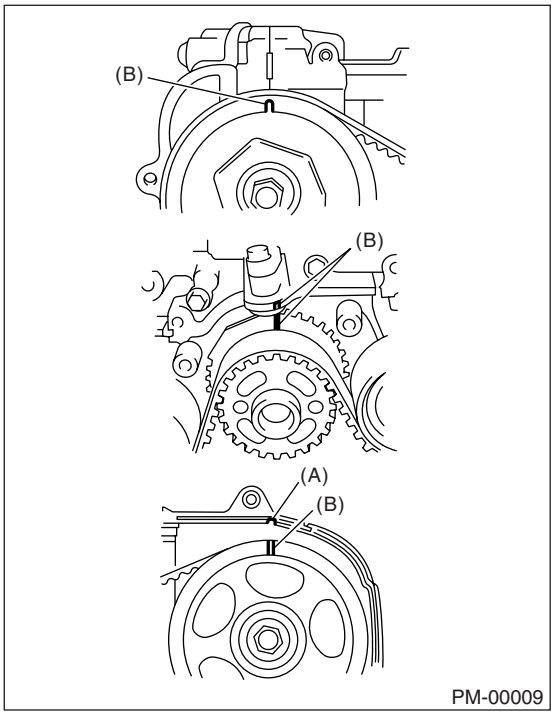

(A) Notch
(B) Alignment mark

11) Remove the belt idler.
12) Remove the belt idler (No. 2).

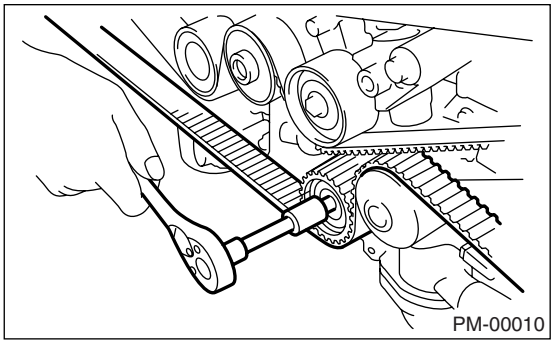

13) Remove the timing belt.
14) Remove the automatic belt tension adjuster assembly.

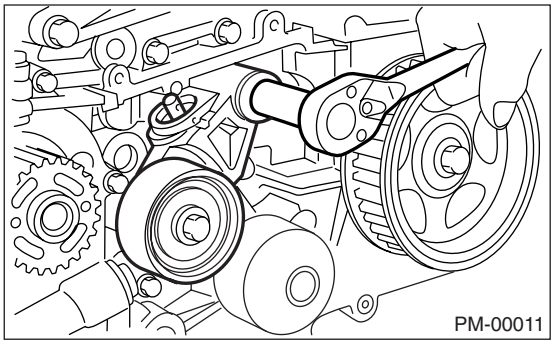

15) Install in the reverse order of removal. <Ref. to ME(H4SO)-42, INSTALLATION, Timing Belt.>

2. 2.5 L TURBO MODEL

1) Protect the radiator with cardboard and blanket.
2) Remove the V-belts. <Ref. to ME(H4DOTC)-37, V-belt.>
3) Remove the A/C compressor V-belt tensioner.
4) Remove the pulley bolt. Use the ST to lock crankshaft.
ST 499977100 CRANK PULLEY WRENCH

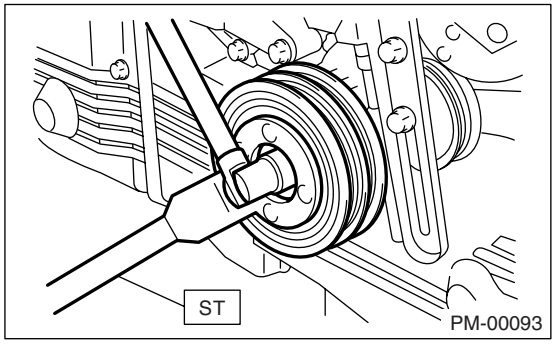

5) Remove the crank pulley.
6) Remove the belt cover (LH).
7) Remove the belt cover (RH).
8) Remove the front belt cover.
9) Remove the timing belt guide.

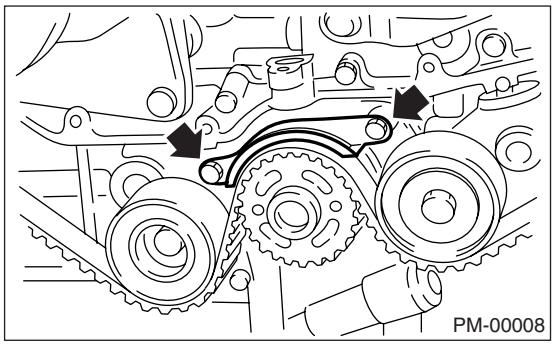

- MT model

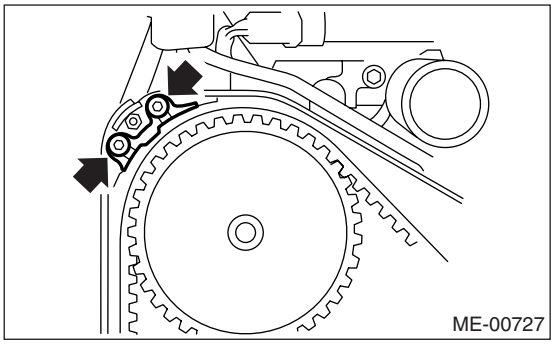

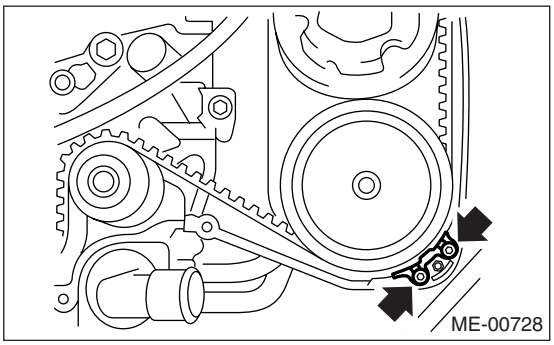

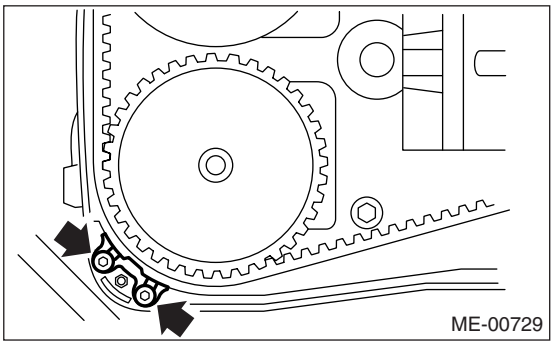

10) Turn the crankshaft and align the alignment marks on crankshaft, and left and right cam sprockets with notches of belt cover and cylinder block. Use the ST to turn crankshaft.

ST 499987500 CRANKSHAFT SOCKET

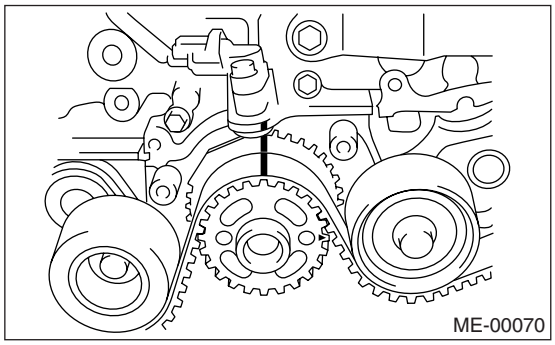

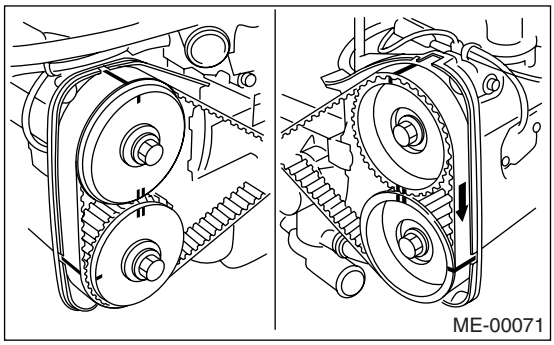

11) Remove the belt idler.

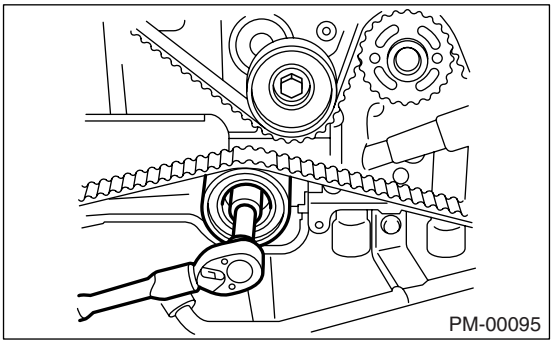

12) Remove the timing belt.
13) Remove the automatic belt tension adjuster assembly.

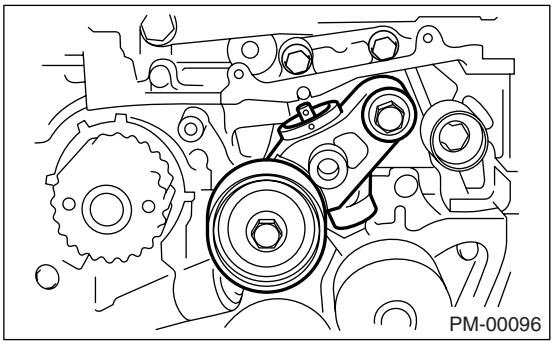

14) Install in the reverse order of removal. <Ref. to ME(H4DOTC)-42, Timing Belt.>

CAUTION:
When installing the timing belt, be sure to align all alignment marks on the belt with corresponding marks on the sprockets. If incorrectly installed, interference between pistons and valves may occur.

B: INSPECTION

1. 2.5 L NON-TURBO MODEL

1) Remove the front timing belt cover and timing belt cover (LH).
2) While cranking engine at least four rotations, check the timing belt back surface for cracks or damage. Replace the faulty timing belt as needed.
3) Measure the timing belt width W. If it is less than 27 mm (1.06 in), check idlers, tensioner, water pump pulley and cam sprocket to determine idler alignment (squareness). Replace the worn timing belt.

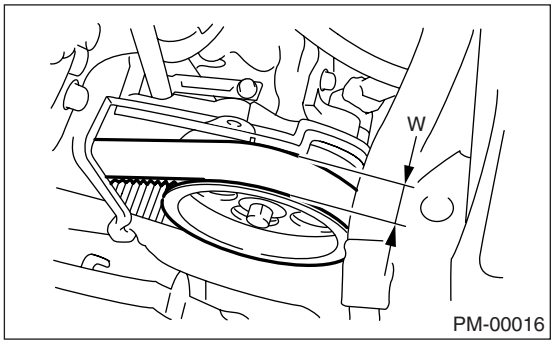

4) Install the front timing belt cover and timing belt cover (LH).

2. 2.5 L TURBO MODEL

1) Remove the timing belt cover (LH).
2) While cranking engine at least four rotations, check the timing belt back surface for cracks or damage. Replace the faulty timing belt as needed.
3) Measure the timing belt width W. If it is less than 30 mm (1.18 in), check idlers, tensioner, water pump pulley and cam sprocket to determine idler alignment (squareness). Replace the worn timing belt.
4) Install the timing belt cover (LH).

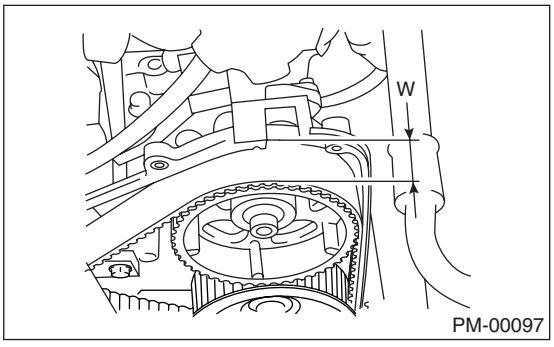

8. Fuel Line

A: INSPECTION

The fuel line is located mostly internally, so check pipes, areas near pipes, and engine compartment piping for rust, hose damage, loose band, etc. If faulty parts are found, repair or replace them.

- 2.5 L non-turbo model

<Ref. to FU(H4SO)-55, Fuel Delivery, Return and Evaporation Lines.>

- 2.5 L turbo model

<Ref. to FU(H4DOTC)-60, Fuel Delivery, Return and Evaporation Lines.>

- 3.0 L model

<Ref. to FU(H6DO)-55, Fuel Delivery, Return and Evaporation Lines.>

9. Air Cleaner Element

A: REPLACEMENT

1) Disconnect the ground cable from battery.

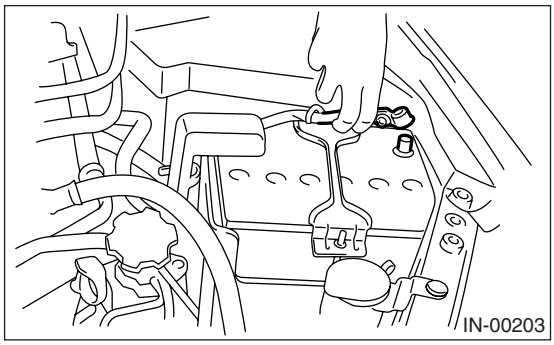

2) Disconnect the connector from mass air flow sensor.

- Non-turbo model

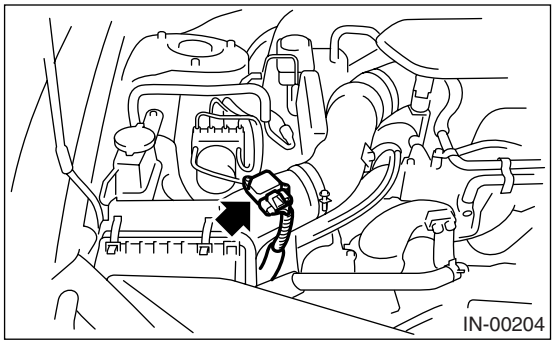

- Turbo model

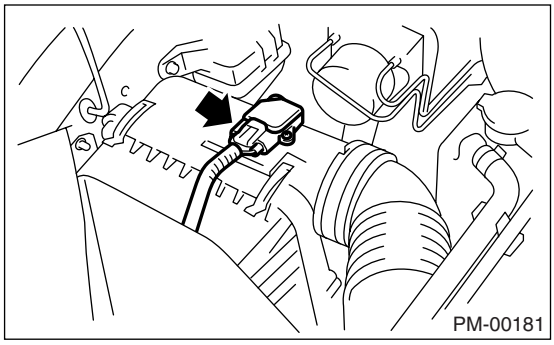

3) Loosen the clamps (A) which connect the air cleaner case to intake duct. (Turbo model)
4) Remove the clips (B) on air cleaner case.

- Non-turbo model

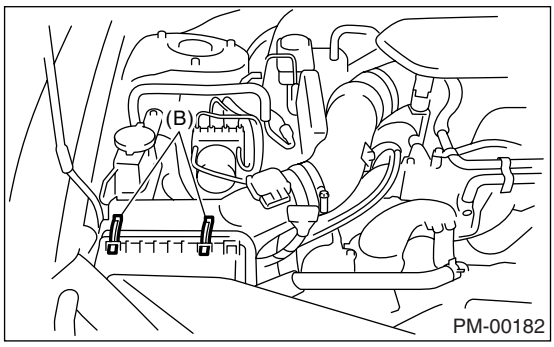

- Turbo model

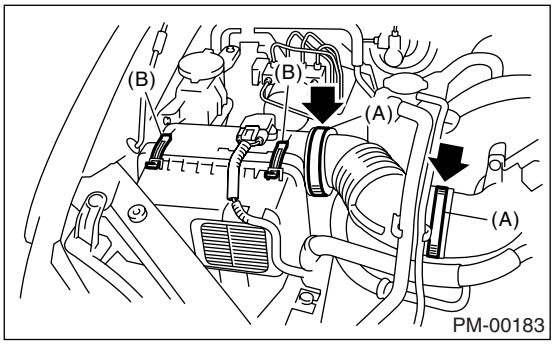

5) Remove the air cleaner case (rear).
6) Remove the air cleaner element.

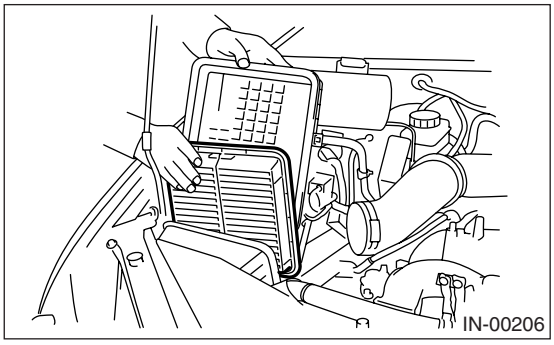

7) Install in the reverse order of removal.

NOTE:

- Fasten with a clip after inserting the lower tab of the case.

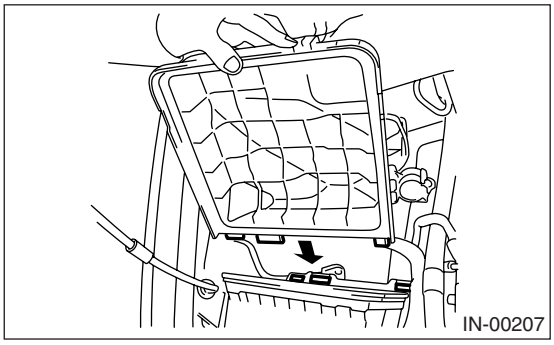

- Refer to “COMPONENT” for tightening torque.
  2.5 L non-turbo model
  <Ref. to IN(H4SO)-2, COMPONENT, General Description.>
  2.5 L turbo model
  <Ref. to IN(H4DOTC)-2, COMPONENT, General Description.>
  3.0 L model
  <Ref. to IN(H6DO)-2, COMPONENT, General Description.>

10.Cooling System

A: INSPECTION

1) To check the radiator for leakage, fill it with engine coolant, and attach the radiator cap tester (A) to the filler neck, and apply pressure. Check the following points:

Non-turbo model:
157 kPa (1.6 kg/cm^2, 23 psi)
Turbo model:
122 kPa (1.2 kg/cm^2, 18 psi)

- Each portion of radiator for leakage
- Hose joints and other connections for leakage

NOTE:
- For turbo model, be sure to install the tester to filler tank side.
- When attaching or detaching tester or when operating tester, use special care not to deform radiator filler neck.
  - Non-turbo model

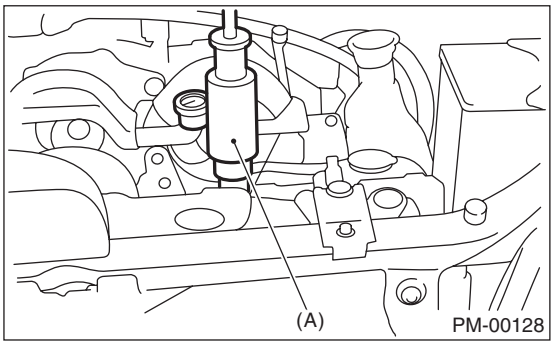

  - Turbo model

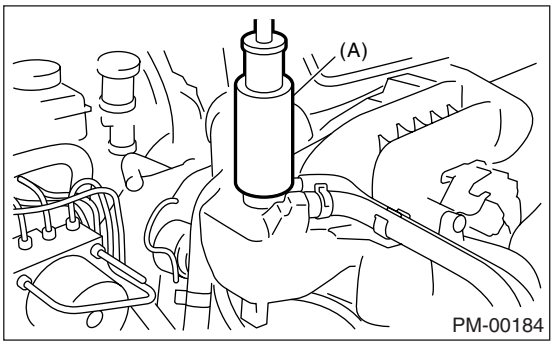

- When performing this check, be sure to keep the engine stationary and fill radiator with coolant.
- Wipe off check points before applying pressure.
- Use care not to spill coolant when detaching tester from radiator.
- Do not remove the radiator side cap. (Turbo model)

2) Check the radiator cap valve open pressure using radiator cap tester.

NOTE:
Rust or dirt on the cap may prevent valve from functioning normally: be sure to clean the cap before testing.

Raise the pressure until the needle of gauge stops and see if the pressure can be retained for five to six seconds. The radiator cap is normal if a pressure above the service limit value has been maintained for this period.

Radiator cap valve open pressure

Non-turbo model
Standard:
93 — 123 kPa (0.95 — 1.25 kg/cm^2, 14 — 18 psi)
Service limit:
83 kPa (0.85 kg/cm^2, 12 psi)

Turbo model

Filler tank side
Standard:
93 — 123 kPa (0.95 — 1.25 kg/cm^2, 14 — 18 psi)
Service limit:
83 kPa (0.85 kg/cm^2, 12 psi)

Radiator side
Standard:
122 — 152 kPa (1.24 — 1.55 kg/cm^2, 18 — 22 psi)
Service limit:
112 kPa (1.14 kg/cm^2, 16 psi)

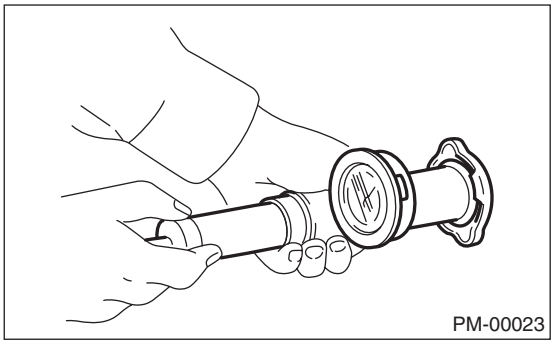

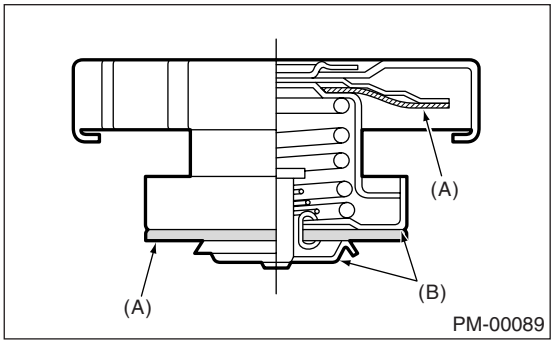

(A) Check points for deformation
(B) Check points for deformation, damage, rust

3) Start the engine, and then check it does not overheat or it is cooled excessively. If it overheats or it is cooled excessively, check the cooling system.
- 2.5 L non-turbo model

<Ref. to CO(H4SO)-14, Water Pump.> <Ref. to CO(H4SO)-17, Thermostat.> <Ref. to CO(H4SO)-19, Radiator.> <Ref. to CO(H4SO)-22, Radiator Cap.>
- 2.5 L turbo model

<Ref. to CO(H4DOTC)-15, Water Pump.> <Ref. to CO(H4DOTC)-17, Thermostat.> <Ref. to CO(H4DOTC)-19, Radiator.> <Ref. to CO(H4DOTC)-23, Radiator Cap.>
- 3.0 L model

<Ref. to CO(H6DO)-12, Water Pump.> <Ref. to CO(H6DO)-13, Thermostat.> <Ref. to CO(H6DO)-14, Radiator.> <Ref. to CO(H6DO)-17, Radiator Cap.>

4) Check the radiator fan operates using Subaru Select Monitor, when the coolant temperature exceeds 96°C (205°F). If it does not operate, check the radiator fan system.
- 2.5 L non-turbo model

<Ref. to CO(H4SO)-8, INSPECTION, Radiator Fan System.>
- 2.5 L turbo model

<Ref. to CO(H4DOTC)-9, INSPECTION, Radiator Fan System.>
- 3.0 L model

<Ref. to CO(H6DO)-8, INSPECTION, Radiator Fan System.>

11.Engine Coolant

A: REPLACEMENT

1. REPLACEMENT OF COOLANT

WARNING:
The radiator is of the pressurized type. Do not attempt to open the radiator cap immediately after the engine has been stopped.

1) Lift-up the vehicle.
2) Remove the under cover.
3) Place a container under drain pipe.
4) Remove the drain cock to drain engine coolant into container.

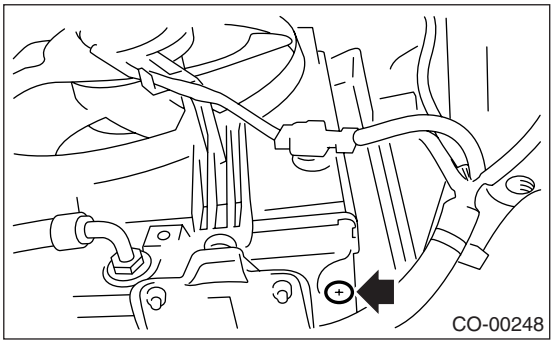

5) For quick draining, open the radiator cap.

NOTE:
• For turbo model, be sure to open the radiator cap on the filler tank side.
• Be careful not to spill coolant on the floor.

6) Drain the coolant from reservoir tank.
7) Tighten the radiator drain cock securely after draining coolant.
8) Pour cooling system conditioner through the filler neck.

Cooling system protective agent:
Cooling system conditioner (Part No. SOA635071)

9) Pour the engine coolant into the radiator (for turbo model, coolant filler tank) up to the filler neck position.
10) Fill engine coolant into the reservoir tank up to "FULL" level.

Recommended engine coolant:
Refer to "RM" section. <Ref. to RM-4, COOLANT, RECOMMENDED MATERIALS, Recommended Materials.>

Coolant capacity (fill up to "FULL" level):

AT model
2.5 L model (without ATF cooler (with warmer))
Approx. 6.3 ℓ (6.7 US qt, 5.5 Imp qt)
2.5 L model (with ATF cooler (with warmer))
Approx. 6.7 ℓ (7.1 US qt, 5.9 Imp qt)
3.0 L model (without ATF cooler (with warmer))
Approx. 7.2 ℓ (7.6 US qt, 6.3 Imp qt)
3.0 L model (with ATF cooler (with warmer))
Approx. 7.7 ℓ (8.1 US qt, 6.8 Imp qt)

MT model
2.5 L model
Approx. 6.4 ℓ (6.8 US qt, 5.6 Imp qt

NOTE:
The SUBARU Genuine Coolant containing anti-freeze and anti-rust agents is especially made for SUBARU engine, which has an aluminum crankcase. Always use SUBARU Genuine Coolant, since other coolant may cause corrosion.

11) Close the radiator (for turbo model, coolant filler tank) cap to start the engine and race 5 to 6 times at less than 3,000 rpm, then stop the engine. (Complete this operation within 40 seconds.)
12) Wait for one minute after the engine stops, open the radiator (for turbo model, coolant filler tank) cap. If the engine coolant level drops, add engine coolant to the filler neck position of radiator (for turbo model, coolant filler tank).
13) Perform the procedures 11) and 12) again.
14) Attach the radiator (for turbo model, coolant filler tank) cap and reservoir tank cap properly.
15) Start the engine and operate the heater at maximum hot position and the blower speed setting to "LO".
16) Run the engine at 2,000 rpm or less until radiator fan starts and stops.

NOTE:
• Be careful with the engine coolant temperature gauge to prevent overheating.
• If the radiator hose becomes to harden by the pressure of engine coolant, air bleeding operation seems to be almost completed.

17) Stop the engine and wait until engine coolant temperature lowers to 30°C (86°F) or less.
18) Open the radiator (for turbo model, coolant filler tank) cap. If the engine coolant level drops, add engine coolant to the filler neck position of radiator and the "FULL" level of reservoir tank.
19) Attach the radiator (for the turbo model, coolant filler tank) cap and reservoir tank cap properly.

20) Operate the heater at maximum hot position and the blower speed setting to “LO” and start the engine. Race at less than 3,000 rpm. If the flowing sound is heard, perform the procedures from 16) again.

2. RERATIONSHIP OF SUBARU COOLANT CONCENTRATION AND FREEZING TEMPERATURE

Concentration and safe operating temperature of SUBARU coolant is shown in the diagram. Measuring the temperature and specific gravity of the coolant will provide this information.
[Example]
If the coolant temperature is 25°C (77°F), its specific gravity is 1.054 and the concentration is 35% (point A), the safe operating temperature is –14°C (7°F) (point B), and the freezing temperature is –20°C (–4°F) (point C).

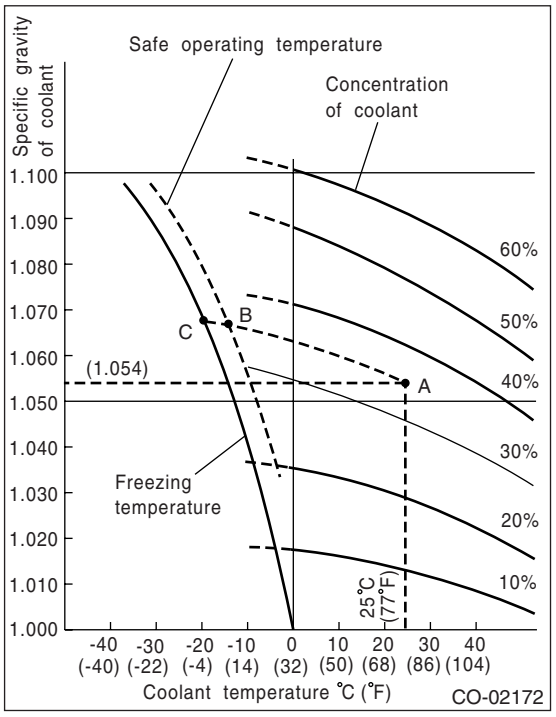

3. PROCEDURE TO ADJUST THE CONCENTRATION OF THE COOLANT

To adjust the concentration of coolant according to temperature, find the proper fluid concentration in the above diagram and replace the necessary amount of coolant with an undiluted solution of SUBARU genuine coolant (concentration 50%).
The amount of coolant that should be replaced can be determined using the diagram.
[Example]
Assume that the coolant concentration must be increased from 25% to 40%. Find point A, where the 25% line of coolant concentration intersects with the 40% curve of the necessary coolant concentration, and read the scale on the vertical axis of the graph at height A. The quantity of coolant to be drained is 2.1 ℓ (2.2 US qt, 1.8 Imp qt). Drain 2.1 ℓ (2.2 US qt, 1.8 Imp qt) of coolant from the cooling system and add 2.1 ℓ (2.2 US qt, 1.8 Imp qt) of the undiluted solution of SUBARU coolant.
If a coolant concentration of 50% is needed, drain all the coolant and refill with the undiluted solution only.

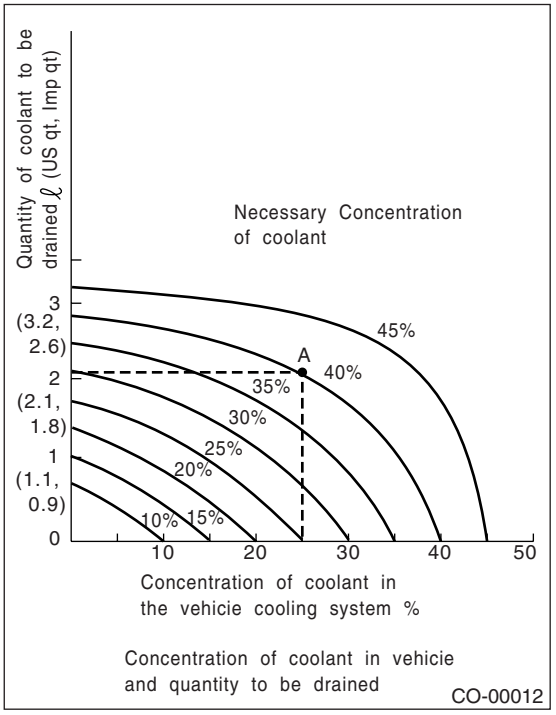

12.Clutch System

A: INSPECTION AND ADJUSTMENT

1) Push the release lever to retract the push rod of the operating cylinder and check if the fluid level in the clutch reservoir tank rises or not.

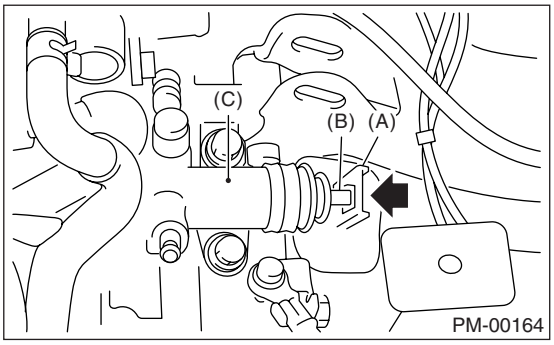

(A) Release lever
(B) Push rod
(C) Operating cylinder

2) If the fluid level rises, pedal free play is correct.
3) If the fluid level does not rise, or the push rod cannot be retracted, adjust the clutch pedal. <Ref. to CL-21, Clutch Pedal.>
4) Check the fluid level using the scale on the outside of the clutch reservoir tank (A). If the level is below “MIN” (B), inspect the clutch master cylinder, operating cylinder and hydraulic line for fluid leaks. If fluid leaks are found, repair or replace. If fluid leaks are not found, add clutch fluid to bring it up to “MAX” (C) of clutch reservoir tank.

Recommended clutch fluid:
Refer to “RM” section. <Ref. to RM-4, FLUID, RECOMMENDED MATERIALS, Recommended Materials.>

CAUTION:
Prevent the clutch fluid from being splashed over vehicle body. If the clutch fluid is splashed over vehicle body, flush it, and then wipe it up.

NOTE:
• Avoid mixing different brands of brake fluid to prevent degradation of the fluid.
• Be careful not to allow dirt or dust to get into the reservoir tank.

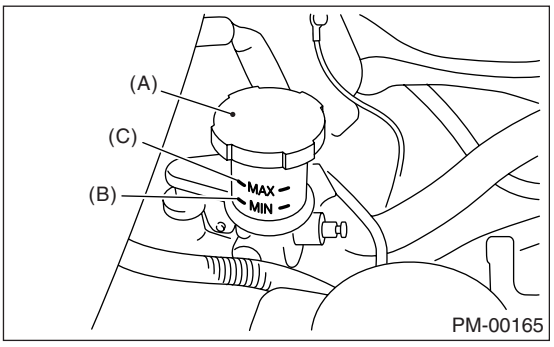

(A) Reservoir tank
(B) MIN. level
(C) MAX. level

13.Transmission Gear Oil

A: REPLACEMENT

1. MANUAL TRANSMISSION

1) Drain the gear oil by removing drain plug.

NOTE:
• Before starting work, cool off the transmission gear oil well.
• If transmission gear oil adheres to the exhaust pipe, wipe it off completely.

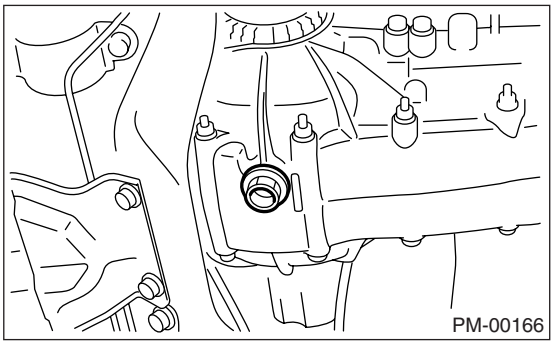

2) Replace the gasket with new one, and then tighten the drain plug to specified torque.

Tightening torque:
69 N·m (7.0 kgf-m, 50.6 ft-lb)

3) Fill the transmission gear oil through the oil level gauge hole up to the upper point of level gauge.

Recommended gear oil:
Refer to "RM" section. <Ref. to RM-2, LUBRICANTS, RECOMMENDED MATERIALS, Recommended Materials.>

NOTE:
Each oil manufacturer has its base oil and additives. Thus, do not mix two or more brands.

Gear oil capacity:
3.5 ℓ (3.7 US qt, 3.1 Imp qt)

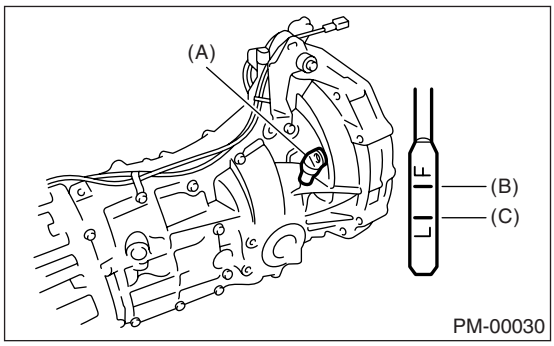

(A) Oil level gauge
(B) Upper level
(C) Lower level

14. Automatic Transmission Fluid

A: INSPECTION

CAUTION:
The level of ATF varies with fluid temperature. Pay attention to the fluid temperature when checking ATF level.

1) Raise the ATF temperature by driving a distance of 5 to 10 km (3 to 6 miles). Otherwise, idle the engine to raise ATF temperature to 70 — 80°C (158 — 176°F) on Subaru Select Monitor. <Ref. to 4AT(D)(diag)-14, READ CURRENT DATA, OPERATION, Subaru Select Monitor.>
2) Make sure the vehicle is level.
3) After selecting all positions (P, R, N, D), shift the select lever in "P" range. Measure the ATF level with engine idling for one or two minutes.

- 4AT model

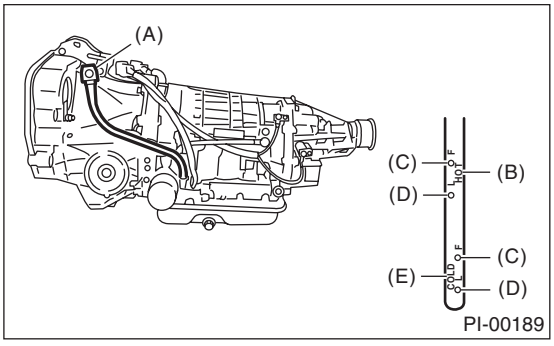

(A) Level gauge
(B) ATF level range at "HOT" [70 — 80°C (158 — 176°F)]
(C) Upper level
(D) Lower level
(E) ATF level range at "COLD" [20 — 30°C (68 — 86°F)]

- 5AT model

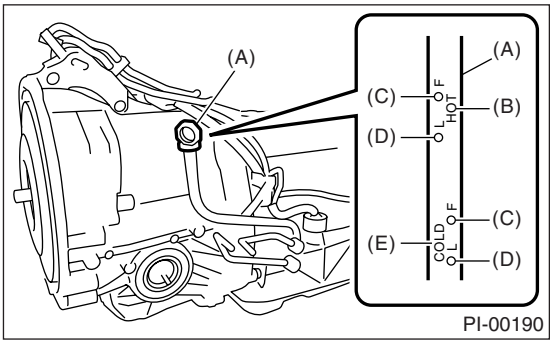

(A) Level gauge
(B) ATF level range at "HOT" [70 — 80°C (158 — 176°F)]
(C) Upper level
(D) Lower level
(E) ATF level range at "COLD" [20 — 30°C (68 — 86°F)]

4) Make sure that ATF level is above the center of upper and lower marks at "HOT" side.
5) If the ATF level is below the center between upper and lower marks, add the recommended ATF until the fluid level is found above the center between upper and lower marks.

CAUTION:
• Use care not to exceed the upper limit level.
• Addition of ATF to the upper limit mark on "HOT" side when the ATF temperature is below 70°C (158°F) will overfilling of ATF, causing a transmission failure.

6) Check ATF level after raising ATF temperature to 70 — 80°C (158 — 176°F) by running the vehicle or by idling the engine again.
7) Check the ATF for leaks.
Check for leaks in the transmission. If there are leaks, it is necessary to repair or replace gasket, oil seals, plugs or other parts.

B: REPLACEMENT

1. AUTOMATIC TRANSMISSION FLUID

1) Drain the ATF by removing drain plug.

NOTE:
Before starting work, cool off the ATF well.

• 4AT model

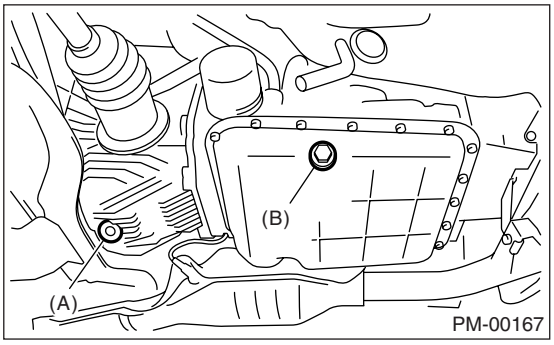

(A) Front differential gear oil drain plug
(B) ATF drain plug

• 5AT model

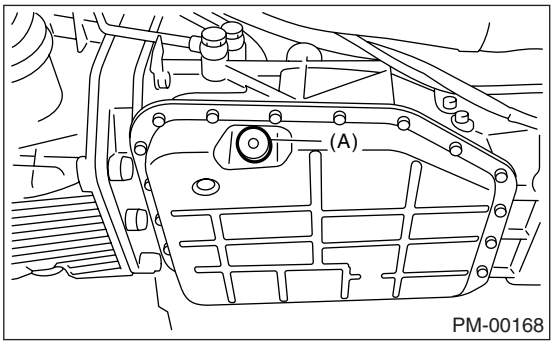

(A) ATF drain plug

2) Replace the gasket with new one, and then tighten the drain plug to specified torque.

Tightening torque:
4AT model
25 N·m (2.5 kgf-m, 18.1 ft-lb)
5AT model
20 N·m (2.0 kgf-m, 4.5 ft-lb)

3) Pour ATF from the oil charger pipe.

Recommended ATF:
Refer to "RM" section. <Ref. to RM-4, FLUID, RECOMMENDED MATERIALS, Recommended Materials.>

Capacity:
Fill the same amount of ATF drained.

4) Check the ATF level. <Ref. to PM-26, INSPECTION, Automatic Transmission Fluid.>

• 4AT model

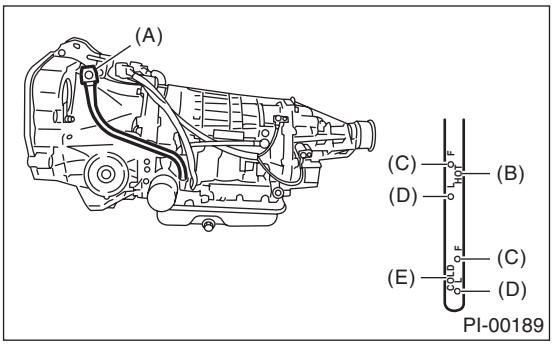

(A) Level gauge
(B) ATF level range at "HOT" [70 — 80°C (158 — 176°F)]
(C) Upper level
(D) Lower level
(E) ATF level range at "COLD" [20 — 30°C (68 — 86°F)]

• 5AT model

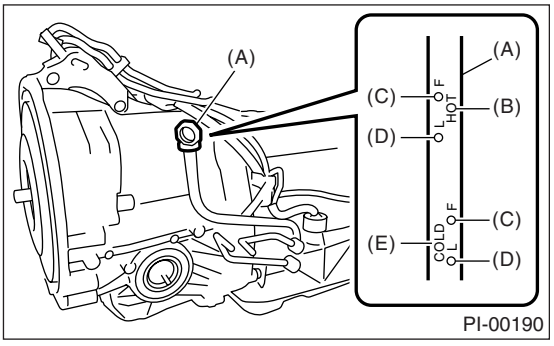

(A) Level gauge
(B) ATF level range at "HOT" [70 — 80°C (158 — 176°F)]
(C) Upper level
(D) Lower level
(E) ATF level range at "COLD" [20 — 30°C (68 — 86°F)]

2. ATF FILTER

NOTE:
Basically ATF filter is maintenance free, but when it has physically rust, damaged or ATF leaked, the ATF filter needs replacement.

For the replacement procedure of ATF filter, refer to "ATF FILTER".

• 4AT model
<Ref. to 4AT-62, ATF Filter.>
• 5AT model
<Ref. to 5AT-59, ATF Filter.>

15. Front & Rear Differential Gear Oil

A: REPLACEMENT

1. FRONT DIFFERENTIAL (MT MODEL)

Front differential gear oil for MT model lubricates the transmission and differential together. Refer to "Transmission Oil" for replacement procedure. <Ref. to PM-25, Transmission Gear Oil.>

2. FRONT DIFFERENTIAL (AT MODEL)

1) Drain the differential gear oil by removing drain plug using TORX® BIT T70.

NOTE:
• Before starting work, cool off the differential gear oil well.
• If front differential gear oil adheres to the exhaust pipe, wipe it off completely.
• 4AT model

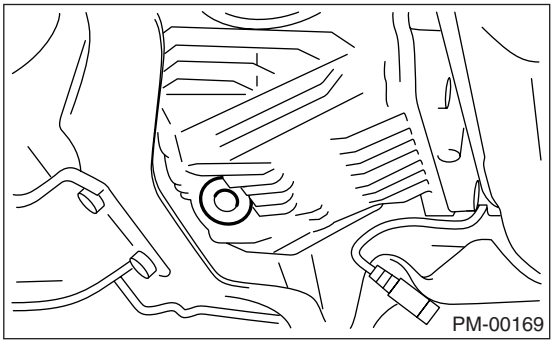

• 5AT model

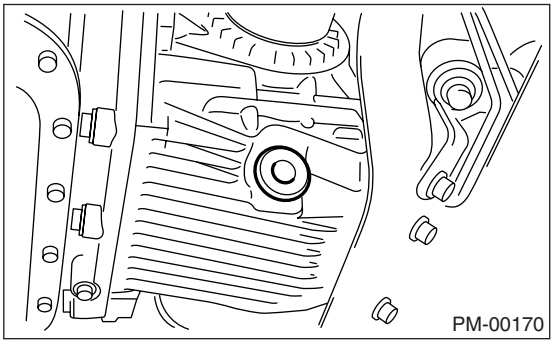

2) Replace the gasket with new one, and then tighten the drain plug to specified torque.

Tightening torque:
70 N·m (7.1 kgf-m, 51.6 ft-lb)

3) Fill differential gear oil through the oil level gauge hole up to the upper point of level gauge.

Recommended gear oil:
Refer to "RM" section. <Ref. to RM-2, LUBRICANTS, RECOMMENDED MATERIALS, Recommended Materials.>

NOTE:
Each oil manufacturer has its base oil and additives. Thus, do not mix two or more brands.

Differential gear oil capacity:
4AT model
1.1 — 1.3 ℓ (1.2 — 1.4 US qt, 1.0 — 1.1 Imp qt)

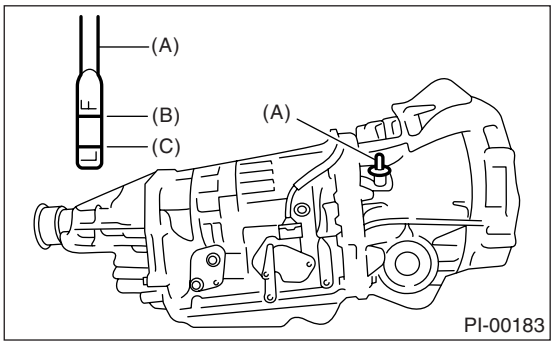

(A) Oil level gauge
(B) Upper level
(C) Lower level

5AT model
1.3 — 1.5 ℓ (1.4 — 1.6 US qt, 1.1 — 1.3 Imp qt)

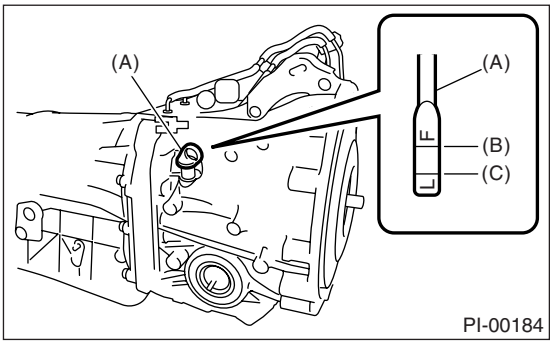

(A) Oil level gauge
(B) Upper level
(C) Lower level

3. REAR DIFFERENTIAL

1) Drain the oil by removing drain plug.
2) Remove the filler plug for quick draining oil.
3) Install the drain plug after draining oil.

NOTE:
• Apply liquid gasket to the drain plug threads for T-type.
• Use a new gasket for VA-type.

Liquid gasket:
THREE BOND 1105 (Part No. 004403010)

Tightening torque:
T-type
49.0 N·m (5.0 kgf-m, 36.2 ft-lb)
VA1-type
34 N·m (3.5 kgf-m, 25.3 ft-lb)
VA2-type
29 N·m (3.0 kgf-m, 21.4 ft-lb)

4) Pour oil to the bottom end of filler plug hole.

Recommended gear oil:
Refer to "RM" section. <Ref. to RM-2, LUBRICANTS, RECOMMENDED MATERIALS, Recommended Materials.>

- Except for VA2-type

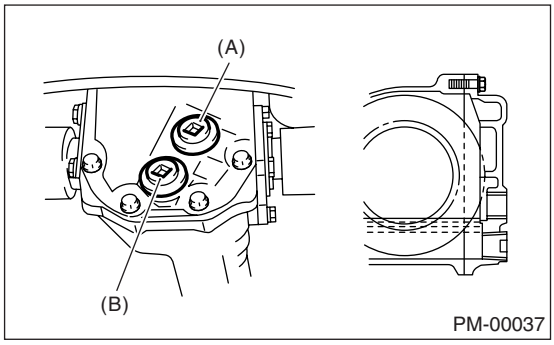

(A) Filler plug
(B) Drain plug

- VA2-type

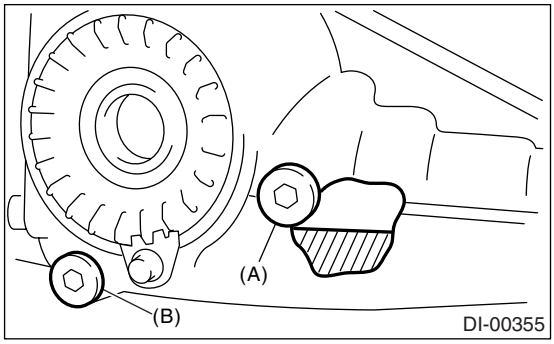

(A) Filler plug
(B) Drain plug

Oil capacity:
0.8 ℓ (0.8 US qt, 0.7 Imp qt)

NOTE:
Each oil manufacturer has its base oil and additives. Thus, do not mix two or more brands.

5) Install the filler plug.

NOTE:
- Apply liquid gasket to the filer plug threads for T-type.
- Use a new aluminum gasket for VA-type.

Liquid gasket:
THREE BOND 1105 (Part No. 004403010)

Tightening torque:
T-type
49.0 N·m (5.0 kgf-m, 36.2 ft-lb)
VA1-type
34 N·m (3.5 kgf-m, 25.3 ft-lb)
VA2-type
29 N·m (3.0 kgf-m, 21.4 ft-lb)

16.Brake Line

A: INSPECTION

1. BRAKE LINE

1) Check for scratches, swelling, corrosion, traces of fluid leakage on the brake hoses or pipe joints.
2) Check the possibility of adjacent parts interfering with brake pipes/hoses during driving, and loose connections/clamps.
3) Check any trace of fluid leakage, scratches, etc. on master cylinder, wheel cylinder and pressure control valve.

NOTE:
• When the brake fluid level in the reservoir tank is lower than specified limit, the brake warning light on the combination meter will come on.
• Visually check the brake hose for damage. (Use a mirror where it is difficult to see)

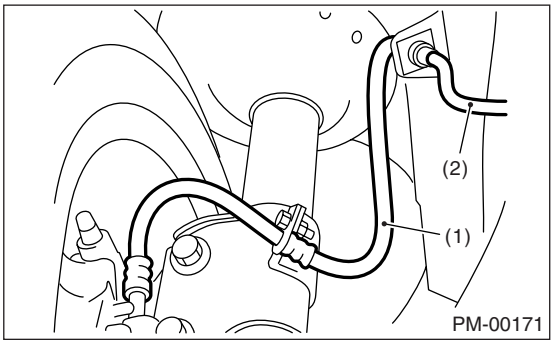

(1) Front brake hose
(2) Front brake pipe

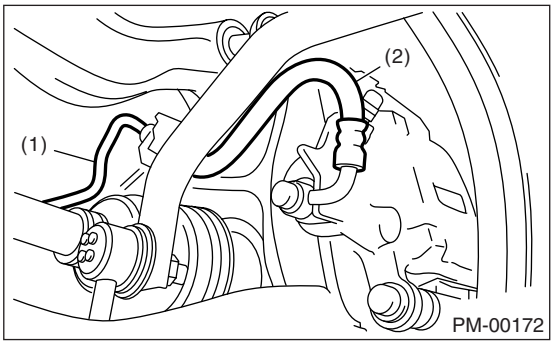

(1) Rear brake pipe
(2) Rear brake hose

2. SERVICE BRAKE

1) Check the free play of brake pedal with pulling up the force of less than 10 N (1 kgf, 2 lb).

Brake pedal free play (Pulling up direction of pedal)
0.5 — 2.0 mm (0.02 — 0.08 in)

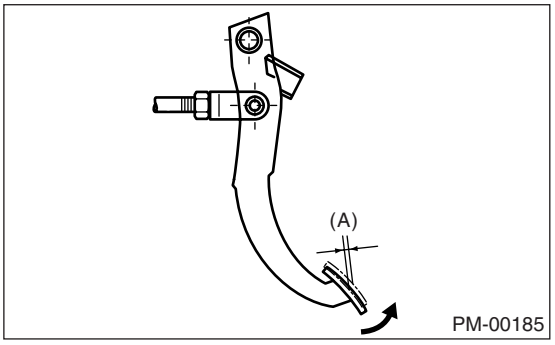

(A) Pedal free play

2) If the free play is out of specifications above, adjust the brake pedal as follows:
(1) Make sure the engine is off. (No vacuum is applied to brake booster.)
(2) There should be play between brake booster clevis and pin at brake pedal installing portion. [Pulling up the brake pedal pad with a force of less than 10 N (1 kgf, 2 lb) to a stroke of 0.5 to 2.0 mm (0.02 to 0.08 in).]
(3) If there is no free play between clevis pin and clevis, turn brake switch adjusting nut until the clearance between stopper and screw of brake switch becomes 0.3 mm (0.012 in).

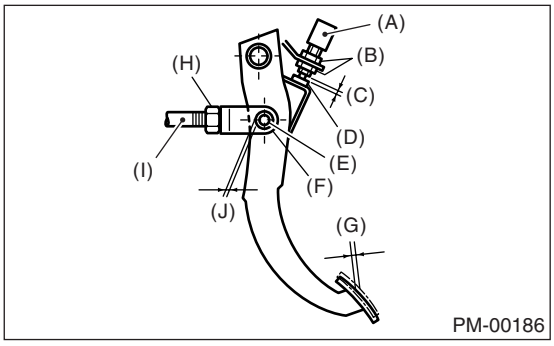

(A) Brake switch
(B) Adjusting nut
(C) 0.3 mm (0.012 in)
(D) Stopper
(E) Clevis pin
(F) Clevis
(G) Pedal free play
(H) Lock nut
(I) Brake booster operating rod
(J) Play at pin

3) Check the pedal stroke.
While the engine is idling, depress the brake pedal with a 490 N (50 kgf, 110 lb) load and measure the distance between the brake pedal and steering wheel. With the brake pedal released, measure the distance between pedal and steering wheel again. The difference between the two measurements must be less than specified value. If the distance is more than specified value, there is possibility of air inside the hydraulic unit.

Brake pedal reserve distance A:
95 mm (3.7 in)/ 490 N (50 kgf, 110 lb) or less

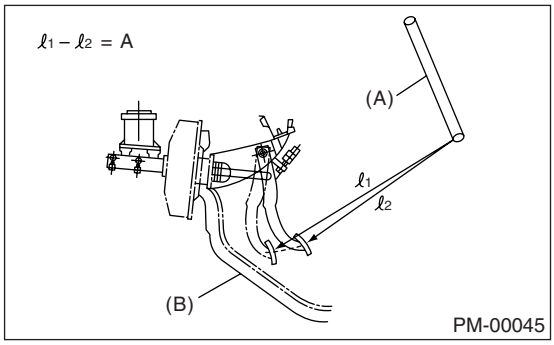

(A) Steering wheel
(B) Toe board

4) Check to see if air is in the hydraulic brake line by the feel of pedal operation. If air appears to exist in the line, bleed it from the system.
5) Check for even operation of all brakes, using a brake tester or by driving the vehicle for a short distance on a straight road.

3. BRAKE SERVO SYSTEM

1) With the engine off, depress the brake pedal several times applying the same pedal force. Make sure the travel distance should not change.
2) With the brake pedal depressed, start the engine. Make sure the pedal should move slightly toward the floor.
3) With the brake pedal depressed, stop the engine and keep the pedal depressed for 30 seconds. Make sure the pedal height should not change.
4) A check valve is brake booster nipple part. Disconnect the vacuum hose to inspect function of check valve.
Make sure air flows from the booster end to engine end but does not flow in the opposite direction in the check valve.

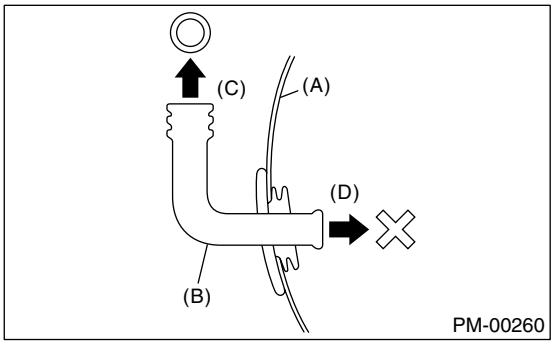

(A) Brake booster
(B) Check valve side
(C) Engine side
(D) Brake booster side

5) Check the vacuum hose for cracks or other damage.

NOTE:
When installing the vacuum hose on the engine and brake booster, do not use soapy water or lubricating oil on their connections.

6) Check the vacuum hose to make sure it is tightly secured.

17.Brake Fluid

A: REPLACEMENT

1) Either jack-up the vehicle and place a rigid rack under it, or lift-up the vehicle.
2) Remove all the wheels.
3) Drain the brake fluid from master cylinder.
4) Refill the reservoir tank with recommended brake fluid.

Recommended brake fluid:
Refer to "RM" section. <Ref. to RM-4, FLUID, RECOMMENDED MATERIALS, Recommended Materials.>

NOTE:
• Avoid mixing different brands of brake fluid to prevent degrading the quality of fluid.
• Be careful not to allow dirt or dust to get into the reservoir tank.

Air bleeding sequence (1) → (2) → (3) → (4)

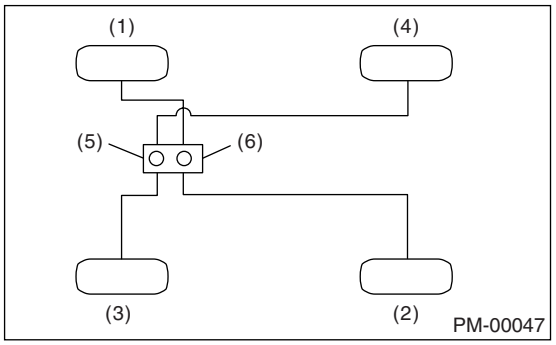

(1) Front RH
(2) Rear LH
(3) Front LH
(4) Rear RH
(5) Secondary
(6) Primary

5) Install one end of a vinyl tube onto the air bleeder and insert the other end of the tube into a container to collect the brake fluid.

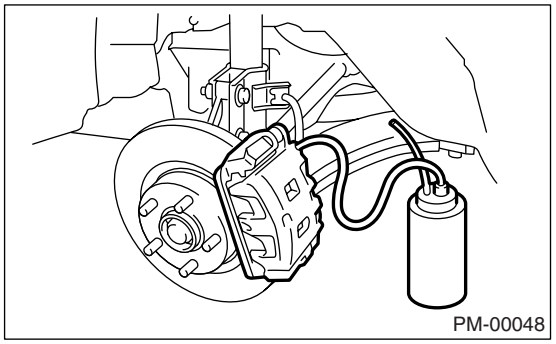

NOTE:
• Cover the bleeder with cloth, when loosening it, to prevent brake fluid from being splashed over surrounding parts.
• During the bleeding operation, keep the brake reservoir tank filled with brake fluid to eliminate entry of air.
• The brake pedal operation must be very slow.
• For convenience and safety, two people should do the work.
• The amount of brake fluid required is approx. 500 mℓ (16.9 US fl oz, 17.6 Imp fl oz) for total brake system.

6) Instruct your co-worker to depress the brake pedal slowly two or three times and then hold it depressed.
7) Loosen the bleeder screw approximately 1/4 turn until a small amount of brake fluid drains into the container, and then quickly tighten the screw.
8) Repeat steps 6) and 7) until there are no air bubbles in drained brake fluid and new fluid flows through vinyl tube.

NOTE:
Add brake fluid as necessary while performing the air bleed operation, in order to prevent the tank from running short of brake fluid.

9) After completing the bleeding operation, hold the brake pedal depressed and tighten the screw and install bleeder cap.

Tightening torque:
8 N·m (0.8 kgf-m, 5.8 ft-lb)

10) Bleed air from each wheel cylinder by following steps from 5) to 9).
11) Depress the brake pedal with a force of approx. 294 N (30 kgf, 66 lb) and hold it there for approx. 20 seconds. At this time check the pedal to see if it makes any unusual movement. Visually inspect the bleeder screws and brake pipe joints to confirm there is no fluid leakage.
12) Install the wheels, and drive the vehicle for a short distance between 2 to 3 km (1 to 2 miles) to confirm brakes are operating properly.

18.Disc Brake Pad and Disc

A: INSPECTION

1) Jack-up the vehicle and support with rigid racks. Then remove the wheels.
2) Visually check the pad thickness through inspection hole of disc brake assembly. Replace the pad if necessary.

NOTE:
When replacing a pad, always replace the pads for both the left and right wheels at the same time. Also replace the pad clips if they are twisted or worn.

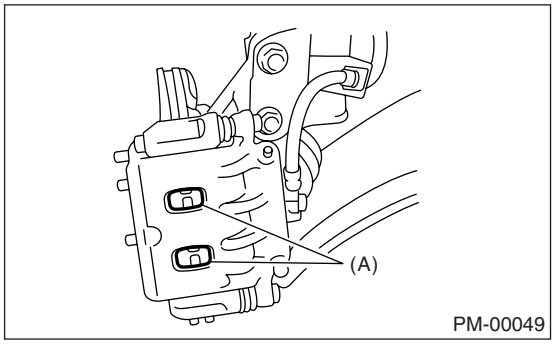

(A) Inspection hole

- Front

Pad thickness		mm (in)
Standard	15-inch	11 (0.43)
	16-inch	11 (0.43)
	17-inch	11 (0.43)
Wear limit	15-inch	1.5 (0.059)
	16-inch	1.5 (0.059)
	17-inch	1.5 (0.059)

- Rear

Pad thickness		mm (in)
Standard	Solid disc type	9 (0.35)
	Ventilated disc type	9 (0.35)
Wear limit	Solid disc type	1.5 (0.059)
	Ventilated disc type	1.5 (0.059)

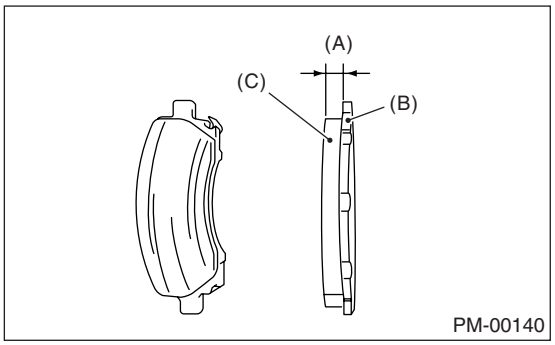

(A) Pad thickness
(B) Back metal
(C) Lining

3) Check the disc rotor, and correct or replace if it is damaged or worn.
- Front

Disc rotor thickness		mm (in)
Standard	15, 16-inch	24 (0.94)
	17-inch	30 (1.18)
Wear limit	15, 16-inch	22 (0.87)
	17-inch	28 (1.10)

- Rear

Disc rotor thickness		mm (in)
Standard	Solid disc type	10 (0.39)
	Ventilated disc type	18 (0.71)
Wear limit	Solid disc type	8.5 (0.34)
	Ventilated disc type	16 (0.63)

4) Remove the caliper body. <Ref. to BR-17, Front Disc Brake Assembly.> <Ref. to BR-25, Rear Disc Brake Assembly.>
5) Tighten the wheel nuts to secure disk rotor.
6) Set a dial gauge at a point less than 10 mm (0.39 in) from outer periphery of the rotor, and then measure the disk rotor runout.

Disc rotor runout limit:
Front: 0.05 mm (0.002 in)
Rear: 0.05 mm (0.002 in)

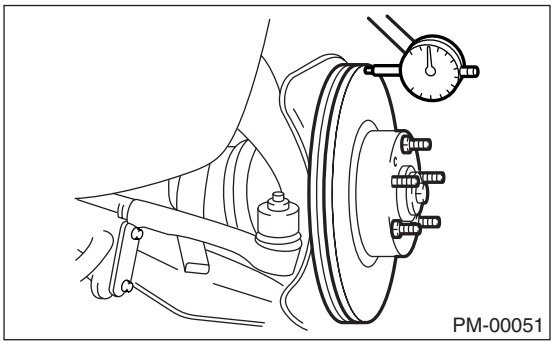

19.Parking Brake

A: INSPECTION

Inspect the brake linings and disc rotor of both sides of the rear brake at the same time by removing disc rotor.
1) Inspect the brake shoes for damage or deformation and check the brake linings for wear.

NOTE:
Always replace both primary and secondary brake shoes for the left and right wheels at the same time.

Thickness of brake lining (except back metal):
Standard value: 3.2 mm (0.126 in)
Wear limit: 1.5 mm (0.059 in)

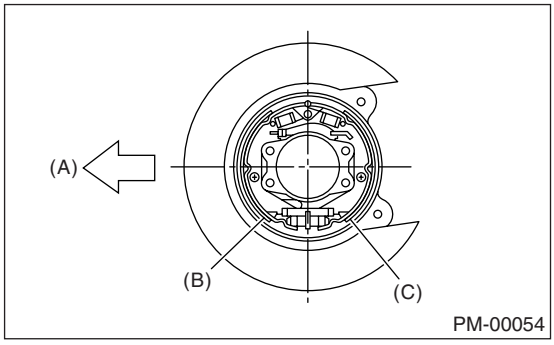

(A) Forward
(B) Brake shoe (Primary side)
(C) Brake shoe (Secondary side)

2) Check the inside of disk rotor for wear, dents or other damage. If the inside surface of dick rotor is streaked, correct the surface with emery cloth (#200 or more). If it is unevenly worn or tapered, correct or replace it.

Brake drum inside diameter:
Standard value: 170 mm (6.69 in)
Wear limit: 171 mm (6.73 in)

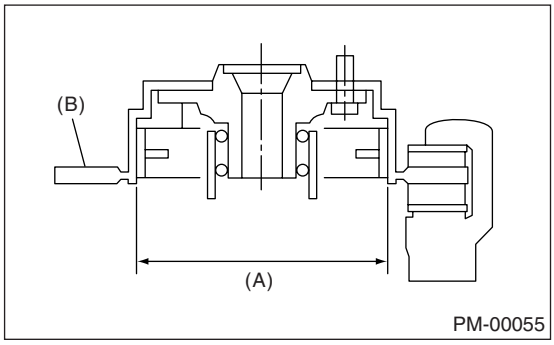

(A) Inside diameter
(B) Disc

3) If the deformation or wear of back plate, shoe, etc. is noticeable, replace them.
4) When the shoe return spring tension is excessively weakened, replace it.

B: ADJUSTMENT

For rear disc brake, adjust the parking brake after bleeding air.
1) Remove the rear cover (rubber) installed at back plate.
2) Turn the adjuster toward arrow mark (upward) until it is locked slightly, by using flat-tip screwdriver as shown in the illustration.

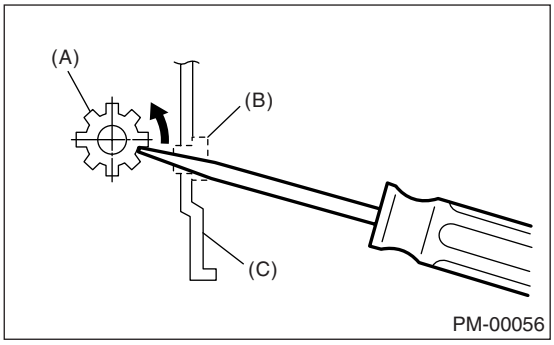

(A) Adjuster
(B) Cover (rubber)
(C) Back plate

3) Turn back (downward) the adjuster 3 to 4 notches.
4) Install the cover (rubber) in original position correctly.

20.Suspension

A: INSPECTION

1. SUSPENSION BALL JOINT

1) Jack-up the vehicle until front wheels are off ground.
2) Grasp the bottom of tire and move it in and out. If relative movement is observed between the brake disc cover (A) and end of front arm (D), ball joint (C) may be excessively worn.

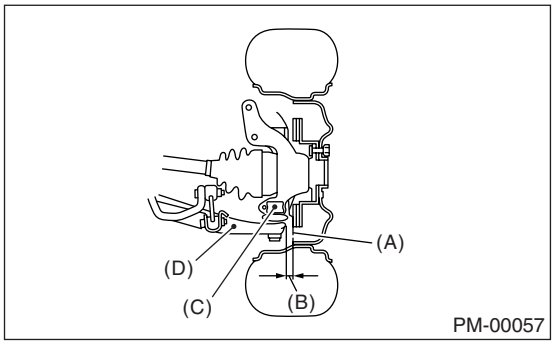

3) Grasp the end of front arm and move it up and down. Relative movement (A) between the housing (D) and front arm (C) boss indicates ball joint (B) may be excessively worn.

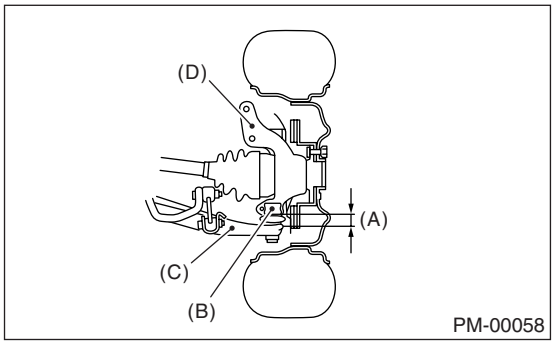

4) If relative movement is observed in the step 2), 3), remove and inspect the ball joint. If the free play exceeds standard value, replace the ball joint. <Ref. to FS-16, Front Ball Joint.>
5) Damage of dust seal
Visually inspect the ball joint dust seal. If it is damaged, remove the front arm. <Ref. to FS-18, Front Arm.> And measure free play of ball joint. <Ref. to FS-16, Front Ball Joint.>

(1) When looseness exceeds standard value, replace the ball joint.
(2) If the dust seal is damaged, replace with a new ball joint.

NOTE:
When the front arm ball joint has been removed or replaced, check the toe-in of front wheel. If the front wheel toe-in is not at specified value, adjust the toe-in. <Ref. to FS-7, Wheel Alignment.>

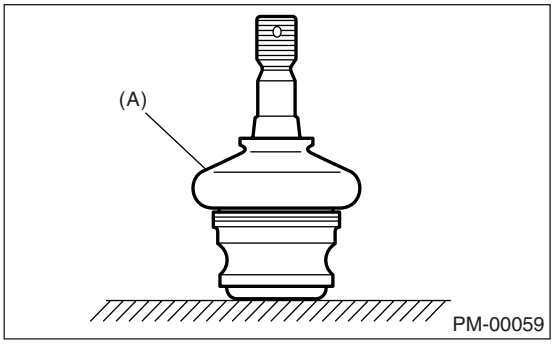

(A) Dust seal

2. FRONT, REAR SUSPENSION BUSHING

Apply pressure with tire lever etc, and inspect the bushing for wear or crack. Replace the bushings if there is wear or crack.

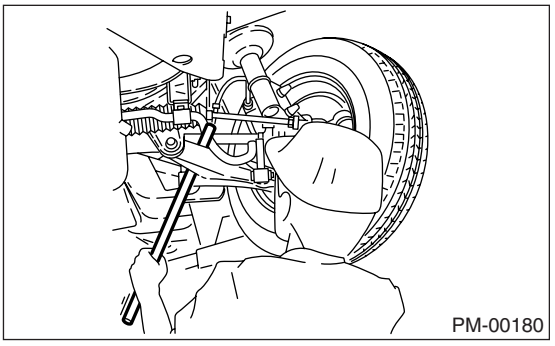

3. WHEEL ARCH HEIGHT

1) Unload the cargoes and set the vehicle in curb weight (empty) condition.
2) Check the wheel arch height of front and rear suspensions to ensure that they are within specified values. <Ref. to FS-7, Wheel Alignment.>
3) When the wheel arch height is out of standard, visually inspect following components and replace deformed parts.

- Suspension components [Front strut assembly and rear damper assembly]
- Parts connecting suspension and body

4) If no components are deformed, adjust the wheel arch height by replacing the suspension which wheel arch height is out of standard. <Ref. to FS-7, Wheel Alignment.> <Ref. to RS-8, Wheel Alignment.>

4. WHEEL ALIGNMENT OF FRONT SUSPENSION

1) Check the alignment of front suspension to ensure that following items conform to standard values.
- Toe-in
- Camber
- Caster
- Steering angle

<Ref. to FS-7, Wheel Alignment.>
2) When the caster angle does not conform to reference obviously, visually inspect the following components and replace deformed parts.
- Suspension components [Strut assembly, crossmember, front arm, etc.]
- Parts connecting suspension and body

3) When the toe-in and camber are out of standard value, adjust them so that they conform to standard value.
4) When the right-and-left turning angles of tire are out of standard, adjust to standard value.

5. WHEEL ALIGNMENT OF REAR SUSPENSION

1) Check the alignment of rear suspension to ensure that following items are within standard values.
- Toe-in
- Camber
- Thrust angle

<Ref. to RS-8, Wheel Alignment.>
2) When the camber angle does not conform to standard value, visually inspect the following components. If the deformation is observed, replace the damaged parts.
- Suspension components [Shock absorber, front link, rear link, upper link, rear arm, sub frame, etc]
- Parts connecting suspension and body

3) When the toe-in and thrust angle are out of standard value, adjust them so that they conform to standard value.

6. OIL LEAKAGE OF STRUT AND SHOCK ABSORBER

Visually inspect the front strut and rear shock absorber for oil leakage. Replace the front strut and rear shock absorber if oil leaks excessively.

7. TIGHTNESS OF BOLTS AND NUTS

Check the bolts and nuts for looseness. Retighten the bolts and nuts to specified torque. If the self-locking nuts and bolts are removed, replace them with new ones.
- Front suspension

<Ref. to FS-2, General Description.>
- Rear suspension

<Ref. to RS-2, General Description.>

8. DAMAGE TO SUSPENSION PARTS

Check the following parts and the fastening portion of the vehicle body for deformation or excessive rusting which impairs the suspension. If necessary, replace the damaged parts with new ones. If minor rust formation, pitting, etc. are noted, remove the rust and take rust prevention measure.
- Front suspension
  - Front arm
  - Crossmember
  - Strut
- Rear suspension
  - Sub frame
  - Front link
  - Rear link
  - Upper link
  - Rear arm
  - Shock absorber
- In the area where salt is sprayed to melt snow on a road in winter, check suspension parts for damage caused by rust every 12 months after lapse of 60 months. Take rust prevention measure as required.

21.Wheel Bearing

A: INSPECTION

1. FRONT WHEEL BEARING

NOTE:
Inspect the condition of front wheel bearing grease.

1) Jack-up the front side of vehicle.
2) While holding the front wheel by hand, swing it in and out to check bearing free play.
3) Loosen the wheel nuts, and remove the front wheel.
4) If the bearing free play exists in step 2) above, attach a dial gauge to the hub and measure axial play in axial direction.

Service limit:
Straight-ahead position within 0.05 mm (0.0020 in)

5) Remove the bolts and self-locking nuts, and extract the front arm from front crossmember.
6) Remove the PTJ of front drive shaft from transmission. <Ref. to DS-13, Front Axle.>
7) While supporting the front drive shaft horizontally with one hand, turn the hub with the other hand to check for noise or binding.
If the hub is noisy or binds, replace the front axle.

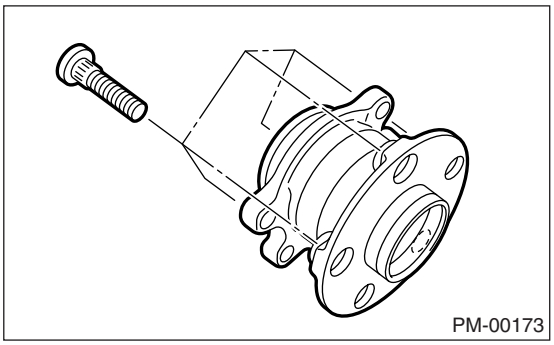
PM-00173

2. REAR WHEEL BEARING

1) Jack-up the rear side of vehicle.
2) While holding the rear wheel by hand, swing it in and out to check bearing free play.
3) Loosen the wheel nuts, and remove the rear wheel.
4) If the bearing free play exists in step 2) above, attach a dial gauge to the hub and measure axial play in axial direction.

Service limit:
Straight-ahead position within 0.05 mm (0.0020 in)

5) Remove the DOJ of rear drive shaft from rear differential. <Ref. to DS-26, Rear Drive Shaft.>
6) While supporting rear drive shaft horizontally with one hand, turn the hub with the other hand to check for noise or binding.
If the hub is noisy or binds, replace the rear axle.

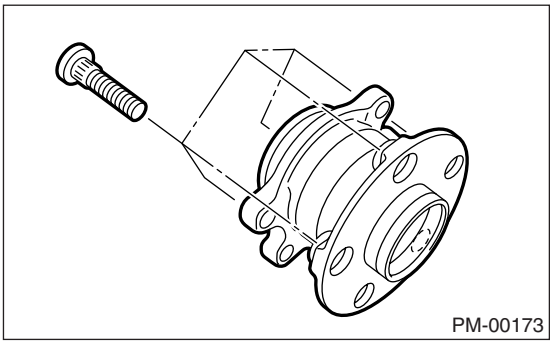
PM-00173

22.Axle Boots & Joints

A: INSPECTION

1. FRONT AND REAR AXLE BOOTS

Inspect the front axle boots (A) and rear axle boots (B) for deformation, damage or failure. If faulty, replace them with new ones. <Ref. to DS-22, Front Drive Shaft.> <Ref. to DS-26, Rear Drive Shaft.>

- Front

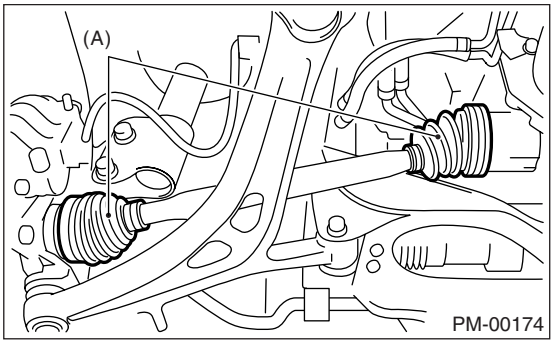

- Rear

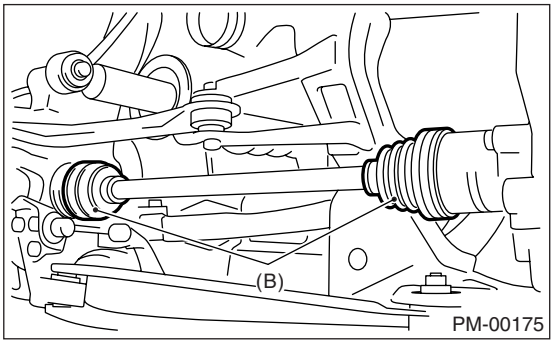

2. PROPELLER SHAFT

Inspect the propeller shaft for damage or failure. If faulty, replace them with new ones. <Ref. to DS-10, Propeller Shaft.>

23.Tire Rotation

A: INSPECTION

1) When the tread has worn down to 1.6 mm (2/32 in) or the wear indicator appears across the tread, replace the tire. (It is recommended to replace both left and right tires as a set.)
2) If abnormal uneven wear is found on the tire, adjust the wheel alignment.
3) Also, tire rotations should be done by interchanging front and rear tires as shown to ensure even wear of the tires.

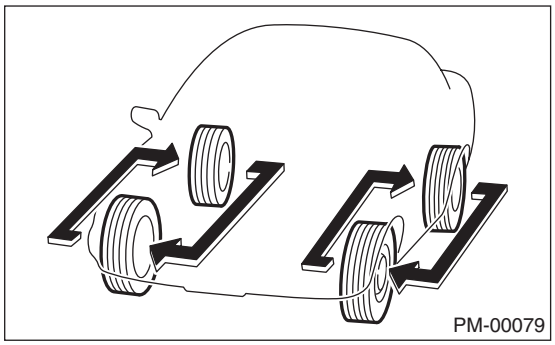

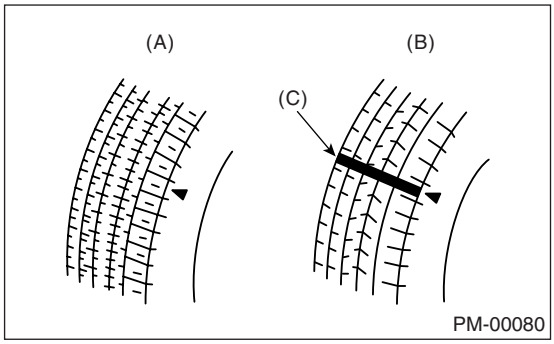

(A) New tread
(B) Worn tread
(C) Tread wear indicator

24.Steering System (Power Steering)

A: INSPECTION

1. STEERING WHEEL

1) Set the steering wheel in a straight-ahead position, and check the wheel spokes to make sure they are correctly set in their specified positions.
2) Lightly turn the steering wheel to the left and right to determine the point where front wheels start to move.
Measure the distance of the movement of steering wheel at the outer periphery of wheel.

Steering wheel free play:
0 — 17 mm (0 — 0.67 in)

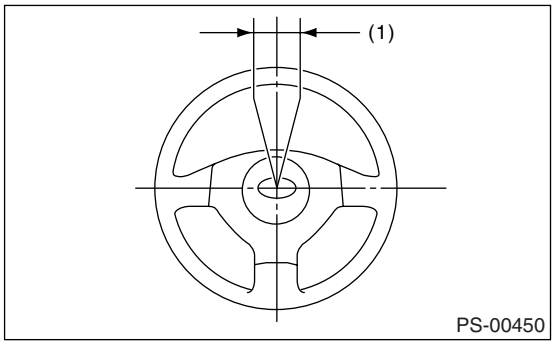

(1) Steering wheel free play

Move the steering wheel vertically toward the shaft to ascertain if there is play in the direction.

Maximum permissible play:
0.5 mm (0.020 in)

3) Drive the vehicle and check the following items during operation.
(1) Steering force:
The effort required for steering should be smooth and even at all points, and should not vary.
(2) Pulled to one side:
Steering wheel should not be pulled to either side while driving on a level surface.
(3) Wheel runout:
Steering wheel should not show any sign of runout.
(4) Return factor:
Steering wheel should return to its original position after it has been turned and then released.

2. STEERING SHAFT JOINT

When the steering wheel free play is excessive, disconnect the universal joint of steering shaft and check it for any play and yawing torque (at the point of the crossing direction). Also inspect for any damage to sealing or worn serrations. If the joint is loose, retighten the mounting bolts to the specified torque.

Tightening torque:
24 N·m (2.4 kgf-m, 17.4 ft-lb)

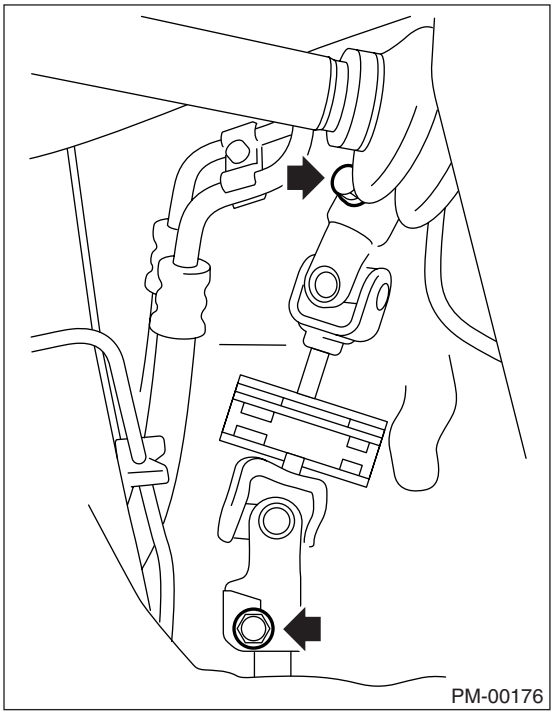

3. GEARBOX

1) With the vehicle placed on a level surface, turn the steering wheel 90° in both the left and right directions.
While the wheel is being rotated, reach under the vehicle and check for looseness in gearbox.

Tightening torque:
60 N·m (6.1 kgf-m, 44.1 ft-lb)

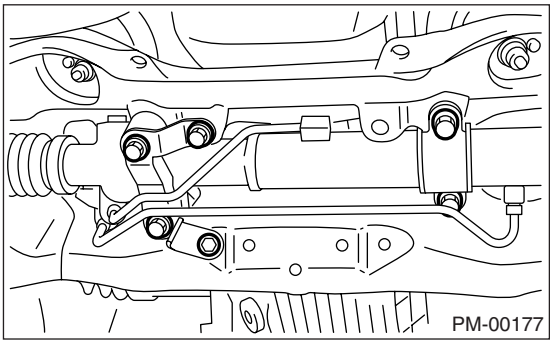

2) Check the boot for damage, cracks or deterioration.

3) With the vehicle placed on a level surface, quickly turn the steering wheel to the left and right.
While steering wheel is being rotated, check the gear backlash. If any noise is noticed, adjust the gear backlash.
4) Apply liquid gasket to at least 1/3 of entire perimeter of adjusting screw thread.
5) Tighten adjusting screw to 25 N·m (2.5 kgf-m, 18.1 ft-lb) and then loosen.
6) Tighten adjusting screw to 3.9 N·m (0.40 kgf-m, 2.9 ft-lb) and then loosen 20°.

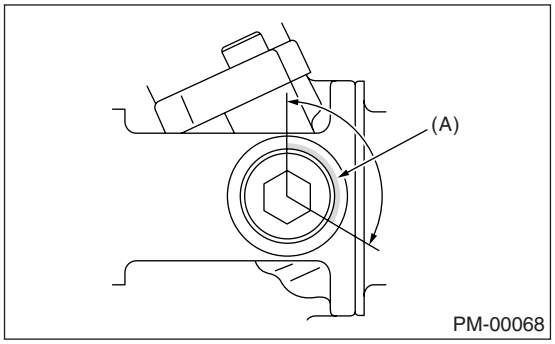

(A) Apply liquid gasket to at least 1/3 of entire perimeter

7) Install the lock nut. While holding adjusting screw with a wrench, tighten the lock nut using ST.
ST 926230000 SPANNER

Tightening torque (lock nut):
25 N·m (2.5 kgf-m, 18.1 ft-lb)

Hold the adjusting screw with a wrench to prevent it from turning while tightening the lock nut.

4. TIE-ROD

1) Check the tie-rod and tie-rod ends for bends, scratches or other damage.

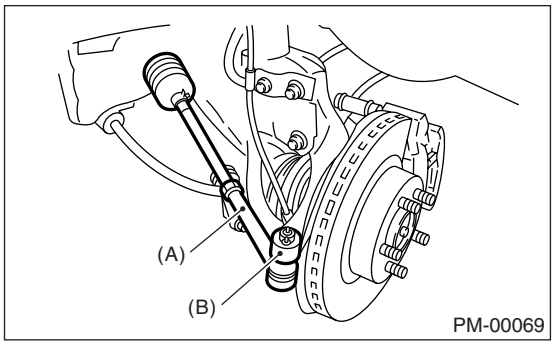

(A) Tie-rod end
(B) Knuckle arm

2) Check the connections of knuckle ball joints for play, inspect for damage on dust seals, and check free play of ball studs. If castle nut is loose, retighten it to the specified torque, then tighten further up to 60° until cotter pin hole is aligned.

Tightening torque:
27 N·m (2.75 kgf-m, 19.9 ft-lb)

3) Check the lock nut on the tie-rod for tightness. If it is loose, retighten it to the specified torque.

Tightening torque:
85 N·m (8.7 kgf-m, 63 ft-lb)

5. POWER STEERING FLUID LEVEL

NOTE:
• At power steering fluid temperature 20°C (68°F); read the fluid level on the "COLD" side.
• At power steering fluid temperature 80°C (176°F); read the fluid level on the "HOT" side.

1) Place the vehicle with engine "OFF" on a level surface.
2) Check the fluid level using the scale on the outside of the reservoir tank (A). If the level is below "MIN" (B), add fluid to bring it up to "MAX" (C).

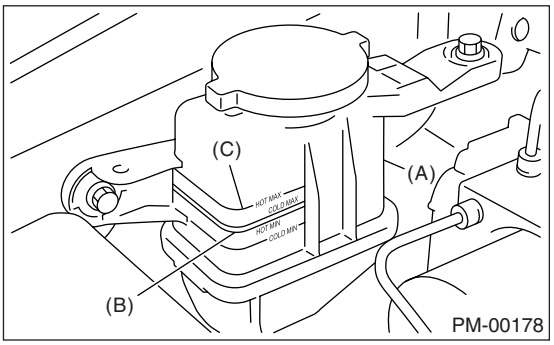

NOTE:
If fluid level is at MAX level or above, drain fluid to keep the level in the specified range of indicator by using a syringe or the like.

Recommended fluid:
Refer to "RM" section. <Ref. to RM-4, FLUID, RECOMMENDED MATERIALS, Recommended Materials.>

Fluid capacity:
0.8 ℓ (0.8 US qt, 0.7 Imp qt)

6. POWER STEERING FLUID FOR LEAKS

Inspect the underside of oil pump and gearbox of power steering system, hoses, pipes and their couplings for fluid leaks.
If the fluid leaks are found, retighten their fitting bolts (or nuts) and/or replace their parts.

NOTE:
• Wipe the leaked fluid off after correcting fluid leaks.
• Also pay attention to clearances between hoses (or pipes) and other parts when inspecting fluid leaks.

7. HOSES OF OIL PUMP FOR DAMAGES

Check the pressure hose and return hose of oil pump for crack, swell or damage. Replace the hose with a new one if necessary.

NOTE:
Prevent hoses from turning and/or bending when installing hoses.

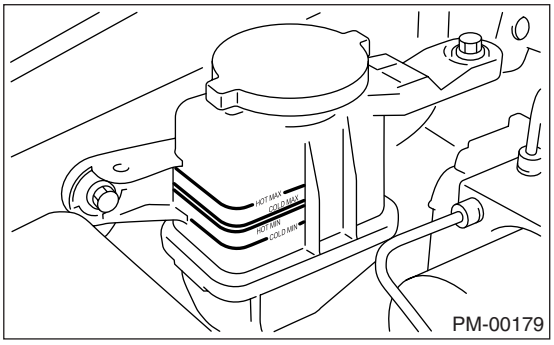

8. POWER STEERING PIPES FOR DAMAGES

Check the power steering pipes for corrosion and damage.
Replace the pipes with new ones if necessary.

9. GEARBOX BOOTS

Inspect both sides of the gearbox boot as follows, and correct the defects if necessary.
1) Positions (A) and (B) of the gearbox boot are fitted correspondingly in grooves (A) and (B) of the gearbox and rod (C).
2) Clips are fitted outside of positions (A) and (B) of boot.
3) Boot does not have crack and hole.

NOTE:
Rotate the position (B) of gearbox boot against the twist of it produced by adjustment of toe-in, etc. Apply grease to the groove (C).

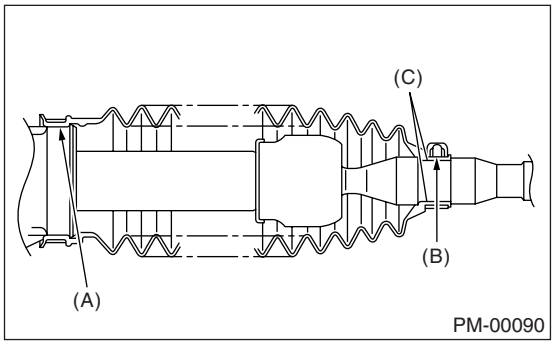

10.FITTING BOLTS AND NUTS

Inspect the fitting bolts and nuts of oil pump and bracket for looseness, and retighten them if necessary.
Inspect and/or retighten them when engine is cold.

25.Supplemental Restraint System

A: INSPECTION

Check the airbag system in accordance with the result of the self-diagnosis. <Ref. to AB(diag)-2, Basic Diagnostic Procedure.>

1) Ensure that airbag connectors are connected. If not, properly connect. When the ignition switch is turned ON with the connector(s) disconnected, the airbag warning light blinks to identify the fault.

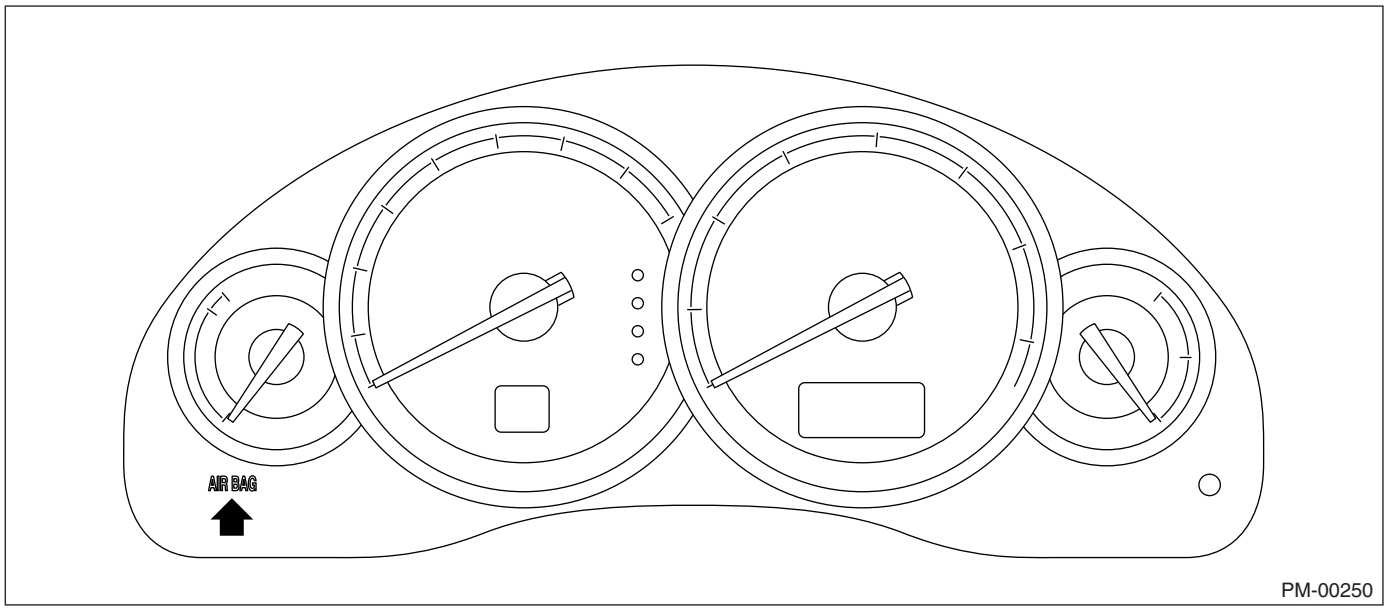

2) Connect the Subaru Select Monitor to datalink connector. Turn the ignition switch to ON, and Subaru Select Monitor switch to ON.

3) Read the Diagnostic Trouble Code (DTC) using Subaru Select Monitor. <Ref. to ABS(diag)-15, READ DIAGNOSTIC TROUBLE CODE (DTC), OPERATION, Subaru Select Monitor.>

4) Inspect the airbag system according to the Diagnostic Trouble Code (DTC).

ENGINE SECTION 1

This service manual has been prepared to provide SUBARU service personnel with the necessary information and data for the correct maintenance and repair of SUBARU vehicles.
This manual includes the procedures for maintenance, disassembling, reassembling, inspection and adjustment of components and diagnostics for guidance of experienced mechanics.
Please peruse and utilize this manual fully to ensure complete repair work for satisfying our customers by keeping their vehicle in optimum condition. When replacement of parts during repair work is needed, be sure to use SUBARU genuine parts.

All information, illustration and specifications contained in this manual are based on the latest product information available at the time of publication approval.

FUEL INJECTION (FUEL SYSTEMS)	FU(H4SO)
EMISSION CONTROL (AUX. EMISSION CONTROL DEVICES)	EC(H4SO)
INTAKE (INDUCTION)	IN(H4SO)
MECHANICAL	ME(H4SO)
EXHAUST	EX(H4SO)
COOLING	CO(H4SO)
LUBRICATION	LU(H4SO)
SPEED CONTROL SYSTEMS	SP(H4SO)
IGNITION	IG(H4SO)
STARTING/CHARGING SYSTEMS	SC(H4SO)
ENGINE (DIAGNOSTICS)	EN(H4SO)(diag)
GENERAL DESCRIPTION	GD(H4SO)
FUEL INJECTION (FUEL SYSTEMS)	FU(H4SO U5)
EMISSION CONTROL (AUX. EMISSION CONTROL DEVICES)	EC(H4SO U5)
INTAKE (INDUCTION)	IN(H4SO U5)
MECHANICAL	ME(H4SO U5)
EXHAUST	EX(H4SO U5)

ENGINE SECTION 1

COOLING	CO(H4SO U5)
LUBRICATION	LU(H4SO U5)
SPEED CONTROL SYSTEMS	SP(H4SO U5)
IGNITION	IG(H4SO U5)
STARTING/CHARGING SYSTEMS	SC(H4SO U5)
ENGINE (DIAGNOSTICS)	EN(H4SO U5)(diag)
GENERAL DESCRIPTION	GD(H4SO U5)

FUEL INJECTION (FUEL SYSTEMS)

FU(H4SO)

		Page
1.	General Description	2
2.	Throttle Body	11
3.	Intake Manifold	12
4.	Engine Coolant Temperature Sensor	21
5.	Crankshaft Position Sensor	22
6.	Camshaft Position Sensor	23
7.	Knock Sensor	24
8.	Throttle Position Sensor	25
9.	Manifold Absolute Pressure Sensor	26
10.	Mass Air Flow and Intake Air Temperature Sensor	27
11.	EGR Valve	28
12.	Fuel Injector	29
13.	Front Oxygen (A/F) Sensor	32
14.	Rear Oxygen Sensor	34
15.	Engine Control Module (ECM)	35
16.	Main Relay	36
17.	Fuel Pump Relay	37
18.	Electronic Throttle Control Relay	38
19.	Fuel	39
20.	Fuel Tank	40
21.	Fuel Filler Pipe	46
22.	Fuel Pump	49
23.	Fuel Level Sensor	51
24.	Fuel Sub Level Sensor	52
25.	Fuel Filter	53
26.	Fuel Damper Valve	54
27.	Fuel Delivery, Return and Evaporation Lines	55
28.	Fuel System Trouble in General	58

1. General Description

A: SPECIFICATION

Fuel tank	Capacity	64 ℓ (16.9 US gal, 14.1 Imp gal)
	Location	Under rear seat
Fuel pump	Type	Impeller
	Shutoff discharge pressure	441 — 686 kPa (4.50 — 7.00 kg/cm^2, 64.0 — 99.5 psi)
	Discharge	75 ℓ (19.8 US gal, 16.5 Imp gal)/h or more [12 V at 300 kPa (3.06 kg/cm^2, 43.5 psi)]
Fuel filter		In-tank type

B: COMPONENT

1. INTAKE MANIFOLD

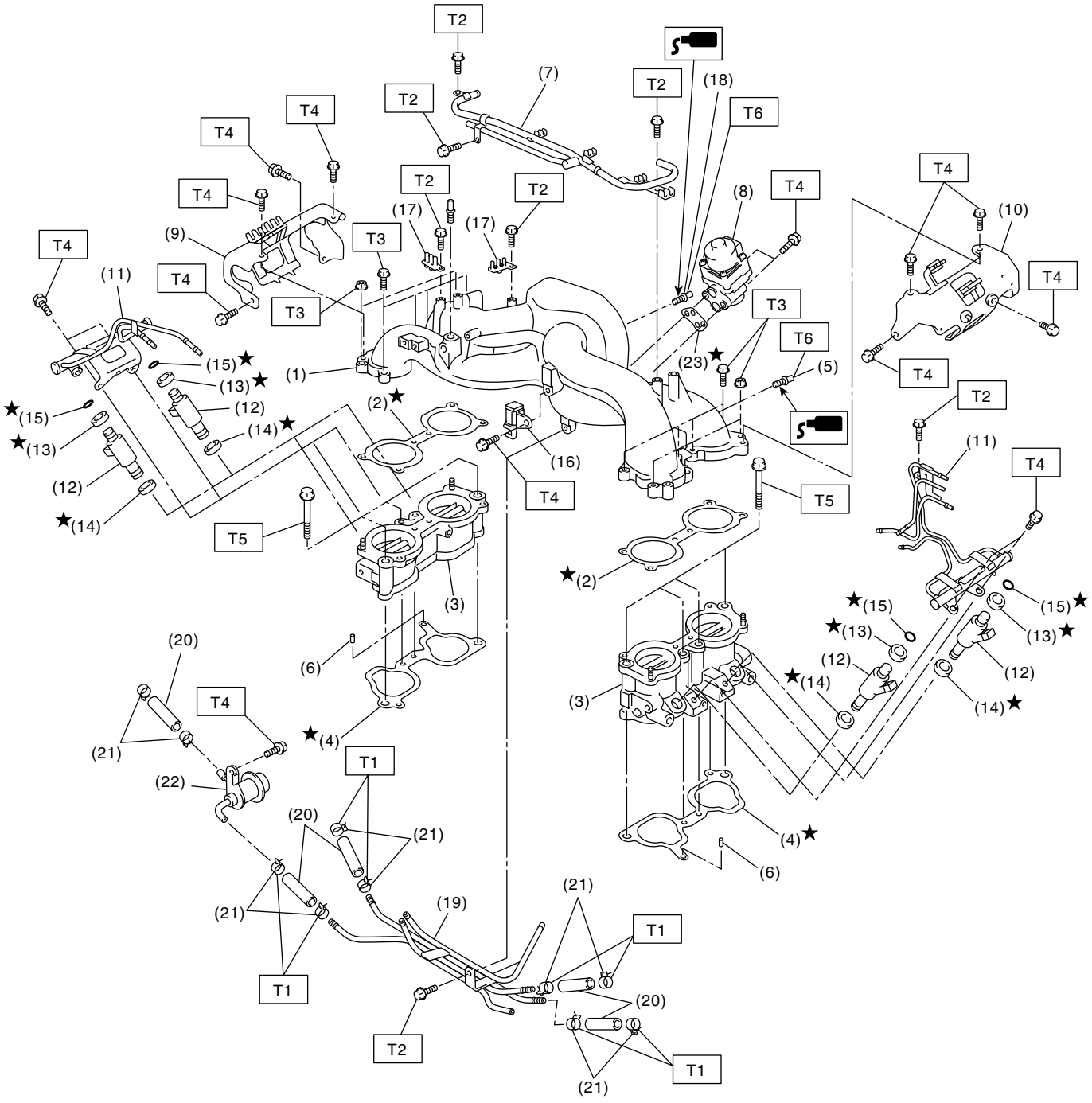

(1) Intake manifold
(2) Gasket
(3) Intake manifold (Lower)
(4) Gasket
(5) Nipple
(6) Guide pin
(7) PCV pipe
(8) EGR valve
(9) Fuel pipe protector RH
(10) Fuel pipe protector LH
(11) Fuel injector pipe
(12) Fuel injector
(13) O-ring
(14) O-ring
(15) O-ring
(16) Purge control solenoid valve
(17) Plug cord holder
(18) Nipple
(19) Fuel pipe ASSY
(20) Fuel hose
(21) Clip
(22) Pressure regulator
(23) Gasket

Tightening torque: N·m (kgf-m, ft-lb)
T1: 1.5 (0.15, 1.1)
T2: 6.4 (0.65, 4.7)
T3: 8.75 (0.89, 6.5)
T4: 19 (1.9, 14)
T5: 25 (2.5, 18)
T6: 17 (1.7, 12.5)

2. AIR INTAKE SYSTEM

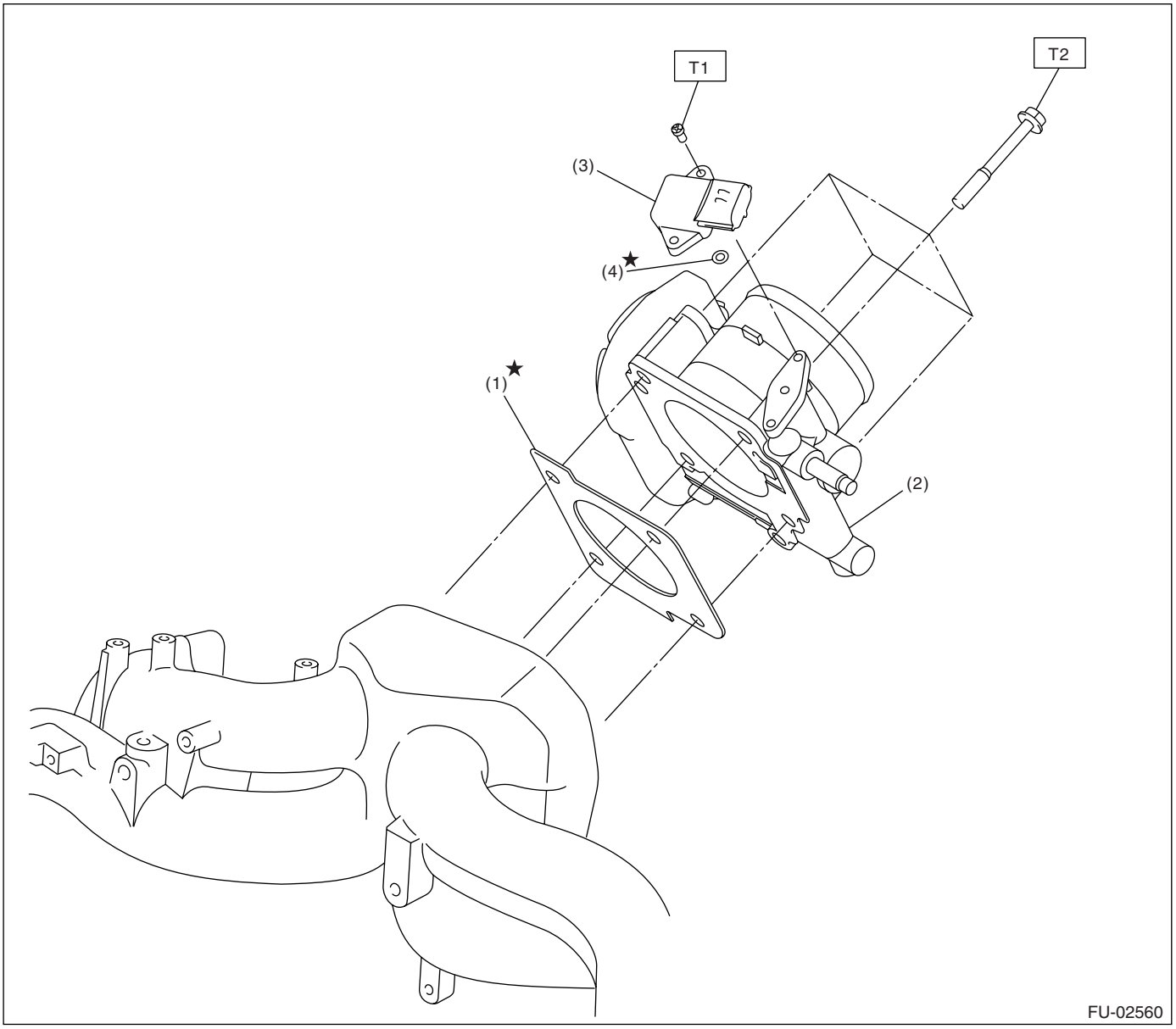

(1) Gasket
(2) Throttle body
(3) Manifold absolute pressure sensor
(4) O-ring

Tightening torque: N·m (kgf-m, ft-lb)
T1: 2 (0.2, 1.5)
T2: 8 (0.8, 5.9)

3. CRANKSHAFT POSITION, CAMSHAFT POSITION AND KNOCK SENSORS

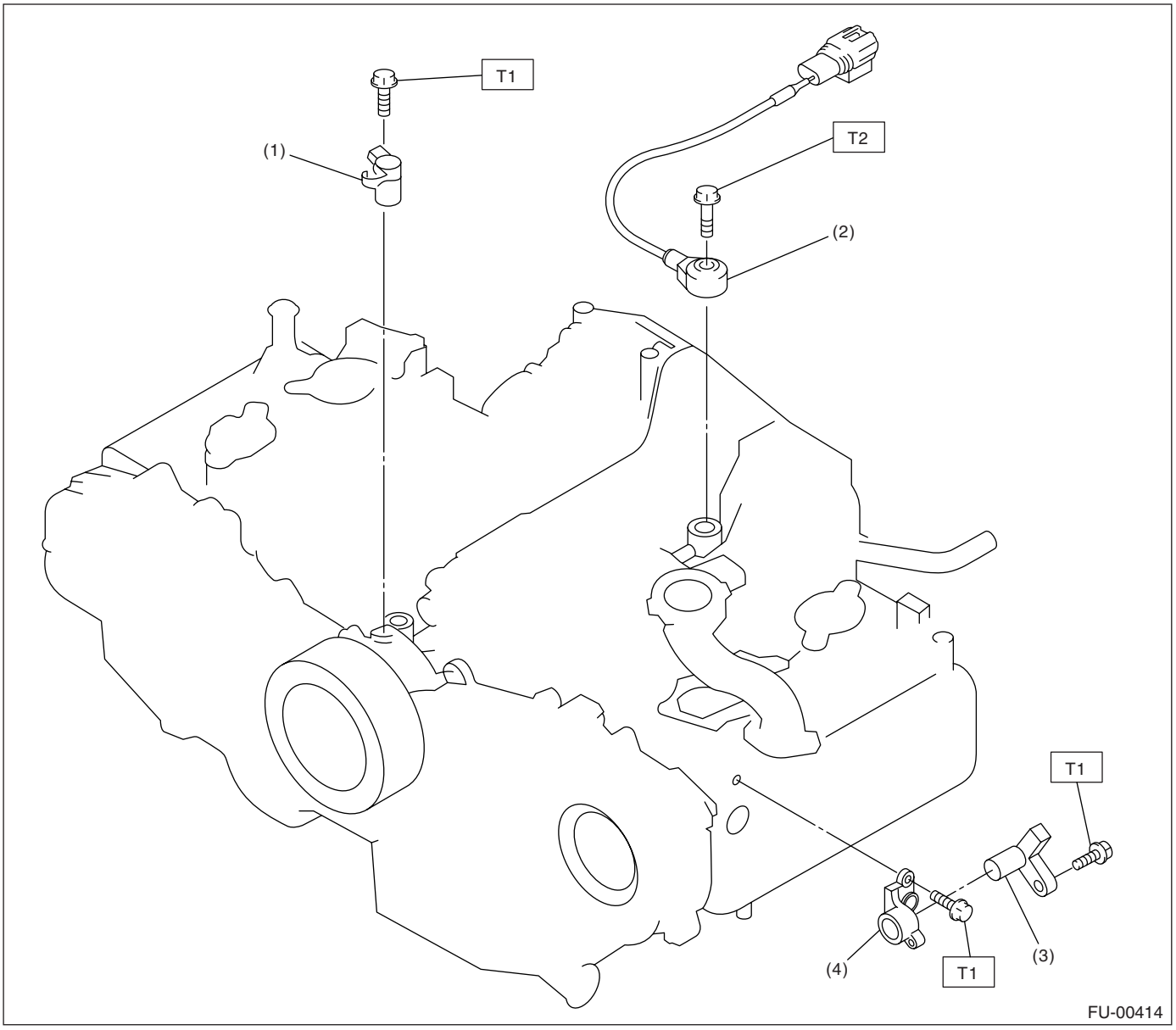

(1) Crankshaft position sensor
(2) Knock sensor
(3) Camshaft position sensor
(4) Camshaft position sensor support

Tightening torque: N·m (kgf-m, ft-lb)
T1: 6.4 (0.65, 4.7)
T2: 24 (2.4, 17.4)

4. FUEL TANK

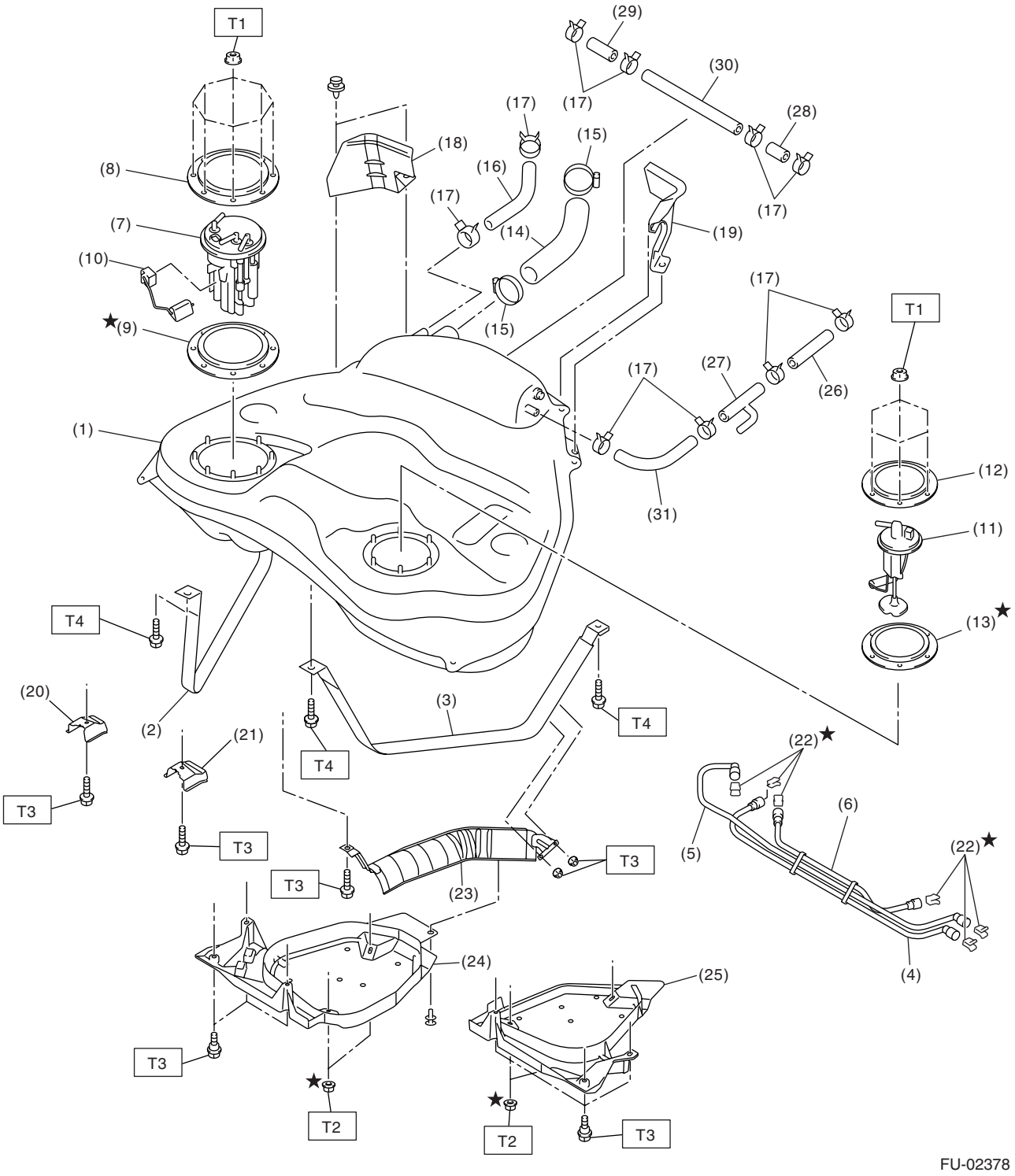
T1
(29)
(30)
(17)
(17)
(28)
(18)
(15)
(16)
(8)
(17)
(17)
(7)
(14)
(19)
(10)
(17)
T1
★(9)
(15)
(17)
(27)
(26)
(1)
(12)
(31)
(11)
T4
(13)★
(20)
(3)
(2)
(21)
T4
T4
(22)★
T3
(6)
T3
T3
(5)
(22)★
(23)
T3
(24)
(25)
(4)
T3
★
T2
★
T2
T3
FU-02378

(1) Fuel tank
(2) Fuel tank band RH
(3) Fuel tank band LH
(4) Delivery tube
(5) Return tube
(6) Jet pump tube
(7) Fuel pump assembly
(8) Fuel pump upper plate
(9) Fuel pump gasket
(10) Fuel level sensor
(11) Fuel sub level sensor
(12) Fuel sub level sensor upper plate
(13) Fuel sub level sensor gasket
(14) Fuel filler hose
(15) Clamp
(16) Evaporation hose A
(17) Clip
(18) Fuel tank protector RH (Rear)
(19) Fuel tank protector LH (Rear)
(20) Stopper RH
(21) Stopper LH
(22) Retainer
(23) Heat shield cover
(24) Fuel tank protector RH (Front)
(25) Fuel tank protector LH (Front)
(26) Evaporation hose B
(27) Connector
(28) Evaporation hose C
(29) Evaporation hose D
(30) Evaporation pipe
(31) Evaporation hose E

Tightening torque: N·m (kgf-m, ft-lb)
T1: 4.4 (0.45, 3.2)
T2: 9 (0.9, 6.6)
T3: 17.5 (1.78, 12.9)
T4: 33 (3.4, 25)

5. FUEL LINE

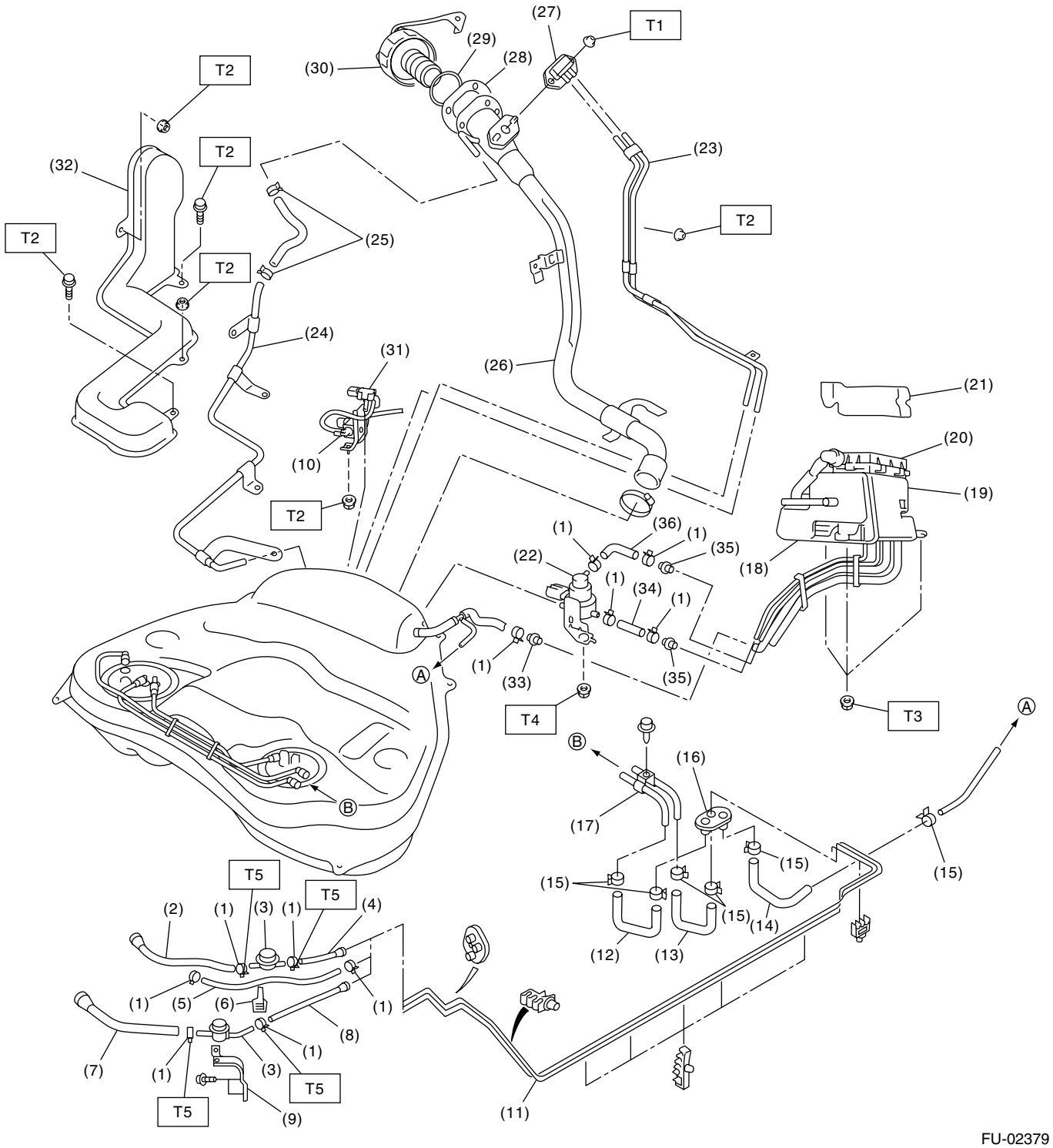

FU-02379

(1) Clamp
(2) Fuel return hose A
(3) Fuel damper valve
(4) Fuel return hose B
(5) Evaporation hose A
(6) Clip
(7) Fuel delivery hose A
(8) Fuel delivery hose B
(9) Fuel damper valve bracket
(10) Fuel tank sensor control valve
(11) Fuel pipe ASSY
(12) Fuel delivery hose C
(13) Fuel return hose C
(14) Evaporation hose B
(15) Clamp
(16) Grommet
(17) Fuel pipe ASSY
(18) Canister
(19) Drain valve
(20) Drain filter
(21) Canister protector
(22) Pressure control solenoid valve
(23) Evaporation pipe A
(24) Evaporation pipe B
(25) Clip
(26) Fuel filler pipe
(27) Shut valve
(28) Packing
(29) Ring
(30) Fuel filler cap
(31) Fuel tank pressure sensor
(32) Evaporation pipe protector
(33) Connector A
(34) Canister hose A
(35) Connector B
(36) Canister hose B

Tightening torque: N·m (kgf-m, ft-lb)
T1: 4.4 (0.45, 3.2)
T2: 7.5 (0.76, 5.5)
T3: 8 (0.8, 5.9)
T4: 17.6 (1.8, 13)
T5: 1.25 (0.13, 0.94)

C: CAUTION

• Wear work clothing, including a cap, protective goggles and protective shoes during operation.
• Remove contamination including dirt and corrosion before removal, installation or disassembly.
• Keep the disassembled parts in order and protect them from dust and dirt.
• Before removal, installation or disassembly, be sure to clarify the failure. Avoid unnecessary removal, installation, disassembly and replacement.
• Be careful not to burn yourself, because each part on the vehicle is hot after running.
• Be sure to tighten fasteners including bolts and nuts to the specified torque.
• Place shop jacks or rigid racks at the specified points.
• Before disconnecting electrical connectors of sensors or units, be sure to disconnect the ground cable from battery.
• Place “NO FIRE” signs near the working area.
• Be careful not to spill fuel on the floor.

D: PREPARATION TOOL

ILLUSTRATION	TOOL NUMBER	DESCRIPTION	REMARKS
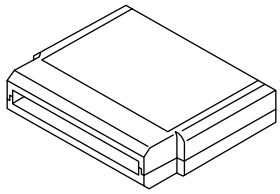 ST24082AA260	24082AA260	CARTRIDGE	Troubleshooting for electrical system.
ST22771AA030	22771AA030	SUBARU SELECT MONITOR KIT	Troubleshooting for electrical system.
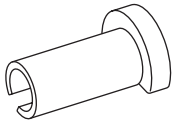 ST42099AE000	42099AE000	CONNECTOR REMOVER	Used for disconnecting quick connector.

2. Throttle Body

A: REMOVAL

1) Disconnect the ground cable from battery.

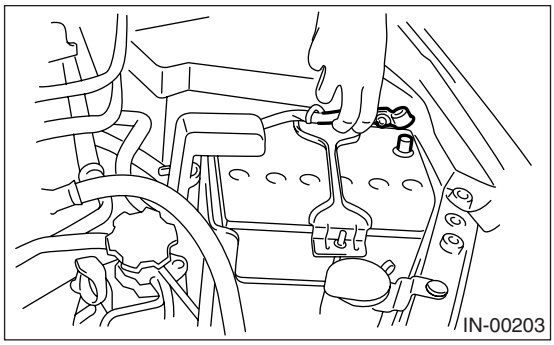

2) Remove the air intake chamber. <Ref. to IN(H4SO)-9, REMOVAL, Air Intake Chamber.>
3) Disconnect the connectors from the throttle position sensor and manifold absolute pressure sensor.

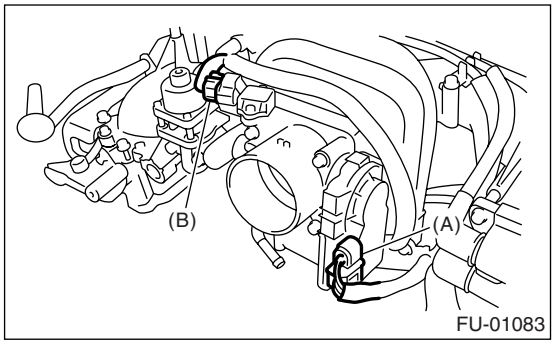

(A) Throttle position sensor
(B) Manifold absolute pressure sensor

4) Disconnect the engine coolant hoses (A) from throttle body.
5) Remove the bolts (B) which secure throttle body to intake manifold.

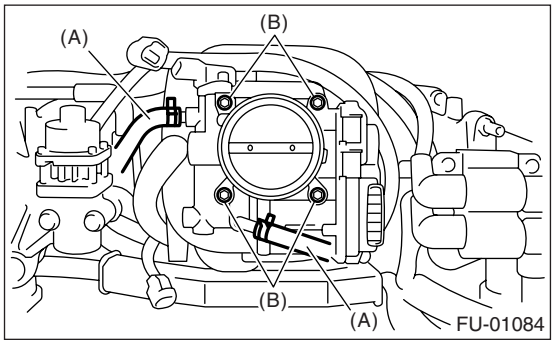

B: INSTALLATION

Install in the reverse order of removal.

NOTE:
Use a new gasket.

Tightening torque:
8 N·m (0.8 kgf-m, 5.9 ft-lb)

3. Intake Manifold

A: REMOVAL

1) Release the fuel pressure. <Ref. to FU(H4SO)-39, RELEASING OF FUEL PRESSURE, PROCEDURE, Fuel.>
2) Open the fuel filler flap lid, and remove the fuel filler cap.
3) Disconnect the ground cable from battery.

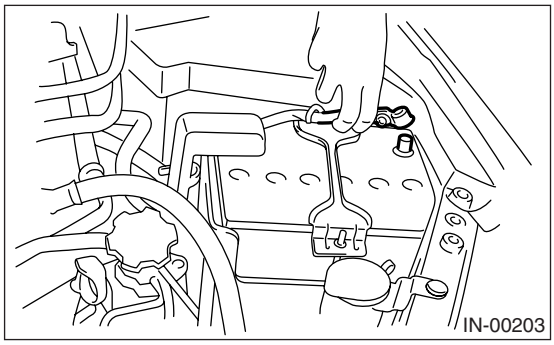

4) Remove the air cleaner case and air intake chamber. <Ref. to IN(H4SO)-7, REMOVAL, Air Cleaner Case.> <Ref. to IN(H4SO)-9, REMOVAL, Air Intake Chamber.>
5) Remove the generator. <Ref. to SC(H4SO)-20, REMOVAL, Generator.>
6) Disconnect the spark plug cords from spark plugs by pulling the plug cap. (Do not pull the cord.)
7) Disconnect the engine coolant hoses (A) from throttle body.

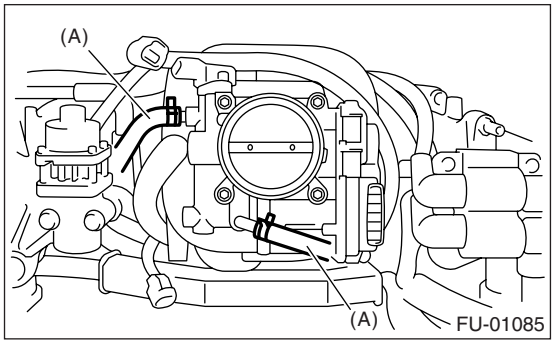

8) Disconnect the brake booster hose (A).

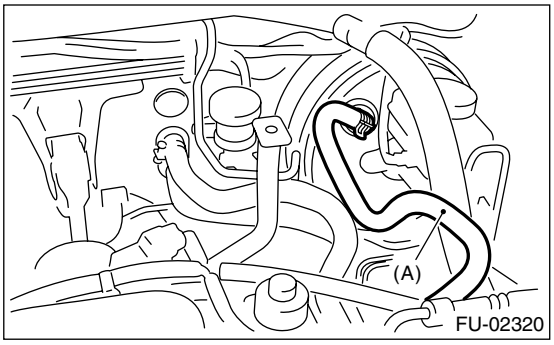

9) Disconnect the PCV hoses (A) from intake manifold.
10) Disconnect the engine harness connectors (B) from bulkhead harness connectors.

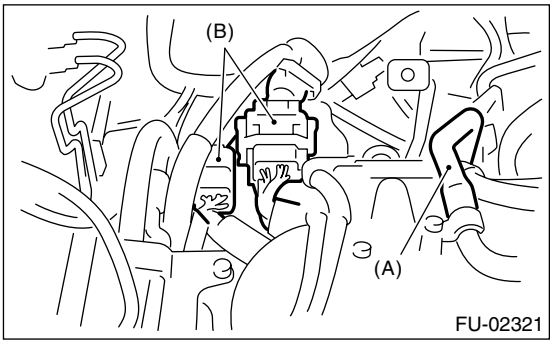

11) Disconnect the connectors from engine coolant temperature sensor.

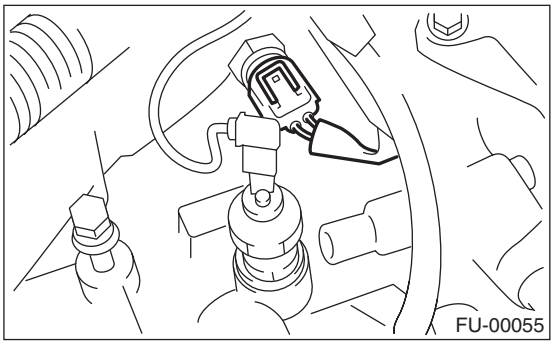

12) Disconnect the knock sensor connector.

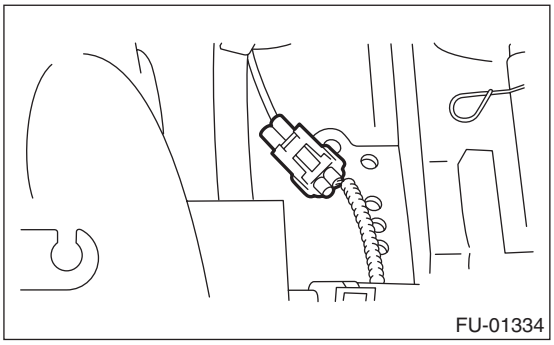

13) Disconnect the connector from crankshaft position sensor.

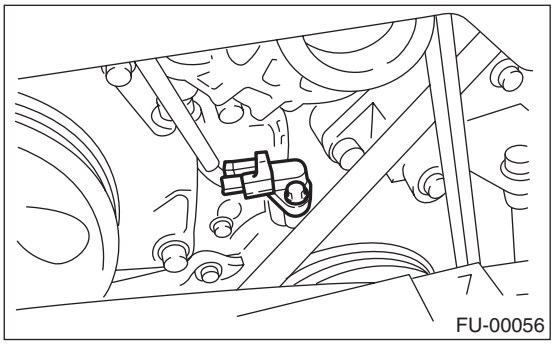

14) Disconnect the connector from power steering pump switch (A).

15) Disconnect the connector from oil pressure switch (B).

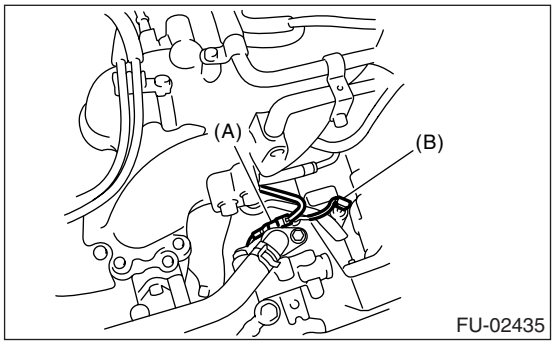

16) Disconnect the connector from camshaft position sensor.

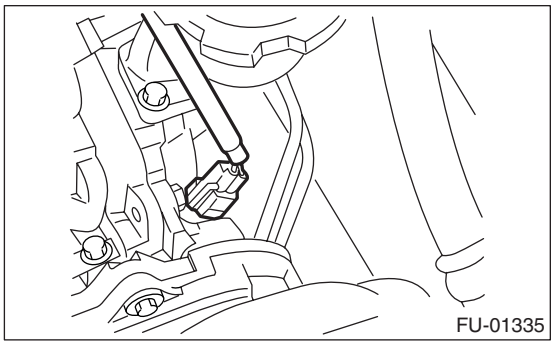

17) Remove the EGR pipe from intake manifold.

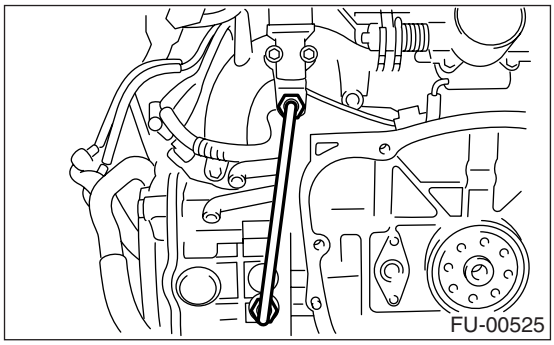

18) Disconnect the fuel hoses from fuel pipes.
(1) Push the ST to separate the connectors of fuel delivery line and return line.

ST 42099AE000 CONNECTOR REMOVER

(2) Remove the clip to disconnect evaporation hoses from pipe.

WARNING:
- **Be careful not to spill fuel.**
- **Catch the fuel from hoses using a container or cloth.**

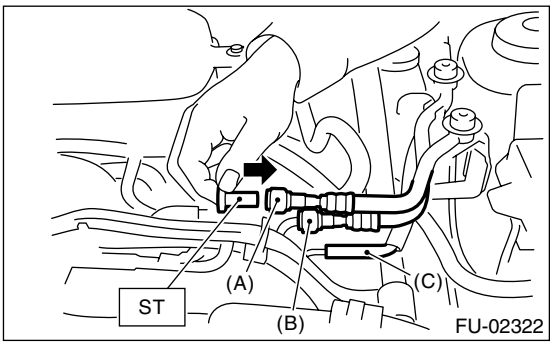

(A) Fuel delivery hose
(B) Return hose
(C) Evaporation hose

19) Remove the bolts which secure intake manifold to cylinder head.

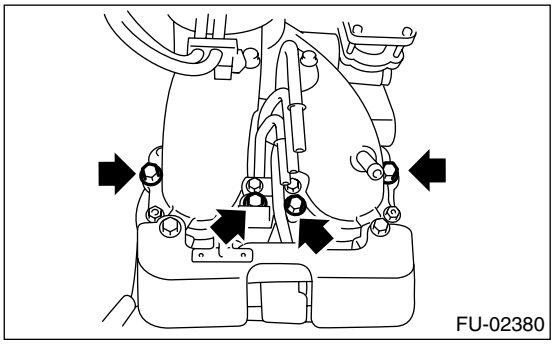

20) Remove the intake manifold.

B: INSTALLATION

1) Install the intake manifold onto cylinder heads.

NOTE:
Use a new gasket.

Tightening torque:
25 N·m (2.5 kgf-m, 18 ft-lb)

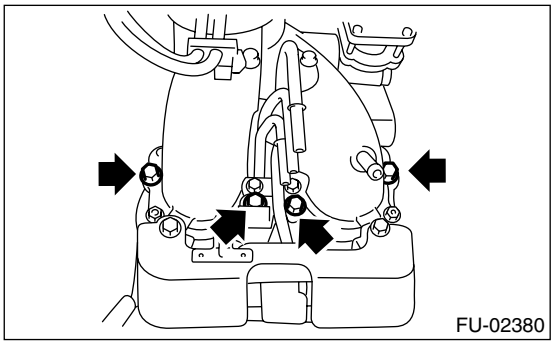

2) Connect the fuel hoses to fuel pipe.

NOTE:
If fuel hoses is damaged, replace it with new one.

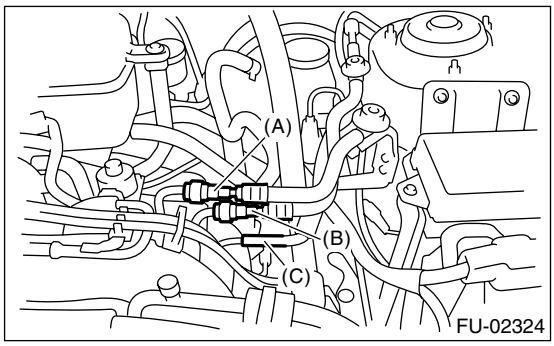

(A) Fuel delivery hose
(B) Return hose
(C) Evaporation hose

3) Install the EGR pipe to intake manifold.

Tightening torque:
34 N·m (3.4 kgf-m, 24.6 ft-lb)

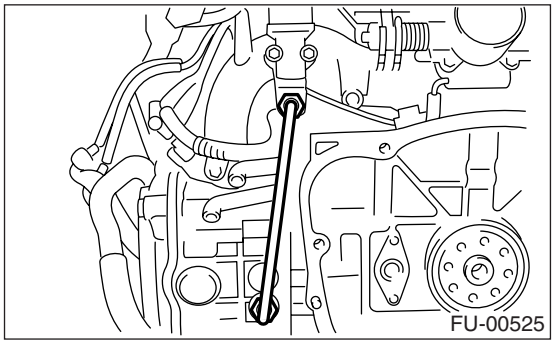

4) Connect the connector to camshaft position sensor.

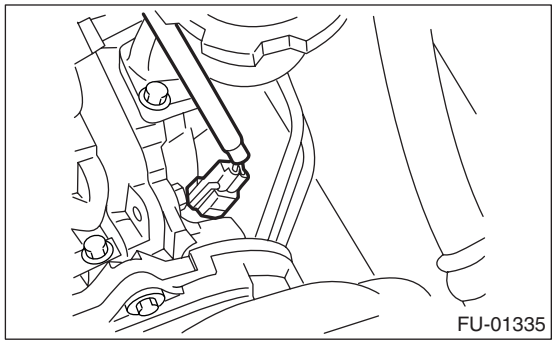

5) Connect the connector to power steering pump switch (A).

6) Connect the connector to oil pressure switch (B).

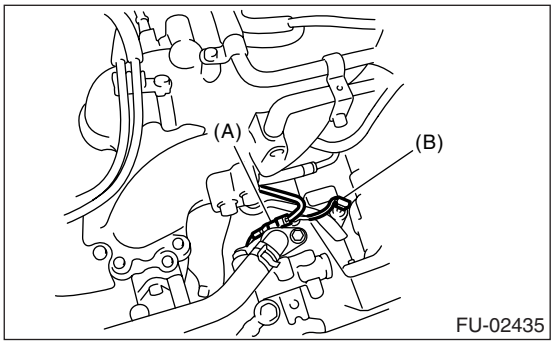

7) Connect the connector to crankshaft position sensor.

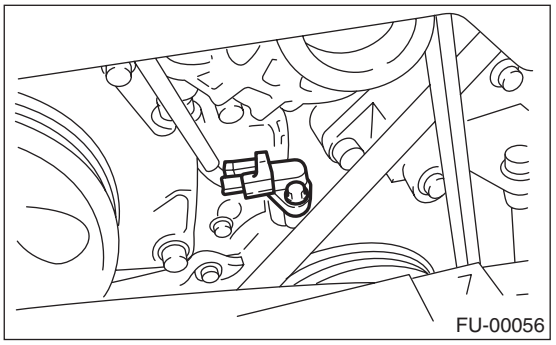

8) Connect the knock sensor connector.

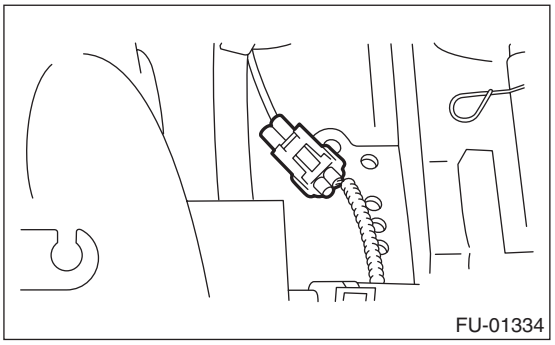

9) Connect the connectors to engine coolant temperature sensor.

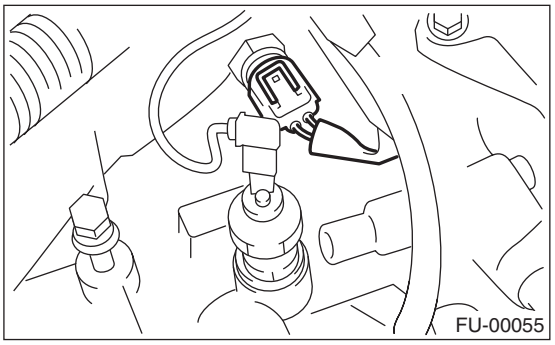

10) Connect the PCV hose (A) to intake manifold.

11) Connect the engine harness connectors (B) to bulkhead harness connectors.

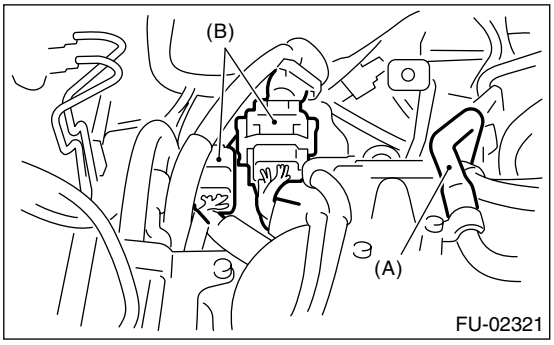

12) Connect the brake booster hose (A).

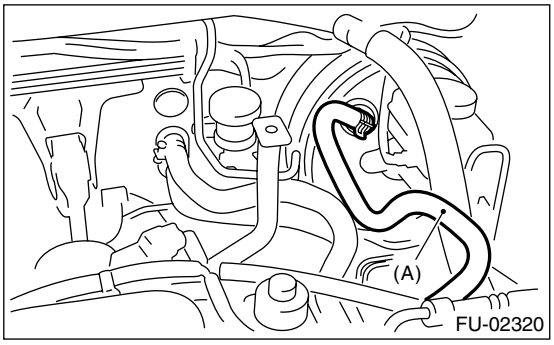

13) Connect the engine coolant hoses (A) to throttle body.

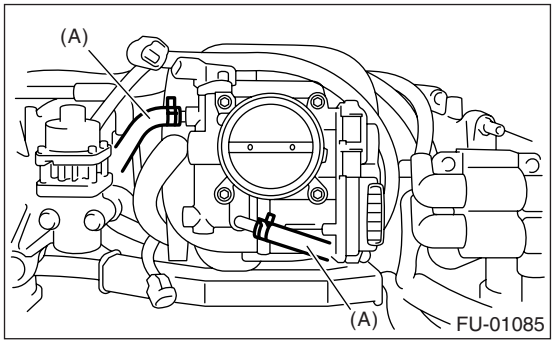

14) Connect the spark plug cords to spark plugs.
15) Install the generator. <Ref. to SC(H4SO)-20, INSTALLATION, Generator.>
16) Install the air cleaner case and air intake chamber. <Ref. to IN(H4SO)-7, INSTALLATION, Air Cleaner Case.> <Ref. to IN(H4SO)-9, INSTALLATION, Air Intake Chamber.>
17) Install the fuse of fuel pump to main fuse box.
18) Connect the battery ground cable to battery.

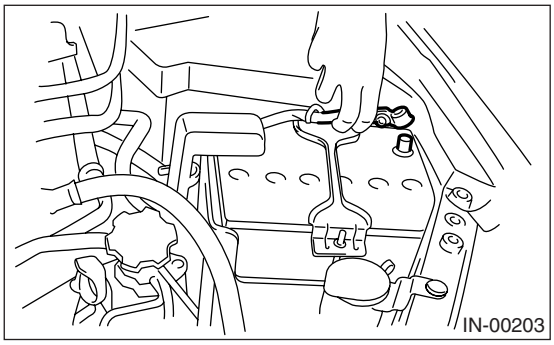

C: DISASSEMBLY

1) Disconnect the engine ground terminal from intake manifold.

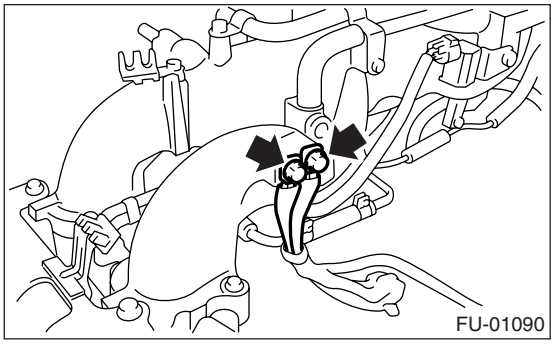

2) Remove the ignition coil & ignitor ASSY. <Ref. to IG(H4SO)-8, REMOVAL, Ignition Coil and Ignitor Assembly.>
3) Remove the throttle body. <Ref. to FU(H4SO)-11, REMOVAL, Throttle Body.>
4) Remove the EGR valve. <Ref. to FU(H4SO)-28, REMOVAL, EGR Valve.>
5) Remove the PCV pipe.

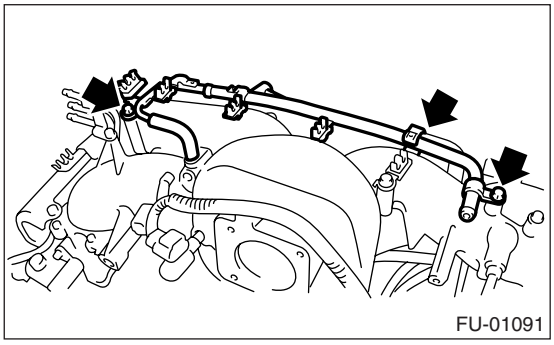

6) Remove the fuel pipe protector LH.

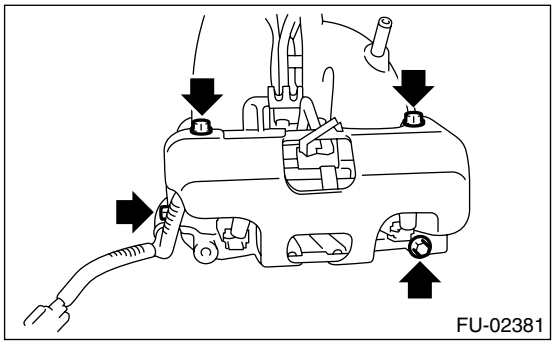

7) Remove the fuel pipe protector RH.

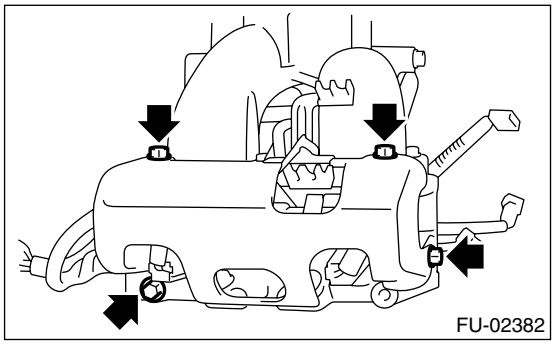

8) Disconnect the pressure regulator vacuum hose (A) from intake manifold.

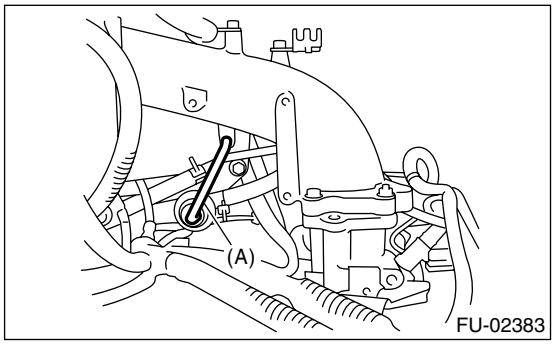

9) Disconnect the connectors (A) from fuel injector.
10) Remove the clip (B) which holds engine harness to injector pipe.

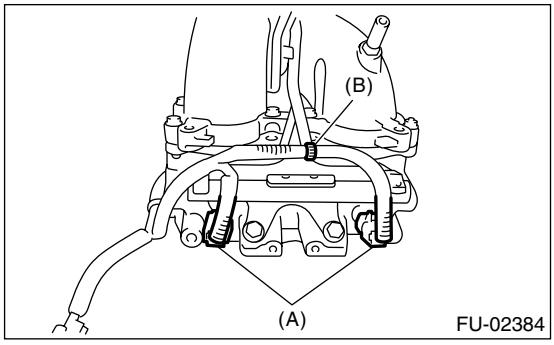

11) Remove the purge control solenoid valve. <Ref. to EC(H4SO)-6, REMOVAL, Purge Control Solenoid Valve.>

12) Remove the harness band clips which install the engine harness.

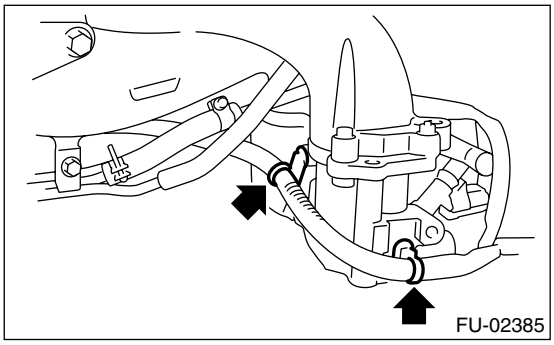

13) Remove the bolts which hold the engine harness to intake manifold.

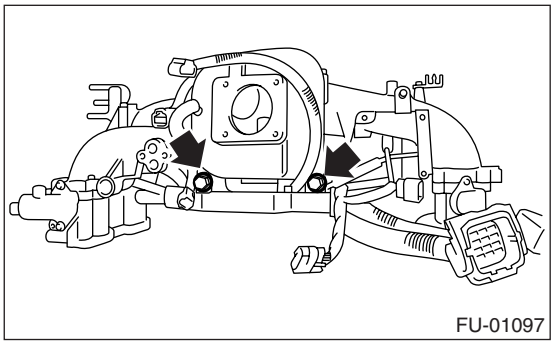

14) Remove the engine harness from intake manifold.
15) Remove the bolts which install injector pipe on the intake manifold as shown in the figure.
- RH side

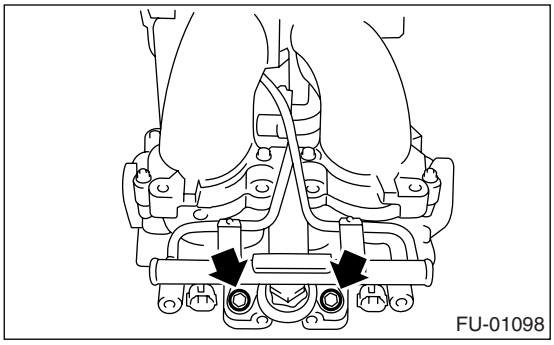

• LH side

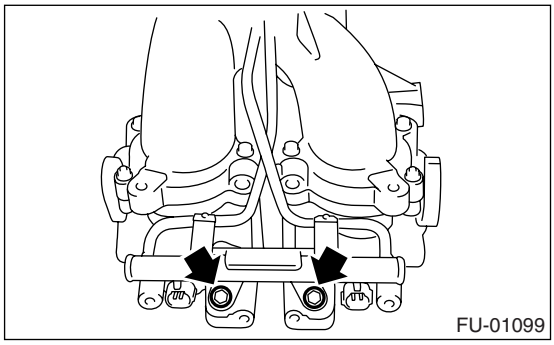
FU-01099

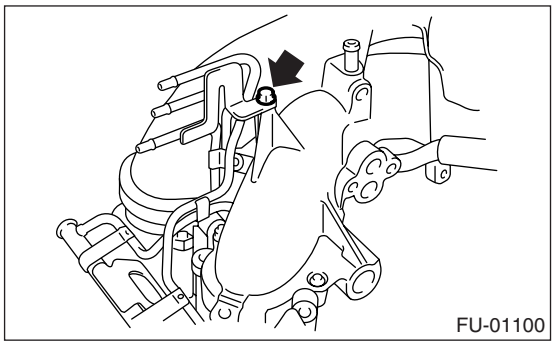
FU-01100

16) Remove the fuel injectors from injector pipe.
17) Loosen the clamp which holds fuel injector pipe RH to fuel hose, and then disconnect the pipe from fuel hose.

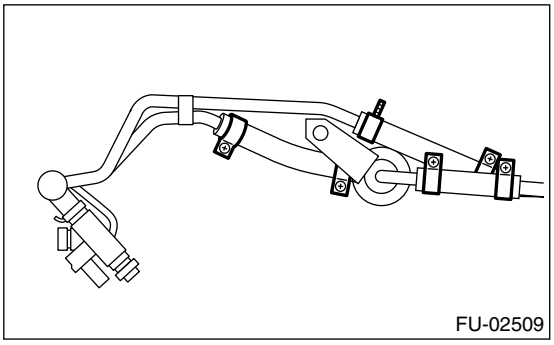
FU-02509

18) Loosen the clamp which holds fuel injector pipe LH to fuel hose, and then disconnect the pipe from fuel hose.

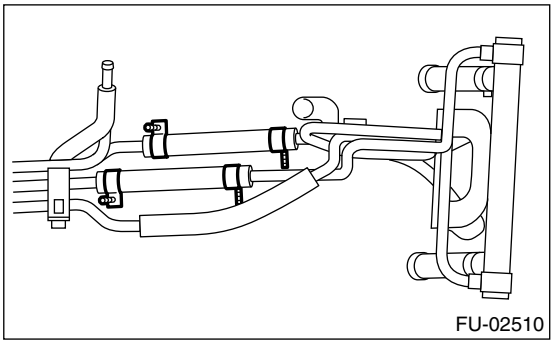
FU-02510

19) Remove the fuel injector pipe.
20) Remove the bolt which installs pressure regulator on intake manifold.
21) Remove the bolt which installs the fuel pipes on intake manifold.

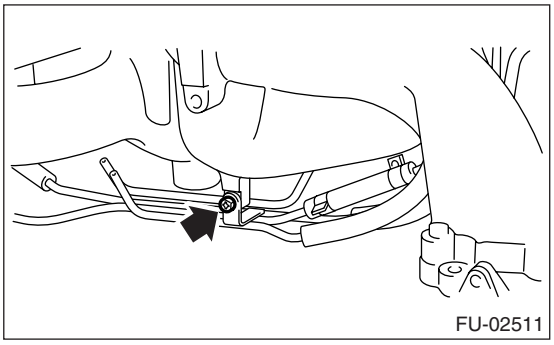
FU-02511

22) Remove the fuel pipe assembly and pressure regulator, from intake manifold.
23) Remove the intake manifold.

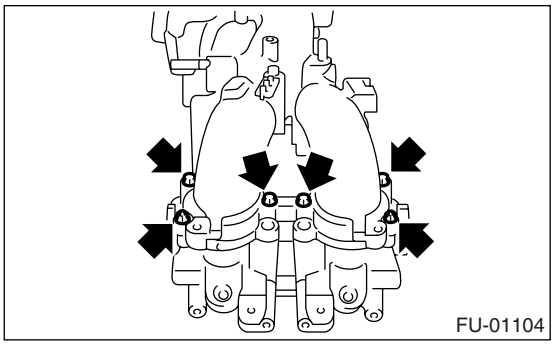
FU-01104

D: ASSEMBLY

1) Install the intake manifold.

NOTE:
• Use a new gasket.
• When assembling the nipple, apply liquid gasket.

Liquid gasket:
THREE BOND 1105 (Part No. 004403010)

Tightening torque:
8.75 N·m (0.89 kgf-m, 6.5 ft-lb)

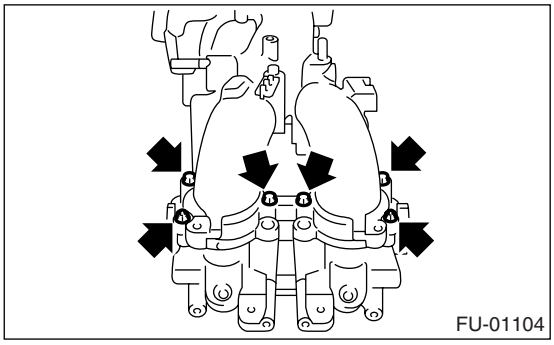
FU-01104

2) Tighten the bolt which installs the fuel pipes on intake manifold.

Tightening torque:
6.4 N·m (0.65 kgf-m, 4.7 ft-lb)

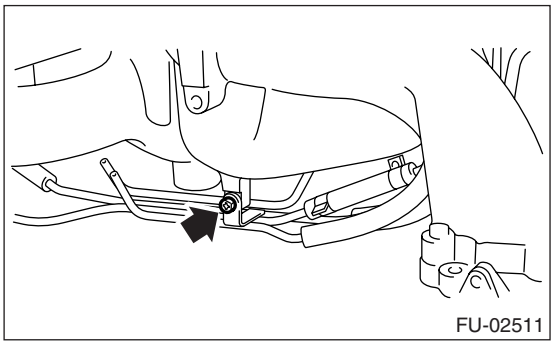
FU-02511

3) Tighten the bolt which installs pressure regulator on intake manifold.

Tightening torque:
19 N·m (1.9 kgf-m, 14 ft-lb)

4) Connect the fuel injector pipe.
5) Connect the fuel injector pipe LH to fuel hose, and tighten the clamp screw.

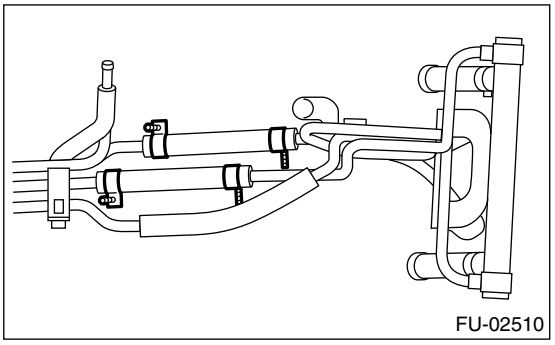
FU-02510

6) Connect the fuel injector pipe RH to fuel hose, and tighten the clamp screw.

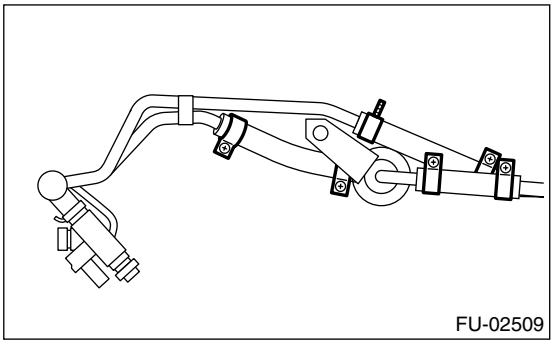
FU-02509

7) Install the fuel injectors.
8) Tighten the bolts which install injector pipe on intake manifold.

- RH side

Tightening torque:
19 N·m (1.9 kgf-m, 14 ft-lb)

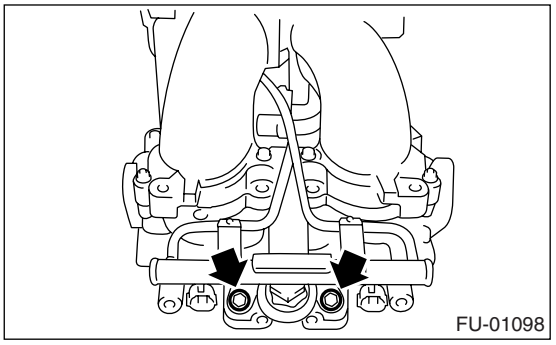
FU-01098

- LH side

Tightening torque:
19 N·m (1.9 kgf-m, 14 ft-lb)

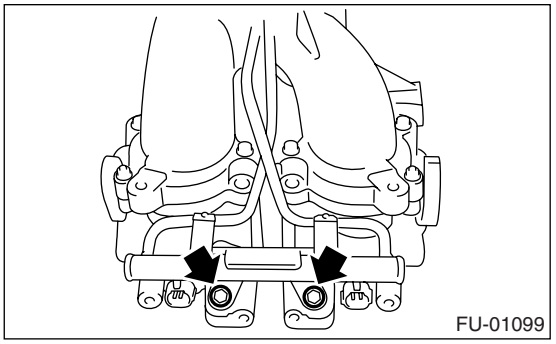
FU-01099

9) Tighten the two bolts which install fuel pipes on intake manifold.

Tightening torque:
6.4 N·m (0.65 kgf-m, 4.7 ft-lb)

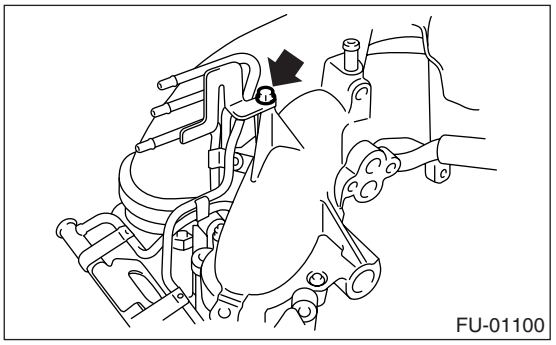
FU-01100

10) Install the engine harness onto intake manifold.
11) Tighten the bolts which install engine harness on intake manifold.

Tightening torque:
16 N·m (1.6 kgf-m, 11.8 ft-lb)

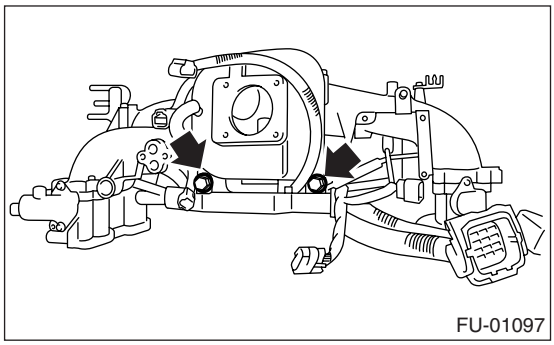

12) Hold the engine harness by harness band clips.

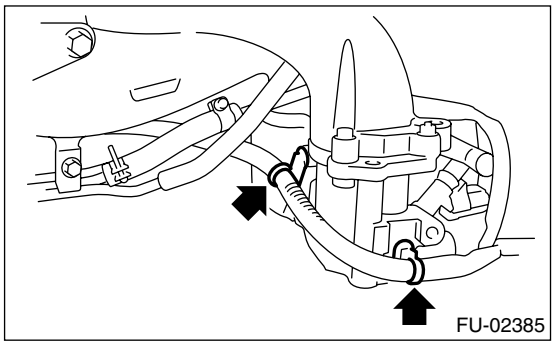

13) Install the purge control solenoid valve. <Ref. to EC(H4SO)-6, INSTALLATION, Purge Control Solenoid Valve.>
14) Connect the connectors (A) to fuel injector.
15) Hold the engine harness to injector pipe by clip (B).

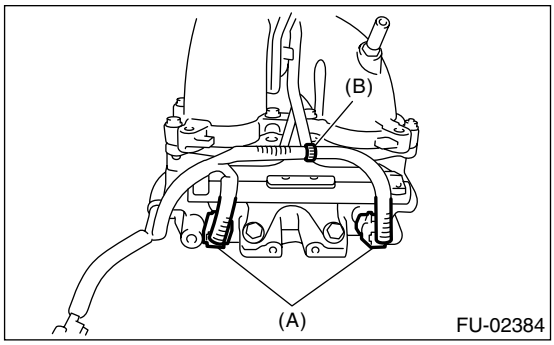

16) Connect the pressure regulator vacuum hose (A) to intake manifold.

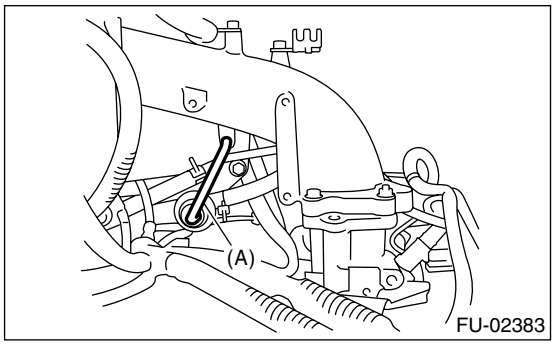

17) Install the fuel pipe protector RH.

Tightening torque:
19 N·m (1.9 kgf-m, 14 ft-lb)

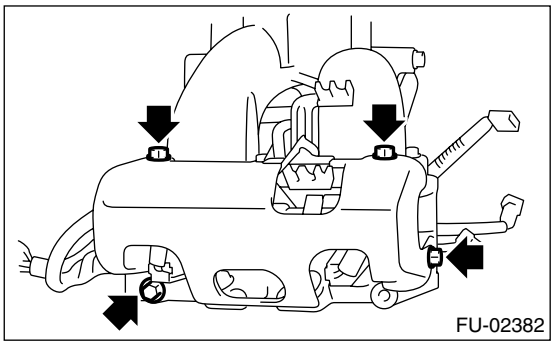

18) Install the fuel pipe protector LH.

Tightening torque:
19 N·m (1.9 kgf-m, 14 ft-lb)

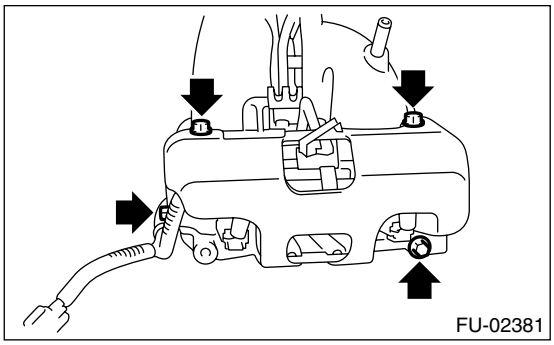

19) Install the PCV pipe.

Tightening torque:
6.4 N·m (0.65 kgf-m, 4.7 ft-lb)

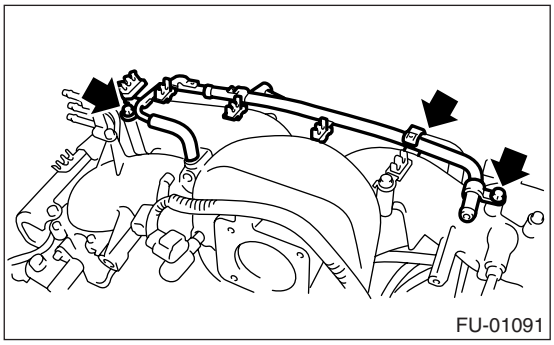

20) Install the EGR valve. <Ref. to FU(H4SO)-28, INSTALLATION, EGR Valve.>
21) Install the throttle body to intake manifold. <Ref. to FU(H4SO)-11, INSTALLATION, Throttle Body.>
22) Install the ignition coil & ignitor ASSY. <Ref. to IG(H4SO)-8, INSTALLATION, Ignition Coil and Ignitor Assembly.>
23) Install the engine ground terminal to intake manifold.

Tightening torque:
19 N·m (1.9 kgf-m, 14 ft-lb)

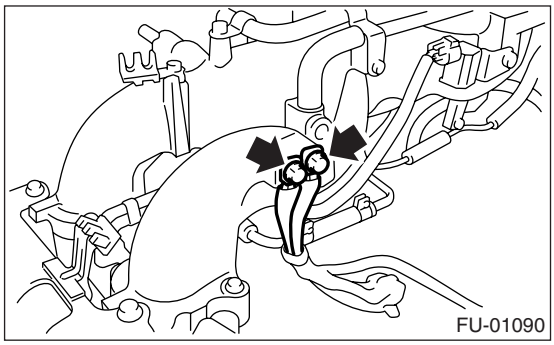

E: INSPECTION

Make sure the fuel pipe and fuel hoses are not damaged and the connections are tightened firmly.

4. Engine Coolant Temperature Sensor

A: REMOVAL

1) Disconnect the ground cable from battery.

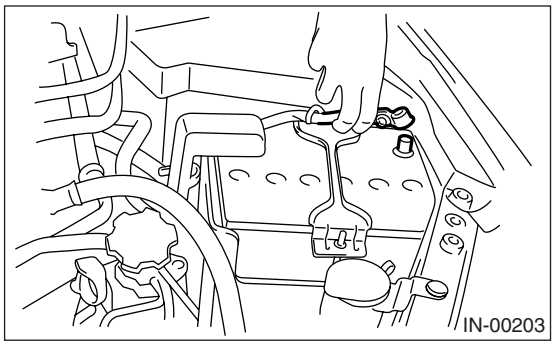

2) Remove the generator. <Ref. to SC(H4SO)-20, REMOVAL, Generator.>

3) Disconnect the connectors from engine coolant temperature sensor.

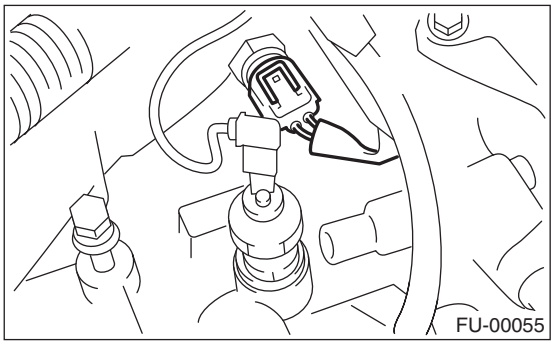

4) Remove the engine coolant temperature sensor.

B: INSTALLATION

Install in the reverse order of removal.

Tightening torque:
18 N·m (1.8 kgf-m, 13.3 ft-lb)

5. Crankshaft Position Sensor

A: REMOVAL

1) Disconnect the ground cable from battery.

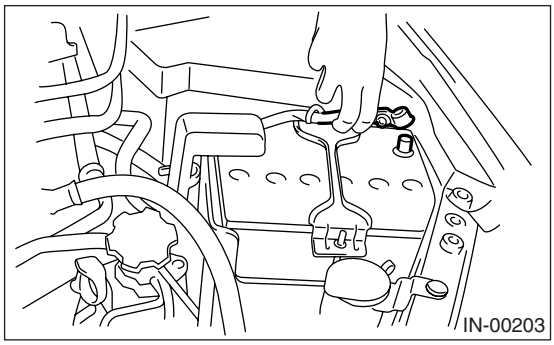

2) Remove the generator. <Ref. to SC(H4SO)-20, REMOVAL, Generator.>
3) Remove the bolt which installs crankshaft position sensor to cylinder block.

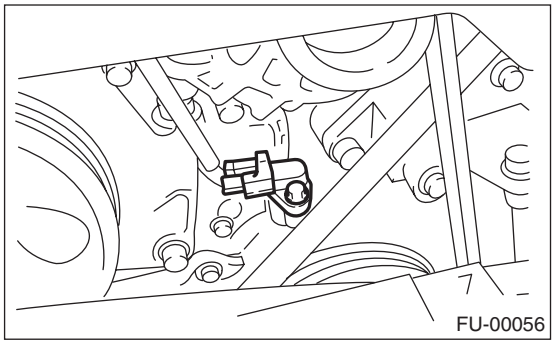

4) Remove the crankshaft position sensor, and disconnect the connector from it.

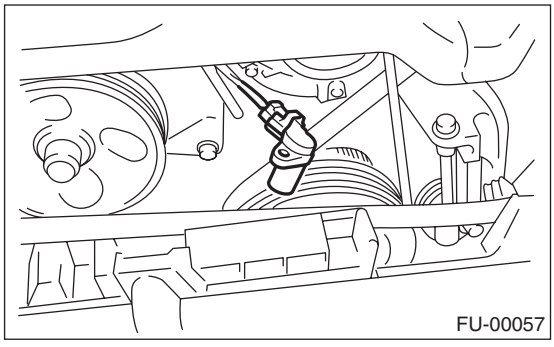

B: INSTALLATION

Install in the reverse order of removal.

Tightening torque:
T: 6.4 N·m (0.65 kgf-m, 4.7 ft-lb)

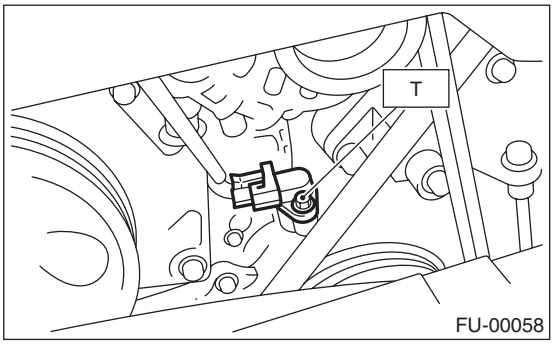

6. Camshaft Position Sensor

A: REMOVAL

1) Disconnect the ground cable from battery.

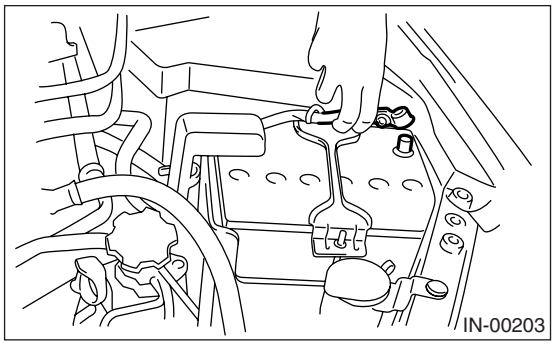

2) Disconnect the connector from camshaft position sensor.

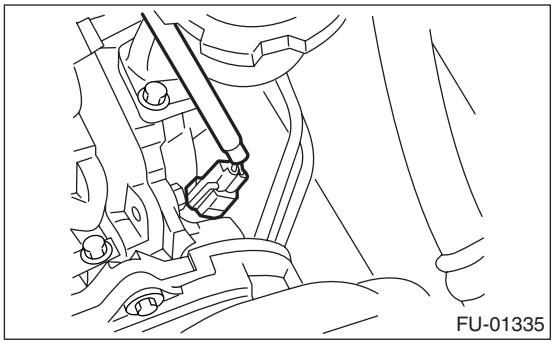

3) Remove the bolt which installs camshaft position sensor to the support.

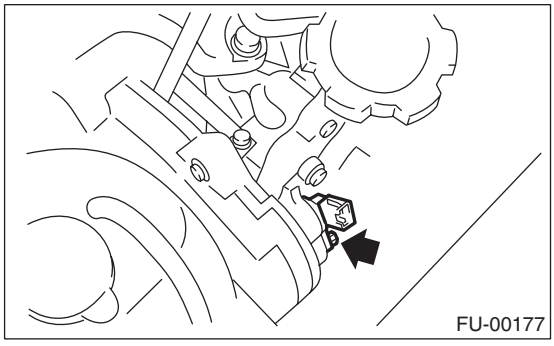

4) Remove the bolt which installs the camshaft position sensor support to camshaft cap LH.

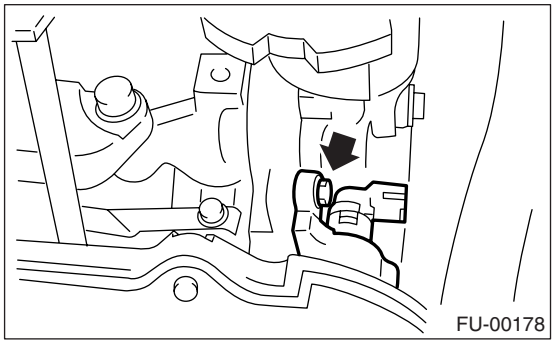

5) Remove the camshaft position sensor and the support as a unit.

6) Remove the camshaft position sensor itself.

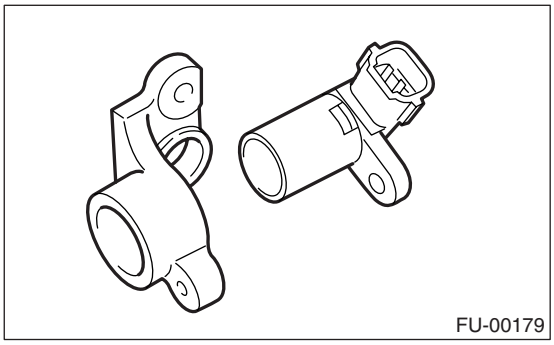

B: INSTALLATION

Install in the reverse order of removal.

Tightening torque:
Camshaft position sensor support
6.4 N·m (0.65 kgf-m, 4.7 ft-lb)
Camshaft position sensor
6.4 N·m (0.65 kgf-m, 4.7 ft-lb)

7. Knock Sensor

A: REMOVAL

1) Disconnect the ground cable from battery.

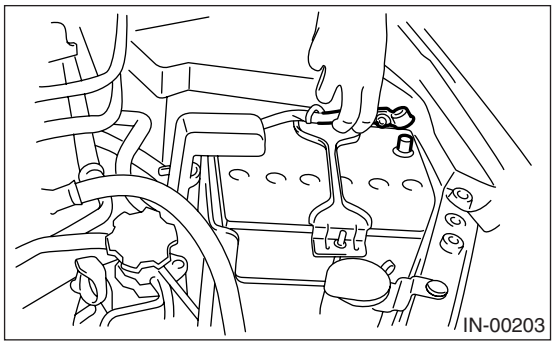

2) Remove the air intake chamber. <Ref. to IN(H4SO)-9, REMOVAL, Air Intake Chamber.>
3) Disconnect the knock sensor connector.

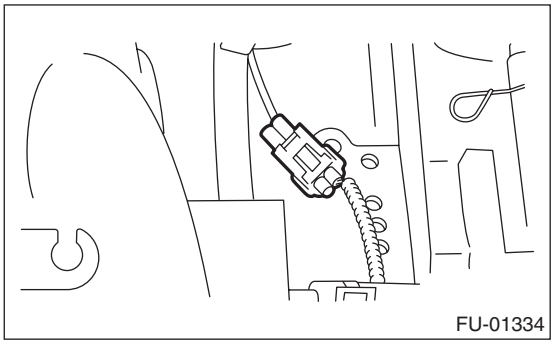

4) Remove the knock sensor from cylinder block.

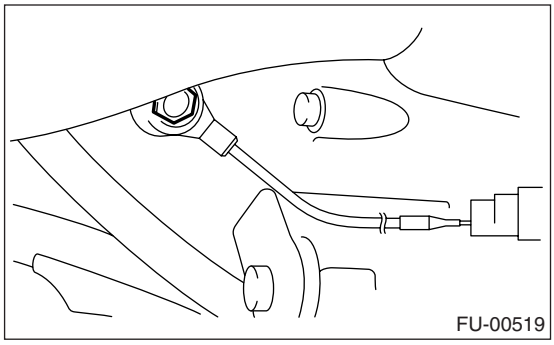

B: INSTALLATION

1) Install the knock sensor to cylinder block.

NOTE:
Extraction area of knock sensor cord must be positioned at a 60° angle relative to the engine rear.

Tightening torque:
24 N·m (2.4 kgf-m, 17.4 ft-lb)

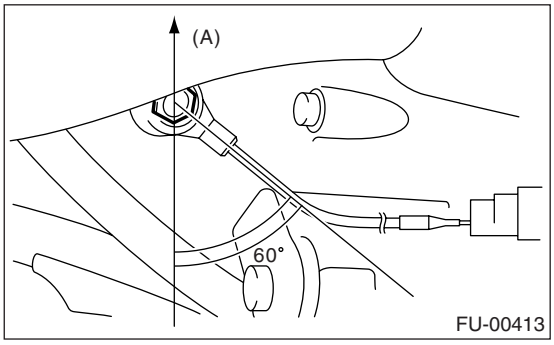

(A) Front side

2) Connect the knock sensor connector.

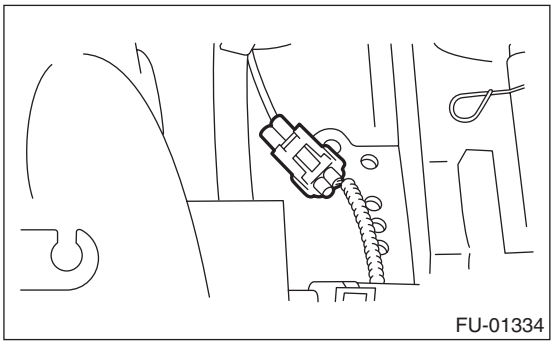

3) Install the air intake chamber. <Ref. to IN(H4SO)-9, INSTALLATION, Air Intake Chamber.>
4) Connect the battery ground cable to battery.

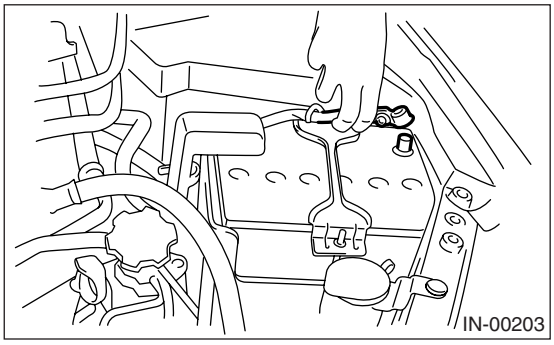

8. Throttle Position Sensor

A: SPECIFICATION

Throttle body is a non-disassembled part, so do not remove the throttle position sensor from throttle body.
Refer to “Throttle Body” for removal and installation procedure. <Ref. to FU(H4SO)-11, REMOVAL, Throttle Body.> <Ref. to FU(H4SO)-11, INSTALLATION, Throttle Body.>

9. Manifold Absolute Pressure Sensor

A: REMOVAL

1) Disconnect the ground cable from battery.

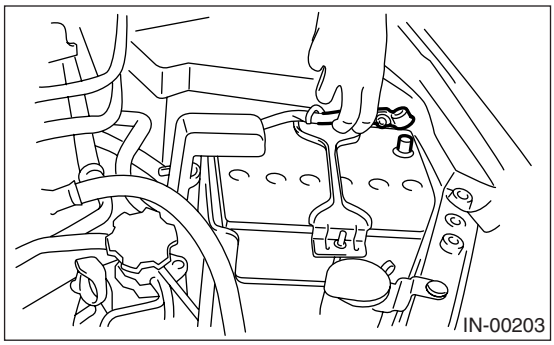

2) Disconnect the connector from manifold absolute pressure sensor.

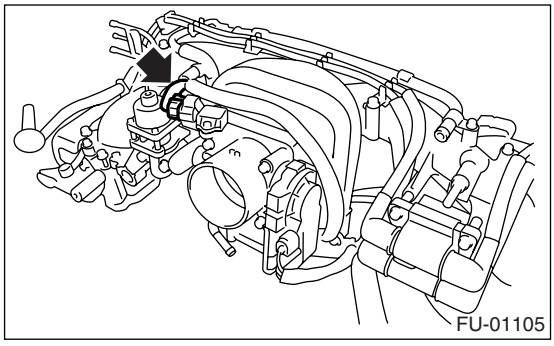

3) Remove the manifold absolute pressure sensor from throttle body.

B: INSTALLATION

Install in the reverse order of removal.

NOTE:
Use new O-rings.

Tightening torque:
2 N·m (0.2 kgf-m, 1.5 ft-lb)

10.Mass Air Flow and Intake Air Temperature Sensor

A: REMOVAL

1) Disconnect the ground cable from battery.

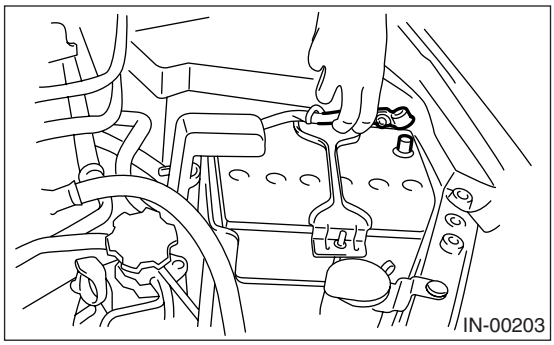

2) Disconnect the connector from mass air flow and intake air temperature sensor.
3) Remove the mass air flow and intake air temperature sensor.

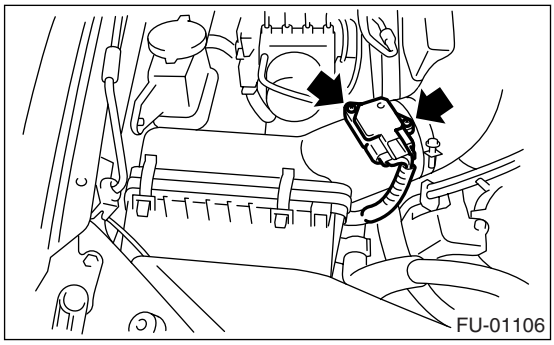

B: INSTALLATION

Install in the reverse order of removal.

Tightening torque:
1 N·m (0.1 kgf-m, 0.7 ft-lb)

11.EGR Valve

A: REMOVAL

1) Disconnect the ground cable from battery.

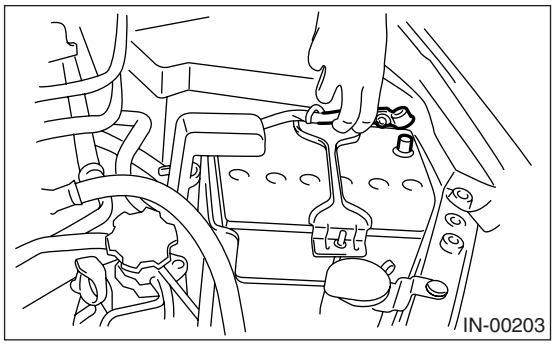

2) Disconnect the connector from EGR valve.

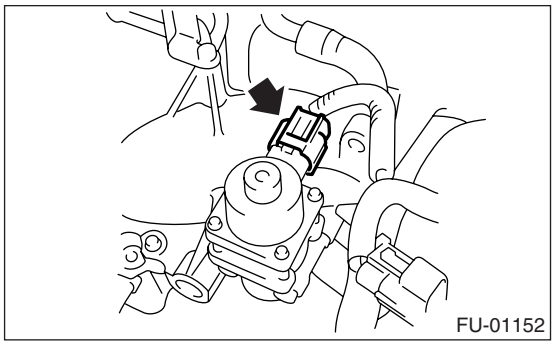

3) Remove the EGR valve from intake manifold.

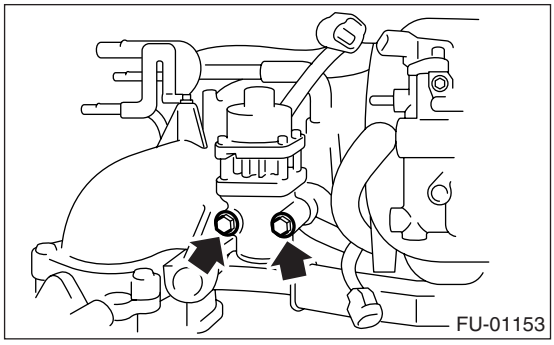

B: INSTALLATION

Install in the reverse order of removal.

NOTE:
Use a new gasket.

Tightening torque:
19 N·m (1.9 kgf-m, 14 ft-lb)

12.Fuel Injector

A: REMOVAL

1. RH SIDE

1) Release the fuel pressure.
<Ref. to FU(H4SO)-39, RELEASING OF FUEL PRESSURE, PROCEDURE, Fuel.>
2) Open the fuel filler flap lid, and remove the fuel filler cap.
3) Disconnect the ground cable from battery.

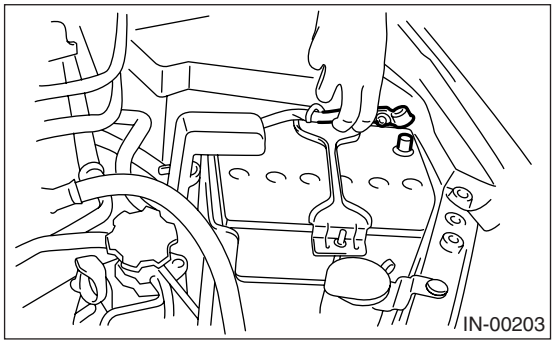

4) Remove the air cleaner case. <Ref. to IN(H4SO)-7, REMOVAL, Air Cleaner Case.>
5) Remove the spark plug cords from spark plugs (#1 and #3 cylinders).
6) Remove the fuel pipe protector RH.

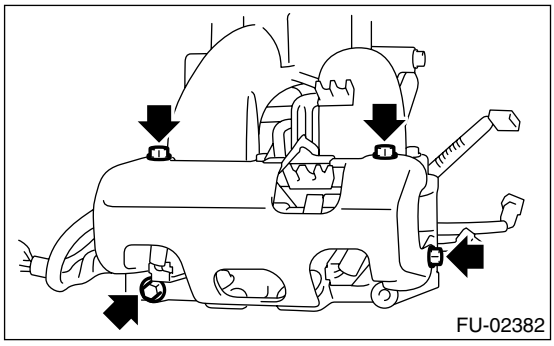

7) Disconnect the connector (A) from fuel injector.
8) Remove the clip (B) which holds engine harness to injector pipe.

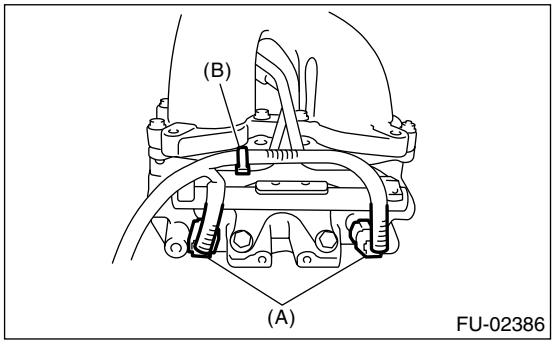

9) Remove the bolts which hold fuel injector pipe onto intake manifold.

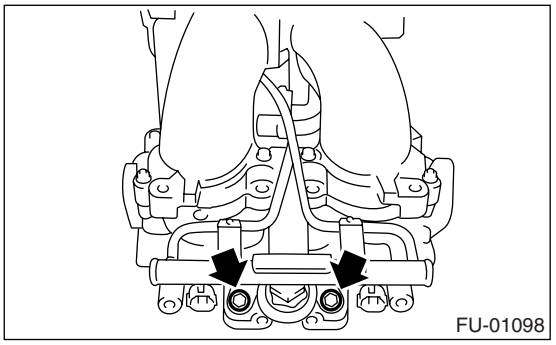

10) Remove the fuel injector while lifting up the fuel injector pipe.

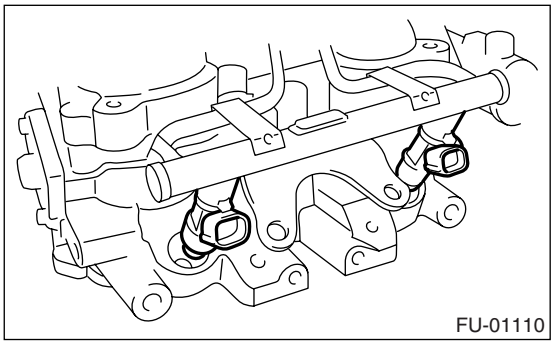

2. LH SIDE

1) Release the fuel pressure.
<Ref. to FU(H4SO)-39, RELEASING OF FUEL PRESSURE, PROCEDURE, Fuel.>
2) Open the fuel filler flap lid, and remove the fuel filler cap.
3) Remove the battery. <Ref. to SC(H4SO)-26, REMOVAL, Battery.>
4) Remove the spark plug cords from spark plugs (#2 and #4 cylinders).
5) Remove the fuel pipe protector LH.

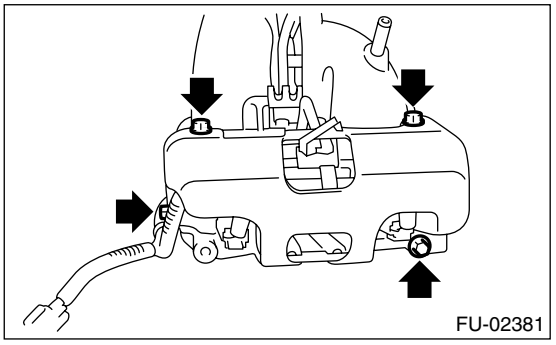

6) Disconnect the connector (A) from fuel injector.

7) Remove the clip (B) which holds engine harness to injector pipe.

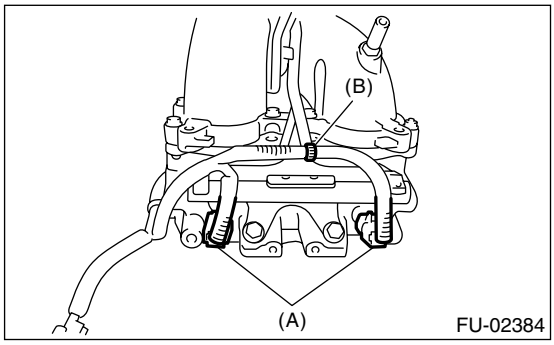

8) Remove the bolts which hold fuel injector pipe onto intake manifold.

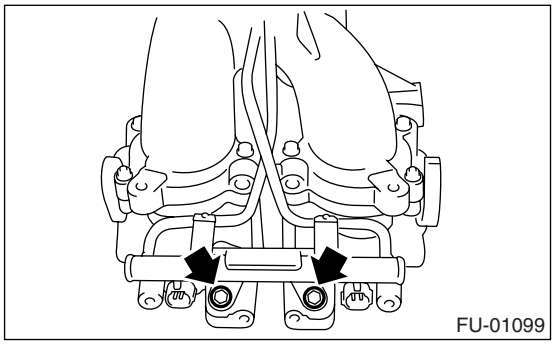

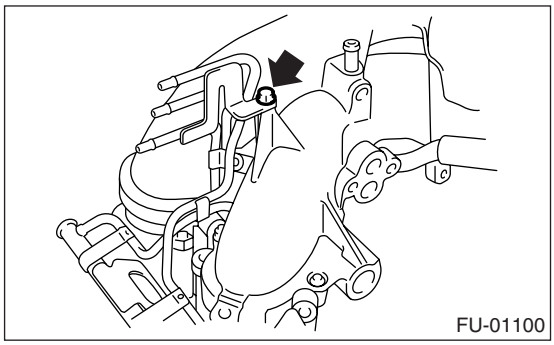

9) Remove the fuel injector while lifting up the fuel injector pipe.

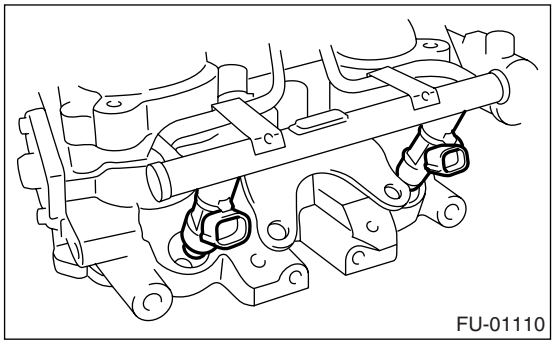

B: INSTALLATION

1. RH SIDE

Install in the reverse order of removal.

NOTE:
Use new O-rings.

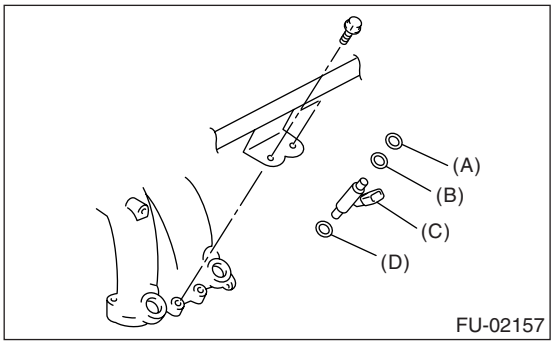

(A) O-ring
(B) O-ring
(C) Fuel injector
(D) O-ring

Tightening torque:
19 N·m (1.9 kgf-m, 14 ft-lb)

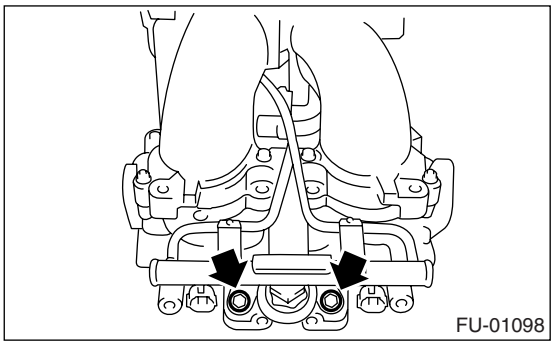

Tightening torque:
19 N·m (1.9 kgf-m, 14 ft-lb)

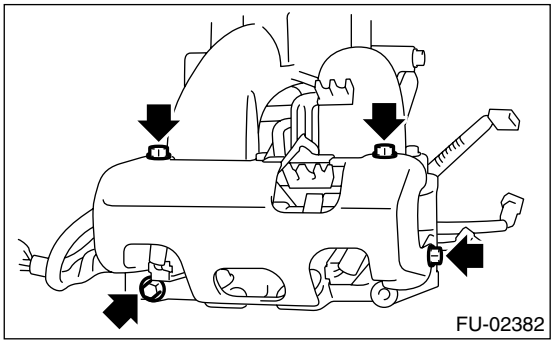

2. LH SIDE

Install in the reverse order of removal.

NOTE:
Use new O-rings.

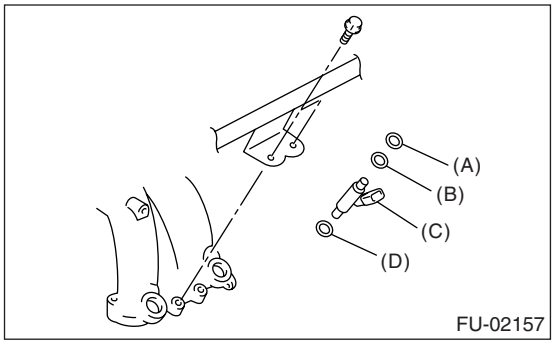

(A) O-ring
(B) O-ring
(C) Fuel injector
(D) O-ring

Tightening torque:
6.4 N·m (0.65 kgf-m, 4.7 ft-lb)

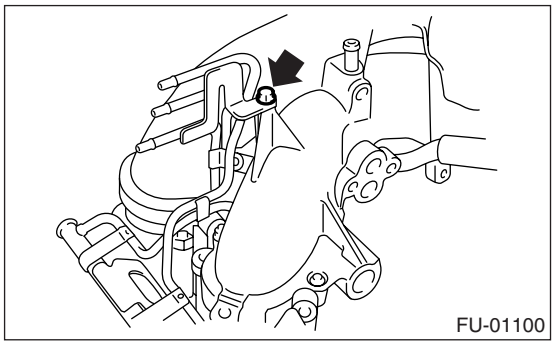

Tightening torque:
19 N·m (1.9 kgf-m, 14 ft-lb)

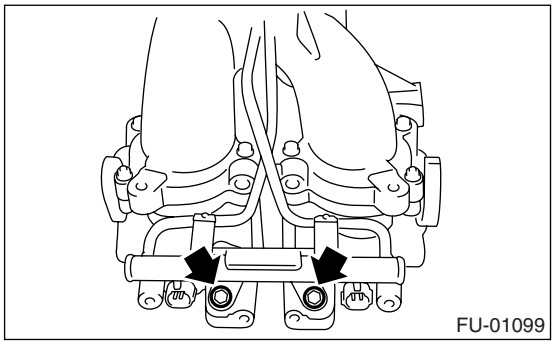

Tightening torque:
19 N·m (1.9 kgf-m, 14 ft-lb)

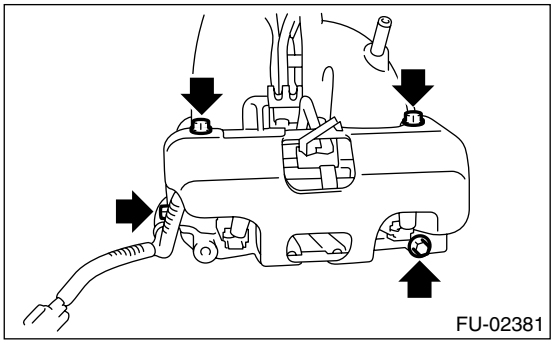

13.Front Oxygen (A/F) Sensor

A: REMOVAL

1) Disconnect the ground cable from battery.

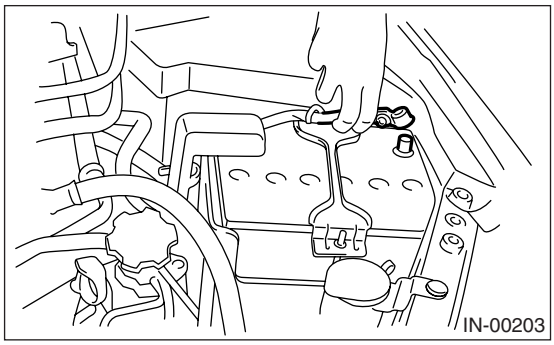

2) Disconnect the front oxygen (A/F) sensor connector.

NOTE:
Remove the harness from bracket.

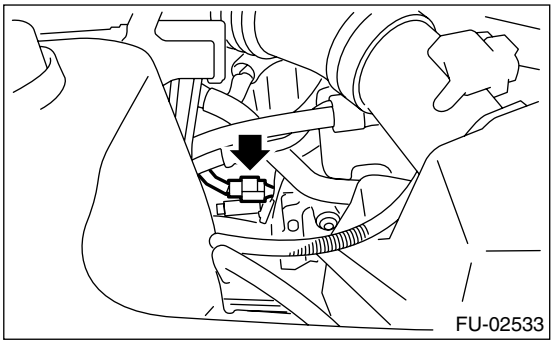

3) Lift up the vehicle.
4) Apply spray-type lubricant to the threaded portion of front oxygen (A/F) sensor, and leave it for one minute or more.
5) Remove the front oxygen (A/F) sensor.

CAUTION:
When removing the oxygen (A/F) sensor, wait until exhaust pipe cools, otherwise it will damage exhaust pipe.

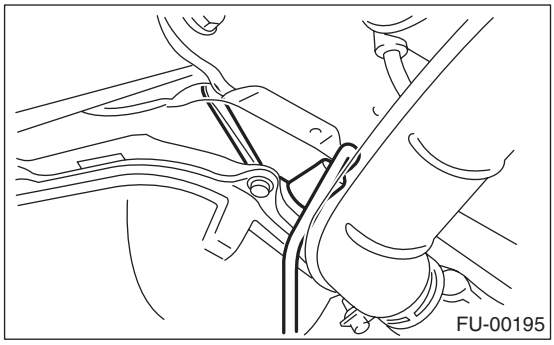

B: INSTALLATION

1) Before installing front oxygen (A/F) sensor, apply anti-seize compound only to the threaded portion of front oxygen (A/F) sensor to make the next removal easier.

Anti-seize compound:
SS-30 by JET LUBE

CAUTION:
Never apply anti-seize compound to protector of front oxygen (A/F) sensor.

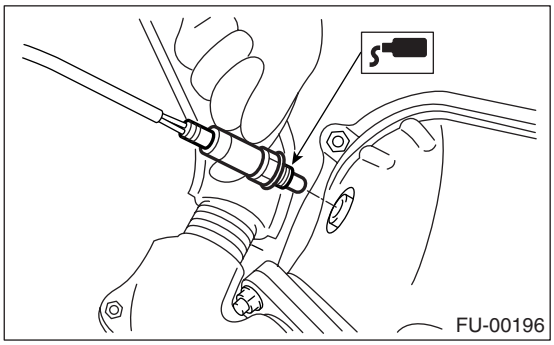

2) Install the front oxygen (A/F) sensor.

Tightening torque:
21 N·m (2.1 kgf-m, 15.2 ft-lb)

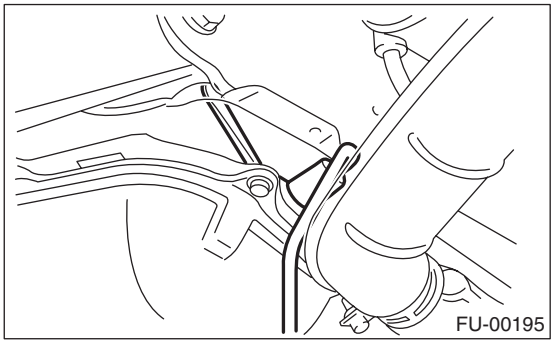

3) Lower the vehicle.
4) Connect the connector to front oxygen (A/F) sensor.

NOTE:
Hold the harness to bracket.

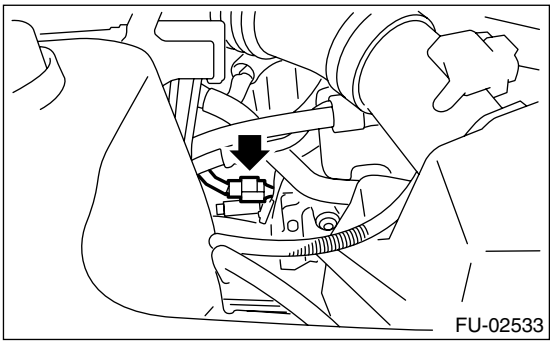

5) Connect the battery ground cable to battery.

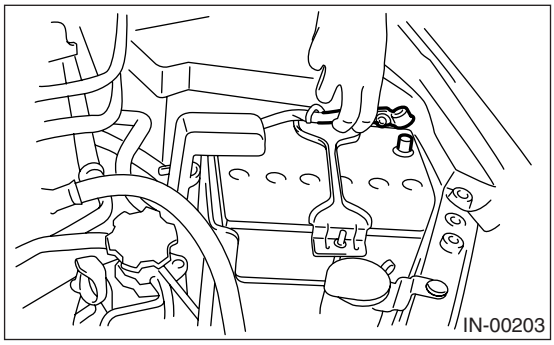

14.Rear Oxygen Sensor

A: REMOVAL

1) Disconnect the ground cable from battery.

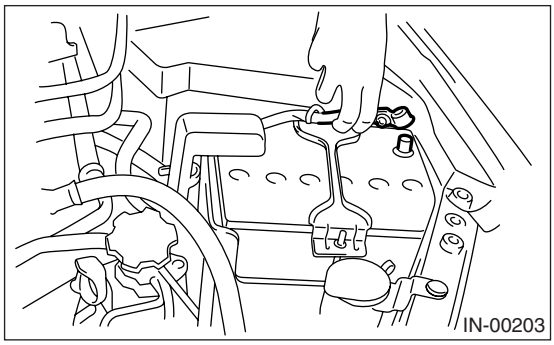

2) Disconnect the connector of rear oxygen sensor.

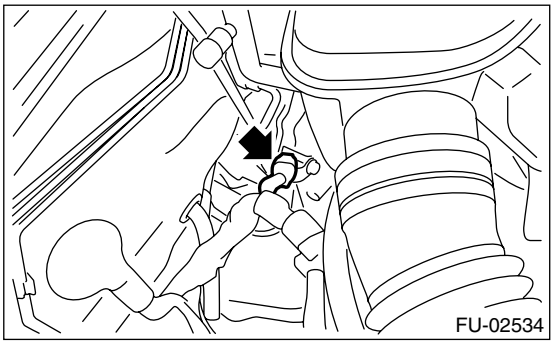

3) Lift up the vehicle.
4) Apply spray-type lubricant to the threaded portion of rear oxygen sensor, and leave it for one minute or more.
5) Remove the rear oxygen sensor.

CAUTION:
When removing the rear oxygen sensor, wait until the exhaust pipe cools, otherwise it will damage the exhaust pipe.

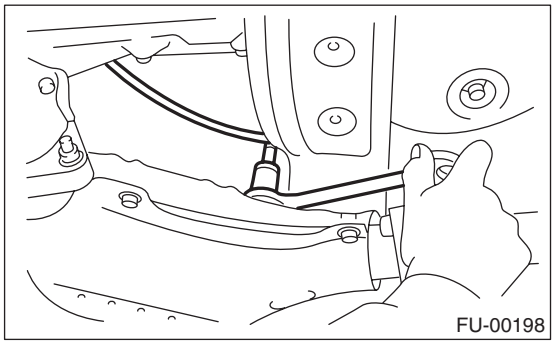

B: INSTALLATION

1) Before installing the rear oxygen (A/F) sensor, apply anti-seize compound only to the threaded portion of the rear oxygen (A/F) sensor to make the next removal easier.

Anti-seize compound:
SS-30 by JET LUBE

CAUTION:
Never apply anti-seize compound to protector of rear oxygen sensor.

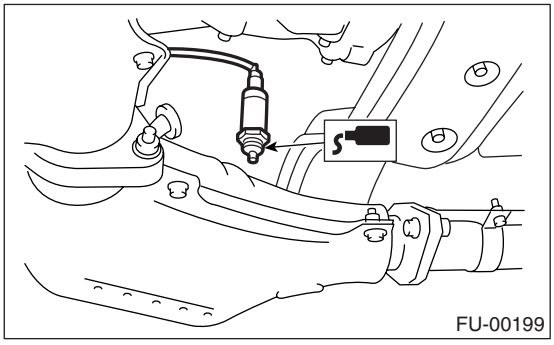

2) Install the rear oxygen sensor.

Tightening torque:
21 N·m (2.1 kgf-m, 15.2 ft-lb)

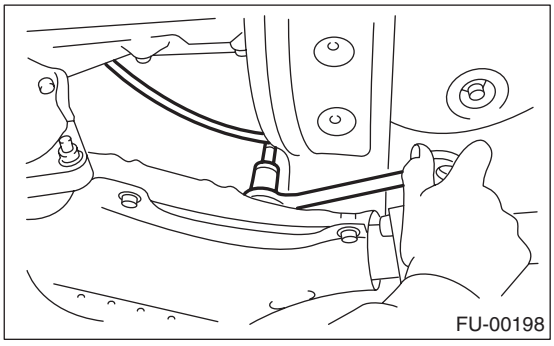

3) Lower the vehicle.
4) Connect the connector to the rear oxygen sensor.

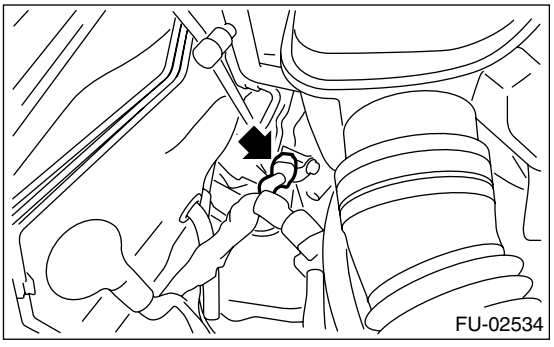

5) Connect the battery ground cable to battery.

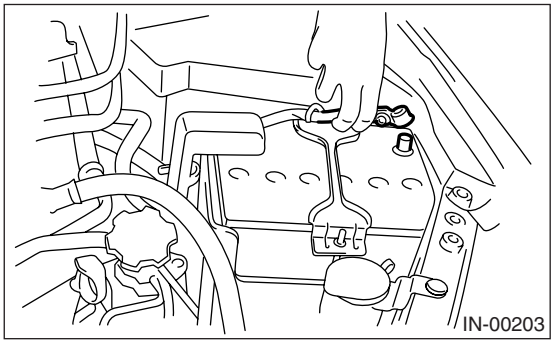

15.Engine Control Module (ECM)

A: REMOVAL

1) Disconnect the ground cable from battery.

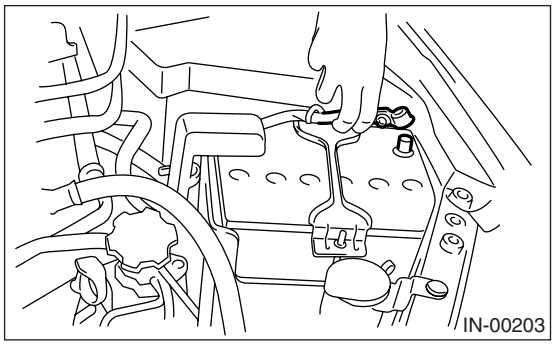

2) Remove the lower inner trim of passenger's side. <Ref. to EI-60, REMOVAL, Lower Inner Trim.>
3) Detach the floor mat of front passenger seat.
4) Remove the protect cover.

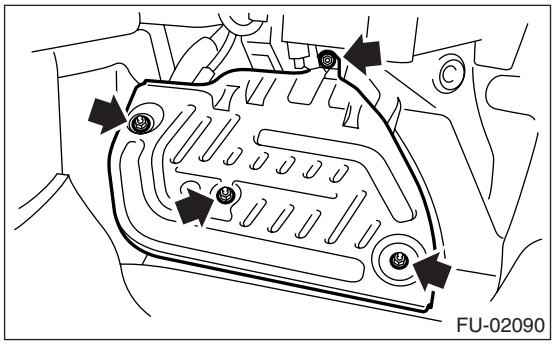

5) Remove the bolt and nut which hold the ECM to bracket.
6) Remove the clip (A) from bracket.

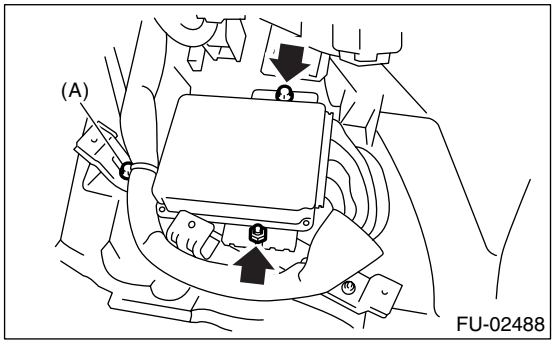

7) Disconnect the ECM connectors and take out the ECM.

B: INSTALLATION

Install in the reverse order of removal.

CAUTION:
• When replacing the ECM, be careful not to use the wrong spec. ECM to avoid any damage to fuel injection system.
• When replacing the ECM, be careful not to damage the harnesses and connectors.

Tightening torque:
5 N·m (0.5 kgf-m, 3.6 ft-lb)

16.Main Relay

A: REMOVAL

1) Disconnect the ground cable from battery.

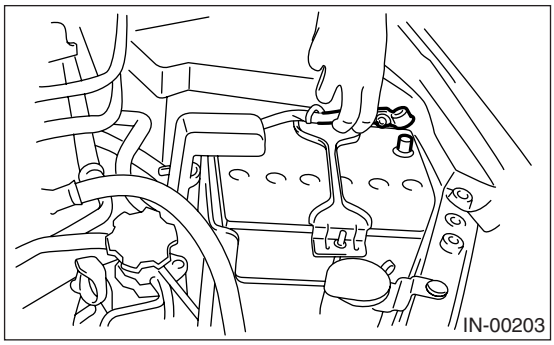

2) Remove the glove box. <Ref. to EI-51, REMOVAL, Glove Box.>
3) Remove the harness cover (A).

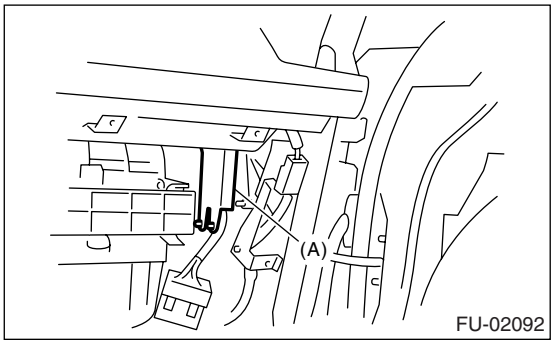

4) Disconnect the connector from main relay.

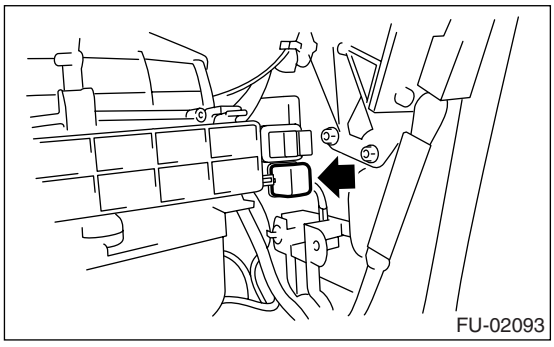

B: INSTALLATION

Install in the reverse order of removal.

17.Fuel Pump Relay

A: REMOVAL

1) Disconnect the ground cable from battery.

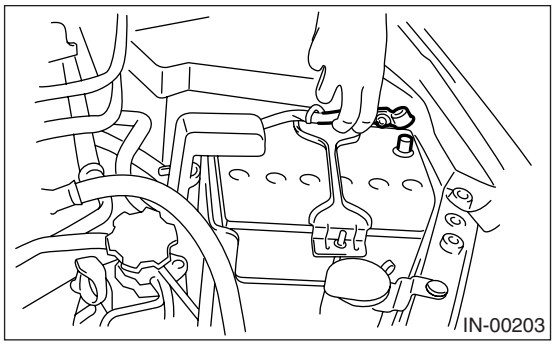

2) Remove the glove box. <Ref. to EI-51, REMOVAL, Glove Box.>
3) Remove the harness cover (A).

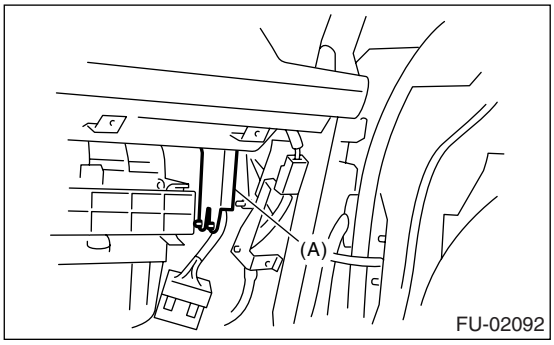

4) Disconnect the connector from fuel pump relay.

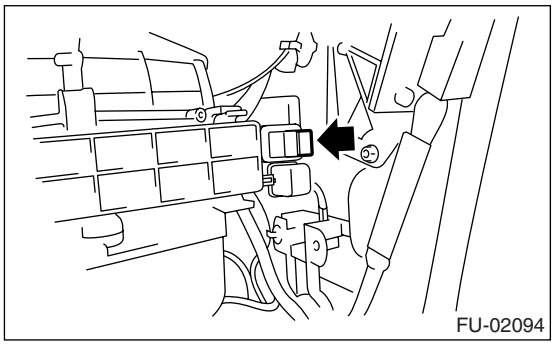

B: INSTALLATION

Install in the reverse order of removal.

18. Electronic Throttle Control Relay

A: REMOVAL

1) Disconnect the ground cable from battery.

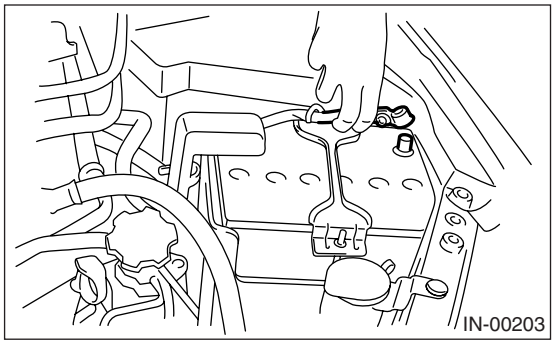

2) Remove the glove box. <Ref. to EI-51, REMOVAL, Glove Box.>

3) Remove the harness cover (A).

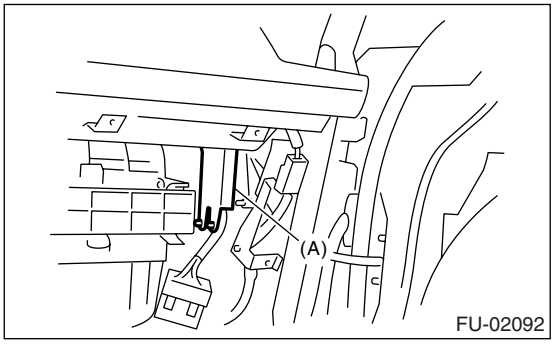

4) Disconnect the connector from electric throttle control relay.

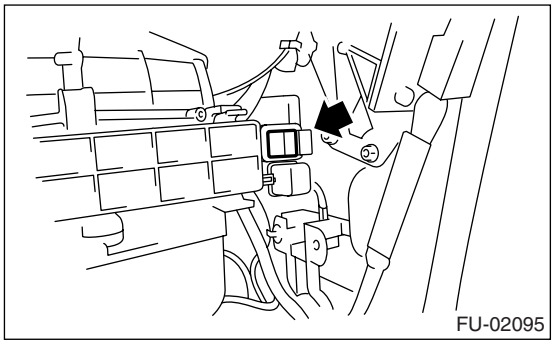

B: INSTALLATION

Install in the reverse order of removal.

19.Fuel

A: PROCEDURE

1. RELEASING OF FUEL PRESSURE

WARNING:
- **Place "NO FIRE" signs near the working area.**
- **Be careful not to spill fuel on the floor.**

1) Remove the fuse of fuel pump from main fuse box.

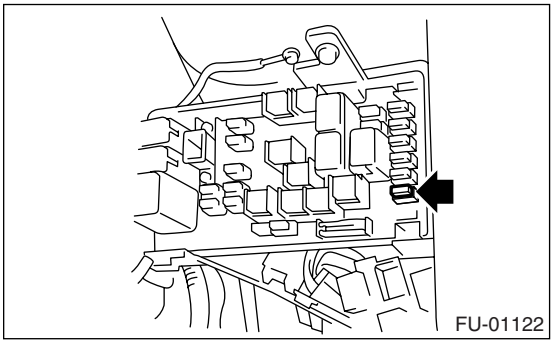

2) Start the engine and run it until it stalls.
3) After the engine stalls, crank it for five more seconds.
4) Turn the ignition switch to OFF.

2. DRAINING FUEL

WARNING:
- **Place "NO FIRE" signs near the working area.**
- **Be careful not to spill fuel on the floor.**

1) Set the vehicle on a lift.
2) Disconnect the ground cable from battery.

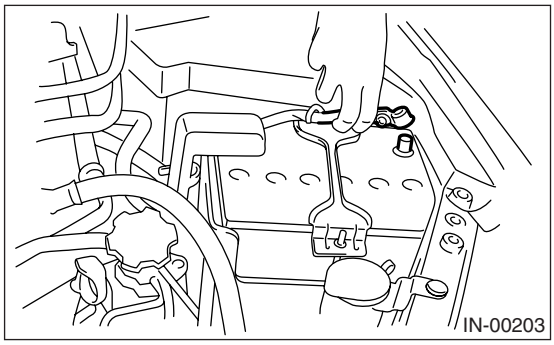

3) Open the fuel filler flap lid, and remove the fuel filler cap.
4) Lift-up the vehicle.
5) Remove the fuel tank protector.
6) Set a container under the vehicle and remove the drain plug from fuel tank to drain fuel from fuel tank.

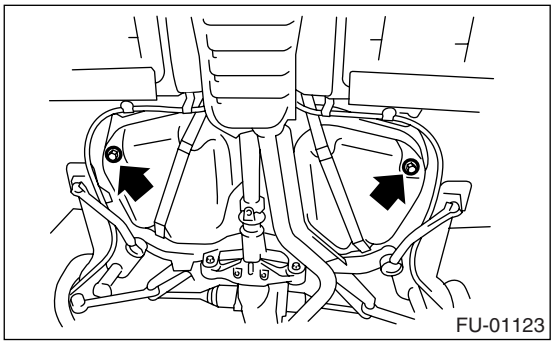

7) Tighten the fuel drain plug.

NOTE:
Use a new gasket.

Tightening torque:
26 N·m (2.65 kgf-m, 19.2 ft-lb)

8) Install the fuel tank protector.

NOTE:
Use a new nut.

Tightening torque:
Nut
9 N·m (0.9 kgf-m, 6.6 ft-lb)
Bolt
17.5 N·m (1.78 kgf-m, 12.9 ft-lb)

20.Fuel Tank

A: REMOVAL

WARNING:
- **Place "NO FIRE" signs near the working area.**
- **Be careful not to spill fuel on the floor.**

1) Set the vehicle on a lift.
2) Release the fuel pressure.
<Ref. to FU(H4SO)-39, RELEASING OF FUEL PRESSURE, PROCEDURE, Fuel.>
3) Drain fuel from the fuel tank.
<Ref. to FU(H4SO)-39, DRAINING FUEL, PROCEDURE, Fuel.>
4) Remove the rear seat.
5) Remove the service hole cover from fuel pump.

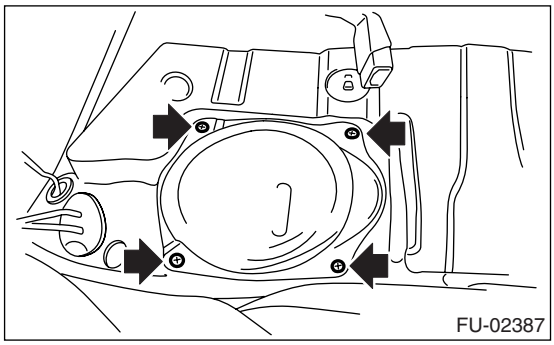

6) Disconnect the connector from fuel pump.

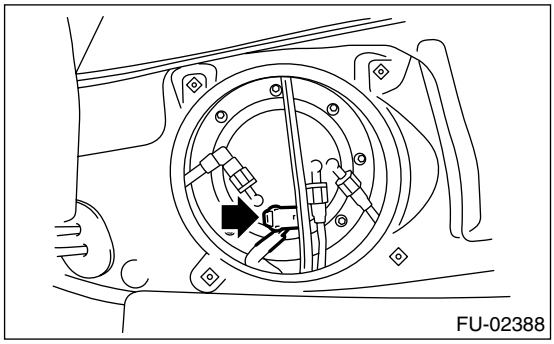

7) Remove the connector and clips (B).

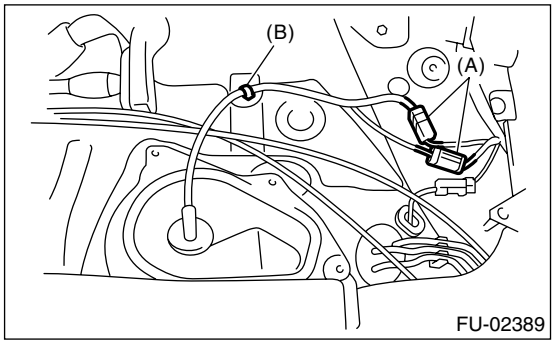

8) Remove the service hole cover from fuel sub level sensor.
(1) Remove the bolts (A).
(2) Push the grommet (B) down under the body and remove service hole cover.

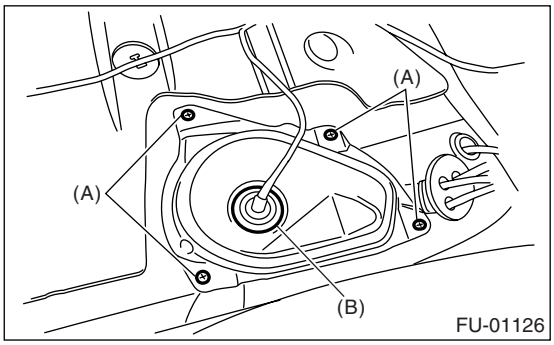

9) Disconnect the connector (A) from fuel sub level sensor.
10) Disconnect the quick connector from the fuel delivery (B) and return hose (C). <Ref. to FU(H4SO)-55, REMOVAL, Fuel Delivery, Return and Evaporation Lines.>

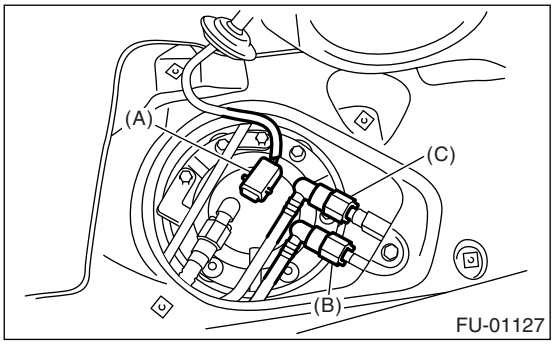

11) Remove trunk room trim. (Sedan model)
<Ref. to EI-70, REMOVAL, Trunk Room Trim.>
12) Remove rear quarter trim. (Wagon model)
<Ref. to EI-62, WAGON MODEL, REMOVAL, Rear Quarter Trim.>
13) Remove pipe protector.

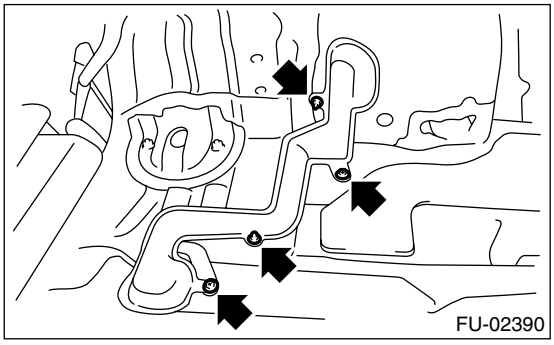

14) Remove the grommet, and then disconnect the quick connector of evaporation pipes. <Ref. to FU(H4SO)-55, REMOVAL, Fuel Delivery, Return and Evaporation Lines.>

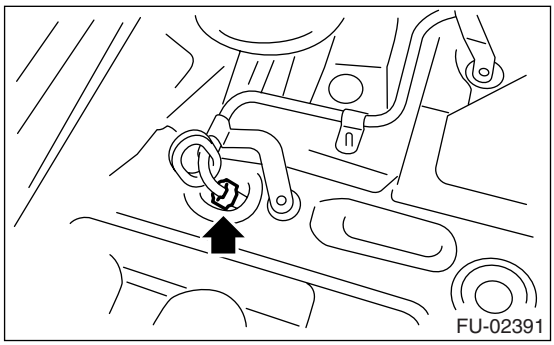

15) Remove the rear wheels.
16) Remove the bolts which secure the rear brake hose installation bracket.

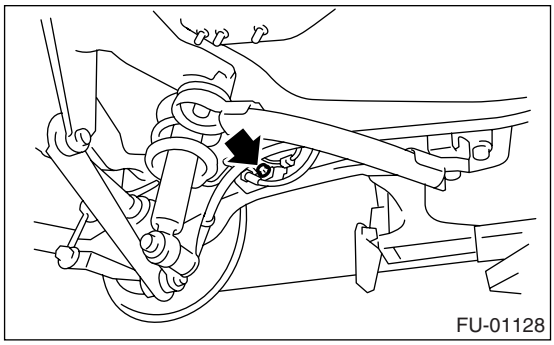

17) Remove the rear brake caliper and tie it to the vehicle body side.

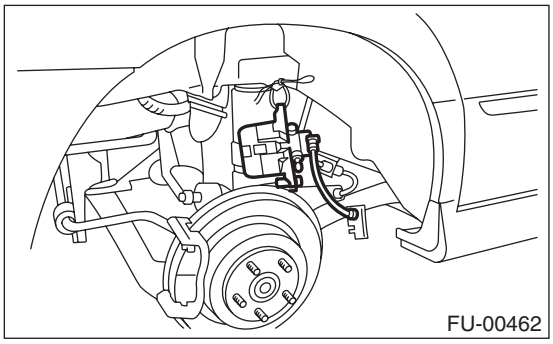

18) Remove the parking brake cable from parking brake assembly. <Ref. to PB-6, REMOVAL, Parking Brake Assembly (Rear Disc Brake).>
19) Lift-up the vehicle.
20) Remove the rear exhaust pipe.
<Ref. to EX(H4SO)-8, REMOVAL, Rear Exhaust Pipe.>
21) Remove the propeller shaft. <Ref. to DS-10, REMOVAL, Propeller Shaft.>
22) Remove the heat shield cover.
23) Disconnect the connector from rear ABS wheel speed sensor.

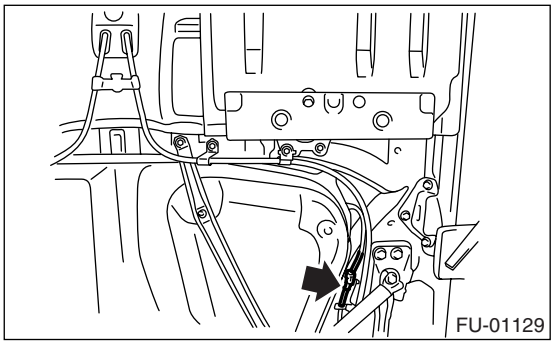

24) Remove the bolts which install the parking brake cable clamp.

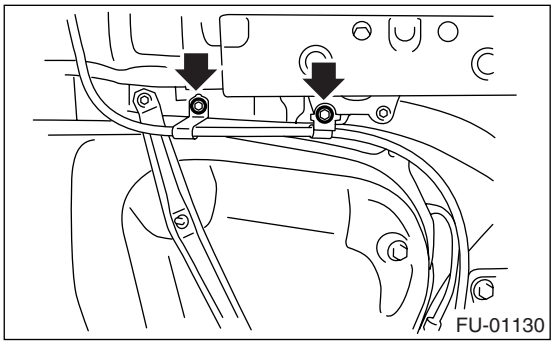

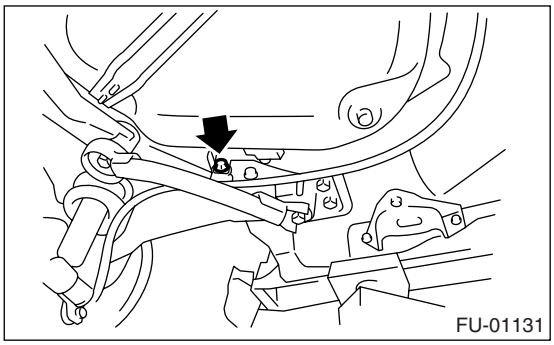

25) Remove the rear suspension assembly.

CAUTION:
A helper is required to perform this work.

(1) Support the rear differential with transmission jack.
(2) Remove the bolt which installs the rear shock absorber to rear suspension arm.

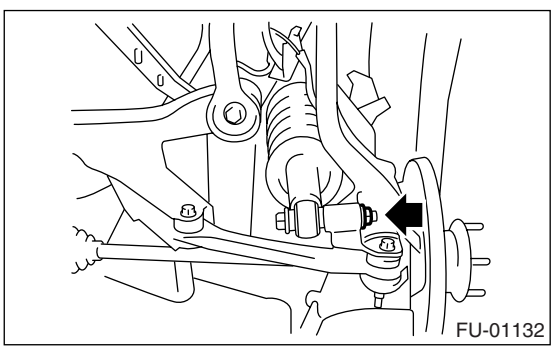

(3) Remove the bolts which secure the rear suspension assembly to body.

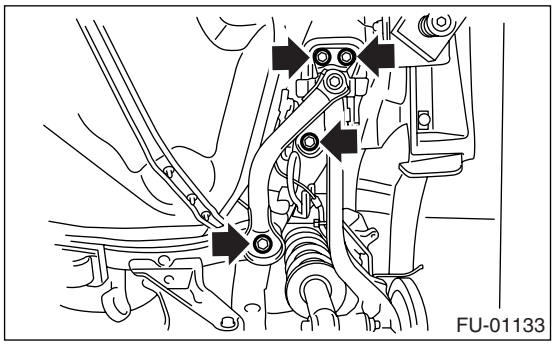

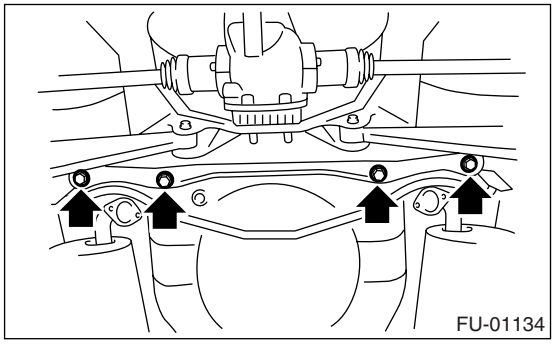

(4) Remove the rear suspension assembly.

26) Disconnect the connector.

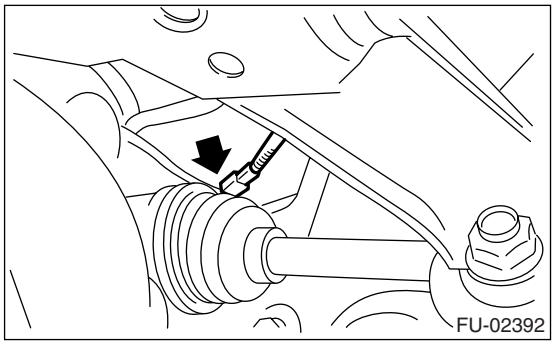

27) Disconnect the evaporation hoses.

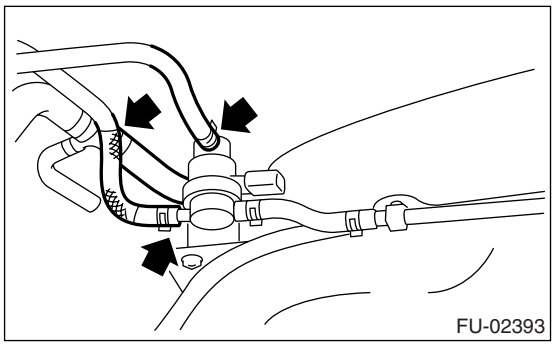

28) Disconnect the fuel filler hoses (A) and evaporation hoses (B).

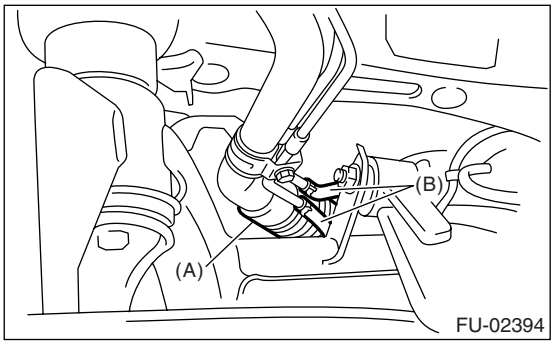

29) Support the fuel tank with transmission jack, remove the bolts from fuel tank bands, and dismount the fuel tank from vehicle.

WARNING:
A helper is required to perform this work.

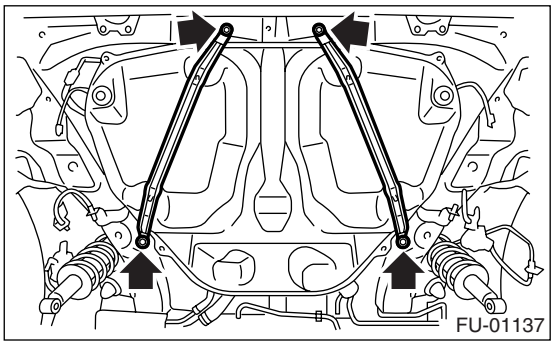

B: INSTALLATION

1) Support the fuel tank with transmission jack, set the fuel tank, and then temporarily tighten the bolts of fuel tank band.

WARNING:
A helper is required to perform this work.

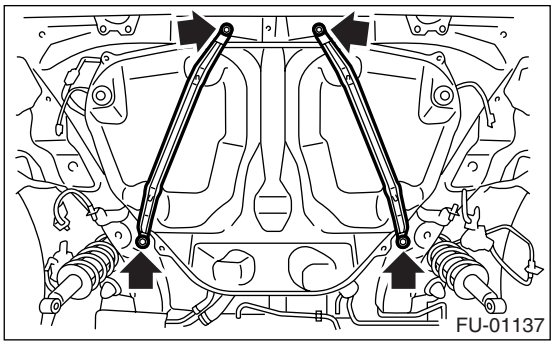

2) Correctly insert the fuel filler hose (A) and evaporation hose (B) to specified position, and then tighten the clamp.

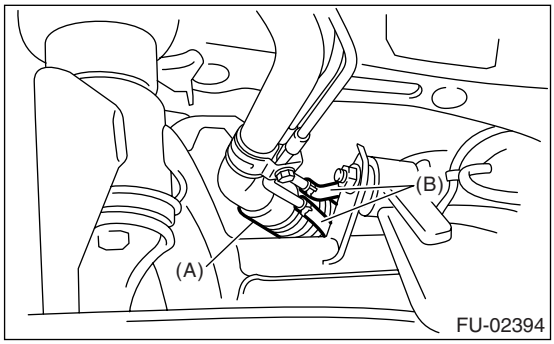

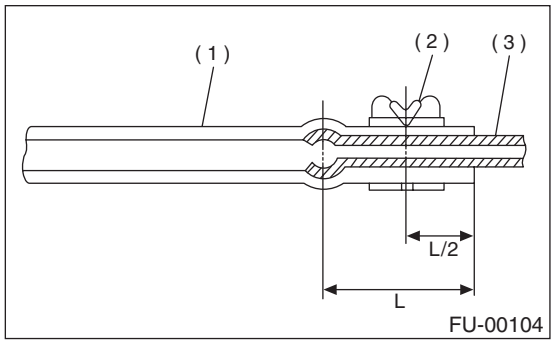

(1) Hose
(2) Clip or clamp
(3) Pipe

3) Connect the evaporation hose.

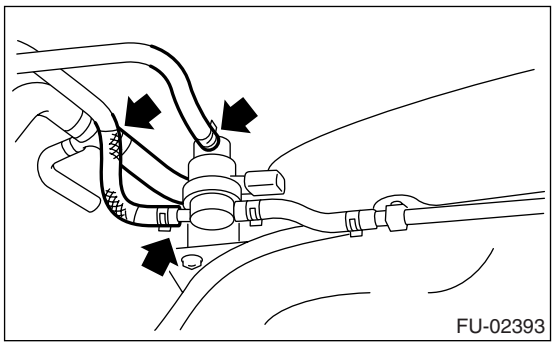

4) Tighten the bolts of fuel tank band.

Tightening torque:
33 N·m (3.4 kgf-m, 25 ft-lb)

5) Connect the connector.

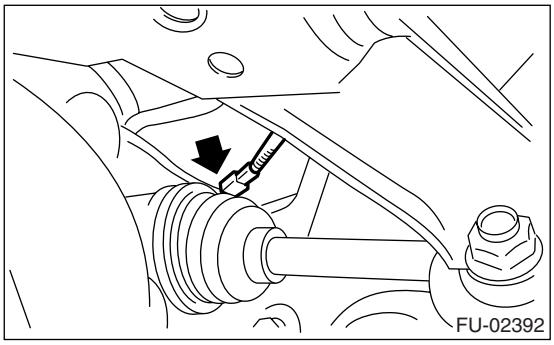

6) Install the rear suspension assembly.

CAUTION:
A helper is required to perform this work.

(1) Support the rear differential with transmission jack.
(2) Support the rear suspension assembly, and then tighten the bolts which secure the rear suspension assembly to body.

Tightening torque:
T1: 125 N·m (12.7 kgf-m, 92.2 ft-lb)
T2: 65 N·m (6.2 kgf-m, 48 ft-lb)
T3: 175 N·m (17.8 kgf-m, 129 ft-lb)

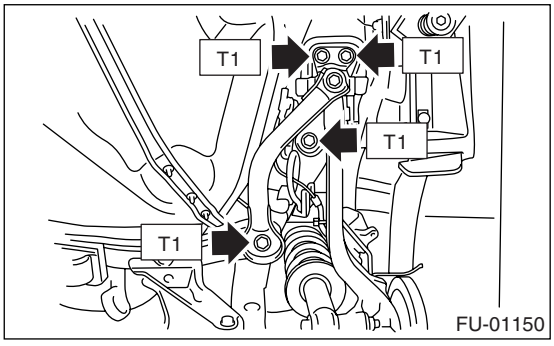

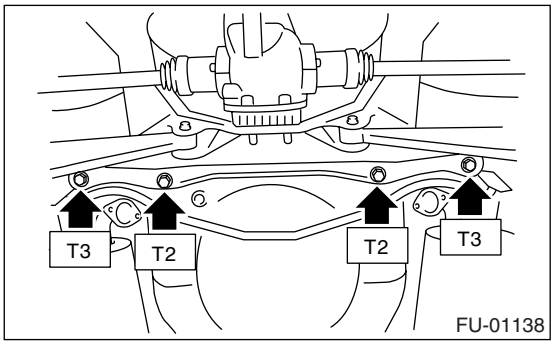

(3) Tighten the bolts which install the rear shock absorber to rear suspension arm. <Ref. to RS-11, INSTALLATION, Rear Arm.>

Tightening torque:
62 N·m (6.3 kgf-m, 46 ft-lb)

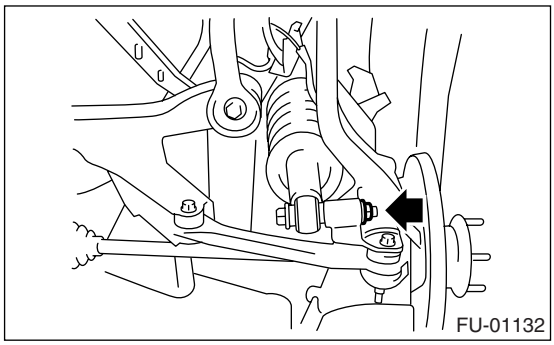

7) Tighten the bolts which install the parking brake cable clamp.

Tightening torque:
18 N·m (1.8 kgf-m, 13.3 ft-lb)

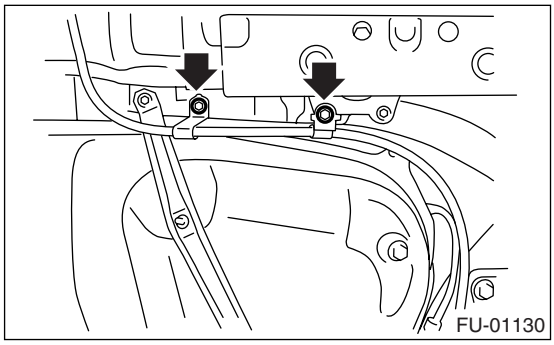

Tightening torque:
32 N·m (3.3 kgf-m, 23.9 ft-lb)

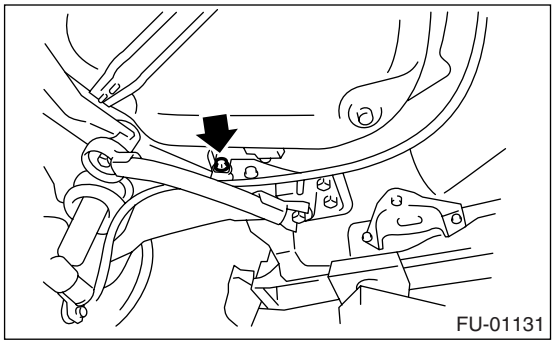

8) Connect the connector to rear ABS wheel speed sensor.

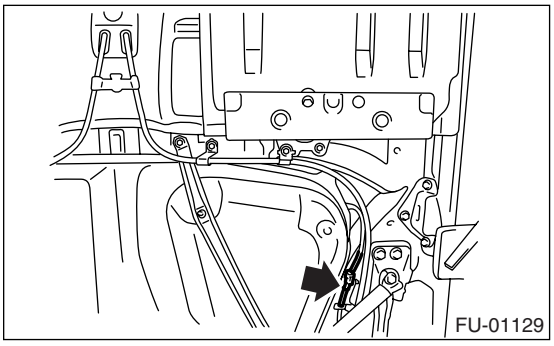

9) Install the heat shield cover.

10) Install the propeller shaft. <Ref. to DS-11, INSTALLATION, Propeller Shaft.>
11) Install the rear exhaust pipe. <Ref. to EX(H4SO)-8, INSTALLATION, Rear Exhaust Pipe.>
12) Lower the vehicle.
13) Connect the parking brake cable to parking brake assembly. <Ref. to PB-7, INSTALLATION, Parking Brake Assembly (Rear Disc Brake).>
14) Install the rear brake caliper.
15) Tighten the bolt which secures rear brake hose installation bracket.

Tightening torque:
33 N·m (3.4 kgf-m, 25 ft-lb)

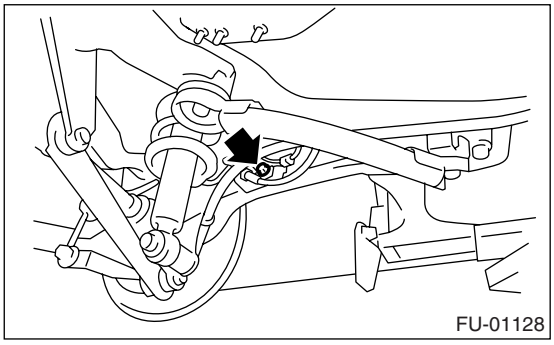

16) Install the rear wheels.
17) Lower the vehicle.
18) Connect the quick connector of evaporation pipe. <Ref. to FU(H4SO)-56, INSTALLATION, Fuel Delivery, Return and Evaporation Lines.>

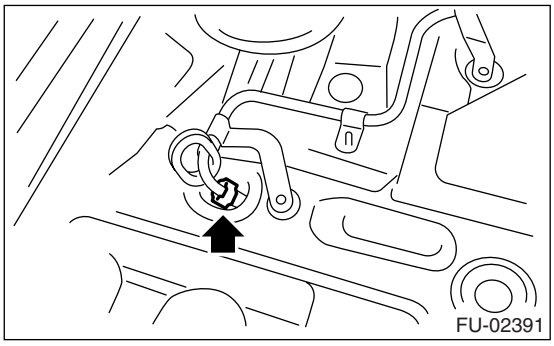

19) Install pipe protector.

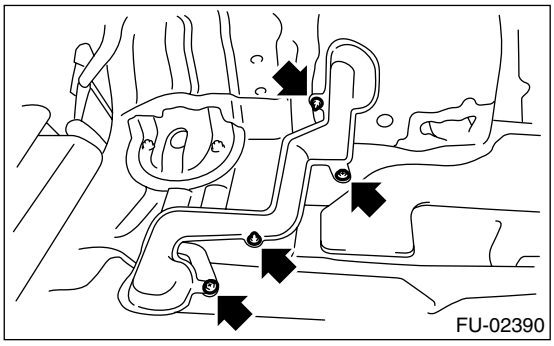

20) Install trunk room trim. (Sedan model) <Ref. to EI-71, INSTALLATION, Trunk Room Trim.>

21) Install rear quarter trim. (Wagon model) <Ref. to EI-63, WAGON MODEL, INSTALLATION, Rear Quarter Trim.>
22) Connect the connector (A) to fuel sub level sensor.
23) Connect the quick connector to the fuel delivery (B) and return hose (C). <Ref. to FU(H4SO)-56, INSTALLATION, Fuel Delivery, Return and Evaporation Lines.>

NOTE:
Be careful not to misconnect the delivery side and return side.

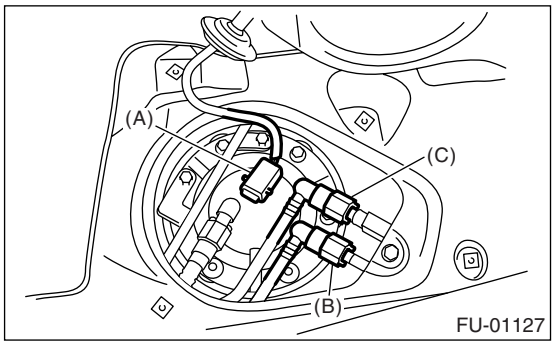

24) Install the service hole cover of fuel sub level sensor.

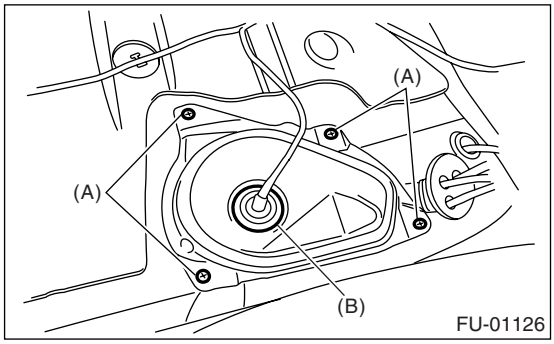

(A) Bolt
(B) Grommet

25) Connect the connector (A), and then install the clips (B).

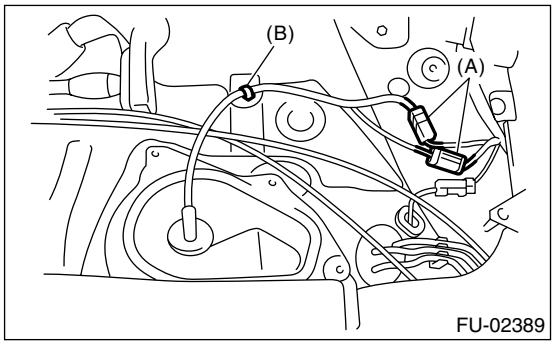

26) Connect the connector to fuel pump.

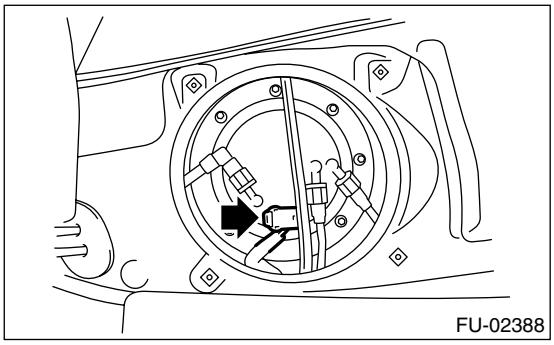

27) Install the service hole cover of fuel pump.

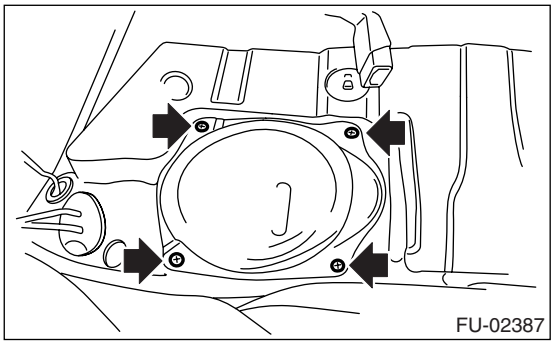

28) Install the rear seat.
29) Install the fuse of fuel pump to main fuse box.

C: INSPECTION

1) Check that the fuel tank is not holed, cracked or otherwise damaged.
2) Make sure that the fuel hoses and fuel pipes are not cracked and those connections are tight.

21.Fuel Filler Pipe

A: REMOVAL

WARNING:
- **Place "NO FIRE" signs near the working area.**
- **Be careful not to spill fuel on the floor.**

1) Disconnect the ground cable from battery.

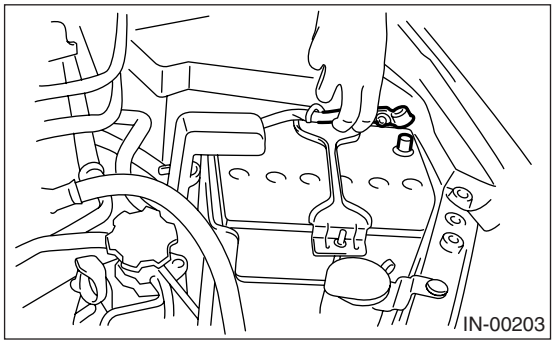

2) Open the fuel filler flap lid, and remove the filler cap.
3) Remove the screws which secure the packing.

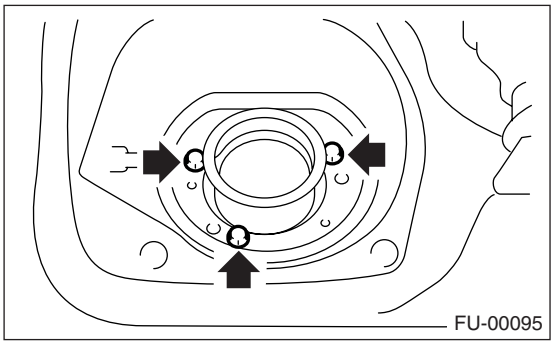

4) Lift-up the vehicle.
5) Remove the rear wheel RH.

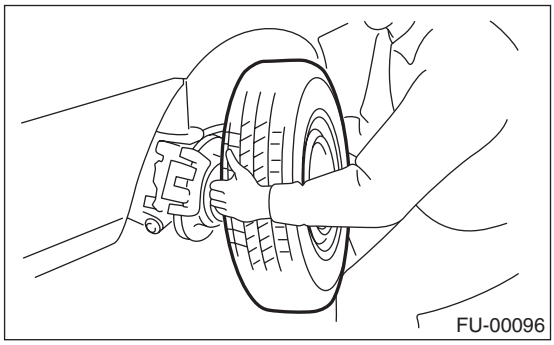

6) Drain fuel from fuel tank. <Ref. to FU(H4SO)-39, DRAINING FUEL, PROCEDURE, Fuel.>
7) Remove the mud guard. <Ref. to EI-29, REMOVAL, Mud Guard.>
8) Remove the rear sub frame. <Ref. to RS-23, REMOVAL, Rear Sub Frame.>
9) Remove the bolts which hold the fuel filler pipe bracket on the body.

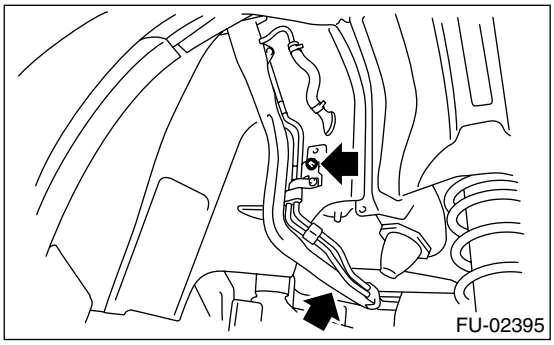

10) Loosen the clamp and disconnect the fuel filler hose (A) and evaporation hose (B).

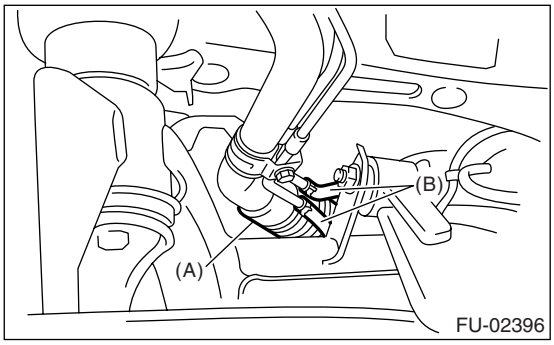

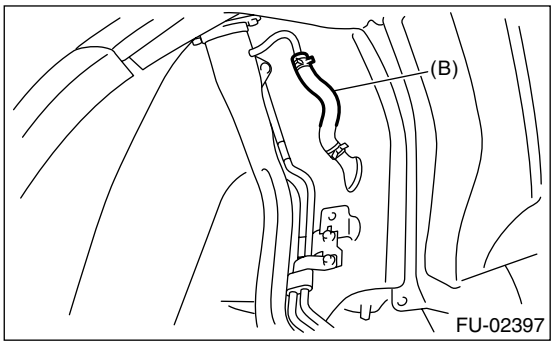

11) Remove the fuel filler pipe to under side of the vehicle.

B: INSTALLATION

1) Open the fuel filler flap lid.
2) Set the fuel saucer (A) with rubber packing (C) and insert the fuel filler pipe into hole from the inner side of apron.
3) Align the holes in fuel filler pipe neck and set the cup (B), and tighten the screws.

NOTE:
If the edges of rubber packing are folded toward the inside, straighten it with a flat tip screwdriver.

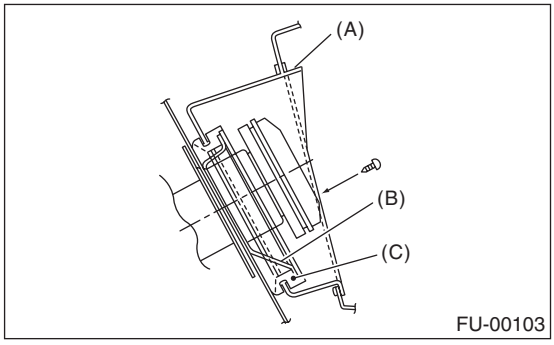

4) Correctly insert the fuel filler hose (A) and evaporation hose (B) to specified position, and then tighten the clamp.

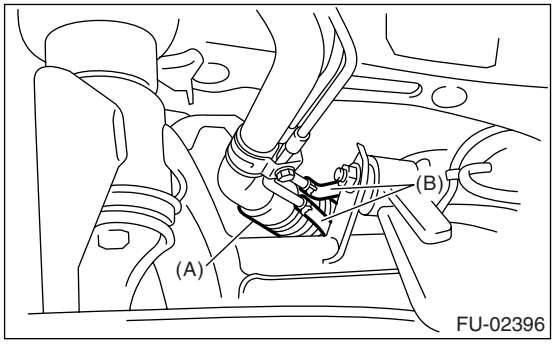

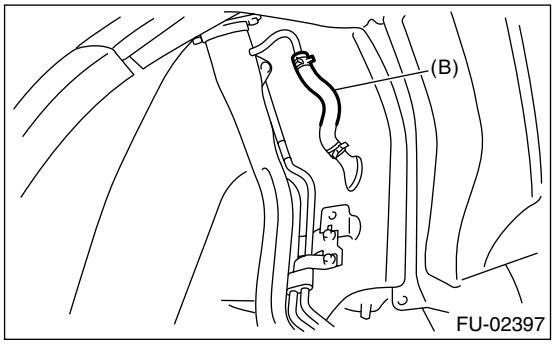

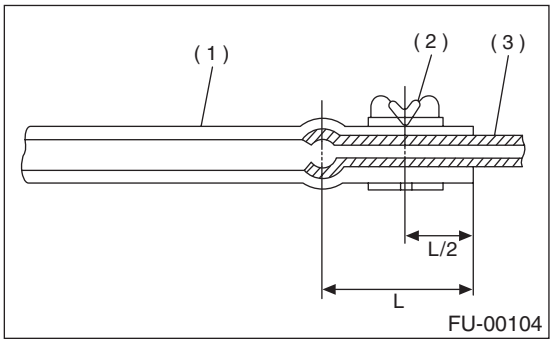

(1) Hose
(2) Clip or clamp
(3) Pipe

5) Tighten the bolts which hold the fuel filler pipe bracket on the body.

Tightening torque:
7.5 N·m (0.76 kgf-m, 5.5 ft-lb)

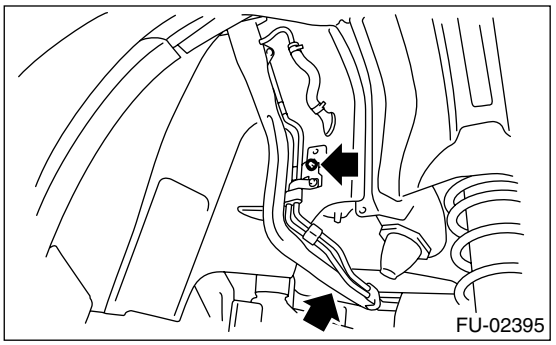

6) Install the rear sub frame. <Ref. to RS-23, INSTALLATION, Rear Sub Frame.>
7) Install the mud guard. <Ref. to EI-29, INSTALLATION, Mud Guard.>
8) Install the rear wheel RH.

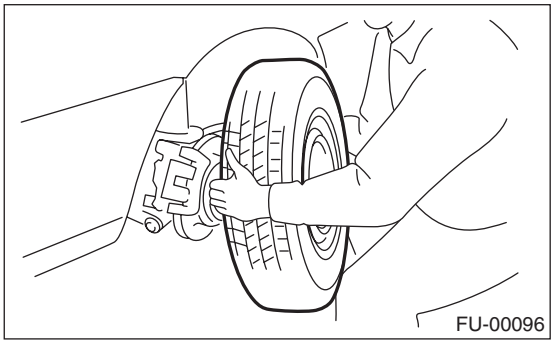

9) Lower the vehicle.
10) Connect the battery ground cable to battery.

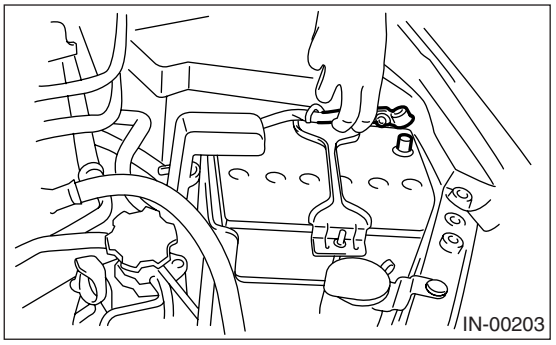

C: DISASSEMBLY

1) Move the clamp, and disconnect the evaporation hose from shut valve.

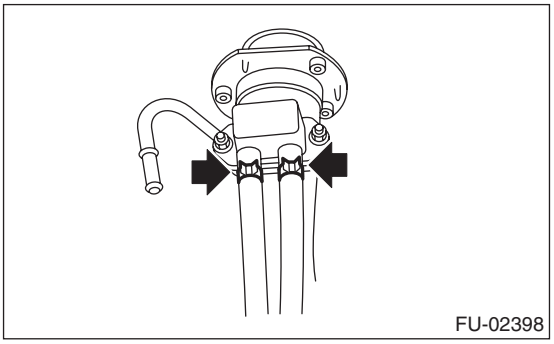

2) Remove the nut which holds the evaporation to fuel filler pipe.

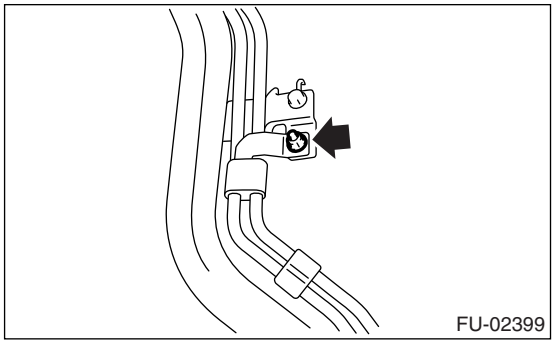

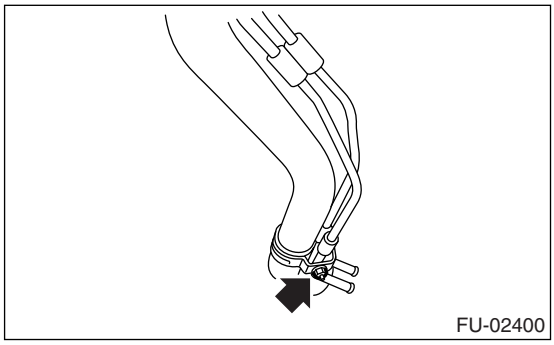

3) Remove the shut valve from fuel filler pipe. <Ref. to EC(H4SO)-15, REMOVAL, Shut Valve.>

D: ASSEMBLY

1) Install the shut valve to fuel filler pipe. <Ref. to EC(H4SO)-15, INSTALLATION, Shut Valve.>
2) Tighten the nut which holds the evaporation pipe assembly on the fuel filler pipe.

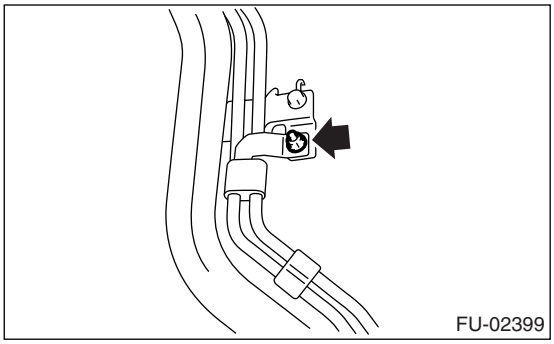

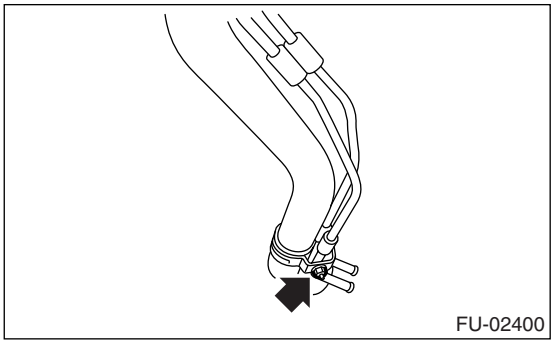

3) Connect the evaporation hose to shut valve.

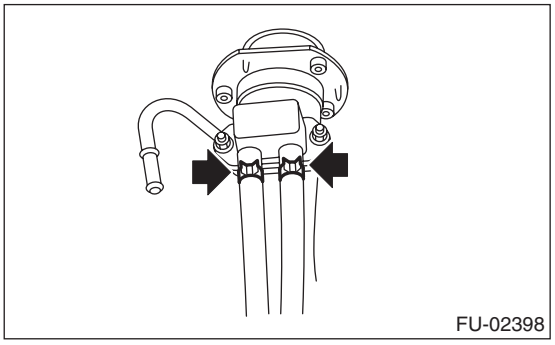

22.Fuel Pump

A: REMOVAL

WARNING:
- **Place "NO FIRE" signs near the working area.**
- **Be careful not to spill fuel on the floor.**

NOTE:
Fuel pump assembly consists of fuel pump and fuel level sensor.

1) Release the fuel pressure.
<Ref. to FU(H4SO)-39, RELEASING OF FUEL PRESSURE, PROCEDURE, Fuel.>
2) Drain the fuel. <Ref. to FU(H4SO)-39, DRAINING FUEL, PROCEDURE, Fuel.>
3) Remove the rear seat.
4) Remove the service hole cover.

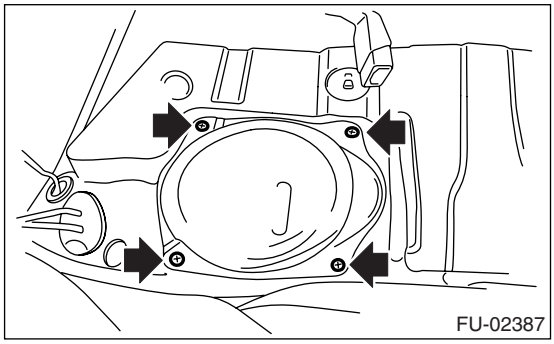
FU-02387

5) Disconnect the connector from fuel pump.

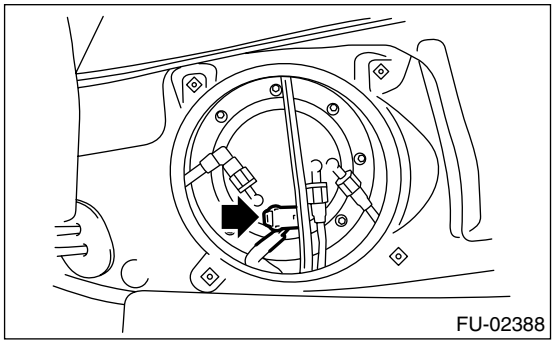
FU-02388

6) Disconnect the quick connector and then disconnect the fuel delivery hose, return hose and jet pump hose. <Ref. to FU(H4SO)-55, REMOVAL, Fuel Delivery, Return and Evaporation Lines.>

7) Remove the nuts which install the fuel pump assembly onto fuel tank.

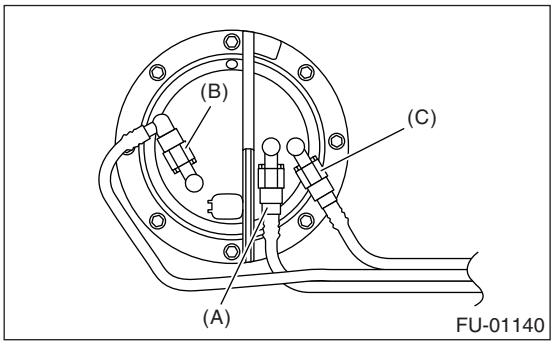

FU-01140

(A) Delivery hose
(B) Return hose
(C) Jet pump hose

8) Take off the fuel pump assembly from fuel tank.

B: INSTALLATION

Install in the reverse order of removal.

NOTE:
Use a new gasket.
(1) Ensure the sealing portion is free from fuel or foreign particles before installation.
(2) Tighten the nuts to specified torque in the order as shown in the figure.

Tightening torque:
4.4 N·m (0.45 kgf-m, 3.2 ft-lb)

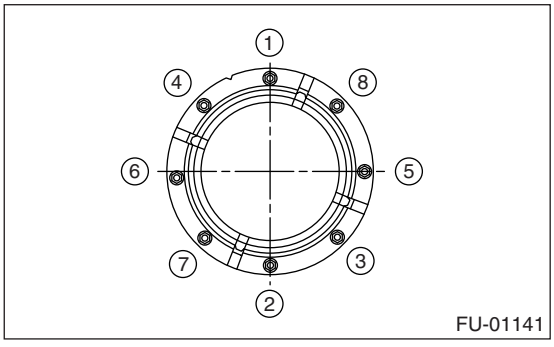

FU-01141

C: INSPECTION

Connect the lead harness to the connector terminal of fuel pump and apply the battery power supply to check whether the pump operates.

WARNING:
- **Wipe off the fuel completely.**
- **Keep battery as far apart from fuel pump as possible.**
- **Be sure to turn the battery supply to ON and OFF on the battery side.**

• Do not run fuel pump for a long time under non-load condition.

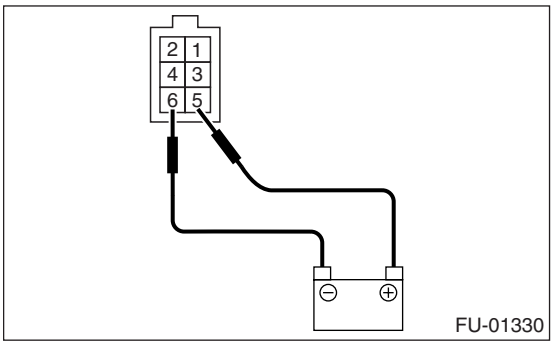

23.Fuel Level Sensor

A: REMOVAL

WARNING:
- **Place “NO FIRE” signs near the working area.**
- **Be careful not to spill fuel on the floor.**

NOTE:
Fuel level sensor is built in fuel pump assembly.

1) Remove the fuel pump assembly. <Ref. to FU(H4SO)-49, REMOVAL, Fuel Pump.>
2) Disconnect the connector from fuel pump bracket.
3) Remove the fuel level sensor and the fuel temperature sensor.

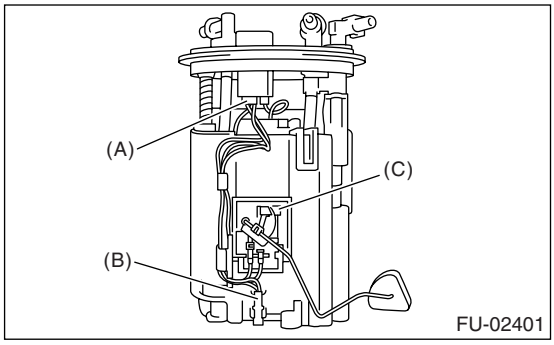

(A) Connector
(B) Fuel temperature sensor
(C) Fuel level sensor

B: INSTALLATION

Install in the reverse order of removal.

24.Fuel Sub Level Sensor

A: REMOVAL

WARNING:
- **Place "NO FIRE" signs near the working area.**
- **Be careful not to spill fuel on the floor.**

1) Drain fuel. <Ref. to FU(H4SO)-39, DRAINING FUEL, PROCEDURE, Fuel.>
2) Remove the rear seat.
3) Remove the service hole cover.
   (1) Remove the bolts (A).
   (2) Push the grommet (B) down under the body and remove the service hole cover.

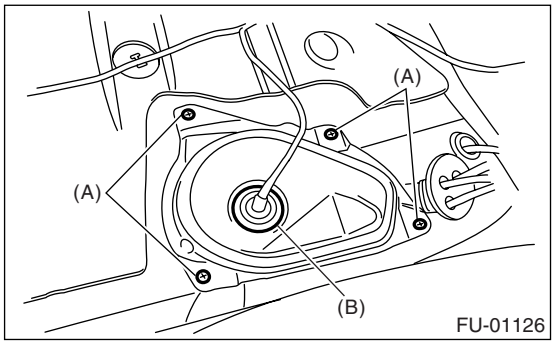

4) Disconnect the connector from fuel sub level sensor.

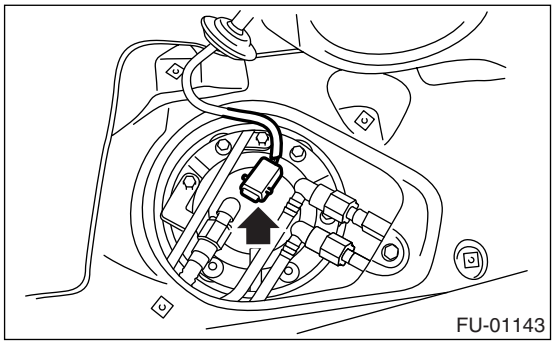

5) Disconnect the quick connector and then disconnect the fuel delivery hose, return hose and jet pump hose. <Ref. to FU(H4SO)-55, REMOVAL, Fuel Delivery, Return and Evaporation Lines.>

6) Remove the nuts and bolts which install the fuel sub level sensor on fuel tank.

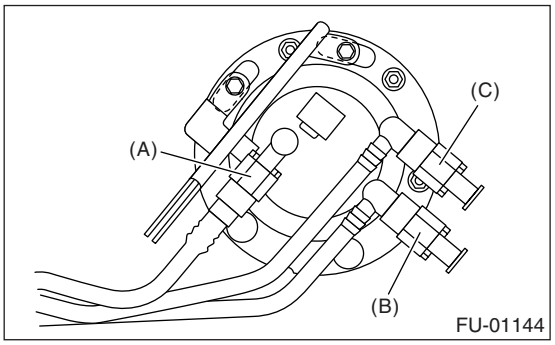

(A) Jet pump hose
(B) Delivery hose
(C) Return hose

7) Remove the fuel sub level sensor.

B: INSTALLATION

Install in the reverse order of removal.

NOTE:
Use a new gasket.
(1) Ensure the sealing portion is free from fuel or foreign particles before installation.
(2) Tighten the nuts and bolts to specified torque in the order as shown in the figure.

Tightening torque:
4.4 N·m (0.45 kgf-m, 3.2 ft-lb)

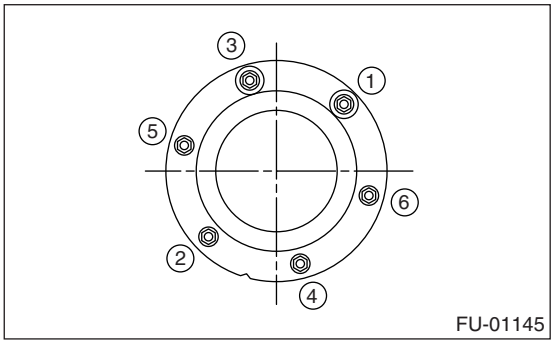

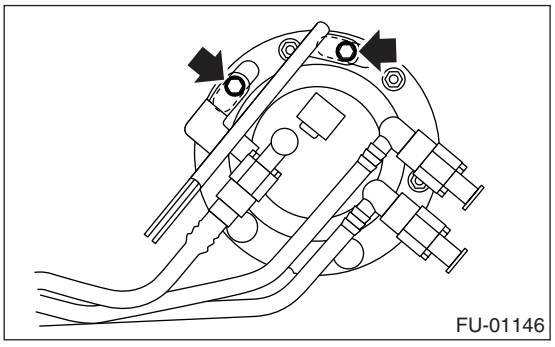

25.Fuel Filter

A: SPECIFICATION

Fuel filter forms a unit with fuel pump.
Refer to Fuel Pump for removal and installation procedures.
<Ref. to FU(H4SO)-49, REMOVAL, Fuel Pump.>
<Ref. to FU(H4SO)-49, INSTALLATION, Fuel Pump.>

26.Fuel Damper Valve

A: REMOVAL

1) Release the fuel pressure.
<Ref. to FU(H4SO)-39, RELEASING OF FUEL PRESSURE, PROCEDURE, Fuel.>
2) Remove the fuel damper valve from fuel delivery line and fuel return line.

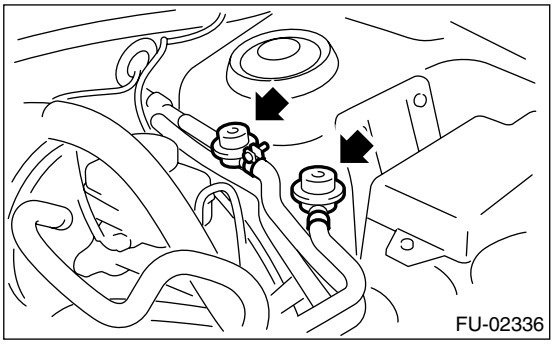

B: INSTALLATION

Install in the reverse order of removal.

Tightening torque:
Fuel damper valve
1.25 N·m (0.13 kgf-m, 0.94 ft-lb)

27.Fuel Delivery, Return and Evaporation Lines

A: REMOVAL

1) Set the vehicle on a lift.
2) Release the fuel pressure. <Ref. to FU(H4SO)-39, RELEASING OF FUEL PRESSURE, PROCEDURE, Fuel.>
3) Open the fuel filler flap lid, and remove the fuel filler cap.
4) Remove the floor mat. <Ref. to EI-72, REMOVAL, Floor Mat.>
5) Disconnect the fuel delivery pipes and hoses, and then disconnect the fuel return pipes and hoses, evaporation pipes and hoses.

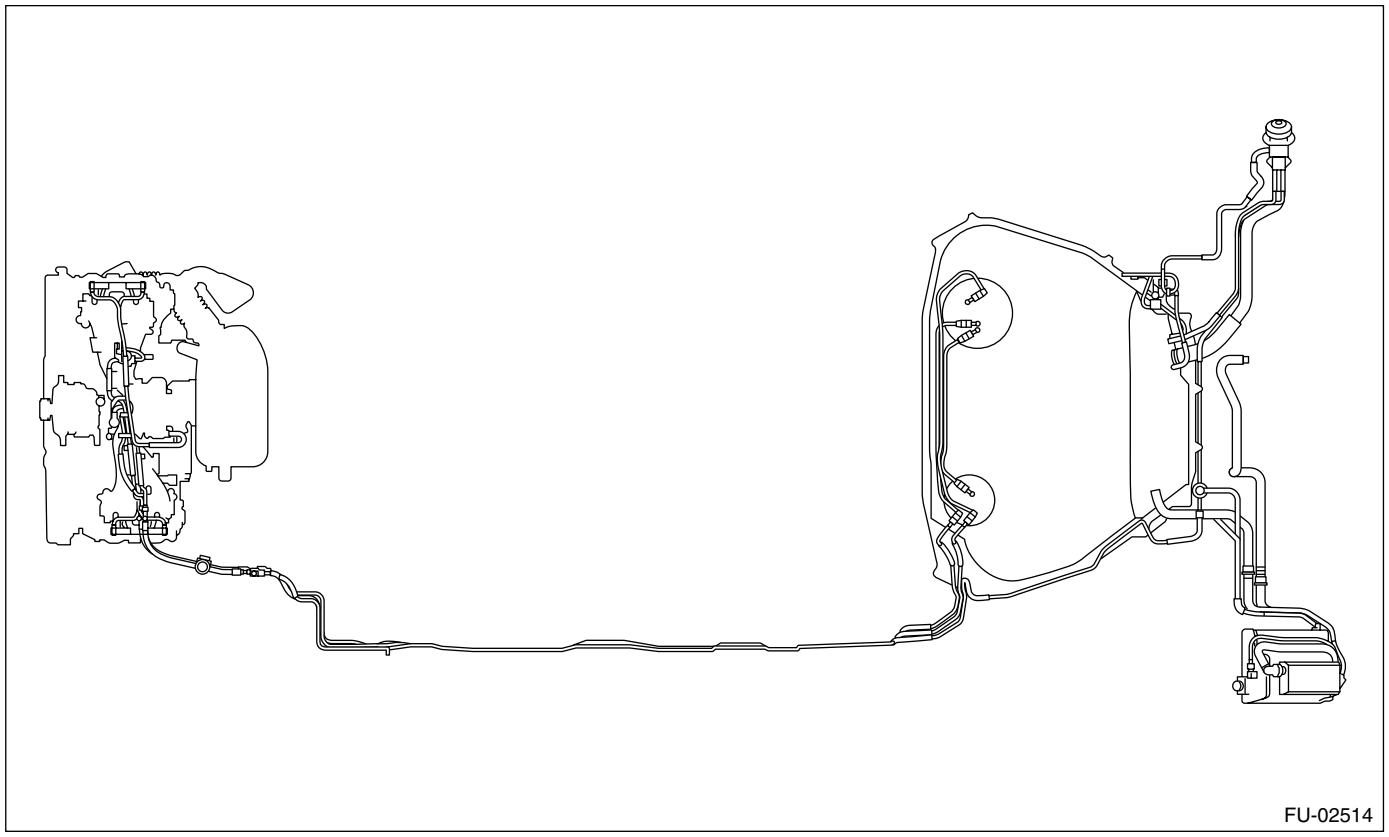
FU-02514

6) In the engine compartment, disconnect the fuel delivery hoses, return hoses, and evaporation hose.
   (1) Disconnect the quick connector of fuel delivery line and return line by pushing the ST in the direction of arrow.
   (2) Remove the clip, and disconnect the evaporation hose from pipe.

WARNING:
- **Be careful not to spill fuel.**
- **Catch the fuel from hoses using a container or cloth.**

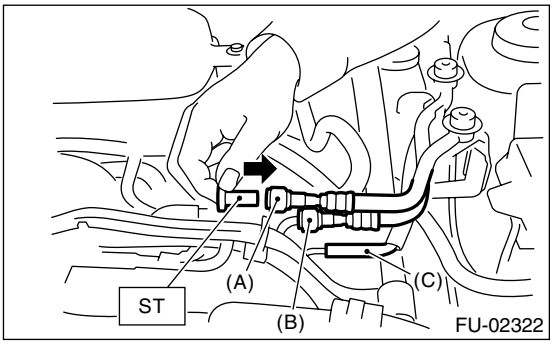

(A) Fuel delivery hose
(B) Return hose
(C) Evaporation hose

7) Lift-up the vehicle.

8) Remove the fuel tank. <Ref. to FU(H4SO)-40, REMOVAL, Fuel Tank.>
9) Separate the quick connector on fuel line.
(1) Clean the pipe and connector, if they are covered with dust.
(2) To prevent from damaging or entering foreign matter, wrap the pipes and connectors with plastic bag, etc.

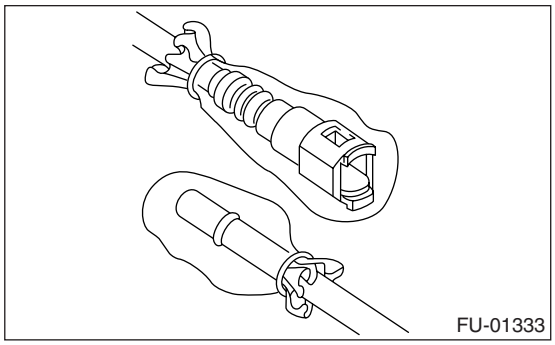

(3) Hold the connector (A) and push retainer (B) down.
(4) Pull out the connector (A) from retainer (B).

CAUTION:
Always use a new retainer except in use of engine compartment.

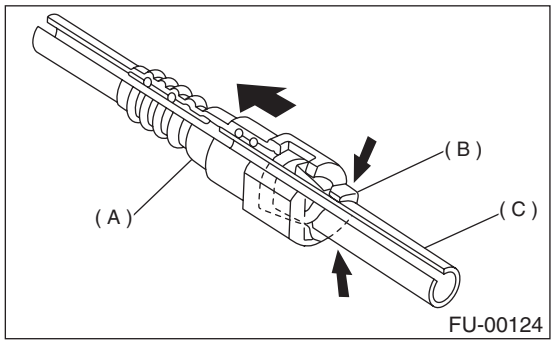

(A) Connector
(B) Retainer
(C) Pipe

B: INSTALLATION

1) Connect the quick connector on fuel line.

CAUTION:
• Always use a new retainer except in use of engine compartment.
• Make sure that the connected portion is not damaged or dust-covered. If necessary, clean the seal surface of pipe.

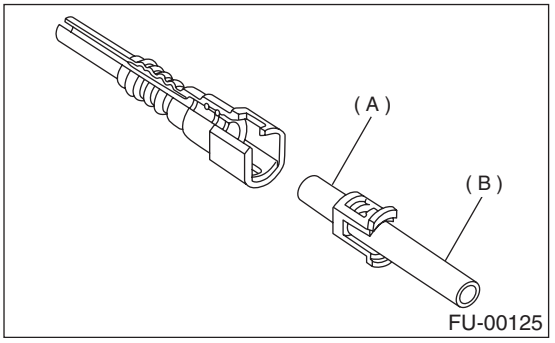

(A) Seal surface
(B) Pipe

(1) Set the new retainer (B) to connector (A).
(2) Push the pipe into the connector completely.

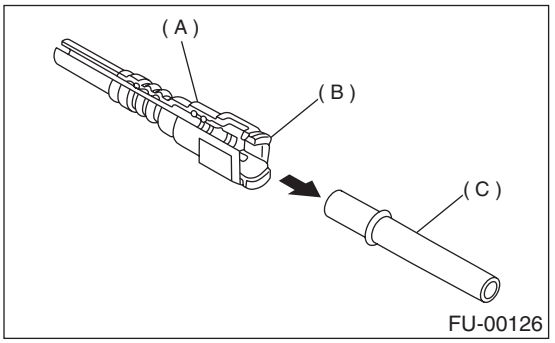

(A) Connector
(B) Retainer
(C) Pipe

CAUTION:
• Pull the connector to ensure it is connected securely.
• Ensure the two retainer pawls are engaged in their mating positions in the connector.

• Be sure to inspect the hoses and their connections for fuel leakage.

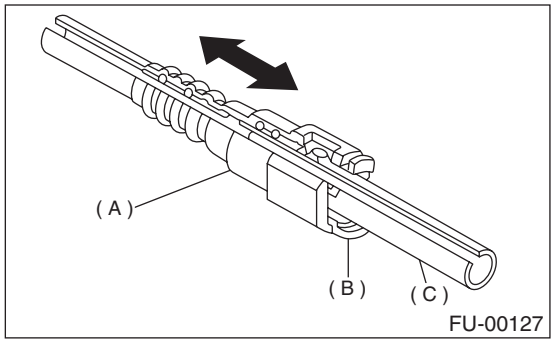

(A) Connector
(B) Retainer
(C) Pipe

2) Connect the fuel delivery hose to the pipe with an overlap of 20 to 25 mm (0.79 to 0.98 in).
Type A: When the amount to be inserted is specified.
Type B: When the amount to be inserted is not specified.

ℓ : 2.5±1.5 mm (0.098±0.059 in)

L: 22.5±2.5 mm (0.886±0.098 in)

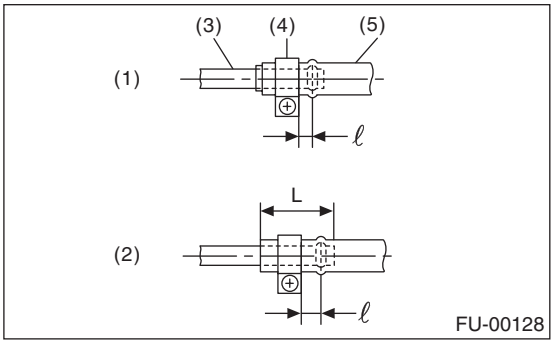

(1) Type A
(2) Type B
(3) Pipe
(4) Clamp
(5) Hose

3) Connect the return hose and evaporation hose to the pipe by approx. 15 mm (0.59 in) from hose end.

Fuel return hose:
L = 22.5±2.5 mm (0.886±0.098 in)
Fuel evaporation hose:
L = 17.5±2.5 mm (0.689±0.098 in)

CAUTION:
Be sure to inspect the hoses and their connections for fuel leakage.

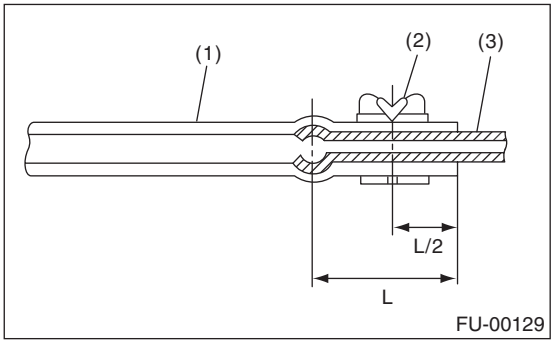

(1) Hose
(2) Clip
(3) Pipe

C: INSPECTION

1) Make sure that there are no cracks on the fuel pipes and fuel hoses.
2) Make sure the fuel pipe and fuel hose connections are tightened firmly.

28.Fuel System Trouble in General

A: INSPECTION

Trouble and possible cause		Corrective action
1. Insufficient fuel supply to injector		
1)	Fuel pump does not operate.	
	❍ Defective terminal contact	Inspect contact, especially ground, and tighten it securely.
	❍ Trouble in electromagnetic or electronic circuit parts	Replace the faulty parts.
2)	Decline of fuel pump function	Replace the fuel pump.
3)	Clogged dust or water in the fuel filter	Replace fuel filter, clean or replace fuel tank.
4)	Clogged or bent fuel pipe or hose	Clean, correct or replace the fuel pipe or hose.
5)	Air mixed in the fuel system	Inspect or retighten each connection part.
6)	Clogged or bent air breather tube or pipe	Clean, correct or replace air breather tube or pipe.
7)	Damaged diaphragm of pressure regulator	Replace.
2. Leakage or blow out of fuel		
1)	Loosened joints of the fuel pipe	Retighten.
2)	Cracked fuel pipe, hose, and fuel tank	Replace.
3)	Defective welding part on the fuel tank	Replace.
4)	Defective drain packing of the fuel tank	Replace.
5)	Clogged or bent air breather tube or air vent tube	Clean, correct or replace air breather tube or air vent tube.
3. Gasoline smell inside of compartment		
1)	Loose joints at air breather tube, air vent tube, and fuel filler pipe	Retighten.
2)	Defective packing air tightness on the fuel saucer	Correct or replace the packing.
3)	Inoperative fuel pump modulator or circuit	Replace.
4. Defective fuel meter indicator		
1)	Defective operation of fuel level sensor	Replace.
2)	Defective operation of fuel meter	Replace.
5. Noise		
1)	Large operation noise or vibration of fuel pump	Replace.

NOTE:
• When the vehicle is left unused for an extended period of time, water may accumulate in the fuel tank. Fill fuel fully to prevent those problem. And also drain the water condensation from fuel filter.
• In snow-covered areas, mountainous areas, skiing areas, etc. where ambient temperatures drop below 0°C (32°F) throughout the winter season, use water removing agent in the fuel system to prevent freezing fuel system and accumulating water. Fill the water removing agent each time the fuel is reduced to half to maintain the advantage.
• When water condensation is noticed in the fuel filter, drain the water from both the fuel filter and fuel tank or use water removing agent in the fuel tank.
• Before using water removing agent, follow the cautions noted on the bottle.

EMISSION CONTROL (AUX. EMISSION CONTROL DEVICES)

EC(H4SO)

		Page
1.	General Description	2
2.	Front Catalytic Converter	3
3.	Rear Catalytic Converter	4
4.	Canister	5
5.	Purge Control Solenoid Valve	6
6.	EGR Valve	7
7.	Fuel Level Sensor	8
8.	Fuel Temperature Sensor	9
9.	Fuel Sub Level Sensor	10
10.	Fuel Tank Pressure Sensor	11
11.	Fuel Tank Sensor Control Valve	12
12.	Pressure Control Solenoid Valve	13
13.	Drain Filter	14
14.	Shut Valve	15
15.	Drain Valve	16
16.	PCV Valve	17

1. General Description

A: CAUTION

• Wear work clothing, including a cap, protective goggles, and protective shoes during operation.
• Remove contamination including dirt and corrosion before removal, installation or disassembly.
• Keep the disassembled parts in order and protect them from dust or dirt.
• Before removal, installation or disassembly, be sure to clarify the failure. Avoid unnecessary removal, installation, disassembly, and replacement.
• Be careful not to burn yourself, because each part on the vehicle is hot after running.
• Be sure to tighten fasteners including bolts and nuts to the specified torque.
• Place shop jacks or rigid racks at the specified points.
• Before disconnecting electrical connectors of sensors or units, be sure to disconnect the ground cable from battery.

2. Front Catalytic Converter

A: REMOVAL

1. U5 MODEL

Front and rear catalytic converters and front exhaust pipe are integrated into one unit; therefore, the removal procedure is the same as that for front exhaust pipe. <Ref. to EX(H4SO U5)-4, REMOVAL, Front Exhaust Pipe.>

2. EXCEPT FOR U5 MODEL

Front and rear catalytic converters and center exhaust pipe are integrated into one unit; therefore, the removal procedure is the same as that for center exhaust pipe. <Ref. to EX(H4SO)-7, REMOVAL, Center Exhaust Pipe.>

B: INSTALLATION

1. U5 MODEL

Front and rear catalytic converters and front exhaust pipe are integrated into one unit; therefore, the installation procedure is the same as that for front exhaust pipe. <Ref. to EX(H4SO U5)-6, INSTALLATION, Front Exhaust Pipe.>

2. EXCEPT FOR U5 MODEL

Front and rear catalytic converters and center exhaust pipe are integrated into one unit; therefore, the installation procedure is the same as that for center exhaust pipe. <Ref. to EX(H4SO)-7, INSTALLATION, Center Exhaust Pipe.>

C: INSPECTION

1) Make sure there are no exhaust leaks from connections and welds.
2) Make sure there are no holes or rusting.

3. Rear Catalytic Converter

A: REMOVAL

1. U5 MODEL

Front and rear catalytic converters and front exhaust pipe are integrated into one unit; therefore, the removal procedure is the same as that for front exhaust pipe. <Ref. to EX(H4SO U5)-4, REMOVAL, Front Exhaust Pipe.>

2. EXCEPT FOR U5 MODEL

Front and rear catalytic converters and center exhaust pipe are integrated into one unit; therefore, the removal procedure is the same as that for front catalytic converter. <Ref. to EX(H4SO)-7, REMOVAL, Center Exhaust Pipe.>

B: INSTALLATION

1. U5 MODEL

Front and rear catalytic converters and front exhaust pipe are integrated into one unit; therefore, the installation procedure is the same as that for front exhaust pipe. <Ref. to EX(H4SO U5)-6, INSTALLATION, Front Exhaust Pipe.>

2. EXCEPT FOR U5 MODEL

Front and rear catalytic converters and center exhaust pipe are integrated into one unit; therefore, the installation procedure is the same as that for front catalytic converter. <Ref. to EX(H4SO)-7, INSTALLATION, Center Exhaust Pipe.>

C: INSPECTION

1) Make sure there are no exhaust leaks from connections and welds.
2) Make sure there are no holes or rusting.

4. Canister

A: REMOVAL

1) Disconnect the ground cable from battery.

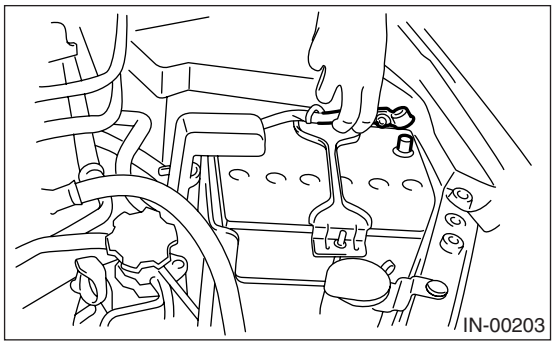

2) Lift-up the vehicle.
3) Remove the rear wheel LH.
4) Remove the mud guard LH.
5) Disconnect the quick connector (A).
6) Disconnect the drain valve connector (B).
7) Remove the clip (C).

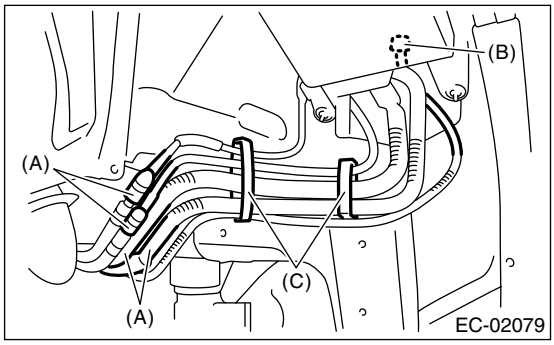

8) Remove the canister (B) from body.

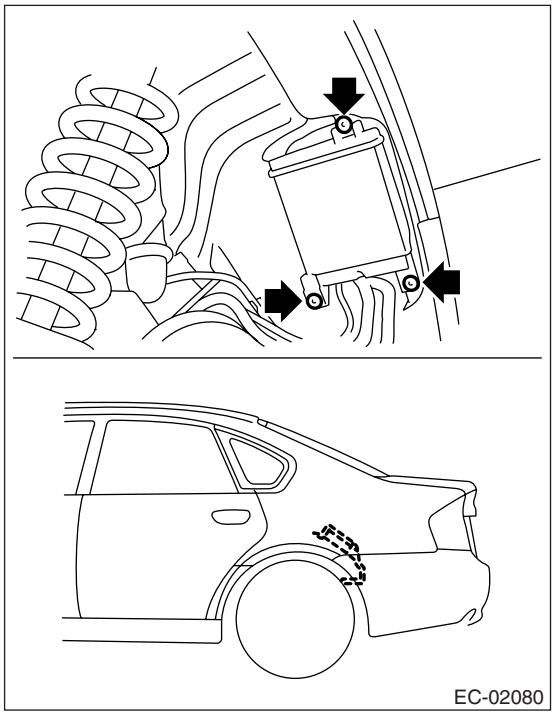

B: INSTALLATION

Install in the reverse order of removal.

NOTE:
Make sure there are no damage or dust on the connection of quick connector. If necessary, clean the seal surface of pipe.

Tightening torque:
8 N·m (0.8 kgf-m, 5.9 ft-lb)

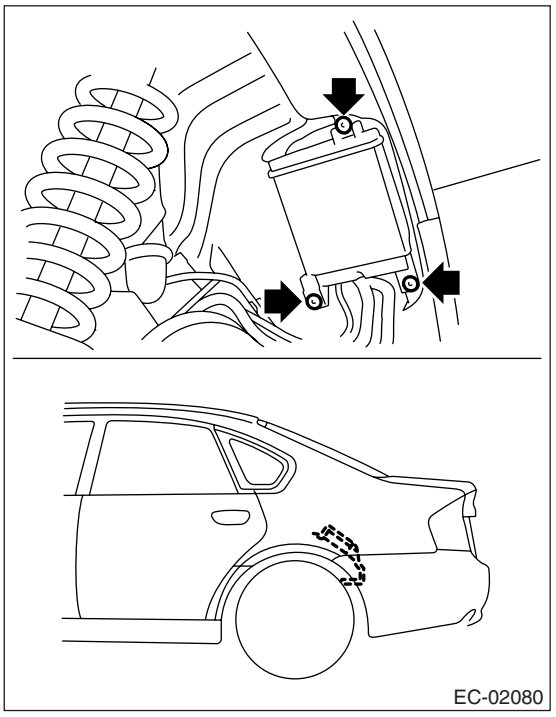

C: INSPECTION

Make sure the canister and canister hoses are not cracked or loose.

5. Purge Control Solenoid Valve

A: REMOVAL

1) Disconnect the ground cable from battery.

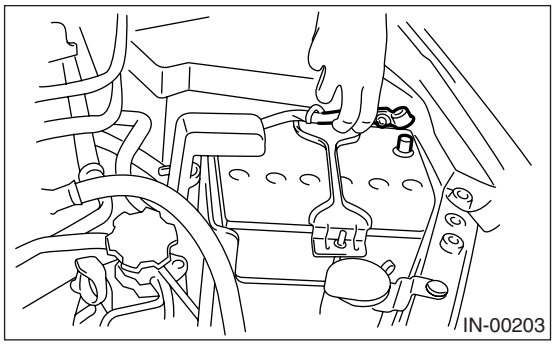

2) Disconnect the connector (A) and evaporation hose (B) from purge control solenoid valve, and then remove the purge control solenoid valve.

- U5 Model

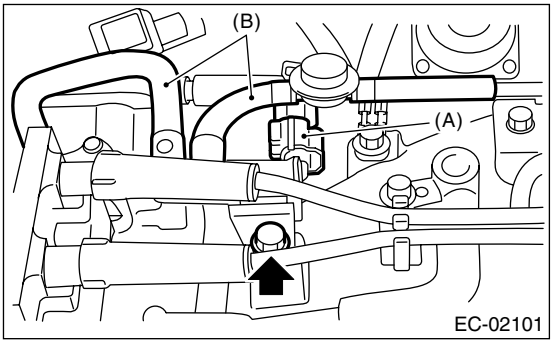

- Except for U5 model

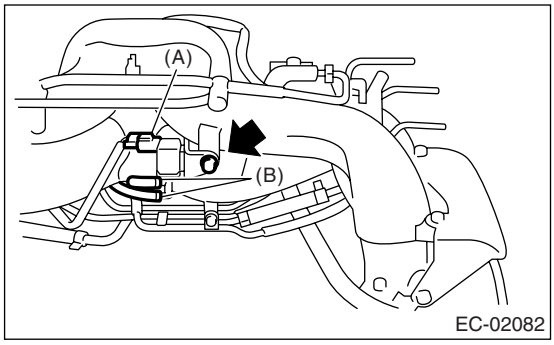

B: INSTALLATION

Install in the reverse order of removal.

Tightening torque (Purge control solenoid valve installing bolts):
19 N·m (1.9 kgf-m, 14 ft-lb)

NOTE:
Connect the evaporation hose as shown in the following figure.

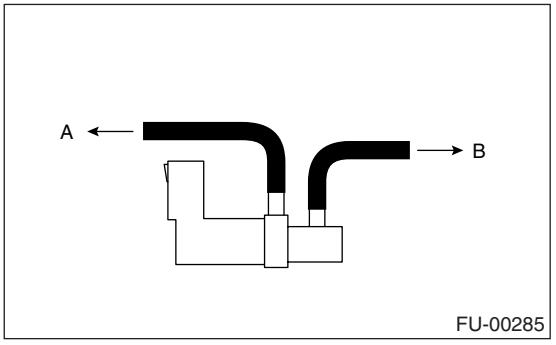

(A) To fuel pipe (Evaporation line)
(B) To intake manifold

C: INSPECTION

Make sure the hoses are not cracked or loose.

6. EGR Valve

A: REMOVAL

For removal procedure, refer to “FU” section. <Ref. to FU(H4SO)-28, REMOVAL, EGR Valve.> <Ref. to FU(H4SO U5)-33, REMOVAL, EGR Valve.>

B: INSTALLATION

For installation procedure, refer to “FU” section. <Ref. to FU(H4SO)-28, INSTALLATION, EGR Valve.> <Ref. to FU(H4SO U5)-33, INSTALLATION, EGR Valve.>

7. Fuel Level Sensor

A: REMOVAL

For removal procedure, refer to “FU” section. <Ref. to FU(H4SO)-51, REMOVAL, Fuel Level Sensor.> <Ref. to FU(H4SO U5)-60, REMOVAL, Fuel Level Sensor.>

B: INSTALLATION

For installation procedure, refer to “FU” section. <Ref. to FU(H4SO)-51, INSTALLATION, Fuel Level Sensor.> <Ref. to FU(H4SO U5)-60, INSTALLATION, Fuel Level Sensor.>

8. Fuel Temperature Sensor

A: REMOVAL

Fuel temperature sensor and fuel level sensor are integrated into one unit; therefore, the removal procedure is the same as that for fuel level sensor. <Ref. to FU(H4SO)-51, REMOVAL, Fuel Level Sensor.> <Ref. to FU(H4SO U5)-60, REMOVAL, Fuel Level Sensor.>

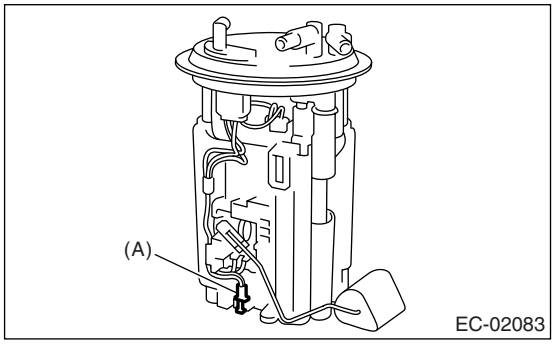

(A) Fuel temperature sensor

B: INSTALLATION

Fuel temperature sensor and fuel level sensor are integrated into one unit; therefore, the installation procedure is the same as that for fuel level sensor. <Ref. to FU(H4SO)-51, INSTALLATION, Fuel Level Sensor.> <Ref. to FU(H4SO U5)-60, INSTALLATION, Fuel Level Sensor.>

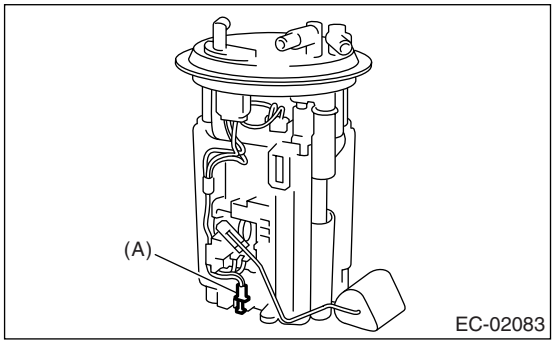

(A) Fuel temperature sensor

9. Fuel Sub Level Sensor

A: REMOVAL

For removal procedure, refer to “FU” section. <Ref. to FU(H4SO)-52, REMOVAL, Fuel Sub Level Sensor.> <Ref. to FU(H4SO U5)-61, REMOVAL, Fuel Sub Level Sensor.>

B: INSTALLATION

For installation procedure, refer to “FU” section. <Ref. to FU(H4SO)-52, INSTALLATION, Fuel Sub Level Sensor.> <Ref. to FU(H4SO U5)-61, INSTALLATION, Fuel Sub Level Sensor.>

10.Fuel Tank Pressure Sensor

A: REMOVAL

1) Set the vehicle on the lift.
2) Open fuel filler flap lid, and remove fuel filler cap.
3) Disconnect the battery ground cable.

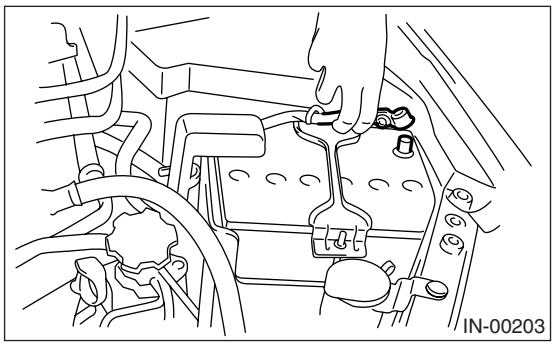

4) Lift-up the vehicle.
5) Disconnect the connector from fuel tank pressure sensor and fuel tank sensor control valve.
6) Disconnect the pressure hose from fuel tank pressure sensor.
7) Remove fuel tank pressure sensor and fuel tank sensor control valve with bracket.

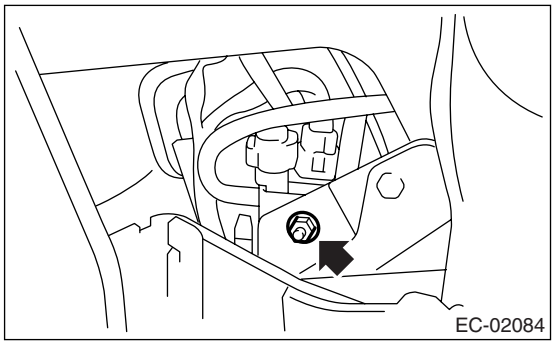

NOTE:
Replace the fuel tank pressure sensor and fuel tank sensor control valve as a unit.

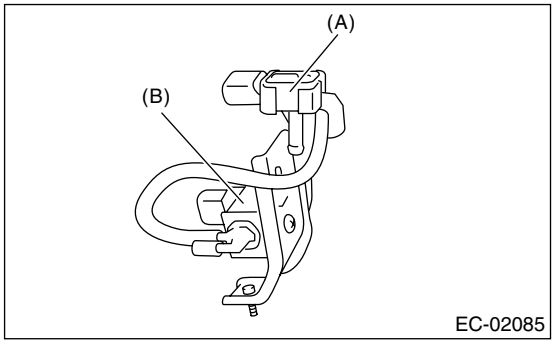

(A) Fuel tank pressure sensor
(B) Fuel tank sensor control valve

B: INSTALLATION

Install in the reverse order of removal.

Tightening torque:
7.4 N·m (0.75 kgf-m, 5.4 ft-lb)

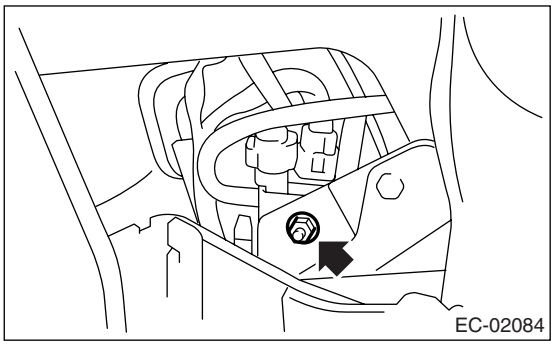

C: INSPECTION

Make sure that hoses are not cracked or loose.

11.Fuel Tank Sensor Control Valve

A: REMOVAL

Fuel tank sensor control valve and fuel tank pressure sensor are integrated into one unit; therefore, the removal procedure is the same as that for fuel tank pressure sensor. <Ref. to EC(H4SO)-11, REMOVAL, Fuel Tank Pressure Sensor.>

B: INSTALLATION

Fuel tank sensor control valve and fuel tank pressure sensor are integrated into one unit; therefore, the installation procedure is the same as that for fuel tank pressure sensor. <Ref. to EC(H4SO)-11, INSTALLATION, Fuel Tank Pressure Sensor.>

C: INSPECTION

Make sure that the hoses are not cracked or loose.

12.Pressure Control Solenoid Valve

A: REMOVAL

1) Set the vehicle on the lift.
2) Disconnect the battery ground cable.

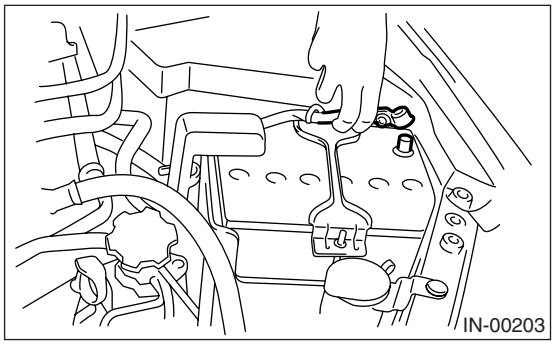

3) Lift-up the vehicle.
4) Disconnect the connector from pressure control solenoid valve.
5) Disconnect the evaporation hose (B) from pressure control solenoid valve.
6) Remove the bolt (C) which holds the bracket to fuel tank.

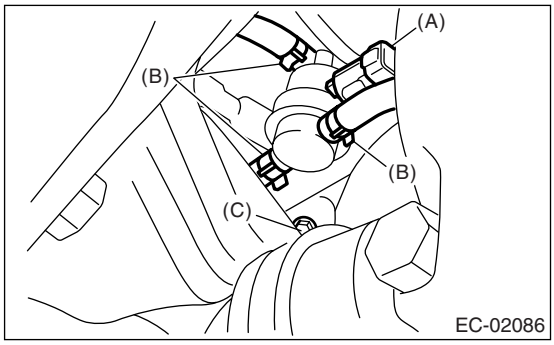

7) Remove pressure control solenoid valve from bracket.

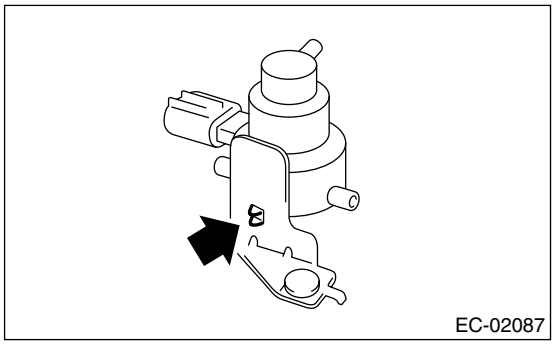

B: INSTALLATION

Install in the reverse order of removal.

Tightening torque:
17.6 N·m (1.8 kgf-m, 13.0 ft-lb)

C: INSPECTION

Make sure that the hoses are not cracked or loose.

13.Drain Filter

A: SPECIFICATION

Canister is a non-disassembled part, so do not remove the drain filter from canister.
Refer to “Canister” for removal and installation procedure. <Ref. to EC(H4SO)-5, REMOVAL, Canister.> <Ref. to EC(H4SO)-5, INSTALLATION, Canister.>

14.Shut Valve

A: REMOVAL

1) Remove the fuel filler pipe.
<Ref. to FU(H4SO)-46, REMOVAL, Fuel Filler Pipe.>
2) Disconnect the evaporation hoses from shut valve.

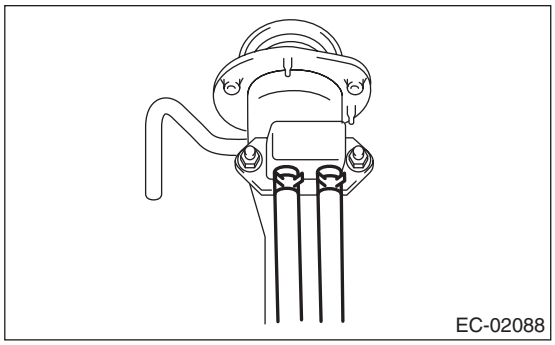

3) Remove the shut valve from fuel filler pipe.

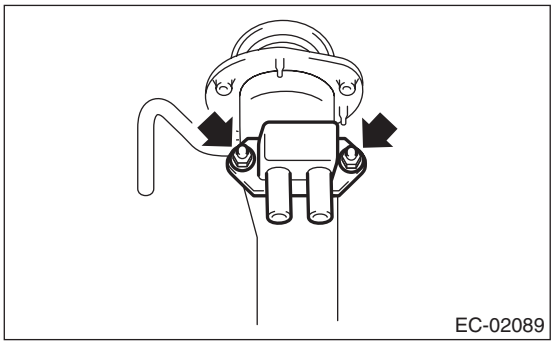

B: INSTALLATION

Install in the reverse order of removal.

Tightening torque:
4.5 N·m (0.46 kgf-m, 3.3 ft-lb)

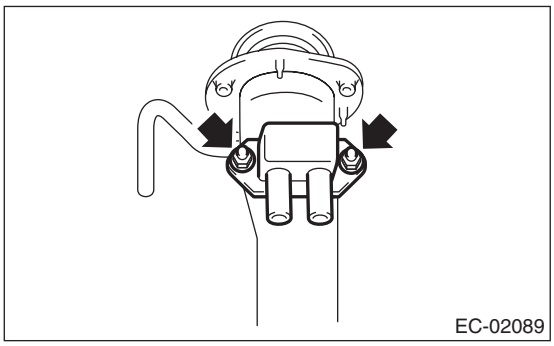

C: INSPECTION

Make sure the hoses are not cracked or loose.

15.Drain Valve

A: SPECIFICATION

Canister is a non-disassembled part, so do not remove the drain valve from canister.
Refer to “Canister” for removal and installation procedure. <Ref. to EC(H4SO)-5, REMOVAL, Canister.> <Ref. to EC(H4SO)-5, INSTALLATION, Canister.>

16.PCV Valve

A: REMOVAL

1) Disconnect the PCV hose.

- U5 model

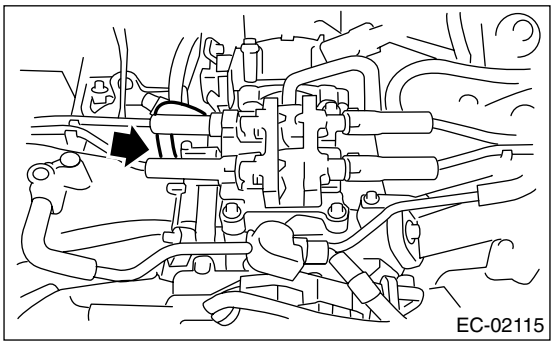

- Except for U5 model

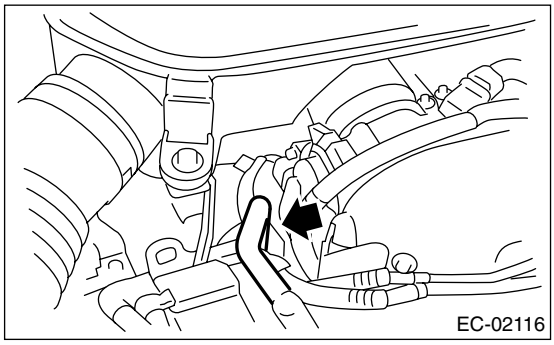

2) Remove the PCV valve from cylinder block.

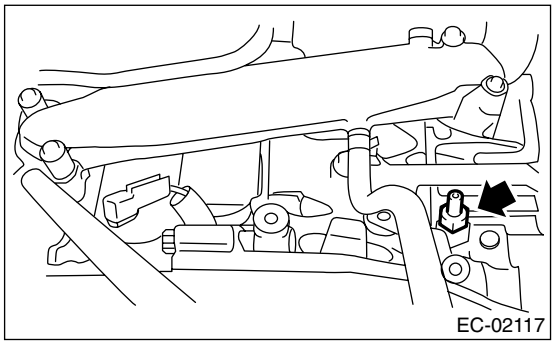

B: INSTALLATION

Install in the reverse order of removal.

NOTE:
Apply liquid gasket to the bolt threads of PCV valve.

Liquid gasket:
THREE BOND 1105 (Part No. 004403010)

Tightening torque:
23 N·m (2.3 kgf-m, 17 ft-lb)

INTAKE (INDUCTION)

IN(H4SO)

Page

1. General Description 2
2. Air Cleaner Element 6
3. Air Cleaner Case 7
4. Air Intake Chamber 9
5. Air Intake Duct 10
6. Resonator Chamber 11

1. General Description

A: COMPONENT

1. U5 MODEL

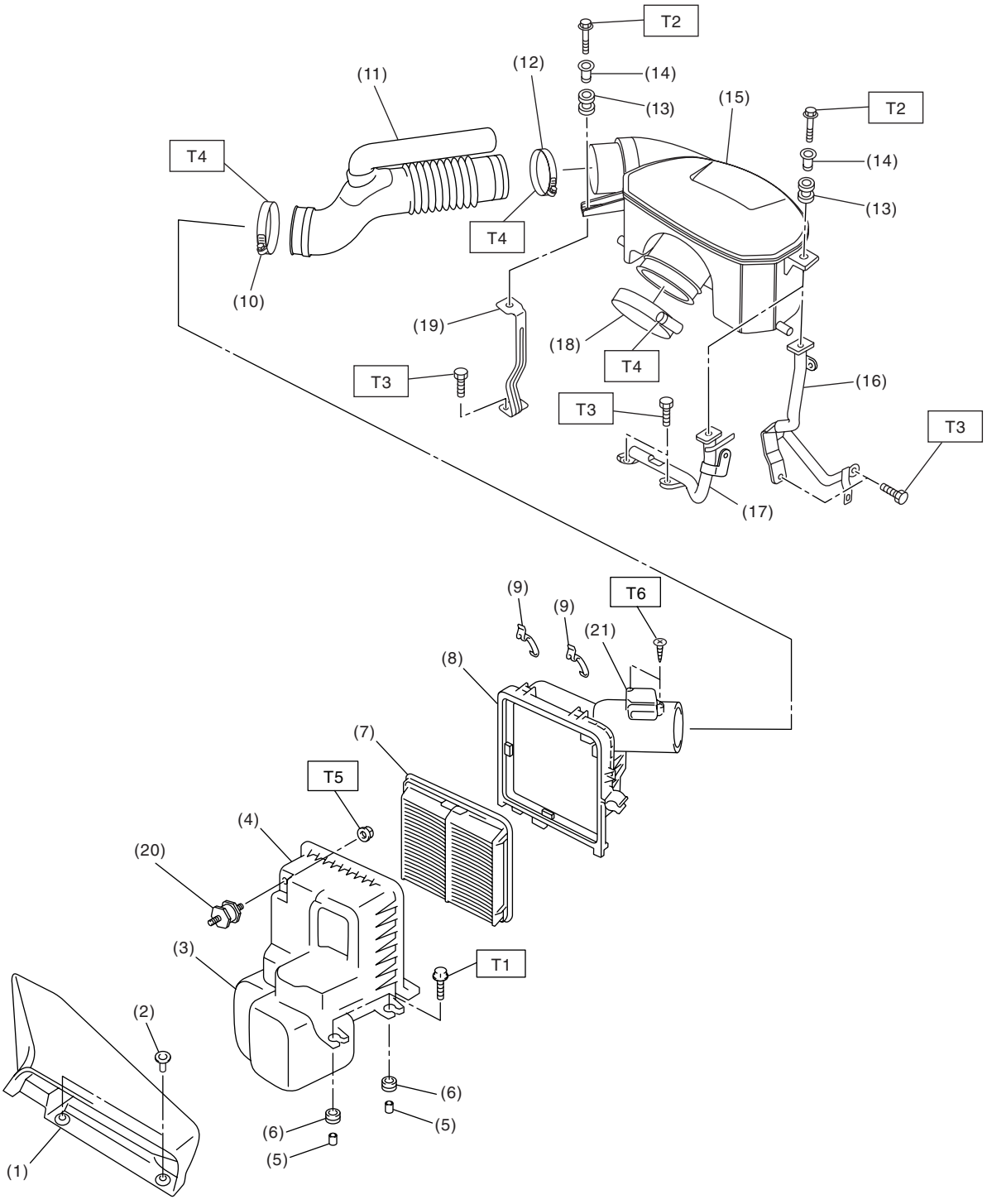

IN-02078

(1) Air intake duct
(2) Clip
(3) Resonator chamber
(4) Air cleaner case (front)
(5) Spacer
(6) Cushion
(7) Air cleaner element
(8) Air cleaner case (rear)
(9) Clip
(10) Clamp
(11) Intake duct
(12) Clamp
(13) Cushion
(14) Spacer
(15) Air intake chamber
(16) Stay LH (MT model)
(17) Stay LH (AT model)
(18) Clamp
(19) Stay RH
(20) Cushion
(21) Mass air flow and intake air temperature sensor

Tightening torque: N·m (kgf-m, ft-lb)	
T1:	*6.0 (0.6, 4.4)*
T2:	*6.5 (0.66, 4.8)*
T3:	*16 (1.6, 11.6)*
T4:	*3.0 (0.3, 2.2)*
T5:	*7.5 (0.76, 5.5)*
T6:	*1.0 (0.10, 0.7)*

2. EXCEPT FOR U5 MODEL

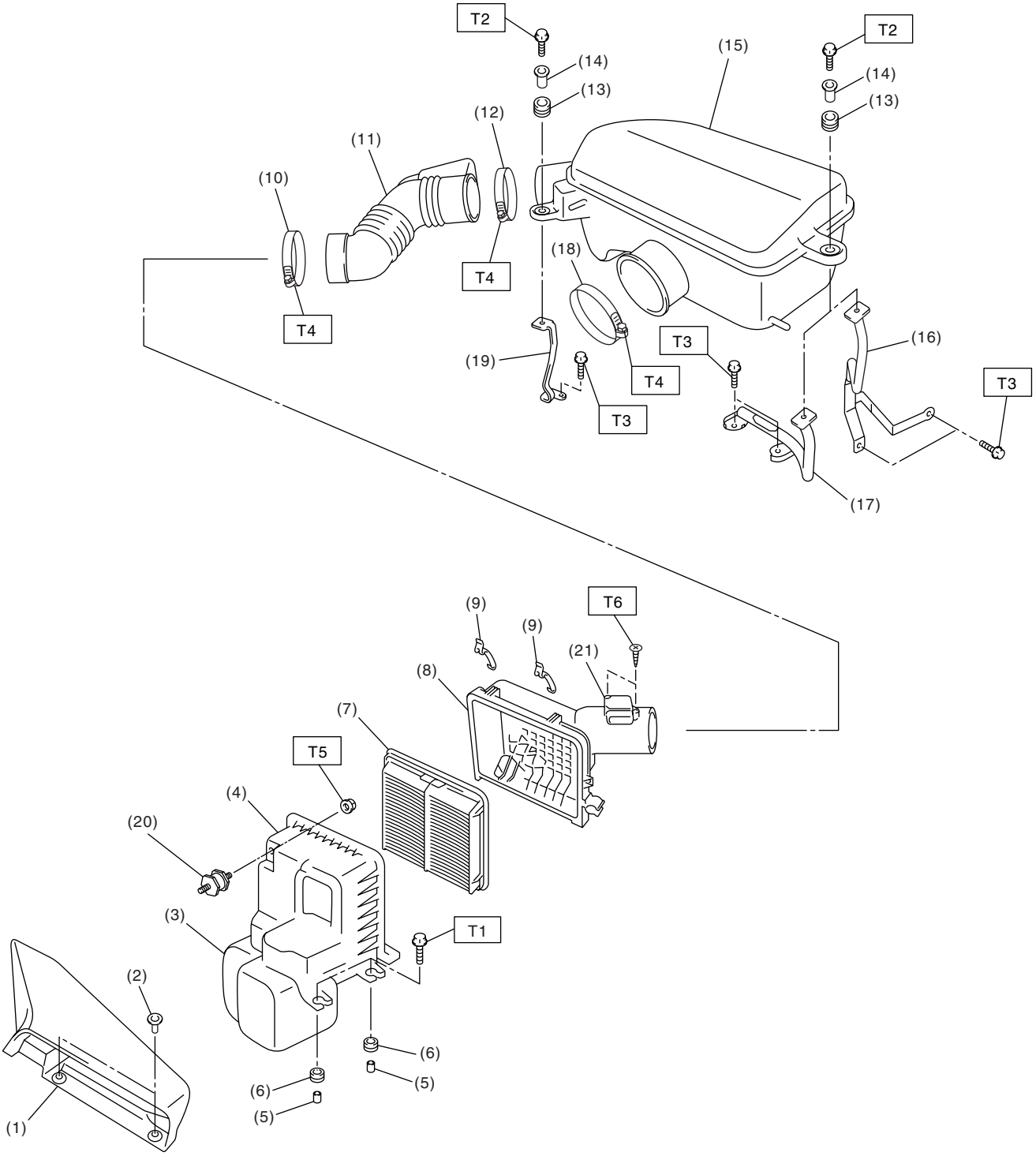

IN-02083

(1) Air intake duct
(2) Clip
(3) Resonator chamber
(4) Air cleaner case (front)
(5) Spacer
(6) Cushion
(7) Air cleaner element
(8) Air cleaner case (rear)
(9) Clip
(10) Clamp
(11) Intake duct
(12) Clamp
(13) Cushion
(14) Spacer
(15) Air intake chamber
(16) Stay LH (MT model)
(17) Stay LH (AT model)
(18) Clamp
(19) Stay RH
(20) Cushion
(21) Mass air flow and intake air temperature sensor

Tightening torque: N·m (kgf-m, ft-lb)	
T1:	*6.0 (0.6, 4.4)*
T2:	*6.5 (0.66, 4.8)*
T3:	*16 (1.6, 11.6)*
T4:	*3.0 (0.3, 2.2)*
T5:	*7.5 (0.76, 5.5)*
T6:	*1.0 (0.10, 0.7)*

B: CAUTION

• Wear work clothing, including a cap, protective goggles, and protective shoes during operation.
• Remove contamination including dirt and corrosion before removal, installation or disassembly.
• Keep the disassembled parts in order and protect them from dust and dirt.
• Before removal, installation or disassembly, be sure to clarify the failure. Avoid unnecessary removal, installation, disassembly and replacement.
• Be careful not to burn yourself, because each part on the vehicle is hot after running.
• Be sure to tighten fasteners including bolts and nuts to the specified torque.
• Place shop jacks or rigid racks at the specified points.
• Before disconnecting electrical connectors of sensors or units, be sure to disconnect the ground cable from battery.

2. Air Cleaner Element

A: REMOVAL

1) Disconnect the ground cable from battery.

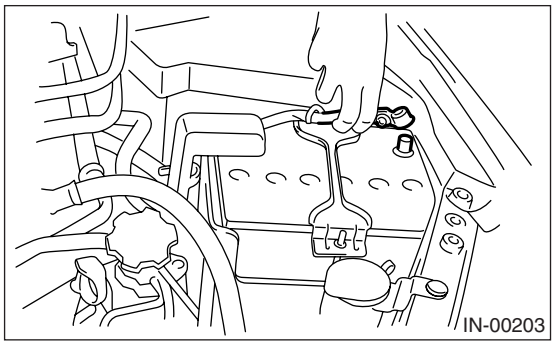

2) Disconnect the connector from mass air flow and intake air temperature sensor.

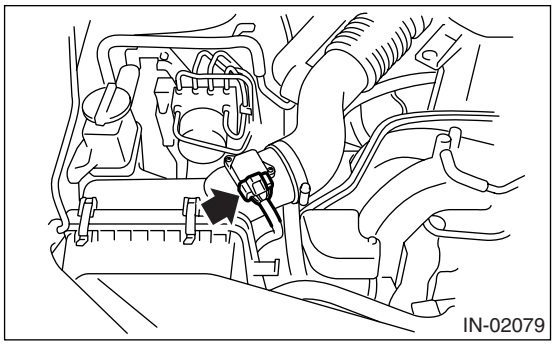

3) Remove the clip (A) from upper side of air cleaner case.

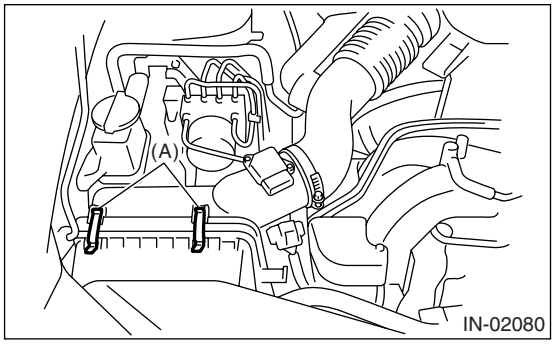

4) Pull the air cleaner case (rear) to rearward of the vehicle, and then remove the air cleaner element.

NOTE:
Be careful that the power steering hose is secured to the under side of air cleaner case (rear).

B: INSTALLATION

Install in the reverse order of removal.

NOTE:
Fasten the air cleaner case (rear) with a clip after inserting the lower tab of the case.

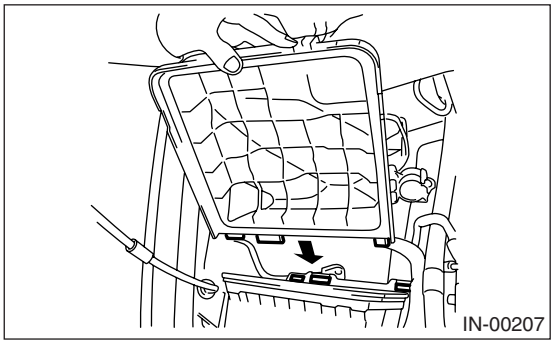

C: INSPECTION

Replace if excessively damaged or dirty.

3. Air Cleaner Case

A: REMOVAL

1) Disconnect the ground cable from battery.

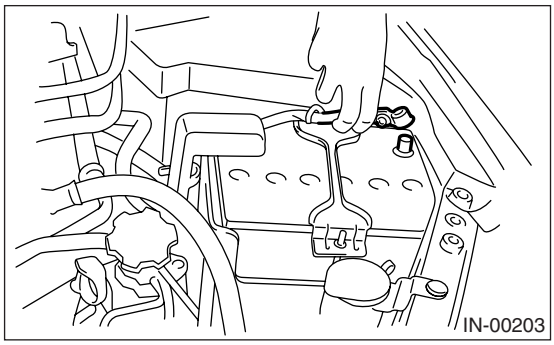

2) Remove the air intake duct. <Ref. to IN(H4SO)-10, REMOVAL, Air Intake Duct.>

3) Disconnect the connector from mass air flow and intake air temperature sensor.

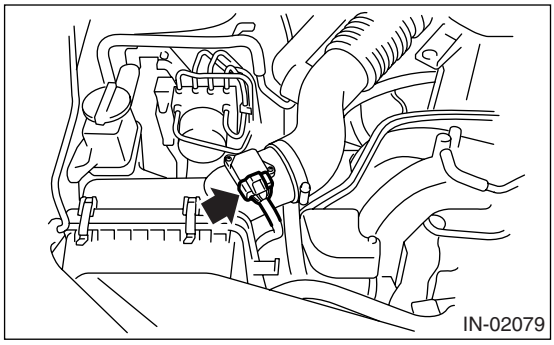

4) Loosen the clamp (A) which connects the air cleaner case to intake duct.

5) Remove the clip (B) from upper side of air cleaner case.

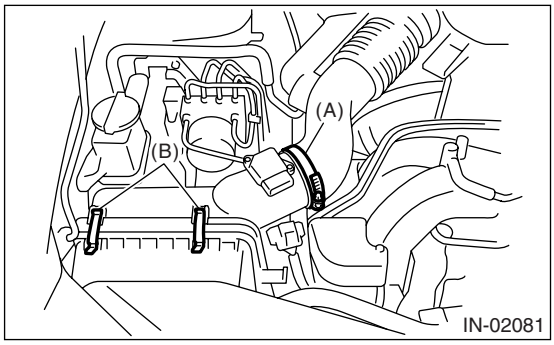

6) Remove the air cleaner case (rear) and air cleaner element.

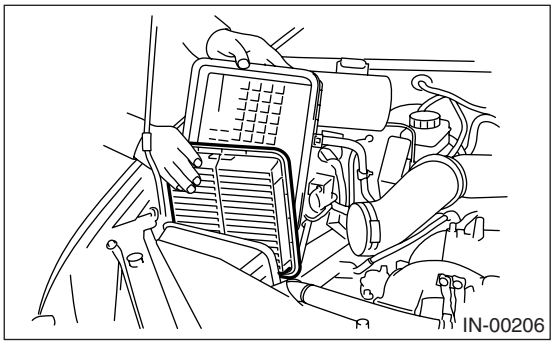

7) Remove the bolt (A) and nut (B) which hold the air cleaner case on body.

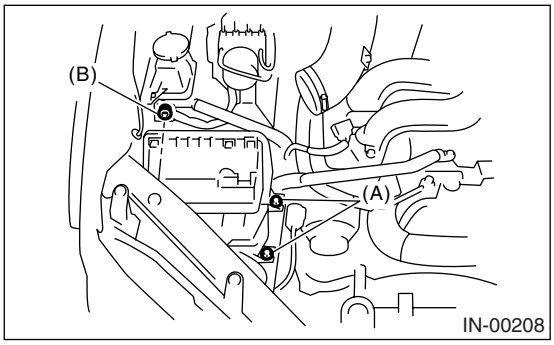

8) Remove the air cleaner case (front).

B: INSTALLATION

Install in the reverse order of removal.

Tightening torque:
Bolt (A): 6.0 N·m (0.6 kgf-m, 4.4 ft-lb)
Nut (B): 7.5 N·m (0.76 kgf-m, 5.5 ft-lb)

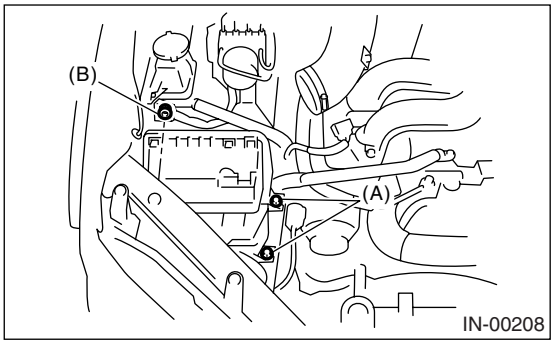

NOTE:
Fasten the air cleaner case with a clip after inserting the lower tab of the case.

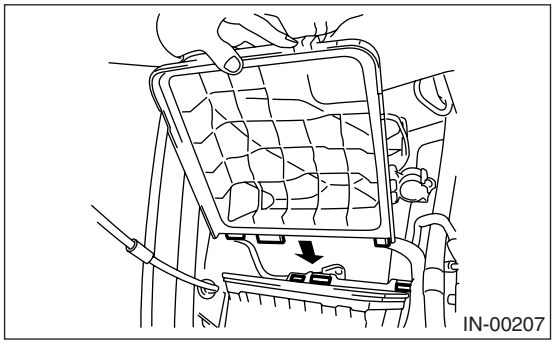

C: INSPECTION

Check for cracks or loose connections.

4. Air Intake Chamber

A: REMOVAL

1. U5 MODEL

1) Loosen the clamp (A) which connects air intake chamber to throttle body.
2) Loosen the clamp (B) which connects air intake boot to air intake chamber.
3) Remove the bolt (C) which secures air intake chamber to stay.

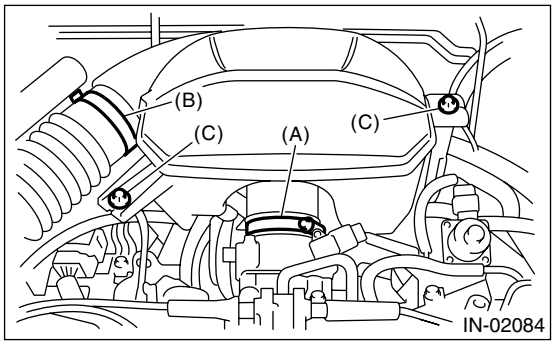

4) Disconnect the blow-by hoses, and then remove air intake chamber.

2. EXCEPT FOR U5 MODEL

1) Loosen the clamp (A) which connects air intake chamber to throttle body.
2) Loosen the clamp (B) which connects intake duct to air intake chamber.
3) Remove the bolt (C) which secures air intake chamber to the stay.

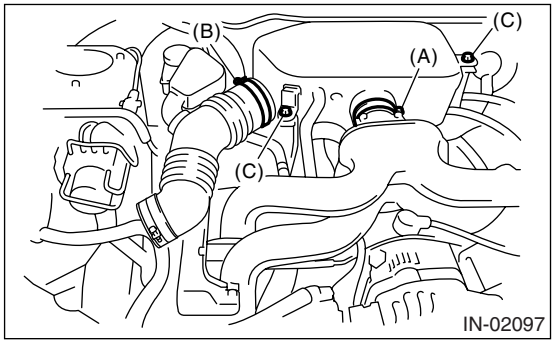

4) Disconnect the blow-by hose, and remove the air intake chamber.

B: INSTALLATION

1. U5 MODEL

Install in the reverse order of removal.

Tightening torque:
Clamp (A), (B)
3.0 N·m (0.3 kgf-m, 2.2 ft-lb)
Bolt (C)
6.5 N·m (0.66 kgf-m, 4.8 ft-lb)

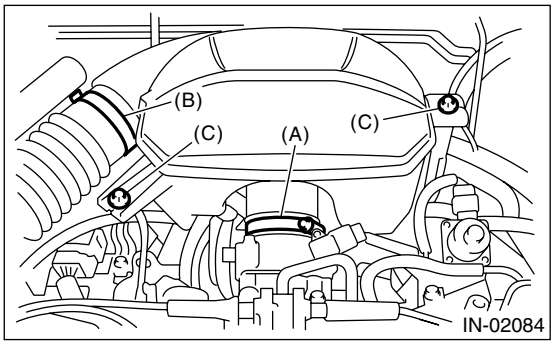

2. EXCEPT FOR U5 MODEL

Install in the reverse order of removal.

Tightening torque:
Clamp (A), (B)
3.0 N·m (0.3 kgf-m, 2.2 ft-lb)
Bolt (C)
6.5 N·m (0.66 kgf-m, 4.8 ft-lb)

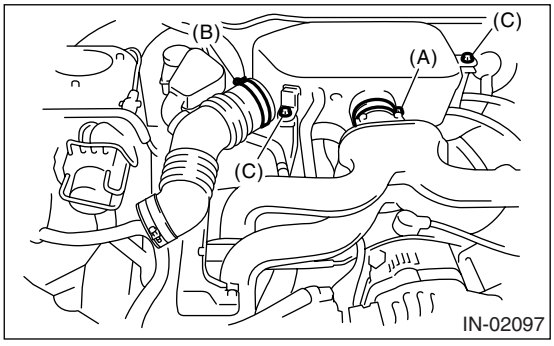

C: INSPECTION

1) Check for cracks or loose connections.
2) Inspect that no foreign objects in the air intake chamber.

5. Air Intake Duct

A: REMOVAL

1) Remove the clips which install the air intake duct on the front side of body.
2) Remove the air intake duct.

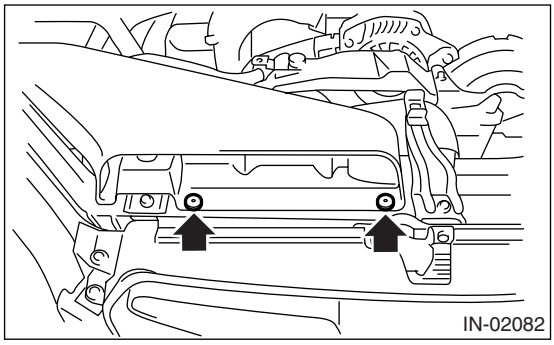

B: INSTALLATION

Install in the reverse order of removal.

C: INSPECTION

1) Check for cracks or loose connections.
2) Inspect that no foreign objects in the air intake duct.

6. Resonator Chamber

A: REMOVAL

Refer to “Air Cleaner Case” for removal procedure because the resonator chamber forms a single unit with air cleaner case. <Ref. to IN(H4SO)-7, REMOVAL, Air Cleaner Case.>

B: INSTALLATION

Refer to “Air Cleaner Case” for installation procedure because the resonator chamber forms a single unit with air cleaner case. <Ref. to IN(H4SO)-7, INSTALLATION, Air Cleaner Case.>

C: INSPECTION

Check for cracks or loose connections.

MECHANICAL

ME(H4SO)

		Page
1.	General Description	2
2.	Compression	20
3.	Idle Speed	21
4.	Ignition Timing	22
5.	Intake Manifold Vacuum	23
6.	Engine Oil Pressure	24
7.	Fuel Pressure	25
8.	Valve Clearance	26
9.	Engine Assembly	28
10.	Engine Mounting	35
11.	Preparation for Overhaul	36
12.	V-belt	37
13.	Crank Pulley	39
14.	Timing Belt Cover	40
15.	Timing Belt	41
16.	Cam Sprocket	46
17.	Crank Sprocket	47
18.	Valve Rocker Assembly	48
19.	Camshaft	50
20.	Cylinder Head	54
21.	Cylinder Block	61
22.	Intake and Exhaust Valve	81
23.	Piston	82
24.	Connecting Rod	83
25.	Crankshaft	84
26.	Engine Trouble in General	85
27.	Engine Noise	90

1. General Description

A: SPECIFICATION

Engine	Model			2.5 L NA
	Cylinder arrangement			Horizontally opposed, liquid cooled, 4-cylinder, 4-stroke gasoline engine
	Valve system mechanism			Belt driven, single over-head camshaft, 4-valve/ cylinder
	Bore × Stroke	mm (in)		99.5 × 79.0 (3.917 × 3.110)
	Displacement	cm^3 (cu in)		2,457 (150)
	Compression ratio			10.0
	Compression pressure (at 350 rpm)	kPa (kg/cm^2, psi)		1,020 — 1,275 (10.4 — 13.0, 148 — 185)
	Number of piston rings			Pressure ring: 2, Oil ring: 1
	Intake valve timing		Open	BTDC 2° *BTDC 1°
			Close	ABDC 56° *ABDC 51°
	Exhaust valve timing		Open	BBDC 40° *BBDC 50°
			Close	ATDC 8°
	Valve clearance	mm (in)	Intake	0.20±0.04 (0.0079±0.0016)
			Exhaust	0.25±0.04 (0.0098±0.0016)
	Idle speed [at neutral position on MT, or “P” or “N” range on AT]	rpm		650±100 (No load) 800±100 (A/C ON)
	Ignition order			1 → 3 → 2 → 4
	Ignition timing	BTDC/rpm		13°±10°/650

*: U5 model

NOTE:
US: undersize OS: oversize

Belt tension adjuster	Protrusion of adjuster rod				mm (in)	5.2 — 6.2 (0.205 — 0.244)
Belt tensioner	Spacer O.D.				mm (in)	17.955 — 17.975 (0.7069 — 0.7077)
	Tensioner bushing I.D.				mm (in)	18.00 — 18.08 (0.7087 — 0.7118)
	Clearance between spacer and bushing			Standard	mm (in)	0.025 — 0.125 (0.0010 — 0.0049)
	Side clearance of spacer			Standard	mm (in)	0.20 — 0.55 (0.0079 — 0.0217)
Valve rocker arm	Clearance between shaft and arm			Standard	mm (in)	0.020 — 0.054 (0.0008 — 0.0021)
Camshaft	Bend limit				mm (in)	0.020 (0.00079)
	Side clearance			Standard	mm (in)	0.030 — 0.090 (0.0012 — 0.0035)
	Cam lobe height mm (in)	U5 model	Intake	Standard		39.485 — 39.585 (1.5545 — 1.5585)
			Exhaust	Standard		39.843 — 39.943 (1.5686 — 1.5726)
		Except for U5 model	Intake	Standard		39.485 — 39.585 (1.5545 — 1.5585)
			Exhaust	Standard		39.720 — 39.820 (1.5638 — 1.5677)
	Camshaft journal O.D.				mm (in)	31.928 — 31.945 (1.2570 — 1.2577)
	Camshaft journal hole I.D.				mm (in)	32.000 — 32.018 (1.2598 — 1.2605)
	Oil clearance			Standard	mm (in)	0.055 — 0.090 (0.0022 — 0.0035)

Cylinder Head	Surface warpage limit (mating with cylinder block) mm (in)			0.03 (0.001)
	Grinding limit mm (in)			0.1 (0.004)
	Standard height mm (in)			97.5 (3.84)
Valve seat	Refacing angle			90°
	Contacting width mm (in)	Intake	Standard	0.8 — 1.4 (0.03 — 0.055)
		Exhaust	Standard	1.2 — 1.8 (0.047 — 0.071)
Valve guide	Inside diameter mm (in)			6.000 — 6.012 (0.2362 — 0.2367)
	Protrusion above head mm (in)		Intake	20.0 — 21.0 (0.787 — 0.827)
			Exhaust	16.5 — 17.5 (0.650 — 0.689)
Valve	Head edge thickness mm (in)	Intake	Standard	0.8 — 1.2 (0.03 — 0.047)
		Exhaust	Standard	1.0 — 1.4 (0.039 — 0.055)
	Stem outer diameters mm (in)		Intake	5.950 — 5.965 (0.2343 — 0.2348)
			Exhaust	5.945 — 5.960 (0.2341 — 0.2346)
	Valve stem gap mm (in)	Standard	Intake	0.035 — 0.062 (0.0014 — 0.0024)
			Exhaust	0.040 — 0.067 (0.0016 — 0.0026)
	Overall length mm (in)		Intake	120.6 (4.75)
			Exhaust	121.7 (4.79)
Valve springs	Free length mm (in)			54.30 (2.1378)
	Squareness			2.5°, 2.4 mm (0.094 in)
	Tension/spring height N (kgf, lb)/mm (in)		Set	214 — 246 (22 — 25, 48 — 55)/ 45.0 (1.772)
			Lift	526 — 582 (54 — 59, 119 — 130)/ 34.7 (1.366)
Cylinder block	Surface warpage limit (mating with cylinder head) mm (in)			0.025 (0.00098)
	Grinding limit mm (in)			0.1 (0.004)
	Standard height mm (in)			201.0 (7.91)
	Cylinder inner diameter mm (in)	Standard	A	99.505 — 99.515 (3.9175 — 3.9179)
			B	99.495 — 99.505 (3.9171 — 3.9175)
	Taper mm (in)		Standard	0.015 (0.0006)
	Out-of-roundness mm (in)		Standard	0.010 (0.0004)
	Piston clearance mm (in)		Standard	−0.010 — 0.010 (−0.00039 — 0.00039)
Piston	Outer diameter mm (in)	Standard	A	99.505 — 99.515 (3.9175 — 3.9179)
			B	99.495 — 99.505 (3.9171 — 3.9175)
		0.25 (0.0098) OS		99.745 — 99.765 (3.9270 — 3.9278)
		0.50 (0.0197) OS		99.995 — 100.015 (3.9368 — 3.9376)
	Piston pin standard diameter mm (in)			23.000 — 23.006 (0.9055 — 0.9057)
Piston pin	Outer diameter mm (in)			22.994 — 23.000 (0.9053 — 0.9055)
	Standard clearance between piston and piston pin mm (in)			0.004 — 0.008 (0.0002 — 0.0003)
	Degree of fit			Piston pin must be fitted into position with thumb at 20°C (68°F).
Piston Ring	Ring closed gap mm (in)	Top ring	Standard	0.20 — 0.35 (0.0079 — 0.0138)
		Second ring	Standard	0.37 — 0.52 (0.0144 — 0.0203)
		Oil ring	Standard	0.20 — 0.50 (0.0079 — 0.0197)
	Ring groove gap mm (in)	Top ring	Standard	0.040 — 0.080 (0.0016 — 0.0031)
		Second ring	Standard	0.030 — 0.070 (0.0012 — 0.0028)
Connecting Rod	Bend twist per 100 mm (3.94 in) in length mm (in)	Limit		0.10 (0.0039)
	Side clearance of large end mm (in)	Standard		0.070 — 0.330 (0.0028 — 0.0130)

Bearing of large end	Oil clearance		mm (in)	Standard	0.016 — 0.044 (0.00063 — 0.0017)
	Bearing size (Thickness at center)		mm (in)	Standard	1.492 — 1.501 (0.0587 — 0.0591)
				0.03 (0.0012) US	1.510 — 1.513 (0.0594 — 0.0596)
				0.05 (0.0020) US	1.520 — 1.523 (0.0598 — 0.0600)
				0.25 (0.0098) US	1.620 — 1.623 (0.0638 — 0.0639)
Bush of small end	Clearance between piston pin and bushing		mm (in)	Standard	0 — 0.022 (0 — 0.0009)
Crankshaft	Bend limit				0.035 (0.0014)
	Crank pin	Out-of-roundness	mm (in)		0.003 (0.0001)
		Cylindricality	mm (in)		0.004 (0.0002)
		Grinding limit (dia.)	mm (in)		To 51.750 (2.0374)
	Crank journal	Out-of-roundness	mm (in)		0.005 (0.0002)
		Cylindricality	mm (in)		0.006 (0.0002)
		Grinding limit (dia.)	mm (in)		To 59.750 (2.3524)
	Crank pin outer diameter		mm (in)	Standard	51.984 — 52.000 (2.0466 — 2.0472)
				0.03 (0.0012) US	51.954 — 51.970 (2.0454 — 2.0461)
				0.05 (0.0020) US	51.934 — 51.950 (2.0446 — 2.0453)
				0.25 (0.0098) US	51.734 — 51.750 (2.0368 — 2.0374)
	Crank journal outer diameter		mm (in)	Standard	59.992 — 60.008 (2.3619 — 2.3625)
				0.03 (0.0012) US	59.962 — 59.978 (2.3607 — 2.3613)
				0.05 (0.0020) US	59.942 — 59.958 (2.3599 — 2.3605)
				0.25 (0.0098) US	59.742 — 59.758 (2.3520 — 2.3527)
	Side clearance		mm (in)	Standard	0.030 — 0.115 (0.0012 — 0.0045)
	Oil clearance		mm (in)	Standard	0.010 — 0.030 (0.0004 — 0.0012)
Main bearing	Main bearing mm (in)	#1, #3		Standard	1.998 — 2.011 (0.0787 — 0.0792)
				0.03 (0.0012) US	2.017 — 2.020 (0.0794 — 0.0795)
				0.05 (0.0020) US	2.027 — 2.030 (0.0798 — 0.0799)
				0.25 (0.0098) US	2.127 — 2.130 (0.0837 — 0.0839)
		#2, #4, #5		Standard	2.000 — 2.013 (0.0787 — 0.0793)
				0.03 (0.0012) US	2.019 — 2.022 (0.0795 — 0.0796)
				0.05 (0.0020) US	2.029 — 2.032 (0.0799 — 0.0800)
				0.25 (0.0098) US	2.129 — 2.132 (0.0838 — 0.0839)

B: COMPONENT

1. TIMING BELT

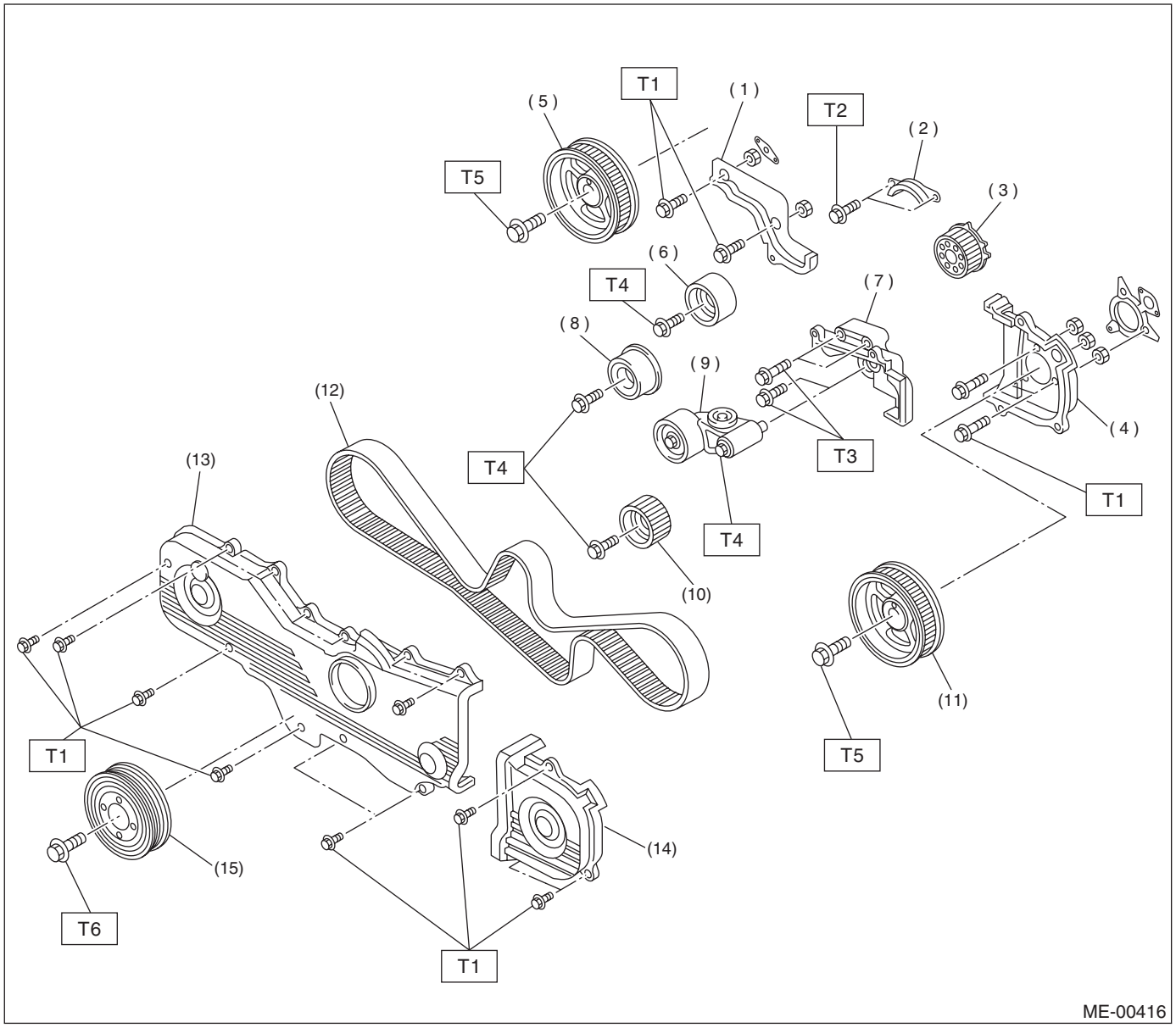

(1) Timing belt cover No. 2 (RH)
(2) Timing belt guide (MT model)
(3) Crankshaft sprocket
(4) Timing belt cover No. 2 (LH)
(5) Camshaft sprocket No. 1
(6) Belt idler (No. 1)
(7) Tensioner bracket
(8) Belt idler (No. 2)
(9) Automatic belt tension adjuster ASSY
(10) Belt idler No. 2
(11) Camshaft sprocket No. 2
(12) Timing belt
(13) Front timing belt cover
(14) Timing belt cover (LH)
(15) Crank pulley

Tightening torque: N·m (kgf-m, ft-lb)
T1: 5 (0.5, 3.6)
T2: 10 (1.0, 7.2)
T3: 25 (2.5, 18.1)
T4: 39 (4.0, 28.9)
T5: 78 (8.0, 57.9)
T6: <Ref. to ME(H4SO)-39, INSTALLATION, Crank Pulley.>

2. CYLINDER HEAD AND CAMSHAFT

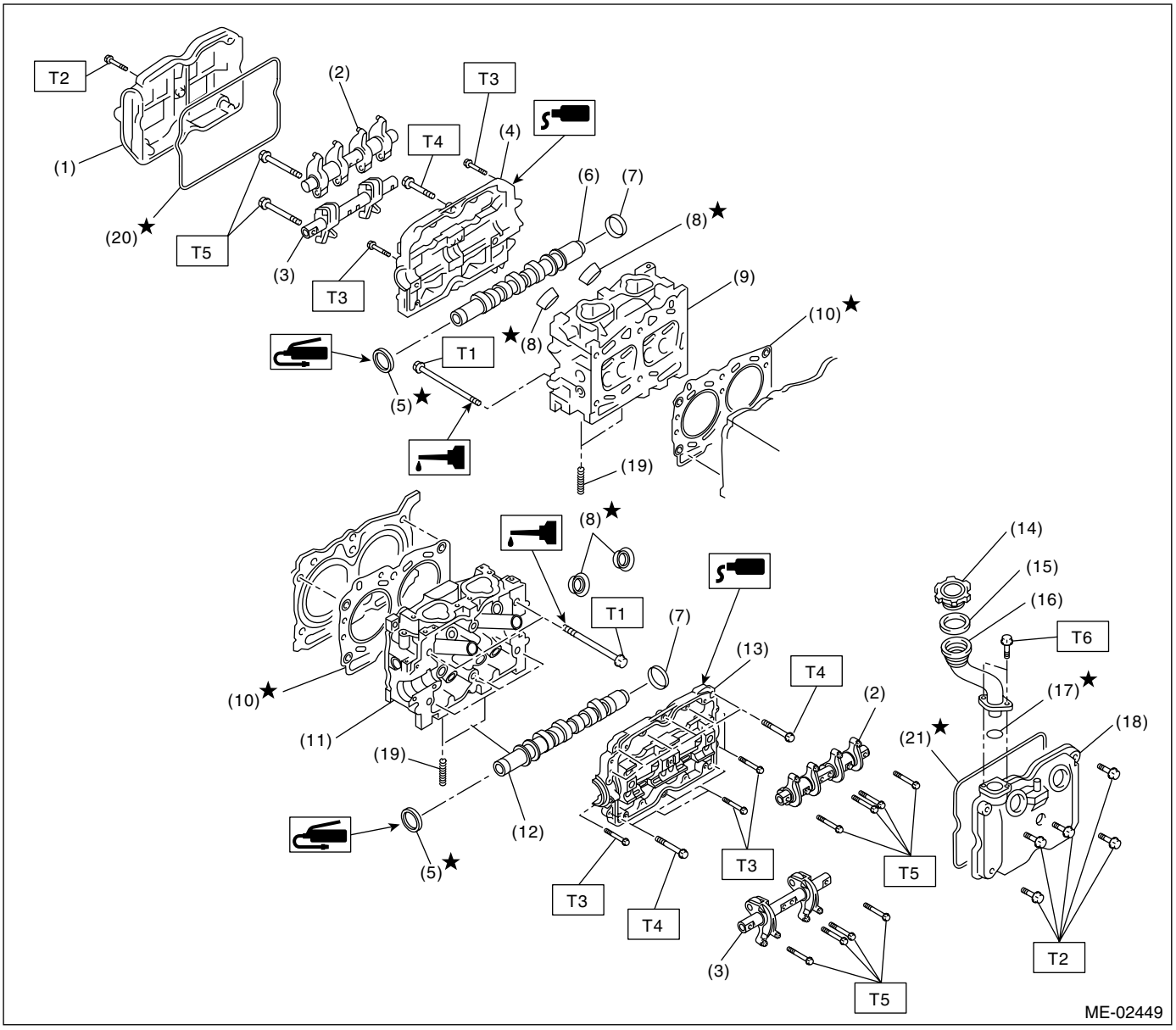

(1) Rocker cover (RH)
(2) Intake valve rocker ASSY
(3) Exhaust valve rocker ASSY
(4) Camshaft cap (RH)
(5) Oil seal
(6) Camshaft (RH)
(7) Plug
(8) Spark plug pipe gasket
(9) Cylinder head (RH)
(10) Cylinder head gasket
(11) Cylinder head (LH)
(12) Camshaft (LH)
(13) Camshaft cap (LH)
(14) Oil filler cap
(15) Gasket
(16) Oil filler duct
(17) O-ring
(18) Rocker cover (LH)
(19) Stud bolt
(20) Rocker cover gasket (RH)
(21) Rocker cover gasket (LH)

Tightening torque: N·m (kgf-m, ft-lb)

T1: <Ref. to ME(H4SO)-54, INSTALLATION, Cylinder Head.>
T2: 5 (0.5, 3.6)
T3: 10 (1.0, 7.2)
T4: 18 (1.8, 13.0)
T5: 25 (2.5, 18.1)
T6: 6.4 (0.65, 4.7)

3. VALVE ROCKER ASSEMBLY

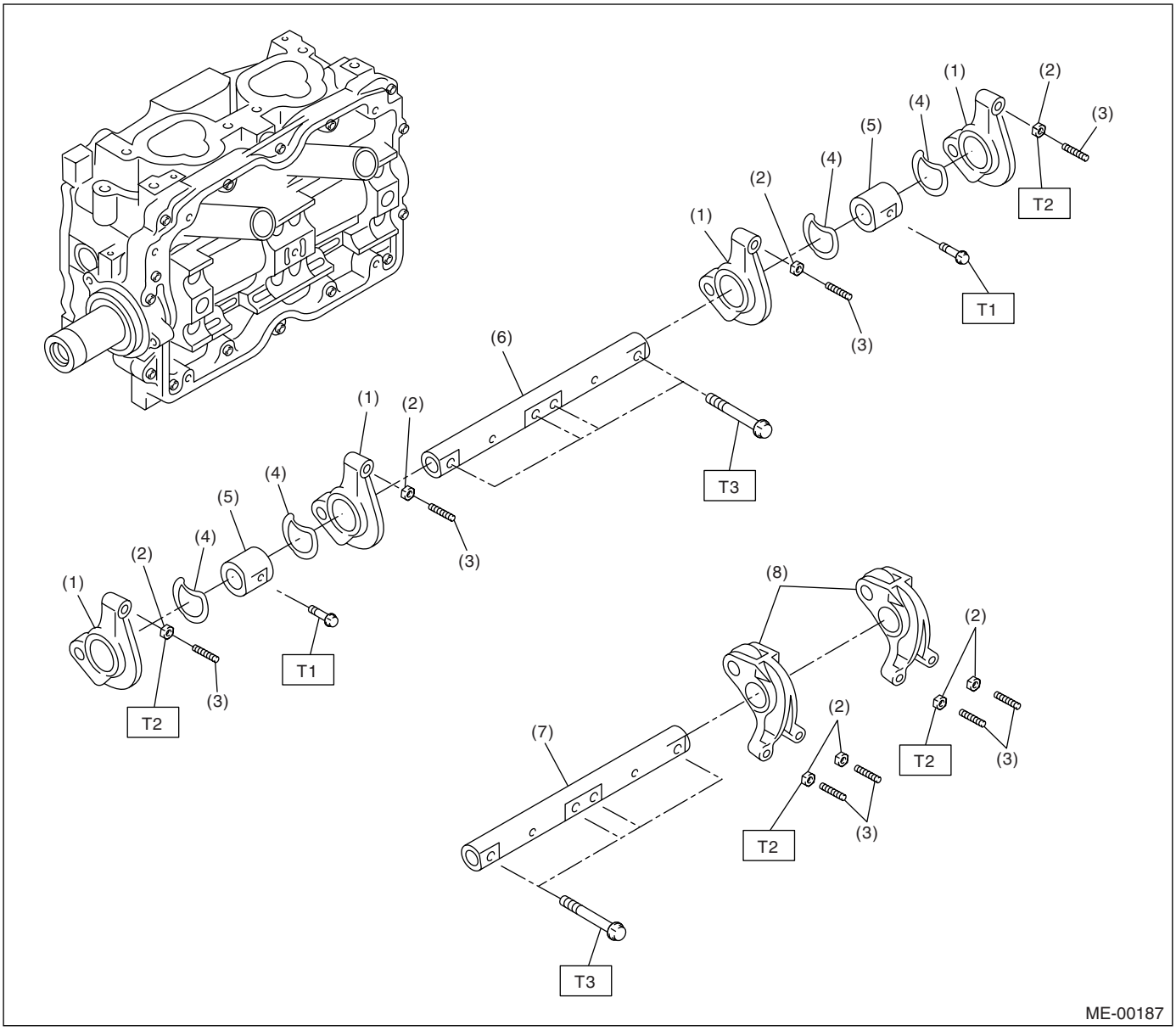

(1)	Intake valve rocker arm	(5)	Rocker shaft support	***Tightening torque: N·m (kgf-m, ft-lb)***
(2)	Valve rocker nut	(6)	Intake rocker shaft	***T1: 5 (0.5, 3.6)***
(3)	Valve rocker adjust screw	(7)	Exhaust rocker shaft	***T2: 10 (1.0, 7.2)***
(4)	Spring	(8)	Exhaust valve rocker arm	***T3: 25 (2.5, 18.1)***

4. CYLINDER HEAD AND VALVE ASSEMBLY

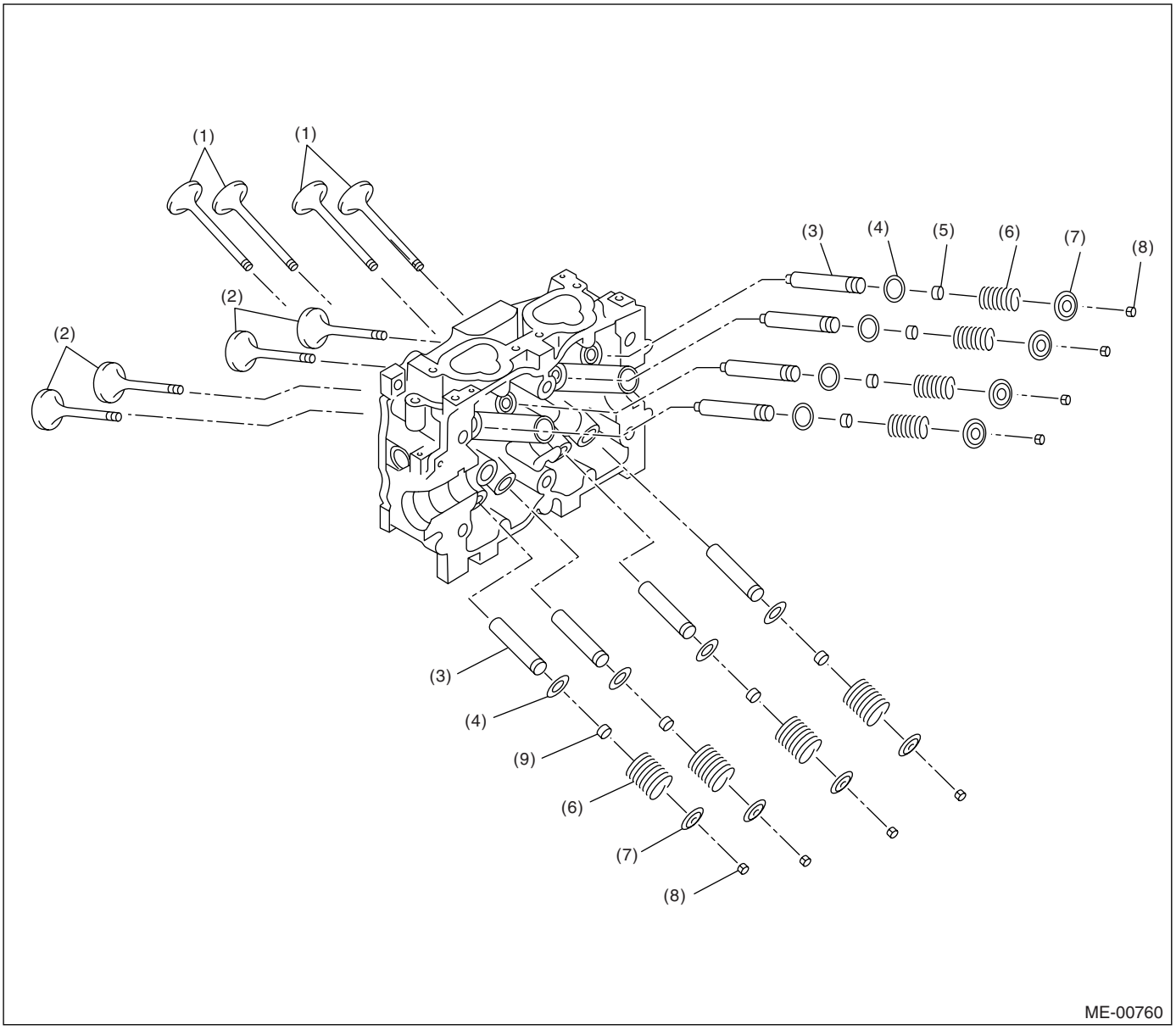

(1) Exhaust valve
(2) Intake valve
(3) Valve guide
(4) Valve spring seat
(5) Intake valve oil seal
(6) Valve spring
(7) Retainer
(8) Retainer key
(9) Exhaust valve oil seal

5. CYLINDER BLOCK

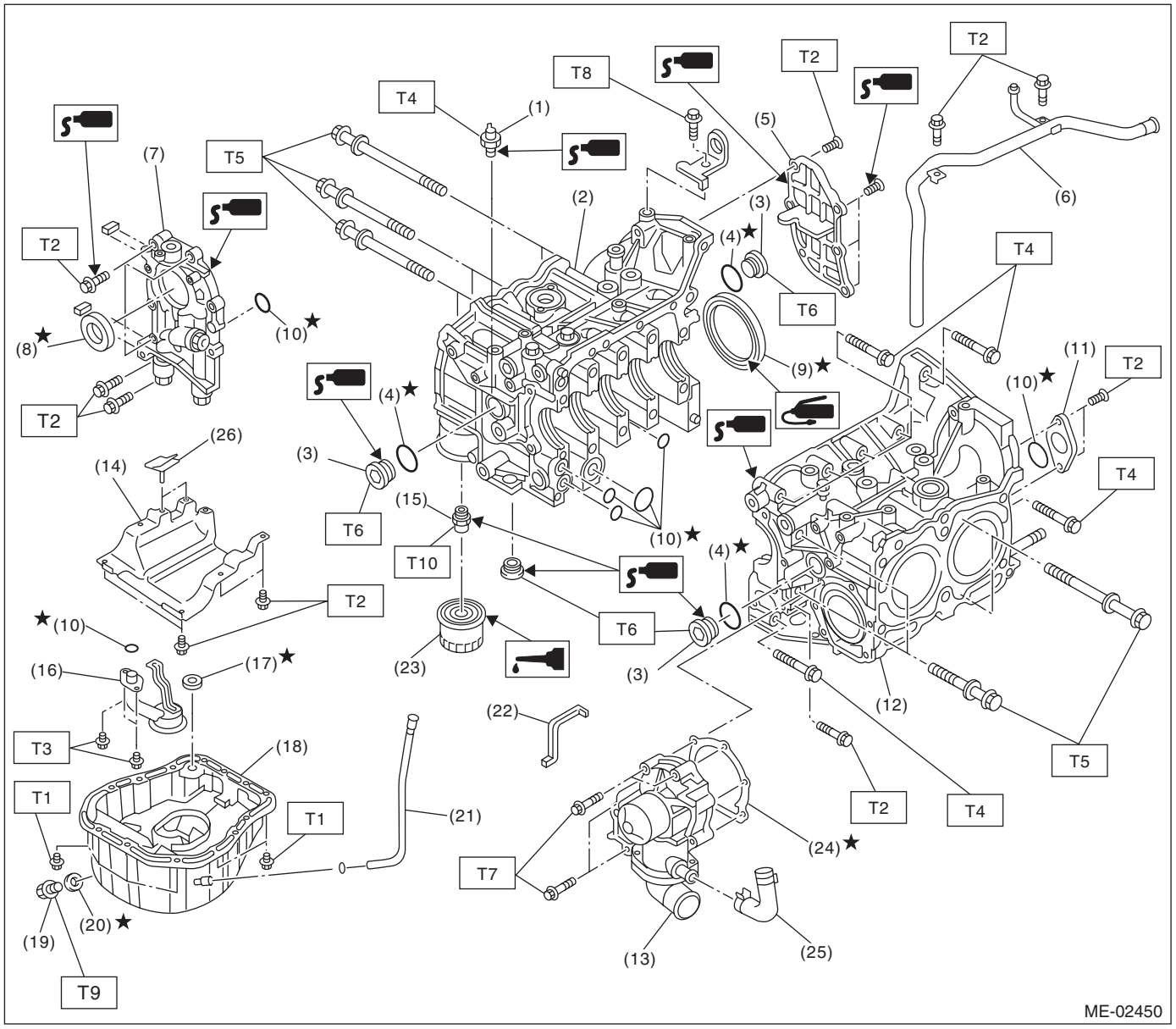

(1) Oil pressure switch
(2) Cylinder block (RH)
(3) Service hole plug
(4) Gasket
(5) Oil separator cover
(6) Water by-pass pipe
(7) Oil pump
(8) Front oil seal
(9) Rear oil seal
(10) O-ring
(11) Service hole cover
(12) Cylinder block (LH)
(13) Water pump
(14) Baffle plate
(15) Oil filter connector
(16) Oil strainer
(17) Gasket
(18) Oil pan
(19) Drain plug
(20) Metal gasket
(21) Oil level gauge guide
(22) Water pump sealing
(23) Oil filter
(24) Gasket
(25) Water pump hose
(26) Seal

Tightening torque: N·m (kgf-m, ft-lb)

T1: 5 (0.5, 3.6)
T2: 6.4 (0.65, 4.7)
T3: 10 (1.0, 7.2)
T4: 25 (2.5, 18.1)
T5: <Ref. to ME(H4SO)-65, INSTALLATION, Cylinder Block.>
T6: 70 (7.1, 50.6)
T7: First 12 (1.2, 8.9)
Second 12 (1.2, 8.9)
T8: 16 (1.6, 11.6)
T9: 44 (4.5, 33)
T10: 45 (4.6, 33.3)

6. CRANKSHAFT AND PISTON

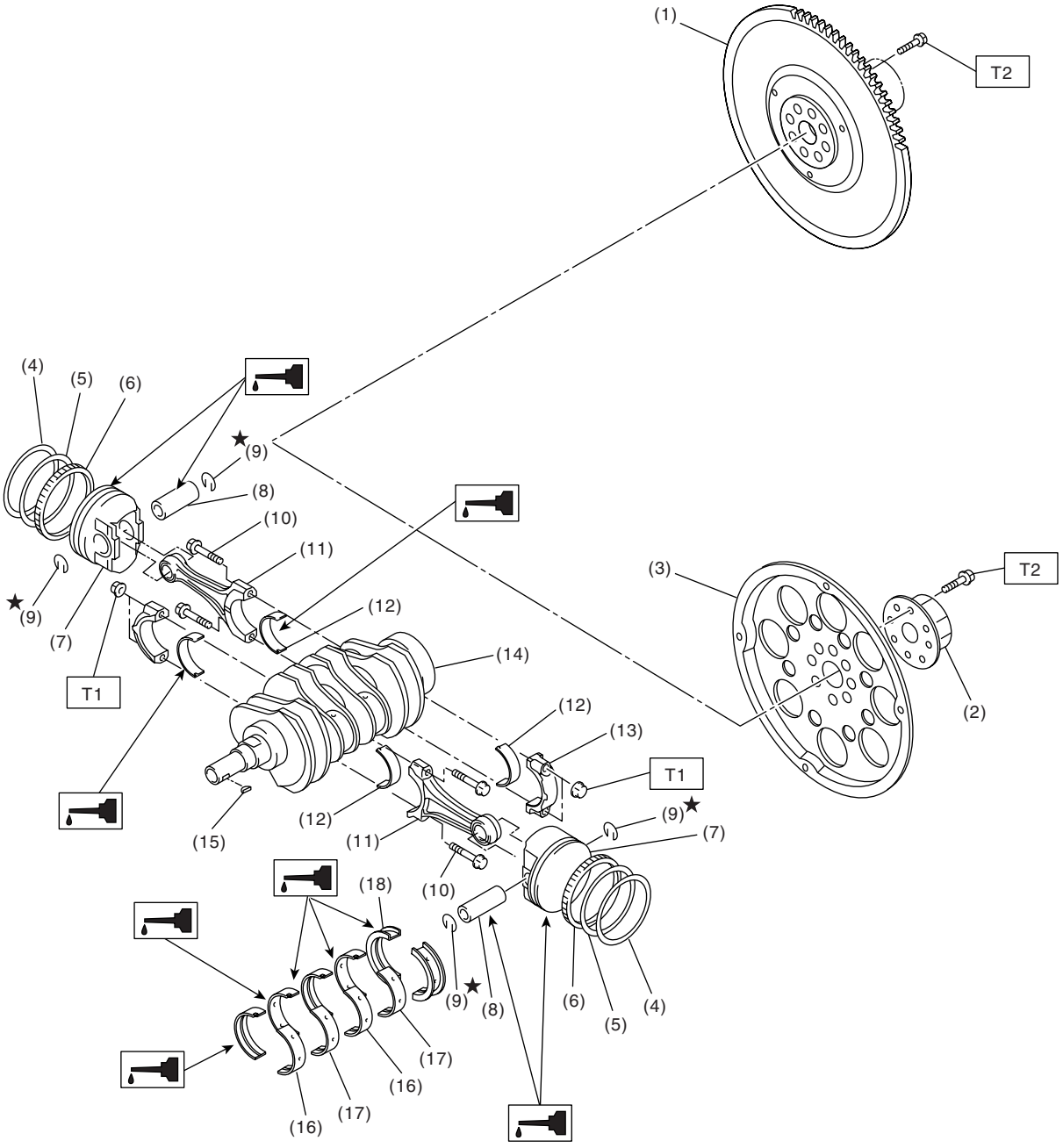

ME-02460

(1) Flywheel (MT model)
(2) Reinforcement (AT model)
(3) Drive plate (AT model)
(4) Top ring
(5) Second ring
(6) Oil ring
(7) Piston
(8) Piston pin
(9) Snap ring
(10) Connecting rod bolt
(11) Connecting rod
(12) Connecting rod bearing
(13) Connecting rod cap
(14) Crankshaft
(15) Woodruff key
(16) Crankshaft bearing #1, #3
(17) Crankshaft bearing #2, #4
(18) Crankshaft bearing #5

Tightening torque: N·m (kgf-m, ft-lb)
T1: 45 (4.6, 33.3)
T2: 72 (7.3, 52.8)

7. ENGINE MOUNTING

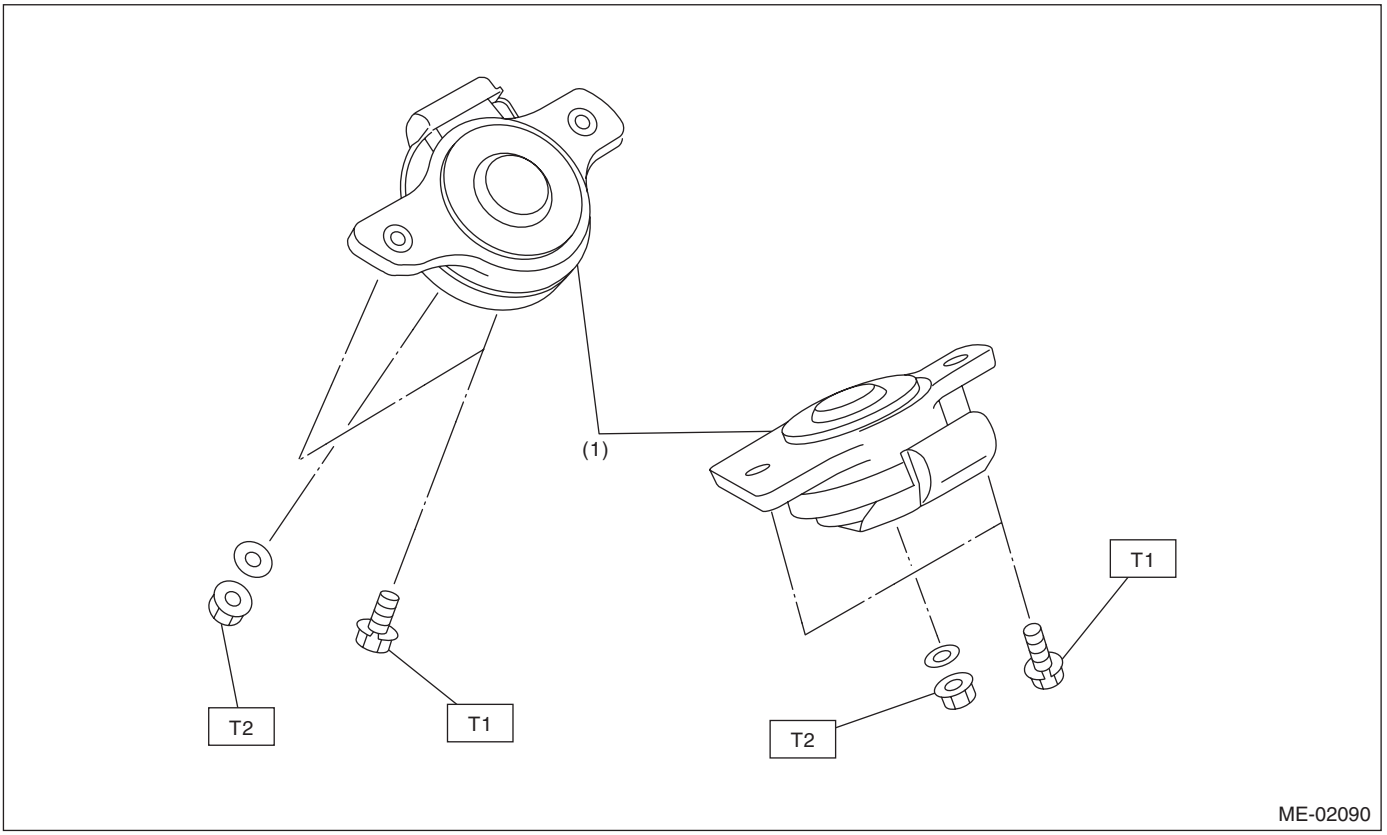

(1) Front cushion rubber

Tightening torque: N·m (kgf-m, ft-lb)
T1: 35 (3.6, 25.8)
T2: 75 (7.6, 55.3)

C: CAUTION

- Wear work clothing, including a cap, protective goggles and protective shoes during operation.
- Remove contamination including dirt and corrosion before removal, installation or disassembly.
- Keep the disassembled parts in order and protect them from dust and dirt.
- Before removal, installation or disassembly, be sure to clarify the failure. Avoid unnecessary removal, installation, disassembly and replacement.
- Be careful not to burn yourself, because each part on the vehicle is hot after running.
- Be sure to tighten fasteners including bolts and nuts to the specified torque.
- Place shop jacks or rigid racks at the specified points.
- Before disconnecting electrical connectors of sensors or units, be sure to disconnect the ground cable from battery.
- All parts should be thoroughly cleaned, paying special attention to the engine oil passages, pistons and bearings.
- Rotating parts and sliding parts such as piston, bearing and gear should be coated with oil prior to assembly.
- Be careful not to let oil, grease or coolant contact the timing belt, clutch disc and flywheel.
- All removed parts, if to be reused, should be reinstalled in the original positions and directions.
- Bolts, nuts and washers should be replaced with new ones as required.
- Even if necessary inspections have been made in advance, proceed with assembly work while making rechecks.
- Remove or install the engine in an area where chain hoists, lifting devices, etc. are available for ready use.
- Be sure not to damage coated surfaces of body panels with tools, or not to stain seats and windows with coolant or oil. Place a cover over fenders, as required, for protection.
- Prior to starting work, prepare the following:

Service tools, clean cloth, containers to catch coolant and oil, wire ropes, chain hoist, transmission jacks, etc.

- Lift-up or lower the vehicle when necessary. Make sure to support the correct positions.

D: PREPARATION TOOL

1. SPECIAL TOOL

ILLUSTRATION	TOOL NUMBER	DESCRIPTION	REMARKS
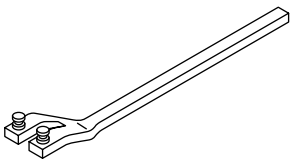 ST18231AA010	18231AA010	CAM SPROCKET WRENCH	• Used for removing and installing cam sprocket. • CAM SPROCKET WRENCH (499207100) can also be used.
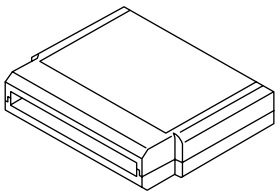 ST24082AA260	24082AA260	CARTRIDGE	Troubleshooting for electrical system.
ST22771AA030	22771AA030	SUBARU SELECT MONITOR KIT	Troubleshooting for electrical system.
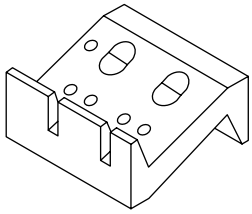 ST-498267800	498267800	CYLINDER HEAD TABLE	• Used for replacing valve guides. • Used for removing and installing valve spring.

ILLUSTRATION	TOOL NUMBER	DESCRIPTION	REMARKS
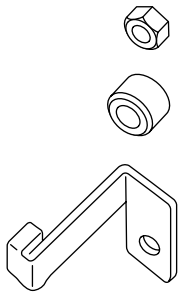 ST-498277200	498277200	STOPPER SET	Used for installing automatic transmission assembly to engine.
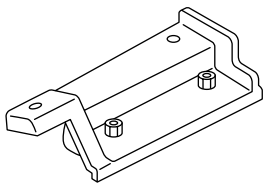 ST-498457000	498457000	ENGINE STAND ADAPTER RH	Used with ENGINE STAND (499817100).
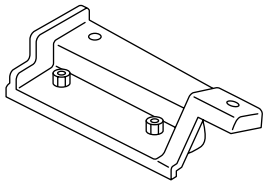 ST-498457100	498457100	ENGINE STAND ADAPTER LH	Used with ENGINE STAND (499817100).
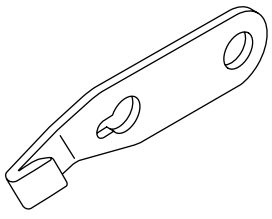 ST-498497100	498497100	CRANKSHAFT STOPPER	Used for stopping rotation of flywheel when loosening/tightening crank pulley bolt.

ILLUSTRATION	TOOL NUMBER	DESCRIPTION	REMARKS
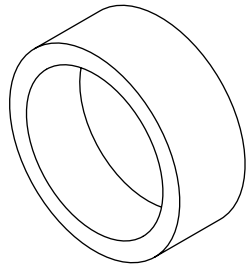 ST-498747300	498747300	PISTON GUIDE	Used for installing piston in cylinder.
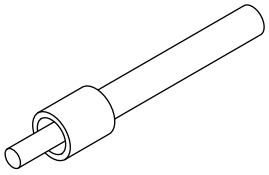 ST-498857100	498857100	VALVE OIL SEAL GUIDE	Used for press-fitting of intake and exhaust valve guide oil seals.
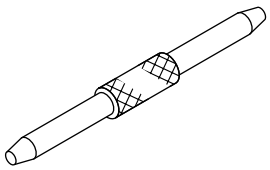 ST-499017100	499017100	PISTON PIN GUIDE	Used for installing piston pin, piston and connecting rod.
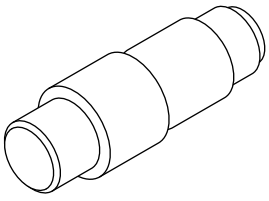 ST-499037100	499037100	CONNECTING ROD BUSHING REMOVER AND INSTALLER	Used for removing and installing connecting rod bushing.

ILLUSTRATION	TOOL NUMBER	DESCRIPTION	REMARKS
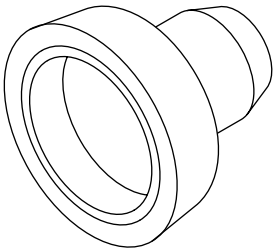 ST-499587200	499587200	CRANKSHAFT OIL SEAL INSTALLER	• Used for installing crankshaft oil seal. • Used with CRANKSHAFT OIL SEAL GUIDE (499597100).
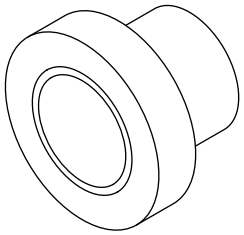 ST-499587500	499587500	OIL SEAL INSTALLER	• Used for installing camshaft oil seal. • Used with OIL SEAL GUIDE (499597000).
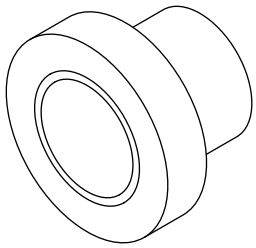 ST-499587700	499587700	CAMSHAFT OIL SEAL INSTALLER	Used for installing cylinder head plug.
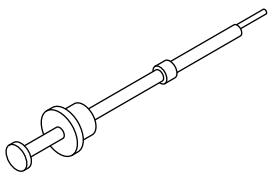 ST-499097700	499097700	PISTON PIN REMOVER ASSY	Used for removing piston pin.

ILLUSTRATION	TOOL NUMBER	DESCRIPTION	REMARKS
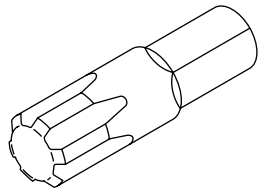 ST-499497000	499497000	TORX® PLUS	Used for removing and installing camshaft cap.
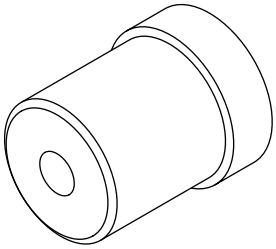 ST-499587100	499587100	OIL SEAL INSTALLER	Used for installing oil pump oil seal.
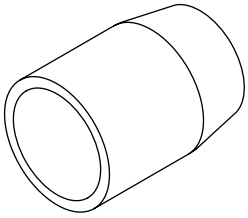 ST-499597000	499597000	OIL SEAL GUIDE	• Used for installing camshaft oil seal. • Used with CAMSHAFT OIL SEAL INSTALLER (499587500).
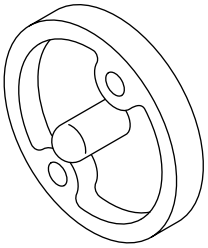 ST-499597100	499597100	CRANKSHAFT OIL SEAL GUIDE	• Used for installing crankshaft oil seal. • Used with CRANKSHAFT OIL SEAL INSTALLER (499587200).

ILLUSTRATION	TOOL NUMBER	DESCRIPTION	REMARKS
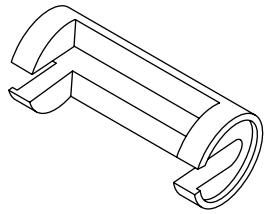 ST-499718000	499718000	VALVE SPRING REMOVER	Used for removing and installing valve spring.
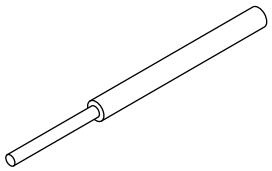 ST-499767200	499767200	VALVE GUIDE REMOVER	Used for removing valve guides.
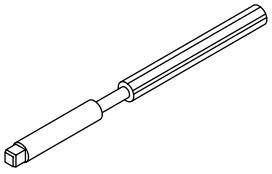 ST-499767400	499767400	VALVE GUIDE REAMER	Used for reaming valve guides.
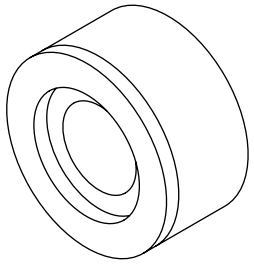 ST-499767700	499767700	VALVE GUIDE ADJUSTER	Used for installing valve guides. (Intake side)

ILLUSTRATION	TOOL NUMBER	DESCRIPTION	REMARKS
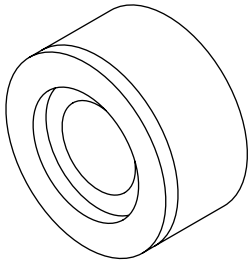 ST-499767800	499767800	VALVE GUIDE ADJUSTER	Used for installing valve guides. (Exhaust side)
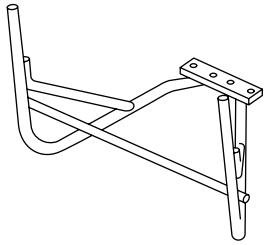 ST-499817100	499817100	ENGINE STAND	• Stand used for engine disassembly and assembly. • Used with ENGINE STAND ADAPTER RH (498457000) & LH (498457100).
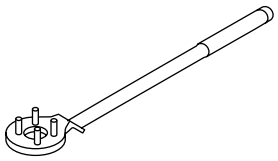 ST-499977100	499977100	CRANK PULLEY WRENCH	Used for stopping rotation of crank pulley when loosening/tightening crank pulley bolt.
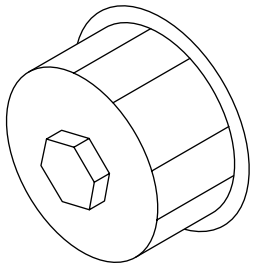 ST-498547000	498547000	OIL FILTER WRENCH	Used for removing and installing oil filter. (Outer diameter: 80 mm (3.15 in))

ILLUSTRATION	TOOL NUMBER	DESCRIPTION	REMARKS
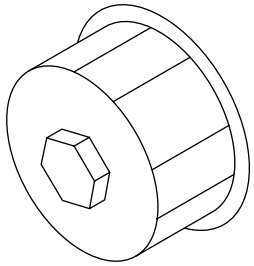 ST18332AA000	18332AA000	OIL FILTER WRENCH	Used for removing and installing oil filter. (Outer diameter: 68 mm (2.68 in))
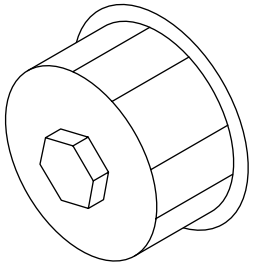 ST18332AA010	18332AA010	OIL FILTER WRENCH	Used for removing and installing oil filter. (Outer diameter: 65 mm (2.56 in))
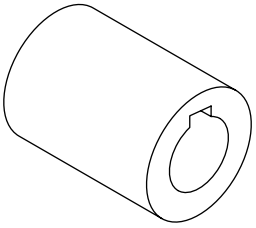 ST-499987500	499987500	CRANKSHAFT SOCKET	Used for rotating crankshaft.

2. GENERAL TOOL

TOOL NAME	REMARKS
Compression gauge	Used for measuring compression.
Tachometer (Secondary pick-up type)	Used for measuring idle speed.
Timing light	Used for measuring ignition timing.

E: PROCEDURE

It is possible to conduct the following service procedures with engine on the vehicle, however, the procedures described in this section are based on the condition that the engine is removed from the vehicle.

- V-belt
- Timing belt
- Valve rocker assembly
- Camshaft
- Cylinder head

2. Compression

A: INSPECTION

CAUTION:
After warming-up, engine becomes very hot. Be careful not to burn yourself during measurement.

1) After warming-up the engine, turn the ignition switch to OFF.
2) Make sure that the battery is fully charged.
3) Release the fuel pressure.
<Ref. to FU(H4SO)-39, RELEASING OF FUEL PRESSURE, PROCEDURE, Fuel.>
4) Remove all the spark plugs. <Ref. to IG(H4SO)-5, REMOVAL, Spark Plug.>
5) Fully open the throttle valve.
6) Check the starter motor for satisfactory performance and operation.
7) Hold the compression gauge tight against the spark plug hole.

NOTE:
When using a screw-in type compression gauge, the screw (put into cylinder head spark plug hole) should be less than 18 mm (0.71 in) long.

8) Crank the engine by means of the starter motor, and read the maximum value on the gauge when the pointer is steady.

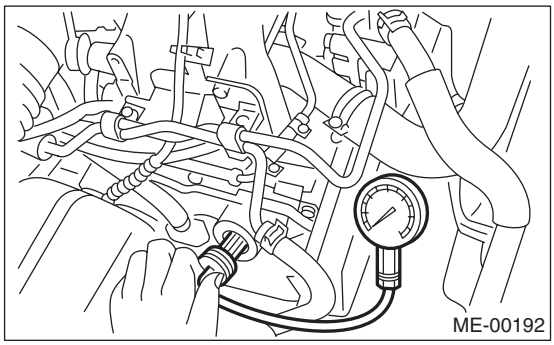

9) Perform at least two measurements per cylinder, and make sure that the values are correct.

Compression (350 rpm and fully open throttle):
Standard:
1,020 — 1,275 kPa (10.4 — 13.0 kgf/cm^2 , 148 — 185 psi)
Difference between cylinders:
49 kPa (0.5 kgf/cm^2, 7 psi) or less

3. Idle Speed

A: INSPECTION

1) Before checking the idle speed, check the following:
   (1) Ensure the air cleaner element is free from clogging, ignition timing is correct, spark plugs are in good condition, and hoses are connected properly.
   (2) Ensure the malfunction indicator light does not illuminate.
2) Idle the engine.
3) Stop the engine, and turn the ignition switch to OFF.
4) When using Subaru Select Monitor, refer to the following. <Ref. to ME(H4SO)-12, SPECIAL TOOL, PREPARATION TOOL, General Description.>
   (1) Insert the cartridge to the Subaru Select Monitor.
   (2) Connect the Subaru Select Monitor to data link connector.

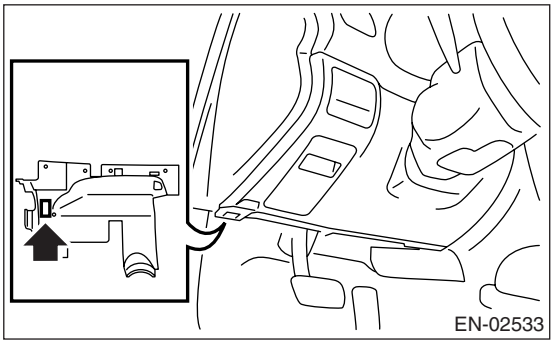

   (3) Turn the ignition switch to ON, and Subaru select monitor switch to ON.
   (4) Select {Each System Check} in the Main Menu.
   (5) Select {Engine} in the Selection Menu.
   (6) Select {Current Data Display & Save} in the Engine Control System Diagnosis.
   (7) Select {Data Display} in the Data Display Menu.
   (8) Start the engine, and read engine idle speed.
5) When using the tachometer (Secondary pick-up type):
   (1) Attach the pick-up clip to No. 1 cylinder spark plug cord.
   (2) Start the engine, and read engine idle speed.

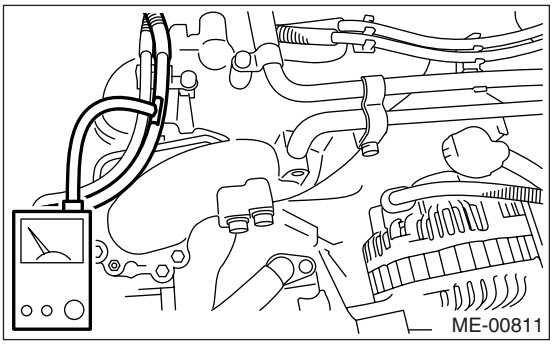

NOTE:
This ignition system provides simultaneous ignition for #1 and #2 plugs. It must be noted that some tachometers may register twice that of actual engine speed.

6) Check the idle speed when unloaded. (With headlights, heater fan, rear defroster, radiator fan, A/C, etc. OFF)

Idle speed [No load and gears in "N" or "P" range]:
650±100 rpm

7) Check the idle speed when loaded. (Turn the A/C switch to "ON" and operate the compressor for at least one minute before measurement.)

Idle speed [A/C "ON" and gears in "N" or "P" range]:
800±100 rpm

NOTE:
Idle speed cannot be adjusted manually, because the idle speed is automatically adjusted. If the idle speed is out of specifications, refer to General Diagnosis Table under "Engine Control System". <Ref. to EN(H4SO)(diag)-2, Basic Diagnostic Procedure.>

4. Ignition Timing

A: INSPECTION

CAUTION:
After warming-up, engine becomes very hot. Be careful not to burn yourself at measurement.

1) Idle the engine.
2) To check the ignition timing, connect a timing light to #1 cylinder spark plug cord, and illuminate the timing mark with the timing light.
3) Start the engine and check the ignition timing at the following idle speed.

Ignition timing [BTDC/rpm]:
13°±10°/650

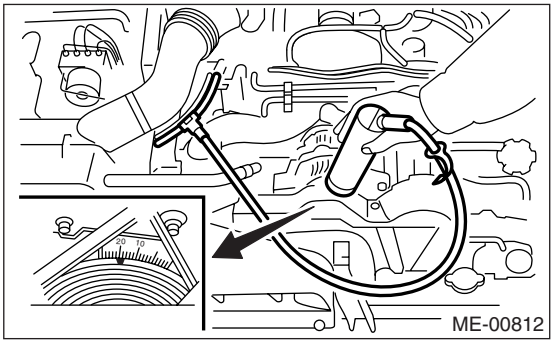

If the timing is not correct, check the ignition control system. <Ref. to EN(H4SO)(diag)-2, Basic Diagnostic Procedure.>

5. Intake Manifold Vacuum

A: INSPECTION

1) Idle the engine.
2) Disconnect the brake vacuum hose from the intake manifold, and then install the vacuum gauge.
3) Keep the engine at the idle speed and read the vacuum gauge indication.

By observing the gauge needle movement, the internal condition of the engine can be diagnosed as described below.

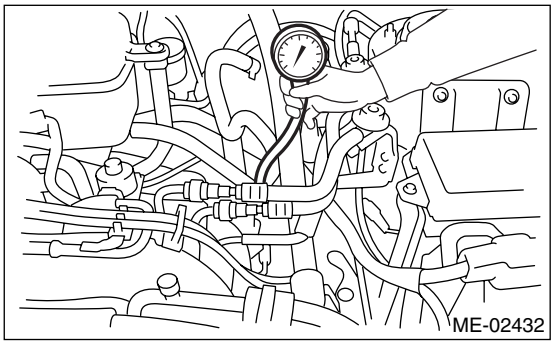

Vacuum pressure (at idling, A/C "OFF"):
Less than −60.0 kPa (−450 mmHg, −17.72 in-Hg)

Diagnosis of engine condition by measurement of intake manifold vacuum	
Vacuum gauge indication	Possible engine condition
1. Needle is steady but lower than normal position. This tendency becomes more evident as engine temperature rises.	Air leakage around intake manifold gasket, disconnection or damage of vacuum hose
2. Needle intermittently drops to position lower than normal position.	Leakage around cylinder
3. Needle drops suddenly and intermittently from normal position.	Valve anchoring
4. When engine speed is gradually increased, needle begins to vibrate rapidly at certain speed, and then vibration increases as engine speed increases.	Weak or broken valve springs
5. Needle vibrates above and below normal position in narrow range.	Defective ignition system

6. Engine Oil Pressure

A: INSPECTION

1) Disconnect the ground cable from battery.

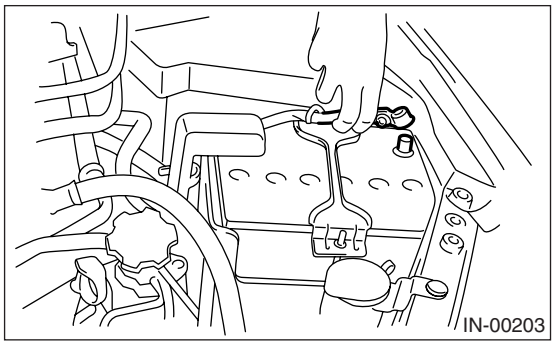

2) Remove the generator. <Ref. to SC(H4SO)-20, REMOVAL, Generator.>
3) Disconnect the connector from oil pressure switch.
4) Remove the oil pressure switch from cylinder block. <Ref. to LU(H4SO)-17, REMOVAL, Oil Pressure Switch.>
5) Connect the oil pressure gauge hose to cylinder block.
6) Connect the battery ground cable to battery.

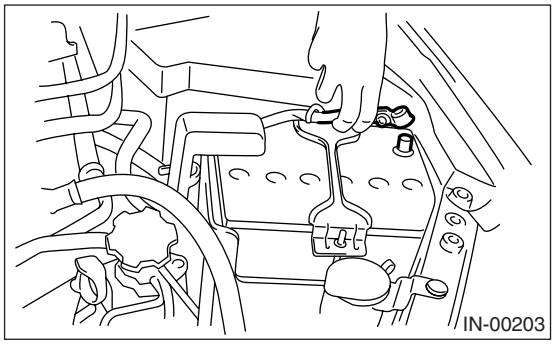

7) Start the engine, and measure oil pressure.

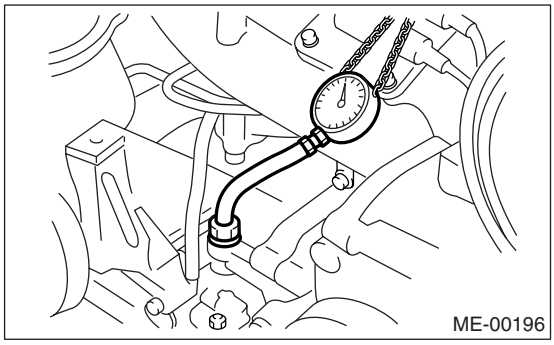

Oil pressure:
Standard
88 kPa (0.9 kg/cm^2, 13 psi) or more at 800 rpm
294 kPa (3.0 kg/cm^2, 43 psi) or more at 5,000 rpm

CAUTION:
• If the oil pressure is out of specification, check oil pump, oil filter and lubrication line. <Ref. to LU(H4SO)-19, INSPECTION, General Diagnostic Table.>
• If the oil pressure warning light is turned to ON but oil pressure is within specification, replace the oil pressure switch. <Ref. to LU(H4SO)-19, INSPECTION, General Diagnostic Table.>

NOTE:
The specified value is based on an engine oil temperature of 80°C (176°F).

8) After measuring the oil pressure, install the oil pressure switch. <Ref. to LU(H4SO)-17, INSTALLATION, Oil Pressure Switch.>

Tightening torque:
25 N·m (2.5 kgf-m, 18.1 ft-lb)

7. Fuel Pressure

A: INSPECTION

WARNING:
Before removing the fuel pressure gauge, release fuel pressure.

NOTE:
When the fuel pressure is out of specification, check or replace the pressure regulator and pressure regulator vacuum hose.

1) Release the fuel pressure.
<Ref. to FU(H4SO)-39, RELEASING OF FUEL PRESSURE, PROCEDURE, Fuel.> <Ref. to FU(H4SO U5)-48, RELEASING OF FUEL PRESSURE, PROCEDURE, Fuel.>
2) Open the fuel filler flap lid, and remove the fuel filler cap.
3) Disconnect the fuel delivery hose, and connect a fuel pressure gauge.

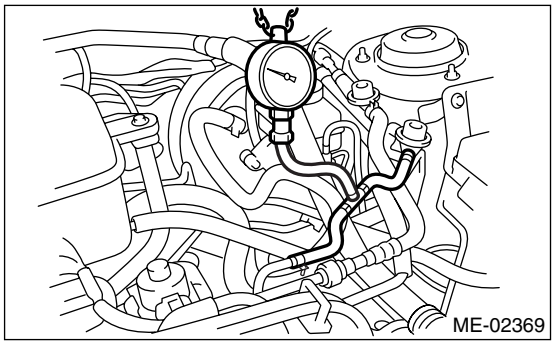

4) Install the fuse of fuel pump to main fuse box.
5) Start the engine.
6) Measure the fuel pressure while disconnecting pressure regulator vacuum hose from intake manifold.

Fuel pressure:
Standard: 284 — 314 kPa (2.9 — 3.2 kg/cm^2, 41 — 46 psi)

7) After connecting the pressure regulator vacuum hose, measure the fuel pressure.

Fuel pressure:
Standard: 206 — 235 kPa (2.1 — 2.4 kg/cm^2, 30 — 34 psi)

NOTE:
The fuel pressure gauge registers 10 to 20 kPa (0.1 to 0.2 kg/cm^2, 1 to 3 psi) higher than standard values during high-altitude operations.

8. Valve Clearance

A: INSPECTION

NOTE:
Inspection and adjustment of valve clearance should be performed while engine is cold.

1) Set the vehicle on a lift.
2) Lift-up the vehicle.
3) Remove the under cover.
4) Lower the vehicle.
5) Disconnect the ground cable from battery.

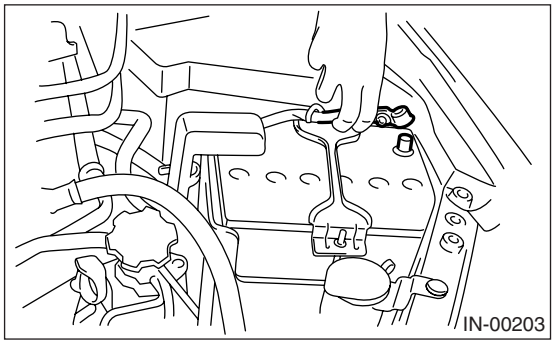

6) Remove the timing belt cover (LH).

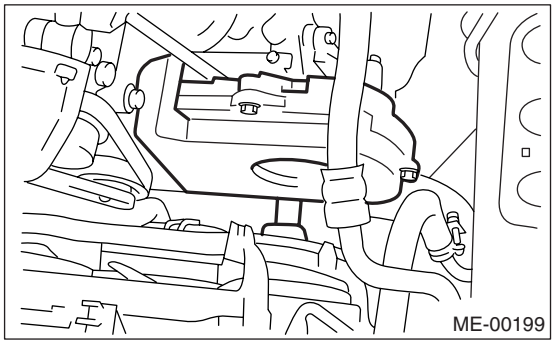

7) When inspecting #1 and #3 cylinders:
   (1) Disconnect the spark plug cords from spark plugs RH side. <Ref. to IG(H4SO)-5, RH SIDE, REMOVAL, Spark Plug.>
   (2) Disconnect the PCV hose from rocker cover (RH).
   (3) Remove the bolts, then remove the rocker cover (RH).
8) When inspecting #2 and #4 cylinders:
   (1) Disconnect the spark plug cords from spark plugs (LH Side). <Ref. to IG(H4SO)-5, LH SIDE, REMOVAL, Spark Plug.>
   (2) Disconnect the PCV hose from rocker cover (LH).
   (3) Remove the bolts, then remove the rocker cover (LH).
9) Set #1 cylinder piston to top dead center of compression stroke by rotating the crank pulley clockwise using the socket wrench.

NOTE:
When the arrow mark (A) on cam sprocket (LH) comes exactly to the top, #1 cylinder piston is brought to the top dead center of compression stroke.

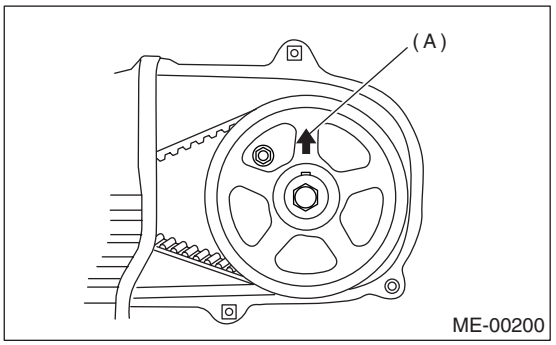

10) Measure #1 cylinder valve clearance using thickness gauge.

CAUTION:
• Insert the thickness gauge (A) in as horizontally as possible with respect to the valve stem end face.
• Measure the exhaust valve clearances while lifting-up the vehicle.

Valve clearance (Standard):
Intake:
0.20±0.04 mm (0.0079±0.0016 in)
Exhaust:
0.25±0.04 mm (0.0098±0.0016 in)

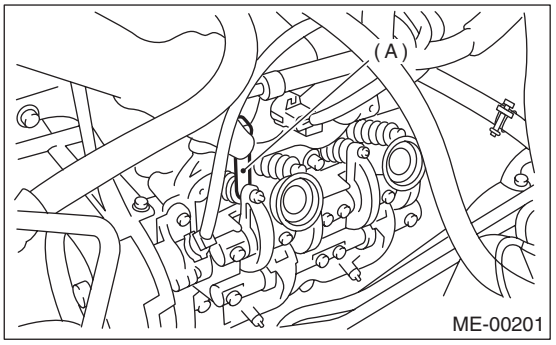

11) If necessary, adjust the valve clearance. <Ref. to ME(H4SO)-27, ADJUSTMENT, Valve Clearance.>
12) Measure the valve clearance in #3, #2 and #4 cylinder in the same measurement procedure as #1 cylinder.

NOTE:
• Be sure to set the cylinder pistons to their respective top dead centers on compression stroke before measuring valve clearances.

• By rotating the crank pulley clockwise every 180° from the state that #1 cylinder piston is on the top dead center of compression stroke, #3, #2 and #4 cylinder pistons come to the top dead center of compression stroke in this order.

13) After inspection, install the related parts in the reverse order of removal.

B: ADJUSTMENT

CAUTION:
Adjustment of valve clearance should be performed while engine is cold.

1) Set #1 cylinder piston to top dead center of compression stroke by rotating the crank pulley clockwise using the socket wrench.

NOTE:
When the arrow mark (A) on cam sprocket (LH) comes exactly to the top, #1 cylinder piston is brought to the top dead center of compression stroke.

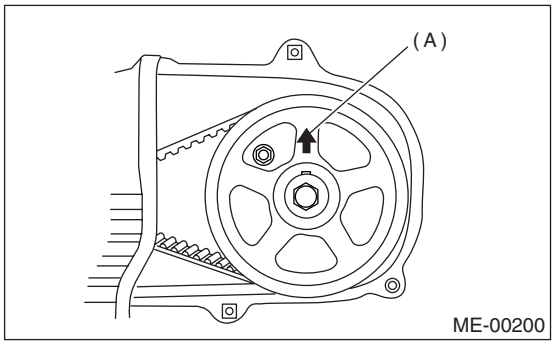

2) Adjust the #1 cylinder valve clearance.
(1) Loosen the valve rocker nut and screw.
(2) Place a suitable thickness gauge.
(3) While noting the valve clearance, tighten the valve rocker adjusting screw.
(4) When the specified valve clearance is obtained, tighten the valve rocker nut.

Tightening torque:
10 N·m (1.0 kgf-m, 7.2 ft-lb)

CAUTION:
• Insert the thickness gauge in as horizontally as possible with respect to the valve stem end face.
• Adjust the exhaust valve clearances while lifting-up the vehicle.

Valve clearance
Intake:
0.20±0.04 mm (0.0079±0.0016 in)
Exhaust:
0.25±0.04 mm (0.0098±0.0016 in)

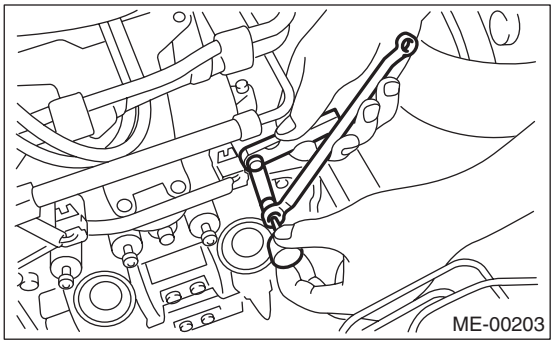

3) Adjust the valve clearance in #3, #2 and #4 cylinder in the same adjustment procedure as #1 cylinder.

NOTE:
• Be sure to set the cylinder pistons to their respective top dead centers on compression stroke before adjusting valve clearances.
• By rotating the crank pulley clockwise every 180° from the state that #1 cylinder piston is on the top dead center of compression stroke, #3, #2 and #4 cylinder pistons come to the top dead center of compression stroke in this order.

4) Ensure the valve clearances of each cylinder are within specifications. If necessary, readjust the valve clearances.

9. Engine Assembly

A: REMOVAL

1) Set the vehicle on a lift.
2) Open the front hood fully and support with the front food stay.
3) Collect the refrigerant from A/C system. <Ref. to AC-20, PROCEDURE, Refrigerant Recovery Procedure.>
4) Release the fuel pressure.
<Ref. to FU(H4SO)-39, RELEASING OF FUEL PRESSURE, PROCEDURE, Fuel.> or <Ref. to FU(H4SO U5)-48, RELEASING OF FUEL PRESSURE, PROCEDURE, Fuel.>
5) Remove the fuel filler cap.
6) Disconnect the ground cable from battery.

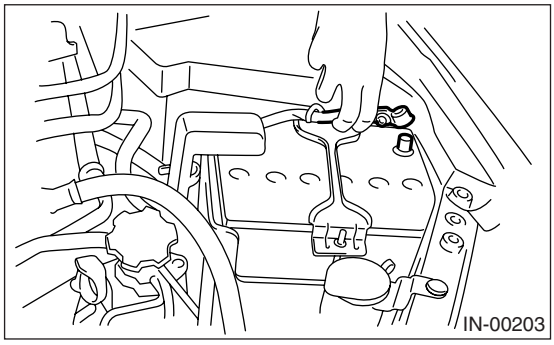
IN-00203

7) Remove the air intake duct, air cleaner case and air intake chamber.
<Ref. to IN(H4SO)-10, REMOVAL, Air Intake Duct.> <Ref. to IN(H4SO)-7, REMOVAL, Air Cleaner Case.> <Ref. to IN(H4SO)-9, REMOVAL, Air Intake Chamber.>
8) Remove the under cover.
9) Remove the radiator from vehicle. <Ref. to CO(H4SO)-19, REMOVAL, Radiator.>
10) Disconnect the A/C pressure hoses from A/C compressor.
11) Remove the air intake chamber stay.

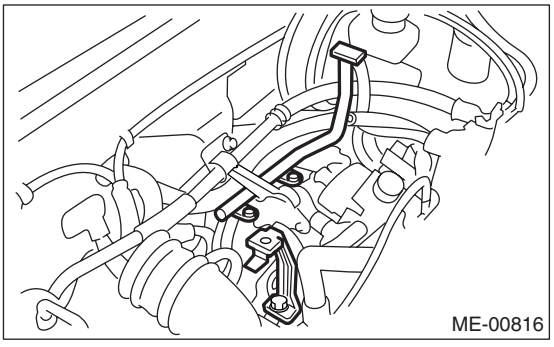
ME-00816

12) Disconnect the following connectors and cables.
(1) Front oxygen (A/F) sensor connector
• U5 model

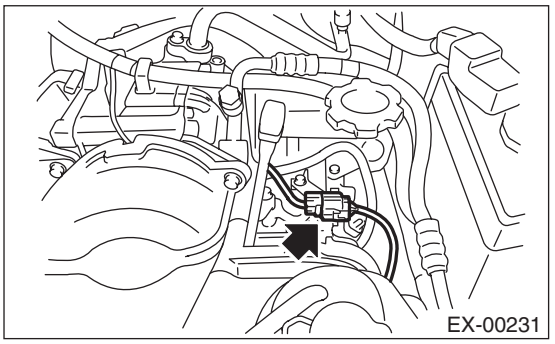
EX-00231

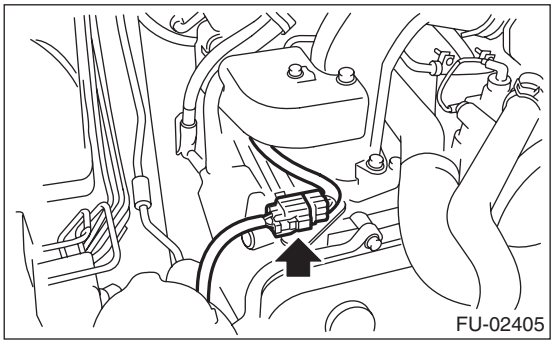
FU-02405

• Except for U5 model

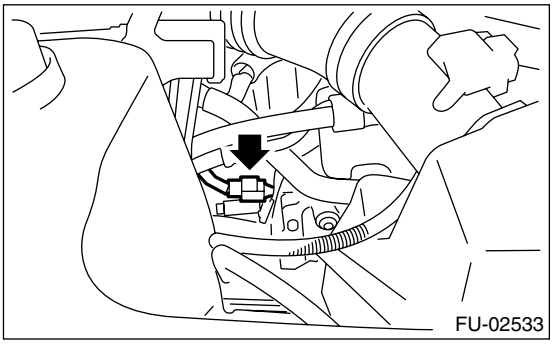
FU-02533

(2) Front oxygen (A/F) sensor (U5 model)

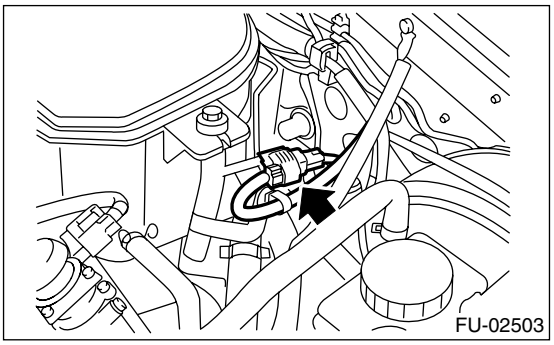

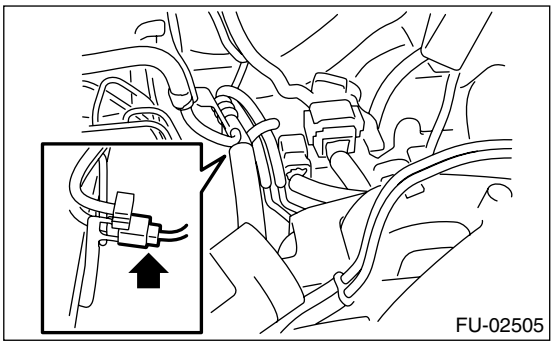

(3) Rear oxygen sensor connector

- U5 model

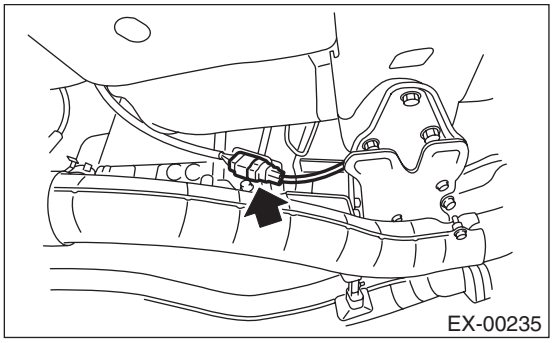

- Except for U5 model

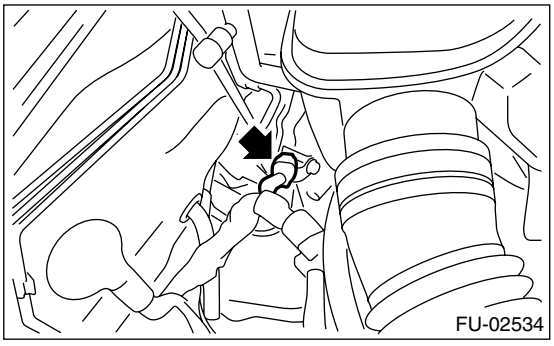

(4) Engine ground cable

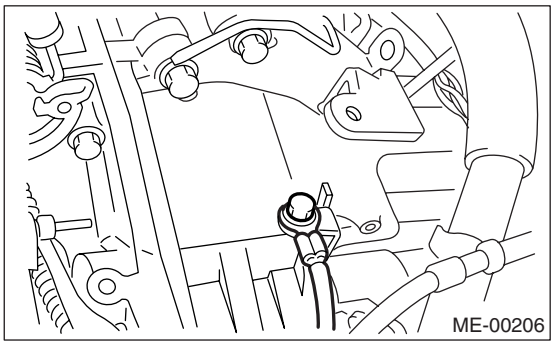

(5) Engine harness connectors

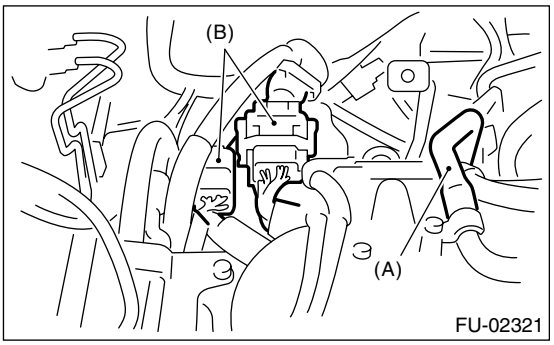

(A) PCV hose
(B) Engine harness connectors

(6) Generator connector and terminal

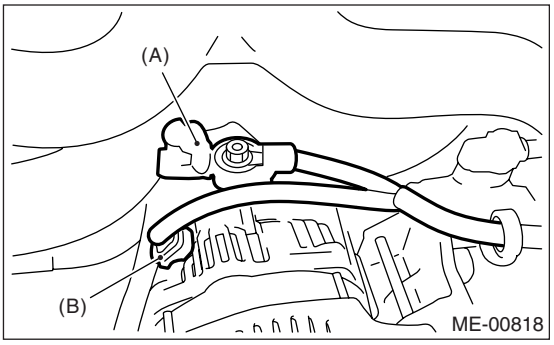

(A) Terminal
(B) Generator connector

(7) A/C compressor connectors

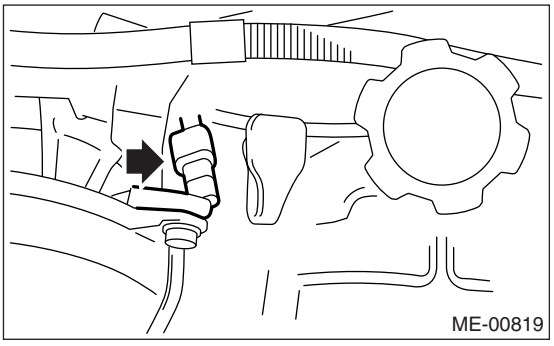

(8) Power steering switch connector

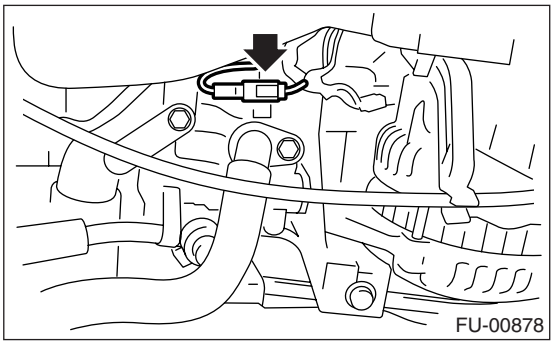

13) Disconnect the following hoses.
(1) Brake booster vacuum hose

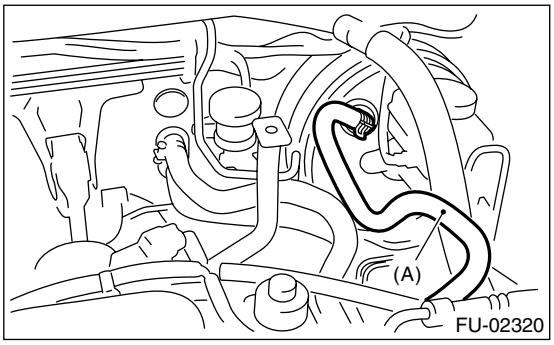

(A) Brake booster hose

(2) Heater inlet and outlet hoses

14) Remove the power steering pump from bracket.
(1) Loosen the lock bolt and slider bolt, and remove the front side belt. <Ref. to ME(H4SO)-37, FRONT SIDE BELT, REMOVAL, V-belt.>
(2) Remove the power steering pump bracket.

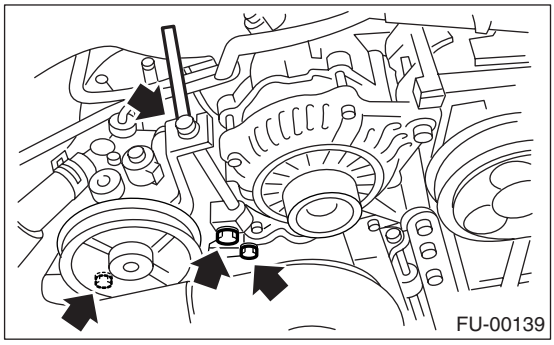

(3) Place the power steering pump on the right side wheel apron.

15) Remove the front and center exhaust pipe. <Ref. to EX(H4SO)-4, REMOVAL, Front Exhaust Pipe.> <Ref. to EX(H4SO U5)-4, REMOVAL, Front Exhaust Pipe.>

16) Remove the nuts which hold lower side of transmission to engine.

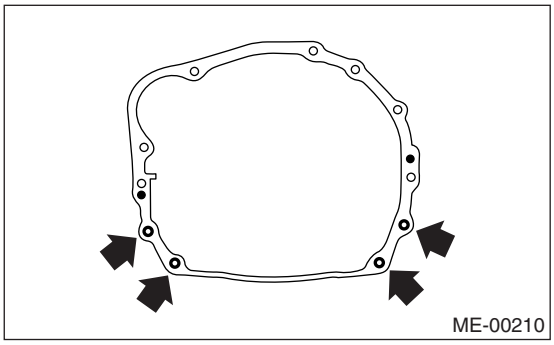

17) Remove the nuts which install front cushion rubber onto front crossmember.

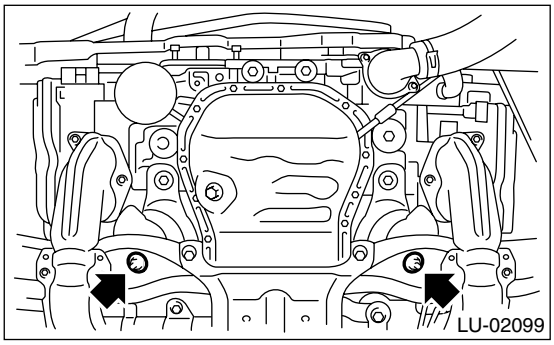

18) Separate the torque converter clutch from drive plate. (AT model)
(1) Lower the vehicle.
(2) Remove the service hole plug.
(3) Remove the bolts which hold torque converter clutch to drive plate.
(4) Remove other bolts while rotating the engine using a socket wrench.

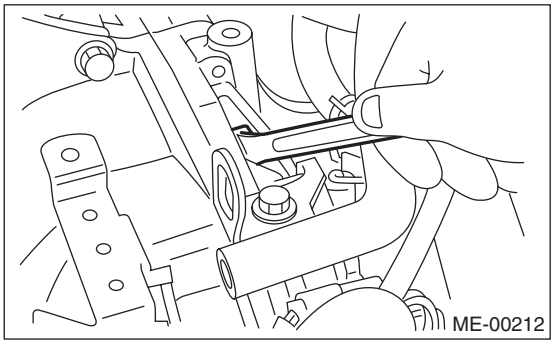

19) Remove the pitching stopper.

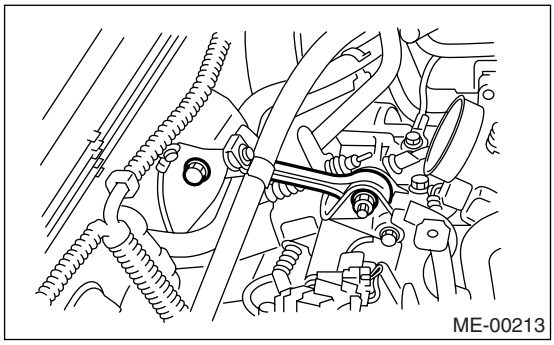

20) Disconnect the fuel hose from fuel pipe.
(1) Disconnect the connectors of fuel delivery and return lines by pushing the ST to the direction of arrow.

ST 42099AE000 CONNECTOR REMOVER

(2) Remove the clip, and disconnect the evaporation hoses from pipes.

CAUTION:
• Catch fuel from the hose into container.
• Disconnect the hose with its end wrapped with cloth to prevent fuel from splashing.

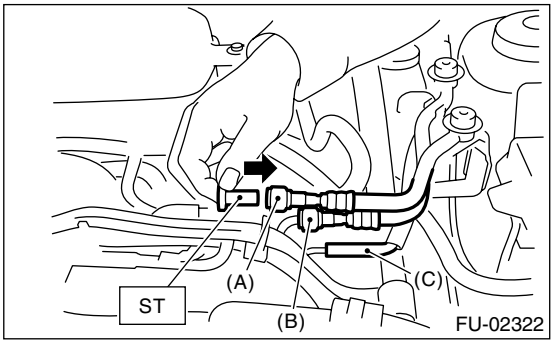

21) Support the engine with a lifting device and wire ropes.

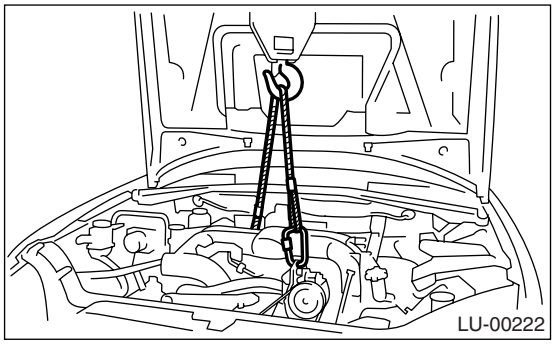

22) Support the transmission with a garage jack.

CAUTION:
Doing this is very important because the transmission lowers for its own weight. This work is also of great importance for facilitating reinstallation.

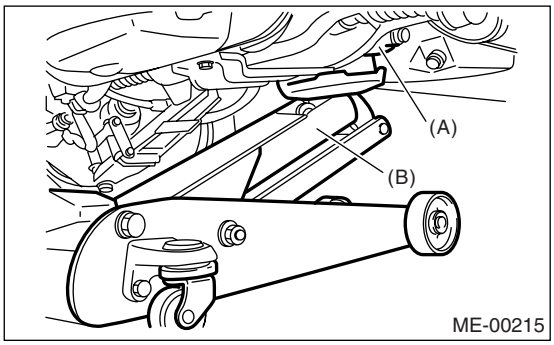

(A) Transmission
(B) Garage jack

CAUTION:
Before removing the engine away from transmission, check to be sure no work has been overlooked.

23) Separation of engine and transmission.
(1) Remove the starter. <Ref. to SC(H4SO)-6, REMOVAL, Starter.>
(2) Remove the bolts which hold upper side of transmission to engine.

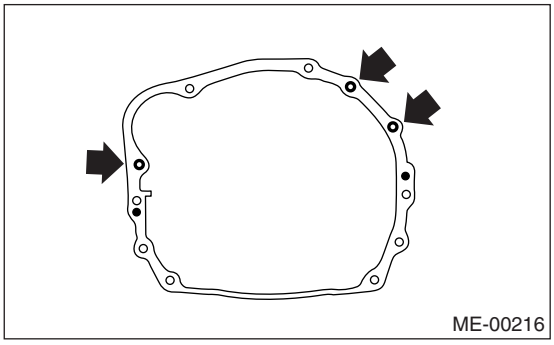

24) Set the ST to converter case. (AT model)

ST 498277200 STOPPER SET

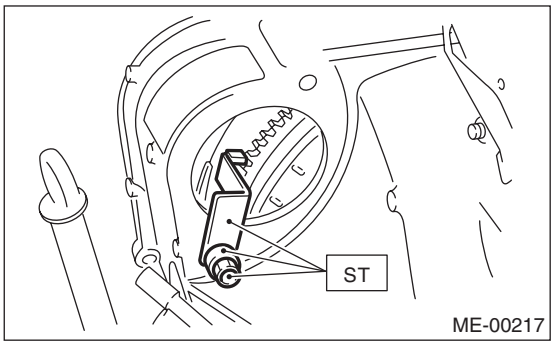

25) Remove the engine from vehicle.
(1) Slightly raise the engine.
(2) Raise the transmission with garage jack.

(3) Move the engine horizontally until main shaft is withdrawn from clutch cover.
(4) Slowly move the engine away from engine compartment.

NOTE:
Be careful not to damage adjacent parts or body panels with crank pulley, oil level gauge, etc.

26) Remove the front cushion rubbers.

B: INSTALLATION

1) Install the front cushion rubbers.

Tightening torque:
35 N·m (3.6 kgf-m, 25.8 ft-lb)

2) Position the engine in engine compartment and align it with transmission.

NOTE:
Be careful not to damage adjacent parts or body panels with crank pulley, oil level gauge, etc.

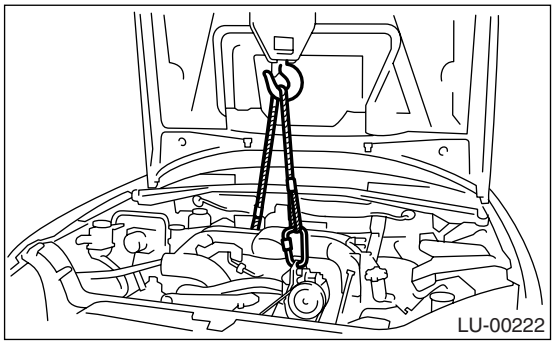

3) Apply a small amount of grease to splines of main shaft. (MT model)
4) Tighten the bolts which hold upper side of transmission to engine.

Tightening torque:
50 N·m (5.1 kgf-m, 36.9 ft-lb)

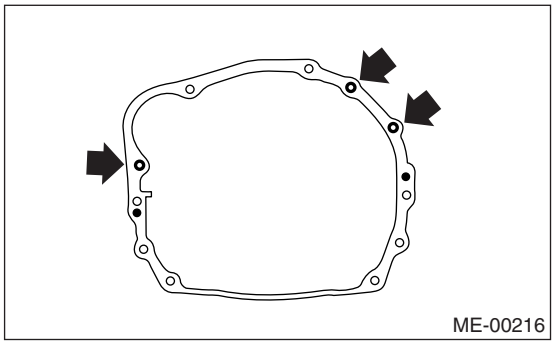

5) Remove the lifting device and wire ropes.
6) Remove the garage jack.
7) Install the pitching stopper.

Tightening torque:
T1: 50 N·m (5.1 kgf-m, 36.9 ft-lb)
T2: 58 N·m (5.9 kgf-m, 42.8 ft-lb)

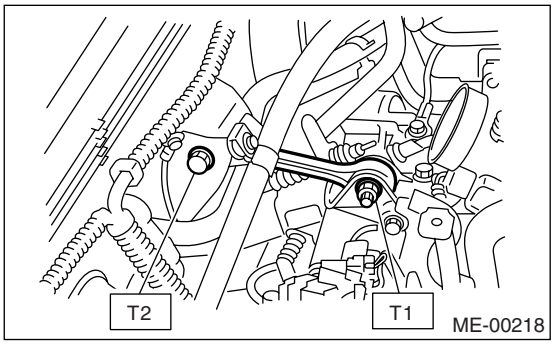

8) Remove the ST from converter case. (AT model)

NOTE:
Be careful not to drop the ST into the converter case when removing the ST.

ST 498277200 STOPPER SET

9) Install the starter. <Ref. to SC(H4SO)-6, INSTALLATION, Starter.>
10) Install the torque converter clutch to drive plate. (AT model)
(1) Tighten the bolts which hold torque converter clutch to drive plate.
(2) Tighten other bolts while rotating the engine using a socket wrench.

CAUTION:
Be careful not to drop bolts into the torque converter clutch housing.

Tightening torque:
25 N·m (2.5 kgf-m, 18.1 ft-lb)

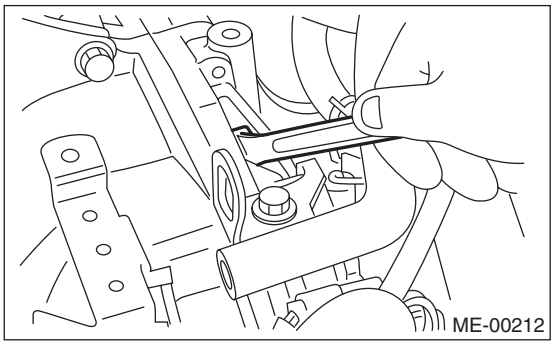

(3) Clog the service hole plug and prevent foreign matters from being mixed.

11) Install the power steering pump on bracket.
(1) Install the power steering pump on bracket, and tighten the bolts.

Tightening torque:
22 N·m (2.2 kgf-m, 16 ft-lb)

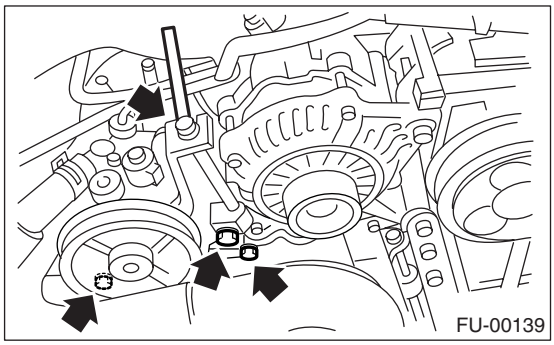

(2) Connect the power steering switch connector.

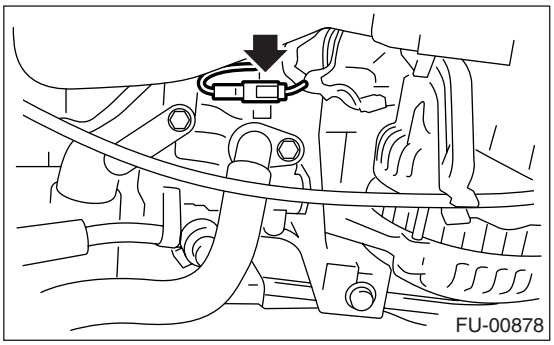

(3) Install the front side belt and adjust it. <Ref. to ME(H4SO)-37, FRONT SIDE BELT, INSTALLATION, V-belt.>

12) Lift-up the vehicle.
13) Tighten the nuts which hold lower side of transmission to engine.

Tightening torque:
50 N·m (5.1 kgf-m, 36.9 ft-lb)

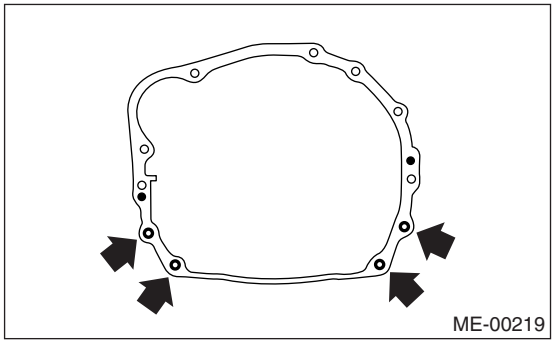

14) Tighten the nuts which install the front cushion rubber onto crossmember.

Tightening torque:
75 N·m (7.6 kgf-m, 55.3 ft-lb)

NOTE:
Make sure the front cushion rubber mounting bolts are securely installed.

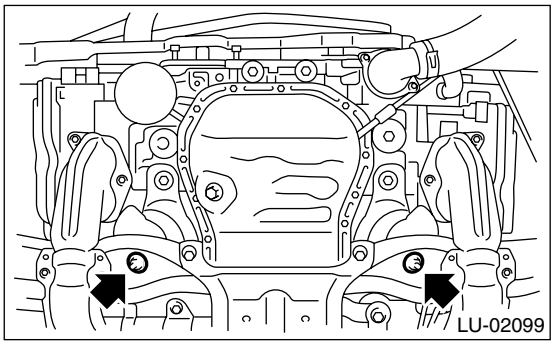

15) Install the front and center exhaust pipe.
<Ref. to EX(H4SO)-5, INSTALLATION, Front Exhaust Pipe.> <Ref. to EX(H4SO U5)-6, INSTALLATION, Front Exhaust Pipe.>
16) Lower the vehicle.
17) Connect the following hoses:
(1) Fuel delivery hose, return hose and evaporation hose
(2) Heater inlet and outlet hoses
(3) Brake booster vacuum hose
18) Connect the following connectors:
(1) Front oxygen (A/F) sensor connector
(2) Front oxygen (A/F) sensor (U5 model)
(3) Rear oxygen sensor connector
(4) Engine ground cable

Tightening torque:
14 N·m (1.4 kgf-m, 10.1 ft-lb)

(5) Engine harness connectors
(6) Generator connector and terminal
(7) A/C compressor connector

19) Install the air intake chamber stay.

Tightening torque:
16 N·m (1.6 kgf-m, 11.6 ft-lb)

20) Install the A/C pressure hoses.
<Ref. to AC-39, INSTALLATION, Hose and Tube.>
21) Install the radiator to vehicle. <Ref. to CO(H4SO)-20, INSTALLATION, Radiator.>
22) Install the air intake duct, air cleaner case and air intake chamber. <Ref. to IN(H4SO)-10, INSTALLATION, Air Intake Duct.> <Ref. to IN(H4SO)-7, INSTALLATION, Air Cleaner Case.> <Ref. to IN(H4SO)-9, INSTALLATION, Air Intake Chamber.>
23) Install the under cover.
24) Install the battery in the vehicle, and connect cables.
25) Fill engine coolant.
<Ref. to CO(H4SO)-12, FILLING OF ENGINE COOLANT, REPLACEMENT, Engine Coolant.>

26) Check the ATF level and replenish it if necessary.
<Ref. to 4AT-28, INSPECTION, Automatic Transmission Fluid.>
27) Charge the A/C system with refrigerant. <Ref. to AC-21, PROCEDURE, Refrigerant Charging Procedure.>
28) Remove the front hood stay, and close the front hood.
29) Take off the vehicle from a lift.

C: INSPECTION

1) Check pipes and hoses are installed firmly.
2) Check that the engine coolant and ATF are at specified levels.

10.Engine Mounting

A: REMOVAL

1) Remove the engine assembly. <Ref. to ME(H4SO)-28, REMOVAL, Engine Assembly.>
2) Remove the engine mounting from engine assembly.

B: INSTALLATION

Install in the reverse order of removal.

Tightening torque:
Engine mounting;
35 N·m (3.6 kgf-m, 25.8 ft-lb)

C: INSPECTION

Make sure that no crack or other damages do not exist.

11.Preparation for Overhaul

A: PROCEDURE

1) After removing the engine from the body, secure it in the ST shown below.

ST1	498457000	ENGINE STAND ADAPTER RH
ST2	498457100	ENGINE STAND ADAPTER LH
ST3	499817100	ENGINE STAND

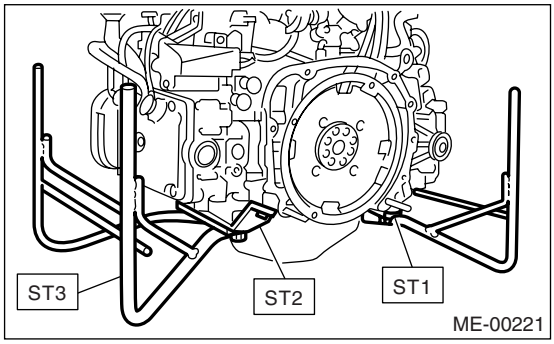

2) In this section the procedures described under each index are all connected and stated in order. The procedure for overhauling of the engine will be completed when you go through all steps in the process.
Therefore, in this section, to conduct the particular procedure within the flow of a section, you need to go back and conduct the procedure described previously in order to do that particular procedure.

12.V-belt

A: REMOVAL

NOTE:
Perform the following procedures with the engine installed to the body.

1. FRONT SIDE BELT

1) Remove the V-belt covers.

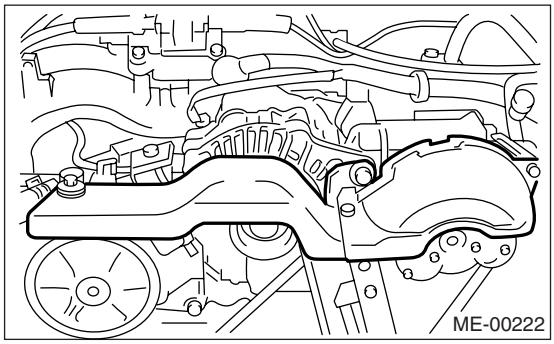

2) Loosen the lock bolt (A).
3) Loosen the slider bolt (B).
4) Remove the front side belt (C).

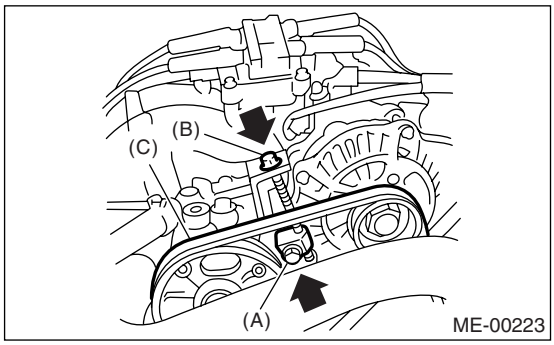

2. REAR SIDE BELT

1) Loosen the lock nut (A).
2) Loosen the slider bolt (B).

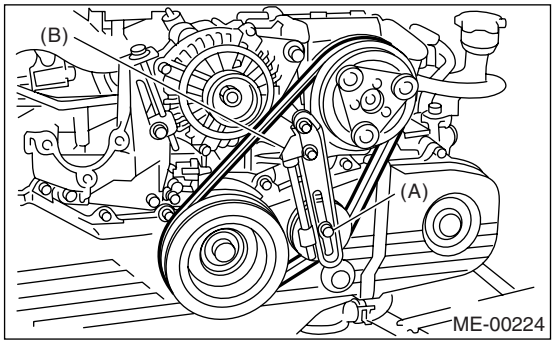

3) Remove the rear side belt.
4) Remove the belt tensioner.

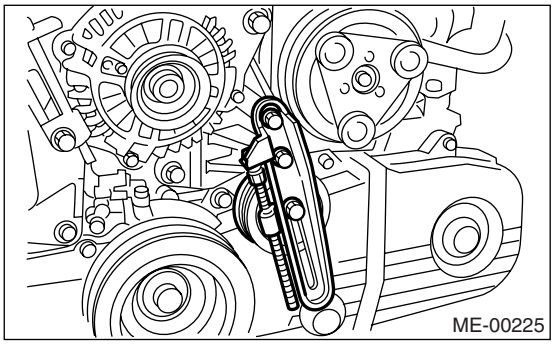

B: INSTALLATION

NOTE:
Wipe off any oil or water on the belt and pulley.

1. FRONT SIDE BELT

1) Install a V belt (C), and tighten the slider bolt so as to obtain the specified belt tension. <Ref. to ME(H4SO)-38, INSPECTION, V-belt.>
2) Tighten the lock bolt (A).
3) Tighten the slider bolt (B).

Tightening torque:
Lock bolt (A):
25 N·m (2.5 kgf-m, 18.1 ft-lb)
Slider bolt (B):
8 N·m (0.8 kgf-m, 5.9 ft-lb)

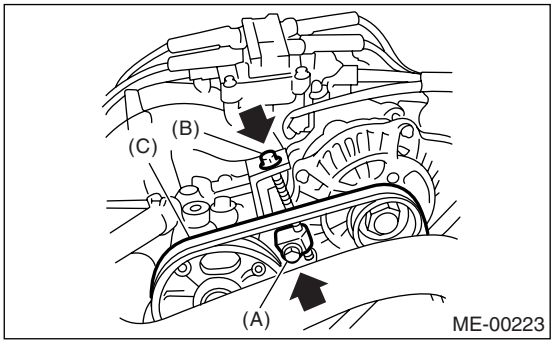

2. REAR SIDE BELT

1) Install the belt tensioner.
2) Install a V belt, and tighten the slider bolt (B) so as to obtain the specified belt tension.
<Ref. to ME(H4SO)-38, INSPECTION, V-belt.>
3) Tighten the lock nut (A).

Tightening torque:
Lock nut (A);
23 N·m (2.3 kgf-m, 17.0 ft-lb)

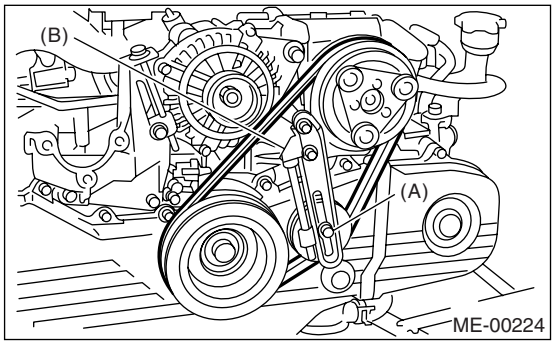

C: INSPECTION

1) Replace the belts, if cracks, fraying or wear is found.
2) Remove the V-belt cover and reservoir tank. (with belt tension gauge)
3) Check the V-belt tension and adjust it if necessary by changing the generator installing position or idler pulley installing position.

Belt tension (with belt tension gauge)

(A)
When installing new parts:
640 — 780 N (65 — 80 kgf, 143 — 175 lb)
At inspection:
490 — 640 N (50.0 — 65.3 kgf, 110.2 — 143.9 lb)

(B)
When installing new parts:
740 — 880 N (75.5 — 89.7 kgf, 166 — 198 lb)
At inspection:
350 — 450 N (35.7 — 45.9 kgf, 78.7 — 101.2 lb)

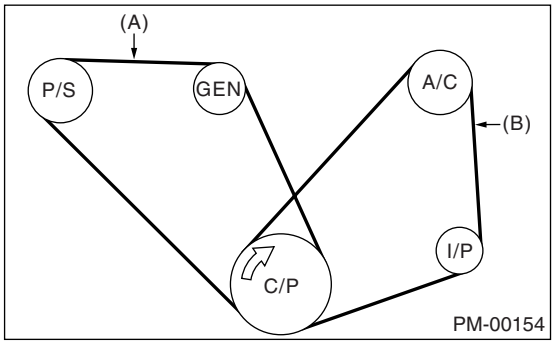

(A) Front side belt
(B) Rear side belt
C/P Crank pulley
GEN Generator
P/S Power steering oil pump pulley
A/C Air conditioning compressor pulley
I/P Idler pulley

Belt tension (without belt tension gauge)

(A)
When installing new parts:
7 — 9 mm (0.276 — 0.354 in)
At inspection:
9 — 11 mm (0.354 — 0.433 in)

(B)
When installing new parts:
7.5 — 8.5 mm (0.295 — 0.335 in)
At inspection:
9.0 — 10.0 mm (0.354 — 0.394 in)

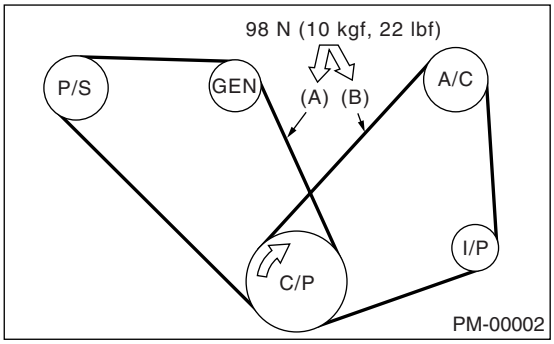

(A) Front side belt
(B) Rear side belt
C/P Crank pulley
GEN Generator
P/S Power steering oil pump pulley
A/C Air conditioning compressor pulley
I/P Idler pulley

13.Crank Pulley

A: REMOVAL

1) Remove the V-belts. <Ref. to ME(H4SO)-37, REMOVAL, V-belt.>
2) Remove the crank pulley bolt. To lock the crankshaft, use ST.
ST 499977100 CRANK PULLEY WRENCH

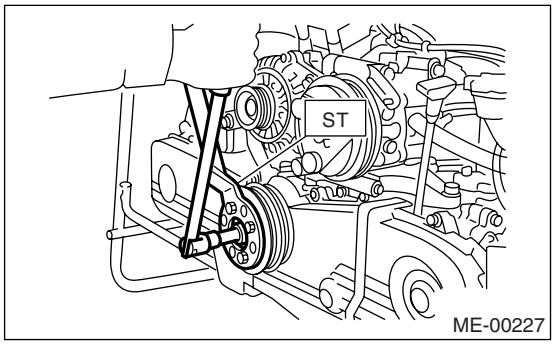

3) Remove the crank pulley.

B: INSTALLATION

1) Install the crank pulley.
2) Install the pulley bolt.
To lock the crankshaft, use ST.
ST 499977100 CRANK PULLEY WRENCH
(1) Clean the crankshaft thread using compressed air.
(2) Apply engine oil to the crank pulley bolt seat and thread.
(3) Tighten the bolts temporarily with tightening torque of 44 N·m (4.5 kgf-m, 33 ft-lb).
(4) Tighten the crank pulley bolts.

Tightening torque:
180 N·m (18.3 kgf-m, 132.7 ft-lb)

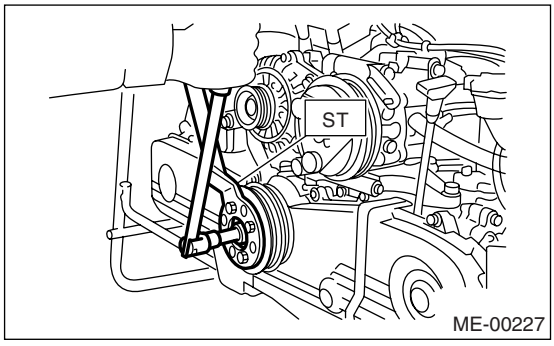

3) Confirm that the tightening angle of crank pulley bolt is 65 degrees or more. If the tightening angle of crank pulley bolt is less than 65 degrees, conduct the following procedures.
(1) Replace the crank pulley bolts and clean them.

Crank pulley bolt:
Part No. 12369AA011

(2) Clean the crankshaft thread using compressed air.
(3) Apply engine oil to the crank pulley bolt seal and thread.
(4) Tighten the bolts temporarily with tightening torque of 44 N·m (4.5 kgf-m, 33 ft-lb).
(5) Tighten the crank pulley bolts keeping them in an angle between 65 degrees and 75 degrees.

NOTE:
Conduct the tightening procedures by confirming the turning angle of crank pulley bolt referring to the gauge indicated on timing belt cover.

4) Install the A/C belt tensioner.

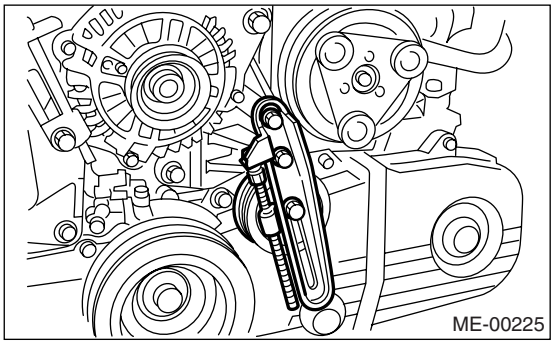

5) Install the V-belt. <Ref. to ME(H4SO)-37, INSTALLATION, V-belt.>

C: INSPECTION

1) Make sure the V-belt is not worn or otherwise damaged.
2) Check the tension of the belt. <Ref. to ME(H4SO)-38, INSPECTION, V-belt.>

14.Timing Belt Cover

A: REMOVAL

1) Remove the V-belts. <Ref. to ME(H4SO)-37, REMOVAL, V-belt.>
2) Remove the crank pulley. <Ref. to ME(H4SO)-39, REMOVAL, Crank Pulley.>
3) Remove the timing belt cover (LH).
4) Remove the front timing belt cover.

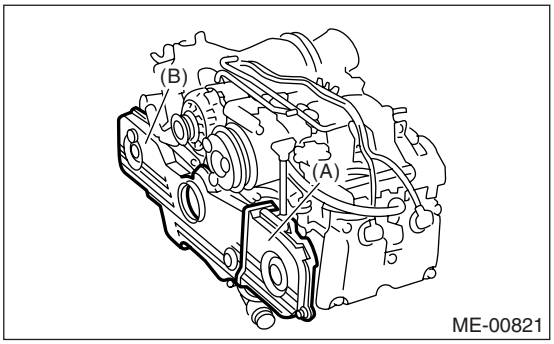

(A) Timing belt cover (LH)
(B) Front timing belt cover

B: INSTALLATION

1) Install the front timing belt cover.

Tightening torque:
5 N·m (0.5 kgf-m, 3.6 ft-lb)

2) Install the timing belt cover (LH).

Tightening torque:
5 N·m (0.5 kgf-m, 3.6 ft-lb)

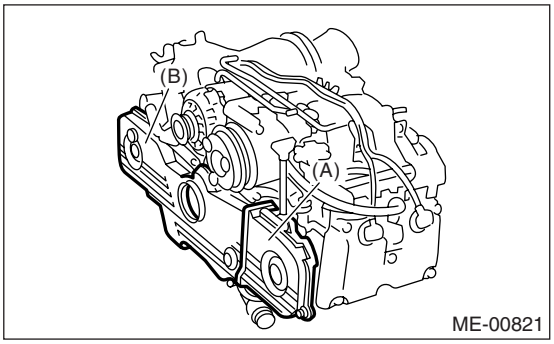

(A) Timing belt cover (LH)
(B) Front timing belt cover

3) Install the crank pulley. <Ref. to ME(H4SO)-39, INSTALLATION, Crank Pulley.>
4) Install the V-belts. <Ref. to ME(H4SO)-37, INSTALLATION, V-belt.>

C: INSPECTION

Check the cover for damage.

15.Timing Belt

A: REMOVAL

1. TIMING BELT

1) Remove the V-belts. <Ref. to ME(H4SO)-37, REMOVAL, V-belt.>
2) Remove the crank pulley. <Ref. to ME(H4SO)-39, REMOVAL, Crank Pulley.>
3) Remove the timing belt cover. <Ref. to ME(H4SO)-40, REMOVAL, Timing Belt Cover.>
4) Remove the timing belt guide. (MT model)

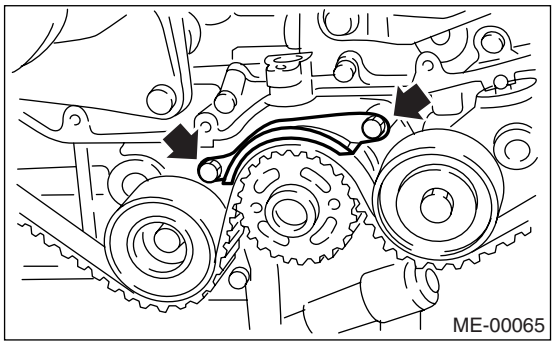

5) If the alignment mark (a) or arrow mark (which indicates rotation direction) on timing belt fade away, put new marks before removing the timing belt as shown in procedures below.

(1) To turn crankshaft, use the ST: Align the mark (a) of sprocket to the cylinder block notch (b), and then ensure the right side cam sprocket mark (c), cam cap and cylinder head matching surface (d) or left side cam sprocket mark (e), timing belt cover notch (f) are properly adjusted.

ST 499987500 CRANKSHAFT SOCKET

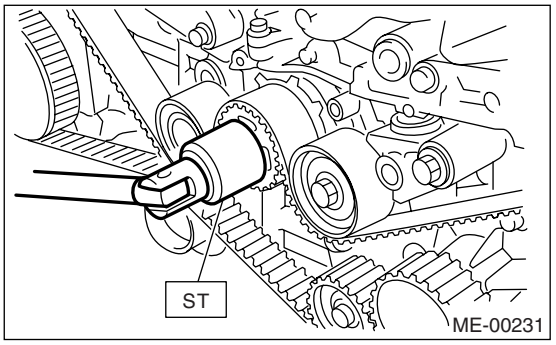

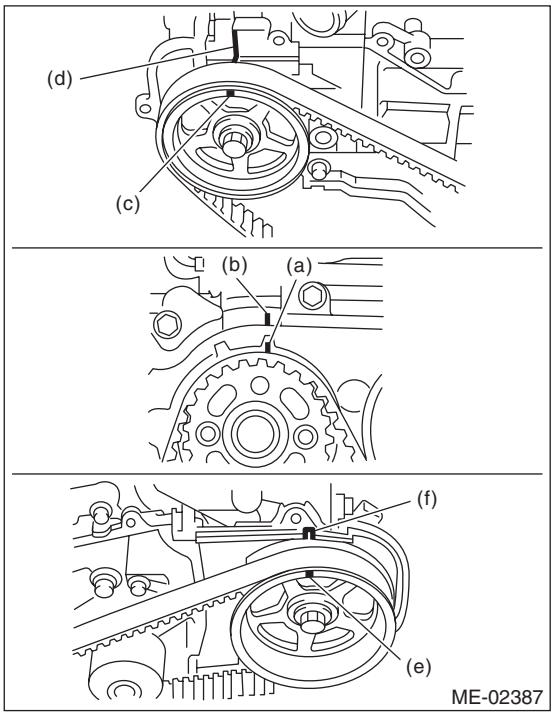

(2) Using white paint, put alignment marks or arrow marks on the timing belts in relation to the crank sprocket and cam sprockets.

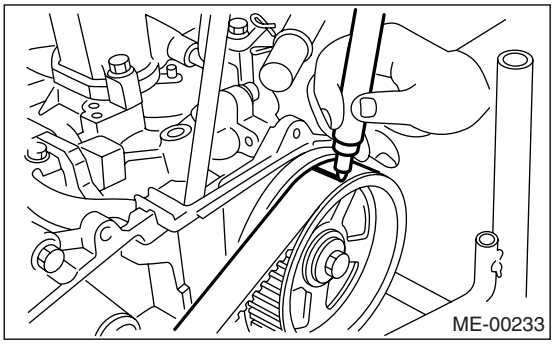

Specified data:
Z_1: Length of 46.8 teeth
Z_2: Length of 43.7 teeth

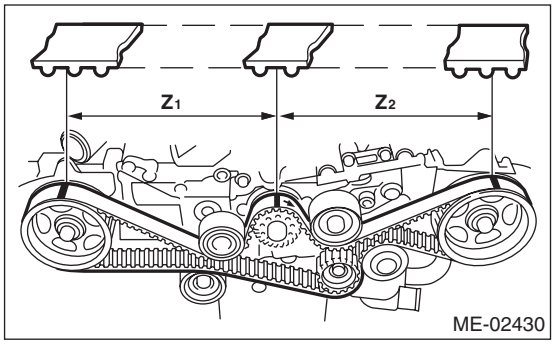

6) Remove the belt idler (No. 2).
7) Remove the belt idler No. 2.

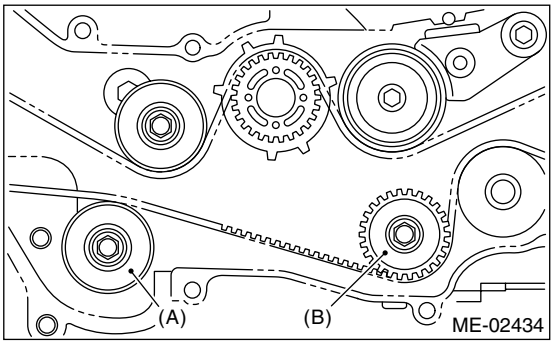

(A) Belt idler (No. 2)
(B) Belt idler No. 2

8) Remove the timing belt.

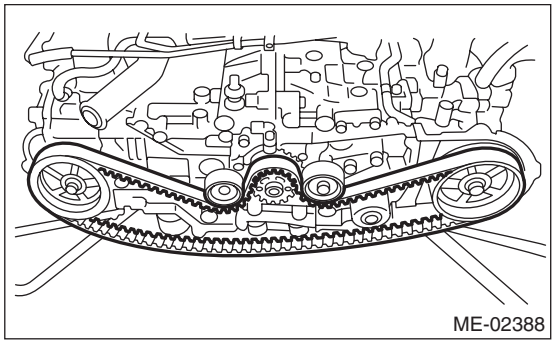

2. BELT IDLER AND AUTOMATIC BELT TENSION ADJUSTER ASSEMBLY

1) Remove the belt idler (No. 1).

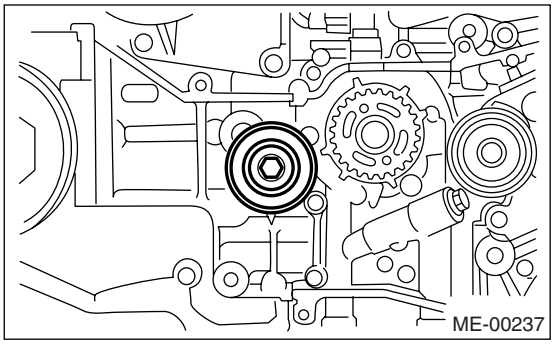

2) Remove the automatic belt tension adjuster assembly.

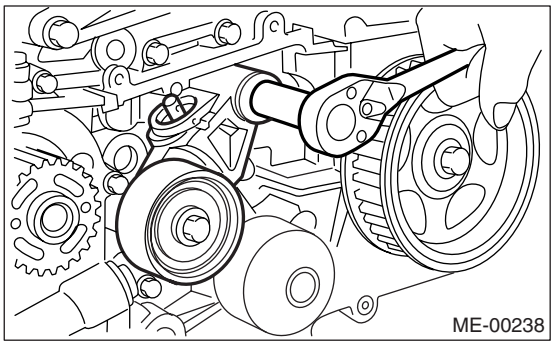

B: INSTALLATION

1. AUTOMATIC BELT TENSION ADJUSTER ASSEMBLY AND BELT IDLER

1) Preparation for installation of automatic belt tension adjuster assembly.

CAUTION:
• Always use a vertical type pressing tool to move the adjuster rod down.
• Do not use a lateral type vise.
• Push the adjuster rod vertically.
• Press-in the push adjuster rod gradually taking more than three minutes.
• Do not allow press pressure to exceed 9,807 N (1,000 kgf, 2,205 lb).
• Press the adjuster rod as far as the end surface of the cylinder. Do not press the adjuster rod into cylinder. Doing so may damage the cylinder.
• Do not release the press pressure until stopper pin is completely inserted.

(1) Attach the automatic belt tension adjuster assembly to the vertical pressing tool.

(2) Slowly move the adjuster rod down with a pressure of more than 165 N (16.8 kgf, 37.1 lb) until the adjuster rod is aligned with the stopper pin hole in the cylinder.

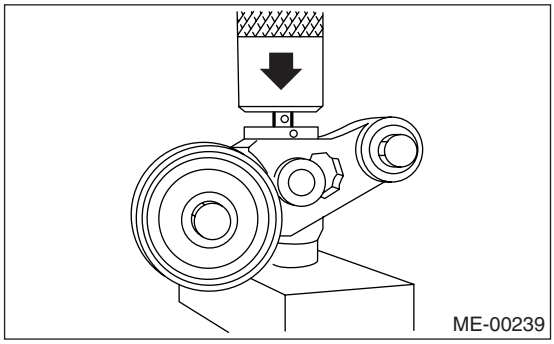

(3) With a 2 mm (0.08 in) dia. stopper pin or a 2 mm (0.08 in) (nominal) dia. hex wrench inserted into the stopper pin hole in cylinder, secure the adjuster rod.

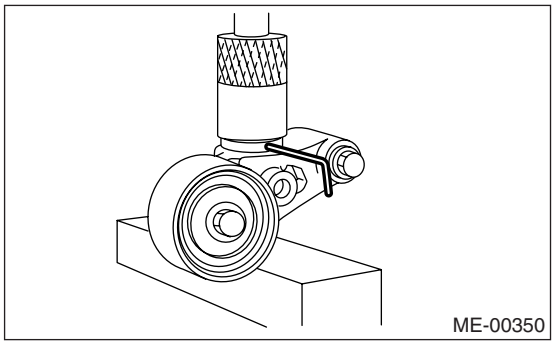

2) Install the automatic belt tension adjuster assembly.

Tightening torque:
39 N·m (4.0 kgf-m, 28.9 ft-lb)

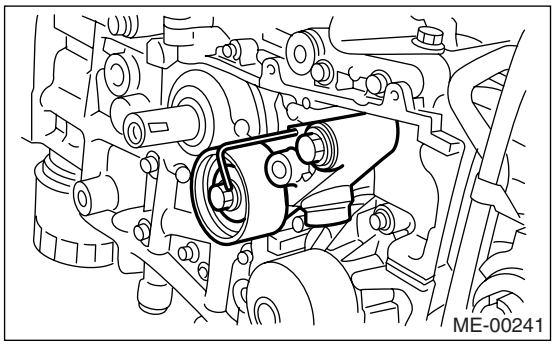

3) Install the belt idler (No. 1).

Tightening torque:
39 N·m (4.0 kgf-m, 28.9 ft-lb)

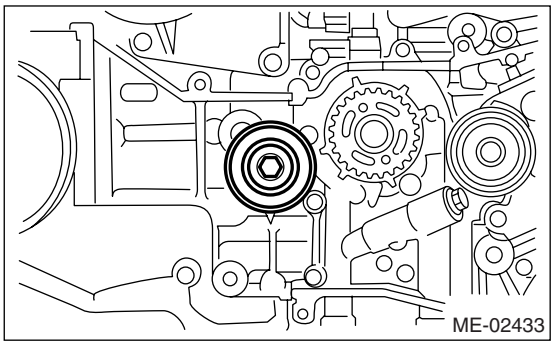

2. TIMING BELT

1) Prepare for installation of automatic belt tension adjuster assembly. <Ref. to ME(H4SO)-42, AUTOMATIC BELT TENSION ADJUSTER ASSEMBLY AND BELT IDLER, INSTALLATION, Timing Belt.>
2) Installation of timing belt:
(1) Turn the cam sprocket No. 1 and 2 using ST so that their alignment marks (A) come to top positions.

ST 18231AA010 CAM SPROCKET WRENCH

NOTE:
CAM SPROCKET WRENCH (499207100) can also be used.

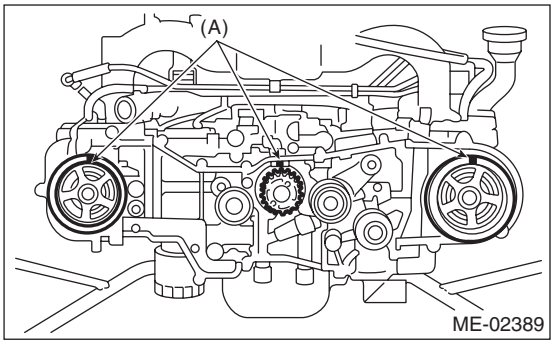

(2) While aligning the alignment mark (B) on timing belt with the mark (A) on sprockets, position the timing belt properly.

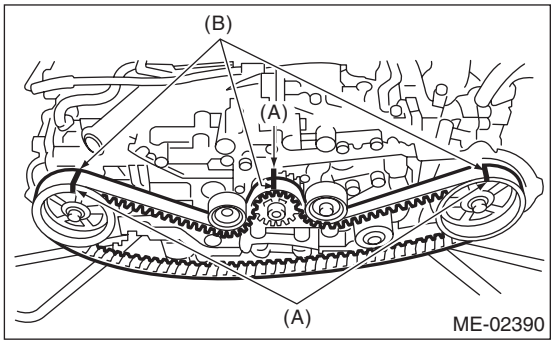

3) Install the belt idler No. 2.

Tightening torque:
39 N·m (4.0 kgf-m, 28.9 ft-lb)

4) Install the belt idler (No. 2).

Tightening torque:
39 N·m (4.0 kgf-m, 28.9 ft-lb)

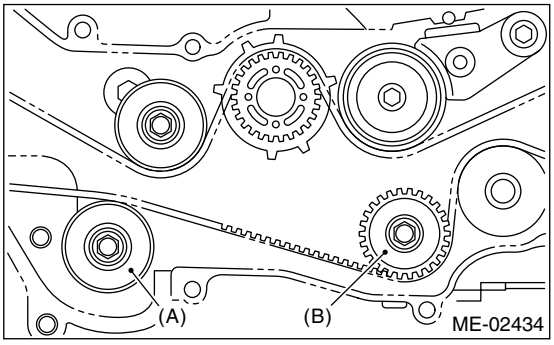

(A) Belt idler (No. 2)
(B) Belt idler No. 2

5) After ensuring the marks on timing belt and cam sprockets are aligned, remove the stopper pin from belt tension adjuster.

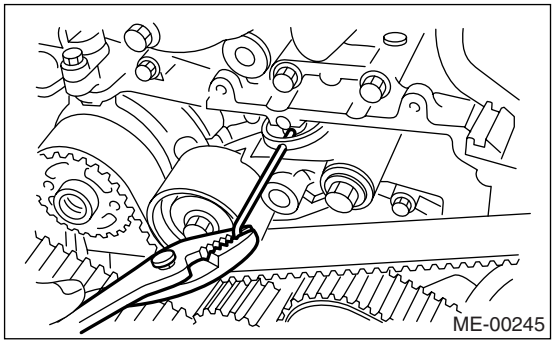

6) Install the timing belt guide. (MT model)
(1) Temporarily tighten the timing belt guide mounting bolts.

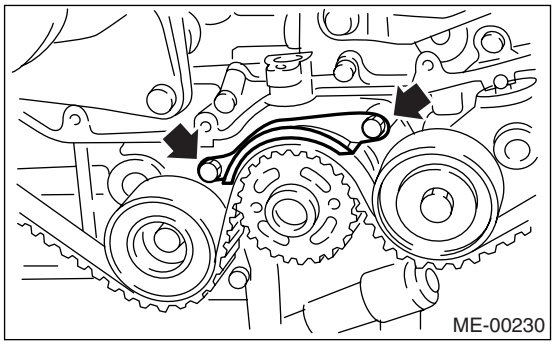

(2) Check and adjust the clearance between timing belt and timing belt guide by using thickness gauge.

Clearance:
1.0±0.5 mm (0.039±0.020 in)

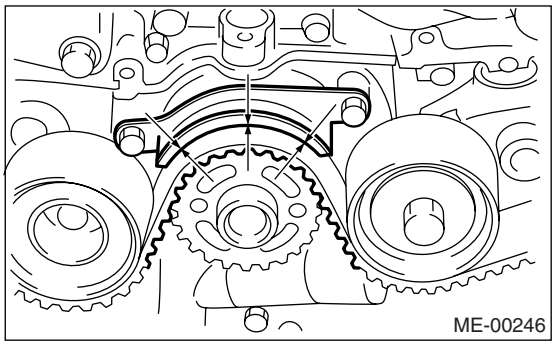

(3) Tighten the timing belt guide mounting bolts.

Tightening torque:
10 N·m (1.0 kgf-m, 7.2 ft-lb)

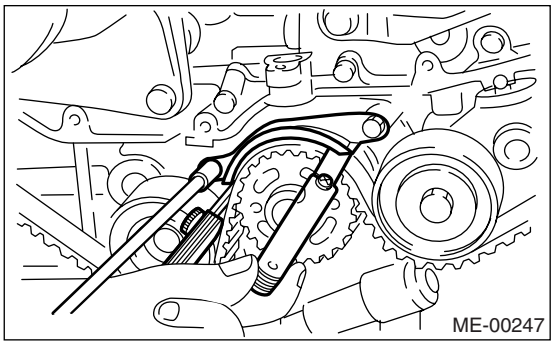

7) Install the timing belt cover.
<Ref. to ME(H4SO)-40, INSTALLATION, Timing Belt Cover.>
8) Install the crank pulley. <Ref. to ME(H4SO)-39, INSTALLATION, Crank Pulley.>
9) Install the V-belts. <Ref. to ME(H4SO)-37, INSTALLATION, V-belt.>

C: INSPECTION

1. TIMING BELT

1) Check the timing belt teeth for breaks, cracks and wear. If any fault is found, replace the belt.
2) Check the condition of the backside of belt. If cracks are found, replace the belt.

CAUTION:
• Be careful not to let oil, grease or coolant contact the belt. Remove quickly and thoroughly if this happens.
• Do not bend the timing belt sharply.

In radial diameter h:
60 mm (2.36 in) or more

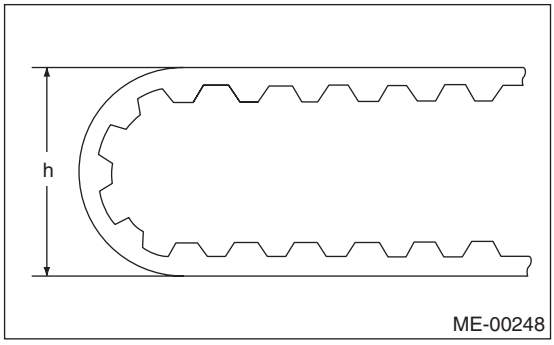

2. AUTOMATIC BELT TENSION ADJUSTER

1) Visually check the oil seals for leaks, and rod ends for abnormal wear or scratches. If necessary, replace the automatic belt tension adjuster assembly.

NOTE:
Slight trances of oil at rod's oil seal does not indicate a problem.

2) Check that the adjuster rod does not move when a pressure of 165 N (16.8 kgf, 37.1 lb) is applied to it. This is to check adjuster rod stiffness.
3) If the adjuster rod is not stiff and moves freely when applying 165 N (16.8 kgf, 37.1 lb), check it using the following procedures:
(1) Slowly press the adjuster rod down to the end surface of the cylinder. Repeat this operation two to three times.
(2) With the adjuster rod moved all the way up, apply a pressure of 165 N (16.8 kgf, 37.1 lb) to it. Check the adjuster rod stiffness.
(3) If the adjuster rod is not stiff and moves down, replace the automatic belt tension adjuster assembly with a new one.

CAUTION:
• Always use a vertical type pressing tool to move the adjuster rod down.
• Do not use a lateral type vise.
• Push the adjuster rod vertically.
• Press the adjuster rod gradually taking more than three minutes.
• Do not allow press pressure to exceed 9,807 N (1,000 kgf, 2,205 lb).
• Press the adjuster rod as far as the end surface of cylinder. Do not press the adjuster rod into cylinder. Doing so may damage the cylinder.

4) Measure the amount of rod protrusion beyond the body. If it is not within specifications, replace with a new one.

Amount of rod protrusion H:
5.7±0.5 mm (0.224±0.020 in)

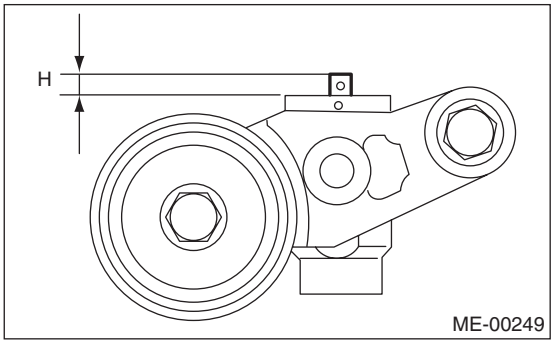

3. BELT TENSION PULLEY

1) Check the mating surfaces of timing belt and contact point of adjuster rod for abnormal wear or scratches. Replace the automatic belt tension adjuster assembly if faulty.
2) Check the belt tension pulley for smooth rotation. Replace if noise or excessive play occurs.
3) Check the belt tension pulley for grease leakage.

4. BELT IDLER

1) Check the belt idler for smooth rotation. Replace if noise or excessive play occurs.
2) Check the outer contacting surfaces of idler pulley for abnormal wear and scratches.
3) Check the belt idler for grease leakage.

16.Cam Sprocket

A: REMOVAL

1) Remove the V-belts. <Ref. to ME(H4SO)-37, REMOVAL, V-belt.>
2) Remove the crank pulley. <Ref. to ME(H4SO)-39, REMOVAL, Crank Pulley.>
3) Remove the timing belt cover. <Ref. to ME(H4SO)-40, REMOVAL, Timing Belt Cover.>
4) Remove the timing belt. <Ref. to ME(H4SO)-41, REMOVAL, Timing Belt.>
5) Remove the camshaft position sensor. <Ref. to FU(H4SO)-23, REMOVAL, Camshaft Position Sensor.>
6) Remove the cam sprocket No. 1 and 2. To lock the camshaft, use ST.
ST 18231AA010 CAM SPROCKET WRENCH

NOTE:
CAM SPROCKET WRENCH (499207100) can also be used.

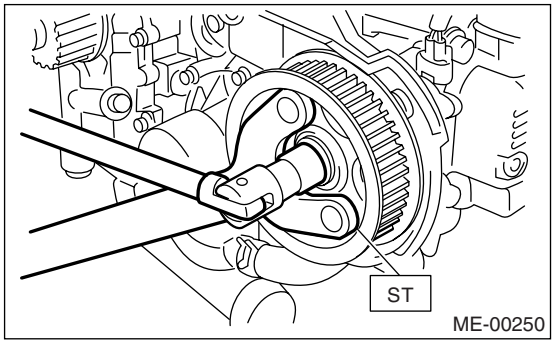

B: INSTALLATION

1) Install the cam sprocket No. 1 and 2. To lock the camshaft, use ST.
ST 18231AA010 CAM SPROCKET WRENCH

NOTE:
CAM SPROCKET WRENCH (499207100) can also be used.

Tightening torque:
78 N·m (8.0 kgf-m, 57.9 ft-lb)

NOTE:
Do not confuse left and right side cam sprockets during installation. Cam sprocket No. 2 is identified by a protrusion used to monitor the camshaft position sensor.

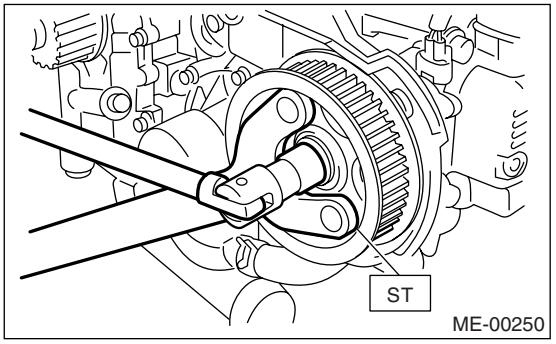

2) Install the camshaft position sensor. <Ref. to FU(H4SO)-23, INSTALLATION, Camshaft Position Sensor.>
3) Install the timing belt. <Ref. to ME(H4SO)-42, INSTALLATION, Timing Belt.>
4) Install the timing belt cover.
<Ref. to ME(H4SO)-40, INSTALLATION, Timing Belt Cover.>
5) Install the crank pulley. <Ref. to ME(H4SO)-39, INSTALLATION, Crank Pulley.>
6) Install the V-belts. <Ref. to ME(H4SO)-37, INSTALLATION, V-belt.>

C: INSPECTION

1) Check the cam sprocket teeth for abnormal wear and scratches.
2) Make sure there is no free play between cam sprocket and key.
3) Check the cam sprocket protrusion used for sensor for damage and contamination of foreign matter.

17.Crank Sprocket

A: REMOVAL

1) Remove the V-belts. <Ref. to ME(H4SO)-37, REMOVAL, V-belt.>
2) Remove the crank pulley. <Ref. to ME(H4SO)-39, REMOVAL, Crank Pulley.>
3) Remove the timing belt cover. <Ref. to ME(H4SO)-40, REMOVAL, Timing Belt Cover.>
4) Remove the timing belt. <Ref. to ME(H4SO)-41, REMOVAL, Timing Belt.>
5) Remove the cam sprocket. <Ref. to ME(H4SO)-46, REMOVAL, Cam Sprocket.>
6) Remove the crank sprocket.

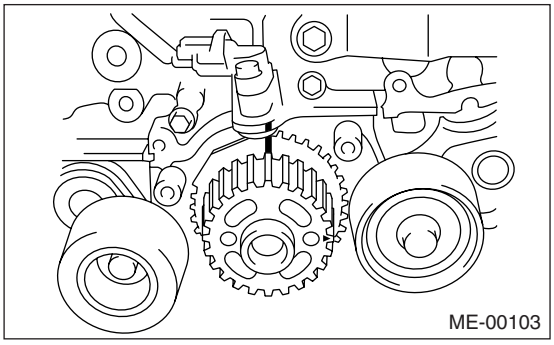

B: INSTALLATION

1) Install the crank sprocket.

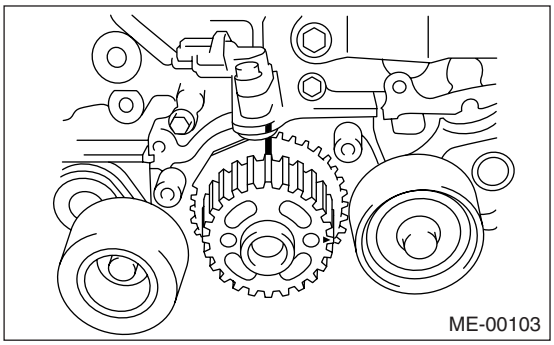

2) Install the cam sprocket. <Ref. to ME(H4SO)-46, INSTALLATION, Cam Sprocket.>
3) Install the timing belt. <Ref. to ME(H4SO)-42, INSTALLATION, Timing Belt.>
4) Install the timing belt cover.
<Ref. to ME(H4SO)-40, INSTALLATION, Timing Belt Cover.>
5) Install the crank pulley. <Ref. to ME(H4SO)-39, INSTALLATION, Crank Pulley.>
6) Install the V-belts. <Ref. to ME(H4SO)-37, INSTALLATION, V-belt.>

C: INSPECTION

1) Check the crank sprocket teeth for abnormal wear and scratches.
2) Make sure there is no free play between crank sprocket and key.
3) Check the crank sprocket protrusion used for sensor for damage and contamination of foreign matter.

18.Valve Rocker Assembly

A: REMOVAL

1) Remove the V-belts. <Ref. to ME(H4SO)-37, REMOVAL, V-belt.>
2) Remove the crank pulley. <Ref. to ME(H4SO)-39, REMOVAL, Crank Pulley.>
3) Remove the timing belt cover. <Ref. to ME(H4SO)-40, REMOVAL, Timing Belt Cover.>
4) Remove the timing belt. <Ref. to ME(H4SO)-41, REMOVAL, Timing Belt.>
5) Remove the cam sprocket. <Ref. to ME(H4SO)-46, REMOVAL, Cam Sprocket.>
6) Disconnect the PCV hose and remove the rocker cover.
7) Removal of valve rocker assembly
   (1) Remove the bolts (a) through (h) in alphabetical sequence.

NOTE:
Leave two or three threads of bolts (g) and (h) engaged in order to retain the valve rocker assembly.

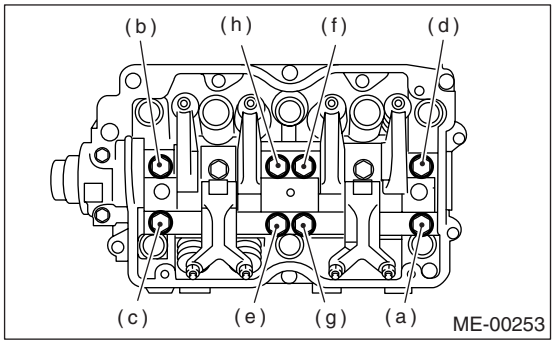

   (2) Remove the valve rocker assembly.

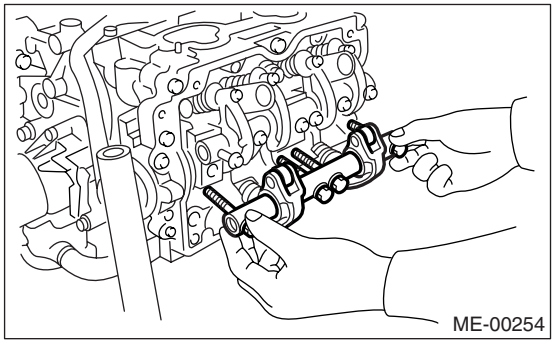

B: INSTALLATION

1) Install the valve rocker assembly.
   (1) Temporarily tighten the bolts (a) through (d) equally in order as shown in the figure.

NOTE:
Do not allow the valve rocker assembly to damage knock pins.

   (2) Tighten the bolts (e) through (h) to specified torque.
   (3) Tighten the bolts (a) through (d) to specified torque.

Tightening torque:
25 N·m (2.5 kgf-m, 18.1 ft-lb)

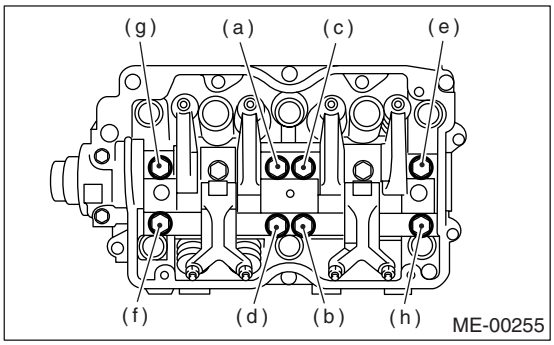

2) Adjust the valve clearance. <Ref. to ME(H4SO)-27, ADJUSTMENT, Valve Clearance.>
3) Install the rocker cover and rocker cover gasket, and then connect PCV hose.

NOTE:
Use a new rocker cover gasket.

4) Install the cam sprocket. <Ref. to ME(H4SO)-46, INSTALLATION, Cam Sprocket.>
5) Install the timing belt. <Ref. to ME(H4SO)-42, INSTALLATION, Timing Belt.>
6) Install the timing belt cover.
<Ref. to ME(H4SO)-40, INSTALLATION, Timing Belt Cover.>
7) Install the crank pulley. <Ref. to ME(H4SO)-39, INSTALLATION, Crank Pulley.>
8) Install the V-belts. <Ref. to ME(H4SO)-37, INSTALLATION, V-belt.>

C: DISASSEMBLY

1) Remove the bolts which secure the rocker shaft.
2) Extract the rocker shaft. Remove the valve rocker arms, springs and shaft supports from rocker shaft.

NOTE:
Keep all the removed parts in order for re-installing in their original positions.

3) Remove the nut and adjusting screw from valve rocker.

D: ASSEMBLY

1) Install the adjusting screw and nut to valve rocker.
2) Arrange the valve rocker arms, springs and shaft supports in assembly order, and then insert the valve rocker shaft.

Tightening torque (Shaft supports installing bolts):
5 N·m (0.5 kgf-m, 3.6 ft-lb)

NOTE:
Valve rocker arms, rocker shaft and shaft supports have identification marks. Ensure the parts with same markings are properly assembled.

3) Install the valve rocker shaft securing bolts.

E: INSPECTION

1. VALVE ROCKER ARM AND ROCKER SHAFT

1) Measure the inner diameter of valve rocker arm and outer diameter of valve rocker shaft, and determine the difference (oil clearance) between the two values.

Clearance between arm and shaft:
Standard:
0.020 — 0.054 mm (0.0008 — 0.0021 in)

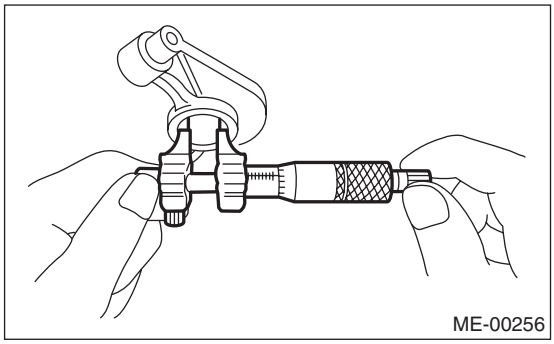
ME-00256

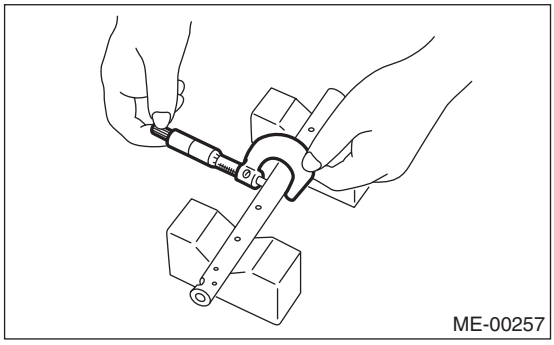
ME-00257

2) If the oil clearance exceeds the standard value, replace the valve rocker arm or shaft, whichever shows greater amount of wear.

Rocker arm inside diameter:
22.020 — 22.041 mm (0.8669 — 0.8678 in)

Rocker shaft diameter:
21.987 — 22.000 mm (0.8656 — 0.8661 in)

3) If the cam or valve contact surface of valve rocker arm is worn or dented excessively, replace the valve rocker arm.
4) Check that the valve rocker arm roller rotates smoothly. If not, replace the valve rocker arm.

19.Camshaft

A: REMOVAL

1) Remove the V-belts. <Ref. to ME(H4SO)-37, REMOVAL, V-belt.>
2) Remove the crank pulley. <Ref. to ME(H4SO)-39, REMOVAL, Crank Pulley.>
3) Remove the timing belt cover. <Ref. to ME(H4SO)-40, REMOVAL, Timing Belt Cover.>
4) Remove the timing belt. <Ref. to ME(H4SO)-41, REMOVAL, Timing Belt.>
5) Remove the cam sprocket. <Ref. to ME(H4SO)-46, REMOVAL, Cam Sprocket.>
6) Remove the crank sprocket. <Ref. to ME(H4SO)-47, REMOVAL, Crank Sprocket.>
7) Remove the timing belt cover No. 2 (LH).
8) Remove the timing belt cover No. 2 (RH).

NOTE:
Do not damage or lose the seal rubber when removing the timing belt covers.

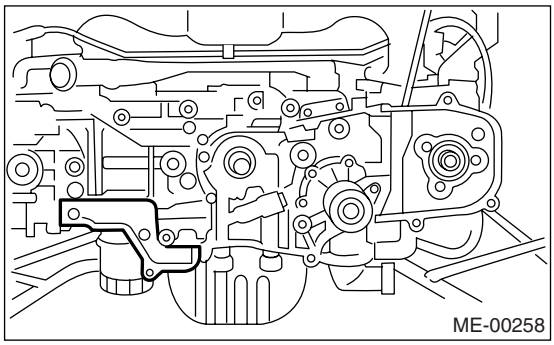
ME-00258

9) Remove the tensioner bracket.

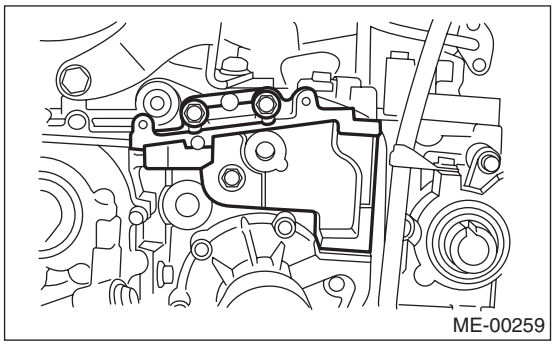
ME-00259

10) Remove the camshaft position sensor support. (LH side only)
11) Remove the oil level gauge guide. (LH side only)
12) Remove the valve rocker assembly. <Ref. to ME(H4SO)-48, REMOVAL, Valve Rocker Assembly.>
13) Remove the camshaft cap.

(1) Remove the bolts (a) and (b) in alphabetical sequence.

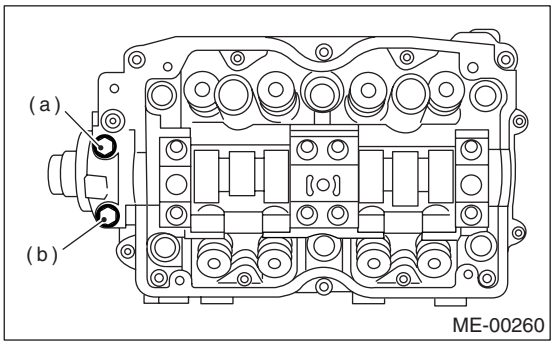

ME-00260

(2) Equally loosen the bolts (c) through (j) all the way in alphabetical sequence.

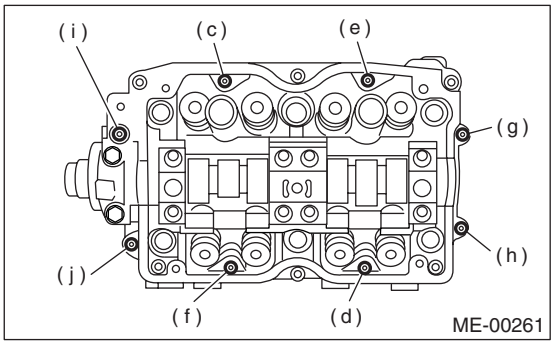

ME-00261

(3) Remove the bolts (k) through (p) in alphabetical sequence using ST.

ST 499497000 TORX® PLUS

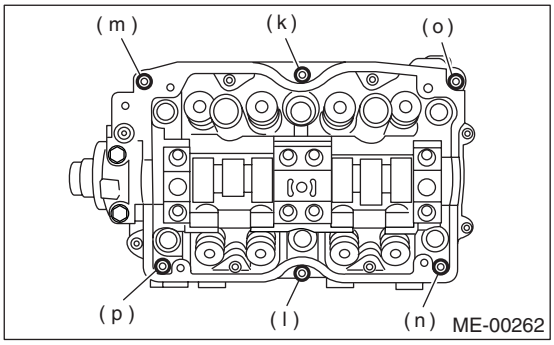

ME-00262

(4) Remove the camshaft cap.

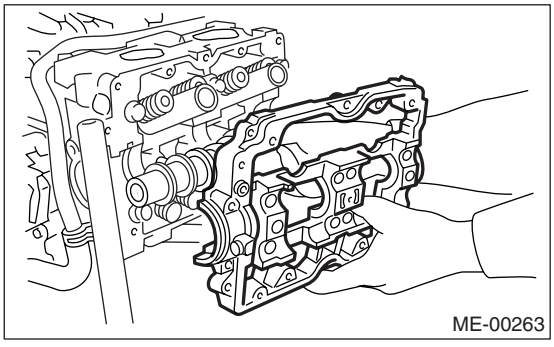
ME-00263

14) Remove the camshaft.
15) Remove the oil seal.
16) Remove the plug from the rear side of camshaft.

CAUTION:
- **Do not remove the oil seal unless necessary.**
- **Do not scratch the journal surface when removing the oil seal.**

B: INSTALLATION

1) Apply a coat of engine oil to camshaft journals and install the camshaft.
2) Install the camshaft cap.
   (1) Apply liquid gasket to the mating surfaces of camshaft cap.

Liquid gasket:
THREE BOND 1280B (Part No. K0877YA018)

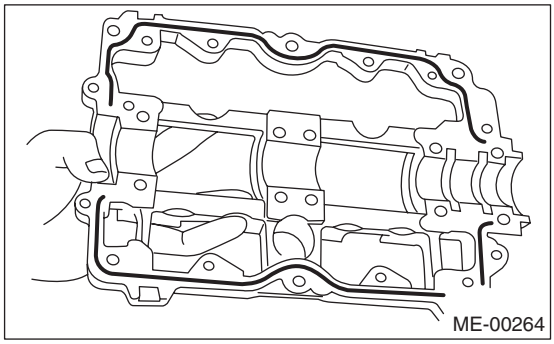

NOTE:
- Apply a coat of liquid gasket of 3 mm (0.12 in) in diameter (A) along the edge (B) of camshaft cap (C) mating surface.
- Assemble them within 20 min. after applying liquid gasket.

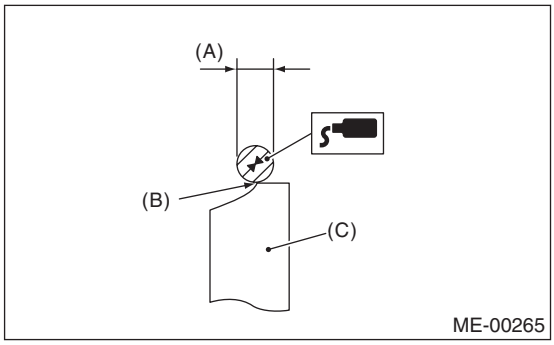

(2) Temporarily tighten the bolts (g) through (j) in alphabetical sequence.

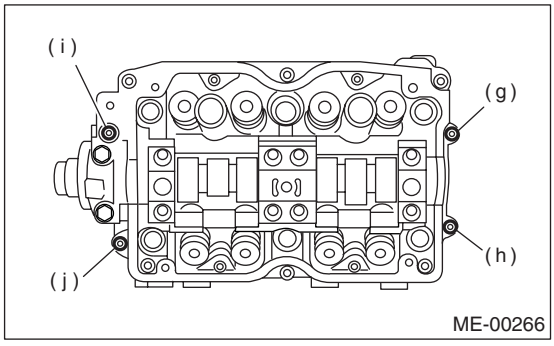

(3) Install the valve rocker assembly.

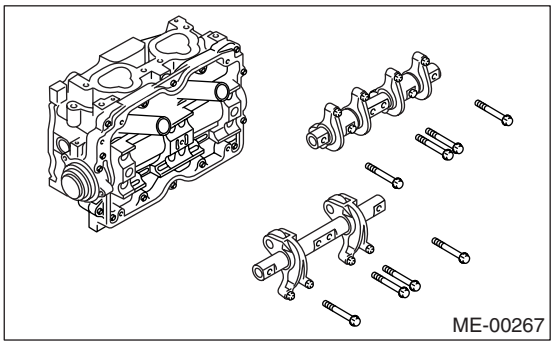

(4) Tighten the bolts (a) through (h) in alphabetical sequence.

Tightening torque:
25 N·m (2.5 kgf-m, 18.1 ft-lb)

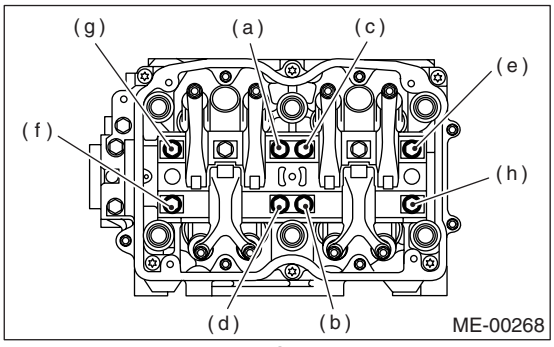

(5) Tighten the TORX® bolts (i) through (n) in alphabetical sequence using ST.

ST 499497000 TORX® PLUS

Tightening torque:
18 N·m (1.8 kgf-m, 13.0 ft-lb)

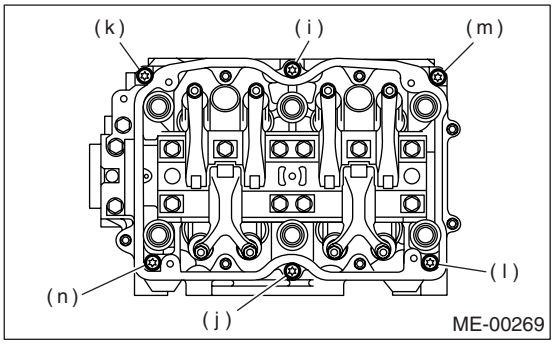

(6) Tighten the bolts (o) through (v) in alphabetical sequence.

Tightening torque:
10 N·m (1.0 kgf-m, 7.2 ft-lb)

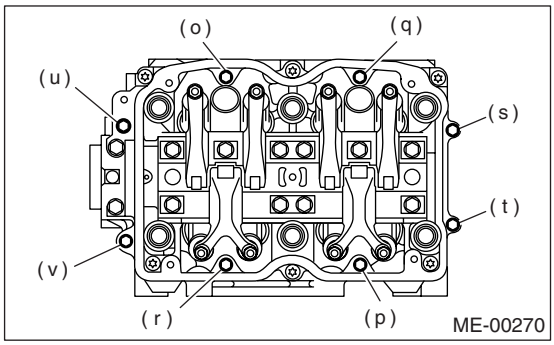

(7) Tighten the bolts (w) and (x) in alphabetical sequence.

Tightening torque:
10 N·m (1.0 kgf-m, 7.2 ft-lb)

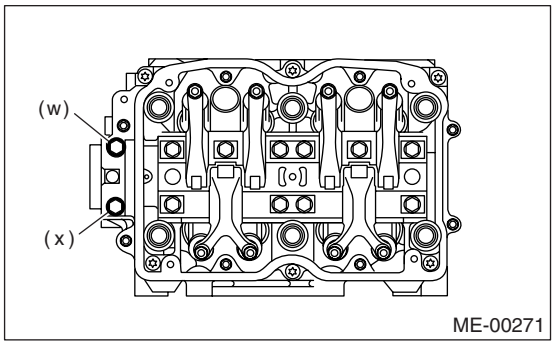

3) Apply a coat of grease to oil seal lips and install the oil seal (A) on camshaft using ST1 and ST2.

NOTE:
Use a new oil seal.

ST1 499597000 OIL SEAL GUIDE
ST2 499587500 OIL SEAL INSTALLER

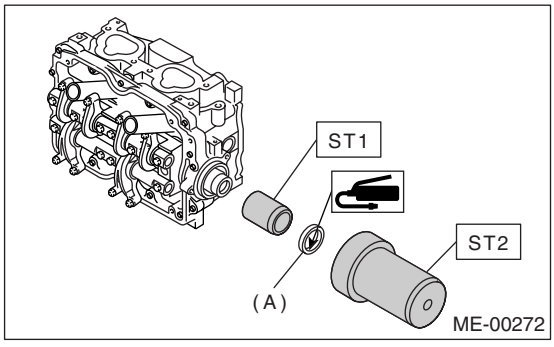

4) Install the plug using ST.

ST 499587700 CAMSHAFT OIL SEAL INSTALLER

5) Adjust the valve clearance. <Ref. to ME(H4SO)-27, ADJUSTMENT, Valve Clearance.>

6) Install the rocker cover and rocker cover gasket, and then connect PCV hose.

NOTE:
Use a new rocker cover gasket.

7) Install the oil level gauge guide. (LH side only)
8) Install the camshaft position sensor support. (LH side only)
9) Install the tensioner bracket.

Tightening torque:
25 N·m (2.5 kgf-m, 18.1 ft-lb)

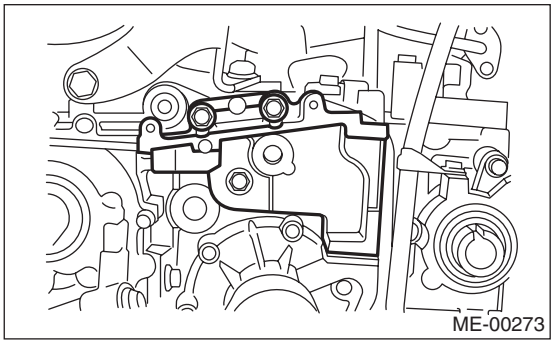

10) Install the timing belt cover No. 2 (RH).

Tightening torque:
5 N·m (0.5 kgf-m, 3.6 ft-lb)

11) Install the timing belt cover No. 2 (LH).

Tightening torque:
5 N·m (0.5 kgf-m, 3.6 ft-lb)

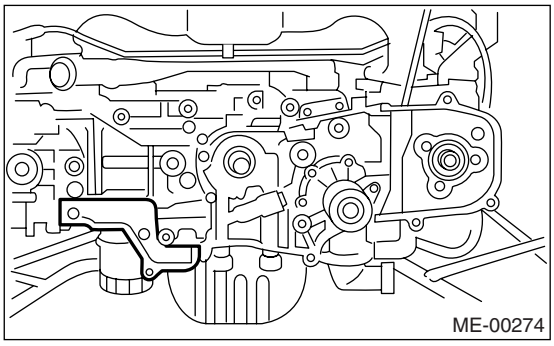

12) Install the crank sprocket.
<Ref. to ME(H4SO)-47, INSTALLATION, Crank Sprocket.>
13) Install the cam sprocket. <Ref. to ME(H4SO)-46, INSTALLATION, Cam Sprocket.>
14) Install the timing belt. <Ref. to ME(H4SO)-42, INSTALLATION, Timing Belt.>
15) Install the timing belt cover.
<Ref. to ME(H4SO)-40, INSTALLATION, Timing Belt Cover.>
16) Install the crank pulley. <Ref. to ME(H4SO)-39, INSTALLATION, Crank Pulley.>
17) Install the V-belts. <Ref. to ME(H4SO)-37, INSTALLATION, V-belt.>

C: INSPECTION

1. CAMSHAFT

1) Measure the bend, and repair or replace if necessary.

Service limit:
0.020 mm (0.00079 in)

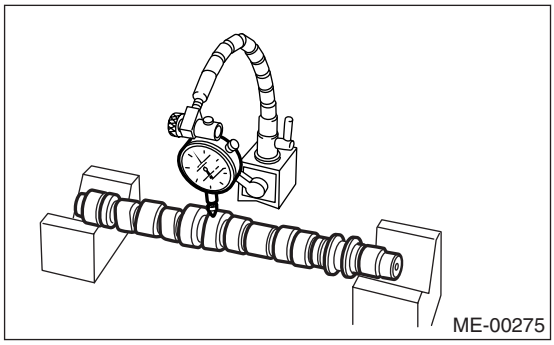

2) Check the journal for damage and wear. Replace if faulty.
3) Measure the outer diameter of camshaft journal and inner diameter of cylinder head journal, and determine the difference (oil clearance) between the two values. If the oil clearance exceeds standard value, replace the camshaft or cylinder head as necessary.

		Unit: mm (in)
Clearance at journal	Standard	0.055 — 0.090 (0.0022 — 0.0035)
Camshaft journal O.D.		31.928 — 31.945 (1.2570 — 1.2577)
Journal hole I.D.		32.000 — 32.018 (1.2598 — 1.2605)

4) Check the cam face condition, and remove the minor faults by grinding with oil stone. Measure the cam height H. If it exceeds the limit, replace it.

Cam height H:

Model	Parts	Unit: mm (in)	
U5	Intake	Standard	39.485 — 39.585 (1.5545 — 1.5585)
	Exhaust	Standard	39.843 — 39.943 (1.5686 — 1.5726)
Except for U5	Intake	Standard	39.485 — 39.585 (1.5545 — 1.5585)
	Exhaust	Standard	39.720 — 39.820 (1.5638 — 1.5677)

Cam base circle diameter A:
Intake: 34.00 mm (1.3386 in)
Exhaust: 34.00 mm (1.3386 in)

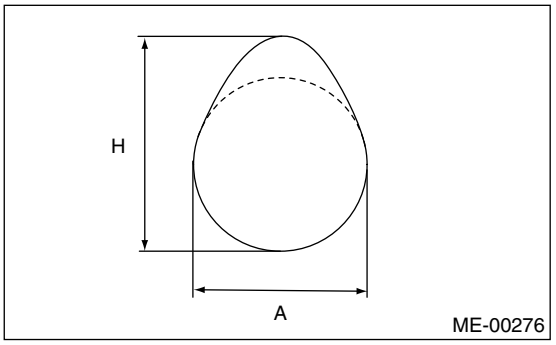

2. CAMSHAFT SUPPORT

Measure the side clearance of camshaft with setting the dial gauge at end of camshaft. If side clearance exceeds the limit, replace the camshaft support.

Standard:
0.030 — 0.090 mm (0.0012 — 0.0035 in)

20.Cylinder Head

A: REMOVAL

1) Remove the V-belts. <Ref. to ME(H4SO)-37, REMOVAL, V-belt.>
2) Remove the crank pulley. <Ref. to ME(H4SO)-39, REMOVAL, Crank Pulley.>
3) Remove the timing belt cover. <Ref. to ME(H4SO)-40, REMOVAL, Timing Belt Cover.>
4) Remove the timing belt. <Ref. to ME(H4SO)-41, REMOVAL, Timing Belt.>
5) Remove the cam sprocket. <Ref. to ME(H4SO)-46, REMOVAL, Cam Sprocket.>
6) Remove the intake manifold. <Ref. to FU(H4SO)-12, REMOVAL, Intake Manifold.>
7) Remove the bolt which installs the A/C compressor bracket on cylinder head.
8) Remove the valve rocker assembly. <Ref. to ME(H4SO)-48, REMOVAL, Valve Rocker Assembly.>
9) Remove the camshaft. <Ref. to ME(H4SO)-50, REMOVAL, Camshaft.>
10) Remove the cylinder head bolts in alphabetical sequence as shown in the figure.

NOTE:
Leave bolts (a) and (c) engaged by three or four threads to prevent the cylinder head from falling.

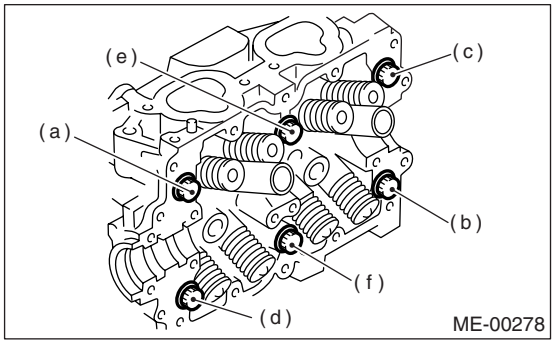

11) While tapping the cylinder head with a plastic hammer, separate it from cylinder block.
12) Remove the bolts (a) and (c) to remove the cylinder head.

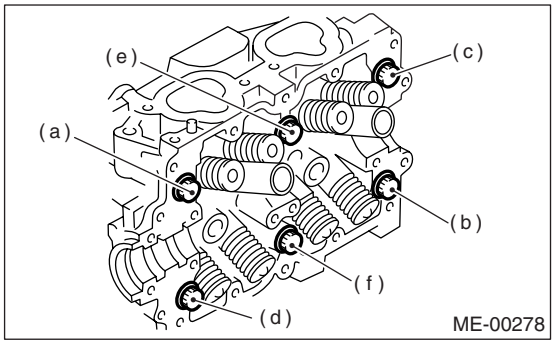

13) Remove the cylinder head gasket.

CAUTION:
Be careful not to scratch the mating surface of cylinder head and cylinder block.

14) Similarly, remove the right side cylinder head.

B: INSTALLATION

1) Install the cylinder head to the cylinder block.

CAUTION:
Be careful not to scratch the mating surface of cylinder head and cylinder block.

NOTE:
Use a new cylinder head gasket.

(1) Clean the bolt threads and the bolt holes in the cylinder block.

CAUTION:
To avoid erroneous tightening of the bolts, clean out the bolt holes sufficiently by blowing with compressed air to eliminate engine coolant etc.

(2) Apply a sufficient coat of engine oil to the washer and bolt thread.
(3) Tighten all bolts to 40 N·m (4.1 kgf-m, 29.5 ft-lb) in alphabetical order.
(4) Retighten all bolts to 95 N·m (9.7 kgf-m, 70.1 ft-lb) in alphabetical order.

CAUTION:
If the bolt makes stick-slip sound during tightening, repeat the procedure from step (1). In this case, the cylinder head gasket can be reused.

(5) Loosen all the bolts by 180° in the reverse order of installing, and loosen them further by 180°.
(6) Tighten all bolts to 10 N·m (1.0 kgf-m, 7.4 ft-lb) in alphabetical order.
(7) Retighten all bolts to 30 N·m (3.1 kgf-m, 22.1 ft-lb) in alphabetical order.
(8) Retighten all bolts to 60 N·m (6.1 kgf-m, 44.3 ft-lb) in alphabetical order.
(9) Retighten all bolts by 80 — 90° in alphabetical order.
(10) Retighten all bolts by 40 — 45° in alphabetical order.

CAUTION:
The tightening angle of the bolt should not exceed 45°.

(11) Retighten bolts (a) and (b) by 40 — 45°.

CAUTION:
Make sure the total "tightening angle" of steps (10) and (11) does not exceed 90°.

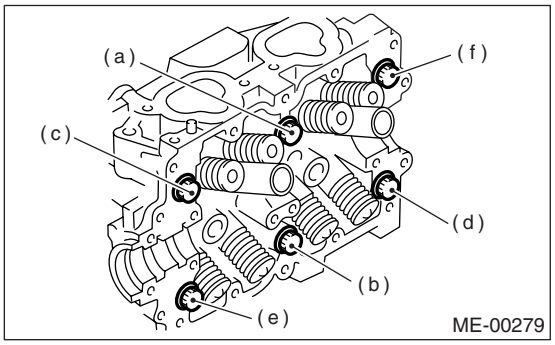

2) Install the camshaft. <Ref. to ME(H4SO)-51, INSTALLATION, Camshaft.>
3) Install the valve rocker assembly. <Ref. to ME(H4SO)-48, INSTALLATION, Valve Rocker Assembly.>
4) Install the A/C compressor bracket on cylinder head.
5) Install the intake manifold.
<Ref. to FU(H4SO)-13, INSTALLATION, Intake Manifold.>
6) Install the cam sprocket. <Ref. to ME(H4SO)-46, INSTALLATION, Cam Sprocket.>
7) Install the timing belt. <Ref. to ME(H4SO)-42, INSTALLATION, Timing Belt.>
8) Install the timing belt cover.
<Ref. to ME(H4SO)-40, INSTALLATION, Timing Belt Cover.>
9) Install the crank pulley. <Ref. to ME(H4SO)-39, INSTALLATION, Crank Pulley.>
10) Install the V-belts. <Ref. to ME(H4SO)-37, INSTALLATION, V-belt.>

C: DISASSEMBLY

1) Place the cylinder head on the ST.
ST 498267800 CYLINDER HEAD TABLE
2) Set the ST on valve spring. Compress the valve spring and remove the valve spring retainer key. Remove each valve and valve spring.
ST 499718000 VALVE SPRING REMOVER

NOTE:
Keep all the removed parts in order for re-installing in their original positions.

CAUTION:
- **Mark each valve to prevent confusion.**
- **Use extreme care not to damage the lips of the intake valve oil seals and exhaust valve oil seals.**

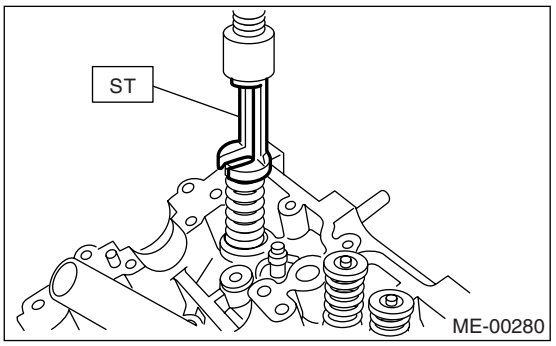

D: ASSEMBLY

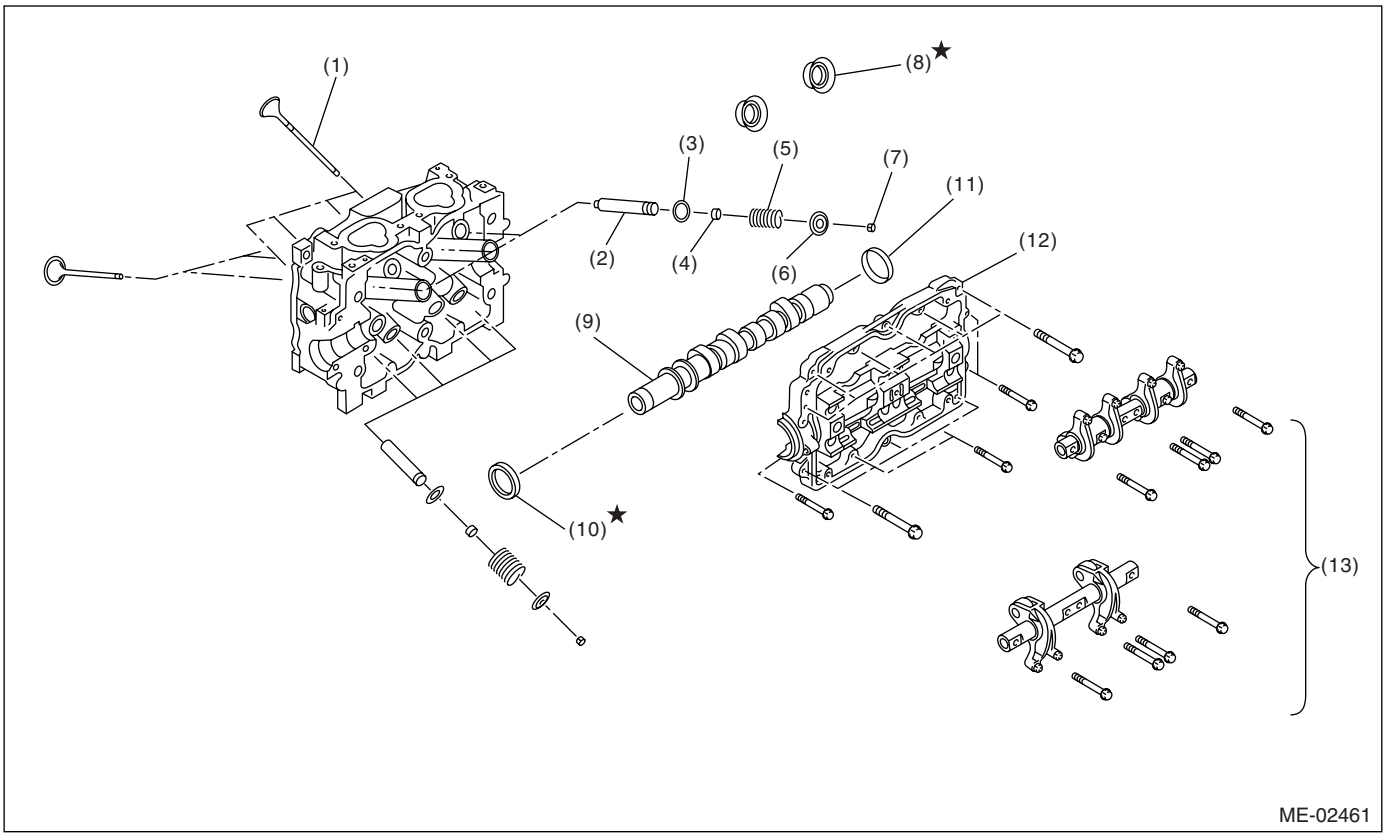

(1)	Valve	(6)	Retainer	(11)	Plug
(2)	Valve guide	(7)	Retainer key	(12)	Camshaft cap
(3)	Valve spring seat	(8)	Spark plug gasket	(13)	Valve rocker ASSY
(4)	Oil seal	(9)	Camshaft		
(5)	Valve springs	(10)	Oil seal		

1) Installation of valve spring and valve:
(1) Place the cylinder head on the ST.

ST 498267800CYLINDER HEAD TABLE

(2) Coat the stem of each valve with engine oil and insert the valve into valve guide.

CAUTION:
Use extreme care not to damage the oil lips when inserting the valve into valve guide.

(3) Install the valve spring and retainer.

NOTE:
Be sure to install the valve springs with their close-coiled end facing the seat on the cylinder head.

(4) Set the ST on valve spring.

ST 499718000 VALVE SPRING REMOVER

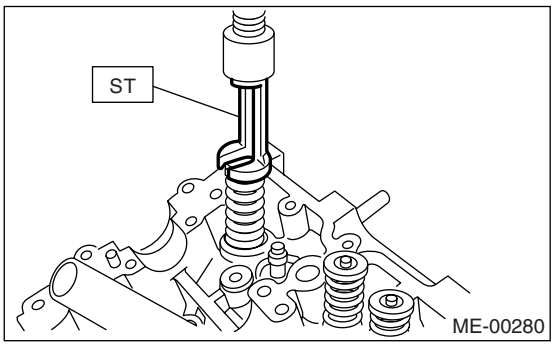

(5) Compress the valve spring and fit the valve spring retainer key.

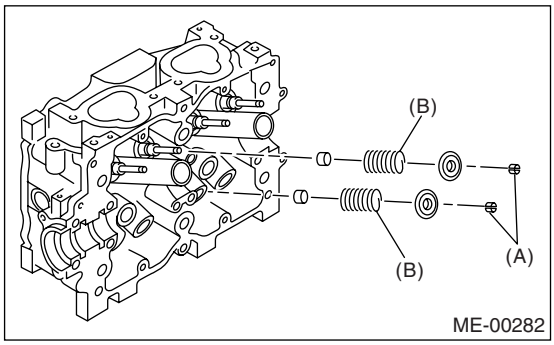

(A) Retainer key
(B) Valve springs

(6) After installing, tap the valve spring retainers lightly with a plastic hammer for better seating.

E: INSPECTION

1. CYLINDER HEAD

1) Make sure that no crack or other damage do not exist. In addition to visual inspection, inspect important areas using liquid penetrant tester.
Also make sure the gasket installing surface shows no trace of gas and water leaks.
2) Place the cylinder head on the ST.
ST 498267800CYLINDER HEAD TABLE
3) Measure the warping of the cylinder head surface that mates with crankcase using a straight edge and thickness gauge.
If the warping exceeds the limit, regrind the surface with a surface grinder.

Warping limit:
0.03 mm (0.0012 in)

Grinding limit:
0.1 mm (0.004 in)

Standard height of cylinder head:
97.5 mm (3.839 in)

NOTE:
Uneven torque for the cylinder head bolts can cause warping. When reassembling, pay special attention to the torque so as to tighten evenly.

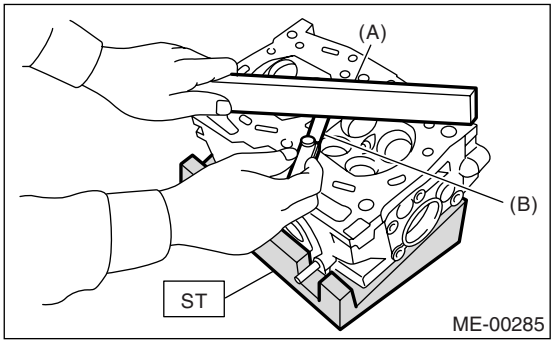

(A) Straight edge
(B) Thickness gauge

2. VALVE SEAT

Inspect the intake and exhaust valve seats, and correct the contact surfaces with a valve seat cutter if they are defective or when valve guides are replaced.

Valve seat width W:
Standard
Intake (A) 0.8 — 1.4 mm (0.03 — 0.055 in)
Exhaust (B) 1.2 — 1.8 mm (0.047 — 0.071 in)

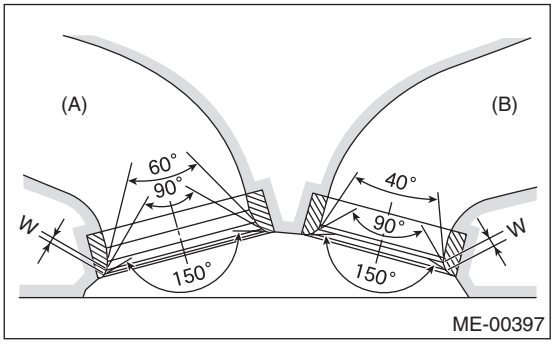

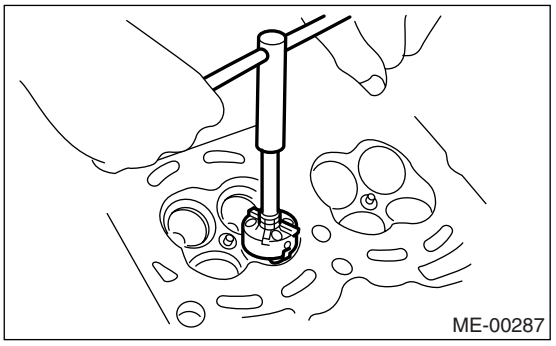

3. VALVE GUIDE

1) Check the clearance between valve guide and stem. The clearance can be checked by measuring respectively the outer diameter of valve stem and inner diameter of valve guide with a micrometer.

Clearance between the valve guide and valve stem:

Standard

Intake 0.035 — 0.062 mm (0.0014 — 0.0024 in)

Exhaust 0.040 — 0.067 mm (0.0016 — 0.0026 in)

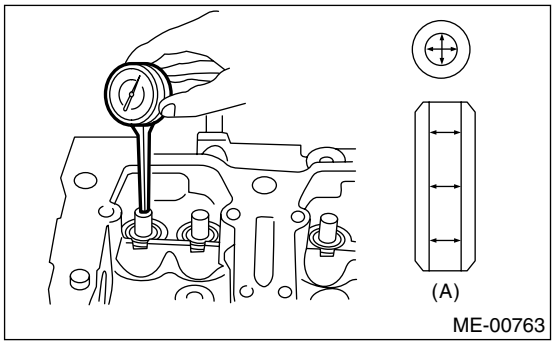

(A) Valve guide

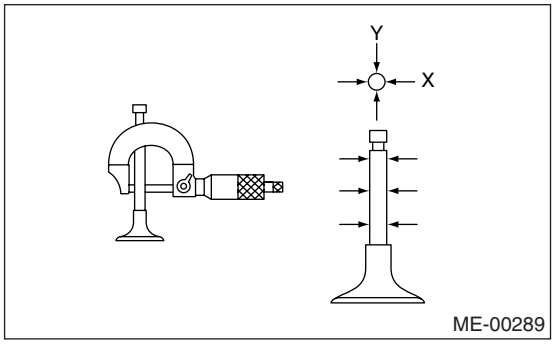

2) If the clearance between valve guide and stem exceeds the standard value, replace the valve guide or valve itself whichever shows greater amount of wear. See the following procedure for valve guide replacement.

Valve guide inner diameter:

6.000 — 6.012 mm (0.2362 — 0.2367 in)

Valve stem outer diameters:

Intake

5.950 — 5.965 mm (0.2343 — 0.2348 in)

Exhaust

5.945 — 5.960 mm (0.2341 — 0.2346 in)

(1) Place the cylinder head on ST1 with the combustion chamber upward so that valve guides enter the holes in ST1.

(2) Insert ST2 into the valve guide and press it down to remove the valve guide.

ST1 498267800 CYLINDER HEAD TABLE
ST2 499767200 VALVE GUIDE REMOVER

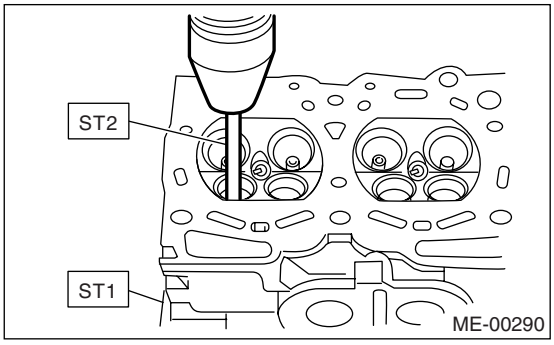

(3) Turn the cylinder head upside down and place the ST as shown in the figure.

Intake side:
ST 499767700 VALVE GUIDE ADJUSTER
Exhaust side:
ST 499767800 VALVE GUIDE ADJUSTER

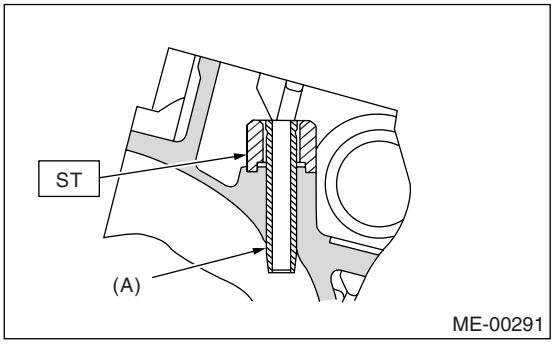

(A) Valve guide

(4) Before installing a new valve guide, make sure that neither scratches nor damages exist on the inside surface of the valve guide holes in cylinder head.

(5) Put a new valve guide, coated with sufficient oil, in cylinder, and insert the ST1 into valve guide. Press in until the valve guide upper end is flush with the upper surface of ST2.

ST1 499767200 VALVE GUIDE REMOVER
Intake side:
ST2 499767700 VALVE GUIDE ADJUSTER
Exhaust side:
ST2 499767800 VALVE GUIDE ADJUSTER

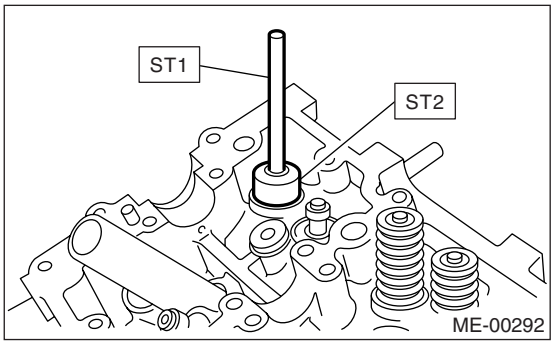

(6) Check the valve guide protrusion.

Valve guide protrusion L:
Intake
20.0 — 21.0 mm (0.787 — 0.827 in)
Exhaust
16.5 — 17.5 mm (0.650 — 0.689 in)

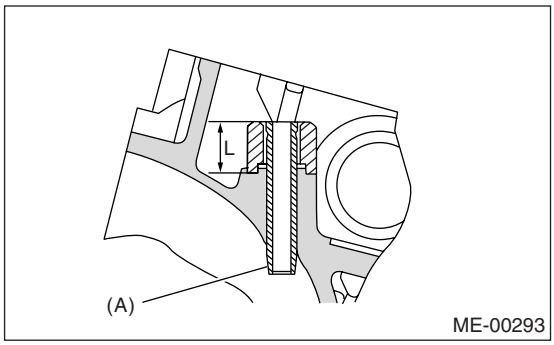

(A) Valve guide

(7) Ream the inside of valve guide using ST. Put the reamer in valve guide, and rotate the reamer slowly clockwise while pushing it lightly. Bring the reamer back while rotating it clockwise. After reaming, clean the valve guide to remove chips.

CAUTION:
• Apply engine oil to the reamer when reaming.
• If the inner surface of the valve guide is torn, the edge of the reamer should be slightly ground with an oil stone.
• If the inner surface of the valve guide becomes lustrous and the reamer does not chip, use a new reamer or remedy the reamer.

ST 499767400 VALVE GUIDE REAMER

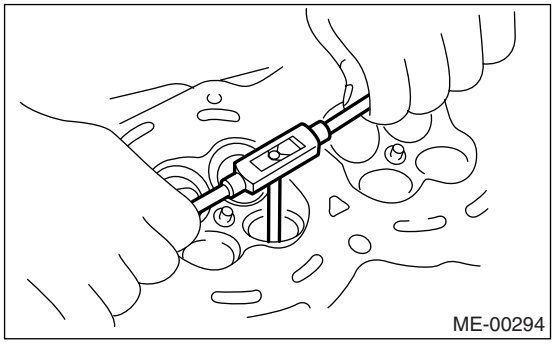

(8) Recheck the contact condition between valve and valve seat after replacing the valve guide.

4. INTAKE AND EXHAUST VALVE

1) Inspect the flange and stem of valve, and replace if damaged, worn or deformed, or if "H" exceed the standard value.

H:
Intake
Standard: 0.8 — 1.2 mm (0.03 — 0.047 in)
Exhaust
Standard: 1.0 — 1.4 mm (0.039 — 0.055 in)

Valve overall length:
Intake
120.6 mm (4.75 in)
Exhaust
121.7 mm (4.79 in)

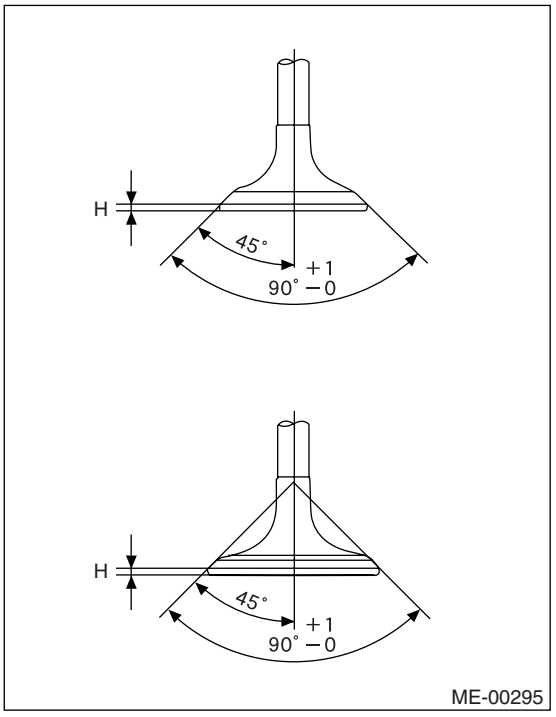

2) Put a small amount of grinding compound on the seat surface and lap the valve and seat surface. <Ref. to ME(H4SO)-57, VALVE SEAT, INSPECTION, Cylinder Head.> Install a new intake valve oil seal after lapping.

5. VALVE SPRING

1) Check the valve springs for damage, free length, and tension. Replace the valve spring if it is not within the standard value presented in the table.
2) To measure the squareness of the valve spring, stand the spring on a surface plate and measure its deflection at the top of spring using a try square.

Free length mm (in)		54.30 (2.1378)
Tension/spring height N (kgf, lb)/mm (in)	Set	214 — 246 (22 — 25, 48 — 55)/ 45.0 (1.772)
	Lift	526 — 582 (54 — 59, 119 — 130)/34.7 (1.366)
Squareness		2.5°, 2.4 mm (0.094 in)

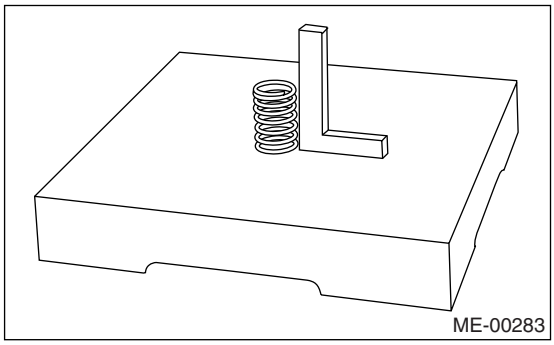
ME-00283

6. INTAKE AND EXHAUST VALVE OIL SEAL

In the following case, pinch and remove the oil seal from valve using pliers, and then replace it with a new one.
- When the lip is damaged.
- When the spring is out of the specified position.
- When readjusting the surfaces of intake valve and valve sheet.
- When replacing the intake valve guide.

1) Place the cylinder head on ST1.
2) Using ST2, press-fit the oil seal.

NOTE:
- Apply engine oil to oil seal before press-fitting.
- Differentiate between the intake valve oil seal and exhaust valve oil seal by noting their difference in color.

ST1 498267800 CYLINDER HEAD TABLE
ST2 498857100 VALVE OIL SEAL GUIDE

Color of rubber part:
Intake [Gray]
Exhaust [Green]

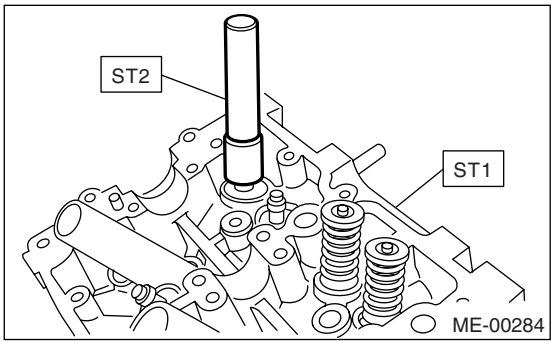

21.Cylinder Block

A: REMOVAL

NOTE:
Before conducting this procedure, drain the engine oil completely .

1) Remove the intake manifold. <Ref. to FU(H4SO)-12, REMOVAL, Intake Manifold.>
2) Remove the V-belts. <Ref. to ME(H4SO)-37, REMOVAL, V-belt.>
3) Remove the crank pulley. <Ref. to ME(H4SO)-39, REMOVAL, Crank Pulley.>
4) Remove the timing belt cover. <Ref. to ME(H4SO)-40, REMOVAL, Timing Belt Cover.>
5) Remove the timing belt. <Ref. to ME(H4SO)-41, REMOVAL, Timing Belt.>
6) Remove the cam sprocket. <Ref. to ME(H4SO)-46, REMOVAL, Cam Sprocket.>
7) Remove the crank sprocket. <Ref. to ME(H4SO)-39, REMOVAL, Crank Pulley.>
8) Remove the generator and A/C compressor with their brackets.
9) Remove the rocker cover.
10) Remove the cylinder head bolts in alphabetical sequence as shown in the figure.

NOTE:
Leave bolts (a) and (c) engaged by three or four threads to prevent the cylinder head from falling.

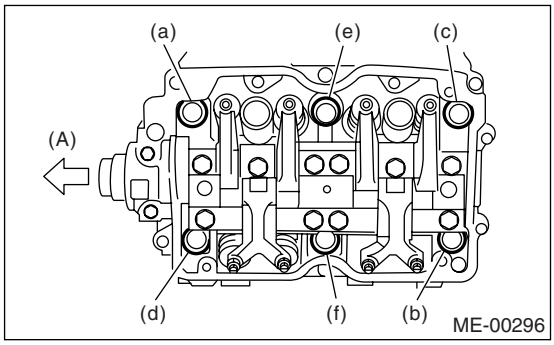

(A) Front side

11) While tapping the cylinder head with a plastic hammer, separate it from cylinder block.

12) Remove the bolts (a) and (c) to remove the cylinder head.

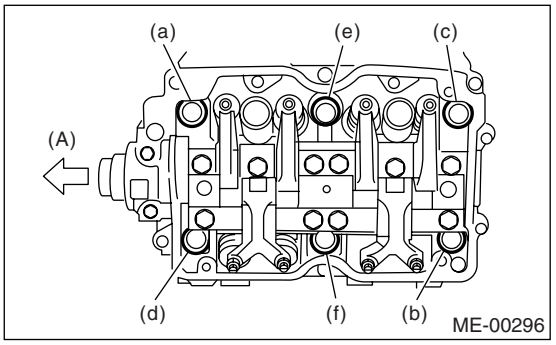

(A) Front side

13) Remove the cylinder head gasket.

NOTE:
Do not scratch the mating surface of cylinder head and cylinder block.

14) Similarly, remove the right side cylinder head.
15) Remove the clutch housing cover. (MT model)
16) Remove the flywheel (MT model) or drive plate (AT model).
Lock the crankshaft using ST.
ST 498497100 CRANKSHAFT STOPPER

- MT model

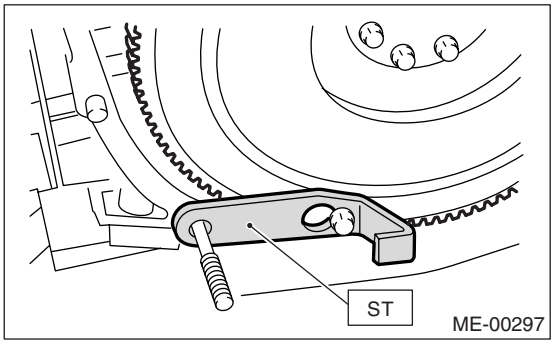

- AT model

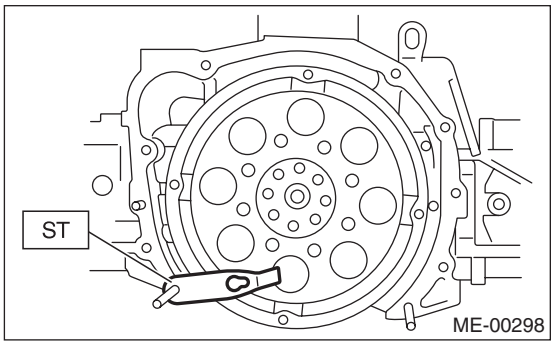

17) Remove the oil separator cover.
18) Remove the water by-pass pipe for heater.
19) Remove the water pump.
20) Remove the bolts which secure oil pump to cylinder block.

21) Remove the oil pump from cylinder block.
Use a flat tip screwdriver as shown in the figure when removing the oil pump.

CAUTION:
Be careful not to scratch the mating surface of cylinder block and oil pump.

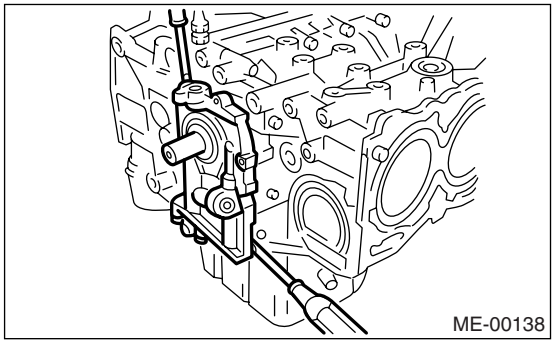
ME-00138

22) Remove the oil pan.
(1) Place the cylinder block to face the #2 and #4 piston side upward.
(2) Remove the bolts which secure oil pan to cylinder block.
(3) Insert a oil pan cutter blade between cylinder block-to-oil pan clearance and remove the oil pan. Do not use a screwdriver or similar tools in place of oil pan cutter.
23) Remove the oil strainer stay.
24) Remove the oil strainer.
25) Remove the baffle plate.
26) Remove the oil filter.

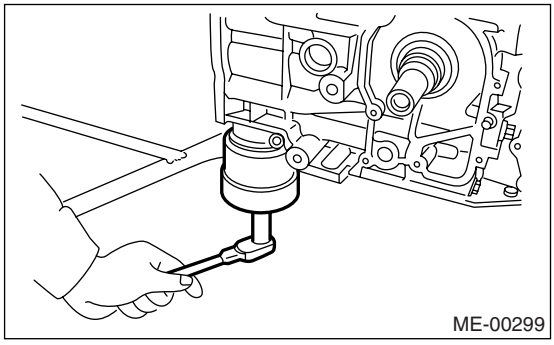
ME-00299

27) Remove the water pipe.

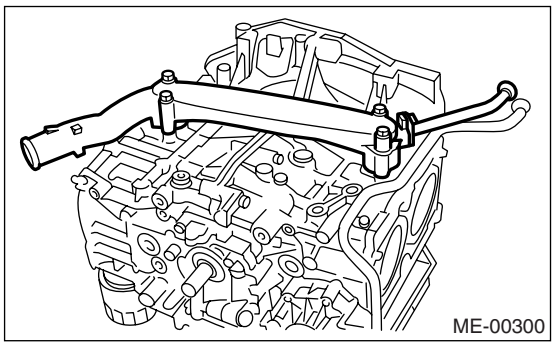
ME-00300

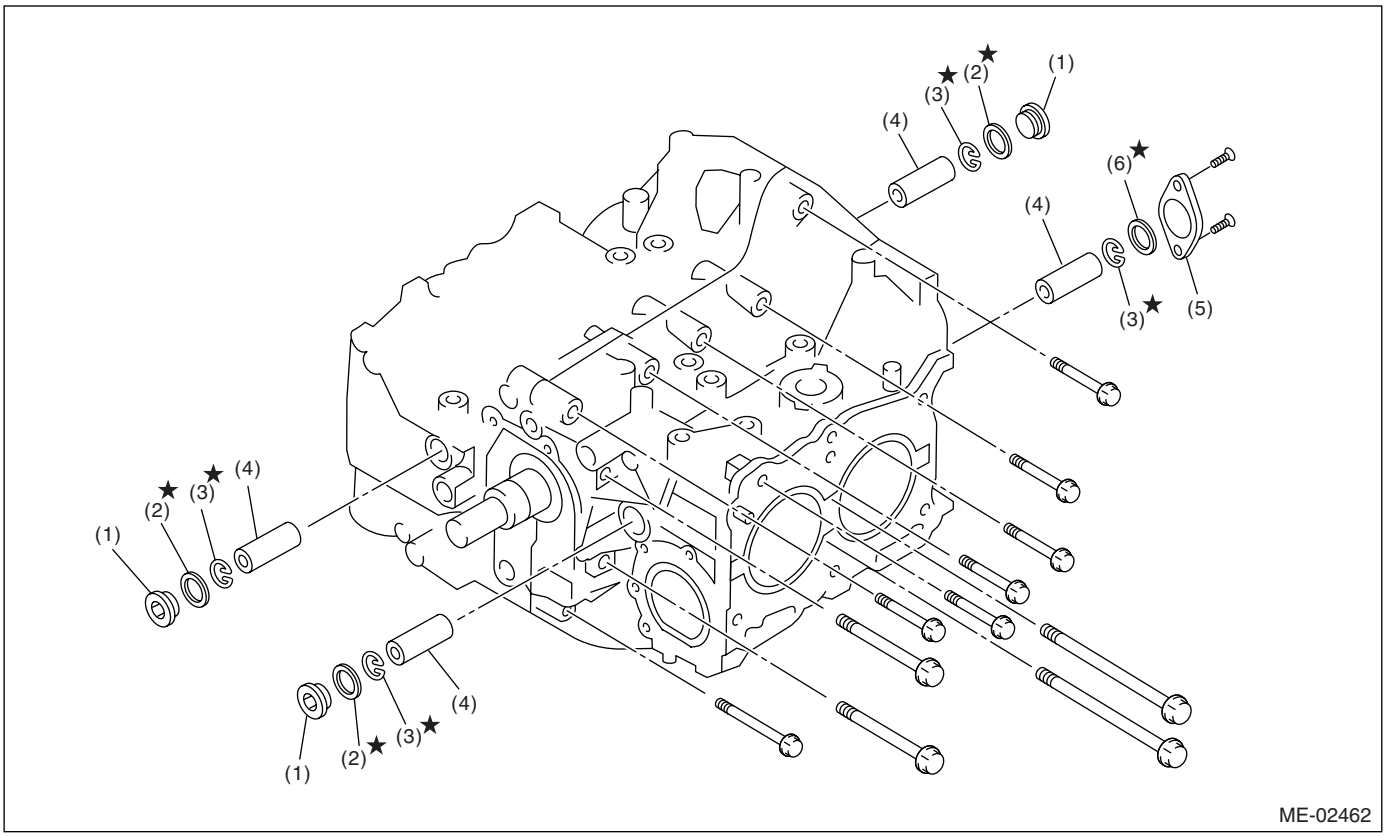

(1) Service hole plug
(2) Gasket
(3) Snap ring
(4) Piston pin
(5) Service hole cover
(6) O-ring

28) Remove the service hole cover and service hole plugs using a hexagon wrench [14 mm (0.55 in)].

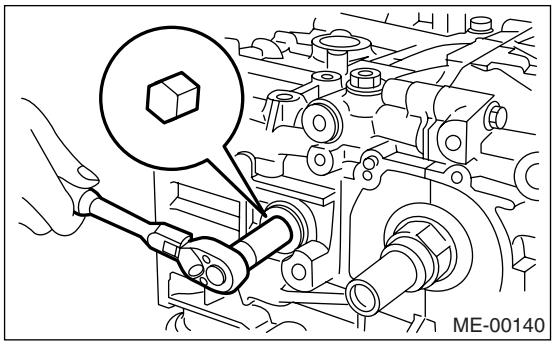

29) Rotate the crankshaft to bring #1 and #2 pistons to bottom dead center position, then remove the piston snap ring through service hole of #1 and #2 cylinders.

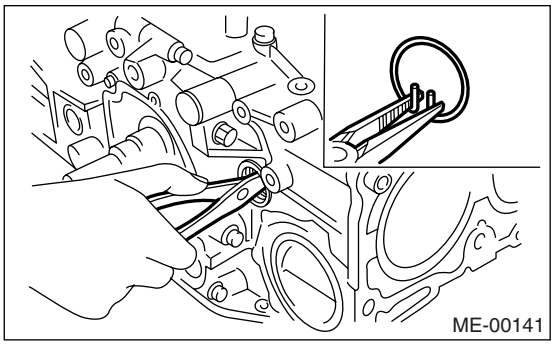

30) Draw out the piston pin from #1 and #2 pistons using ST.
ST 499097700 PISTON PIN REMOVER

NOTE:
Be careful not to confuse the original combination of piston, piston pin and cylinder.

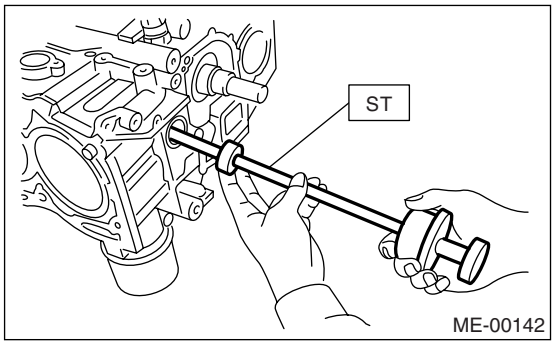

31) Similarly remove the piston pins from #3 and #4 pistons.
32) Remove the bolts which connect cylinder block on the side of #2 and #4 cylinders.
33) Back off the bolts which connect cylinder block on the side of #1 and #3 cylinders two or three turns.
34) Set up the cylinder block so that #1 and #3 cylinders are on the upper side, then remove the cylinder block connecting bolts.
35) Separate the cylinder block (RH) and (LH).

NOTE:
When separating the cylinder block, do not allow the connecting rod to fall or damage the cylinder block.

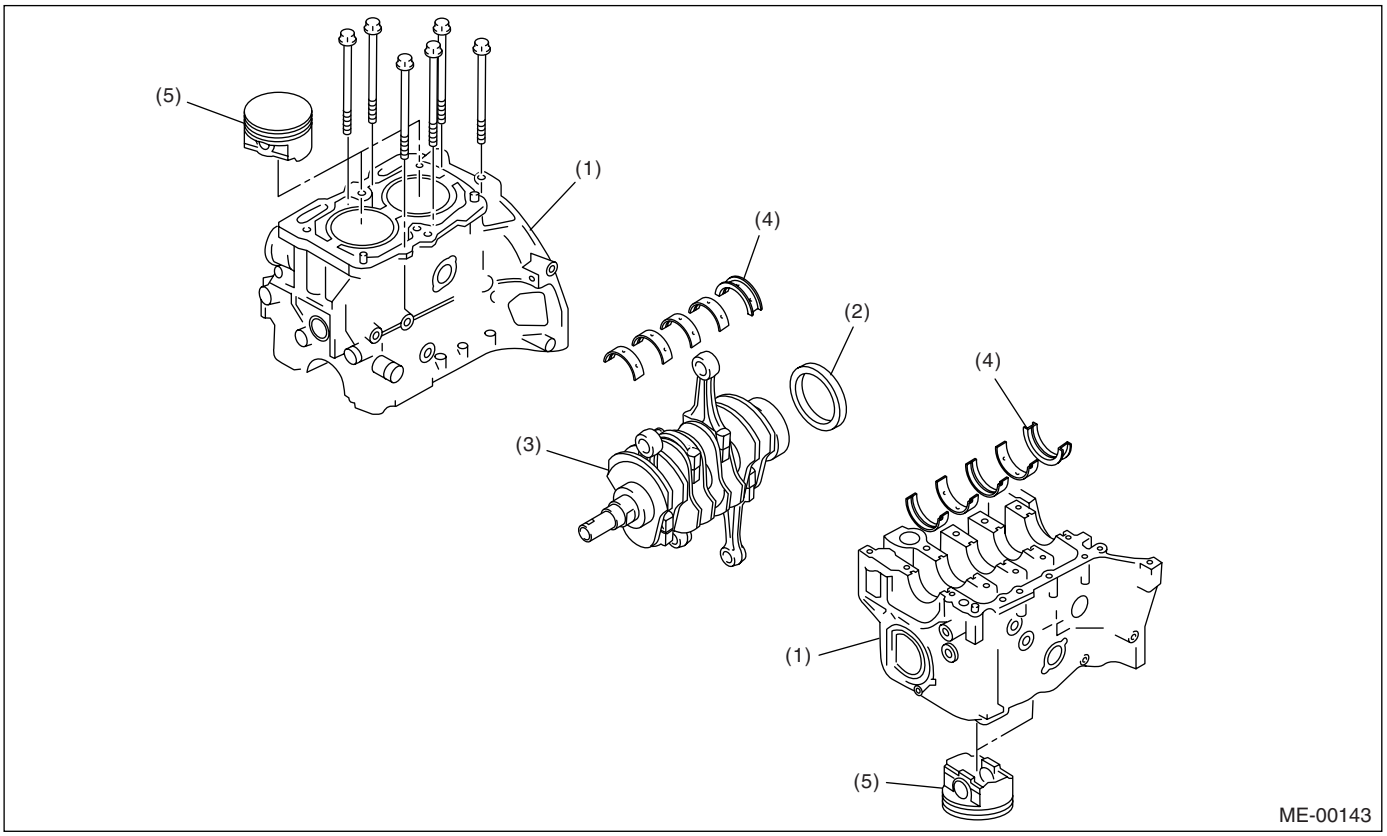

(1) Cylinder block
(2) Rear oil seal
(3) Crankshaft
(4) Crankshaft bearing
(5) Piston

36) Remove the rear oil seal.
37) Remove the crankshaft together with connecting rod.
38) Remove the crankshaft bearings from cylinder block using a hammer handle.

NOTE:
Be careful not to confuse the crankshaft bearing combination. Press the bearing at the end opposite to locking lip.

39) Draw out each piston from cylinder block using a wooden bar or hammer handle.

NOTE:
Be careful not to confuse the original combination of piston and cylinder.

B: INSTALLATION

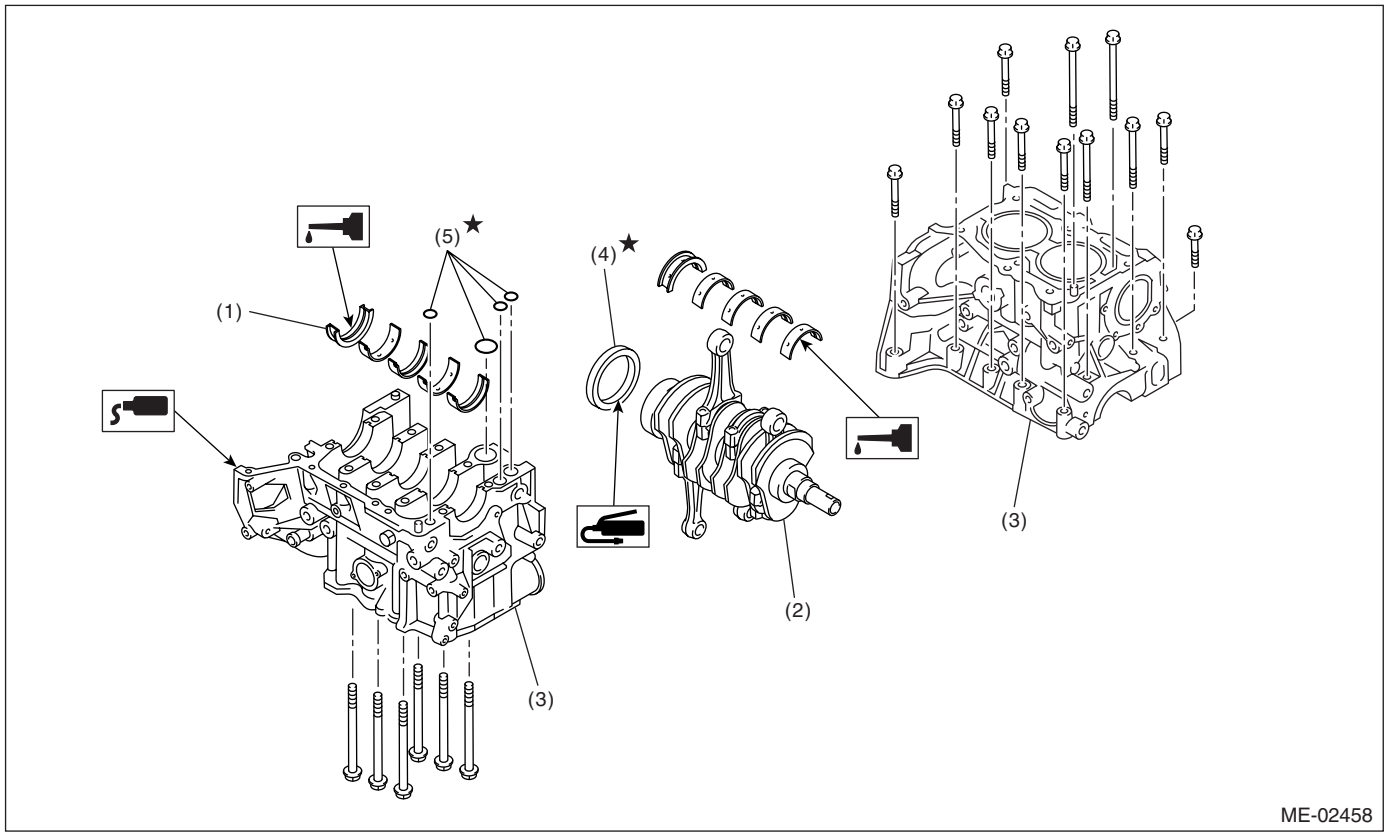

(1) Crankshaft bearing
(2) Crankshaft
(3) Cylinder block
(4) Rear oil seal
(5) O-ring

NOTE:
Remove oil on the mating surface of bearing and cylinder block before installation. Apply a coat of engine oil to crankshaft pins.

1) Position the crankshaft on the #2 and #4 cylinder block.

2) Apply liquid gasket to the mating surface of #1 and #3 cylinder block, and position it on #2 and #4 cylinder block.

Liquid gasket:
THREE BOND 1215 (Part No. 004403007) or equivalent

NOTE:
Do not allow liquid gasket to flow into O-ring grooves, oil passages, bearing grooves, etc.

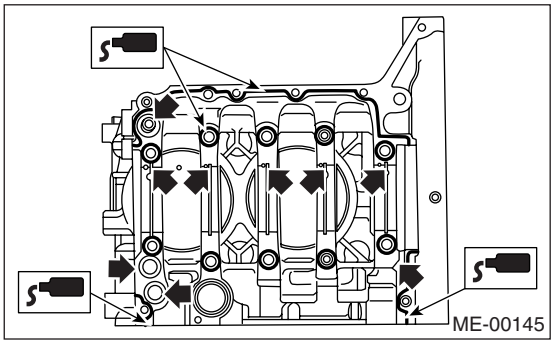

3) Tighten the 10 mm cylinder block connecting bolts on LH side (A — D) in alphabetical sequence.

Tightening torque:
10 N·m (1.0 kgf-m, 7.2 ft-lb)

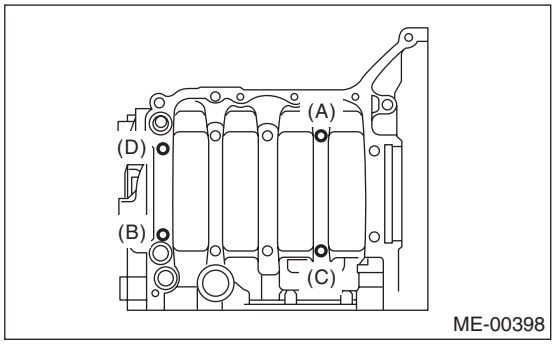

4) Tighten the 10 mm cylinder block connecting bolts on RH side (E — J) in alphabetical sequence.

Tightening torque:
10 N·m (1.0 kgf-m, 7.2 ft-lb)

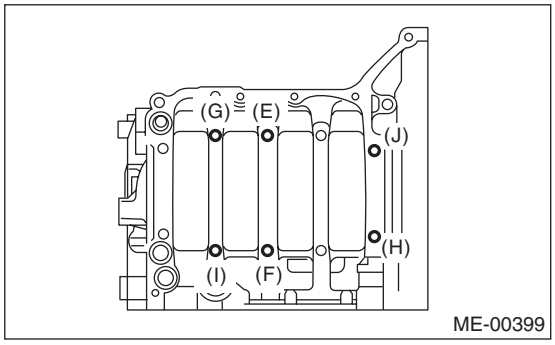

5) Further tighten the LH side bolts (A — D) in alphabetical sequence.

Tightening torque:
18 N·m (1.8 kgf-m, 13.0 ft-lb)

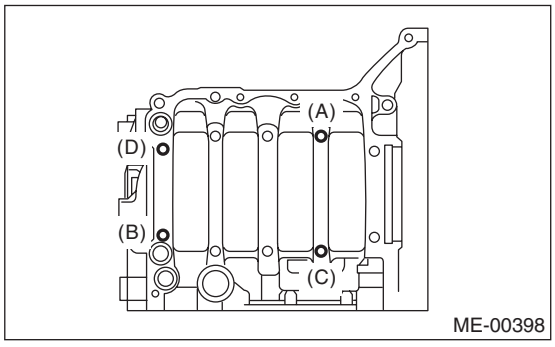

6) Further tighten the RH side bolts (E — J) in alphabetical sequence.

Tightening torque:
18 N·m (1.8 kgf-m, 13.0 ft-lb)

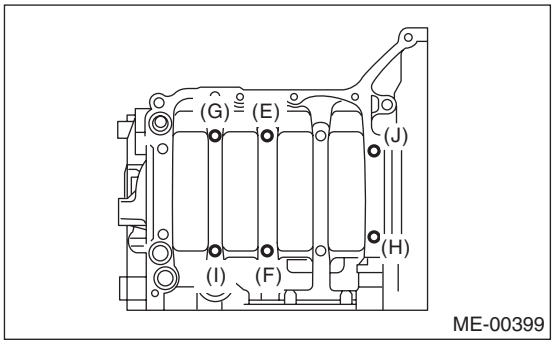

7) Further tighten the LH side bolts (A — D) in alphabetical sequence.

(A), (C): 90°
(B), (D): 40 N·m (4.1 kgf-m, 29.5 ft-lb)

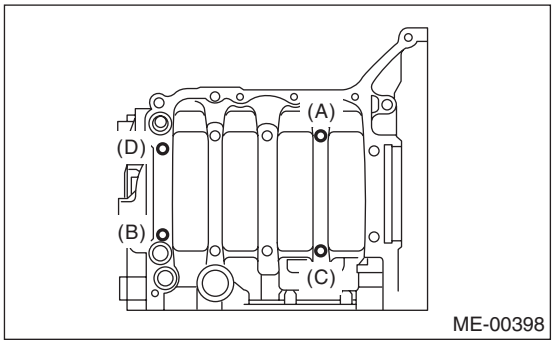

8) Further tighten the RH side bolts (E — J) to 90° in alphabetical sequence.

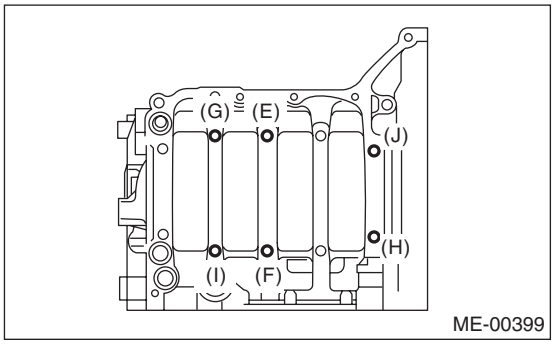

9) Tighten the 8 mm and 6 mm cylinder block connecting bolts on LH side (A — H) in alphabetical sequence.

Tightening torque:
(A) — (G): 25 N·m (2.5 kgf-m, 18.1 ft-lb)
(H): 6.4 N·m (0.65 kgf-m, 4.7 ft-lb)

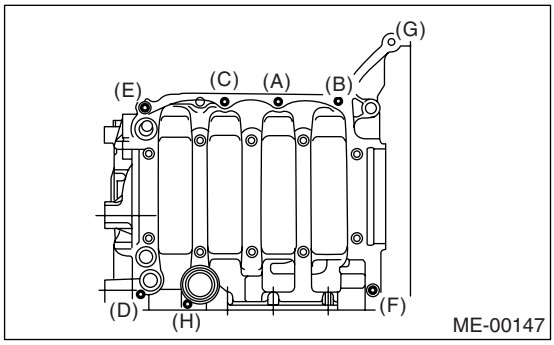

10) Install the rear oil seal using ST1 and ST2.
ST1 499597100 OIL SEAL GUIDE
ST2 499587200 OIL SEAL INSTALLER

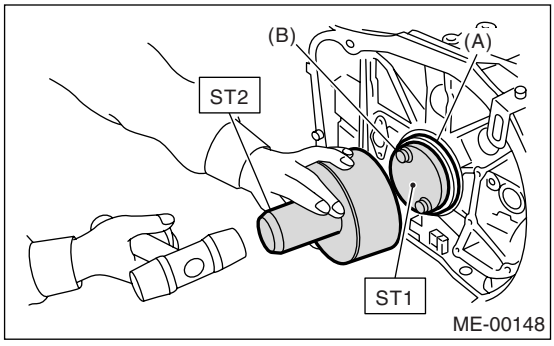

(A) Rear oil seal
(B) Flywheel attaching bolt

11) Position the top ring gap at (A) or (B) in the figure.
12) Position the second ring gap at 180° on the reverse side of the top ring gap.
• U5 model

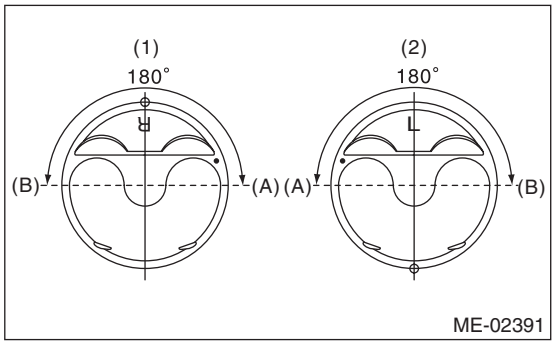

(1) RH side
(2) LH side

• Except for U5 model

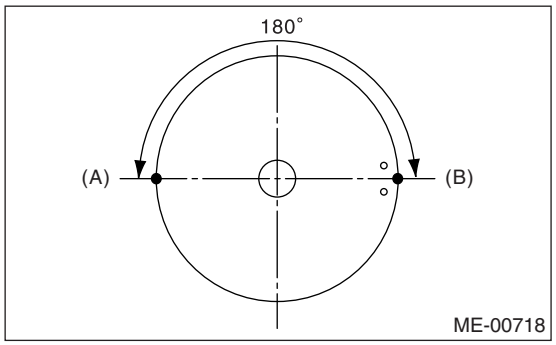

13) Set the oil ring. (U5 model)
(1) Position the expander gap at (C) in the figure.

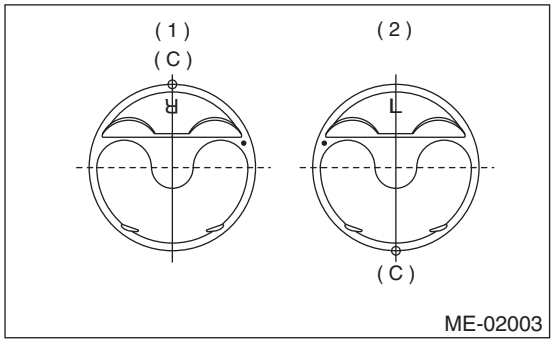

(1) RH side
(2) LH side

(2) Position the upper rail gap at (D) in the figure.

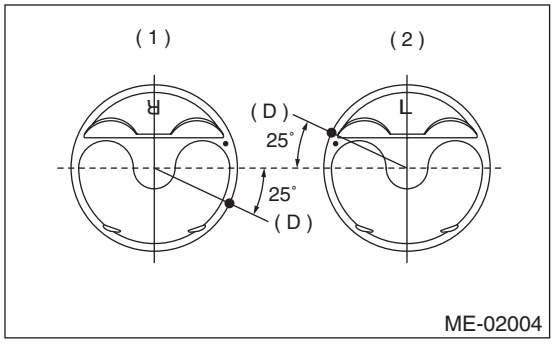

(1) RH side
(2) LH side

NOTE:
Align upper rail spin stopper (F) with piston side surface hole (E).

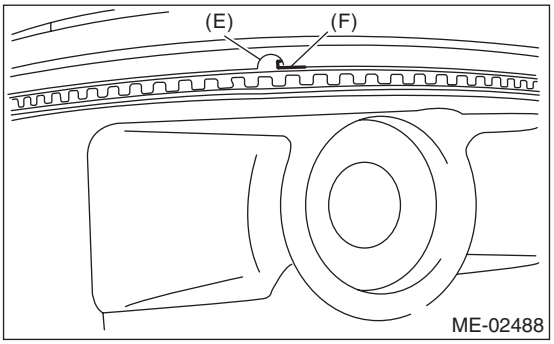

(3) Position the lower rail gap at (G) in the figure.

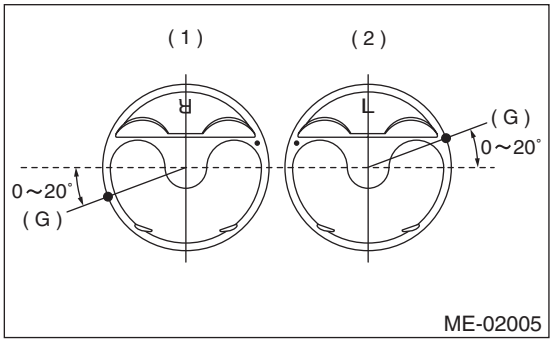

(1) RH side
(2) LH side

CAUTION:
• Ensure ring gaps do not face the same direction.
• Ensure ring gaps are not within the piston skirt area.

14) Set the oil ring. (Except for U5 model)
(1) Position the upper rail gap at (C) in the figure.

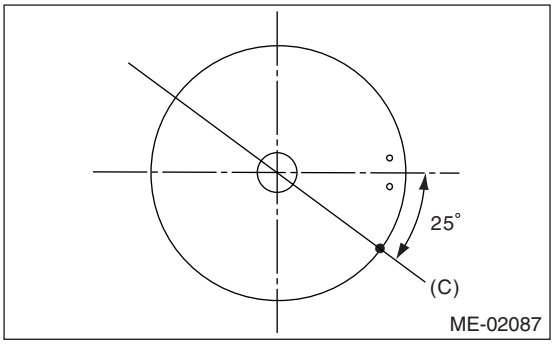

(2) Align the upper rail spin stopper (E) to the side hole (D) on the piston.

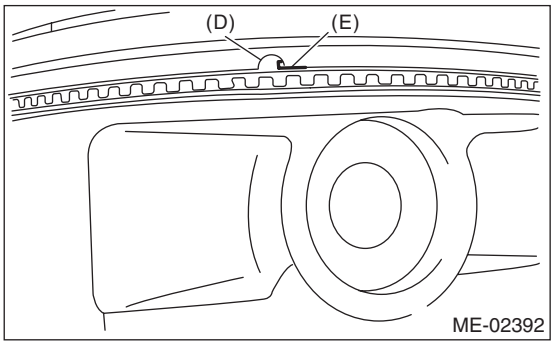

(3) Position the expander gap at 180° on the reverse side of (C) that shown (F) in the figure.

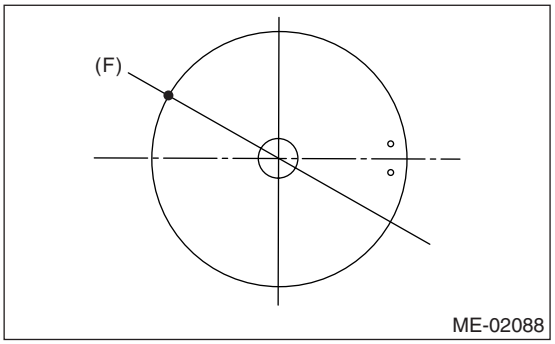

(4) Position the lower rail gap at 120° on counterclockwise of (C) that shown (G) in the figure.

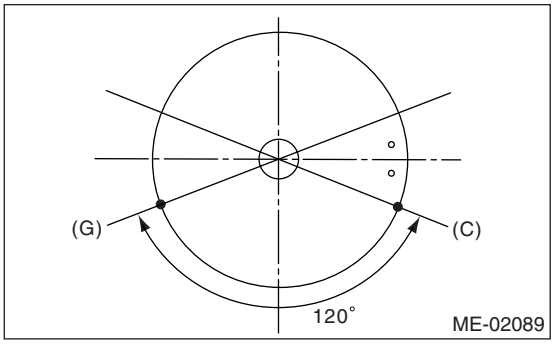

CAUTION:
• Ensure ring gaps do not face the same direction.
• Ensure ring gaps are not within the piston skirt area.

15) Install the snap ring.
Install snap rings in the piston holes located opposite to the service holes in cylinder block, when positioning all pistons in the corresponding cylinders.

NOTE:
Use new snap rings.

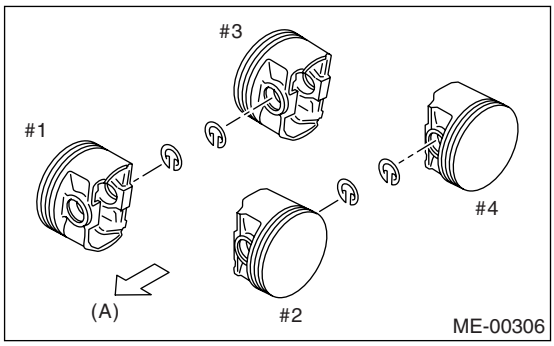

(A) Front side

CAUTION:
Piston front mark faces towards the front of engine.

- U5 model

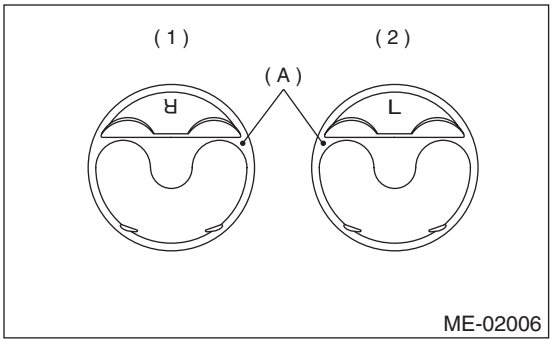

- Except for U5 model

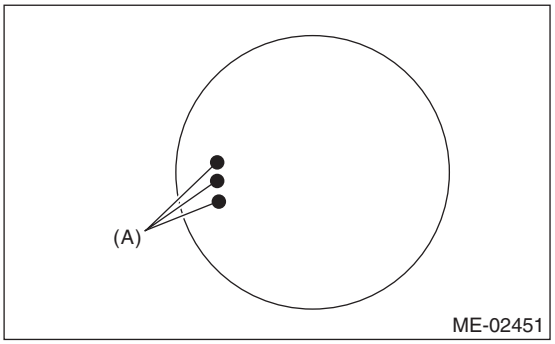

(A) Front mark

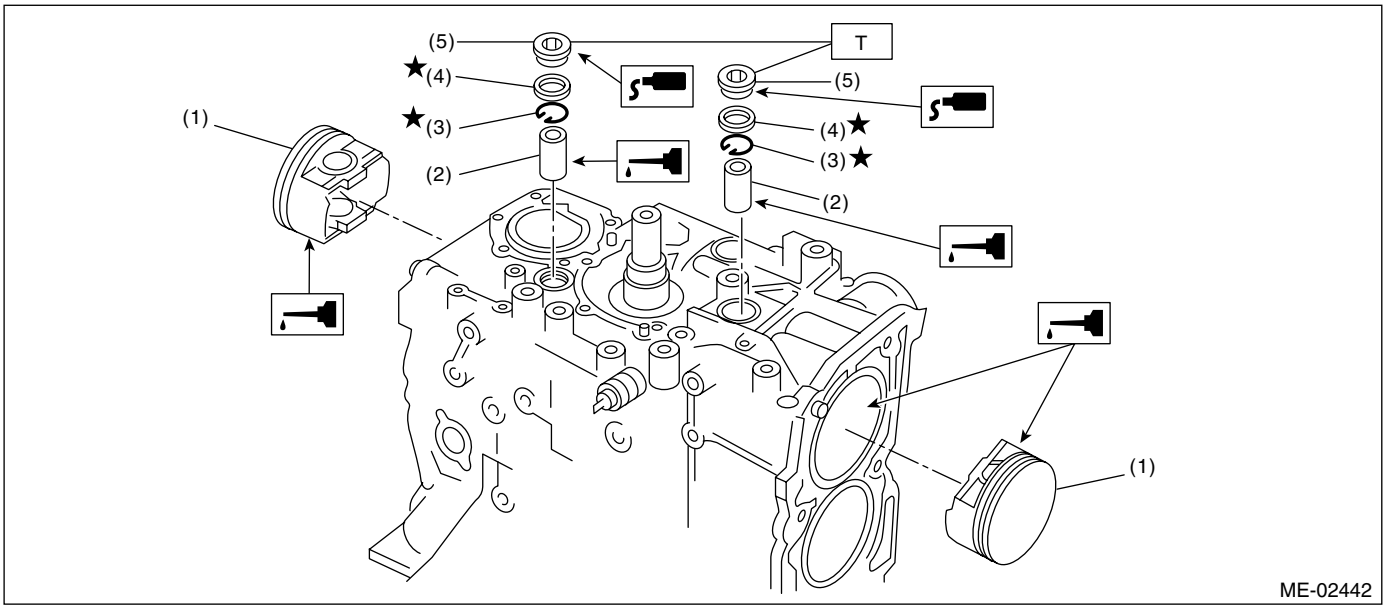

(1) Piston
(2) Piston pin
(3) Snap ring
(4) Gasket
(5) Service hole plug

Tightening torque: N·m (kgf-m, ft-lb)
T: 70 (7.1, 50.6)

16) Install the piston.
(1) Place the cylinder block to face the #1 and #2 cylinder side upward.
(2) Using ST1, turn the crankshaft so that #1 and #2 connecting rods are set at bottom dead center.

ST1 499987500 CRANKSHAFT SOCKET

(3) Apply a coat of engine oil to the pistons and cylinders and insert pistons in their cylinders using ST2.

ST2 498747300 PISTON GUIDE

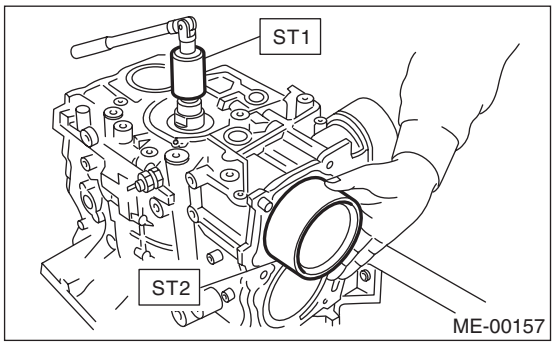

17) Install the piston pin.

(1) Apply a coat of engine oil to ST3.

(2) Insert ST3 into the service hole to align piston pin hole with connecting rod small end.

ST3 499017100 PISTON PIN GUIDE

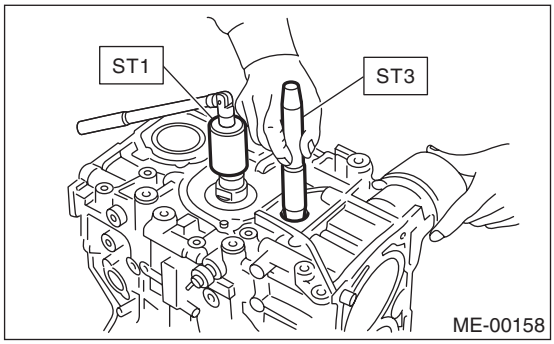

(3) Apply a coat of engine oil to piston pin, and insert the piston pin into piston and connecting rod through service hole.

(4) Install the snap ring.

NOTE:
Use new snap rings.

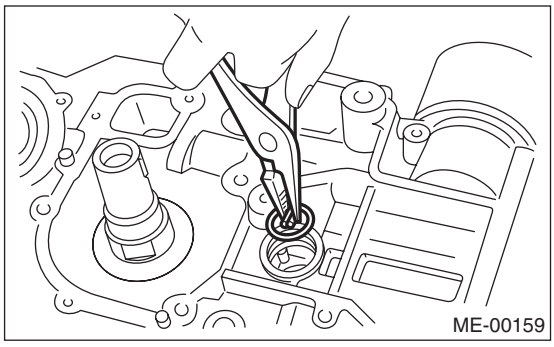

(5) Apply liquid gasket around the service hole plug.

Liquid gasket:
THREE BOND 1215 (Part No. 004403007) or equivalent

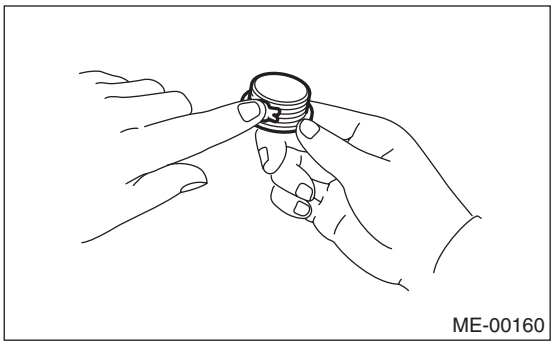

(6) Install the service hole plug and gasket.

NOTE:
Use a new gasket.

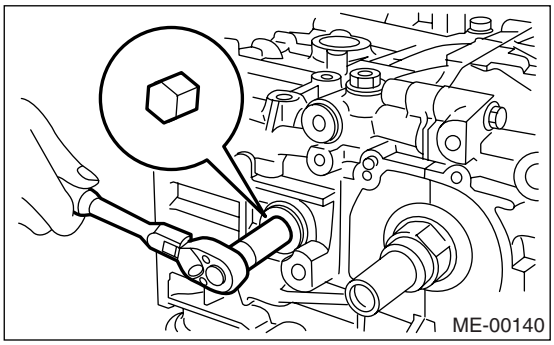

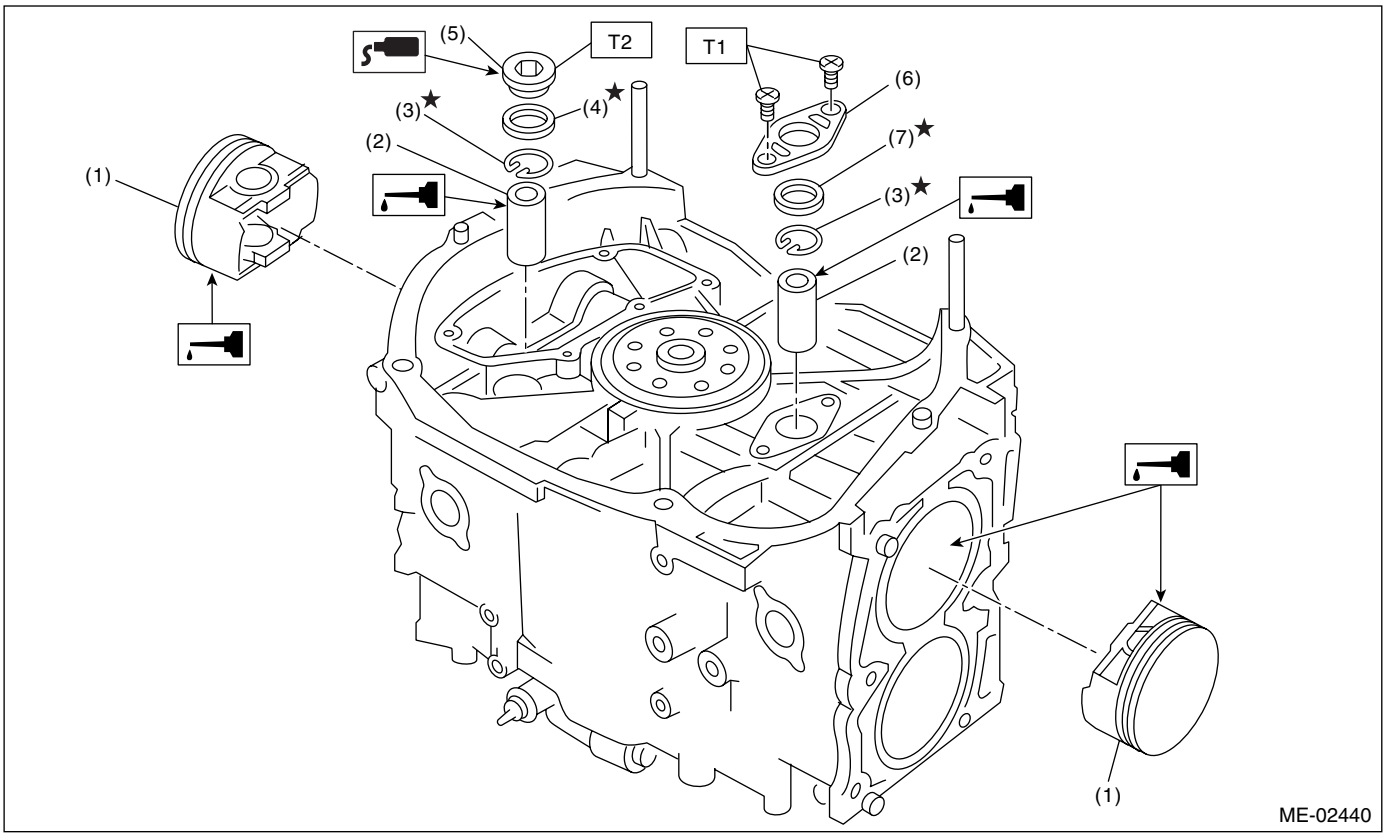

(1) Piston
(2) Piston pin
(3) Snap ring
(4) Gasket
(5) Service hole plug
(6) Service hole cover
(7) O-ring

Tightening torque: N·m (kgf-m, ft-lb)	
T1:	*6.4 (0.65, 4.7)*
T2:	*70 (7.1, 50.6)*

(7) Place the cylinder block to face the #3 and #4 cylinder side upward. Following the same procedures as used for #1 and #2 cylinders, install the pistons and piston pins.

18) Install the water pipe.

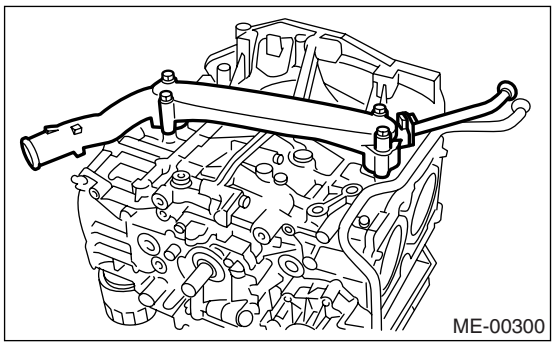

19) Install the baffle plate.

Tightening torque:
6.4 N·m (0.65 kgf-m, 4.7 ft-lb)

20) Install the oil strainer and O-ring.

Tightening torque:
10 N·m (1.0 kgf-m, 7.2 ft-lb)

21) Install the oil strainer stay.

22) Apply liquid gasket to mating surfaces and install the oil pan.

Liquid gasket:
THREE BOND 1207C (Part No. 004403012) or equivalent

Tightening torque:
5 N·m (0.5 kgf-m, 3.6 ft-lb)

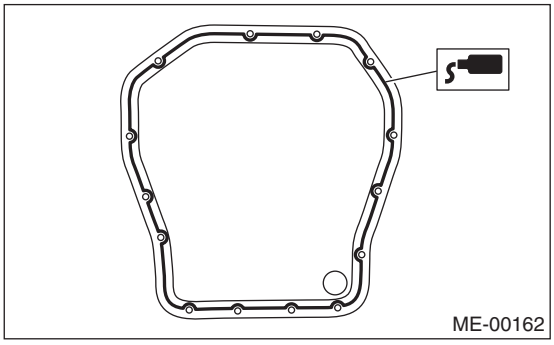

23) Apply liquid gasket to the mating surfaces and the threaded portion of a bolt (A) shown in the figure, and then install the oil separator cover.

Liquid gasket:
THREE BOND 1207C (Part No. 004403012) or equivalent

Tightening torque:
6.4 N·m (0.65 kgf-m, 4.7 ft-lb)

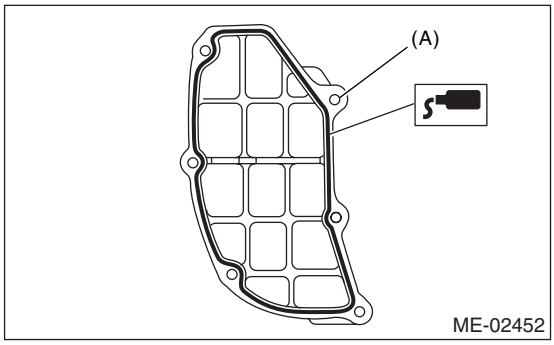

24) Install the flywheel. (MT model)
<Ref. to CL-12, INSTALLATION, Flywheel.>
To lock the crankshaft, use the ST.
ST 498497100 CRANKSHAFT STOPPER

Tightening torque:
72 N·m (7.3 kgf-m, 52.8 ft-lb)

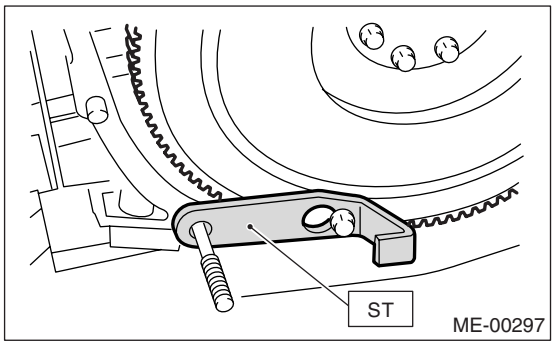

25) Install the drive plate. (AT model)
To lock the crankshaft, use the ST.
ST 498497100 CRANKSHAFT STOPPER

Tightening torque:
72 N·m (7.3 kgf-m, 52.8 ft-lb)

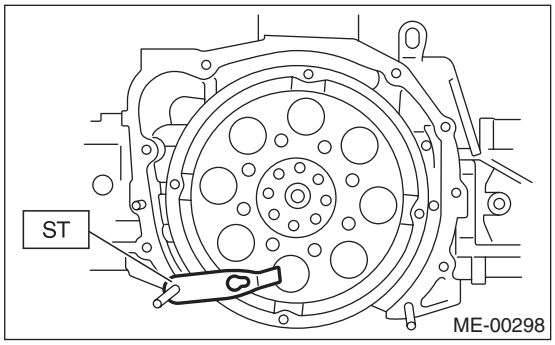

26) Install the housing cover.
27) Installation of oil pump:
(1) Discard the front oil seal after removal. Replace with a new one using ST.
ST 499587100 OIL SEAL INSTALLER

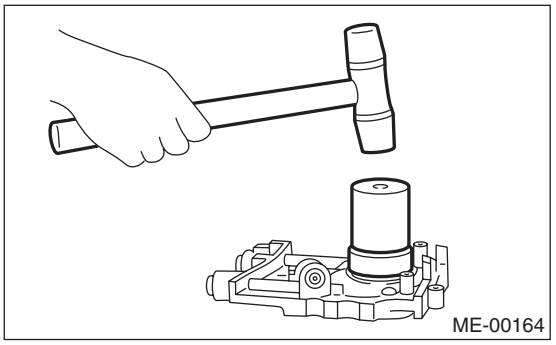

(2) Apply liquid gasket to the matching surface of oil pump.

Liquid gasket:
THREE BOND 1215 (Part No. 004403007) or equivalent

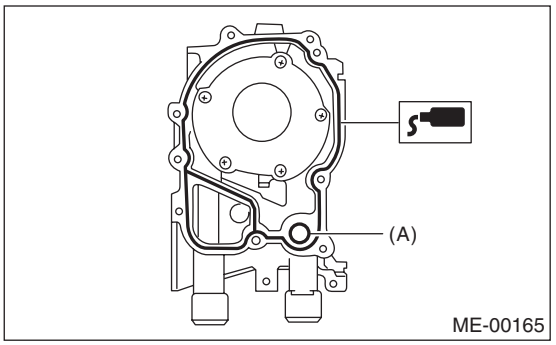

(A) O-ring

(3) Apply a coat of engine oil to the inside of oil seal.

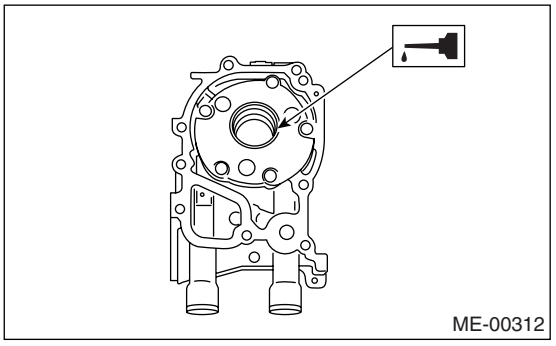

(4) Install the oil pump on cylinder block. Be careful not to damage the oil seal during installation.
(5) Apply a coat of liquid gasket to the threaded portion of 3 bolts.

Liquid gasket:
THREE BOND 1215 (Part No. 004403007) or equivalent

Tightening torque:
6.4 N·m (0.65 kgf-m, 4.7 ft-lb)

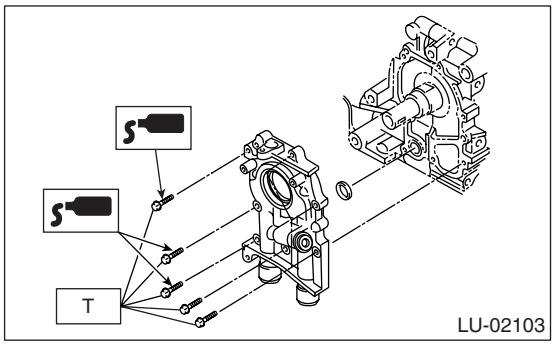

CAUTION:
• Do not forget to install the O-ring and seal when installing the oil pump.
• Align the flat surface of oil pump's inner rotor with crankshaft before installation.

28) Install the water pump and gasket.

Tightening torque:
First: 12 N·m (1.2 kgf-m, 8.9 ft-lb)
Second: 12 N·m (1.2 kgf-m, 8.9 ft-lb)

CAUTION:
• Be sure to use a new gasket.
• When installing the water pump, tighten bolts in two stages in alphabetical sequence as shown in the figure.

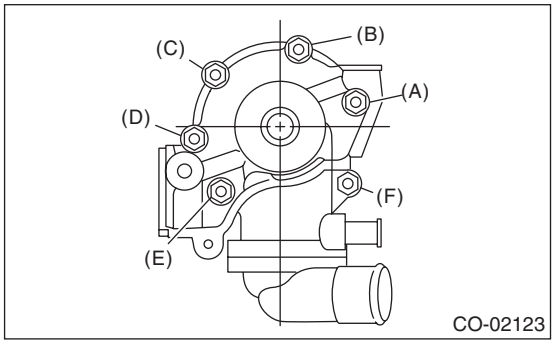

29) Install the water by-pass pipe for heater.
30) Install the oil filter.
31) Tighten the cylinder head bolts.
(1) Apply a coat of engine oil to washers and bolt threads.
(2) Tighten all bolts to 29 N·m (3.0 kgf-m, 22 ft-lb) in alphabetical sequence. Then tighten all bolts to 69 N·m (7.0 kgf-m, 51 ft-lb) in alphabetical sequence.
(3) Back off all bolts by 180° in reverse order of installation, and back them off again by 180°.
(4) Tighten all bolts to 42 N·m (4.3 kgf-m, 31 ft-lb).
(5) Tighten all bolts by 80 — 90° in alphabetical sequence.
(6) Tighten all bolts by 40 — 45° in alphabetical sequence.

CAUTION:
Tightening angle of the bolt must not exceed 45°.

(7) Further tighten the bolts (a) and (b) by 40 — 45°.

CAUTION:
Total "re-tightening angle" of the step (6) and (7) must not exceed 90°.

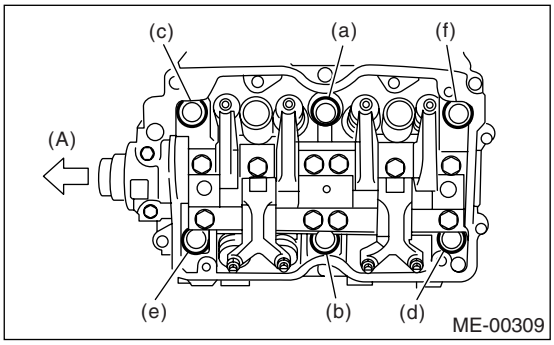

(A) Front side

32) Install the oil level gauge guide and tighten the bolt (LH side only).
33) Install the rocker cover and rocker cover gasket.

NOTE:
Use a new rocker cover gasket.

34) Install the crank sprocket.
<Ref. to ME(H4SO)-47, INSTALLATION, Crank Sprocket.>
35) Install the cam sprocket. <Ref. to ME(H4SO)-46, INSTALLATION, Cam Sprocket.>
36) Install the timing belt. <Ref. to ME(H4SO)-42, INSTALLATION, Timing Belt.>
37) Install the timing belt cover.
<Ref. to ME(H4SO)-40, INSTALLATION, Timing Belt Cover.>
38) Install the crank pulley. <Ref. to ME(H4SO)-39, INSTALLATION, Crank Pulley.>
39) Install the generator and A/C compressor brackets on cylinder head.
40) Install the V-belts. <Ref. to ME(H4SO)-37, INSTALLATION, V-belt.>
41) Install the intake manifold.
<Ref. to FU(H4SO)-13, INSTALLATION, Intake Manifold.>

C: DISASSEMBLY

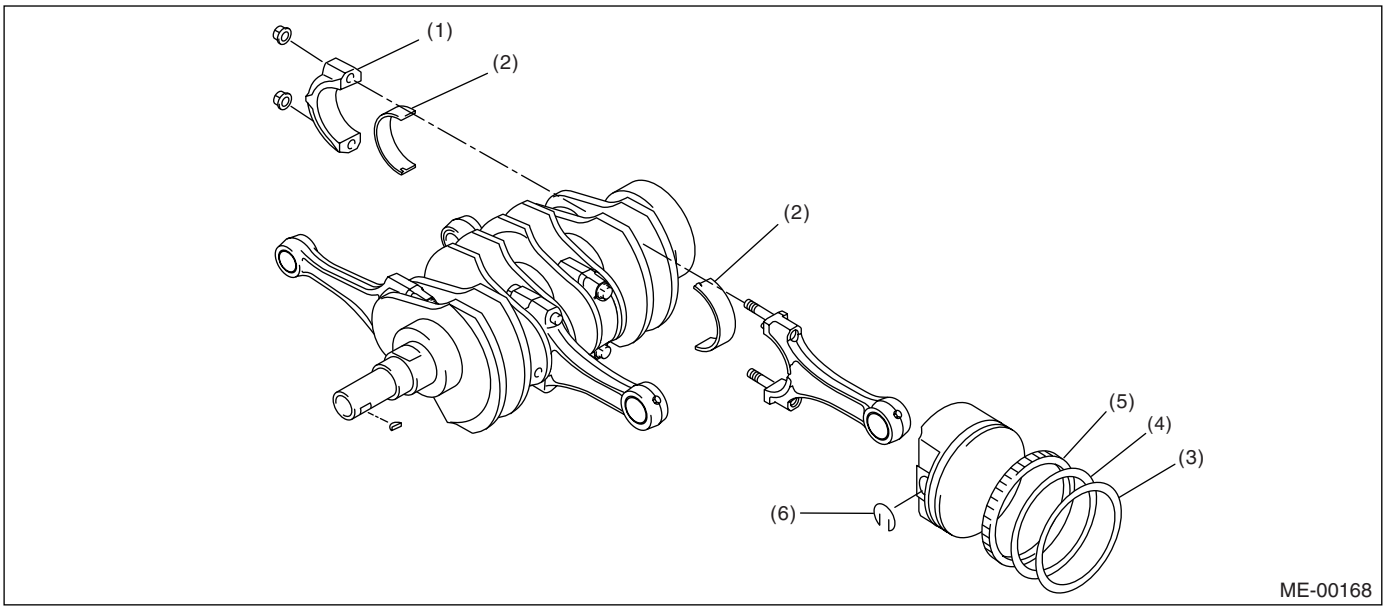

(1) Connecting rod cap
(2) Connecting rod bearing
(3) Top ring
(4) Second ring
(5) Oil ring
(6) Snap ring

1) Remove the connecting rod cap.
2) Remove the connecting rod bearing.

NOTE:
Arrange the removed connecting rod, connecting rod cap and bearing in order, to prevent confusion.

3) Remove the piston rings using the piston ring expander.
4) Remove the oil ring by hand.

NOTE:
Arrange the removed piston rings in proper order, to prevent confusion.

5) Remove the snap ring.

D: ASSEMBLY

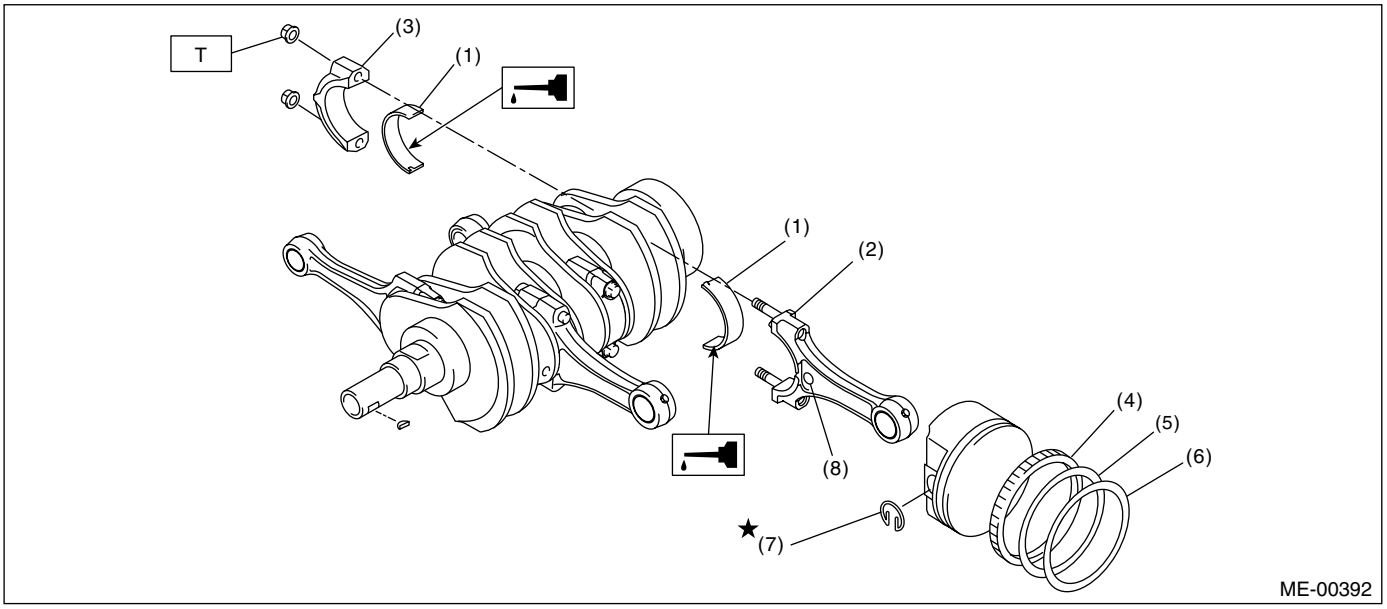

(1) Connecting rod bearing
(2) Connecting rod
(3) Connecting rod cap
(4) Oil ring
(5) Second ring
(6) Top ring
(7) Snap ring
(8) Side mark

Tightening torque: N·m (kgf-m, ft-lb)
T: 45 (4.6, 33.3)

1) Apply oil to the surfaces of the connecting rod bearings.
2) Install the connecting rod bearings on connecting rods and connecting rod caps.
3) Position each connecting rod with the marked side facing forward, and install it.
4) Install the connecting rod cap with connecting rod nut.
Ensure the arrow on connecting rod cap faces toward front during installation.

CAUTION:
• Each connecting rod has its own mating cap. Make sure that they are assembled correctly by checking their matching number.
• When tightening the connecting rod nuts, apply oil on the threads.

5) Install the expander, lower rail and upper rail by hand. Install the second ring and top ring by using a piston ring expander.

E: INSPECTION

1. CYLINDER BLOCK

1) Visually check for cracks and damage. Especially, inspect the important parts using liquid penetrant tester.
2) Check the oil passages for clogging.
3) Inspect the cylinder block surface that mates with cylinder head for warping by using a straight edge, and correct by grinding if necessary.

Warping limit:
0.025 mm (0.00098 in)

Grinding limit:
0.1 mm (0.004 in)

Standard height of cylinder block:
201.0 mm (7.91 in)

2. CYLINDER AND PISTON

1) The cylinder bore size is stamped on the cylinder block's front upper surface.

NOTE:
• Measurement should be performed at a temperature of 20°C (68°F).
• Standard sized pistons are classified into two grades, "A" and "B". These grades should be used as guide lines in selecting a standard piston.

Standard diameter:
A: 99.505 — 99.515 mm (3.9175 — 3.9179 in)
B: 99.495 — 99.505 mm (3.9171 — 3.9175 in)

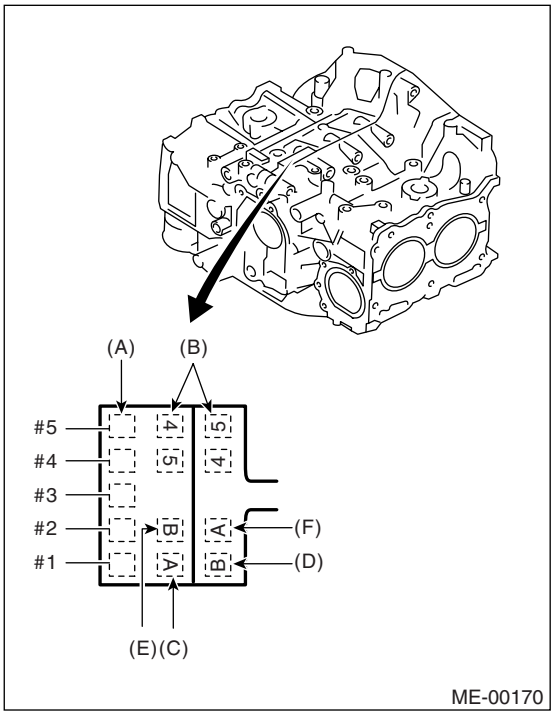

(A) Main journal size mark
(B) Cylinder block (RH)-(LH) combination mark
(C) #1 cylinder bore size mark
(D) #2 cylinder bore size mark
(E) #3 cylinder bore size mark
(F) #4 cylinder bore size mark

2) How to measure the inner diameter of each cylinder:
Measure the inner diameter of each cylinder in both the thrust and piston pin directions at the heights as shown in the figure, using a cylinder bore gauge.

NOTE:
Measurement should be performed at a temperature of 20°C (68°F).

Taper:
Standard
0.015 mm (0.0006 in)

Out-of-roundness:
Standard
0.010 mm (0.0004 in)

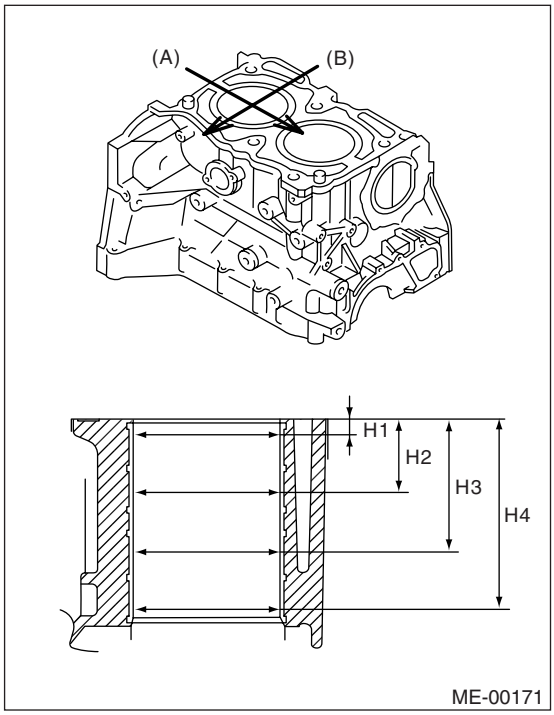

(A) Piston pin direction
(B) Thrust direction
H1 10 mm (0.39 in)
H2 45 mm (1.77 in)
H3 80 mm (3.15 in)
H4 115 mm (4.53 in)

3) When the piston is to be replaced due to general or cylinder wear, determine a suitable sized piston by measuring the piston clearance.
4) How to measure the outer diameter of each piston:
Measure the outer diameter of each piston at the height as shown in the figure. (Thrust direction)

NOTE:
Measurement should be performed at a temperature of 20°C (68°F).

Piston grade point H:
37.0 mm (1.457 in)

Standard
A: 99.505 — 99.515 mm (3.9175 — 3.9179 in)
B: 99.495 — 99.505 mm (3.9171 — 3.9175 in)

0.25 mm (0.0098 in) oversize
99.745 — 99.765 mm (3.9270 — 3.9278 in)

0.50 mm (0.0197 in) oversize
99.995 — 100.015 mm (3.9368 — 3.9376 in)

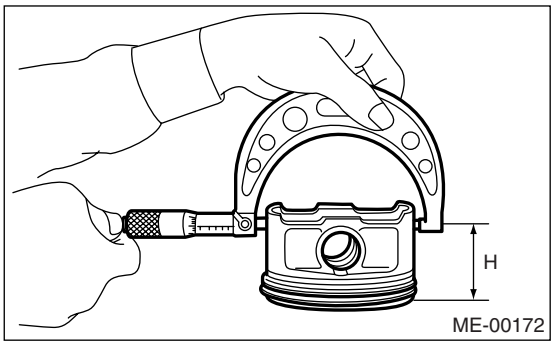

5) Calculate the clearance between cylinder and piston.

NOTE:
Measurement should be performed at a temperature of 20°C (68°F).

Cylinder to piston clearance at 20°C (68°F):
Standard
−0.010 — 0.010 mm (−0.00039 — 0.00039 in)

6) Boring and honing
(1) If the value of taper, out-of-roundness, or cylinder-to-piston clearance measured exceeds the standard value or if there is any damage on the cylinder wall, rebore it to use an oversize piston.

CAUTION:
When any of the cylinders needs reboring, all other cylinders must be bored at the same time, and use oversize pistons. Do not perform boring on one cylinder only. Nor use an oversize piston for one cylinder only.

(2) If the cylinder inner diameter exceeds 100.015 mm (3.9376 in) after boring and honing, replace the cylinder block.

NOTE:
Immediately after reboring, the cylinder diameter may differ from its real diameter due to temperature rise. Thus, pay attention when measuring the cylinder diameter.

3. PISTON AND PISTON PIN

1) Check the pistons and piston pins for damage, cracks and wear, and the piston ring grooves for wear and damage. Replace if defective.
2) Measure the piston-to-cylinder clearance at each cylinder. <Ref. to ME(H4SO)-75, CYLINDER AND PISTON, INSPECTION, Cylinder Block.> If any of the clearances is not within the standard value, replace the piston. Or bore the cylinder to use an oversize piston.

3) Make sure that the piston pin can be inserted into the piston pin hole with a thumb at 20°C (68°F). Replace if defective.

Clearance between piston hole and piston pin:
Standard
0.004 — 0.008 mm (0.0002 — 0.0003 in)

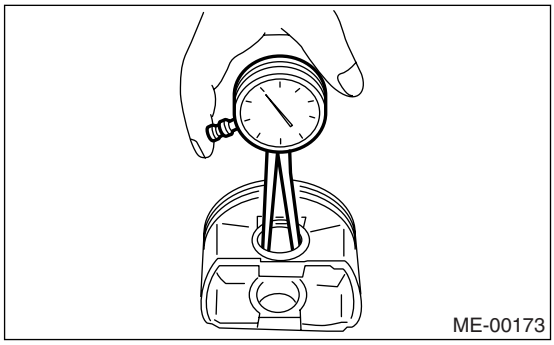
ME-00173

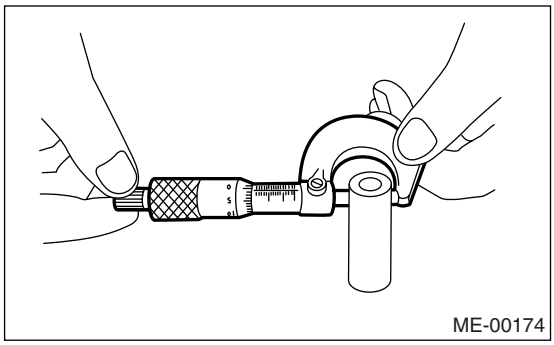
ME-00174

4) Check the snap ring installation groove (A) on the piston for burr. If necessary, remove burr from the groove so that the piston pin can lightly move.

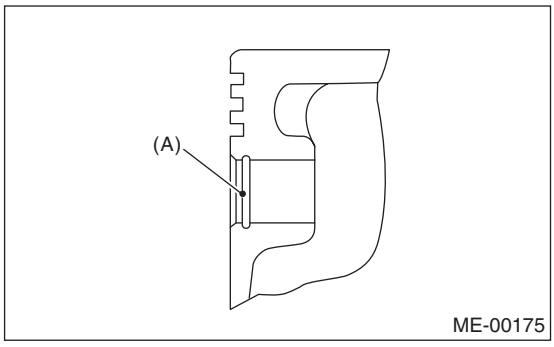

ME-00175

5) Check the piston pin snap ring for distortion, cracks and wear.

4. PISTON RING

1) If the piston ring is broken, damaged or worn, or if its tension is insufficient, or when the piston is replaced, replace the piston ring with a new one of the same size as the piston.

CAUTION:
• Mark is displayed on the end of top and second rings. When installing the rings to the piston, face these marks upward.

• Oil ring consists of the upper rail, expander and lower rail. Be careful about the direction of rail when installing the oil ring to piston.

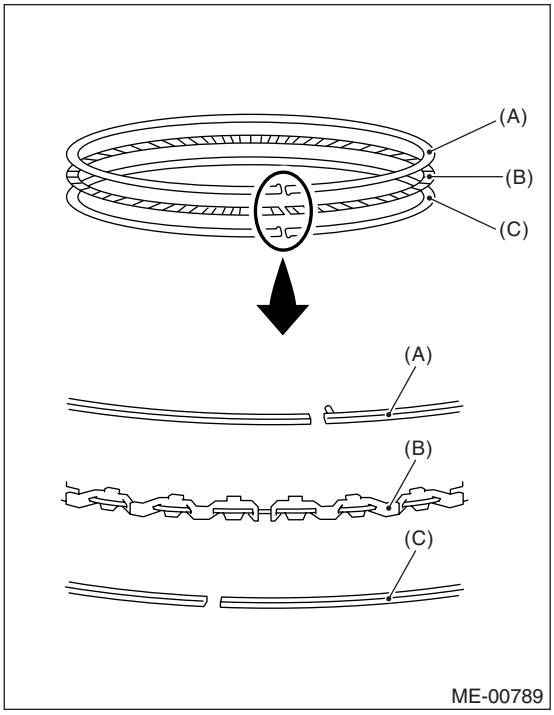

ME-00789

(A) Upper rail
(B) Expander
(C) Lower rail

2) Clean the piston ring groove and piston ring.
3) Squarely place the piston ring and oil ring in cylinder, and measure the piston ring gap with a thickness gauge.

		Standard mm (in)
Piston ring gap	Top ring	0.20 — 0.35 (0.0079 — 0.0138)
	Second ring	0.37 — 0.52 (0.0144 — 0.0203)
	Oil ring rail	0.20 — 0.50 (0.0079 — 0.0197)

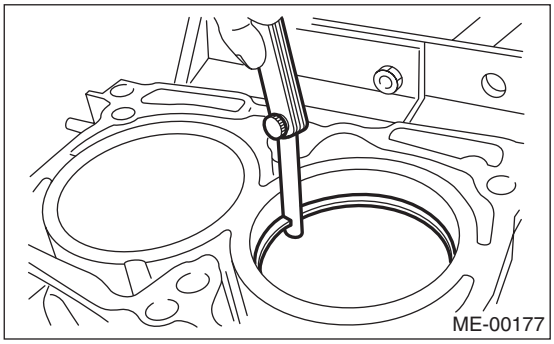
ME-00177

4) Measure the clearance between piston ring and piston ring groove with a thickness gauge.

		Standard mm (in)
Clearance between piston ring and piston ring groove	Top ring	0.040 — 0.080 (0.0016 — 0.0031)
	Second ring	0.030 — 0.070 (0.0012 — 0.0028)

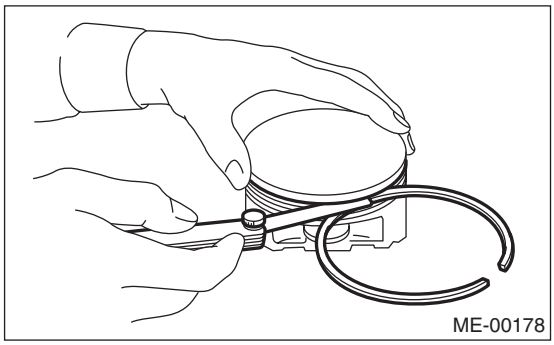

5. CONNECTING ROD

1) Replace the connecting rod, if the large or small end thrust surface is damaged.
2) Check for bend or twist using a connecting rod aligner. Replace the connecting rod if the bend or twist exceeds the limit.

Limit of bend or twist per 100 mm (3.94 in) in length:
0.10 mm (0.0039 in)

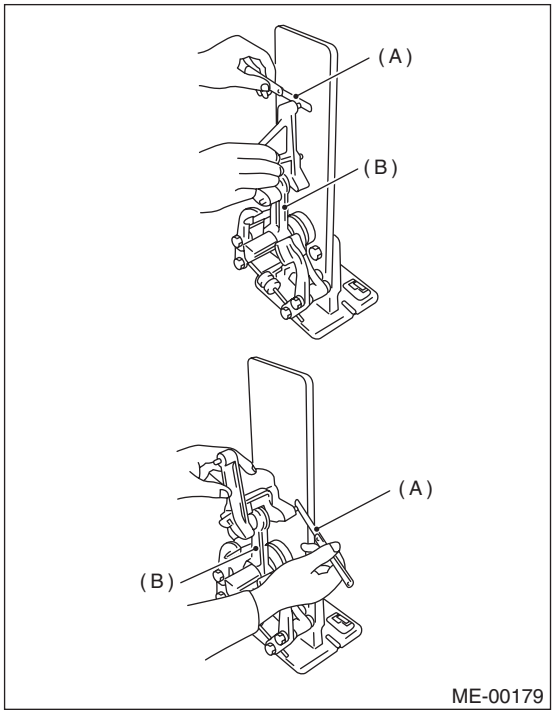

(A) Thickness gauge
(B) Connecting rod

3) Install the connecting rod fitted with bearing to crankshaft and measure the side clearance (thrust clearance). If side clearance exceeds the limit, replace the connecting rod.

Connecting rod side clearance:
Standard
0.070 — 0.330 mm (0.0028 — 0.0130 in)

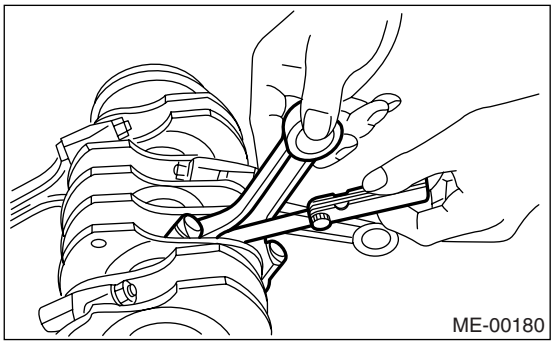

4) Inspect the connecting rod bearing for scar, peeling, seizure, melting, wear, etc.
5) Measure the oil clearance on individual connecting rod bearings by means of plastigauge. If any oil clearance is not within the specification, replace the defective bearing with a new one of standard size or undersize as necessary. (See the table below.)

Connecting rod oil clearance:
Standard
0.016 — 0.044 mm (0.00063 — 0.0017 in)

		Unit: mm (in)
Bearings	Bearing size (Thickness at center)	Outer diameter of crank pin
Standard	1.492 — 1.501 (0.0587 — 0.0591)	51.984 — 52.000 (2.0466 — 2.0472)
0.03 (0.0012) undersize	1.510 — 1.513 (0.0594 — 0.0596)	51.954 — 51.970 (2.0454 — 2.0461)
0.05 (0.0020) undersize	1.520 — 1.523 (0.0598 — 0.0600)	51.934 — 51.950 (2.0446 — 2.0453)
0.25 (0.0098) undersize	1.620 — 1.623 (0.0638 — 0.0639)	51.734 — 51.750 (2.0368 — 2.0374)

6) Inspect the bushing at connecting rod small end, and replace if worn or damaged. Also measure the piston pin clearance at the connecting rod small end.

Clearance between piston pin and bushing:
Standard
0 — 0.022 mm (0 — 0.0009 in)

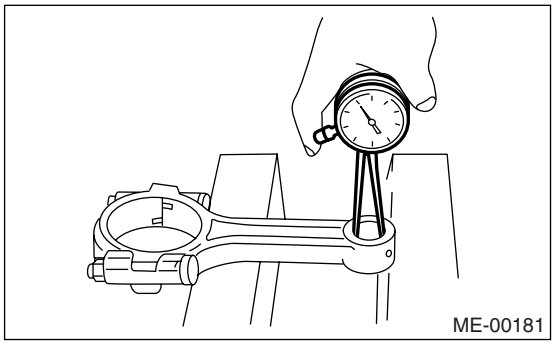
ME-00181

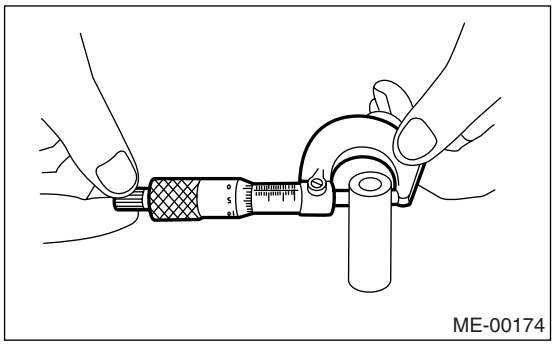
ME-00174

7) Replacement procedure is as follows.
(1) Remove the bushing from connecting rod with ST and press.
(2) Press the bushing with ST after applying oil on the periphery of bushing.

ST 499037100 CONNECTING ROD BUSHING REMOVER AND INSTALLER

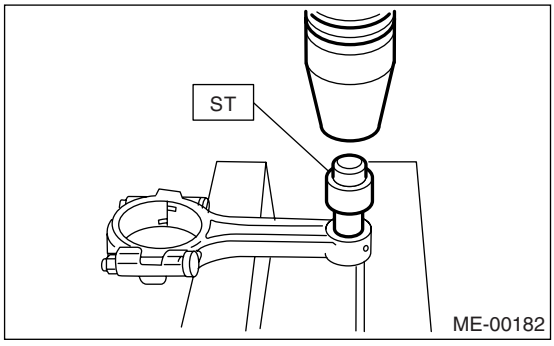

ME-00182

(3) Make two 3 mm (0.12 in)-holes in bushing. Ream the inside of bushing.
(4) After completion of reaming, clean the bushing to remove chips.

6. CRANKSHAFT AND CRANKSHAFT BEARING

1) Clean the crankshaft completely, and check it for cracks using liquid penetrant tester. Replace if faulty.
2) Measure the bend of crankshaft. If it exceeds the limit, repair or replace it.

NOTE:
If a suitable V-block is not available, install #1 and #5 crankshaft bearing on cylinder block, position the crankshaft on these bearings, and then measure the crankshaft bend using a dial gauge.

Crankshaft bend limit:
0.035 mm (0.0014 in)

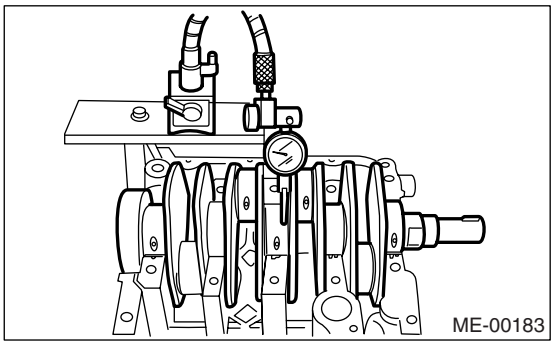
ME-00183

3) Inspect the crank journal and crank pin for wear. If they are not within the specifications, replace the bearing with a suitable (undersize) one, and replace or recondition crankshaft as necessary. When grinding the crank journal or crank pin, finish them to the specified dimensions according to the undersize bearing to be used.

Crank pin:
Out-of-roundness
0.003 mm (0.0001 in)
Cylindricality
0.004 mm (0.0002 in)
Grinding limit
To 51.750 mm (2.0374 in) dia.

Crank journal:
Out-of-roundness
0.005 mm (0.0002 in)
Cylindricality
0.006 mm (0.0002 in)
Grinding limit
To 59.750 mm (2.3524 in) dia.

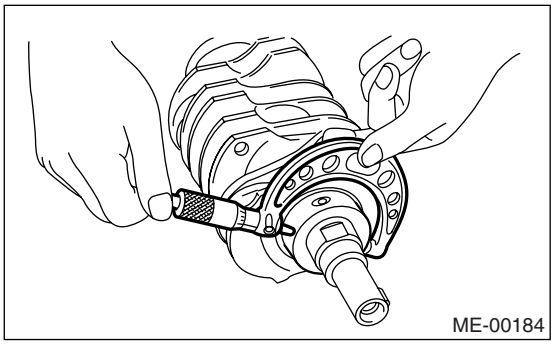
ME-00184

Unit: mm (in)

		Crank journal outer diameter		Crank pin outer diameter
		#1, #3	#2, #4, #5	
Standard	Journal O.D.	59.992 — 60.008 (2.3619 — 2.3625)	59.992 — 60.008 (2.3619 — 2.3625)	51.984 — 52.000 (2.0466 — 2.0472)
	Bearing size (Thickness at center)	1.998 — 2.011 (0.0787 — 0.0792)	2.000 — 2.013 (0.0787 — 0.0793)	1.492 — 1.501 (0.0587 — 0.0591)
0.03 (0.0012) undersize	Journal O.D.	59.962 — 59.978 (2.3607 — 2.3613)	59.962 — 59.978 (2.3607 — 2.3613)	51.954 — 51.970 (2.0454 — 2.0461)
	Bearing size (Thickness at center)	2.017 — 2.020 (0.0794 — 0.0795)	2.019 — 2.022 (0.0795 — 0.0796)	1.510 — 1.513 (0.0594 — 0.0596)
0.05 (0.0020) undersize	Journal O.D.	59.942 — 59.958 (2.3599 — 2.3605)	59.942 — 59.958 (2.3599 — 2.3605)	51.934 — 51.950 (2.0446 — 2.0453)
	Bearing size (Thickness at center)	2.027 — 2.030 (0.0798 — 0.0799)	2.029 — 2.032 (0.0799 — 0.0800)	1.520 — 1.523 (0.0598 — 0.0600)
0.25 (0.0098) undersize	Journal O.D.	59.742 — 59.758 (2.3520 — 2.3527)	59.742 — 59.758 (2.3520 — 2.3527)	51.734 — 51.750 (2.0368 — 2.0374)
	Bearing size (Thickness at center)	2.127 — 2.130 (0.0837 — 0.0839)	2.129 — 2.132 (0.0838 — 0.0839)	1.620 — 1.623 (0.0638 — 0.0639)

4) Measure the side clearance of crankshaft at center bearing. If clearance exceeds the limit, replace the bearing.

Crankshaft side clearance:
Standard
0.030 — 0.115 mm (0.0012 — 0.0045 in)

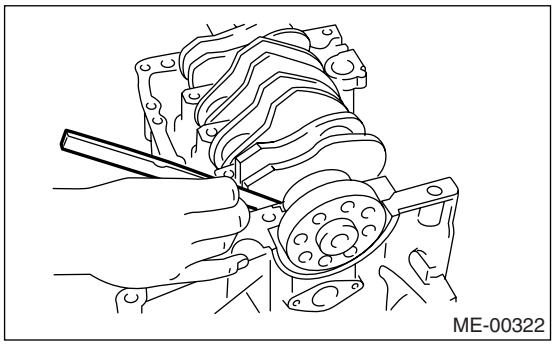

5) Inspect individual crankshaft bearings for signs of flaking, seizure, melting and wear.
6) Measure the oil clearance on each crankshaft bearing by means of plastigauge. If the measurement is not within the specification, replace the defective bearing with an undersize one, and replace or recondition the crankshaft as necessary.

Crankshaft oil clearance:
Standard
0.010 — 0.030 mm (0.0004 — 0.0012 in)

22.Intake and Exhaust Valve

A: SPECIFICATION

Refer to “Cylinder Head” for removal and installation procedures of intake and exhaust valves. <Ref. to ME(H4SO)-54, REMOVAL, Cylinder Head.> <Ref. to ME(H4SO)-54, INSTALLATION, Cylinder Head.>

23.Piston

A: SPECIFICATION

Refer to “Cylinder Block” for removal and installation procedures of pistons. <Ref. to ME(H4SO)-61, REMOVAL, Cylinder Block.> <Ref. to ME(H4SO)-65, INSTALLATION, Cylinder Block.>

24.Connecting Rod

A: SPECIFICATION

Refer to “Cylinder Block” for removal and installation procedures of connecting rod. <Ref. to ME(H4SO)-61, REMOVAL, Cylinder Block.> <Ref. to ME(H4SO)-65, INSTALLATION, Cylinder Block.>

25.Crankshaft

A: SPECIFICATION

Refer to “Cylinder Block” for removal and installation procedures of crankshaft. <Ref. to ME(H4SO)-61, REMOVAL, Cylinder Block.> <Ref. to ME(H4SO)-65, INSTALLATION, Cylinder Block.>

26.Engine Trouble in General

A: INSPECTION

NOTE:
“RANK” shown in the chart refers to the possibility of reason for the trouble in order (“Very often” to “Rarely”)
A — Very often
B — Sometimes
C — Rarely

Symptom	Problem parts, etc.	Possible cause	RANK
1. Engine does not start.			
1) Starter does not turn.	Starter	Defective battery-to-starter harness	B
		Defective starter switch	C
		Defective inhibitor switch	C
		Defective starter	B
	Battery	Poor terminal connection	A
		Run-down battery	A
		Defective charging system	B
	Friction	Seizure of crankshaft and connecting rod bearing	C
		Seized camshaft	C
		Seized or stuck piston and cylinder	C
2) Initial combustion does not occur.	Starter	Defective starter	C
	Engine control system <Ref. to EN(H4SO)(diag)-2, Basic Diagnostic Procedure.>		A
	Fuel line	Defective fuel pump and relay	A
		Lack of or insufficient fuel	B
	Belt	Trouble	B
		Defective timing	B
	Compression	Incorrect valve clearance	C
		Loosened spark plug or defective gasket	C
		Loosened cylinder head bolt or defective gasket	C
		Improper valve sealing	C
		Defective valve stem	C
		Worn or broken valve spring	B
		Worn or stuck piston rings, cylinder and piston	C
		Incorrect valve timing	B
		Improper engine oil (low viscosity)	B
3) Initial combustion occurs.	Engine control system <Ref. to EN(H4SO)(diag)-2, Basic Diagnostic Procedure.>		A
	Intake system	Defective intake manifold gasket	B
		Defective throttle body gasket	B
	Fuel line	Defective fuel pump and relay	C
		Clogged fuel line	C
		Lack of or insufficient fuel	B
	Belt	Trouble	B
		Defective timing	B
	Compression	Incorrect valve clearance	C
		Loosened spark plug or defective gasket	C
		Loosened cylinder head bolt or defective gasket	C
		Improper valve sealing	C
		Defective valve stem	C
		Worn or broken valve spring	B
		Worn or stuck piston rings, cylinder and piston	C
		Incorrect valve timing	B
		Improper engine oil (low viscosity)	B

Symptom	Problem parts, etc.	Possible cause	RANK
4) Engine stalls after initial combustion.	Engine control system <Ref. to EN(H4SO)(diag)-2, Basic Diagnostic Procedure.>		A
	Intake system	Loosened or cracked intake duct	B
		Loosened or cracked PCV hose	C
		Loosened or cracked vacuum hose	C
		Defective intake manifold gasket	B
		Defective throttle body gasket	B
		Dirty air cleaner element	C
	Fuel line	Clogged fuel line	C
		Lack of or insufficient fuel	B
	Belt	Trouble	B
		Defective timing	B
	Compression	Incorrect valve clearance	C
		Loosened spark plug or defective gasket	C
		Loosened cylinder head bolt or defective gasket	C
		Improper valve sealing	C
		Defective valve stem	C
		Worn or broken valve spring	B
		Worn or stuck piston rings, cylinder and piston	C
		Incorrect valve timing	B
		Improper engine oil (low viscosity)	B
2. Rough idle and engine stall	Engine control system <Ref. to EN(H4SO)(diag)-2, Basic Diagnostic Procedure.>		A
	Intake system	Loosened or cracked intake duct	A
		Loosened or cracked PCV hose	A
		Loosened or cracked vacuum hose	A
		Defective intake manifold gasket	B
		Defective throttle body gasket	B
		Defective PCV valve	C
		Loosened oil filler cap	B
		Dirty air cleaner element	C
	Fuel line	Defective fuel pump and relay	C
		Clogged fuel line	C
		Lack of or insufficient fuel	B
	Belt	Defective timing	C
	Compression	Incorrect valve clearance	B
		Loosened spark plug or defective gasket	B
		Loosened cylinder head bolt or defective gasket	B
		Improper valve sealing	B
		Defective valve stem	C
		Worn or broken valve spring	B
		Worn or stuck piston rings, cylinder and piston	B
		Incorrect valve timing	A
		Improper engine oil (low viscosity)	B
	Lubrication system	Incorrect oil pressure	B
		Defective rocker cover gasket	C
	Cooling system	Over-heating	C
	Other	Evaporative emission control system malfunction	A
		Stuck or damaged throttle valve	B

Symptom	Problem parts, etc.	Possible cause	RANK
3. Low output, hesitation and poor acceleration	Engine control system <Ref. to EN(H4SO)(diag)-2, Basic Diagnostic Procedure.>		A
	Intake system	Loosened or cracked intake duct	A
		Loosened or cracked PCV hose	A
		Loosened or cracked vacuum hose	B
		Defective intake manifold gasket	B
		Defective throttle body gasket	B
		Defective PCV valve	B
		Loosened oil filler cap	B
		Dirty air cleaner element	A
	Fuel line	Defective fuel pump and relay	B
		Clogged fuel line	B
		Lack of or insufficient fuel	C
	Belt	Defective timing	B
	Compression	Incorrect valve clearance	B
		Loosened spark plug or defective gasket	B
		Loosened cylinder head bolt or defective gasket	B
		Improper valve sealing	B
		Defective valve stem	C
		Worn or broken valve spring	B
		Worn or stuck piston rings, cylinder and piston	C
		Incorrect valve timing	A
		Improper engine oil (low viscosity)	B
	Lubrication system	Incorrect oil pressure	B
	Cooling system	Over-heating	C
		Over-cooling	C
	Other	Evaporative emission control system malfunction	A
4. Surging	Engine control system <Ref. to EN(H4SO)(diag)-2, Basic Diagnostic Procedure.>		A
	Intake system	Loosened or cracked intake duct	A
		Loosened or cracked PCV hose	A
		Loosened or cracked vacuum hose	A
		Defective intake manifold gasket	B
		Defective throttle body gasket	B
		Defective PCV valve	B
		Loosened oil filler cap	B
		Dirty air cleaner element	B
	Fuel line	Defective fuel pump and relay	B
		Clogged fuel line	B
		Lack of or insufficient fuel	C
	Belt	Defective timing	B
	Compression	Incorrect valve clearance	B
		Loosened spark plug or defective gasket	C
		Loosened cylinder head bolt or defective gasket	C
		Improper valve sealing	C
		Defective valve stem	C
		Worn or broken valve spring	C
		Worn or stuck piston rings, cylinder and piston	C
		Incorrect valve timing	A
		Improper engine oil (low viscosity)	B
	Cooling system	Over-heating	B
	Other	Evaporative emission control system malfunction	C

Symptom	Problem parts, etc.	Possible cause	RANK
5. Engine does not return to idle.	Engine control system <Ref. to EN(H4SO)(diag)-2, Basic Diagnostic Procedure.>		A
	Intake system	Loosened or cracked vacuum hose	A
	Other	Stuck or damaged throttle valve	A
6. Dieseling (Run-on)	Engine control system <Ref. to EN(H4SO)(diag)-2, Basic Diagnostic Procedure.>		A
	Cooling system	Over-heating	B
	Other	Evaporative emission control system malfunction	B
7. After burning in exhaust system	Engine control system <Ref. to EN(H4SO)(diag)-2, Basic Diagnostic Procedure.>		A
	Intake system	Loosened or cracked intake duct	C
		Loosened or cracked PCV hose	C
		Loosened or cracked vacuum hose	B
		Defective PCV valve	B
		Loosened oil filler cap	C
	Belt	Defective timing	B
	Compression	Incorrect valve clearance	B
		Loosened spark plug or defective gasket	C
		Loosened cylinder head bolt or defective gasket	C
		Improper valve sealing	B
		Defective valve stem	C
		Worn or broken valve spring	C
		Worn or stuck piston rings, cylinder and piston	C
		Incorrect valve timing	A
	Lubrication system	Incorrect oil pressure	C
	Cooling system	Over-cooling	C
	Other	Evaporative emission control system malfunction	C
8. Knocking	Engine control system <Ref. to EN(H4SO)(diag)-2, Basic Diagnostic Procedure.>		A
	Intake system	Loosened oil filler cap	B
	Belt	Defective timing	B
	Compression	Incorrect valve clearance	C
		Incorrect valve timing	B
	Cooling system	Over-heating	A
9. Excessive engine oil consumption	Intake system	Loosened or cracked PCV hose	A
		Defective PCV valve	B
		Loosened oil filler cap	C
	Compression	Defective valve stem	A
		Worn or stuck piston rings, cylinder and piston	A
	Lubrication system	Loosened oil pump attaching bolts and defective gasket	B
		Defective oil filter seal	B
		Defective crankshaft oil seal	B
		Defective rocker cover gasket	B
		Loosened oil drain plug or defective gasket	B
		Loosened oil pan fitting bolts or defective oil pan	B

Symptom	Problem parts, etc.	Possible cause	RANK
10. Excessive fuel consumption	Engine control system <Ref. to EN(H4SO)(diag)-2, Basic Diagnostic Procedure.>		A
	Intake system	Dirty air cleaner element	A
	Belt	Defective timing	B
	Compression	Incorrect valve clearance	B
		Loosened spark plug or defective gasket	C
		Loosened cylinder head bolt or defective gasket	C
		Improper valve sealing	B
		Defective valve stem	C
		Worn or broken valve spring	C
		Worn or stuck piston rings, cylinder and piston	B
		Incorrect valve timing	B
	Lubrication system	Incorrect oil pressure	C
	Cooling system	Over-cooling	C

27.Engine Noise

A: INSPECTION

Type of sound	Condition	Possible cause
Regular clicking sound	Sound increases as engine speed increases.	• Valve mechanism is defective. • Incorrect valve clearance • Worn valve rocker • Worn camshaft • Broken valve spring
Heavy and dull clank	Oil pressure is low.	• Worn camshaft main bearing • Worn connecting rod bearing (big end)
	Oil pressure is normal.	Damaged engine mounting
High-pitched clank (Spark knock)	Sound is noticeable when accelerating with an overload.	• Ignition timing advanced • Accumulation of carbon inside combustion chamber • Wrong spark plug • Improper gasoline
Clank when engine speed is 1,000 rpm to 2,000 rpm	Sound is reduced when fuel injector connector of noisy cylinder is disconnected. (NOTE*)	• Worn camshaft main bearing • Worn bearing at crankshaft end of connecting rod
Knocking sound when engine is operating under idling speed and engine is warm	Sound is reduced when fuel injector connector of noisy cylinder is disconnected. (NOTE*)	• Worn cylinder liner and piston ring • Broken or stuck piston ring • Worn piston pin and hole at piston end of connecting rod
	Sound is not reduced if each fuel injector connector is disconnected in turn. (NOTE*)	• Worn cam sprocket • Worn camshaft journal bore in crankcase
Squeaky sound	—	Insufficient generator lubrication
Rubbing sound	—	Defective generator brush and rotor contact
Gear scream when starting engine	—	• Defective ignition starter switch • Worn gear and starter pinion
Sound like polishing glass with a dry cloth	—	• Loose drive belt • Defective water pump shaft
Hissing sound	—	• Loss of compression • Air leakage in air intake system, hoses, connections or manifolds
Timing belt noise	—	• Loose timing belt • Belt contacting with case/adjacent part
Valve tappet noise	—	Incorrect valve clearance

NOTE*)
When disconnecting the fuel injector connector, the malfunction indicator light illuminates and DTC is stored in ECM memory. Therefore, carry out the clear memory mode <Ref. to EN(H4SO)(diag)-43, OPERATION, Clear Memory Mode.> and inspection mode <Ref. to EN(H4SO)(diag)-35, PROCEDURE, Inspection Mode.> after connecting the fuel injector connector.

EXHAUST

EX(H4SO)

Page

1. General Description 2
2. Front Exhaust Pipe 4
3. Center Exhaust Pipe 7
4. Rear Exhaust Pipe 8
5. Muffler 10

1. General Description

A: COMPONENT

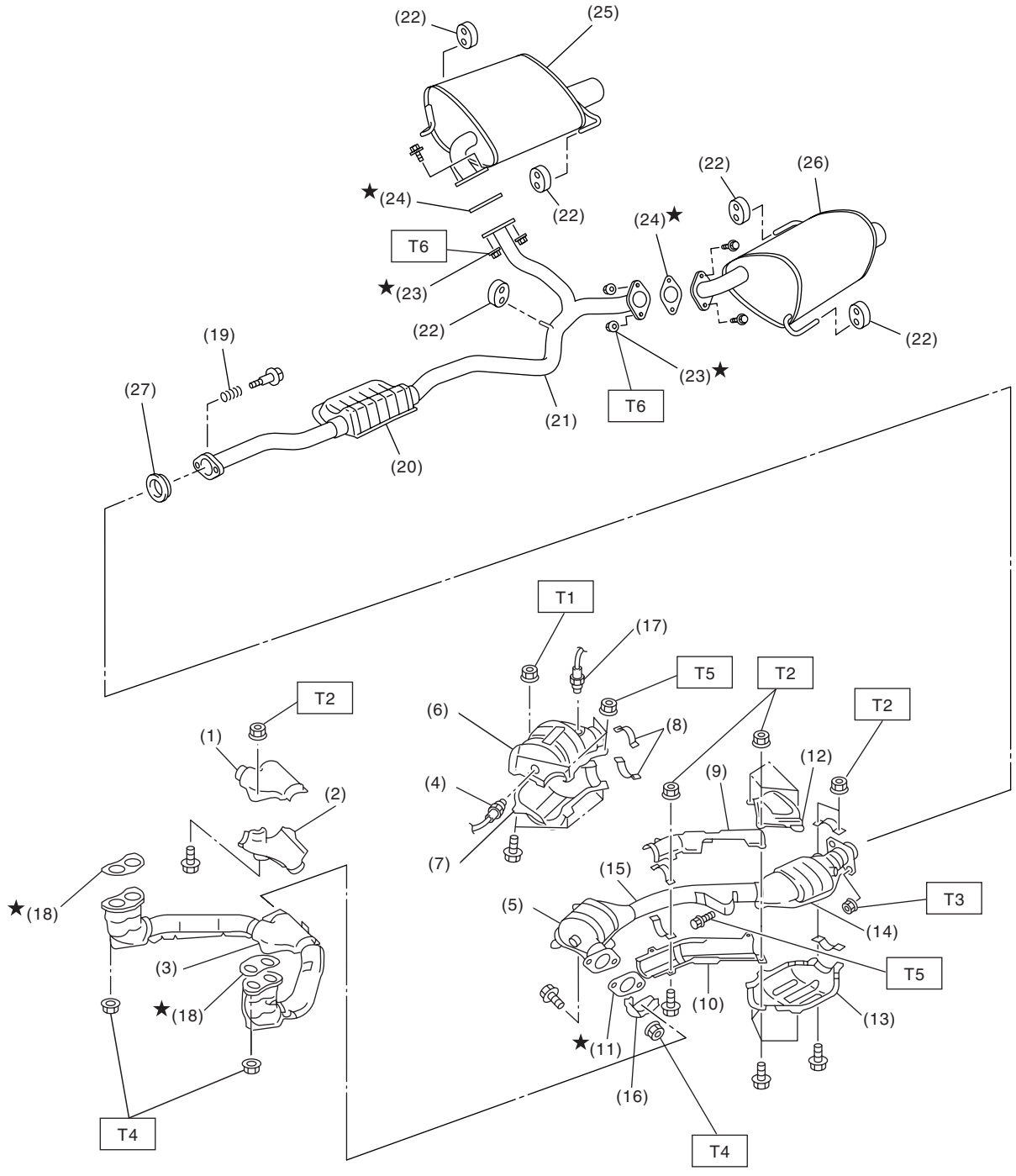

EX-02064

(1) Front exhaust pipe upper cover
(2) Front exhaust pipe lower cover
(3) Front exhaust pipe
(4) Front oxygen (A/F) sensor
(5) Front catalytic converter
(6) Front catalytic converter upper cover
(7) Front catalytic converter lower cover
(8) Clamp
(9) Center exhaust pipe upper cover
(10) Center exhaust pipe lower cover
(11) Gasket
(12) Rear catalytic converter upper cover
(13) Rear catalytic converter lower cover
(14) Rear catalytic converter
(15) Center exhaust pipe
(16) Protector
(17) Rear oxygen (A/F) sensor
(18) Gasket
(19) Spring
(20) Chamber
(21) Rear exhaust pipe
(22) Cushion rubber
(23) Self-locking nut
(24) Gasket
(25) Muffler (RH)
(26) Muffler (LH)
(27) Gasket

Tightening torque: N·m (kgf-m, ft-lb)	
T1:	***8 (0.8, 5.8)***
T2:	***13 (1.3, 9.4)***
T3:	***18 (1.8, 13.0)***
T4:	***30 (3.1, 22.4)***
T5:	***35 (3.6, 26.0)***
T6:	***48 (4.9, 35.4)***

B: CAUTION

• Wear work clothing, including a cap, protective goggles and protective shoes during operation.
• Remove contamination including dirt and corrosion before removal, installation or disassembly.
• Keep the disassembled parts in order and protect them from dust and dirt.
• Before removal, installation or disassembly, be sure to clarify the failure. Avoid unnecessary removal, installation, disassembly and replacement.
• Be careful not to burn yourself, because each part on the vehicle is hot after running.
• Be sure to tighten fasteners including bolts and nuts to the specified torque.
• Place shop jacks or rigid racks at the specified points.
• Before disconnecting electrical connectors of sensors or units, be sure to disconnect the ground cable from battery.

2. Front Exhaust Pipe

A: REMOVAL

1) Disconnect the battery ground cable from battery.

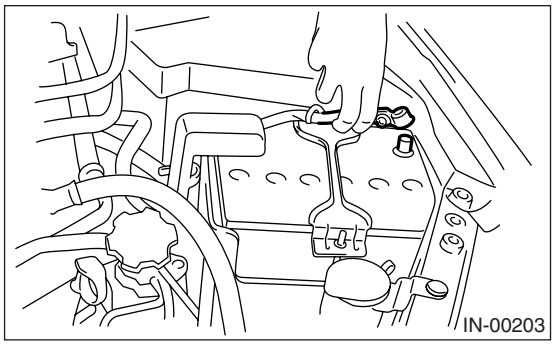

2) Disconnect the front oxygen (A/F) sensor connector.

NOTE:
Remove the harness from bracket.

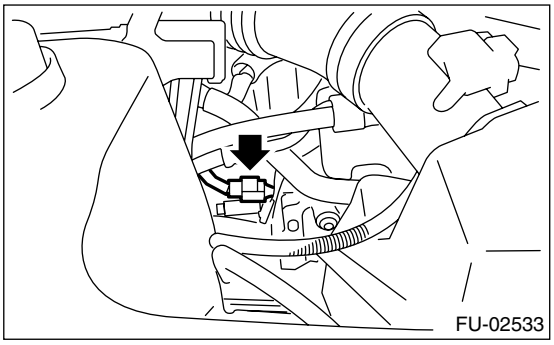

3) Disconnect the rear oxygen sensor connector.

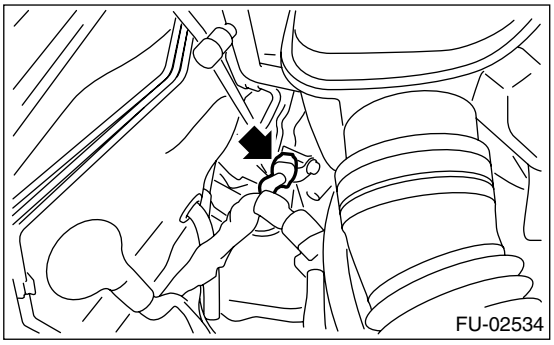

4) Lift-up the vehicle.
5) Separate the front and center exhaust pipe assembly from rear exhaust pipe.

WARNING:
Be careful, exhaust pipe is hot.

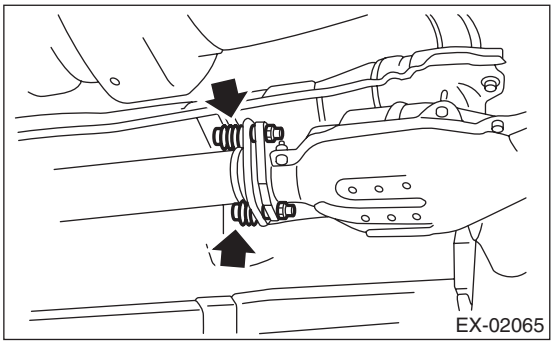

6) Remove the under cover.
7) Remove the nuts which hold front exhaust pipe onto cylinder heads.

CAUTION:
Be careful not to pull down front and center exhaust pipe assembly.

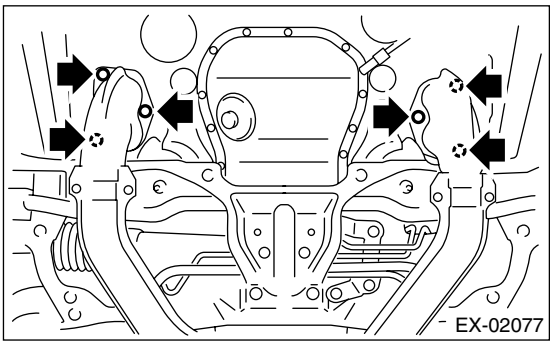

8) Remove the bolt which installs front and center exhaust pipe assembly to hanger bracket.

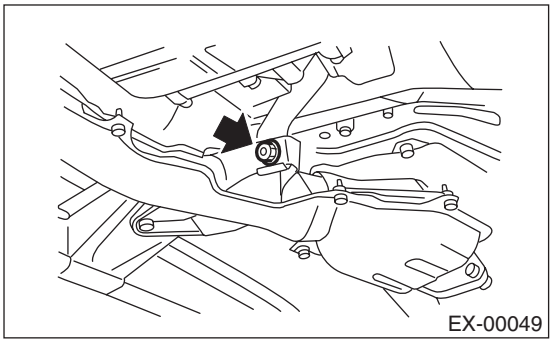

9) Remove the front and center exhaust pipe assembly from vehicle.

CAUTION:
• Be careful not to let front and center exhaust pipe assembly fall off when removing as it is quite heavy.
• After removing front and center exhaust assembly, do not apply excessive pulling force on rear exhaust pipe.

10) Separate the front exhaust pipe from center exhaust pipe.

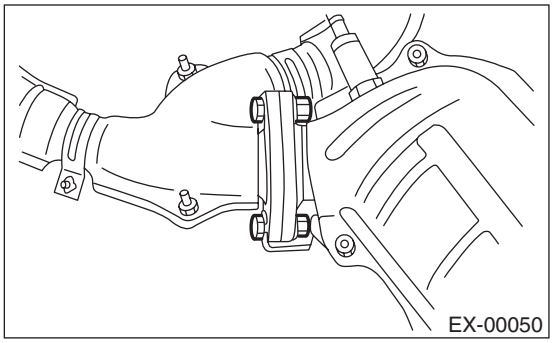

B: INSTALLATION

1) Install the front exhaust pipe to center exhaust pipe.

NOTE:
Replace gaskets with new ones.

Tightening torque:
30 N·m (3.1 kgf-m, 22.4 ft-lb)

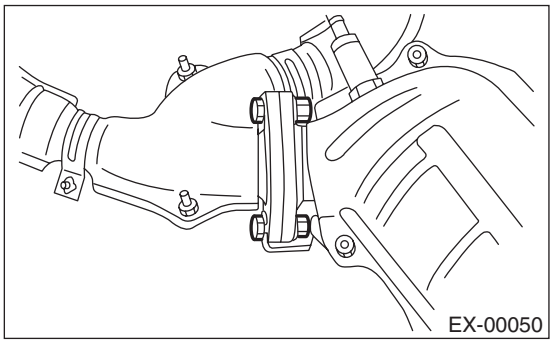

2) Install the front and center exhaust pipe assembly to vehicle.
3) Temporarily tighten the bolt which installs front and center exhaust pipe assembly to hanger bracket.

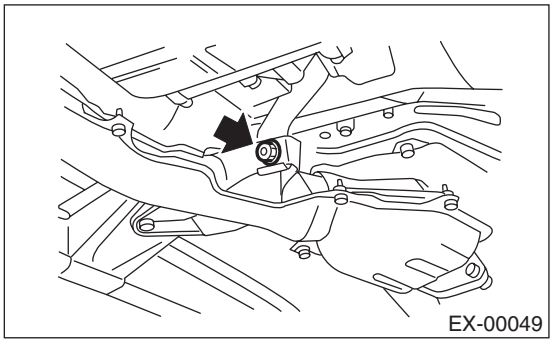

4) Tighten the nuts which hold front exhaust pipe onto cylinder heads.

Tightening torque:
30 N·m (3.1 kgf-m, 22.4 ft-lb)

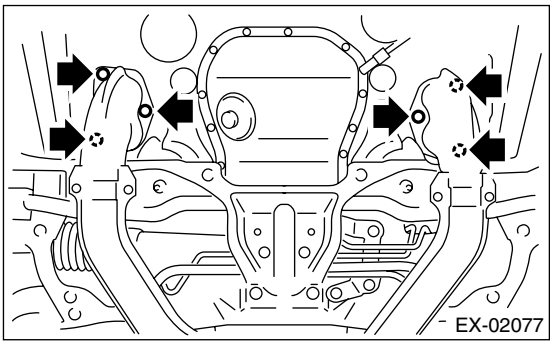

5) Install the under cover.
6) Tighten the bolts which install front and center exhaust pipe assembly to rear exhaust pipe.

Tightening torque:
18 N·m (1.8 kgf-m, 13.0 ft-lb)

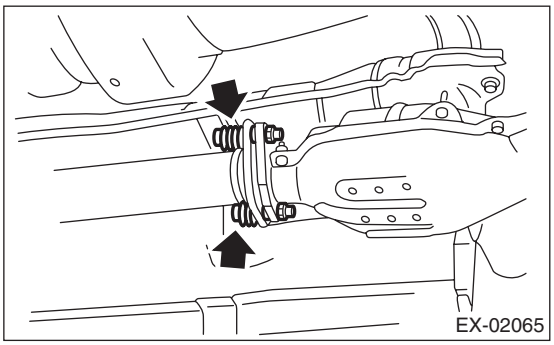

7) Tighten the bolt which holds front and center exhaust pipe assembly to hanger bracket.

Tightening torque:
35 N·m (3.6 kgf-m, 26.0 ft-lb)

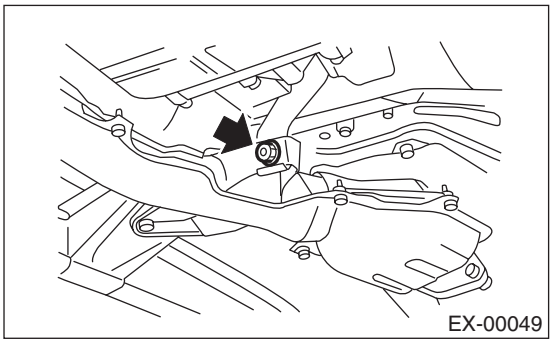

8) Lower the vehicle.

9) Connect the rear oxygen sensor connector.

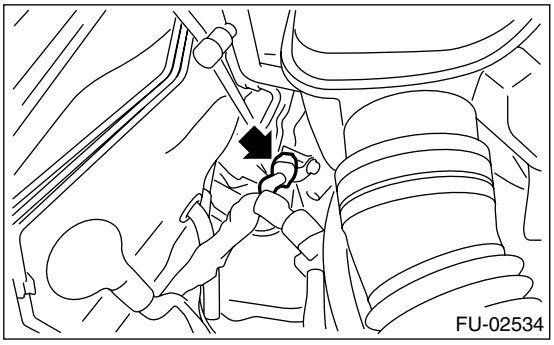

10) Connect the front oxygen (A/F) sensor connector.

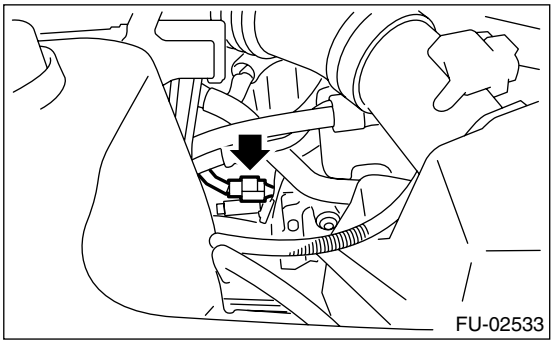

11) Connect the battery ground cable.

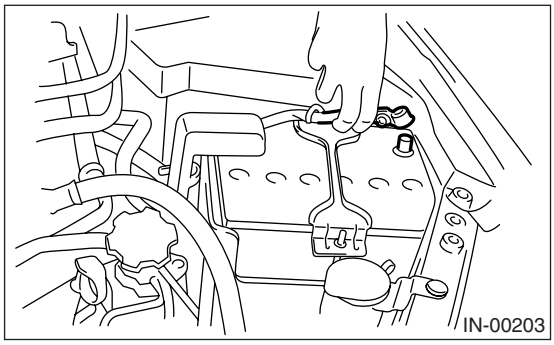

C: INSPECTION

1) Make sure there are no exhaust leaks from connections and welds.
2) Make sure there are no holes or rusting.

3. Center Exhaust Pipe

A: REMOVAL

1) After removing the center and front exhaust pipes as an assembly, separate them. Refer to “Front Exhaust Pipe” for removal procedure. <Ref. to EX(H4SO)-4, REMOVAL, Front Exhaust Pipe.>
2) Remove the front oxygen (A/F) sensor and rear oxygen sensor. <Ref. to FU(H4SO)-32, REMOVAL, Front Oxygen (A/F) Sensor.> <Ref. to FU(H4SO)-34, REMOVAL, Rear Oxygen Sensor.>

B: INSTALLATION

1) Install the front oxygen (A/F) sensor and rear oxygen sensor. <Ref. to FU(H4SO)-32, INSTALLATION, Front Oxygen (A/F) Sensor.> <Ref. to FU(H4SO)-34, INSTALLATION, Rear Oxygen Sensor.>
2) Install the center exhaust pipe and front exhaust pipe as an assembly. Refer to “Front Exhaust Pipe” for installation procedure. <Ref. to EX(H4SO)-5, INSTALLATION, Front Exhaust Pipe.>

C: INSPECTION

1) Make sure there are no exhaust leaks from connections and welds.
2) Make sure there are no holes or rusting.

4. Rear Exhaust Pipe

A: REMOVAL

1) Separate the rear exhaust pipe from center exhaust pipe.

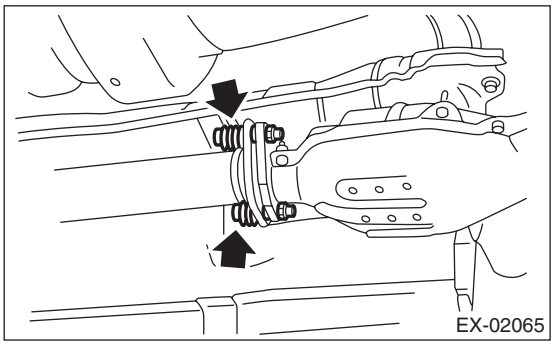

2) Separate the rear exhaust pipe from muffler.

CAUTION:
Be careful not to pull down the rear exhaust pipe.

- LH side

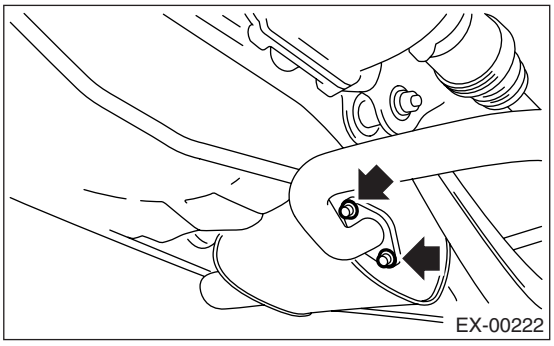

- RH side

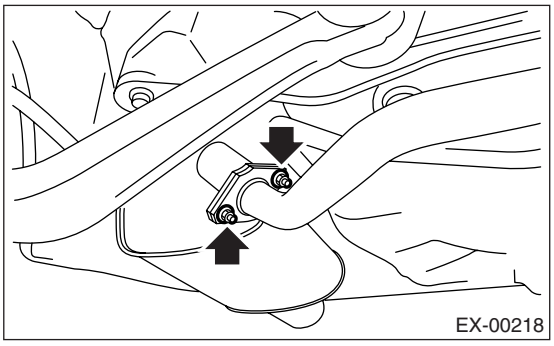

3) Apply a coat of spray type lubricant to the mating area of cushion rubber.

4) Remove the rear exhaust pipe bracket from cushion rubber.

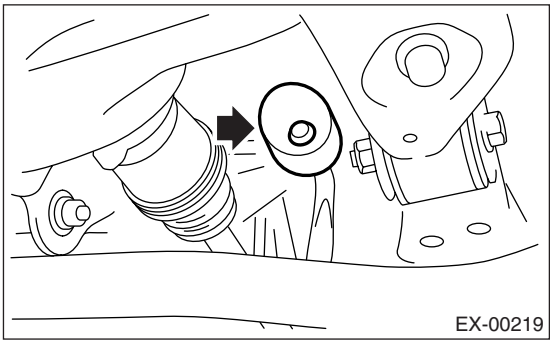

B: INSTALLATION

1) Apply a coat of spray type lubricant to the mating area of cushion rubber.
2) Install the rear exhaust pipe bracket to cushion rubber.

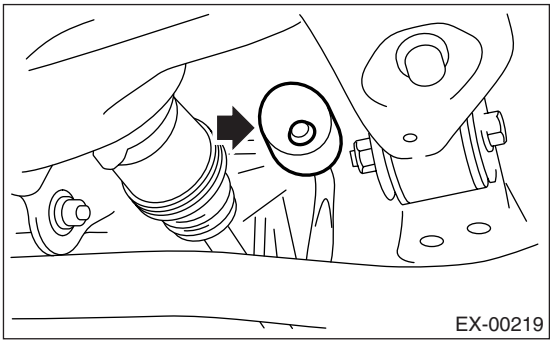

3) Install the rear exhaust pipe to muffler.

NOTE:
Use a new gasket and self-locking nut.

Tightening torque:
48 N·m (4.9 kgf-m, 35.4 ft-lb)

- LH side

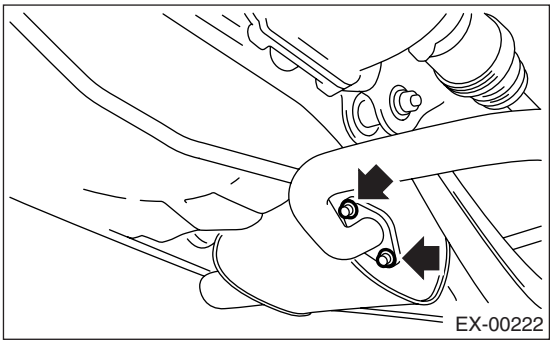

- RH side

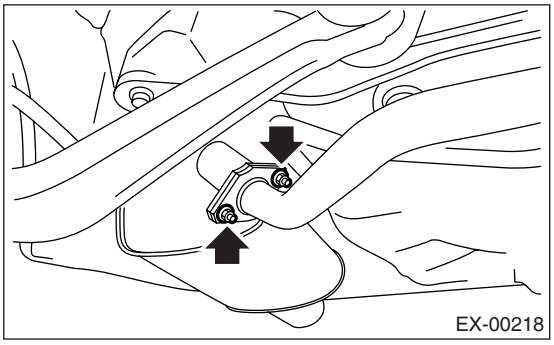

4) Install the rear exhaust pipe to center exhaust pipe.

Tightening torque:
18 N·m (1.8 kgf-m, 13.0 ft-lb)

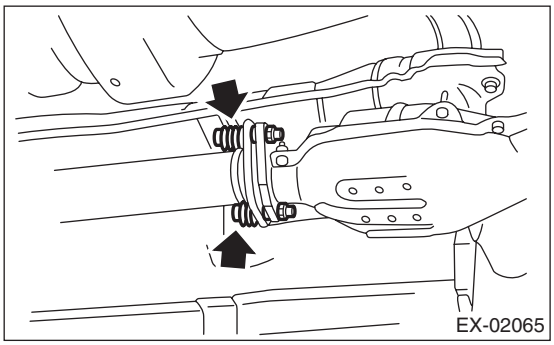

C: INSPECTION

1) Make sure there are no exhaust leaks from connections and welds.
2) Make sure there are no holes or rusting.
3) Make sure the cushion rubber is not worn or cracked.

5. Muffler

A: REMOVAL

1) Separate the muffler from rear exhaust pipe.
- LH side

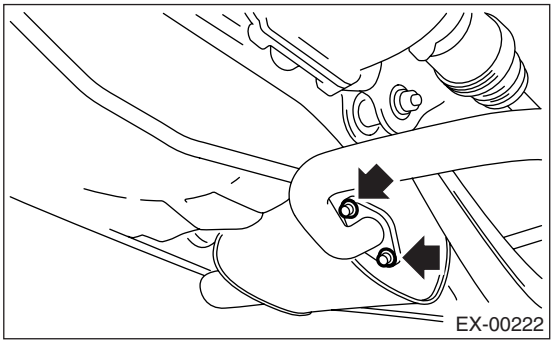

- RH side

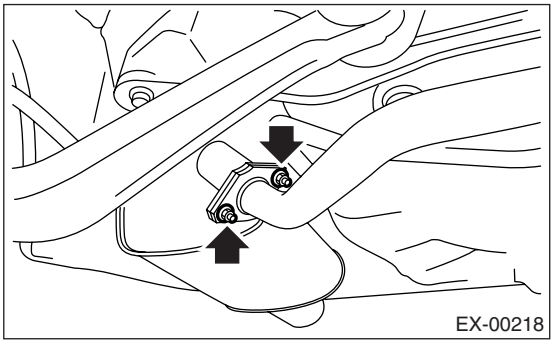

2) Apply a coat of spray type lubricant to the mating area of cushion rubber.
- LH side

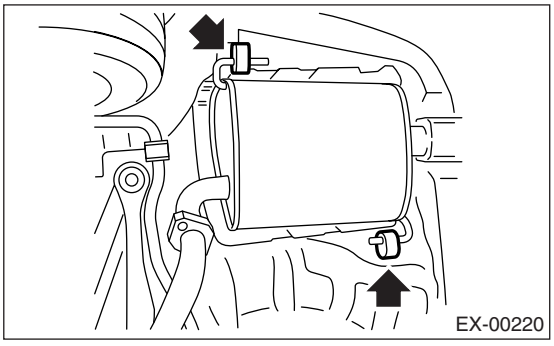

- RH side

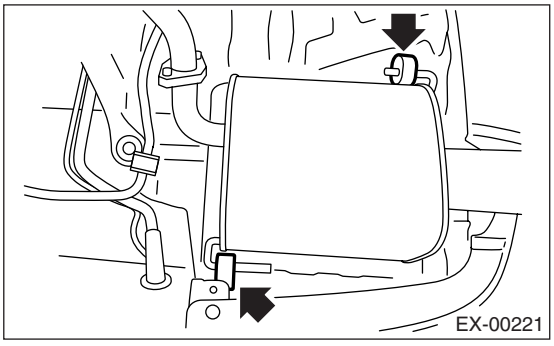

3) Remove the front and rear cushion rubber, and then remove the muffler.

B: INSTALLATION

Install in the reverse order of removal.

NOTE:
Use a new gasket and self-locking nut.

Tightening torque:
48 N·m (4.9 kgf-m, 35.4 ft-lb)

- LH side

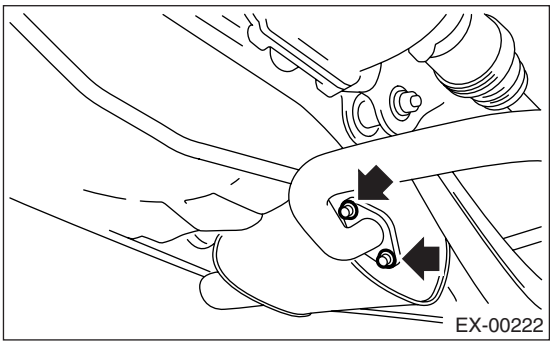

- RH side

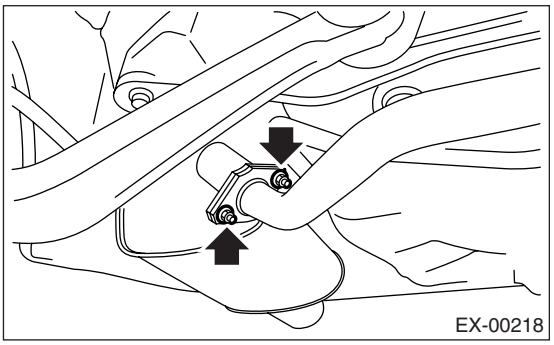

C: INSTALLATION

1) Make sure there are no exhaust leaks from connections and welds.
2) Make sure there are no holes or rusting.
3) Make sure the cushion rubber is not worn or cracked.

COOLING

CO(H4SO)

Page

1. General Description 2
2. Radiator Fan System 7
3. Engine Coolant....12
4. Water Pump 14
5. Thermostat 17
6. Radiator....19
7. Radiator Cap 22
8. Radiator Main Fan and Fan Motor 23
9. Radiator Sub Fan and Fan Motor....25
10. Reservoir Tank....27
11. Engine Cooling System Trouble in General 28

1. General Description

A: SPECIFICATION

Cooling system				Electric fan + Forced engine coolant circulation system
Total engine coolant capacity ℓ (US qt, Imp qt)				MT: approx. 6.4 (6.8, 5.6) AT: approx. 6.3 (6.7, 5.5)
Water pump	Type			Centrifugal impeller type
	Discharge performance I	Discharge ℓ (US gal, Imp gal) / min		18 (4.8, 4.0)
		Pump speed — Discharge pressure		1,000 rpm — 7 kPa (0.7 mAq)
		Engine coolant temperature		85°C (185°F)
	Discharge performance II	Discharge ℓ (US gal, Imp gal) / min		70 (18.5, 15.4)
		Pump speed — Discharge pressure		3,000 rpm — 55 kPa (5.6 mAq)
		Engine coolant temperature		85°C (185°F)
	Discharge performance III	Discharge ℓ (US gal, Imp gal) / min		153 (40.4, 33.7)
		Pump speed — Discharge pressure		6,000 rpm — 217 kPa (22.1 mAq)
		Engine coolant temperature		85°C (185°F)
	Impeller diameter mm (in)			74 (2.91)
	Number of impeller vanes			8
	Pump pulley diameter mm (in)			60 (2.36)
	Clearance between impeller and case		Standard mm (in)	0.4 — 1.6 (0.016 — 0.063)
Thermostat	Type			Wax pellet type
	Starting temperature to open			76 — 80°C (169 — 176°F)
	Fully opens			91°C (196°F)
	Valve lift mm (in)			9.0 (0.354) or more
	Valve bore mm (in)			35 (1.38)
Radiator fan	Motor input	Main fan		90 W
		Sub fan		90 W
	Fan diameter / Blades	Main fan		300 mm (11.81 in) /4
		Sub fan		300 mm (11.81 in) /5
Radiator	Type			Down flow, pressure type
	Core dimensions	Width × Height × Thickness mm (in)		687.4 × 340 × 16 (27.06 × 13.39 × 0.63)
	Pressure range in which cap valve is open kPa (kg/cm^2, psi)			Above: 108±15, or more (1.1±0.15, 16±2) Below: −1.0 — −4.9, or less (−0.01 — −0.05, −0.1 — −0.7)
	Fins			Corrugated fin type
Reservoir tank	Capacity ℓ (US qt, Imp qt)			0.45 (0.48, 0.40)

Vehicle speed	A/C compressor load	Engine coolant temperature		
		Rising: 95°C (203°F) or less Descending: 92°C (198°F) or less	Rising: 96 — 99°C (205 — 210°F) Descending: 93 — 94°C (199 — 201°F)	Rising: 100°C (212°F) or more Descending: 95°C (203°F) or more
		Operation of radiator fan	Operation of radiator fan	Operation of radiator fan
At acceleration: 19 km/h (12 MPH) or less At deceleration: 10 km/h (6 MPH) or less	OFF	OFF	Low-Speed	High-Speed
	Low	Low-Speed	Low-Speed	High-Speed
	High	High-Speed	High-Speed	High-Speed
At acceleration: 20 — 69 km/h (12 — 43 MPH) At deceleration: 11 — 64 km/h (7 — 40 MPH)	OFF	OFF	Low-Speed	High-Speed
	Low	High-Speed	High-Speed	High-Speed
	High	High-Speed	High-Speed	High-Speed
At acceleration: 70 — 105 km/h (43 — 65 MPH) At deceleration: 65 — 103 km/h (40 — 64 MPH)	OFF	OFF	Low-Speed	High-Speed
	Low	OFF	Low-Speed	High-Speed
	High	Low-Speed	High-Speed	High-Speed
At acceleration: 106 km/h (66 MPH) or more At deceleration: 104 km/h (65 MPH) or more	OFF	OFF	OFF	High-Speed
	Low	OFF	Low-Speed	High-Speed
	High	OFF	Low-Speed	High-Speed

B: COMPONENT

1. WATER PUMP

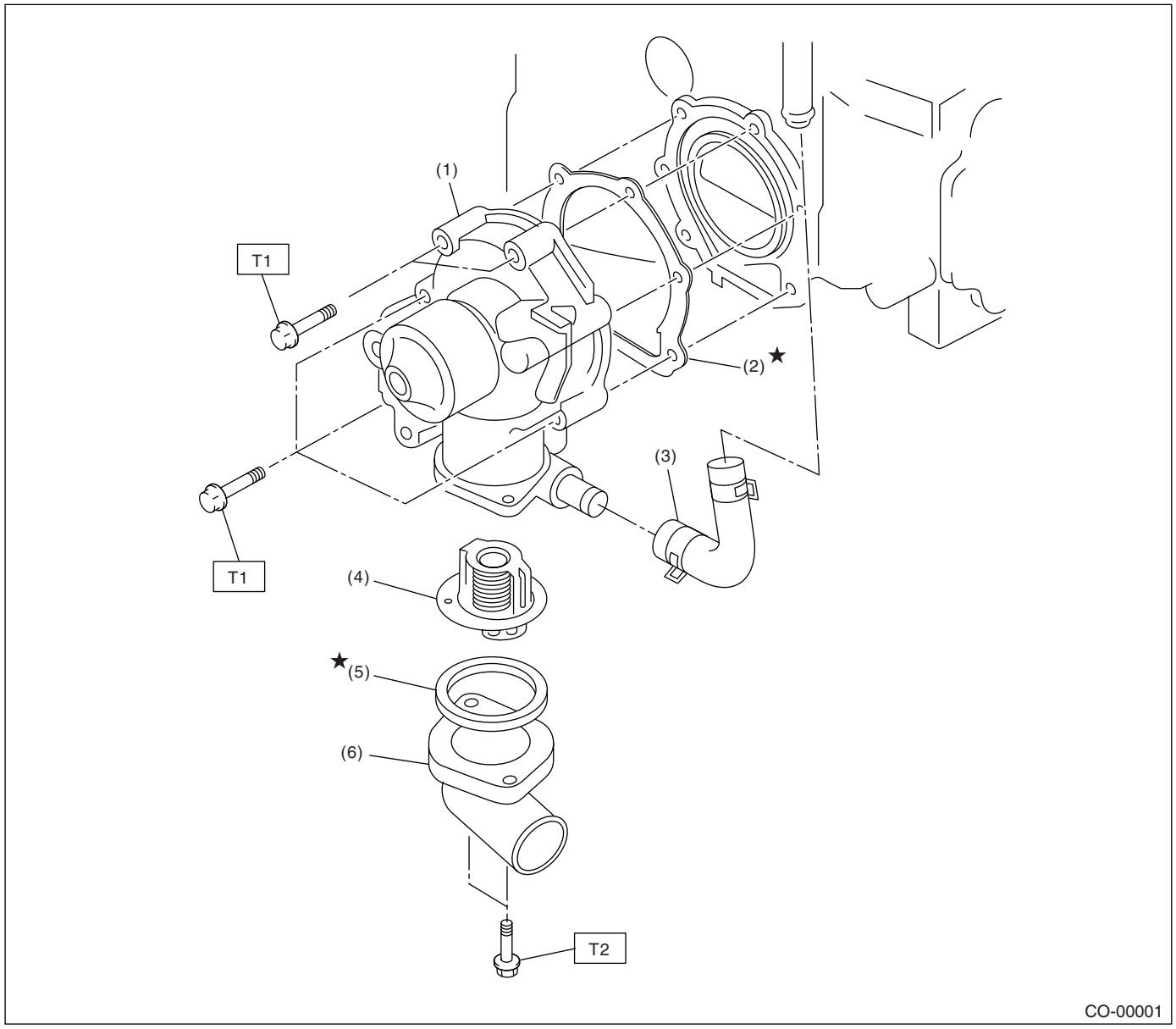

(1) Water pump ASSY
(2) Gasket
(3) Heater by-pass hose
(4) Thermostat
(5) Gasket
(6) Thermostat cover

Tightening torque: N·m (kgf-m, ft-lb)
T1: First 12 (1.2, 8.9)
Second 12 (1.2, 8.9)
T2: 6.5 (0.66, 4.8)

2. RADIATOR AND RADIATOR FAN

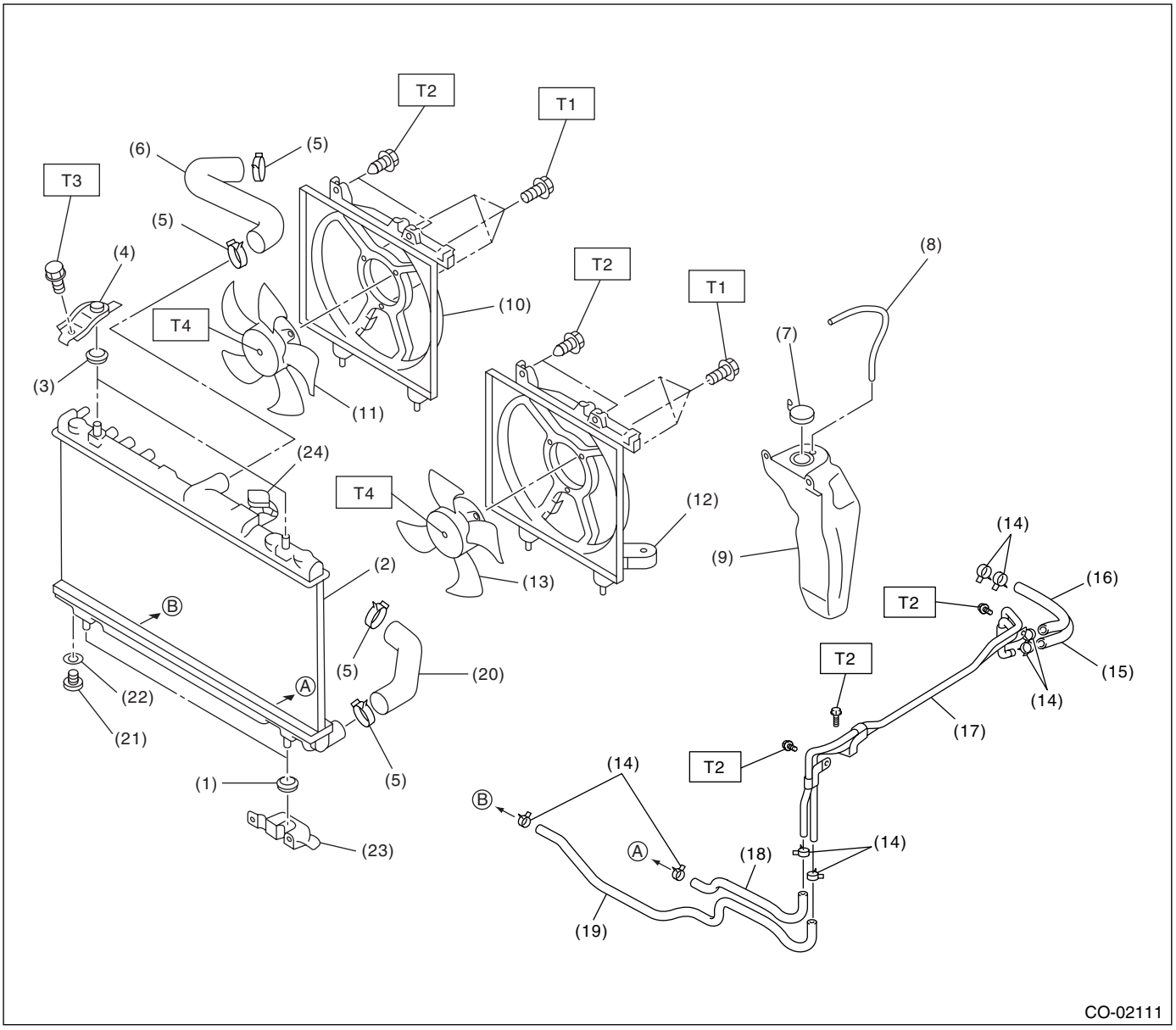

(1) Radiator lower cushion
(2) Radiator
(3) Radiator upper cushion
(4) Radiator upper bracket
(5) Clamp
(6) Radiator hose A
(7) Engine coolant reservoir tank cap
(8) Over flow hose
(9) Engine coolant reservoir tank
(10) Radiator sub fan shroud
(11) Radiator sub fan, radiator sub fan motor assembly
(12) Radiator main fan shroud
(13) Radiator main fan, radiator main fan motor assembly
(14) ATF hose clamp (AT model)
(15) ATF hose A (AT model)
(16) ATF hose B (AT model)
(17) ATF pipe (AT model)
(18) ATF hose C (AT model)
(19) ATF hose D (AT model)
(20) Radiator hose B
(21) Radiator drain plug
(22) O-ring
(23) Radiator lower bracket
(24) Radiator cap

Tightening torque: N·m (kgf-m, ft-lb)
T1: 5 (0.5, 3.6)
T2: 7.5 (0.76, 5.5)
T3: 12 (1.2, 8.9)
T4: 3.4 (0.35, 2.5)

C: CAUTION

- Wear work clothing, including a cap, protective goggles, and protective shoes during operation.
- Remove contamination including dirt and corrosion before removal, installation or disassembly.
- Keep the disassembled parts in order and protect them from dust and dirt.
- Before removal, installation or disassembly, be sure to clarify the failure. Avoid unnecessary removal, installation, disassembly and replacement.
- Be careful not to burn yourself, because each part on the vehicle is hot after running.
- Be sure to tighten fasteners including bolts and nuts to the specified torque.
- Place shop jacks or rigid racks at the specified points.
- Before disconnecting electrical connectors of sensors or units, be sure to disconnect the ground cable from battery.

D: PREPARATION TOOL

1. SPECIAL TOOL

ILLUSTRATION	TOOL NUMBER	DESCRIPTION	REMARKS
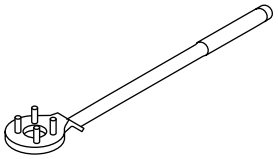 ST-499977100	499977100	CRANK PULLEY WRENCH	Used for stopping rotation of crank pulley when loosening/tightening crank pulley bolt.
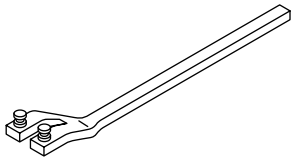 ST18231AA010	18231AA010	CAM SPROCKET WRENCH	• Used for removing and installing cam sprocket. • CAM SPROCKET WRENCH (499207100) can also be used.

2. Radiator Fan System

A: WIRING DIAGRAM

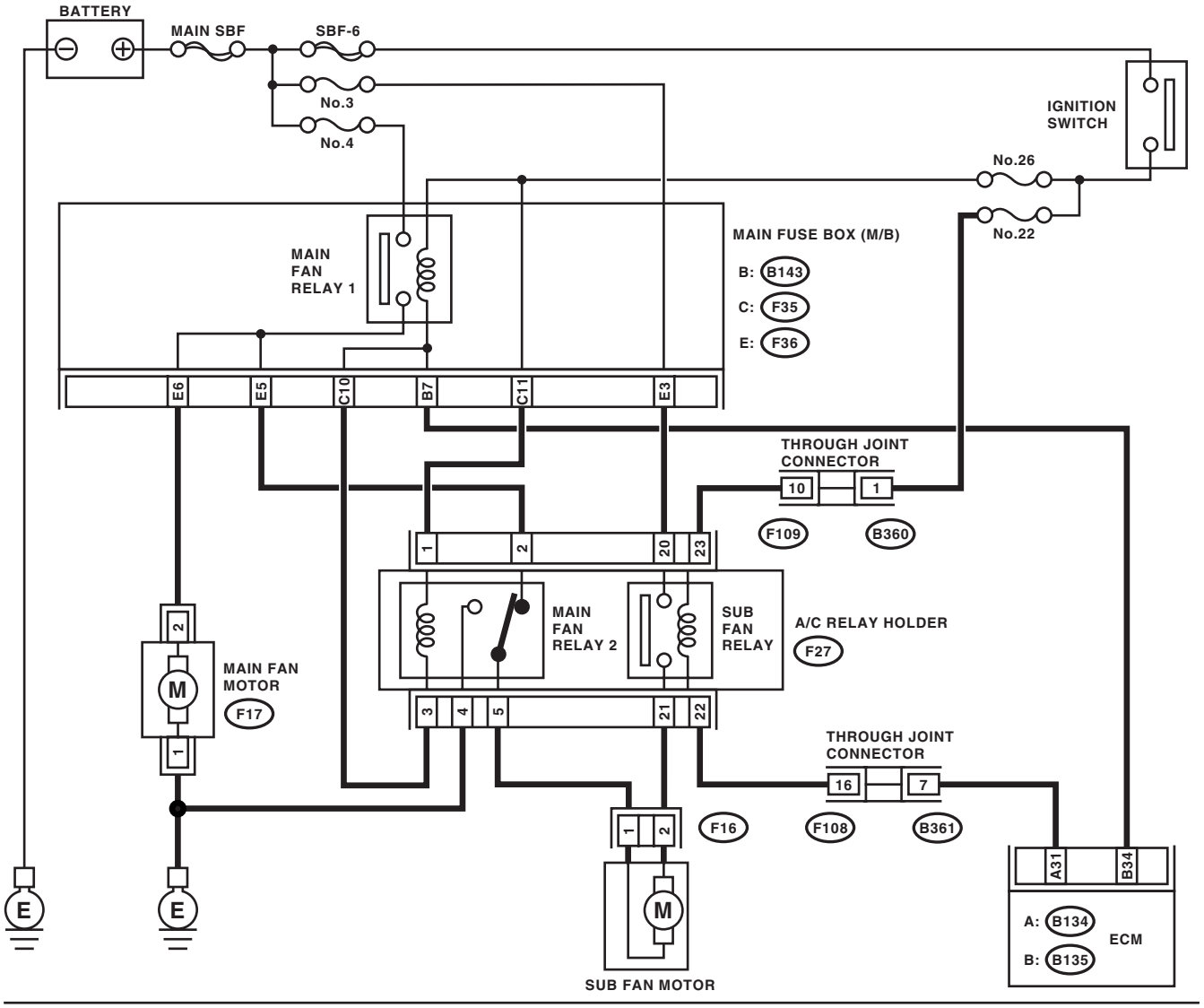

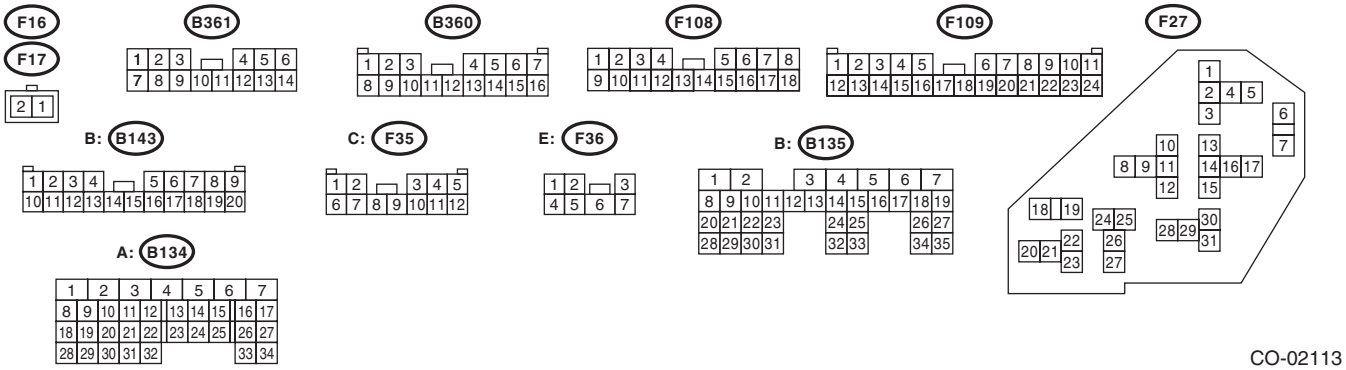

CO-02113

B: INSPECTION

DETECTING CONDITION:

- Engine coolant temperature is more than 96°C (205°F).
- Vehicle speed is below 19 km/h (12 MPH).

TROUBLE SYMPTOMS:

Radiator main and sub fan do not rotate under the above conditions.

	Step	Check	Yes	No
1	**CHECK OPERATION OF RADIATOR FAN.** 1) Connect the test mode connector. 2) Turn the ignition switch to ON. 3) Perform the compulsory operation check for the radiator fan relay using Subaru Select Monitor. NOTE: • When performing the compulsory operation check for the radiator fan relay using Subaru Select Monitor, the radiator main fan and sub fan will repeat such a operation as low speed revolution → high speed revolution → OFF in this order. • Subaru Select Monitor Refer to Compulsory Valve Operation Check Mode for more operation procedure. <Ref. to EN(H4SO)(diag)-44, Compulsory Valve Operation Check Mode.>	Do the radiator main fan and sub fan rotate at low speed?	Go to step **2.**	Go to step **3.**
2	**CHECK OPERATION OF RADIATOR FAN.** 1) Connect the test mode connector. 2) Turn the ignition switch to ON. 3) Perform the compulsory operation check for the radiator fan relay using Subaru Select Monitor. NOTE: • When performing the compulsory operation check for the radiator fan relay using Subaru Select Monitor, the radiator main fan and sub fan will repeat such a operation as low speed revolution → high speed revolution → OFF in this order. • Subaru Select Monitor Refer to Compulsory Valve Operation Check Mode for more operation procedure. <Ref. to EN(H4SO)(diag)-44, Compulsory Valve Operation Check Mode.>	Do the radiator main fan and sub fan rotate at high speed?	Radiator fan system is normal.	Go to step **27.**
3	**CHECK POWER SUPPLY TO SUB FAN RELAY.** 1) Turn the ignition switch to OFF. 2) Remove the sub fan relay from A/C relay holder. 3) Measure the voltage between sub fan relay terminal and chassis ground. ***Connector & terminal*** ***(F27) No. 20 (+) — Chassis ground (−):***	Is the voltage more than 10 V?	Go to step **4.**	Go to step **5.**
4	**CHECK POWER SUPPLY TO SUB FAN RELAY.** 1) Turn the ignition switch to ON. 2) Measure the voltage between sub fan relay terminal and chassis ground. ***Connector & terminal*** ***(F27) No. 23 (+) — Chassis ground (−):***	Is the voltage more than 10 V?	Go to step **7.**	Go to step **6.**

	Step	Check	Yes	No
5	**CHECK FUSE.** 1) Turn the ignition switch to OFF. 2) Remove the fuse No. 3. 3) Check the condition of fuse.	Is the fuse blown out?	Replace the fuse.	Repair the power supply line.
6	**CHECK FUSE.** 1) Turn the ignition switch to OFF. 2) Remove the fuse No. 22. 3) Check the condition of fuse.	Is the fuse blown out?	Replace the fuse.	Repair the power supply line.
7	**CHECK SUB FAN RELAY.** 1) Turn the ignition switch to OFF. 2) Measure the resistance between sub fan relay terminals. ***Terminals*** ***No. 20 — No. 21:***	Is the resistance more than 1 MΩ?	Go to step **8.**	Replace the sub fan relay.
8	**CHECK SUB FAN RELAY.** 1) Connect the battery to terminals No. 22 and No. 23 of sub fan relay. 2) Measure the resistance between sub fan relay terminals. ***Terminals*** ***No. 20 — No. 21:***	Is the resistance less than 1 Ω?	Go to step **9.**	Replace the sub fan relay.
9	**CHECK HARNESS BETWEEN SUB FAN RELAY TERMINAL AND SUB FAN MOTOR CONNECTOR.** 1) Disconnect the connector from sub fan motor. 2) Measure the resistance of harness between sub fan relay terminal and sub fan motor connector. ***Connector & terminal*** ***(F16) No. 2 — (F27) No. 21:***	Is the resistance less than 1 Ω?	Go to step **10.**	Measure the open circuit of harness between sub fan relay terminal and sub fan motor connector.
10	**CHECK HARNESS BETWEEN SUB FAN MOTOR CONNECTOR AND MAIN FAN RELAY 2 CONNECTOR.** 1) Remove the main fan relay 2 from A/C relay holder. 2) Measure the resistance of harness between sub fan motor connector and main fan relay 2 connector. ***Connector & terminal*** ***(F16) No. 1 — (F27) No. 5:***	Is the resistance less than 1 Ω?	Go to step **11.**	Repair the open harness between sub fan motor connector and main fan relay 2 connector.
11	**CHECK POOR CONTACT.** Check the poor contact in sub fan motor connector.	Is there poor contact in sub fan motor connector?	Repair the poor contact in sub fan motor connector.	Go to step **12.**
12	**CHECK SUB FAN MOTOR.** Connect the battery positive (+) terminal to terminal No. 2 of sub fan motor, and the ground (–) terminal to terminal No. 1.	Does the sub fan rotate?	Go to step **13.**	Replace the sub fan motor.
13	**CHECK MAIN FAN RELAY 2.** Measure the resistance of main fan relay 2. ***Terminals*** ***No. 2 — No. 5:***	Is the resistance less than 1 Ω?	Go to step **14.**	Replace the main fan relay 2.

	Step	Check	Yes	No
14	**CHECK HARNESS BETWEEN MAIN FAN RELAY 2 TERMINAL AND MAIN FAN MOTOR CONNECTOR.** 1) Disconnect the connector from main fan motor. 2) Measure the resistance of harness between main fan relay 2 terminal and main fan motor connector. ***Connector & terminal*** ***(F17) No. 2 — (F27) No. 2:***	Is the resistance less than 1 Ω?	Go to step **15.**	Repair the open circuit of harness between main fan relay 2 terminal and main fan motor connector.
15	**CHECK MAIN FAN MOTOR AND GROUND CIRCUIT.** Measure the resistance between main fan motor connector and chassis ground. ***Connector & terminal*** ***(F17) No. 1 — Chassis ground:***	Is the resistance less than 5 Ω?	Go to step **16.**	Repair the open circuit in harness between main fan motor connector and chassis ground.
16	**CHECK POOR CONTACT.** Check poor contact in main fan motor connector.	Is there poor contact in main fan motor connector?	Repair the poor contact in main fan motor connector.	Go to step **17.**
17	**CHECK MAIN FAN MOTOR.** Connect the battery positive (+) terminal to terminal No. 2 of main fan motor, and the ground (−) terminal to terminal No. 1.	Does the main fan rotate?	Go to step **18.**	Replace the main fan motor.
18	**CHECK HARNESS BETWEEN SUB FAN RELAY AND ECM.** 1) Disconnect the connector from ECM. 2) Measure the resistance between sub fan relay terminal and ECM connector. ***Connector & terminal*** ***(B134) No. 31 — (F27) No. 22:***	Is the resistance less than 1 Ω?	Go to step **19.**	Repair the open circuit in harness between sub fan relay terminal and ECM.
19	**CHECK POOR CONTACT.** Check poor contact in ECM connector.	Is there poor contact in ECM connector?	Repair the poor contact in ECM connector.	Check the DTC. Repair the trouble cause. <Ref. to EN(H4SO)(diag)-34, Read Diagnostic Trouble Code (DTC).>
20	**CHECK MAIN FAN RELAY 1.** 1) Turn the ignition switch to OFF. 2) Remove the main fan relay 1 from main fuse box. 3) Measure the resistance of terminal in main fan relay 1 switch.	Is the resistance more than 1 MΩ?	Go to step **21.**	Replace the main fan relay 1.
21	**CHECK MAIN FAN RELAY 1.** 1) Connect the battery to terminal of main fan relay 1 coil. 2) Measure the resistance between terminals of main fan relay 1 switch.	Is the resistance less than 1 Ω?	Go to step **22.**	Replace the main fan relay 1.
22	**CHECK HARNESS BETWEEN MAIN FAN RELAY 1 TERMINAL AND MAIN FAN MOTOR CONNECTOR.** 1) Disconnect the connector from main fan motor. 2) Measure the resistance of harness between main fan relay 1 terminal and main fan motor connector. ***Connector & terminal*** ***(F17) No. 2 — (F36) No. 6:***	Is the resistance less than 1 Ω?	Go to step **23.**	Repair the open circuit of harness between main fan relay 1 terminal and main fan motor connector.

	Step	Check	Yes	No
23	**CHECK HARNESS BETWEEN MAIN FAN RELAY 1 AND ECM.** 1) Disconnect the connector from ECM. 2) Measure the resistance between main fan relay 1 terminal and ECM connector. ***Connector & terminal*** ***(B135) No. 34 — (B143) No. 7:***	Is the resistance less than 1 Ω?	Go to step **24.**	Repair the open circuit of harness between main fan relay 1 terminal and ECM.
24	**CHECK HARNESS BETWEEN MAIN FAN RELAY 2 AND ECM.** Measure the resistance between main fan relay 2 terminal and ECM connector. ***Connector & terminal*** ***(B135) No. 34 — (F27) No. 3:***	Is the resistance less than 1 Ω?	Go to step **25.**	Repair the open circuit of harness between main fan relay 2 terminal and ECM.
25	**CHECK FUSE.** 1) Turn the ignition switch to OFF. 2) Remove the fuse No. 4 and No. 26. 3) Check the condition of fuse.	Is the fuse blown out?	Replace the fuse.	Go to step **26.**
26	**CHECK POOR CONTACT.** Check poor contact in ECM connector.	Is there a poor contact in ECM connector?	Repair the poor contact in ECM connector.	Repair the power supply circuit for main fuse box.
27	**CHECK OPERATION OF RADIATOR FAN.** Check if the sub fan rotates when both fans do not rotate at high speed under the step 2.	Does the sub fan rotate?	Go to step **20.**	Go to step **28.**
28	**CHECK GROUND CIRCUIT OF MAIN FAN RELAY 2.** 1) Remove the main fan relay 2 from A/C relay holder. 2) Measure the resistance between main fan relay 2 terminal and chassis ground. ***Connector & terminal*** ***(F27) No. 4 — Chassis ground:***	Is the resistance less than 1 Ω?	Go to step **29.**	Repair the open circuit in harness between main fan relay 2 and chassis ground.
29	**CHECK POWER SUPPLY TO MAIN FAN RELAY 2.** 1) Turn the ignition switch to ON. 2) Measure the voltage between main fan relay 2 terminal and chassis ground. ***Connector & terminal*** ***(F27) No. 1 (+) — Chassis ground (−):***	Is the voltage more than 10 V?	Go to step **30.**	Repair the power supply line.
30	**CHECK MAIN FAN RELAY 2.** 1) Turn the ignition switch to OFF. 2) Remove the main fan relay 2. 3) Measure the resistance of main fan relay 2. ***Terminals*** ***(F27) No. 2 — (F27) No. 4:***	Is the resistance more than 1 MΩ?	Go to step **31.**	Replace the main fan relay 2.
31	**CHECK MAIN FAN RELAY 2.** 1) Connect the battery to terminals No. 1 and No. 3 of main fan relay 2. 2) Measure the resistance of main fan relay 2. ***Terminals*** ***(F27) No. 4 — (F27) No. 5:***	Is the resistance less than 1 Ω?	Go to step **23.**	Replace the main fan relay 2.

3. Engine Coolant

A: REPLACEMENT

1. DRAINING OF ENGINE COOLANT

1) Lift-up the vehicle.
2) Remove the under cover.
3) Remove the drain plug to drain engine coolant into container.

NOTE:
Remove the radiator cap so that engine coolant will drain faster.

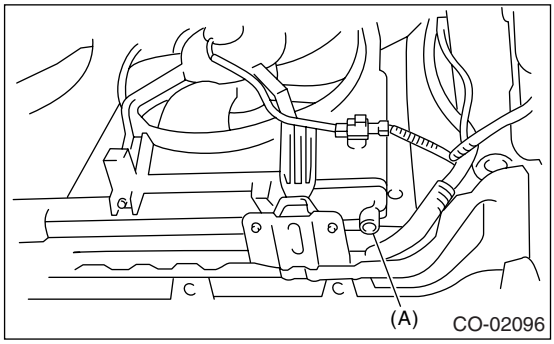

(A) Drain plug

4) Install the drain plug.

2. FILLING OF ENGINE COOLANT

1) Pour cooling system conditioner through the filler neck.

Cooling system protective agent:
COOLING SYSTEM CONDITIONER (Part No. SOA635071)

2) Pour engine coolant into the radiator up to the filler neck position.

Coolant capacity (fill up to "FULL" level):
MT model:
6.4 ℓ (6.8 US qt, 5.6 Imp qt)
AT model:
6.3 ℓ (6.7 US qt, 5.5 Imp qt)

NOTE:
The SUBARU Genuine Coolant containing anti-freeze and anti-rust agents is especially made for SUBARU engine, which has an aluminum crankcase. Always use SUBARU Genuine Coolant, since other coolant may cause corrosion.

3) Fill engine coolant into the reservoir tank up to "FULL" level.

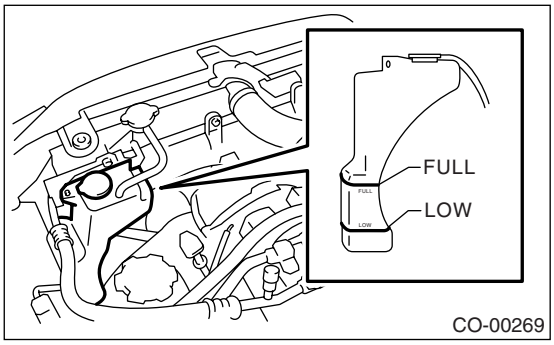

4) Close the radiator cap to start the engine and race 5 to 6 times at less than 3,000 rpm, then stop the engine. (Complete this operation within 40 seconds.)
5) Wait for one minute after the engine stops, open the radiator cap. If the engine coolant level drops, add engine coolant into radiator up to the filler neck position.
6) Perform the procedures 4) and 5) again.
7) Attach the radiator cap and reservoir tank cap properly.
8) Start the engine and operate the heater at maximum hot position and the blower speed setting to "LO"
9) Run the engine at 2,000 rpm or less until radiator fan starts and stops.

NOTE:
• Be careful with the engine coolant temperature gauge to prevent overheating.
• If the radiator hose becomes harden with the pressure of engine coolant, air bleeding operation seems to be almost completed.

10) Stop the engine and wait until engine coolant temperature lowers to 30°C (86°F).
11) Open the radiator cap. If the engine coolant level drops, add engine coolant into radiator up to the filler neck position and reservoir tank to the "FULL" level.
12) Attach the radiator cap and reservoir tank cap properly.
13) Set the heater setting to maximum hot position and the blower speed setting to "LO" and start the engine. Perform racing at less than 3,000 rpm. If the flowing sound is heard, perform the procedures from 9) again.

B: INSPECTION

1. RELATIONSHIP OF SUBARU COOLANT CONCENTRATION AND FREEZING TEMPERTAURE

The concentration and safe operating temperature of SUBARU coolant is shown in the diagram. Measuring the temperature and specific gravity of the coolant will provide this information.
[Example]
If the coolant temperature is 25°C (77°F) and its specific gravity is 1.054 and the concentration is 35% (point A), the safe operating temperature is −14°C (7°F) (point B), and the freezing temperature is −20°C (−4°F) (point C).

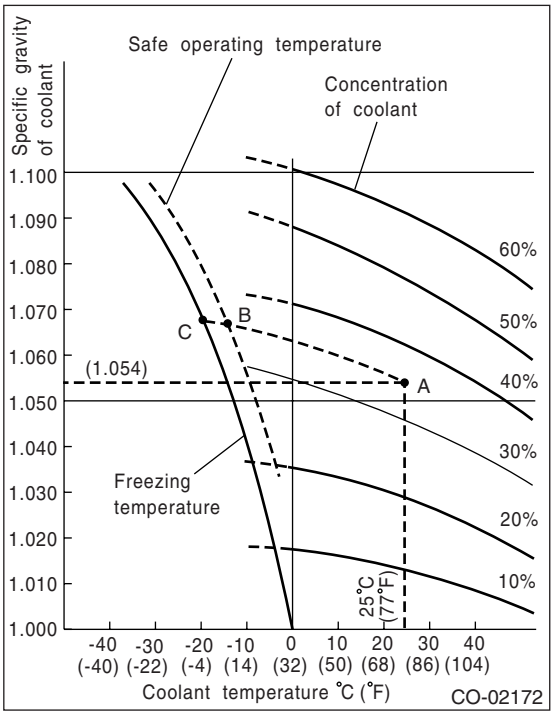

2. PROCEDURE TO ADJUST THE CONCENTRATION OF THE COOLANT

To adjust the concentration of coolant according to temperature, find the proper fluid concentration in the above diagram and replace the necessary amount of coolant with an undiluted solution of SUBARU genuine coolant (concentration 50%).
The amount of coolant that should be replaced can be determined using the diagram.
[Example]
Assume that the coolant concentration must be increased from 25% to 40%. Find point A, where the 25% line of coolant concentration intersects with the 40% curve of the necessary coolant concentration, and read the scale on the vertical axis of the graph at height A. The quantity of coolant to be drained is 2.1 ℓ (2.2 US qt, 1.8 Imp qt). Drain 2.1 ℓ (2.2 US qt, 1.8 Imp qt) of coolant from the cooling system and add 2.1 ℓ (2.2 US qt, 1.8 Imp qt) of the undiluted solution of SUBARU coolant.
If a coolant concentration of 50% is needed, drain all the coolant and refill with the undiluted solution only.

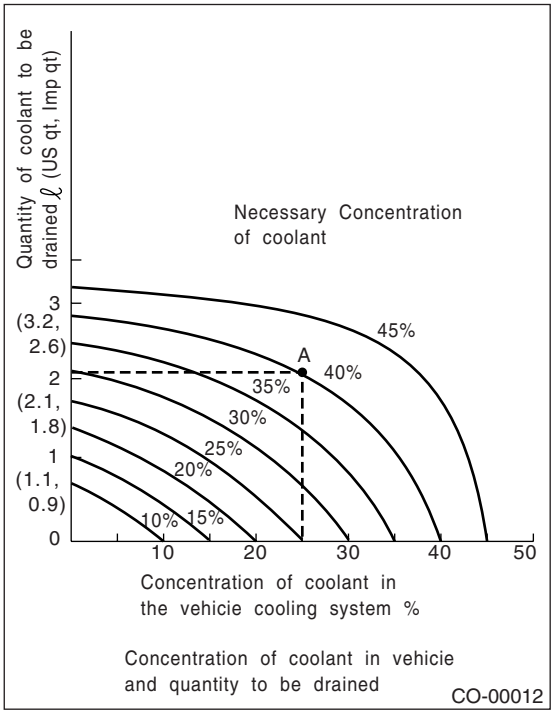

4. Water Pump

A: REMOVAL

1) Remove the radiator. <Ref. to CO(H4SO)-19, REMOVAL, Radiator.>
2) Remove the V-belts. <Ref. to ME(H4SO)-37, REMOVAL, V-belt.>
3) Remove the timing belt. <Ref. to ME(H4SO)-41, TIMING BELT, REMOVAL, Timing Belt.>
4) Remove the automatic belt tension adjuster.

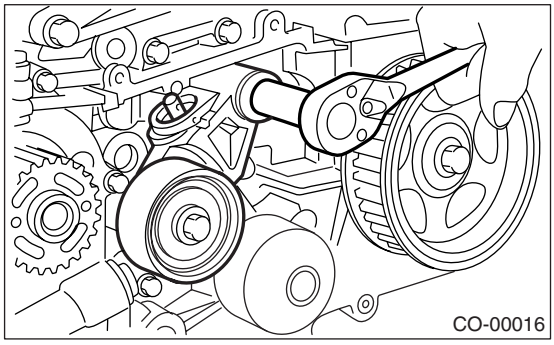

5) Remove the belt idler No. 2.

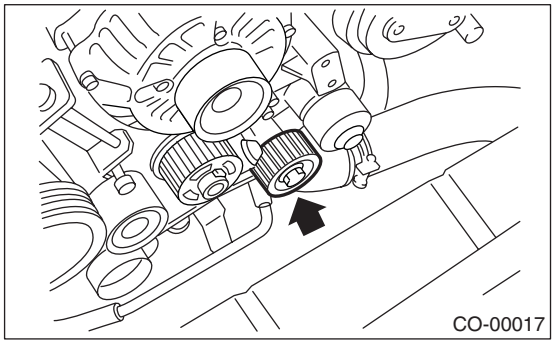

6) Remove the cam sprocket (LH) using ST.
ST 18231AA010 CAM SPROCKET WRENCH

NOTE:
CAM SPROCKET WRENCH (499207100) can also be used.

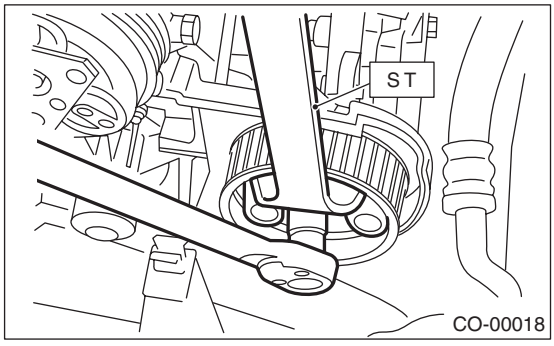

7) Remove the belt cover No. 2 (LH).

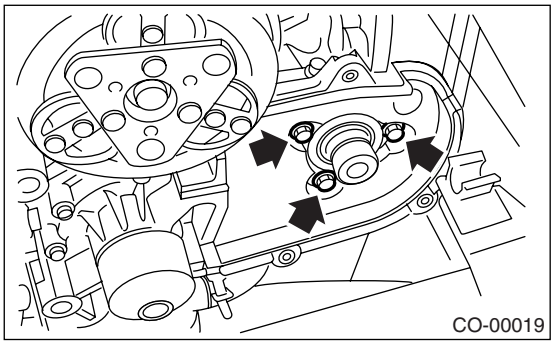

8) Remove the tensioner bracket.

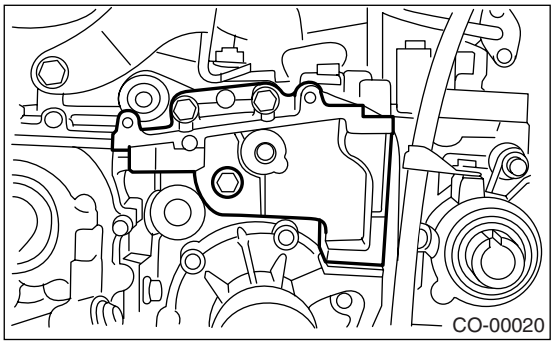

9) Disconnect the hose from water pump.
10) Remove the water pump.

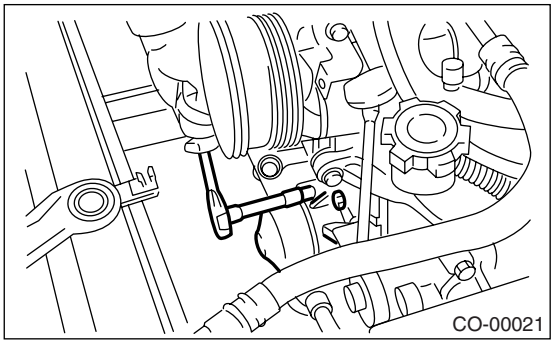

B: INSTALLATION

1) Install the water pump onto cylinder block (LH).

NOTE:
- Use a new gasket.
- When installing the water pump, tighten the bolts in two stages in alphabetical sequence as shown in figure.

Tightening torque:
First:
12 N·m (1.2 kgf-m, 8.9 ft-lb)
Second:
12 N·m (1.2 kgf-m, 8.9 ft-lb)

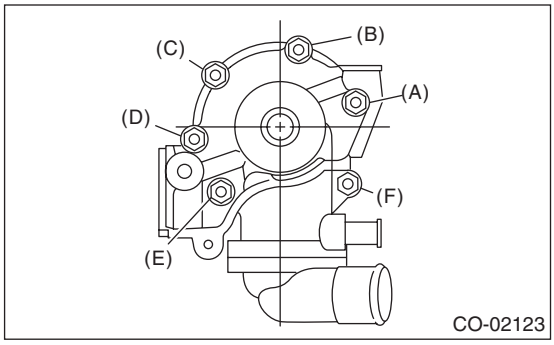

2) Connect the hose to the water pump.
3) Install the tensioner bracket.

Tightening torque:
25 N·m (2.5 kgf-m, 18 ft-lb)

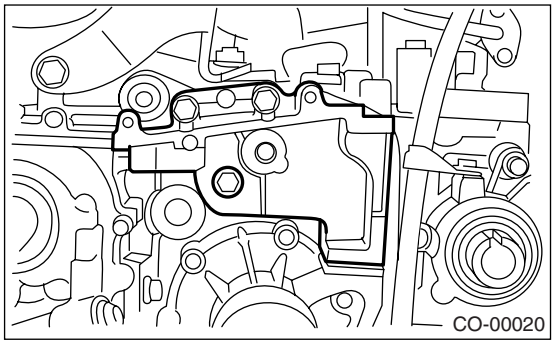

4) Install the belt cover No. 2 (LH).

Tightening torque:
5 N·m (0.5 kgf-m, 3.6 ft-lb)

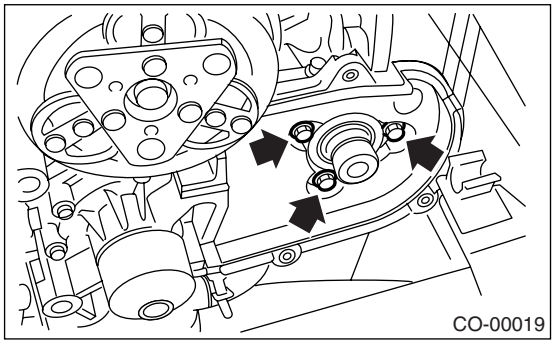

5) Install the cam sprocket (LH) using ST.
ST 18231AA010 CAM SPROCKET WRENCH

NOTE:
CAM SPROCKET WRENCH (499207100) can also be used.

Tightening torque:
78 N·m (8.0 kgf-m, 57.9 ft-lb)

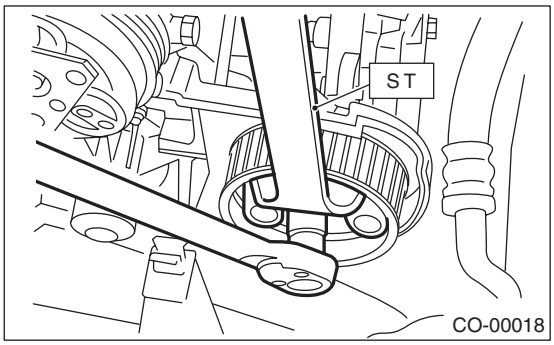

6) Install the belt idler No. 2.

Tightening torque:
39 N·m (4.0 kgf-m, 28.9 ft-lb)

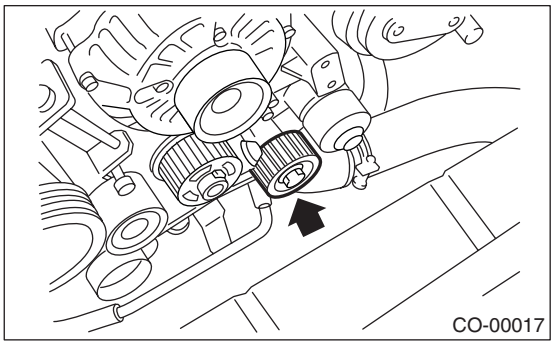

7) Install the automatic belt tension adjuster which tension rod is held with pin. <Ref. to ME(H4SO)-42, AUTOMATIC BELT TENSION ADJUSTER ASSEMBLY AND BELT IDLER, INSTALLATION, Timing Belt.>
8) Install the timing belt. <Ref. to ME(H4SO)-43, TIMING BELT, INSTALLATION, Timing Belt.>
9) Install the V-belts. <Ref. to ME(H4SO)-37, INSTALLATION, V-belt.>
10) Install the radiator. <Ref. to CO(H4SO)-20, INSTALLATION, Radiator.>

C: INSPECTION

1) Check the water pump bearing for smooth rotation.
2) Check the water pump pulley for abnormalities.
3) Check the impeller for crack or deformation.
4) Check the clearance between impeller and pump case.

Clearance between impeller and pump case:
Standard
0.4 — 1.6 mm (0.016 — 0.063 in)

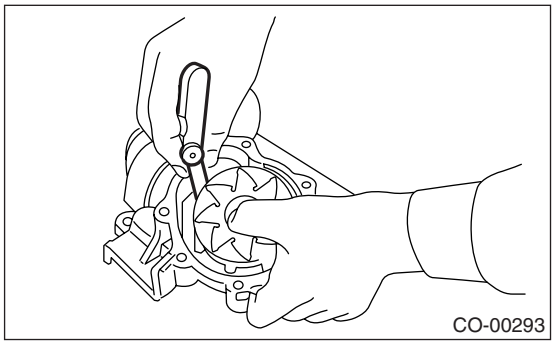

5) After water pump installation, check the pulley shaft for engine coolant leaks. If leaks are noted, replace the water pump assembly.

5. Thermostat

A: REMOVAL

1) Set the vehicle on a lift.
2) Lift-up the vehicle.
3) Remove the under cover.
4) Drain engine coolant completely. <Ref. to CO(H4SO)-12, DRAINING OF ENGINE COOLANT, REPLACEMENT, Engine Coolant.>

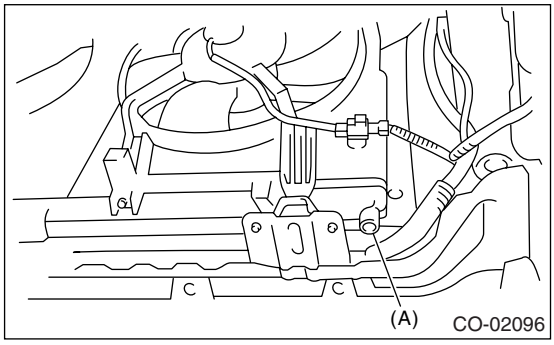

(A) Drain plug

5) Disconnect the radiator outlet hose from thermostat cover.

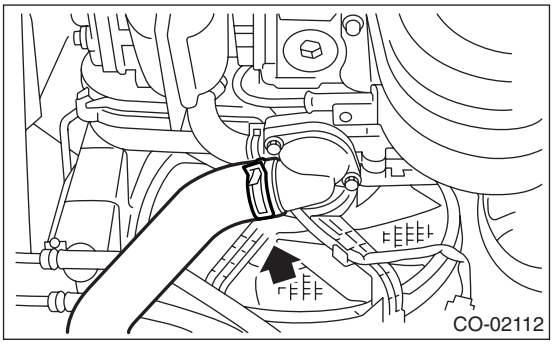

6) Remove the thermostat cover and gasket, and then remove the thermostat.

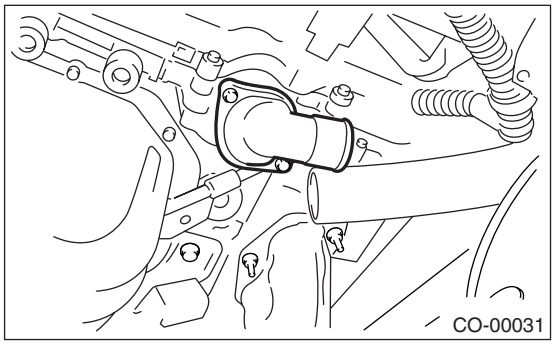

B: INSTALLATION

1) Install a gasket to thermostat, and install the thermostat and gasket to water pump as a unit. Then, install the thermostat cover.

NOTE:
• When reinstalling the thermostat, use a new gasket.
• The thermostat must be installed with the jiggle pin facing forward.

Tightening torque:
6.5 N·m (0.66 kgf-m, 4.7 ft-lb)

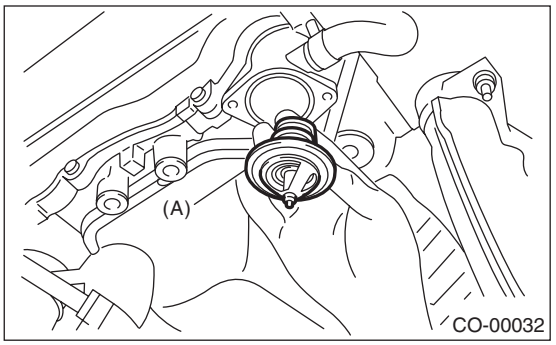

(A) Thermostat

2) Connect the radiator outlet hose to thermostat cover.
3) Install the under cover.
4) Lower the vehicle.
5) Fill with engine coolant. <Ref. to CO(H4SO)-12, FILLING OF ENGINE COOLANT, REPLACEMENT, Engine Coolant.>

C: INSPECTION

Replace the thermostat if the valve does not close completely at an ambient temperature or if the following test shows unsatisfactory results.
• Inspection method
Immerse the thermostat and a thermometer in water. Raise water temperature gradually, and measure the temperature and valve lift when the valve begins to open and when the valve is fully opened. During the test, agitate the water for even temperature distribution. The measurement should be to the specification.

NOTE:
• Leave the thermostat in the boiling water for more than five minutes before measuring the valve lift.
• Hold the thermostat with a wire or the like to avoid contacting with container bottom.

Starting temperature to open:
76 — 80°C (169 — 176°F)

Fully opens:
91°C (196°F)

Valve lift:
9.0 mm (0.354 in) or more

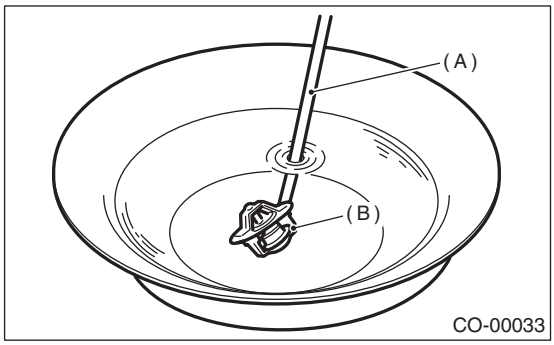

(A) Thermometer
(B) Thermostat

6. Radiator

A: REMOVAL

1) Set the vehicle on a lift.
2) Disconnect the ground cable from battery.

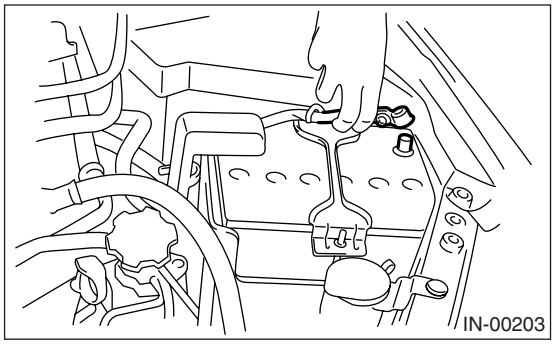

3) Lift-up the vehicle.
4) Remove the under cover.
5) Drain engine coolant completely. <Ref. to CO(H4SO)-12, DRAINING OF ENGINE COOLANT, REPLACEMENT, Engine Coolant.>
6) Disconnect the connector (A) of radiator main fan motor and connector (B) of sub fan motor.

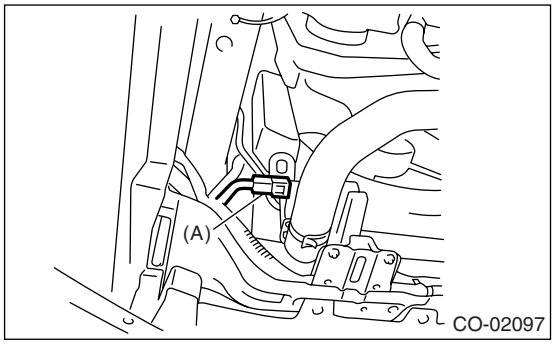

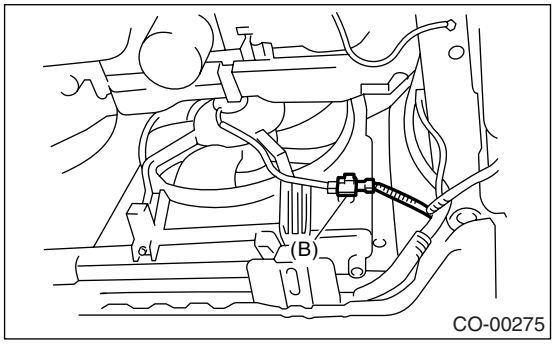

7) Disconnect the radiator outlet hose from thermostat cover.

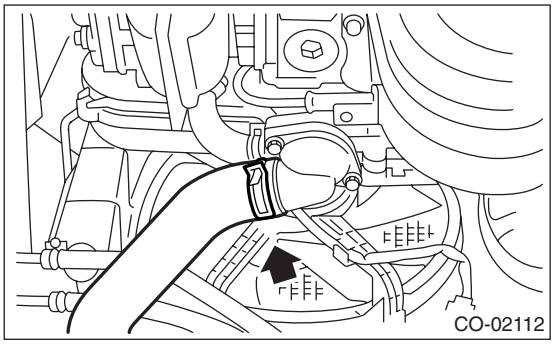

8) Disconnect the ATF cooler hoses from ATF pipes. (AT model)
Plug the ATF pipe to prevent ATF leaks.

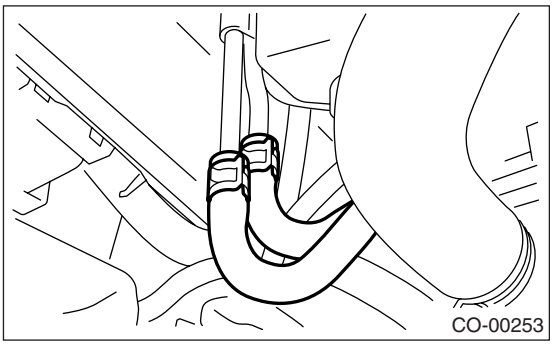

9) Lower the vehicle.
10) Disconnect the over flow hose.
11) Remove the reservoir tank. <Ref. to CO(H4SO)-27, REMOVAL, Reservoir Tank.>
12) Remove the hood stay holder.

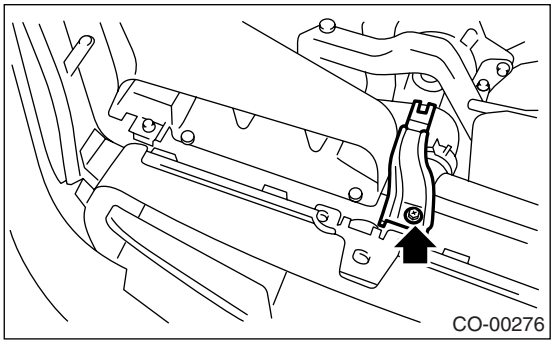

13) Remove the air intake duct. <Ref. to IN(H4SO)-10, REMOVAL, Air Intake Duct.>

14) Disconnect the radiator inlet hose from engine.

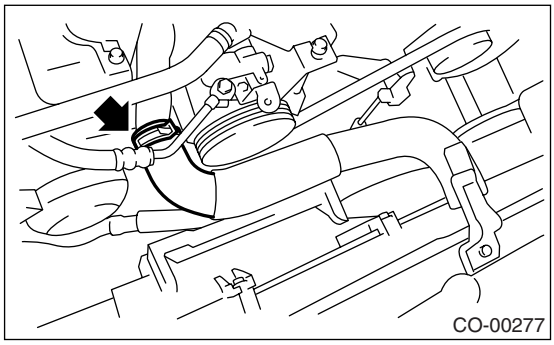

15) Remove the radiator upper brackets.

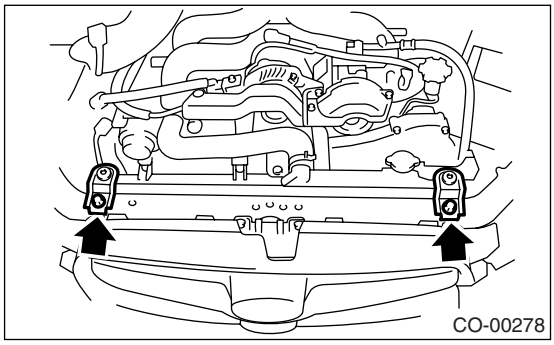

16) Lift the radiator up and away from vehicle.

B: INSTALLATION

1) Attach the radiator lower cushions to holes on the radiator lower bracket.

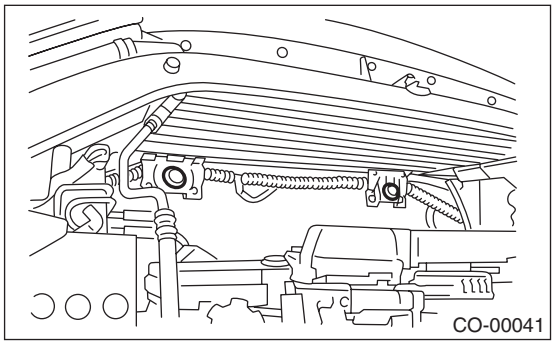

2) Install the radiator to vehicle.

NOTE:
Make pins on the lower side of radiator be fitted into the radiator lower cushions on body side.

3) Install the radiator upper brackets and tighten the bolts.

Tightening torque:
12 N·m (1.2 kgf-m, 8.9 ft-lb)

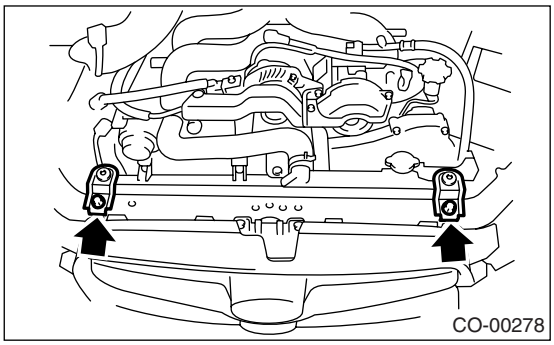

4) Connect the radiator inlet hose.

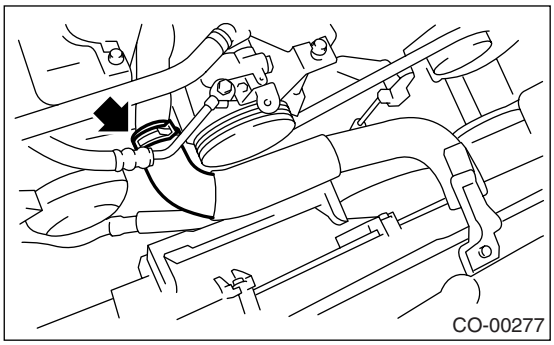

5) Install the air intake duct. <Ref. to IN(H4SO)-10, INSTALLATION, Air Intake Duct.>
6) Install the hood stay holder.

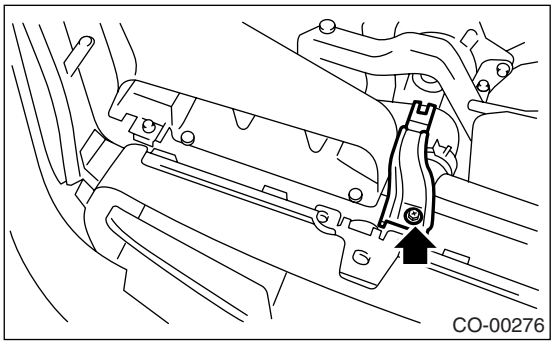

7) Install the reservoir tank. <Ref. to CO(H4SO)-27, INSTALLATION, Reservoir Tank.>
8) Connect the over flow hose.
9) Lift-up the vehicle.
10) Connect the ATF cooler hoses. (AT model)

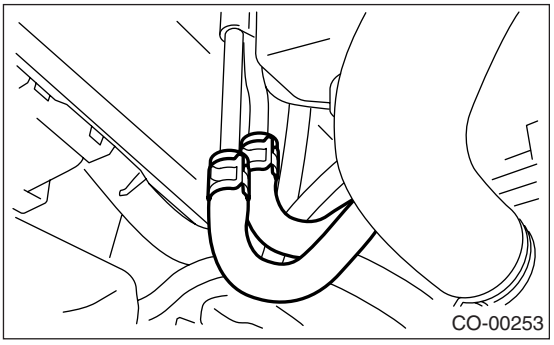

11) Connect the radiator outlet hose.

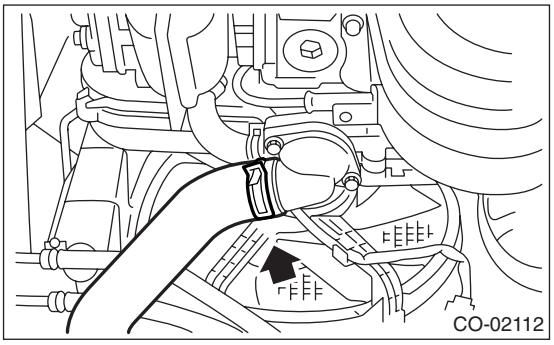

12) Connect the connector (A) to radiator main fan motor and connector (B) to sub fan motor.

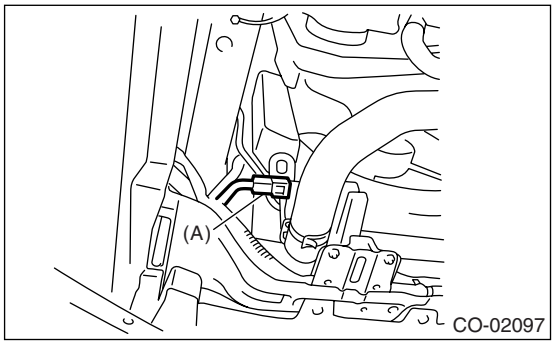

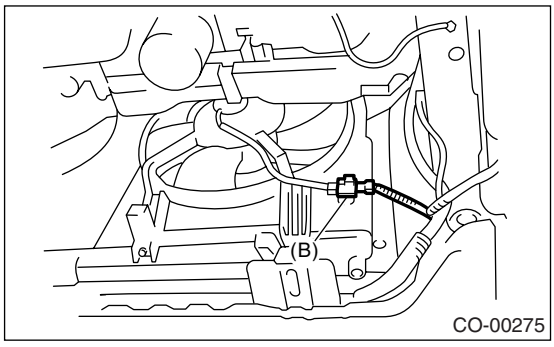

13) Install the under cover.
14) Lower the vehicle.
15) Connect the battery ground cable to battery.

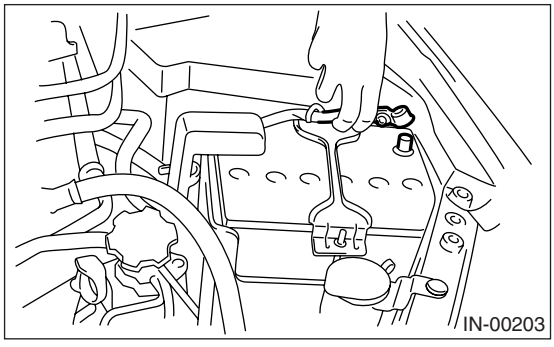

16) Fill with engine coolant. <Ref. to CO(H4SO)-12, FILLING OF ENGINE COOLANT, REPLACEMENT, Engine Coolant.>
17) Check the ATF level. <Ref. to 4AT-28, INSPECTION, Automatic Transmission Fluid.>

C: INSPECTION

1) Remove the radiator cap, top off the radiator with coolant, and then attach the tester in place of cap.

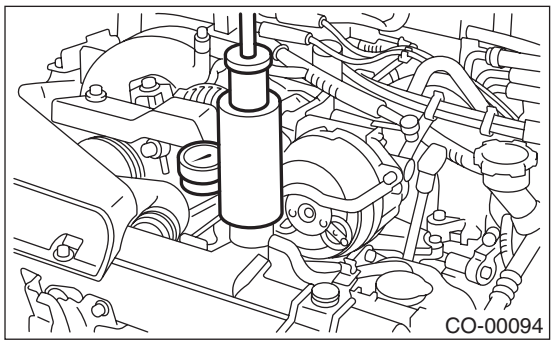

2) Apply a pressure of 157 kPa (1.6 kg/cm^2, 23 psi) to the radiator to check if:
- Engine coolant leaks at/around radiator.
- Engine coolant leaks at/around hoses or connections.

CAUTION:
- **Engine should be turned off.**
- **Wipe engine coolant from check points in advance.**
- **Be careful to prevent engine coolant from spurting out when removing tester.**
- **Be careful not to deform the filler neck of radiator when installing or removing the tester.**

7. Radiator Cap

A: INSPECTION

1) Attach the radiator cap to tester.

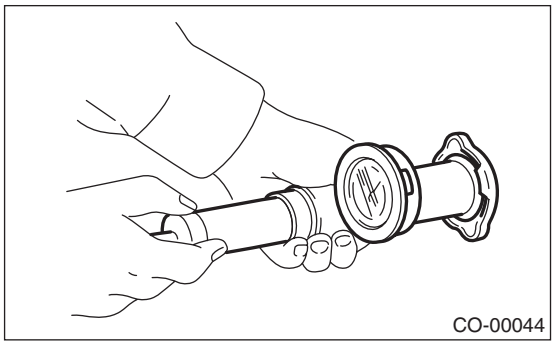

2) Increase pressure until the tester gauge pointer stops. Radiator cap is functioning properly if it holds the service limit pressure for five to six seconds.

Standard pressure:
93 — 123 kPa (0.95 — 1.25 kg/cm^2 , 14 — 18 psi)

Service limit pressure:
83 kPa (0.85 kg/cm^2, 12 psi)

CAUTION:
Be sure to remove foreign matter and rust from the cap in advance, otherwise results of pressure test will be incorrect.

8. Radiator Main Fan and Fan Motor

A: REMOVAL

1) Set the vehicle on a lift.
2) Disconnect the ground cable from battery.

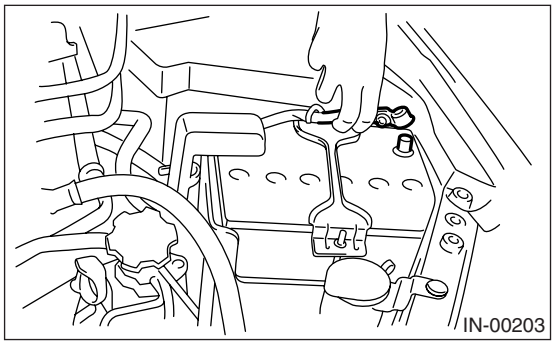

3) Lift-up the vehicle.
4) Remove the under cover.
5) Disconnect the connector (A) of main fan motor.

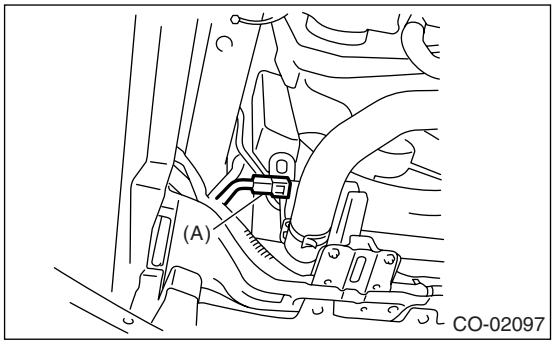

6) Remove the ATF hose from the clip of radiator main fan motor assembly. (AT model)
7) Lower the vehicle.
8) Disconnect the over flow hose.
9) Remove the reservoir tank. <Ref. to CO(H4SO)-27, REMOVAL, Reservoir Tank.>
10) Remove the bolts which hold the radiator main fan shroud to radiator.

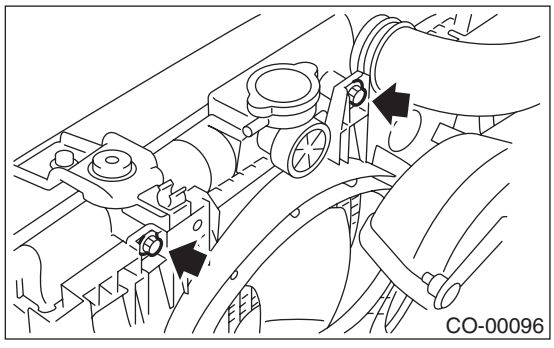

11) Remove the radiator main fan motor assembly.

B: INSTALLATION

Install in the reverse order of removal.

NOTE:
When the radiator main fan motor assembly cannot be installed, loosen the bolts which secure radiator sub fan motor assembly.

Tightening torque:
7.5 N·m (0.76 kgf-m, 5.5 ft-lb)

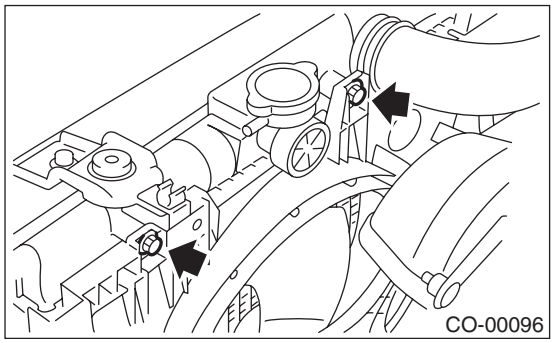

C: DISASSEMBLY

1) Remove the clip which holds motor connector onto the shroud.
2) Remove the nut which holds the fan onto fan motor and shroud.

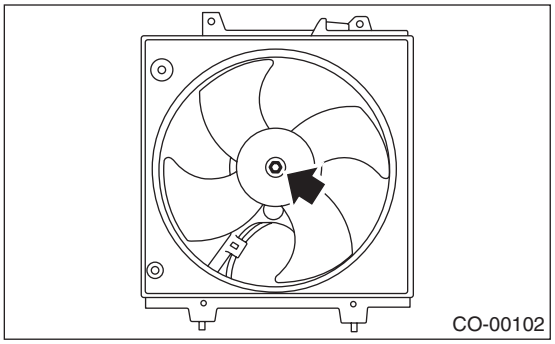

3) Remove the bolts which install fan motor onto the shroud.

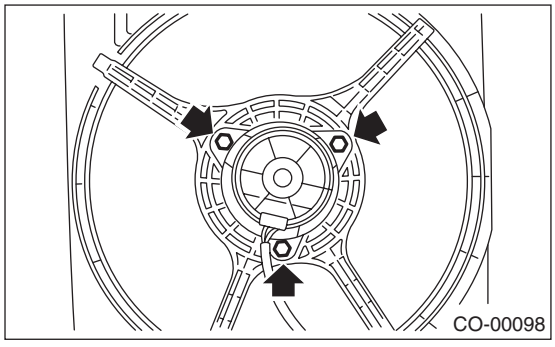

D: ASSEMBLY

Assemble in the reverse order of disassembly.

Tightening torque:
5 N·m (0.5 kgf-m, 3.6 ft-lb)

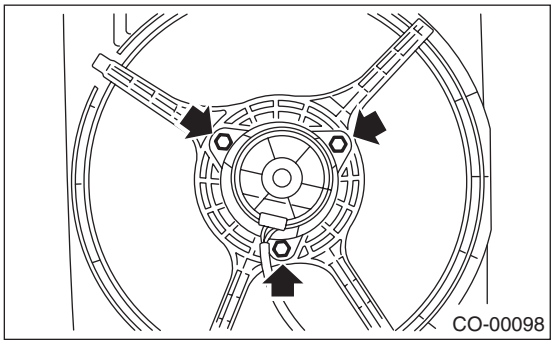

Tightening torque:
3.4 N·m (0.35 kgf-m, 2.5 ft-lb)

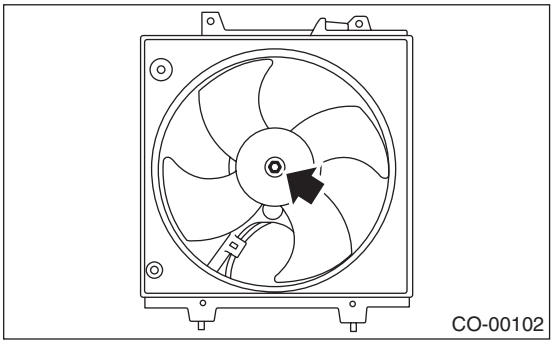

9. Radiator Sub Fan and Fan Motor

A: REMOVAL

1) Set the vehicle on a lift.
2) Disconnect the ground cable from battery.

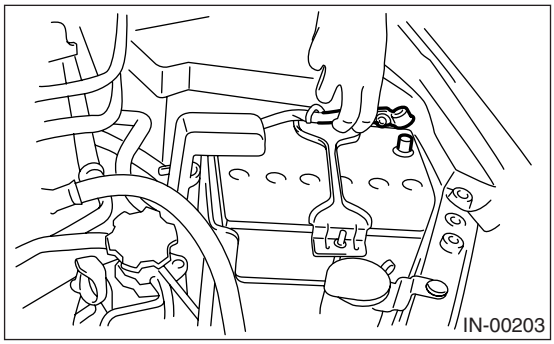

3) Lift-up the vehicle.
4) Remove the under cover.
5) Disconnect the connector (B) of sub fan motor.

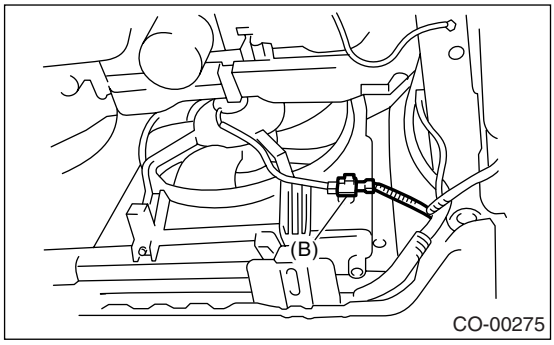

6) Remove the ATF hose from the clip of radiator sub fan motor assembly. (AT model)
7) Lower the vehicle.
8) Remove the air intake duct. <Ref. to IN(H4SO)-10, REMOVAL, Air Intake Duct.>
9) Remove the bolts which hold the radiator sub fan shroud to radiator.

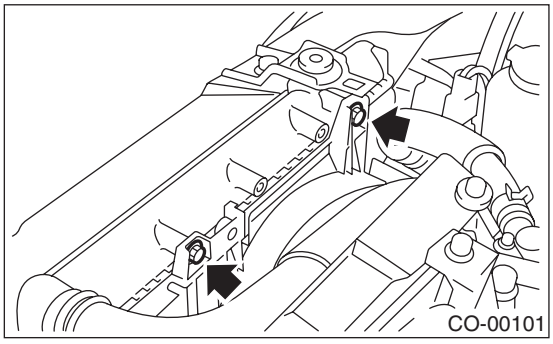

10) Remove the radiator sub fan motor assembly from the lower side of vehicle.

B: INSTALLATION

Install in the reverse order of removal.

Tightening torque:
7.5 N·m (0.76 kgf-m, 5.5 ft-lb)

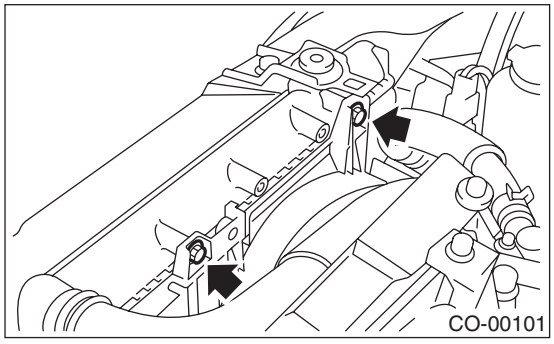

C: DISASSEMBLY

1) Remove the clip which holds the fan motor connector onto shroud.
2) Remove the nut which holds fan onto the fan motor and shroud assembly.

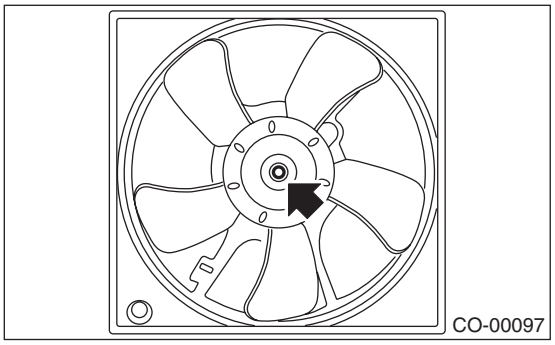

3) Remove the bolts which install fan motor onto the shroud.

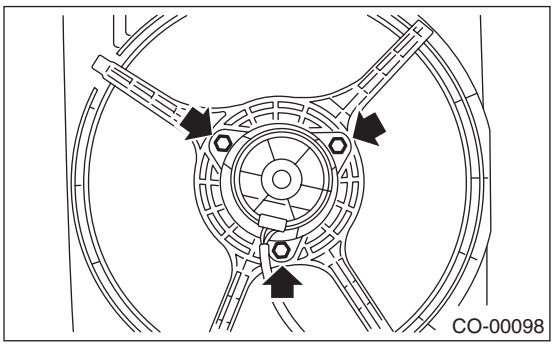

D: ASSEMBLY

Assemble in the reverse order of disassembly.

Tightening torque:
5 N·m (0.5 kgf-m, 3.6 ft-lb)

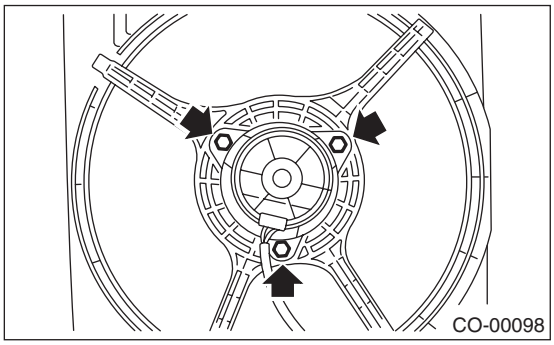

Tightening torque:
3.4 N·m (0.35 kgf-m, 2.5 ft-lb)

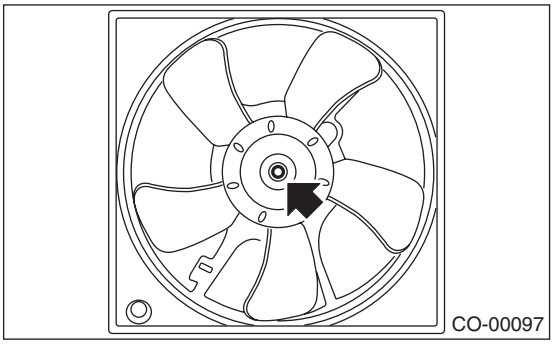

10.Reservoir Tank

A: REMOVAL

1) Disconnect the over flow hose.
2) Pull out the reservoir tank to the direction of arrow while pushing the pawl (A).

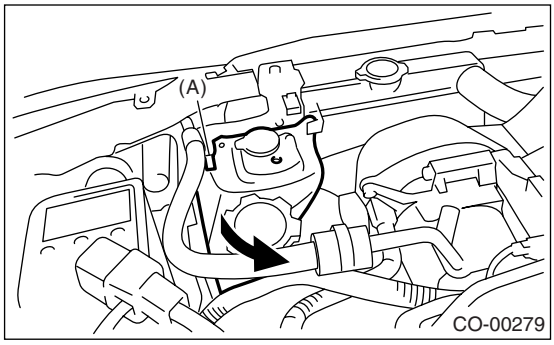

B: INSTALLATION

Install in the reverse order of removal.

C: INSPECTION

Make sure the engine coolant level is between “FULL” and “LOW”.

11.Engine Cooling System Trouble in General

A: INSPECTION

Trouble	Possible cause	Corrective action
Over-heating	a. Insufficient engine coolant	Replenish engine coolant, inspect for leakage, and repair it if necessary.
	b. Loose timing belt	Repair or replace timing belt tensioner.
	c. Oil on timing belt	Replace.
	d. Malfunction of thermostat	Replace.
	e. Malfunction of water pump	Replace.
	f. Clogged engine coolant passage	Clean.
	g. Improper ignition timing	Inspect and repair ignition control system. <Ref. to EN(H4SO)(diag)-2, Basic Diagnostic Procedure.>
	h. Clogged or leaking radiator	Clean, repair or replace.
	i. Improper engine oil in engine coolant	Replace engine coolant.
	j. Air/fuel mixture ratio too lean	Inspect and repair the fuel injection system. <Ref. to EN(H4SO)(diag)-2, Basic Diagnostic Procedure.>
	k. Excessive back pressure in exhaust system	Clean or replace.
	l. Insufficient clearance between piston and cylinder	Adjust or replace.
	m. Slipping clutch	Correct or replace.
	n. Dragging brake	Adjustment.
	o. Defective radiator fan	Inspect radiator fan relay, engine coolant temperature sensor or radiator motor and replace them.
Over-cooling	a. Ambient temperature extremely low	Partly cover radiator front area.
	b. Defective thermostat	Replace.
Engine coolant leaks	a. Loosened or damaged connecting units on hoses	Correct or replace.
	b. Leakage from water pump	Replace.
	c. Leakage from water pipe	Correct or replace.
	d. Leakage around cylinder head gasket	Retighten cylinder head bolts or replace gasket.
	e. Damaged or cracked cylinder head and crankcase	Correct or replace.
	f. Damaged or cracked thermostat case	Correct or replace.
	g. Leakage from radiator	Correct or replace.
Strange noise	a. Defective timing belt	Replace.
	b. Defective radiator fan	Replace.
	c. Defective water pump bearing	Replace water pump.
	d. Defective water pump mechanical seal	Replace water pump.

LUBRICATION

LU(H4SO)

Page

1. General Description 2
2. Oil Pressure System 7
3. Engine Oil....9
4. Oil Pump 10
5. Oil Pan and Strainer....14
6. Oil Pressure Switch....17
7. Engine Oil Filter....18
8. General Diagnostic Table....19

1. General Description

A: SPECIFICATION

Lubrication method					Forced lubrication
OIL PUMP	Pump type				Trochoid type
	Number of teeth	Inner rotor			9
		Outer rotor			10
	Outer rotor diameter × thickness			mm (in)	78 × 7 (3.07 × 0.28)
	Tip clearance between inner and outer rotors		Standard value	mm (in)	0.04 — 0.14 (0.0016 — 0.0055)
	Side clearance between inner rotor and pump case		Standard value	mm (in)	0.02 — 0.07 (0.0008 — 0.0028)
	Case clearance between outer rotor and pump case		Standard value	mm (in)	0.10 — 0.175 (0.0039 — 0.0069)
	Performance at 80°C (176°F)	600 rpm	Discharge pressure	kPa (kg/cm^2, psi)	98 (1.0, 14)
			Discharge rate	ℓ (US qt, Imp qt)/min.	3.2 (3.4, 2.8)
		5,000 rpm	Discharge pressure	kPa (kg/cm^2, psi)	294 (3.0, 43)
			Discharge rate	ℓ (US qt, Imp qt)/min.	32.6 (34.4, 28.7)
	Relief valve working pressure			kPa (kg/cm^2, psi)	490 (5.0, 71)
Oil filter	Filter type				Full-flow filter type
	Filtration area	cm^2 (sq in)	Outer diameter 80 mm		910 (141)
			Outer diameter 68 mm		800 (124)
			Outer diameter 65 mm		470 (73)
	By-pass valve opening pressure			kPa (kg/cm^2, psi)	157 (1.60, 22.8)
	Outer diameter × width	mm (in)	Outer diameter 80 mm		80 × 75 (3.15 × 2.95)
			Outer diameter 68 mm		68 × 65 (2.68 × 2.56)
			Outer diameter 65 mm		65 × 74.4 (2.56 × 2.93)
	Installation screw specifications				M 20 × 1.5
Oil pressure switch	Type				Immersed contact point type
	Working voltage — wattage				12 V — 3.4 W or less
	Warning light activation pressure			kPa (kg/cm^2, psi)	14.7 (0.15, 2.1)
	Proof pressure			kPa (kg/cm^2, psi)	981 (10, 142) or more
Oil capacity (at replacement)				ℓ (US qt, Imp qt)	4.0 (4.2, 3.5)

Recommended oil:

API standard SL with the "Energy Conserving" logo is printed (if you cannot obtain the oil with SL grade, you may use SJ grade "ENERGY CONSERVING" oil.)
ILSAC standard, GF-3 or New API certification mark (Star burst mark) label is on the container

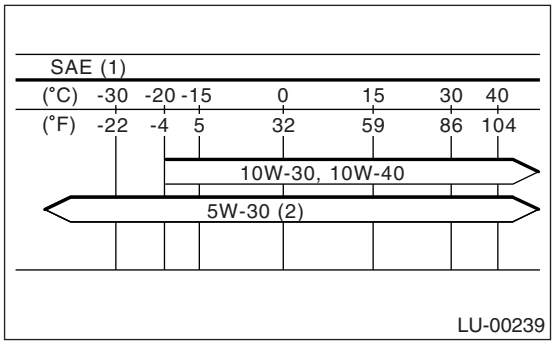

(1) SAE viscosity No. and applicable temperature
(2) Recommend

The proper viscosity helps vehicle get good cold and hot starting by reducing viscous friction and thus increasing cranking speed.

CAUTION:
When replenishing oil, it does not matter if the oil to be added is a different brand from that in the engine; however, use oil having the API standard and SAE viscosity No. designated by SUBARU.

NOTE:
If the vehicle is used in areas with very high temperatures or for other heavy duty applications, the following viscosity oils may be used: API standard: SL or SJ
SAE Viscosity No.: 30, 40, 10W-50, 20W-40, 20W-50.

B: COMPONENT

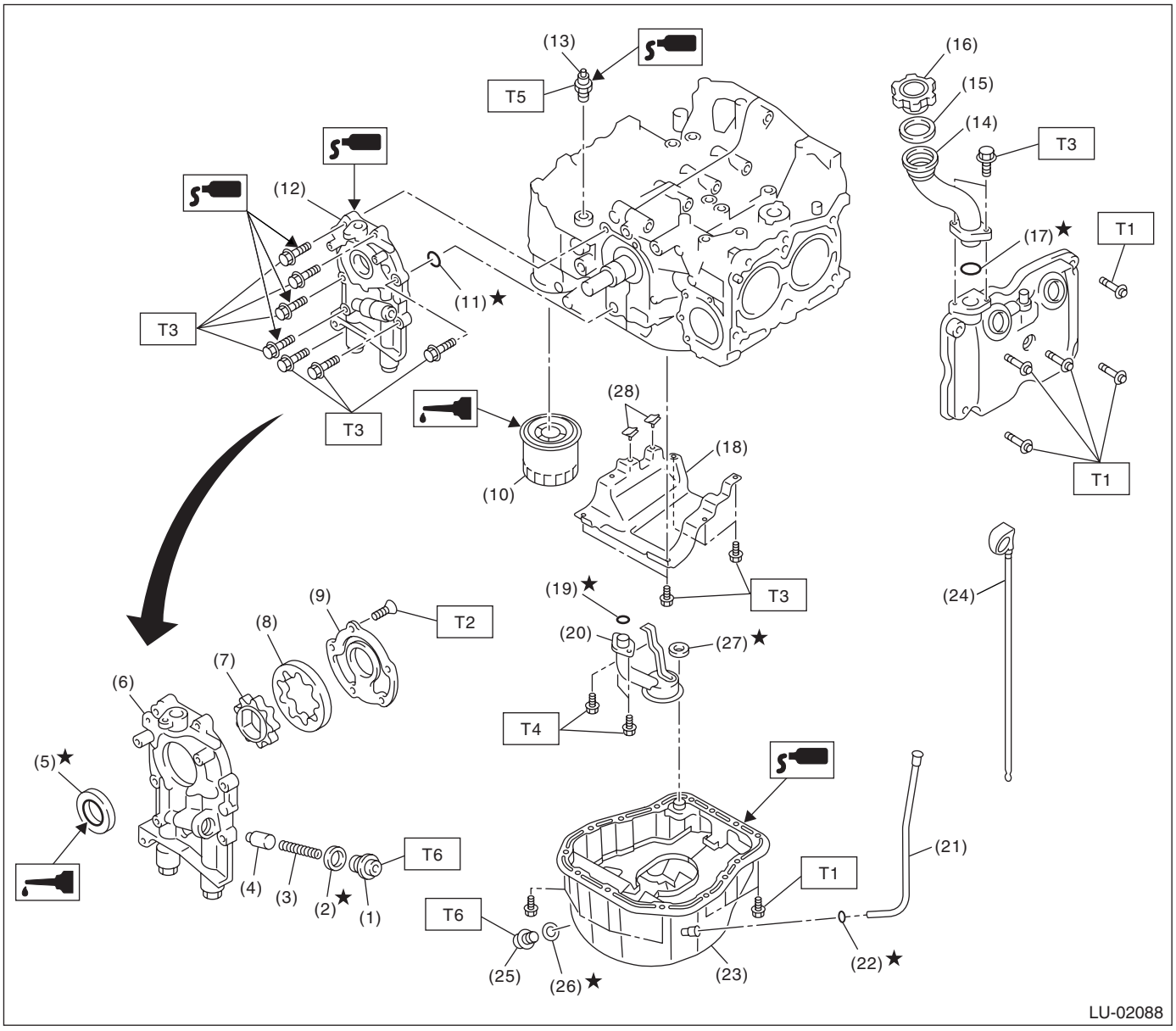

(1)	Plug	(13)	Oil pressure switch	(25)	Drain plug
(2)	Gasket	(14)	Oil filler duct	(26)	Metal gasket
(3)	Relief valve spring	(15)	O-ring	(27)	Gasket
(4)	Relief valve	(16)	Oil filler cap	(28)	Seal
(5)	Oil seal	(17)	O-ring		
(6)	Oil pump case	(18)	Baffle plate		
(7)	Inner rotor	(19)	O-ring		
(8)	Outer rotor	(20)	Oil strainer		
(9)	Oil pump cover	(21)	Oil level gauge guide		
(10)	Oil filter	(22)	O-ring		
(11)	O-ring	(23)	Oil pan		
(12)	Oil pump ASSY	(24)	Oil level gauge		

Tightening torque: N·m (kgf-m, ft-lb)

T1: 5 (0.5, 3.6)
T2: 5.4 (0.55, 4.0)
T3: 6.4 (0.65, 4.7)
T4: 10 (1.0, 7.2)
T5: 25 (2.5, 18.1)
T6: 44 (4.5, 32.5)

C: CAUTION

• Wear work clothing, including a cap, protective goggles and protective shoes during operation.
• Remove contamination including dirt and corrosion before removal, installation or disassembly.
• Keep the disassembled parts in order and protect them from dust and dirt.
• Before removal, installation or disassembly, be sure to clarify the failure. Avoid unnecessary removal, installation, disassembly and replacement.
• Be careful not to burn yourself, because each part on the vehicle is hot after running.
• Be sure to tighten fasteners including bolts and nuts to the specified torque.
• Place shop jacks or rigid racks at the specified points.
• Before disconnecting electrical connectors of sensors or units, be sure to disconnect the ground cable from battery.

D: PREPARATION TOOL

1. SPECIAL TOOL

ILLUSTRATION	TOOL NUMBER	DESCRIPTION	REMARKS
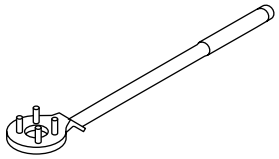 ST-499977100	499977100	CRANK PULLEY WRENCH	Used for stopping rotation of crank pulley when removing and tightening crank pulley bolt.
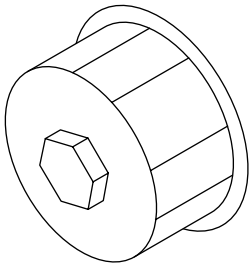 ST-498547000	498547000	OIL FILTER WRENCH	Used for removing and installing oil filter. (Outer diameter: 80 mm (3.15 in))
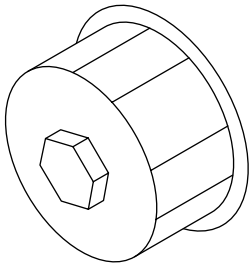 ST18332AA000	18332AA000	OIL FILTER WRENCH	Used for removing and installing oil filter. (Outer diameter: 68 mm (2.68 in))

ILLUSTRATION	TOOL NUMBER	DESCRIPTION	REMARKS
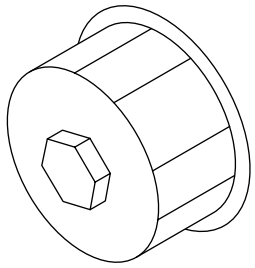 ST18332AA010	18332AA010	OIL FILTER WRENCH	Used for removing and installing oil filter. (Outer diameter: 65 mm (2.56 in))
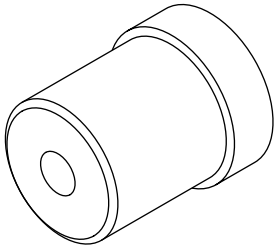 ST-499587100	499587100	OIL SEAL INSTALLER	Used for installing oil seal into oil pump.

2. Oil Pressure System

A: WIRING DIAGRAM

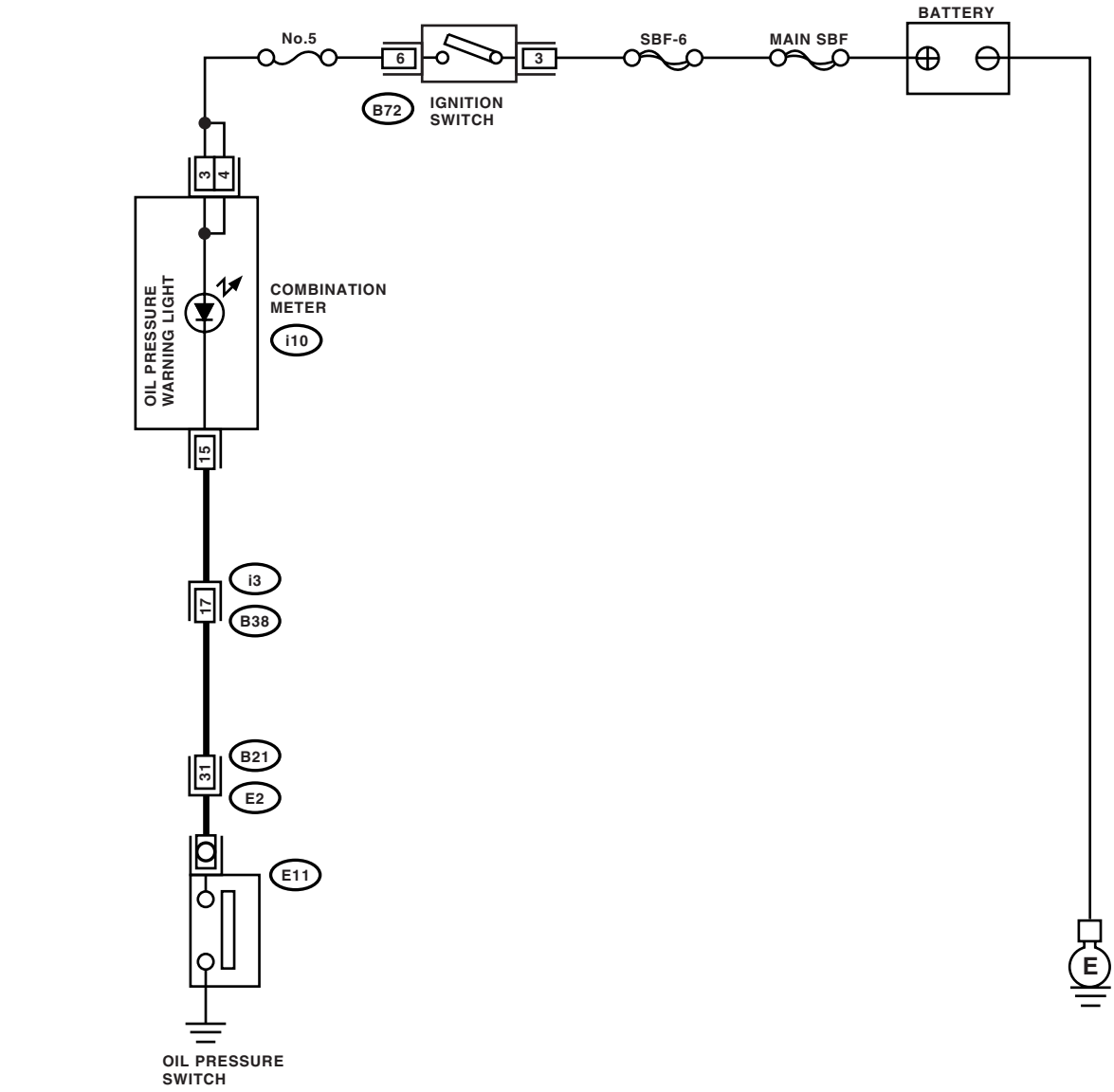

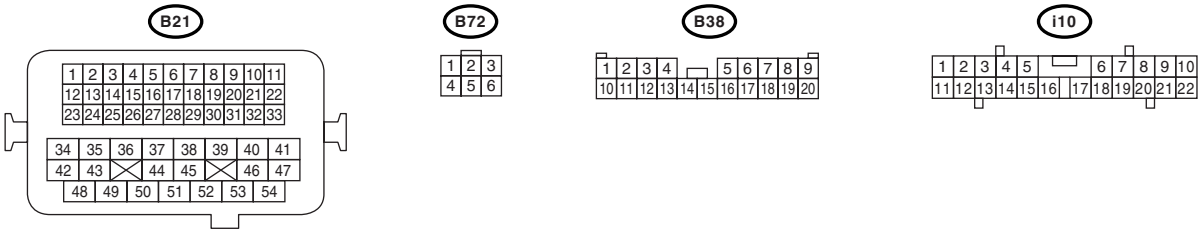

LU-02114

B: INSPECTION

	Step	Check	Yes	No
1	**CHECK COMBINATION METER.** 1) Turn the ignition switch to ON (engine OFF). 2) Check the warning light of combination meter.	Does the warning light illuminate?	Go to step **2.**	Repair or replace the combination meter. <Ref. to IDI-3, INSPECTION, Combination Meter System.>
2	**CHECK HARNESS CONNECTOR BETWEEN COMBINATION METER AND OIL PRESSURE SWITCH.** 1) Turn the ignition switch to OFF. 2) Disconnect the connector from oil pressure switch. 3) Turn the ignition switch to ON. 4) Measure the voltage of harness between oil pressure switch connector and chassis ground. ***Connector & terminal*** ***(E11) No. 1 (+) — Chassis ground (–):***	Is the voltage more than 10 V?	Replace the oil pressure switch.	Go to step **3.**
3	**CHECK COMBINATION METER.** 1) Turn the ignition switch to OFF. 2) Remove the combination meter. 3) Measure the resistance of the combination meter. ***Connector & terminal*** ***(i10) No. 3 — (i10) No. 15:*** ***(i10) No. 4 — (i10) No. 15:***	Is the resistance less than 10 Ω?	Replace the harness connector between combination meter and oil pressure switch.	Repair or replace the combination meter. <Ref. to IDI-3, INSPECTION, Combination Meter System.>

3. Engine Oil

A: INSPECTION

1) Park the vehicle on a level surface.
2) Remove the oil level gauge and wipe it clean.
3) Reinsert the level gauge all the way. Be sure that the level gauge is correctly inserted and properly orientated.
4) Remove it again and check the engine oil level. If the engine oil level is below “L” line, add oil to bring the level up to “F” line.
5) After turning off the engine, wait a few minutes for the oil to return to the oil pan before checking the level.
6) Just after driving or while the engine is warm, engine oil level show in the range between “F” line and the notch mark. This is caused by thermal expansion of the engine oil.

NOTE:
To prevent overfilling the engine oil, do not add oil above “F” line when the engine is cold.

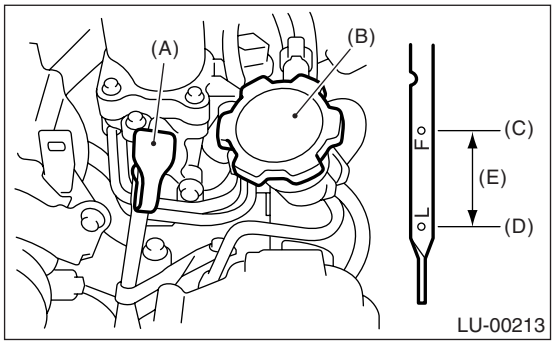

(A) Oil level gauge
(B) Engine oil filler cap
(C) Upper level
(D) Lower level
(E) Approx. 1.0 ℓ (1.1 US qt, 0.9 Imp qt)

B: REPLACEMENT

1) Open the engine oil filler cap for quick draining of the engine oil.
2) Lift-up the vehicle.
3) Drain engine oil by loosening the engine oil drain plug.

NOTE:
Prepare a container for draining of engine oil.

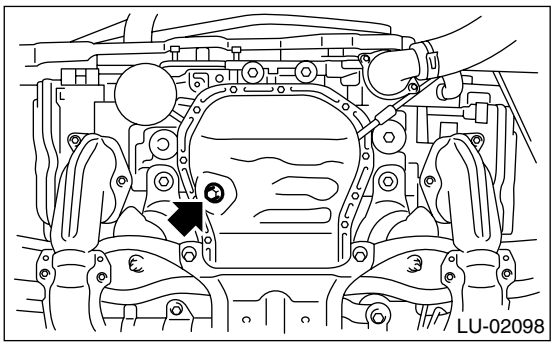

4) Tighten the engine oil drain plug after draining the engine oil.

NOTE:
Use a new drain plug gasket.

Tightening torque:
44 N·m (4.5 kgf-m, 32.5 ft-lb)

5) Use the engine oil of proper quality and viscosity, fill engine oil through the oil filler duct to upper level on level gauge. Make sure that the vehicle is parked on a level surface when checking oil level.

Recommended oil:
Refer to “SPECIFICATION” for the recommended oil. <Ref. to LU(H4SO)-2, SPECIFICATION, General Description.>

Engine oil capacity:
Upper level
4.0 ℓ (4.2 US qt, 3.5 Imp qt)
Lower level
3.0 ℓ (3.2 US qt, 2.6 Imp qt)

6) Close the engine oil filler cap.
7) Start the engine and warm it up for a time.
8) After the engine stops, recheck the oil level. If necessary, add engine oil up to the upper level on level gauge.

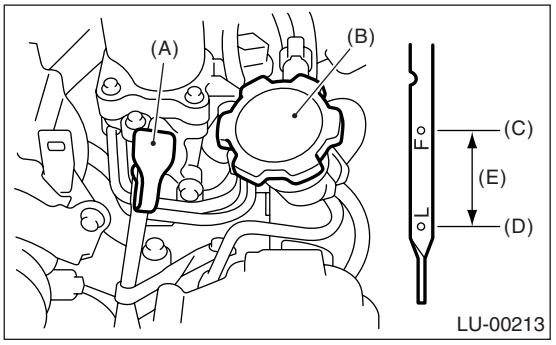

(A) Oil level gauge
(B) Engine oil filler cap
(C) Upper level
(D) Lower level
(E) Approx. 1.0 ℓ (1.1 US qt, 0.9 Imp qt)

4. Oil Pump

A: REMOVAL

1) Disconnect the ground cable from battery.

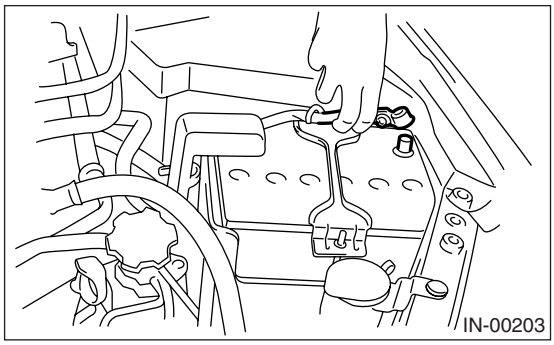

2) Lift-up the vehicle.
3) Remove the under cover.
4) Lower the vehicle.
5) Remove the radiator. <Ref. to CO(H4SO)-19, REMOVAL, Radiator.>
6) Remove the V-belts. <Ref. to ME(H4SO)-37, REMOVAL, V-belt.>
7) Remove the belt tensioner.

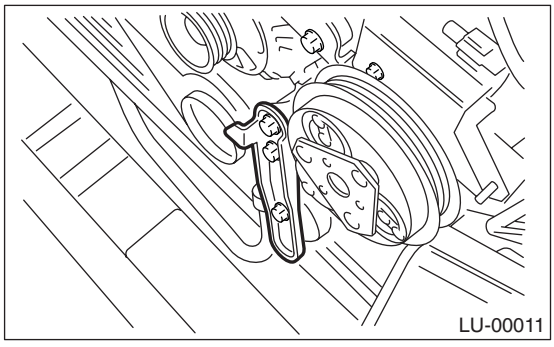

8) Remove the crankshaft position sensor. <Ref. to FU(H4SO)-22, REMOVAL, Crankshaft Position Sensor.> <Ref. to FU(H4SO U5)-24, REMOVAL, Crankshaft Position Sensor.>
9) Remove the crank pulley using ST.
ST 499977100 CRANK PULLEY WRENCH

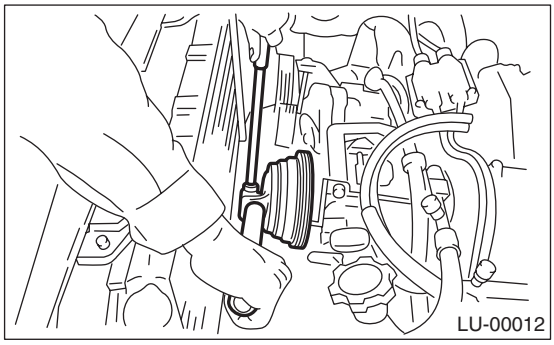

10) Remove the water pump. <Ref. to CO(H4SO)-14, REMOVAL, Water Pump.>
11) Remove the timing belt guide. (MT model)

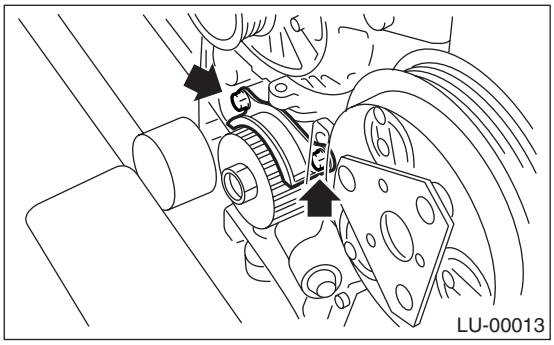

12) Remove the crank sprocket.

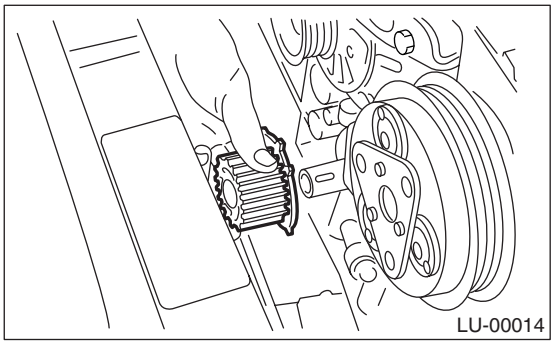

13) Remove the bolts which install oil pump onto cylinder block.

NOTE:
When disassembling and checking the oil pump, loosen the relief valve plug before removing the oil pump.

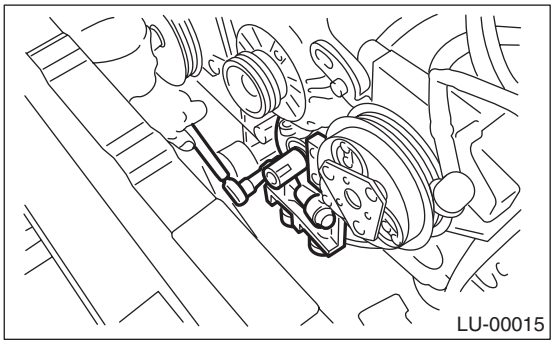

14) Remove the oil pump by using flat tip screwdriver.

CAUTION:
Be careful not to scratch mating surfaces of cylinder block and oil pump.

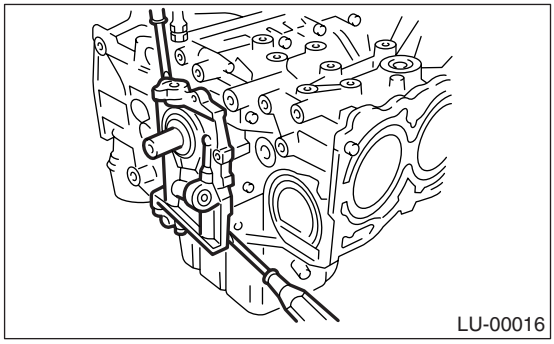
LU-00016

B: INSTALLATION

Install in the reverse order of removal.
Perform the following.
1) Apply liquid gasket to the matching surfaces of oil pump.

Liquid gasket:
THREE BOND 1215 (Part No. 004403007) or equivalent

2) Replace the O-ring (A) with a new one.

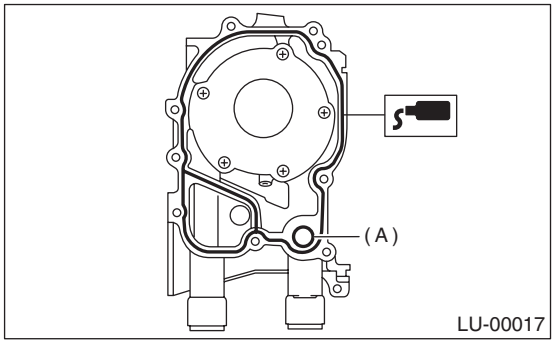

LU-00017

3) Apply a coat of engine oil to the inside of oil seal.

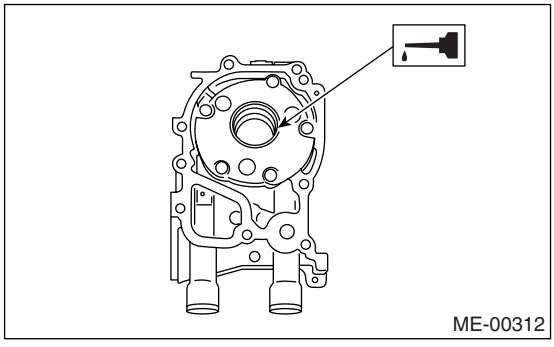
ME-00312

4) Position the oil pump, aligning the notched area with the crankshaft, and push the oil pump straight.

CAUTION:
- **Make sure the oil seal lip is not folded.**
- **Be careful not to scratch oil seal when installing oil pump on cylinder block.**

5) Install the oil pump.

6) Apply a coat of liquid gasket to the 3 bolts of oil pump.

Liquid gasket:
THREE BOND 1215 (Part No. 004403007) or equivalent

Tightening torque:
6.4 N·m (0.65 kgf-m, 4.7 ft-lb)

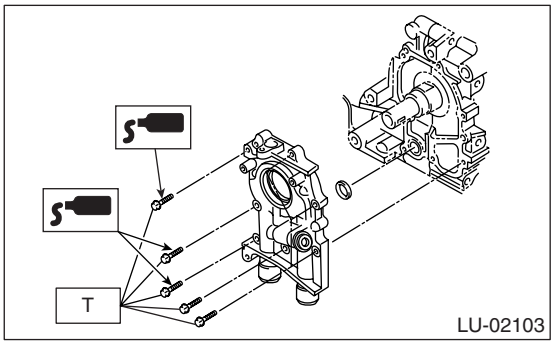

LU-02103

C: DISASSEMBLY

Remove the screws which secure oil pump cover and then disassemble oil pump. Inscribe alignment marks on the inner and outer rotors so that they can be replaced in their original positions during reassembly.

CAUTION:
Before disassembling the oil pump, remove the relief valve.

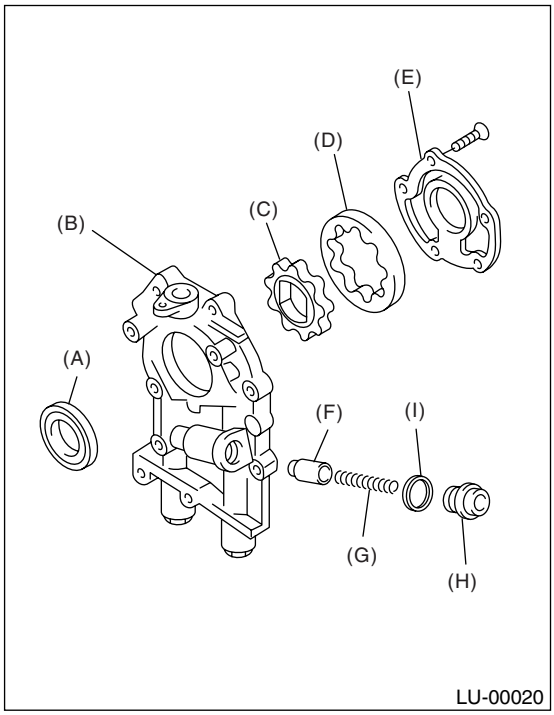

(A) Oil seal
(B) Oil pump case
(C) Inner rotor
(D) Outer rotor
(E) Oil pump cover
(F) Relief valve
(G) Relief valve spring
(H) Plug
(I) Gasket

D: ASSEMBLY

1) Install the front oil seal using ST.
ST 499587100 OIL SEAL INSTALLER

NOTE:
Use a new oil seal.

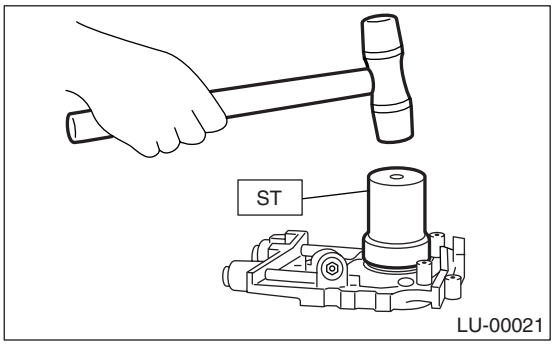

2) Apply a coat of engine oil to the inner and outer rotors.
3) Install the inner and outer rotors in their original positions.
4) Install the oil relief valve and relief valve spring and plug.

NOTE:
Use a new gasket.

5) Install the oil pump cover.

Tightening torque:
T1: 5.4 N·m (0.55 kgf-m, 4.0 ft-lb)
T2: 44 N·m (4.5 kgf-m, 32.5 ft-lb)

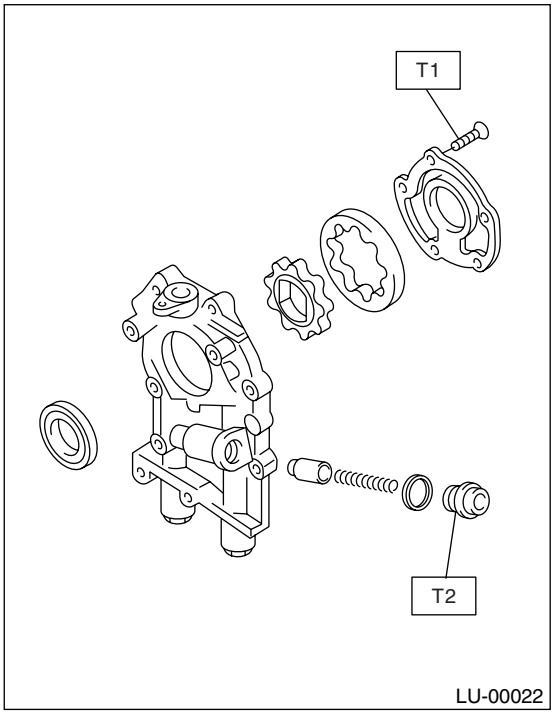

E: INSPECTION

1. TIP CLEARANCE

Measure the tip clearance of rotors. If the clearance is out of the standard value, replace the rotors as a matched set.

Tip clearance:
Standard value
0.04 — 0.14 mm (0.0016 — 0.0055 in)

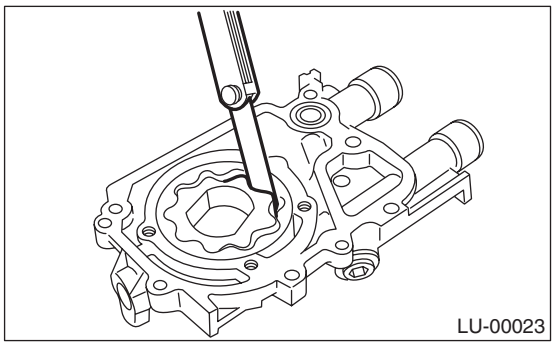

2. CASE CLEARANCE

Measure the clearance between the outer rotor and oil pump rotor housing. If the clearance is out of the standard value, replace the oil pump case.

Case clearance:
Standard value
0.10 — 0.175 mm (0.0039 — 0.0069 in)

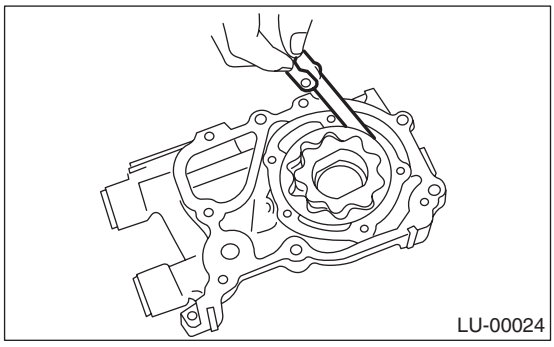

3. SIDE CLEARANCE

Measure the clearance between oil pump inner rotor and pump cover. If the clearance is out of the standard value, replace the rotor or oil pump case.

Side clearance:
Standard value
0.02 — 0.07 mm (0.0008 — 0.0028 in)

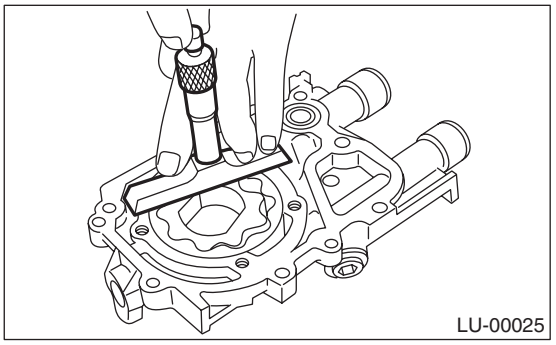

4. OIL RELIEF VALVE

Check the valve for fitting condition and damage, and the relief valve spring for damage and deterioration. Replace the parts if defective.

Relief valve spring:
Free length
72.8 mm (2.866 in)
Installed length
54.7 mm (2.154 in)
Load when installed
81.3 N (8.29 kgf, 18.24 lb)

5. OIL PUMP CASE

Check the worn shaft hole, clogged oil passage, worn rotor chamber, cracks and other faults.

6. OIL SEAL

Check the oil seal lips for deformation, hardening, wear, etc, and replace if defective.

5. Oil Pan and Strainer

A: REMOVAL

1) Set the vehicle on a lift.
2) Remove the front wheels.
3) Disconnect the ground cable from battery.

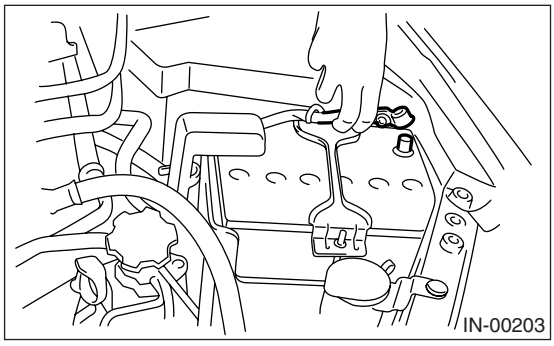

4) Remove the air intake duct and air cleaner case. <Ref. to IN(H4SO)-10, REMOVAL, Air Intake Duct.> <Ref. to IN(H4SO)-7, REMOVAL, Air Cleaner Case.>
5) Remove the air intake chamber. <Ref. to IN(H4SO)-9, REMOVAL, Air Intake Chamber.>
6) Remove the pitching stopper.

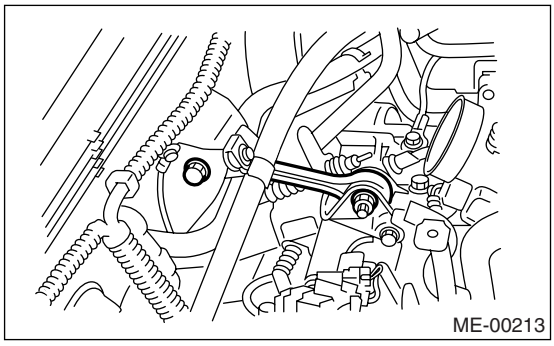

7) Remove the hood stay holder (A) and radiator upper brackets (B).

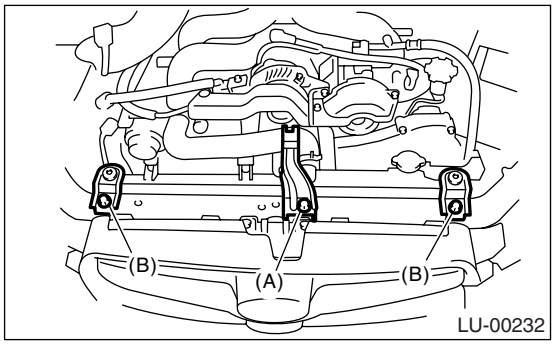

8) Support the engine with a lifting device and wire ropes.

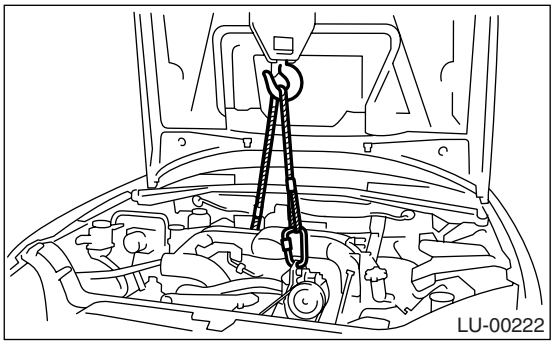

9) Lift-up the vehicle.

CAUTION:
When lifting up the vehicle, raise up wire ropes at the same time.

10) Remove the under cover.
11) Drain engine oil. <Ref. to LU(H4SO)-9, REPLACEMENT, Engine Oil.>
12) Remove the front and center exhaust pipe. <Ref. to EX(H4SO)-4, REMOVAL, Front Exhaust Pipe.> <Ref. to EX(H4SO U5)-4, REMOVAL, Front Exhaust Pipe.>
13) Remove the nuts which install front cushion rubber onto front crossmember.

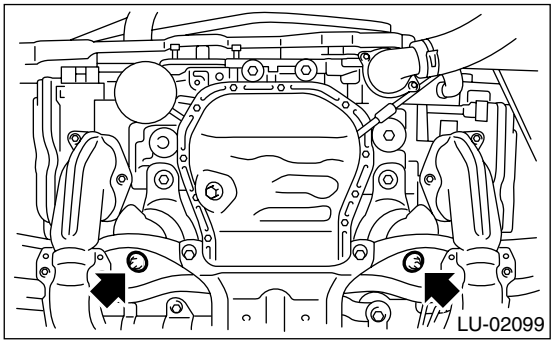

14) Remove the bolts which install oil pan on cylinder block with engine raised up.
15) Insert the oil pan cutter blade into the clearance between cylinder block and oil pan.

CAUTION:
Do not use a screwdriver or similar tool in place of oil pan cutter.

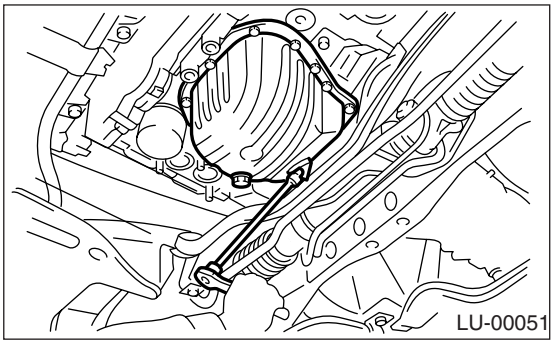

16) Remove the oil strainer.

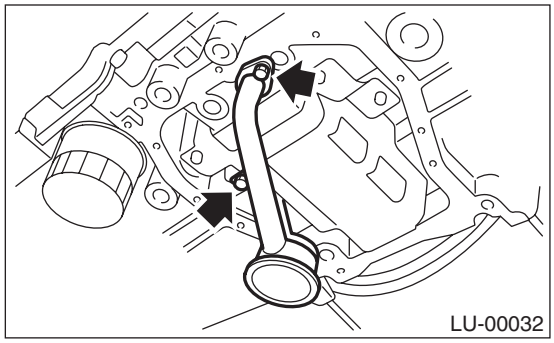

17) Remove the baffle plate.

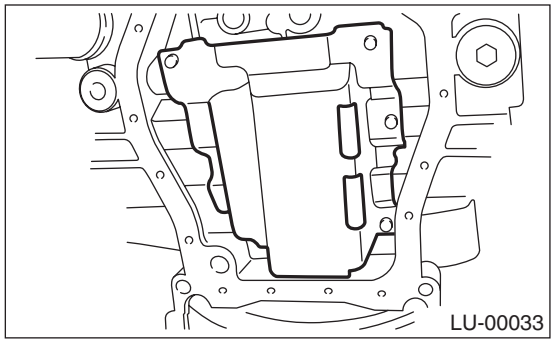

B: INSTALLATION

CAUTION:
Before installing the oil pan, clean the mating surface of oil pan and cylinder block.

1) Make sure that the seal (A) is installed securely on the buffle plate in a direction as shown in the figure below.

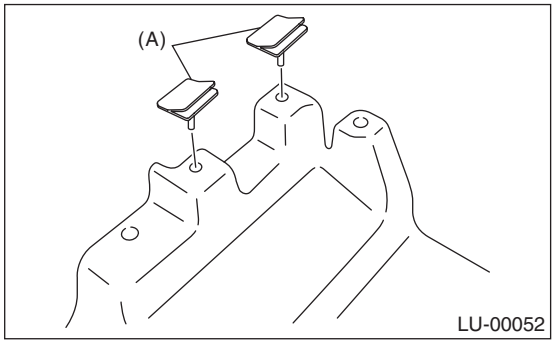

2) Install the baffle plate.

Tightening torque:
6.4 N·m (0.65 kgf-m, 4.7 ft-lb)

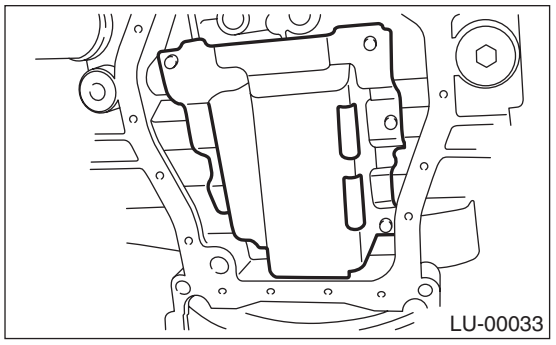

3) Install the oil strainer onto baffle plate.

NOTE:
Replace O-ring with new one.

Tightening torque:
10 N·m (1.0 kgf-m, 7.2 ft-lb)

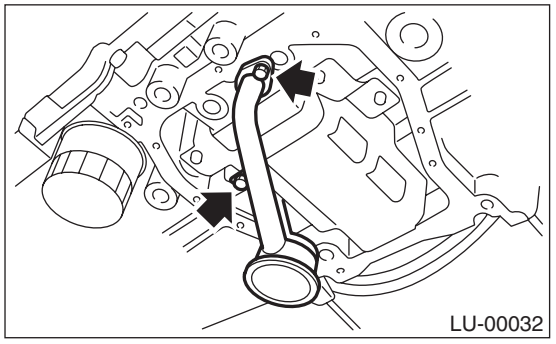

4) Apply liquid gasket to the mating surfaces and install the oil pan.

Liquid gasket:
THREE BOND 1207C (Part No. 004403012) or equivalent

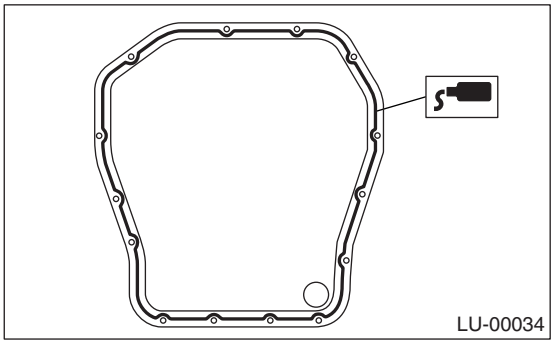

5) Tighten the bolts which install oil pan onto cylinder block.

Tightening torque:
5 N·m (0.5 kgf-m, 3.6 ft-lb)

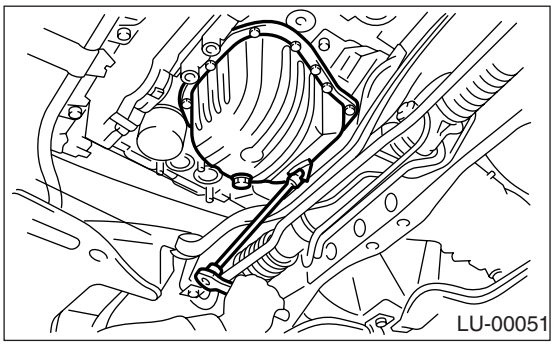

6) Lower the engine onto front crossmember.
7) Tighten the nuts which install front cushion rubber onto front crossmember.

Tightening torque:
69 N·m (7.0 kgf-m, 50.9 ft-lb)

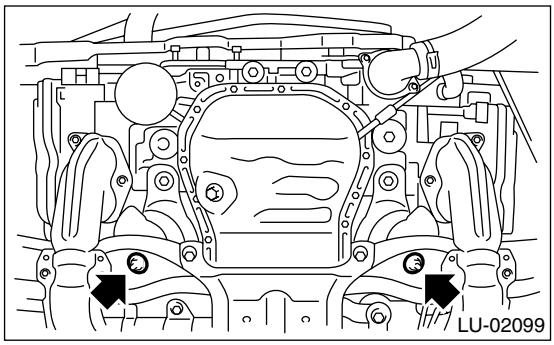

8) Install the front and center exhaust pipe.
<Ref. to EX(H4SO)-5, INSTALLATION, Front Exhaust Pipe.> <Ref. to EX(H4SO U5)-6, INSTALLATION, Front Exhaust Pipe.>
9) Install the under cover.
10) Lower the vehicle.

CAUTION:
When lowing the vehicle, lower the lift-up device and wire ropes at the same time.

11) Remove the lifting device and wire ropes.

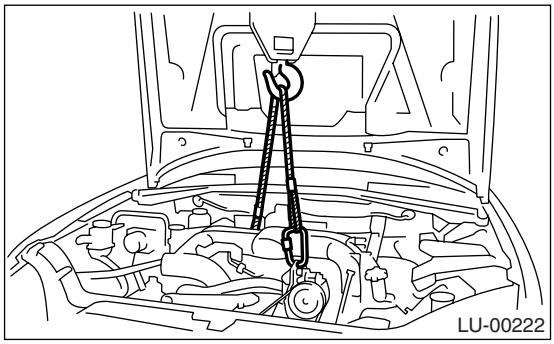

12) Install the pitching stopper.

Tightening torque:
T1: 50 N·m (5.1 kgf-m, 36.9 ft-lb)
T2: 58 N·m (5.9 kgf-m, 42.8 ft-lb)

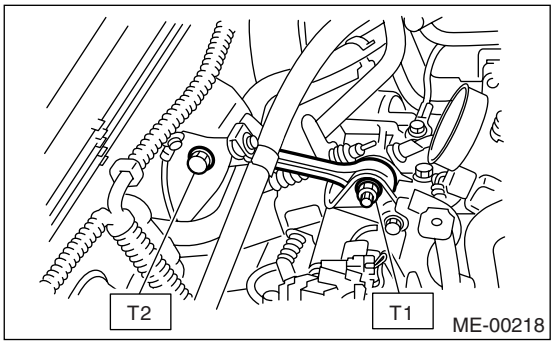

13) Install the hood stay holder (A) and radiator upper brackets (B).

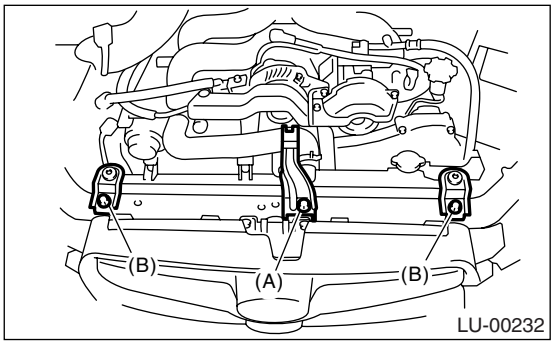

14) Install the air intake chamber.
<Ref. to IN(H4SO)-9, INSTALLATION, Air Intake Chamber.>
15) Install the air intake duct and air cleaner case.
<Ref. to IN(H4SO)-10, INSTALLATION, Air Intake Duct.> <Ref. to IN(H4SO)-7, INSTALLATION, Air Cleaner Case.>
16) Install the front wheels.
17) Connect the battery ground cable to battery.

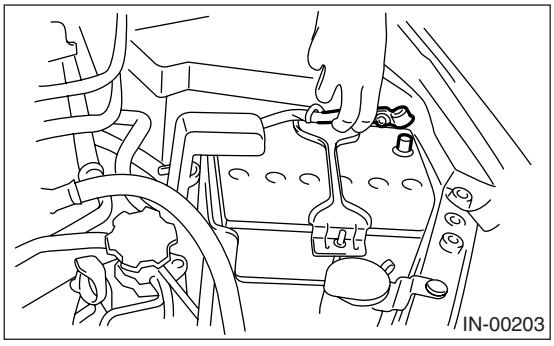

18) Fill engine oil. <Ref. to LU(H4SO)-9, INSPECTION, Engine Oil.>

C: INSPECTION

Visually check that the oil pan, oil strainer, oil strainer stay and baffle plate are not damaged.

6. Oil Pressure Switch

A: REMOVAL

1) Remove the generator from bracket.
<Ref. to SC(H4SO)-20, REMOVAL, Generator.>
2) Disconnect the terminal from oil pressure switch.

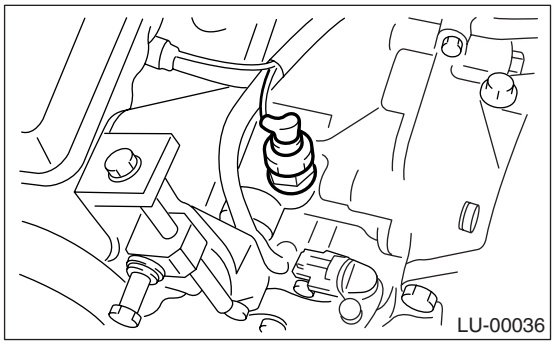

3) Remove the oil pressure switch.

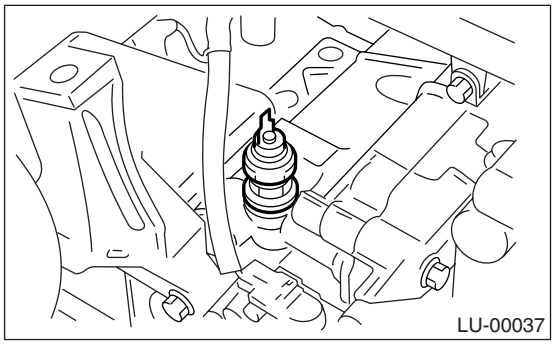

B: INSTALLATION

1) Apply liquid gasket to the oil pressure switch threads.

Liquid gasket:
THREE BOND 1324 (Part No. 004403042) or equivalent

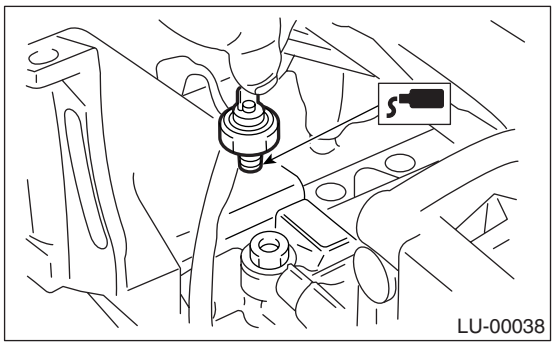

2) Install the oil pressure switch onto engine block.

Tightening torque:
25 N·m (2.5 kgf-m, 18.1 ft-lb)

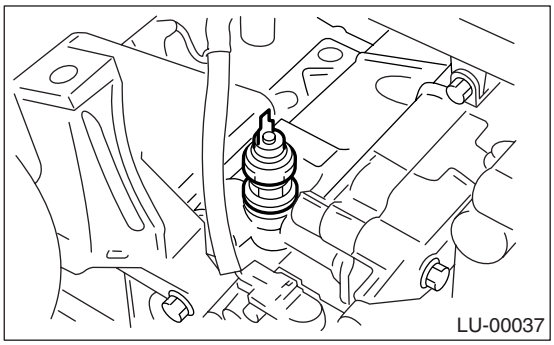

3) Connect the terminal to oil pressure switch.

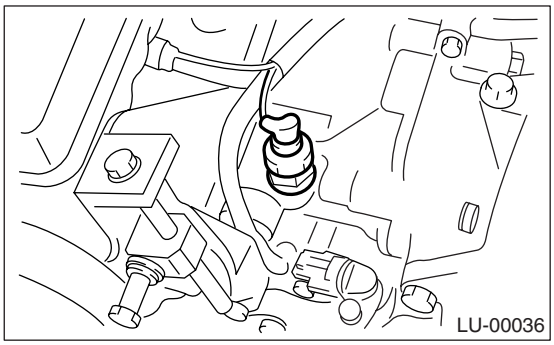

4) Install the generator to bracket.
<Ref. to SC(H4SO)-20, INSTALLATION, Generator.>

C: INSPECTION

Check the oil pressure switch installation portion for oil leakage and oil seepage.

7. Engine Oil Filter

A: REMOVAL

1) Lift-up the vehicle.
2) Remove the oil filter using ST.

ST	498547000	OIL FILTER WRENCH (Outer diameter: 80 mm (3.15 in))
ST	18332AA000	OIL FILTER WRENCH (Outer diameter: 68 mm (2.68 in))
ST	18332AA010	OIL FILTER WRENCH (Outer diameter: 65 mm (2.56 in))

NOTE:
Standard oil filter is outer diameter of 80 mm (3.15 in). However, SUBARU genuine oil filter having outer diameter of 68 mm (2.68 in) or 65 mm (2.56 in) can also be used.

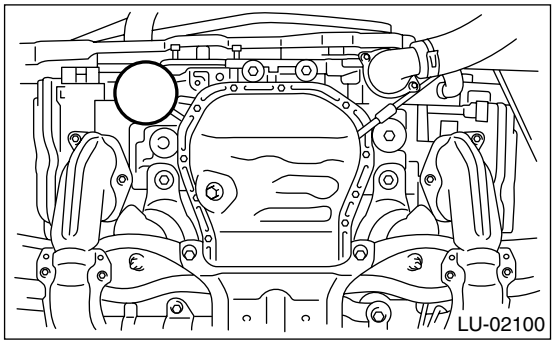

B: INSTALLATION

1) Clean the oil filter installing surface on cylinder block.
2) Obtain a new oil filter and apply a thin coat of engine oil to the seal rubber.
3) Install the oil filter turning it by hand, being careful not to damage the seal rubber.
4) Tighten more after the seal rubber contacts the cylinder block.

NOTE:
- In case of oil filter in outer diameter 80 mm (3.15 in) and 65 mm (2.56 in), tighten by approx. 2/3 to 3/4 turn.
- In case of oil filter in outer diameter 68 mm (2.68 in), tighten by approx. one turn.
- Over-tightening may cause oil leak.

C: INSPECTION

1) After installing the oil filter, run engine and make sure that no oil is leaking around the seal rubber.

NOTE:
The filter element and filter case are permanently jointed; therefore, interior cleaning is not necessary.

2) Check the engine oil level. <Ref. to LU(H4SO)-9, INSPECTION, Engine Oil.>

8. General Diagnostic Table

A: INSPECTION

Before performing diagnosis, make sure that the engine oil level is correct and no oil leakage exists.

Symptom	Possible cause		Corrective action
1. Warning light remains on.	1) Oil pressure switch failure	Cracked diaphragm or oil leakage within switch	Replace.
		Broken spring or seized contacts	Replace.
	2) Low oil pressure	Clogging of oil filter	Replace.
		Malfunction of oil by-pass valve in oil filter	Clean or replace.
		Malfunction of oil relief valve in oil pump	Clean or replace.
		Clogged oil passage	Clean.
		Excessive tip clearance and side clearance of oil pump rotor and gear	Replace.
		Clogged oil strainer or broken pipe	Clean or replace.
	3) No oil pressure	Insufficient engine oil	Replenish.
		Broken pipe of oil strainer	Replace.
		Stuck oil pump rotor	Replace.
2. Warning light does not come on.	1) Malfunction of combination meter		Replace.
	2) Poor contact of switch contact points		Replace.
	3) Disconnection of wiring		Repair.
3. Warning light flickers momentarily.	1) Poor contact at terminals		Repair.
	2) Defective wiring harness		Repair.
	3) Low oil pressure		Check for the same possible causes as listed in 1) — 2).

SPEED CONTROL SYSTEMS

SP(H4SO)

Page

1. General Description 2
2. Accelerator Pedal 3

1. General Description

A: SPECIFICATION

Accelerator pedal	Stroke	At pedal pad	50 — 63 mm (1.97 — 2.48 in)

B: COMPONENT

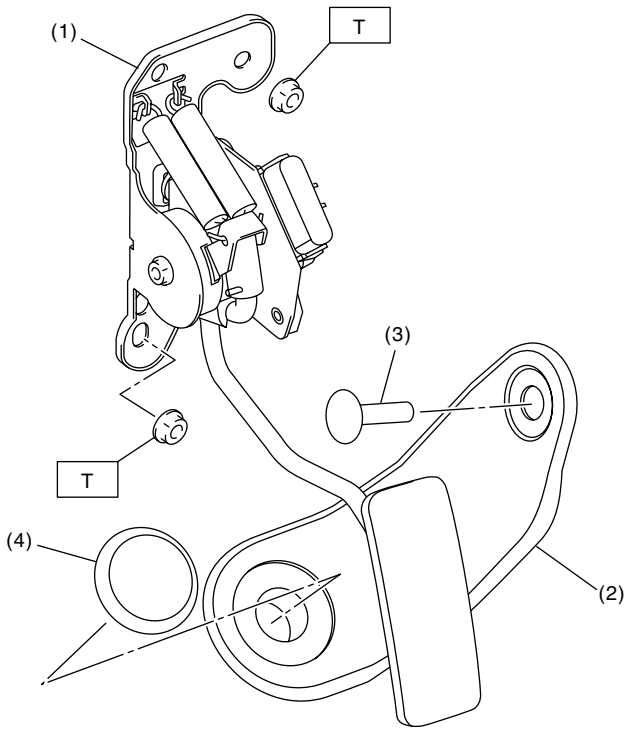

SP-02002

(1) Accelerator pedal ASSY
(2) Accelerator plate
(3) Clip
(4) Stopper

Tightening torque: N·m (kgf-m, ft-lb)
T: 18 (1.8, 13.0)

C: CAUTION

• Wear work clothing, including a cap, protective goggles and protective shoes during operation.
• Remove contamination including dirt and corrosion before removal, installation or disassembly.
• Keep the disassembled parts in order and protect them from dust and dirt.
• Before removal, installation or disassembly, be sure to clarify the failure. Avoid unnecessary removal, installation, disassembly and replacement.
• Be careful not to burn yourself, because each part on the vehicle is hot after running.
• Be sure to tighten fasteners including bolts and nuts to the specified torque.
• Place shop jacks or rigid racks at the specified points.
• Before disconnecting electrical connectors of sensors or units, be sure to disconnect the ground cable from battery.

2. Accelerator Pedal

A: REMOVAL

1) Disconnect the ground cable from battery.
2) Disconnect the connector.
3) Remove the nut securing accelerator pedal assembly.

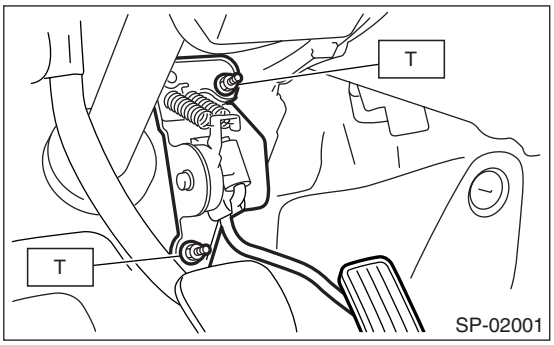

B: INSTALLATION

Install in the reverse order of removal.

Tightening torque:
18 N·m (1.8 kgf-m, 13.0 ft-lb)

C: DISASSEMBLY

NOTE:
Accelerator pedal is a disassembled part.

IGNITION

IG(H4SO)

Page

1. General Description 2
2. Spark Plug 5
3. Ignition Coil and Ignitor Assembly 8
4. Spark Plug Cord 10

1. General Description

A: SPECIFICATION

1. U5 MODEL

Item		Specification
Engine	Model	2.5 L SOHC Non-turbo
Ignition coil and ignitor ASSY	Type	FH0137
	Manufacturer	DEMCO
	Secondary coil resistance	12.8 kΩ±15%
Spark plug	Manufacturer and type	NGK: FR5AP-11
	Thread size (diameter, pitch, length) mm	14, 1.25, 19
	Spark plug gap mm (in)	1.0 — 1.1 (0.039 — 0.043)
	Electrode	Platinum

2. EXCEPT FOR U5 MODEL

Item		Specification
Engine	Model	2.5 L SOHC Non-turbo
Ignition coil and ignitor ASSY	Type	FH 0286
	Manufacturer	DIAMOND
	Secondary coil resistance	11.2 kΩ±15%
Spark plug	Manufacturer and type	NGK: FR5AP-11
	Thread size (diameter, pitch, length) mm	14, 1.25, 19
	Spark plug gap mm (in)	1.0 — 1.1 (0.039 — 0.043)
	Electrode	Platinum

B: COMPONENT

1. U5 MODEL

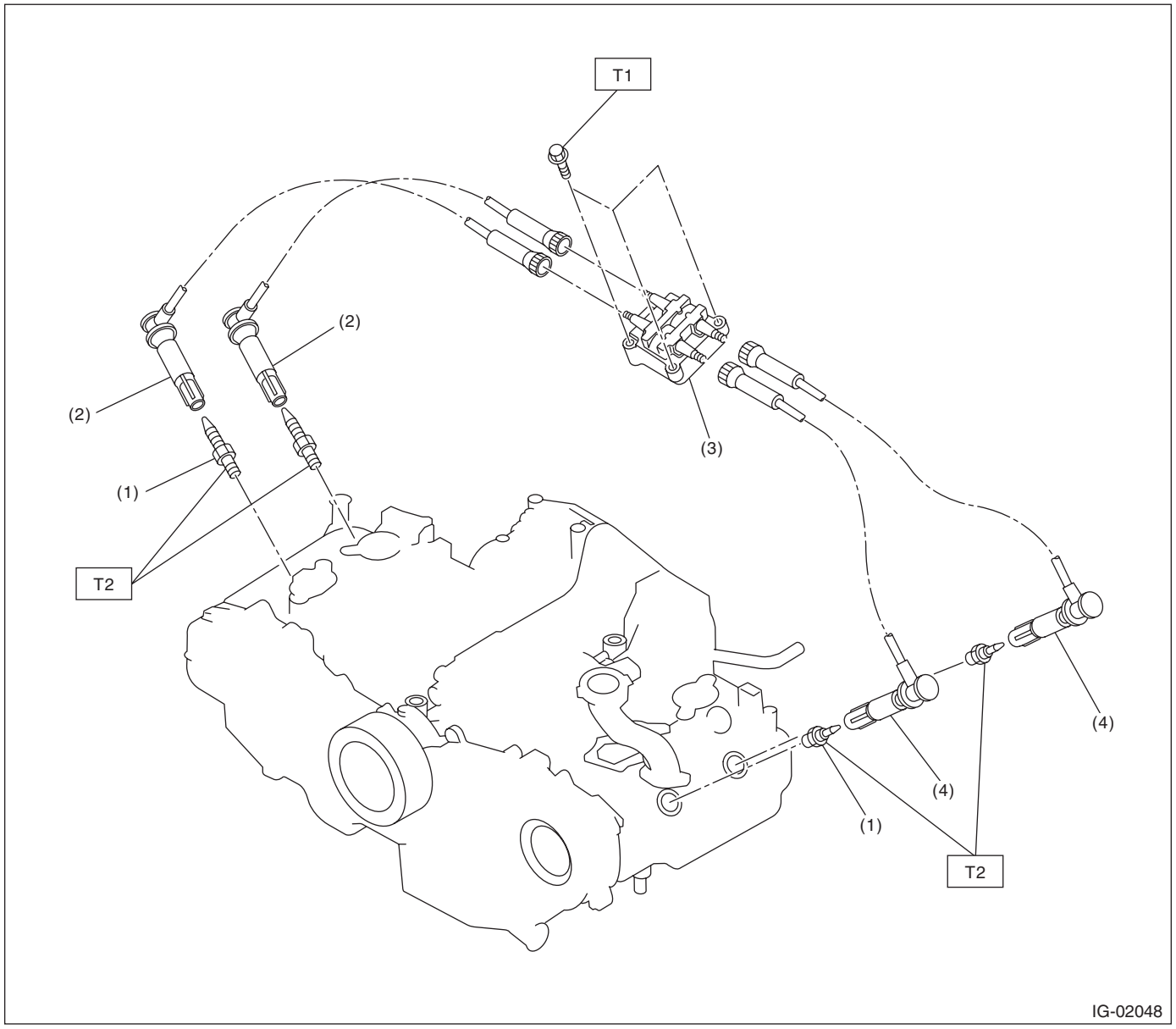

(1) Spark plug
(2) Spark plug cord (#1, #3)
(3) Ignition coil and ignitor ASSY
(4) Spark plug cord (#2, #4)

Tightening torque: N·m (kgf-m, ft-lb)
T1: 8 (0.82, 5.9)
T2: 21 (2.1, 15.2)

2. EXCEPT FOR U5 MODEL

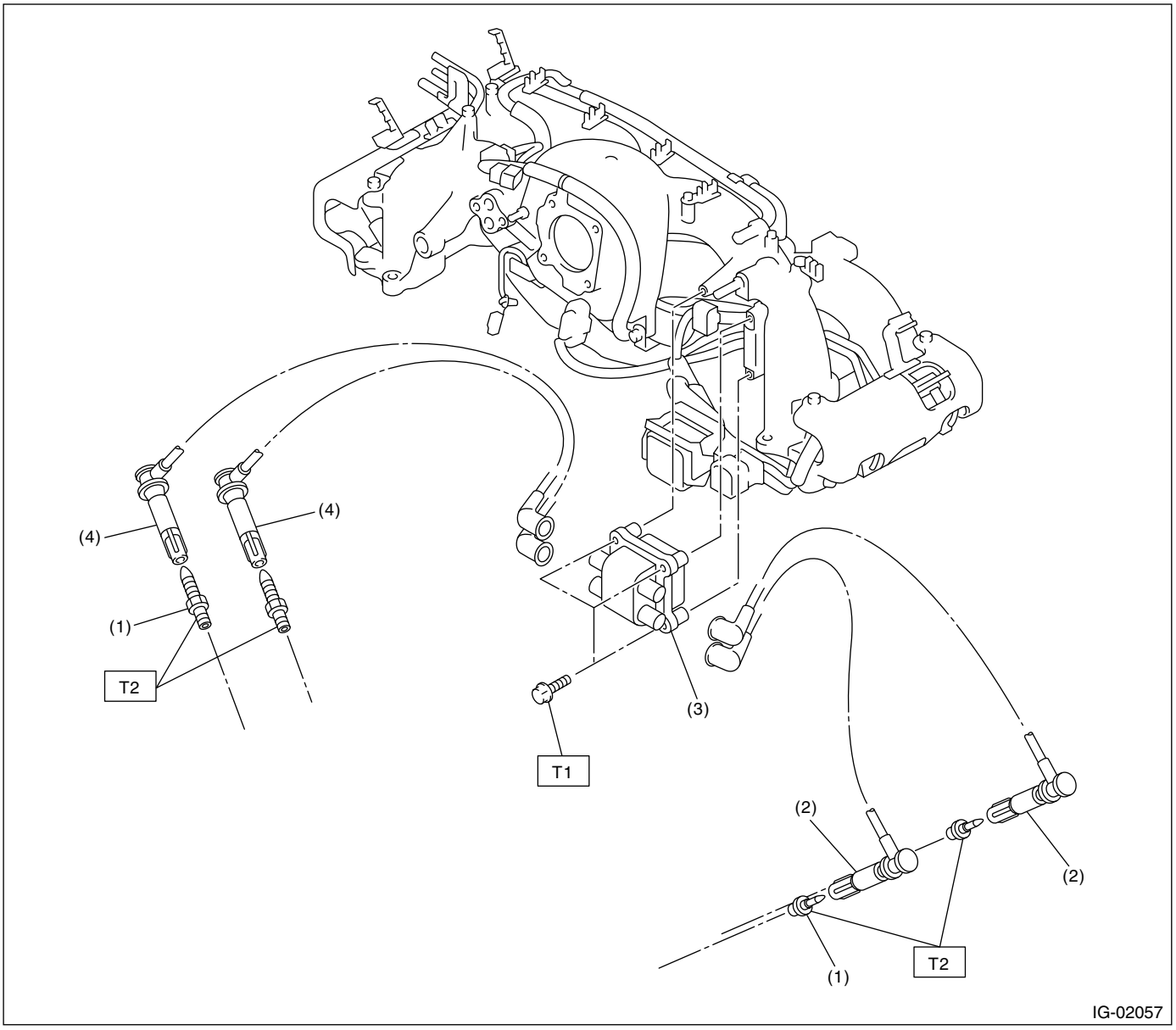

(1) Spark plug
(2) Spark plug cord (#1, #3)
(3) Ignition coil and ignitor ASSY
(4) Spark plug cord (#2, #4)

Tightening torque: N·m (kgf-m, ft-lb)
T1: 8 (0.82, 5.9)
T2: 21 (2.1, 15.2)

C: CAUTION

- Wear work clothing, including a cap, protective goggles and protective shoes during operation.
- Remove contamination including dirt and corrosion before removal, installation or disassembly.
- Keep the disassembled parts in order and protect them from dust and dirt.
- Before removal, installation or disassembly, be sure to clarify the failure. Avoid unnecessary removal, installation, disassembly and replacement.
- Be careful not to burn yourself, because each part on the vehicle is hot after running.
- Be sure to tighten fasteners including bolts and nuts to the specified torque.
- Place shop jacks or rigid racks at the specified points.
- Before disconnecting electrical connectors of sensors or units, be sure to disconnect the ground cable from battery.

2. Spark Plug

A: REMOVAL

Spark plug:
<Ref. to IG(H4SO)-2, SPECIFICATION, General Description.>

1. RH SIDE

1) Disconnect the ground cable from battery.

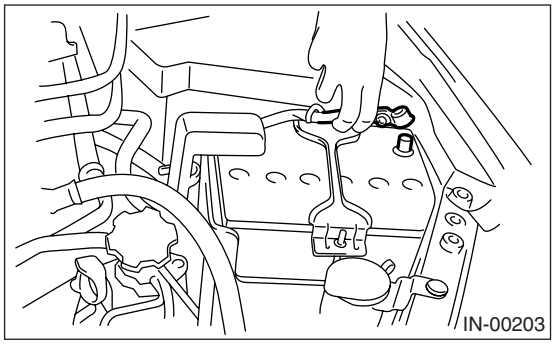
IN-00203

2) Remove the air cleaner case. <Ref. to IN(H4SO)-7, REMOVAL, Air Cleaner Case.>
3) Remove the spark plug cords by pulling the boot. (Do not pull the cord itself.)

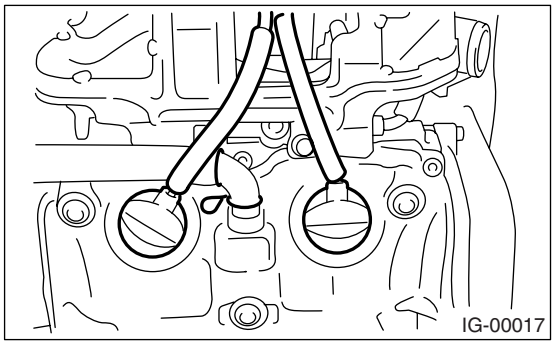
IG-00017

4) Remove the spark plug with a spark plug socket.

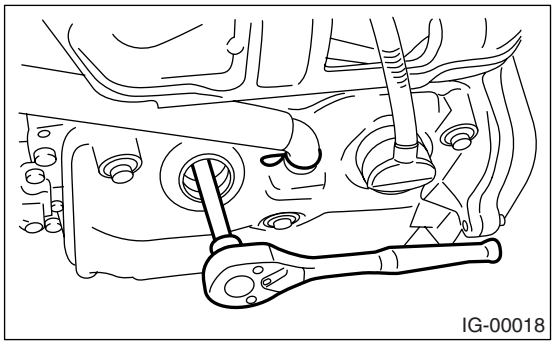
IG-00018

2. LH SIDE

1) Remove the battery. <Ref. to SC(H4SO)-26, REMOVAL, Battery.>
2) Remove the spark plug cords by pulling the boot. (Do not pull the cord itself.)

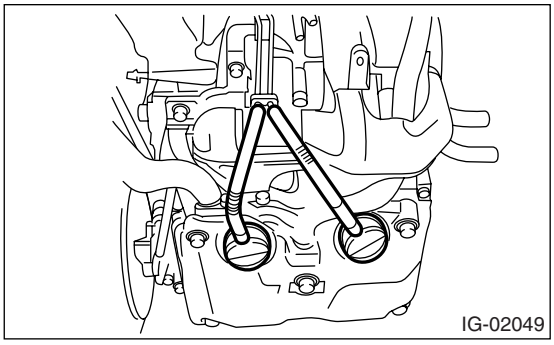
IG-02049

3) Remove the spark plug with a spark plug socket.

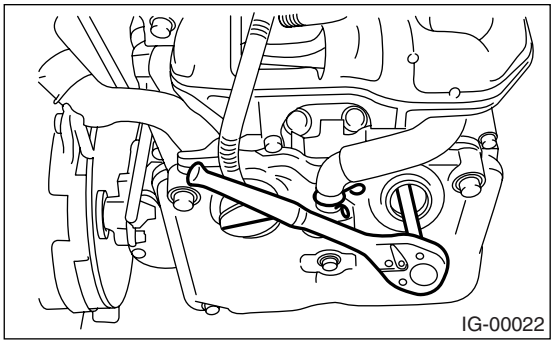
IG-00022

B: INSTALLATION

1. RH SIDE

Install in the reverse order of removal.

Tightening torque:
21 N·m (2.1 kgf-m, 15.2 ft-lb)

NOTE:
The above torque should be only applied to new spark plugs without oil on their threads.
In case their threads are lubricated, the torque should be reduced by approx. 1/3 of the specified torque in order to avoid over-stressing.

2. LH SIDE

Install in the reverse order of removal.

Tightening torque:
21 N·m (2.1 kgf-m, 15.2 ft-lb)

NOTE:
The above torque should be only applied to new spark plugs without oil on their threads.
In case their threads are lubricated, the torque should be reduced by approx. 1/3 of the specified torque in order to avoid over-stressing.

C: INSPECTION

Check the electrodes and inner and outer ceramic insulator of plugs, noting the type of deposits and the degree of electrode erosion.

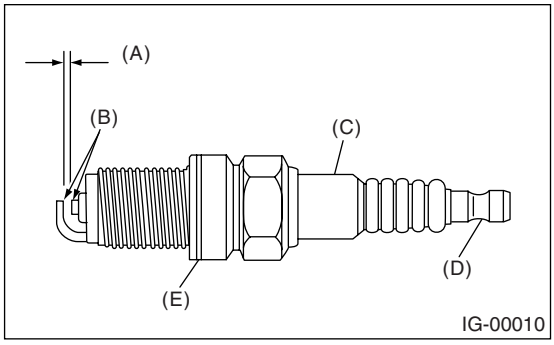

(A) Spark plug gap
(B) Carbon accumulation or wear
(C) Crack
(D) Damage
(E) Damaged gasket

1) Normal:
Brown to grayish-tan deposits and slight electrode wear indicate correct spark plug heat range.

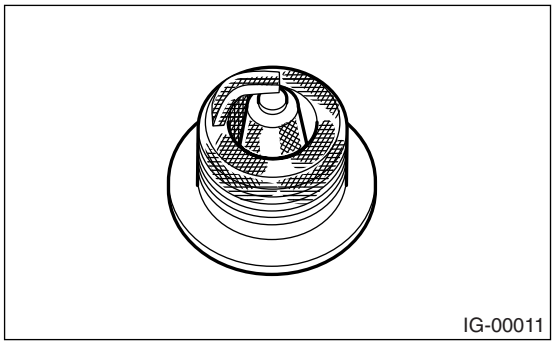

2) Carbon fouled:
Dry fluffy carbon deposits on insulator and electrode are mostly caused by slow speed driving in the city, weak ignition, too rich fuel mixture and dirty air cleaner.

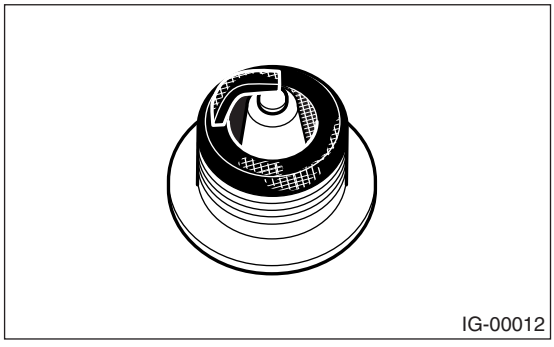

3) Oil fouled:
Wet black deposits show oil entrance into the combustion chamber through worn rings and pistons or excessive clearance between valve guides and stems.

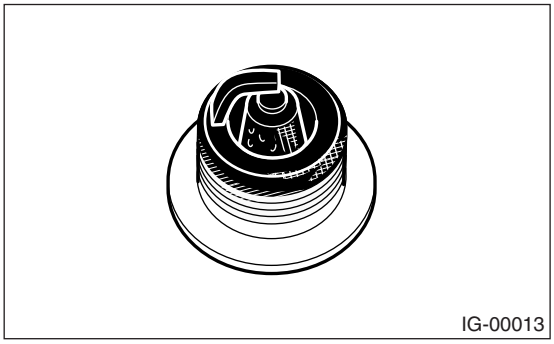

4) Overheating:
White or light gray insulator with black or brown spots and bluish burnt electrodes indicate engine overheating. Moreover, the appearance results from incorrect ignition timing, loose spark plugs, wrong selection of fuel.

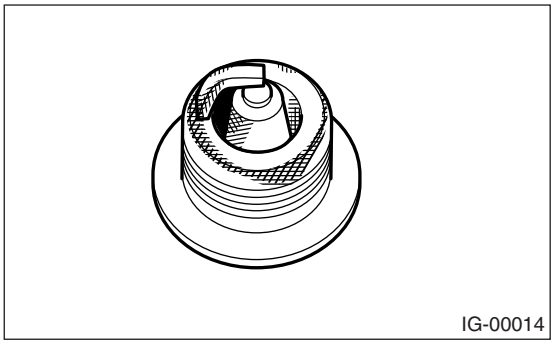

D: ADJUSTMENT

Clean the spark plugs using a wire brush.
Clean and remove the carbon or oxide deposits. But do not wear away ceramic insulator.
If deposits are too stubborn, replace the plugs.
After cleaning the spark plugs, measurement the spark plug gap using a gap gauge.

NOTE:
Do not use a plug cleaner because the spark plugs are applied with platinum tip.

Spark plug gap L:
1.0 — 1.1 mm (0.039 — 0.043 in)

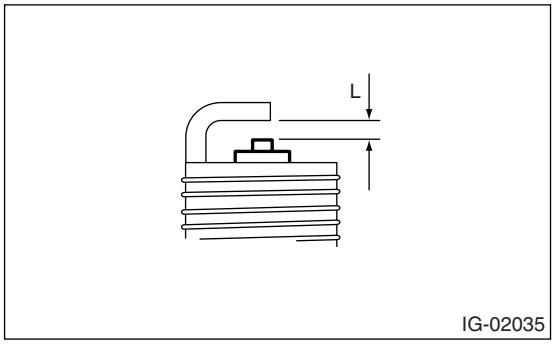

3. Ignition Coil and Ignitor Assembly

A: REMOVAL

1) Disconnect the ground cable from battery.

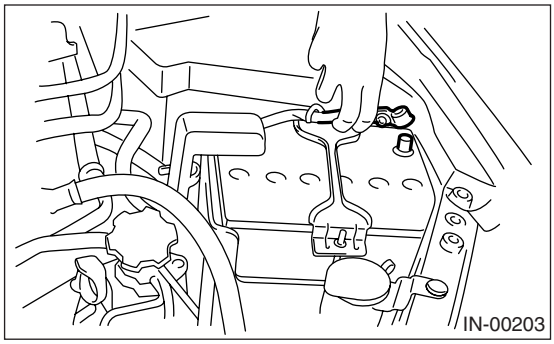

2) Disconnect the spark plug cords from ignition coil and ignitor assembly.

- U5 model

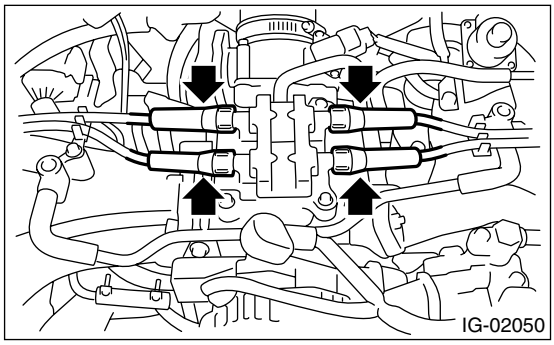

- Except for U5 model

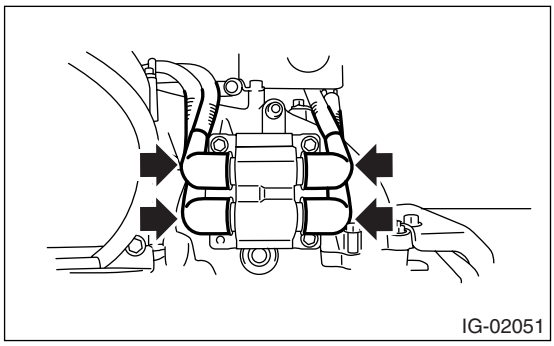

3) Disconnect the connector from ignition coil and ignitor assembly.

4) Remove the bolt which secures the ignition coil and ignitor assembly to intake manifold.

- U5 model

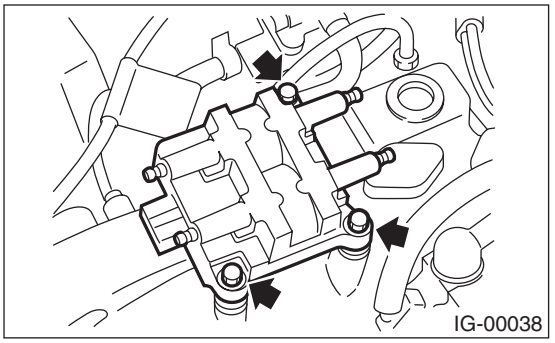

- Except for U5 model

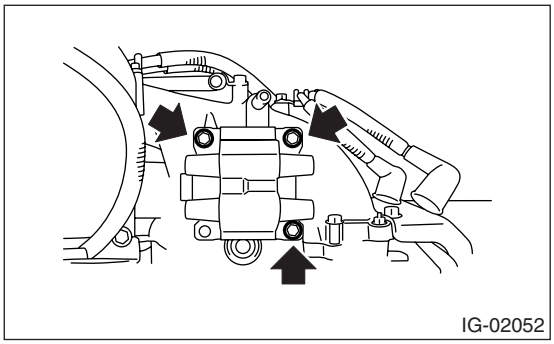

B: INSTALLATION

Install in the reverse order of removal.

Tightening torque:
8 N·m (0.82 kgf-m, 5.9 ft-lb)

CAUTION:
Connect the spark plug cords to correct positions. Failure to do so will damage the unit.

C: INSPECTION

Check the following using a tester. Replace if defective.

- Secondary coil resistance

CAUTION:
• If the resistance is extremely low, it indicates the presence of a short-circuit.
• Ignitor is integrated with the coil. Therefore the resistance of primary side coil cannot be measured.

Specified resistance (U5 model):

[Secondary side]
Between (A) and (B)
12.8 kΩ±15%
Between (C) and (D)
12.8 kΩ±15%

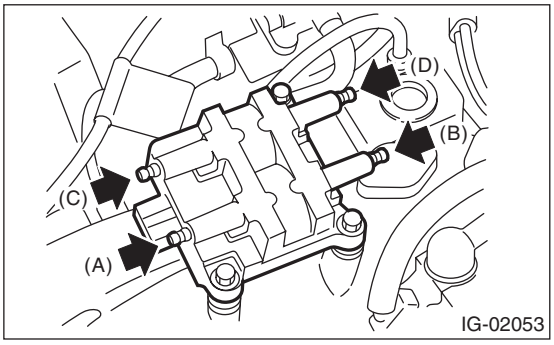

Specified resistance (Except for U5 model):

[Secondary side]
Between (A) and (B)
11.2 kΩ±15%
Between (C) and (D)
11.2 kΩ±15%

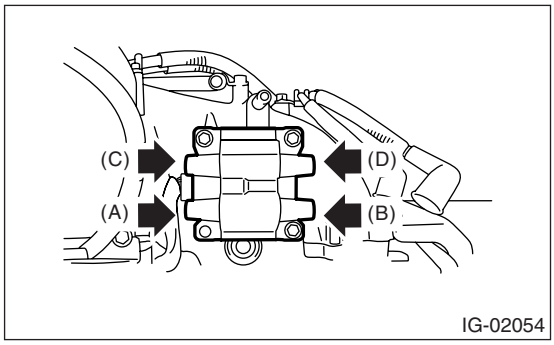

4. Spark Plug Cord

A: INSPECTION

Check the following items:

- Damage to cords, deformation, burning or rust formation of terminals
- Resistance values of cords

Resistance value (U5 model):

#1 cord: 7.6 — 12.7 kΩ
#2 cord: 7.5 — 12.7 kΩ
#3 cord: 7.6 — 12.7 kΩ
#4 cord: 7.5 — 12.7 kΩ

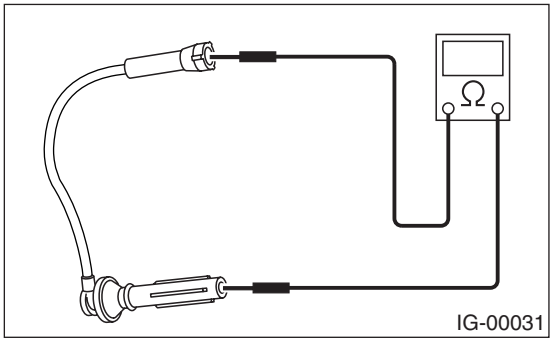

Resistance value (Except for U5 model):

#1 cord: 7.1 — 12.1 kΩ
#2 cord: 12.1 — 19.9 kΩ
#3 cord: 7.7 — 13.0 kΩ
#4 cord: 12.3 — 20.2 kΩ

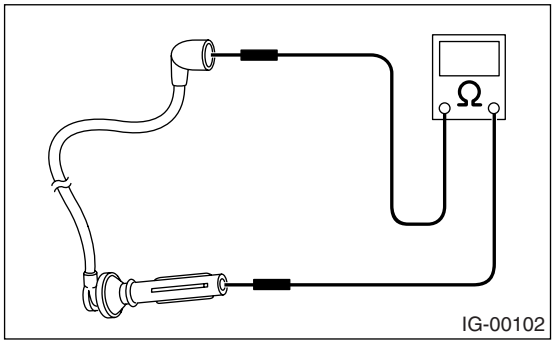

STARTING/CHARGING SYSTEMS

SC(H4SO)

Page

1. General Description 2
2. Starter 6
3. Generator 20
4. Battery 26

1. General Description

A: SPECIFICATION

Item			Specification	
Vehicle model			MT	AT
Starter	Type		Reduction type	
	Model		428000-2300	428000-2290
	Manufacturer		DENSO	
	Voltage and output		12 V — 1.0 kW	12 V — 1.4 kW
	Revolving direction		Counterclockwise (when observed from pinion)	
	Number of pinion teeth		9	9
	No-load characteristics	Voltage	11 V	11 V
		Current	90 A or less	90 A or less
		Rotating speed	1,820 rpm or more	1,720 rpm or more
	Load characteristics	Voltage	8 V	8 V
		Current	280 A	370 A
		Torque	7.76 N·m (0.79 kgf-m, 5.7 ft-lb) or more	12.78 N·m (1.30 kgf-m, 9.4 ft-lb) or more
		Rotating speed	900 rpm or more	850 rpm or more
	Lock characteristics	Voltage	3 V	3 V
		Current	900 A or less	900 A or less
		Torque	13.62 N·m (1.39 kgf-m, 10.0 ft-lb) or more	15.42 N·m (1.57 kgf-m, 11.3 ft-lb) or more
Generator	Model		Rotating-field three-phase type, voltage regulator built-in type, with load response control system	
	Model	2.5 L Non-Turbo	A003TG2391ZC	
		3.0 L Non-Turbo	A003TB1891	
		2.5 L Turbo	A003TG0491	
	Manufacturer		Mitsubishi Electric	
	Voltage and output	2.5 L Non-Turbo and 2.5 L Turbo	12 V — 110 A	
		3.0 L Non-Turbo	12 V — 100 A	
	Polarity on ground side		Negative	
	Revolving direction		Clockwise (when observed from pulley side)	
	Armature connection		3-phase Y-type	
	Output current	2.5 L Non-Turbo and 2.5 L Turbo	1,500 rpm — 50 A or more 2,500 rpm — 91 A or more 5,000 rpm — 105 A or more	
		3.0 L Non-Turbo	1,500 rpm — 43 A or more 2,500 rpm — 76 A or more 5,000 rpm — 100 A or more	
	Regulated voltage		14.1 — 14.8 V [20°C (68°F)]	
Battery	Type and capacity		12 V — 48 AH (55D23L)	12 V — 52 AH (75D23L)

B: COMPONENT

1. STARTER

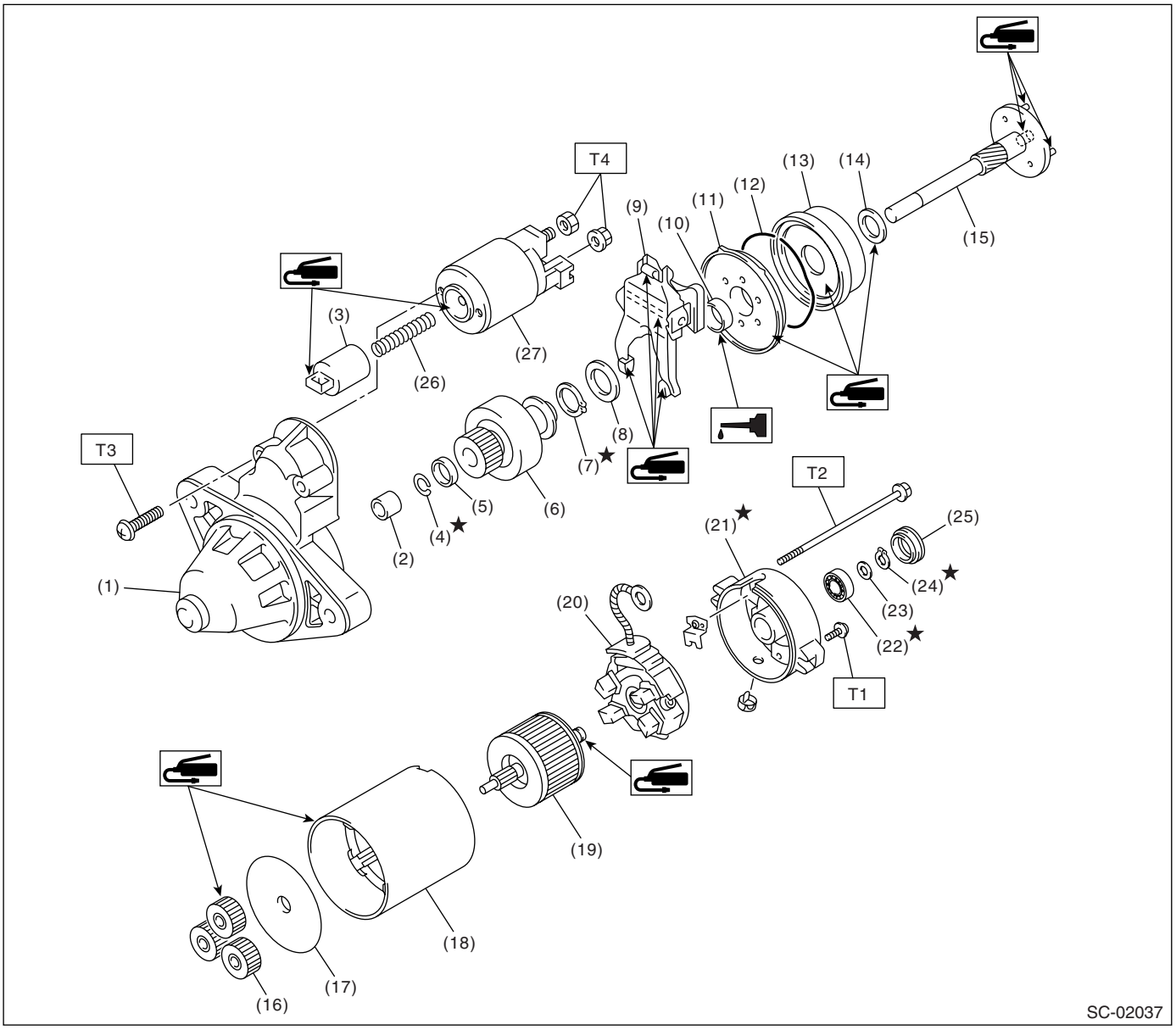

(1)	Front bracket	(12)	Wave washer	(23)	Space ring
(2)	Front bearing	(13)	Internal gear	(24)	Snap ring
(3)	Plunger	(14)	Washer	(25)	End frame cover
(4)	Snap ring	(15)	Shaft	(26)	Plunger spring
(5)	Stopper	(16)	Planetary gear	(27)	Magnet switch
(6)	Overrunning clutch	(17)	Armature plate		
(7)	Snap ring	(18)	Yoke		
(8)	Washer	(19)	Armature		
(9)	Lever	(20)	Brush holder ASSY		
(10)	Oilless bearing	(21)	End frame		
(11)	Shock absorber bearing	(22)	Rear bearing		

Tightening torque: N·m (kgf-m, ft-lb)

T1: 1.4 (0.14, 1.03)
T2: 6 (0.6, 4.4)
T3: 7.5 (0.8, 5.5)
T4: 10 (1.0, 7.4)

2. GENERATOR

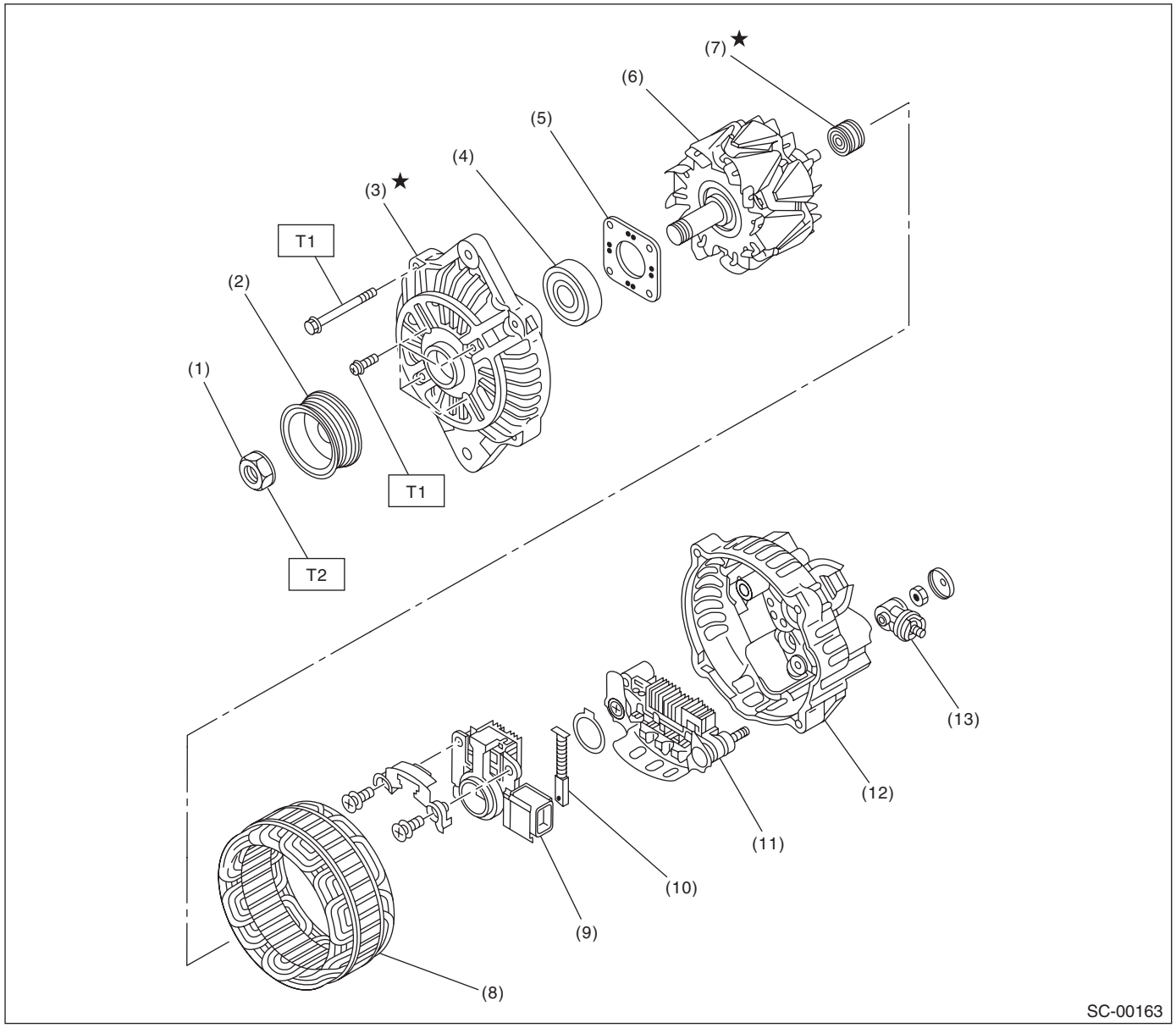

(1) Pulley nut
(2) Pulley
(3) Front cover
(4) Ball bearing
(5) Bearing retainer
(6) Rotor
(7) Bearing
(8) Stator coil
(9) IC regulator with brush
(10) Brush
(11) Rectifier
(12) Rear cover
(13) Terminal

Tightening torque: N·m (kgf-m, ft-lb)
T1: 4.7 (0.48, 3.5)
T2: 108 (11.0, 80)

C: CAUTION

• Wear work clothing, including a cap, protective goggles and protective shoes during operation.
• Remove contamination including dirt and corrosion before removal, installation or disassembly.
• Keep the disassembled parts in order and protect them from dust and dirt.
• Before removal, installation or disassembly, be sure to clarify the failure. Avoid unnecessary removal, installation, disassembly and replacement.
• Be careful not to burn yourself, because each part on the vehicle is hot after running.
• Be sure to tighten fasteners including bolts and nuts to the specified torque.
• Place shop jacks or rigid racks at the specified points.
• Before disconnecting electrical connectors of sensors or units, be sure to disconnect the ground cable from battery.

2. Starter

A: REMOVAL

1) Disconnect the ground cable from battery.

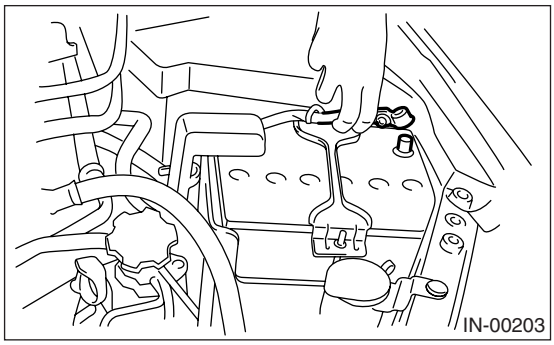

2) Remove the air intake chamber. (Non-turbo model) <Ref. to IN(H4SO)-9, REMOVAL, Air Intake Chamber.> <Ref. to IN(H6DO)-7, REMOVAL, Air Intake Chamber.>
3) Remove the intercooler. (Turbo model)
<Ref. to IN(H4DOTC)-12, REMOVAL, Intercooler.>
4) Remove the air intake chamber stay LH. (2.5L Non-turbo model).
5) Disconnect the connector and terminal from starter.

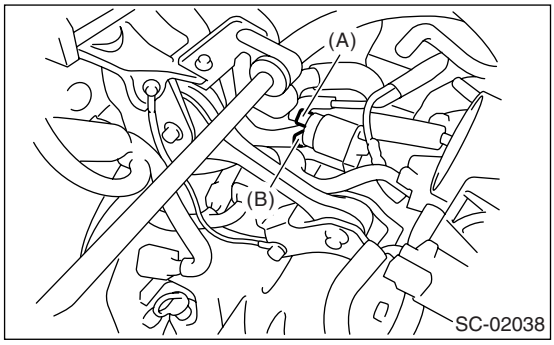

(A) Terminals
(B) Connector

6) Remove the starter from transmission.

B: INSTALLATION

Install in the reverse order of removal.

Tightening torque:
50 N·m (5.1 kgf-m, 37 ft-lb)

C: DISASSEMBLY

1. STARTER ASSEMBLY

1) Loosen the nut which holds terminal M of magnet switch assembly, and then disconnect the harness from terminal.

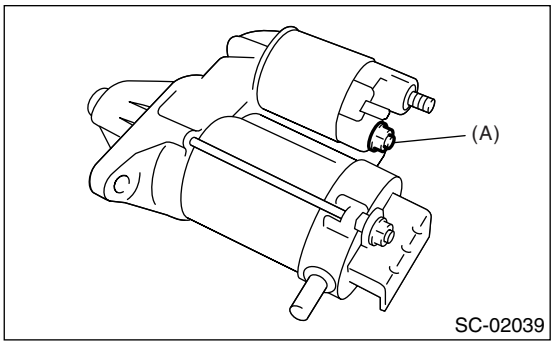

(A) Terminal M

2) Remove the bolts which hold switch assembly, and then remove the switch assembly, plunger and plunger spring from starter.

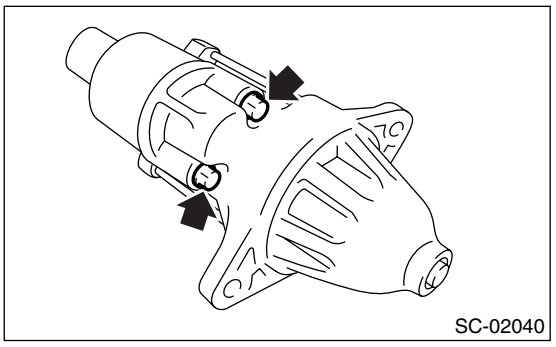

3) Remove the nuts of both sides, and then remove rear cover.

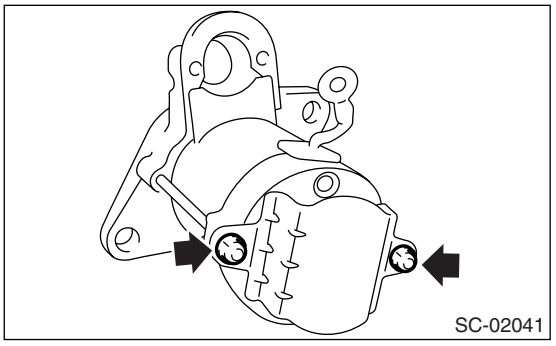

4) Remove the through-bolts of bolt side, and then detach the end frame and armature from yoke as a unit.

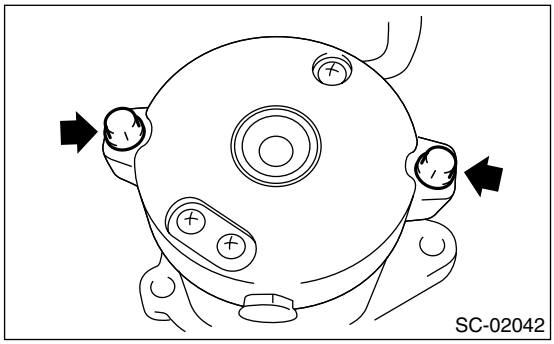
SC-02042

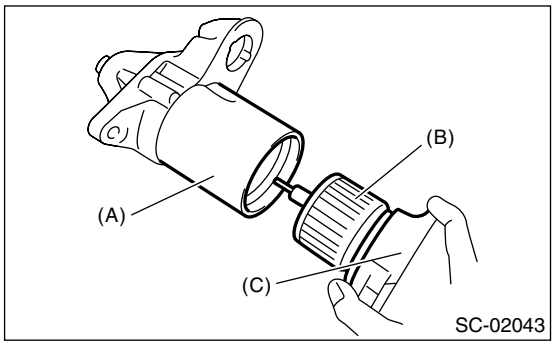

SC-02043

(A) Yoke
(B) Armature
(C) End frame

5) Remove the end frame cover.

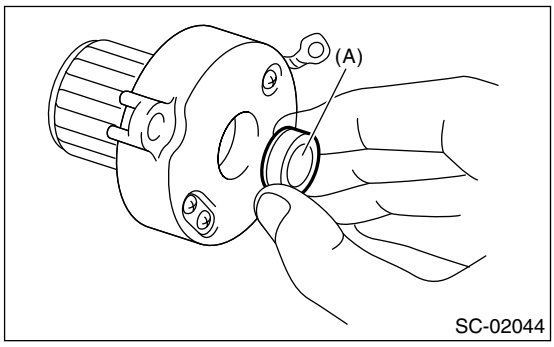

SC-02044

(A) End frame cover

6) Remove the snap ring.

7) Remove the space ring.

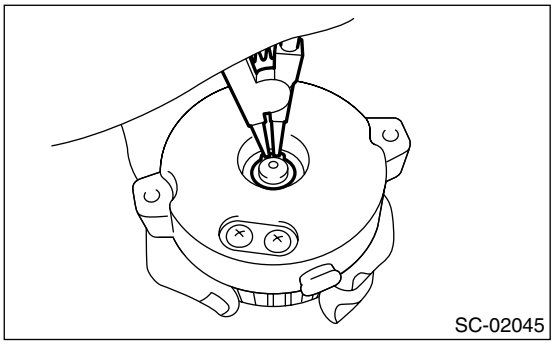
SC-02045

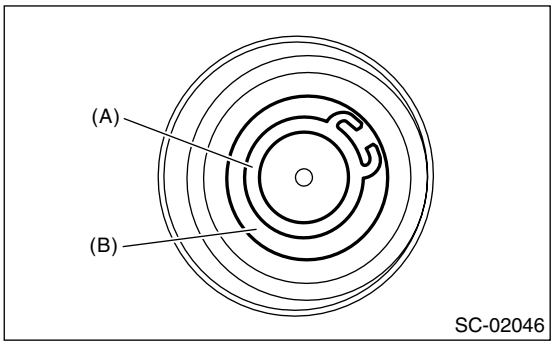

SC-02046

(A) Snap ring
(B) Space ring

8) Remove the armature from end frame.
9) Remove the screw.

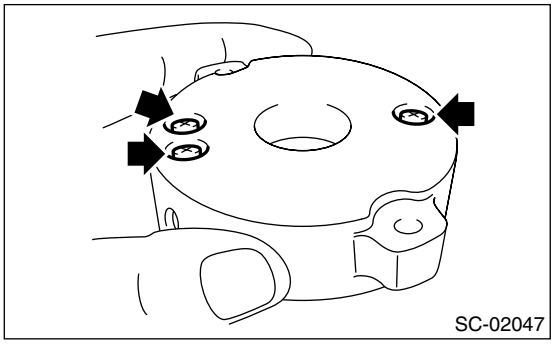
SC-02047

10) Remove the brush holder assembly from end frame.

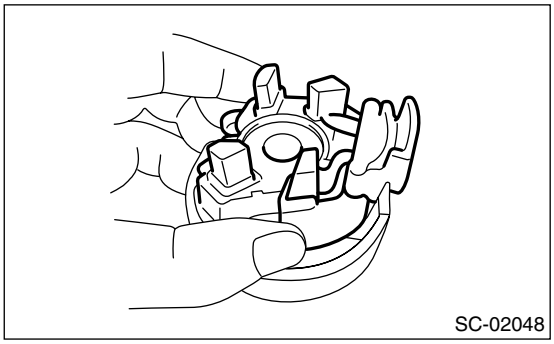
SC-02048

11) Remove the yoke from front bracket.

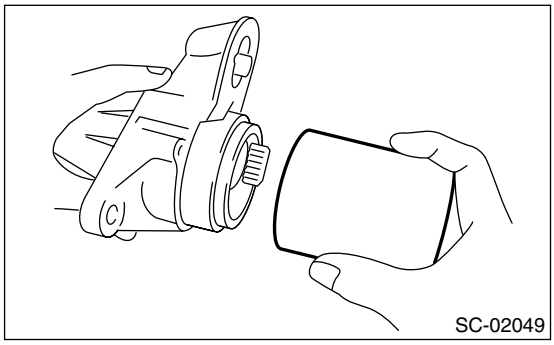

12) Remove the armature plate from the yoke.

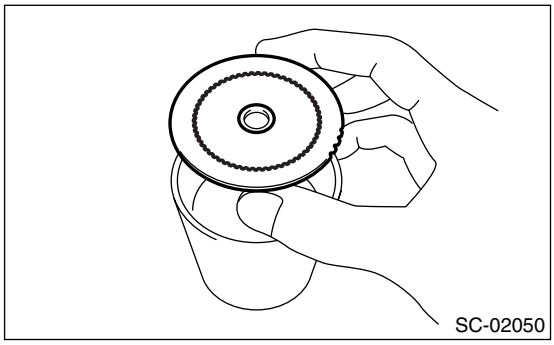

13) Remove the rubber seal and planetary gear.

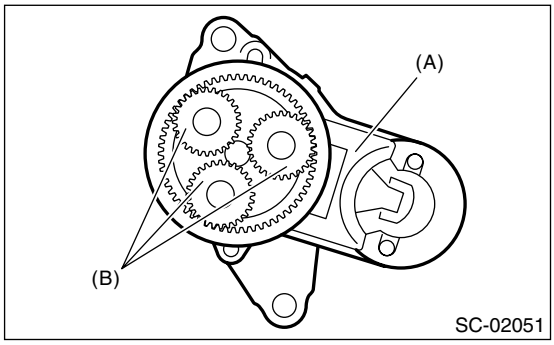

(A) Rubber seal
(B) Planetary gear

14) Remove the shaft assembly, overrunning clutch and lever from front bracket as a unit.

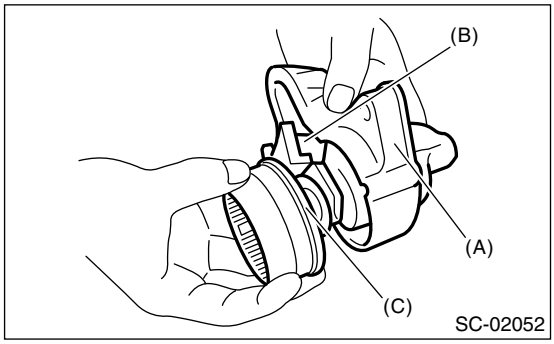

(A) Front bracket
(B) Lever
(C) Shaft ASSY

15) Remove the overrunning clutch from shaft assembly as follows:
(1) Remove the stopper from snap ring by lightly tapping the stopper with an appropriate tool (such as a fit socket wrench).
(2) Remove the snap ring, stopper and clutch from shaft.

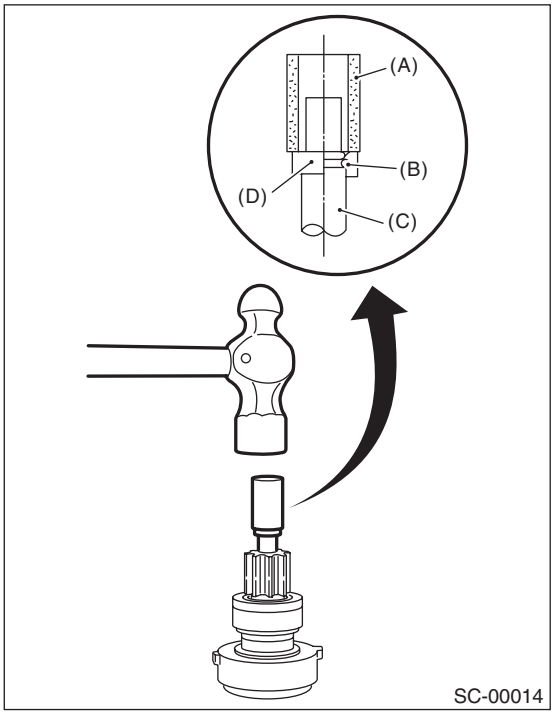

(A) Socket wrench
(B) Snap ring
(C) Shaft
(D) Stopper

16) Remove the snap ring.

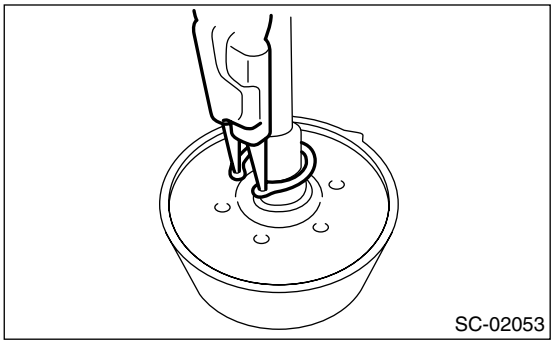

17) Remove the shock absorber bearing, wave washer and internal gear from shaft.

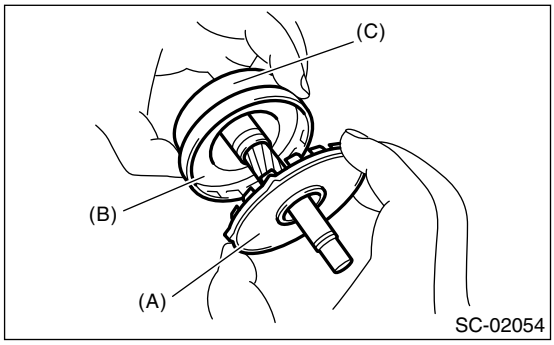

(A) Shock absorber bearing
(B) Wave washer
(C) Internal gear

18) Remove the front bearing from front bracket.
(1) Set an appropriate tool (ϕ2.0 mm) to front bearing.
(2) Using a press, remove the front bearing.

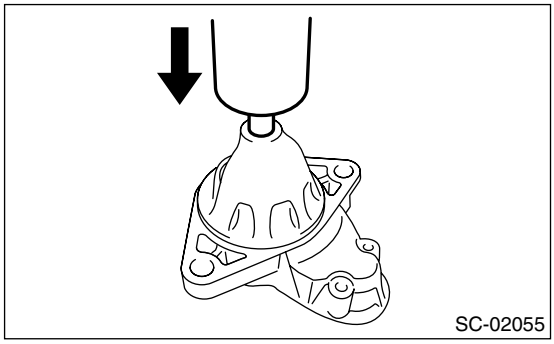

19) Remove the oilless bearing from shock absorber bearing.
(1) Set an appropriate tool (ϕ20 mm) to oilless bearing.
(2) Using a press, remove the oilless bearing.

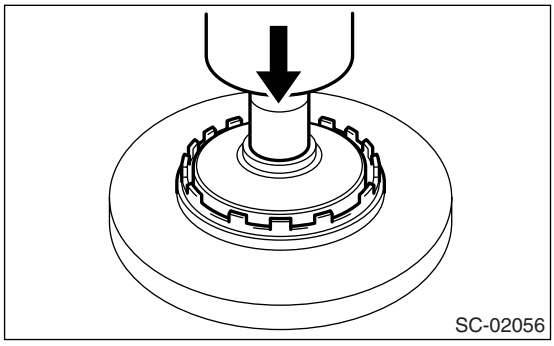

20) Remove the rear bearing from end frame.
(1) Set an appropriate tool (ϕ16 mm) to rear bearing.
(2) Using a press, remove the rear bearing.

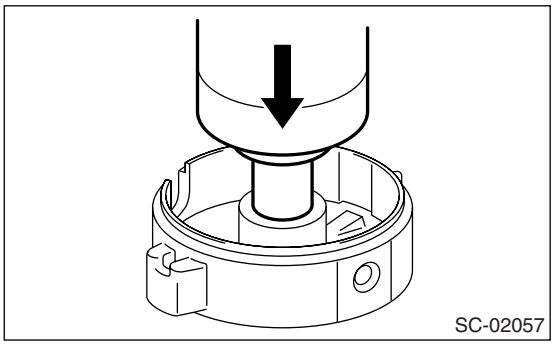

D: ASSEMBLY

1) Press-fit the rear bearing into end frame.
(1) Set an appropriate tool (ϕ22 mm) to rear bearing.
(2) Press-fit the rear bearing using a press.

NOTE:
- Use a new bearing.
- Use a flat base.
- Press-fit the bearing outer ring until it contact to the base bottom.

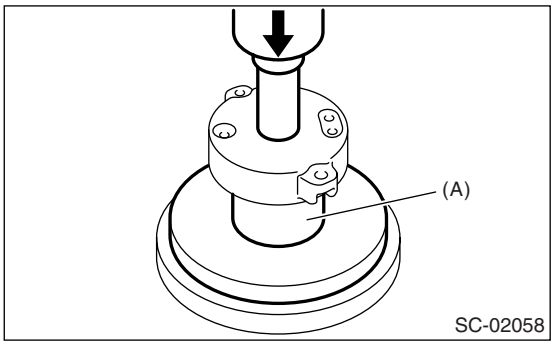

(A) Base

2) Press-fit the oilless bearing into shock absorber bearing.
(1) Set an appropriate tool (ϕ20 mm) to oilless bearing.
(2) Press-fit the oilless bearing using a press.

NOTE:
- Use a new bearing.
- Use a flat base.

• Press-fit the bearing outer ring until it contact to the base bottom.

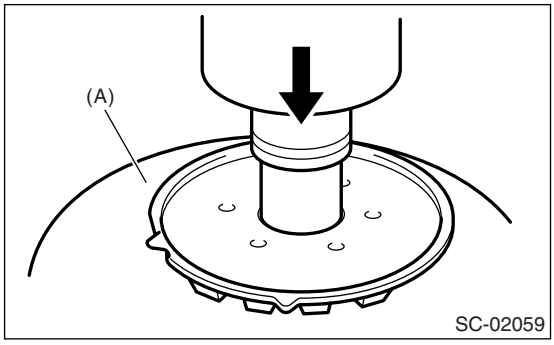

(A) Base

3) Press-fit the front bearing into front bracket.
(1) Set the front bearing into front bracket.
(2) Set an appropriate tool (2.0-mm thickness plate) to front bracket, and press-fit the front bearing using a press.

NOTE:
• Use a new bearing.
• Measure the protrusion of front bearing after press-fitting, to check if it is within standard value.

Standard
2.0 — 2.4 mm (0.0787 — 0.0945 in)

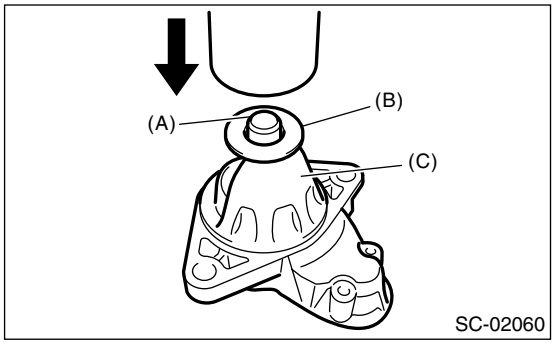

(A) Front bearing
(B) Plate
(C) Front bracket

4) Assemble the internal gear and wave washer to shock absorber bearing.

NOTE:
Align with the pawl position of shock absorber bearing to install internal gear.

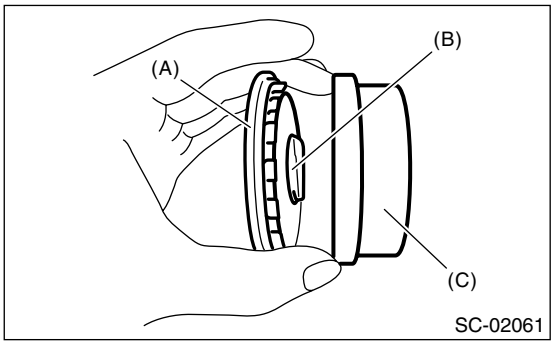

(A) Shock absorber bearing
(B) Wave washer
(C) Internal gear

5) Assemble the washer and internal gear to shaft.

NOTE:
Apply grease to the both sides of the shaft spline and washer.

Grease:
DENSO HL50

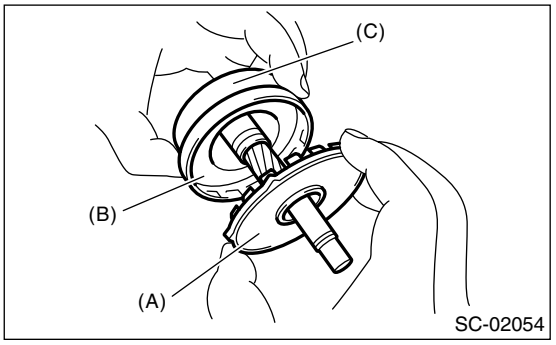

(A) Shock absorber bearing
(B) Wave washer
(C) Internal gear

6) Assemble the snap ring.

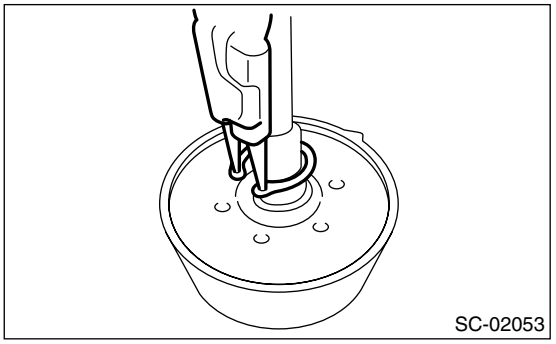

7) Assemble the overrunning clutch to shaft.

NOTE:
Apply grease to the stop ring entire perimeter.

Grease:
DENSO HL50

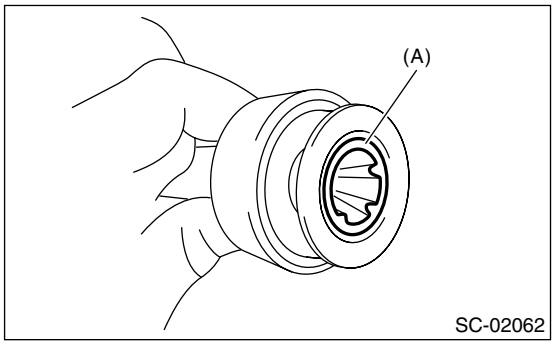

(A) Stop ring

8) Install the stopper to shaft as follows:
(1) Insert the snap ring into the shaft groove by lightly tapping it with an appropriate tool (such as a fit socket wrech).

NOTE:
Use a new snap ring.

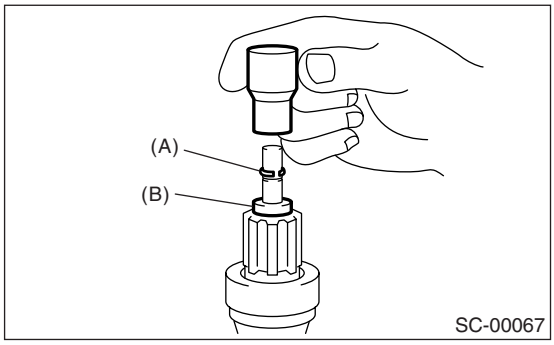

(A) Snap ring
(B) stopper

(2) Press-fit the stopper to snap ring using a press.

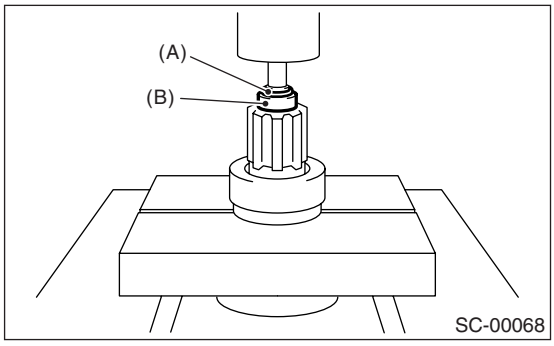

(A) Snap ring
(B) Stopper

9) Install the shaft assembly to front bracket.
(1) Apply grease to the sliding part (A) of lever pin and the pole piece (B) of arm.

Grease:
DENSO HL50

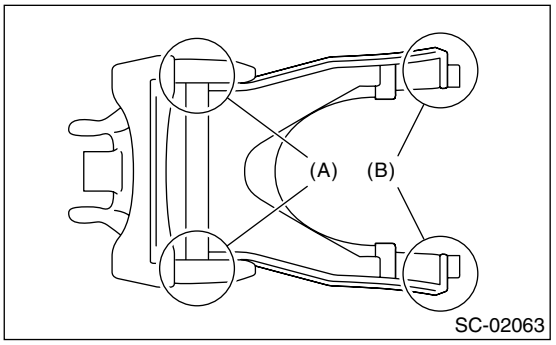

(2) Insert the lever arm into the position on over running clutch as shown in the figure.

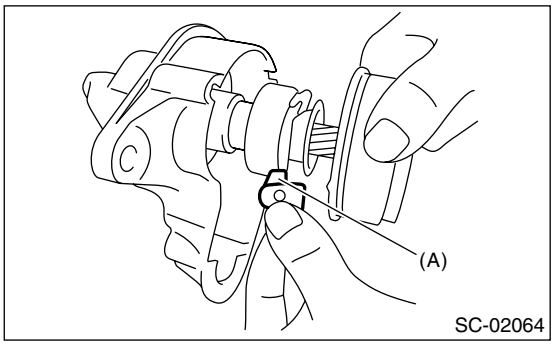

(A) Lever

(3) Align the shaft assembly to the position on front bracket as shown in the figure.

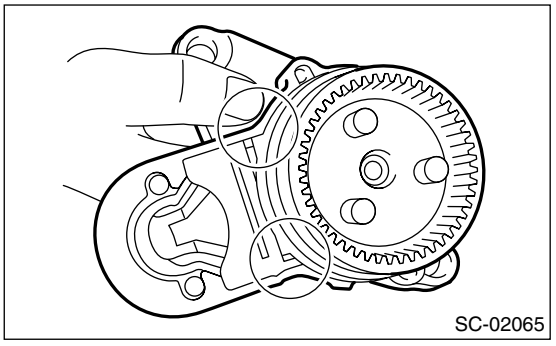

10) Install the rubber seal.

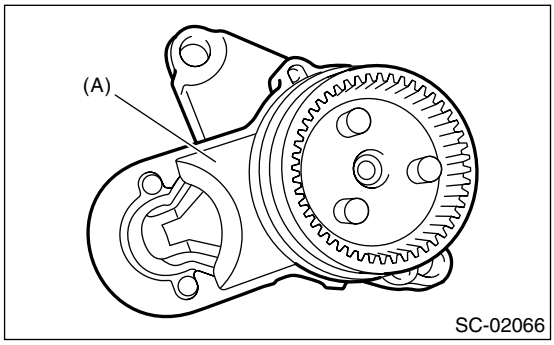

(A) Rubber seal

11) Install the planetary gear.

(1) Apply a grease to the pin (A) and bushing (B).

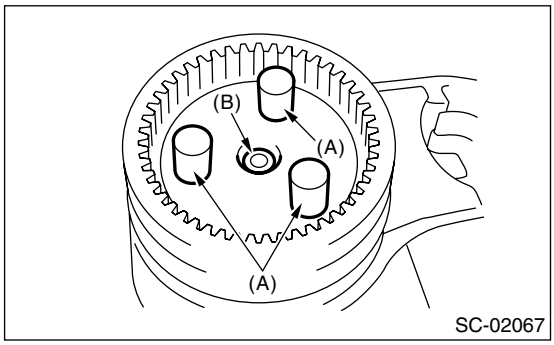

(2) Assemble the planetary gear to pin.

(3) Apply grease to the planetary gear clearance (A) and pin upper part (B).

NOTE:
- Apply grease so that it contacts each gear.
- be careful not to allow dirt to get in.

Grease:
DENSO HL50

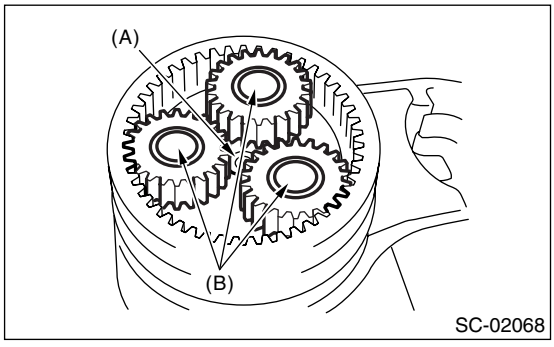

12) Assemble the brush assembly to end frame.

NOTE:
- Be careful not to allow grease to get on brush.
- Align the rubber seal part with end frame groove.

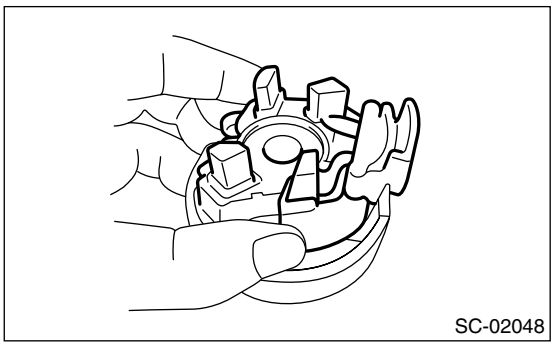

Tightening torque:
1.4 N·m (0.14 kgf-m, 1.03 ft-lb)

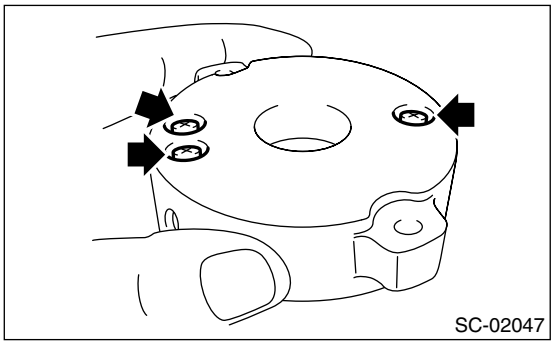

13) Install the armature to end frame.

NOTE:
- Apply grease to the rear bearing inner circumference.
- Be careful not to allow grease to attach to commutator.

Grease:
DENSO HL50

14) Set the space ring, then assemble the snap ring.

NOTE:
- Use a new bearing.

• Check the dimension of (A) in the figure after assembling snap ring. If it exceeds 5.0 mm (0.20 in), assemble a new snap ring again.

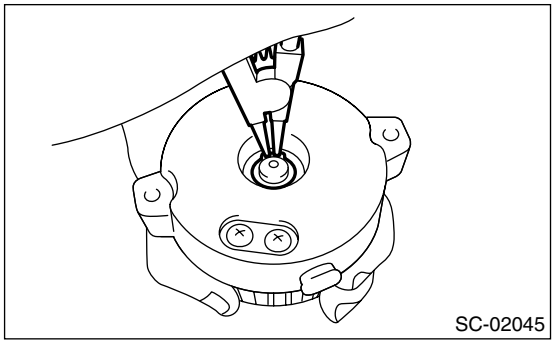
SC-02045

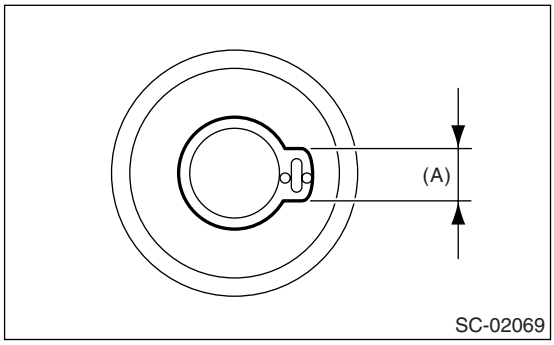

SC-02069

15) Install the end frame cover.

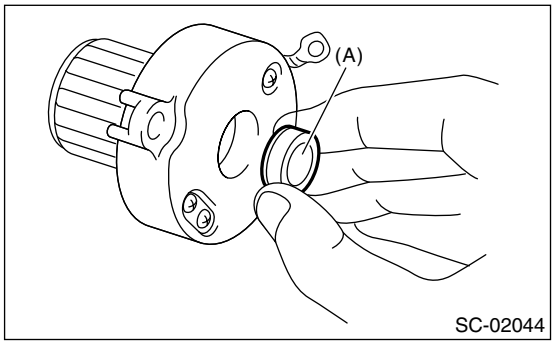

SC-02044

(A) End frame cover

16) Assemble the armature plate to yoke.

NOTE:
• Align the rotation stopper of armature plate with the drive out part of yoke inner circumference.

• Be careful of the assembly direction of armature plate.

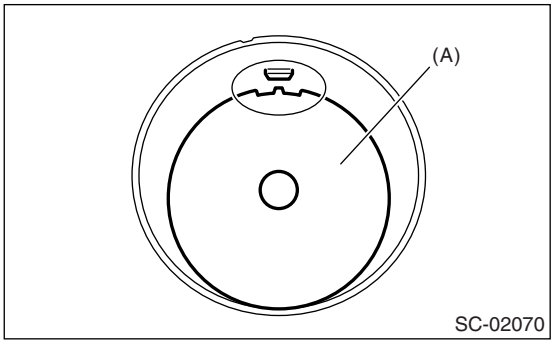

SC-02070

(A) Armature plate

17) Assemble the armature to yoke.

NOTE:
• Be careful not to allow armature plate to move. It is recommendable to support with cylindrical pipe as shown in the figure.
• Align the positions of cutout of yoke with the rubber part of end frame.
• Be careful not to damage the magnet.

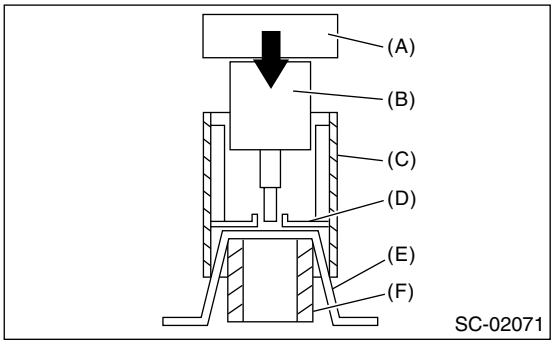

SC-02071

(A) End frame
(B) Armature
(C) Yoke
(D) Armature plate
(E) Cloth
(F) Pipe

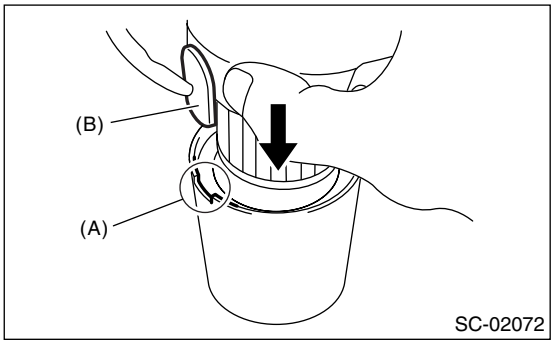

SC-02072

(A) Cutout of yoke
(B) Rubber part

18) Assemble the yoke to front bracket.

NOTE:
• Apply grease to the end surface of yoke (mating surface with front bracket).
• Align the drive out position of yoke outer perimeter with the cutout of front bracket.

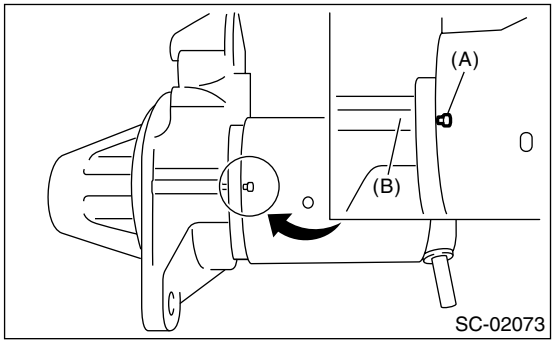

(A) Drive out
(B) Cutout

19) Tighten the through bolts on both sides.

Tightening torque:
6 N·m (0.6 kgf-m, 4.4 ft-lb)

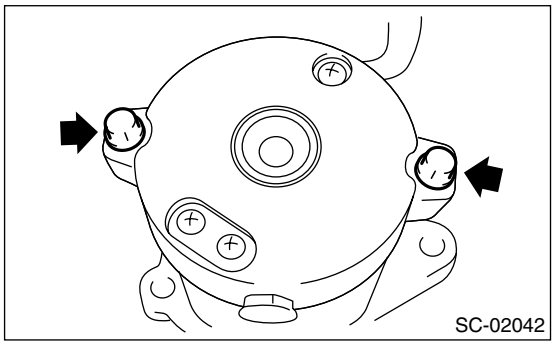

20) Install the rear cover.

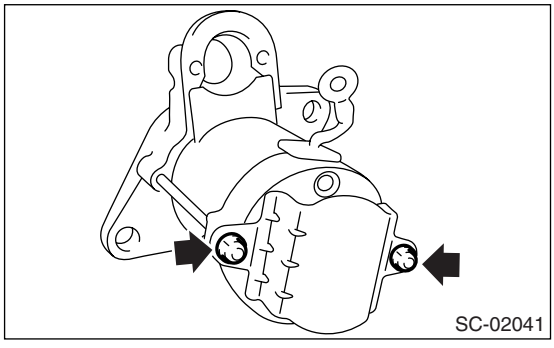

21) Install the magnet switch assembly to front bracket.
(1) Assemble the plunger hook to lever.

NOTE:
Apply grease to the plunger hook and sleeve inner circumference.

Grease:
DENSO HL50

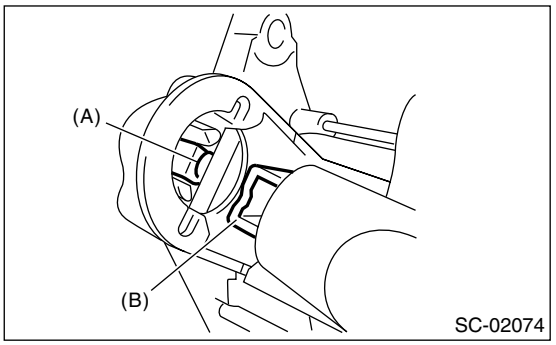

(A) Lever
(B) Plunger hook

(2) Assemble the plunger spring and magnet switch to front bracket.

NOTE:
Apply grease to the end surface of magnet switch as shown in the figure.

Grease:
DENSO HL50

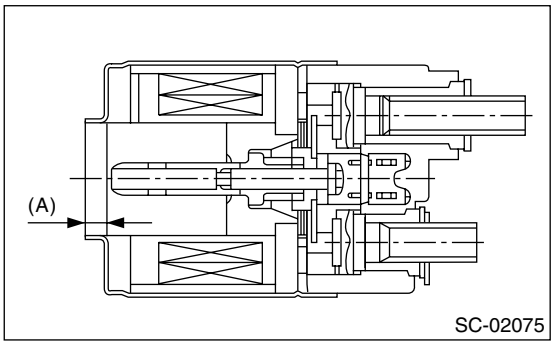

(A) 5 mm

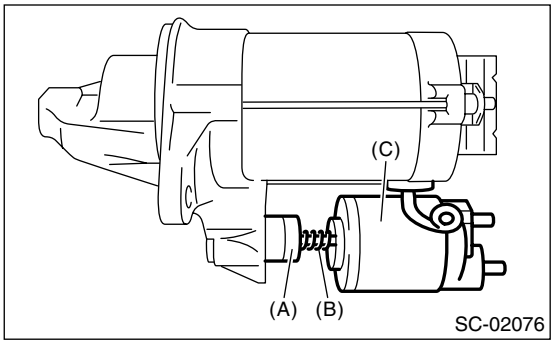

(A) Plunger
(B) Plunger spring
(C) Magnet switch

(3) Tighten the bolt.

Tightening torque:
7.5 N·m (0.8 kgf-m, 5.5 ft-lb)

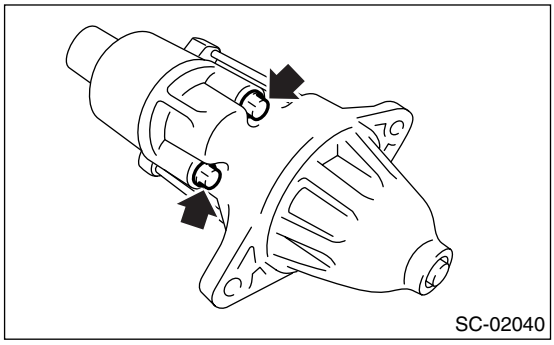
SC-02040

22) Connect the harness to terminal M of magnet switch assembly.

Tightening torque:
10 N·m (1.0 kgf-m, 7.4 ft-lb)

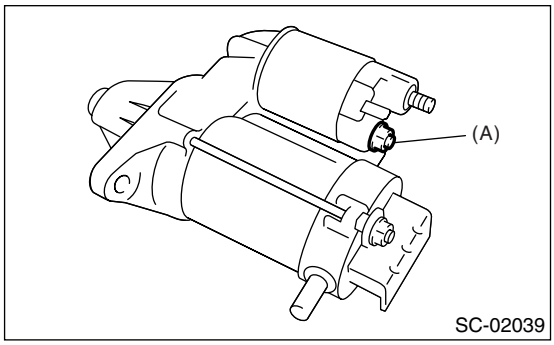

SC-02039

(A) Terminal M

E: INSPECTION

1. ARMATURE

1) Check the commutator for any sign of burns of rough surfaces or stepped wear. If wear is of a minor nature, correct it by using sand paper (#300).
2) Run-out test
Check the commutator for run-out, and then replace if it exceeds the limit.

Commutator run-out:
Standard
3.1 mm (0.1220 in)
Service limit
Less than 3.8 mm (0.1496 in)

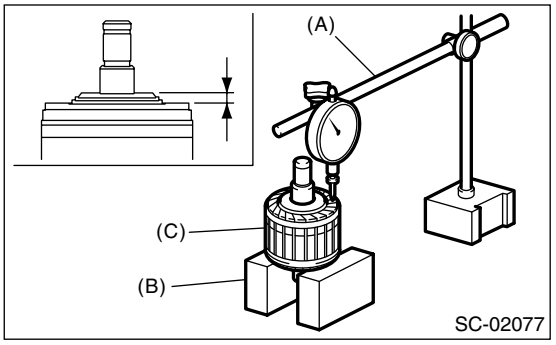

SC-02077

(A) Dial gauge
(B) Block
(C) Armature

3) Armature short-circuit test
Check the armature for short-circuit by placing it on growler tester. Hold an iron sheet (thickness gauge, etc.) against the armature core while slowly rotating the armature. A short-circuited armature will cause the iron sheet to vibrate and to be attracted to core. If the iron sheet is attracted or vibrates, the armature, which is short-circuited, must be replaced or repaired.

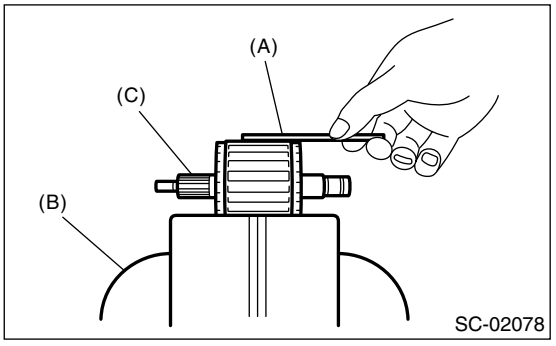

SC-02078

(A) Iron sheet (thickness gauge etc.)
(B) Growler tester
(C) Armature

4) Armature discontinuity test
Using a circuit tester, touch one probe to the Armature and the other to commutator. There should be no continuity. If there is continuity, the armature is grounded.

Replace the armature if it is grounded.

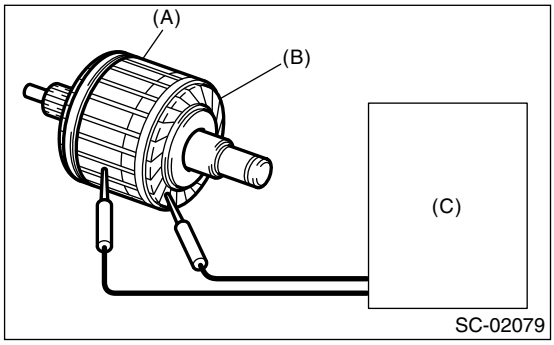

(A) Armature
(B) Commutator
(C) Circuit tester

2. OVERRUNNING CLUTCH

Inspect the teeth of pinion for wear and damage. Replace if it is damaged. Rotate the pinion in the right direction of rotation (counterclockwise). It should rotate smoothly. But in the opposite direction, it should be locked.

CAUTION:
Do not clean the overrunning clutch with oil to prevent grease from flowing out.

3. BRUSH AND BRUSH HOLDER

1) Brush length
Measure the brush length, and then replace if it exceeds the service limit.
Replace if abnormal wear or cracks are noticed.

Brush length:
Standard
9.0 mm (0.354 in)
Service limit
6.0 mm (0.236 in)

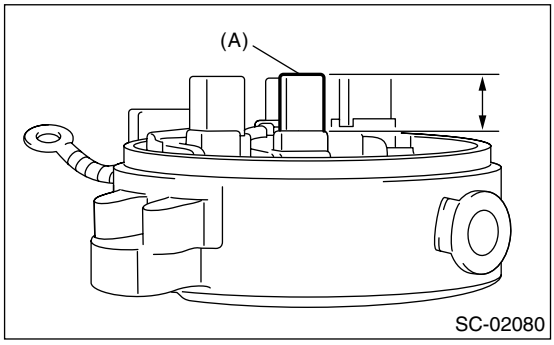

(A) Brush

2) Brush movement
Be sure the brush moves smoothly inside brush holder.

3) Brush holder discontinuity test
Using a circuit tester, touch one probe to positive side brush holder and the other to negative side brush holder. There should be no continuity.

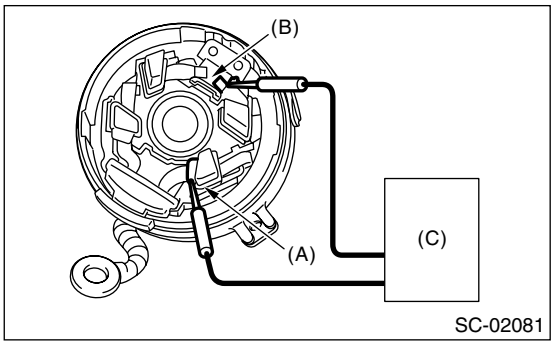

(A) Positive side
(B) Negative side
(C) Circuit tester

4. SWITCH ASSEMBLY

1) Return spring check
Make sure the plunger returns to its original position immediately after pressed-in then released.

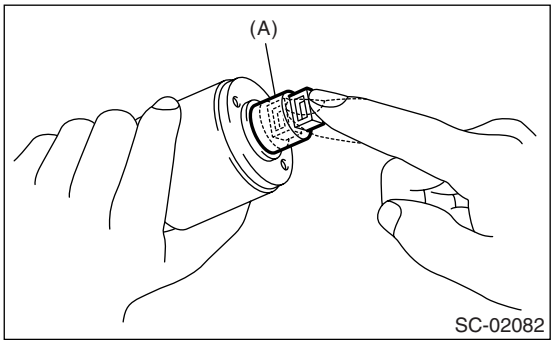

(A) Plunger

2) Magnet switch conrinuty test
Be sure there is continuity between the terminals S and M, and between terminal S and ground. Use a circuit tester.
Also check to be sure there is no continuity between terminal M and B.

Terminal / Specified resistance:
S — M / Less than 1 Ω
S — Ground / Less than 1 Ω
M — B / More than 1 MΩ

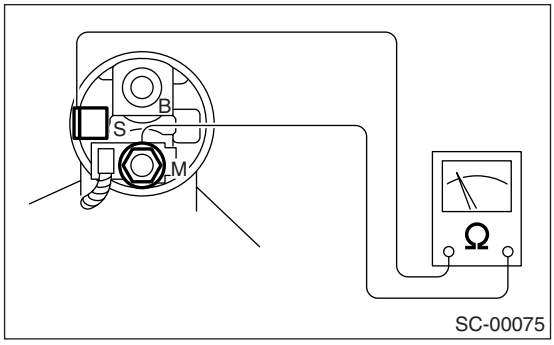

5. FRONT BEARING

Check the front bearing to make sure there are no damage or rust.
Also, insert the shaft into front bearing to make sure the front bearing rotates smoothly when the shaft is rotated.
Replace the front bearing if faulty.

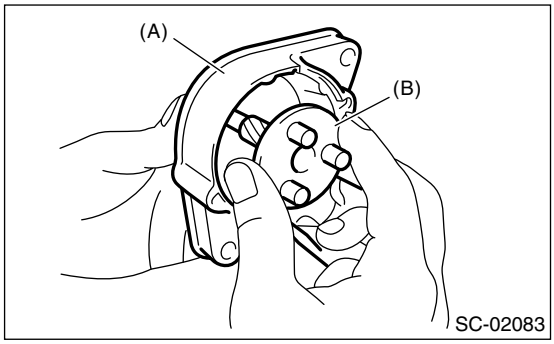

(A) Front bracket
(B) Shaft

6. SHOCK ABSORBER BEARING CLEARANCE

Measure the outside (A) diameter of sliding part for shaft shock absorber bearing.
Then, measure the inside (B) diameter of shock absorber bearing, and calculate the clearance.
If it exceeds the service limit, replace the oilless bearing or shaft.

Shock absorber bearing sliding part:
Standard
18 mm (0.709 in)

Clearance:
Standard
0.03 — 0.061 mm (0.001 — 0.0024 in)
Service limit
0.1 mm (0.003 in)

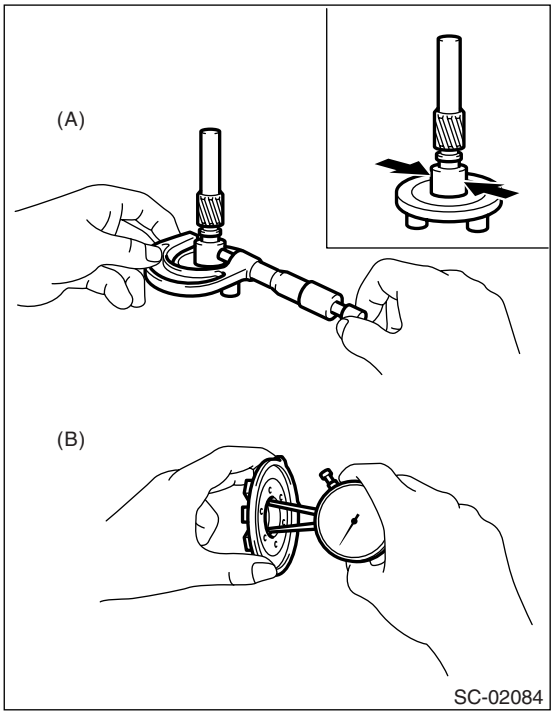

7. REAR BEARING

Check the rear bearing, and replace the rear bearing if there are damage, lock or rust.

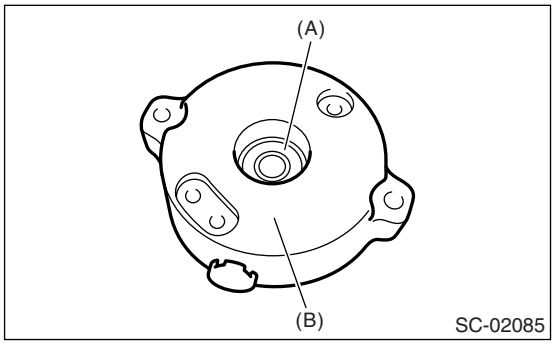

(A) Bearing
(B) End frame

8. PLANETARY GEAR BUSHING

Measure the outer diameter (A) of pin which is press-fited into shaft.
Then, measure the inner diameter (B) of pranetary gear bushing, and calculate the clearance.
If it exceeds the service limit, replace the planetary gear or shaft.

Clearance:
Standard
0.035 — 0.065 mm (0.001 — 0.0025 in)
Service limit
0.1 mm (0.003 in)

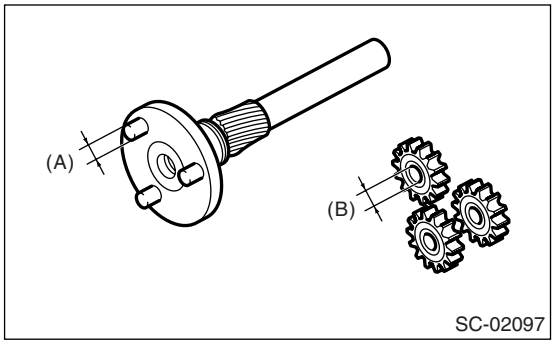

9. SWITCH ASSEMBLY OPERATION

NOTE:
Test period of each test must be within short time (3 – 5 seconds).

1) Vacuum test
Disconnect the harness from terminal M and connect it as shown in the figure. Make sure the pinion gear sticks out.

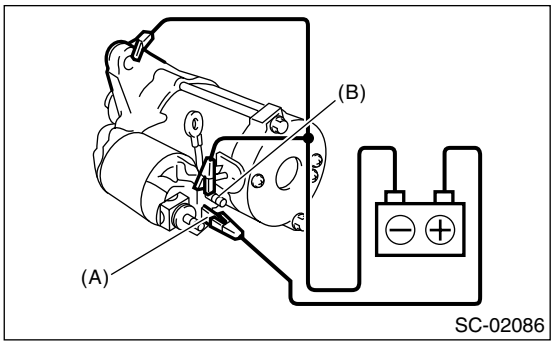

(A) Terminal S
(B) Terminal M

2) Hold test
Make sure the pinion gear remains stick out even after disconnecting terminal M in the above condition.

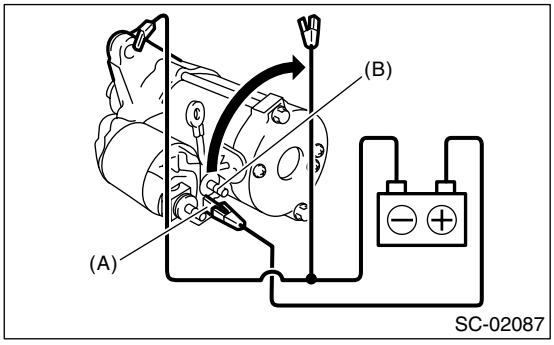

(A) Terminal S
(B) Terminal M

3) Return test
Connect the positive terminal to terminal S and the negative terminal to terminal M and starter body to pull the pinion gear at the main contact point. Make sure the pinion gear returns to its original position when the terminal S is disconnected.

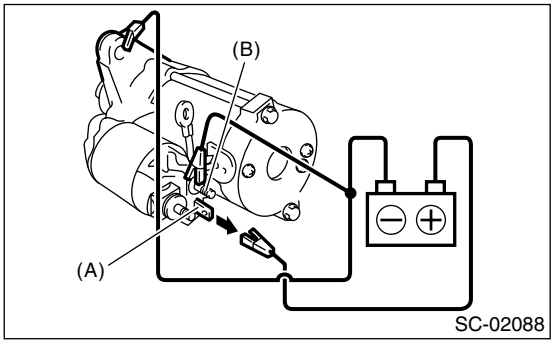

(A) Terminal S
(B) Terminal M

10.PERFORMANCE TEST

The starter should be submitted to performance tests whenever it has been overhauled, to assure its satisfactory performance when installed on the engine.
Three performance tests, no-load test, load test, and lock test, are presented here; however, if the load test and lock test cannot be performed, carry out at least the no-load test.
For these performance tests, use the circuit shown in the figure.

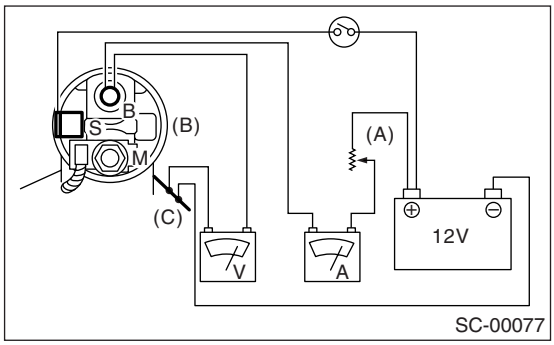

(A) Variable resistance
(B) Starter body
(C) Magnetic switch

1) No-load test
With switch on, adjust the variable resistance for the voltage to obtain 11 V, read the ammeter and measure the rotating speed. Compare these values with the specifications.

No-load test (Standard):

Voltage / Current
MT model
11 V / 90 A or less
AT model
11 V / 90 A or less

Rotating speed
MT model
1,820 rpm or more
AT model
1,720 rpm or more

2) Load test
Apply the specified braking torque to starter. The condition is satisfactory if the current draw and rotating speed are within specifications.

Load test (Standard):

Voltage / Load
MT model
8 V / 7.76 N·m (0.79 kgf-m, 5.7 ft-lb)
AT model
8 V / 12.78 N·m (1.30 kgf-m, 9.4 ft-lb)

Current / Speed
MT model
280 A / 900 rpm or more
AT model
370 A / 850 rpm or more

3) Lock test
With the starter stalled, or not rotating, measure the torque developed and current draw when the voltage is adjusted to the specified voltage.

Lock test (Standard):

Voltage / Current
MT model
3 V / 900 A or less
AT model
3 V / 900 A or less

Torque
MT model
13.62 N·m (1.38 kgf-m, 10.0 ft-lb)
AT model
15.42 N·m (1.57 kgf-m, 11.3 ft-lb)

3. Generator

A: REMOVAL

1) Disconnect the ground cable from battery.

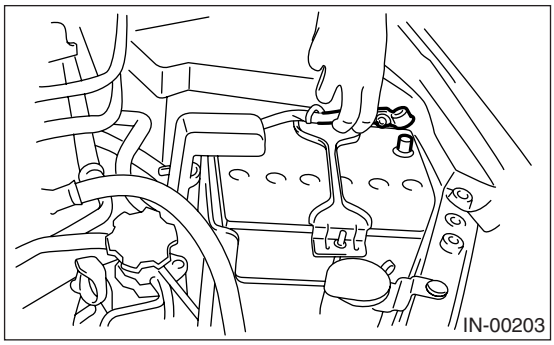

2) Disconnect the connector and terminal from generator.

- 2.5L Non-turbo model (U5)

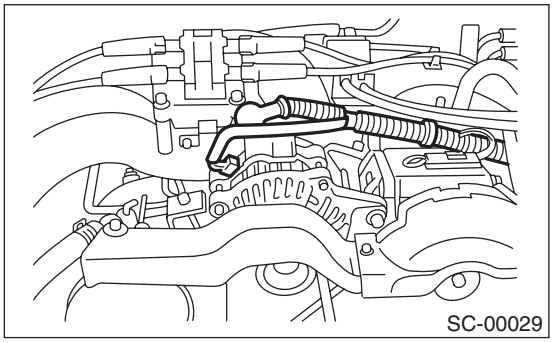

- 2.5L Non-turbo model (Except for U5)

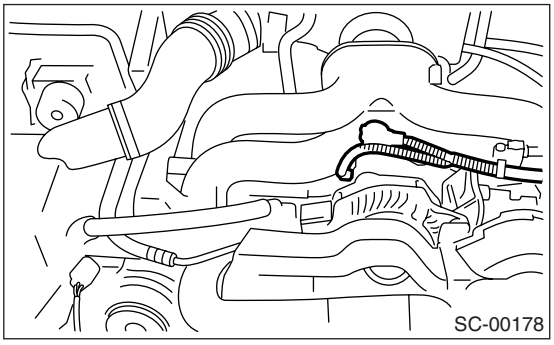

- 3.0L Non-turbo model

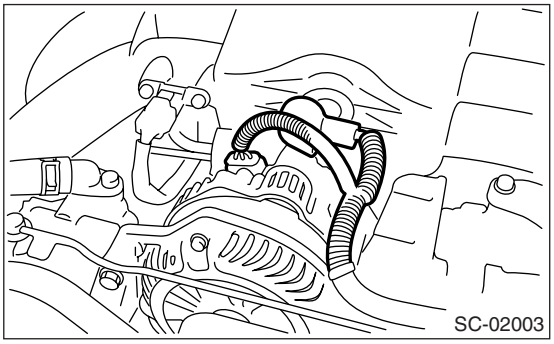

- Turbo model

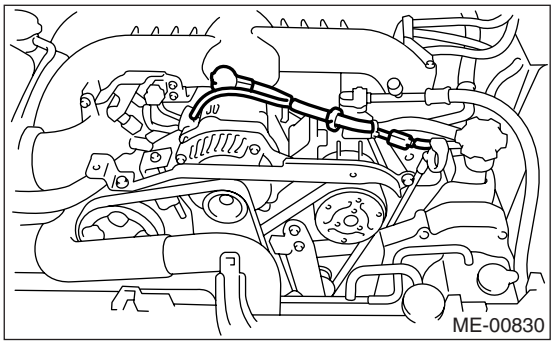

3) Remove the V-belt covers.
4) Remove the V-belts.
<Ref. to ME(H4SO)-37, FRONT SIDE BELT, REMOVAL, V-belt.> or <Ref. to ME(H4DOTC)-37, FRONT SIDE BELT, REMOVAL, V-belt.> or <Ref. to ME(H6DO)-32, REMOVAL, V-belt.>
5) Remove the bolts which install the generator onto bracket.

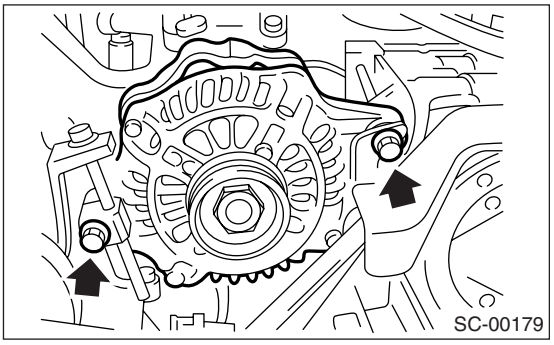

B: INSTALLATION

Install in the reverse order of removal.

Tightening torque:
25 N·m (2.5 kgf-m, 18.1 ft-lb)

CAUTION:
Check and adjust the V-belt tension.
<Ref. to ME(H4SO)-38, INSPECTION, V-belt.> or <Ref. to ME(H4DOTC)-38, INSPECTION, V-belt.> or <Ref. to ME(H6DO)-32, INSPECTION, V-belt.>

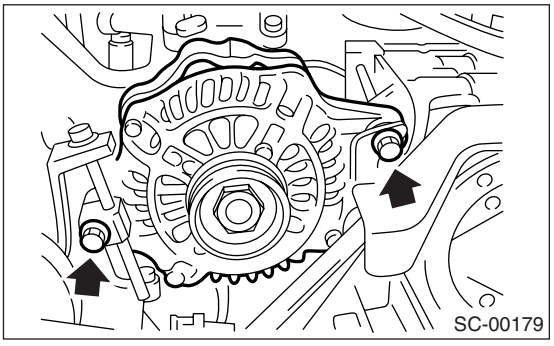

C: DISASSEMBLY

1) Remove the four through-bolts.

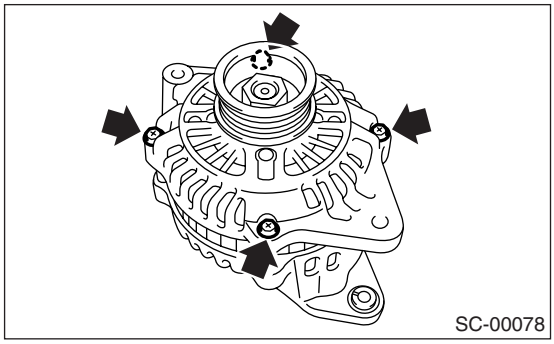

2) Heat portion (A) of rear cover to 50°C (122°F) with a heater drier.

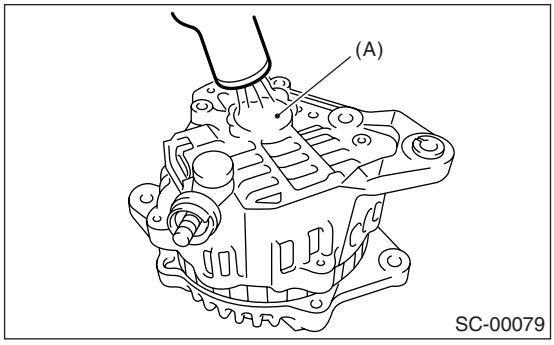

3) Then insert the tip of a flat tip screwdriver into the gap between stator core and front cover. Pry them apart to disassemble.

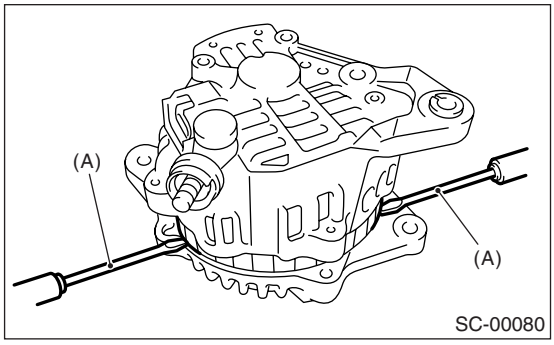

(A) Screwdriver

4) Hold the rotor with a vise and remove pulley nut.

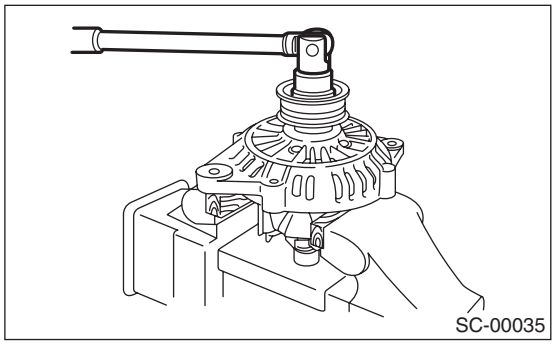

CAUTION:
When holding the rotor with a vise, place aluminum plates or wooden pieces on the vise jaws to prevent rotor from damage.

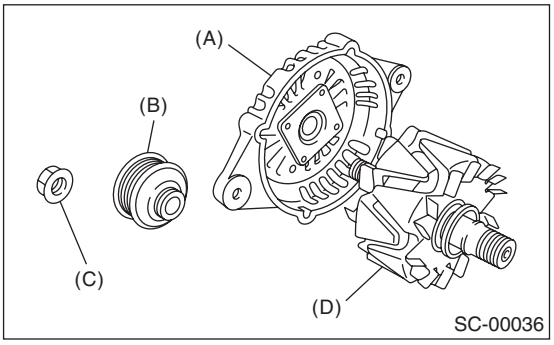

(A) Front cover
(B) Pulley
(C) Nut
(D) Rotor

5) Remove the ball bearing as follows.
(1) Remove the bolt, and then remove the bearing retainer.

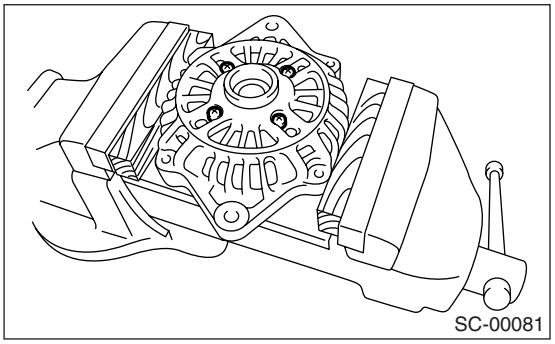

(2) Firmly install an appropriate tool (such as a fit socket wrench) to bearing inner race.

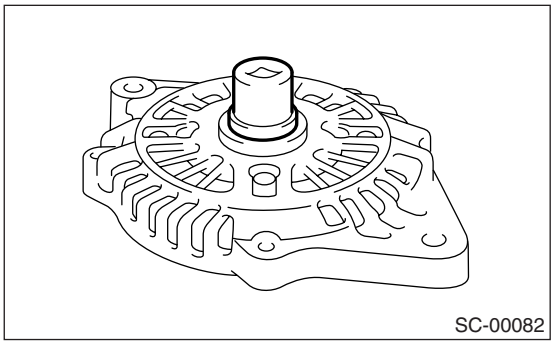

(3) Push the ball bearing off the front cover using a press.

6) Remove the bearing from rotor using a bearing puller.

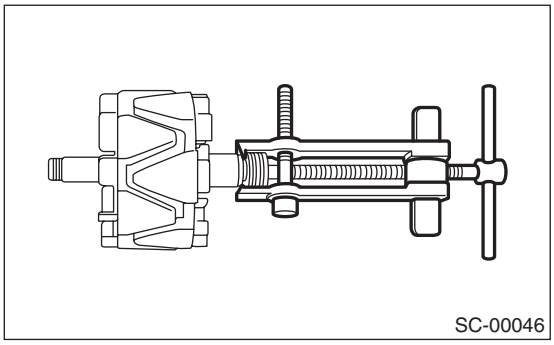
SC-00046

7) Unsolder connection between rectifier and stator coil to remove the stator coil.

CAUTION:
Do not allow a 180 — 270 W soldering iron to contact the terminals for more than 5 seconds at once because the rectifier cannot withstand so much heat.

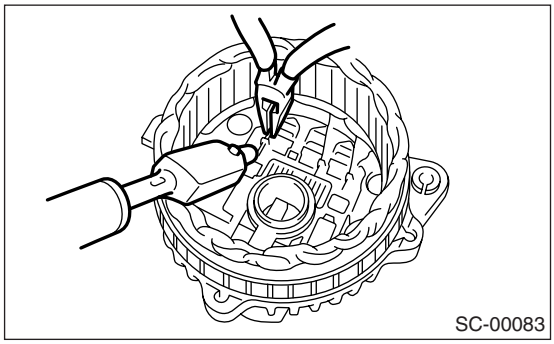
SC-00083

8) Remove the IC regulator as follows.
(1) Remove the screws which secure IC regulator to rear cover.

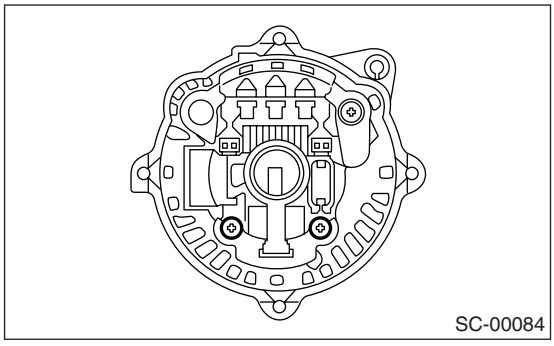
SC-00084

(2) Unsolder the connection between IC regulator and rectifier to remove the IC regulator.

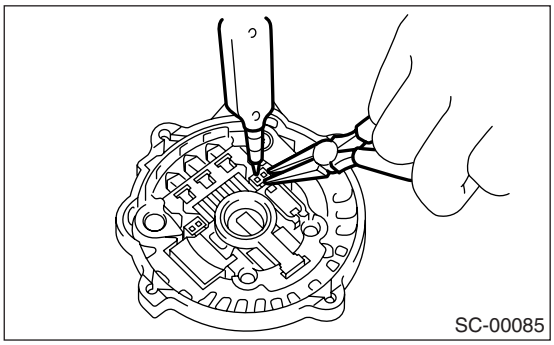
SC-00085

9) Remove the brush as follows.
(1) Remove cover A.

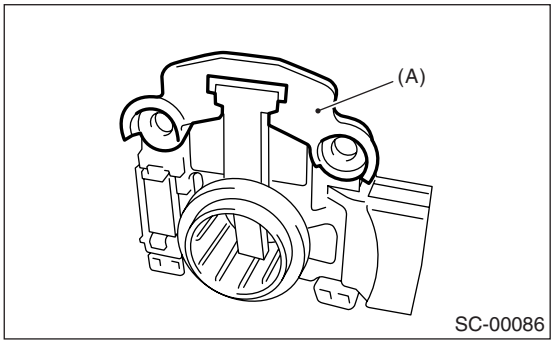

SC-00086

(A) Cover A

(2) Remove cover B.

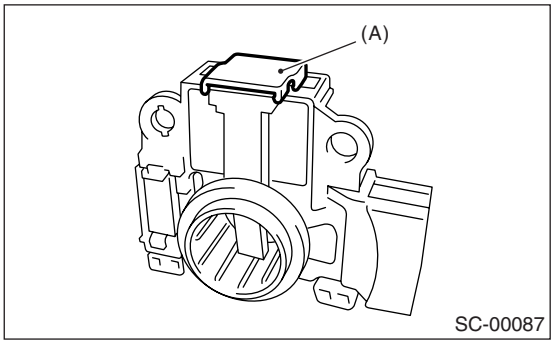

SC-00087

(A) Cover B

(3) Separate the brush from connection to remove.

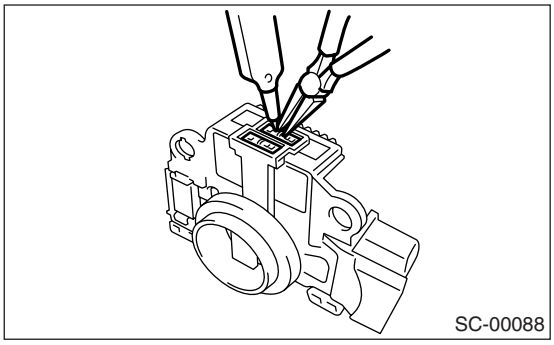
SC-00088

10) Remove the rectifier as follows.
(1) Remove the bolt which secures the rectifier.

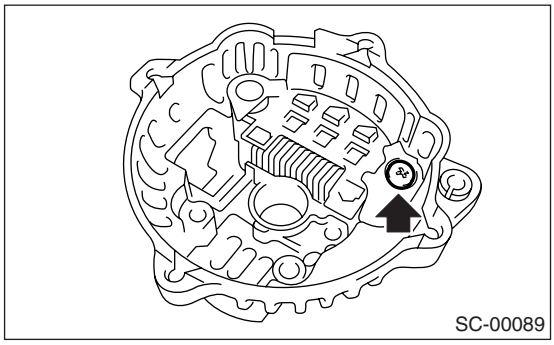
SC-00089

(2) Remove the cover of terminal B.

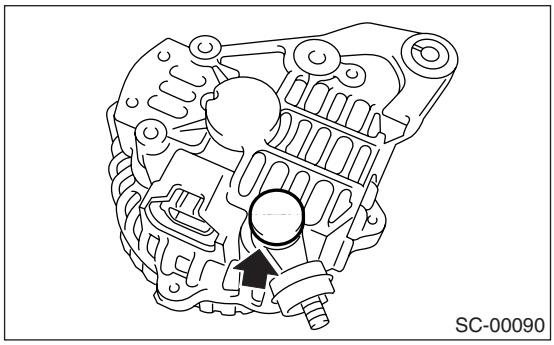
SC-00090

(3) Remove the nut of terminal B, and then remove the rectifier.

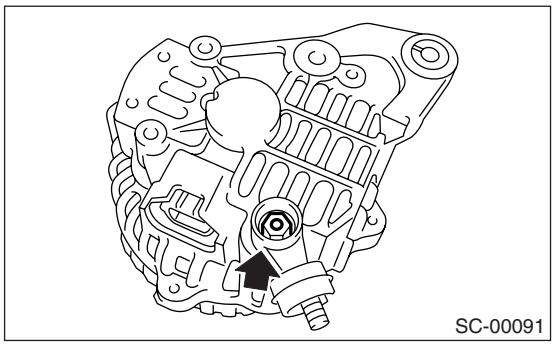
SC-00091

D: ASSEMBLY

Assemble in the reverse order of disassembly.
1) Pulling up brush
Before assembling, press the brush down into brush holder, and then fix them in that position by passing a [1 mm (0.08 in) dia. 40 to 50 mm (1.6 to 2.0 in) long] wire through the hole as shown in the figure.

CAUTION:
Be sure to remove the wire after reassembly.

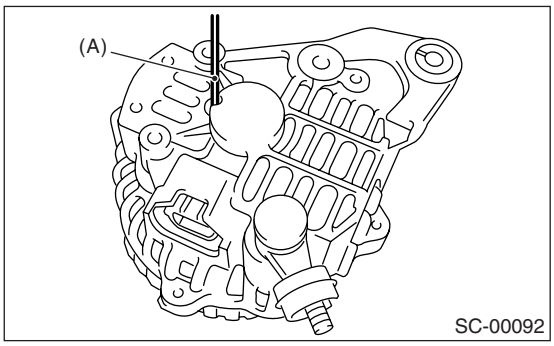

SC-00092

(A) Wire

2) Install the ball bearing.
(1) Set the ball bearing on the front cover, and then securely install an appropriate tool (such as a fit socket wrench) to the bearing outer race.
(2) Press the ball bearing into the specified position using a press.
(3) Install the bearing retainer.
3) Press the bearing (rear side) into the rotor shaft using a press to install.
4) Heat the bearing box in rear cover [50 to 60°C (122 to 140°F)], and then press the rear bearing into rear cover.

CAUTION:
Grease should not be applied to rear bearing. Remove the oil completely if it is found on bearing box.

5) After reassembly, turn the pulley by hand to check that rotor turns smoothly.

E: INSPECTION

1. DIODE

CAUTION:
Never use a mega tester (designed for reading high voltage) or any other similar instrument for this test; otherwise, the diodes may be damaged.

1) Checking positive diode
Check for continuity between the diode lead and positive side heat sink. The positive diode is in good condition if resistance is 1 Ω or less only in the direction from the diode lead to heat sink.

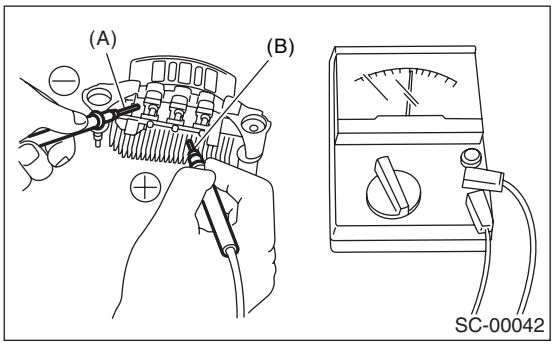

(A) Diode lead
(B) Heat sink (positive side)

2) Checking negative diode
Check for continuity between the negative side heat sink and diode lead. The negative diode is in good condition if resistance is 1 Ω or less only in the direction from the heat sink to diode lead.

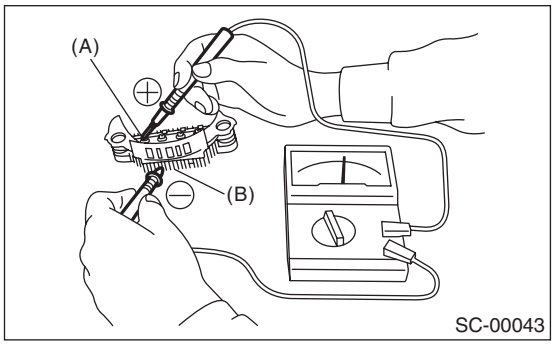

(A) Diode lead
(B) Heat sink (negative side)

2. ROTOR

1) Slip ring surface
Inspect the slip rings for contamination or any roughness on the sliding surface. Repair the slip ring surface using a lathe or sand paper.
2) Slip ring outer diameter
Measure the slip ring outer diameter. If the slip ring is worn, replace the rotor assembly.

Slip ring outer diameter:
Standard
22.7 mm (0.894 in)
Limit
22.1 mm (0.870 in)

3) Continuity test
Check the resistance between slip rings using circuit tester.
If the resistance is not within the specified range, replace the rotor assembly.

Specified resistance:
Approx. 1.8 — 2.2 Ω

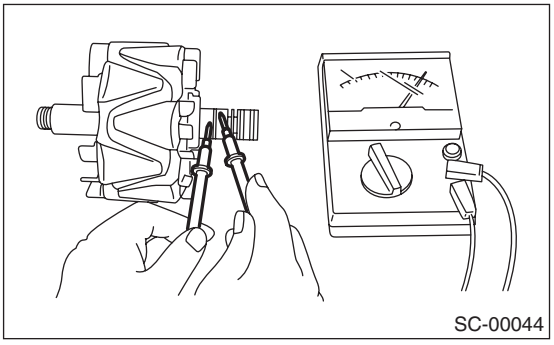

4) Insulation test
Check the continuity between slip ring and rotor core or shaft. If resistance is 1 Ω or less, the rotor coil is grounded, and so replace the rotor assembly.

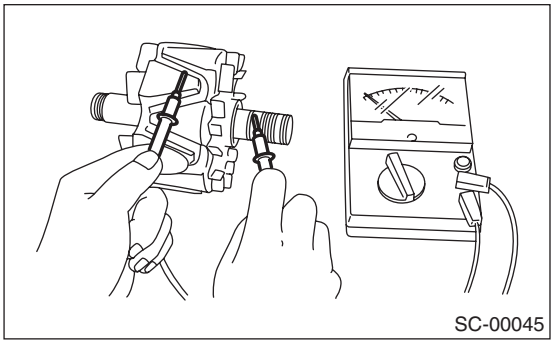

5) Ball bearing (rear side)
Check the rear ball bearing. Replace if it is noisy or if the rotor does not turn smoothly.

3. STATOR

1) Continuity test
Inspect the stator coil for continuity between each end of the lead wires. If resistance is 1 MΩ or more, the lead wire is broken, and so replace the stator assembly.

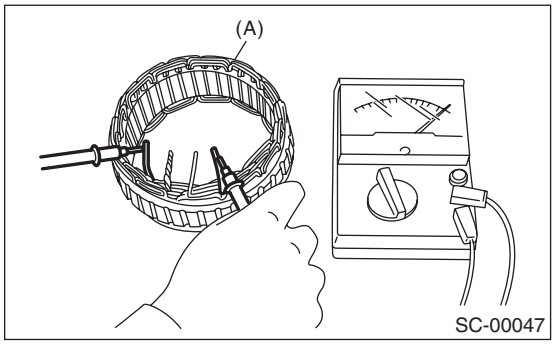

(A) Stator

2) Insulation test
Inspect the stator coil for continuity between stator core and each end of lead wire. If resistance is 1 Ω or less, the stator coil is grounded, and so replace the stator assembly.

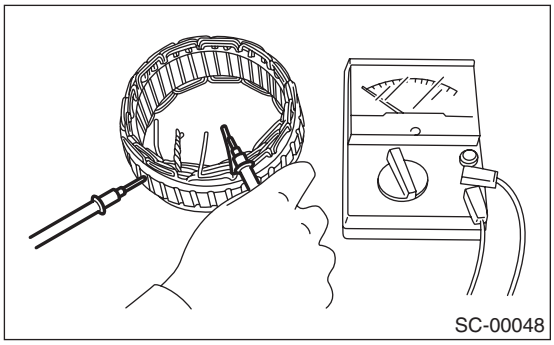

4. BRUSH

1) Measure the length of each brush. If wear exceeds the service limit, replace the brush. Each brush has the service limit mark (A) on it.

Brush length:
Service limit (1)
5.0 mm (0.197 in)
Standard (2)
18.5 mm (0.728 in)

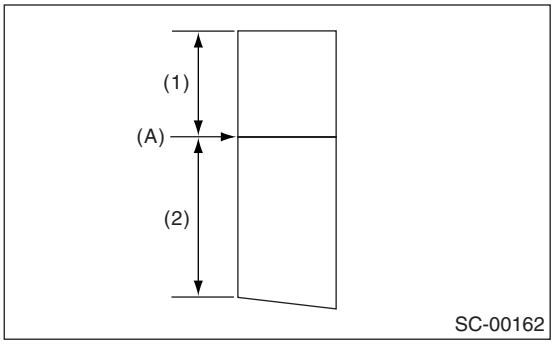

2) Checking brush spring for proper pressure
Using a spring pressure indicator, push the brush into the brush holder until its tip protrudes 2 mm (0.08 in). Then measure the pressure of brush spring. If the pressure is less than 2.648 N (270 g, 9.52 oz), replace the brush spring with a new one. The new spring must have a pressure of 4.609 to 5.786 N (470 to 590 g, 16.58 to 20.810 oz).

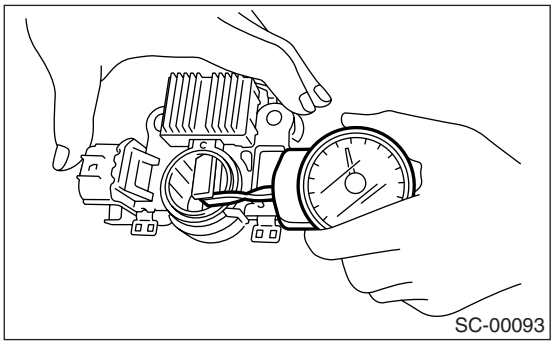

5. BEARING (FRONT SIDE)

Check the front ball bearing. If the resistance is felt while rotating, or if abnormal noise is heard, replace the ball bearing.

4. Battery

A: REMOVAL

1) Disconnect the positive (+) terminal after disconnecting the negative (–) terminal of battery.
2) Remove the flange nuts from battery rods and take off battery holder.

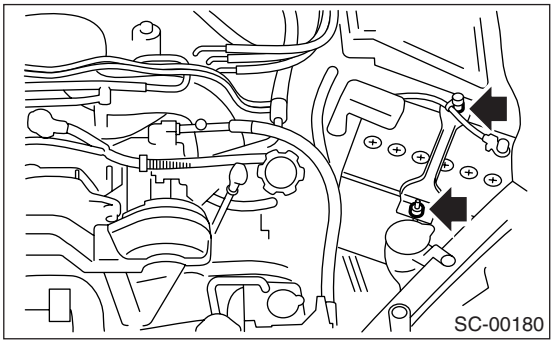

3) Remove the battery.

B: INSTALLATION

Install in the reverse order of removal.

Tightening torque:
3.4 N·m (0.35 kgf-m, 2.5 ft-lb)

NOTE:
• Clean the battery cable terminals and apply grease to retard the formation of corrosion.
• Connect the positive (+) terminal, and then connect the negative (–) terminal of battery.
• Initial diagnosis of electronic control throttle is performed after battery installation. For this reason, start the engine after 10 seconds or more have elapsed since the ignition switch was turned to ON.

C: INSPECTION

WARNING:
• Electrolyte has toxicity; be careful handling the fluid.
• Avoid contact with skin, eyes or clothing. Especially at contact with eyes, flush with water for 15 minutes and get prompt medical attention.
• Batteries produce explosive gases. Keep sparks, flame, cigarettes away.
• Ventilate when charging or using in enclosed space.
• For safety, in case an explosion does occur, wear eye protection or shield your eyes when working near any battery. Never lean over a battery.
• Do not let battery fluid contact eyes, skin, fabrics, or paint-work because battery fluid is corrosive acid.
• To lessen the risk of sparks, remove rings, metal watch-bands, and other metal jewelry. Never allow metal tools to contact the positive battery terminal and anything connected to it while you are at the same time in contact with any other metallic portion of the vehicle. This may cause short circuit.

1. EXTERNAL PARTS

Check the battery case, top cover, vent plugs, and terminal posts for dirt or cracks. If necessary, clean with water and wipe with a dry cloth.
Apply a thin coat of grease on the terminal posts to prevent corrosion.

2. ELECTROLYTE LEVEL

Check the electrolyte level in each cell. If the level is below MIN level, bring the level to MAX level by pouring distilled water into the battery cell. Do not fill beyond MAX level.

3. SPECIFIC GRAVITY OF ELECTROLYTE

1) Measure specific gravity of electrolyte using a hydrometer and a thermometer.
Specific gravity varies with temperature of electrolyte so that it must be corrected at 20°C (68°F) using the following equation:

$$S_{20} = St + 0.0007 \times (t - 20)$$

S_{20}: Specific gravity corrected at electrolyte temperature of 20°C (68°F)
St: Measured specific gravity
t: Measured temperature (°C)
Determine whether or not battery must be charged, according to corrected specific gravity.
Standard specific gravity: 1.220 — 1.290 [20°C (68°F)]

2) Measuring the specific gravity of the electrolyte in the battery will disclose the state of charge of the battery. The relation between specific gravity and state of charge is as shown in the figure.

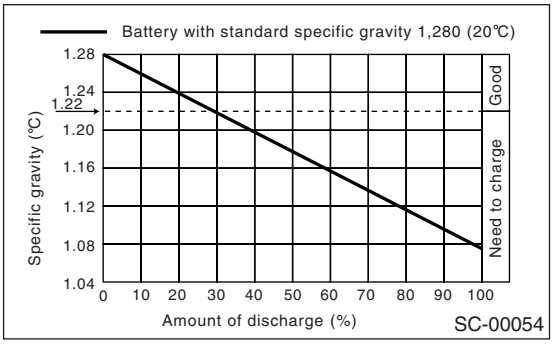

D: MEASUREMENT

WARNING:
Do not bring an open flame close to the battery at this time.

CAUTION:
• Prior to charging, corroded terminals should be cleaned with a brush and common caustic soda solution.
• Be careful since battery electrolyte overflows while charging the battery.
• Observe instructions when handling the battery charger.
• Before charging the battery on vehicle, disconnect the battery ground terminal to prevent damage of generator diodes or other electrical modules.

1. JUDGMENT OF BATTERY IN CHARGED CONDITION

1) Specific gravity of electrolyte should be held within the specific range from 1.250 to 1.290 for more than one hour.
2) Voltage per battery cell should be held at a specific value in a range from 2.5 to 2.8 V for more than one hour.

2. CHECK HYDROMETER FOR STATE OF CHARGE

Hydrometer indicator	Charge battery	Corrective action
Green	Above 65%	Load test
Dark	Below 65%	Charge battery
Clear	Low electrolyte	Replace battery* (If cranking is difficult)
* Check electrical system before replacement.		

3. NORMAL CHARGING

Charge the battery at current value specified by manufacturer or at approx. 1/10 of battery's ampere-hour rating.

4. QUICK CHARGING

Quick charging is a method that the battery is charged in a short period of time with a relatively large current by using a quick charger.
Since a large current flow raises electrolyte temperature, the battery is subject to damage if the large current is used for prolonged time. For this reason, the quick charging must be carried out within a current range that will not increase the electrolyte temperature above 40°C (104°F).
Also the quick charging is a temporary means to bring battery voltage up to a fair value and, as a rule, a battery should be charged slowly with a low current.

CAUTION:
• Observe the items in 3. NORMAL CHARGING.
• Never use more than 10 A when charging the battery because it will shorten the battery life.

ENGINE (DIAGNOSTICS)

EN(H4SO)(diag)

		Page
1.	Basic Diagnostic Procedure	2
2.	Check List for Interview	3
3.	General Description	5
4.	Electrical Component Location	8
5.	Engine Control Module (ECM) I/O Signal	18
6.	Engine Condition Data	22
7.	Data Link Connector	23
8.	General Scan Tool	24
9.	Subaru Select Monitor	27
10.	Read Diagnostic Trouble Code (DTC)	34
11.	Inspection Mode	35
12.	Drive Cycle	39
13.	Clear Memory Mode	43
14.	Compulsory Valve Operation Check Mode	44
15.	Malfunction Indicator Light	46
16.	Diagnostics for Engine Starting Failure	55
17.	List of Diagnostic Trouble Code (DTC)	70
18.	Diagnostic Procedure with Diagnostic Trouble Code (DTC)	76
19.	General Diagnostic Table	301

1. Basic Diagnostic Procedure

A: PROCEDURE

1. ENGINE

	Step	Check	Yes	No
1	**CHECK ENGINE START FAILURE.** 1) Ask the customer when and how the trouble occurred using the interview check list. <Ref. to EN(H4SO)(diag)-3, CHECK, Check List for Interview.> 2) Start the engine.	Does the engine start?	Go to step **2.**	Inspection using "Diagnostics for Engine Starting Failure". <Ref. to EN(H4SO)(diag)-55, Diagnostics for Engine Starting Failure.>
2	**CHECK ILLUMINATION OF MALFUNCTION INDICATOR LIGHT.**	Does the malfunction indicator light illuminate?	Go to step **3.**	Inspection using "General Diagnostic Table". <Ref. to EN(H4SO)(diag)-301, INSPECTION, General Diagnostic Table.>
3	**CHECK INDICATION OF DTC ON DISPLAY.** 1) Turn the ignition switch to OFF. 2) Connect the Subaru Select Monitor or general scan tool to data link connector. 3) Turn the ignition switch to ON. 4) Read DTC on Subaru Select Monitor or general scan tool. NOTE: • Subaru Select Monitor For detailed operation procedure, refer to the "READ DIAGNOSTIC TROUBLE CODE (DTC)". <Ref. to EN(H4SO)(diag)-34, Read Diagnostic Trouble Code (DTC).> • General scan tool For detailed operation procedures, refer to the general scan tool instruction manual.	Is DTC displayed on the Subaru Select Monitor?	Record the DTC. Repair the trouble cause. <Ref. to EN(H4SO)(diag)-70, List of Diagnostic Trouble Code (DTC).> Go to step **4.**	Repair the related parts. NOTE: If DTC is not shown on display although the engine warning light illuminates, perform the diagnostics of malfunction indicator light circuit or combination meter. <Ref. to EN(H4SO)(diag)-46, Malfunction Indicator Light.>
4	**PERFORM DIAGNOSIS.** 1) Perform the clear memory mode. <Ref. to EN(H4SO)(diag)-43, Clear Memory Mode.> 2) Perform the inspection mode. <Ref. to EN(H4SO)(diag)-35, Inspection Mode.>	Is DTC displayed on the Subaru Select Monitor?	Check on "Diagnostic Chart with Diagnostic Trouble Code (DTC)" <Ref. to EN(H4SO)(diag)-76, Diagnostic Procedure with Diagnostic Trouble Code (DTC).>	Finish the diagnosis.

2. Check List for Interview

A: CHECK

1. CHECK LIST No. 1

Check the following items when problem has occurred.

NOTE:
Use copies of this page for interviewing customers.

Customer's name		Engine No.	
Date of sale		Fuel brand	
Date of repair		Odometer reading	km
V.I.N.			miles
Weather	❑ Fine ❑ Cloudy ❑ Rainy ❑ Snowy ❑ Various/Others:		
Ambient air temperature	°C (°F)		
	❑ Hot ❑ Warm ❑ Cool ❑ Cold		
Place	❑ Highway ❑ Suburbs ❑ Inner city ❑ Uphill ❑ Downhill ❑ Rough road ❑ Others:		
Engine temperature	❑ Cold ❑ Warming-up ❑ After warming-up ❑ Any temperature ❑ Others:		
Engine speed	rpm		
Vehicle speed	km/h (MPH)		
Driving conditions	❑ Not affected ❑ At starting ❑ While idling ❑ At racing ❑ While accelerating ❑ While cruising ❑ While decelerating ❑ While turning (RH/LH)		
Headlight	❑ ON / ❑ OFF	Rear defogger	❑ ON / ❑ OFF
Blower	❑ ON / ❑ OFF	Audio	❑ ON / ❑ OFF
A/C compressor	❑ ON / ❑ OFF	Car phone	❑ ON / ❑ OFF
Radiator fan	❑ ON / ❑ OFF		
Front wiper	❑ ON / ❑ OFF		
Rear wiper	❑ ON / ❑ OFF		

2. CHECK LIST No. 2

Check the following items about the vehicle's state when malfunction indicator light turns on.

NOTE:
Use copies of this page for interviewing customers.

a) Other warning lights or indicators turn on. ❑ Yes / ❑ No
❑ Low fuel warning light ❑ Charge indicator light ❑ AT diagnostic indicator light ❑ ABS warning light ❑ Oil pressure indicator light
b) Fuel level
• Lack of gasoline: ❑ Yes / ❑ No • Indicator position of fuel gauge: • Experienced running out of fuel: ❑ Yes / ❑ No
c) Intentional connecting or disconnecting of harness connectors or spark plug cords: ❑ Yes / ❑ No
• What:
d) Intentional connecting or disconnecting of hoses: ❑ Yes / ❑ No
• What:
e) Installing of other parts except for genuine parts: ❑ Yes / ❑ No
• What: • Where:
f) Occurrence of noise: ❑ Yes / ❑ No
• From where: • What kind:
g) Occurrence of smell: ❑ Yes / ❑ No
• From where: • What kind:
h) Intrusion of water into engine compartment or passenger compartment: ❑ Yes / ❑ No
i) Troubles occurred
❑ Engine does not start. ❑ Engine stalls during idling. ❑ Engine stalls while driving. ❑ Engine speed decreases. ❑ Engine speed does not decrease. ❑ Rough idling ❑ Poor acceleration ❑ Back fire ❑ After fire ❑ Does not shift. ❑ Excessive shift shock

3. General Description

A: CAUTION

1) Airbag system wiring harness is routed near the ECM, main relay and fuel pump relay.

CAUTION:
• All airbag system wiring harnesses and connectors are colored yellow. Do not use electrical test equipment on these circuits.
• Be careful not to damage the airbag system wiring harness when servicing the ECM, TCM, main relay and fuel pump relay.

2) Never connect the battery in reverse polarity.
• The ECM will be destroyed instantly.
• The fuel injector and other parts will be damaged.

3) Do not disconnect the battery terminals while the engine is running.
A large counter electromotive force will be generated in the generator, and this voltage may damage electronic parts such as ECM, etc.

4) Before disconnecting the connectors of each sensor and ECM, be sure to turn the ignition switch to OFF. Perform the inspection mode after connecting the connectors.

5) Poor contact has been identified as a primary cause of this problem. Measure the voltage or resistance of individual sensor or all electrical control modules using a tapered pin with a diameter of less than 0.64 mm (0.025 in). Do not insert the pin more than 5 mm (0.20 in) into the part.

6) Remove the ECM from the located position after disconnecting two cables on battery.
Otherwise, the ECM may be damaged.

CAUTION:
When replacing the ECM, be careful not to use the wrong spec. ECM to avoid any damage on the fuel injection system.

7) Connectors of each sensor in the engine compartment and the harness connectors on the engine side and body side are all designed to be waterproof. However, it is still necessary to take care not to allow water to get into the connectors when washing the vehicle, or when servicing the vehicle on a rainy day.

8) Use ECM mounting stud bolts as the grounding point to chassis when measuring voltage and resistance inside the passenger compartment.

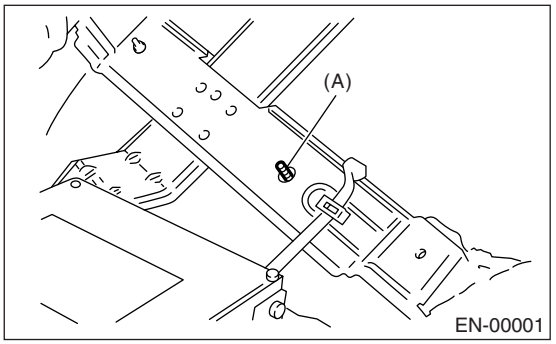

(A) Stud bolt

9) Use engine grounding terminal or engine as the grounding point to the chassis when measuring voltage and resistance in the engine compartment.

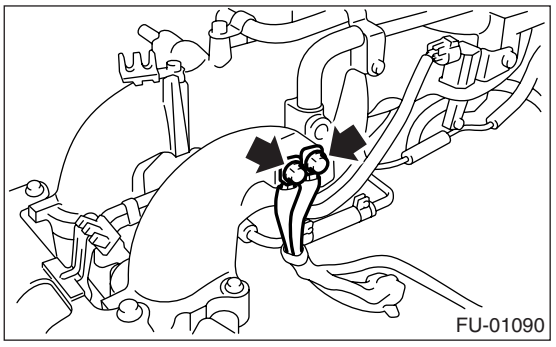

10) Use TCM mounting stud bolts as the grounding point to chassis when measuring voltage and resistance inside the passenger compartment.

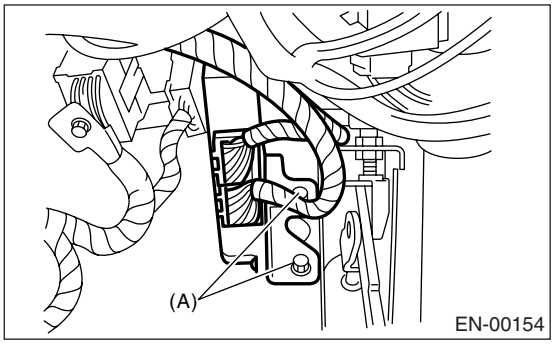

(A) Stud bolt

11) Every MFI-related part is a precision part. Do not drop them.

12) Observe the following cautions when installing a radio in MFI equipped models.

CAUTION:
• The antenna must be kept as far apart as possible from the control unit. (The ECM is located under the steering column, inside of instrument panel lower trim panel.)

• The antenna feeder must be placed as far apart as possible from the ECM and MFI harness.
• Carefully adjust the antenna for correct matching.
• When mounting a large power type radio, pay special attention to the three items mentioned above.
• Incorrect installation of the radio may affect the operation of ECM.

13) Before disconnecting the fuel hose, disconnect the fuel pump connector and crank the engine for more than five seconds to release pressure in the fuel system. If engine starts during this operation, run it until it stops.
14) Problems in the electronic-controlled automatic transmission may be caused by failure of the engine, the electronic control system, the transmission proper, or by a combination of these. These three causes must be distinguished clearly when performing diagnostics.
15) Diagnostics should be conducted by rotating with simple, easy operations and proceeding to complicated, difficult operations. The most important thing in diagnostics is to understand the customer's complaint, and distinguish between the three causes.
16) For AT models, do not hold the stall for more than five seconds. (from closed throttle, fully open throttle to stall engine speed.)
17) On the model with ABS, when performing driving test in jacked-up or lifted-up position, sometimes the warning light may be lit, but this is not a malfunction of the system. The reason for this is the speed difference between the front and rear wheels. After diagnosis of engine control system, perform the ABS memory clear procedure of self-diagnosis function.

B: INSPECTION

Before performing diagnostics, check the following items which might affect engine problems.

1. BATTERY

1) Measure battery voltage and specific gravity of electrolyte.

Standard voltage: 12 V

Specific gravity: Above 1.260

2) Check the condition of the main and other fuses, and harnesses and connectors. Also check for proper grounding.

2. ENGINE GROUND

Make sure the engine grounding terminal is properly connected to engine.

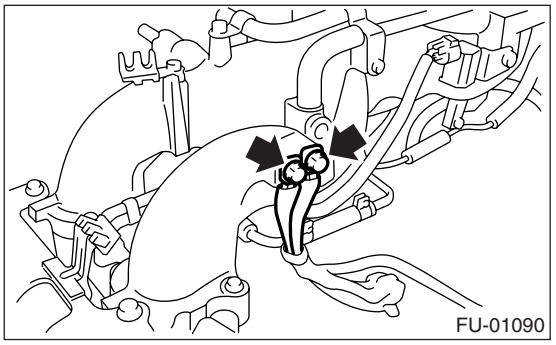

C: NOTE

1. DESCRIPTION

• The on-board diagnostics (OBD) system detects and indicates a fault in various inputs and outputs of the complex electronic control. Malfunction indicator light in the combination meter indicates occurrence of a fault or trouble.
• Further, against such a failure or sensors as may disable the drive, the fail-safe function is provided to ensure the minimal driveability.
• The OBD system incorporated with the vehicles within this engine family complies with OBD-II Regulations. The OBD system monitors the components and the system malfunction listed in Engine Section which affects on emissions.
• When the system decides that a malfunction occurs, malfunction indicator light illuminates. At the same time of the malfunction indicator light illumination or blinking, a DTC and a freeze frame engine conditions are stored into on-board computer.
• The OBD system stores freeze frame engine condition data (engine load, engine coolant temperature, fuel trim, engine speed and vehicle speed, etc.) into on-board computer when it detects a malfunction first.
• If the OBD system detects the various malfunctions including the fault of fuel trim or misfire, the OBD system first stores freeze frame engine conditions about the fuel trim or misfire.
• When the malfunction does not occur again for three consecutive driving cycles, malfunction indicator light is turned off, but DTC remains at on-board computer.
• When troubleshooting the vehicle which complies with OBD-II Regulations, connect the Subaru Select Monitor or general scan tool to the vehicle.

2. ENGINE AND EMISSION CONTROL SYSTEM

• The Multipoint Fuel Injection (MFI) system is a system that supplies the optimum air-fuel mixture to the engine for all the various operating conditions through the use of the latest electronic technology.
With this system fuel, which is pressurized at a constant pressure, is injected into the intake air passage of the cylinder head. The injection quantity of fuel is controlled by an intermittent injection system where the electro-magnetic injection valve (fuel injector) opens only for a short period of time, depending on the quantity of air required for one cycle of operation. In actual operation, the injection quantity is determined by the duration of an electric pulse applied to the fuel injector and this permits simple, yet highly precise metering of the fuel.
• Further, all the operating conditions of the engine are converted into electric signals, and this results in additional features of the system, such as large improved adaptability, easier addition of compensating element, etc.
The MFI system also has the following features:
- Reduced emission of harmful exhaust gases.
- Reduction in fuel consumption.
- Increased engine output.
- Superior acceleration and deceleration.
- Superior startability and warm-up performance in cold weather since compensation is made for engine coolant and intake air temperature.

D: PREPARATION TOOL

ILLUSTRATION	TOOL NUMBER	DESCRIPTION	REMARKS
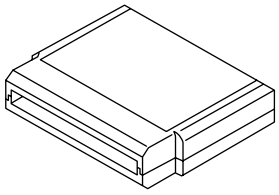 ST24082AA260	24082AA260	CARTRIDGE	Troubleshooting for electrical system.
ST22771AA030	22771AA030	SUBARU SELECT MONITOR KIT	Troubleshooting for electrical system.

4. Electrical Component Location

A: LOCATION

1. ENGINE

- Control module

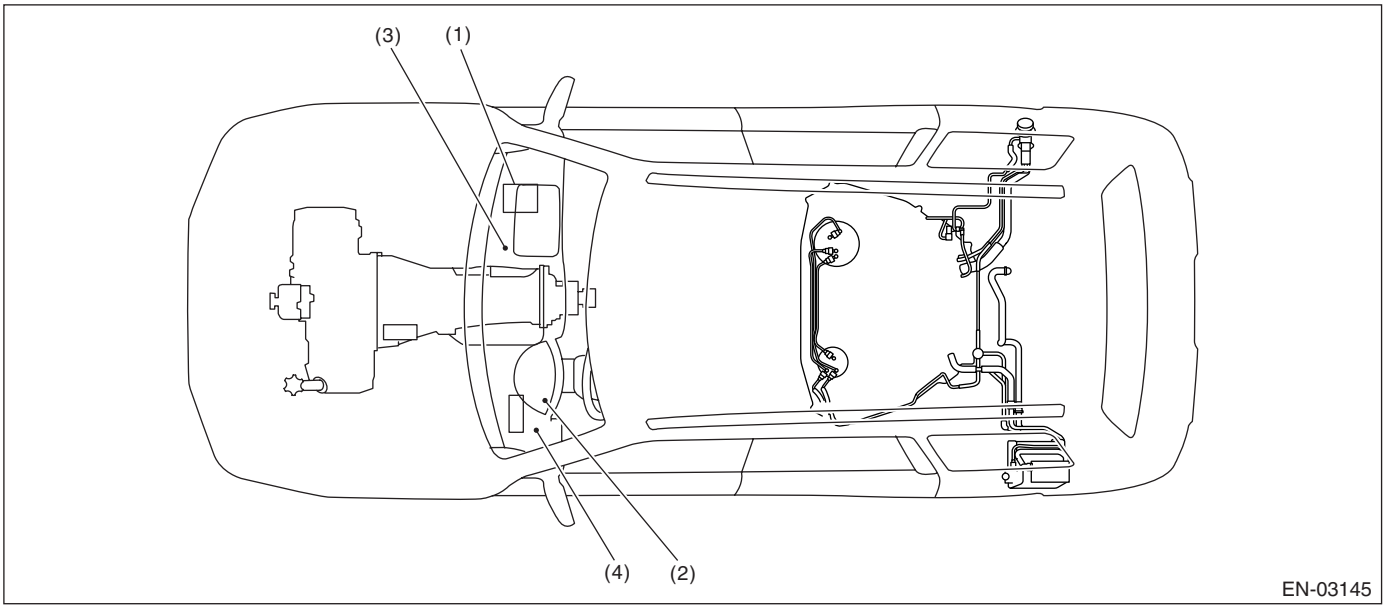

(1) Engine control module (ECM)
(2) Malfunction indicator light
(3) Test mode connector
(4) Data link connector

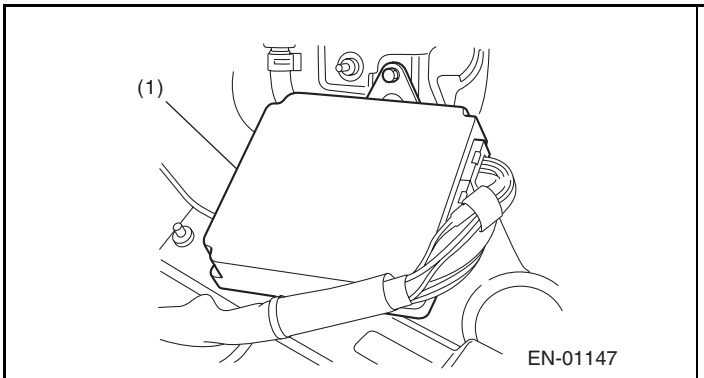

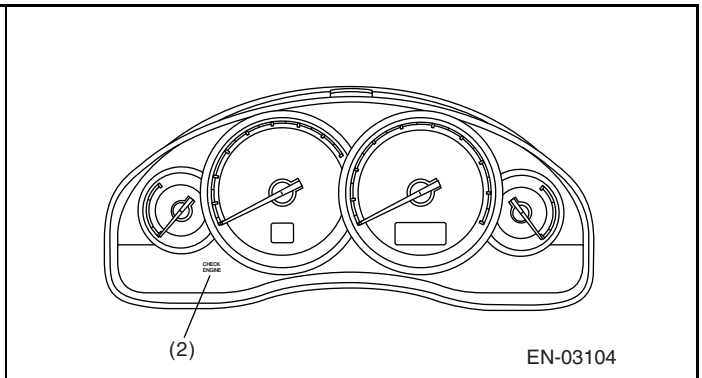

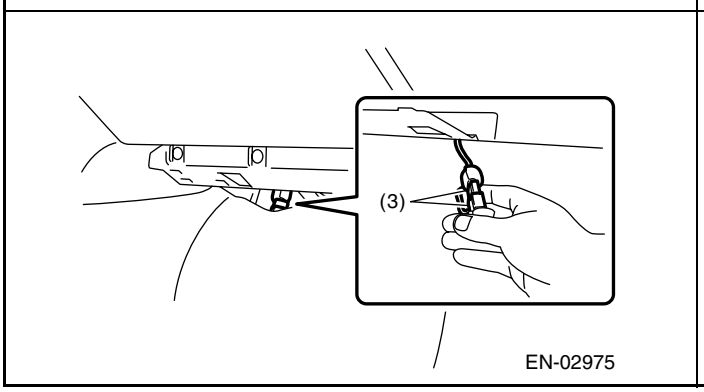

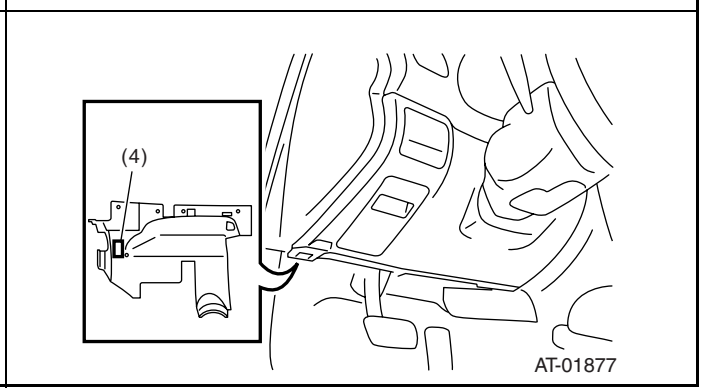

- Sensor

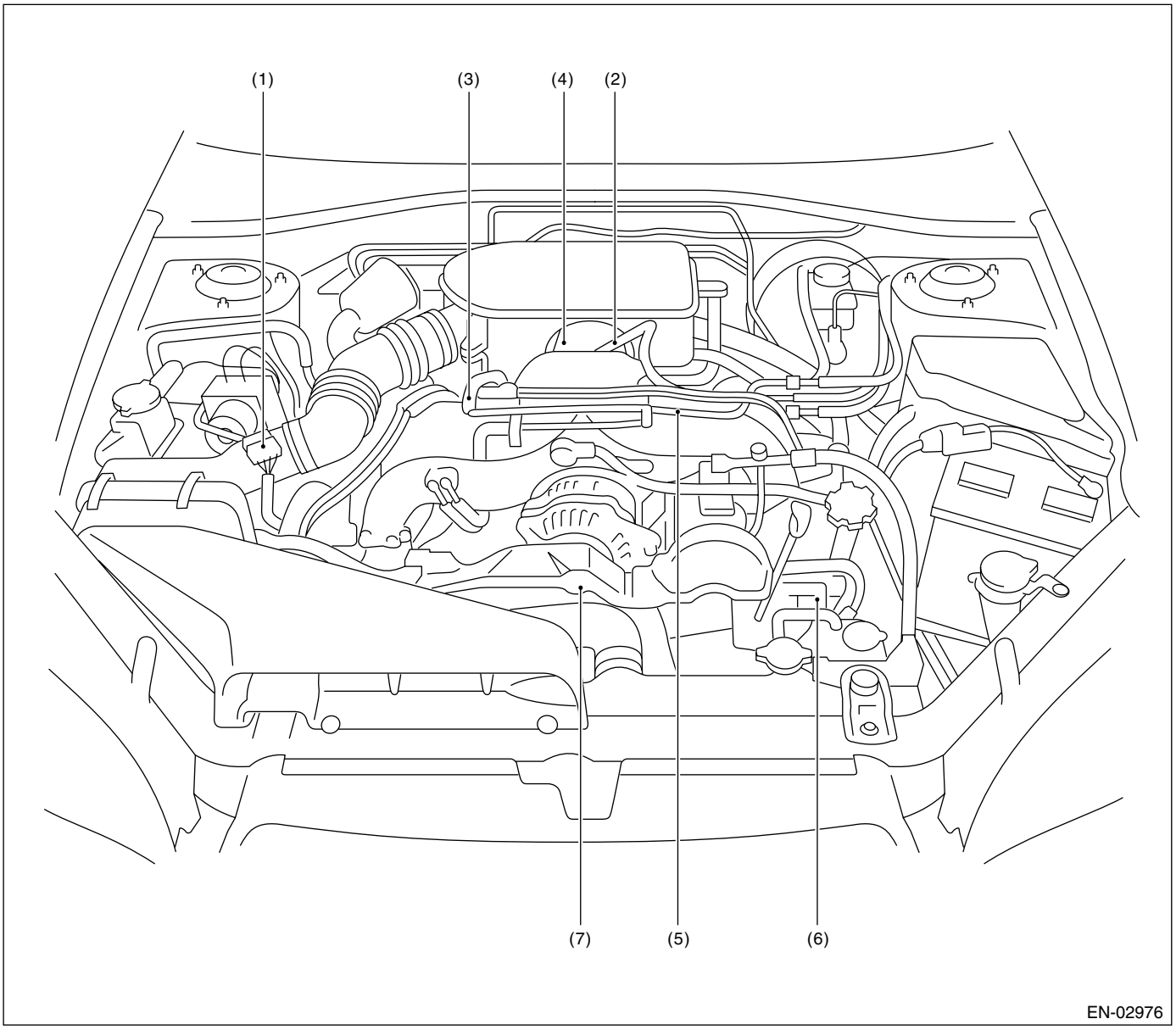

(1) Mass air flow and intake air temperature sensor
(2) Manifold absolute pressure sensor
(3) Engine coolant temperature sensor
(4) Electronic throttle control
(5) Knock sensor
(6) Camshaft position sensor
(7) Crankshaft position sensor

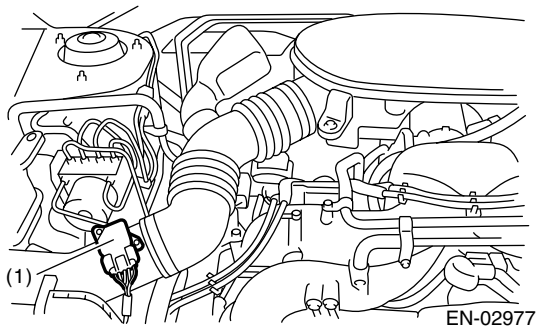

EN-02977

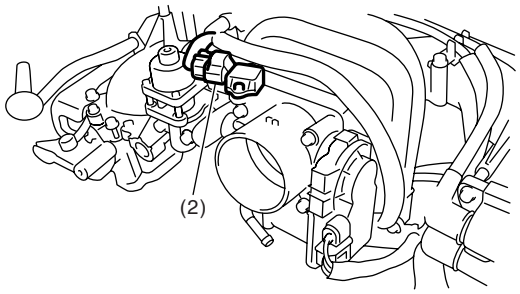

EN-01971

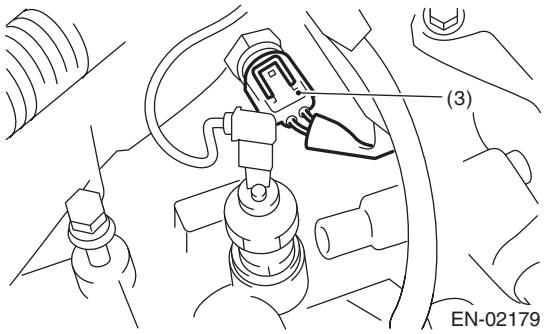

EN-02179

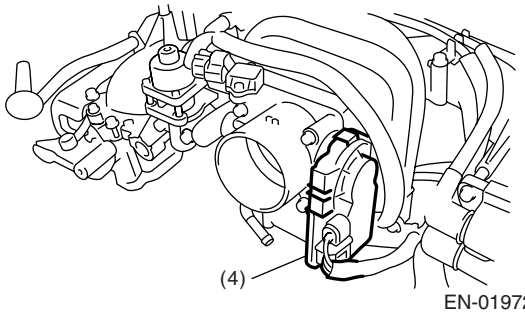

EN-01972

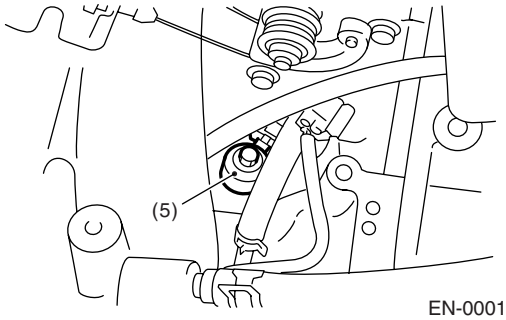

EN-00010

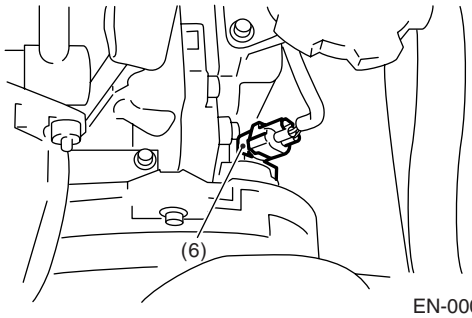

EN-00011

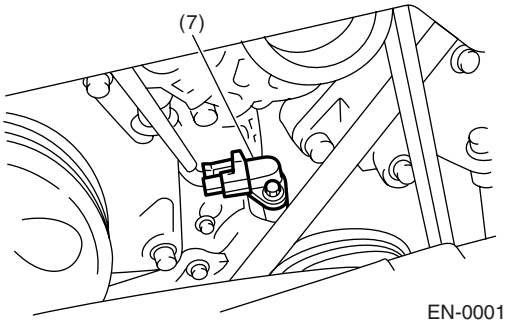

EN-00012

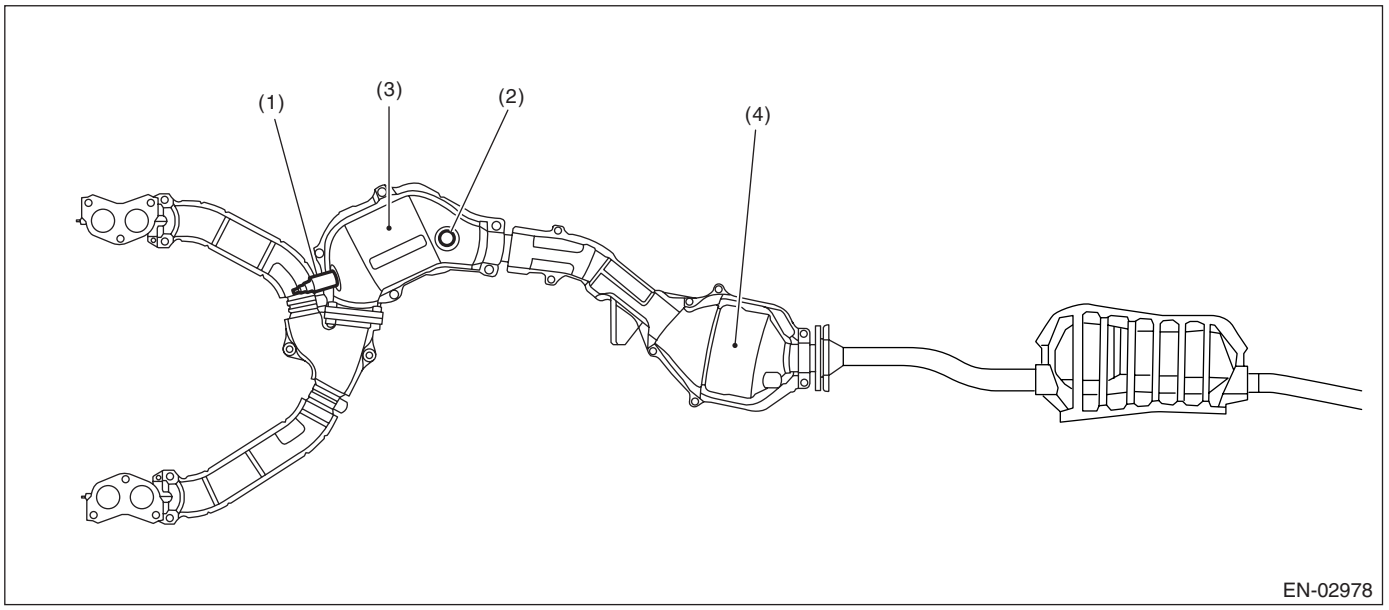

(1) Front oxygen (A/F) sensor
(2) Rear oxygen sensor
(3) Front catalytic converter
(4) Rear catalytic converter

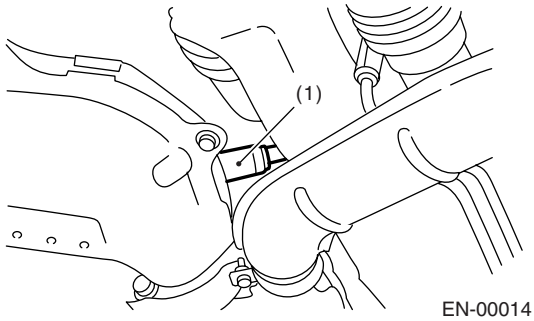

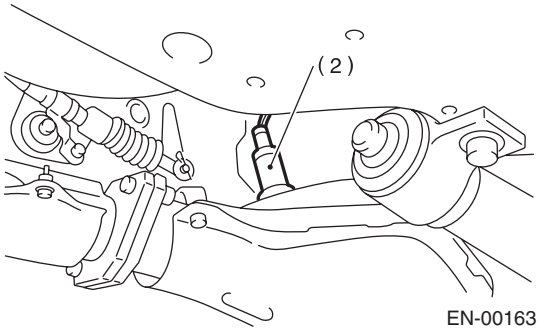

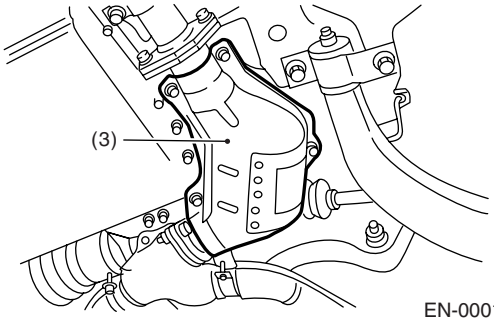

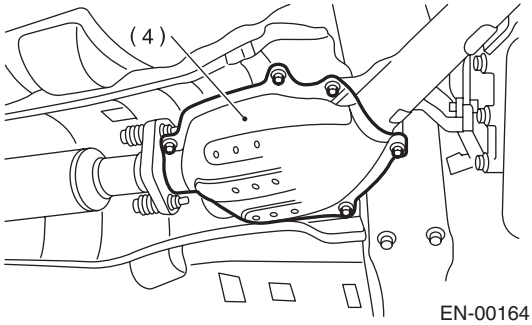

Electrical Component Location

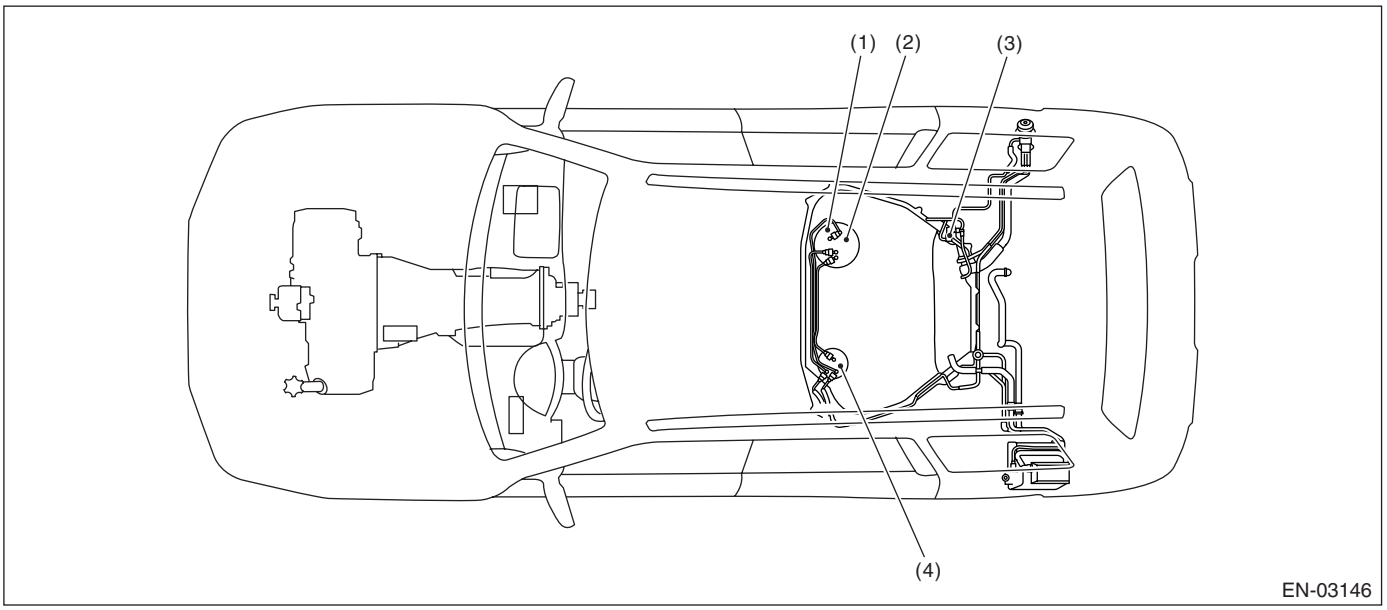

(1) Fuel level sensor
(2) Fuel temperature sensor
(3) Fuel tank pressure sensor
(4) Fuel sub level sensor

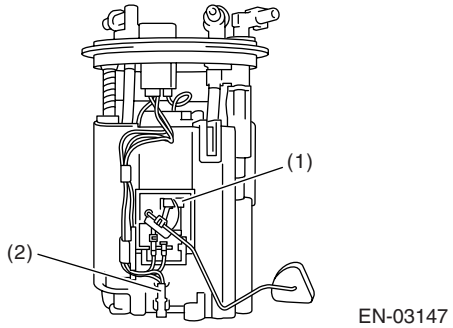

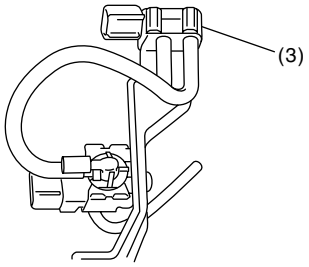

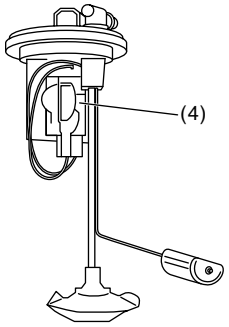

- Solenoid valve, actuator, emission control system parts and ignition system parts

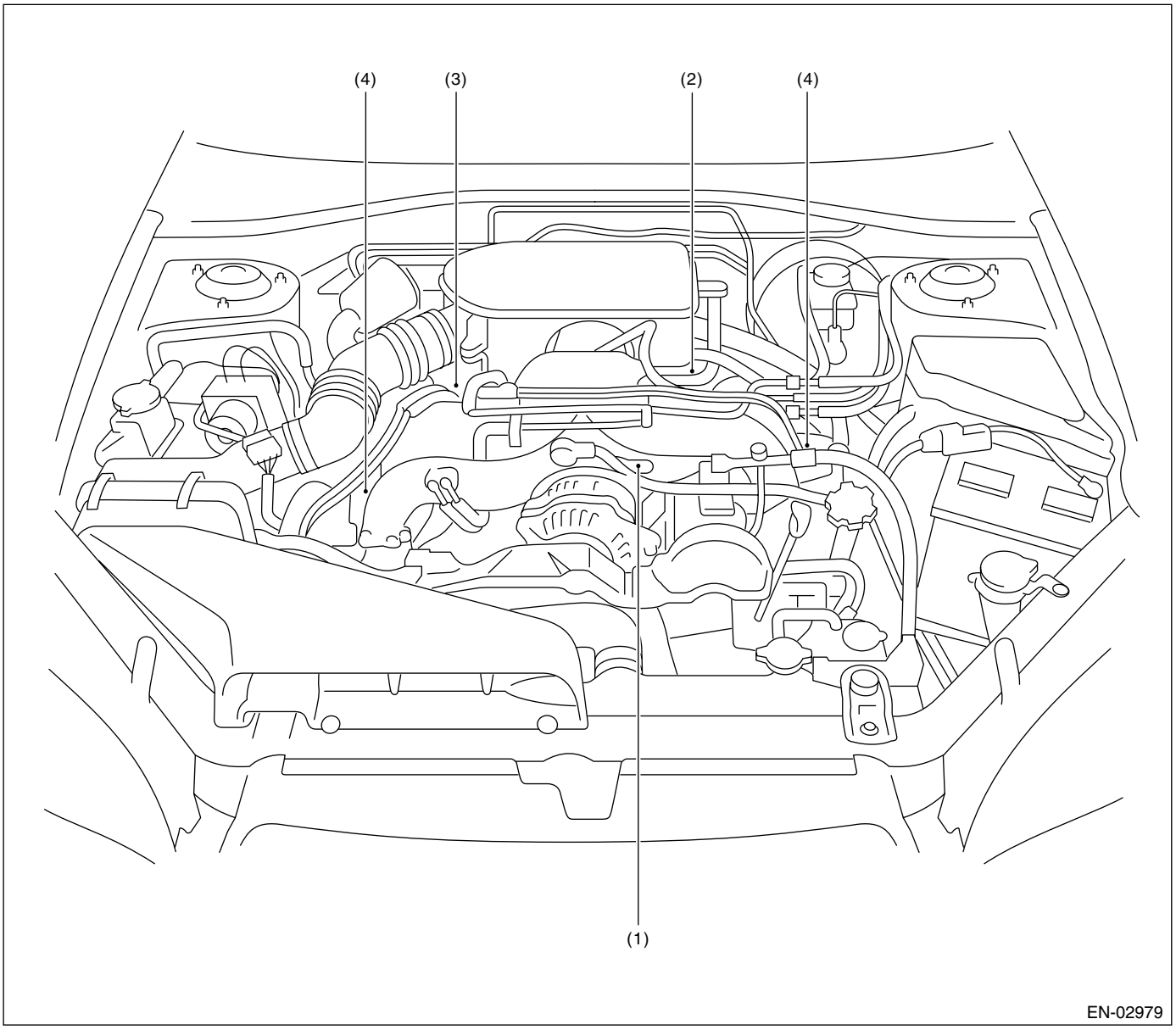

(1) Purge control solenoid valve
(2) EGR Valve
(3) Ignition coil & ignitor ASSY
(4) Fuel injector

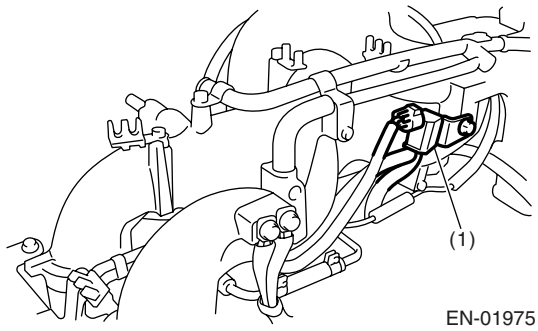

EN-01975

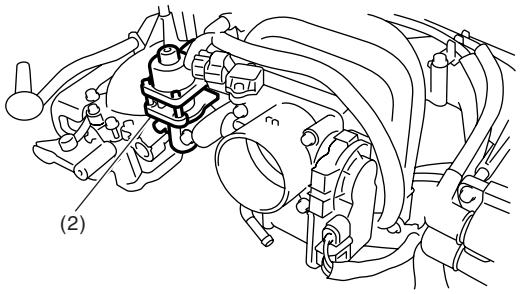

EN-01976

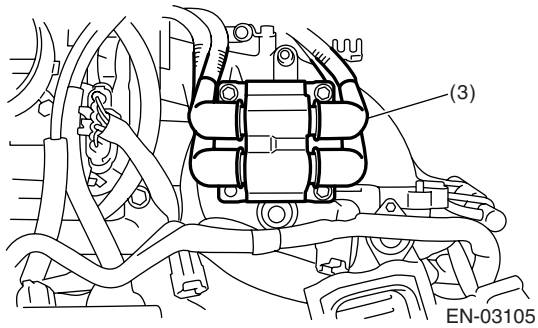

EN-03105

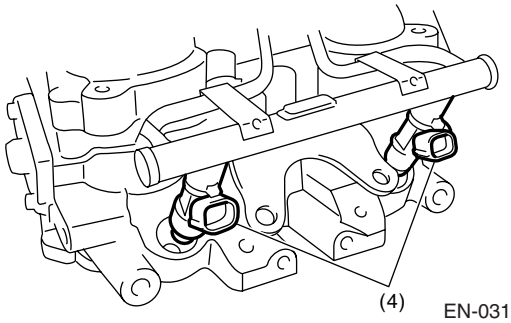

EN-03106

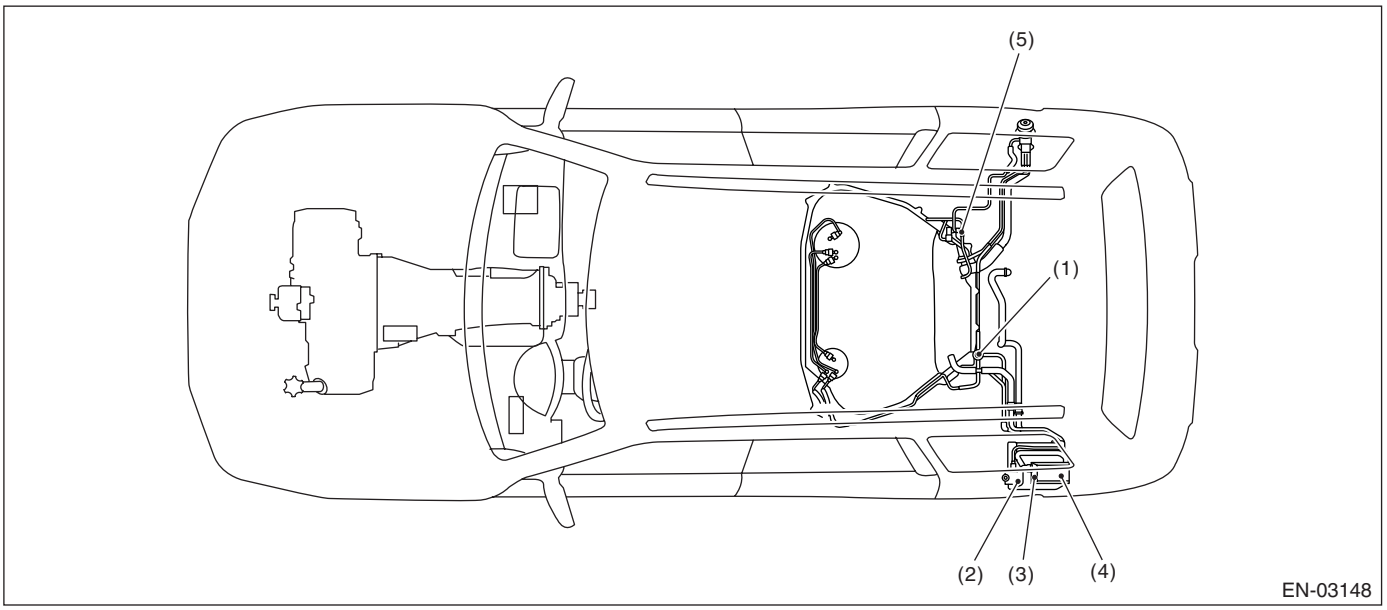

(1) Pressure control solenoid valve
(2) Canister
(3) Drain valve
(4) Drain filter
(5) Fuel tank sensor control valve

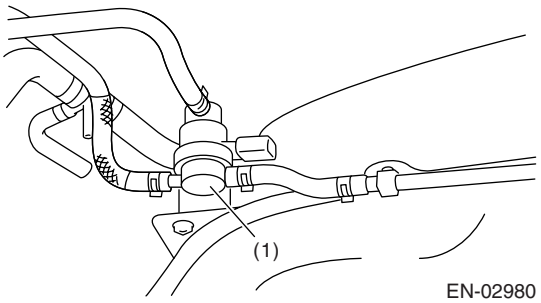

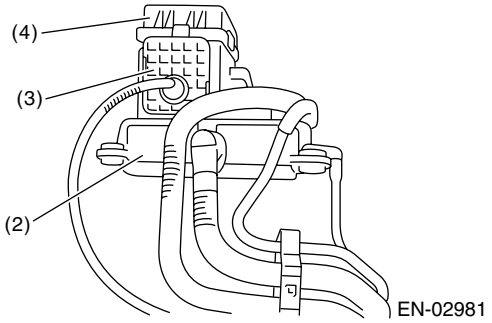

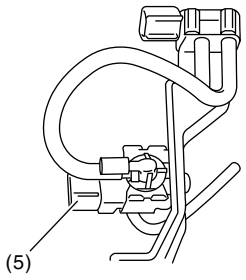

Electrical Component Location

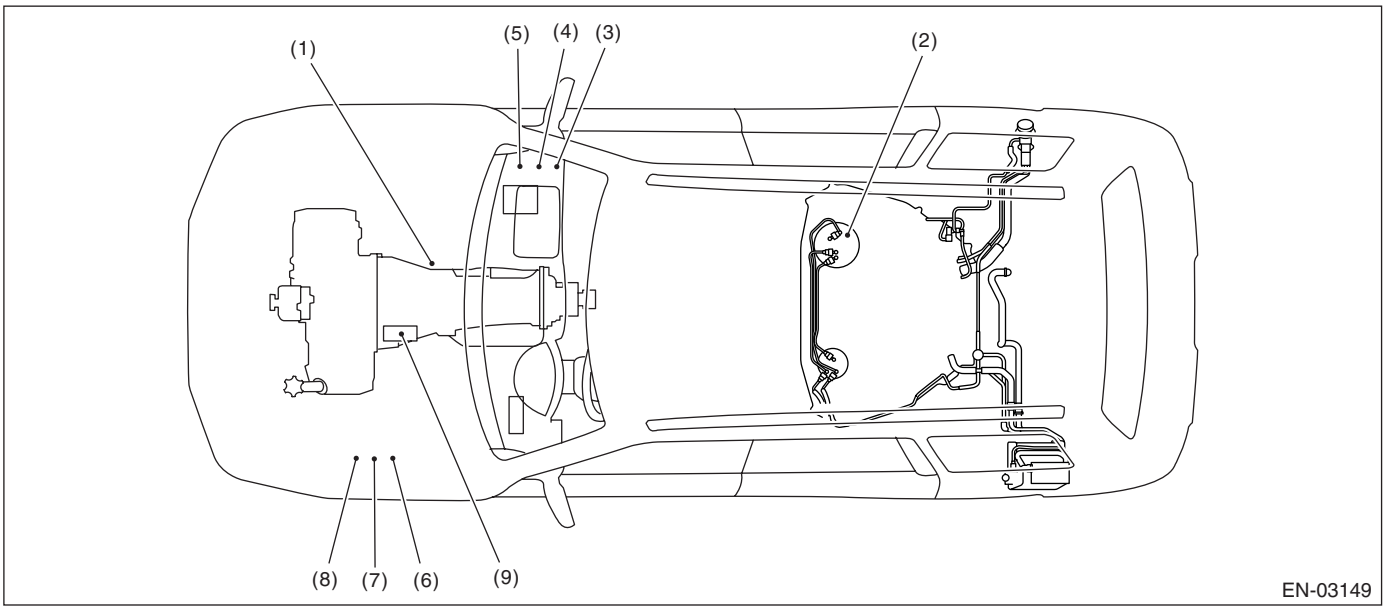

(1) Inhibitor switch
(2) Fuel pump
(3) Main relay
(4) Fuel pump relay
(5) Electronic throttle control relay
(6) Radiator main fan relay 1
(7) Radiator sub fan relay
(8) Radiator main fan relay 2
(9) Starter

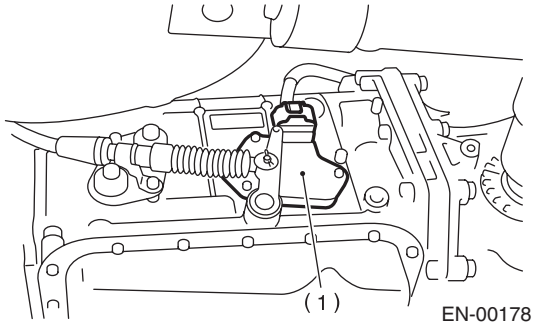

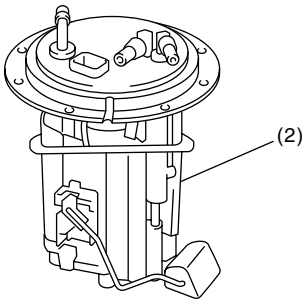

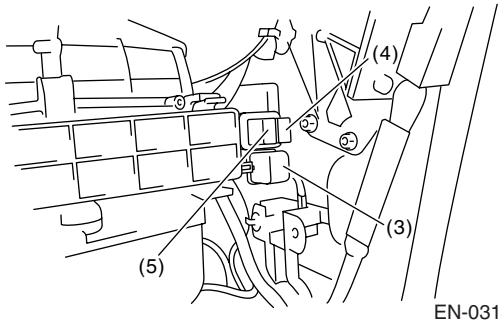

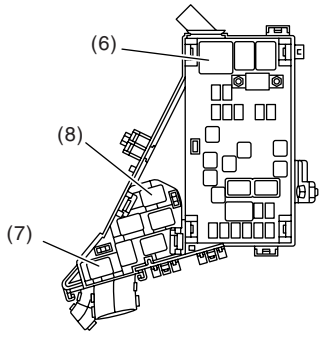

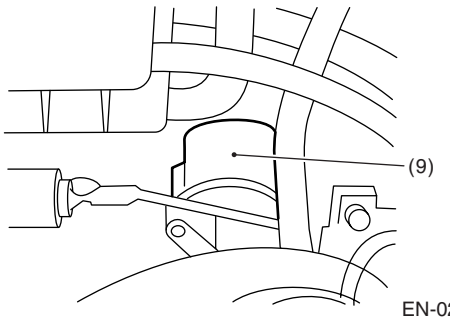
(9)
EN-02096

5. Engine Control Module (ECM) I/O Signal

A: ELECTRICAL SPECIFICATION

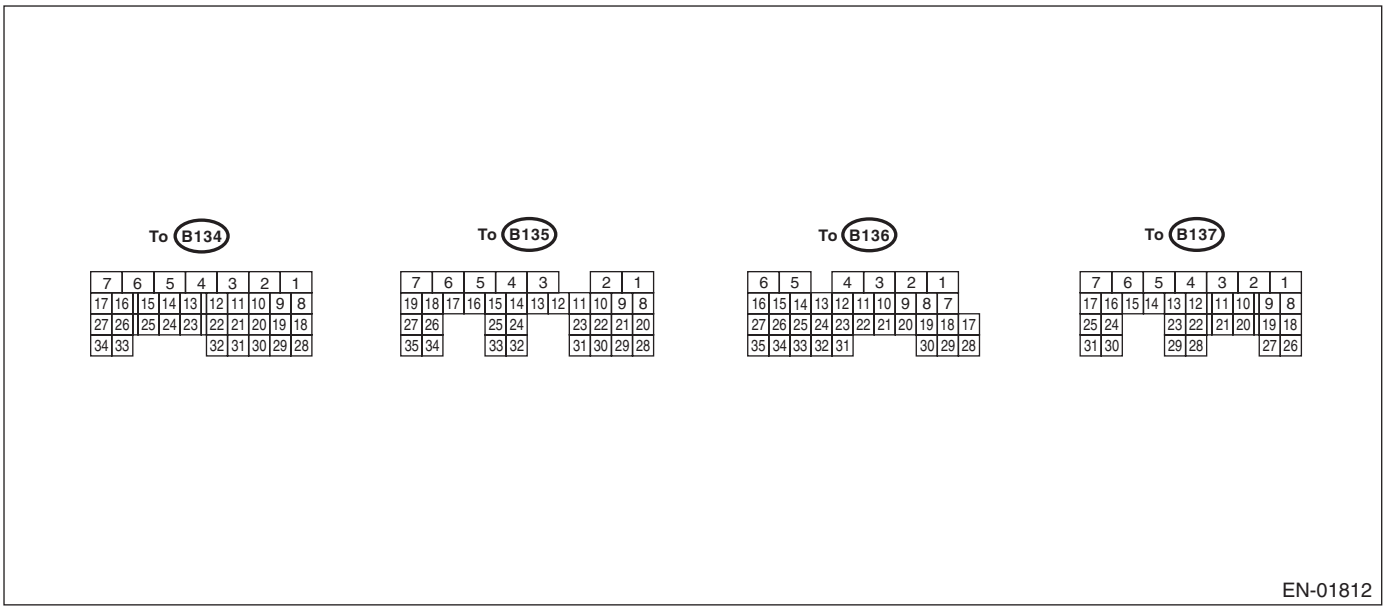

DESCRIPTION		Connector No.	Terminal No.	Signal (V)		NOTE
				Ignition SW ON (engine OFF)	Engine ON (idling)	
Crankshaft position sensor	Signal (+)	B135	10	0	–7 — +7	Waveform
	Signal (–)	B135	22	0	0	—
	Shield	B135	31	0	0	—
Camshaft position sensor	Signal (+)	B135	11	0	–7 — +7	Waveform
	Signal (–)	B135	23	0	0	—
	Shield	B135	31	0	0	—
Electronic throttle control	Main	B136	18	0.64 — 0.72 Fully opens: 3.96	0.64 — 0.72 (After engine is warmed-up.)	Fully closed: 0.6 Fully open: 3.96
	Sub	B136	29	1.51 — 1.58 Fully opens: 4.17	1.51 — 1.58 (After engine is warmed-up.)	Fully closed: 1.48 Fully open: 4.17
Electronic throttle control motor (+)		B137	5	Duty waveform	Duty waveform	Drive frequency: 500 Hz
Electronic throttle control motor (–)		B137	4	Duty waveform	Duty waveform	Drive frequency: 500 Hz
Electronic throttle control motor power supply		B137	6	10 — 13	13 — 14	—
Electronic throttle control motor relay		B135	35	ON: 0 OFF: 10 — 13	ON: 0 OFF: 13 — 14	When ignition switch is turned to ON: ON
Accelerator position sensor	Main	B136	17	Fully closed: 1 Fully opens: 3.3	Fully closed: 1 Fully opens: 3.3	—
	Power supply	B136	15	5	5	—
	Ground	B136	34	0	0	—
	Sub	B136	28	Fully closed: 1 Fully opens: 3.3	Fully closed: 1 Fully opens: 3.3	—
Rear oxygen sensor	Signal	B137	24	0	0 — 0.9	—
	Shield	B137	31	0	0	—

Engine Control Module (ECM) I/O Signal

DESCRIPTION		Connector No.	Terminal No.	Signal (V)		NOTE
				Ignition SW ON (engine OFF)	Engine ON (idling)	
Front oxygen (A/F) sensor heater	Signal 1	B134	3	0 — 1.0	0 or 13 — 14	Duty waveform
	Signal 2	B134	2	0 — 1.0	0 or 13 — 14	Duty waveform
Rear oxygen sensor heater signal		B135	2	0 — 1.0	0 or 13 — 14	Duty waveform
Engine coolant temperature sensor		B136	14	1.0 — 1.4	1.0 — 1.4	After engine is warmed-up.
Starter switch		B137	8	0	0	Cranking: 8 — 14
Starter relay		B135	32	ON: 0 OFF: 10 — 13	ON: 0 OFF: 13 — 14	—
A/C switch		B137	16	ON: 10 — 13 OFF: 0	ON: 13 — 14 OFF: 0	—
Ignition switch		B137	15	10 — 13	13 — 14	—
Neutral position switch	AT	B137	9	ON: 0 OFF: 12±0.5		Switch is ON when select or shift lever is shifted into “P” or “N” range. (AT model)
	MT			ON: 12±0.5 OFF: 0		Switch is ON when shift lever is shifted into “N” range. (MT model)
Test mode connector		B137	14	5	5	When connected: 0
Knock sensor	Signal	B136	25	2.8	2.8	—
	Shield	B136	33	0	0	—
Back-up power supply		B135	19	10 — 13	13 — 14	Ignition switch “OFF”: 10 — 13
Control module power supply		B135	6	10 — 13	13 — 14	—
		B135	5	10 — 13	13 — 14	—
Sensor power supply		B136	16	5	5	—
Ignition control	1	B135	18	0	1 — 3.4	Waveform
	2	B135	17	0	1 — 3.4	Waveform
Fuel injector	#1	B136	6	10 — 13	1 — 14	Waveform
	#2	B136	5	10 — 13	1 — 14	Waveform
	#3	B136	4	10 — 13	1 — 14	Waveform
	#4	B136	3	10 — 13	1 — 14	Waveform
Fuel pump relay control		B135	26	ON: 0.5 or less OFF: 10 — 13	0.5 or less	—
A/C relay control		B135	33	ON: 0.5 or less OFF: 10 — 13	ON: 0.5 or less OFF: 13 — 14	—
Radiator fan relay 1 control		B134	31	ON: 0.5 or less OFF: 10 — 13	ON: 0.5 or less OFF: 13 — 14	—
Radiator fan relay 2 control		B135	34	ON: 0.5 or less OFF: 10 — 13	ON: 0.5 or less OFF: 13 — 14	—
Self-shutoff control		B137	17	0.5 or less	0.5 or less	—
Malfunction indicator light		B134	17	—	—	Light “ON”: 1 or less Light “OFF”: 10 — 14
Engine speed output		B134	23	—	0 — 13 or more	Waveform
Purge control solenoid valve		B134	14	ON: 1 or less OFF: 10 — 13	ON: 1 or less OFF: 13 — 14	Duty waveform
EGR solenoid valve	Signal A+	B134	11	0 or 10 — 13	0 or 10 — 13	Waveform
	Signal A−	B134	10	0 or 10 — 13	0 or 10 — 13	Waveform
	Signal B+	B134	9	0 or 10 — 13	0 or 10 — 13	Waveform
	Signal B−	B134	8	0 or 10 — 13	0 or 10 — 13	Waveform

Engine Control Module (ECM) I/O Signal

DESCRIPTION		Connector No.	Terminal No.	Signal (V)		NOTE
				Ignition SW ON (engine OFF)	Engine ON (idling)	
Power steering switch		B137	10	ON: 1 or less OFF: 10 — 13	ON: 1 or less OFF: 13 — 14	—
Blower fan switch		B137	13	ON: 0 OFF: 10 — 13	ON: 0 OFF: 13 — 14	—
A/C middle pressure switch		B136	30	ON: 0 OFF: 10 — 13	ON: 0 OFF: 13 — 14	—
Front oxygen (A/F) sensor signal 1		B134	33	—	2.6 — 3.0	—
Front oxygen (A/F) sensor signal 2		B134	26	—	2.2 — 2.6	—
Front oxygen (A/F) sensor shield		B134	25	0	0	—
Manifold absolute pressure sensor		B136	22	4.0 — 4.8	1.1 — 1.9	—
Air flow sensor	Signal	B136	23	—	0.3 — 4.5	—
	Shield	B136	32	0	0	—
	Ground	B136	31	0	0	—
Intake air temperature sensor		B136	13	3.15 — 3.33	3.15 — 3.33	intake air temperature: 25°C (75°F)
SSM communication line		B137	20	Less than 1←→ More than 4	Less than 1←→ More than 4	—
GND (sensor)		B136	35	0	0	—
GND (injector)		B137	7	0	0	—
GND (ignition system)		B135	12	0	0	—
GND (power supply)		B135	4	0	0	—
		B135	1	0	0	—
GND (control system)		B137	2	0	0	—
		B137	1	0	0	—
GND (Front oxygen (A/F) sensor heater 1)		B134	7	0	0	—
GND (Front oxygen (A/F) sensor heater 2)		B134	6	0	0	—
GND (Electronic throttle control)		B137	3	0	0	—
Main switch		B136	7	ON: 0 OFF: 5	ON: 0 OFF: 5	—
Clutch switch		B136	10	When clutch pedal is depressed: 0 When clutch pedal is released: 10 — 13	When clutch pedal is depressed: 0 When clutch pedal is released: 13 — 14	—
Brake switch 1		B136	9	When brake pedal is depressed: 0 When brake pedal is released: 10 — 13	When brake pedal is depressed: 0 When brake pedal is released: 13 — 14	—
Brake switch 2		B136	8	When brake pedal is depressed: 10 — 13 When brake pedal is released: 0	When brake pedal is depressed: 13 — 14 When brake pedal is released: 0	—

DESCRIPTION	Connector No.	Terminal No.	Signal (V)		NOTE
			Ignition SW ON (engine OFF)	Engine ON (idling)	
Cruise control command switch	B136	11	When operating nothing: 3.5 — 4.5 When operating RES/ACC: 2.5 — 3.5 When operating SET/COAST: 0.5 — 1.5 When operating CANCEL: 0 — 0.5	When operating nothing: 3.5 — 4.5 When operating RES/ACC: 2.5 — 3.5 When operating SET/COAST: 0.5 — 1.5 When operating CANCEL: 0 — 0.5	—
Fuel temperature sensor	B136	12	2.5 — 3.8	2.5 — 3.8	Ambient temperature: 25°C (75°F)
Fuel tank pressure sensor	B136	21	2.3 — 2.7	2.3 — 2.7	Value after removing fuel filler cap and installing again
Fuel tank sensor control valve	B134	24	ON: 1 or less OFF: 10 — 13	ON: 1 or less OFF: 13 — 14	—
Pressure control solenoid valve	B134	12	ON: 1 or less OFF: 10 — 13	ON: 1 or less OFF: 13 — 14	—
Drain valve	B134	13	ON: 1 or less OFF: 10 — 13	ON: 1 or less OFF: 13 — 14	—
CAN communication line (+)	B137	18	2.5 — 3.5	2.5 — 3.5	Waveform
CAN communication line (−)	B137	26	1.5 — 2.5	1.5 — 2.5	Waveform
AT/MT identification switch	B137	22	0	0	MT model

6. Engine Condition Data

A: ELECTRICAL SPECIFICATION

Remarks	SPECIFICATION
Engine load	1.9 — 3.9 (%): Idling
	6 — 12.2 (%): 2,500 rpm Racing

Measuring condition:
- After engine is warmed-up.
- Gear position is in “N” or “P” range.
- A/C is turned OFF.
- All accessory switches are turned OFF.

7. Data Link Connector

A: NOTE

This connector is used for Subaru Select Monitor.

CAUTION:
Do not connect any scan tools except for Subaru Select Monitor or general scan tool, because the circuit for Subaru Select Monitor may be damaged.

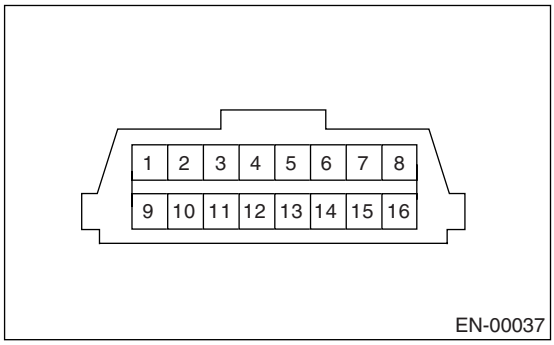

Terminal No.	Remarks	Terminal No.	Remarks
1	Power supply	9	Empty
2	Empty	10	Subaru Select Monitor signal
3	Empty	11	Empty
4	Empty	12	Ground
5	Empty	13	Ground
6	Empty	14	Empty
7	Empty	15	Empty
8	Empty	16	Empty

8. General Scan Tool

A: OPERATION

1. HOW TO USE GENERAL SCAN TOOL

1) Prepare a general scan tool required by SAE J1978.
2) Open the cover and connect the general scan tool to data link connector located in the lower portion of instrument panel (on the driver's side).

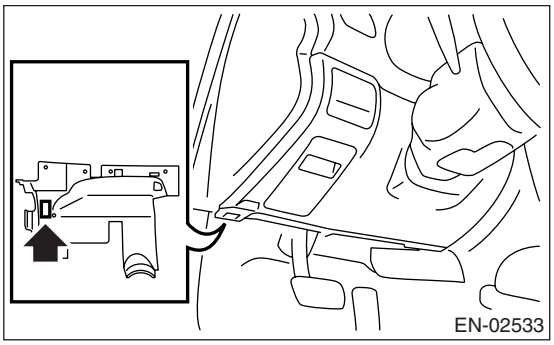

3) Using the general scan tool, call up DTC and freeze frame data.
General scan tool functions consist of:
(1) MODE $01: Current powertrain diagnostic data
(2) MODE $02: Powertrain freeze frame data
(3) MODE $03: Emission-related powertrain DTC
(4) MODE $04: Clear/Reset emission-related diagnostic information
(5) MODE $06: Request on-board monitoring test results for non-continuously monitored systems
(6) MODE $07: Request on-board monitoring test results for continuously monitored systems
(7) MODE $09: Request vehicle information
Read out the data according to repair procedures. (For detailed operation procedures, refer to the operation manual of general scan tool.)

NOTE:
For details concerning DTC, refer to "List of Diagnostic Trouble Code (DTC)". <Ref. to EN(H4SO)(diag)-70, List of Diagnostic Trouble Code (DTC).>

2. MODE $01 (CURRENT POWERTRAIN DIAGNOSTIC DATA)

Refer to data denoting the current operating condition of analog input/output, digital input/output and/or the powertrain system.
A list of the support data and PID (Parameter Identification) codes are shown in the following table.

PID	Data	Unit of measure
01	Number of emission-related powertrain DTC and malfunction indicator light status and diagnosis support information	—
03	Fuel system control status	—
04	Calculated engine load value	%
05	Engine coolant temperature	°C
06	Short term fuel trim	%
07	Long term fuel trim	%
0B	Intake manifold absolute pressure	kPa
0C	Engine revolution	rpm
0D	Vehicle speed	MPH
0E	Ignition timing advance	°
0F	Intake air temperature	°C
10	Air flow rate from mass air flow sensor	g/sec
11	Throttle valve absolute opening angle	%
13	Check whether oxygen sensor is installed.	—
15	Oxygen sensor output voltage and short term fuel trim associated with oxygen sensor (Bank 1 Sensor 2)	V and %
1C	Supporting OBD system	—
24	A/F value and front oxygen (A/F) sensor output voltage (Bank 1 Sensor 1)	— and V
34	Front oxygen (A/F) sensor current (Bank 1 Sensor 1)	mA

NOTE:
Refer to general scan tool manufacturer's instruction manual to access generic OBD-II PIDs (MODE $01).

3. MODE $02 (POWERTRAIN FREEZE FRAME DATA)

Refer to data denoting the operating condition when trouble is detected by the on-board diagnosis system. A list of the support data and PID (Parameter Identification) codes are shown in the following table.

PID	Data	Unit of measure
02	DTC that caused CARB required freeze frame data storage	—
03	Fuel system control status	—
04	Calculated engine load value	%
05	Engine coolant temperature	°C
06	Short term fuel trim (Bank 1 Sensor 1)	%
07	Long term fuel trim (Bank 1 Sensor 1)	%
0B	Intake manifold absolute pressure	kPa
0C	Engine speed	rpm
0D	Vehicle speed	MPH
0E	Ignition timing advance	°
0F	Intake air temperature	°C
10	Air flow rate from mass air flow sensor	g/sec
11	Throttle valve opening angle	%
13	Check whether oxygen sensor is installed.	—
15	Oxygen sensor output voltage and short term fuel trim associated with oxygen sensor (Bank 1 Sensor 2)	V and %
1C	Supporting OBD system	—

NOTE:
Refer to general scan tool manufacturer's operation manual to access freeze frame data (MODE $02).

4. MODE $03 (EMISSION-RELATED POWERTRAIN DIAGNOSTIC TROUBLE CODE (DTC))

Refer to "List of Diagnostic Trouble Code (DTC)" for information about data denoting emission-related powertrain DTC. <Ref. to EN(H4SO)(diag)-70, List of Diagnostic Trouble Code (DTC).>

5. MODE $04 (CLEAR/RESET EMISSION-RELATED DIAGNOSTIC INFORMATION)

Refer to the mode used to clear or reset emission-related diagnostic information (OBD-II trouble diagnostic information).

NOTE:
Refer to general scan tool manufacturer's operation manual to clear or reset emission-related diagnostic information (MODE $04).

6. MODE $06

Refer to test value of troubleshooting and data of test limit on support data bit sequence table. List of support data is shown in the following table.

TID	CID	Test value & Test limit
$81	$01	Catalyst system efficiency below threshold
$82	$81	Exhaust gas recirculation control circuit range/performance
	$02	Exhaust gas recirculation control circuit range/performance
$83	$01	Evaporative emission control system (0.04 inch leak)
	$02	Evaporative emission control system (0.04 inch leak)
	$03	Evaporative emission control system (0.04 inch leak)
	$04	Evaporative emission control system (0.04 inch leak)
	$05	Evaporative emission control system (0.02 inch leak)
	$06	Evaporative emission control system (0.02 inch leak)
$84	$01	Front oxygen (A/F) sensor(Bank 1 Sensor 1)
$85	$01	O_2 sensor circuit slow response (Bank 1 Sensor 2) Rich → Lean
	$02	O_2 sensor circuit slow response (Bank 1 Sensor 2) Lean → Rich
$41	$81	O_2 sensor circuit (Bank 1 Sensor 2)
	$02	O_2 sensor circuit (Bank 1 Sensor 2)

7. MODE $07

Refer to the data of DTC (pending code) for troubleshooting result about emission in first time.

8. MODE $09

Refer to the data of vehicle specification (VIN, calibration ID, diagnostic frequency, etc.).

9. Subaru Select Monitor

A: OPERATION

1. HOW TO USE SUBARU SELECT MONITOR

1) Prepare the Subaru Select Monitor kit. <Ref. to EN(H4SO)(diag)-7, PREPARATION TOOL, General Description.>

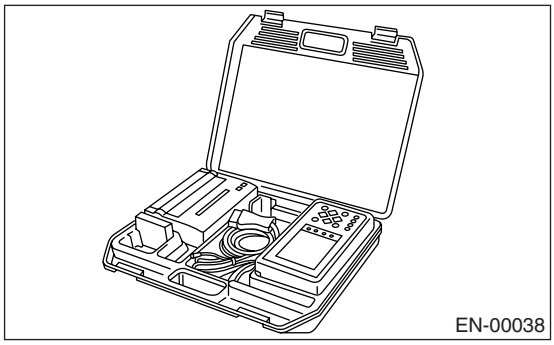

2) Connect the diagnosis cable to Subaru Select Monitor.
3) Insert the cartridge to Subaru Select Monitor. <Ref. to EN(H4SO)(diag)-7, PREPARATION TOOL, General Description.>

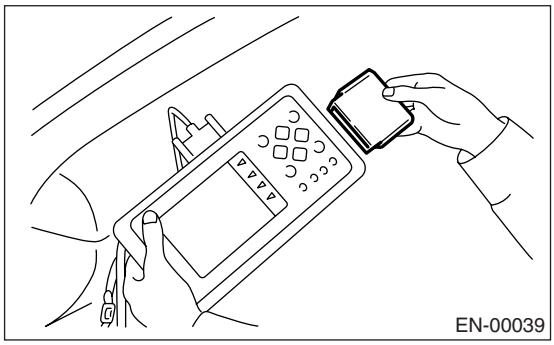

4) Connect the Subaru Select Monitor to data link connector.
(1) Data link connector is located in the lower portion of instrument panel (on the driver's side).

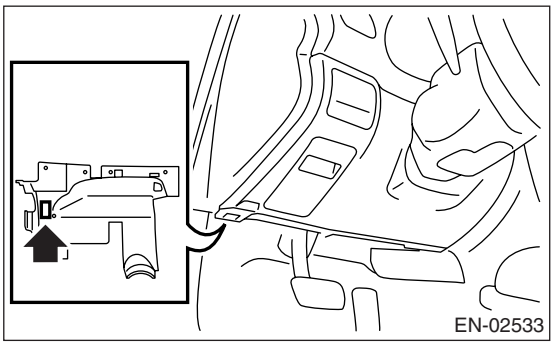

(2) Connect the diagnosis cable to data link connector.

CAUTION:
Do not connect the scan tools except for Subaru Select Monitor or general scan tool.

5) Turn ignition switch to ON (engine OFF) and turn Subaru Select Monitor switch to ON.

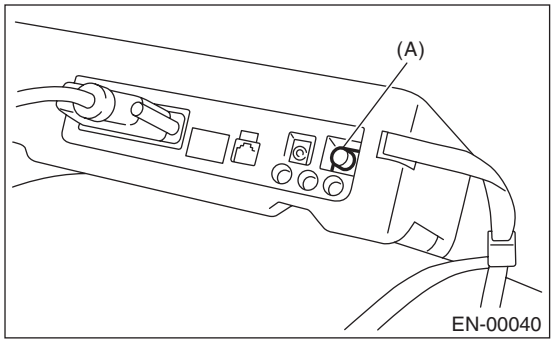

(A) Power switch

6) Using the Subaru Select Monitor, call up DTC and data, then record them.

2. READ DIAGNOSTIC TROUBLE CODE (DTC) FOR ENGINE (NORMAL MODE)

Refer to "Read Diagnostic Trouble Code (DTC)" for information about how to indicate DTCs. <Ref. to EN(H4SO)(diag)-34, Read Diagnostic Trouble Code (DTC).>

3. READ DIAGNOSTIC TROUBLE CODE (DTC) FOR ENGINE (OBD MODE)

Refer to "Read Diagnostic Trouble Code (DTC)" for information about how to indicate DTCs. <Ref. to EN(H4SO)(diag)-34, Read Diagnostic Trouble Code (DTC).>

4. READ CURRENT DATA FOR ENGINE. (NORMAL MODE)

1) On the «Main Menu» display screen, select the {Each System Check} and press the [YES] key.
2) On the «System Selection Menu» display screen, select the {Engine} and press the [YES] key.
3) Press the [YES] key after the information of engine type has been displayed.
4) On the «Engine Diagnosis» display screen, select the {Current Data Display/Save}, and then press the [YES] key.
5) On the «Data Display Menu» display screen, select the {Data Display} and press the [YES] key.
6) Using the scroll key, scroll the display screen up or down until the desired data is shown.
• A list of the support data is shown in the following table.

Remarks	Display	Unit of measure	Note (at idling)
Engine load	Engine Load	%	3.5%
Engine coolant temperature signal	Coolant Temp.	°C or °F	≥ 75°C or 167°F
A/F correction 1	A/F Correction #1	%	–10 — +10%
A/F learning 1	A/F Learning #1	%	–15 — +15%
Intake manifold absolute pressure	Mani. Absolute Pressure	mmHg, kPa, inHg or psig	200 — 300 mmHg, 26.7 — 40 kPa, 7.8 — 11.8 inHg or 3.8 — 5.8 psig
Engine speed signal	Engine Speed	rpm	600 — 800 rpm (Agree with the tachometer indication)
Vehicle speed signal	Vehicle Speed	km/h or MPH	0 km/h or 0 MPH (at parking)
Ignition timing signal	Ignition Timing	deg	12.5 — 13.5 deg
Intake air temperature signal	Intake Air Temp.	°C or °F	(Ambient air temperature)
Amount of intake air	Mass Air Flow	g/s or lb/m	2.8 — 3.2 g/s or 0.37 — 0.42 lb/m
Throttle opening angle signal	Throttle Opening Angle	%	1.2 — 1.6%
Rear oxygen sensor voltage	Rear O2 Sensor	V	0.6 — 0.85 V
Battery voltage	Battery Voltage	V	12 — 14 V
Mass air flow voltage	Air Flow Sensor Voltage	V	1.1 — 1.2 V
Injection 1 pulse width	Fuel Injection #1 Pulse	ms	2.56 — 3.3 ms
Knock sensor correction	Knocking Correction	deg	0.0 deg
Atmospheric pressure signal	Atmosphere Pressure	mmHg, kPa, inHg or psig	(Atmosphere pressure)
Intake manifold relative pressure	Mani. Relative Pressure	mmHg, kPa, inHg or psig	(Mani. Absolute Pressure – Atmosphere pressure)
Fuel tank pressure signal	Fuel Tank Pressure	mmHg, kPa, inHg or psig	+3.8 mmHg, +0.51 kPa, +0.15 inHg or +0.07 psig
Fuel temperature signal	Fuel Temp	°C or °F	+8°C or +46°F
Fuel level signal	Fuel Level	V	1.02 V
Acceleration opening angle signal	Accel. Opening Angle	%	0.0%
Purge control solenoid duty ratio	CPC Valve Duty Ratio	%	0 — 3%
EGR steps	No. of EGR Steps	STEP	0
A/F sensor current value 1	A/F Sensor #1 Current	mA	–0.2 — 0.2 mA
A/F sensor resistance value 1	A/F Sensor #1 Resistance	ohm	28 — 31 mA
A/F sensor output lambda 1	A/F Sensor #1	—	0.85 — 1.05
A/F correction 3	A/F Correction #3	%	5.08%
A/F learning 3	A/F Learning #3	%	0%
Throttle motor duty	Throttle Motor Duty	%	–12 — –20%
Throttle power supply voltage	Throttle Motor Voltage	V	(Battery voltage)
Sub throttle sensor voltage	Sub-throttle Sensor	V	1.48 — 1.50 V
Main throttle sensor voltage	Main-throttle Sensor	V	0.62 V

Remarks	Display	Unit of measure	Note (at idling)
Sub acceleration sensor voltage	Sub-accelerator Sensor	V	1.12 V
Main acceleration sensor voltage	Main-accelerator Sensor	V	0.98 — 1.0 V
Memory vehicle speed	Memorized Cruise Speed	km/h or MPH	0 km/h or 0 MPH
Fuel level sensor resistance	Fuel Level Resistance	Ω	8.0 Ω
#1 cylinder roughness monitor	Roughness Monitor #1	—	0
#2 cylinder roughness monitor	Roughness Monitor #2	—	0
#3 cylinder roughness monitor	Roughness Monitor #3	—	0
#4 cylinder roughness monitor	Roughness Monitor #4	—	0
AT/MT identification terminal	AT Vehicle ID Signal	—	ON/OFF
Test mode terminal	Test Mode Signal	—	OFF
Neutral position switch signal	Neutral Position Switch	—	ON
Soft idle switch signal	Idle Switch Signal	—	ON
Ignition switch signal	Ignition Switch	—	ON
Power steering switch input signal	P/S Switch	—	OFF (At OFF)
Air conditioning switch signal	A/C Switch	—	OFF (At OFF)
Starter switch signal	Starter Switch	—	OFF
Rear O2 monitor	Rear O2 Rich Signal	—	OFF
Knocking signal	Knocking Signal	—	OFF
Crankshaft position sensor signal	Crankshaft Position Sig.	—	OFF
Camshaft position sensor signal	Camshaft Position Sig.	—	OFF
Rear defogger switch signal	Rear Defogger SW	—	OFF (At OFF)
Blower fan switch signal	Blower Fan SW	—	OFF (At OFF)
Light switch signal	Light Switch	—	OFF (At OFF)
A/C middle pressure switch signal	A/C Mid Pressure Switch	—	OFF (At OFF)
Air conditioner compressor relay output signal	A/C Compressor Signal	—	OFF (At OFF)
Radiator fan relay 1 signal	Radiator Fan Relay #1	—	OFF (At OFF)
Radiator fan relay 2 signal	Radiator Fan Relay #2	—	OFF (At OFF)
Fuel pump relay signal	Fuel Pump Relay	—	ON
Pressure control solenoid valve signal	PCV Solenoid	—	OFF output
Drain valve signal	Vent Control Solenoid	—	OFF output
Fuel tank sensor control valve signal	Tank Sensor Cntl Valve	—	OFF output
AT coordinate retard angle demand signal	Retard Signal from AT	—	OFF
AT coordinate fuel cut demand signal	Fuel Cut Signal from AT	—	OFF
AT coordinate permission demand	Torque Permission Signal	—	ON
Electronic throttle control motor relay signal	ETC Motor Relay	—	ON
Clutch switch signal	Clutch Switch	—	OFF (At OFF)
Stop light switch signal	Stop Light Switch	—	OFF (At OFF)
SET/COAST switch signal	SET/COAST Switch	—	OFF (At OFF)
RES/ACC switch signal	RESUME/ACCEL Switch	—	OFF (At OFF)
Brake switch signal	Brake Switch	—	OFF (At OFF)
Main switch signal	Main Switch	—	OFF (At OFF)
Integrated unit data reception	Body Int. Unit Data	—	ON
Integrated unit data update	Body Int. Unit Count	—	ON
Cancel switch signal	Cancel Switch	—	OFF (At OFF)

NOTE:
For detailed operation procedure, refer to the “SUBARU SELECT MONITOR OPERATION MANUAL”.

5. READ CURRENT DATA FOR ENGINE (OBD MODE)

1) On the «Main Menu» display screen, select the {Each System Check} and press the [YES] key.
2) On the «System Selection Menu» display screen, select the {Engine} and press the [YES] key.
3) Press the [YES] key after the information of engine type has been displayed.
4) On the «Engine Diagnosis» display screen, select the {OBD system} and press the [YES] key.
5) On the «OBD Menu» display screen, select the {Current Data Display/Save}, and press the [YES] key.
6) On the «Data Display Menu» display screen, select the {Data Display} and press the [YES] key.
7) Using the scroll key, scroll the display screen up or down until the desired data is shown.

• A list of the support data is shown in the following table.

DESCRIPTION	Display	Unit of measure	Note (at idling)
Number of diagnosis code	Number of Diag. Code:	—	0
Condition of malfunction indicator light	MI (MIL)	—	OFF
Monitoring test of misfire	Misfire monitoring	—	complete
Monitoring test of fuel system	Fuel system monitoring	—	complete
Monitoring test of comprehensive component	Component monitoring	—	complete
Test of catalyst	Catalyst Diagnosis	—	incomplete
Test of heating-type catalyst	Heated catalyst	—	no support
Test of evaporative emission purge control system	Evaporative purge system	—	incomplete
Test of secondary air system	Secondary air system	—	no support
Test of air conditioning system refrigerant	A/C system refrigerant	—	no support
Test of oxygen sensor	O1 Sensor Diagnosis	—	incomplete
Test of oxygen sensor heater	O2 Heater Diagnosis	—	complete
Test of EGR system	EGR system	—	incomplete
A/F control #1	Fuel system for Bank 1	—	CLOSE normal
Load	Calculated load valve	%	2.70%
Engine coolant temperature signal	Coolant Temp.	°C	94°C
A/F correction 1	A/F Correction #1	%	0%
A/F learning 1	A/F Learning #1	%	−7.0%
Intake manifold absolute pressure	Mani. Absolute Pressure	mmHg, kPa, inHg or psig	218 mmHg, 29.1 kPa, 8.58 inHg or 4.22 psig
Engine speed signal	Engine Speed	rpm	705 rpm
Vehicle speed signal	Vehicle Speed	km/h or MPH	0 km/h or 0 MPH
Ignition timing #1	Ignition timing adv. #1	°	+10°
Intake air temperature signal	Intake Air Temp.	°C or °F	34°C or 93°F
Amount of intake air	Mass Air Flow	g/s or lb/m	2.9 g/s or 0.38 lb/m
Throttle opening angle signal	Throttle Opening Angle	%	13%
Oxygen sensor (Bank 1 Sensor 2)	Oxygen sensor #12	V	0.235 V
A/F correction (Bank 1 Sensor 2)	A/F Correction #12	%	0.00%
OBD system	OBD system	—	CARB — OBD2
Front oxygen (A/F) sensor (Bank 1 Sensor 1)	Oxygen sensor #11	—	Support
Oxygen sensor (Bank 1 Sensor 2)	Oxygen sensor #12	—	Support
Front oxygen (A/F) sensor (Bank 1 Sensor 1)	A/F sensor #11	—	0.996
Front oxygen (A/F) sensor (Bank 1 Sensor 1)	A/F sensor #11	V	2.782 V
Front oxygen (A/F) sensor (Bank 1 Sensor 1)	A/F sensor #11	—	0.995
Front oxygen (A/F) sensor (Bank 1 Sensor 1)	A/F sensor #11	mA	−0.02 mA

NOTE:
For detailed operation procedure, refer to “SUBARU SELECT MONITOR OPERATION MANUAL”.

6. READ FREEZE FRAME DATA FOR ENGINE (OBD MODE)

1) On the «Main Menu» display screen, select the {Each System Check} and press the [YES] key.
2) On the «System Selection Menu» display screen, select the {Engine Control System} and press the [YES] key.
3) Press the [YES] key after the information of engine type has been displayed.
4) On the «Engine Diagnosis» display screen, select the {OBD System} and press the [YES] key.
5) On the «OBD Menu» display screen, select the {Freeze Frame Data} and press the [YES] key.
• A list of support data is shown in the following table.

Contents	Display	Unit of measure
DTC for freeze frame data	Freeze frame data	DTC
Air fuel ratio control system for bank 1	Fuel system for Bank1	ON or OFF
Engine load data	Engine Load	%
Engine coolant temperature signal	Coolant Temp.	°C or °F
Short term fuel trim by front oxygen (A/F) sensor	Short term fuel trim B1	%
Long term fuel trim by front oxygen (A/F) sensor	Long term fuel trim B1	%
Intake manifold absolute pressure signal	Mani. Absolute Pressure	mmHg, kPa, inHg or psig
Engine speed signal	Engine Speed	rpm
Vehicle speed signal	Vehicle Speed	km/h or MPH
Ignition timing signal	Ignition Timing	°
Intake air volume	Mass Air Flow	g/s or lb/m
Intake air temperature signal	Intake Air Temp	°C
Throttle position signal	Throttle Opening Angle	%
Oxygen sensor (Bank 1 Sensor 2)	Oxygen sensor #12	V
A/F correction (Bank 1 Sensor 2)	Short term fuel trim #12	%
Front oxygen (A/F) sensor (Bank 1 Sensor 1)	Oxygen sensor #11	Support
Oxygen sensor (Bank 1 Sensor 2)	Oxygen sensor #12	Support

NOTE:
For detailed operation procedure, refer to SUBARU SELECT MONITOR OPERATION MANUAL.

7. LED OPERATION MODE FOR ENGINE

1) On the «Main Menu» display screen, select the {Each System Check} and press the [YES] key.
2) On the «System Selection Menu» display screen, select the {Engine} and press the [YES] key.
3) Press the [YES] key after the information of engine type has been displayed.
4) On the «Engine Diagnosis» display screen, select the {Current Data Display/Save}, and then press the [YES] key.
5) On the «Data Display Menu» display screen, select the {Data & LED Display} and press the [YES] key.
6) Using the scroll key, scroll the display screen up or down until the desired data is shown.
• A list of the support data is shown in the following table.

Remarks	Display	Message	LED "ON" requirements
AT/MT identification signal	AT Vehicle ID Signal	ON or OFF	Illuminate (AT model)
Test mode signal	Test Mode Signal	ON or OFF	D check
Neutral position switch signal	Neutral Position Switch	ON or OFF	When neutral position signal is entered.
Idle switch signal	Idle Switch Signal	ON or OFF	When idle switch signal is entered.
Ignition switch signal	Ignition Switch	ON or OFF	When ignition switch is turned to ON.
Power steering switch signal	P/S Switch	ON or OFF	When power steering switch is entered.
Air conditioning switch signal	A/C Switch	ON or OFF	When air conditioning switch is input.
Starter switch signal	Starter Switch	ON or OFF	When starter switch is input.
Rear oxygen sensor rich signal	Rear O2 Rich Signal	ON or OFF	When rear oxygen sensor mixture ratio is rich.
Knocking signal	Knocking Signal	ON or OFF	When knocking signal is input.
Crankshaft position sensor signal	Crankshaft Position Signal	ON or OFF	When crankshaft position sensor signal is input.
Camshaft position sensor signal	Camshaft Position Signal	ON or OFF	When camshaft position sensor signal is entered.
Rear defogger switch signal	Rear Defogger Switch	ON or OFF	When rear defogger switch is turned to ON.
Blower fan switch signal	Blower Fan Switch	ON or OFF	When blower fan switch is turned to ON.
Light switch signal	Light Switch	ON or OFF	When light switch is turned to ON.
A/C middle pressure switch signal	A/C Mid Pressure Switch	ON or OFF	When A/C middle pressure switch is turned to ON.
Air conditioning relay signal	A/C Compressor Signal	ON or OFF	When air conditioning relay is in function.
Radiator fan relay 1 signal	Radiator Fan Relay #1	ON or OFF	When radiator fan relay 1 is in function.
Radiator fan relay 2 signal	Radiator Fan Relay #2	ON or OFF	When radiator fan relay 2 is in function.
Fuel pump relay signal	Fuel Pump Relay	ON or OFF	ON output
Pressure control solenoid valve signal	PCV Solenoid	ON or OFF	When pressure control solenoid valve is in operation.
Drain valve signal	Vent Control Solenoid	ON or OFF	When drain valve is in operation.
Fuel tank sensor control valve signal	Tank Sensor Cntl Valve	ON or OFF	When fuel tank sensor control valve is in operation.
AT retard angle demand signal	Retard Signal	ON or OFF	When AT retard angle demand signal is input.
AT fuel cut signal	Fuel Cut	ON or OFF	When AT fuel cut signal is input.

Remarks	Display	Message	LED “ON” requirements
AT coordinate permission signal	Torque Control Permission	ON or OFF	When AT coordinate permission signal is input.
Electronic throttle control motor relay signal	ETC Motor Relay	ON or OFF	When electronic throttle control is in function.
Clutch switch signal	Clutch Switch	ON or OFF	When clutch switch is turned to ON.
Stop light switch signal	Stop Light Switch	ON or OFF	When stop switch is turned to ON.
SET/COAST switch signal	SET/COAST Switch	ON or OFF	When SET/COAST switch is turned to ON.
RES/ACC switch signal	RESUME/ACCEL Switch	ON or OFF	When RES/ACC switch is turned to ON.
Brake switch signal	Brake Switch	ON or OFF	When brake switch is turned to ON.
Main switch signal	Main Switch	ON or OFF	When main switch is turned to ON.
Data reception signal	Body Int. Unit Data	ON or OFF	When data reception signal is entered.
Counter update signal	Body Int. Unit Count	ON or OFF	When counter update signal is entered.
Cancel switch signal	Cancel Switch	ON or OFF	When cancel switch is turned to ON.

NOTE:
For detailed operation procedure, refer to “SUBARU SELECT MONITOR OPERATION MANUAL”.

8. VIN REGISTRATION

1) On the «Main Menu» display screen, select the {Each System Check} and press the [YES] key.
2) On the «System Selection Menu» display screen, select the {Engine} and press the [YES] key.
3) Press the [YES] key after the information of engine type has been displayed.
4) On the «Engine Diagnosis» display screen, select the {VIN registration} and press the [YES] key.
5) Perform the procedure as shown in the display.

NOTE:
For detailed operation procedure, refer to “SUBARU SELECT MONITOR OPERATION MANUAL”.

10.Read Diagnostic Trouble Code (DTC)

A: OPERATION

1. SUBARU SELECT MONITOR (NORMAL MODE)

1) On the «Main Menu» display screen, select the {Each System Check} and press the [YES] key.
2) On the «System Selection Menu» display screen, select the {Engine} and press the [YES] key.
3) Press the [YES] key after the information of engine type has been displayed.
4) On the «Engine Diagnosis» screen, select the {DTC Display}, and then press the [YES] key.
5) On the «Diagnostic Code(s) Display» screen, select the {Current Diagnostic Code(s)} or {History Diagnostic Code(s)}, and then press the [YES] key.

NOTE:
• For detailed operation procedure, refer to “SUBARU SELECT MONITOR OPERATION MANUAL”.
• For details concerning DTC, refer to “List of Diagnostic Trouble Code (DTC)”. <Ref. to EN(H4SO)(diag)-70, List of Diagnostic Trouble Code (DTC).>

2. SUBARU SELECT MONITOR (OBD MODE)

1) On the «Main Menu» display screen, select the {Each System Check} and press the [YES] key.
2) On the «System Selection Menu» display screen, select the {Engine} and press the [YES] key.
3) Press the [YES] key after the information of engine type has been displayed.
4) On the «Engine Diagnosis» display screen, select the {OBD System} and press the [YES] key.
5) On the «OBD Menu» display screen, select the {DTC Display} and press the [YES] key.
6) Make sure DTC is shown on the screen.

NOTE:
• For detailed operation procedure, refer to “SUBARU SELECT MONITOR OPERATION MANUAL”.
• For details concerning DTC, refer to “List of Diagnostic Trouble Code (DTC)”. <Ref. to EN(H4SO)(diag)-70, List of Diagnostic Trouble Code (DTC).>

3. GENERAL SCAN TOOL

Refers to data denoting emission-related powertrain DTC.
For details concerning DTC, refer to the List of Diagnostic Trouble Code (DTC). <Ref. to EN(H4SO)(diag)-70, List of Diagnostic Trouble Code (DTC).>

NOTE:
Refer to general scan tool manufacturer’s instruction manual to access emission-related powertrain DTC (MODE $03).

11.Inspection Mode

A: PROCEDURE

Carry out trouble diagnosis shown in the following DTC table.
When performing trouble diagnosis which is not shown in the DTC table, refer to the next item Drive cycle. <Ref. to EN(H4SO)(diag)-39, Drive Cycle.>

DTC	Item
P0031	HO2S Heater Control Circuit Low (Bank 1 Sensor 1)
P0032	HO2S Heater Control Circuit High (Bank 1 Sensor 1)
P0037	HO2S Heater Control Circuit Low (Bank 1 Sensor 2)
P0038	HO2S Heater Control Circuit High (Bank 1 Sensor 2)
P0102	Mass or Volume Air Flow Circuit Low Input
P0103	Mass or Volume Air Flow Circuit High Input
P0107	Manifold Absolute Pressure/Barometric Pressure Circuit Low Input
P0108	Manifold Absolute Pressure/Barometric Pressure Circuit High Input
P0112	Intake Air Temperature Circuit Low Input
P0113	Intake Air Temperature Circuit High Input
P0117	Engine Coolant Temperature Circuit Low Input
P0118	Engine Coolant Temperature Circuit High Input
P0122	Throttle/Pedal Position Sensor/Switch “A” Circuit Low Input
P0123	Throttle/Pedal Position Sensor/Switch “A” Circuit High Input
P0131	O2 Sensor Circuit Low Voltage (Bank 1 Sensor 1)
P0132	O2 Sensor Circuit High Voltage (Bank 1 Sensor 1)
P0137	O2 Sensor Circuit Low Voltage (Bank 1 Sensor 2)
P0138	O2 Sensor Circuit High Voltage (Bank 1 Sensor 2)
P0182	Fuel Temperature Sensor “A” Circuit Low Input
P0183	Fuel Temperature Sensor “A” Circuit High Input
P0222	Throttle/Pedal Position Sensor/Switch “B” Circuit Low Input
P0223	Throttle/Pedal Position Sensor/Switch “B” Circuit High Input
P0327	Knock Sensor 1 Circuit Low Input (Bank 1 or Single Sensor)
P0328	Knock Sensor 1 Circuit High Input (Bank 1 or Single Sensor)
P0335	Crankshaft Position Sensor “A” Circuit
P0336	Crankshaft Position Sensor “A” Circuit Range/Performance
P0340	Camshaft Position Sensor “A” Circuit (Bank 1 or Single Sensor)
P0341	Camshaft Position Sensor “A” Circuit Range/Performance (Bank 1 or Single Sensor)
P0447	Evaporative Emission Control System Vent Control Circuit Open
P0448	Evaporative Emission Control System Vent Control Circuit Shorted
P0452	Evaporative Emission Control System Pressure Sensor Low Input
P0453	Evaporative Emission Control System Pressure Sensor High Input
P0458	Evaporative Emission Control System Purge Control Valve Circuit Low
P0462	Fuel Level Sensor Circuit Low Input
P0463	Fuel Level Sensor Circuit High Input
P0500	Vehicle Speed Sensor
P0512	Starter Request Circuit
P0519	Idle control system malfunction (Fail-Safe)
P0600	CAN Communication Circuit
P0604	Internal Control Module Random Access Memory (RAM) Error
P0605	Internal Control Module Read Only Memory (ROM) Error
P0607	Control Module Performance
P0638	Throttle Actuator Control Range/Performance (Bank 1)
P0691	Cooling Fan 1 Control Circuit Low
P0692	Radiator Fun Relay 1 Circuit Malfunction

DTC	Item
P0700	Transmission Control System (MIL Request)
P0851	Neutral Switch Input Circuit Low
P0852	Neutral Switch Input Circuit High
P1152	O2 Sensor Circuit Range/Performance (Low) (Bank1 Sensor1)
P1153	O2 Sensor Circuit Range/Performance (High) (Bank1 Sensor1)
P1160	Return Spring Failure
P1400	Fuel Tank Pressure Control Solenoid Valve Circuit Low
P1420	Fuel Tank Pressure Control Solenoid Valve Circuit High
P1446	Fuel Tank Sensor Control Valve Circuit Low
P1447	Fuel Tank Sensor Control Valve Circuit High
P1518	Starter Switch Circuit Low Input
P1560	Back-up Voltage Circuit Malfunction
P2101	Throttle Actuator Control Motor Circuit Range/Performance
P2102	Throttle Actuator Control Motor Circuit Low
P2103	Throttle Actuator Control Motor Circuit High
P2109	Throttle/Pedal Position Sensor A Minimum Stop Performance
P2122	Throttle/Pedal Position Sensor/Switch “D” Circuit Low Input
P2123	Throttle/Pedal Position Sensor/Switch “D” Circuit High Input
P2127	Throttle/Pedal Position Sensor/Switch “E” Circuit Low Input
P2128	Throttle/Pedal Position Sensor/Switch “E” Circuit High Input
P2135	Throttle/Pedal Position Sensor/Switch “A” / “B” Voltage Rationality
P2138	Throttle/Pedal Position Sensor/Switch “D” / “E” Voltage Rationality
P2227	Barometric Pressure Circuit Range/Performance
P2228	Barometric Pressure Sensor Circuit Low Input
P2229	Barometric Pressure Sensor Circuit High Input

1. PREPARATION FOR THE INSPECTION MODE

1) Check if the battery voltage is more than 12 V and fuel remains half [20 — 40 ℓ (5.3 — 10.6 US gal, 4.4 — 8.8 Imp gal)].
2) Lift-up the vehicle using a garage jack and place it on rigid racks, or drive the vehicle onto free rollers.

WARNING:
• Before lifting-up the vehicle, ensure parking brakes are applied.
• Do not use a pantograph jack in place of a rigid rack.
• Secure a rope or wire to the front or rear towing hooks to prevent the lateral runout of front wheels.
• Do not abruptly depress/release clutch pedal or accelerator pedal during works even when the engine is operating at low speeds since this may cause vehicle to jump off free rollers.
• In order to prevent the vehicle from slipping due to vibration, do not place any wooden blocks or similar items between the rigid racks and vehicle.
• Since the rear wheels will also rotate, do not place anything near them. Also, make sure that nobody goes in front of the vehicle.

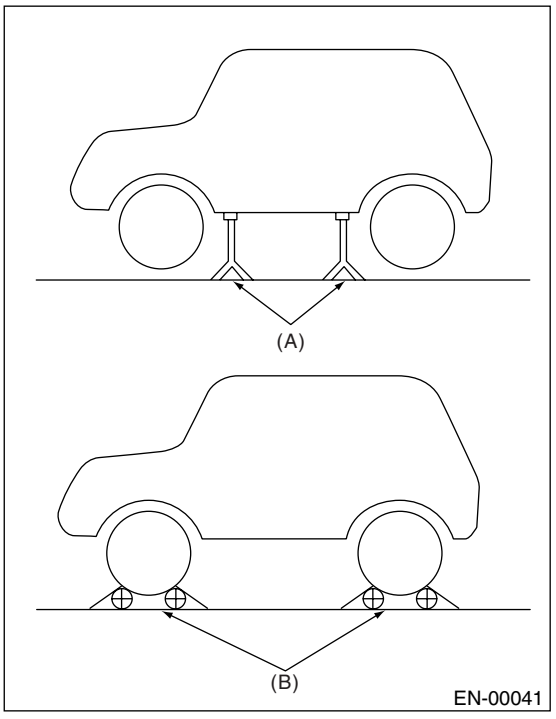

(A) Rigid rack
(B) Free rollers

2. SUBARU SELECT MONITOR

1) After clearing the memory, check for any remaining unresolved trouble data. <Ref. to EN(H4SO)(diag)-43, Clear Memory Mode.>
2) Idle the engine.
3) Prepare the Subaru Select Monitor kit. <Ref. to EN(H4SO)(diag)-7, PREPARATION TOOL, General Description.>

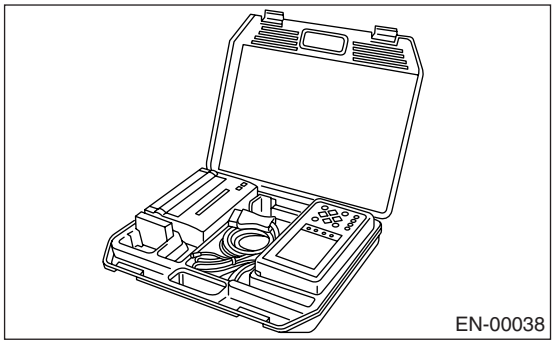

4) Connect the diagnosis cable to Subaru Select Monitor.
5) Insert the cartridge to Subaru Select Monitor. <Ref. to EN(H4SO)(diag)-7, PREPARATION TOOL, General Description.>

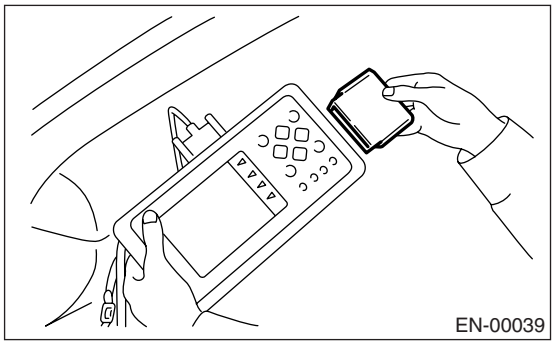

6) Connect the test mode connector (A) located at the lower portion of glove box.

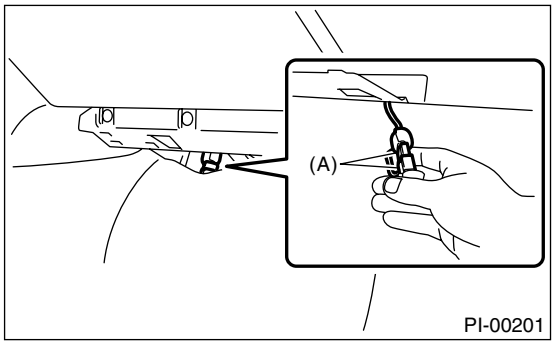

7) Connect the Subaru Select Monitor to data link connector located in the lower portion of the instrument panel (on the driver's side).

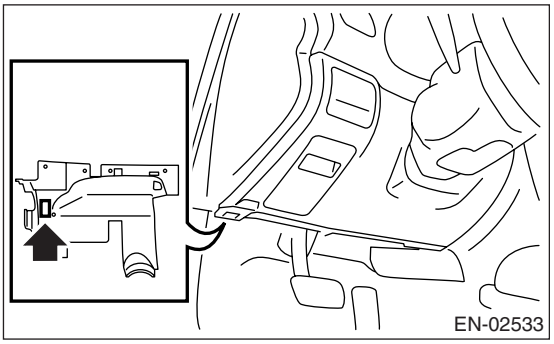

CAUTION:
Do not connect the scan tools except for Subaru Select Monitor or general scan tool.

8) Turn the ignition switch to ON (engine OFF) and turn Subaru Select Monitor switch to ON.

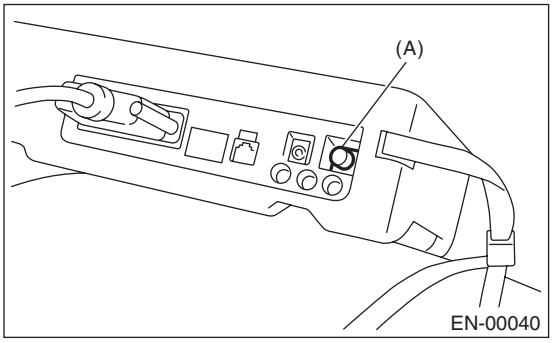

(A) Power switch

9) On the «Main Menu» display screen, select the {Each System Check} and press the [YES] key.
10) On the «System Selection Menu» display screen, select the {Engine} and press the [YES] key.
11) Press the [YES] key after the information of engine type has been displayed.
12) On the «Engine Diagnosis» screen, select the {D Check} and press the [YES] key.
13) When the "Perform D Check?" is shown on the screen, press the [YES] key.
14) Perform subsequent procedures as instructed on the display screen.

- If trouble still remains in the memory, the corresponding DTC appears on the display screen.

NOTE:

- For detailed operation procedure, refer to "SUBARU SELECT MONITOR OPERATION MANUAL".
- For the details concerning DTCs, refer to "List of Diagnostic Trouble Code (DTC)".

<Ref. to EN(H4SO)(diag)-70, List of Diagnostic Trouble Code (DTC).>

- Release the parking brake.

• The speed difference between front and rear wheels may light the ABS warning light, but this indicates no malfunctions. When engine control diagnosis is finished, perform the ABS memory clear procedure of self-diagnosis function.

3. GENERAL SCAN TOOL

1) After performing the diagnostics and clearing memory, check for any remaining unresolved trouble data: <Ref. to EN(H4SO)(diag)-43, Clear Memory Mode.>
2) Warm up the engine.
3) Connect the test mode connector (A) at the lower side of globe box.

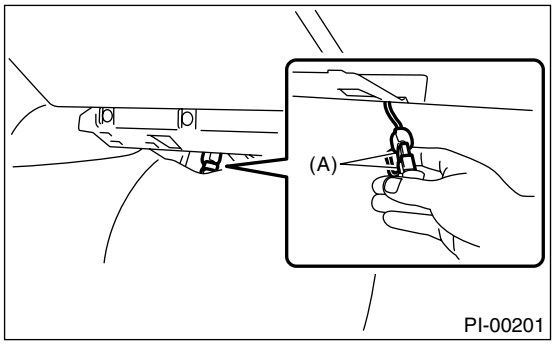

4) Connect the general scan tool to its data link connector in the lower portion of instrument panel (on the driver's side).

CAUTION:
Do not connect the scan tools except for Subaru Select Monitor or general scan tool.

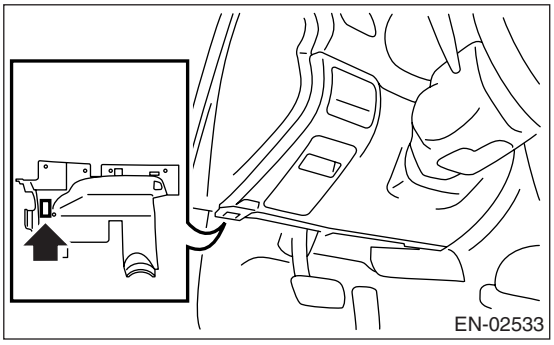

5) Start the engine.

NOTE:
• Ensure the select lever is placed in "P" range before starting. (AT model)
• Depress the clutch pedal when starting engine. (MT model)

6) Using the select lever or shift lever, turn the "P" position switch and "N" position switch to ON.
7) Depress the brake pedal to turn brake switch ON. (AT model)
8) Keep the engine speed in 2,500 — 3,000 rpm range for 40 seconds.
9) Place the select lever or shift lever in "D" range (AT model) or "1st" gear (MT model) and drive the vehicle at 5 to 10 km/h (3 to 6 MPH).

NOTE:
• On AWD model, release the parking brake.
• The speed difference between front and rear wheels may light ABS warning light, but this indicates no malfunctions. When the engine control diagnosis is finished, perform the ABS memory clearance procedure of self-diagnosis system.

10) Using the general scan tool, check for DTC and record the result(s).

NOTE:
• For detailed operation procedures, refer to the operation manual of general scan tool.
• For detailed concerning DTC, refer to "List of Diagnostic Trouble Code (DTC)".
<Ref. to EN(H4SO)(diag)-70, List of Diagnostic Trouble Code (DTC).>

12.Drive Cycle

A: PROCEDURE

There are five drive patterns of drive cycles A — E for the trouble diagnosis. Performing the specified drive pattern allows to diagnose malfunctioning items listed below. After the malfunctioning items listed below are repaired, always check if they correctly resume their functions by performing the required drive pattern.

1. PREPARATION FOR THE DRIVE CYCLE

1) Make sure that the fuel remains approx. half amount [20 — 40 ℓ (5.3 — 10.6 US gal, 4.4 — 8.8 Imp gal)], and battery voltage is 12 V or more.
2) After performing the diagnostics and cleaning memory, check for any remaining unresolved trouble data. <Ref. to EN(H4SO)(diag)-43, Clear Memory Mode.>
3) Disconnect the test mode connector.

NOTE:
• Except for the engine coolant temperature specified items at starting, the diagnosis is carried out after engine warm up.
• Carry out the diagnosis which is marked * on DTC twice, then, after finishing first diagnosis, stop the engine and do second time at the same condition.

2. DRIVE CYCLE A (AFTER RUNNING 20 MINUTES AT 80 KM/H (50 MPH), IDLE ENGINE FOR 1 MINUTE.)

DTC	Item	Condition
*P0125	Insufficient Coolant Temperature for Closed Loop Fuel Control	Coolant temperature at start is less than 20°C (68°F).
*P0126	Insufficient Coolant Temperature for Stable Operation	—
*P0128	Coolant Thermostat (Coolant Temperature Below Thermostat Regulating Temperature)	—
*P0133	O2Sensor Circuit Slow Response (Bank 1 Sensor 1)	—
*P0171	System too Lean (Bank 1)	Diagnosis completes in drive cycle B or C as well.
*P0172	System too Rich (Bank 1)	Diagnosis completes in drive cycle B or C as well.
*P0301	Cylinder 1 Misfire Detected	Diagnosis completes in drive cycle B or C as well.
*P0302	Cylinder 2 Misfire Detected	Diagnosis completes in drive cycle B or C as well.
*P0303	Cylinder 3 Misfire Detected	Diagnosis completes in drive cycle B or C as well.
*P0304	Cylinder 4 Misfire Detected	Diagnosis completes in drive cycle B or C as well.
*P0420	Catalyst System Efficiency Below Threshold (Bank 1)	—
*P0442	Evaporative Emission Control System Leak Detected (small leak)	Coolant temperature at start is less than 25°C (77°F).
*P0451	Evaporative Emission Control System Pressure Sensor Range/Performance	—
*P0456	Evaporative Emission Control System Leak Detected (very small leak)	Coolant temperature at start is less than 25°C (77°F).
*P0457	Evaporative Emission Control System Leak Detected (fuel cap loose/off)	Coolant temperature at start is less than 25°C (77°F).
*P0459	Evaporative Emission Control System Purge Control Valve Circuit High	—
P1443	Vent Control Solenoid Valve Function Problem	—
*P2096	Post Catalyst Fuel Trim System Too Lean Bank 1	Diagnosis completes in drive cycle B or C as well.
*P2097	Post Catalyst Fuel Trim System Too Rich Bank 1	Diagnosis completes in drive cycle B or C as well.

3. DRIVE CYCLE B (10 MINUTES IDLING)

NOTE:
Drive the vehicle at 10 km/h (6 MPH) or more before diagnosis.

DTC	Item	Condition
*P0111	Intake Air Temperature Circuit Range/Performance	Coolant temperature at start is less than 30°C (86°F).
*P0171	System Too Lean (Bank 1)	Diagnosis completes in drive cycle A or C as well.
*P0172	System Too Rich (Bank 1)	Diagnosis completes in drive cycle A or C as well.
*P0301	Cylinder 1 Misfire Detected	Diagnosis completes in drive cycle A or C as well.
*P0302	Cylinder 2 Misfire Detected	Diagnosis completes in drive cycle A or C as well.
*P0303	Cylinder 3 Misfire Detected	Diagnosis completes in drive cycle A or C as well.
*P0304	Cylinder 4 Misfire Detected	Diagnosis completes in drive cycle A or C as well.
*P0464	Fuel Level Sensor Circuit Intermittent	—
*P0483	Cooling Fan Rationality Check	—
*P0506	Idle Control System RPM Lower Than Expected	—
*P0507	Idle Control System RPM Higher Than Expected	—
*P2096	Post Catalyst Fuel Trim System Too Lean (Bank 1)	Diagnosis completes in drive cycle A or C as well.
*P2097	Post Catalyst Fuel Trim System Too Rich (Bank 1)	Diagnosis completes in drive cycle A or C as well.

4. DRIVE CYCLE C (DRIVE ACCORDING TO THE FOLLOWING DRIVE PATTERN)

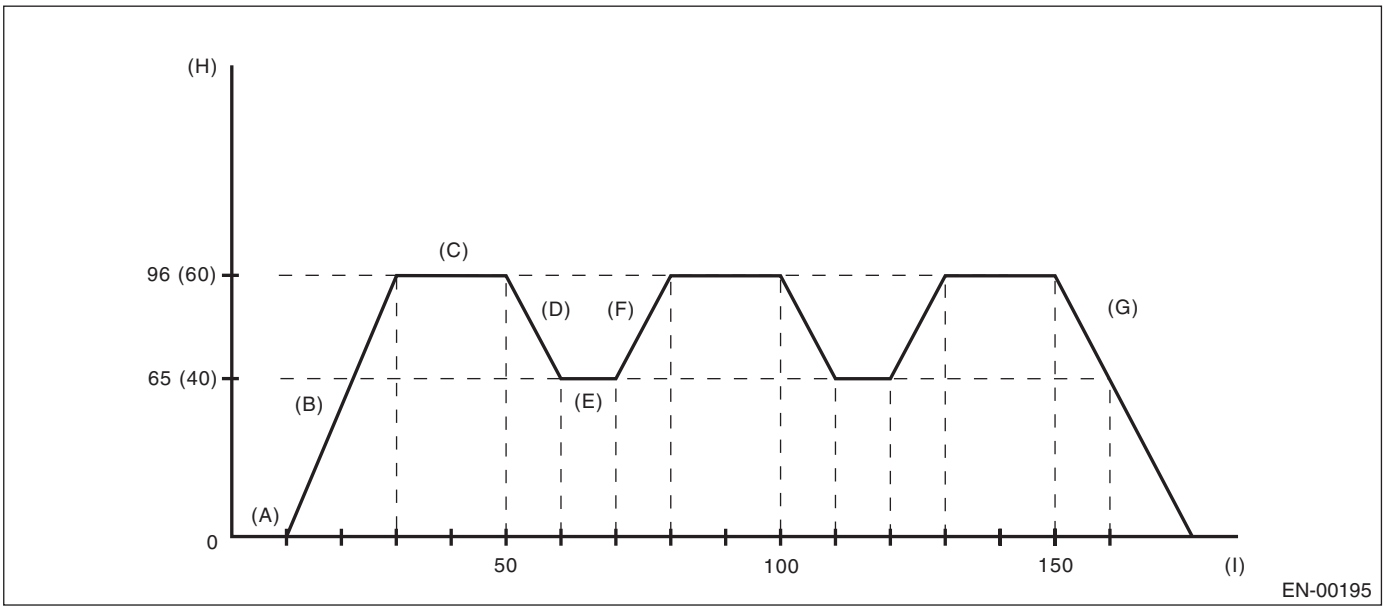

(A) Idle engine for 1 minute.
(B) Accelerate to 96 km/h (60 MPH) within 20 seconds.
(C) Drive vehicle at 96 km/h (60 MPH) for 20 seconds.
(D) Decelerate with fully closed throttle to 65 km/h (40 MPH).
(E) Drive vehicle at 65 km/h (40 MPH) for 10 seconds.
(F) Accelerate to 96 km/h (60 MPH) within 10 seconds.
(G) Stop vehicle with throttle fully closed.
(H) km/h (MPH)
(I) Second.

DTC	Item	Condition
*P0030	HO2S Heater Control Circuit (Bank 1 Sensor 1)	—
*P0068	Manifold Pressure sensor Range/Performance	—
*P0101	Mass or Volume Air Flow Circuit Range/Performance	—
P0134	O2 Sensor Circuit No Activity Detected (Bank 1 Sensor 1)	—
*P0139	O2 Sensor Circuit Slow Response (Bank 1 Sensor 2)	—
*P0171	System too Lean (Bank 1)	Diagnosis completes in drive cycle A or B as well.
*P0172	System too Rich (Bank 1)	Diagnosis completes in drive cycle A or B as well.
*P0301	Cylinder 1 Misfire Detected	Diagnosis completes in drive cycle A or B as well.
*P0302	Cylinder 2 Misfire Detected	Diagnosis completes in drive cycle A or B as well.
*P0303	Cylinder 3 Misfire Detected	Diagnosis completes in drive cycle A or B as well.
*P0304	Cylinder 4 Misfire Detected	Diagnosis completes in drive cycle A or B as well.
*P0400	Exhaust Gas Recirculation	—
P1492	EGR Solenoid Valve Signal #1 Circuit Malfunction (Low Input)	—
P1493	EGR Solenoid Valve Signal #1 Circuit Malfunction (High Input)	—
P1494	EGR Solenoid Valve Signal #2 Circuit Malfunction (Low Input)	—
P1495	EGR Solenoid Valve Signal #2 Circuit Malfunction (High Input)	—
P1496	EGR Solenoid Valve Signal #3 Circuit Malfunction (Low Input)	—
P1497	EGR Solenoid Valve Signal #3 Circuit Malfunction (High Input)	—
P1498	EGR Solenoid Valve Signal #4 Circuit Malfunction (Low Input)	—
P1499	EGR Solenoid Valve Signal #5 Circuit Malfunction (High Input)	—

DTC	Item	Condition
*P2096	Post Catalyst Fuel Trim System Too Lean (Bank 1)	Diagnosis completes in drive cycle A or B as well.
*P2097	Post Catalyst Fuel Trim System Too Rich (Bank 1)	Diagnosis completes in drive cycle A or B as well.

5. DRIVE CYCLE D

• DRIFT DIAGNOSIS

1) Make sure that the engine coolant temperature at engine starting is less than 30°C (86°F).
2) Make sure that fuel of more than 9.6 ℓ (2.5 US gal, 2.1 Imp gal) remains and the battery voltage is more than 10.9 V.
3) Make sure that the engine coolant temperature rises for more than 10°C (50°F) from the level of engine starting and is also more than 75°C (167°F).
4) Idle the engine for more than 120 seconds in the condition of step 3.

• STUCK DIAGNOSIS

1) Make sure that the battery voltage is more than 10.9 V.
2) Perform the clear memory mode. <Ref. to EN(H4SO)(diag)-43, Clear Memory Mode.>
3) Drive the vehicle for the distance equal to fuel of 50 ℓ (13.2 US gal, 11 Imp gal).

NOTE:
• It is possible to drive intermittently.
• Do not disconnect the terminal of battery during diagnosis. (If disconnecting the terminal of battery, the data will be cleared.)

DTC	Item	Condition
P0181	Fuel Temperature Sensor “A” Circuit Range/Performance	—

6. DRIVE CYCLE E

1) Make sure that the battery voltage is more than 10.9 V.
2) Perform the clear memory mode. <Ref. to EN(H4SO)(diag)-43, Clear Memory Mode.>
3) Drive the vehicle for the distance equal to fuel of 30 ℓ (7.9 US gal, 6.6 Imp gal).

NOTE:
• It is possible to drive intermittently.
• Do not disconnect the terminal of battery during diagnosis. (If disconnecting the terminal of battery, the data will be cleared.)

DTC	Item	Condition
P0461	Fuel Level Sensor Circuit Range/Performance	—

13.Clear Memory Mode

A: OPERATION

1. SUBARU SELECT MONITOR (NORMAL MODE)

1) On the «Main Menu» display screen, select the {Each System Check} and press the [YES] key.
2) On the «System Selection Menu» display screen, select the {Engine} and press the [YES] key.
3) Press the [YES] key after the information of engine type has been displayed.
4) On the «Engine Diagnosis» display screen, select the {Memory Clear} and press the [YES] key.
5) When the “Done” and “Turn Ignition Switch OFF” are shown on the display screen, turn the ignition switch to OFF and then Subaru Select Monitor switch to OFF.

NOTE:
• Initial diagnosis of electronic control throttle is performed after memory clearance. For this reason, start the engine after 10 seconds or more have elapsed since the ignition switch was turned to ON.
• For detailed operation procedure, refer to “SUBARU SELECT MONITOR OPERATION MANUAL”.

2. SUBARU SELECT MONITOR (OBD MODE)

1) On the «Main Menu» display screen, select the {Each System Check} and press the [YES] key.
2) On the «System Selection Menu» display screen, select the {Engine} and press the [YES] key.
3) Press the [YES] key after the information of engine type has been displayed.
4) On the «Engine Diagnosis» display screen, select the {OBD System} and press the [YES] key.
5) On the «OBD Menu» display screen, select the {DTC Clear} and press the [YES] key.
6) When the “Perform Diagnostic Code(s) Clear?” is shown on the screen, press the [YES] key.
7) Turn the ignition switch to OFF and then turn the Subaru Select Monitor switch to OFF.

NOTE:
• Initial diagnosis of electronic control throttle is performed after memory clearance. For this reason, start the engine after 10 seconds or more have elapsed since the ignition switch was turned to ON.
• For detailed operation procedure, refer to “SUBARU SELECT MONITOR OPERATION MANUAL”.

3. GENERAL SCAN TOOL

For clear memory procedures using general scan tool, refer to general scan tool instruction manual.

NOTE:
Initial diagnosis of electronic control throttle is performed after memory clearance. For this reason, start the engine after 10 seconds or more have elapsed since the ignition switch was turned to ON.

14.Compulsory Valve Operation Check Mode

A: OPERATION

1) Prepare the Subaru Select Monitor kit. <Ref. to EN(H4SO)(diag)-7, PREPARATION TOOL, General Description.>

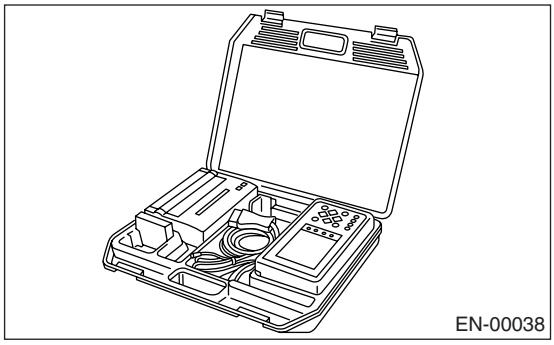

2) Connect the diagnosis cable to Subaru Select Monitor.
3) Insert the cartridge to Subaru Select Monitor. <Ref. to EN(H4SO)(diag)-7, PREPARATION TOOL, General Description.>

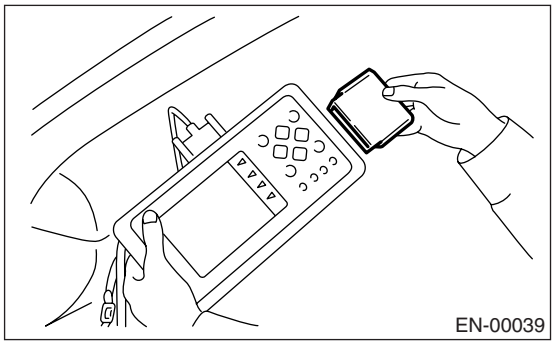

4) Connect the test mode connector (A) located at the lower portion of glove box.

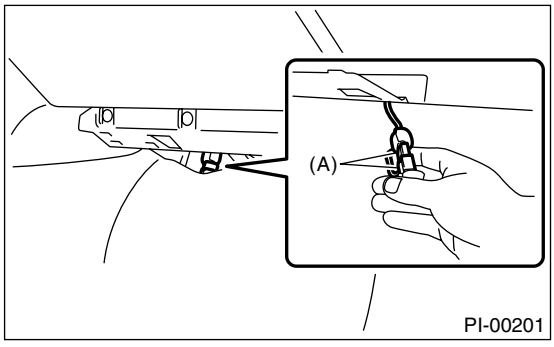

5) Connect the Subaru Select Monitor to data link connector located in the lower portion of instrument panel (on the driver's side).

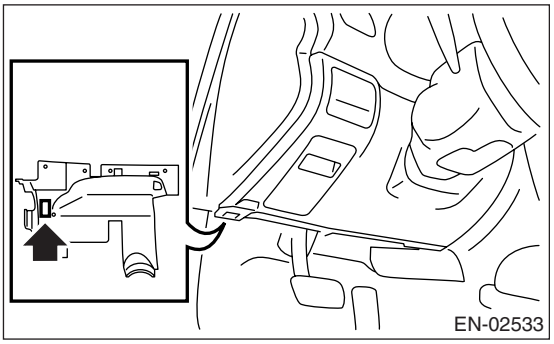

CAUTION:
Do not connect the scan tools except for Subaru Select Monitor or general scan tool.

6) Turn the ignition switch to ON (engine OFF) and turn Subaru Select Monitor switch to ON.

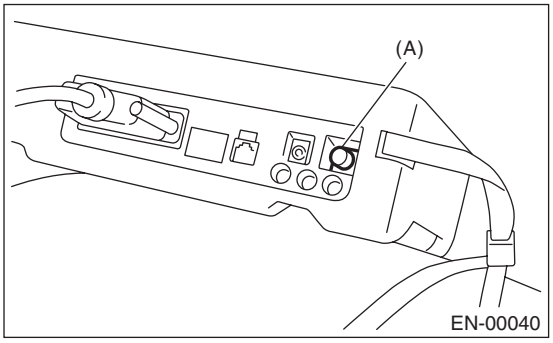

(A) Power switch

7) On the «Main Menu» display screen, select the {Each System Check} and press the [YES] key.
8) On the «System Selection Menu» display screen, select the {Engine} and press the [YES] key.
9) Press the [YES] key after the information of engine type has been displayed.
10) On the «Engine Diagnosis» display screen, select the {System Operation Check Mode} and press the [YES] key.
11) On the «System Operation Check Mode» display screen, select the {Actuator ON/OFF Operation} and press the [YES] key.
12) Select the desired compulsory actuator on the «Actuator ON/OFF Operation» display screen and press the [YES] key.
13) Pressing the [NO] key completes the compulsory operation check mode. The display will then return to the «Actuator ON/OFF Operation» screen.

• A list of support data is shown in the following table.

Contents	Display
Compulsory fuel pump relay operation check	Fuel Pump Relay
Compulsory radiator fan relay operation check	Radiator Fan Relay
Compulsory air conditioning relay operation check	A/C Compressor Relay
Compulsory purge control solenoid valve operation check	CPC Solenoid Valve
Compulsory pressure control solenoid valve operation check	PCV Solenoid Valve
Compulsory air assist vent control solenoid valve operation check	Vent Control Solenoid Valve
Compulsory fuel tank sensor control solenoid valve operation check	Fuel Tank Sensor Control Valve

NOTE:
• The following parts will be displayed but not functional.

Display
EGR Solenoid Valve
AAI Solenoid Valve
ASV Solenoid Valve
FICD Solenoid
Pressure Switching Sol. 1
Pressure Switching Sol. 2
Turbocharger Wastegate Solenoid
EXH. Bypass Control Permit Flag

• For detailed operation procedure, refer to SUBARU SELECT MONITOR OPERATION MANUAL.

15.Malfunction Indicator Light

A: PROCEDURE

1. Activation of malfunction indicator light. <Ref. to EN(H4SO)(diag)-47, ACTIVATION OF MALFUNCTION INDICATOR LIGHT, Malfunction Indicator Light.>
↓
2. Check that the malfunction indicator light does not come on. <Ref. to EN(H4SO)(diag)-48, MALFUNCTION INDICATOR LIGHT DOES NOT COME ON, Malfunction Indicator Light.>
↓
3. Check that the malfunction indicator light does not go off. <Ref. to EN(H4SO)(diag)-50, MALFUNCTION INDICATOR LIGHT DOES NOT GO OFF., Malfunction Indicator Light.>
↓
4. Check that the malfunction indicator light does not blink. <Ref. to EN(H4SO)(diag)-51, MALFUNCTION INDICATOR LIGHT DOES NOT BLINK., Malfunction Indicator Light.>
↓
5. Check that the malfunction indicator light remains blinking. <Ref. to EN(H4SO)(diag)-53, MALFUNCTION INDICATOR LIGHT REMAINS BLINKING., Malfunction Indicator Light.>

B: ACTIVATION OF MALFUNCTION INDICATOR LIGHT

1) When the ignition switch is turned to ON (engine OFF), the malfunction indicator light (A) in the combination meter illuminates.

NOTE:
If the malfunction indicator light does not illuminate, perform the diagnosis of malfunction indicator light circuit or the combination meter circuit. <Ref. to EN(H4SO)(diag)-48, MALFUNCTION INDICATOR LIGHT DOES NOT COME ON, Malfunction Indicator Light.>

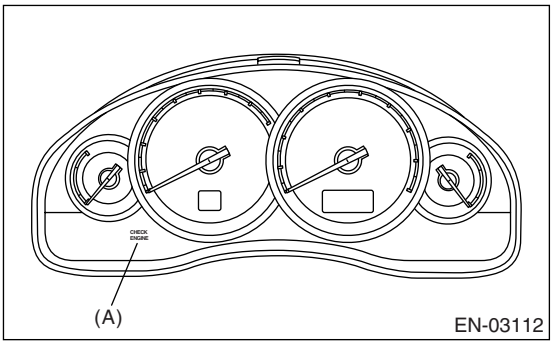

2) After starting the engine, the malfunction indicator light goes out. If it does not, either the engine or emission control system is malfunctioning.

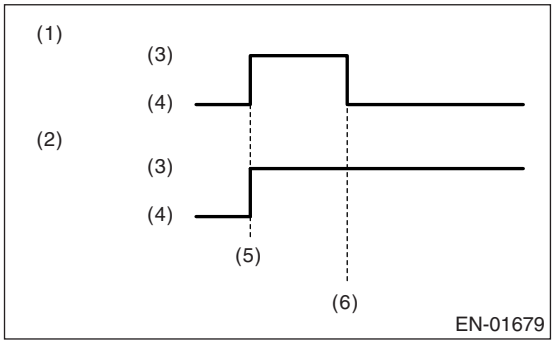

(1) No faulty
(2) Trouble occurs
(3) ON
(4) OFF
(5) Ignition switch ON
(6) Engine start

3) Turn the ignition switch to OFF and connect the test mode connector.

(1) When the ignition switch is turned to ON (engine OFF), the malfunction indicator light illuminates.

(2) Malfunction indicator light blinks at a cycle of 0.5 Hz after starting the engine. (During diagnosis)

(3) Malfunction indicator light blinks at a cycle of 3 Hz after diagnosis if there is no trouble. Malfunction indicator light illuminates if faulty.

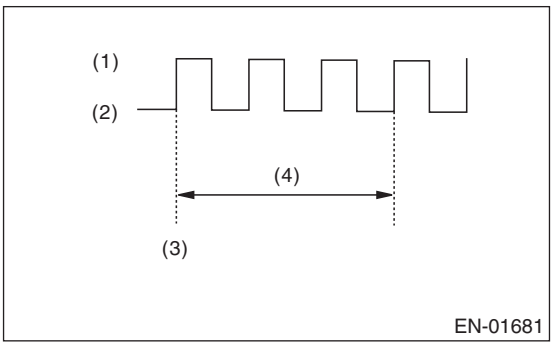

(1) ON
(2) OFF
(3) Ignition switch ON
(4) 1 second

C: MALFUNCTION INDICATOR LIGHT DOES NOT COME ON

DIAGNOSIS:
The malfunction indicator light circuit is open or shorted.
TROUBLE SYMPTOM:
When the ignition switch is turned to ON (engine OFF), malfunction indicator light does not come on.
WIRING DIAGRAM:

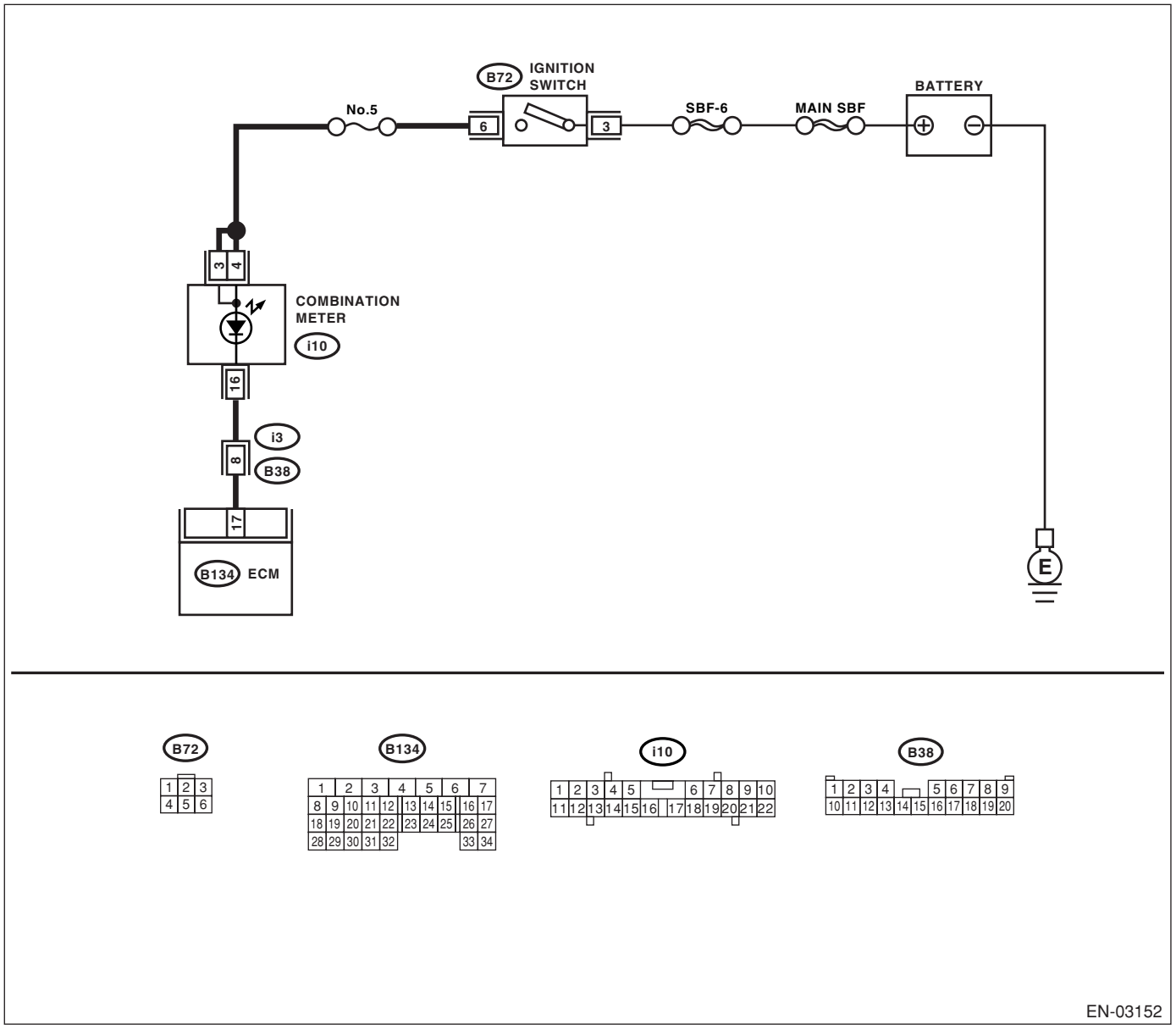

	Step	Check	Yes	No
1	**CHECK OUTPUT SIGNAL FROM ECM.** 1) Turn the ignition switch to ON. 2) Measure the voltage between ECM connector and chassis ground. ***Connector & terminal*** ***(B134) No. 17 (+) — Chassis ground (−):***	Is the voltage less than 1 V?	Go to step **4.**	Go to step **2.**
2	**CHECK POOR CONTACT.** Check for poor connection by shaking or pulling ECM connector and harness.	Does the malfunction indicator light illuminate?	Repair the poor contact in ECM connector.	Go to step **3.**
3	**CHECK ECM CONNECTOR.** Check the connection of ECM connector.	Is the ECM connector correctly connected?	Replace the ECM. <Ref. to FU(H4SO)-35, Engine Control Module (ECM).>	Repair the connection of ECM connector.
4	**CHECK HARNESS BETWEEN COMBINATION METER AND ECM CONNECTOR.** 1) Turn the ignition switch to OFF. 2) Remove the combination meter. <Ref. to IDI-15, Combination Meter.> 3) Disconnect the connector from ECM and combination meter. 4) Measure the resistance of harness between ECM and combination meter connector. ***Connector & terminal*** ***(B134) No. 17 — (i10) No. 16:***	Is the resistance less than 1 Ω?	Go to step **5.**	Repair the harness and connector. NOTE: In this case, repair the following: • Open circuit in harness between ECM and combination meter connector • Poor contact in coupling connector
5	**CHECK POOR CONTACT.** Check poor contact in combination meter connector.	Is there poor contact in combination meter connector?	Repair the poor contact in combination meter connector.	Go to step **6.**
6	**CHECK HARNESS BETWEEN COMBINATION METER AND IGNITION SWITCH CONNECTOR.** 1) Turn the ignition switch to ON. 2) Measure the voltage between combination meter connector and chassis ground. ***Connector & terminal*** ***(i10) No. 3 (+) — Chassis ground (−):*** ***(i10) No. 4 (+) — Chassis ground (−):***	Is the voltage more than 10 V?	Replace the board of combination meter. <Ref. to IDI-15, Combination Meter.>	Check the following and repair if necessary. NOTE: • Blown out fuse (No. 5) • Open or short circuit in harness between fuse (No. 5) and battery terminal • Poor contact in ignition switch connector

D: MALFUNCTION INDICATOR LIGHT DOES NOT GO OFF.

DIAGNOSIS:
The malfunction indicator light circuit is shorted.

TROUBLE SYMPTOM:
Although malfunction indicator light comes on when the engine runs, DTC is not shown on the Subaru Select Monitor display.

WIRING DIAGRAM:

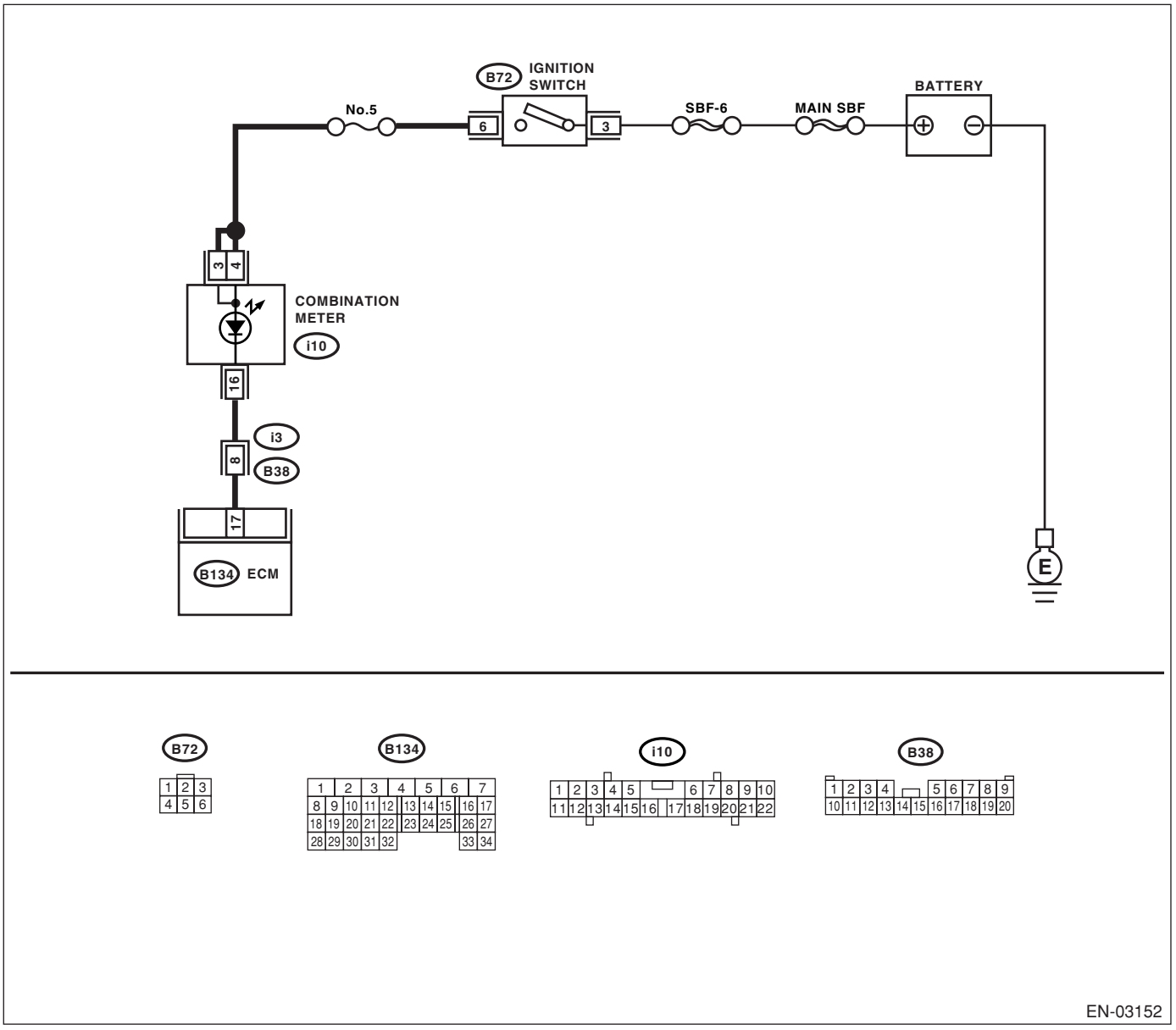

Step		Check	Yes	No
1	**CHECK HARNESS BETWEEN COMBINATION METER AND ECM CONNECTOR.** 1) Turn the ignition switch to OFF. 2) Disconnect the connector from ECM. 3) Turn the ignition switch to ON.	Does the malfunction indicator light illuminate?	Repair the short circuit in harness between combination meter and ECM connector.	Replace the ECM. <Ref. to FU(H4SO)-35, Engine Control Module (ECM).>

E: MALFUNCTION INDICATOR LIGHT DOES NOT BLINK.

DIAGNOSIS:

- The malfunction indicator light circuit is open or shorted.
- Test mode connector circuit is in open.

TROUBLE SYMPTOM:

Malfunction indicator light does not blink during inspection mode.

WIRING DIAGRAM:

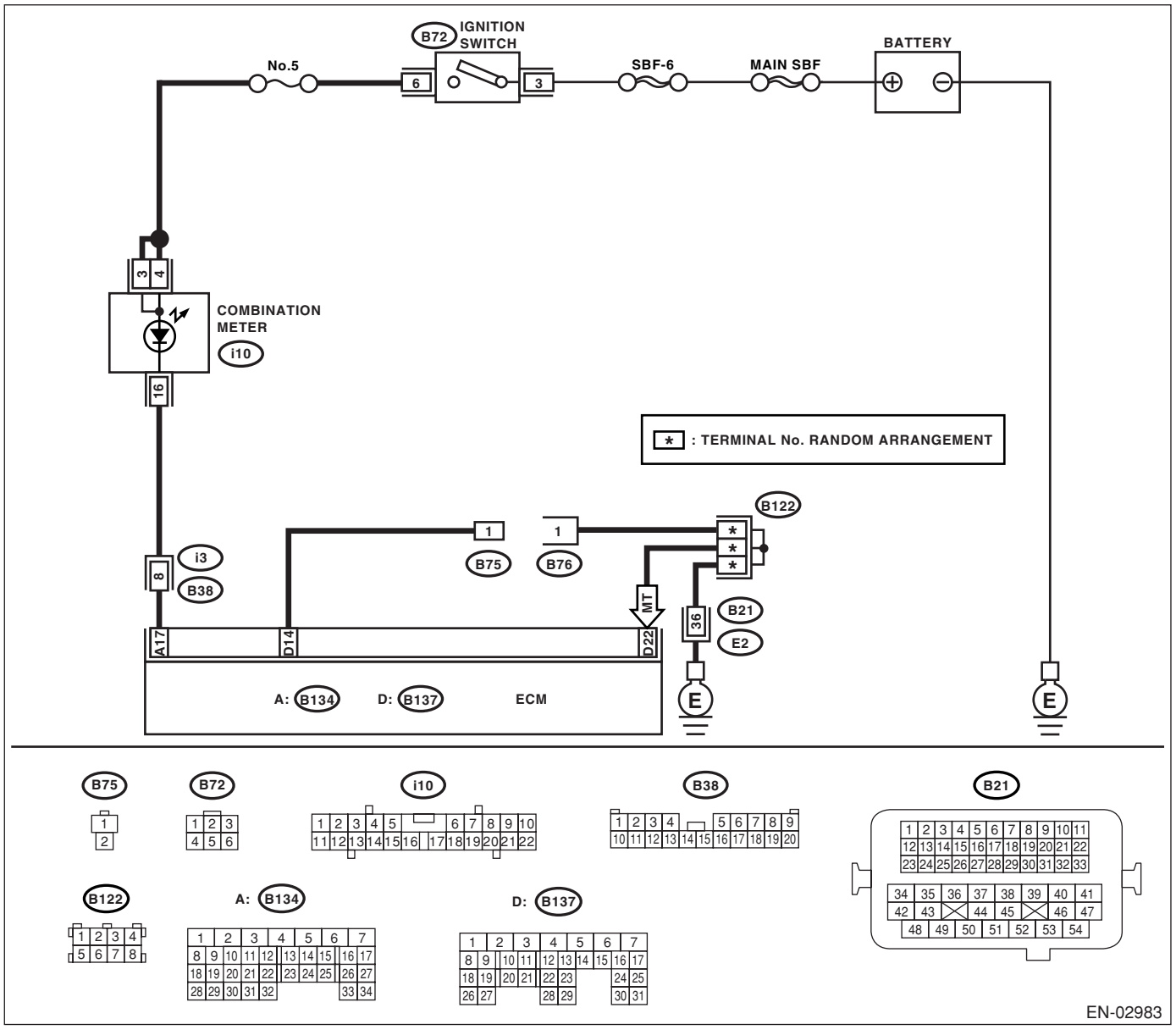

	Step	Check	Yes	No
1	**CHECK STATUS OF MALFUNCTION INDICATOR LIGHT.** 1) Turn the ignition switch to OFF. 2) Disconnect the test mode connector. 3) Turn the ignition switch to ON. (engine OFF)	Does the malfunction indicator light illuminate?	Go to step **2.**	Repair the malfunction indictor light circuit. <Ref. to EN(H4SO)(diag)-48, MALFUNCTION INDICATOR LIGHT DOES NOT COME ON, Malfunction Indicator Light.>
2	**CHECK HARNESS BETWEEN COMBINATION METER AND ECM CONNECTOR.** 1) Turn the ignition switch to OFF. 2) Disconnect the connector from ECM. 3) Turn the ignition switch to ON.	Does malfunction indicator light illuminate?	Repair the short circuit in harness between combination meter and ECM connector.	Go to step **3.**
3	**CHECK HARNESS BETWEEN TEST MODE CONNECTOR AND CHASSIS GROUND.** 1) Turn the ignition switch to OFF. 2) Disconnect the connector from ECM. 3) Measure the resistance of harness between test mode connector and chassis ground. ***Connector & terminal*** ***(B76) No. 1 — Chassis ground:***	Is the resistance less than 1 Ω?	Go to step **4.**	Repair the harness and connector. NOTE: In this case, repair the following: • Open circuit in harness between test mode connector and chassis ground
4	**CHECK POOR CONTACT.** Check poor contact in ECM connector.	Is there poor contact in ECM connector?	Repair the poor contact in ECM connector.	Go to step **5.**
5	**CHECK HARNESS BETWEEN ECM AND TEST MODE CONNECTOR.** 1) Connect the test mode connector. 2) Measure the resistance of harness between ECM and chassis ground. ***Connector & terminal*** ***(B137) No. 14 — Chassis ground:***	Is the resistance less than 1 Ω?	Go to step **6.**	Repair the open circuit in harness between ECM and test mode connector.
6	**CHECK POOR CONTACT.** Check poor contact in ECM connector.	Is there poor contact in ECM connector?	Repair the poor contact in ECM connector.	Replace the ECM. <Ref. to FU(H4SO)-35, Engine Control Module (ECM).>

F: MALFUNCTION INDICATOR LIGHT REMAINS BLINKING.

DIAGNOSIS:
Test mode connector circuit is shorted.
TROUBLE SYMPTOM:
Malfunction indicator light blinks when test mode connector is not connected.
WIRING DIAGRAM:

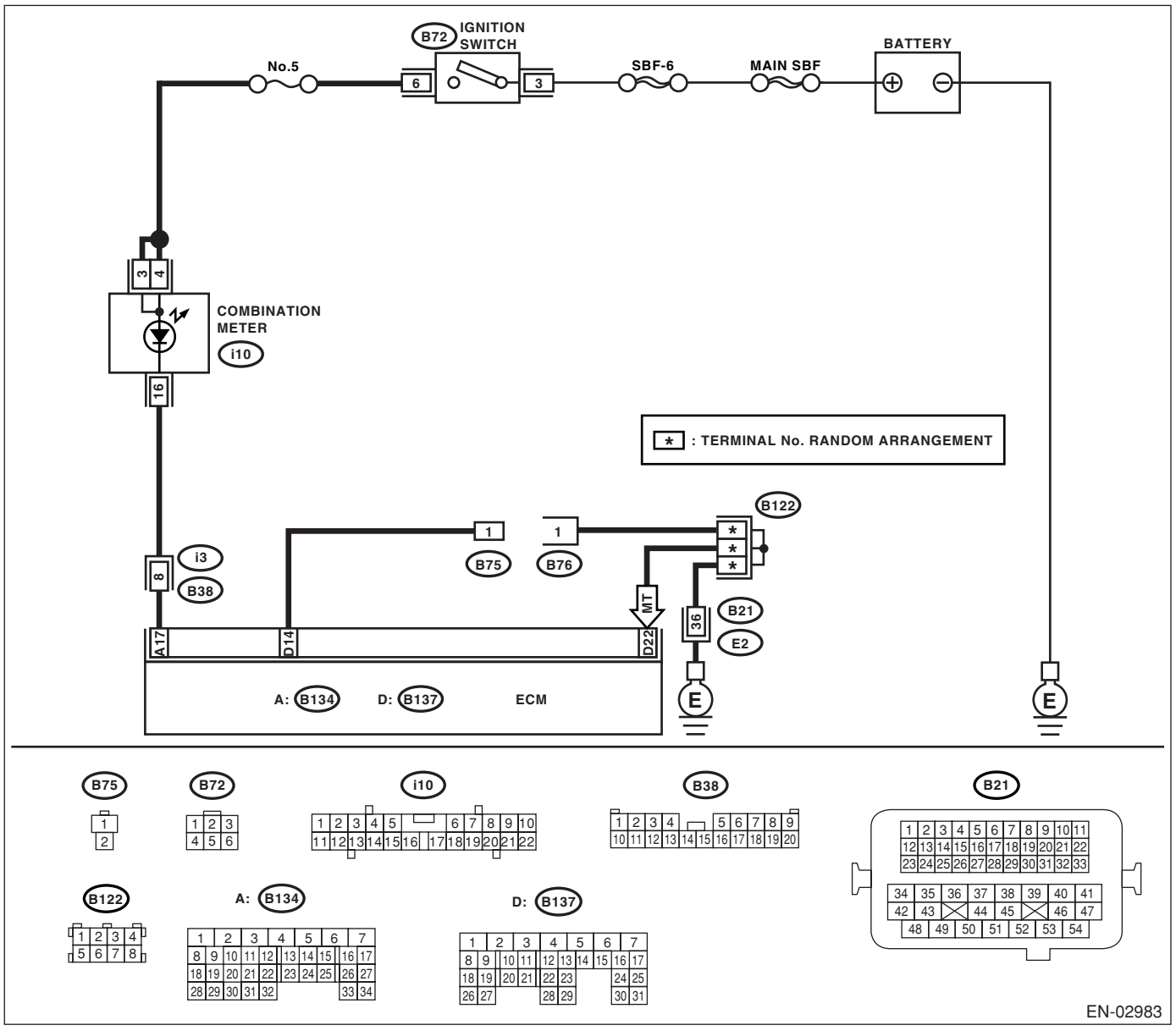

	Step	Check	Yes	No
1	**CHECK TEST MODE CONNECTOR.** 1) Disconnect the test mode connector. 2) Turn the ignition switch to ON.	Does the malfunction indicator light blink?	Go to step **2.**	System is in good order. NOTE: Malfunction indicator light blinks when test mode connector is connected.
2	**CHECK HARNESS BETWEEN ECM CONNECTOR AND CHASSIS GROUNDING TERMINAL.** 1) Turn the ignition switch to OFF. 2) Disconnect the connector from ECM. 3) Measure the resistance of harness between ECM connector and chassis ground. ***Connector & terminal*** ***(B137) No. 14 — Chassis ground:***	Is the resistance less than 5 Ω?	Repair the short circuit in harness between ECM and test mode connector.	Replace the ECM. <Ref. to FU(H4SO)-35, Engine Control Module (ECM).>

16.Diagnostics for Engine Starting Failure

A: PROCEDURE

1. Check for fuel amount.
↓
2. Inspection of starter motor circuit. <Ref. to EN(H4SO)(diag)-56, STARTER MOTOR CIRCUIT, Diagnostics for Engine Starting Failure.>
↓
3. Inspection of ECM power supply and ground line. <Ref. to EN(H4SO)(diag)-60, CHECK POWER SUPPLY AND GROUND LINE OF ENGINE CONTROL MODULE (ECM), Diagnostics for Engine Starting Failure.>
↓
4. Inspection of ignition control system. <Ref. to EN(H4SO)(diag)-62, IGNITION CONTROL SYSTEM, Diagnostics for Engine Starting Failure.>
↓
5. Inspection of fuel pump circuit. <Ref. to EN(H4SO)(diag)-65, FUEL PUMP CIRCUIT, Diagnostics for Engine Starting Failure.>
↓
6. Inspection of fuel injector circuit. <Ref. to EN(H4SO)(diag)-68, FUEL INJECTOR CIRCUIT, Diagnostics for Engine Starting Failure.>

B: STARTER MOTOR CIRCUIT

CAUTION:
After repair or replacement of faulty parts, conduct Clear Memory Mode <Ref. to EN(H4SO)(diag)-43, Clear Memory Mode.> and Inspection Mode <Ref. to EN(H4SO)(diag)-35, Inspection Mode.>.

WIRING DIAGRAM:

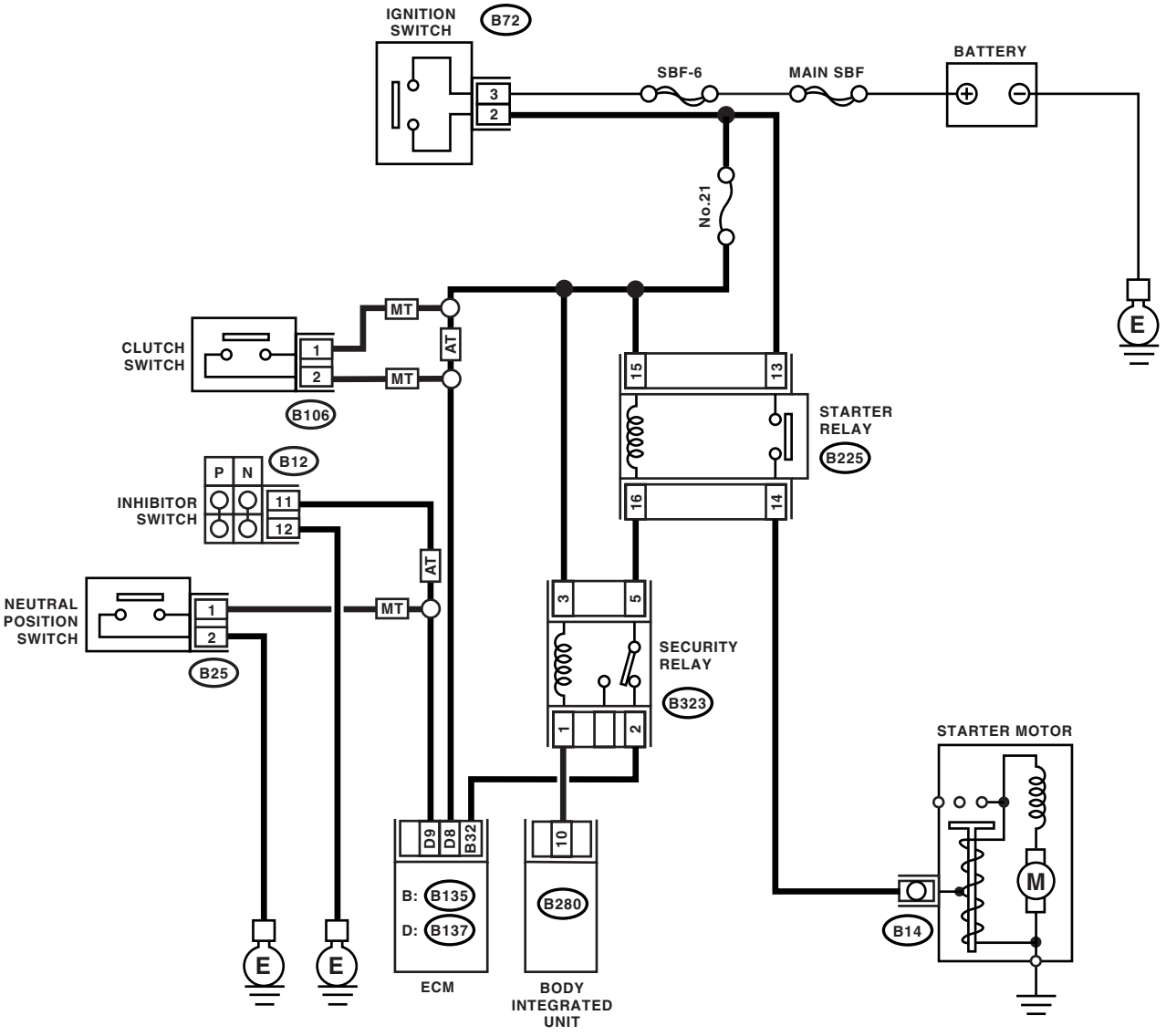

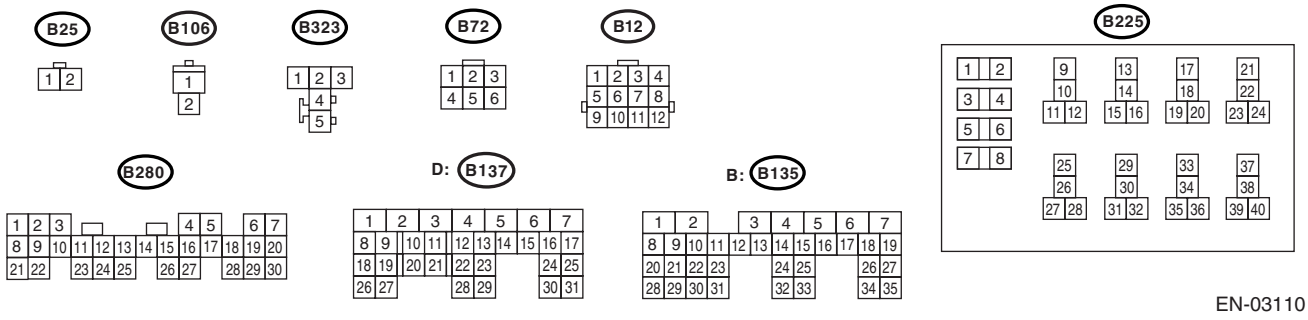

EN-03110

	Step	Check	Yes	No
1	**CHECK BATTERY.** Check the battery voltage.	Is the voltage more than 12 V?	Go to step **2.**	Charge or replace the battery.
2	**CHECK OPERATION OF STARTER MOTOR.** NOTE: Check the security alarm is not sounding.	Does the starter motor operate?	Go to step **3.**	Go to step **4.**
3	**CHECK DTC.**	Is DTC displayed? <Ref. to EN(H4SO)(diag)-34, OPERATION, Read Diagnostic Trouble Code (DTC).>	Inspect the relevant DTC using List of Diagnostic Trouble Code (DTC). <Ref. to EN(H4SO)(diag)-70, List of Diagnostic Trouble Code (DTC).>	Repair the poor contact in ECM connector.
4	**CHECK INPUT SIGNAL FOR STARTER MOTOR.** 1) Turn the ignition switch to OFF. 2) Disconnect the connector from starter motor. 3) Turn the ignition switch to START. 4) Measure the power supply voltage between starter motor connector terminal and engine ground. ***Connector & terminal*** ***(B14) No. 1 (+) — Engine ground (−):*** NOTE: • On AT model, set the selector lever in the "P" or "N" range. • On MT model, depress the clutch pedal.	Is the voltage more than 10 V?	Check the starter motor. <Ref. to SC(H4SO)-6, Starter.>	Go to step **5.**
5	**CHECK HARNESS BETWEEN BATTERY AND IGNITION SWITCH CONNECTOR.** 1) Disconnect the connector from ignition switch. 2) Measure the power supply voltage between ignition switch connector and chassis ground. ***Connector & terminal*** ***(B72) No. 3 (+) — Chassis ground (−):***	Is the voltage more than 10 V?	Go to step **6.**	Repair the open or ground short circuit in harness between ignition switch and battery, and check fuse SBF No. 6 and MAIN SBF.
6	**CHECK IGNITION SWITCH.** 1) Disconnect the connector from ignition switch. 2) Measure the resistance between ignition switch terminals after turning the ignition switch to START position. ***Terminals*** ***No. 2 — No. 3:***	Is the resistance less than 5 Ω?	Go to step **7.**	Replace the ignition switch.
7	**CHECK INPUT VOLTAGE OF STARTER RELAY.** 1) Turn the ignition switch to OFF. 2) Disconnect the connector from starter relay. 3) Connect the connector to ignition switch. 4) Measure the input voltage between starter relay connector and chassis ground after turning the ignition switch to START position. ***Connector & terminal*** ***(B225) No. 13 (+) — Chassis ground (−):*** ***(B225) No. 15 (+) — Chassis ground (−):***	Is the voltage more than 10 V?	Go to step **8.**	Repair the open or ground short circuit in harness between starter fan relay and ignition switch.

	Step	Check	Yes	No
8	**CHECK STARTER RELAY.** 1) Connect the battery to starter relay terminals No. 15 and No. 16. 2) Measure the resistance between starter relay terminals. ***Terminals*** ***No. 13 — No. 14:***	Is the resistance less than 1 Ω?	Go to step **9.**	Replace the starter relay.
9	**CHECK HARNESS BETWEEN STARTER RELAY AND STARTER MOTOR** 1) Disconnect the connector from starter motor. 2) Measure the resistance of harness between starter relay and starter motor. ***Connector & terminal*** ***(B225) No. 14 — (B14) No. 1:***	Is the resistance less than 1 Ω?	Go to step **10.**	Replace the open or ground short circuit of harness between starter relay and starter motor.
10	**CHECK HARNESS BETWEEN STARTER RELAY AND SECURITY RELAY.** 1) Disconnect the connector from security relay. 2) Measure the resistance of harness between starter relay and security relay. ***Connector & terminal*** ***(B225) No. 16 — (B323) No. 5:***	Is the resistance less than 1 Ω?	Go to step **11.**	Replace the open or ground short circuit of harness between starter relay and security relay.
11	**CHECK INPUT VOLTAGE OF SECURITY RELAY.** 1) Turn the ignition switch to START. 2) Measure the input voltage between security relay connector and chassis ground. ***Connector & terminal*** ***(B323) No. 8 (+) — Chassis ground (−):***	Is the voltage more than 10 V?	Go to step **12.**	Repair the open or ground short circuit of harness between security relay and ignition switch.
12	**CHECK SECURITY RELAY.** 1) Turn the ignition switch to OFF. 2) Measure the resistance between security relay terminals. ***Terminal*** ***No. 2 — No. 5:***	is the resistance less than 1 Ω?	Go to step **13.**	Replace the security relay.
13	**CHECK HARNESS BETWEEN ECM AND SECURITY RELAY.** 1) Disconnect the connector from ECM. 2) Measure the resistance of harness connector between ECM and security relay. ***Connector & terminal*** ***(B135) No. 32 — (B323) No. 2:***	Is the resistance less than 1 Ω?	Go to step **14.**	Repair the open or ground short circuit of harness between ECM and security relay.
14	**CHECK HARNESS BETWEEN BODY INTEGRATED UNIT AND SECURITY RELAY.** 1) Disconnect the connector from body integrated unit. 2) Measure the resistance of harness connector between body integrated unit and security relay. ***Connector & terminal*** ***(B280) No. 10 — (B323) No. 1:***	Is the resistance less than 1 Ω?	Go to step **15.**	Repair the open or ground short circuit of harness between body integrated unit and security relay.
15	**CHECK TRANSMISSION TYPE.**	Is the transmission type AT?	Go to step **16.**	Go to step **20.**
16	**CHECK INPUT VOLTAGE OF ECM.** 1) Turn the ignition switch to START. 2) Measure the input input voltage between ECM connector and chassis ground. ***Connector & terminal*** ***(B137) No. 8 (+) — Chassis ground (−):***	Is the voltage more than 10 V?	Go to step **17.**	Repair the open or ground short circuit of harness between ECM and ignition switch.

	Step	Check	Yes	No
17	**CHECK HARNESS ECM AND INHIBITOR SWITCH.** 1) Turn the ignition switch to OFF. 2) Disconnect the connector from inhibitor switch. 3) Measure the resistance of harness connector between ECM and inhibitor switch. ***Connector & terminal*** ***(B137) No. 9 — (B12) No. 11:***	Is the resistance less than 1 Ω?	Go to step **18.**	Repair the open or ground short circuit of harness between ECM and inhibitor switch.
18	**CHECK GROUND CIRCUIT OF INHIBITOR SWITCH.** Measure the resistance between inhibitor switch and chassis ground. ***Connector & terminal*** ***(B12) No. 12 — Chassis ground:***	Is the resistance less than 5 Ω?	Go to step **19.**	Repair the open circuit of ground circuit.
19	**CHECK INHIBITOR SWITCH.** 1) Place the shift lever except in “N” and “P” range. 2) Measure the resistance between inhibitor switch terminals. ***Terminal*** ***No. 11 — No. 12:***	Is the resistance more than 1 MΩ?	Correct with SOA service center	Replace the inhibitor switch.
20	**CHECK INPUT VOLTAGE OF ECM.** 1) Turn the ignition switch to START. 2) Measure the input voltage between ECM connector and chassis ground. ***Connector & terminal*** ***(B137) No. 8 (+) — Chassis ground (−):*** NOTE: Depress the clutch pedal.	Is the voltage more than 10 V?	Go to step **21.**	Repair the open or ground short circuit of harness between ECM and ignition switch.
21	**CHECK CLUTCH SWITCH.** 1) Turn the ignition switch to OFF. 2) Disconnect the connector from clutch switch. 3) Measure the resistance between clutch switch terminals with the clutch pedal depressed. ***Terminal*** ***No. 1 — No. 2:***	Is the resistance less than 1 Ω?	Go to step **22.**	Replace the clutch switch.
22	**CHECK HARNESS BETWEEN ECM AND NEUTRAL POSITION SWITCH.** 1) Disconnect the connector from neutral position switch. 2) Measure the resistance of harness connector between ECM and neutral position switch. ***Connector & terminal*** ***(B137) No. 9 — (B25) No. 1:***	Is the resistance less than 1 Ω?	Go to step **23.**	Repair the open or ground short circuit of harness between ECM and neutral position switch.
23	**CHECK GROUND CIRCUIT OF NEUTRAL POSITION SWITCH.** Measure the resistance of harness between neutral position switch and chassis ground. ***Connector & terminal*** ***(B25) No. 2 — Chassis ground:***	Is the resistance less than 5 Ω?	Go to step **24.**	Repair the open circuit of ground circuit.
24	**CHECK NEUTRAL POSITION SWITCH.** 1) Place the shift lever in “N” range. 2) Measure the resistance between neutral position switch connector terminals. ***Terminal*** ***No. 1 — No. 2:***	Is the resistance more than 1 MΩ?	Contact your SOA service center.	Replace the neutral position switch.

C: CHECK POWER SUPPLY AND GROUND LINE OF ENGINE CONTROL MODULE (ECM)

CAUTION:
After repair or replacement of faulty parts, conduct Clear Memory Mode <Ref. to EN(H4SO)(diag)-43, Clear Memory Mode.> and Inspection Mode <Ref. to EN(H4SO)(diag)-35, Inspection Mode.>.

WIRING DIAGRAM:

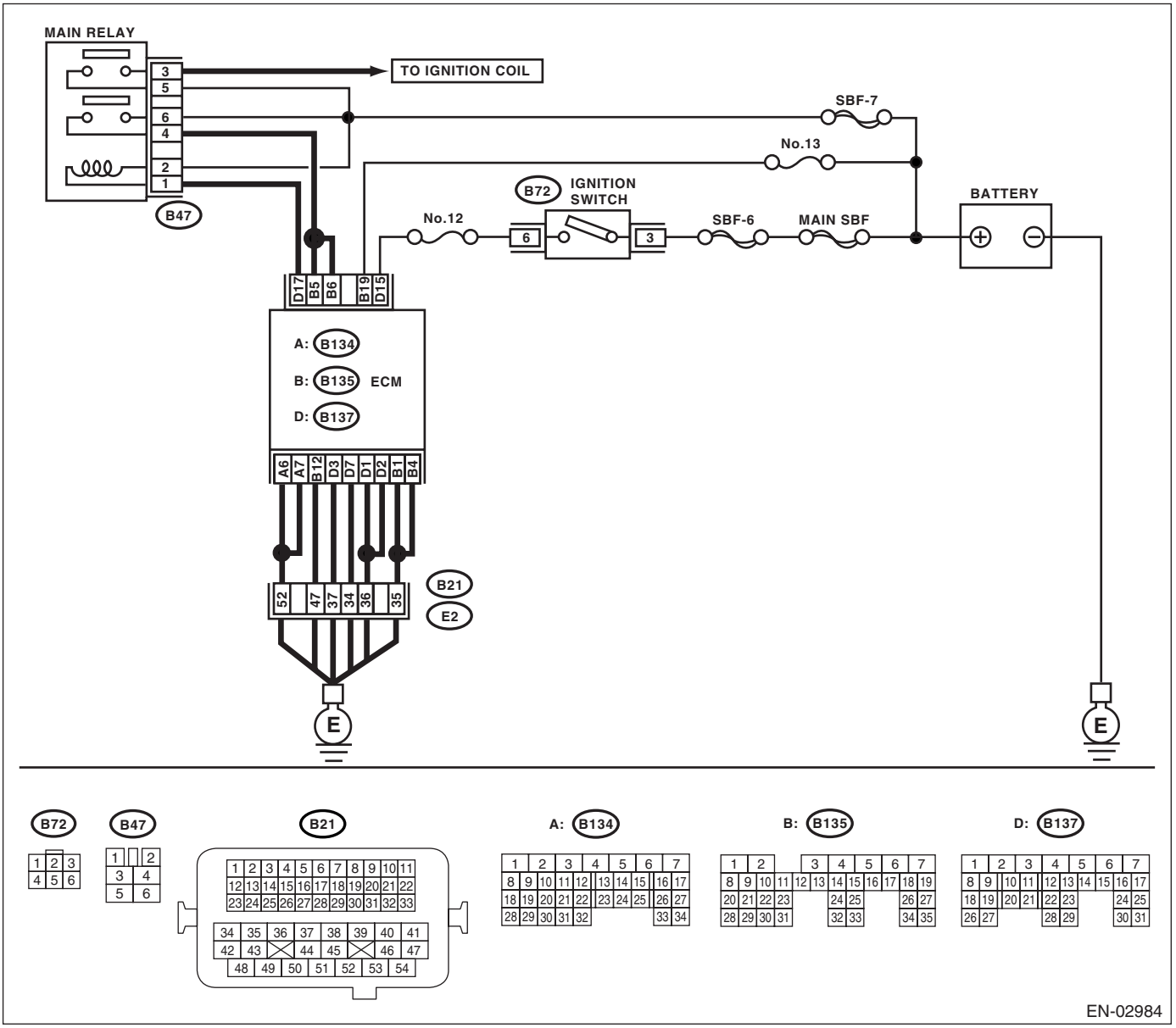

	Step	Check	Yes	No
1	**CHECK MAIN RELAY.** 1) Turn the ignition switch to OFF. 2) Remove the main relay. 3) Connect the battery to main relay terminals No. 1 and No. 2. 4) Measure the resistance between main relay terminals. ***Terminals*** ***No. 3 — No. 5:*** ***No. 4 — No. 6:***	Is the resistance less than 10 Ω?	Go to step **2.**	Replace the main relay.
2	**CHECK GROUND CIRCUIT FOR ECM.** 1) Disconnect the connector from ECM. 2) Measure the resistance of harness between ECM and chassis ground. ***Connector & terminal*** ***(B134) No. 6 — Chassis ground:*** ***(B134) No. 7 — Chassis ground:*** ***(B135) No. 1 — Chassis ground:*** ***(B135) No. 4 — Chassis ground:*** ***(B135) No. 12 — Chassis ground:*** ***(B137) No. 1 — Chassis ground:*** ***(B137) No. 2 — Chassis ground:*** ***(B137) No. 3 — Chassis ground:*** ***(B137) No. 7 — Chassis ground:***	Is the resistance less than 5 Ω?	Go to step **3.**	Repair the open circuit in harness between ECM connector and engine grounding terminal.
3	**CHECK INPUT VOLTAGE OF ECM.** Measure the voltage between ECM connector and chassis ground. ***Connector & terminal*** ***(B135) No. 19 (+) — Chassis ground (−):*** ***(B137) No. 15 (+) — Chassis ground (−):***	Is the voltage more than 10 V?	Go to step **4.**	Repair the open or ground short circuit of power supply circuit.
4	**CHECK INPUT VOLTAGE OF MAIN RELAY.** Measure the voltage between main relay connector and chassis ground. ***Connector & terminal*** ***(B47) No. 1 (+) — Chassis ground (−):*** ***(B47) No. 5 (+) — Chassis ground (−):*** ***(B47) No. 6 (+) — Chassis ground (−):***	Is the voltage more than 10 V?	Go to step **5.**	Repair the open or ground short circuit in harness of power supply circuit.
5	**CHECK INPUT VOLTAGE OF ECM.** 1) Turn the ignition switch to ON. 2) Measure the voltage between ECM connector and chassis ground. ***Connector & terminal*** ***(B135) No. 5 (+) — Chassis ground (−):*** ***(B135) No. 6 (+) — Chassis ground (−):*** ***(B137) No. 17 (+) — Chassis ground (−):***	Is the voltage more than 10 V?	Check ignition control system. <Ref. to EN(H4SO)(diag)-62, IGNITION CONTROL SYSTEM, Diagnostics for Engine Starting Failure.>	Repair the open or ground short circuit in harness between ECM connector and main relay connector.

D: IGNITION CONTROL SYSTEM

CAUTION:
After repair or replacement of faulty parts, conduct Clear Memory Mode <Ref. to EN(H4SO)(diag)-43, Clear Memory Mode.> and Inspection Mode <Ref. to EN(H4SO)(diag)-35, Inspection Mode.>.

WIRING DIAGRAM:

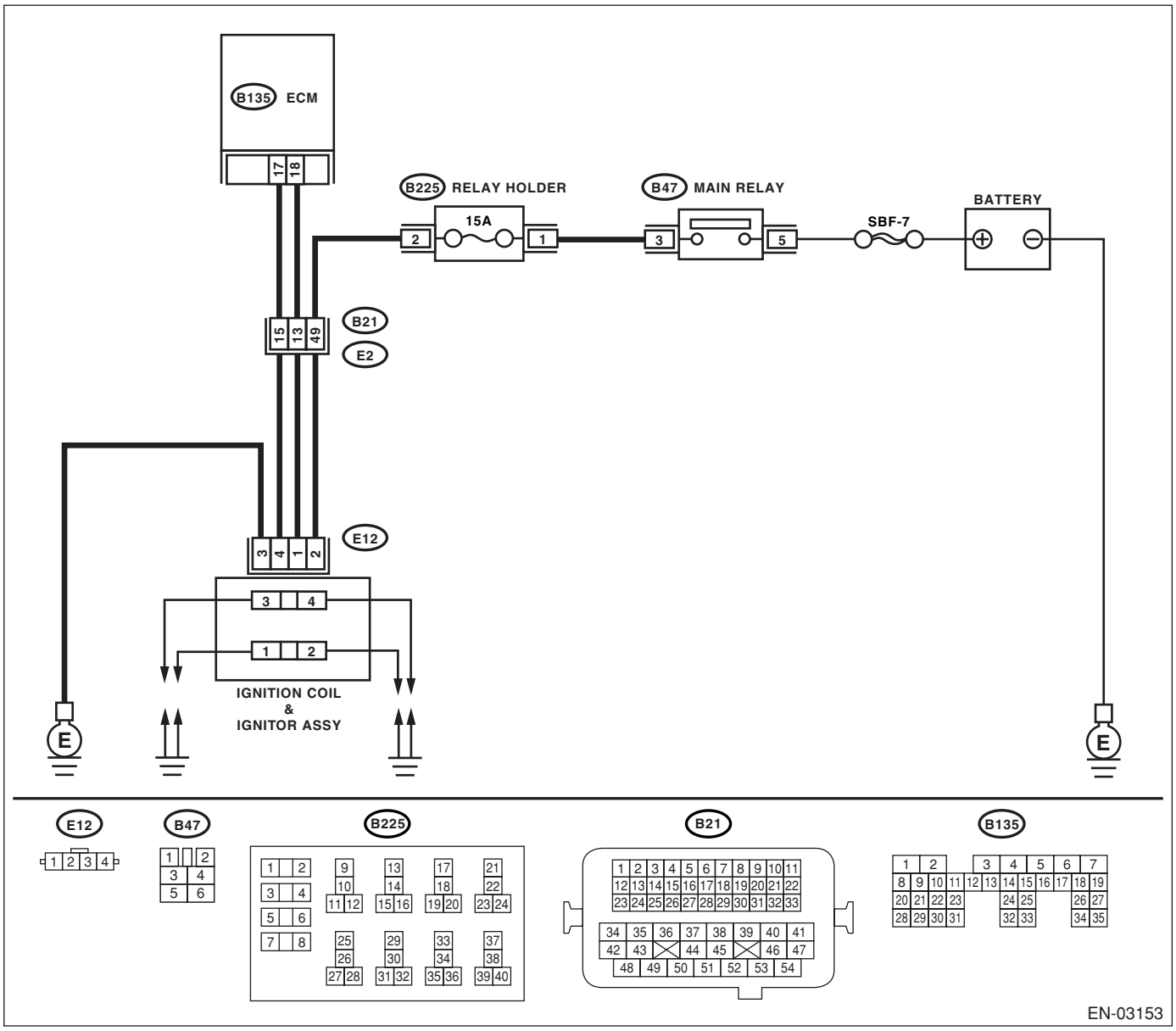

	Step	Check	Yes	No
1	**CHECK IGNITION SYSTEM FOR SPARKS.** 1) Remove the plug cord cap from each spark plug. 2) Install a new spark plug on plug cord cap. **CAUTION:** **Do not remove the spark plug from engine.** 3) Contact the spark plug's thread portion on engine. 4) While opening the throttle valve fully, crank the engine to check that spark occurs at each cylinder.	Does spark occur at each cylinder?	Check fuel pump system. <Ref. to EN(H4SO)(diag)-65, FUEL PUMP CIRCUIT, Diagnostics for Engine Starting Failure.>	Go to step **2.**
2	**CHECK POWER SUPPLY CIRCUIT FOR IGNITION COIL AND IGNITOR ASSEMBLY.** 1) Turn the ignition switch to OFF. 2) Disconnect the connector from ignition coil and ignitor assembly. 3) Turn the ignition switch to ON. 4) Measure the power supply voltage between ignition coil and ignitor assembly connector and engine ground. ***Connector & terminal*** ***(E12) No. 2 (+) — Engine ground (–):***	Is the voltage more than 10 V?	Go to step **3.**	Repair the harness and connector. NOTE: In this case, repair the following: • Open circuit in harness between ignition coil and ignitor assembly and main relay connector • Poor contact in coupling connector • Blown out fuse
3	**CHECK HARNESS OF IGNITION COIL AND IGNITOR ASSEMBLY GROUND CIRCUIT.** 1) Turn the ignition switch to OFF. 2) Measure the resistance between ignition coil and ignitor assembly connector and engine ground. ***Connector & terminal*** ***(E12) No. 3 — Engine ground:***	Is the resistance less than 5 Ω?	Go to step **4.**	Repair the harness and connector. NOTE: In this case, repair the following: • Open circuit in harness between ignition coil and ignitor assembly connector and engine grounding terminal
4	**CHECK IGNITION COIL AND IGNITOR ASSEMBLY.** 1) Remove the spark plug cords. 2) Measure the resistance between spark plug cord contact portions to check secondary coil. ***Terminals*** ***No. 1 — No. 2:*** ***No. 3 — No. 4:***	Is the resistance 10 — 15 kΩ?	Go to step **5.**	Replace the ignition coil and ignitor assembly. <Ref. to IG(H4SO)-8, Ignition Coil and Ignitor Assembly.>
5	**CHECK INPUT SIGNAL FOR IGNITION COIL AND IGNITOR ASSEMBLY.** 1) Connect the connector to ignition coil and ignitor assembly. 2) Check if voltage varies synchronously with engine speed when cranking, while monitoring voltage between ignition coil and ignitor assembly connector and engine ground. ***Connector & terminal*** ***(E12) No. 1 (+) — Engine ground (–):*** ***(E12) No. 4 (+) — Engine ground (–):***	Does the voltage vary more than 10 V?	Go to step **6.**	Replace the ignition coil and ignitor assembly. <Ref. to IG(H4SO)-8, Ignition Coil and Ignitor Assembly.>

	Step	Check	Yes	No
6	**CHECK HARNESS BETWEEN ECM AND IGNITION COIL AND IGNITOR ASSEMBLY CONNECTOR.** 1) Turn the ignition switch to OFF. 2) Disconnect the connector from ECM. 3) Disconnect the connector from ignition coil and ignitor assembly. 4) Measure the resistance of harness between ECM and ignition coil and ignitor assembly connector. ***Connector & terminal*** ***(B135) No. 18 — (E12) No. 1:*** ***(B135) No. 17 — (E12) No. 4:***	Is the resistance less than 1 Ω?	Go to step **7.**	Repair the harness and connector. NOTE: In this case, repair the following: • Open circuit in harness between ECM and ignition coil and ignitor assembly connector • Poor contact in coupling connector
7	**CHECK HARNESS BETWEEN ECM AND IGNITION COIL AND IGNITOR ASSEMBLY CONNECTOR.** Measure the resistance of harness between ECM and engine ground. ***Connector & terminal:*** ***(B135) No. 18 — Engine ground:*** ***(B135) No. 17 — Engine ground:***	Is the resistance more than 1 MΩ?	Go to step **8.**	Repair the ground short circuit in harness between ECM and ignition coil and ignitor assembly connector.
8	**CHECK POOR CONTACT.** Check poor contact in ECM connector.	Is there poor contact in ECM connector?	Repair the poor contact in ECM connector.	Check fuel pump circuit. <Ref. to EN(H4SO)(diag)-65, FUEL PUMP CIRCUIT, Diagnostics for Engine Starting Failure.>

E: FUEL PUMP CIRCUIT

CAUTION:
After repair or replacement of faulty parts, conduct Clear Memory Mode <Ref. to EN(H4SO)(diag)-43, Clear Memory Mode.> and Inspection Mode <Ref. to EN(H4SO)(diag)-35, Inspection Mode.>.

WIRING DIAGRAM:

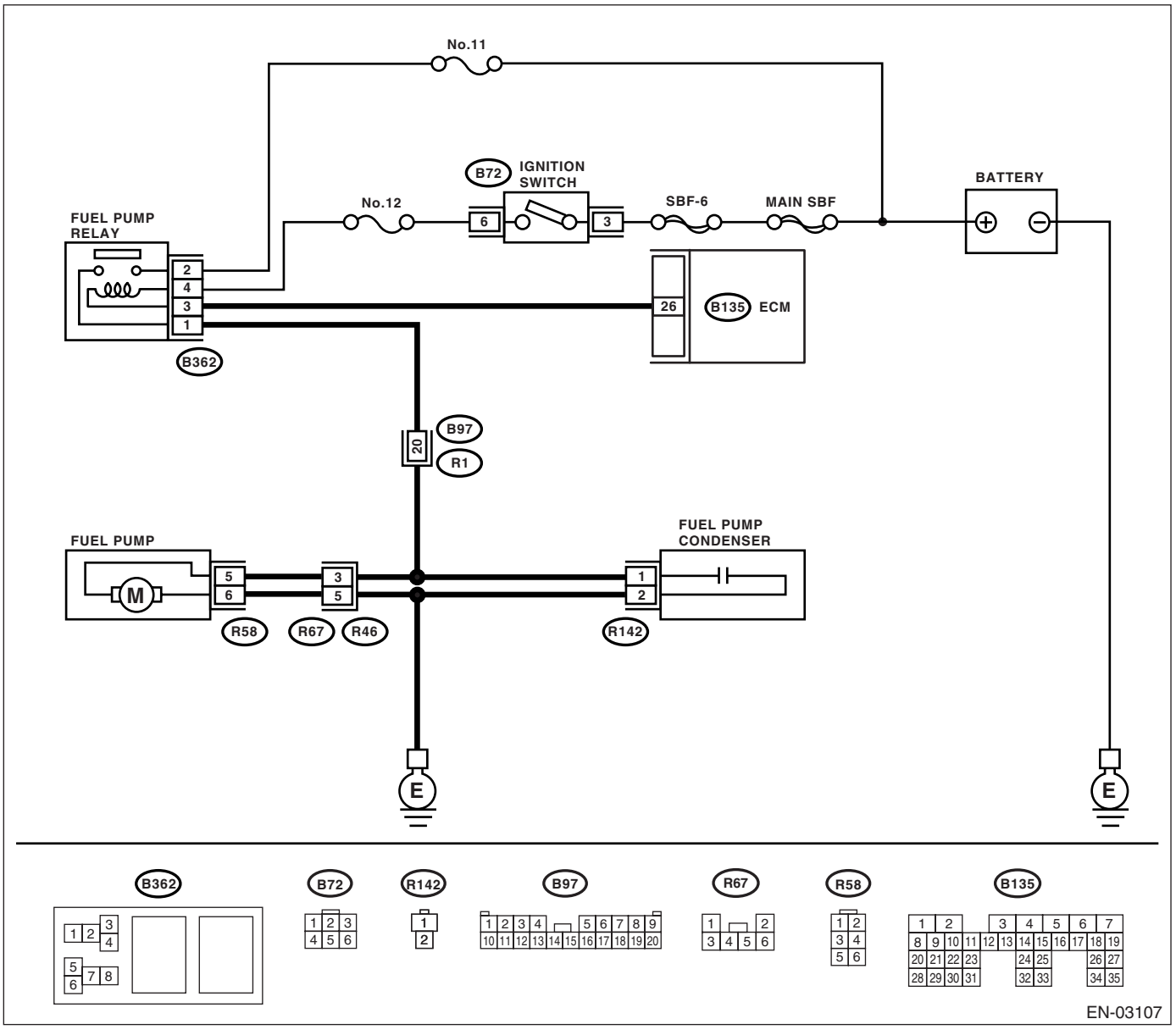

Diagnostics for Engine Starting Failure

	Step	Check	Yes	No
1	**CHECK OPERATING SOUND OF FUEL PUMP.** Check the fuel pump is in operation for two seconds when turning the ignition switch to ON. NOTE: Fuel pump operation can also be executed using Subaru Select Monitor. Refer to "Compulsory Valve Operation Check Mode" for procedures. <Ref. to EN(H4SO)(diag)-44, Compulsory Valve Operation Check Mode.>	Does the fuel pump produce operating sound?	Check the fuel injector circuit. <Ref. to EN(H4SO)(diag)-68, FUEL INJECTOR CIRCUIT, Diagnostics for Engine Starting Failure.>	Go to step **2.**
2	**CHECK GROUND CIRCUIT OF FUEL PUMP.** 1) Turn the ignition switch to OFF. 2) Remove the fuel pump access hole lid. 3) Disconnect the connector from fuel pump. 4) Measure the resistance of harness connector between fuel pump and chassis ground. ***Connector & terminal*** ***(R58) No. 6 — Chassis ground:***	Is the resistance less than 5 Ω?	Go to step **3.**	Repair the harness and connector. NOTE: In this case, repair the following: • Open circuit in harness between fuel pump connector and chassis grounding terminal
3	**CHECK POWER SUPPLY TO FUEL PUMP.** 1) Turn the ignition switch to ON. 2) Measure the voltage of power supply circuit between fuel pump connector and chassis ground. ***Connector & terminal*** ***(R58) No. 5 (+) — Chassis ground (−):***	Is the voltage more than 10 V?	Replace the fuel pump. <Ref. to FU(H4SO)-49, Fuel Pump.>	Go to step **4.**
4	**CHECK HARNESS BETWEEN FUEL PUMP AND FUEL PUMP RELAY CONNECTOR.** 1) Turn the ignition switch to OFF. 2) Measure the resistance of harness connector between fuel pump and fuel pump relay. ***Connector & terminal*** ***(R58) No. 5 — (B362) No. 1:***	Is the resistance less than 1 Ω?	Go to step **5.**	Repair the harness and connector. NOTE: In this case, repair the following: • Open circuit in harness between fuel pump connector and chassis grounding terminal • Poor contact in coupling connector
5	**CHECK HARNESS BETWEEN FUEL PUMP AND FUEL PUMP RELAY CONNECTOR.** Measure the resistance of harness between fuel pump and fuel pump relay connector. ***Connector & terminal*** ***(R58) No. 5 — Chassis ground:***	Is the resistance more than 1 MΩ?	Go to step **6.**	Repair the short circuit in harness between fuel pump and fuel pump relay connector.
6	**CHECK FUEL PUMP RELAY.** 1) Disconnect the connectors from fuel pump relay and main relay. 2) Remove the fuel pump relay and main relay with bracket. 3) Connect the battery to fuel pump relay connector terminals No. 3 and No. 4. 4) Measure the resistance between connector terminals of fuel pump relay. ***Terminals*** ***No. 2 — No. 1:***	Is the resistance less than 10 Ω?	Go to step **7.**	Replace the fuel pump relay. <Ref. to FU(H4SO)-49, Fuel Pump.>

	Step	Check	Yes	No
7	**CHECK HARNESS BETWEEN ECM AND FUEL PUMP RELAY CONNECTOR.** 1) Disconnect the connector from ECM. 2) Measure the resistance of harness between ECM and fuel pump relay connector. ***Connector & terminal (B135) No. 26 — (B362) No. 3:***	Is the resistance less than 1 Ω?	Go to step **8.**	Repair the open circuit in harness between ECM and fuel pump relay connector.
8	**CHECK POOR CONTACT.** Check poor contact in ECM connector.	Is there poor contact in ECM connector?	Repair the poor contact in ECM connector.	Check the fuel injector circuit. <Ref. to EN(H4SO)(diag)-68, FUEL INJECTOR CIRCUIT, Diagnostics for Engine Starting Failure.>

F: FUEL INJECTOR CIRCUIT

CAUTION:
- **Check or repair only faulty parts.**
- **After repair or replacement of faulty parts, conduct Clear Memory Mode <Ref. to EN(H4SO)(diag)-43, Clear Memory Mode.> and Inspection Mode <Ref. to EN(H4SO)(diag)-35, Inspection Mode.>.**

WIRING DIAGRAM:

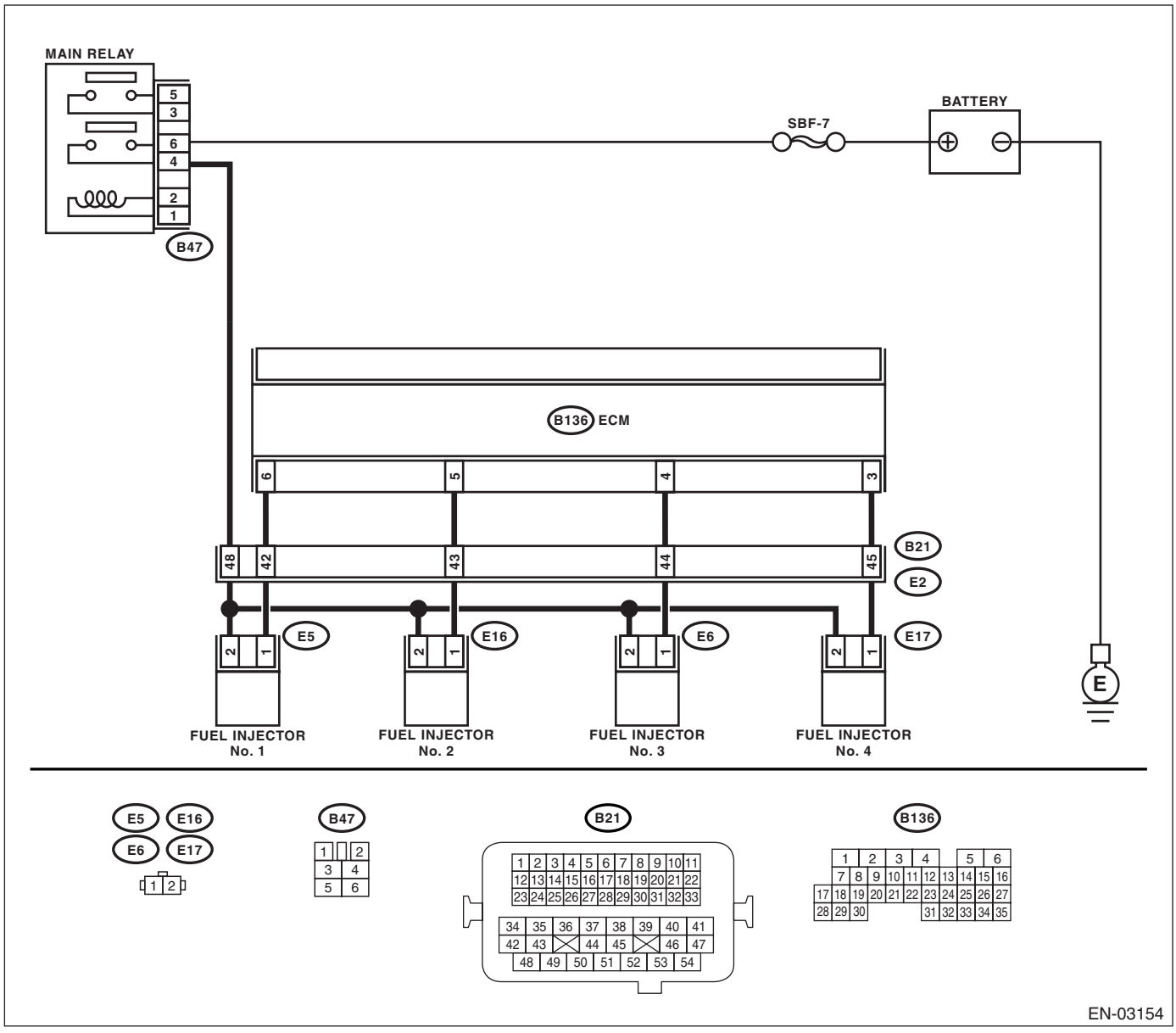

	Step	Check	Yes	No
1	**CHECK OPERATION OF EACH FUEL INJECTOR.** While cranking the engine, check each fuel injector emits operating sound. Use a sound scope or apply a screwdriver to the injector for this check.	Does the fuel pump emit operating sound?	Check the fuel pressure. <Ref. to ME(H4SO)-25, INSPECTION, Fuel Pressure.>	Go to step **2.**

	Step	Check	Yes	No
2	**CHECK POWER SUPPLY TO EACH FUEL INJECTOR.** 1) Turn the ignition switch to OFF. 2) Disconnect the connector from fuel injector. 3) Turn the ignition switch to ON. 4) Measure the power supply voltage between fuel injector terminal and engine ground. ***Connector & terminal*** ***#1 (E5) No. 2 (+) — Engine ground (–):*** ***#2 (E16) No. 2 (+) — Engine ground (–):*** ***#3 (E6) No. 2 (+) — Engine ground (–):*** ***#4 (E17) No. 2 (+) — Engine ground (–):***	Is the voltage more than 10 V?	Go to step **3.**	Repair the harness and connector. NOTE: In this case, repair the following: • Open circuit in harness between main relay and fuel injector connector • Poor contact in main relay connector • Poor contact in coupling connector • Poor contact in fuel injector connector
3	**CHECK HARNESS BETWEEN ECM AND FUEL INJECTOR CONNECTOR.** 1) Disconnect the connector from ECM. 2) Measure the resistance of harness between ECM and fuel injector connector. ***Connector & terminal*** ***#1 (B136) No. 6 — (E5) No. 1:*** ***#2 (B136) No. 5 — (E16) No. 1:*** ***#3 (B136) No. 4 — (E6) No. 1:*** ***#4 (B136) No. 3 — (E17) No. 1:***	Is the resistance less than 1 Ω?	Go to step **4.**	Repair the harness and connector. NOTE: In this case, repair the following: • Open circuit in harness between ECM and fuel injector connector • Poor contact in coupling connector
4	**CHECK HARNESS BETWEEN ECM AND FUEL INJECTOR CONNECTOR.** Measure the resistance of harness between ECM and fuel injector connector. ***Connector & terminal*** ***#1 (B136) No. 6 — Chassis ground:*** ***#2 (B136) No. 5 — Chassis ground:*** ***#3 (B136) No. 4 — Chassis ground:*** ***#4 (B136) No. 3 — Chassis ground:***	Is the resistance more than 1 MΩ?	Go to step **5.**	Repair the ground short circuit in harness between ECM and fuel injector connector.
5	**CHECK EACH FUEL INJECTOR.** 1) Turn the ignition switch to OFF. 2) Measure the resistance between each fuel injector terminals. ***Terminals*** ***No. 1 — No. 2:***	Is the resistance 5 — 20 Ω?	Go to step **6.**	Replace the faulty fuel injector.
6	**CHECK POOR CONTACT.** Check poor contact in ECM connector.	Is there poor contact in ECM connector?	Repair the poor contact in ECM connector.	Inspection using “General Diagnostic Table” <Ref. to EN(H4SO)(diag)-301, INSPECTION, General Diagnostic Table.>

17.List of Diagnostic Trouble Code (DTC)

A: LIST

DTC	Item	NOTE
P0030	HO2S Heater Control Circuit (Bank 1 Sensor 1)	<Ref. to EN(H4SO)(diag)-76, DTC P0030 HO2S HEATER CONTROL CIRCUIT (BANK 1 SENSOR 1), Diagnostic Procedure with Diagnostic Trouble Code (DTC).>
P0031	HO2S Heater Control Circuit Low (Bank 1 Sensor 1)	<Ref. to EN(H4SO)(diag)-78, DTC P0031 HO2S HEATER CONTROL CIRCUIT LOW (BANK 1 SENSOR 1), Diagnostic Procedure with Diagnostic Trouble Code (DTC).>
P0032	HO2S Heater Control Circuit High (Bank 1 Sensor 1)	<Ref. to EN(H4SO)(diag)-80, DTC P0032 HO2S HEATER CONTROL CIRCUIT HIGH (BANK 1 SENSOR 1), Diagnostic Procedure with Diagnostic Trouble Code (DTC).>
P0037	HO2S Heater Control Circuit Low (Bank 1 Sensor 2)	<Ref. to EN(H4SO)(diag)-82, DTC P0037 HO2S HEATER CONTROL CIRCUIT LOW (BANK 1 SENSOR 2), Diagnostic Procedure with Diagnostic Trouble Code (DTC).>
P0038	HO2S Heater Control Circuit High (Bank 1 Sensor 2)	<Ref. to EN(H4SO)(diag)-85, DTC P0038 HO2S HEATER CONTROL CIRCUIT HIGH (BANK 1 SENSOR 2), Diagnostic Procedure with Diagnostic Trouble Code (DTC).>
P0068	MAP/MAF - Throttle Position Correlation	<Ref. to EN(H4SO)(diag)-87, DTC P0068 MAP/MAF - THROTTLE POSITION CORRELATION, Diagnostic Procedure with Diagnostic Trouble Code (DTC).>
P0101	Mass or Volume Air Flow Circuit Range/Performance	<Ref. to EN(H4SO)(diag)-89, DTC P0101 MASS OR VOLUME AIR FLOW CIRCUIT RANGE/PERFORMANCE, Diagnostic Procedure with Diagnostic Trouble Code (DTC).>
P0102	Mass or Volume Air Flow Circuit Low Input	<Ref. to EN(H4SO)(diag)-91, DTC P0102 MASS OR VOLUME AIR FLOW CIRCUIT LOW INPUT, Diagnostic Procedure with Diagnostic Trouble Code (DTC).>
P0103	Mass or Volume Air Flow Circuit High Input	<Ref. to EN(H4SO)(diag)-94, DTC P0103 MASS OR VOLUME AIR FLOW CIRCUIT HIGH INPUT, Diagnostic Procedure with Diagnostic Trouble Code (DTC).>
P0107	Manifold Absolute Pressure/Barometric Pressure Circuit Low Input	<Ref. to EN(H4SO)(diag)-96, DTC P0107 MANIFOLD ABSOLUTE PRESSURE/BAROMETRIC PRESSURE CIRCUIT LOW INPUT, Diagnostic Procedure with Diagnostic Trouble Code (DTC).>
P0108	Manifold Absolute Pressure/Barometric Pressure Circuit High Input	<Ref. to EN(H4SO)(diag)-99, DTC P0108 MANIFOLD ABSOLUTE PRESSURE/BAROMETRIC PRESSURE CIRCUIT HIGH INPUT, Diagnostic Procedure with Diagnostic Trouble Code (DTC).>
P0111	Intake Air Temperature Circuit Range/Performance	<Ref. to EN(H4SO)(diag)-102, DTC P0111 INTAKE AIR TEMPERATURE CIRCUIT RANGE/PERFORMANCE, Diagnostic Procedure with Diagnostic Trouble Code (DTC).>
P0112	Intake Air Temperature Circuit Low Input	<Ref. to EN(H4SO)(diag)-104, DTC P0112 INTAKE AIR TEMPERATURE CIRCUIT LOW INPUT, Diagnostic Procedure with Diagnostic Trouble Code (DTC).>
P0113	Intake Air Temperature Circuit High Input	<Ref. to EN(H4SO)(diag)-106, DTC P0113 INTAKE AIR TEMPERATURE CIRCUIT HIGH INPUT, Diagnostic Procedure with Diagnostic Trouble Code (DTC).>
P0117	Engine Coolant Temperature Circuit Low Input	<Ref. to EN(H4SO)(diag)-109, DTC P0117 ENGINE COOLANT TEMPERATURE CIRCUIT LOW INPUT, Diagnostic Procedure with Diagnostic Trouble Code (DTC).>
P0118	Engine Coolant Temperature Circuit High Input	<Ref. to EN(H4SO)(diag)-111, DTC P0118 ENGINE COOLANT TEMPERATURE CIRCUIT HIGH INPUT, Diagnostic Procedure with Diagnostic Trouble Code (DTC).>
P0122	Throttle/Pedal Position Sensor/ Switch “A” Circuit Low Input	<Ref. to EN(H4SO)(diag)-113, DTC P0122 THROTTLE/PEDAL POSITION SENSOR/SWITCH “A” CIRCUIT LOW INPUT, Diagnostic Procedure with Diagnostic Trouble Code (DTC).>
P0123	Throttle/Pedal Position Sensor/ Switch “A” Circuit High Input	<Ref. to EN(H4SO)(diag)-116, DTC P0123 THROTTLE/PEDAL POSITION SENSOR/SWITCH “A” CIRCUIT HIGH INPUT, Diagnostic Procedure with Diagnostic Trouble Code (DTC).>

DTC	Item	NOTE
P0125	Insufficient Coolant Temperature for Closed Loop Fuel Control	<Ref. to EN(H4SO)(diag)-119, DTC P0125 INSUFFICIENT ENGINE COOLANT TEMPERATURE FOR CLOSED LOOP FUEL CONTROL, Diagnostic Procedure with Diagnostic Trouble Code (DTC).>
P0126	Insufficient Coolant Temperature for Stable Operation	<Ref. to EN(H4SO)(diag)-121, DTC P0126 INSUFFICIENT ENGINE COOLANT TEMPERATURE FOR STABLE OPERATION, Diagnostic Procedure with Diagnostic Trouble Code (DTC).>
P0128	Coolant Thermostat (Coolant Temperature Below Thermostat Regulating Temperature)	<Ref. to EN(H4SO)(diag)-123, DTC P0128 COOLANT THERMOSTAT (ENGINE COOLANT TEMPERATURE BELOW THERMOSTAT REGULATING TEMPERATURE), Diagnostic Procedure with Diagnostic Trouble Code (DTC).>
P0131	O2 Sensor Circuit Low Voltage (Bank 1 Sensor 1)	<Ref. to EN(H4SO)(diag)-124, DTC P0131 O2 SENSOR CIRCUIT LOW VOLTAGE (BANK 1 SENSOR 1), Diagnostic Procedure with Diagnostic Trouble Code (DTC).>
P0132	O2 Sensor Circuit High Voltage (Bank 1 Sensor 1)	<Ref. to EN(H4SO)(diag)-126, DTC P0132 O2 SENSOR CIRCUIT HIGH VOLTAGE (BANK 1 SENSOR 1), Diagnostic Procedure with Diagnostic Trouble Code (DTC).>
P0133	O2 Sensor Circuit Slow Response (Bank 1 Sensor 1)	<Ref. to EN(H4SO)(diag)-128, DTC P0133 O2 SENSOR CIRCUIT SLOW RESPONSE (BANK 1 SENSOR 1), Diagnostic Procedure with Diagnostic Trouble Code (DTC).>
P0134	O2 Sensor Circuit No Activity Detected (Bank 1 Sensor 1)	<Ref. to EN(H4SO)(diag)-130, DTC P0134 O2 SENSOR CIRCUIT NO ACTIVITY DETECTED (BANK 1 SENSOR 1), Diagnostic Procedure with Diagnostic Trouble Code (DTC).>
P0137	O2 Sensor Circuit Low Voltage (Bank 1 Sensor 2)	<Ref. to EN(H4SO)(diag)-132, DTC P0137 O2 SENSOR CIRCUIT LOW VOLTAGE (BANK 1 SENSOR 2), Diagnostic Procedure with Diagnostic Trouble Code (DTC).>
P0138	O2 Sensor Circuit High Voltage (Bank 1 Sensor 2)	<Ref. to EN(H4SO)(diag)-135, DTC P0138 O2 SENSOR CIRCUIT HIGH VOLTAGE (BANK 1 SENSOR 2), Diagnostic Procedure with Diagnostic Trouble Code (DTC).>
P0139	O2 Sensor Circuit Slow Response (Bank 1 Sensor 2)	<Ref. to EN(H4SO)(diag)-138, DTC P0139 O2 SENSOR CIRCUIT SLOW RESPONSE (BANK 1 SENSOR 2), Diagnostic Procedure with Diagnostic Trouble Code (DTC).>
P0171	System Too Lean (Bank 1)	<Ref. to EN(H4SO)(diag)-139, DTC P0171 SYSTEM TOO LEAN (BANK 1), Diagnostic Procedure with Diagnostic Trouble Code (DTC).>
P0172	System Too Rich (Bank 1)	<Ref. to EN(H4SO)(diag)-140, DTC P0172 SYSTEM TOO RICH (BANK 1), Diagnostic Procedure with Diagnostic Trouble Code (DTC).>
P0181	Fuel Temperature Sensor “A” Circuit Range/Performance	<Ref. to EN(H4SO)(diag)-142, DTC P0181 FUEL TEMPERATURE SENSOR “A” CIRCUIT RANGE/PERFORMANCE, Diagnostic Procedure with Diagnostic Trouble Code (DTC).>
P0182	Fuel Temperature Sensor “A” Circuit Low Input	<Ref. to EN(H4SO)(diag)-144, DTC P0182 FUEL TEMPERATURE SENSOR “A” CIRCUIT LOW INPUT, Diagnostic Procedure with Diagnostic Trouble Code (DTC).>
P0183	Fuel Temperature Sensor “A” Circuit High Input	<Ref. to EN(H4SO)(diag)-146, DTC P0183 FUEL TEMPERATURE SENSOR “A” CIRCUIT HIGH INPUT, Diagnostic Procedure with Diagnostic Trouble Code (DTC).>
P0222	Throttle/Pedal Position Sensor/ Switch “B” Circuit Low Input	<Ref. to EN(H4SO)(diag)-148, DTC P0222 THROTTLE/PEDAL POSITION SENSOR/SWITCH “B” CIRCUIT LOW INPUT, Diagnostic Procedure with Diagnostic Trouble Code (DTC).>
P0223	Throttle/Pedal Position Sensor/ Switch “B” Circuit High Input	<Ref. to EN(H4SO)(diag)-151, DTC P0223 THROTTLE/PEDAL POSITION SENSOR/SWITCH “B” CIRCUIT HIGH INPUT, Diagnostic Procedure with Diagnostic Trouble Code (DTC).>
P0301	Cylinder 1 misfire detected	<Ref. to EN(H4SO)(diag)-154, DTC P0301 CYLINDER 1 MISFIRE DETECTED, Diagnostic Procedure with Diagnostic Trouble Code (DTC).>
P0302	Cylinder 2 misfire detected	<Ref. to EN(H4SO)(diag)-154, DTC P0302 CYLINDER 2 MISFIRE DETECTED, Diagnostic Procedure with Diagnostic Trouble Code (DTC).>
P0303	Cylinder 3 misfire detected	<Ref. to EN(H4SO)(diag)-154, DTC P0303 CYLINDER 3 MISFIRE DETECTED, Diagnostic Procedure with Diagnostic Trouble Code (DTC).>

List of Diagnostic Trouble Code (DTC)

DTC	Item	NOTE
P0304	Cylinder 4 misfire detected	<Ref. to EN(H4SO)(diag)-155, DTC P0304 CYLINDER 4 MISFIRE DETECTED, Diagnostic Procedure with Diagnostic Trouble Code (DTC).>
P0327	Knock Sensor 1 Circuit Low Input (Bank 1 or Single Sensor)	<Ref. to EN(H4SO)(diag)-161, DTC P0327 KNOCK SENSOR 1 CIRCUIT LOW INPUT (BANK 1 OR SINGLE SENSOR), Diagnostic Procedure with Diagnostic Trouble Code (DTC).>
P0328	Knock Sensor 1 Circuit High Input (Bank 1 or Single Sensor)	<Ref. to EN(H4SO)(diag)-163, DTC P0328 KNOCK SENSOR 1 CIRCUIT HIGH INPUT (BANK 1 OR SINGLE SENSOR), Diagnostic Procedure with Diagnostic Trouble Code (DTC).>
P0335	Crankshaft Position Sensor “A” Circuit	<Ref. to EN(H4SO)(diag)-165, DTC P0335 CRANKSHAFT POSITION SENSOR “A” CIRCUIT, Diagnostic Procedure with Diagnostic Trouble Code (DTC).>
P0336	Crankshaft Position Sensor “A” Circuit Range/Performance	<Ref. to EN(H4SO)(diag)-167, DTC P0336 CRANKSHAFT POSITION SENSOR “A” CIRCUIT RANGE/PERFORMANCE, Diagnostic Procedure with Diagnostic Trouble Code (DTC).>
P0340	Camshaft Position Sensor “A” Circuit (Bank 1 or Single Sensor)	<Ref. to EN(H4SO)(diag)-169, DTC P0340 CAMSHAFT POSITION SENSOR “A” CIRCUIT (BANK 1 OR SINGLE SENSOR), Diagnostic Procedure with Diagnostic Trouble Code (DTC).>
P0341	Camshaft Position Sensor “A” Circuit Range/Performance (Bank 1 or Single Sensor)	<Ref. to EN(H4SO)(diag)-171, DTC P0341 CAMSHAFT POSITION SENSOR “A” CIRCUIT RANGE/PERFORMANCE (BANK 1 OR SINGLE SENSOR), Diagnostic Procedure with Diagnostic Trouble Code (DTC).>
P0400	Exhaust Gas Recirculation Flow	<Ref. to EN(H4SO)(diag)-174, DTC P0400 EXHAUST GAS RECIRCULATION FLOW, Diagnostic Procedure with Diagnostic Trouble Code (DTC).>
P0420	Catalyst System Efficiency Below Threshold (Bank 1)	<Ref. to EN(H4SO)(diag)-177, DTC P0420 CATALYST SYSTEM EFFICIENCY BELOW THRESHOLD (BANK 1), Diagnostic Procedure with Diagnostic Trouble Code (DTC).>
P0442	Evaporative Emission Control System Leak Detected (small leak)	<Ref. to EN(H4SO)(diag)-181, DTC P0442 EVAPORATIVE EMISSION CONTROL SYSTEM LEAK DETECTED (SMALL LEAK), Diagnostic Procedure with Diagnostic Trouble Code (DTC).>
P0447	Evaporative Emission Control System Vent Control Cirsuit Open	<Ref. to EN(H4SO)(diag)-185, DTC P0447 EVAPORATIVE EMISSION CONTROL SYSTEM VENT CONTROL CIRCUIT OPEN, Diagnostic Procedure with Diagnostic Trouble Code (DTC).>
P0448	Evaporative Emission Control System Vent Control Cirsuit Shorted	<Ref. to EN(H4SO)(diag)-188, DTC P0448 EVAPORATIVE EMISSION CONTROL SYSTEM VENT CONTROL CIRCUIT SHORTED, Diagnostic Procedure with Diagnostic Trouble Code (DTC).>
P0451	Evaporative Emission Control System Pressure Sensor	<Ref. to EN(H4SO)(diag)-190, DTC P0451 EVAPORATIVE EMISSION CONTROL SYSTEM PRESSURE SENSOR, Diagnostic Procedure with Diagnostic Trouble Code (DTC).>
P0452	Evaporative Emission Control System Pressure Sensor Low Input	<Ref. to EN(H4SO)(diag)-192, DTC P0452 EVAPORATIVE EMISSION CONTROL SYSTEM PRESSURE SENSOR LOW INPUT, Diagnostic Procedure with Diagnostic Trouble Code (DTC).>
P0453	Evaporative Emission Control System Pressure Sensor High Input	<Ref. to EN(H4SO)(diag)-195, DTC P0453 EVAPORATIVE EMISSION CONTROL SYSTEM PRESSURE SENSOR HIGH INPUT, Diagnostic Procedure with Diagnostic Trouble Code (DTC).>
P0456	Evaporative Emission Control System Leak Detected (very small leak)	<Ref. to EN(H4SO)(diag)-198, DTC P0456 EVAPORATIVE EMISSION CONTROL SYSTEM LEAK DETECTED (VERY SMALL LEAK), Diagnostic Procedure with Diagnostic Trouble Code (DTC).>
P0457	Evaporative Emission Control System Leak Detected (fuel cap loose/off)	<Ref. to EN(H4SO)(diag)-201, DTC P0457 EVAPORATIVE EMISSION CONTROL SYSTEM LEAK DETECTED (FUEL CAP LOOSE/OFF), Diagnostic Procedure with Diagnostic Trouble Code (DTC).>
P0458	Evaporative Emission Control System Purge Control Valve Circuit Low	<Ref. to EN(H4SO)(diag)-205, DTC P0458 EVAPORATIVE EMISSION CONTROL SYSTEM PURGE CONTROL VALVE CIRCUIT LOW, Diagnostic Procedure with Diagnostic Trouble Code (DTC).>
P0459	Evaporative Emission Control System Purge Control Valve Circuit High	<Ref. to EN(H4SO)(diag)-207, DTC P0459 EVAPORATIVE EMISSION CONTROL SYSTEM PURGE CONTROL VALVE CIRCUIT HIGH, Diagnostic Procedure with Diagnostic Trouble Code (DTC).>

DTC	Item	NOTE
P0461	Fuel Level Sensor Circuit Range/Performance	<Ref. to EN(H4SO)(diag)-209, DTC P0461 FUEL LEVEL SENSOR CIRCUIT RANGE/PERFORMANCE, Diagnostic Procedure with Diagnostic Trouble Code (DTC).>
P0462	Fuel Level Sensor Circuit Low Input	<Ref. to EN(H4SO)(diag)-209, DTC P0462 FUEL LEVEL SENSOR CIRCUIT LOW INPUT, Diagnostic Procedure with Diagnostic Trouble Code (DTC).>
P0463	Fuel Level Sensor Circuit High Input	<Ref. to EN(H4SO)(diag)-209, DTC P0463 FUEL LEVEL SENSOR CIRCUIT HIGH INPUT, Diagnostic Procedure with Diagnostic Trouble Code (DTC).>
P0464	Fuel Level Sensor Circuit Intermittent	<Ref. to EN(H4SO)(diag)-209, DTC P0464 FUEL LEVEL SENSOR CIRCUIT INTERMITTENT, Diagnostic Procedure with Diagnostic Trouble Code (DTC).>
P0483	Cooling Fan Rationality Check	<Ref. to EN(H4SO)(diag)-210, DTC P0483 COOLING FAN RATIONALITY CHECK, Diagnostic Procedure with Diagnostic Trouble Code (DTC).>
P0500	Vehicle Speed Sensor	<Ref. to EN(H4SO)(diag)-210, DTC P0500 VEHICLE SPEED SENSOR, Diagnostic Procedure with Diagnostic Trouble Code (DTC).>
P0506	Idle Control System RPM Lower Than Expected	<Ref. to EN(H4SO)(diag)-211, DTC P0506 IDLE CONTROL SYSTEM RPM LOWER THAN EXPECTED, Diagnostic Procedure with Diagnostic Trouble Code (DTC).>
P0507	Idle Control System RPM High Than Expected	<Ref. to EN(H4SO)(diag)-213, DTC P0507 IDLE CONTROL SYSTEM RPM HIGHER THAN EXPECTED, Diagnostic Procedure with Diagnostic Trouble Code (DTC).>
P0512	Starter Request Circuit	<Ref. to EN(H4SO)(diag)-215, DTC P0512 STARTER REQUEST CIRCUIT, Diagnostic Procedure with Diagnostic Trouble Code (DTC).>
P0519	Idle Control System Malfunction (Fail-Safe)	<Ref. to EN(H4SO)(diag)-217, DTC P0519 IDLE CONTROL SYSTEM MALFUNCTION (FAIL-SAFE), Diagnostic Procedure with Diagnostic Trouble Code (DTC).>
P0600	Serial Communication Link	<Ref. to EN(H4SO)(diag)-219, DTC P0600 SERIAL COMMUNICATION LINK, Diagnostic Procedure with Diagnostic Trouble Code (DTC).>
P0604	Internal Control Module Random Access Memory (RAM) Error	<Ref. to EN(H4SO)(diag)-220, DTC P0604 INTERNAL CONTROL MODULE RANDOM ACCESS MEMORY (RAM) ERROR, Diagnostic Procedure with Diagnostic Trouble Code (DTC).>
P0605	Internal Control Module Read Only Memory (ROM) Error	<Ref. to EN(H4SO)(diag)-221, DTC P0605 INTERNAL CONTROL MODULE READ ONLY MEMORY (ROM) ERROR, Diagnostic Procedure with Diagnostic Trouble Code (DTC).>
P0607	Control Module Performance	<Ref. to EN(H4SO)(diag)-222, DTC P0607 CONTROL MODULE PERFORMANCE, Diagnostic Procedure with Diagnostic Trouble Code (DTC).>
P0638	Throttle Actuator Control Range/Performance (Bank 1)	<Ref. to EN(H4SO)(diag)-223, DTC P0638 THROTTLE ACTUATOR CONTROL RANGE/PERFORMANCE (BANK 1), Diagnostic Procedure with Diagnostic Trouble Code (DTC).>
P0691	Cooling Fan 1 Control Circuit Low	<Ref. to EN(H4SO)(diag)-223, DTC P0691 COOLING FAN 1 CONTROL CIRCUIT LOW, Diagnostic Procedure with Diagnostic Trouble Code (DTC).>
P0692	Cooling Fan 1 Control Circuit High	<Ref. to EN(H4SO)(diag)-224, DTC P0692 COOLING FAN 1 CONTROL CIRCUIT HIGH, Diagnostic Procedure with Diagnostic Trouble Code (DTC).>
P0700	Transmission Control System (MIL Request)	<Ref. to EN(H4SO)(diag)-224, DTC P0700 TRANSMISSION CONTROL SYSTEM (MIL REQUEST), Diagnostic Procedure with Diagnostic Trouble Code (DTC).>
P0851	Neutral Switch Input Circuit Low	<Ref. to EN(H4SO)(diag)-225, DTC P0851 NEUTRAL SWITCH INPUT CIRCUIT LOW (AT MODEL), Diagnostic Procedure with Diagnostic Trouble Code (DTC).> <Ref. to EN(H4SO)(diag)-227, DTC P0851 NEUTRAL SWITCH INPUT CIRCUIT LOW (MT MODEL), Diagnostic Procedure with Diagnostic Trouble Code (DTC).>
P0852	Neutral Switch Input Circuit High	<Ref. to EN(H4SO)(diag)-229, DTC P0852 NEUTRAL SWITCH INPUT CIRCUIT HIGH (AT MODEL), Diagnostic Procedure with Diagnostic Trouble Code (DTC).> <Ref. to EN(H4SO)(diag)-232, DTC P0852 NEUTRAL SWITCH INPUT CIRCUIT HIGH (MT MODEL), Diagnostic Procedure with Diagnostic Trouble Code (DTC).>

DTC	Item	NOTE
P1152	O2 Sensor Circuit Range/Performance (Low) (Bank1 Sensor1)	<Ref. to EN(H4SO)(diag)-234, DTC P1152 O2 SENSOR CIRCUIT RANGE/PERFORMANCE (LOW) (BANK1 SENSOR1), Diagnostic Procedure with Diagnostic Trouble Code (DTC).>
P1153	O2 Sensor Circuit Range/Performance (High) (Bank1 Sensor1)	<Ref. to EN(H4SO)(diag)-236, DTC P1153 O2 SENSOR CIRCUIT RANGE/PERFORMANCE (HIGH) (BANK1 SENSOR1), Diagnostic Procedure with Diagnostic Trouble Code (DTC).>
P1160	Return Spring Failure	<Ref. to EN(H4SO)(diag)-238, DTC P1160 RETURN SPRING FAILURE, Diagnostic Procedure with Diagnostic Trouble Code (DTC).>
P1400	Fuel Tank Pressure Control Solenoid Valve Circuit Low	<Ref. to EN(H4SO)(diag)-238, DTC P1400 FUEL TANK PRESSURE CONTROL SOLENOID VALVE CIRCUIT LOW, Diagnostic Procedure with Diagnostic Trouble Code (DTC).>
P1420	Fuel Tank Pressure Control Sol. Valve Circuit High	<Ref. to EN(H4SO)(diag)-240, DTC P1420 FUEL TANK PRESSURE CONTROL SOL. VALVE CIRCUIT HIGH, Diagnostic Procedure with Diagnostic Trouble Code (DTC).>
P1443	Vent Control Solenoid Valve Function Problem	<Ref. to EN(H4SO)(diag)-242, DTC P1443 VENT CONTROL SOLENOID VALVE FUNCTION PROBLEM, Diagnostic Procedure with Diagnostic Trouble Code (DTC).>
P1446	Fuel Tank Sensor Control Valve Circuit Low	<Ref. to EN(H4SO)(diag)-244, DTC P1446 FUEL TANK SENSOR CONTROL VALVE CIRCUIT LOW, Diagnostic Procedure with Diagnostic Trouble Code (DTC).>
P1447	Fuel Tank Sensor Control Valve Circuit High	<Ref. to EN(H4SO)(diag)-247, DTC P1447 FUEL TANK SENSOR CONTROL VALVE CIRCUIT HIGH, Diagnostic Procedure with Diagnostic Trouble Code (DTC).>
P1492	EGR Solenoid Valve Signal #1 Circuit Malfunction (Low Input)	<Ref. to EN(H4SO)(diag)-248, DTC P1492 EGR SOLENOID VALVE SIGNAL #1 CIRCUIT MALFUNCTION (LOW INPUT), Diagnostic Procedure with Diagnostic Trouble Code (DTC).>
P1493	EGR Solenoid Valve Signal #1 Circuit Malfunction (High Input)	<Ref. to EN(H4SO)(diag)-248, DTC P1493 EGR SOLENOID VALVE SIGNAL #1 CIRCUIT MALFUNCTION (HIGH INPUT), Diagnostic Procedure with Diagnostic Trouble Code (DTC).>
P1494	EGR Solenoid Valve Signal #2 Circuit Malfunction (Low Input)	<Ref. to EN(H4SO)(diag)-249, DTC P1494 EGR SOLENOID VALVE SIGNAL #2 CIRCUIT MALFUNCTION (LOW INPUT), Diagnostic Procedure with Diagnostic Trouble Code (DTC).>
P1495	EGR Solenoid Valve Signal #2 Circuit Malfunction (High Input)	<Ref. to EN(H4SO)(diag)-249, DTC P1495 EGR SOLENOID VALVE SIGNAL #2 CIRCUIT MALFUNCTION (HIGH INPUT), Diagnostic Procedure with Diagnostic Trouble Code (DTC).>
P1496	EGR Solenoid Valve Signal #3 Circuit Malfunction (Low Input)	<Ref. to EN(H4SO)(diag)-249, DTC P1496 EGR SOLENOID VALVE SIGNAL #3 CIRCUIT MALFUNCTION (LOW INPUT), Diagnostic Procedure with Diagnostic Trouble Code (DTC).>
P1497	EGR Solenoid Valve Signal #3 Circuit Malfunction (High Input)	<Ref. to EN(H4SO)(diag)-249, DTC P1497 EGR SOLENOID VALVE SIGNAL #3 CIRCUIT MALFUNCTION (HIGH INPUT), Diagnostic Procedure with Diagnostic Trouble Code (DTC).>
P1498	EGR Solenoid Valve Signal #4 Circuit Malfunction (Low Input)	<Ref. to EN(H4SO)(diag)-249, DTC P1498 EGR SOLENOID VALVE SIGNAL #4 CIRCUIT MALFUNCTION (LOW INPUT), Diagnostic Procedure with Diagnostic Trouble Code (DTC).>
P1499	EGR Solenoid Valve Signal #4 Circuit Malfunction (High Input)	<Ref. to EN(H4SO)(diag)-251, DTC P1499 EGR SOLENOID VALVE SIGNAL #4 CIRCUIT MALFUNCTION (HIGH INPUT), Diagnostic Procedure with Diagnostic Trouble Code (DTC).>
P1518	Starter Switch Circuit Low Input	<Ref. to EN(H4SO)(diag)-253, DTC P1518 STARTER SWITCH CIRCUIT LOW INPUT, Diagnostic Procedure with Diagnostic Trouble Code (DTC).>
P1560	Back-Up Voltage Circuit Malfunction	<Ref. to EN(H4SO)(diag)-256, DTC P1560 BACK-UP VOLTAGE CIRCUIT MALFUNCTION, Diagnostic Procedure with Diagnostic Trouble Code (DTC).>
P2096	Post Catalyst Fuel Trim System Too Lean Bank 1	<Ref. to EN(H4SO)(diag)-258, DTC P2096 POST CATALYST FUEL TRIM SYSTEM TOO LEAN BANK 1, Diagnostic Procedure with Diagnostic Trouble Code (DTC).>

DTC	Item	NOTE
P2097	Post Catalyst Fuel Trim System Too Rich Bank 1	<Ref. to EN(H4SO)(diag)-264, DTC P2097 POST CATALYST FUEL TRIM SYSTEM TOO RICH BANK 1, Diagnostic Procedure with Diagnostic Trouble Code (DTC).>
P2101	Throttle Actuator Control Motor Circuit Range/Performance	<Ref. to EN(H4SO)(diag)-270, DTC P2101 THROTTLE ACTUATOR CONTROL MOTOR CIRCUIT RANGE/PERFORMANCE, Diagnostic Procedure with Diagnostic Trouble Code (DTC).>
P2102	Throttle Actuator Control Motor Circuit Low	<Ref. to EN(H4SO)(diag)-276, DTC P2102 THROTTLE ACTUATOR CONTROL MOTOR CIRCUIT LOW, Diagnostic Procedure with Diagnostic Trouble Code (DTC).>
P2103	Throttle Actuator Control Motor Circuit High	<Ref. to EN(H4SO)(diag)-279, DTC P2103 THROTTLE ACTUATOR CONTROL MOTOR CIRCUIT HIGH, Diagnostic Procedure with Diagnostic Trouble Code (DTC).>
P2109	Throttle/Pedal Position Sensor A Minimum Stop Performance	<Ref. to EN(H4SO)(diag)-280, DTC P2109 THROTTLE/PEDAL POSITION SENSOR A MINIMUM STOP PERFORMANCE, Diagnostic Procedure with Diagnostic Trouble Code (DTC).>
P2122	Throttle/Pedal Position Sensor/ Switch “D” Circuit Low Input	<Ref. to EN(H4SO)(diag)-281, DTC P2122 THROTTLE/PEDAL POSITION SENSOR/SWITCH “D” CIRCUIT LOW INPUT, Diagnostic Procedure with Diagnostic Trouble Code (DTC).>
P2123	Throttle/Pedal Position Sensor/ Switch “D” Circuit High Input	<Ref. to EN(H4SO)(diag)-284, DTC P2123 THROTTLE/PEDAL POSITION SENSOR/SWITCH “D” CIRCUIT HIGH INPUT, Diagnostic Procedure with Diagnostic Trouble Code (DTC).>
P2127	Throttle/Pedal Position Sensor/ Switch “E” Circuit Low Input	<Ref. to EN(H4SO)(diag)-286, DTC P2127 THROTTLE/PEDAL POSITION SENSOR/SWITCH “E” CIRCUIT LOW INPUT, Diagnostic Procedure with Diagnostic Trouble Code (DTC).>
P2128	Throttle/Pedal Position Sensor/ Switch “E” Circuit High Input	<Ref. to EN(H4SO)(diag)-289, DTC P2128 THROTTLE/PEDAL POSITION SENSOR/SWITCH “E” CIRCUIT HIGH INPUT, Diagnostic Procedure with Diagnostic Trouble Code (DTC).>
P2135	Throttle/Pedal Position Sensor/ Switch “A”/“B” Voltage Rationality	<Ref. to EN(H4SO)(diag)-291, DTC P2135 THROTTLE/PEDAL POSITION SENSOR/SWITCH “A”/“B” VOLTAGE RATIONALITY, Diagnostic Procedure with Diagnostic Trouble Code (DTC).>
P2138	Throttle/Pedal Position Sensor/ Switch “D”/“E” Voltage Rationality	<Ref. to EN(H4SO)(diag)-296, DTC P2138 THROTTLE/PEDAL POSITION SENSOR/SWITCH “D”/“E” VOLTAGE RATIONALITY, Diagnostic Procedure with Diagnostic Trouble Code (DTC).>
P2227	Barometric Pressure Circuit Range/ Performance	<Ref. to EN(H4SO)(diag)-299, DTC P2227 BAROMETRIC PRESSURE CIRCUIT RANGE/PERFORMANCE, Diagnostic Procedure with Diagnostic Trouble Code (DTC).>
P2228	Barometric Pressure Cirsuit Low Input	<Ref. to EN(H4SO)(diag)-300, DTC P2228 BAROMETRIC PRESSURE CIRCUIT LOW INPUT, Diagnostic Procedure with Diagnostic Trouble Code (DTC).>
P2229	Barometric Pressure Cirsuit High Input	<Ref. to EN(H4SO)(diag)-300, DTC P2229 BAROMETRIC PRESSURE CIRCUIT HIGH INPUT, Diagnostic Procedure with Diagnostic Trouble Code (DTC).>

18.Diagnostic Procedure with Diagnostic Trouble Code (DTC)

A: DTC P0030 HO2S HEATER CONTROL CIRCUIT (BANK 1 SENSOR 1)

DTC DETECTING CONDITION:

- Two consecutive driving cycles with fault
- GENERAL DESCRIPTION <Ref. to GD(H4SO)-8, DTC P0030 HO2S HEATER CONTROL CIRCUIT (BANK 1 SENSOR 1), Diagnostic Trouble Code (DTC) Detecting Criteria.>

CAUTION:
After repair or replacement of faulty parts, conduct Clear Memory Mode <Ref. to EN(H4SO)(diag)-43, OPERATION, Clear Memory Mode.> and Inspection Mode <Ref. to EN(H4SO)(diag)-35, PROCEDURE, Inspection Mode.>.

WIRING DIAGRAM:

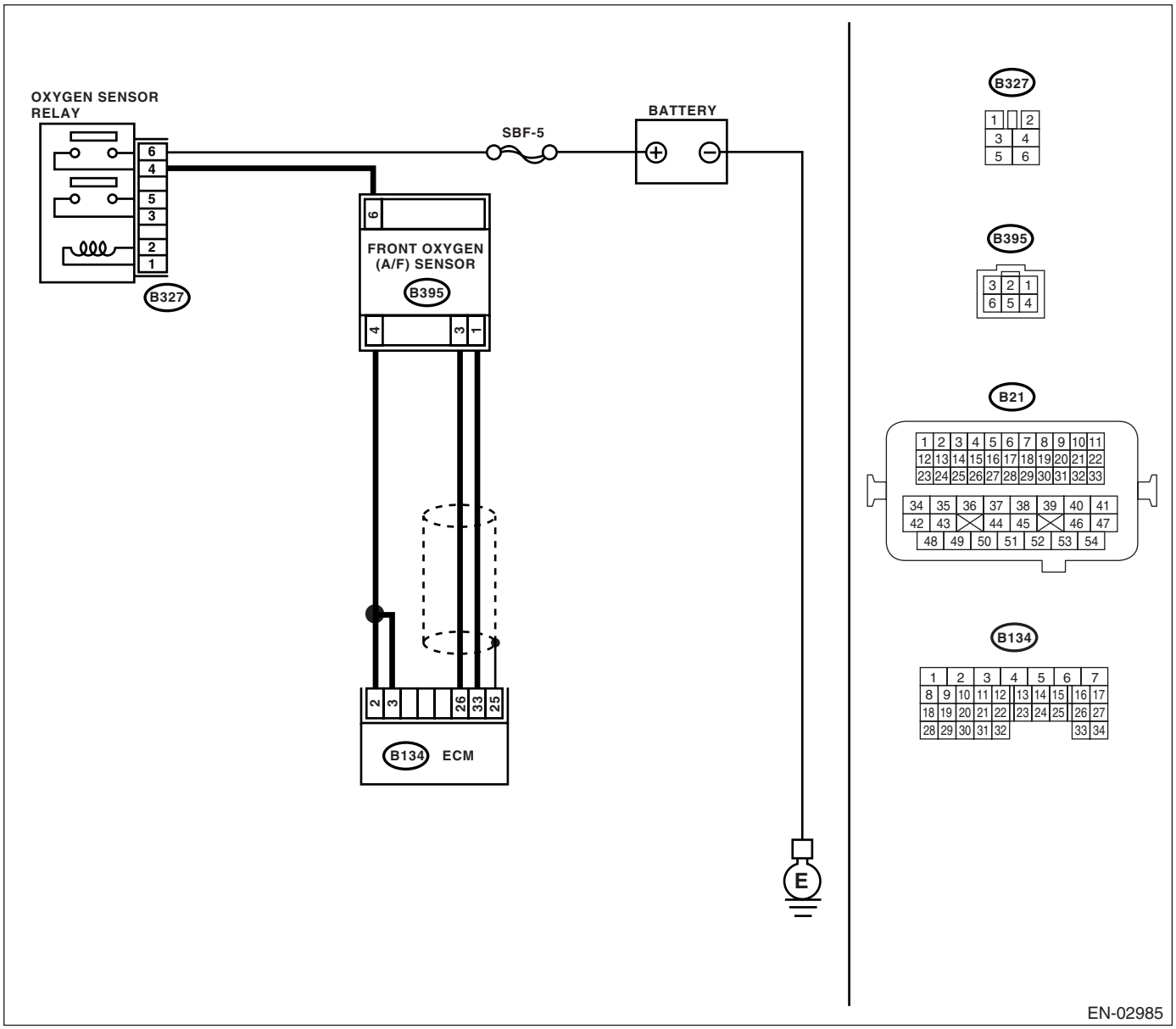

	Step	Check	Yes	No
1	**CHECK HARNESS BETWEEN ECM AND FRONT OXYGEN (A/F) SENSOR CONNECTOR.** 1) Start the engine and warm-up engine. 2) Turn the ignition switch to OFF. 3) Disconnect the connectors from ECM and front oxygen (A/F) sensor. 4) Measure the resistance of harness between ECM and front oxygen (A/F) sensor connector. ***Connector & terminal*** ***(B134) No. 2 — (B395) No. 4:*** ***(B134) No. 3 — (B395) No. 4:***	Is the resistance less than 1 Ω?	Go to step **2.**	Repair the open circuit in harness between ECM and front oxygen (A/F) sensor connector.
2	**CHECK HARNESS BETWEEN ECM AND FRONT OXYGEN (A/F) SENSOR CONNECTOR.** Measure the resistance of harness between ECM and front oxygen (A/F) sensor connector. ***Connector & terminal*** ***(B134) No. 33 — (B395) No. 1:*** ***(B134) No. 26 — (B395) No. 3:***	Is the resistance less than 1 Ω?	Go to step **3.**	Repair the open circuit in harness between main relay and front oxygen (A/F) sensor connector.
3	**CHECK HARNESS BETWEEN A/F AND OXYGEN SENSOR RELAY AND FRONT OXYGEN (A/F) SENSOR CONNECTOR.** Measure the resistance of harness between oxygen sensor relay and front oxygen (A/F) sensor connector. ***Connector & terminal*** ***(B327) No. 4 — (B395) No. 6:***	Is the resistance less than 1 Ω?	Go to step **4.**	Repair the open circuit in harness between oxygen sensor relay and front oxygen (A/F) sensor connector.
4	**CHECK FRONT OXYGEN (A/F) SENSOR.** Measure the resistance between front oxygen (A/F) sensor connector terminals. ***Terminals*** ***No. 4 — No. 6:***	Is the resistance less than 5 Ω?	Go to step **5.**	Replace the front oxygen (A/F) sensor. <Ref. to FU(H4SO)-32, Front Oxygen (A/F) Sensor.>
5	**CHECK POOR CONTACT.** Check the poor contact in ECM and front oxygen (A/F) sensor connector.	Is there poor contact in ECM or front oxygen (A/F) sensor connector?	Repair the poor contact in ECM or front oxygen (A/F) sensor connector.	Replace the front oxygen (A/F) sensor. <Ref. to FU(H4SO)-32, Front Oxygen (A/F) Sensor.>

B: DTC P0031 HO2S HEATER CONTROL CIRCUIT LOW (BANK 1 SENSOR 1)

DTC DETECTING CONDITION:

- Detect as soon as malfunction occurs.
- GENERAL DESCRIPTION <Ref. to GD(H4SO)-10, DTC P0031 HO2S HEATER CONTROL CIRCUIT LOW (BANK 1 SENSOR 1), Diagnostic Trouble Code (DTC) Detecting Criteria.>

CAUTION:
After repair or replacement of faulty parts, conduct Clear Memory Mode <Ref. to EN(H4SO)(diag)-43, OPERATION, Clear Memory Mode.> and Inspection Mode <Ref. to EN(H4SO)(diag)-35, PROCEDURE, Inspection Mode.>.

WIRING DIAGRAM:

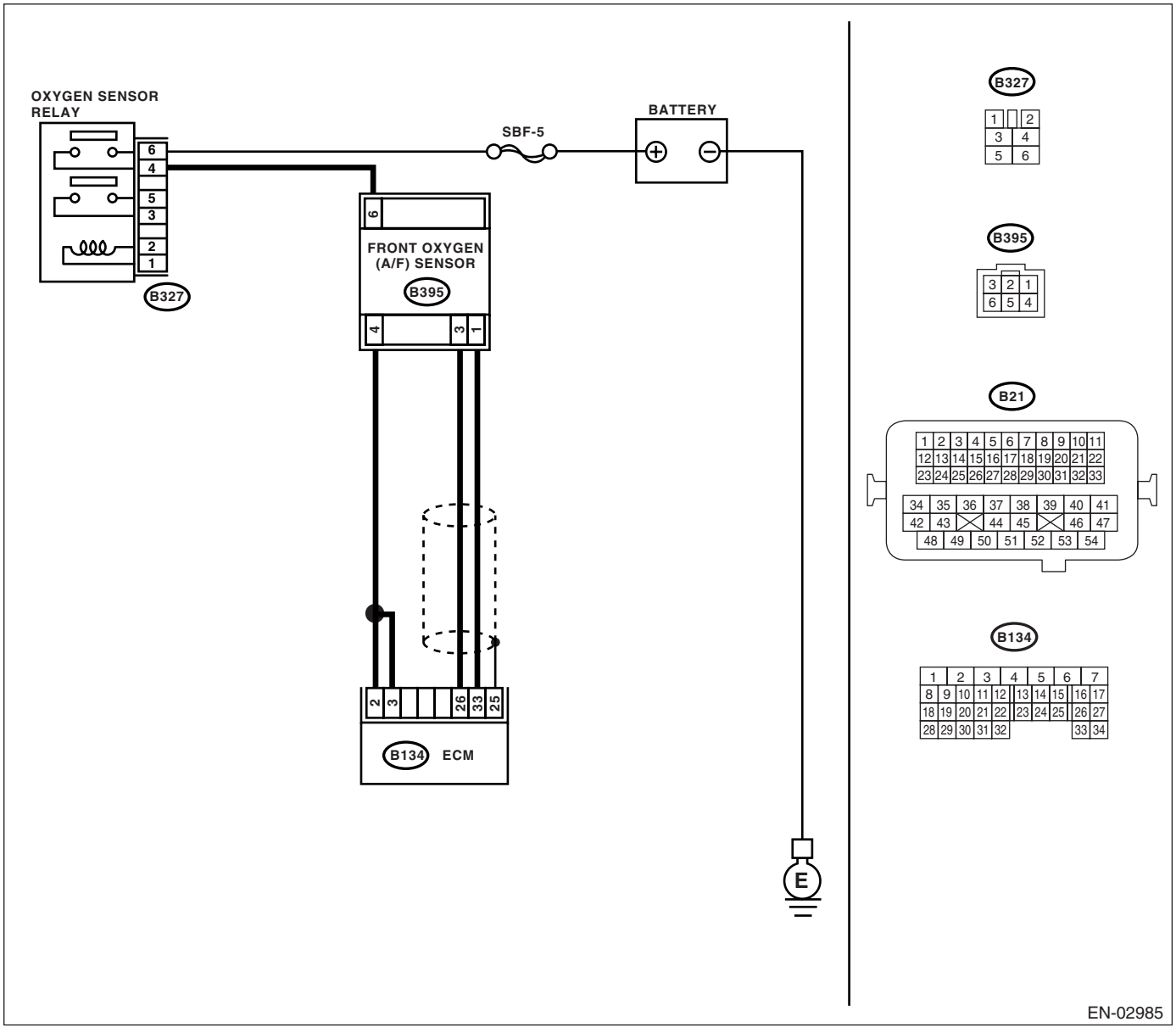

Step		Check	Yes	No
1	**CHECK FOR ANY OTHER DTC ON DISPLAY.**	Does the Subaru Select Monitor or general scan tool display DTC P0031 and P0037 at the same time?	Go to step **2.**	Go to step **4.**

	Step	Check	Yes	No
2	**CHECK POWER SUPPLY TO FRONT OXYGEN (A/F) SENSOR.** 1) Turn the ignition switch to OFF. 2) Disconnect the connector from front oxygen (A/F) sensor. 3) Turn the ignition switch to ON. 4) Measure the voltage between front oxygen (A/F) sensor connector and engine ground. ***Connector & terminal*** ***(B395) No. 6 (+) — Engine ground (−):***	Is the voltage more than 10 V?	Go to step **3.**	Repair the power supply line or replace the main relay. NOTE: In this case, repair the following: • Open circuit in harness between oxygen sensor relay and front oxygen (A/F) sensor connector • Poor contact in oxygen sensor relay connector
3	**CHECK CURRENT DATA.** 1) Start the engine. 2) Read the data of front oxygen (A/F) sensor heater current using Subaru Select Monitor or general scan tool. NOTE: • Subaru Select Monitor For detailed operation procedure, refer to the "READ CURRENT DATA FOR ENGINE". <Ref. to EN(H4SO)(diag)-27, Subaru Select Monitor.> • General scan tool For detailed operation procedures, refer to the general scan tool instruction manual.	Is the current more than 0.2 A?	Repair poor contact in connector. NOTE: In this case, repair the following: • Poor contact in front oxygen (A/F) sensor connector • Poor contact in ECM connector	Go to step **4.**
4	**CHECK INPUT SIGNAL FROM ECM.** 1) Start and idle the engine. 2) Measure the voltage between ECM connector and chassis ground. ***Connector & terminal*** ***(B134) No. 3(+) — Chassis ground (−):*** ***(B134) No. 2 (+) — Chassis ground (−):***	Is the voltage less than 1 V?	Go to step **6.**	Go to step **5.**
5	**CHECK OUTPUT SIGNAL FROM ECM.** Measure the voltage between ECM connector and chassis ground. ***Connector & terminal*** ***(B134) No. 3 (+) — Chassis ground (−):*** ***(B134) No. 2 (+) — Chassis ground (−):***	Does the voltage change by shaking the ECM harness and connector?	Repair poor contact in ECM connector.	Go to step **6.**
6	**CHECK FRONT OXYGEN (A/F) SENSOR.** 1) Turn the ignition switch to OFF. 2) Measure the resistance between front oxygen (A/F) sensor connector terminals. ***Terminals*** ***No. 4 — No. 6:***	Is the resistance less than 10 Ω?	Repair harness and connector. NOTE: In this case, repair the following: • Open or ground short circuit in harness between front oxygen (A/F) sensor and ECM connector • Poor contact in front oxygen (A/F) sensor connector • Poor contact in ECM connector	Replace the front oxygen (A/F) sensor. <Ref. to FU(H4SO)-32, Front Oxygen (A/F) Sensor.>

C: DTC P0032 HO2S HEATER CONTROL CIRCUIT HIGH (BANK 1 SENSOR 1)

DTC DETECTING CONDITION:

- Detect as soon as malfunction occurs.
- GENERAL DESCRIPTION <Ref. to GD(H4SO)-12, DTC P0032 HO2S HEATER CONTROL CIRCUIT HIGH (BANK 1 SENSOR 1), Diagnostic Trouble Code (DTC) Detecting Criteria.>

CAUTION:
After repair or replacement of faulty parts, conduct Clear Memory Mode <Ref. to EN(H4SO)(diag)-43, OPERATION, Clear Memory Mode.> and Inspection Mode <Ref. to EN(H4SO)(diag)-35, PROCEDURE, Inspection Mode.>.

WIRING DIAGRAM:

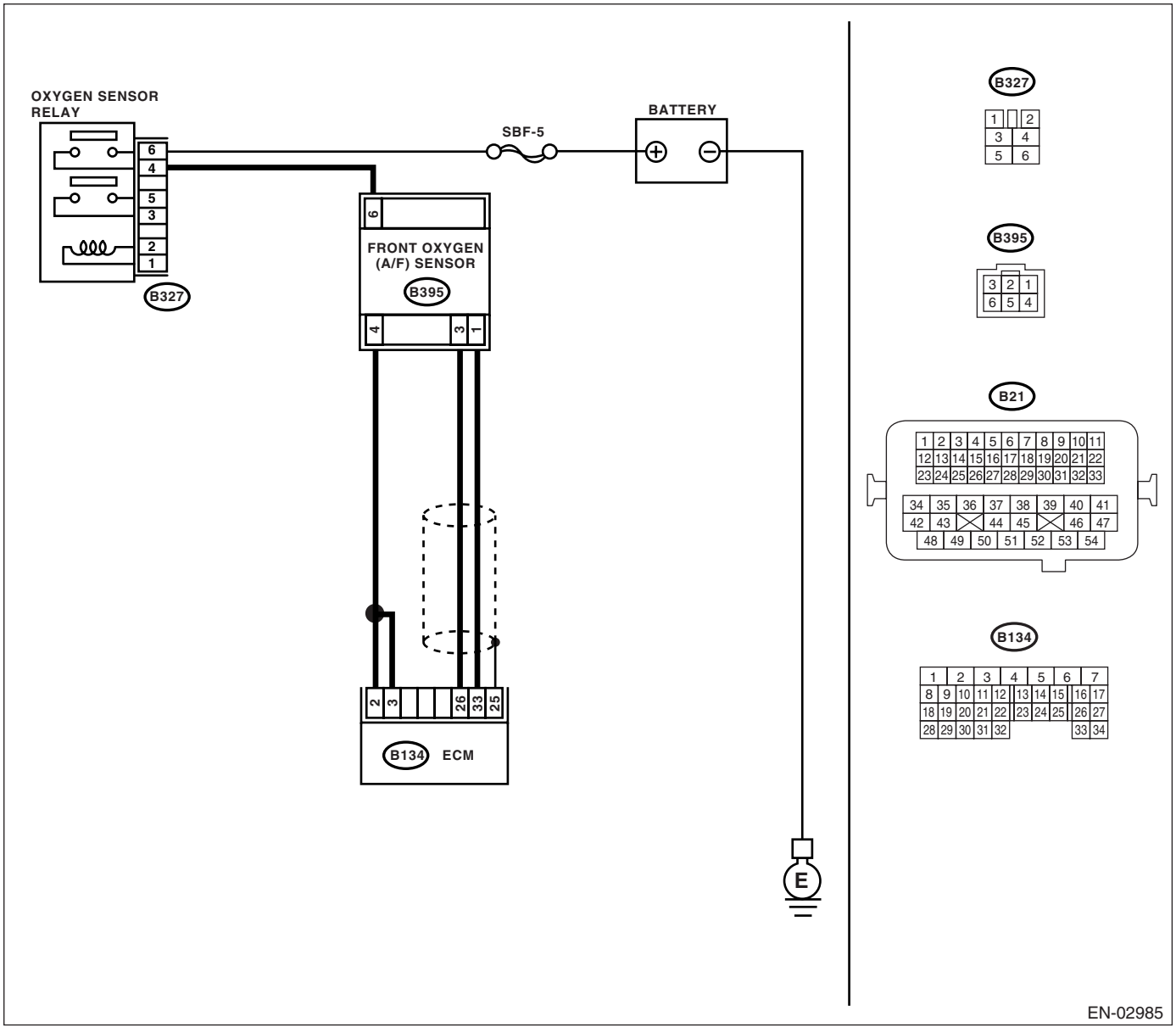

	Step	Check	Yes	No
1	**CHECK OUTPUT SIGNAL FROM ECM.** 1) Turn the ignition switch to ON. 2) Measure the voltage between ECM connector and chassis ground. ***Connector & terminal*** ***(B134) No. 2 (+) — Chassis ground (−):*** ***(B134) No. 3 (+) — Chassis ground (−):***	Is the voltage more than 8 V?	Go to step **2.**	Go to step **3.**
2	**CHECK FRONT OXYGEN (A/F) SENSOR HEATER CURRENT.** 1) Turn the ignition switch to OFF. 2) Repair the battery short circuit in harness between ECM and front oxygen (A/F) sensor connector. 3) Turn the ignition switch to ON. 4) Read the data of front oxygen (A/F) sensor heater current using Subaru Select Monitor or general scan tool. NOTE: • Subaru Select Monitor For detailed operation procedure, refer to the "READ CURRENT DATA FOR ENGINE". <Ref. to EN(H4SO)(diag)-27, Subaru Select Monitor.> • General scan tool For detailed operation procedure, refer to the general scan tool instruction manual.	Is the current more than 2.3 A?	Replace the ECM. <Ref. to FU(H4SO)-35, Engine Control Module (ECM).>	END
3	**CHECK OUTPUT SIGNAL FROM ECM.** Measure the voltage between ECM connector and chassis ground. ***Connector & terminal*** ***(B134) No. 2 (+) — Chassis ground (−):*** ***(B134) No. 3 (+) — Chassis ground (−):***	Does the voltage change by shaking the ECM harness and connector?	Repair battery short circuit in harness between ECM and front oxygen (A/F) sensor connector.	END

D: DTC P0037 HO2S HEATER CONTROL CIRCUIT LOW (BANK 1 SENSOR 2)

DTC DETECTING CONDITION:

- Two consecutive driving cycles with fault
- GENERAL DESCRIPTION <Ref. to GD(H4SO)-14, DTC P0037 HO2S HEATER CONTROL CIRCUIT LOW (BANK 1 SENSOR 2), Diagnostic Trouble Code (DTC) Detecting Criteria.>

CAUTION:
After repair or replacement of faulty parts, conduct Clear Memory Mode <Ref. to EN(H4SO)(diag)-43, OPERATION, Clear Memory Mode.> and Inspection Mode <Ref. to EN(H4SO)(diag)-35, PROCEDURE, Inspection Mode.>.

WIRING DIAGRAM:

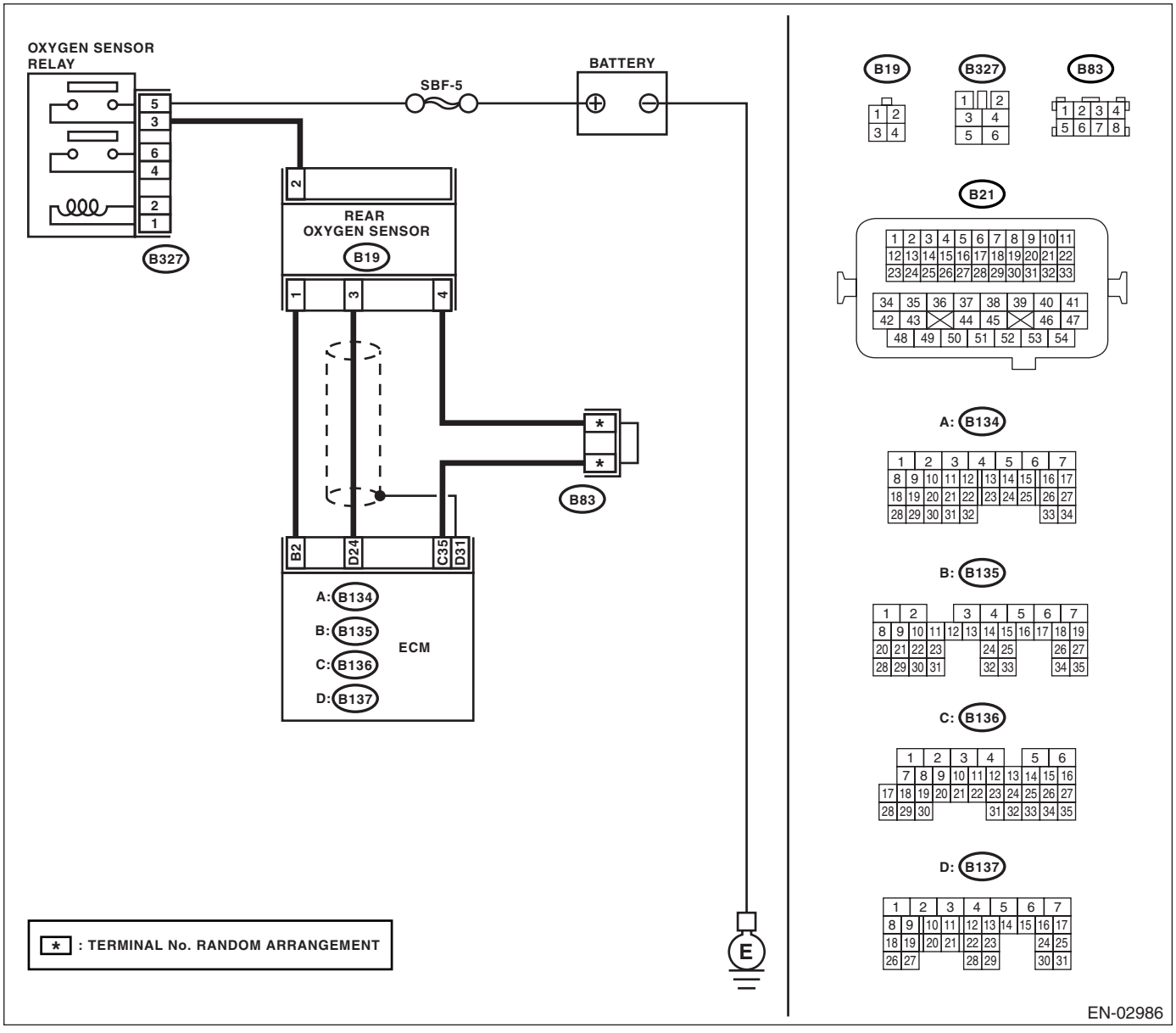

	Step	Check	Yes	No
1	**CHECK CURRENT DATA.** 1) Start the engine. 2) Read the data of rear oxygen sensor heater current using Subaru Select Monitor or general scan tool. NOTE: • Subaru Select Monitor For detailed operation procedure, refer to the "READ CURRENT DATA FOR ENGINE". <Ref. to EN(H4SO)(diag)-27, Subaru Select Monitor.> • General scan tool For detailed operation procedures, refer to the general scan tool instruction manual.	Is the current more than 0.2 A?	Repair the connector. NOTE: In this case, repair the following: • Poor contact in rear oxygen sensor connector • Poor contact in rear oxygen sensor connecting harness connector • Poor contact in ECM connector	Go to step **2.**
2	**CHECK OUTPUT SIGNAL FROM ECM.** 1) Start and idle the engine. 2) Measure the voltage between ECM connector and chassis ground. ***Connector & terminal*** ***(B135) No. 2 (+) — Chassis ground (−):***	Is the voltage less than 1 V?	Go to step **5.**	Go to step **3.**
3	**CHECK OUTPUT SIGNAL FROM ECM.** Measure the voltage between ECM connector and chassis ground. ***Connector & terminal*** ***(B135) No. 2 (+) — Chassis ground (−):***	Does the voltage change by shaking the ECM harness and connector?	Repair poor contact in ECM connector.	Go to step **4.**
4	**CHECK OUTPUT SIGNAL FROM ECM.** 1) Disconnect the connector from rear oxygen sensor. 2) Measure the voltage between ECM connector and chassis ground. ***Connector & terminal*** ***(B135) No. 2 (+) — Chassis ground (−):***	Is the voltage less than 1 V?	Replace the ECM. <Ref. to FU(H4SO)-35, Engine Control Module (ECM).>	Repair battery short circuit in harness between ECM and rear oxygen sensor connector. After repair, replace the ECM. <Ref. to FU(H4SO)-35, Engine Control Module (ECM).>
5	**CHECK POWER SUPPLY TO REAR OXYGEN SENSOR.** 1) Turn the ignition switch to OFF. 2) Disconnect the connector from rear oxygen sensor. 3) Turn the ignition switch to ON. 4) Measure the voltage between rear oxygen sensor connector and engine ground or chassis ground. ***Connector & terminal*** ***(B19) No. 2 (+) — Chassis ground (−):***	Is the voltage more than 10 V?	Go to step **6.**	Repair the power supply line or replace the main relay. NOTE: In this case, repair the following: • Open circuit in harness between oxygen sensor relay and rear oxygen sensor connector • Poor contact in oxygen sensor relay connector

Step		Check	Yes	No
6	**CHECK REAR OXYGEN SENSOR.** 1) Turn the ignition switch to OFF. 2) Measure the resistance between rear oxygen sensor connector terminals. ***Terminals*** ***No. 1 — No. 2:***	Is the resistance less than 30 Ω?	Repair harness and connector. NOTE: In this case, repair the following: • Open circuit in harness between rear oxygen sensor and ECM connector • Poor contact in rear oxygen sensor connector • Poor contact in ECM connector • Poor contact in coupling connector	Replace the rear oxygen sensor.<Ref. to FU(H4SO)-34, Rear Oxygen Sensor.>

E: DTC P0038 HO2S HEATER CONTROL CIRCUIT HIGH (BANK 1 SENSOR 2)

DTC DETECTING CONDITION:

- Two consecutive driving cycles with fault
- GENERAL DESCRIPTION <Ref. to GD(H4SO)-16, DTC P0038 HO2S HEATER CONTROL CIRCUIT HIGH (BANK 1 SENSOR 2), Diagnostic Trouble Code (DTC) Detecting Criteria.>

CAUTION:
After repair or replacement of faulty parts, conduct Clear Memory Mode <Ref. to EN(H4SO)(diag)-43, OPERATION, Clear Memory Mode.> and Inspection Mode <Ref. to EN(H4SO)(diag)-35, PROCEDURE, Inspection Mode.>.

WIRING DIAGRAM:

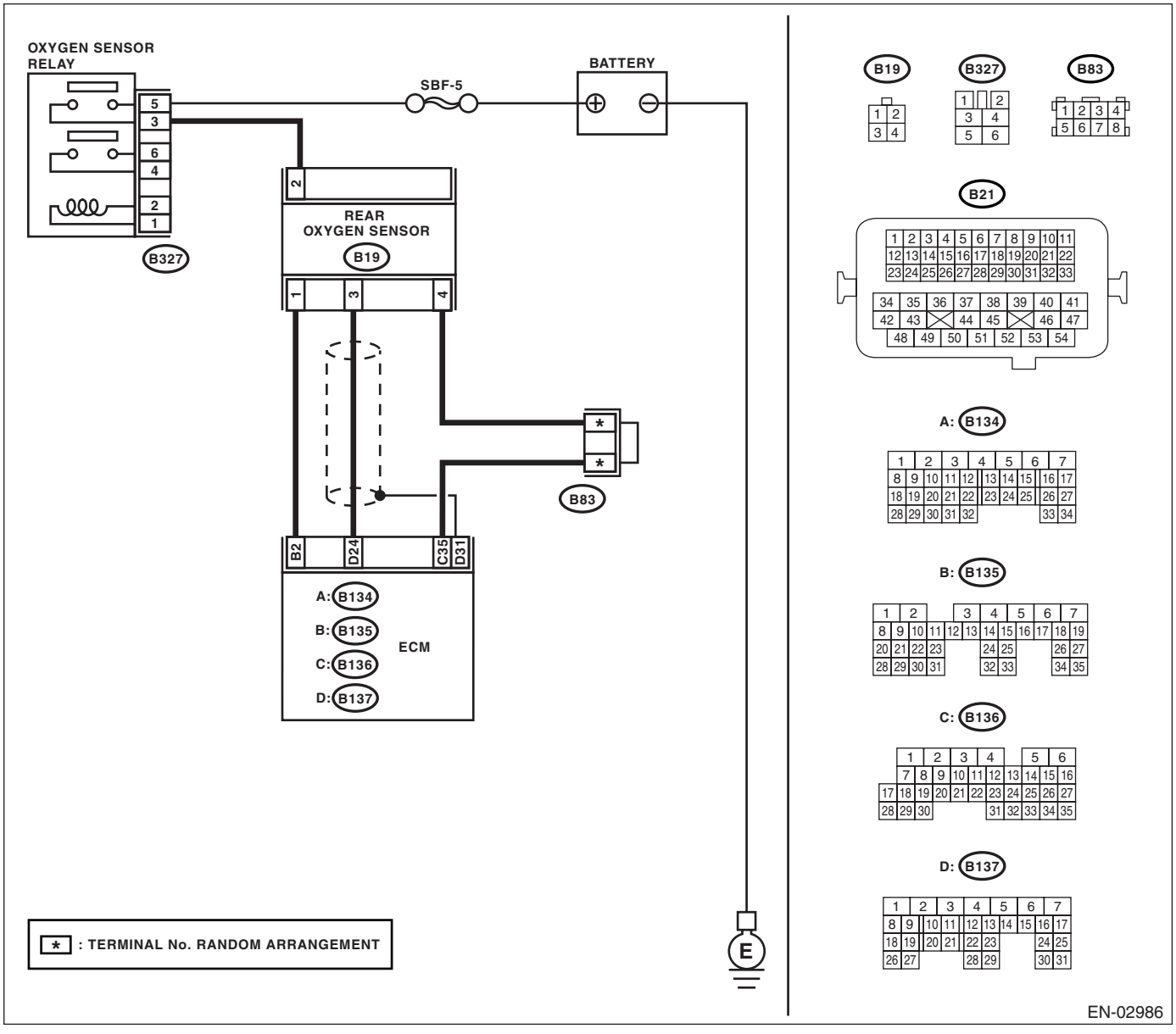

	Step	Check	Yes	No
1	**CHECK INPUT SIGNAL FOR ECM.** Measure the voltage between ECM connector and chassis ground. ***Connector & terminal*** ***(B135) No. 2 (+) — Chassis ground (−):***	Is the voltage more than 8 V?	Go to step **2.**	Go to step **3.**
2	**CHECK CURRENT DATA.** 1) Turn the ignition switch to OFF. 2) Repair the battery short circuit in harness between ECM and rear oxygen sensor connector. 3) Turn the ignition switch to ON. 4) Read the data of rear oxygen sensor heater current using Subaru Select Monitor or general scan tool. NOTE: • Subaru Select Monitor For detailed operation procedure, refer to the "READ CURRENT DATA FOR ENGINE". <Ref. to EN(H4SO)(diag)-27, Subaru Select Monitor.> • General scan tool For detailed operation procedure, refer to the general scan tool instruction manual.	Is the current more than 7 A?	Replace the ECM. <Ref. to FU(H4SO)-35, Engine Control Module (ECM).>	END
3	**CHECK POOR CONTACT.** Check poor contact in ECM connector.	Is there poor contact in ECM connector?	Repair poor contact in ECM connector.	END

F: DTC P0068 MAP/MAF - THROTTLE POSITION CORRELATION

DTC DETECTING CONDITION:

- Two consecutive driving cycles with fault
- GENERAL DESCRIPTION <Ref. to GD(H4SO)-18, DTC P0068 MAP/MAF - THROTTLE POSITION CORRELATION, Diagnostic Trouble Code (DTC) Detecting Criteria.>

CAUTION:
After repair or replacement of faulty parts, conduct CLEAR MEMORY MODE <Ref. to EN(H4SO)(diag)-43, OPERATION, Clear Memory Mode.> and INSPECTION MODE <Ref. to EN(H4SO)(diag)-35, PROCEDURE, Inspection Mode.>.

WIRING DIAGRAM:

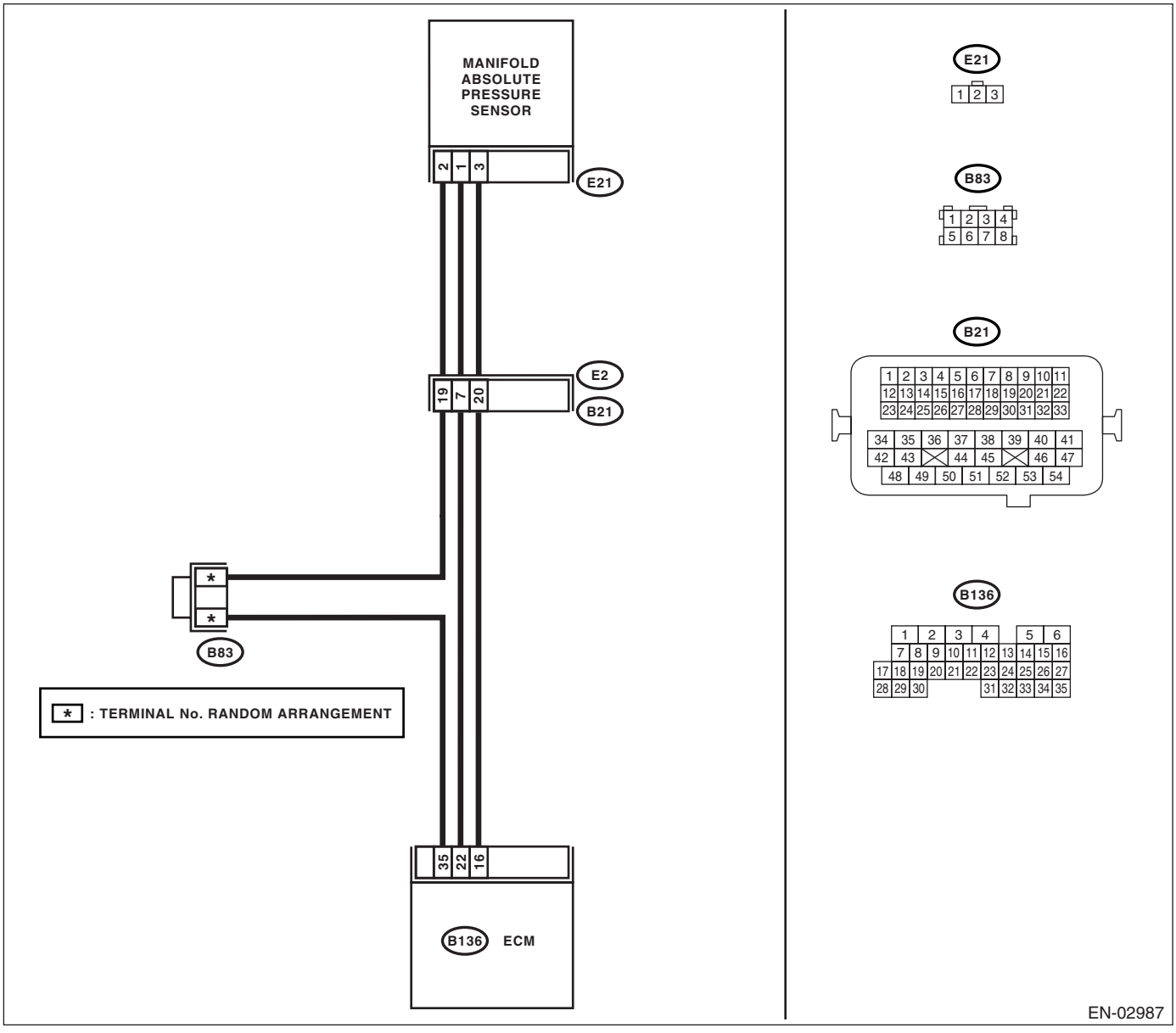

	Step	Check	Yes	No
1	**CHECK FOR ANY OTHER DTC ON DISPLAY.**	Is any other DTC displayed?	Inspect DTC using "List of Diagnostic Trouble Code (DTC)". <Ref. to EN(H4SO)(diag)-70, List of Diagnostic Trouble Code (DTC).>	Go to step **2.**
2	**CHECK AIR INTAKE SYSTEM.**	Are there holes, loose bolts or disconnection of hose on air intake system?	Repair air intake system.	Go to step **3.**
3	**CHECK PRESSURE SENSOR.** 1) Start the engine and warm-up engine until coolant temperature is greater than 60°C (140°F). 2) Place the selector lever or shift lever in "P" or "N" position. 3) Turn the A/C switch to OFF. 4) All accessory switches OFF. 5) Read the data of intake manifold pressure sensor signal using Subaru Select Monitor or general scan tool. NOTE: • Subaru Select Monitor For detailed operation procedures, refer to "READ CURRENT DATA FOR ENGINE". <Ref. to EN(H4SO)(diag)-27, Subaru Select Monitor.> • General scan tool For detailed operation procedures, refer to the general scan tool instruction manual.	Ignition ON: Is the measured value 73.3 — 106.6 kPa (550 — 800 mmHg, 21.65 — 31.50 inHg)? Idling: Is the measured value 20.0 — 46.7 kPa (150 — 350 mmHg, 5.91 — 13.78 inHg)?	Go to step **4.**	Replace the manifold absolute pressure sensor. <Ref. to FU(H4SO)-26, Manifold Absolute Pressure Sensor.>
4	**CHECK THROTTLE POSITION.** Read the data of throttle position signal using Subaru Select Monitor or general scan tool. NOTE: • Subaru Select Monitor For detailed operation procedures, refer to "READ CURRENT DATA FOR ENGINE". <Ref. to EN(H4SO)(diag)-27, Subaru Select Monitor.> • General scan tool For detailed operation procedures, refer to the general scan tool instruction manual.	Is the measured value less than 5% when throttle is fully closed?	Go to step **5.**	Adjust or replace the throttle position sensor. <Ref. to FU(H4SO)-25, Throttle Position Sensor.>
5	**CHECK THROTTLE POSITION.**	Is the measured value more than 85% when throttle is wide open?	Replace the manifold absolute pressure sensor. <Ref. to FU(H4SO)-26, Manifold Absolute Pressure Sensor.>	Replace the throttle position sensor.<Ref. to FU(H4SO)-25, Throttle Position Sensor.>

G: DTC P0101 MASS OR VOLUME AIR FLOW CIRCUIT RANGE/PERFORMANCE

DTC DETECTING CONDITION:

- Two consecutive driving cycles with fault
- GENERAL DESCRIPTION <Ref. to GD(H4SO)-20, DTC P0101 MASS OR VOLUME AIR FLOW CIRCUIT RANGE/PERFORMANCE, Diagnostic Trouble Code (DTC) Detecting Criteria.>

TROUBLE SYMPTOM:

- Erroneous idling
- Engine stalls.
- Poor driving performance

CAUTION:

After repair or replacement of faulty parts, conduct Clear Memory Mode <Ref. to EN(H4SO)(diag)-43, OPERATION, Clear Memory Mode.> and Inspection Mode <Ref. to EN(H4SO)(diag)-35, PROCEDURE, Inspection Mode.>.

WIRING DIAGRAM:

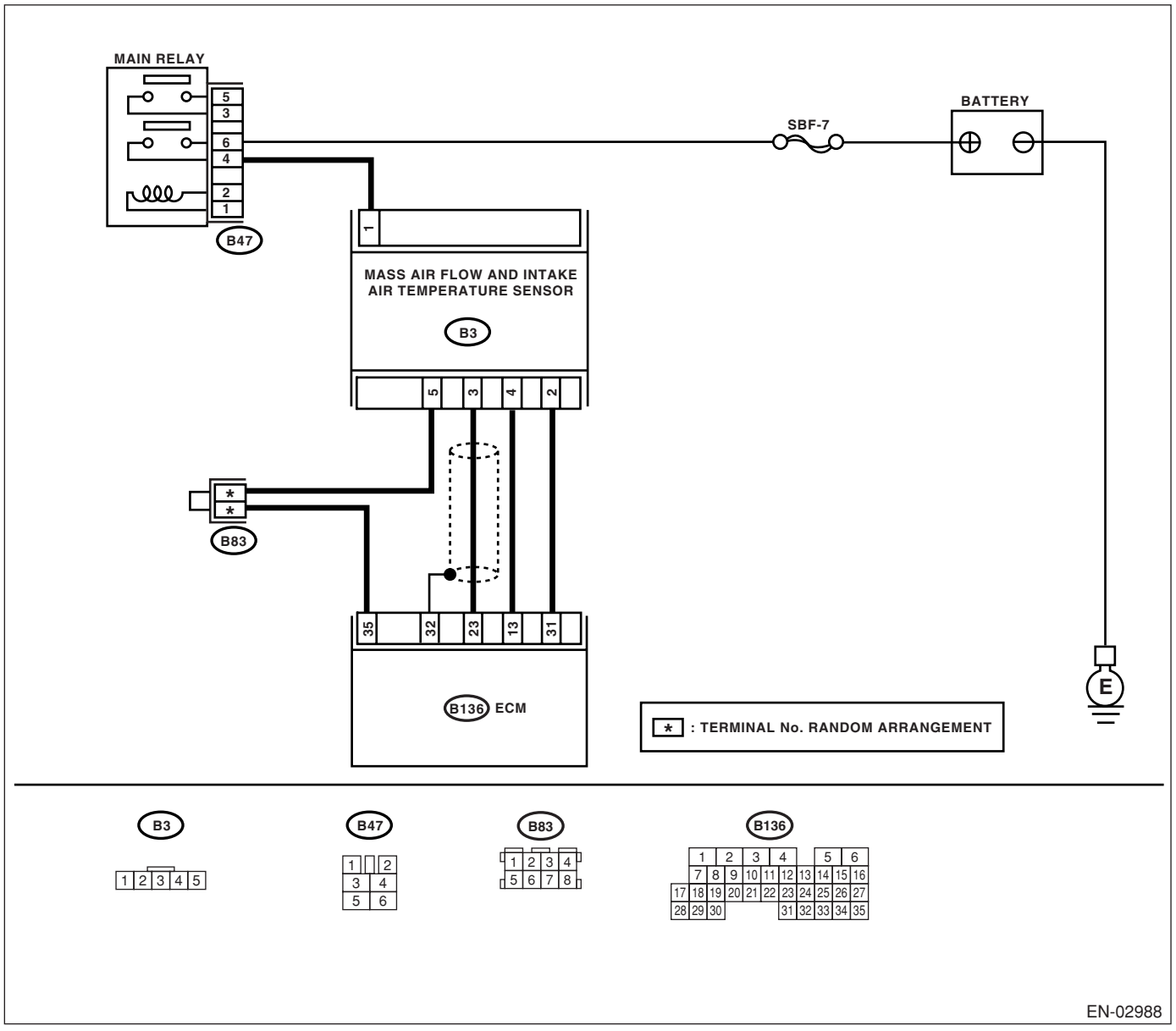

Step		Check	Yes	No
1	**CHECK FOR ANY OTHER DTC ON DISPLAY.**	Is any other DTC displayed?	Inspect the relevant DTC using "List of Diagnostic Trouble Code (DTC)".<Ref. to EN(H4SO)(diag)-70, List of Diagnostic Trouble Code (DTC).> NOTE: In this case, it is not necessary to inspect DTC P0101.	Replace the mass air flow and intake air temperature sensor.<Ref. to FU(H4SO)-27, Mass Air Flow and Intake Air Temperature Sensor.>

H: DTC P0102 MASS OR VOLUME AIR FLOW CIRCUIT LOW INPUT

DTC DETECTING CONDITION:

- Detect as soon as malfunction occurs.
- GENERAL DESCRIPTION <Ref. to GD(H4SO)-23, DTC P0102 MASS OR VOLUME AIR FLOW CIRCUIT LOW INPUT, Diagnostic Trouble Code (DTC) Detecting Criteria.>

TROUBLE SYMPTOM:

- Erroneous idling
- Engine stalls.
- Poor driving performance

CAUTION:

After repair or replacement of faulty parts, conduct Clear Memory Mode <Ref. to EN(H4SO)(diag)-43, OPERATION, Clear Memory Mode.> and Inspection Mode <Ref. to EN(H4SO)(diag)-35, PROCEDURE, Inspection Mode.>.

WIRING DIAGRAM:

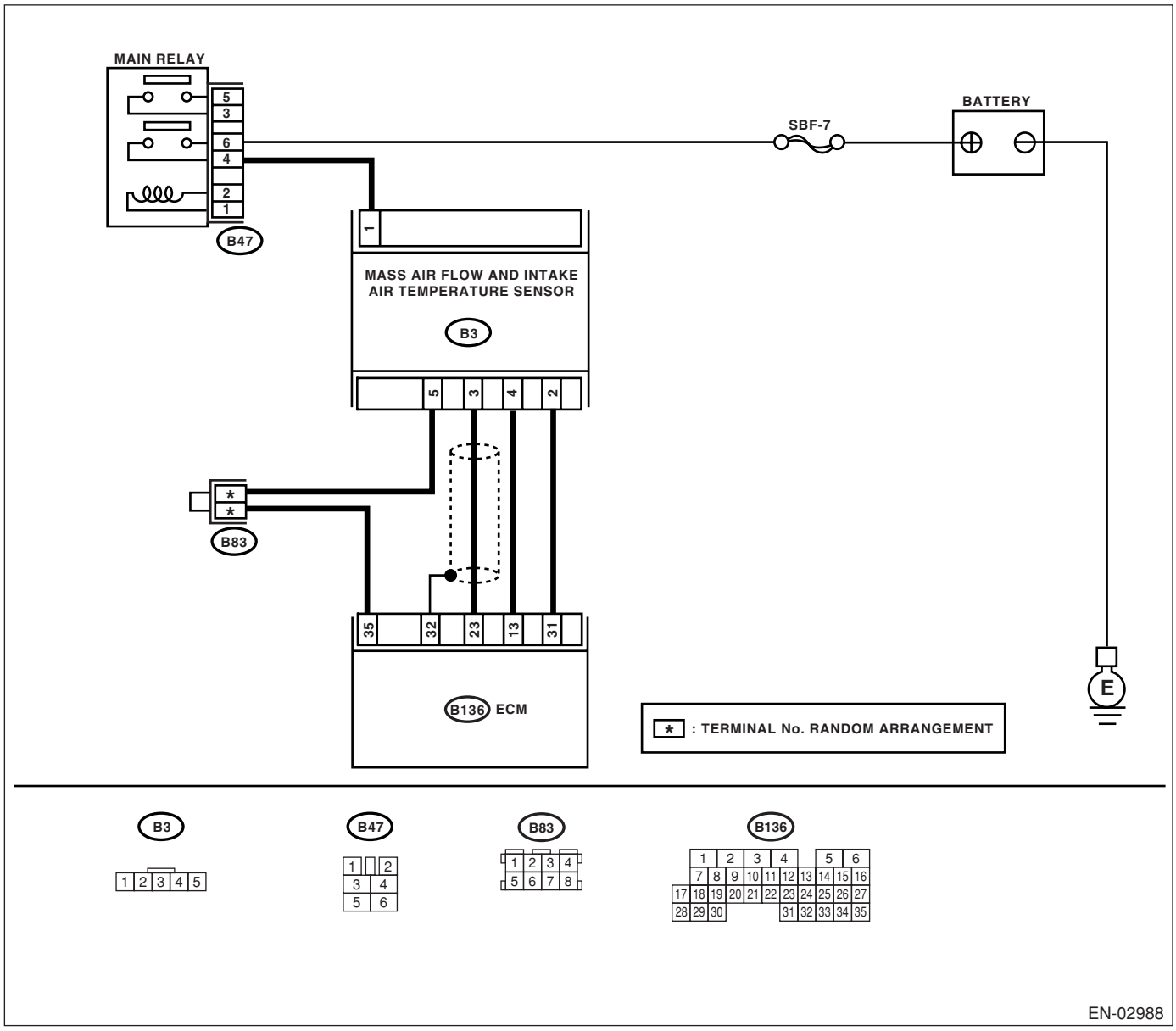

	Step	Check	Yes	No
1	**CONNECT SUBARU SELECT MONITOR OR THE GENERAL SCAN TOOL, AND READ DATA.** 1) Turn the ignition switch to OFF. 2) Connect the Subaru Select Monitor or general scan tool to data link connector. 3) Turn the ignition switch to ON and Subaru Select Monitor or the general scan tool switch to ON. 4) Start the engine. 5) Read the mass air flow sensor voltage using Subaru Select Monitor or general scan tool. NOTE: • Subaru Select Monitor For detailed operation procedure, refer to the "READ CURRENT DATA FOR ENGINE".<Ref. to EN(H4SO)(diag)-27, Subaru Select Monitor.> • General scan tool For detailed operation procedures, refer to the general scan tool instruction manual.	Is the measured value within 0.2 to 4.7 V?	Even if malfunction indicator light lights up, the circuit has returned to a normal condition at this time. A temporary poor contact of the connector or harness may be the cause. Repair the harness or connector in the mass air flow sensor. NOTE: In this case, repair the following: • Open or ground short circuit in harness between mass air flow sensor and ECM connector • Poor contact in mass air flow sensor or ECM connector	Go to step **2.**
2	**CHECK INPUT SIGNAL FOR ECM.** Measure the voltage between ECM connector and chassis ground while engine is idling. ***Connector & terminal*** ***(B136) No. 23 (+) — Chassis ground (−):***	Is the measured value less than 0.2 V?	Go to step **4.**	Go to step **3.**
3	**CHECK INPUT SIGNAL FOR ECM (USING SUBARU SELECT MONITOR).** Measure the voltage between ECM connector and chassis ground while engine is idling.	Shake the ECM harness and connector, while monitoring value of Subaru Select Monitor. Does the voltage change?	Repair the poor contact in ECM connector.	Contact your SOA Service Center.
4	**CHECK POWER SUPPLY TO MASS AIR FLOW SENSOR.** 1) Turn the ignition switch to OFF. 2) Disconnect the connector from mass air flow sensor. 3) Turn the ignition switch to ON. 4) Measure the voltage between mass air flow sensor connector and chassis ground. ***Connector & terminal*** ***(B3) No. 1 (+) — Chassis ground (−):***	Is the voltage more than 5 V?	Go to step **5.**	Repair the open circuit between mass air flow sensor and main relay.
5	**CHECK HARNESS BETWEEN ECM AND MASS AIR FLOW SENSOR CONNECTOR.** 1) Turn the ignition switch to OFF. 2) Disconnect the connector from ECM. 3) Measure the resistance of harness between ECM and mass air flow sensor connector. ***Connector & terminal*** ***(B136) No. 23 — (B3) No. 3:*** ***(B136) No. 31 — (B3) No. 2:*** ***(B136) No. 35 — (B3) No. 5:***	Is the measured value less than 1 Ω?	Go to step **6.**	Repair the open circuit between ECM and mass air flow sensor connector.

	Step	Check	Yes	No
6	**CHECK HARNESS BETWEEN ECM AND MASS AIR FLOW SENSOR CONNECTOR** Measure the resistance of harness between ECM and chassis ground. ***Connector & terminal*** ***(B136) No. 23 — Chassis ground:*** ***(B136) No. 31 — Chassis ground:*** ***(B136) No. 35 — Chassis ground:***	Is the measured value more than 1 MΩ?	Go to step **7.**	Repair the ground short circuit between ECM and mass air flow sensor connector.
7	**CHECK POOR CONTACT** Check poor contact in mass air flow sensor connector.	Is there poor contact in mass air flow sensor connector?	Repair the poor contact in mass air flow sensor connector.	Replace the mass air flow and intake air temperature sensor.<Ref. to FU(H4SO)-27, Mass Air Flow and Intake Air Temperature Sensor.>

I: DTC P0103 MASS OR VOLUME AIR FLOW CIRCUIT HIGH INPUT

DTC DETECTING CONDITION:

- Detect as soon as malfunction occurs.
- GENERAL DESCRIPTION <Ref. to GD(H4SO)-25, DTC P0103 MASS OR VOLUME AIR FLOW CIRCUIT HIGH INPUT, Diagnostic Trouble Code (DTC) Detecting Criteria.>

TROUBLE SYMPTOM:

- Erroneous idling
- Engine stalls.
- Poor driving performance

CAUTION:

After repair or replacement of faulty parts, conduct Clear Memory Mode <Ref. to EN(H4SO)(diag)-43, OPERATION, Clear Memory Mode.> and Inspection Mode <Ref. to EN(H4SO)(diag)-35, PROCEDURE, Inspection Mode.>.

WIRING DIAGRAM:

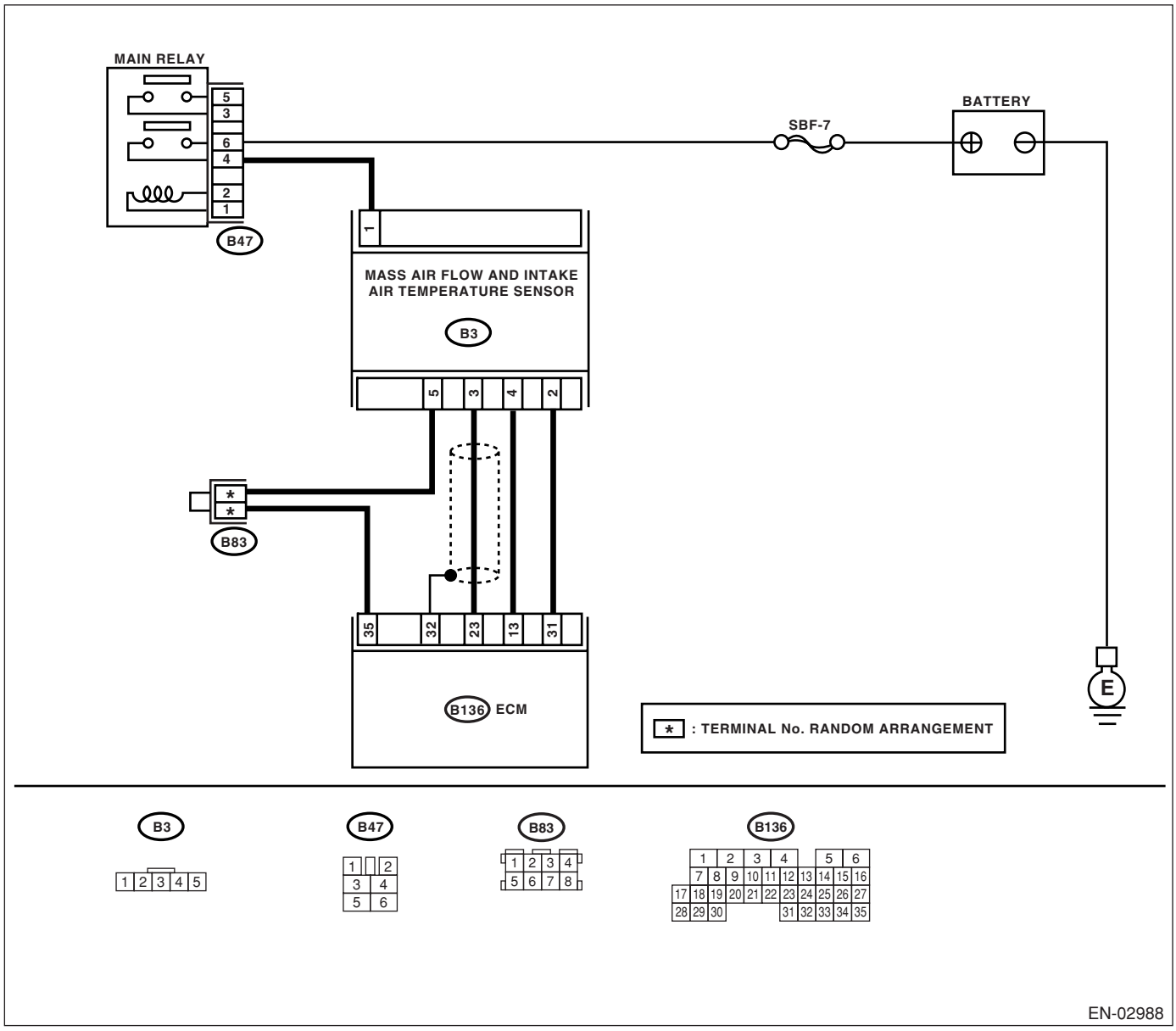

	Step	Check	Yes	No
1	**CONNECT SUBARU SELECT MONITOR OR THE GENERAL SCAN TOOL, AND READ DATA.** 1) Turn the ignition switch to OFF. 2) Connect the Subaru Select Monitor or general scan tool to data link connector. 3) Turn the ignition switch to ON and Subaru Select Monitor or general scan tool switch to ON. 4) Start the engine. 5) Read the mass air flow sensor voltage using Subaru Select Monitor or general scan tool. NOTE: • Subaru Select Monitor For detailed operation procedure, refer to the "READ CURRENT DATA FOR ENGINE".<Ref. to EN(H4SO)(diag)-27, Subaru Select Monitor.> • General scan tool For detailed operation procedures, refer to the general scan tool instruction manual.	Is the measured value within 0.2 to 4.7 V?	Even if malfunction indicator light lights up, the circuit has returned to a normal condition at this time.	Go to step **2.**
2	**CHECK HARNESS BETWEEN ECM AND MASS AIR FLOW SENSOR CONNECTOR.** 1) Turn the ignition switch to OFF. 2) Disconnect the connector from mass air flow sensor. 3) Turn the ignition switch to ON. 4) Measure the voltage between mass air flow sensor connector and chassis ground. ***Connector & terminal*** ***(B3) No. 3 (+) — Chassis ground (−):***	Is the measured value more than 5 V?	Repair the battery short of harness between mass air flow sensor connector and ECM connector.	Go to step **3.**
3	**CHECK HARNESS BETWEEN ECM AND MASS AIR FLOW SENSOR CONNECTOR.** 1) Turn the ignition switch to OFF. 2) Disconnect the connector from ECM. 3) Measure the resistance between ECM connector and mass air flow sensor connector. ***Connector & terminal*** ***(B3) No. 2 — (B136) No. 31:***	Is the measured value less than 1 Ω?	Replace the mass air flow sensor.<Ref. to FU(H4SO)-27, Mass Air Flow and Intake Air Temperature Sensor.>	Repair the open harness between mass air flow sensor connector and ECM connector.

J: DTC P0107 MANIFOLD ABSOLUTE PRESSURE/BAROMETRIC PRESSURE CIRCUIT LOW INPUT

DTC DETECTING CONDITION:

- Detect as soon as malfunction occurs.
- GENERAL DESCRIPTION <Ref. to GD(H4SO)-27, DTC P0107 MANIFOLD ABSOLUTE PRESSURE/ BAROMETRIC PRESSURE CIRCUIT LOW INPUT, Diagnostic Trouble Code (DTC) Detecting Criteria.>

CAUTION:

After repair or replacement of faulty parts, conduct Clear Memory Mode <Ref. to EN(H4SO)(diag)-43, OPERATION, Clear Memory Mode.> and Inspection Mode <Ref. to EN(H4SO)(diag)-35, PROCEDURE, Inspection Mode.>.

WIRING DIAGRAM:

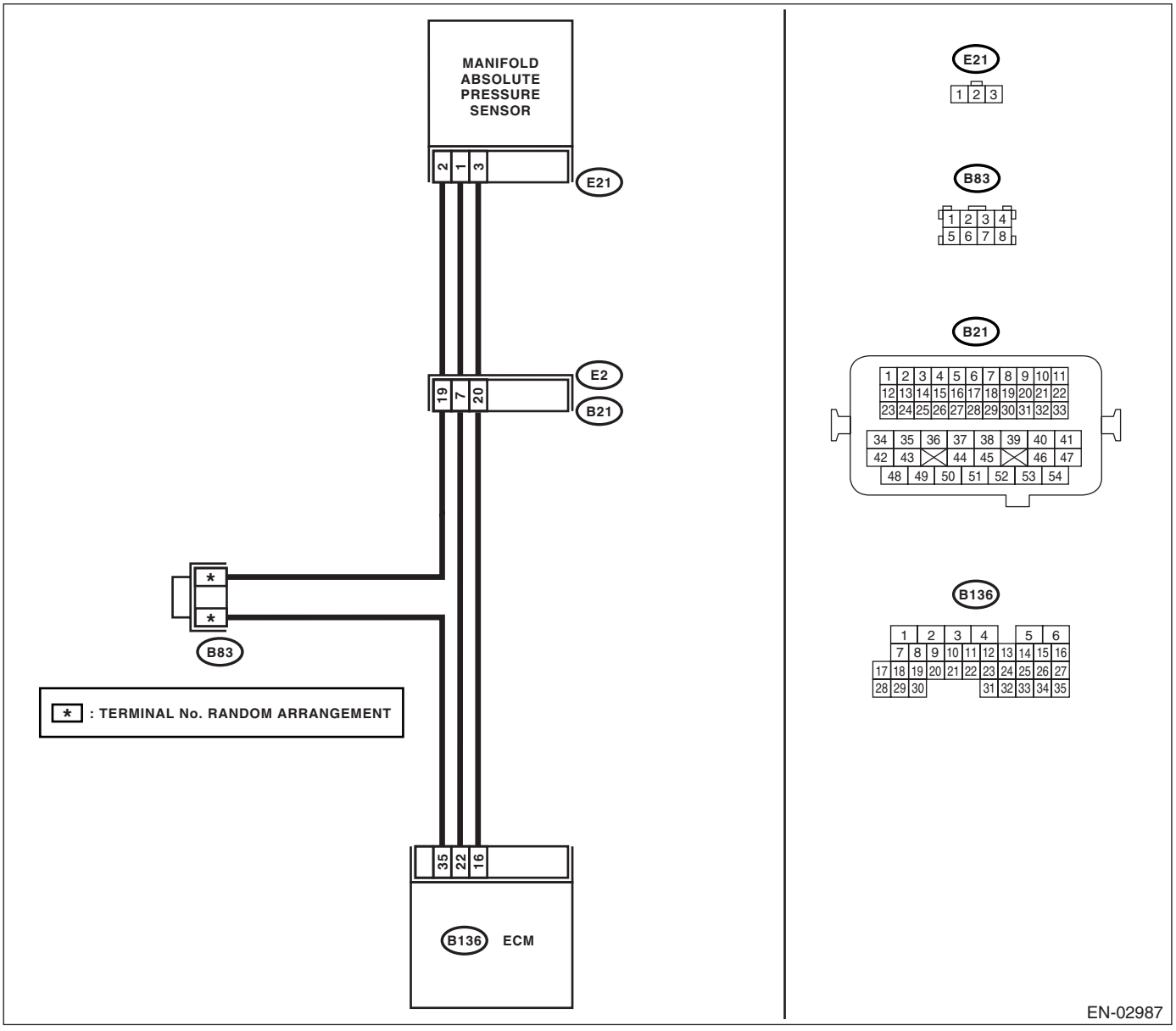

	Step	Check	Yes	No
1	**CHECK CURRENT DATA.** 1) Start the engine. 2) Read the data of intake manifold absolute pressure signal using Subaru Select Monitor or general scan tool. NOTE: • Subaru Select Monitor For detailed operation procedure, refer to the "READ CURRENT DATA FOR ENGINE". <Ref. to EN(H4SO)(diag)-27, Subaru Select Monitor.> • General scan tool For detailed operation procedures, refer to the general scan tool instruction manual.	Is the measured value less than 13.3 kPa (100 mmHg, 3.94 inHg)?	Go to step **3.**	Go to step **2.**
2	**CHECK POOR CONTACT.** Check poor contact in ECM and manifold absolute pressure sensor connector.	Is there poor contact in ECM or manifold absolute pressure sensor connector?	Repair poor contact in ECM or manifold absolute pressure sensor connector.	Even if malfunction indicator light lights up, the circuit has returned to a normal condition at this time.
3	**CHECK OUTPUT SIGNAL FOR ECM.** Measure the voltage between ECM connector and chassis ground. ***Connector & terminal*** ***(B136) No. 16 (+) — Chassis ground (–):***	Is the voltage more than 4.5 V?	Go to step **5.**	Go to step **4.**
4	**CHECK OUTPUT SIGNAL FOR ECM.** Measure the voltage between ECM connector and chassis ground. ***Connector & terminal*** ***(B136) No. 16 (+) — Chassis ground (–):***	Does the voltage change by shaking the ECM harness and connector?	Repair poor contact in ECM connector.	Contact SOA Service Center.
5	**CHECK INPUT SIGNAL FOR ECM.** Measure the voltage between ECM and chassis ground. ***Connector & terminal*** ***(B136) No. 22 (+) — Chassis ground (–):***	Is the voltage less than 0.2 V?	Go to step **7.**	Go to step **6.**
6	**CHECK INPUT SIGNAL FOR ECM. (USING SUBARU SELECT MONITOR)** Read the data of atmospheric absolute pressure signal using Subaru Select Monitor. NOTE: • Subaru Select Monitor For detailed operation procedure, refer to the "READ CURRENT DATA FOR ENGINE". <Ref. to EN(H4SO)(diag)-27, Subaru Select Monitor.>	Is the measured value more than 13.3 kPa (100 mmHg, 3.94 inHg) by shaking the harness and connector of ECM?	Repair poor contact in ECM connector.	Go to step **7.**
7	**CHECK HARNESS BETWEEN MANIFOLD ABSOLUTE PRESSURE SENSOR AND ECM CONNECTOR.** 1) Turn the ignition switch to OFF. 2) Disconnect the connector from manifold absolute pressure sensor. 3) Turn the ignition switch to ON. 4) Measure the voltage between manifold absolute pressure sensor connector and engine ground. ***Connector & terminal*** ***(E21) No. 3 (+) — Engine ground (–):***	Is the voltage more than 4.5 V?	Go to step **8.**	Repair open circuit in harness between ECM and manifold absolute pressure sensor connector.

	Step	Check	Yes	No
8	**CHECK HARNESS BETWEEN MANIFOLD ABSOLUTE PRESSURE SENSOR AND ECM CONNECTOR.** 1) Turn the ignition switch to OFF. 2) Disconnect the connector from ECM. 3) Measure the resistance of harness between ECM and manifold absolute pressure sensor connector. ***Connector & terminal*** ***(B136) No. 35 — (E21) No. 2:***	Is the resistance less than 1 Ω?	Go to step **9.**	Repair open circuit in harness between ECM and manifold absolute pressure sensor connector.
9	**CHECK POOR CONTACT.** Check poor contact in manifold absolute pressure sensor connector.	Is there poor contact in manifold absolute pressure sensor connector?	Repair poor contact in manifold absolute pressure sensor connector.	Replace the manifold absolute pressure sensor. <Ref. to FU(H4SO)-26, Manifold Absolute Pressure Sensor.>

K: DTC P0108 MANIFOLD ABSOLUTE PRESSURE/BAROMETRIC PRESSURE CIRCUIT HIGH INPUT

DTC DETECTING CONDITION:

- Detect as soon as malfunction occurs.
- GENERAL DESCRIPTION <Ref. to GD(H4SO)-29, DTC P0108 MANIFOLD ABSOLUTE PRESSURE/ BAROMETRIC PRESSURE CIRCUIT HIGH INPUT, Diagnostic Trouble Code (DTC) Detecting Criteria.>

CAUTION:

After repair or replacement of faulty parts, conduct Clear Memory Mode <Ref. to EN(H4SO)(diag)-43, OPERATION, Clear Memory Mode.> and Inspection Mode <Ref. to EN(H4SO)(diag)-35, PROCEDURE, Inspection Mode.>.

WIRING DIAGRAM:

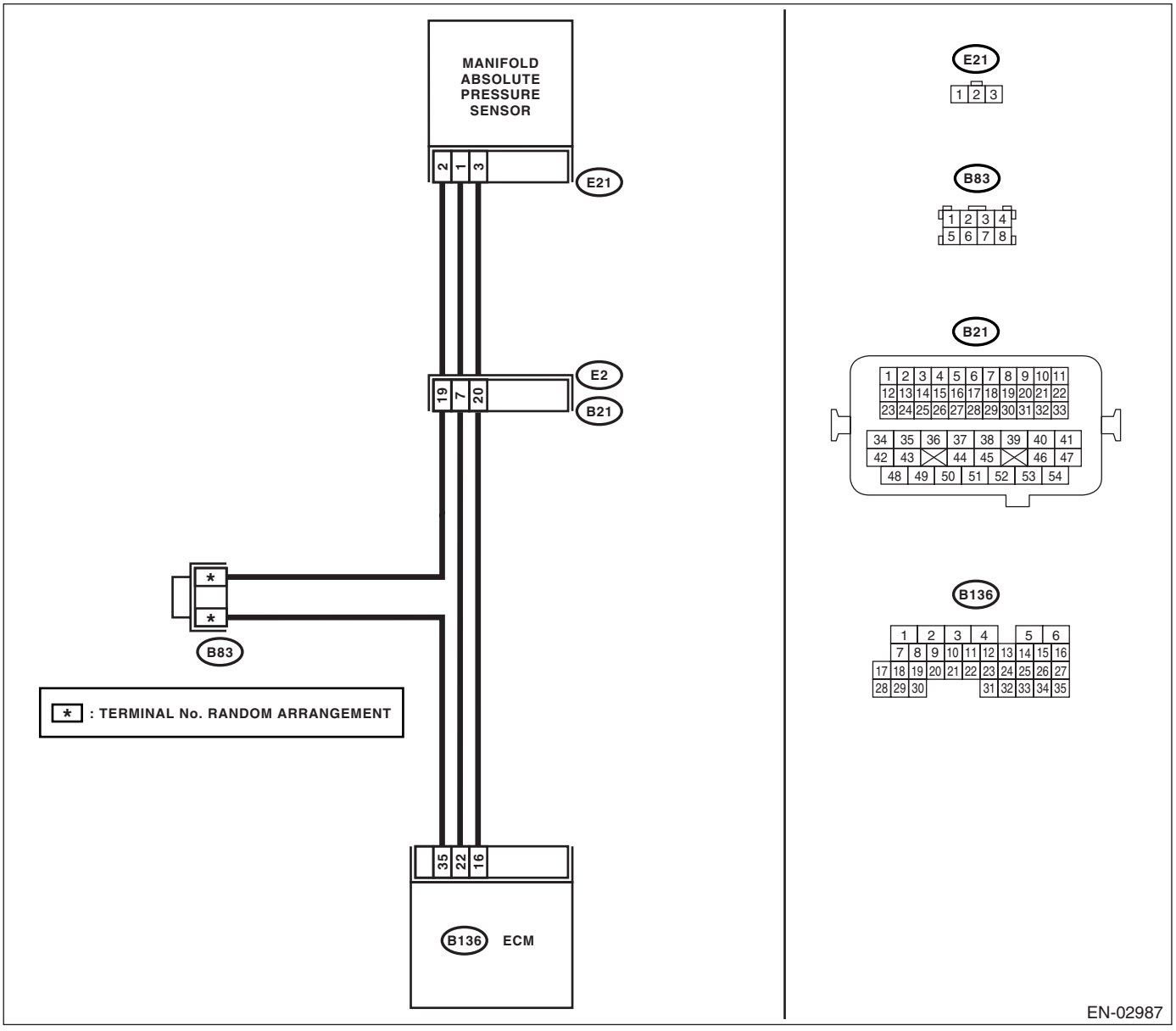

	Step	Check	Yes	No
1	**CHECK CURRENT DATA.** 1) Start the engine. 2) Read the data of intake manifold absolute pressure signal using Subaru Select Monitor or general scan tool. NOTE: • Subaru Select Monitor For detailed operation procedure, refer to the "READ CURRENT DATA FOR ENGINE". <Ref. to EN(H4SO)(diag)-27, Subaru Select Monitor.> • General scan tool For detailed operation procedures, refer to the general scan tool instruction manual.	Is the measured value more than 119.5 kPa (896.5 mmHg, 35.29 inHg)?	Go to step **10.**	Go to step **2.**
2	**CHECK OUTPUT SIGNAL FOR ECM.** Measure the voltage between ECM connector and chassis ground. ***Connector & terminal*** ***(B136) No. 16 (+) — Chassis ground (–):***	Is the voltage more than 4.5 V?	Go to step **4.**	Go to step **3.**
3	**CHECK OUTPUT SIGNAL FOR ECM.** Measure the voltage between ECM connector and chassis ground. ***Connector & terminal*** ***(B136) No. 16 (+) — Chassis ground (–):***	Does the voltage change by shaking the ECM harness and connector?	Repair poor contact in ECM connector.	Contact SOA Service Center.
4	**CHECK INPUT SIGNAL FOR ECM.** Measure the voltage between ECM connector and chassis ground. ***Connector & terminal*** ***(B136) No. 22 (+) — Chassis ground (–):***	Is the voltage less than 0.2 V?	Go to step **6.**	Go to step **5.**
5	**CHECK INPUT SIGNAL FOR ECM. (USING SUBARU SELECT MONITOR)** Read the data of atmospheric absolute pressure signal using Subaru Select Monitor. NOTE: • Subaru Select Monitor For detailed operation procedure, refer to the "READ CURRENT DATA FOR ENGINE". <Ref. to EN(H4SO)(diag)-27, Subaru Select Monitor.>	Is the measured value more than 13.3 kPa (100 mmHg, 3.94 inHg) by shaking the harness and connector of ECM?	Repair poor contact in ECM connector.	Go to step **6.**
6	**CHECK HARNESS BETWEEN MANIFOLD ABSOLUTE PRESSURE SENSOR AND ECM CONNECTOR.** 1) Turn the ignition switch to OFF. 2) Disconnect the connector from manifold absolute pressure sensor. 3) Turn the ignition switch to ON. 4) Measure the voltage between manifold absolute pressure sensor connector and engine ground. ***Connector & terminal*** ***(E21) No. 3 (+) — Engine ground (–):***	Is the voltage more than 4.5 V?	Go to step **7.**	Repair open circuit in harness between ECM and manifold absolute pressure sensor connector.

	Step	Check	Yes	No
7	**CHECK HARNESS BETWEEN MANIFOLD ABSOLUTE PRESSURE SENSOR AND ECM CONNECTOR.** 1) Turn the ignition switch to OFF. 2) Disconnect the connector from ECM. 3) Measure the resistance of harness between ECM and manifold absolute pressure sensor connector. ***Connector & terminal*** ***(B136) No. 22 — (E21) No. 1:***	Is the resistance less than 1 Ω?	Go to step **8.**	Repair open circuit in harness between ECM and manifold absolute pressure sensor connector.
8	**CHECK HARNESS BETWEEN MANIFOLD ABSOLUTE PRESSURE SENSOR AND ECM CONNECTOR.** Measure the resistance of harness between ECM and manifold absolute pressure sensor connector. ***Connector & terminal*** ***(B136) No. 35 — (E21) No. 2:***	Is the resistance less than 1 Ω?	Go to step **9.**	Repair open circuit in harness between ECM and manifold absolute pressure sensor connector.
9	**CHECK POOR CONTACT.** Check poor contact in manifold absolute pressure sensor connector.	Is there poor contact in manifold absolute pressure sensor connector?	Repair poor contact in manifold absolute pressure sensor connector.	Replace the manifold absolute pressure sensor. <Ref. to FU(H4SO)-26, Manifold Absolute Pressure Sensor.>
10	**CHECK HARNESS BETWEEN MANIFOLD ABSOLUTE PRESSURE SENSOR AND ECM CONNECTOR.** 1) Turn the ignition switch to OFF and Subaru Select Monitor or the general scan tool switch to OFF. 2) Disconnect the connector from manifold absolute pressure sensor. 3) Turn the ignition switch to ON and Subaru Select Monitor or the general scan tool switch to ON. 4) Read the data of intake manifold absolute pressure signal using Subaru Select Monitor or general scan tool. NOTE: • Subaru Select Monitor For detailed operation procedure, refer to the “READ CURRENT DATA FOR ENGINE”. <Ref. to EN(H4SO)(diag)-27, Subaru Select Monitor.> • General scan tool For detailed operation procedures, refer to the general scan tool instruction manual.	Is the measured value more than 119.5 kPa (896.5 mmHg, 35.29 inHg)?	Repair battery short circuit in harness between ECM and manifold absolute pressure sensor connector.	Replace the manifold absolute pressure sensor. <Ref. to FU(H4SO)-26, Manifold Absolute Pressure Sensor.>

L: DTC P0111 INTAKE AIR TEMPERATURE CIRCUIT RANGE/PERFORMANCE

DTC DETECTING CONDITION:

- Two consecutive driving cycles with fault
- GENERAL DESCRIPTION <Ref. to GD(H4SO)-31, DTC P0111 INTAKE AIR TEMPERATURE CIRCUIT RANGE/PERFORMANCE, Diagnostic Trouble Code (DTC) Detecting Criteria.>

TROUBLE SYMPTOM:

- Erroneous idling
- Poor driving performance

CAUTION:

After repair or replacement of faulty parts, conduct Clear Memory Mode <Ref. to EN(H4SO)(diag)-43, OPERATION, Clear Memory Mode.> and Inspection Mode <Ref. to EN(H4SO)(diag)-35, PROCEDURE, Inspection Mode.>.

WIRING DIAGRAM:

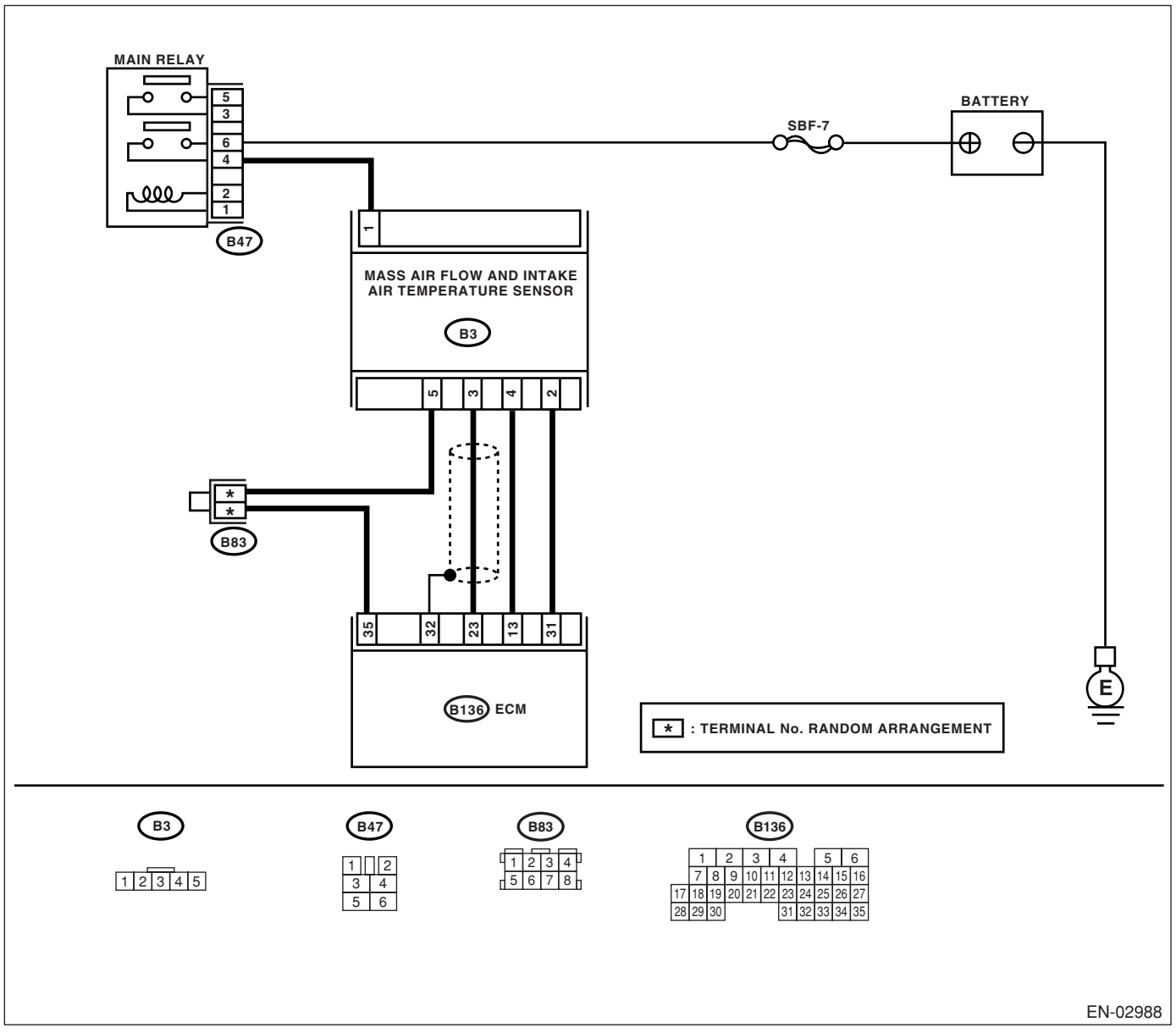

Step		Check	Yes	No
1	**CHECK FOR ANY OTHER DTC ON DISPLAY.**	Is any other DTC displayed?	Inspect DTC using “List of Diagnostic Trouble Code (DTC)”.<Ref. to EN(H4SO)(diag)-70, List of Diagnostic Trouble Code (DTC).> NOTE: In this case, it is not necessary to inspect DTC P0111.	Replace the intake air temperature sensor.<Ref. to FU(H4SO)-27, Mass Air Flow and Intake Air Temperature Sensor.>

M: DTC P0112 INTAKE AIR TEMPERATURE CIRCUIT LOW INPUT

DTC DETECTING CONDITION:

- Detect as soon as malfunction occurs.
- GENERAL DESCRIPTION <Ref. to GD(H4SO)-33, DTC P0112 INTAKE AIR TEMPERATURE CIRCUIT LOW INPUT, Diagnostic Trouble Code (DTC) Detecting Criteria.>

TROUBLE SYMPTOM:

- Erroneous idling
- Poor driving performance

CAUTION:

After repair or replacement of faulty parts, conduct Clear Memory Mode <Ref. to EN(H4SO)(diag)-43, OPERATION, Clear Memory Mode.> and Inspection Mode <Ref. to EN(H4SO)(diag)-35, PROCEDURE, Inspection Mode.>.

WIRING DIAGRAM:

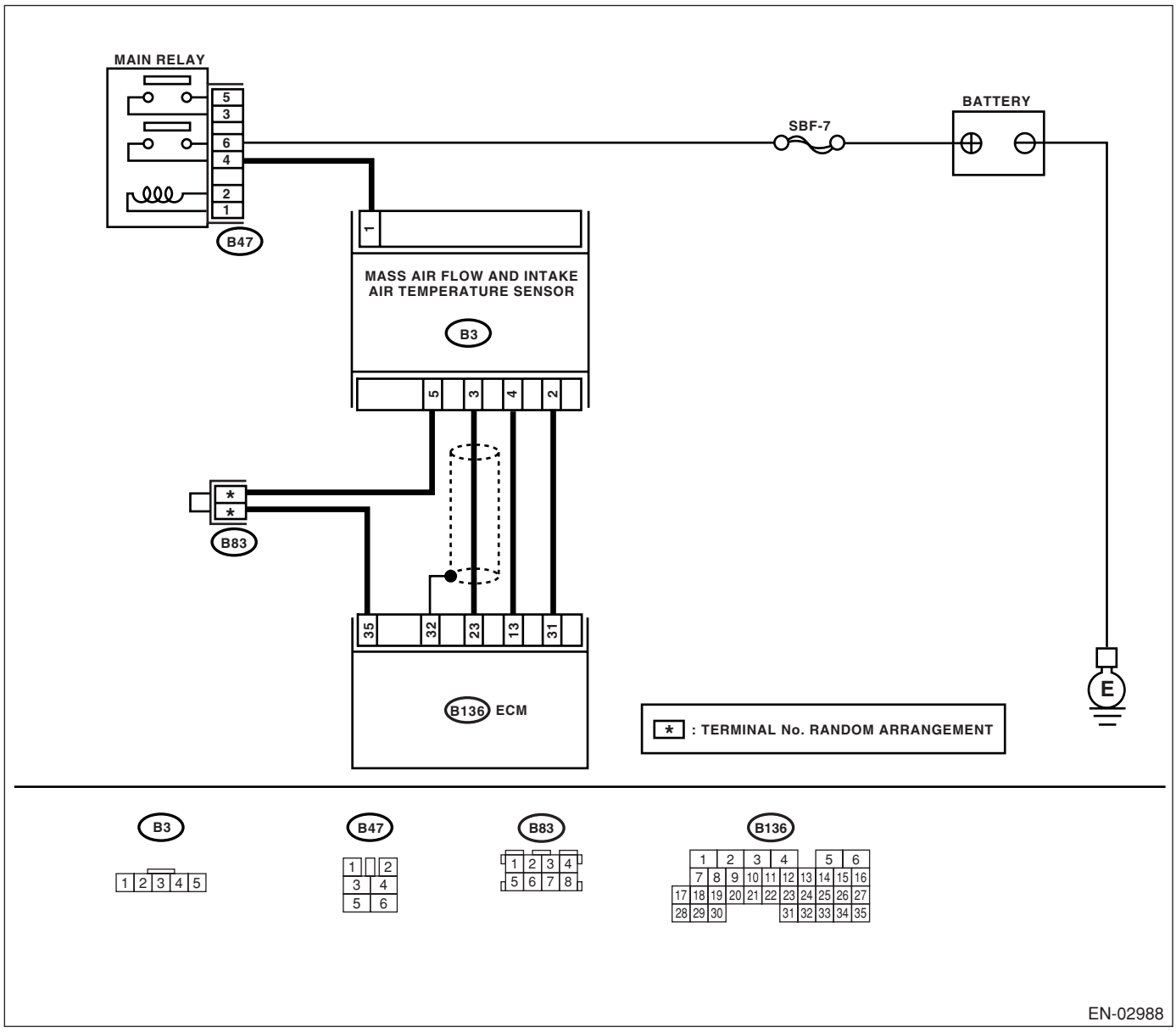

	Step	Check	Yes	No
1	**CHECK CURRENT DATA.** 1) Start the engine. 2) Read the data of intake air temperature sensor signal using Subaru Select Monitor or general scan tool. NOTE: • Subaru Select Monitor For detailed operation procedure, refer to the "READ CURRENT DATA FOR ENGINE".<Ref. to EN(H4SO)(diag)-27, Subaru Select Monitor.> • General scan tool For detailed operation procedure, refer to the general scan tool instruction manual.	Is the measured value more than 120°C (248°F)?	Go to step **2.**	Repair poor contact. NOTE: In this case, repair the following: • Poor contact in intake air temperature sensor • Poor contact in ECM • Poor contact in coupling connector • Poor contact in joint connector
2	**CHECK HARNESS BETWEEN INTAKE AIR TEMPERATURE SENSOR AND ECM CONNECTOR.** 1) Turn the ignition switch to OFF. 2) Disconnect the connector from intake air temperature sensor. 3) Turn the ignition switch to ON. 4) Read the data of intake air temperature sensor signal using Subaru Select Monitor or general scan tool. NOTE: • Subaru Select Monitor For detailed operation procedure, refer to the "READ CURRENT DATA FOR ENGINE".<Ref. to EN(H4SO)(diag)-27, Subaru Select Monitor.> • General scan tool For detailed operation procedure, refer to the general scan tool instruction manual.	Is the measured value less than −40°C (−40°F)?	Replace the intake air temperature sensor.<Ref. to FU(H4SO)-27, Mass Air Flow and Intake Air Temperature Sensor.>	Repair ground short circuit in harness between intake air temperature sensor and ECM connector.

N: DTC P0113 INTAKE AIR TEMPERATURE CIRCUIT HIGH INPUT

DTC DETECTING CONDITION:

- Detect as soon as malfunction occurs.
- GENERAL DESCRIPTION <Ref. to GD(H4SO)-35, DTC P0113 INTAKE AIR TEMPERATURE CIRCUIT HIGH INPUT, Diagnostic Trouble Code (DTC) Detecting Criteria.>

TROUBLE SYMPTOM:

- Erroneous idling
- Poor driving performance

CAUTION:
After repair or replacement of faulty parts, conduct Clear Memory Mode <Ref. to EN(H4SO)(diag)-43, OPERATION, Clear Memory Mode.> and Inspection Mode <Ref. to EN(H4SO)(diag)-35, PROCEDURE, Inspection Mode.>.

WIRING DIAGRAM:

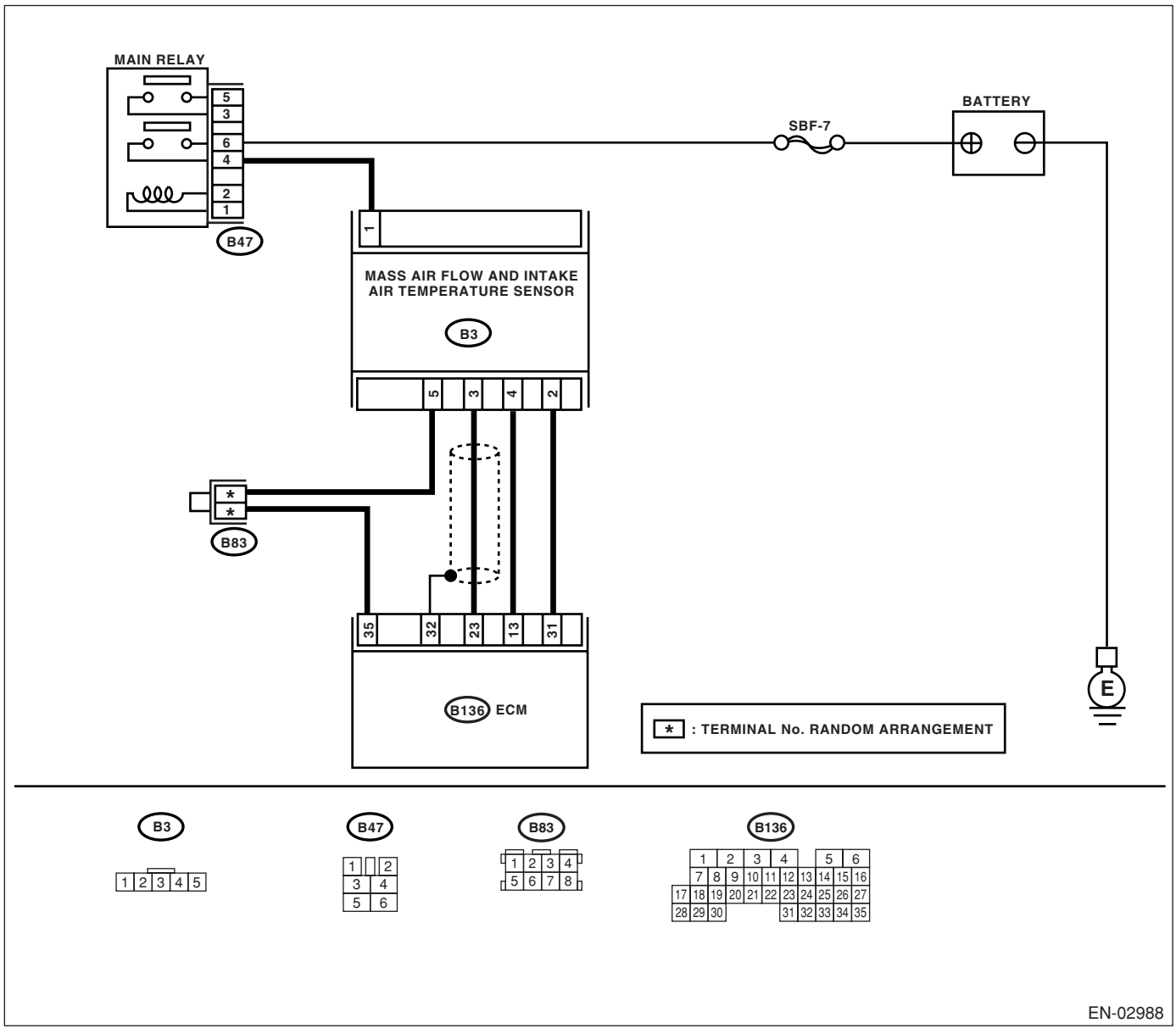

	Step	Check	Yes	No
1	**CHECK CURRENT DATA.** 1) Start the engine. 2) Read the data of intake air temperature sensor signal using Subaru Select Monitor or general scan tool. NOTE: • Subaru Select Monitor For detailed operation procedure, refer to the "READ CURRENT DATA FOR ENGINE".<Ref. to EN(H4SO)(diag)-27, Subaru Select Monitor.> • General scan tool For detailed operation procedure, refer to the general scan tool instruction manual.	Is the measured value less than −40°C (−40°F)?	Go to step **2.**	Repair poor contact. NOTE: In this case, repair the following: • Poor contact in intake air temperature sensor • Poor contact in ECM • Poor contact in coupling connector • Poor contact in joint connector
2	**CHECK HARNESS BETWEEN INTAKE AIR TEMPERATURE SENSOR AND ECM CONNECTOR.** 1) Turn the ignition switch to OFF. 2) Disconnect the connector from intake air temperature sensor. 3) Measure the voltage between intake air temperature and manifold absolute pressure sensor connector and engine ground. ***Connector & terminal*** ***(B3) No. 4 (+) — Engine ground (−):***	Is the measured value more than 10 V?	Repair battery short circuit in harness between intake air temperature sensor and ECM connector.	Go to step **3.**
3	**CHECK HARNESS BETWEEN INTAKE AIR TEMPERATURE SENSOR AND ECM CONNECTOR.** 1) Turn the ignition switch to ON. 2) Measure the voltage between intake air temperature sensor connector and engine ground. ***Connector & terminal*** ***(B3) No. 4 (+) — Engine ground (−):***	Is the measured value more than 10 V?	Repair battery short circuit in harness between intake air temperature sensor and ECM connector.	Go to step **4.**
4	**CHECK HARNESS BETWEEN INTAKE AIR TEMPERATURE SENSOR AND ECM CONNECTOR.** Measure the voltage between intake air temperature sensor connector and engine ground. ***Connector & terminal*** ***(B3) No. 4 (+) — Engine ground (−):***	Is the measured value more than 3 V?	Go to step **5.**	Repair harness and connector. NOTE: In this case, repair the following: • Open circuit in harness between intake air temperature sensor and ECM connector • Poor contact in intake air temperature sensor • Poor contact in ECM • Poor contact in coupling connector • Poor contact in joint connector

	Step	Check	Yes	No
5	**CHECK HARNESS BETWEEN INTAKE AIR TEMPERATURE SENSOR AND ECM CONNECTOR.** 1) Turn the ignition switch to OFF. 2) Measure the resistance of harness between intake air temperature sensor connector and engine ground. ***Connector & terminal*** ***(B3) No. 5 — Engine ground:***	Is the measured value less than 5 Ω?	Replace the intake air temperature sensor.<Ref. to FU(H4SO)-27, Mass Air Flow and Intake Air Temperature Sensor.>	Repair harness and connector. NOTE: In this case, repair the following: • Open circuit in harness between intake air temperature sensor and ECM connector • Poor contact in intake air temperature sensor • Poor contact in ECM • Poor contact in coupling connector • Poor contact in joint connector

O: DTC P0117 ENGINE COOLANT TEMPERATURE CIRCUIT LOW INPUT

DTC DETECTING CONDITION:

- Detect as soon as malfunction occurs.
- GENERAL DESCRIPTION <Ref. to GD(H4SO)-37, DTC P0117 ENGINE COOLANT TEMPERATURE CIRCUIT LOW INPUT, Diagnostic Trouble Code (DTC) Detecting Criteria.>

TROUBLE SYMPTOM:

- Hard to start
- Erroneous idling
- Poor driving performance

CAUTION:

After repair or replacement of faulty parts, conduct Clear Memory Mode <Ref. to EN(H4SO)(diag)-43, OPERATION, Clear Memory Mode.> and Inspection Mode <Ref. to EN(H4SO)(diag)-35, PROCEDURE, Inspection Mode.>.

WIRING DIAGRAM:

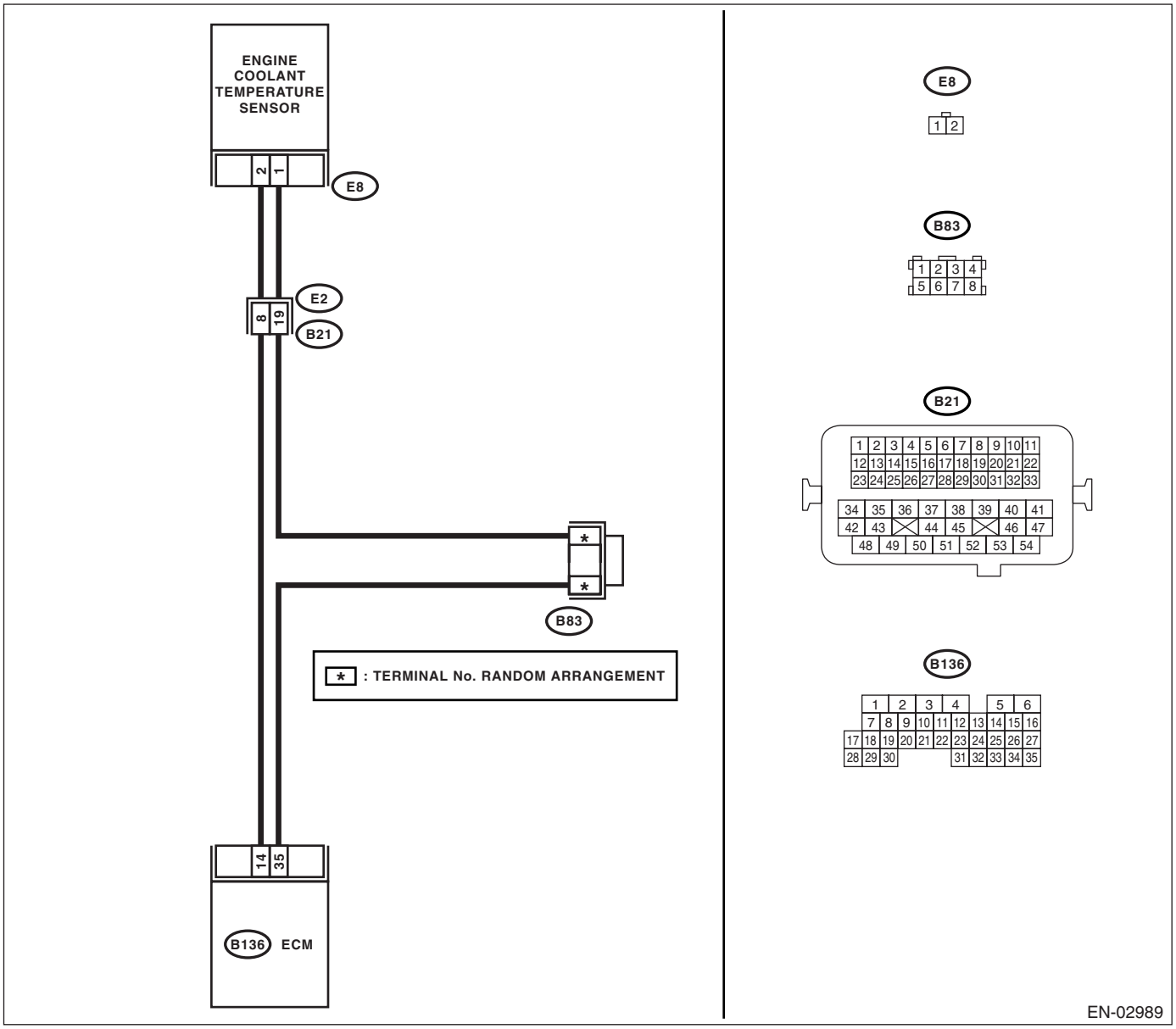

	Step	Check	Yes	No
1	**CHECK CURRENT DATA.** 1) Start the engine. 2) Read the data of engine coolant temperature sensor signal using Subaru Select Monitor or general scan tool. NOTE: • Subaru Select Monitor For detailed operation procedure, refer to the "READ CURRENT DATA FOR ENGINE". <Ref. to EN(H4SO)(diag)-27, Subaru Select Monitor.> • General scan tool For detailed operation procedures, refer to the general scan tool instruction manual.	Is the engine coolant temperature more than 150°C (302°F)?	Go to step **2.**	Repair poor contact. NOTE: In this case, repair the following: • Poor contact in engine coolant temperature sensor • Poor contact in ECM • Poor contact in coupling connector • Poor contact in joint connector
2	**CHECK HARNESS BETWEEN ENGINE COOLANT TEMPERATURE SENSOR AND ECM CONNECTOR.** 1) Turn the ignition switch to OFF. 2) Disconnect the connector from engine coolant temperature sensor. 3) Turn the ignition switch to ON. 4) Read the data of engine coolant temperature sensor signal using Subaru Select Monitor or general scan tool. NOTE: • Subaru Select Monitor For detailed operation procedure, refer to the "READ CURRENT DATA FOR ENGINE". <Ref. to EN(H4SO)(diag)-27, Subaru Select Monitor.> • General scan tool For detailed operation procedures, refer to the general scan tool instruction manual.	Is the engine coolant temperature less than −40°C (−40°F)?	Replace the engine coolant temperature sensor. <Ref. to FU(H4SO)-21, Engine Coolant Temperature Sensor.>	Repair ground short circuit in harness between engine coolant temperature sensor and ECM connector.

P: DTC P0118 ENGINE COOLANT TEMPERATURE CIRCUIT HIGH INPUT

DTC DETECTING CONDITION:

- Detect as soon as malfunction occurs.
- GENERAL DESCRIPTION <Ref. to GD(H4SO)-39, DTC P0118 ENGINE COOLANT TEMPERATURE CIRCUIT HIGH INPUT, Diagnostic Trouble Code (DTC) Detecting Criteria.>

TROUBLE SYMPTOM:

- Hard to start
- Erroneous idling
- Poor driving performance

CAUTION:

After repair or replacement of faulty parts, conduct Clear Memory Mode <Ref. to EN(H4SO)(diag)-43, OPERATION, Clear Memory Mode.> and Inspection Mode <Ref. to EN(H4SO)(diag)-35, PROCEDURE, Inspection Mode.>.

WIRING DIAGRAM:

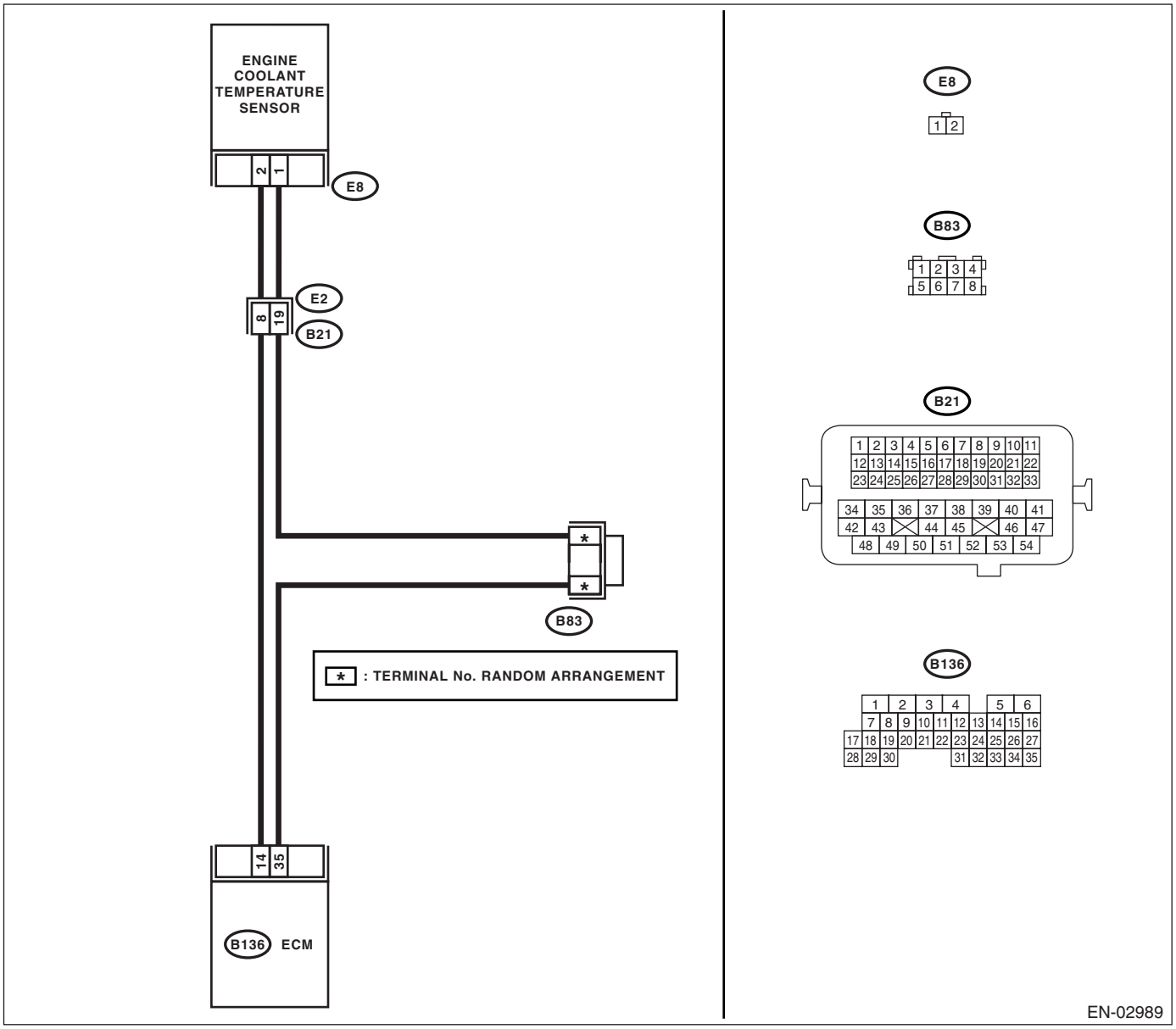

	Step	Check	Yes	No
1	**CHECK CURRENT DATA.** 1) Start the engine. 2) Read the data of engine coolant temperature sensor signal using Subaru Select Monitor or general scan tool. NOTE: • Subaru Select Monitor For detailed operation procedure, refer to the "READ CURRENT DATA FOR ENGINE". <Ref. to EN(H4SO)(diag)-27, Subaru Select Monitor.> • General scan tool For detailed operation procedures, refer to the general scan tool instruction manual.	Is the engine coolant temperature less than −40°C (−40°F)?	Go to step **2.**	Repair poor contact. NOTE: In this case, repair the following: • Poor contact in engine coolant temperature sensor • Poor contact in ECM • Poor contact in coupling connector • Poor contact in joint connector
2	**CHECK HARNESS BETWEEN ENGINE COOLANT TEMPERATURE SENSOR AND ECM CONNECTOR.** 1) Turn the ignition switch to OFF. 2) Disconnect the connector from engine coolant temperature sensor. 3) Measure the voltage between engine coolant temperature sensor connector and engine ground. ***Connector & terminal*** ***(E8) No. 2 (+) — Engine ground (−):***	Is the voltage more than 10 V?	Repair battery short circuit in harness between ECM and engine coolant temperature sensor connector.	Go to step **3.**
3	**CHECK HARNESS BETWEEN ENGINE COOLANT TEMPERATURE SENSOR AND ECM CONNECTOR.** 1) Turn the ignition switch to ON. 2) Measure the voltage between engine coolant temperature sensor connector and engine ground. ***Connector & terminal*** ***(E8) No. 2 (+) — Engine ground (−):***	Is the voltage more than 10 V?	Repair battery short circuit in harness between ECM and engine coolant temperature sensor connector.	Go to step **4.**
4	**CHECK HARNESS BETWEEN ENGINE COOLANT TEMPERATURE SENSOR AND ECM CONNECTOR.** Measure the voltage between engine coolant temperature sensor connector and engine ground. ***Connector & terminal*** ***(E8) No. 2 (+) — Engine ground (−):***	Is the voltage more than 4 V?	Go to step **5.**	Repair harness and connector. NOTE: In this case, repair the following: • Open circuit in harness between ECM and engine coolant temperature sensor connector • Poor contact in engine coolant temperature sensor connector • Poor contact in ECM connector • Poor contact in coupling connector • Poor contact in joint connector

	Step	Check	Yes	No
5	**CHECK HARNESS BETWEEN ENGINE COOLANT TEMPERATURE SENSOR AND ECM CONNECTOR.** 1) Turn the ignition switch to OFF. 2) Measure the resistance of harness between engine coolant temperature sensor connector and engine ground. ***Connector & terminal*** ***(E8) No. 1 — Engine ground:***	Is the resistance less than 5 Ω?	Replace the engine coolant temperature sensor. <Ref. to FU(H4SO)-21, Engine Coolant Temperature Sensor.>	Repair harness and connector. NOTE: In this case, repair the following: • Open circuit in harness between ECM and engine coolant temperature sensor connector • Poor contact in engine coolant temperature sensor connector • Poor contact in ECM connector • Poor contact in coupling connector • Poor contact in joint connector

Q: DTC P0122 THROTTLE/PEDAL POSITION SENSOR/SWITCH “A” CIRCUIT LOW INPUT

DTC DETECTING CONDITION:

- Detect as soon as malfunction occurs.
- GENERAL DESCRIPTION <Ref. to GD(H4SO)-41, DTC P0122 THROTTLE/PEDAL POSITION SENSOR/SWITCH “A” CIRCUIT LOW INPUT, Diagnostic Trouble Code (DTC) Detecting Criteria.>

TROUBLE SYMPTOM:

- Erroneous idling
- Engine stalls.
- Poor driving performance

CAUTION:

After repair or replacement of faulty parts, conduct Clear Memory Mode <Ref. to EN(H4SO)(diag)-43, OPERATION, Clear Memory Mode.> and Inspection Mode <Ref. to EN(H4SO)(diag)-35, PROCEDURE, Inspection Mode.>.

WIRING DIAGRAM:

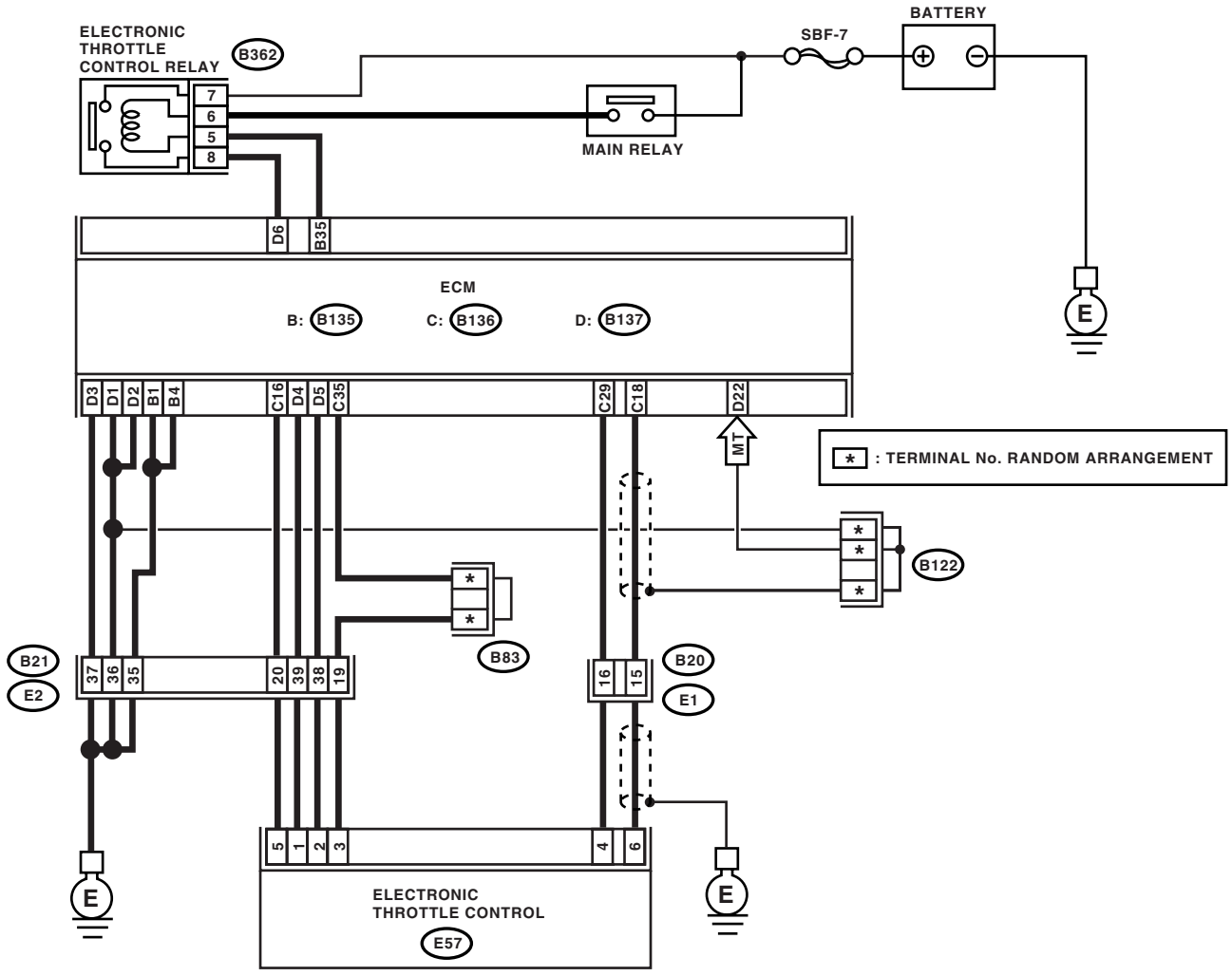

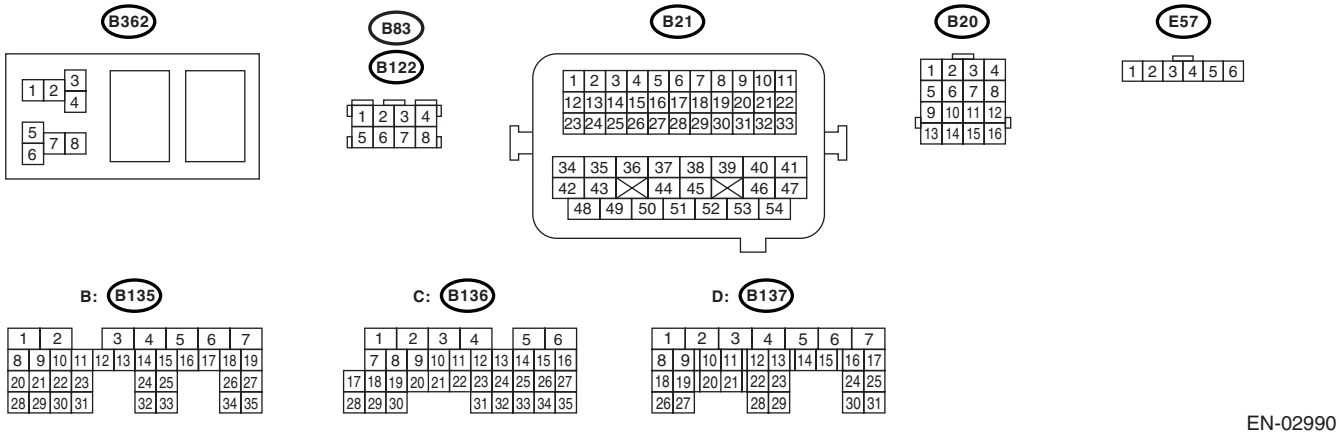

EN-02990

	Step	Check	Yes	No
1	**CHECK SENSOR OUTPUT.** 1) Turn the ignition switch to ON. 2) Read the data of main throttle sensor signal using Subaru Select Monitor. NOTE: • Subaru Select Monitor For detailed operation procedure, refer to the "READ CURRENT DATA FOR ENGINE". <Ref. to EN(H4SO)(diag)-27, Subaru Select Monitor.>	Is the voltage more than 0.4 V?	Go to step **2.**	Go to step **3.**
2	**CHECK POOR CONTACT.** Check poor contact in connector between ECM and electronic throttle control.	Is there poor contact in connector between ECM and electronic throttle control?	Repair the poor contact.	Temporary poor contact occurred, but it is normal at present.
3	**CHECK HARNESS BETWEEN ECM AND ELECTRONIC THROTTLE CONTROL.** 1) Turn the ignition switch to OFF. 2) Disconnect the connector from ECM. 3) Disconnect the connectors from electronic throttle control. 4) Measure the resistance between ECM connector and electronic throttle control connector. ***Connector & terminal*** ***(B136) No. 18 — (E57) No. 6:*** ***(B136) No. 16 — (E57) No. 5:***	Is the resistance less than 1 Ω?	Go to step **4.**	Repair the open circuit of harness connector.
4	**CHECK HARNESS BETWEEN ECM AND ELECTRONIC THROTTLE CONTROL.** Measure the resistance between ECM connector and chassis ground. ***Connector & terminal*** ***(B136) No. 18 — Chassis ground:*** ***(B136) No. 16 — Chassis ground:***	Is the resistance more than 1 MΩ?	Go to step **5.**	Repair the chassis short circuit of harness.
5	**CHECK POWER SUPPLY OF ELECTRONIC THROTTLE CONTROL.** 1) Connect the ECM connector. 2) Turn the ignition switch to ON. 3) Measure the voltage between electronic throttle control connector and engine ground. ***Connector & terminal*** ***(E57) No. 5 (+) — Engine ground (−):***	Is the voltage 4.5 — 5.5 V?	Go to step **6.**	Repair the poor contact in ECM connector. Replace the ECM if defective. <Ref. to FU(H4SO)-35, Engine Control Module (ECM).>
6	**CHECK SHORT CIRCUIT INSIDE THE ECM.** 1) Turn the ignition switch to OFF. 2) Measure the resistance between electronic throttle control connector and engine ground. ***Connector & terminal*** ***(E57) No. 6 — Engine ground:***	Is the resistance more than 10 Ω?	Repair poor contact of electronic throttle control connector. Replace the electronic throttle control if defective.	Repair the poor contact in ECM connector. Replace the ECM if defective. <Ref. to FU(H4SO)-35, Engine Control Module (ECM).>

R: DTC P0123 THROTTLE/PEDAL POSITION SENSOR/SWITCH “A” CIRCUIT HIGH INPUT

DTC DETECTING CONDITION:

- Detect as soon as malfunction occurs.
- GENERAL DESCRIPTION <Ref. to GD(H4SO)-43, DTC P0123 THROTTLE/PEDAL POSITION SENSOR/SWITCH “A” CIRCUIT HIGH INPUT, Diagnostic Trouble Code (DTC) Detecting Criteria.>

TROUBLE SYMPTOM:

- Erroneous idling
- Engine stalls.
- Poor driving performance

CAUTION:
After repair or replacement of faulty parts, conduct Clear Memory Mode <Ref. to EN(H4SO)(diag)-43, OPERATION, Clear Memory Mode.> and Inspection Mode <Ref. to EN(H4SO)(diag)-35, PROCEDURE, Inspection Mode.>.

WIRING DIAGRAM:

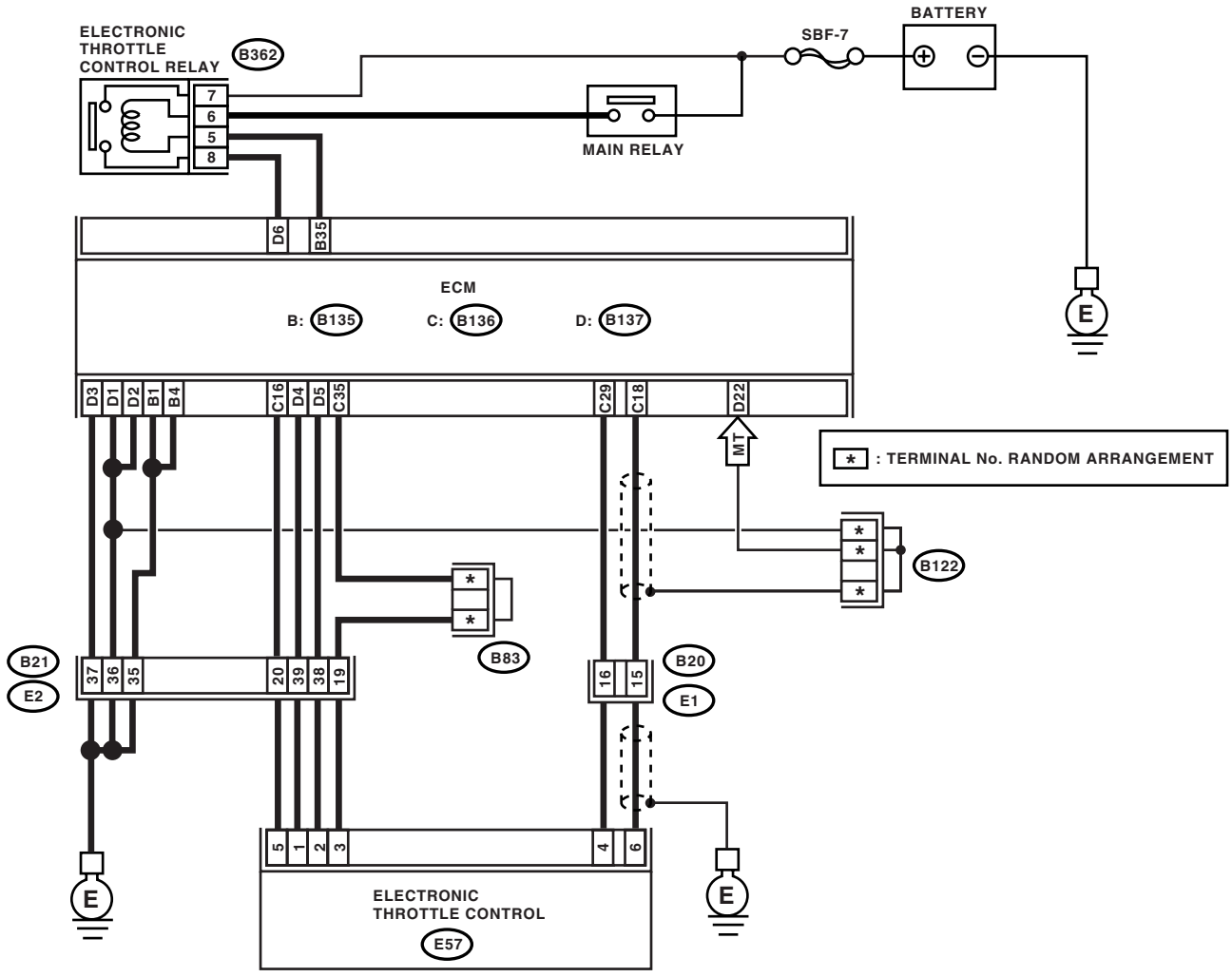

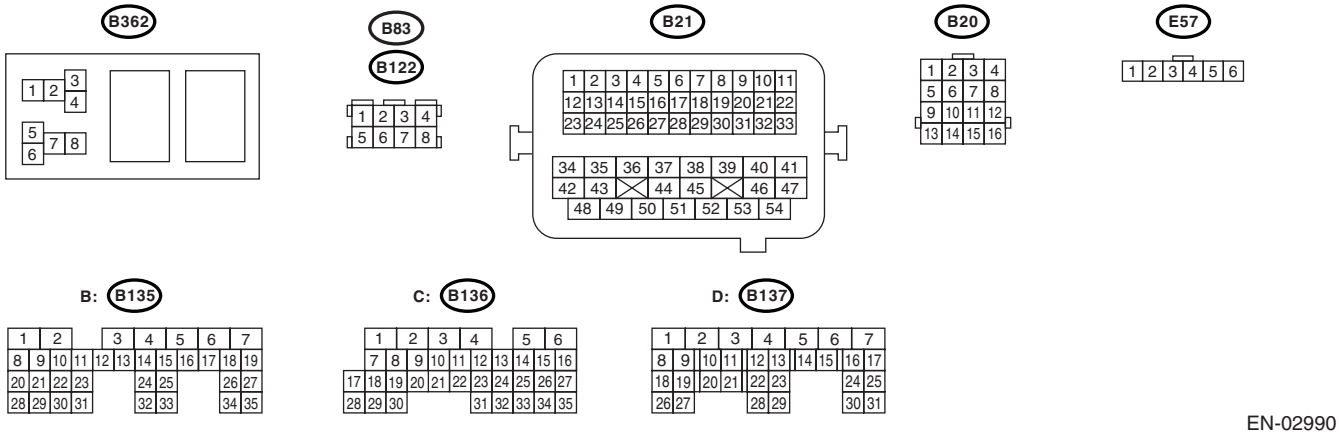

EN-02990

	Step	Check	Yes	No
1	**CHECK SENSOR OUTPUT.** 1) Turn the ignition switch to ON. 2) Read the data of main throttle sensor signal using Subaru Select Monitor. NOTE: • Subaru Select Monitor For detailed operation procedure, refer to the "READ CURRENT DATA FOR ENGINE". <Ref. to EN(H4SO)(diag)-27, Subaru Select Monitor.>	Is the voltage less than 4.63 V?	Go to step **2.**	Go to step **3.**
2	**CHECK POOR CONTACT.** Check poor contact in connector between ECM and electronic throttle control.	Is there poor contact in connector between ECM and electronic throttle control?	Repair the poor contact.	Temporary poor contact occurred, but it is normal at present.
3	**CHECK HARNESS BETWEEN ECM AND ELECTRONIC THROTTLE CONTROL.** 1) Turn the ignition switch to OFF. 2) Disconnect the connector from ECM. 3) Disconnect the connectors from electronic throttle control. 4) Measure the resistance between ECM connector and electronic throttle control connector. ***Connector & terminal*** ***(B136) No. 18 — (E57) No. 6:*** ***(B136) No. 35 — (E57) No. 3:***	Is the resistance less than 1 Ω?	Go to step **4.**	Repair the open circuit of harness connector.
4	**CHECK HARNESS BETWEEN ECM AND ELECTRONIC THROTTLE CONTROL.** 1) Connect the ECM connector. 2) Measure the resistance between electronic throttle control connector and engine ground. ***Connector & terminal*** ***(E57) No. 3 — Engine ground:***	Is the resistance less than 1 Ω?	Go to step **5.**	Repair the poor contact in ECM connector. Replace the ECM if defective. <Ref. to FU(H4SO)-35, Engine Control Module (ECM).>
5	**CHECK SENSOR OUTPUT POWER SUPPLY.** Measure the voltage between electronic throttle control connector and engine ground. ***Connector & terminal*** ***(E57) No. 6 (+) — Engine ground (−):***	Is the voltage less than 10 V?	Go to step **6.**	Repair battery short circuit in harness between ECM connector and electronic throttle control connector.
6	**CHECK HARNESS BETWEEN ECM AND ELECTRONIC THROTTLE CONTROL.** 1) Turn the ignition switch to OFF. 2) Disconnect the connector from ECM. 3) Measure the resistance between ECM connectors. ***Connector & terminal*** ***(B136) No. 18 — (B136) No. 16:***	Is the resistance more than 1 MΩ?	Repair poor contact in harness. Repair the electronic throttle control.	Repair short circuit to sensor power supply.

S: DTC P0125 INSUFFICIENT ENGINE COOLANT TEMPERATURE FOR CLOSED LOOP FUEL CONTROL

DTC DETECTING CONDITION:

- Two consecutive driving cycles with fault
- GENERAL DESCRIPTION <Ref. to GD(H4SO)-45, DTC P0125 INSUFFICIENT ENGINE COOLANT TEMPERATURE FOR CLOSED LOOP FUEL CONTROL, Diagnostic Trouble Code (DTC) Detecting Criteria.>

TROUBLE SYMPTOM:

Engine would not return to idling.

CAUTION:

After repair or replacement of faulty parts, conduct Clear Memory Mode <Ref. to EN(H4SO)(diag)-43, OPERATION, Clear Memory Mode.> and Inspection Mode <Ref. to EN(H4SO)(diag)-35, PROCEDURE, Inspection Mode.>.

WIRING DIAGRAM:

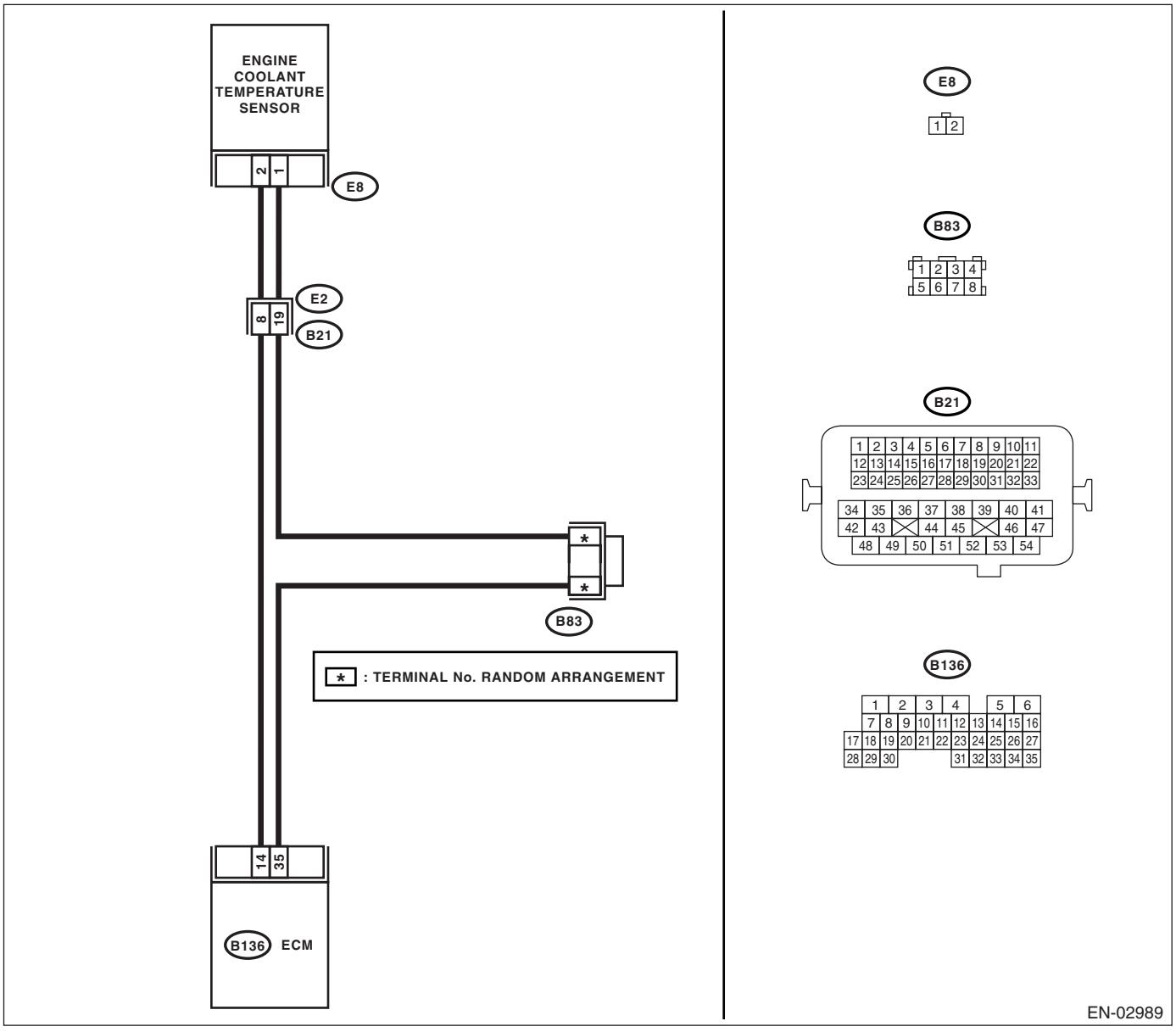

	Step	Check	Yes	No
1	**CHECK FOR ANY OTHER DTC ON DISPLAY.**	Is any other DTC displayed?	Check DTC using "List of Diagnostic Trouble Code (DTC)". <Ref. to EN(H4SO)(diag)-70, List of Diagnostic Trouble Code (DTC).> NOTE: In this case, it is not necessary to inspect DTC P0125.	Go to step **2.**
2	**CHECK THERMOSTAT.**	Does the thermostat remain opened?	Replace the thermostat. <Ref. to CO(H4SO)-17, Thermostat.>	Replace the engine coolant temperature sensor. <Ref. to FU(H4SO)-21, Engine Coolant Temperature Sensor.>

T: DTC P0126 INSUFFICIENT ENGINE COOLANT TEMPERATURE FOR STABLE OPERATION

DTC DETECTING CONDITION:

- Two consecutive driving cycles with fault
- GENERAL DESCRIPTION <Ref. to GD(H4SO)-47, DTC P0126 INSUFFICIENT ENGINE COOLANT TEMPERATURE FOR STABLE OPERATION, Diagnostic Trouble Code (DTC) Detecting Criteria.>

TROUBLE SYMPTOM:

Engine would not return to idling.

CAUTION:

After repair or replacement of faulty parts, conduct Clear Memory Mode <Ref. to EN(H4SO)(diag)-43, OPERATION, Clear Memory Mode.> and Inspection Mode <Ref. to EN(H4SO)(diag)-35, PROCEDURE, Inspection Mode.>.

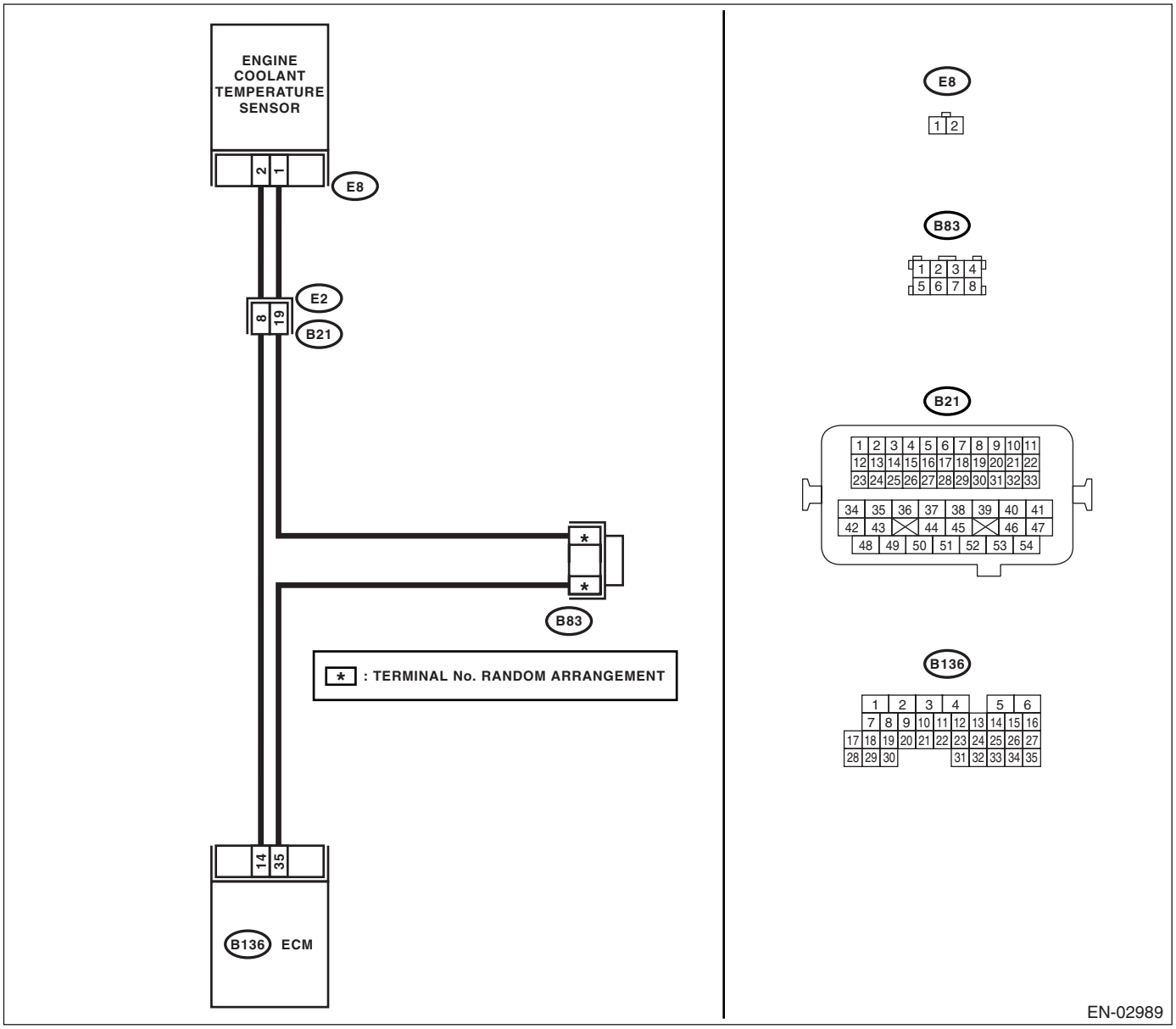

	Step	Check	Yes	No
1	**CHECK FOR ANY OTHER DTC ON DISPLAY.**	Is any other DTC displayed?	Inspect the DTC using “List of Diagnostic Trouble Code (DTC)”. <Ref. to EN(H4SO)(diag)-70, List of Diagnostic Trouble Code (DTC).>	Go to step **2.**
2	**CHECK ENGINE COOLANT TEMPERATURE SENSOR.** Measure the resistance between engine coolant temperature sensor terminals when engine coolant is cold and after warmed-up. ***Terminals*** ***No. 1 — No. 2:***	Is the resistance of engine coolant temperature sensor different between when engine coolant is cold and after warmed-up?	Contact your SOA Service Center.	Replace the engine coolant temperature sensor. <Ref. to FU(H4SO)-21, Engine Coolant Temperature Sensor.>

U: DTC P0128 COOLANT THERMOSTAT (ENGINE COOLANT TEMPERATURE BELOW THERMOSTAT REGULATING TEMPERATURE)

DTC DETECTING CONDITION:

- Two consecutive driving cycles with fault
- GENERAL DESCRIPTION <Ref. to GD(H4SO)-49, DTC P0128 COOLANT THERMOSTAT (ENGINE COOLANT TEMPERATURE BELOW THERMOSTAT REGULATING TEMPERATURE), Diagnostic Trouble Code (DTC) Detecting Criteria.>

TROUBLE SYMPTOM:

Thermostat remains open.

CAUTION:

After repair or replacement of faulty parts, conduct CLEAR MEMORY MODE <Ref. to EN(H4SO)(diag)-43, OPERATION, Clear Memory Mode.> and INSPECTION MODE <Ref. to EN(H4SO)(diag)-35, PROCEDURE, Inspection Mode.>

	Step	Check	Yes	No
1	**CHECK VEHICLE CONDITION.**	Was the vehicle driven or idled with the engine partially submerged under water?	In this case, it is not necessary to inspect DTC P0128.	Go to step **2.**
2	**CHECK FOR ANY OTHER DTC ON DISPLAY.**	Is any other DTC displayed?	Inspect DTC using "List of Diagnostic Trouble Code (DTC)". <Ref. to EN(H4SO)(diag)-70, List of Diagnostic Trouble Code (DTC).>	Go to step **3.**
3	**CHECK ENGINE COOLANT.**	Are coolant level and mixture ratio of cooling water to antifreeze solution correct?	Go to step **4.**	Replace the engine coolant. <Ref. to CO(H4SO)-12, REPLACEMENT, Engine Coolant.>
4	**CHECK RADIATOR FAN.** 1) Start the engine. 2) Check radiator fan operation.	Does the radiator fan continuously rotate for more than 3 minutes during idling?	Repair radiator fan circuit.<Ref. to CO(H4SO)-23, Radiator Main Fan and Fan Motor.> and <Ref. to CO(H4SO)-25, Radiator Sub Fan and Fan Motor.>	Replace the thermostat. <Ref. to CO(H4SO)-17, Thermostat.>

V: DTC P0131 O2 SENSOR CIRCUIT LOW VOLTAGE (BANK 1 SENSOR 1)

DTC DETECTING CONDITION:

- Detect as soon as malfunction occurs.
- GENERAL DESCRIPTION <Ref. to GD(H4SO)-51, DTC P0131 O2 SENSOR CIRCUIT LOW VOLTAGE (BANK 1 SENSOR 1), Diagnostic Trouble Code (DTC) Detecting Criteria.>

CAUTION:
After repair or replacement of faulty parts, conduct Clear Memory Mode <Ref. to EN(H4SO)(diag)-43, OPERATION, Clear Memory Mode.> and Inspection Mode <Ref. to EN(H4SO)(diag)-35, PROCEDURE, Inspection Mode.>.

WIRING DIAGRAM:

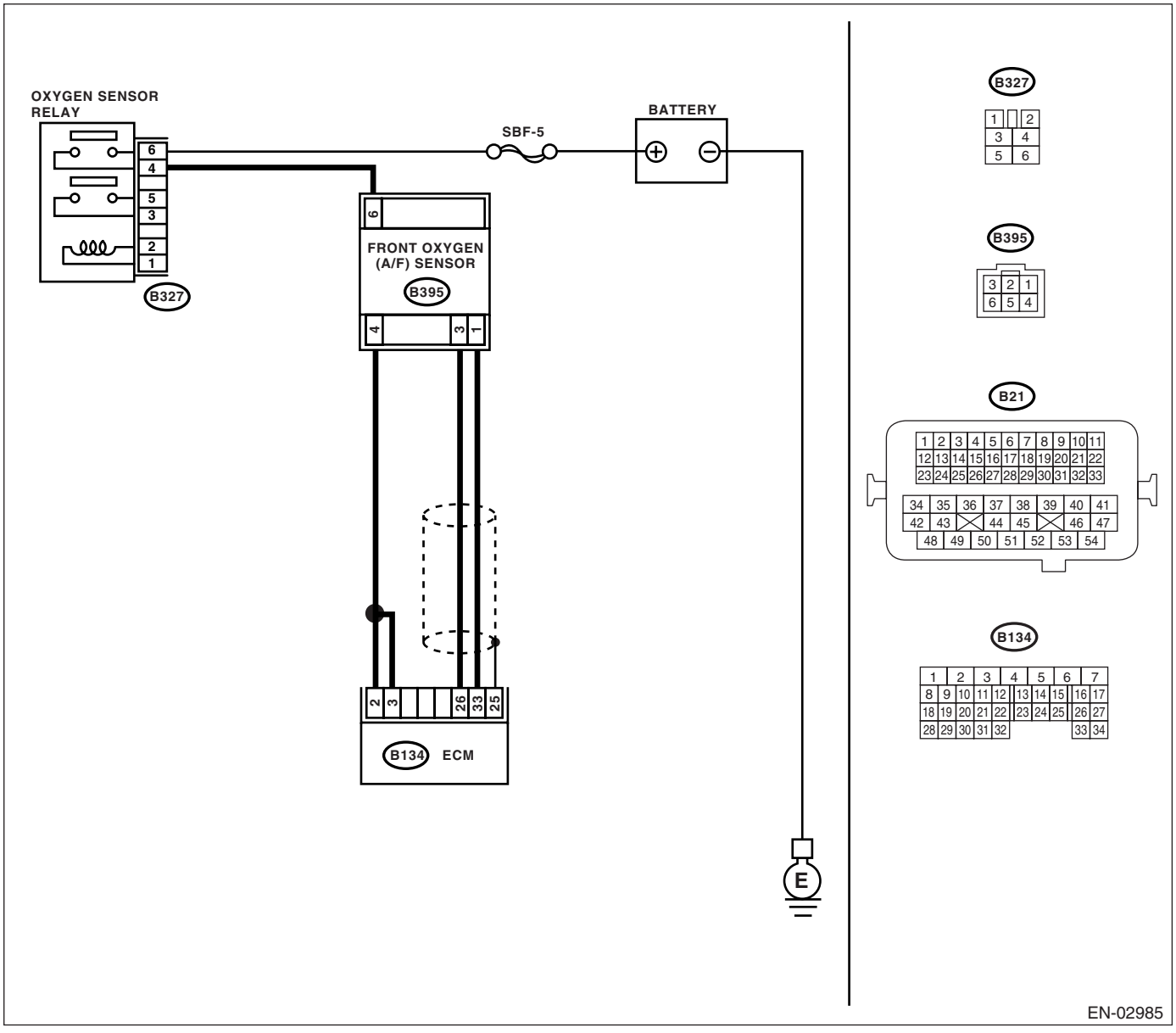

	Step	Check	Yes	No
1	**CHECK HARNESS BETWEEN ECM AND FRONT OXYGEN (A/F) SENSOR CONNECTOR.** 1) Turn the ignition switch to OFF. 2) Disconnect the connectors from ECM and front oxygen (A/F) sensor connector. 3) Measure the resistance of harness between ECM and front oxygen (A/F) sensor connector. ***Connector & terminal*** ***(B134) No. 33 — Chassis ground:*** ***(B134) No. 26 — Chassis ground:***	Is the resistance more than 1 MΩ?	Replace the front oxygen (A/F) sensor. <Ref. to FU(H4SO)-32, Front Oxygen (A/F) Sensor.>	Repair ground short circuit in harness between ECM and front oxygen (A/F) sensor connector.

W: DTC P0132 O2 SENSOR CIRCUIT HIGH VOLTAGE (BANK 1 SENSOR 1)

DTC DETECTING CONDITION:

- Detect as soon as malfunction occurs.
- GENERAL DESCRIPTION <Ref. to GD(H4SO)-53, DTC P0132 O2 SENSOR CIRCUIT HIGH VOLTAGE (BANK 1 SENSOR 1), Diagnostic Trouble Code (DTC) Detecting Criteria.>

CAUTION:
After repair or replacement of faulty parts, conduct Clear Memory Mode <Ref. to EN(H4SO)(diag)-43, OPERATION, Clear Memory Mode.> and Inspection Mode <Ref. to EN(H4SO)(diag)-35, PROCEDURE, Inspection Mode.>.

WIRING DIAGRAM:

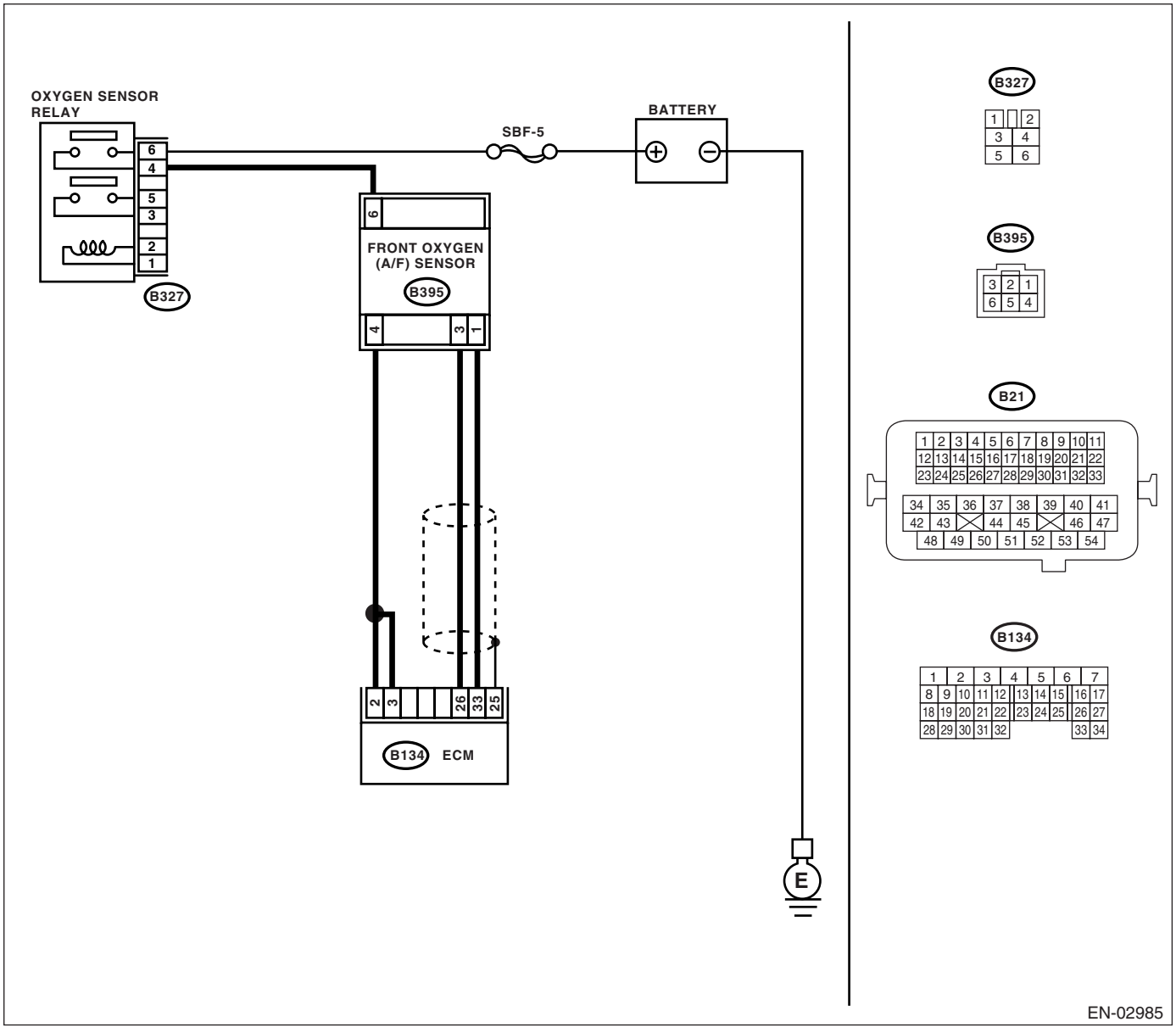

	Step	Check	Yes	No
1	**CHECK HARNESS BETWEEN ECM AND FRONT OXYGEN (A/F) SENSOR CONNECTOR.** 1) Turn the ignition switch to ON. 2) Disconnect the connectors from front oxygen (A/F) sensor. 3) Measure the voltage of harness between ECM connector and chassis ground. ***Connector & terminal*** ***(B134) No. 33 (+) — Chassis ground (−):*** ***(B134) No. 26 (+) — Chassis ground (−):***	Is the voltage more than 8 V?	Replace the front oxygen (A/F) sensor. <Ref. to FU(H4SO)-32, Front Oxygen (A/F) Sensor.>	Repair battery short circuit in harness between ECM and front oxygen (A/F) sensor connector.

X: DTC P0133 O2 SENSOR CIRCUIT SLOW RESPONSE (BANK 1 SENSOR 1)

DTC DETECTING CONDITION:

- Two consecutive driving cycles with fault
- GENERAL DESCRIPTION <Ref. to GD(H4SO)-55, DTC P0133 O2 SENSOR CIRCUIT SLOW RESPONSE (BANK 1 SENSOR 1), Diagnostic Trouble Code (DTC) Detecting Criteria.>

CAUTION:
After repair or replacement of faulty parts, conduct Clear Memory Mode <Ref. to EN(H4SO)(diag)-43, OPERATION, Clear Memory Mode.> and Inspection Mode <Ref. to EN(H4SO)(diag)-35, PROCEDURE, Inspection Mode.>.

WIRING DIAGRAM:

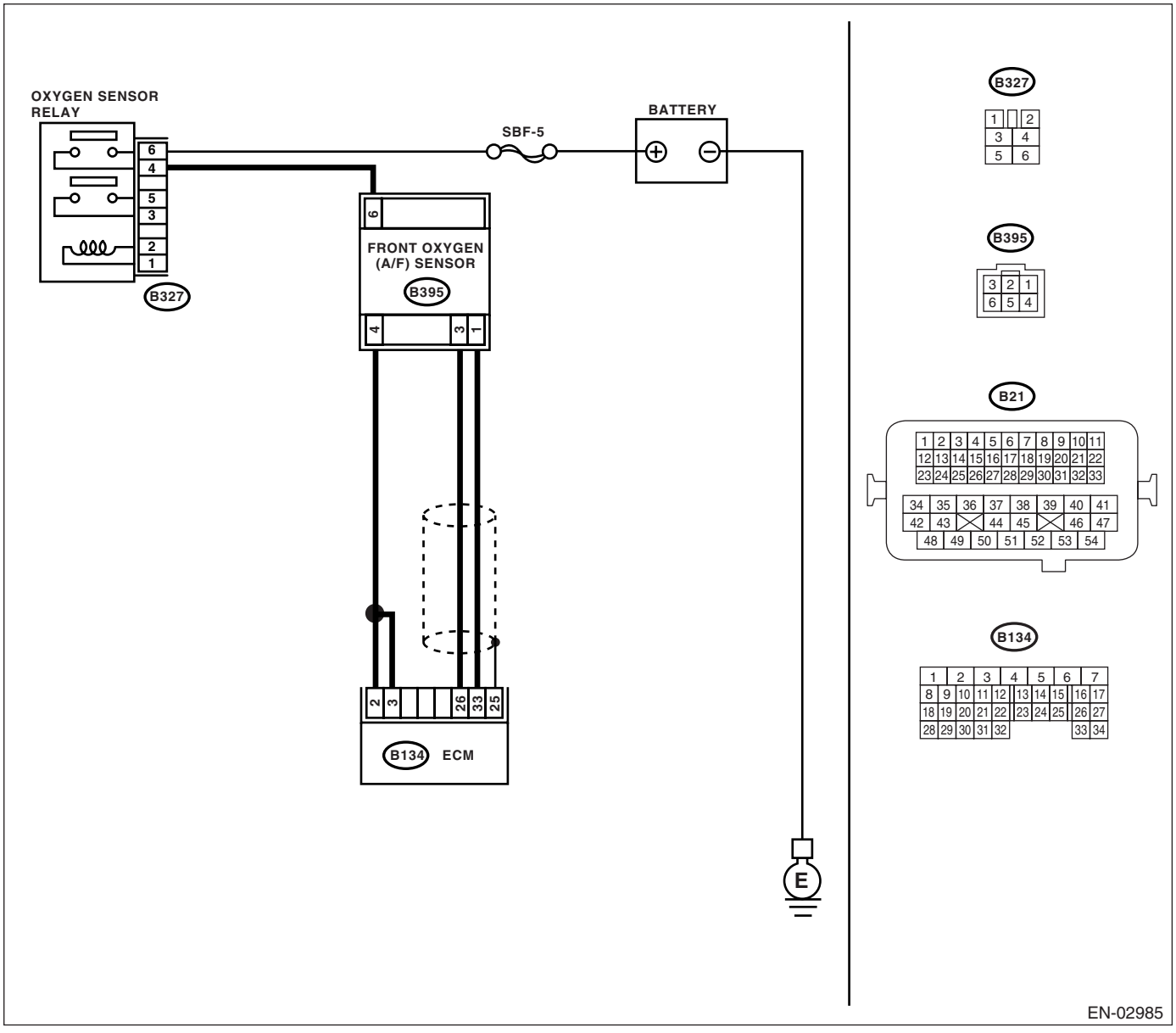

	Step	Check	Yes	No
1	**CHECK FOR ANY OTHER DTC ON DISPLAY.**	Is any other DTC displayed?	Check DTC using "List of Diagnostic Trouble Code (DTC)". <Ref. to EN(H4SO)(diag)-70, List of Diagnostic Trouble Code (DTC).> NOTE: In this case, it is not necessary to inspect DTC P0133.	Go to step **2.**
2	**CHECK EXHAUST SYSTEM.** NOTE: Check the following items. • Loose installation of front portion of exhaust pipe onto cylinder heads • Loose connection between front exhaust pipe and front catalytic converter • Damage of exhaust pipe resulting in a hole	Is there any fault in exhaust system?	Repair exhaust system.	Replace the front oxygen (A/F) sensor. <Ref. to FU(H4SO)-32, Front Oxygen (A/F) Sensor.>

Y: DTC P0134 O2 SENSOR CIRCUIT NO ACTIVITY DETECTED (BANK 1 SENSOR 1)

DTC DETECTING CONDITION:

- Detect as soon as malfunction occurs.
- GENERAL DESCRIPTION <Ref. to GD(H4SO)-58, DTC P0134 O2 SENSOR CIRCUIT NO ACTIVITY DETECTED (BANK 1 SENSOR 1), Diagnostic Trouble Code (DTC) Detecting Criteria.>

CAUTION:
After repair or replacement of faulty parts, conduct Clear Memory Mode <Ref. to EN(H4SO)(diag)-43, OPERATION, Clear Memory Mode.> and Inspection Mode <Ref. to EN(H4SO)(diag)-35, PROCEDURE, Inspection Mode.>.

WIRING DIAGRAM:

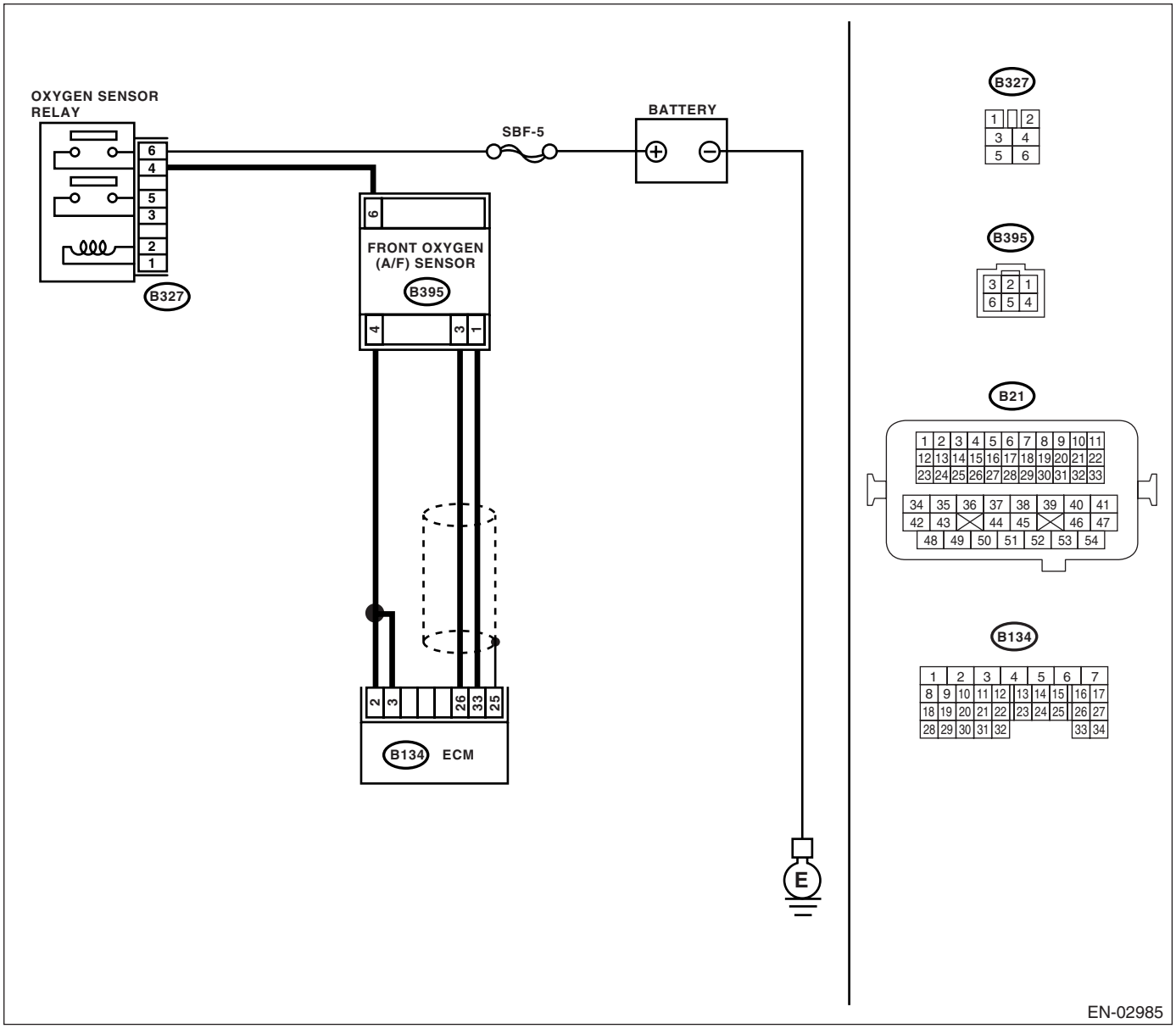

	Step	Check	Yes	No
1	**CHECK HARNESS BETWEEN ECM AND FRONT OXYGEN (A/F) SENSOR CONNECTOR.** 1) Turn the ignition switch to OFF. 2) Disconnect the connectors from ECM and front oxygen (A/F) sensor connector. 3) Measure the resistance of harness between ECM and front oxygen (A/F) sensor connector. ***Connector & terminal*** ***(B134) No. 33 — (B395) No. 1:*** ***(B134) No. 26 — (B395) No. 3:***	Is the resistance less than 1 Ω?	Go to step **2.**	Repair harness and connector. NOTE: In this case, repair the following: • Open circuit in harness between ECM and front oxygen (A/F) sensor connector • Poor contact in front oxygen (A/F) sensor connector • Poor contact in ECM connector
2	**CHECK POOR CONTACT.** Check poor contact in front oxygen (A/F) sensor connector.	Is there poor contact in front oxygen (A/F) sensor connector?	Repair poor contact in front oxygen (A/F) sensor connector.	Replace the front oxygen (A/F) sensor. <Ref. to FU(H4SO)-32, Front Oxygen (A/F) Sensor.>

Z: DTC P0137 O2 SENSOR CIRCUIT LOW VOLTAGE (BANK 1 SENSOR 2)

DTC DETECTING CONDITION:

- Two consecutive driving cycles with fault
- GENERAL DESCRIPTION <Ref. to GD(H4SO)-60, DTC P0137 O2 SENSOR CIRCUIT LOW VOLTAGE (BANK 1 SENSOR 2), Diagnostic Trouble Code (DTC) Detecting Criteria.>

CAUTION:
After repair or replacement of faulty parts, conduct Clear Memory Mode <Ref. to EN(H4SO)(diag)-43, OPERATION, Clear Memory Mode.> and Inspection Mode <Ref. to EN(H4SO)(diag)-35, PROCEDURE, Inspection Mode.>.

WIRING DIAGRAM:

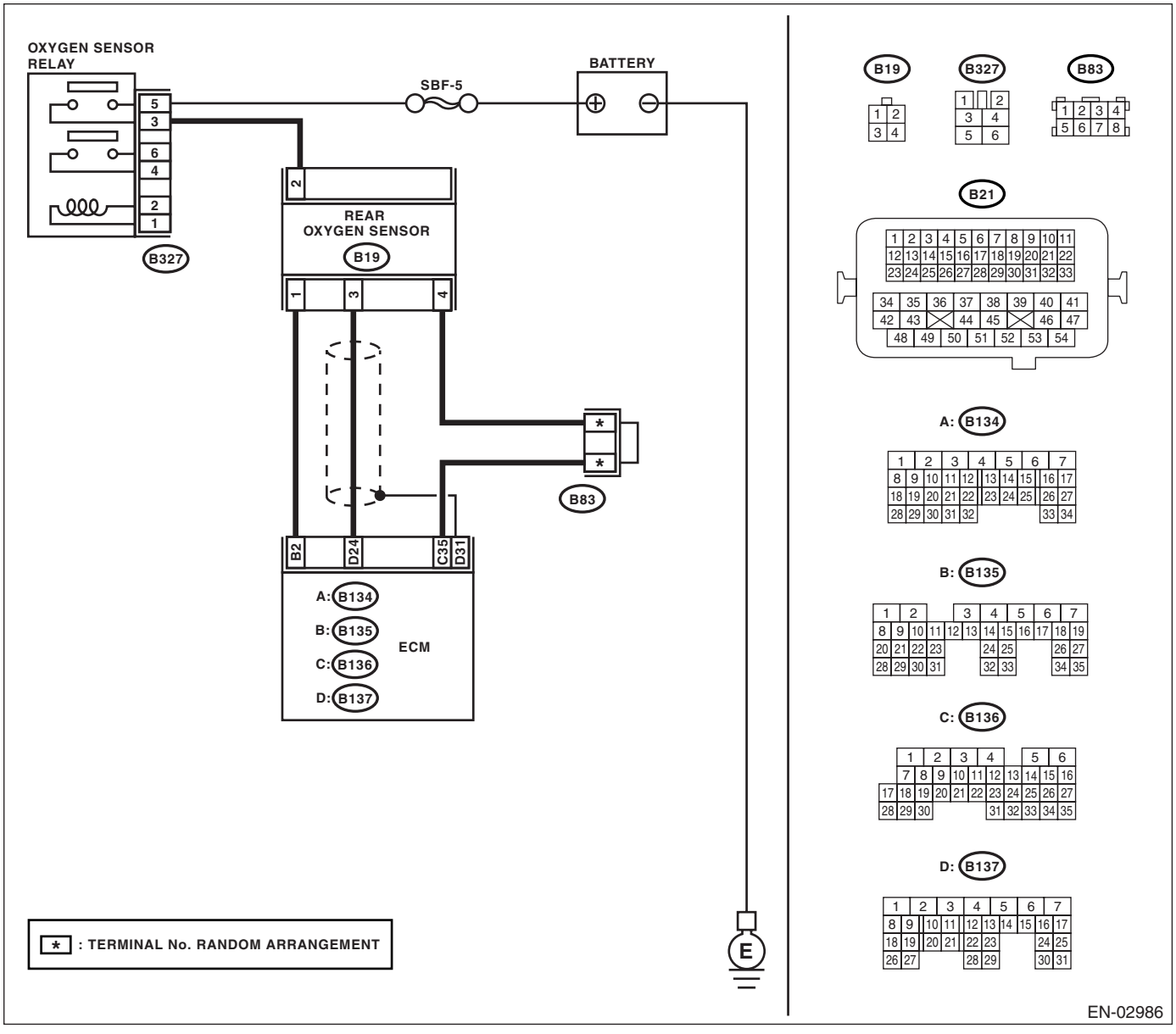

	Step	Check	Yes	No
1	**CHECK FOR ANY OTHER DTC ON DISPLAY.**	Is any other DTC displayed?	Check DTC using "List of Diagnostic Trouble Code (DTC)". <Ref. to EN(H4SO)(diag)-70, List of Diagnostic Trouble Code (DTC).> NOTE: In this case, it is not necessary to inspect DTC P0137.	Go to step **2.**
2	**CHECK REAR OXYGEN SENSOR DATA.** 1) Warm-up the engine until engine coolant temperature is above 70°C (158°F), and keep the engine speed at 5,000 rpm. 2) Read the data of rear oxygen sensor signal using Subaru Select Monitor or general scan tool. NOTE: • Subaru Select Monitor For detailed operation procedure, refer to the "READ CURRENT DATA SHOWN ON DISPLAY FOR ENGINE". <Ref. to EN(H4SO)(diag)-27, Subaru Select Monitor.> • General scan tool For detailed operation procedures, refer to the general scan tool instruction manual.	Is the voltage more than 490 mV?	Go to step **5.**	Go to step **3.**
3	**CHECK HARNESS BETWEEN ECM AND REAR OXYGEN SENSOR CONNECTOR.** 1) Turn the ignition switch to OFF. 2) Disconnect the connectors from ECM and rear oxygen sensor. 3) Measure the resistance of harness between ECM and rear oxygen sensor connector. ***Connector & terminal*** ***(B137) No. 24 — (B19) No. 3:*** ***(B136) No. 35 — (B19) No. 4:***	Is the resistance more than 3 Ω?	Repair open circuit in harness between ECM and rear oxygen sensor connector.	Go to step **4.**
4	**CHECK HARNESS BETWEEN REAR OXYGEN SENSOR AND ECM CONNECTOR.** 1) Turn the ignition switch to OFF. 2) Disconnect the connector from rear oxygen sensor. 3) Turn the ignition switch to ON. 4) Measure the voltage between rear oxygen sensor harness connector and engine ground or chassis ground. ***Connector & terminal*** ***(B19) No. 3 (+) — Engine ground (−):***	Is the voltage 0.2 — 0.5 V?	Replace the rear oxygen sensor.<Ref. to FU(H4SO)-34, Rear Oxygen Sensor.>	Repair harness and connector. NOTE: In this case, repair the following: • Open circuit in harness between rear oxygen sensor and ECM connector • Poor contact in rear oxygen sensor connector • Poor contact in ECM connector

Step		Check	Yes	No
5	**CHECK EXHAUST SYSTEM.** Check exhaust system parts. NOTE: Check the following items. • Loose installation of portions • Damage (crack, hole etc.) of parts • Looseness and ill fitting of parts between front oxygen (A/F) sensor and rear oxygen sensor	Is there any fault in exhaust system?	Repair or replace faulty parts.	Replace the rear oxygen sensor.<Ref. to FU(H4SO)-34, Rear Oxygen Sensor.>

AA:DTC P0138 O2 SENSOR CIRCUIT HIGH VOLTAGE (BANK 1 SENSOR 2)

DTC DETECTING CONDITION:

- Two consecutive driving cycles with fault
- GENERAL DESCRIPTION <Ref. to GD(H4SO)-62, DTC P0138 O2 SENSOR CIRCUIT HIGH VOLTAGE (BANK 1 SENSOR 2), Diagnostic Trouble Code (DTC) Detecting Criteria.>

CAUTION:
After repair or replacement of faulty parts, conduct Clear Memory Mode <Ref. to EN(H4SO)(diag)-43, OPERATION, Clear Memory Mode.> and Inspection Mode <Ref. to EN(H4SO)(diag)-35, PROCEDURE, Inspection Mode.>.

WIRING DIAGRAM:

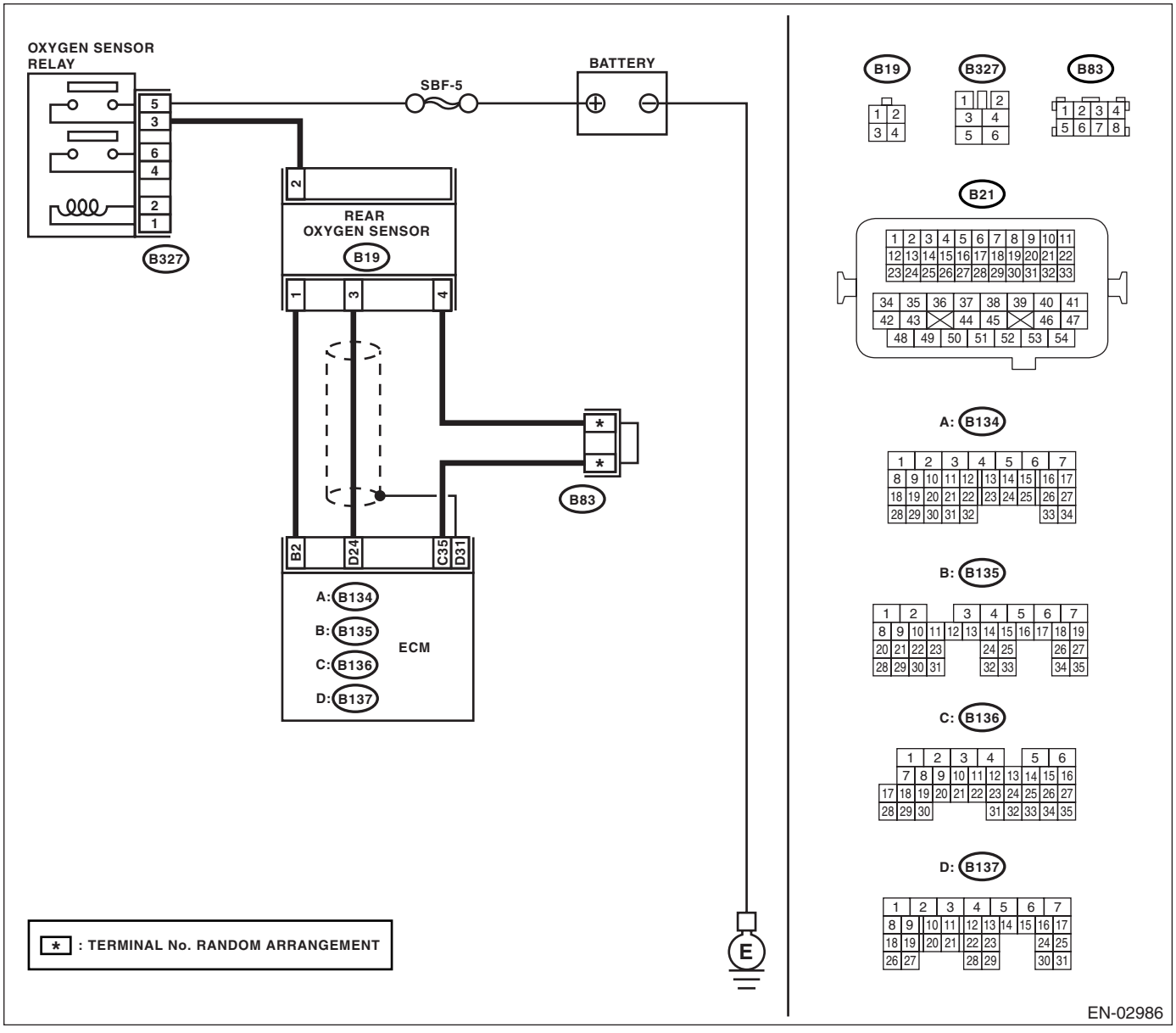

	Step	Check	Yes	No
1	**CHECK FOR ANY OTHER DTC ON DISPLAY.**	Is any other DTC displayed?	Check DTC using "List of Diagnostic Trouble Code (DTC)". <Ref. to EN(H4SO)(diag)-70, List of Diagnostic Trouble Code (DTC).> NOTE: In this case, it is not necessary to inspect DTC P0138.	Go to step **2.**
2	**CHECK REAR OXYGEN SENSOR DATA.** 1) Warm-up the engine until engine coolant temperature is above 70°C (158°F), and immediately decrease the engine speed from 5,000 rpm. 2) Read the data of rear oxygen sensor signal using Subaru Select Monitor or general scan tool. NOTE: • Subaru Select Monitor For detailed operation procedure, refer to the "READ CURRENT DATA SHOWN ON DISPLAY FOR ENGINE". <Ref. to EN(H4SO)(diag)-27, Subaru Select Monitor.> • General scan tool For detailed operation procedures, refer to the general scan tool instruction manual.	Is the voltage less than 250 mV?	Go to step **5.**	Go to step **3.**
3	**CHECK HARNESS BETWEEN ECM AND REAR OXYGEN SENSOR CONNECTOR.** 1) Turn the ignition switch to OFF. 2) Disconnect the connectors from ECM and rear oxygen sensor. 3) Measure the resistance of harness between ECM and rear oxygen sensor connector. ***Connector & terminal*** ***(B137) No. 24 — (B19) No. 3:*** ***(B136) No. 35 — (B19) No. 4:***	Is the resistance more than 3 Ω?	Repair open circuit in harness between ECM and rear oxygen sensor connector.	Go to step **4.**
4	**CHECK HARNESS BETWEEN REAR OXYGEN SENSOR AND ECM CONNECTOR.** 1) Turn the ignition switch to OFF. 2) Disconnect the connector from rear oxygen sensor. 3) Turn the ignition switch to ON. 4) Measure the voltage between rear oxygen sensor harness connector and engine ground or chassis ground. ***Connector & terminal*** ***(B19) No. 3 (+) — Engine ground (−):***	Is the voltage 0.2 — 0.5 V?	Replace the rear oxygen sensor.<Ref. to FU(H4SO)-34, Rear Oxygen Sensor.>	Repair harness and connector. NOTE: In this case, repair the following: • Open circuit in harness between rear oxygen sensor and ECM connector • Poor contact in rear oxygen sensor connector • Poor contact in ECM connector

	Step	Check	Yes	No
5	**CHECK EXHAUST SYSTEM.** Check exhaust system parts. NOTE: Check the following items. • Loose installation of portions • Damage (crack, hole etc.) of parts • Looseness and ill fitting of parts between front oxygen (A/F) sensor and rear oxygen sensor	Is there any fault in exhaust system?	Repair or replace faulty parts.	Replace the rear oxygen sensor.<Ref. to FU(H4SO)-34, Rear Oxygen Sensor.>

AB:DTC P0139 O2 SENSOR CIRCUIT SLOW RESPONSE (BANK 1 SENSOR 2)

DTC DETECTING CONDITION:

- Two consecutive driving cycles with fault
- GENERAL DESCRIPTION <Ref. to GD(H4SO)-64, DTC P0139 O2 SENSOR CIRCUIT SLOW RESPONSE (BANK 1 SENSOR 2), Diagnostic Trouble Code (DTC) Detecting Criteria.>

CAUTION:
After repair or replacement of faulty parts, conduct Clear Memory Mode <Ref. to EN(H4SO)(diag)-43, OPERATION, Clear Memory Mode.> and Inspection Mode <Ref. to EN(H4SO)(diag)-35, PROCEDURE, Inspection Mode.>.

WIRING DIAGRAM:

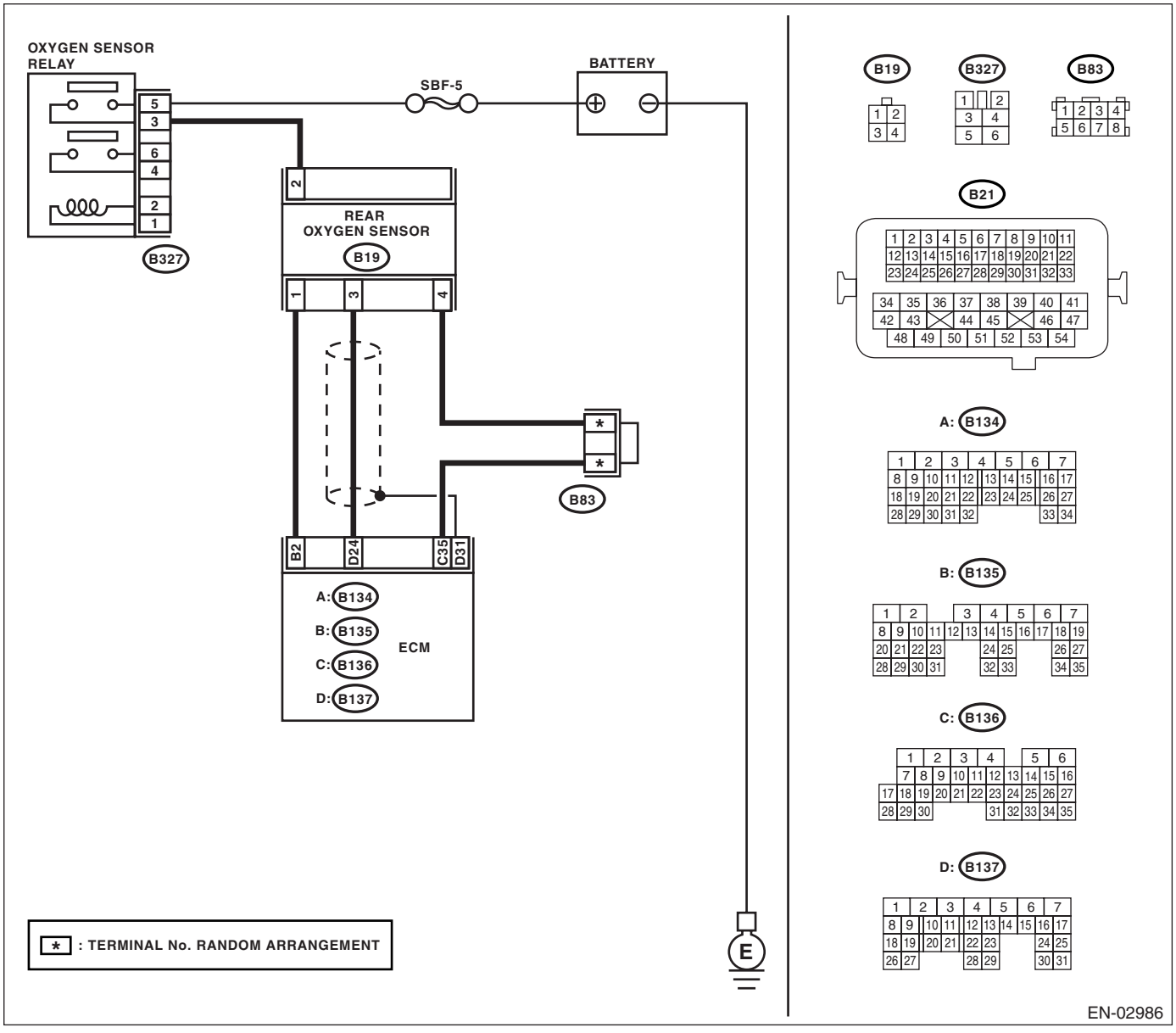

	Step	Check	Yes	No
1	**CHECK FOR ANY OTHER DTC ON DISPLAY.**	Is any other DTC displayed?	Check DTC using "List of Diagnostic Trouble Code (DTC)". <Ref. to EN(H4SO)(diag)-70, List of Diagnostic Trouble Code (DTC).> NOTE: In this case, it is not necessary to inspect DTC P0139.	Go to step **2.**
2	**CHECK HARNESS BETWEEN ECM AND REAR OXYGEN SENSOR CONNECTOR.** 1) Turn the ignition switch to OFF. 2) Disconnect the connectors from ECM and rear oxygen sensor. 3) Measure the resistance of harness between ECM and rear oxygen sensor connector. ***Connector & terminal*** ***(B137) No. 24 — (B19) No. 3:***	Is the resistance less than 1 Ω?	Go to step **3.**	Repair open circuit in harness between ECM and rearoxygen sensor connector.
3	**CHECK HARNESS BETWEEN REAR OXYGEN SENSOR AND ECM CONNECTOR.** Measure the resistance between rear oxygen sensor harness connector and chassis ground. ***Connector & terminal*** ***(B19) No. 3 — Chassis ground:***	Is the resistance more than 1 MΩ?	Go to step **4.**	Repair short circuit to ground in harness.
4	**CHECK REAR OXYGEN SENSOR DATA.** Measure the resistance between connector terminals of rear oxygen sensor. ***terminals*** ***No. 3 — No. 4:***	Is the resistance less than 1 Ω?	Replace the rear oxygen sensor. <Ref. to FU(H4SO)-34, Rear Oxygen Sensor.>	A temporary poor compact occurs. Check poor contact in connector.

AC:DTC P0171 SYSTEM TOO LEAN (BANK 1)

Refer to DTC P0172 for diagnostic procedure. <Ref. to EN(H4SO)(diag)-140, DTC P0172 SYSTEM TOO RICH (BANK 1), Diagnostic Procedure with Diagnostic Trouble Code (DTC).>

AD:DTC P0172 SYSTEM TOO RICH (BANK 1)

DTC DETECTING CONDITION:

- Two consecutive driving cycles with fault
- GENERAL DESCRIPTION <Ref. to GD(H4SO)-71, DTC P0172 SYSTEM TOO RICH (BANK 1), Diagnostic Trouble Code (DTC) Detecting Criteria.>

TROUBLE SYMPTOM:

- Erroneous idling
- Engine stalls.
- Poor driving performance

CAUTION:
After repair or replacement of faulty parts, conduct Clear Memory Mode <Ref. to EN(H4SO)(diag)-43, OPERATION, Clear Memory Mode.> and Inspection Mode <Ref. to EN(H4SO)(diag)-35, PROCEDURE, Inspection Mode.>.

	Step	Check	Yes	No
1	**CHECK EXHAUST SYSTEM.**	Are there holes or loose bolts on exhaust system?	Repair exhaust system.	Go to step **2.**
2	**CHECK AIR INTAKE SYSTEM.**	Are there holes, loose bolts or disconnection of hose on air intake system?	Repair air intake system.	Go to step **3.**
3	**CHECK FUEL PRESSURE.** **Warning:** **• Place "NO FIRE" signs near the working area.** **• Be careful not to spill fuel on the floor.** Measure the fuel pressure while disconnecting pressure regulator vacuum hose from intake manifold. <Ref. to ME(H4SO)-25, INSPECTION, Fuel Pressure.> **Warning:** **Before removing the fuel pressure gauge, release fuel pressure.** NOTE: If fuel pressure does not increase, squeeze fuel return hose 2 to 3 times, then measure fuel pressure again.	Is the fuel pressure 284 — 314 kPa (2.9 — 3.2 kg/cm^2, 41 — 46 psi)?	Go to step **4.**	Repair the following items. Fuel pressure too high: • Clogged fuel return line or bent hose Fuel pressure too low: • Improper fuel pump discharge • Clogged fuel supply line
4	**CHECK FUEL PRESSURE.** After connecting the pressure regulator vacuum hose, measure fuel pressure. <Ref. to ME(H4SO)-25, INSPECTION, Fuel Pressure.> **Warning:** **Before removing the fuel pressure gauge, release fuel pressure.** NOTE: • If fuel pressure does not increase, squeeze fuel return hose 2 to 3 times, then measure fuel pressure again. • If out of specification as measured at this step, check or replace pressure regulator and pressure regulator vacuum hose.	Is the fuel pressure 206 — 235 kPa (2.1 — 2.4 kg/cm^2, 30 — 34 psi)?	Go to step **5.**	Repair the following items. Fuel pressure too high: • Faulty pressure regulator • Clogged fuel return line or bent hose Fuel pressure too low: • Faulty pressure regulator • Improper fuel pump discharge • Clogged fuel supply line

	Step	Check	Yes	No
5	**CHECK ENGINE COOLANT TEMPERATURE SENSOR.** 1) Start the engine and warm-up completely. 2) Read the data of engine coolant temperature sensor signal using Subaru Select Monitor or general scan tool. NOTE: • Subaru Select Monitor For detailed operation procedure, refer to the "READ CURRENT DATA FOR ENGINE". <Ref. to EN(H4SO)(diag)-27, Subaru Select Monitor.> • General scan tool For detailed operation procedures, refer to the general scan tool instruction manual.	Is the engine coolant temperature more than 60°C (140°F)?	Go to step **6.**	Replace the engine coolant temperature sensor. <Ref. to FU(H4SO)-21, Engine Coolant Temperature Sensor.>
6	**CHECK MASS AIR FLOW AND INTAKE AIR TEMPERATURE SENSOR SIGNAL.** 1) Start the engine and warm-up engine until coolant temperature is greater than 60°C (140°F). 2) Place the select lever in "N" or "P" range. 3) Turn the A/C switch to OFF. 4) Turn all accessory switches to OFF. 5) Read the data of mass air flow and intake air temperature sensor signal using Subaru Select Monitor or general scan tool. NOTE: • Subaru Select Monitor For detailed operation procedure, refer to the "READ CURRENT DATA FOR ENGINE". <Ref. to EN(H4SO)(diag)-27, Subaru Select Monitor.> • General scan tool For detailed operation procedures, refer to the general scan tool instruction manual.	Is the measured value 2.1 — 3.4 g/s (0.28 — 0.45 lb/m)?	Go to step **7.**	Replace the mass air flow and intake air temperature sensor. <Ref. to FU(H4SO)-27, Mass Air Flow and Intake Air Temperature Sensor.>
7	**CHECK MASS AIR FLOW AND INTAKE AIR TEMPERATURE SENSOR.** 1) Start the engine and warm-up engine until coolant temperature is greater than 60°C (140°F). 2) Place the shift lever in neutral position. 3) Turn the A/C switch to OFF. 4) Turn all accessory switches to OFF. 5) Open the front hood. 6) Measure the ambient temperature. 7) Read the data of mass air flow and intake air temperature sensor signal using Subaru Select Monitor or general scan tool. NOTE: • Subaru Select Monitor For detailed operation procedure, refer to the "READ CURRENT DATA FOR ENGINE". <Ref. to EN(H4SO)(diag)-27, Subaru Select Monitor.> • General scan tool For detailed operation procedure, refer to the general scan tool instruction manual.	Subtract ambient temperature from intake air temperature. Is the obtained value −10°C — 50°C (14°F — 122°F)?	Contact your SOA Service Center.	Check the mass air flow and intake air temperature sensor. <Ref. to FU(H4SO)-27, Mass Air Flow and Intake Air Temperature Sensor.>

AE:DTC P0181 FUEL TEMPERATURE SENSOR “A” CIRCUIT RANGE/PERFORMANCE

DTC DETECTING CONDITION:

- Fault occurs in two consecutive driving cycles
- GENERAL DESCRIPTION <Ref. to GD(H4SO)-73, DTC P0181 FUEL TEMPERATURE SENSOR “A” CIRCUIT RANGE/PERFORMANCE, Diagnostic Trouble Code (DTC) Detecting Criteria.>

CAUTION:

After repair or replacement of faulty parts, conduct CLEAR MEMORY MODE <Ref. to EN(H4SO)(diag)-43, OPERATION, Clear Memory Mode.> and INSPECTION MODE <Ref. to EN(H4SO)(diag)-35, PROCEDURE, Inspection Mode.>.

WIRING DIAGRAM:

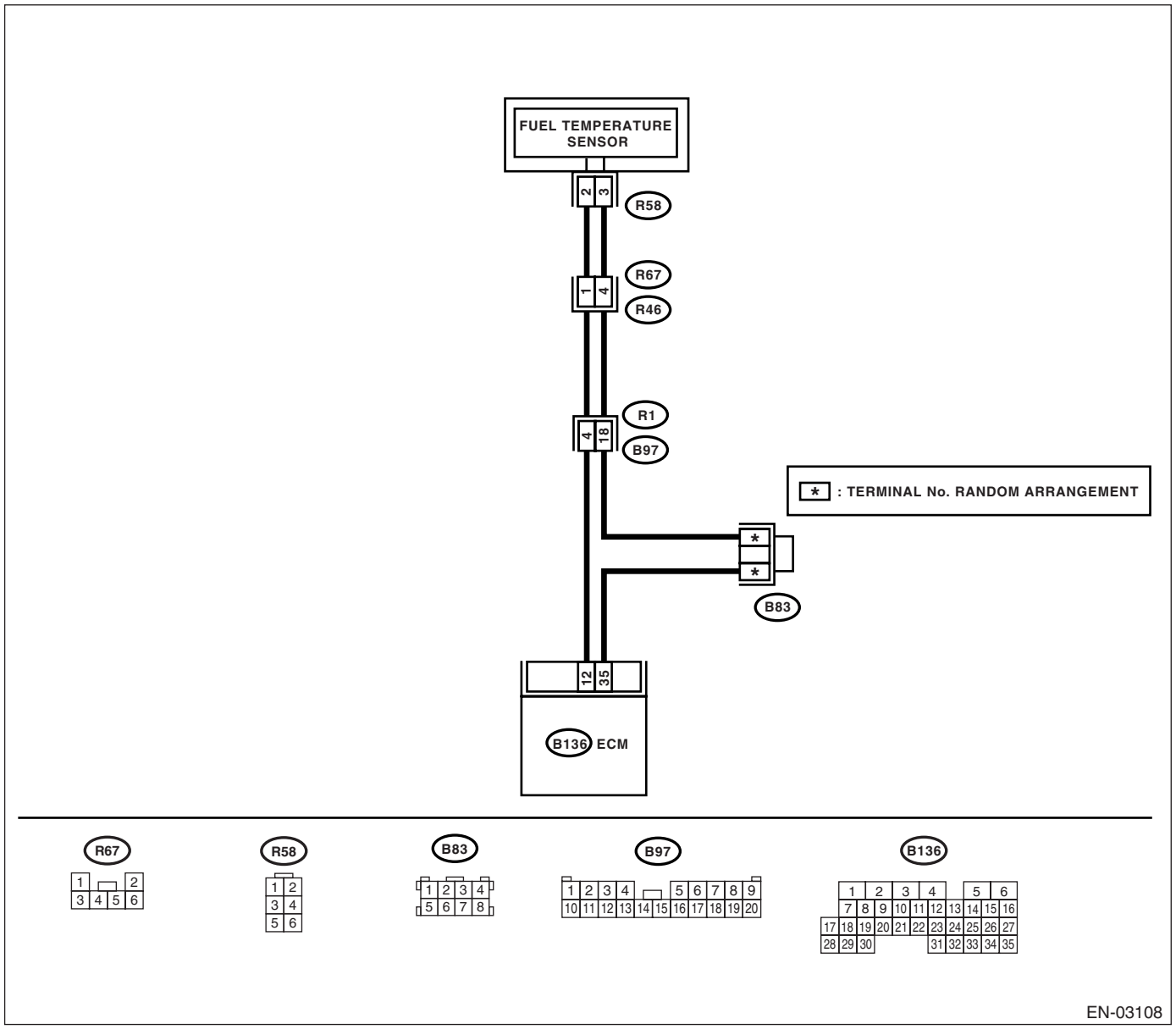

Step		Check	Yes	No
1	**CHECK FOR ANY OTHER DTC ON DISPLAY.**	Is any other DTC displayed?	Inspect DTC using “List of Diagnostic Trouble Code (DTC)”. <Ref. to EN(H4SO)(diag)-70, List of Diagnostic Trouble Code (DTC).> NOTE: In this case, it is not necessary to inspect DTC P0181.	Replace the fuel temperature sensor.<Ref. to EC(H4SO)-9, Fuel Temperature Sensor.>

AF:DTC P0182 FUEL TEMPERATURE SENSOR “A” CIRCUIT LOW INPUT

DTC DETECTING CONDITION:

- Detect as soon as malfunction occurs.
- GENERAL DESCRIPTION <Ref. to GD(H4SO)-76, DTC P0182 FUEL TEMPERATURE SENSOR “A” CIRCUIT LOW INPUT, Diagnostic Trouble Code (DTC) Detecting Criteria.>

CAUTION:
After repair or replacement of faulty parts, conduct CLEAR MEMORY MODE <Ref. to EN(H4SO)(diag)-43, OPERATION, Clear Memory Mode.> and INSPECTION MODE <Ref. to EN(H4SO)(diag)-35, PROCEDURE, Inspection Mode.>.

WIRING DIAGRAM:

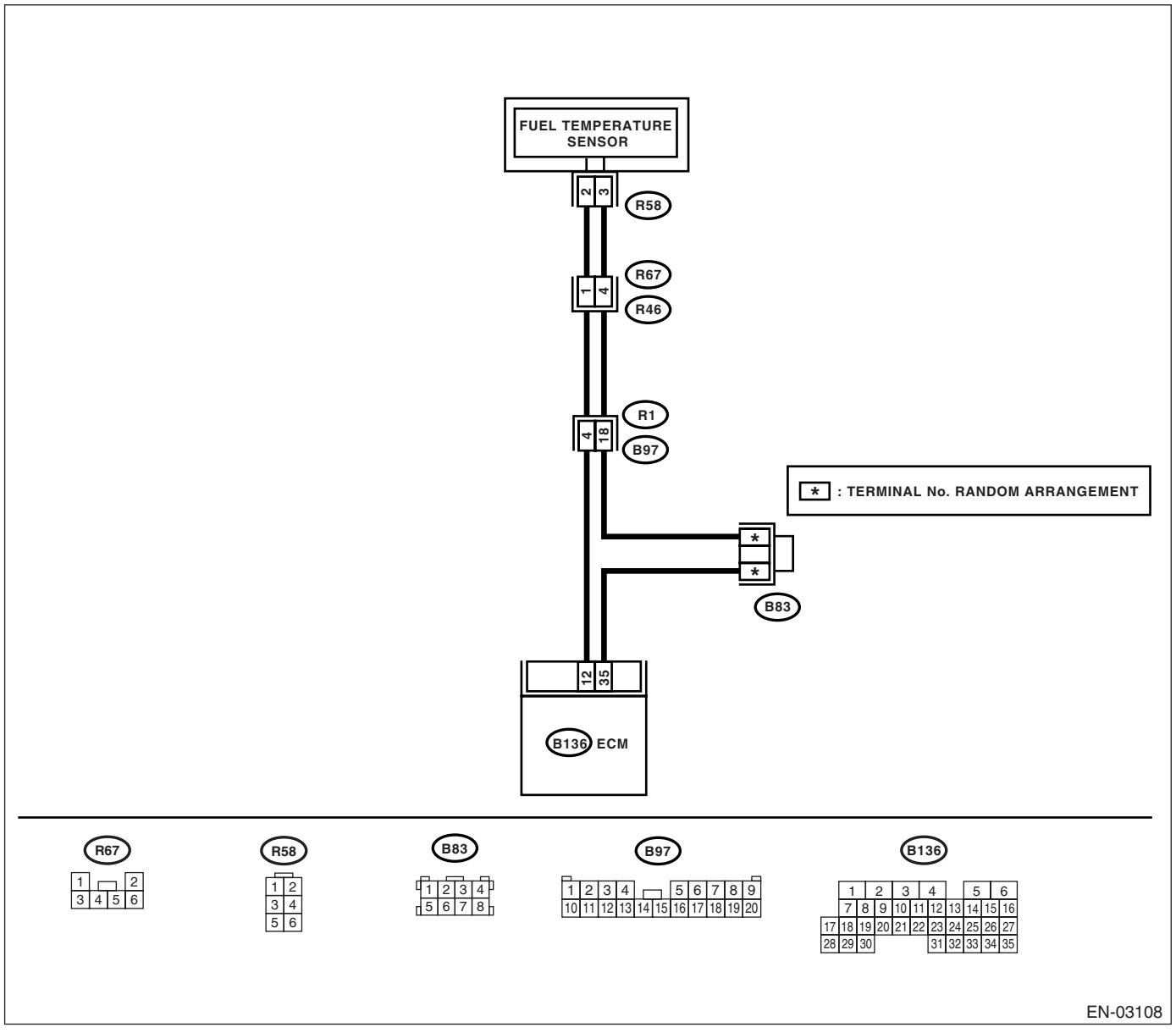

	Step	Check	Yes	No
1	**CHECK CURRENT DATA.** 1) Start the engine. 2) Read the data of fuel temperature sensor signal using Subaru Select Monitor. NOTE: • Subaru Select Monitor For detailed operation procedures, refer to "READ CURRENT DATA FOR ENGINE". <Ref. to EN(H4SO)(diag)-27, Subaru Select Monitor.>	Is the fuel temperature 150°C (302°F)?	Go to step **2.**	The malfunction indicator light may light up, however, the circuit is returned to the normal status at the moment.
2	**CHECK CURRENT DATA.** 1) Turn ignition switch to OFF. 2) Remove the access hole lid. 3) Disconnect the connector from fuel pump. 4) Turn ignition switch to ON. 5) Read the data of fuel temperature sensor signal using Subaru Select Monitor. NOTE: • Subaru Select Monitor For detailed operation procedures, refer to "READ CURRENT DATA FOR ENGINE". <Ref. to EN(H4SO)(diag)-27, Subaru Select Monitor.>	Is the fuel temperature −40°C (−40°F)?	Replace the fuel temperature sensor.<Ref. to EC(H4SO)-9, Fuel Temperature Sensor.>	Repair short circuit to ground in harness between fuel pump and ECM connector.

AG:DTC P0183 FUEL TEMPERATURE SENSOR “A” CIRCUIT HIGH INPUT

DTC DETECTING CONDITION:

- Detect as soon as malfunction occurs.
- GENERAL DESCRIPTION <Ref. to GD(H4SO)-78, DTC P0183 FUEL TEMPERATURE SENSOR “A” CIRCUIT HIGH INPUT, Diagnostic Trouble Code (DTC) Detecting Criteria.>

CAUTION:
After repair or replacement of faulty parts, conduct CLEAR MEMORY MODE <Ref. to EN(H4SO)(diag)-43, OPERATION, Clear Memory Mode.> and INSPECTION MODE <Ref. to EN(H4SO)(diag)-35, PROCEDURE, Inspection Mode.>.

WIRING DIAGRAM:

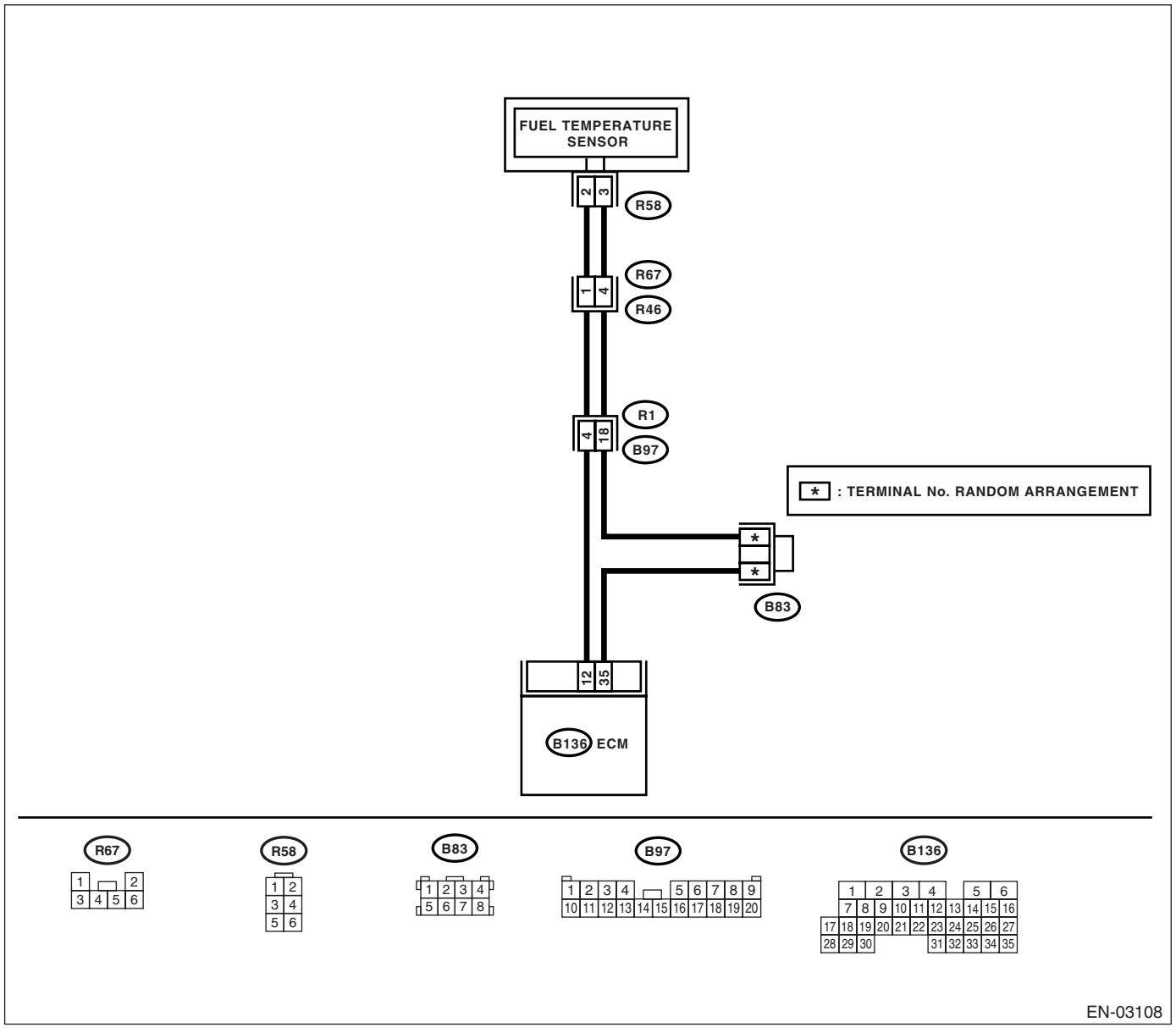

	Step	Check	Yes	No
1	**CHECK CURRENT DATA.** 1) Start the engine. 2) Read the data of fuel temperature sensor signal using Subaru Select Monitor. NOTE: • Subaru Select Monitor For detailed operation procedures, refer to "READ CURRENT DATA FOR ENGINE". <Ref. to EN(H4SO)(diag)-27, Subaru Select Monitor.>	Is the fuel temperature –40°C (–40°F)?	Go to step **2.**	Repair poor contact. NOTE: In this case, repair the following: • Poor contact in fuel pump connector • Poor contact in ECM connector • Poor contact in coupling connector • Poor contact in joint connector
2	**CHECK HARNESS BETWEEN FUEL TEMPERATURE SENSOR AND ECM CONNECTOR.** 1) Turn ignition switch to OFF. 2) Remove the access hole lid. 3) Disconnect the connector from fuel pump. 4) Measure the voltage between fuel pump connector and chassis ground. ***Connector & terminal*** ***(R58) No. 2 (+) — Chassis ground (–):***	Is the voltage more than 10 V?	Repair short circuit to battery in harness between ECM and fuel pump connector.	Go to step **3.**
3	**CHECK HARNESS BETWEEN FUEL TEMPERATURE SENSOR AND ECM CONNECTOR.** 1) Turn ignition switch to ON. 2) Measure the voltage between fuel pump connector and chassis ground. ***Connector & terminal*** ***(R58) No. 2 (+) — Chassis ground (–):***	Is the voltage more than 10 V?	Repair short circuit to battery in harness between ECM and fuel pump connector.	Go to step **4.**
4	**CHECK HARNESS BETWEEN FUEL TEMPERATURE SENSOR AND ECM CONNECTOR.** Measure the voltage between fuel pump connector and chassis ground. ***Connector & terminal*** ***(R58) No. 2 (+) — Chassis ground (–):***	Is the voltage more than 4 V?	Go to step **5.**	Repair harness and connector. NOTE: In this case, repair the following: • Open circuit in harness between ECM and fuel pump connector • Poor contact in fuel pump connector • Poor contact in ECM connector • Poor contact in coupling connector

	Step	Check	Yes	No
5	**CHECK HARNESS BETWEEN FUEL TEMPERATURE SENSOR AND ECM CONNECTOR.** 1) Turn ignition switch to OFF. 2) Disconnect the connector from ECM. 3) Measure the resistance of harness between fuel pump connector and ECM. ***Connector & terminal*** ***(R58) No. 3 — (B136) No. 35:***	Is the resistance less than 1 Ω?	Replace the fuel temperature sensor.<Ref. to EC(H4SO)-9, Fuel Temperature Sensor.>	Repair harness and connector. NOTE: In this case, repair the following: • Open circuit in harness between ECM and fuel pump connector • Poor contact in fuel pump connector • Poor contact in ECM connector • Poor contact in coupling connector • Poor contact in joint connector

AH:DTC P0222 THROTTLE/PEDAL POSITION SENSOR/SWITCH “B” CIRCUIT LOW INPUT

DTC DETECTING CONDITION:

- Detect as soon as malfunction occurs.
- GENERAL DESCRIPTION <Ref. to GD(H4SO)-80, DTC P0222 THROTTLE/PEDAL POSITION SENSOR/SWITCH “B” CIRCUIT LOW INPUT, Diagnostic Trouble Code (DTC) Detecting Criteria.>

TROUBLE SYMPTOM:

- Erroneous idling
- Poor driving performance
- Engine stalls.

WIRING DIAGRAM:

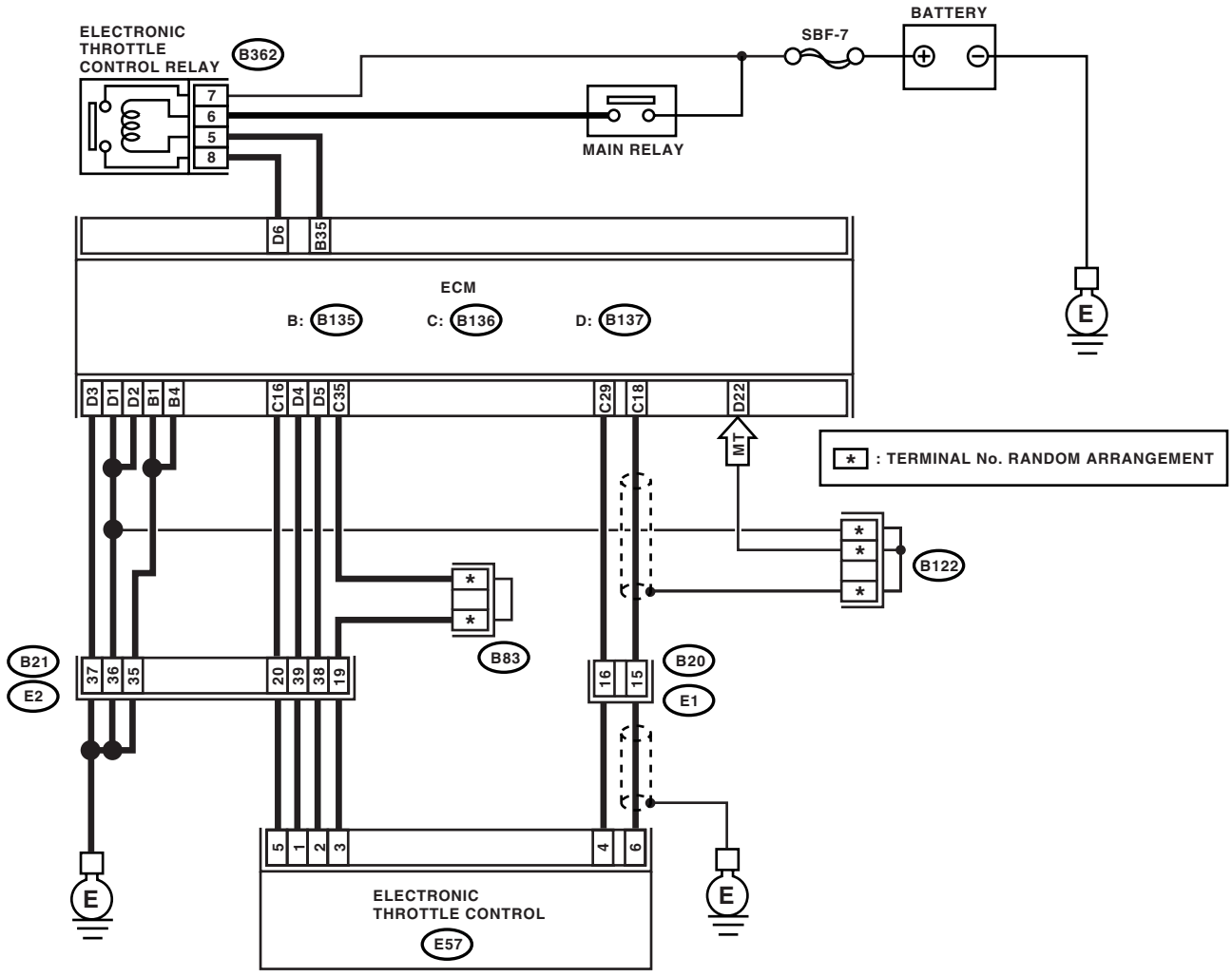

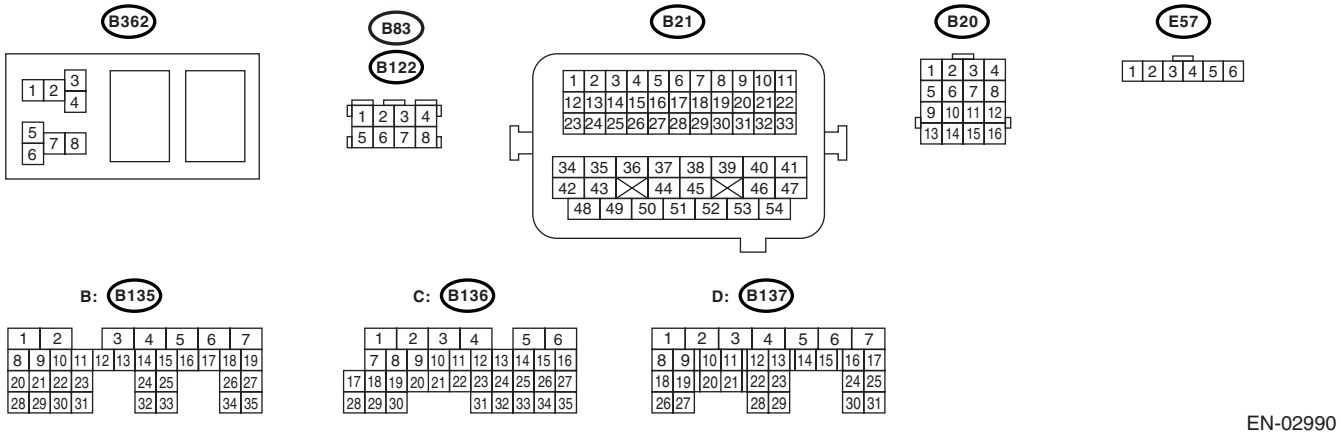

EN-02990

	Step	Check	Yes	No
1	**CHECK OUTPUT VOLTAGE OF SENSOR.** 1) Turn the ignition switch to ON. 2) Read data of sub throttle sensor signal using Subaru Select Monitor. NOTE: • Subaru Select Monitor For detailed operation procedure, refer to the "READ CURRENT DATA FOR ENGINE". <Ref. to EN(H4SO)(diag)-27, Subaru Select Monitor.>	Is the measured value more than 0.8 V?	Go to step **2.**	Go to step **3.**
2	**CHECK POOR CONTACT IN CONNECTORS.** Check poor contact in the connectors between the ECM and electronic throttle control.	Is there poor contact in the connectors between ECM and electronic throttle control?	Repair the poor contact in connectors.	Connector has returned to a normal condition at this time. A temporary poor contact of the connector may be the cause.
3	**CHECK HARNESS BETWEEN ECM AND ELECTRONIC THROTTLE CONTROL.** 1) Turn the ignition switch to OFF. 2) Disconnect the connector from ECM. 3) Disconnect the connector from electronic throttle control. 4) Measure the resistance between the ECM connector and electronic throttle control connector. ***Connector & terminal*** ***(B136) No. 29 — (E57) No. 4:*** ***(B136) No. 16 — (E57) No. 5:***	Is the measured value less than 1 Ω?	Go to step **4.**	Repair the open harness connector.
4	**CHECK HARNESS BETWEEN ECM AND ELECTRONIC THROTTLE CONTROL.** Check the resistance between the ECM connector and chassis ground. ***Connector & terminal*** ***(B136) No. 29 — Chassis ground:*** ***(B136) No. 16 — Chassis ground:***	Is the measured value more than 1 MΩ?	Go to step **5.**	Repair the chassis short of harness.
5	**CHECK POWER SUPPLY TO SENSOR.** 1) Connect the ECM connectors. 2) Turn the ignition switch to ON. 3) Measure the voltage between electronic throttle control connector and engine ground. ***Connector & terminal*** ***(E57) No. 5 (+) — Engine ground (−):***	Is the measured value within 4.5 to 5.5 V?	Go to step **6.**	Repair the poor contact in ECM connector. If problem persists, replace the ECM. <Ref. to FU(H4SO)-35, Engine Control Module (ECM).>
6	**CHECK SHORT OF ECM.** 1) Turn the ignition switch to OFF. 2) Measure the resistance between electronic throttle control connector and engine ground. ***Connector & terminal*** ***(E57) No. 4 — Engine ground:***	Is the measured value more than 10 Ω?	Repair the poor contact in electronic throttle control connector. If problem persists, replace the electronic throttle control.	Repair the poor contact in ECM connectors. If problem persists, replace the ECM. <Ref. to FU(H4SO)-35, Engine Control Module (ECM).>

AI: DTC P0223 THROTTLE/PEDAL POSITION SENSOR/SWITCH “B” CIRCUIT HIGH INPUT

DTC DETECTING CONDITION:

- Detect as soon as malfunction occurs.
- GENERAL DESCRIPTION <Ref. to GD(H4SO)-82, DTC P0223 THROTTLE/PEDAL POSITION SENSOR/SWITCH “B” CIRCUIT HIGH INPUT, Diagnostic Trouble Code (DTC) Detecting Criteria.>

TROUBLE SYMPTOM:

- Erroneous idling
- Poor driving performance
- Engine stalls.

WIRING DIAGRAM:

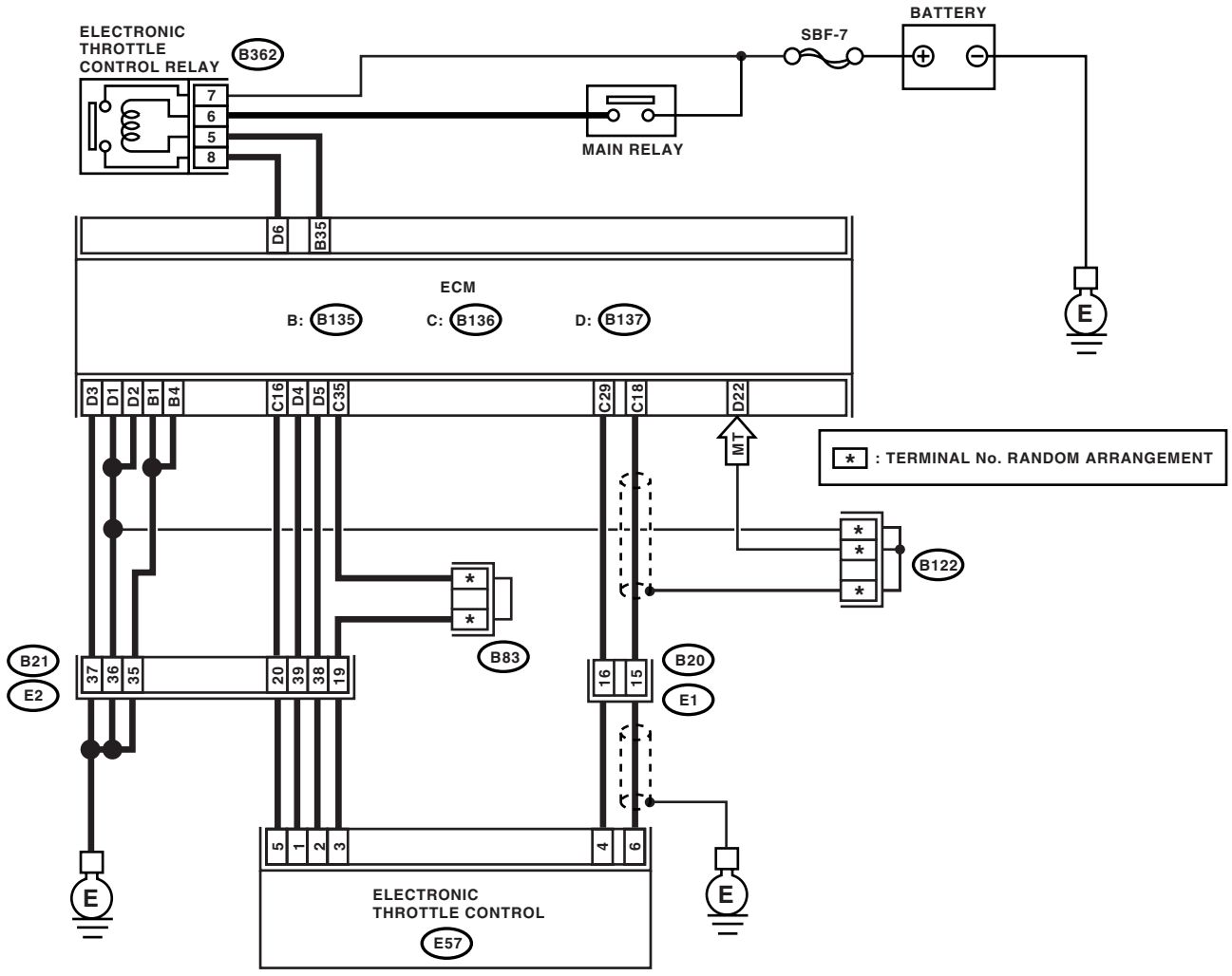

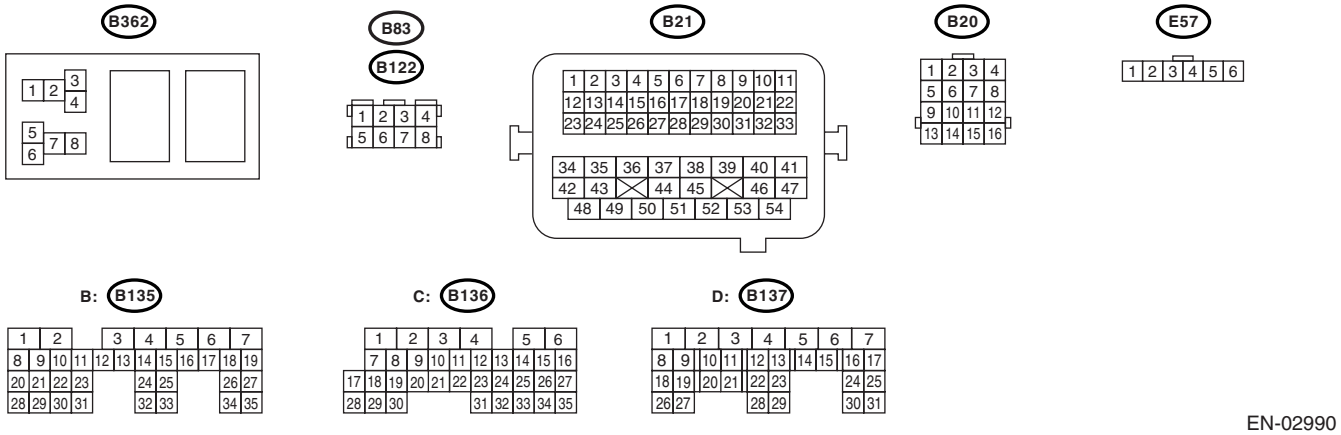

EN-02990

	Step	Check	Yes	No
1	**CHECK OUTPUT VOLTAGE OF SENSOR.** 1) Turn the ignition switch to ON. 2) Read the data of sub throttle sensor signals, using the Subaru Select Monitor. NOTE: • Subaru Select Monitor For detailed operation procedure, refer to the "READ CURRENT DATA FOR ENGINE". <Ref. to EN(H4SO)(diag)-27, Subaru Select Monitor.>	Is the measured value less than 4.73 V?	Go to step **2.**	Go to step **3.**
2	**CHECK POOR CONTACT IN CONNECTORS.** Check poor contact in connectors between ECM and electronic throttle control.	Is there poor contact in the connectors between ECM and electronic throttle control?	Repair the poor contact in connectors.	Connector has returned to a normal condition at this time. A temporary poor contact of the connector may be the cause.
3	**CHECK HARNESS BETWEEN ECM AND ELECTRONIC THROTTLE CONTROL.** 1) Turn the ignition switch to OFF. 2) Disconnect the connectors from ECM. 3) Disconnect the connectors from electronic throttle control. 4) Measure the resistance between ECM connector and electronic throttle control connector. ***Connector & terminal*** ***(B136) No. 35 — (E57) No. 3:*** ***(B136) No. 29 — (E57) No. 4:***	Is the measured value less than 1 Ω?	Go to step **4.**	Repair the open circuit of harness connector.
4	**CHECK HARNESS BETWEEN ECM AND ELECTRONIC THROTTLE CONTROL.** 1) Connect the ECM connector. 2) Measure the resistance between the electronic throttle control connector and engine ground. ***Connector & terminal*** ***(E57) No. 3 — Engine ground:***	Is the measured value less than 5 Ω?	Go to step **5.**	Repair the poor contact in ECM connector. If the problem persists, replace the ECM. <Ref. to FU(H4SO)-35, Engine Control Module (ECM).>
5	**CHECK HARNESS BETWEEN ECM AND ELECTRONIC THROTTLE CONTROL.** Measure the voltage between the electronic throttle control connector and engine ground. ***Connector & terminal*** ***(E57) No. 4 (+) — Engine ground (−):***	Is the measured value less than 10 V?	Go to step **6.**	Repair the short of harness between ECM connector and electronic throttle control connector.
6	**CHECK HARNESS BETWEEN ECM AND ELECTRONIC THROTTLE CONTROL.** 1) Turn the ignition switch to OFF. 2) Disconnect the connector from ECM. 3) Measure the voltage between connectors. ***Connector & terminal*** ***(B136) No. 29 — (B136) No. 16:***	Is the measured value more than 1 MΩ?	Repair the poor contact in electronic throttle control connector. If problem persists, replace the electronic throttle control.	Short circuit of sensor power supply may be the cause.

AJ:DTC P0301 CYLINDER 1 MISFIRE DETECTED

NOTE:
For the diagnostic procedure, refer to DTC P0304. <Ref. to EN(H4SO)(diag)-155, DTC P0304 CYLINDER 4 MISFIRE DETECTED, Diagnostic Procedure with Diagnostic Trouble Code (DTC).>

AK:DTC P0302 CYLINDER 2 MISFIRE DETECTED

NOTE:
For the diagnostic procedure, refer to DTC P0304. <Ref. to EN(H4SO)(diag)-155, DTC P0304 CYLINDER 4 MISFIRE DETECTED, Diagnostic Procedure with Diagnostic Trouble Code (DTC).>

AL:DTC P0303 CYLINDER 3 MISFIRE DETECTED

NOTE:
For the diagnostic procedure, refer to DTC P0304. <Ref. to EN(H4SO)(diag)-155, DTC P0304 CYLINDER 4 MISFIRE DETECTED, Diagnostic Procedure with Diagnostic Trouble Code (DTC).>

AM:DTC P0304 CYLINDER 4 MISFIRE DETECTED

DTC DETECTING CONDITION:

- Two consecutive driving cycles with fault
- Detect as soon as malfunction occurs. (A misfire which could damage catalyst occurs.)
- GENERAL DESCRIPTION <Ref. to GD(H4SO)-89, DTC P0304 CYLINDER 4 MISFIRE DETECTED, Diagnostic Trouble Code (DTC) Detecting Criteria.>

TROUBLE SYMPTOM:

- Engine stalls.
- Erroneous idling
- Rough driving

CAUTION:
After repair or replacement of faulty parts, conduct Clear Memory Mode <Ref. to EN(H4SO)(diag)-43, OPERATION, Clear Memory Mode.> and Inspection Mode <Ref. to EN(H4SO)(diag)-35, PROCEDURE, Inspection Mode.>.

WIRING DIAGRAM:

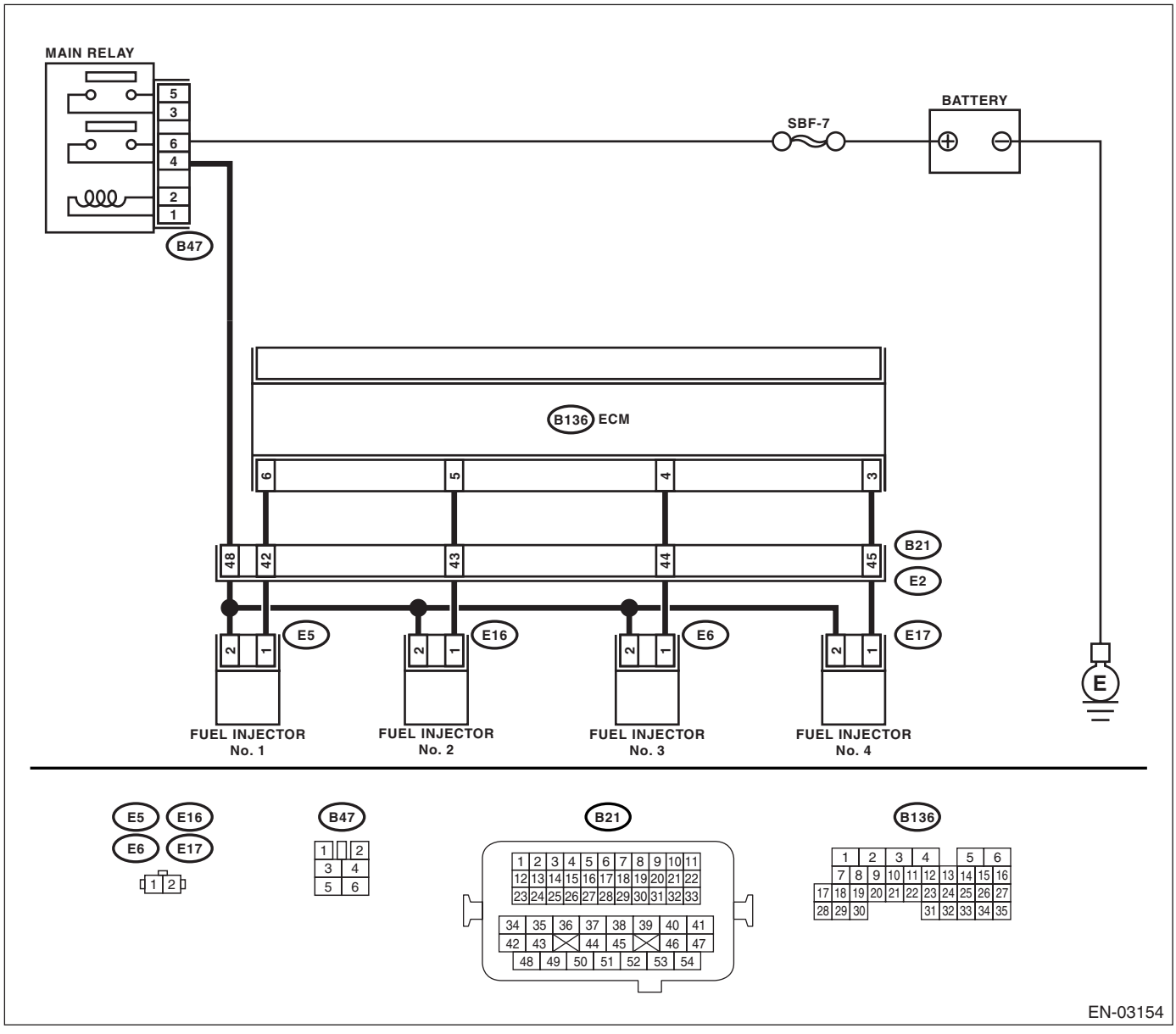

EN-03154

	Step	Check	Yes	No
1	**CHECK FOR ANY OTHER DTC ON DISPLAY.**	Is any other DTC displayed?	Check DTC using "List of Diagnostic Trouble Code (DTC)". <Ref. to EN(H4SO)(diag)-70, List of Diagnostic Trouble Code (DTC).> NOTE: In this case, it is not necessary to inspect DTC P0301, P0302, P0303 and P0304.	Go to step **2.**
2	**CHECK OUTPUT SIGNAL FROM ECM.** 1) Turn the ignition switch to ON. 2) Measure the voltage between ECM connector and chassis ground on faulty cylinders. ***Connector & terminal*** ***#1 (B136) No. 6 (+) — Chassis ground (−):*** ***#2 (B136) No. 5 (+) — Chassis ground (−):*** ***#3 (B136) No. 4 (+) — Chassis ground (−):*** ***#4 (B136) No. 3 (+) — Chassis ground (−):***	Is the voltage more than 10 V?	Go to step **7.**	Go to step **3.**
3	**CHECK HARNESS BETWEEN FUEL INJECTOR AND ECM CONNECTOR.** 1) Turn the ignition switch to OFF. 2) Disconnect the connector from fuel injector on faulty cylinders. 3) Measure the resistance between ECM connector and engine ground on faulty cylinders. ***Connector & terminal*** ***#1 (E5) No. 1 — Engine ground:*** ***#2 (E16) No. 1 — Engine ground:*** ***#3 (E6) No. 1 — Engine ground:*** ***#4 (E17) No. 1 — Engine ground:***	Is the resistance more than 1 MΩ?	Go to step **4.**	Repair ground short circuit in harness between fuel injector and ECM connector.
4	**CHECK HARNESS BETWEEN FUEL INJECTOR AND ECM CONNECTOR.** Measure the resistance of harness connector between ECM connector and fuel injector on faulty cylinders. ***Connector & terminal*** ***#1 (B136) No. 6 — (E5) No. 1:*** ***#2 (B136) No. 5 — (E16) No. 1:*** ***#3 (B136) No. 4 — (E6) No. 1:*** ***#4 (B136) No. 3 — (E17) No. 1:***	Is the resistance less than 1 Ω?	Go to step **5.**	Repair harness and connector. NOTE: In this case, repair the following: • Open circuit in harness between ECM and fuel injector connector • Poor contact in coupling connector
5	**CHECK FUEL INJECTOR.** Measure the resistance between fuel injector terminals on faulty cylinder. ***Terminals*** ***No. 1 — No. 2:***	Is the resistance 5 — 20 Ω?	Go to step **6.**	Replace the faulty fuel injector.<Ref. to FU(H4SO)-29, Fuel Injector.>

	Step	Check	Yes	No
6	**CHECK POWER SUPPLY LINE.** 1) Turn the ignition switch to ON. 2) Measure the voltage between fuel injector and engine ground on faulty cylinders. ***Connector & terminal*** ***#1 (E5) No. 2 (+) — Engine ground (−):*** ***#2 (E16) No. 2 (+) — Engine ground (−):*** ***#3 (E6) No. 2 (+) — Engine ground (−):*** ***#4 (E17) No. 2 (+) — Engine ground (−):***	Is the voltage more than 10 V?	Repair poor contact in all connectors in fuel injector circuit.	Repair harness and connector. NOTE: In this case, repair the following: • Open circuit in harness between main relay and fuel injector connector on faulty cylinders • Poor contact in coupling connector • Poor contact in main relay connector • Poor contact in fuel injector connector on faulty cylinders
7	**CHECK HARNESS BETWEEN FUEL INJECTOR AND ECM CONNECTOR.** 1) Turn the ignition switch to OFF. 2) Disconnect the connector from fuel injector on faulty cylinder. 3) Turn the ignition switch to ON. 4) Measure the voltage between ECM connector and chassis ground on faulty cylinders. ***Connector & terminal*** ***#1 (B136) No. 6 (+) — Chassis ground (−):*** ***#2 (B136) No. 5 (+) — Chassis ground (−):*** ***#3 (B136) No. 4 (+) — Chassis ground (−):*** ***#4 (B136) No. 3 (+) — Chassis ground (−):***	Is the voltage more than 10 V?	Repair battery short circuit in harness between ECM and fuel injector. After repair, replace the ECM. <Ref. to FU(H4SO)-35, Engine Control Module (ECM).>	Go to step **8.**
8	**CHECK FUEL INJECTOR.** 1) Turn the ignition switch to OFF. 2) Measure the resistance between fuel injector terminals on faulty cylinder. ***Terminals*** ***No. 1 — No. 2:***	Is the resistance less than 1 Ω?	Replace the faulty fuel injector<Ref. to FU(H4SO)-29, Fuel Injector.> and ECM <Ref. to FU(H4SO)-35, Engine Control Module (ECM).>	Go to step **9.**
9	**CHECK INSTALLATION OF CAMSHAFT POSITION SENSOR/CRANKSHAFT POSITION SENSOR.**	Is the camshaft position sensor or crankshaft position sensor loosely installed?	Tighten camshaft position sensor or crankshaft position sensor.	Go to step **10.**
10	**CHECK CRANK SPROCKET.** Remove the timing belt cover.	Is the crank sprocket rusted or does it have broken teeth?	Replace the crank sprocket. <Ref. to ME(H4SO)-47, Crank Sprocket.>	Go to step **11.**
11	**CHECK INSTALLATION CONDITION OF TIMING BELT.** Turn the crankshaft to align alignment mark on crank sprocket with alignment mark on cylinder block.	Is the timing belt dislocated from its proper position?	Repair installation condition of timing belt. <Ref. to ME(H4SO)-41, Timing Belt.>	Go to step **12.**
12	**CHECK FUEL LEVEL.**	Is the fuel meter indication higher than the “Lower” level?	Go to step **13.**	Replenish fuel so fuel meter indication is higher than the “Lower” level. After replenishing fuel, Go to step **13.**

	Step	Check	Yes	No
13	**CHECK STATUS OF MALFUNCTION INDICATOR LIGHT.** 1) Clear the memory using Subaru Select Monitor. <Ref. to EN(H4SO)(diag)-43, Clear Memory Mode.> 2) Start the engine, and drive the vehicle more than 10 minutes.	Does the malfunction indicator light illuminate or blink?	Go to step **16.**	Go to step **14.**
14	**CHECK CAUSE OF MISFIRE DIAGNOSED.**	Was the cause of misfire identified when the engine is running? Ex. Disconnection of spark plug cord.	Finish diagnostics operation, if the engine has no abnormality.	Go to step **15.**
15	**CHECK FOR POOR CONTACT.**	Is there poor contact in the ignition coil, fuel injector, ECM and coupling connector?	Repair poor contact.	Contact your SOA Service Center after checking followings. NOTE: In this case, check the following: • Condition of fuel • Fuel additive used or not • Visually check spark plug • Visually check spark plug cord • Condition of engine oil
16	**CHECK AIR INTAKE SYSTEM.**	Is there any fault in air intake system?	Repair air intake system. NOTE: Check the following items: • Are there air leaks or air suction caused by loose or dislocated nuts and bolts? • Are there cracks or any disconnection of hoses?	Go to step **17.**
17	**CHECK MISFIRE SYMPTOM.** 1) Turn the ignition switch to ON. 2) Read the DTC. NOTE: • Subaru Select Monitor For detailed operation procedures, refer to “READ CURRENT DATA FOR ENGINE”. <Ref. to EN(H4SO)(diag)-27, Subaru Select Monitor.> • General scan tool For detailed operation procedures, refer to the general scan tool operation manual. NOTE: Perform diagnosis according to the items listed below.	Does the Subaru Select Monitor or general scan tool display only one DTC?	Go to step **22.**	Go to step **18.**
18	**CHECK DTC ON DISPLAY.** Is any other DTC displayed?	Does the Subaru Select Monitor or general scan tool indicate DTC P0301 and P0302?	Go to step **23.**	Go to step **19.**

	Step	Check	Yes	No
19	**CHECK DTC ON DISPLAY.** Is any other DTC displayed?	Does the Subaru Select Monitor or general scan tool indicate DTC P0303 and P0304?	Go to step **24.**	Go to step **20.**
20	**CHECK DTC ON DISPLAY.** Is any other DTC displayed?	Does the Subaru Select Monitor or general scan tool indicate DTC P0301 and P0303?	Go to step **25.**	Go to step **21.**
21	**CHECK DTC ON DISPLAY.** Is any other DTC displayed?	Does the Subaru Select Monitor or general scan tool indicate DTC P0302 and P0304?	Go to step **26.**	Go to step **27.**
22	**ONLY ONE CYLINDER**	Is there any fault in that cylinder?	Repair or replace faulty parts. NOTE: Check the following items. • Spark plug • Spark plug cord • Fuel injector • Compression ratio	Go to DTC P0171. <Ref. to EN(H4SO)(diag)-139, DTC P0171 SYSTEM TOO LEAN (BANK 1), Diagnostic Procedure with Diagnostic Trouble Code (DTC).>

23	**GROUP OF #1 AND #2 CYLINDERS**	Are there faults in #1 and #2 cylinders?	Repair or replace faulty parts.
			NOTE:
			• Check the following items.
			  • Spark plugs
			  • Fuel injectors
			  • Ignition coil
			  • Compression ratio
			• If no abnormal is discovered, check for “IGNITION CONTROL SYSTEM” of #1 and #2 cylinders side. <Ref. to EN(H4SO)(diag)-62, IGNITION CONTROL SYSTEM, Diagnostics for Engine Starting Failure.>
				Go to DTC P0171. <Ref. to EN(H4SO)(diag)-139, DTC P0171 SYSTEM TOO LEAN (BANK 1), Diagnostic Procedure with Diagnostic Trouble Code (DTC).>

Step		Check	Yes	No
24	GROUP OF #3 AND #4 CYLINDERS	Are there faults in #3 and #4 cylinders?	Repair or replace faulty parts. NOTE: • Check the following items. • Spark plugs • Fuel injectors • Ignition coil • If no abnormal is discovered, check for “IGNITION CONTROL SYSTEM” of #3 and #4 cylinders side. <Ref. to EN(H4SO)(diag)-62, IGNITION CONTROL SYSTEM, Diagnostics for Engine Starting Failure.>	Go to DTC P0171. <Ref. to EN(H4SO)(diag)-139, DTC P0171 SYSTEM TOO LEAN (BANK 1), Diagnostic Procedure with Diagnostic Trouble Code (DTC).>
25	GROUP OF #1 AND #3 CYLINDERS	Are there faults in #1 and #3 cylinders?	Repair or replace faulty parts. NOTE: Check the following items. • Spark plugs • Fuel injectors • Skipping timing belt teeth	Go to DTC P0171. <Ref. to EN(H4SO)(diag)-139, DTC P0171 SYSTEM TOO LEAN (BANK 1), Diagnostic Procedure with Diagnostic Trouble Code (DTC).>
26	GROUP OF #2 AND #4 CYLINDERS	Are there faults in #2 and #4 cylinders?	Repair or replace faulty parts. NOTE: Check the following items. • Spark plugs • Fuel injectors • Compression ratio • Skipping timing belt teeth	Go to DTC P0171. <Ref. to EN(H4SO)(diag)-139, DTC P0171 SYSTEM TOO LEAN (BANK 1), Diagnostic Procedure with Diagnostic Trouble Code (DTC).>
27	CYLINDER AT RANDOM	Is the engine idle rough?	Go to DTC P0171. <Ref. to EN(H4SO)(diag)-139, DTC P0171 SYSTEM TOO LEAN (BANK 1), Diagnostic Procedure with Diagnostic Trouble Code (DTC).>	Repair or replace faulty parts. NOTE: Check the following items. • Spark plugs • Fuel injectors • Compression ratio

AN:DTC P0327 KNOCK SENSOR 1 CIRCUIT LOW INPUT (BANK 1 OR SINGLE SENSOR)

DTC DETECTING CONDITION:

- Detect as soon as malfunction occurs.
- GENERAL DESCRIPTION <Ref. to GD(H4SO)-90, DTC P0327 KNOCK SENSOR 1 CIRCUIT LOW INPUT (BANK 1 OR SINGLE SENSOR), Diagnostic Trouble Code (DTC) Detecting Criteria.>

TROUBLE SYMPTOM:

- Poor driving performance
- Knocking occurs.

CAUTION:
After repair or replacement of faulty parts, conduct Clear Memory Mode <Ref. to EN(H4SO)(diag)-43, OPERATION, Clear Memory Mode.> and Inspection Mode <Ref. to EN(H4SO)(diag)-35, PROCEDURE, Inspection Mode.>.

WIRING DIAGRAM:

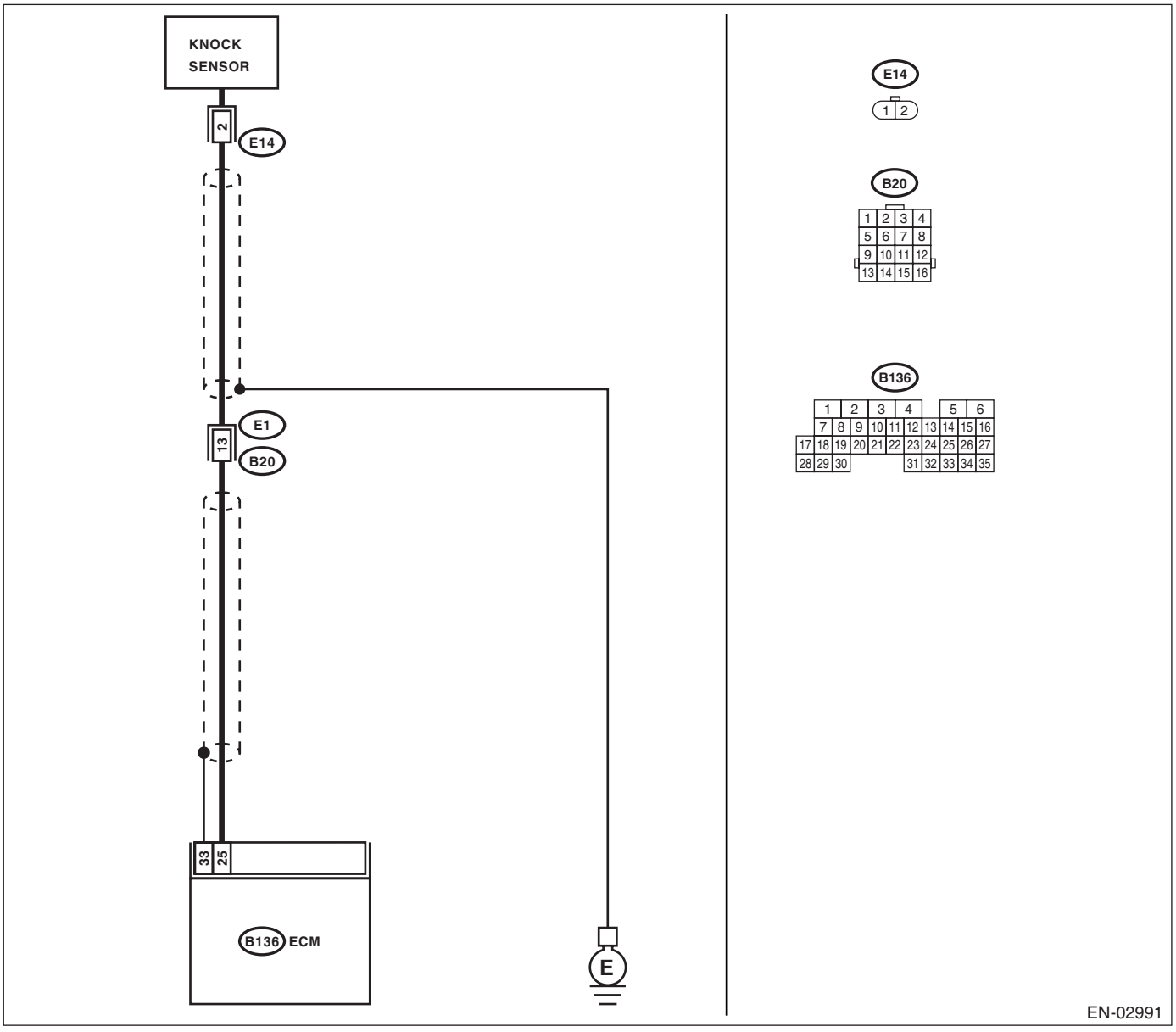

	Step	Check	Yes	No
1	**CHECK HARNESS BETWEEN KNOCK SENSOR AND ECM CONNECTOR.** 1) Turn the ignition switch to OFF. 2) Disconnect the connector from ECM. 3) Measure the resistance between ECM harness connector and chassis ground. ***Connector & terminal*** ***(B136) No. 25 — Chassis ground:***	Is the resistance more than 700 kΩ?	Go to step **2.**	Repair harness and connector. NOTE: In this case, repair the following: • Open circuit in harness between knock sensor and ECM connector • Poor contact in knock sensor connector • Poor contact in coupling connector
2	**CHECK KNOCK SENSOR.** 1) Disconnect the connector from knock sensor. 2) Measure the resistance between knock sensor connector terminal and engine ground. ***Terminals*** ***No. 2 — Engine ground:***	Is the resistance more than 700 kΩ?	Go to step **3.**	Repair harness and connector. NOTE: In this case, repair the following: • Poor contact in knock sensor connector
3	**CHECK CONDITION OF KNOCK SENSOR INSTALLATION.**	Is the knock sensor installation bolt tightened securely?	Replace the knock sensor. <Ref. to FU(H4SO)-24, Knock Sensor.>	Tighten knock sensor installation bolt securely.

AO:DTC P0328 KNOCK SENSOR 1 CIRCUIT HIGH INPUT (BANK 1 OR SINGLE SENSOR)

DTC DETECTING CONDITION:

- Detect as soon as malfunction occurs.
- GENERAL DESCRIPTION <Ref. to GD(H4SO)-92, DTC P0328 KNOCK SENSOR 1 CIRCUIT HIGH INPUT (BANK 1 OR SINGLE SENSOR), Diagnostic Trouble Code (DTC) Detecting Criteria.>

TROUBLE SYMPTOM:

- Poor driving performance
- Knocking occurs.

CAUTION:
After repair or replacement of faulty parts, conduct Clear Memory Mode <Ref. to EN(H4SO)(diag)-43, OPERATION, Clear Memory Mode.> and Inspection Mode <Ref. to EN(H4SO)(diag)-35, PROCEDURE, Inspection Mode.>.

WIRING DIAGRAM:

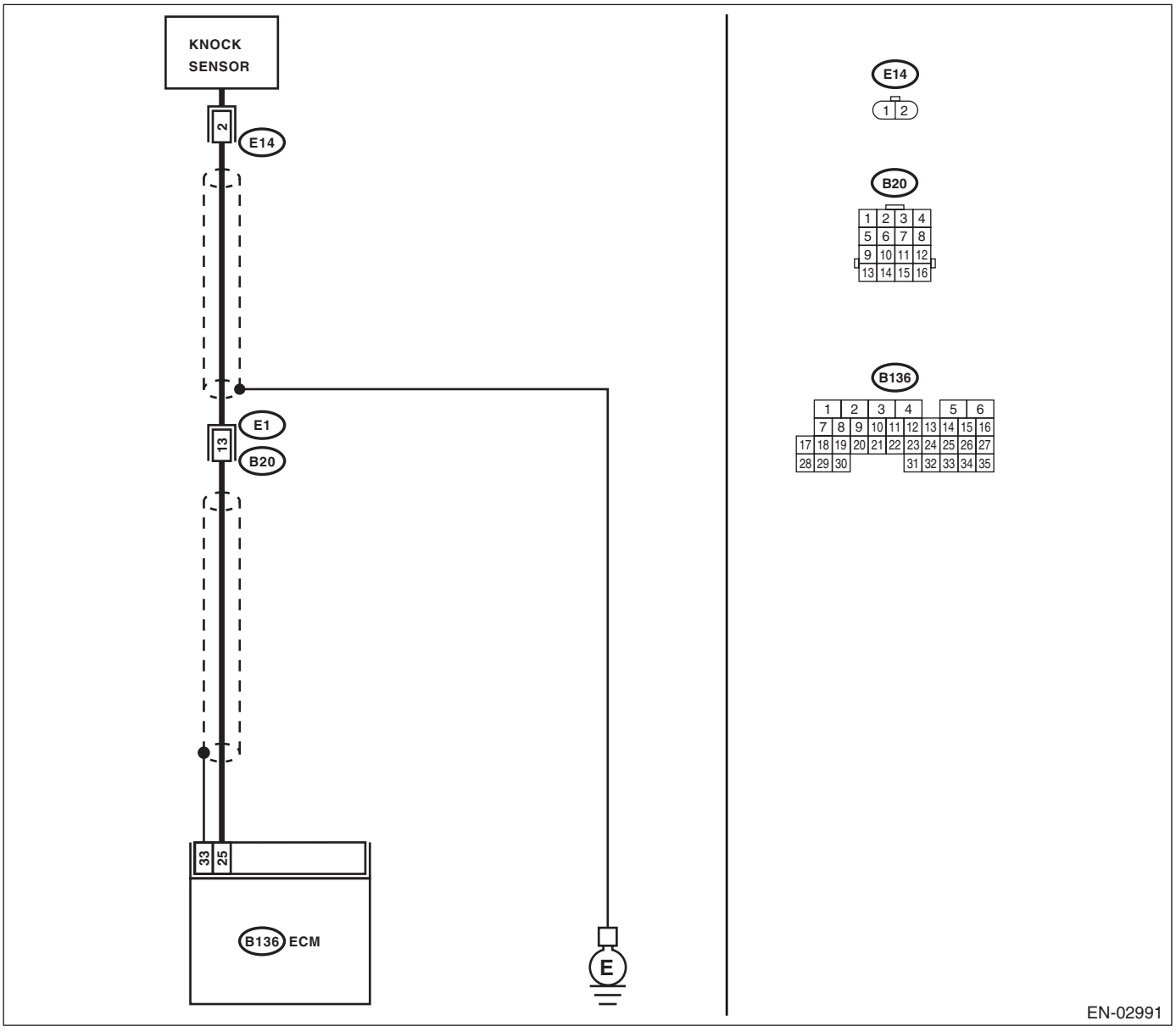

	Step	Check	Yes	No
1	**CHECK HARNESS BETWEEN KNOCK SENSOR AND ECM CONNECTOR.** Measure the resistance of harness between ECM connector and chassis ground. ***Connector & terminal*** ***(B136) No. 25 — Chassis ground:***	Is the resistance less than 400 kΩ?	Go to step **2.**	Go to step **3.**
2	**CHECK KNOCK SENSOR.** 1) Disconnect the connector from knock sensor. 2) Measure the resistance between knock sensor connector terminal and engine ground. ***Terminals*** ***No. 2 — Engine ground:***	Is the resistance less than 400 kΩ?	Replace the knock sensor. <Ref. to FU(H4SO)-24, Knock Sensor.>	Repair ground short circuit in harness between knock sensor connector and ECM connector. NOTE: The harness between both connectors is shielded. Repair short circuit of harness together with shield.
3	**CHECK INPUT SIGNAL FOR ECM.** 1) Connect the connectors to ECM and knock sensor. 2) Turn the ignition switch to ON. 3) Measure the voltage between ECM and chassis ground. ***Connector & terminal*** ***(B136) No. 25 (+) — Chassis ground (−):***	Is the voltage more than 2 V?	Even if malfunction indicator light lights up, the circuit has returned to a normal condition at this time. (However, the possibility of poor contact still remains.) NOTE: In this case, repair the following: • Poor contact in knock sensor connector • Poor contact in ECM connector • Poor contact in coupling connector	Repair poor contact in ECM connector.

AP:DTC P0335 CRANKSHAFT POSITION SENSOR “A” CIRCUIT

DTC DETECTING CONDITION:

- Detect as soon as malfunction occurs.
- GENERAL DESCRIPTION <Ref. to GD(H4SO)-94, DTC P0335 CRANKSHAFT POSITION SENSOR “A” CIRCUIT, Diagnostic Trouble Code (DTC) Detecting Criteria.>

TROUBLE SYMPTOM:

- Engine stalls.
- Failure of engine to start

CAUTION:

After repair or replacement of faulty parts, conduct Clear Memory Mode <Ref. to EN(H4SO)(diag)-43, OPERATION, Clear Memory Mode.> and Inspection Mode <Ref. to EN(H4SO)(diag)-35, PROCEDURE, Inspection Mode.>.

WIRING DIAGRAM:

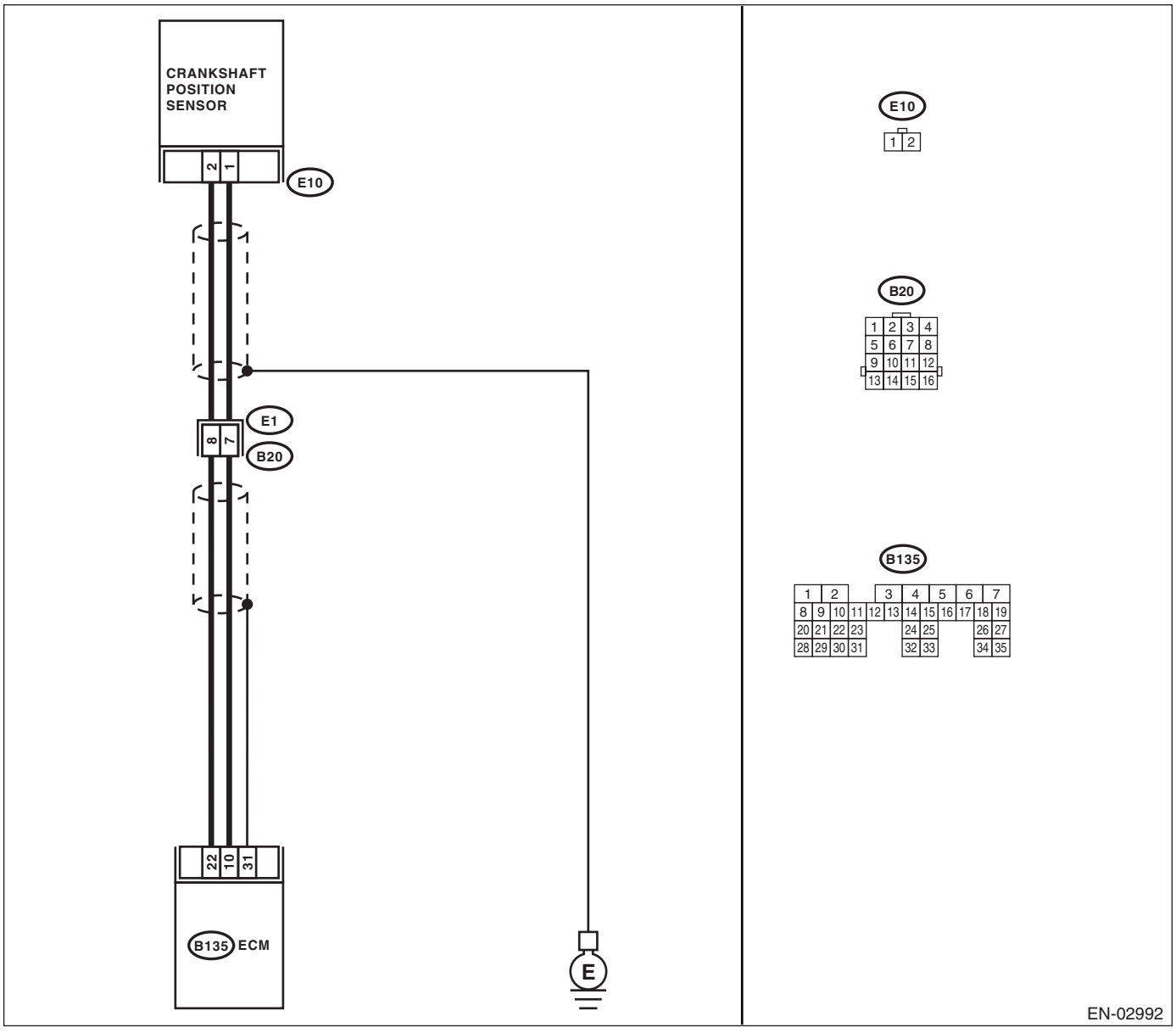

	Step	Check	Yes	No
1	**CHECK HARNESS BETWEEN CRANKSHAFT POSITION SENSOR AND ECM CONNECTOR.** 1) Turn the ignition switch to OFF. 2) Disconnect the connector from crankshaft position sensor. 3) Measure the resistance of harness between crankshaft position sensor connector and engine ground. ***Connector & terminal*** ***(E10) No. 1 — Engine ground:***	Is the resistance more than 100 kΩ?	Repair harness and connector. NOTE: In this case, repair the following: • Open circuit in harness between crankshaft position sensor and ECM connector • Poor contact in ECM connector • Poor contact in coupling connector	Go to step **2.**
2	**CHECK HARNESS BETWEEN CRANKSHAFT POSITION SENSOR AND ECM CONNECTOR.** Measure the resistance of harness between crankshaft position sensor connector and engine ground. ***Connector & terminal*** ***(E10) No. 1 — Engine ground:***	Is the resistance less than 10 Ω?	Repair ground short circuit in harness between crankshaft position sensor and ECM connector. NOTE: The harness between both connectors are shielded. Repair ground short circuit in harness together with shield.	Go to step **3.**
3	**CHECK HARNESS BETWEEN CRANKSHAFT POSITION SENSOR AND ECM CONNECTOR.** Measure the resistance of harness between crankshaft position sensor connector and engine ground. ***Connector & terminal*** ***(E10) No. 2 — Engine ground:***	Is the resistance less than 5 Ω?	Go to step **4.**	Repair harness and connector. NOTE: In this case, repair the following: • Open circuit in harness between crankshaft position sensor and ECM connector • Poor contact in ECM connector • Poor contact in coupling connector
4	**CHECK CONDITION OF CRANKSHAFT POSITION SENSOR.**	Is the crankshaft position sensor installation bolt tightened securely?	Go to step **5.**	Tighten crankshaft position sensor installation bolt securely.
5	**CHECK CRANKSHAFT POSITION SENSOR.** 1) Remove the crankshaft position sensor. 2) Measure the resistance between connector terminals of crankshaft position sensor. ***Terminals*** ***No. 1 — No. 2:***	Is the resistance 1 — 4 kΩ?	Repair poor contact in crankshaft position sensor connector.	Replace the crankshaft position sensor. <Ref. to FU(H4SO)-22, Crankshaft Position Sensor.>

AQ:DTC P0336 CRANKSHAFT POSITION SENSOR “A” CIRCUIT RANGE/PERFORMANCE

DTC DETECTING CONDITION:

- Detect as soon as malfunction occurs.
- GENERAL DESCRIPTION <Ref. to GD(H4SO)-96, DTC P0336 CRANKSHAFT POSITION SENSOR “A” CIRCUIT RANGE/PERFORMANCE, Diagnostic Trouble Code (DTC) Detecting Criteria.>

TROUBLE SYMPTOM:

- Engine stalls.
- Failure of engine to start

CAUTION:
After repair or replacement of faulty parts, conduct Clear Memory Mode <Ref. to EN(H4SO)(diag)-43, OPERATION, Clear Memory Mode.> and Inspection Mode <Ref. to EN(H4SO)(diag)-35, PROCEDURE, Inspection Mode.>.

WIRING DIAGRAM:

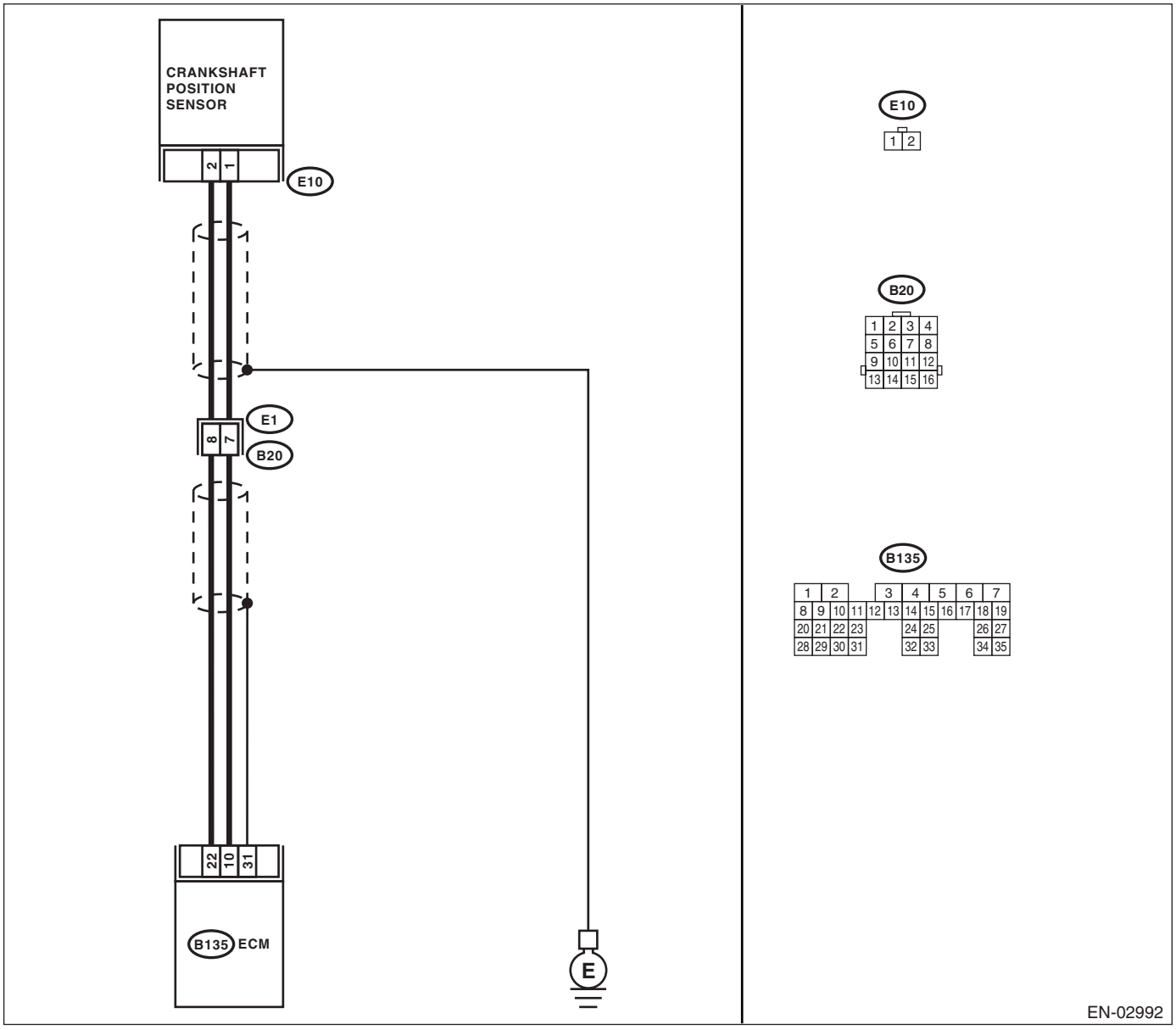

	Step	Check	Yes	No
1	**CHECK FOR ANY OTHER DTC ON DISPLAY.**	Is any other DTC displayed?	Inspect DTC using "List of Diagnostic Trouble Code (DTC)". <Ref. to EN(H4SO)(diag)-70, List of Diagnostic Trouble Code (DTC).>	Go to step **2.**
2	**CHECK CONDITION OF CRANKSHAFT POSITION SENSOR.** Turn the ignition switch to OFF.	Is the crankshaft position sensor installation bolt tightened securely?	Go to step **3.**	Tighten crankshaft position sensor installation bolt securely.
3	**CHECK CRANK SPROCKET.** Remove the timing belt cover.	Are crank sprocket teeth cracked or damaged?	Replace the crank sprocket. <Ref. to ME(H4SO)-47, Crank Sprocket.>	Go to step **4.**
4	**CHECK INSTALLATION CONDITION OF TIMING BELT.** Turn the crankshaft to align alignment mark on crank sprocket with alignment mark on cylinder block.	Is the timing belt dislocated from its proper position?	Repair installation condition of timing belt. <Ref. to ME(H4SO)-41, Timing Belt.>	Replace the crankshaft position sensor. <Ref. to FU(H4SO)-22, Crankshaft Position Sensor.>

AR:DTC P0340 CAMSHAFT POSITION SENSOR “A” CIRCUIT (BANK 1 OR SINGLE SENSOR)

DTC DETECTING CONDITION:

- Detect as soon as malfunction occurs.
- GENERAL DESCRIPTION <Ref. to GD(H4SO)-98, DTC P0340 CAMSHAFT POSITION SENSOR “A” CIRCUIT (BANK 1 OR SINGLE SENSOR), Diagnostic Trouble Code (DTC) Detecting Criteria.>

TROUBLE SYMPTOM:

- Engine stalls.
- Failure of engine to start

CAUTION:
After repair or replacement of faulty parts, conduct Clear Memory Mode <Ref. to EN(H4SO)(diag)-43, OPERATION, Clear Memory Mode.> and Inspection Mode <Ref. to EN(H4SO)(diag)-35, PROCEDURE, Inspection Mode.>.

WIRING DIAGRAM:

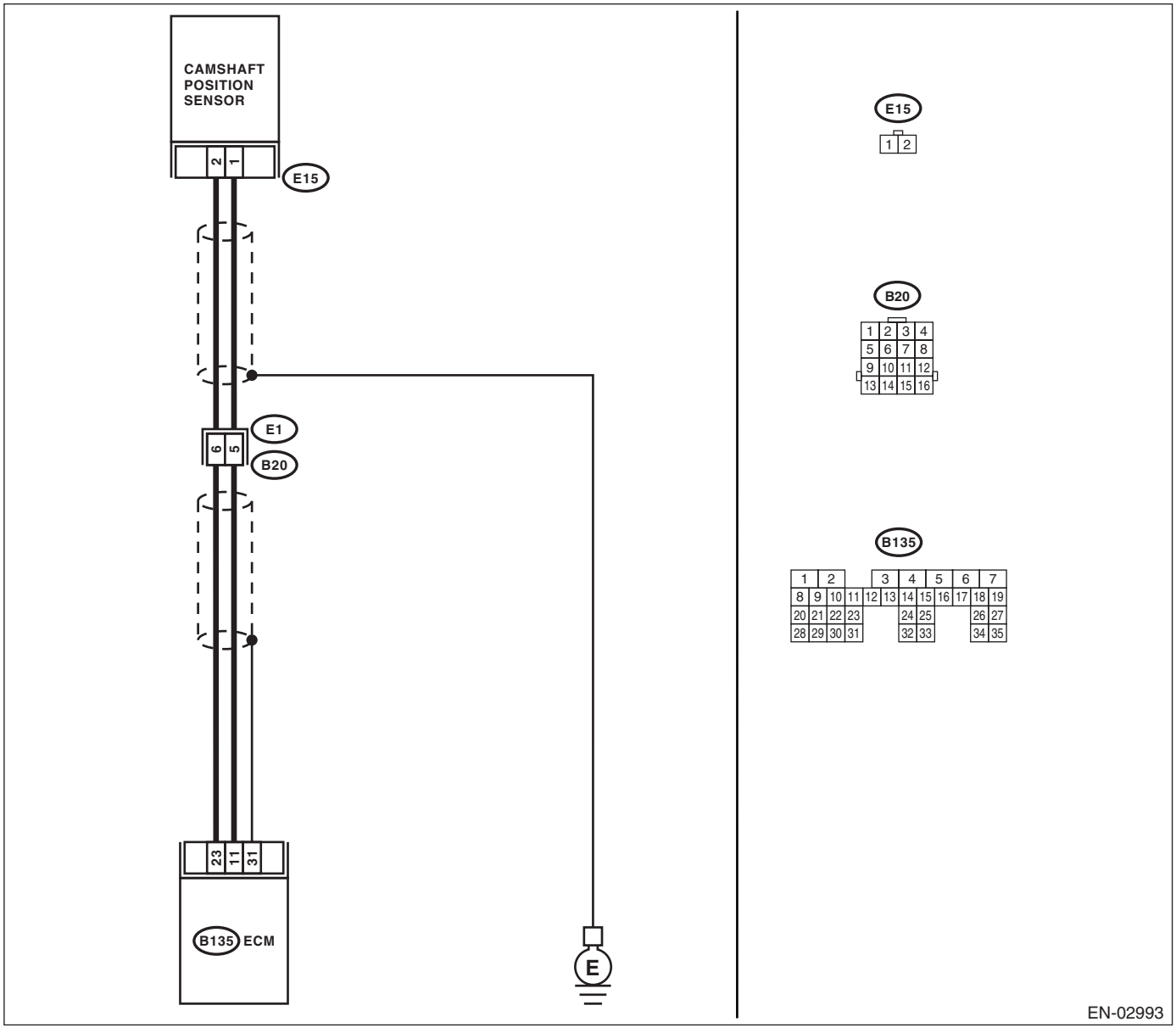

	Step	Check	Yes	No
1	**CHECK HARNESS BETWEEN CAMSHAFT POSITION SENSOR AND ECM CONNECTOR.** 1) Turn the ignition switch to OFF. 2) Disconnect the connector from camshaft position sensor. 3) Measure the resistance of harness between camshaft position sensor connector and engine ground. ***Connector & terminal*** ***(E15) No. 1 — Engine ground:***	Is the resistance more than 100 kΩ?	Repair harness and connector. NOTE: In this case, repair the following: • Open circuit in harness between camshaft position sensor and ECM connector • Poor contact in ECM connector • Poor contact in coupling connector	Go to step **2.**
2	**CHECK HARNESS BETWEEN CAMSHAFT POSITION SENSOR AND ECM CONNECTOR.** Measure the resistance of harness between camshaft position sensor connector and engine ground. ***Connector & terminal*** ***(E15) No. 1 — Engine ground:***	Is the resistance less than 10 Ω?	Repair ground short circuit in harness between camshaft position sensor and ECM connector. NOTE: The harness between both connectors are shielded. Repair ground short circuit in harness together with shield.	Go to step **3.**
3	**CHECK HARNESS BETWEEN CAMSHAFT POSITION SENSOR AND ECM CONNECTOR.** Measure the resistance of harness between camshaft position sensor connector and engine ground. ***Connector & terminal*** ***(E15) No. 2 — Engine ground:***	Is the resistance less than 5 Ω?	Go to step **4.**	Repair harness and connector. NOTE: In this case, repair the following: • Open circuit in harness between camshaft position sensor and ECM connector • Poor contact in ECM connector • Poor contact in coupling connector
4	**CHECK CONDITION OF CAMSHAFT POSITION SENSOR.**	Is the camshaft position sensor installation bolt tightened securely?	Go to step **5.**	Tighten camshaft position sensor installation bolt securely.
5	**CHECK CAMSHAFT POSITION SENSOR.** 1) Remove the camshaft position sensor. 2) Measure the resistance between connector terminals of camshaft position sensor. ***Terminals*** ***No. 1 — No. 2:***	Is the resistance 1 — 4 kΩ?	Repair poor contact in camshaft position sensor connector.	Replace the camshaft position sensor.<Ref. to FU(H4SO)-23, Camshaft Position Sensor.>

AS:DTC P0341 CAMSHAFT POSITION SENSOR “A” CIRCUIT RANGE/PERFORMANCE (BANK 1 OR SINGLE SENSOR)

DTC DETECTING CONDITION:

- Detect as soon as malfunction occurs.
- GENERAL DESCRIPTION <Ref. to GD(H4SO)-100, DTC P0341 CAMSHAFT POSITION SENSOR “A” CIRCUIT RANGE/PERFORMANCE (BANK 1 OR SINGLE SENSOR), Diagnostic Trouble Code (DTC) Detecting Criteria.>

TROUBLE SYMPTOM:

- Engine stalls.
- Failure of engine to start

CAUTION:
After repair or replacement of faulty parts, conduct Clear Memory Mode <Ref. to EN(H4SO)(diag)-43, OPERATION, Clear Memory Mode.> and Inspection Mode <Ref. to EN(H4SO)(diag)-35, PROCEDURE, Inspection Mode.>.

WIRING DIAGRAM:

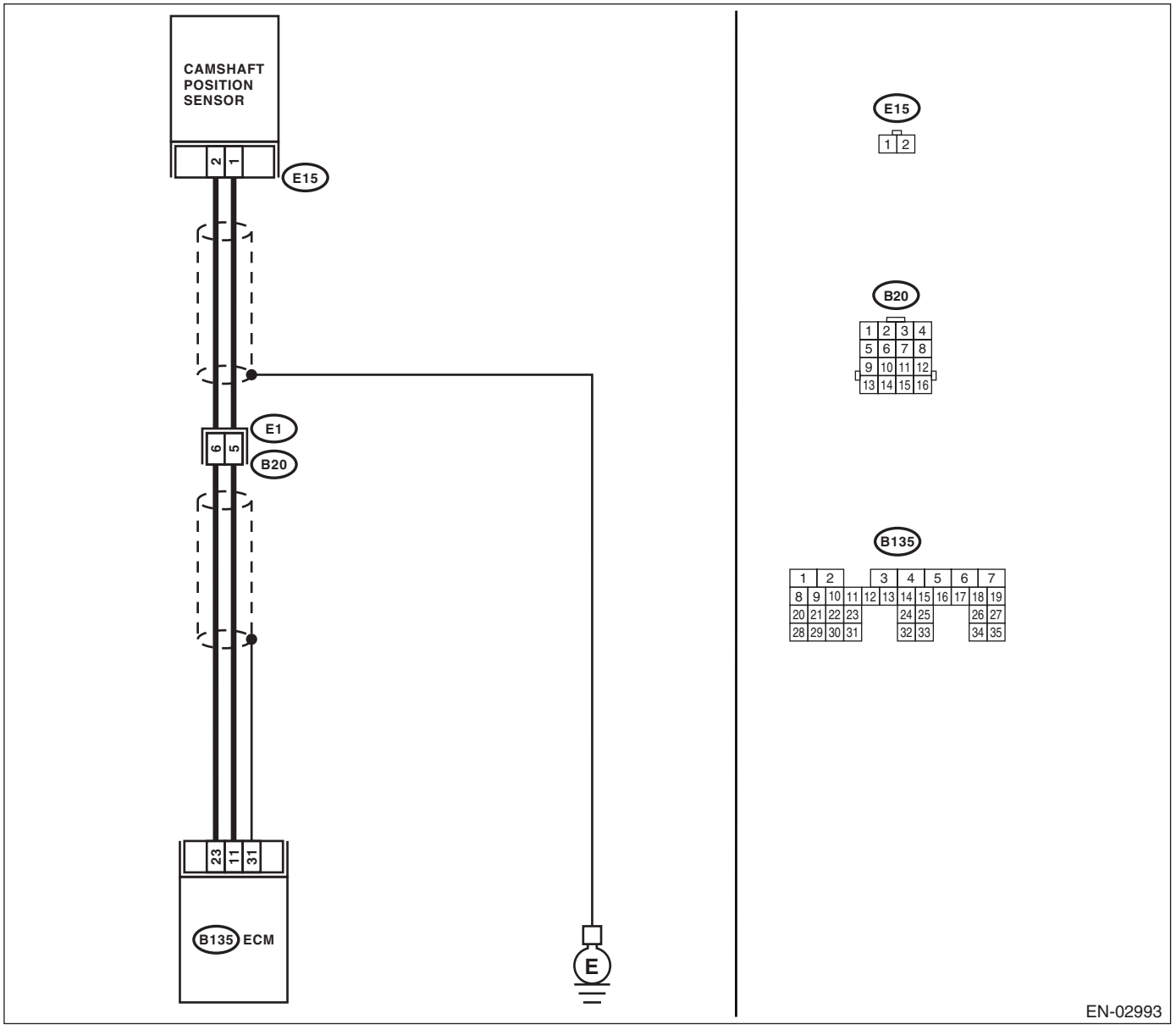

	Step	Check	Yes	No
1	**CHECK FOR ANY OTHER DTC ON DISPLAY.**	Is any other DTC displayed?	Inspect DTC using "List of Diagnostic Trouble Code (DTC)". <Ref. to EN(H4SO)(diag)-70, List of Diagnostic Trouble Code (DTC).>	Go to step **2.**
2	**CHECK HARNESS BETWEEN CAMSHAFT POSITION SENSOR AND ECM CONNECTOR.** 1) Turn the ignition switch to OFF. 2) Disconnect the connector from camshaft position sensor. 3) Measure the resistance of harness between camshaft position sensor connector and engine ground. ***Connector & terminal*** ***(E15) No. 1 — Engine ground:***	Is the resistance more than 100 kΩ?	Repair harness and connector. NOTE: In this case, repair the following: • Open circuit in harness between camshaft position sensor and ECM connector • Poor contact in ECM connector • Poor contact in coupling connector	Go to step **3.**
3	**CHECK HARNESS BETWEEN CAMSHAFT POSITION SENSOR AND ECM CONNECTOR.** Measure the resistance of harness between camshaft position sensor connector and engine ground. ***Connector & terminal*** ***(E15) No. 1 — Engine ground:***	Is the resistance less than 10 Ω?	Repair ground short circuit in harness between camshaft position sensor and ECM connector. NOTE: The harness between both connectors are shielded. Repair ground short circuit in harness together with shield.	Go to step **4.**
4	**CHECK HARNESS BETWEEN CAMSHAFT POSITION SENSOR AND ECM CONNECTOR.** Measure the resistance of harness between camshaft position sensor connector and engine ground. ***Connector & terminal*** ***(E15) No. 2 — Engine ground:***	Is the resistance less than 5 Ω?	Go to step **5.**	Repair harness and connector. NOTE: In this case, repair the following: • Open circuit in harness between camshaft position sensor and ECM connector • Poor contact in ECM connector • Poor contact in coupling connector
5	**CHECK CONDITION OF CAMSHAFT POSITION SENSOR.**	Is the camshaft position sensor installation bolt tightened securely?	Go to step **6.**	Tighten camshaft position sensor installation bolt securely.
6	**CHECK CAMSHAFT POSITION SENSOR.** 1) Remove the camshaft position sensor. 2) Measure the resistance between connector terminals of camshaft position sensor. ***Terminals*** ***No. 1 — No. 2:***	Is the resistance 1 — 4 kΩ?	Go to step **7.**	Replace the camshaft position sensor.<Ref. to FU(H4SO)-23, Camshaft Position Sensor.>

	Step	Check	Yes	No
7	**CHECK CONDITION OF CAMSHAFT POSITION SENSOR.** Turn the ignition switch to OFF.	Is the camshaft position sensor installation bolt tightened securely?	Go to step **8.**	Tighten camshaft position sensor installation bolt securely.
8	**CHECK CAM SPROCKET.** Remove the timing belt cover. <Ref. to ME(H4SO)-40, Timing Belt Cover.>	Are cam sprocket teeth cracked or damaged?	Replace the cam sprocket. <Ref. to ME(H4SO)-46, Cam Sprocket.>	Go to step **9.**
9	**CHECK INSTALLATION CONDITION OF TIMING BELT.** Turn the camshaft to align alignment mark on cam sprocket with alignment mark on timing belt cover LH.	Is the timing belt dislocated from its proper position?	Repair installation condition of timing belt. <Ref. to ME(H4SO)-41, Timing Belt.>	Replace the camshaft position sensor.<Ref. to FU(H4SO)-23, Camshaft Position Sensor.>

AT:DTC P0400 EXHAUST GAS RECIRCULATION FLOW

DTC DETECTING CONDITION:

- Two consecutive driving cycles with fault
- GENERAL DESCRIPTION <Ref. to GD(H4SO)-102, DTC P0400 EXHAUST GAS RECIRCULATION FLOW, Diagnostic Trouble Code (DTC) Detecting Criteria.>

TROUBLE SYMPTOM:

- Poor driving performance at low engine speed
- Faulty idling
- Poor driving performance

CAUTION:

After repair or replacement of faulty parts, conduct Clear Memory Mode <Ref. to EN(H4SO)(diag)-43, OPERATION, Clear Memory Mode.> and Inspection Mode <Ref. to EN(H4SO)(diag)-35, PROCEDURE, Inspection Mode.>.

WIRING DIAGRAM:

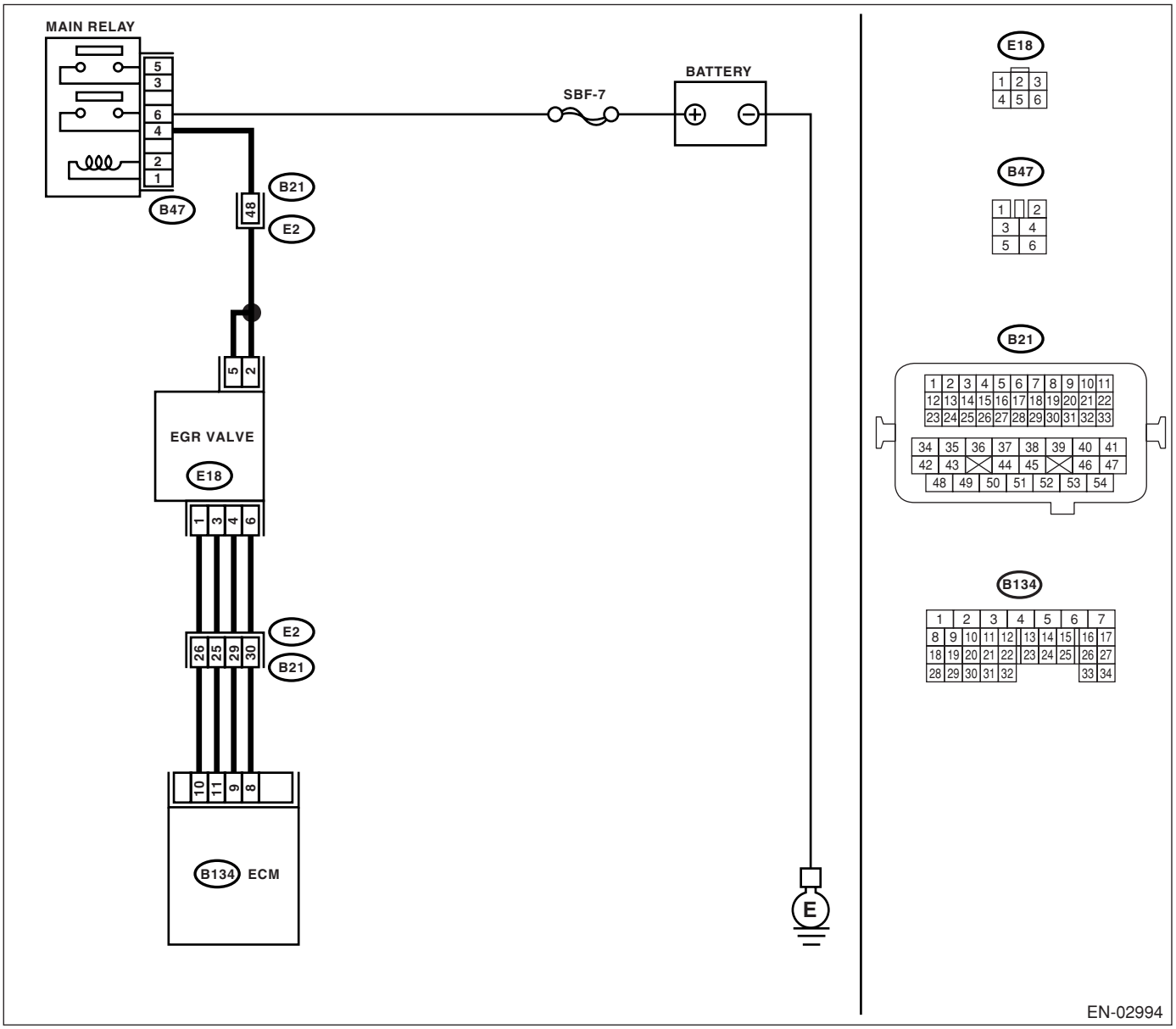

	Step	Check	Yes	No
1	**CHECK FOR ANY OTHER DTC ON DISPLAY.**	Is any other DTC displayed?	Inspect DTC using "List of Diagnostic Trouble Code (DTC)". <Ref. to EN(H4SO)(diag)-70, List of Diagnostic Trouble Code (DTC).>	Go to step **2.**
2	**CHECK CURRENT DATA.** 1) Start the engine. 2) Read data of intake manifold absolute pressure signal using Subaru Select Monitor or general scan tool. NOTE: • Subaru Select Monitor For detailed operation procedures, refer to "READ CURRENT DATA FOR ENGINE".<Ref. to EN(H4SO)(diag)-27, Subaru Select Monitor.> • General scan tool For detailed operation procedures, refer to the general scan tool instruction manual.	Is the measured value more than 53.3 kPa (400 mmHg, 15.75 inHg)?	Make sure that EGR valve, manifold pressure sensor and throttle body are securely installed.	Go to step **3.**
3	**CHECK POWER SUPPLY TO EGR SOLENOID VALVE.** 1) Disconnect connector from EGR solenoid valve. 2) Turn ignition switch ON. 3) Measure voltage between EGR solenoid valve and engine ground. ***Connector & terminal*** ***(E18) No. 2 — Engine ground:*** ***(E18) No. 5 — Engine ground:***	Is the measured value more than 10 V?	Go to step **4.**	Repair the open circuit in harness between main relay and EGR solenoid valve connector.
4	**CHECK EGR SOLENOID VALVE.** Measure resistance between EGR solenoid valve terminals. NOTE: Measure resistance between EGR solenoid valve terminals. ***Connector & terminal*** ***No. 1 — No. 2:*** ***No. 3 — No. 2:*** ***No. 4 — No. 5:*** ***No. 6 — No. 5:***	Is the measured value within 20 to 30 Ω?	Go to step **5.**	Replace EGR solenoid valve. <Ref. to FU(H4SO)-28, EGR Valve.>
5	**OUTPUT SIGNAL FROM ECM** 1) Turn ignition switch OFF. 2) Connect connectors to ECM and EGR solenoid valve. 3) Turn ignition switch ON. 4) Measure voltage between ECM and chassis ground. ***Connector & terminal*** ***(B134) No. 9 (+) — Chassis ground (−):*** ***(B134) No. 10 (+) — Chassis ground (−):*** ***(B134) No. 11 (+) — Chassis ground (−):*** ***(B134) No. 8 (+) — Chassis ground (−):***	Is the measured value within 0 to 10 V?	Repair poor contact in ECM connector.	Go to step **6.**

	Step	Check	Yes	No
6	**CHECK HARNESS BETWEEN EGR SOLENOID VALVE AND ECM CONNECTOR.** 1) Turn ignition switch OFF. 2) Disconnect connector from EGR solenoid valve and ECM. 3) Measure resistance of harness between EGR solenoid valve and ECM connector. ***Connector & terminal*** ***(B134) No. 9 (+) — (E18) No. 4:*** ***(B134) No. 10 (+) — (E18) No. 1:*** ***(B134) No. 11 (+) — (E18) No. 3:*** ***(B134) No. 8 (+) — (E18) No. 6:***	Is the measured value less than 1 Ω?	Go to step **7.**	Repair open circuit in harness between ECM and EGR solenoid valve connector. <Ref. to FU(H4SO)-28, EGR Valve.>
7	**CHECK HARNESS BETWEEN EGR SOLENOID VALVE AND ECM CONNECTOR.** Measure resistance of harness between EGR solenoid valve and chassis ground. ***Connector & terminal*** ***(B134) No. 9 — Chassis ground:*** ***(B134) No. 10 — Chassis ground:*** ***(B134) No. 11 — Chassis ground:*** ***(B134) No. 8 — Chassis ground:***	Is the measured value more than 1 MΩ?	Go to step **8.**	Repair short circuit in harness between main relay and EGR solenoid valve connector.
8	**CHECK POOR CONTACT.** Check poor contact in ECM and EGR solenoid valve connector.	Is there poor contact in ECM and EGR solenoid valve connector?	Repair poor contact in ECM and EGR solenoid valve connector.	Even if MIL lights up, the circuit has returned to a normal condition at this time.

AU:DTC P0420 CATALYST SYSTEM EFFICIENCY BELOW THRESHOLD (BANK 1)

DTC DETECTING CONDITION:

- Two consecutive driving cycles with fault
- GENERAL DESCRIPTION <Ref. to GD(H4SO)-106, DTC P0420 CATALYST SYSTEM EFFICIENCY BELOW THRESHOLD (BANK 1), Diagnostic Trouble Code (DTC) Detecting Criteria.>

TROUBLE SYMPTOM:

- Engine stalls.
- Idle mixture is out of specifications.

CAUTION:
After repair or replacement of faulty parts, conduct Clear Memory Mode <Ref. to EN(H4SO)(diag)-43, OPERATION, Clear Memory Mode.> and Inspection Mode <Ref. to EN(H4SO)(diag)-35, PROCEDURE, Inspection Mode.>.

WIRING DIAGRAM:

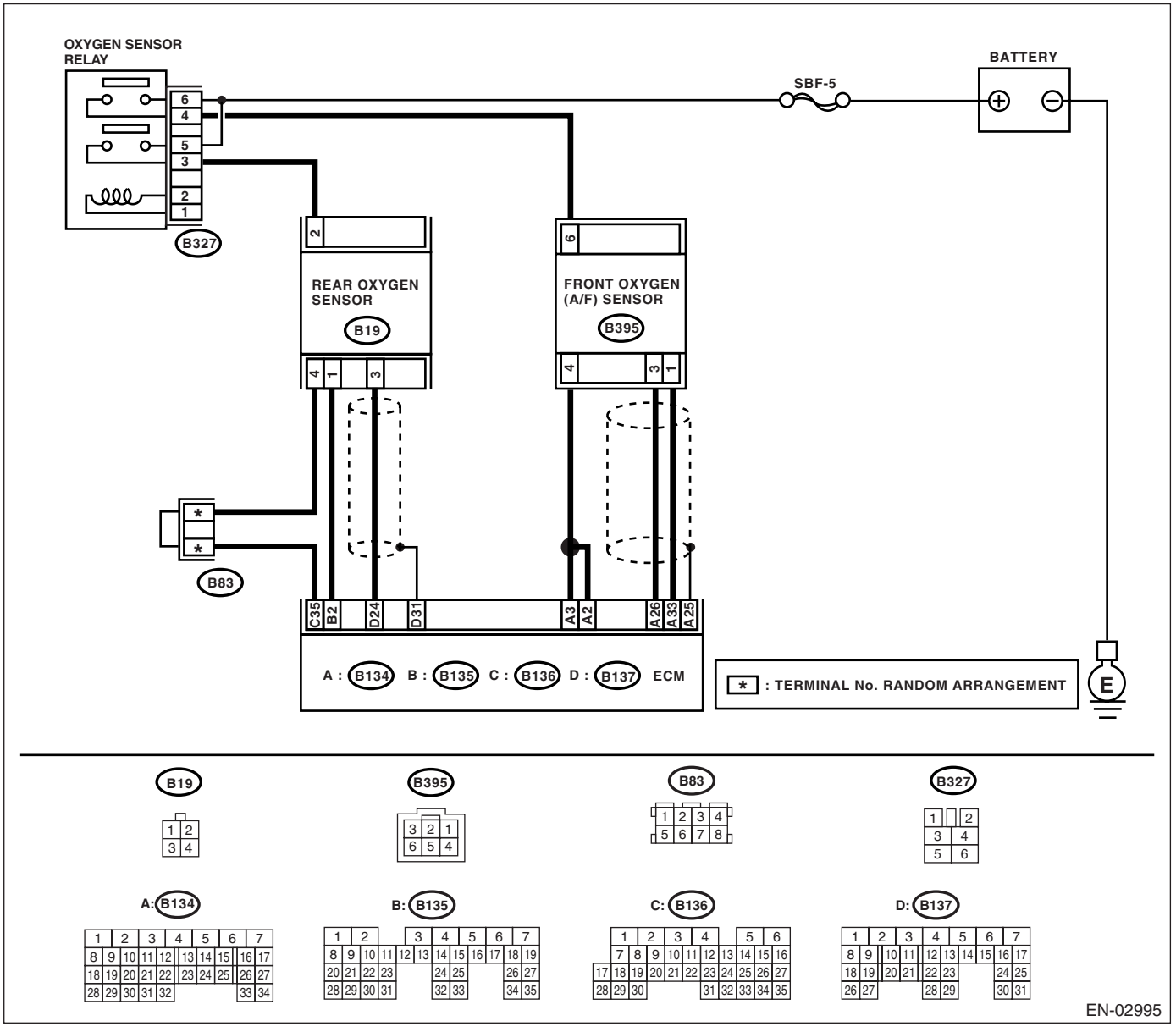

	Step	Check	Yes	No
1	**CHECK ANY OTHER DTC ON DISPLAY.**	Is any other DTC displayed?	Check the appropriate DTC using the "List of Diagnostic Trouble Code (DTC)". <Ref. to EN(H4SO)(diag)-70, List of Diagnostic Trouble Code (DTC).> NOTE: In this case, it is not necessary to inspect DTC P0420.	Go to step **2.**
2	**CHECK EXHAUST SYSTEM.** Check for gas leaks or air suction caused by loose or dislocated nuts and bolts, and open hole at exhaust pipes. NOTE: Check the following positions. • Between cylinder head and front exhaust pipe • Between front exhaust pipe and front catalytic converter • Between front catalytic converter and rear catalytic converter • Loose part and improper installation of front oxygen (A/F) sensor or rear oxygen sensor	Is there any fault in exhaust system?	Repair or replace the exhaust system. <Ref. to EX(H4SO)-2, General Description.>	Go to step **3.**
3	**CHECK WAVEFORM DATA ON SUBARU SELECT MONITOR (WHILE DRIVING).** 1) Drive the vehicle at a constant speed of 80 — 112 km/h (50 — 70 MPH). 2) Keep the condition of step 1) for 5 minutes, then read the waveform data in a driving condition using Subaru Select Monitor. 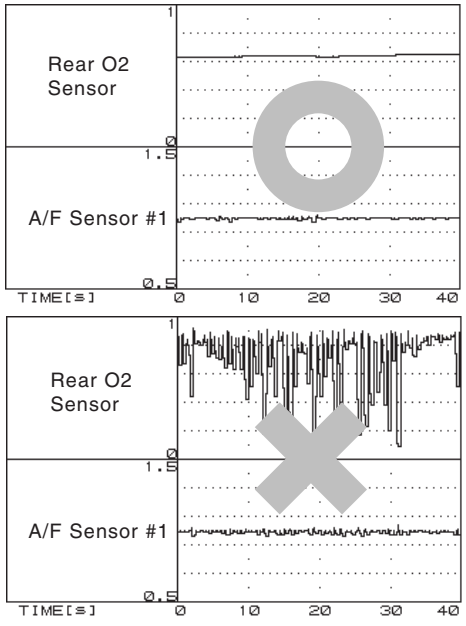	Is normal waveform pattern displayed?	Contact your SOA Service Center. NOTE: The probable cause is considered as the deterioration of multiple parts.	Go to step **4.**

	Step	Check	Yes	No
4	**CHECK WAVEFORM DATA ON SUBARU SELECT MONITOR (WHILE IDLING).** 1) Idle the engine. 2) Under the condition of step 1), read the waveform data using Subaru Select Monitor. 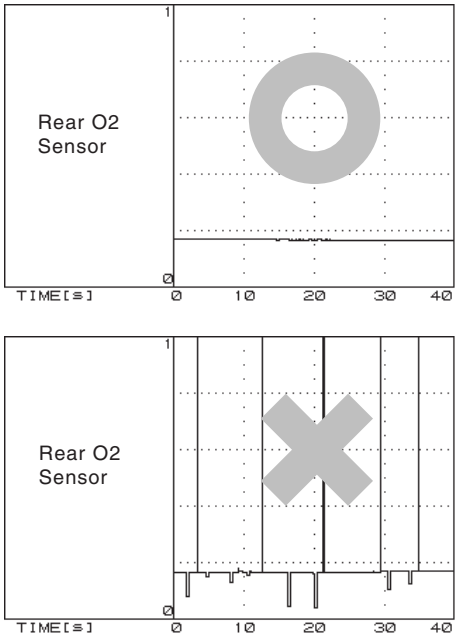 EN-04681	Is normal waveform pattern displayed?	Go to step **10.**	Go to step **5.**
5	**CHECK REAR OXYGEN SENSOR VOLTAGE.** 1) Warm-up the engine until engine coolant temperature is above 70°C (158°F), and keep the engine speed at 3,000 rpm. (Max. 2 minutes) 2) Read the voltage of rear oxygen sensor using Subaru Select Monitor. NOTE: • For MT model, depress the clutch pedal. • Subaru Select Monitor For detailed operation procedure, refer to "READ CURRENT DATA FOR ENGINE". <Ref. to EN(H4SO)(diag)-27, Subaru Select Monitor.>	Is the voltage more than 490 mV?	Go to step **9.**	Go to step **6.**
6	**CHECK REAR OXYGEN SENSOR CONNECTOR AND COUPLING CONNECTOR.**	Does water enter the connector?	Dry the water thoroughly.	Go to step **7.**
7	**CHECK HARNESS BETWEEN ECM AND REAR OXYGEN SENSOR CONNECTOR.** 1) Turn the ignition switch to OFF. 2) Disconnect the connector from ECM and rear oxygen sensor. 3) Measure the resistance of harness between ECM and rear oxygen sensor connector. ***Connector & terminal*** ***(B137) No. 24 — (B19) No. 3:*** ***(B136) No. 35 — (B19) No. 4:***	Is the resistance more than 3 Ω?	Repair the open circuit of harness between ECM and rear oxygen sensor connector.	Go to step **8.**

	Step	Check	Yes	No
8	**CHECK HARNESS BETWEEN ECM AND REAR OXYGEN SENSOR CONNECTOR.** 1) Turn the ignition switch to ON. 2) Measure the voltage between rear oxygen sensor connector and chassis ground. ***Connector & terminal*** ***(B19) No. 3 (+) — Chassis ground (−):***	Is the voltage 0.2 — 0.5 V?	Go to step **11.**	Repair the harness and connector. NOTE: Repair the following. • Open circuit in harness between rear oxygen sensor and ECM connector • Poor contact in rear oxygen sensor and ECM connector • Poor contact in ECM connector
9	**CHECK REAR OXYGEN SENSOR VOLTAGE.** 1) Warm-up the engine until engine coolant temperature is above 70°C (158°F), and rapidly reduce the engine speed from 3,000 rpm. 2) Read the voltage of rear oxygen sensor using Subaru Select Monitor. NOTE: • For MT model, depress the clutch pedal. • Subaru Select Monitor For detailed operation procedure, refer to "READ CURRENT DATA FOR ENGINE". <Ref. to EN(H4SO)(diag)-27, Subaru Select Monitor.>	Is the voltage 250 mV or less?	Contact your SOA Service Center. NOTE: The probable cause is considered as the deterioration of multiple parts.	Go to step **6.**
10	**CHECK CATALYTIC CONVERTER.**	Is the catalytic converter damaged?	Replace the catalytic converter. <Ref. to EC(H4SO)-3, Front Catalytic Converter.>	Contact your SOA Service Center. NOTE: The probable cause is considered as the deterioration of multiple parts.
11	**CHECK REAR OXYGEN SENSOR SHIELD.** 1) Turn the ignition switch to OFF. 2) Bare the harness sensor shield on the body side of rear oxygen sensor connector. 3) Measure the resistance between sensor shield and chassis ground.	Is resistance less than 1 Ω?	Replace the rear oxygen sensor. <Ref. to FU(H4SO)-34, Rear Oxygen Sensor.>	Repair the open circuit of rear oxygen sensor harness.

AV:DTC P0442 EVAPORATIVE EMISSION CONTROL SYSTEM LEAK DETECTED (SMALL LEAK)

DTC DETECTING CONDITION:

- Two consecutive driving cycles with fault
- GENERAL DESCRIPTION <Ref. to GD(H4SO)-109, DTC P0442 EVAPORATIVE EMISSION CONTROL SYSTEM LEAK DETECTED (SMALL LEAK), Diagnostic Trouble Code (DTC) Detecting Criteria.>

TROUBLE SYMPTOM:

- Fuel odor
- There is a hole of more than 1.0 mm (0.04 in) dia. in evaporation system or fuel tank.

CAUTION:
After repair or replacement of faulty parts, conduct CLEAR MEMORY MODE <Ref. to EN(H4SO)(diag)-43, OPERATION, Clear Memory Mode.> and INSPECTION MODE <Ref. to EN(H4SO)(diag)-35, PROCEDURE, Inspection Mode.>.

WIRING DIAGRAM:

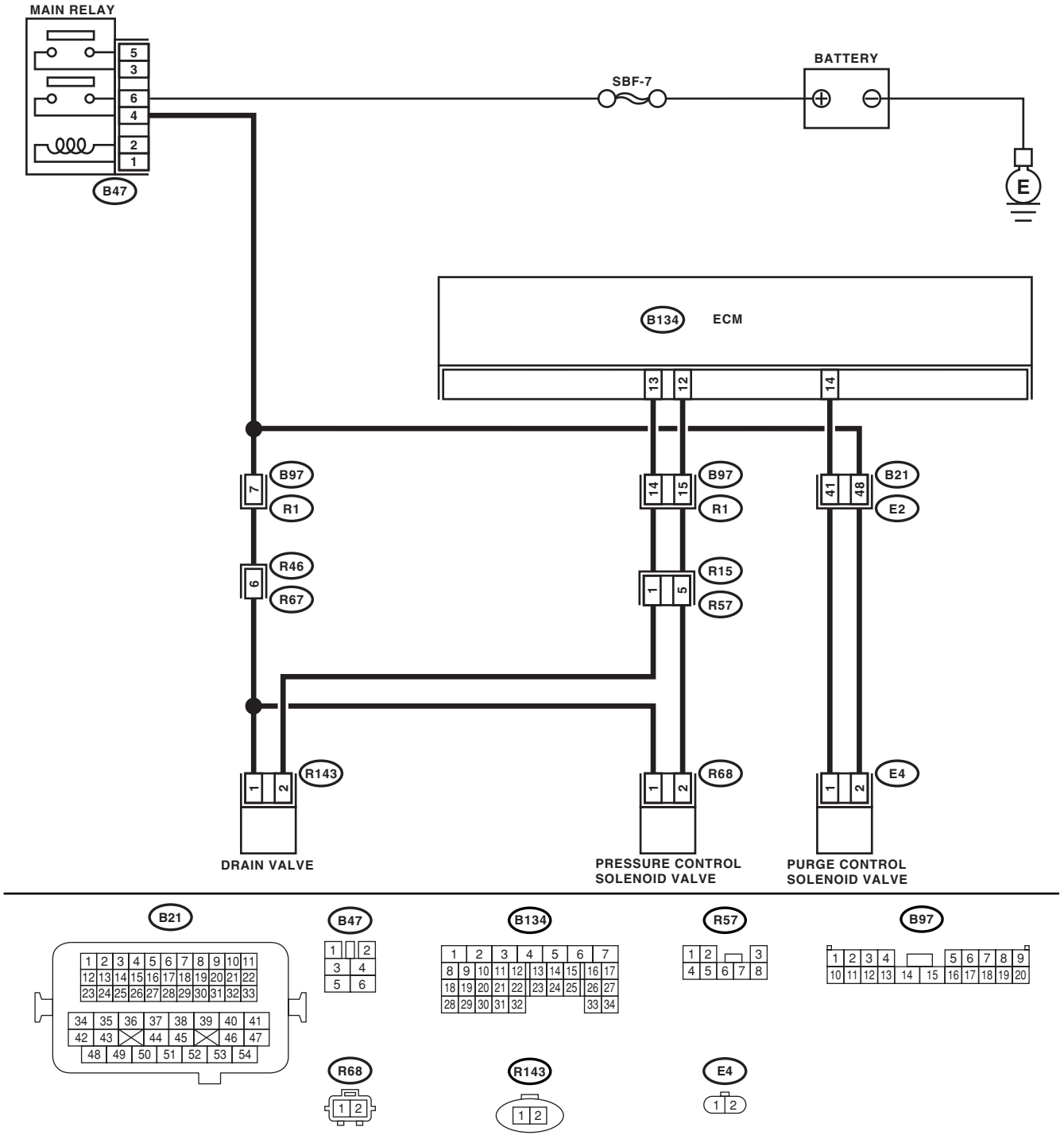

EN-02996

	Step	Check	Yes	No
1	**CHECK FOR ANY OTHER DTC ON DISPLAY.**	Is any other DTC displayed?	Inspect the relevant DTC using "List of Diagnostic Trouble Code (DTC)". <Ref. to EN(H4SO)(diag)-70, List of Diagnostic Trouble Code (DTC).>	Go to step **2.**
2	**CHECK FUEL FILLER CAP.** 1) Turn ignition switch to OFF. 2) Check the fuel filler cap. NOTE: The DTC is stored in memory if fuel filler cap is or was loose or if the cap chain was caught while tightening.	Is the fuel filler cap tightened securely?	Go to step **3.**	Tighten fuel filler cap securely.
3	**CHECK FUEL FILLER CAP.**	Is the fuel filler cap genuine?	Go to step **4.**	Replace with a genuine fuel filler cap.
4	**CHECK FUEL FILLER PIPE PACKING.**	Is there any damage to the seal between fuel filler cap and fuel filler pipe?	Repair or replace the fuel filler cap and fuel filler pipe. <Ref. to FU(H4SO)-46, Fuel Filler Pipe.>	Go to step **5.**
5	**CHECK DRAIN VALVE.** 1) Connect the test mode connector. 2) Turn ignition switch to ON. 3) Operate the drain valve. NOTE: Drain valve operation can also be executed using Subaru Select Monitor. For the procedure, refer to "Compulsory Valve Operation Check Mode". <Ref. to EN(H4SO)(diag)-44, Compulsory Valve Operation Check Mode.>	Does the drain valve operate?	Go to step **6.**	Replace the drain valve. <Ref. to EC(H4SO)-16, Drain Valve.>
6	**CHECK PURGE CONTROL SOLENOID VALVE.** Operate the purge control solenoid valve. NOTE: Purge control solenoid valve operation can also be executed using Subaru Select Monitor. For the procedure, refer to "Compulsory Valve Operation Check Mode". <Ref. to EN(H4SO)(diag)-44, Compulsory Valve Operation Check Mode.>	Does the purge control solenoid valve operate?	Go to step **7.**	Replace the purge control solenoid valve.<Ref. to EC(H4SO)-6, Purge Control Solenoid Valve.>
7	**CHECK PRESSURE CONTROL SOLENOID VALVE.** Operate the pressure control solenoid valve. NOTE: Pressure control solenoid valve operation can also be executed using Subaru Select Monitor. For the procedure, refer to "Compulsory Valve Operation Check Mode". <Ref. to EN(H4SO)(diag)-44, Compulsory Valve Operation Check Mode.>	Does the pressure control solenoid valve operate?	Go to step **8.**	Replace the pressure control solenoid valve. <Ref. to EC(H4SO)-13, Pressure Control Solenoid Valve.>

	Step	Check	Yes	No
8	**CHECK EVAPORATIVE EMISSION CONTROL SYSTEM LINE.** Turn ignition switch to OFF.	Is there a hole of more than 1.0 mm (0.04 in) dia. on evaporation line?	Repair or replace the evaporation line.<Ref. to FU(H4SO)-55, Fuel Delivery, Return and Evaporation Lines.>	Go to step **9.**
9	**CHECK CANISTER.**	Is the canister damaged or is there a hole of more than 1.0 mm (0.04 in) dia. in it?	Repair or replace the canister.<Ref. to EC(H4SO)-5, Canister.>	Go to step **10.**
10	**CHECK FUEL TANK.** Remove the fuel tank. <Ref. to FU(H4SO)-40, Fuel Tank.>	Is the fuel tank damaged or is there a hole of more than 1.0 mm (0.04 in) dia. in it?	Repair or replace the fuel tank.<Ref. to FU(H4SO)-40, Fuel Tank.>	Go to step **11.**
11	**CHECK ANY OTHER MECHANICAL TROUBLE IN EVAPORATIVE EMISSION CONTROL SYSTEM.**	Are there holes of more than 1.0 mm (0.04 in) dia., cracks, clogging, disconnections or bend of hoses or pipes in evaporative emission control system?	Repair or replace the hoses or pipes.	Contact SOA Service Center.

AW:DTC P0447 EVAPORATIVE EMISSION CONTROL SYSTEM VENT CONTROL CIRCUIT OPEN

DTC DETECTING CONDITION:

- Two consecutive driving cycles with fault
- GENERAL DESCRIPTION <Ref. to GD(H4SO)-128, DTC P0447 EVAPORATIVE EMISSION CONTROL SYSTEM VENT CONTROL CIRCUIT OPEN, Diagnostic Trouble Code (DTC) Detecting Criteria.>

CAUTION:

After repair or replacement of faulty parts, conduct CLEAR MEMORY MODE <Ref. to EN(H4SO)(diag)-43, OPERATION, Clear Memory Mode.> and INSPECTION MODE <Ref. to EN(H4SO)(diag)-35, PROCEDURE, Inspection Mode.>.

WIRING DIAGRAM:

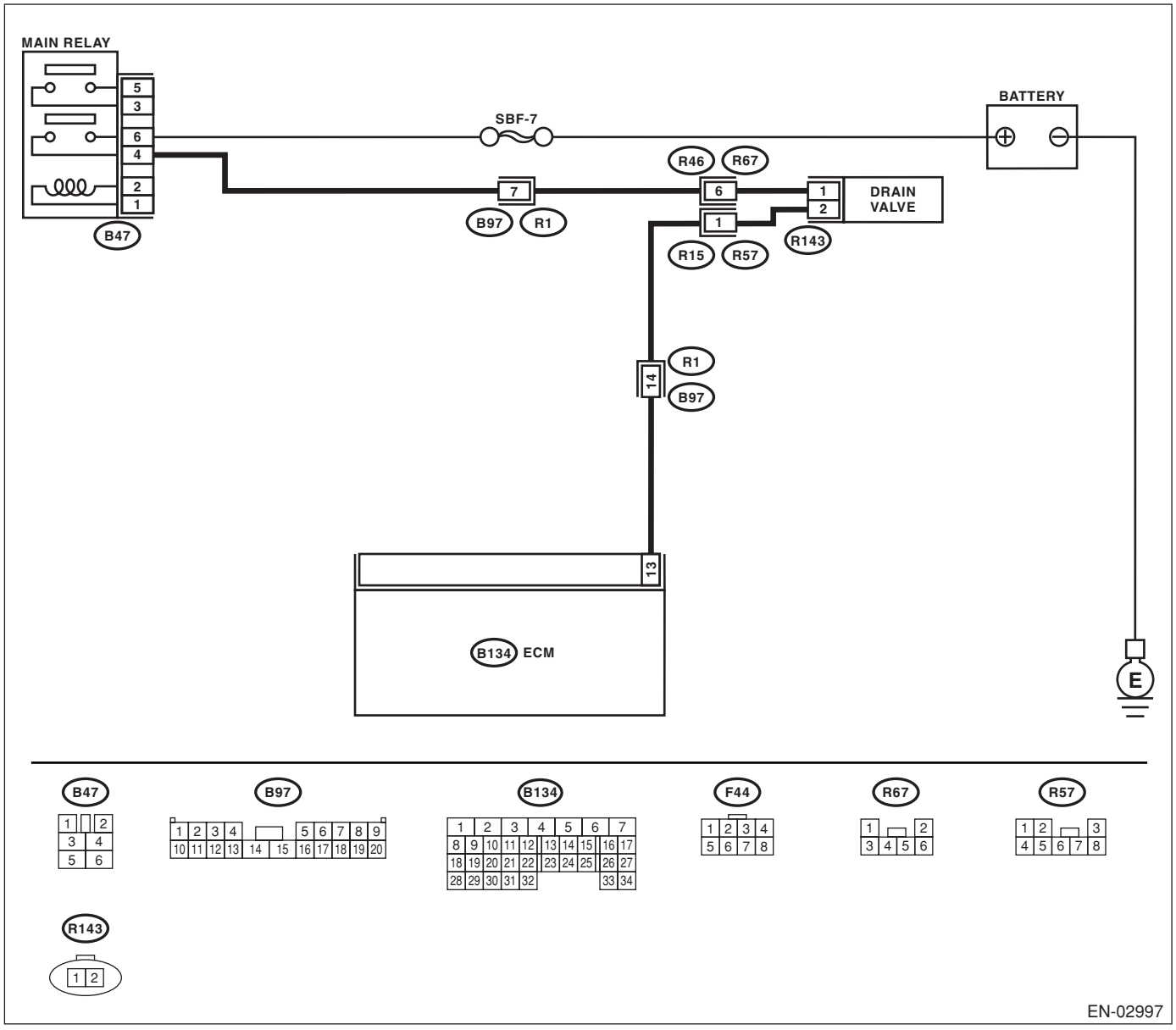

EN-02997

	Step	Check	Yes	No
1	**CHECK OUTPUT SIGNAL FROM ECM.** 1) Turn ignition switch to ON. 2) Measure the voltage between ECM and chassis ground. ***Connector & terminal*** ***(B134) No. 13 (+) — Chassis ground (−):***	Is the voltage more than 10 V?	Go to step **2.**	Go to step **3.**
2	**CHECK FOR POOR CONTACT.** Check for poor contact in ECM connector.	Is there poor contact in ECM connector?	Repair poor contact in ECM connector.	The malfunction indicator light may light up, however, the circuit is returned to the normal status at the moment. (However, the possibility of poor contact still remains.) NOTE: In this case, repair the following: • Poor contact in drain valve connector • Poor contact in ECM connector • Poor contact in coupling connector
3	**CHECK HARNESS BETWEEN DRAIN VALVE AND ECM CONNECTOR.** 1) Turn ignition switch to OFF. 2) Disconnect the connectors from drain valve and ECM. 3) Measure the resistance of harness between drain valve connector and chassis ground. ***Connector & terminal*** ***(R143) No. 2 — Chassis ground:***	Is the resistance more than 1 MΩ?	Go to step **4.**	Repair short circuit to ground in harness between ECM and drain valve connector.
4	**CHECK HARNESS BETWEEN DRAIN VALVE AND ECM CONNECTOR.** Measure the resistance of harness between ECM and drain valve connector. ***Connector & terminal*** ***(B134) No. 13 — (R143) No. 2:***	Is the resistance less than 1 Ω?	Go to step **5.**	Repair harness and connector. NOTE: In this case, repair the following: • Open circuit in harness between ECM and drain valve connector • Poor contact in coupling connector
5	**CHECK DRAIN VALVE.** Measure the resistance between drain valve terminals. ***Terminals*** ***No. 1 — No. 2:***	Is the resistance 10 — 100 Ω?	Go to step **6.**	Replace the drain valve. <Ref. to EC(H4SO)-16, Drain Valve.>

	Step	Check	Yes	No
6	**CHECK POWER SUPPLY TO DRAIN VALVE.** 1) Turn ignition switch to ON. 2) Measure the voltage between drain valve and chassis ground. ***Connector & terminal*** ***(R143) No. 1 (+) — Chassis ground (−):***	Is the voltage more than 10 V?	Go to step **7.**	Repair harness and connector. NOTE: In this case, repair the following: • Open circuit in harness between main relay and drain valve • Poor contact in coupling connector • Poor contact in main relay connector
7	**CHECK FOR POOR CONTACT.** Check for poor contact in drain valve connector.	Is there poor contact in drain valve connector?	Repair poor contact in drain valve connector.	Contact SOA Service Center.

AX:DTC P0448 EVAPORATIVE EMISSION CONTROL SYSTEM VENT CONTROL CIRCUIT SHORTED

DTC DETECTING CONDITION:

- Two consecutive driving cycles with fault
- GENERAL DESCRIPTION <Ref. to GD(H4SO)-130, DTC P0448 EVAPORATIVE EMISSION CONTROL SYSTEM VENT CONTROL CIRCUIT SHORTED, Diagnostic Trouble Code (DTC) Detecting Criteria.>

CAUTION:

After repair or replacement of faulty parts, conduct CLEAR MEMORY MODE <Ref. to EN(H4SO)(diag)-43, OPERATION, Clear Memory Mode.> and INSPECTION MODE <Ref. to EN(H4SO)(diag)-35, PROCEDURE, Inspection Mode.>.

WIRING DIAGRAM:

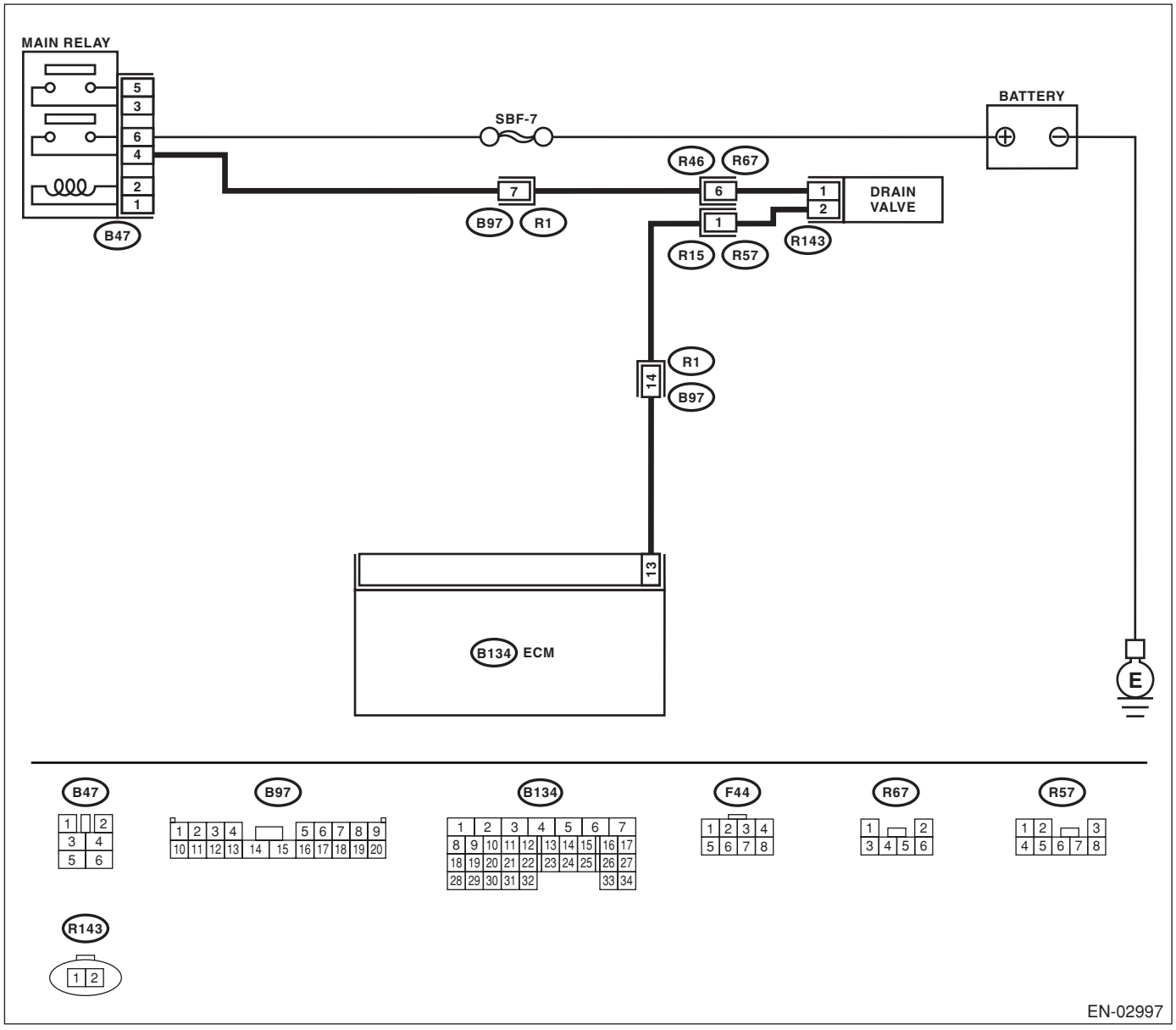

	Step	Check	Yes	No
1	**CHECK INPUT SIGNAL FOR ECM.** 1) Turn ignition switch to OFF. 2) Connect the test mode connector at the lower portion of instrument panel (on the driver's side). 3) Turn ignition switch to ON. 4) While operating the drain valve, measure voltage between ECM and chassis ground. NOTE: Drain valve operation can be executed using Subaru Select Monitor. For the procedure, refer to "Compulsory Valve Operation Check Mode". <Ref. to EN(H4SO)(diag)-44, Compulsory Valve Operation Check Mode.> ***Connector & terminal*** ***(B134) No. 13 (+) — Chassis ground (–):***	Is the voltage 0 — 10 V?	Go to step **2.**	The malfunction indicator light may light up, however, the circuit is returned to the normal status at the moment. In this case, repair poor contact in ECM connector.
2	**CHECK INPUT SIGNAL FOR ECM.** 1) Turn ignition switch to ON. 2) Measure the voltage between ECM and chassis ground. ***Connector & terminal*** ***(B134) No. 13 (+) — Chassis ground (–):***	Is the voltage more than 10 V?	Go to step **4.**	Go to step **3.**
3	**CHECK FOR POOR CONTACT.** Check for poor contact in ECM connector.	Is there poor contact in ECM connector?	Repair poor contact in ECM connector.	Replace the ECM. <Ref. to FU(H4SO)-35, Engine Control Module (ECM).>
4	**CHECK HARNESS BETWEEN DRAIN VALVE AND ECM CONNECTOR.** 1) Turn ignition switch to OFF. 2) Disconnect the connector from drain valve. 3) Turn ignition switch to ON. 4) Measure the voltage between ECM and chassis ground. ***Connector & terminal*** ***(B134) No. 13 (+) — Chassis ground (–):***	Is the voltage more than 10 V?	Repair short circuit to battery in harness between ECM and drain valve connector. After repair, replace the ECM. <Ref. to FU(H4SO)-35, Engine Control Module (ECM).>	Go to step **5.**
5	**CHECK DRAIN VALVE.** 1) Turn ignition switch to OFF. 2) Measure the resistance between drain valve terminals. ***Terminals*** ***No. 1 — No. 2:***	Is the resistance less than 1 Ω?	Replace the drain valve <Ref. to EC(H4SO)-16, Drain Valve.> and ECM <Ref. to FU(H4SO)-35, Engine Control Module (ECM).>.	Go to step **6.**
6	**CHECK FOR POOR CONTACT.** Check for poor contact in ECM connector.	Is there poor contact in ECM connector?	Repair poor contact in ECM connector.	Replace the ECM. <Ref. to FU(H4SO)-35, Engine Control Module (ECM).>

AY:DTC P0451 EVAPORATIVE EMISSION CONTROL SYSTEM PRESSURE SENSOR

DTC DETECTING CONDITION:

- Two consecutive driving cycles with fault
- GENERAL DESCRIPTION <Ref. to GD(H4SO)-132, DTC P0451 EVAPORATIVE EMISSION CONTROL SYSTEM PRESSURE SENSOR, Diagnostic Trouble Code (DTC) Detecting Criteria.>

CAUTION:

After repair or replacement of faulty parts, conduct CLEAR MEMORY MODE <Ref. to EN(H4SO)(diag)-43, OPERATION, Clear Memory Mode.> and INSPECTION MODE <Ref. to EN(H4SO)(diag)-35, PROCEDURE, Inspection Mode.>.

WIRING DIAGRAM:

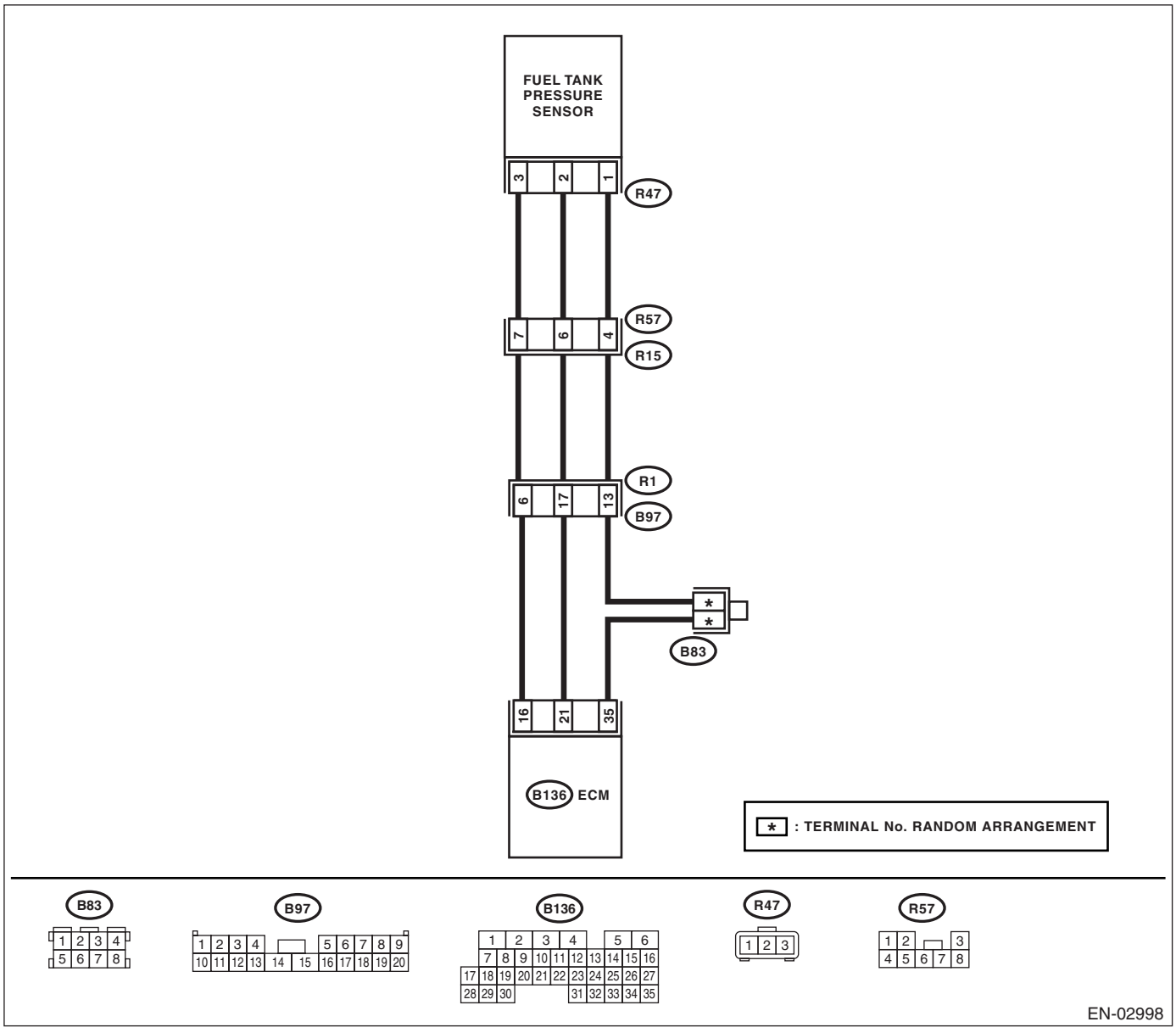

	Step	Check	Yes	No
1	**CHECK FOR ANY OTHER DTC ON DISPLAY.**	Is any other DTC displayed?	Inspect the relevant DTC using "List of Diagnostic Trouble Code (DTC)". <Ref. to EN(H4SO)(diag)-70, List of Diagnostic Trouble Code (DTC).>	Go to step **2.**
2	**CHECK FUEL FILLER CAP.** 1) Turn ignition switch to OFF. 2) Open the fuel flap.	Is the fuel filler cap tightened securely?	Go to step **3.**	Tighten fuel filler cap securely.
3	**CHECK PRESSURE/VACUUM LINE.** NOTE: Check the following items. • Disconnection, leakage and clogging of the vacuum hoses and pipes between fuel tank pressure sensor and fuel tank • Disconnection, leakage and clogging of air ventilation hoses and pipes between fuel filler pipe and fuel tank	Is there any fault in pressure/vacuum line?	Repair or replace the hoses and pipes.	Replace the fuel tank pressure sensor. <Ref. to EC(H4SO)-11, Fuel Tank Pressure Sensor.>

AZ:DTC P0452 EVAPORATIVE EMISSION CONTROL SYSTEM PRESSURE SENSOR LOW INPUT

DTC DETECTING CONDITION:

- Two consecutive driving cycles with fault
- GENERAL DESCRIPTION <Ref. to GD(H4SO)-134, DTC P0452 EVAPORATIVE EMISSION CONTROL SYSTEM PRESSURE SENSOR LOW INPUT, Diagnostic Trouble Code (DTC) Detecting Criteria.>

CAUTION:

After repair or replacement of faulty parts, conduct CLEAR MEMORY MODE <Ref. to EN(H4SO)(diag)-43, OPERATION, Clear Memory Mode.> and INSPECTION MODE <Ref. to EN(H4SO)(diag)-35, PROCEDURE, Inspection Mode.>.

WIRING DIAGRAM:

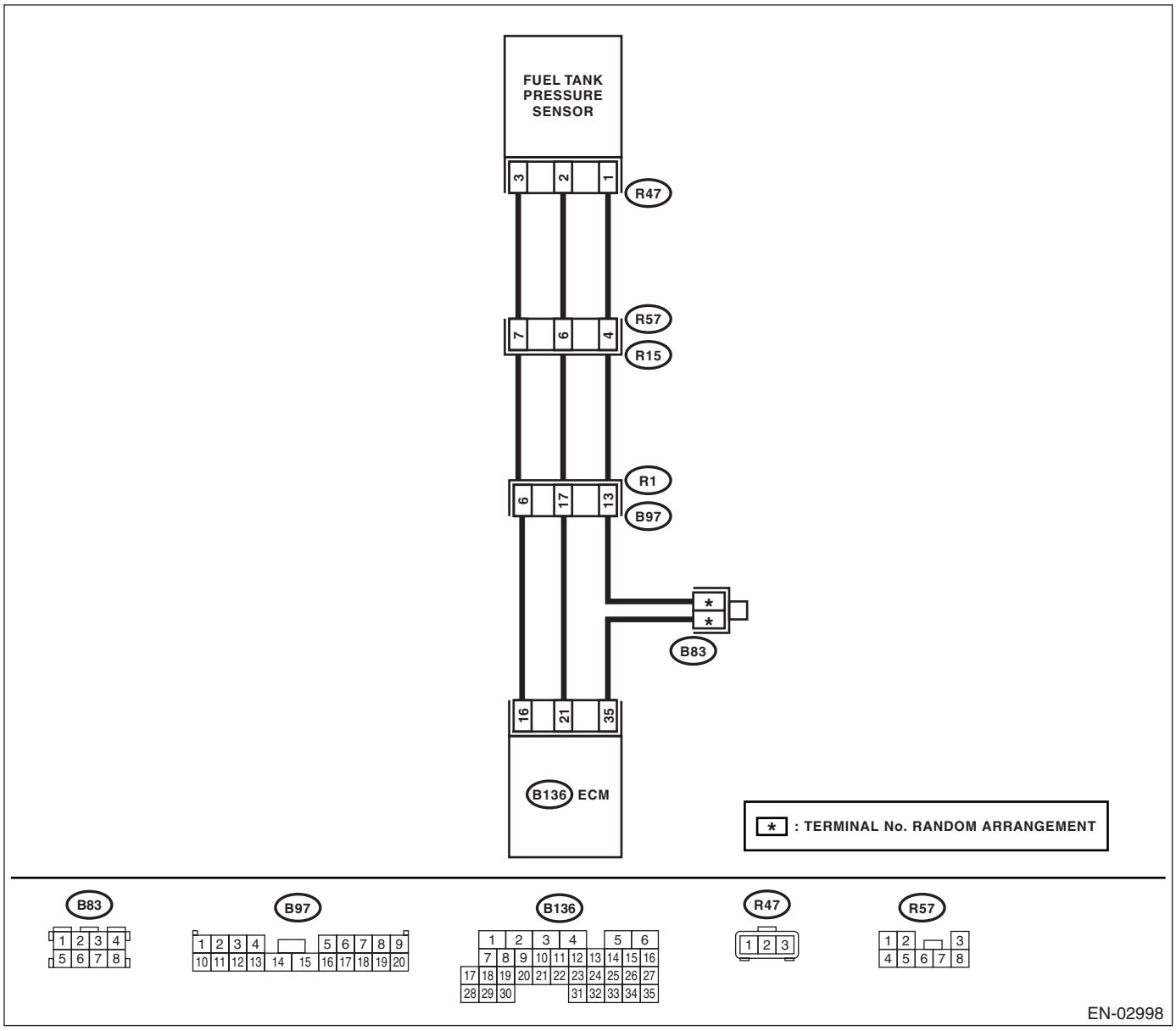

	Step	Check	Yes	No
1	**CHECK CURRENT DATA.** 1) Turn ignition switch to OFF. 2) Remove the fuel filler cap. 3) Install the fuel filler cap. 4) Turn ignition switch to ON. 5) Read the data of fuel tank pressure sensor signal using Subaru Select Monitor. NOTE: • Subaru Select Monitor For detailed operation procedures, refer to "READ CURRENT DATA FOR ENGINE". <Ref. to EN(H4SO)(diag)-27, Subaru Select Monitor.>	Is the measured value less than –2.8 kPa (–21.0 mmHg, –0.827 inHg)?	Go to step **2.**	The malfunction indicator light may light up, however, the circuit is returned to the normal status at the moment.
2	**CHECK POWER SUPPLY TO FUEL TANK PRESSURE SENSOR.** Measure the voltage between ECM connector and chassis ground. ***Connector & terminal*** ***(B136) No. 16 (+) — Chassis ground (–):***	Is the voltage more than 4.5 V?	Go to step **4.**	Go to step **3.**
3	**CHECK POWER SUPPLY TO FUEL TANK PRESSURE SENSOR.** Measure the voltage between ECM connector and chassis ground. ***Connector & terminal*** ***(B136) No. 16 (+) — Chassis ground (–):***	Does the voltage change by shaking the ECM harness and connector?	Repair poor contact in ECM connector.	Contact SOA Service Center.
4	**CHECK INPUT SIGNAL FOR ECM.** Measure the voltage between ECM and chassis ground. ***Connector & terminal*** ***(B136) No. 21 (+) — Chassis ground (–):***	Is the voltage less than 0.2 V?	Go to step **6.**	Go to step **5.**
5	**CHECK INPUT SIGNAL FOR ECM. (USING SUBARU SELECT MONITOR.)** Read the data of fuel tank pressure sensor signal using Subaru Select Monitor. NOTE: • Subaru Select Monitor For detailed operation procedures, refer to "READ CURRENT DATA FOR ENGINE". <Ref. to EN(H4SO)(diag)-27, Subaru Select Monitor.>	Does the measured value change by shaking the ECM harness and connector?	Repair poor contact in ECM connector.	Go to step **6.**
6	**CHECK HARNESS CONNECTOR BETWEEN ECM AND FUEL TANK PRESSURE SENSOR.** 1) Turn ignition switch to OFF. 2) Remove the rear seat cushion. 3) Separate rear (R15) connector and (R57) connector. 4) Turn ignition switch to ON. 5) Measure the voltage between rear wiring harness connector and chassis ground. ***Connector & terminal*** ***(R15) No. 7 (+) — Chassis ground (–):***	Is the voltage more than 4.5 V?	Go to step **7.**	Repair harness and connector. NOTE: In this case, repair the following: • Open circuit in harness between ECM and rear wiring harness connector • Poor contact in coupling connector

	Step	Check	Yes	No
7	**CHECK HARNESS CONNECTOR BETWEEN ECM AND FUEL TANK PRESSURE SENSOR.** 1) Turn ignition switch to OFF. 2) Disconnect the connector from ECM. 3) Measure the resistance of harness between ECM and (R15) connector. ***Connector & terminal*** ***(B136) No. 35 — (R15) No. 4:***	Is the resistance less than 1 Ω?	Go to step **8.**	Repair harness and connector. NOTE: In this case, repair the following: • Open circuit in harness between ECM and rear wiring harness connector • Poor contact in coupling connector • Poor contact in joint connector
8	**CHECK HARNESS CONNECTOR BETWEEN ECM AND FUEL TANK PRESSURE SENSOR.** Measure the resistance of harness between (R15) connector and chassis ground. ***Connector & terminal*** ***(R15) No. 4 (+) — Chassis ground:***	Is the resistance more than 1 MΩ?	Go to step **9.**	Repair short circuit to ground in harness between ECM and rear wiring harness connector.
9	**CHECK FUEL TANK HARNESS.** 1) Disconnect the connector from fuel tank pressure sensor. 2) Measure the resistance of fuel tank harness. ***Connector & terminal*** ***(R57) No. 7 — (R47) No. 3:***	Is the resistance less than 1 Ω?	Go to step **10.**	Repair open circuit in fuel tank cord.
10	**CHECK FUEL TANK HARNESS.** Measure the resistance of fuel tank harness. ***Connector & terminal*** ***(R57) No. 4 — (R47) No. 1:***	Is the resistance less than 1 Ω?	Go to step **11.**	Repair open circuit in fuel tank cord.
11	**CHECK FUEL TANK HARNESS.** Measure the resistance of harness between fuel tank pressure sensor connector and engine ground. ***Connector & terminal*** ***(R47) No. 2 — Chassis ground:***	Is the resistance more than 1 MΩ?	Go to step **12.**	Repair short circuit to ground in fuel tank cord.
12	**CHECK FOR POOR CONTACT.** Check for poor contact in fuel tank pressure sensor connector.	Is there poor contact in fuel tank pressure sensor connector?	Repair poor contact in fuel tank pressure sensor connector.	Replace the fuel tank pressure sensor. <Ref. to EC(H4SO)-11, Fuel Tank Pressure Sensor.>

BA:DTC P0453 EVAPORATIVE EMISSION CONTROL SYSTEM PRESSURE SENSOR HIGH INPUT

DTC DETECTING CONDITION:

- Two consecutive driving cycles with fault
- GENERAL DESCRIPTION <Ref. to GD(H4SO)-136, DTC P0453 EVAPORATIVE EMISSION CONTROL SYSTEM PRESSURE SENSOR HIGH INPUT, Diagnostic Trouble Code (DTC) Detecting Criteria.>

CAUTION:

After repair or replacement of faulty parts, conduct CLEAR MEMORY MODE <Ref. to EN(H4SO)(diag)-43, OPERATION, Clear Memory Mode.> and INSPECTION MODE <Ref. to EN(H4SO)(diag)-35, PROCEDURE, Inspection Mode.>.

WIRING DIAGRAM:

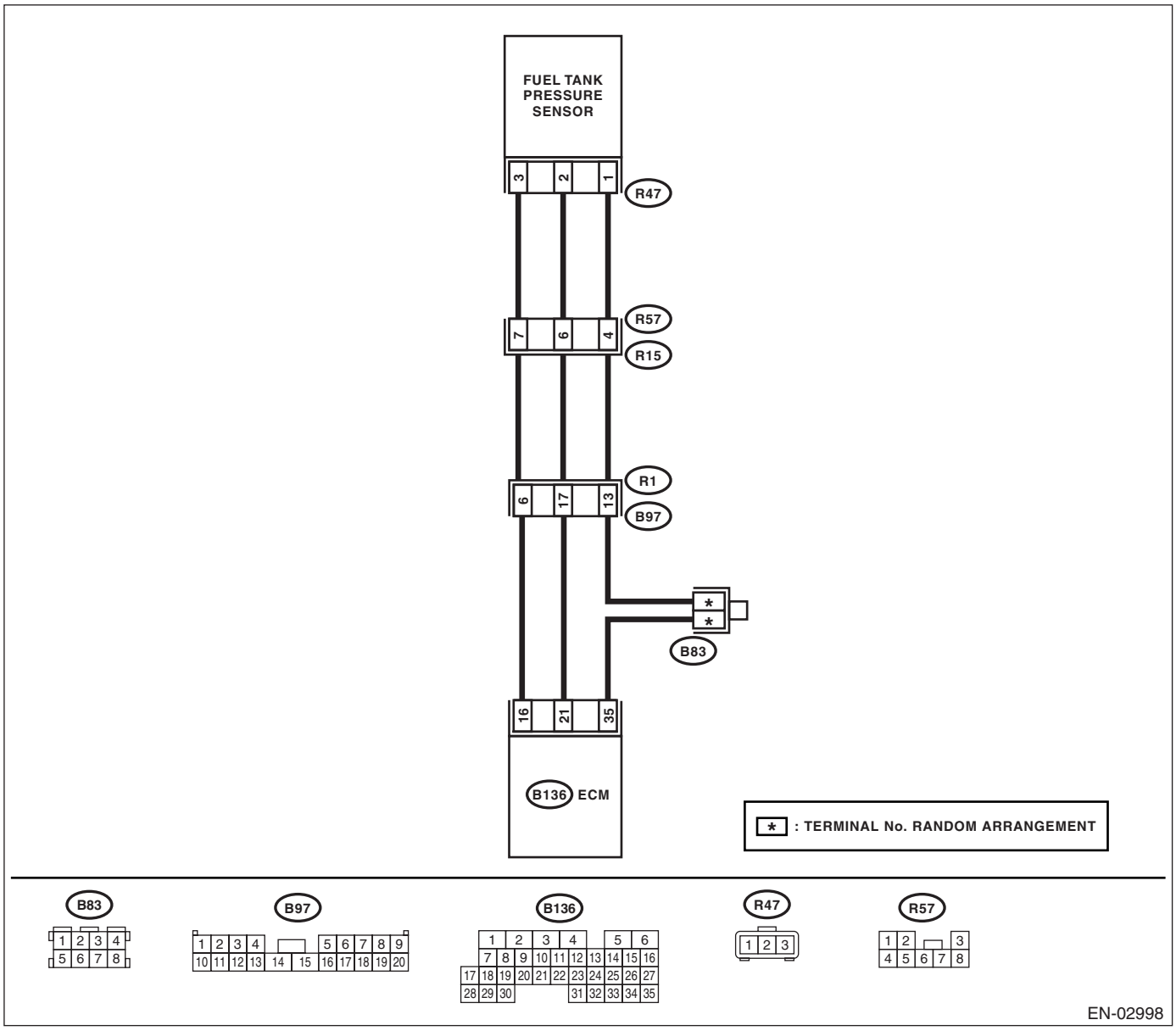

	Step	Check	Yes	No
1	**CHECK CURRENT DATA.** 1) Turn ignition switch to OFF. 2) Remove the fuel filler cap. 3) Install the fuel filler cap. 4) Turn ignition switch to ON. 5) Read the data of fuel tank pressure sensor signal using Subaru Select Monitor. NOTE: • Subaru Select Monitor For detailed operation procedures, refer to "READ CURRENT DATA FOR ENGINE". <Ref. to EN(H4SO)(diag)-27, Subaru Select Monitor.>	Is the measured value more than 2.8 kPa (21.0 mmHg, 0.827 inHg)?	Go to step **11.**	Go to step **2.**
2	**CHECK POWER SUPPLY TO FUEL TANK PRESSURE SENSOR.** Measure the voltage between ECM connector and chassis ground. ***Connector & terminal*** ***(B136) No. 16 (+) — Chassis ground (–):***	Is the voltage more than 4.5 V?	Go to step **4.**	Go to step **3.**
3	**CHECK POWER SUPPLY TO FUEL TANK PRESSURE SENSOR.** Measure the voltage between ECM connector and chassis ground. ***Connector & terminal*** ***(B136) No. 16 (+) — Chassis ground (–):***	Does the voltage change by shaking the ECM harness and connector?	Repair poor contact in ECM connector.	Replace the ECM. <Ref. to FU(H4SO)-35, Engine Control Module (ECM).>
4	**CHECK INPUT SIGNAL FOR ECM.** Measure the voltage between ECM and chassis ground. ***Connector & terminal*** ***(B136) No. 21 (+) — Chassis ground (–):***	Is the voltage less than 0.2 V?	Go to step **6.**	Go to step **5.**
5	**CHECK INPUT SIGNAL FOR ECM. (USING SUBARU SELECT MONITOR.)** Read the data of fuel tank pressure sensor signal using Subaru Select Monitor. NOTE: • Subaru Select Monitor For detailed operation procedures, refer to "READ CURRENT DATA FOR ENGINE". <Ref. to EN(H4SO)(diag)-27, Subaru Select Monitor.>	Does the measured value change by shaking the ECM harness and connector?	Repair poor contact in ECM connector.	Go to step **6.**
6	**CHECK HARNESS BETWEEN ECM AND COUPLING CONNECTOR IN REAR WIRING HARNESS.** 1) Turn ignition switch to OFF. 2) Remove the rear seat cushion. 3) Separate rear wiring harness and fuel tank cord. 4) Turn ignition switch to ON. 5) Measure the voltage between rear wiring harness connector and chassis ground. ***Connector & terminal*** ***(R15) No. 7 (+) — Chassis ground (–):***	Is the voltage more than 4.5 V?	Go to step **7.**	Repair harness and connector. NOTE: In this case, repair the following: • Open circuit in harness between ECM and rear wiring harness connector • Poor contact in coupling connector

	Step	Check	Yes	No
7	**CHECK HARNESS BETWEEN ECM AND COUPLING CONNECTOR IN REAR WIRING HARNESS.** 1) Turn ignition switch to OFF. 2) Disconnect the connector from ECM. 3) Measure the resistance of harness between ECM and rear wiring harness connector. ***Connector & terminal*** ***(B136) No. 21 — (R15) No. 6:*** ***(B136) No. 35 — (R15) No. 4:***	Is the resistance less than 1 Ω?	Go to step **8.**	Repair harness and connector. NOTE: In this case, repair the following: • Open circuit in harness between ECM and rear wiring harness connector • Poor contact in coupling connector
8	**CHECK FUEL TANK HARNESS.** 1) Disconnect the connector from fuel tank pressure sensor. 2) Measure the resistance of fuel tank harness. ***Connector & terminal*** ***(R57) No. 6 — (R47) No. 2:***	Is the resistance less than 1 Ω?	Go to step **9.**	Repair open circuit in fuel tank cord.
9	**CHECK FUEL TANK HARNESS.** Measure the resistance of fuel tank harness. ***Connector & terminal*** ***(R57) No. 4 — (R47) No. 1:***	Is the resistance less than 1 Ω?	Go to step **10.**	Repair open circuit in fuel tank cord.
10	**CHECK FOR POOR CONTACT.** Check for poor contact in fuel tank pressure sensor connector.	Is there poor contact in fuel tank pressure sensor connector?	Repair poor contact in fuel tank pressure sensor connector.	Replace the fuel tank pressure sensor. <Ref. to EC(H4SO)-11, Fuel Tank Pressure Sensor.>
11	**CHECK HARNESS BETWEEN ECM AND FUEL TANK PRESSURE SENSOR CONNECTOR.** 1) Turn ignition switch to OFF. 2) Disconnect the connector from fuel tank pressure sensor. 3) Turn ignition switch to ON. 4) Read the data of fuel tank pressure sensor signal using Subaru Select Monitor. NOTE: • Subaru Select Monitor For detailed operation procedures, refer to "READ CURRENT DATA FOR ENGINE". <Ref. to EN(H4SO)(diag)-27, Subaru Select Monitor.>	Is the measured value more than 2.8 kPa (21.0 mmHg, 0.827 inHg)?	Repair short circuit to battery in harness between ECM and fuel tank pressure sensor connector.	Replace the fuel tank pressure sensor. <Ref. to EC(H4SO)-11, Fuel Tank Pressure Sensor.>

BB:DTC P0456 EVAPORATIVE EMISSION CONTROL SYSTEM LEAK DETECTED (VERY SMALL LEAK)

DTC DETECTING CONDITION:

- Two consecutive driving cycles with fault
- GENERAL DESCRIPTION <Ref. to GD(H4SO)-138, DTC P0456 EVAPORATIVE EMISSION CONTROL SYSTEM LEAK DETECTED (VERY SMALL LEAK), Diagnostic Trouble Code (DTC) Detecting Criteria.>

TROUBLE SYMPTOM:

- Fuel odor
- There is a hole of more than 0.5 mm (0.020 in) dia. in evaporation system or fuel tank.

CAUTION:
After repair or replacement of faulty parts, conduct CLEAR MEMORY MODE <Ref. to EN(H4SO)(diag)-43, OPERATION, Clear Memory Mode.> and INSPECTION MODE <Ref. to EN(H4SO)(diag)-35, PROCEDURE, Inspection Mode.>.

WIRING DIAGRAM:

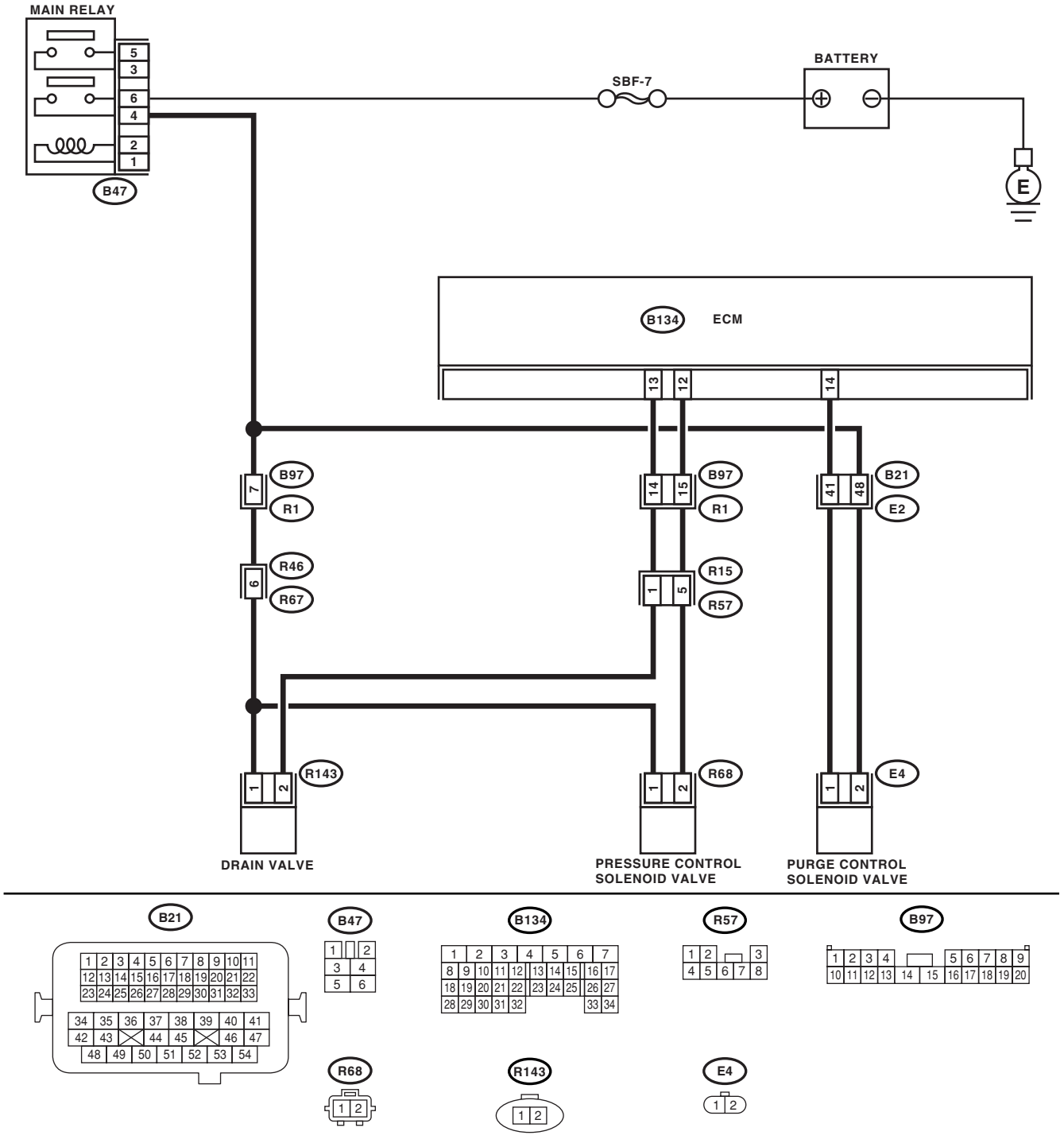

EN-02996

	Step	Check	Yes	No
1	**CHECK FOR ANY OTHER DTC ON DISPLAY.**	Is any other DTC displayed?	Inspect the relevant DTC using "List of Diagnostic Trouble Code (DTC)". <Ref. to EN(H4SO)(diag)-70, List of Diagnostic Trouble Code (DTC).>	Go to step **2.**
2	**CHECK FUEL FILLER CAP.** 1) Turn ignition switch to OFF. 2) Check the fuel filler cap. NOTE: The DTC is stored in memory if fuel filler cap is or was loose or if the cap chain was caught while tightening.	Is the fuel filler cap tightened securely?	Go to step **3.**	Tighten fuel filler cap securely.
3	**CHECK FUEL FILLER CAP.**	Is the fuel filler cap SUBARU genuine?	Go to step **4.**	Replace with a SUBARU genuine fuel filler cap.
4	**CHECK FUEL FILLER PIPE PACKING.**	Is there any damage to the seal between fuel filler cap and fuel filler pipe?	Repair or replace the fuel filler cap and fuel filler pipe. <Ref. to FU(H4SO)-46, Fuel Filler Pipe.>	Go to step **5.**
5	**CHECK DRAIN VALVE.** 1) Connect the test mode connector. 2) Turn ignition switch to ON. 3) Check the drain valve. NOTE: Drain valve operation can also be executed using Subaru Select Monitor. For the procedure, refer to "Compulsory Valve Operation Check Mode". <Ref. to EN(H4SO)(diag)-44, Compulsory Valve Operation Check Mode.>	Does the drain valve operate?	Go to step **6.**	Replace the drain valve. <Ref. to EC(H4SO)-16, Drain Valve.>
6	**CHECK PURGE CONTROL SOLENOID VALVE.** Operate the purge control solenoid valve. NOTE: Purge control solenoid valve operation can also be executed using Subaru Select Monitor. For the procedure, refer to "Compulsory Valve Operation Check Mode". <Ref. to EN(H4SO)(diag)-44, Compulsory Valve Operation Check Mode.>	Does the purge control solenoid valve operate?	Go to step **7.**	Replace the purge control solenoid valve.<Ref. to EC(H4SO)-6, Purge Control Solenoid Valve.>
7	**CHECK PRESSURE CONTROL SOLENOID VALVE.** Operate the pressure control solenoid valve. NOTE: Pressure control solenoid valve operation can also be executed using Subaru Select Monitor. For the procedure, refer to "Compulsory Valve Operation Check Mode". <Ref. to EN(H4SO)(diag)-44, Compulsory Valve Operation Check Mode.>	Does the pressure control solenoid valve operate?	Go to step **8.**	Replace the pressure control solenoid valve. <Ref. to EC(H4SO)-6, Purge Control Solenoid Valve.>

	Step	Check	Yes	No
8	**CHECK EVAPORATIVE EMISSION CONTROL SYSTEM LINE.** Turn ignition switch to OFF.	Is there a hole of more than 0.5 mm (0.020 in) dia. on evaporation line?	Repair or replace the evaporation line.<Ref. to FU(H4SO)-55, Fuel Delivery, Return and Evaporation Lines.>	Go to step **9.**
9	**CHECK CANISTER.**	Is the canister damaged or is there a hole of more than 0.5 mm (0.020 in) dia. in it?	Repair or replace the canister.<Ref. to EC(H4SO)-5, Canister.>	Go to step **10.**
10	**CHECK FUEL TANK.** Remove the fuel tank. <Ref. to FU(H4SO)-40, Fuel Tank.>	Is the fuel tank damaged or is there a hole of more than 0.5 mm (0.020 in) dia. in it?	Repair or replace the fuel tank.<Ref. to FU(H4SO)-40, Fuel Tank.>	Go to step **11.**
11	**CHECK ANY OTHER MECHANICAL TROUBLE IN EVAPORATIVE EMISSION CONTROL SYSTEM.**	Are there holes of more than 0.5 mm (0.020 in) dia., cracks, clogging, disconnections or bend of hoses or pipes in evaporative emission control system?	Repair or replace the hoses or pipes.	Contact SOA Service Center.

BC:DTC P0457 EVAPORATIVE EMISSION CONTROL SYSTEM LEAK DETECTED (FUEL CAP LOOSE/OFF)

DTC DETECTING CONDITION:

- Two consecutive driving cycles with fault
- GENERAL DESCRIPTION <Ref. to GD(H4SO)-109, DTC P0442 EVAPORATIVE EMISSION CONTROL SYSTEM LEAK DETECTED (SMALL LEAK), Diagnostic Trouble Code (DTC) Detecting Criteria.>

TROUBLE SYMPTOM:

- Fuel odor
- Fuel filler cap is loose or not installed.

CAUTION:

After repair or replacement of faulty parts, conduct CLEAR MEMORY MODE <Ref. to EN(H4SO)(diag)-43, OPERATION, Clear Memory Mode.> and INSPECTION MODE <Ref. to EN(H4SO)(diag)-35, PROCEDURE, Inspection Mode.>.

WIRING DIAGRAM:

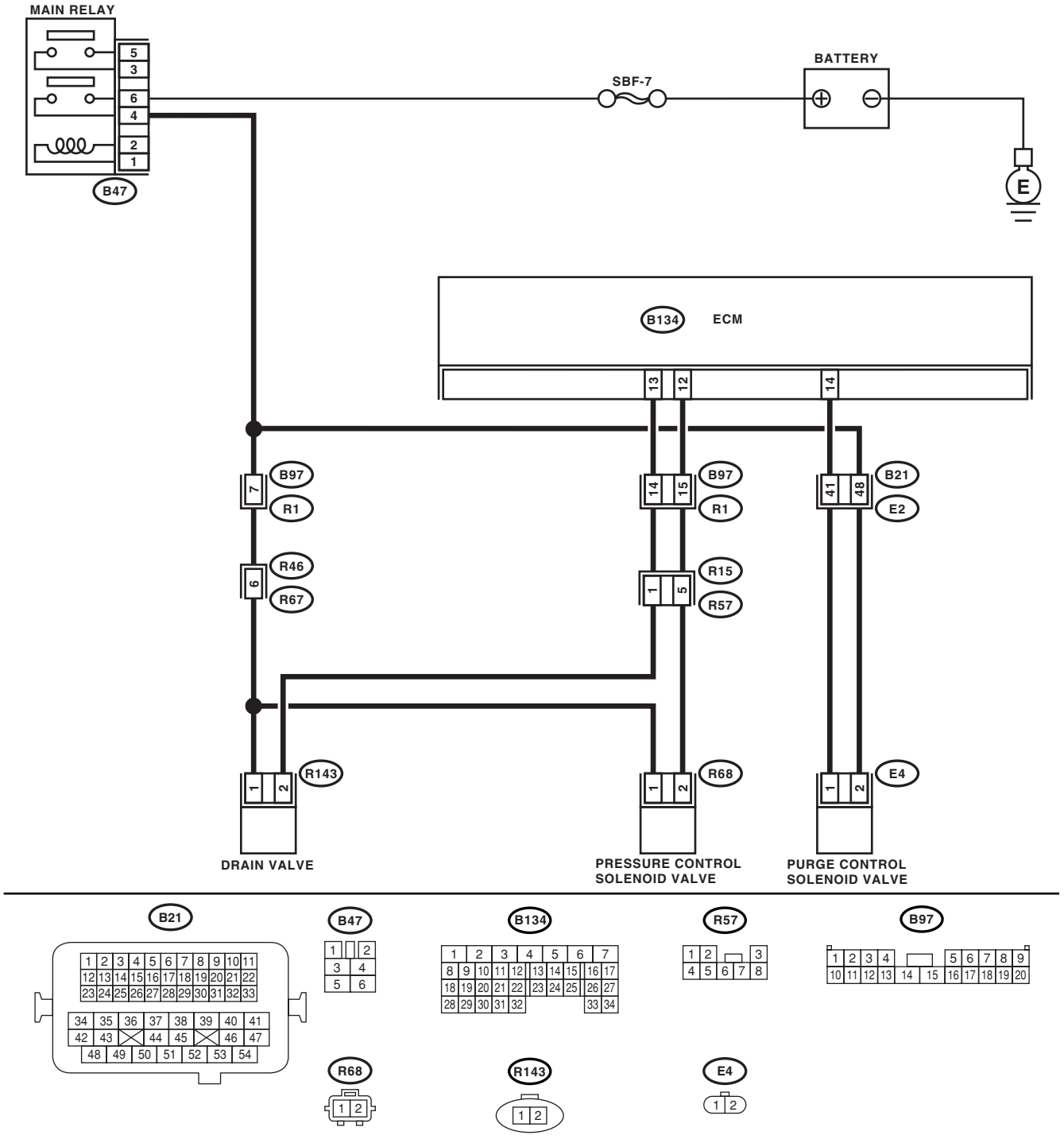

EN-02996

	Step	Check	Yes	No
1	**CHECK FOR ANY OTHER DTC ON DISPLAY.**	Is any other DTC displayed?	Inspect the relevant DTC using "List of Diagnostic Trouble Code (DTC)". <Ref. to EN(H4SO)(diag)-70, List of Diagnostic Trouble Code (DTC).>	Go to step **2.**
2	**CHECK FUEL FILLER CAP.** 1) Turn ignition switch to OFF. 2) Check the fuel filler cap. NOTE: The DTC is stored in memory if fuel filler cap is or was loose or if the cap chain was caught while tightening.	Is the fuel filler cap tightened securely?	Go to step **3.**	Tighten fuel filler cap securely.
3	**CHECK FUEL FILLER CAP.**	Is the fuel filler cap SUBARU genuine?	Go to step **4.**	Replace with a SUBARU genuine fuel filler cap.
4	**CHECK FUEL FILLER PIPE PACKING.**	Is there any damage to the seal between fuel filler cap and fuel filler pipe?	Repair or replace the fuel filler cap and fuel filler pipe. <Ref. to FU(H4SO)-46, Fuel Filler Pipe.>	Go to step **5.**
5	**CHECK DRAIN VALVE.** 1) Connect the test mode connector. 2) Turn ignition switch to ON. 3) Check the drain valve. NOTE: Drain valve operation can also be executed using Subaru Select Monitor. For the procedure, refer to "Compulsory Valve Operation Check Mode". <Ref. to EN(H4SO)(diag)-44, Compulsory Valve Operation Check Mode.>	Does the drain valve operate?	Go to step **6.**	Replace the drain valve. <Ref. to EC(H4SO)-16, Drain Valve.>
6	**CHECK PURGE CONTROL SOLENOID VALVE.** Operate the purge control solenoid valve. NOTE: Purge control solenoid valve operation can also be executed using Subaru Select Monitor. For the procedure, refer to "Compulsory Valve Operation Check Mode". <Ref. to EN(H4SO)(diag)-44, Compulsory Valve Operation Check Mode.>	Does the purge control solenoid valve operate?	Go to step **7.**	Replace the purge control solenoid valve.<Ref. to EC(H4SO)-6, Purge Control Solenoid Valve.>
7	**CHECK PRESSURE CONTROL SOLENOID VALVE.** Operate the pressure control solenoid valve. NOTE: Pressure control solenoid valve operation can also be executed using Subaru Select Monitor. For the procedure, refer to "Compulsory Valve Operation Check Mode". <Ref. to EN(H4SO)(diag)-44, Compulsory Valve Operation Check Mode.>	Does the pressure control solenoid valve operate?	Go to step **8.**	Replace the pressure control solenoid valve. <Ref. to EC(H4SO)-6, Purge Control Solenoid Valve.>
8	**CHECK CANISTER.**	Is the canister damaged?	Repair or replace the canister.<Ref. to EC(H4SO)-5, Canister.>	Go to step **9.**

	Step	Check	Yes	No
9	**CHECK FUEL TANK.** Remove the fuel tank. <Ref. to FU(H4SO)-40, Fuel Tank.>	Is the fuel tank damaged?	Repair or replace the fuel tank.<Ref. to FU(H4SO)-40, Fuel Tank.>	Go to step **10.**
10	**CHECK ANY OTHER MECHANICAL TROUBLE IN EVAPORATIVE EMISSION CONTROL SYSTEM.**	Are there holes of more than 0.5 mm (0.020 in) dia., cracks, clogging or disconnections of hoses or pipes in evaporative emission control system?	Repair or replace the hoses or pipes.	Contact SOA Service Center.

BD:DTC P0458 EVAPORATIVE EMISSION CONTROL SYSTEM PURGE CONTROL VALVE CIRCUIT LOW

DTC DETECTING CONDITION:

- Two consecutive driving cycles with fault
- GENERAL DESCRIPTION <Ref. to GD(H4SO)-139, DTC P0458 EVAPORATIVE EMISSION CONTROL SYSTEM PURGE CONTROL VALVE CIRCUIT LOW, Diagnostic Trouble Code (DTC) Detecting Criteria.>

TROUBLE SYMPTOM:

Erroneous idling

CAUTION:

After repair or replacement of faulty parts, conduct Clear Memory Mode <Ref. to EN(H4SO)(diag)-43, OPERATION, Clear Memory Mode.> and Inspection Mode <Ref. to EN(H4SO)(diag)-35, PROCEDURE, Inspection Mode.>.

WIRING DIAGRAM:

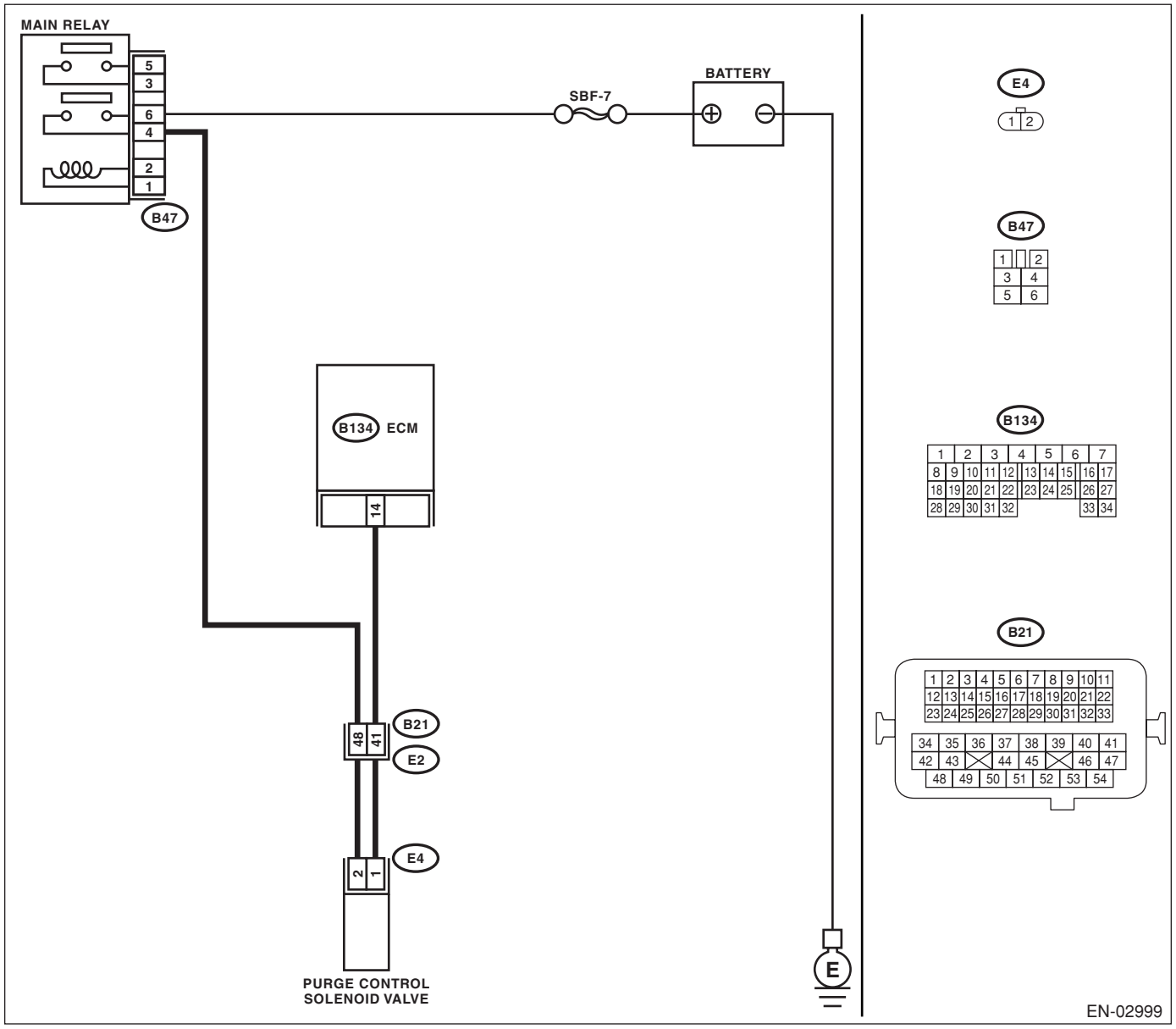

	Step	Check	Yes	No
1	**CHECK OUTPUT SIGNAL FROM ECM.** 1) Turn the ignition switch to ON. 2) Measure the voltage between ECM and chassis ground. ***Connector & terminal*** ***(B134) No. 14 (+) — Chassis ground (−):***	Is the voltage more than 10 V?	Even if malfunction indicator light lights up, the circuit has returned to a normal condition at this time. Contact SOA Service Center.	Go to step **2.**
2	**CHECK HARNESS BETWEEN PURGE CONTROL SOLENOID VALVE AND ECM CONNECTOR.** 1) Turn the ignition switch to OFF. 2) Disconnect the connectors from purge control solenoid valve and ECM. 3) Measure the resistance of harness between purge control solenoid valve connector and engine ground. ***Connector & terminal*** ***(E4) No. 1 — Engine ground:***	Is the resistance more than 1 MΩ?	Go to step **3.**	Repair ground short circuit in harness between ECM and purge control solenoid valve connector.
3	**CHECK HARNESS BETWEEN PURGE CONTROL SOLENOID VALVE AND ECM CONNECTOR.** Measure the resistance of harness between ECM and purge control solenoid valve of harness connector. ***Connector & terminal*** ***(B134) No. 14 — (E4) No. 1:***	Is the resistance less than 1 Ω?	Go to step **4.**	Repair open circuit in harness between ECM and purge control solenoid valve connector. NOTE: In this case, repair the following: • Open circuit in harness between ECM and purge control solenoid valve connector • Poor contact in coupling connector
4	**CHECK PURGE CONTROL SOLENOID VALVE.** 1) Remove the purge control solenoid valve. 2) Measure the resistance between purge control solenoid valve terminals. ***Terminals*** ***No. 1 — No. 2:***	Is the resistance 10 — 100 Ω?	Go to step **5.**	Replace the purge control solenoid valve.<Ref. to EC(H4SO)-6, Purge Control Solenoid Valve.>
5	**CHECK POWER SUPPLY TO PURGE CONTROL SOLENOID VALVE.** 1) Turn the ignition switch to ON. 2) Measure the voltage between purge control solenoid valve and engine ground. ***Connector & terminal*** ***(E4) No. 2 (+) — Engine ground (−):***	Is the voltage more than 10 V?	Go to step **6.**	Repair open circuit in harness between main relay and purge control solenoid valve connector.
6	**CHECK POOR CONTACT.** Check poor contact in purge control solenoid valve connector.	Is there poor contact in purge control solenoid valve connector?	Repair poor contact in purge control solenoid valve connector.	Contact SOA Service Center.

BE:DTC P0459 EVAPORATIVE EMISSION CONTROL SYSTEM PURGE CONTROL VALVE CIRCUIT HIGH

DTC DETECTING CONDITION:

- Two consecutive driving cycles with fault
- GENERAL DESCRIPTION <Ref. to GD(H4SO)-141, DTC P0459 EVAPORATIVE EMISSION CONTROL SYSTEM PURGE CONTROL VALVE CIRCUIT HIGH, Diagnostic Trouble Code (DTC) Detecting Criteria.>

TROUBLE SYMPTOM:

Erroneous idling

CAUTION:

After repair or replacement of faulty parts, conduct Clear Memory Mode <Ref. to EN(H4SO)(diag)-43, OPERATION, Clear Memory Mode.> and Inspection Mode <Ref. to EN(H4SO)(diag)-35, PROCEDURE, Inspection Mode.>.

WIRING DIAGRAM:

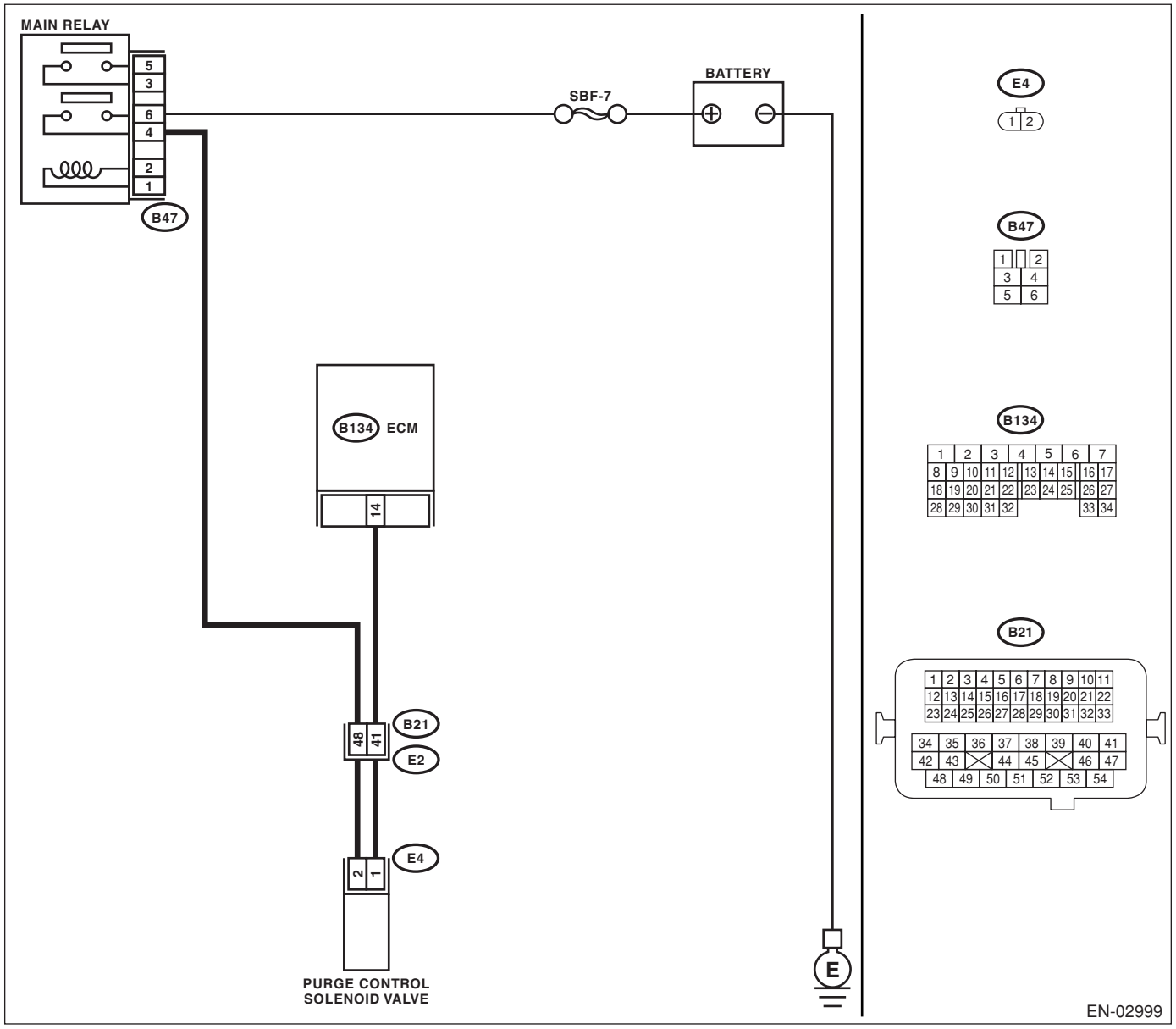

	Step	Check	Yes	No
1	**CHECK OUTPUT SIGNAL FROM ECM.** 1) Turn the ignition switch to OFF. 2) Connect the test mode connector at the lower portion of instrument panel (on the driver's side). 3) Turn the ignition switch to ON. 4) While operating the purge control solenoid valve, measure voltage between ECM and chassis ground. NOTE: Purge control solenoid valve operation can be executed using Subaru Select Monitor. For procedure, refer to "Compulsory Valve Operation Check Mode". <Ref. to EN(H4SO)(diag)-44, Compulsory Valve Operation Check Mode.> ***Connector & terminal*** ***(B134) No. 14 (+) — Chassis ground (–):***	Is the voltage 0 — 10 V?	Go to step **2.**	Even if malfunction indicator light light up, the circuit has returned to a normal condition at this time. In this case, repair poor contact in ECM connector.
2	**CHECK OUTPUT SIGNAL FROM ECM.** 1) Turn the ignition switch to ON. 2) Measure the voltage between ECM and chassis ground. ***Connector & terminal*** ***(B134) No. 14 (+) — Chassis ground (–):***	Is the voltage more than 10 V?	Go to step **4.**	Go to step **3.**
3	**CHECK POOR CONTACT.** Check poor contact in ECM connector.	Is there poor contact in ECM connector?	Repair poor contact in ECM connector.	Replace the ECM. <Ref. to FU(H4SO)-35, Engine Control Module (ECM).>
4	**CHECK HARNESS BETWEEN PURGE CONTROL SOLENOID VALVE AND ECM CONNECTOR.** 1) Turn the ignition switch to OFF. 2) Disconnect the connector from purge control solenoid valve. 3) Turn the ignition switch to ON. 4) Measure the voltage between ECM and chassis ground. ***Connector & terminal*** ***(B134) No. 14 (+) — Chassis ground (–):***	Is the voltage more than 10 V?	Repair battery short circuit in harness between ECM and purge control solenoid valve connector. After repair, replace the ECM. <Ref. to FU(H4SO)-35, Engine Control Module (ECM).>	Go to step **5.**
5	**CHECK PURGE CONTROL SOLENOID VALVE.** 1) Turn the ignition switch to OFF. 2) Measure the resistance between purge control solenoid valve terminals. ***Terminals*** ***No. 1 — No. 2:***	Is the resistance less than 1 Ω?	Replace the purge control solenoid valve<Ref. to EC(H4SO)-6, Purge Control Solenoid Valve.> and ECM <Ref. to FU(H4SO)-35, Engine Control Module (ECM).>	Go to step **6.**
6	**CHECK POOR CONTACT.** Check poor contact in ECM connector.	Is there poor contact in ECM connector?	Repair poor contact in ECM connector.	Replace the ECM. <Ref. to FU(H4SO)-35, Engine Control Module (ECM).>

BF:DTC P0461 FUEL LEVEL SENSOR CIRCUIT RANGE/PERFORMANCE

DTC DETECTING CONDITION:

- Two consecutive driving cycles with fault
- GENERAL DESCRIPTION <Ref. to GD(H4SO)-143, DTC P0461 FUEL LEVEL SENSOR CIRCUIT RANGE/PERFORMANCE, Diagnostic Trouble Code (DTC) Detecting Criteria.>

NOTE:
Refer to DTC P0464 for diagnostic procedure. <Ref. to EN(H4SO)(diag)-209, DTC P0464 FUEL LEVEL SENSOR CIRCUIT INTERMITTENT, Diagnostic Procedure with Diagnostic Trouble Code (DTC).>

BG:DTC P0462 FUEL LEVEL SENSOR CIRCUIT LOW INPUT

DTC DETECTING CONDITION:

- Two consecutive driving cycles with fault
- GENERAL DESCRIPTION <Ref. to GD(H4SO)-145, DTC P0462 FUEL LEVEL SENSOR CIRCUIT LOW INPUT, Diagnostic Trouble Code (DTC) Detecting Criteria.>

NOTE:
Refer to DTC P0464 for diagnostic procedure. <Ref. to EN(H4SO)(diag)-209, DTC P0464 FUEL LEVEL SENSOR CIRCUIT INTERMITTENT, Diagnostic Procedure with Diagnostic Trouble Code (DTC).>

BH:DTC P0463 FUEL LEVEL SENSOR CIRCUIT HIGH INPUT

DTC DETECTING CONDITION:

- Two consecutive driving cycles with fault
- GENERAL DESCRIPTION <Ref. to GD(H4SO)-147, DTC P0463 FUEL LEVEL SENSOR CIRCUIT HIGH INPUT, Diagnostic Trouble Code (DTC) Detecting Criteria.>

NOTE:
Refer to DTC P0464 for diagnostic procedure. <Ref. to EN(H4SO)(diag)-209, DTC P0464 FUEL LEVEL SENSOR CIRCUIT INTERMITTENT, Diagnostic Procedure with Diagnostic Trouble Code (DTC).>

BI: DTC P0464 FUEL LEVEL SENSOR CIRCUIT INTERMITTENT

DTC DETECTING CONDITION:

- Two consecutive driving cycles with fault
- GENERAL DESCRIPTION <Ref. to GD(H4SO)-149, DTC P0464 FUEL LEVEL SENSOR CIRCUIT INTERMITTENT, Diagnostic Trouble Code (DTC) Detecting Criteria.>

CAUTION:
After repair or replacement of faulty parts, conduct CLEAR MEMORY MODE <Ref. to EN(H4SO)(diag)-43, OPERATION, Clear Memory Mode.> and INSPECTION MODE <Ref. to EN(H4SO)(diag)-35, PROCEDURE, Inspection Mode.>.

	Step	Check	Yes	No
1	**CHECK FOR ANY OTHER DTC ON DISPLAY.**	Is DTCP0461, DTCP0462, DTCP0463 or DTCP0464 displayed on the Subaru Select Monitor?	Check the combination meter. <Ref. to IDI-15, Combination Meter.>	Temporary poor contact occurs.

BJ:DTC P0483 COOLING FAN RATIONALITY CHECK

DTC DETECTING CONDITION:

- Two consecutive driving cycles with fault
- GENERAL DESCRIPTION <Ref. to GD(H4SO)-152, DTC P0483 COOLING FAN RATIONALITY CHECK, Diagnostic Trouble Code (DTC) Detecting Criteria.>

TROUBLE SYMPTOM:

- Occurrence of noise
- Overheating

CAUTION:
After repair or replacement of faulty parts, conduct Clear Memory Mode <Ref. to EN(H4SO)(diag)-43, OPERATION, Clear Memory Mode.> and Inspection Mode <Ref. to EN(H4SO)(diag)-35, PROCEDURE, Inspection Mode.>.

NOTE:
If the vehicle, with the engine idling, is placed very close to a wall or another vehicle, preventing normal cooling function, the OBD system may detect malfunction.

	Step	Check	Yes	No
1	**CHECK FOR ANY OTHER DTC ON DISPLAY.**	Is any other DTC displayed?	Inspect the relevant DTC using "List of Diagnostic Trouble Code (DTC)". <Ref. to EN(H4SO)(diag)-70, List of Diagnostic Trouble Code (DTC).>	Check radiator fan and fan motor.<Ref. to CO(H4SO)-23, Radiator Main Fan and Fan Motor.> and <Ref. to CO(H4SO)-25, Radiator Sub Fan and Fan Motor.>

BK:DTC P0500 VEHICLE SPEED SENSOR

DTC DETECTING CONDITION:

- Detect as soon as malfunction occurs.
- GENERAL DESCRIPTION <Ref. to GD(H4SO)-153, DTC P0500 VEHICLE SPEED SENSOR, Diagnostic Trouble Code (DTC) Detecting Criteria.>

CAUTION:
After repair or replacement of faulty parts, conduct Clear Memory Mode <Ref. to EN(H4SO)(diag)-43, Clear Memory Mode.> and Inspection Mode <Ref. to EN(H4SO)(diag)-35, Inspection Mode.>.

	Step	Check	Yes	No
1	**CHECK DTC OF ABS.** Check DTC of ABS.	Is DTC of ABS displayed?	Perform the diagnosis according to DTC. <Ref. to ABS(diag)-34, List of Diagnostic Trouble Code (DTC).>	Repair the poor contact in ECM.

BL:DTC P0506 IDLE CONTROL SYSTEM RPM LOWER THAN EXPECTED

DTC DETECTING CONDITION:

- Two consecutive driving cycles with fault
- GENERAL DESCRIPTION <Ref. to GD(H4SO)-155, DTC P0506 IDLE CONTROL SYSTEM RPM LOWER THAN EXPECTED, Diagnostic Trouble Code (DTC) Detecting Criteria.>

TROUBLE SYMPTOM:

- Engine is difficult to start.
- Engine does not start.
- Erroneous idling
- Engine stalls.

CAUTION:
After repair or replacement of faulty parts, conduct Clear Memory Mode <Ref. to EN(H4SO)(diag)-43, OPERATION, Clear Memory Mode.> and Inspection Mode <Ref. to EN(H4SO)(diag)-35, PROCEDURE, Inspection Mode.>.

WIRING DIAGRAM:

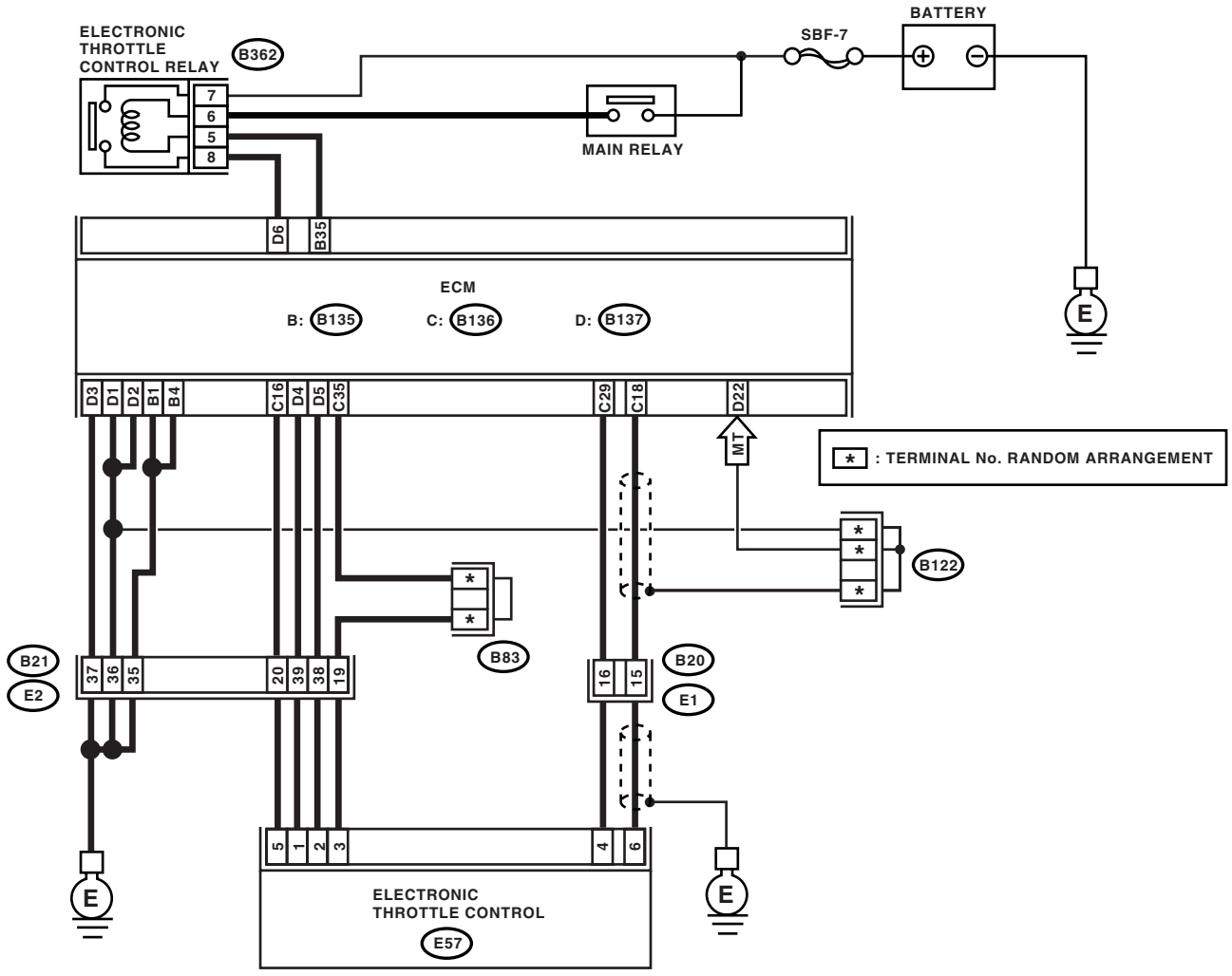

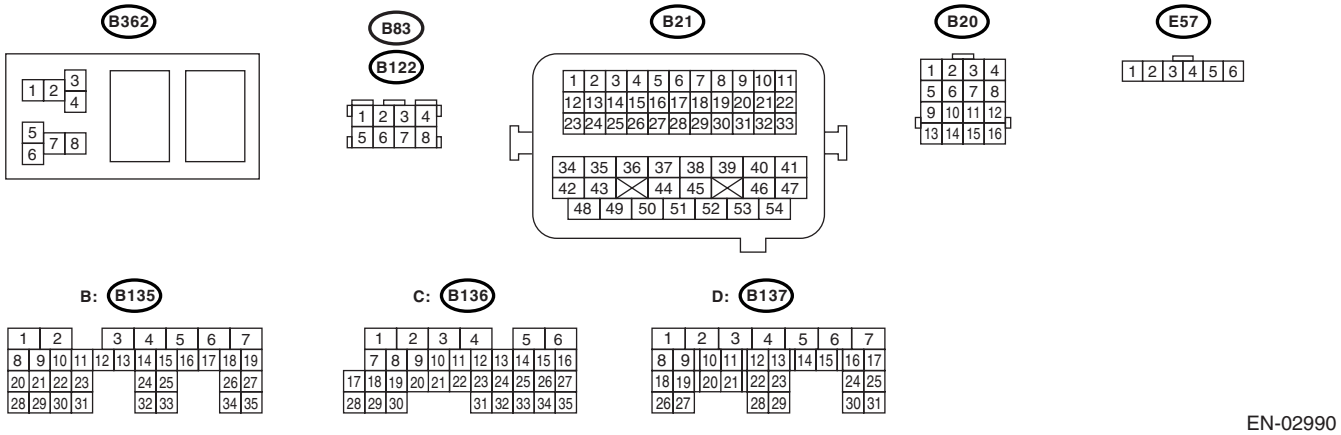

EN-02990

	Step	Check	Yes	No
1	**CHECK FOR ANY OTHER DTC ON DISPLAY.**	Is any other DTC displayed?	Inspect the relevant DTC using "List of Diagnostic Trouble Code (DTC)". <Ref. to EN(H4SO)(diag)-70, List of Diagnostic Trouble Code (DTC).> NOTE: In this case, it is not necessary to inspect DTC P0506.	Go to step **2.**
2	**CHECK AIR CLEANER ELEMENT.** 1) Turn the ignition switch to OFF. 2) Check air cleaner element.	Is there excessive clogging on air cleaner element.	Replace the air cleaner element.<Ref. to IN(H4SO)-6, Air Cleaner Element.>	Go to step **3.**
3	**CHECK ELECTRONIC THROTTLE CONTROL.** 1) Turn the ignition switch to OFF. 2) Remove the electronic throttle control. 3) Check the electronic throttle control.	Are there foreign particles in electronic throttle control?	Remove the foreign particles from electronic throttle control.	Perform the diagnosis of DTC P2101.

BM:DTC P0507 IDLE CONTROL SYSTEM RPM HIGHER THAN EXPECTED

DTC DETECTING CONDITION:

- Two consecutive driving cycles with fault
- GENERAL DESCRIPTION <Ref. to GD(H4SO)-156, DTC P0507 IDLE CONTROL SYSTEM RPM HIGHER THAN EXPECTED, Diagnostic Trouble Code (DTC) Detecting Criteria.>

TROUBLE SYMPTOM:

Engine keeps running at higher revolution than specified idling revolution.

CAUTION:

After repair or replacement of faulty parts, conduct Clear Memory Mode <Ref. to EN(H4SO)(diag)-43, OPERATION, Clear Memory Mode.> and Inspection Mode <Ref. to EN(H4SO)(diag)-35, PROCEDURE, Inspection Mode.>.

WIRING DIAGRAM:

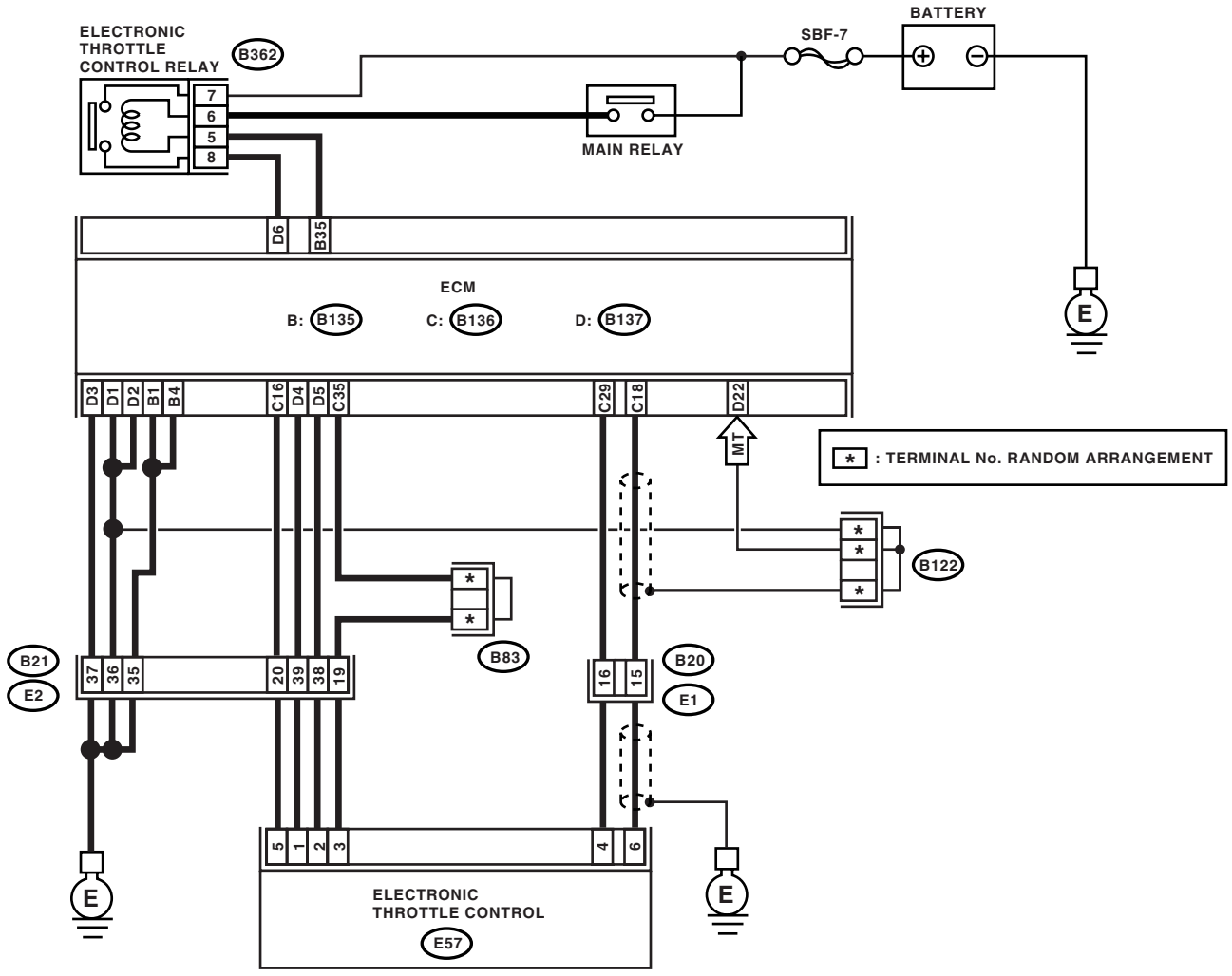

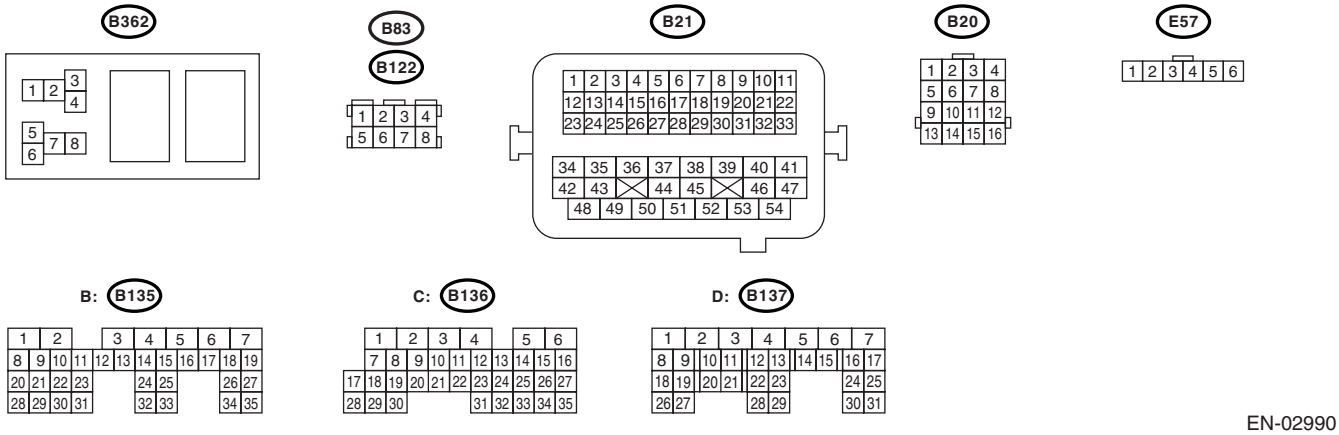

EN-02990

	Step	Check	Yes	No
1	**CHECK FOR ANY OTHER DTC ON DISPLAY.**	Is any other DTC displayed?	Inspect the relevant DTC using "List of Diagnostic Trouble Code (DTC)". <Ref. to EN(H4SO)(diag)-70, List of Diagnostic Trouble Code (DTC).> NOTE: In this case, it is not necessary to inspect DTC P0507.	Go to step **2.**
2	**CHECK AIR INTAKE SYSTEM.** 1) Turn the ignition switch to ON. 2) Start the engine, and idle it. 3) Check the following items. • Loose installation of intake manifold and throttle body • Cracks of intake manifold gasket and throttle body gasket • Disconnections of vacuum hoses	Is there any fault in air intake system?	Repair the air suction and leaks.	Go to step **3.**
3	**CHECK ELECTRONIC THROTTLE CONTROL.** 1) Turn the ignition switch to OFF. 2) Remove the electronic throttle control. 3) Check the electronic throttle control.	Are there foreign particles in electronic throttle control?	Remove the foreign particles from electronic throttle control.	Perform the diagnosis of DTC P2102.

BN:DTC P0512 STARTER REQUEST CIRCUIT

DTC DETECTING CONDITION:

- Two consecutive driving cycles with fault
- GENERAL DESCRIPTION <Ref. to GD(H4SO)-157, DTC P0512 STARTER REQUEST CIRCUIT, Diagnostic Trouble Code (DTC) Detecting Criteria.>

TROUBLE SYMPTOM:

Failure of engine to start

CAUTION:

After repair or replacement of faulty parts, conduct Clear Memory Mode <Ref. to EN(H4SO)(diag)-43, OPERATION, Clear Memory Mode.> and Inspection Mode <Ref. to EN(H4SO)(diag)-35, PROCEDURE, Inspection Mode.>.

WIRING DIAGRAM:

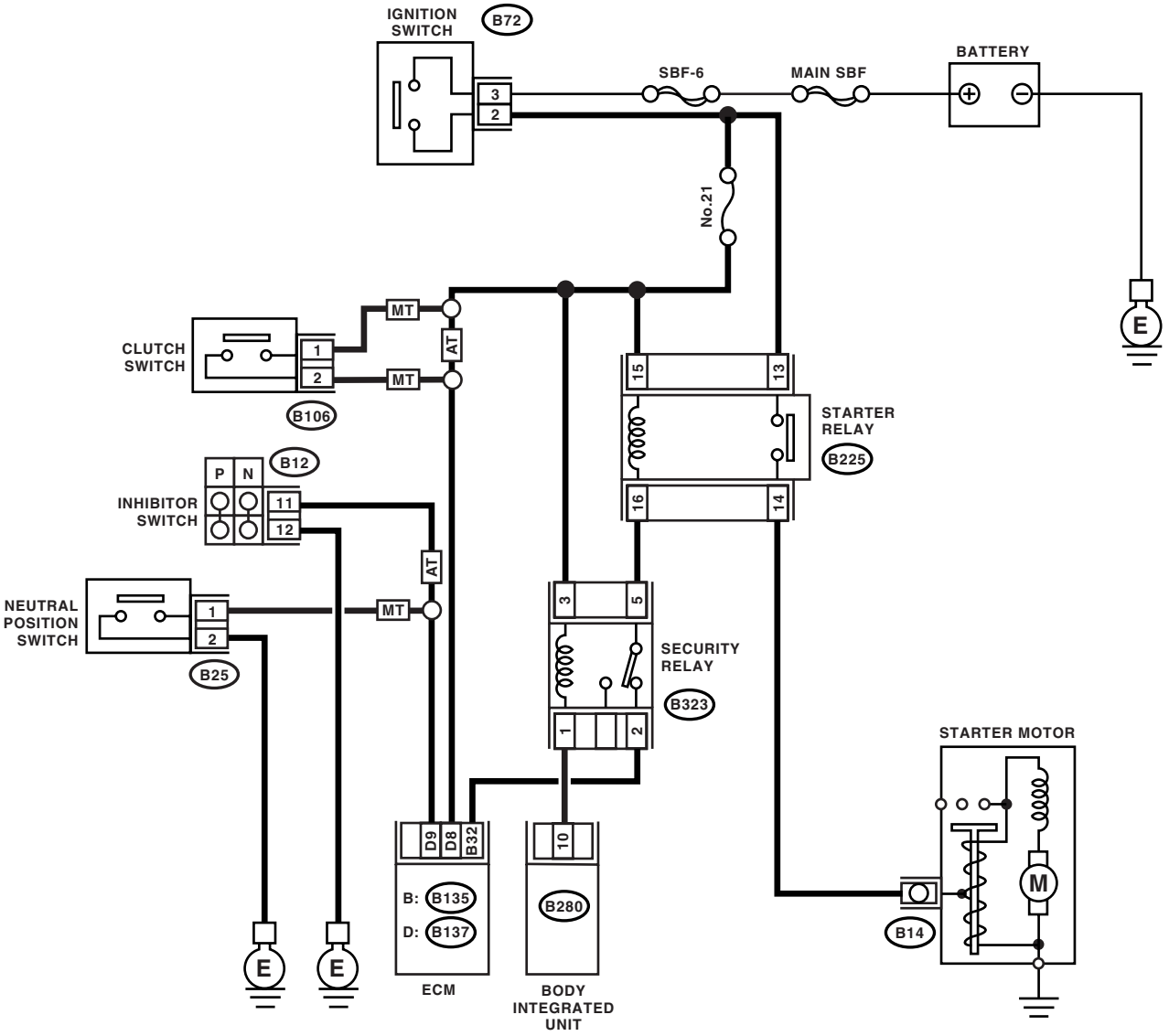

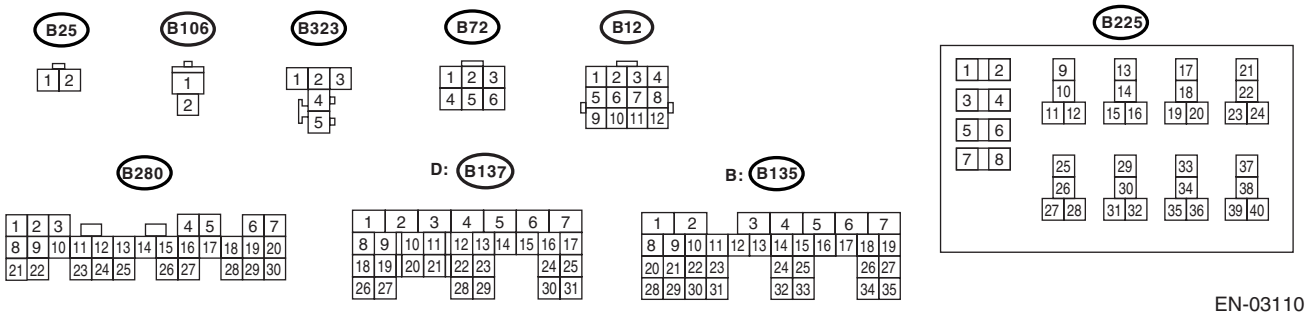

EN-03110

Step		Check	Yes	No
1	**CHECK OPERATION OF STARTER MOTOR.** Turn the ignition switch to ON. NOTE: • Place the inhibitor switch in each position. (AT model) • Depress or release the clutch pedal. (MT model) • Check that the security alarm does not beep.	Dose the starter motor operate?	Repair battery short circuit in starter motor circuit.	Check starter motor circuit. <Ref. to EN(H4SO)(diag)-56, STARTER MOTOR CIRCUIT, Diagnostics for Engine Starting Failure.>

BO:DTC P0519 IDLE CONTROL SYSTEM MALFUNCTION (FAIL-SAFE)

DTC DETECTING CONDITION:

- Detect as soon as malfunction occurs.
- GENERAL DESCRIPTION <Ref. to GD(H4SO)-158, DTC P0519 IDLE CONTROL SYSTEM MALFUNCTION (FAIL-SAFE), Diagnostic Trouble Code (DTC) Detecting Criteria.>

TROUBLE SYMPTOM:

Engine keeps running at higher revolution than specified idling revolution.

CAUTION:

After repair or replacement of faulty parts, conduct Clear Memory Mode <Ref. to EN(H4SO)(diag)-43, OPERATION, Clear Memory Mode.> and Inspection Mode <Ref. to EN(H4SO)(diag)-35, PROCEDURE, Inspection Mode.>.

WIRING DIAGRAM:

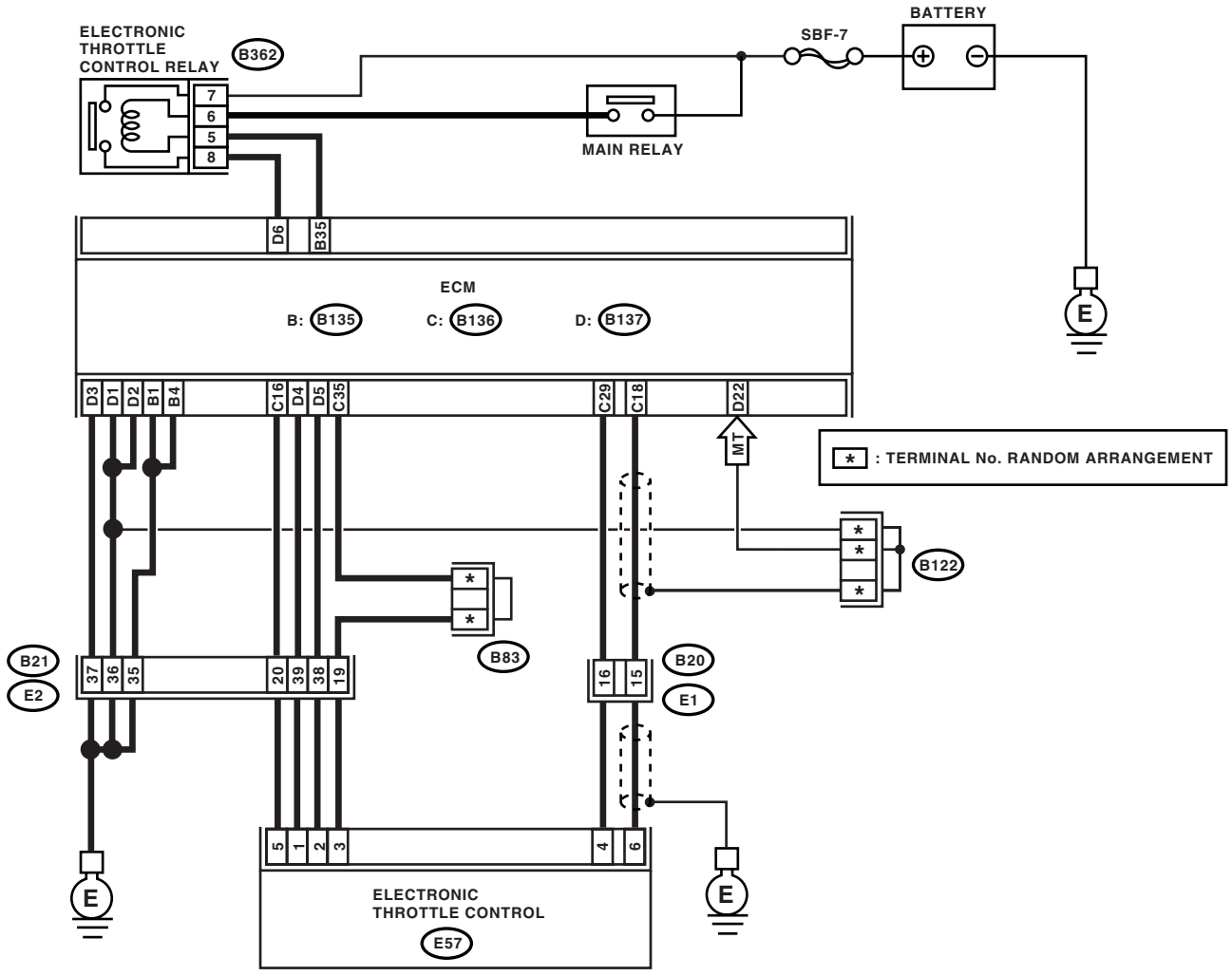

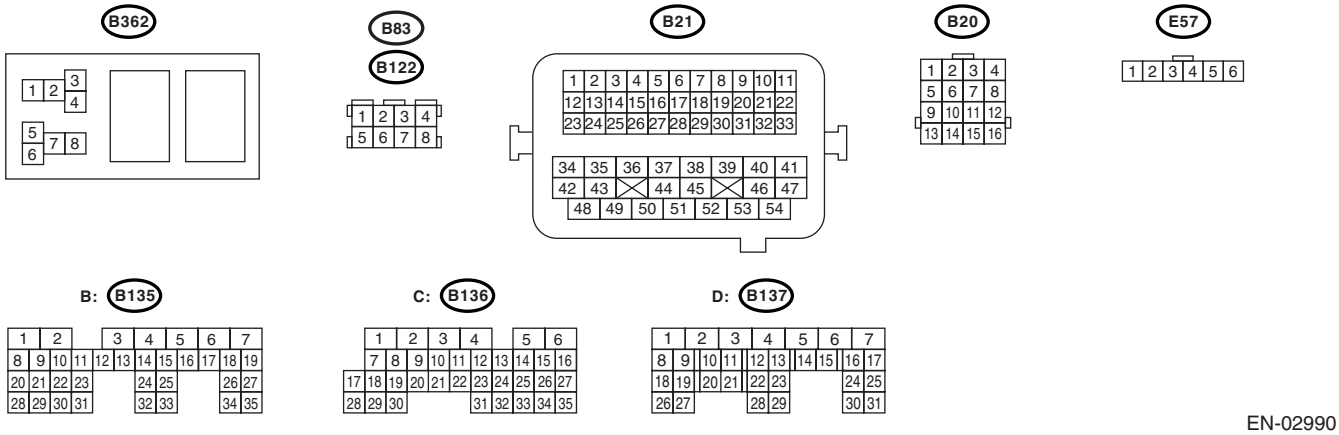

EN-02990

	Step	Check	Yes	No
1	**CHECK FOR ANY OTHER DTC ON DISPLAY.**	Is any other DTC displayed?	Inspect the relevant DTC using "List of Diagnostic Trouble Code (DTC)". <Ref. to EN(H4SO)(diag)-70, List of Diagnostic Trouble Code (DTC).> NOTE: In this case, it is not necessary to inspect DTC P0519.	Go to step **2.**
2	**CHECK AIR INTAKE SYSTEM.** 1) Turn the ignition switch to ON. 2) Start the engine, and idle it. 3) Check the following items. • Loose installation of intake manifold and throttle body • Cracks of intake manifold gasket and throttle body gasket • Disconnections of vacuum hoses	Is there any fault in air intake system?	Repair the air suction and leaks.	Go to step **3.**
3	**CHECK ELECTRONIC THROTTLE CONTROL.** 1) Turn the ignition switch to OFF. 2) Remove the electronic throttle control. 3) Check the electronic throttle control.	Are foreign matters in found inside the electronic throttle control?	Remove foreign matters from the electronic throttle control.	Perform the diagnosis of DTC P2101.

BP:DTC P0600 SERIAL COMMUNICATION LINK

NOTE:
For the diagnostic procedure, refer to LAN section. <Ref. to LAN(diag)-2, Basic Diagnostic Procedure.>

BQ:DTC P0604 INTERNAL CONTROL MODULE RANDOM ACCESS MEMORY (RAM) ERROR

DTC DETECTING CONDITION:

- Detect as soon as malfunction occurs.
- GENERAL DESCRIPTION <Ref. to GD(H4SO)-160, DTC P0604 INTERNAL CONTROL MODULE RANDOM ACCESS MEMORY (RAM) ERROR, Diagnostic Trouble Code (DTC) Detecting Criteria.>

TROUBLE SYMPTOM:

- Engine does not start.
- Engine stalls.

CAUTION:

After repair or replacement of faulty parts, conduct Clear Memory Mode <Ref. to EN(H4SO)(diag)-43, OPERATION, Clear Memory Mode.> and Inspection Mode <Ref. to EN(H4SO)(diag)-35, PROCEDURE, Inspection Mode.>.

WIRING DIAGRAM:

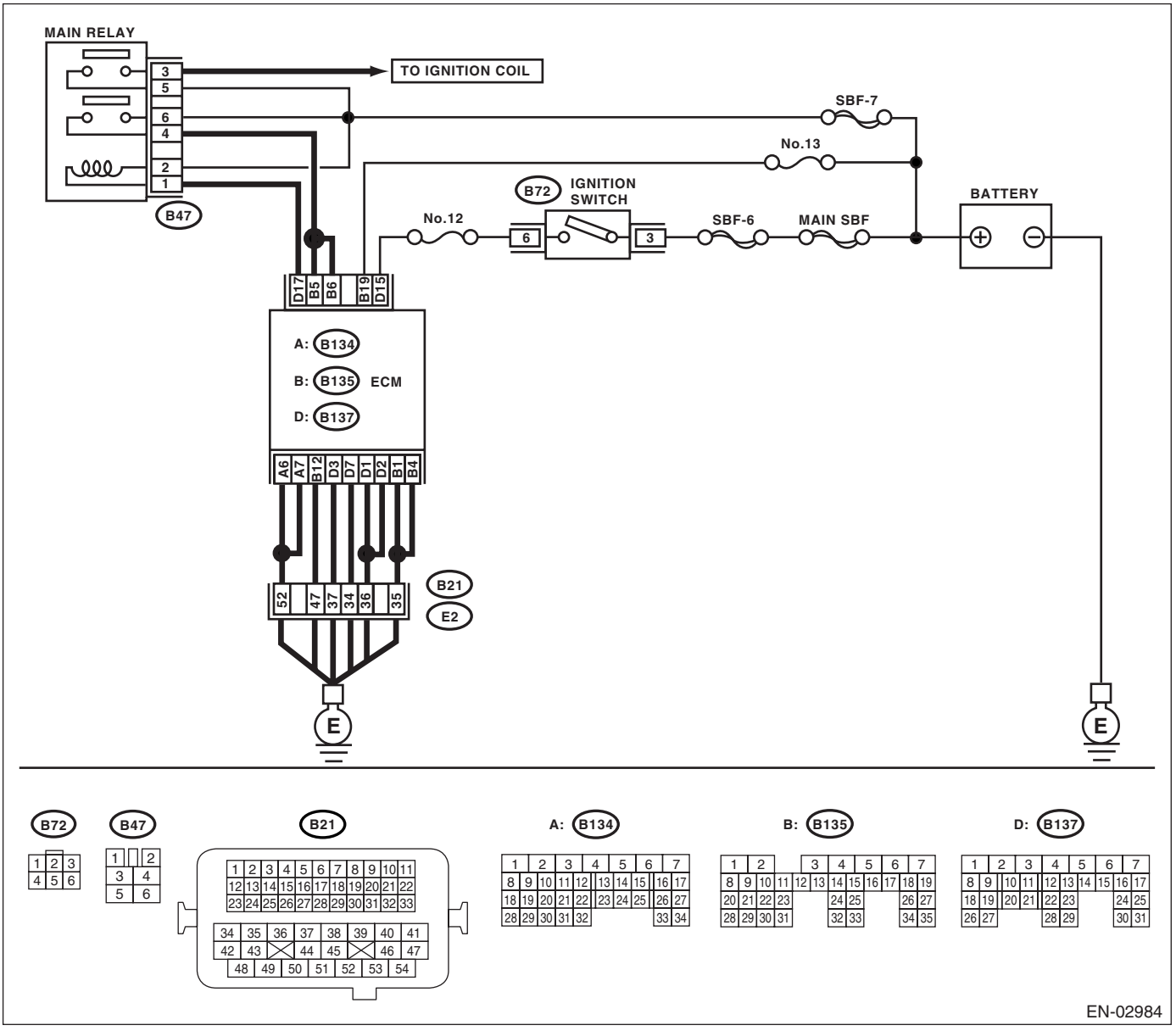

	Step	Check	Yes	No
1	**CHECK FOR ANY OTHER DTC ON DISPLAY.**	Is any other DTC displayed?	Check the relevant DTC using the List of Diagnostic Trouble Code (DTC). <Ref. to EN(H4SO)(diag)-70, List of Diagnostic Trouble Code (DTC).>	A temporary poor contact occurs.

BR:DTC P0605 INTERNAL CONTROL MODULE READ ONLY MEMORY (ROM) ERROR

NOTE:
For the diagnostic procedure, refer to DTC P0607. <Ref. to EN(H4SO)(diag)-222, DTC P0607 CONTROL MODULE PERFORMANCE, Diagnostic Procedure with Diagnostic Trouble Code (DTC).>

BS:DTC P0607 CONTROL MODULE PERFORMANCE

DTC DETECTING CONDITION:

- Detect as soon as malfunction occurs.
- GENERAL DESCRIPTION <Ref. to GD(H4SO)-161, DTC P0605 INTERNAL CONTROL MODULE READ ONLY MEMORY (ROM) ERROR, Diagnostic Trouble Code (DTC) Detecting Criteria.> and <Ref. to GD(H4SO)-162, DTC P0607 CONTROL MODULE PERFORMANCE, Diagnostic Trouble Code (DTC) Detecting Criteria.>

TROUBLE SYMPTOM:

- Erroneous idling
- Poor driving performance

CAUTION:

After repair or replacement of faulty parts, conduct Clear Memory Mode <Ref. to EN(H4SO)(diag)-43, OPERATION, Clear Memory Mode.> and Inspection Mode <Ref. to EN(H4SO)(diag)-35, PROCEDURE, Inspection Mode.>.

WIRING DIAGRAM:

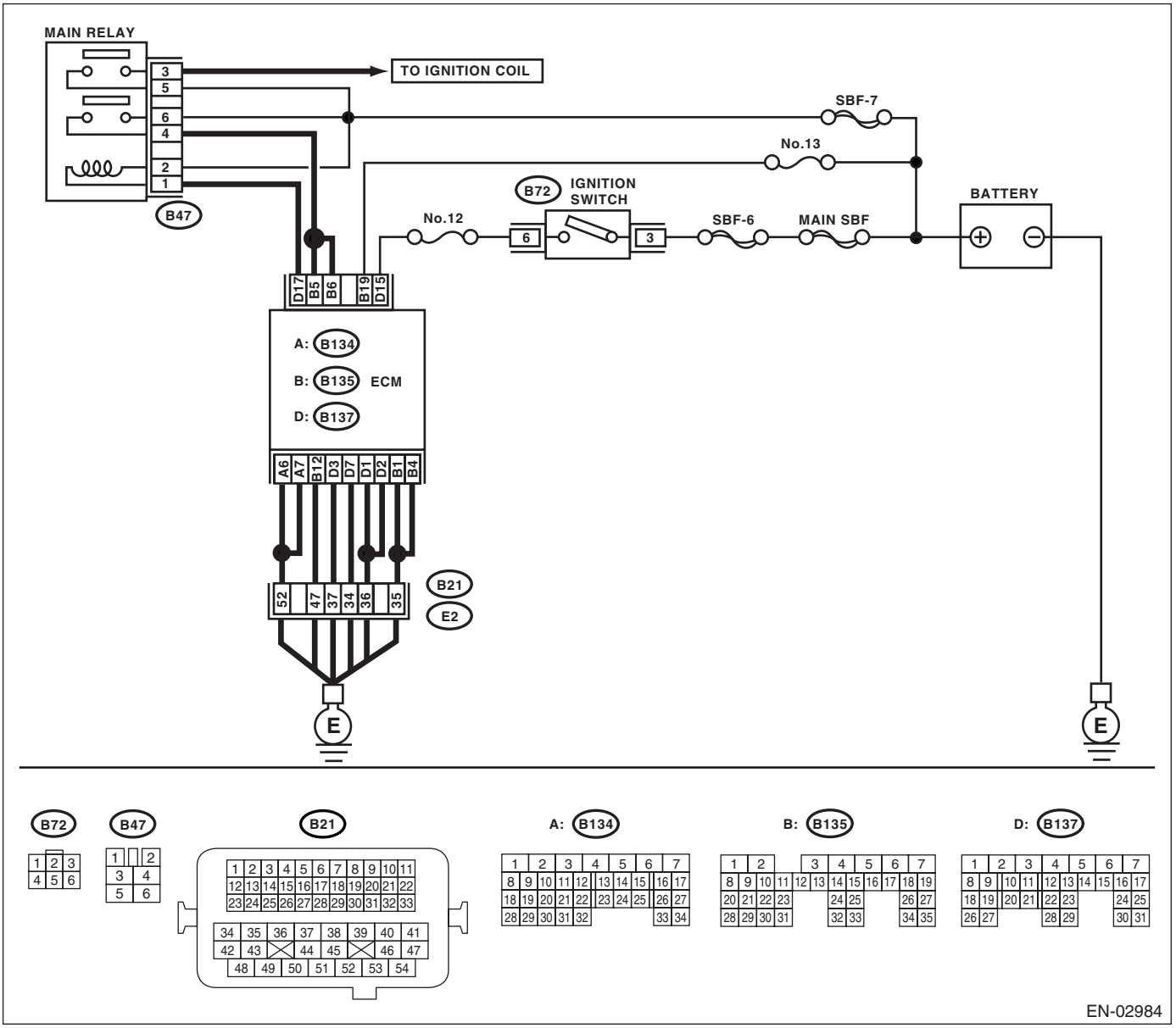

	Step	Check	Yes	No
1	**CHECK INPUT VOLTAGE OF ECM** 1) Turn the ignition switch to ON. 2) Measure the voltage between ECM connector and ground. ***Connector & terminal*** ***(B135) No. 5 (+) — Chassis ground (−):*** ***(B135) No. 6 (+) — Chassis ground (−):***	Is the measured value 10 — 13 V?	Go to step **2.**	Repair the open circuit or ground short of power supply circuit.
2	**CHECK INPUT VOLTAGE OF ECM** 1) Start the engine. 2) Measure the voltage between ECM connector and ground. ***Connector & terminal*** ***(B135) No. 5 (+) — Chassis ground (−):*** ***(B135) No. 6 (+) — Chassis ground (−):***	Is the measured value 13 — 15 V?	Go to step **3.**	Repair the open circuit or ground short of power supply circuit.
3	**CHECK GROUND HARNESS OF ECM** Measure the voltage between ECM connector and ground. ***Connector & terminal*** ***(B137) No. 1 (+) — Chassis ground (−):*** ***(B137) No. 2 (+) — Chassis ground (−):*** ***(B137) No. 3 (+) — Chassis ground (−):***	Is the measured value less than 1 V?	Repair poor contact of ECM connector. If poor contact occur, replace the ECM.	Retighten the engine ground terminal.

BT:DTC P0638 THROTTLE ACTUATOR CONTROL RANGE/PERFORMANCE (BANK 1)

NOTE:
For diagnostic procedure, refer to DTC P2101. <Ref. to EN(H4SO)(diag)-270, DTC P2101 THROTTLE ACTUATOR CONTROL MOTOR CIRCUIT RANGE/PERFORMANCE, Diagnostic Procedure with Diagnostic Trouble Code (DTC).>

BU:DTC P0691 COOLING FAN 1 CONTROL CIRCUIT LOW

DTC DETECTING CONDITION:

- Two consecutive driving cycles with fault
- GENERAL DESCRIPTION<Ref. to GD(H4SO)-168, DTC P0691 COOLING FAN 1 CONTROL CIRCUIT LOW, Diagnostic Trouble Code (DTC) Detecting Criteria.>

TROUBLE SYMPTOM:

- Radiator fan does not operate properly.
- Overheating

CAUTION:
After repair or replacement of faulty parts, conduct Clear Memory Mode <Ref. to EN(H4SO)(diag)-43, OPERATION, Clear Memory Mode.> and Inspection Mode <Ref. to EN(H4SO)(diag)-35, PROCEDURE, Inspection Mode.>.

	Step	Check	Yes	No
1	**CHECK FOR ANY OTHER DTC ON DISPLAY.**	Does DTC P0691 appear on the Subaru Select Monitor?	Check the radiator fan system. <Ref. to CO(H4SO)-7, Radiator Fan System.>	Temporary poor contact occurs.

BV:DTC P0692 COOLING FAN 1 CONTROL CIRCUIT HIGH

DTC DETECTING CONDITION:

- Two consecutive driving cycles with fault
- GENERAL DESCRIPTION <Ref. to GD(H4SO)-169, DTC P0692 COOLING FAN 1 CONTROL CIRCUIT HIGH, Diagnostic Trouble Code (DTC) Detecting Criteria.>

TROUBLE SYMPTOM:

- Radiator fan does not operate properly.
- Overheating

CAUTION:
After repair or replacement of faulty parts, conduct Clear Memory Mode <Ref. to EN(H4SO)(diag)-43, OPERATION, Clear Memory Mode.> and Inspection Mode <Ref. to EN(H4SO)(diag)-35, PROCEDURE, Inspection Mode.>.

	Step	Check	Yes	No
1	**CHECK FOR ANY OTHER DTC ON DISPLAY.**	Does DTC P0692 appear on the Subaru Select Monitor?	Check the radiator fan system. <Ref. to CO(H4SO)-7, Radiator Fan System.>	Temporary poor contact occurs.

BW:DTC P0700 TRANSMISSION CONTROL SYSTEM (MIL REQUEST)

GENERAL DESCRIPTION <Ref. to GD(H4SO)-170, DTC P0700 TRANSMISSION CONTROL SYSTEM (MIL REQUEST), Diagnostic Trouble Code (DTC) Detecting Criteria.>

NOTE:
For the diagnostic procedure, refer to AT section. <Ref. to 4AT(D)(diag)-2, PROCEDURE, Basic Diagnostic Procedure.>

BX:DTC P0851 NEUTRAL SWITCH INPUT CIRCUIT LOW (AT MODEL)

DTC DETECTING CONDITION:

- Two consecutive driving cycles with fault
- GENERAL DESCRIPTION <Ref. to GD(H4SO)-171, DTC P0851 NEUTRAL SWITCH INPUT CIRCUIT LOW (AT MODEL), Diagnostic Trouble Code (DTC) Detecting Criteria.>

TROUBLE SYMPTOM:

Erroneous idling

CAUTION:

After repair or replacement of faulty parts, conduct Clear Memory Mode <Ref. to EN(H4SO)(diag)-43, OPERATION, Clear Memory Mode.> and Inspection Mode <Ref. to EN(H4SO)(diag)-35, PROCEDURE, Inspection Mode.>.

WIRING DIAGRAM:

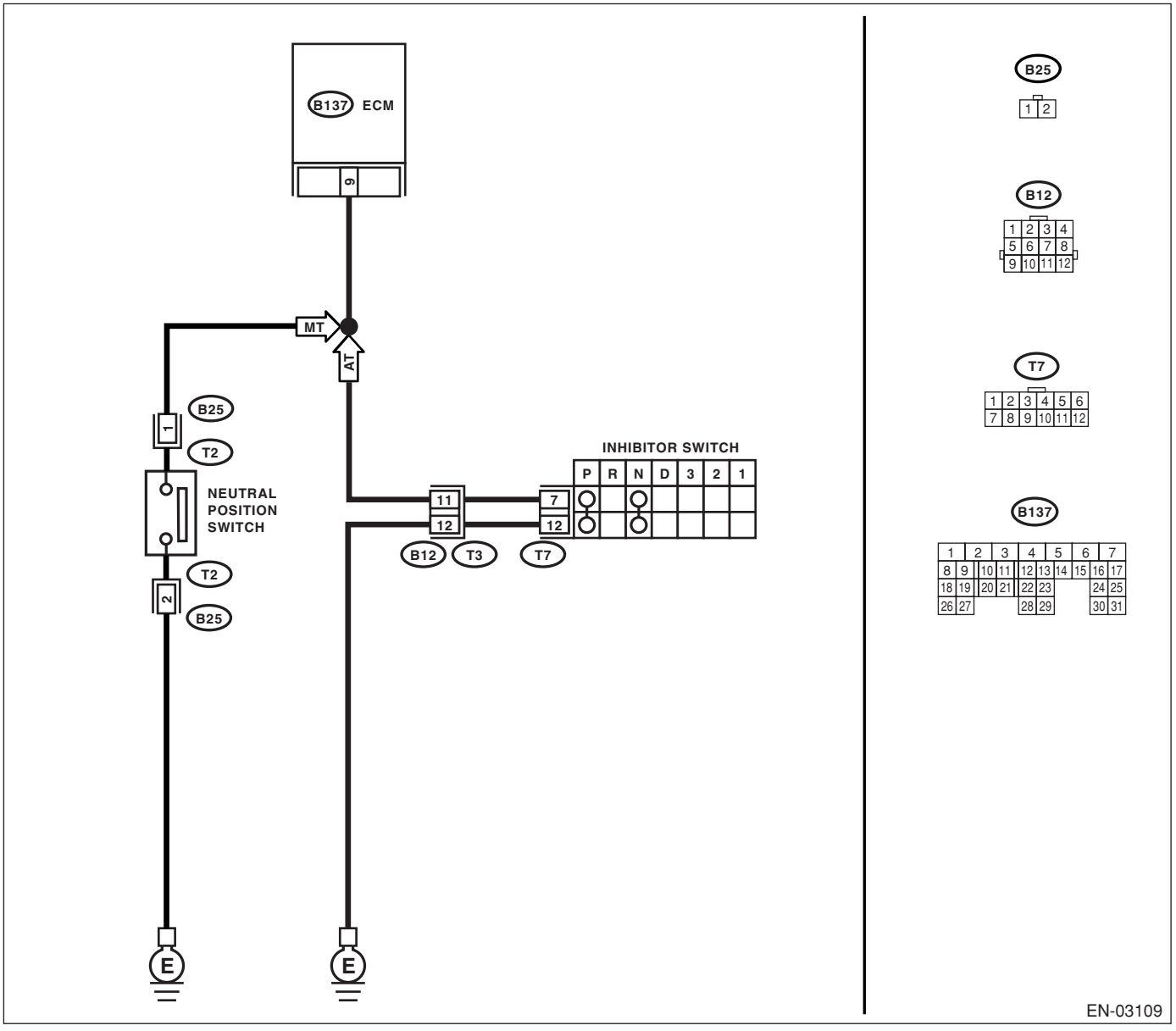

	Step	Check	Yes	No
1	**CHECK SELECTOR CABLE.**	Is there any fault in selector cable?	Repair or adjust selector cable. <Ref. to CS-26, INSPECTION, Select Cable.>	Go to step **2.**
2	**CHECK INPUT SIGNAL FOR ECM.** 1) Turn the ignition switch to ON. 2) Place the select lever except for "N" and "P" ranges. 3) Measure the voltage between ECM and chassis ground. ***Connector & terminal*** ***(B137) No. 9 (+) — Chassis ground (−):***	Is the voltage more than 10 V?	Even if malfunction indicator light lights up, the circuit has returned to a normal condition at this time.	Go to step **3.**
3	**CHECK HARNESS BETWEEN ECM AND TRANSMISSION HARNESS CONNECTOR.** 1) Turn the ignition switch to OFF. 2) Disconnect the connectors from ECM and transmission harness connector (T3). 3) Measure the resistance of harness between ECM connector and chassis ground. ***Connector & terminal*** ***(B137) No. 9 — Chassis ground:***	Is the resistance more than 1 MΩ?	Go to step **4.**	Repair ground short circuit in harness between ECM and transmission harness connector.
4	**CHECK TRANSMISSION HARNESS CONNECTOR.** 1) Disconnect the connector from inhibitor switch. 2) Measure the resistance of harness between transmission harness connector and engine ground. ***Connector & terminal*** ***(T3) No. 11 — Engine ground:***	Is the resistance more than 1 MΩ?	Go to step **5.**	Repair ground short circuit in harness between transmission harness and inhibitor switch connector.
5	**CHECK INHIBITOR SWITCH.** Measure the resistance between inhibitor switch connector the receptacle's terminals in select lever except for "N" and "P" range. ***Terminals*** ***No. 7 — No. 12:***	Is the resistance more than 1 MΩ?	Contact SOA Service Center.	Replace the inhibitor switch.<Ref. to 4AT-48, Inhibitor Switch.>

BY:DTC P0851 NEUTRAL SWITCH INPUT CIRCUIT LOW (MT MODEL)

DTC DETECTING CONDITION:

- Two consecutive driving cycles with fault
- GENERAL DESCRIPTION <Ref. to GD(H4SO)-172, DTC P0851 NEUTRAL SWITCH INPUT CIRCUIT LOW (MT MODEL), Diagnostic Trouble Code (DTC) Detecting Criteria.>

TROUBLE SYMPTOM:

Erroneous idling

CAUTION:

After repair or replacement of faulty parts, conduct Clear Memory Mode <Ref. to EN(H4SO)(diag)-43, OPERATION, Clear Memory Mode.> and Inspection Mode <Ref. to EN(H4SO)(diag)-35, PROCEDURE, Inspection Mode.>.

WIRING DIAGRAM:

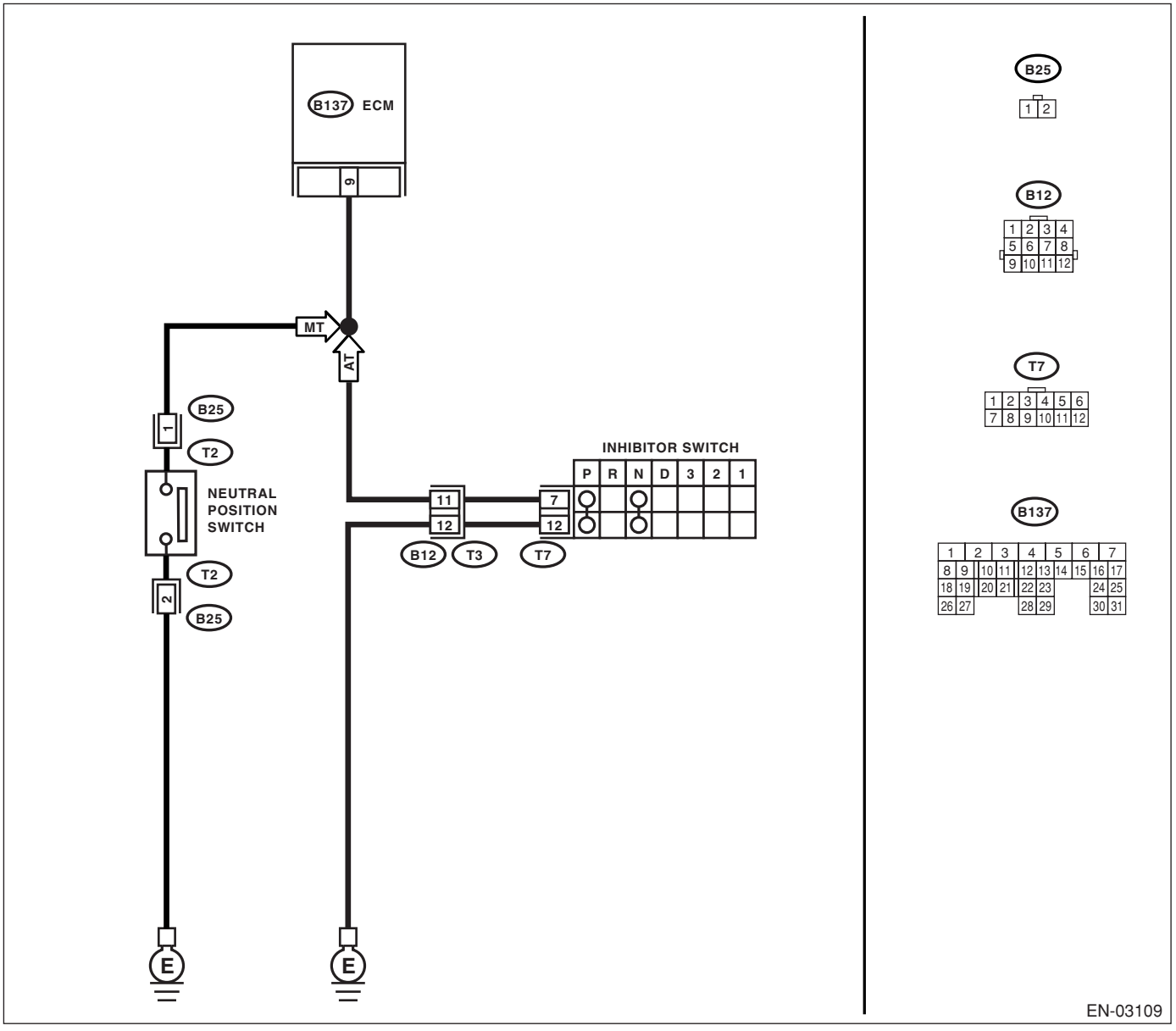

	Step	Check	Yes	No
1	**CHECK INPUT SIGNAL FOR ECM.** 1) Turn the ignition switch to ON. 2) Place the shift lever in neutral. 3) Measure the voltage between ECM and chassis ground. ***Connector & terminal*** ***(B137) No. 9 (+) — Chassis ground (−):***	Is the voltage more than 10 V?	Go to step **2.**	Go to step **4.**
2	**CHECK INPUT SIGNAL FOR ECM.** 1) Place the shift lever in a position except for neutral. 2) Measure the voltage between ECM and chassis ground. ***Connector & terminal*** ***(B137) No. 9 (+) — Chassis ground (−):***	Is the voltage less than 1 V?	Go to step **3.**	Go to step **4.**
3	**CHECK POOR CONTACT.** Check poor contact in ECM connector.	Is there poor contact in ECM connector?	Repair poor contact in ECM connector.	Contact SOA Service Center.
4	**CHECK NEUTRAL POSITION SWITCH.** 1) Turn the ignition switch to OFF. 2) Disconnect the connector from transmission harness. 3) Place the shift lever in neutral. 4) Measure the resistance between transmission harness and connector terminals. ***Connector & terminal*** ***(T2) No. 1 — No. 2:***	Is the resistance more than 1 MΩ?	Go to step **5.**	Repair short circuit in transmission harness or replace neutral position switch.
5	**CHECK NEUTRAL POSITION SWITCH.** 1) Place the shift lever in a position except for neutral. 2) Measure the resistance between transmission harness connector terminals. ***Connector & terminal*** ***(T2) No. 1 — No. 2:***	Is the resistance less than 1 Ω?	Go to step **6.**	Repair short circuit in transmission harness or replace neutral position switch.
6	**CHECK HARNESS BETWEEN ECM AND NEUTRAL POSITION SWITCH CONNECTOR.** Measure the resistance between ECM and chassis ground. ***Connector & terminal*** ***(B137) No. 9 — Chassis ground:***	Is the resistance more than 1 MΩ?	Go to step **7.**	Repair ground short circuit in harness between ECM and transmission harness connector.
7	**CHECK HARNESS BETWEEN ECM AND NEUTRAL POSITION SWITCH CONNECTOR.** 1) Disconnect the connector from ECM. 2) Measure the resistance of harness between ECM and transmission harness connector. ***Connector & terminal*** ***(B137) No. 9 — (B25) No. 1:***	Is the resistance less than 1 Ω?	Go to step **8.**	Repair open circuit in harness between ECM and transmission harness connector.
8	**CHECK HARNESS BETWEEN ECM AND NEUTRAL POSITION SWITCH CONNECTOR.** Measure the resistance of harness between transmission harness connector and engine ground. ***Connector & terminal*** ***(B25) No. 2 — Engine ground:***	Is the resistance less than 5 Ω?	Go to step **9.**	Repair open circuit between transmission harness connector and engine ground terminal.

	Step	Check	Yes	No
9	**CHECK POOR CONTACT.** Check poor contact in transmission harness connector.	Is there poor contact in transmission harness connector?	Repair poor contact in transmission harness connector.	Contact SOA Service Center.

BZ:DTC P0852 NEUTRAL SWITCH INPUT CIRCUIT HIGH (AT MODEL)

DTC DETECTING CONDITION:

- Two consecutive driving cycles with fault
- GENERAL DESCRIPTION <Ref. to GD(H4SO)-173, DTC P0852 NEUTRAL SWITCH INPUT CIRCUIT HIGH (AT MODEL), Diagnostic Trouble Code (DTC) Detecting Criteria.>

TROUBLE SYMPTOM:

Erroneous idling

CAUTION:

After repair or replacement of faulty parts, conduct Clear Memory Mode <Ref. to EN(H4SO)(diag)-43, OPERATION, Clear Memory Mode.> and Inspection Mode <Ref. to EN(H4SO)(diag)-35, PROCEDURE, Inspection Mode.>.

WIRING DIAGRAM:

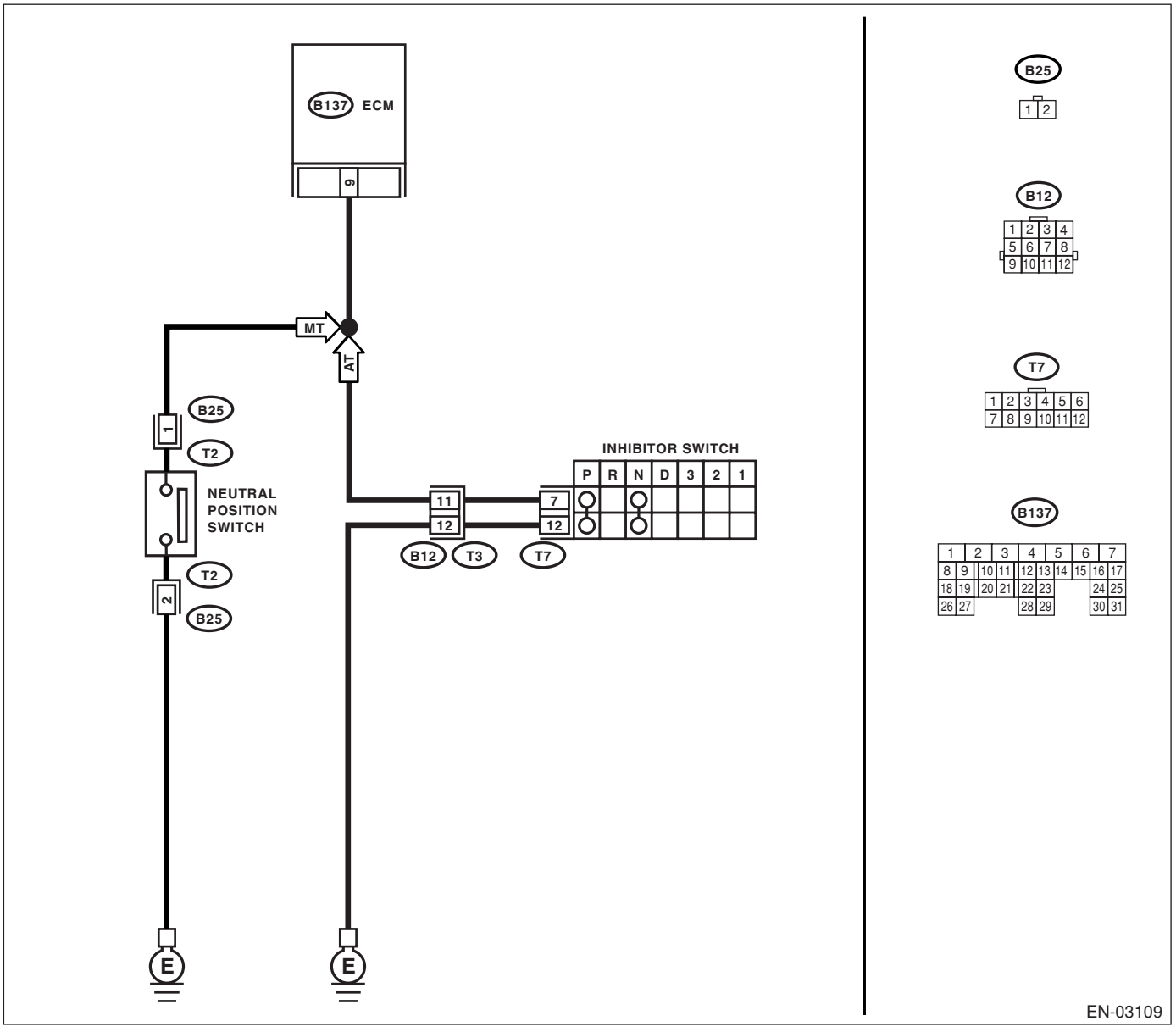

	Step	Check	Yes	No
1	**CHECK SELECTOR CABLE.**	Is there any fault in selector cable?	Repair or adjust selector cable. <Ref. to CS-26, INSPECTION, Select Cable.>	Go to step **2.**
2	**CHECK INPUT SIGNAL FOR ECM.** 1) Turn the ignition switch to ON. 2) Measure the voltage between ECM and chassis ground in select lever "N" and "P" ranges. ***Connector & terminal*** ***(B137) No. 9 (+) — Chassis ground (−):***	Is the voltage less than 1 V?	Go to step **3.**	Go to step **5.**
3	**CHECK INPUT SIGNAL FOR ECM.** Measure the voltage between ECM and chassis ground in select lever except for "N" and "P" ranges. ***Connector & terminal*** ***(B137) No. 9 (+) — Chassis ground (−):***	Is the voltage more than 10 V?	Go to step **4.**	Go to step **5.**
4	**CHECK POOR CONTACT.** Check poor contact in ECM connector.	Is there poor contact in ECM connector?	Repair poor contact in ECM connector.	Contact SOA Service Center.
5	**CHECK INPUT SIGNAL FOR ECM.** Measure the voltage between ECM and chassis ground. ***Connector & terminal*** ***(B137) No. 9 (+) — Chassis ground (−):***	Is the voltage more than 10 V?	Repair battery short circuit in harness between ECM and inhibitor switch connector.	Go to step **6.**
6	**CHECK HARNESS BETWEEN ECM AND INHIBITOR SWITCH CONNECTOR.** 1) Turn the ignition switch to OFF. 2) Disconnect the connectors from ECM and inhibitor switch. 3) Measure the resistance of harness between ECM and inhibitor switch connector. ***Connector & terminal*** ***(B137) No. 9 — (T7) No. 7:***	Is the resistance less than 1 Ω?	Go to step **7.**	Repair harness and connector. NOTE: In this case, repair the following: • Open circuit in harness between ECM and inhibitor switch connector • Poor contact in coupling connector • Poor contact in inhibitor switch connector • Poor contact in ECM connector

	Step	Check	Yes	No
7	**CHECK INHIBITOR SWITCH GROUND LINE.** Measure the resistance of harness between inhibitor switch connector and engine ground. ***Connector & terminal*** ***(T7) No. 12 — Engine ground:***	Is the resistance less than 5 Ω?	Go to step **8.**	Repair open circuit in harness between inhibitor switch connector and starter motor ground line. NOTE: In this case, repair the following: • Open circuit in harness between inhibitor switch connector and starter motor ground line • Poor contact in starter motor connector • Poor contact in starter motor ground • Starter motor
8	**CHECK INHIBITOR SWITCH.** Measure the resistance between inhibitor switch connector receptacle's terminals in select lever "N" and "P" ranges. ***Terminals*** ***No. 7 — No. 12:***	Is the resistance less than 1 Ω?	Contact SOA Service Center.	Replace the inhibitor switch.<Ref. to 4AT-48, Inhibitor Switch.>

CA:DTC P0852 NEUTRAL SWITCH INPUT CIRCUIT HIGH (MT MODEL)

DTC DETECTING CONDITION:

- Two consecutive driving cycles with fault
- GENERAL DESCRIPTION <Ref. to GD(H4SO)-174, DTC P0852 NEUTRAL SWITCH INPUT CIRCUIT HIGH (MT MODEL), Diagnostic Trouble Code (DTC) Detecting Criteria.>

TROUBLE SYMPTOM:

Erroneous idling

CAUTION:

After repair or replacement of faulty parts, conduct CLEAR MEMORY MODE <Ref. to EN(H4SO)(diag)-43, OPERATION, Clear Memory Mode.> and INSPECTION MODE <Ref. to EN(H4SO)(diag)-35, PROCEDURE, Inspection Mode.>.

WIRING DIAGRAM:

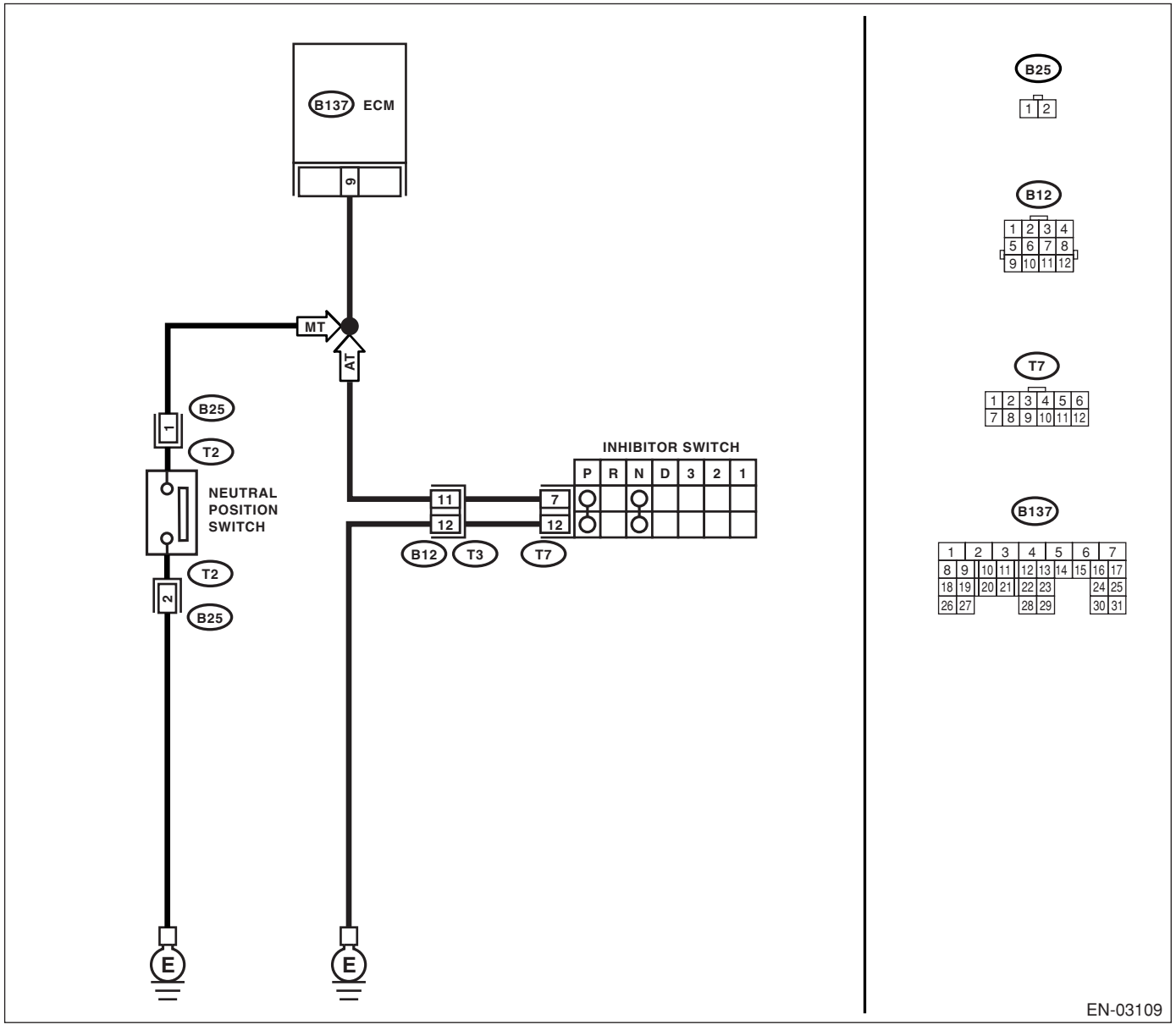

	Step	Check	Yes	No
1	**CHECK INPUT SIGNAL FOR ECM.** 1) Turn ignition switch to ON. 2) Place the shift lever in neutral. 3) Measure the voltage between ECM and chassis ground. ***Connector & terminal*** ***(B137) No. 9 (+) — Chassis ground (−):***	Is the voltage more than 10 V?	Go to step **2.**	Go to step **4.**
2	**CHECK INPUT SIGNAL FOR ECM.** 1) Place the shift lever in a position except for neutral. 2) Measure the voltage between ECM and chassis ground. ***Connector & terminal*** ***(B137) No. 9 (+) — Chassis ground (−):***	Is the voltage less than 1 V?	Go to step **3.**	Go to step **5.**
3	**CHECK POOR CONTACT.** Check poor contact in ECM connector.	Is there poor contact in ECM connector?	Repair poor contact in ECM connector.	Contact SOA Service Center.
4	**CHECK NEUTRAL SWITCH.** 1) Place the shift lever in a position except for neutral. 2) Measure the resistance between transmission harness connector terminals. ***Connector & terminal*** ***(T2) No. 1 — No. 2:***	Is the resistance less than 1 Ω?	Go to step **5.**	Repair open circuit in transmission harness or replace neutral switch.
5	**CHECK HARNESS BETWEEN ECM AND NEUTRAL SWITCH CONNECTOR.** 1) Disconnect the connector from ECM. 2) Measure the resistance of harness between ECM and transmission harness connector. ***Connector & terminal*** ***(B137) No. 9 — (B25) No. 1:***	Is the resistance less than 1 Ω?	Go to step **6.**	Repair open circuit in harness between ECM and transmission harness connector.
6	**CHECK HARNESS BETWEEN ECM AND NEUTRAL SWITCH CONNECTOR.** Measure the resistance of harness between transmission harness connector and engine ground. ***Connector & terminal*** ***(B25) No. 2 — Engine ground:***	Is the resistance less than 5 Ω?	Go to step **7.**	Repair harness and connector. NOTE: In this case, repair the following: • Open circuit in harness between transmission harness connector and engine ground • Poor contact in coupling connector
7	**CHECK POOR CONTACT.** Check poor contact in transmission harness connector.	Is there a poor contact in the transmission harness connector?	Repair poor contact in transmission harness connector.	Contact SOA Service Center.

CB:DTC P1152 O2 SENSOR CIRCUIT RANGE/PERFORMANCE (LOW) (BANK1 SENSOR1)

DTC DETECTING CONDITION:

- Two consecutive driving cycles with fault
- GENERAL DESCRIPTION <Ref. to GD(H4SO)-175, DTC P1152 O2 SENSOR CIRCUIT RANGE/PERFORMANCE (LOW) (BANK1 SENSOR1), Diagnostic Trouble Code (DTC) Detecting Criteria.>

CAUTION:

After repair or replacement of faulty parts, conduct CLEAR MEMORY MODE <Ref. to EN(H4SO)(diag)-43, OPERATION, Clear Memory Mode.> and INSPECTION MODE <Ref. to EN(H4SO)(diag)-35, PROCEDURE, Inspection Mode.>.

WIRING DIAGRAM:

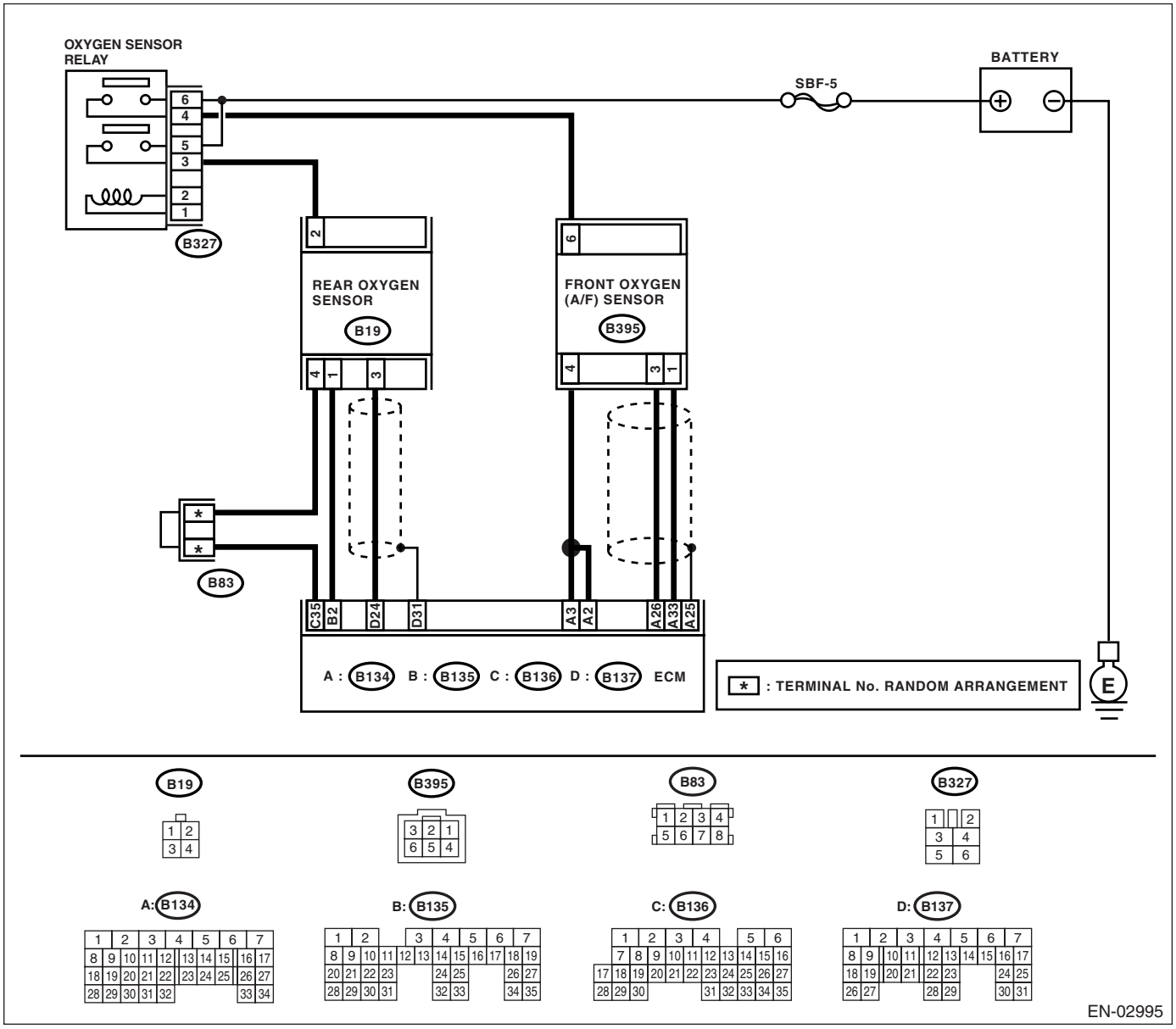

	Step	Check	Yes	No
1	**CHECK HARNESS BETWEEN ECM AND FRONT OXYGEN (A/F) SENSOR CONNECTOR.** 1) Turn the ignition switch to OFF. 2) Disconnect the connectors from ECM and front oxygen (A/F) sensor connector. 3) Measure the resistance of harness between ECM and front oxygen (A/F) sensor connector. ***Connector & terminal*** ***(B134) No. 26 — (E395) No. 3:*** ***(B134) No. 33 — (E395) No. 1:***	Is the measured value less than 1 Ω?	Go to step **2.**	Repair the harness and connector. NOTE: In this case, repair the following: • Open circuit in harness between ECM and front oxygen (A/F) sensor connector • Poor contact in front oxygen (A/F) sensor connector • Poor contact in ECM connector
2	**CHECK POOR CONTACT.** Check poor contact in front oxygen (A/F) sensor connector.	Is there poor contact in front oxygen (A/F) sensor connector?	Repair the poor contact in front oxygen (A/F) sensor connector.	Replace the front oxygen (A/F) sensor. <Ref. to FU(H4SO)-32, Front Oxygen (A/F) Sensor.>

CC:DTC P1153 O2 SENSOR CIRCUIT RANGE/PERFORMANCE (HIGH) (BANK1 SENSOR1)

DTC DETECTING CONDITION:

- Two consecutive driving cycles with fault
- GENERAL DESCRIPTION <Ref. to GD(H4SO)-177, DTC P1153 O2 SENSOR CIRCUIT RANGE/PERFORMANCE (HIGH) (BANK1 SENSOR1), Diagnostic Trouble Code (DTC) Detecting Criteria.>

CAUTION:

After repair or replacement of faulty parts, conduct CLEAR MEMORY MODE <Ref. to EN(H4SO)(diag)-43, OPERATION, Clear Memory Mode.> and INSPECTION MODE <Ref. to EN(H4SO)(diag)-35, PROCEDURE, Inspection Mode.>.

WIRING DIAGRAM:

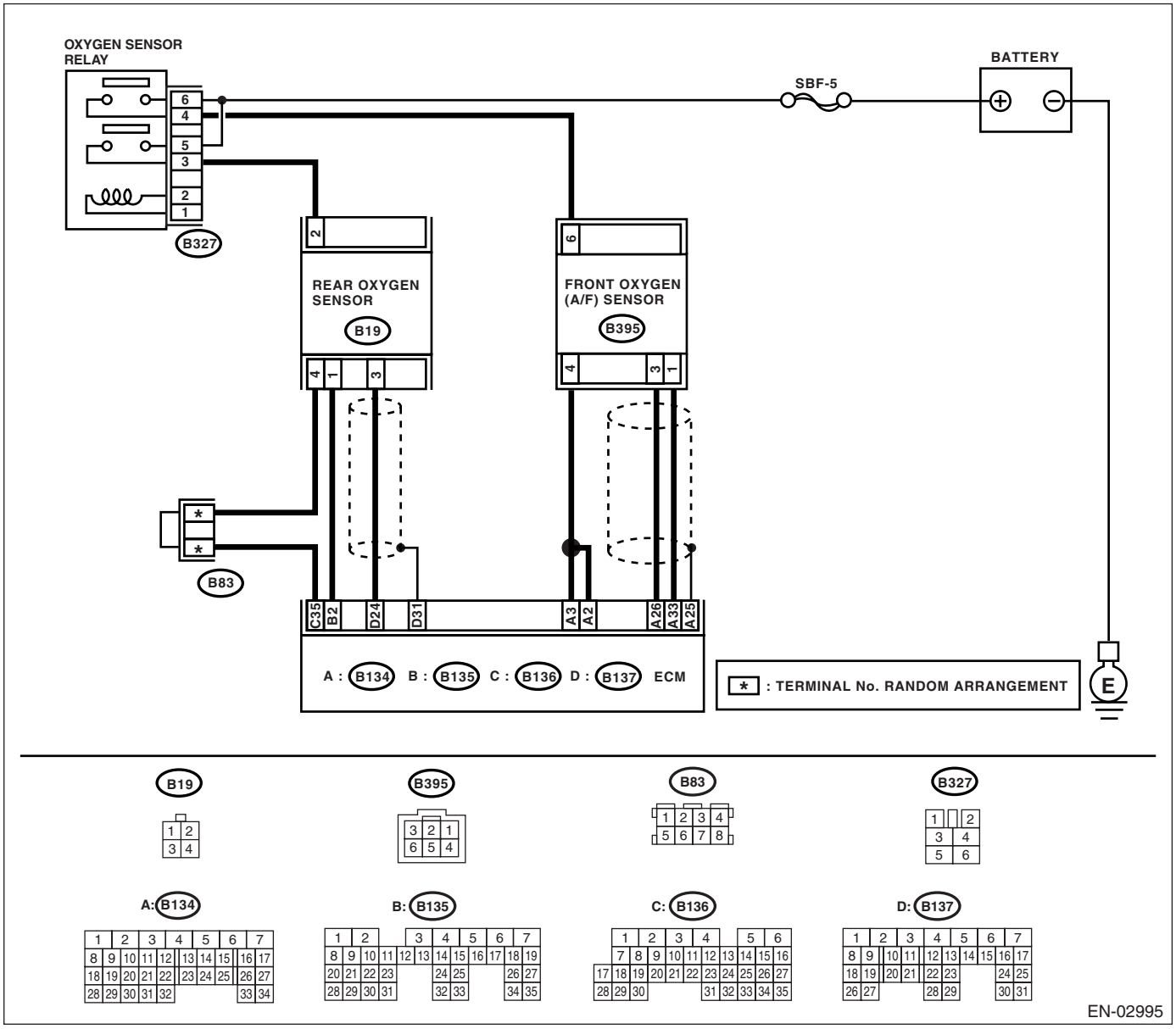

	Step	Check	Yes	No
1	**CHECK HARNESS BETWEEN ECM AND FRONT OXYGEN (A/F) SENSOR CONNECTOR.** 1) Turn the ignition switch to OFF. 2) Disconnect the connector from ECM. 3) Measure the resistance of harness between ECM connector and chassis ground. ***Connector & terminal*** ***(B134) No. 26 — Chassis ground:***	Is the measured value more than 1 MΩ?	Repair the ground short circuit in harness between ECM and front oxygen (A/F) sensor connector.	Go to step **2.**
2	**CHECK HARNESS BETWEEN ECM AND FRONT OXYGEN (A/F) SENSOR CONNECTOR.** Measure the resistance of harness between ECM connector and chassis ground. ***Connector & terminal*** ***(B134) No. 33 — Chassis ground:***	Is the measured value more than 1 MΩ?	Repair the ground short circuit in harness between ECM and front oxygen (A/F) sensor connector.	Go to step **3.**
3	**CHECK OUTPUT SIGNAL FOR ECM.** 1) Connect the connector to ECM. 2) Turn the ignition switch to ON. 3) Measure the voltage between ECM connector and chassis ground. ***Connector & terminal*** ***(B134) No. 26 (+) — Chassis ground (−):***	Is the measured value more than 4.5 V?	Go to step **4.**	Go to step **5.**
4	**CHECK OUTPUT SIGNAL FOR ECM.** Measure the voltage between ECM connector and chassis ground. ***Connector & terminal*** ***(B134) No. 26 (+) — Chassis ground (−):***	Is the measured value more than 10 V?	Repair the battery short circuit in harness between ECM and front oxygen (A/F) sensor connector. After repair, replace the ECM. <Ref. to FU(H4SO)-35, Engine Control Module (ECM).>	Repair the poor contact in ECM connector.
5	**CHECK OUTPUT SIGNAL FOR ECM.** Measure the voltage between ECM connector and chassis ground. ***Connector & terminal*** ***(B134) No. 33 (+) — Chassis ground (−):***	Is the measured value more than 4.95 V?	Go to step **6.**	Replace the front oxygen (A/F) sensor. <Ref. to FU(H4SO)-32, Front Oxygen (A/F) Sensor.>
6	**CHECK OUTPUT SIGNAL FOR ECM.** Measure the voltage between ECM connector and chassis ground. ***Connector & terminal*** ***(B134) No. 33 (+) — Chassis ground (−):***	Is the measured value more than 10 V?	Repair the battery short circuit in harness between ECM and front oxygen (A/F) sensor connector. After repair, replace the ECM. <Ref. to FU(H4SO)-35, Engine Control Module (ECM).>	Repair the poor contact in ECM connector.

CD:DTC P1160 RETURN SPRING FAILURE

NOTE:
For diagnostic procedure, refer to DTC P2101. <Ref. to EN(H4SO)(diag)-270, DTC P2101 THROTTLE ACTUATOR CONTROL MOTOR CIRCUIT RANGE/PERFORMANCE, Diagnostic Procedure with Diagnostic Trouble Code (DTC).>

CE:DTC P1400 FUEL TANK PRESSURE CONTROL SOLENOID VALVE CIRCUIT LOW

DTC DETECTING CONDITION:

- Two consecutive driving cycles with fault
- GENERAL DESCRIPTION <Ref. to GD(H4SO)-182, DTC P1400 FUEL TANK PRESSURE CONTROL SOLENOID VALVE CIRCUIT LOW, Diagnostic Trouble Code (DTC) Detecting Criteria.>

CAUTION:
After repair or replacement of faulty parts, conduct CLEAR MEMORY MODE <Ref. to EN(H4SO)(diag)-43, OPERATION, Clear Memory Mode.> and INSPECTION MODE <Ref. to EN(H4SO)(diag)-35, PROCEDURE, Inspection Mode.>.

WIRING DIAGRAM:

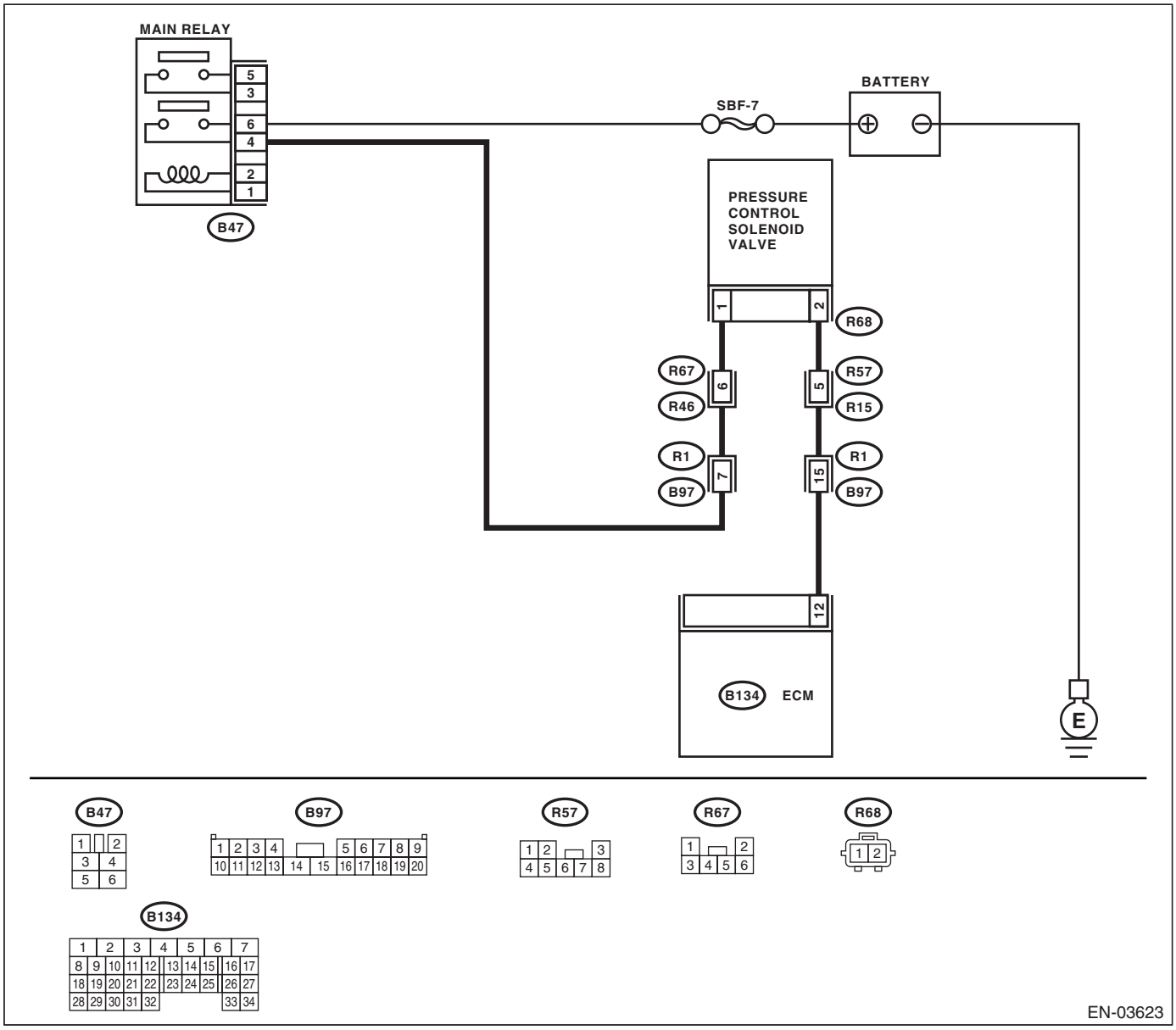

	Step	Check	Yes	No
1	**CHECK OUTPUT SIGNAL FROM ECM.** 1) Turn ignition switch to ON. 2) Measure the voltage between ECM and chassis ground. ***Connector & terminal*** ***(B134) No. 12 (+) — Chassis ground (−):***	Is the voltage more than 10 V?	Go to step **2.**	Go to step **3.**
2	**CHECK POOR CONTACT.** Check poor contact in ECM connector.	Is there poor contact in ECM connector?	Repair poor contact in ECM connector.	Contact SOA Service Center.
3	**CHECK HARNESS BETWEEN PRESSURE CONTROL SOLENOID VALVE AND ECM CONNECTOR.** 1) Turn ignition switch to OFF. 2) Disconnect the connectors from pressure control solenoid valve and ECM. 3) Measure the resistance of harness between pressure control solenoid valve connector and chassis ground. ***Connector & terminal*** ***(R68) No. 2 — Chassis ground:***	Is the resistance less than 10 Ω?	Repair short circuit to ground in harness between ECM and pressure control solenoid valve connector.	Go to step **4.**
4	**CHECK HARNESS BETWEEN PRESSURE CONTROL SOLENOID VALVE AND ECM CONNECTOR.** Measure the resistance of harness between ECM and pressure control solenoid valve connector. ***Connector & terminal*** ***(B134) No. 12 — (R68) No. 2:***	Is the resistance less than 1 Ω?	Go to step **5.**	Repair harness and connector. NOTE: In this case, repair the following: • Open circuit in harness between ECM and pressure control solenoid valve connector • Poor contact in coupling connector
5	**CHECK PRESSURE CONTROL SOLENOID VALVE.** Measure the resistance between pressure control solenoid valve terminals. ***Terminals*** ***No. 1 — No. 2:***	Is the resistance 10 — 100 Ω?	Go to step **6.**	Replace the pressure control solenoid valve. <Ref. to EC(H4SO)-13, Pressure Control Solenoid Valve.>
6	**CHECK POWER SUPPLY TO PRESSURE CONTROL SOLENOID VALVE.** 1) Turn ignition switch to ON. 2) Measure the voltage between pressure control solenoid valve and chassis ground. ***Connector & terminal*** ***(R68) No. 1 (+) — Chassis ground (−):***	Is the voltage more than 10 V?	Go to step **7.**	Repair harness and connector. NOTE: In this case, repair the following: • Open circuit in harness between main relay and pressure control solenoid valve connector • Poor contact in coupling connector • Poor contact in main relay connector
7	**CHECK POOR CONTACT.** Check poor contact in pressure control solenoid valve connector.	Is there poor contact in pressure control solenoid valve connector?	Repair poor contact in pressure control solenoid valve connector.	Contact SOA Service Center.

CF:DTC P1420 FUEL TANK PRESSURE CONTROL SOL. VALVE CIRCUIT HIGH

DTC DETECTING CONDITION:

- Two consecutive driving cycles with fault
- GENERAL DESCRIPTION <Ref. to GD(H4SO)-184, DTC P1420 FUEL TANK PRESSURE CONTROL SOL. VALVE CIRCUIT HIGH, Diagnostic Trouble Code (DTC) Detecting Criteria.>

CAUTION:
After repair or replacement of faulty parts, conduct CLEAR MEMORY MODE <Ref. to EN(H4SO)(diag)-43, OPERATION, Clear Memory Mode.> and INSPECTION MODE <Ref. to EN(H4SO)(diag)-35, PROCEDURE, Inspection Mode.>.

WIRING DIAGRAM:

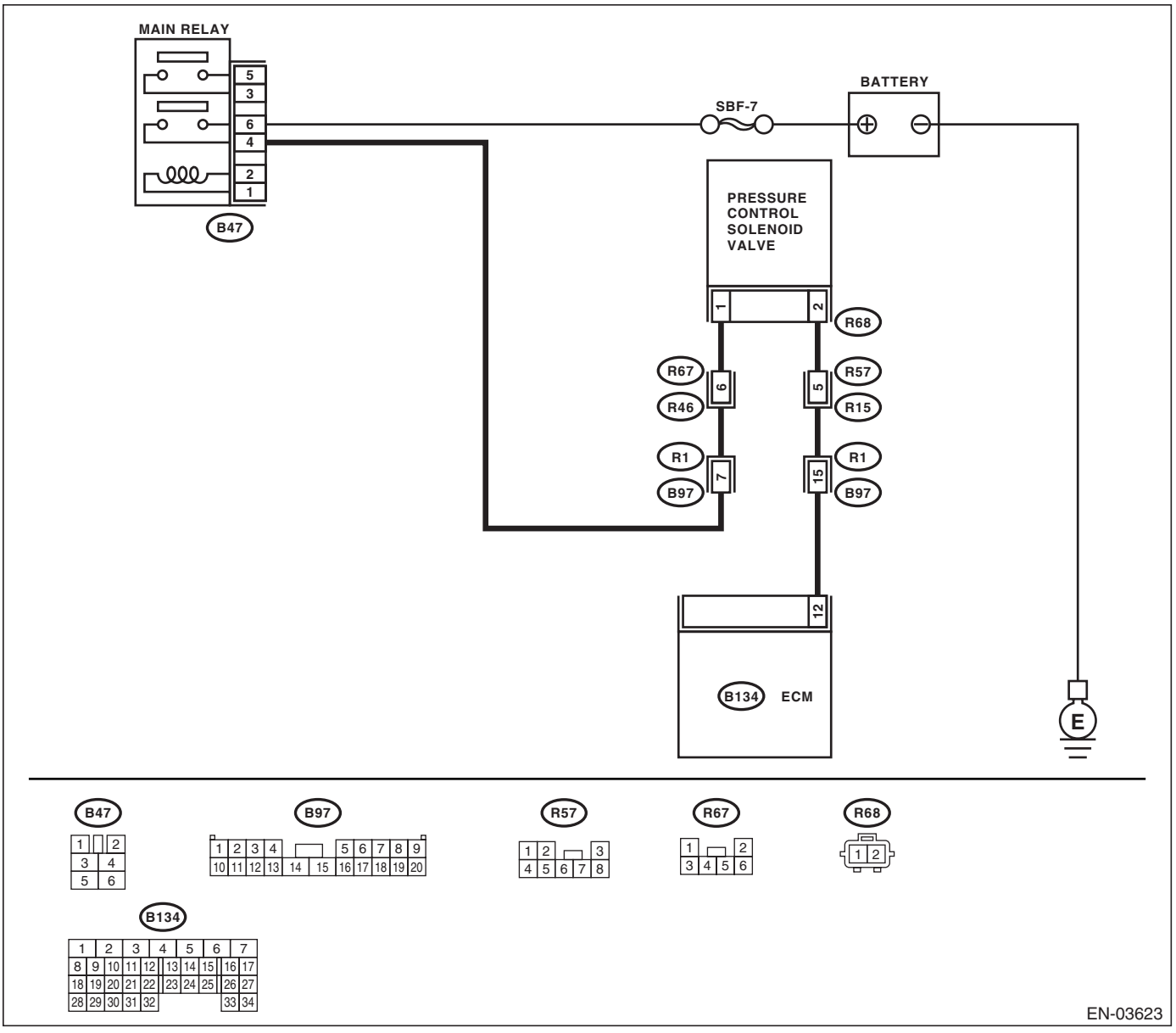

	Step	Check	Yes	No
1	**CHECK INPUT SIGNAL FOR ECM.** 1) Turn ignition switch to OFF. 2) Connect the test mode connector at the lower portion of instrument panel (on the driver's side). 3) Turn ignition switch to ON. 4) While operating the pressure control solenoid valve, measure voltage between ECM and chassis ground. NOTE: Pressure control solenoid valve operation can be executed using Subaru Select Monitor. For the procedure, refer to "Compulsory Valve Operation Check Mode". <Ref. to EN(H4SO)(diag)-44, Compulsory Valve Operation Check Mode.> ***Connector & terminal*** ***(B134) No. 12 (+) — Chassis ground (–):***	Is the voltage 0 — 10 V?	Go to step **2.**	The malfunction indicator light may light up, however, the circuit is returned to the normal status at the moment. In this case, repair poor contact in ECM connector.
2	**CHECK INPUT SIGNAL FOR ECM.** 1) Turn ignition switch to ON. 2) Measure the voltage between ECM and chassis ground. ***Connector & terminal*** ***(B134) No. 12 (+) — Chassis ground (–):***	Is the voltage more than 10 V?	Go to step **4.**	Go to step **3.**
3	**CHECK FOR POOR CONTACT.** Check for poor contact in ECM connector.	Is there poor contact in ECM connector?	Repair poor contact in ECM connector.	Replace the ECM. <Ref. to FU(H4SO)-35, Engine Control Module (ECM).>
4	**CHECK HARNESS BETWEEN PRESSURE CONTROL SOLENOID VALVE AND ECM CONNECTOR.** 1) Turn ignition switch to OFF. 2) Disconnect the connector from pressure control solenoid valve. 3) Turn ignition switch to ON. 4) Measure the voltage between ECM and chassis ground. ***Connector & terminal*** ***(B134) No. 12 (+) — Chassis ground (–):***	Is the voltage more than 10 V?	Repair short circuit to battery in harness between ECM and pressure control solenoid valve connector. After repair, replace the ECM. <Ref. to FU(H4SO)-35, Engine Control Module (ECM).>	Go to step **5.**
5	**CHECK PRESSURE CONTROL SOLENOID VALVE.** 1) Turn ignition switch to OFF. 2) Measure the resistance between pressure control solenoid valve terminals. ***Terminals*** ***No. 1 — No. 2:***	Is the resistance less than 1 Ω?	Replace the pressure control solenoid valve <Ref. to EC(H4SO)-13, Pressure Control Solenoid Valve.> and the ECM <Ref. to FU(H4SO)-35, Engine Control Module (ECM).>.	Go to step **6.**
6	**CHECK FOR POOR CONTACT.** Check for poor contact in ECM connector.	Is there poor contact in ECM connector?	Repair poor contact in ECM connector.	Replace the ECM. <Ref. to FU(H4SO)-35, Engine Control Module (ECM).>

CG:DTC P1443 VENT CONTROL SOLENOID VALVE FUNCTION PROBLEM

DTC DETECTING CONDITION:

- Detect as soon as malfunction occurs.
- GENERAL DESCRIPTION <Ref. to GD(H4SO)-186, DTC P1443 VENT CONTROL SOLENOID VALVE FUNCTION PROBLEM, Diagnostic Trouble Code (DTC) Detecting Criteria.>

TROUBLE SYMPTOM:

Improper fuel supply

CAUTION:

After repair or replacement of faulty parts, conduct CLEAR MEMORY MODE <Ref. to EN(H4SO)(diag)-43, OPERATION, Clear Memory Mode.> and INSPECTION MODE <Ref. to EN(H4SO)(diag)-35, PROCEDURE, Inspection Mode.>.

WIRING DIAGRAM:

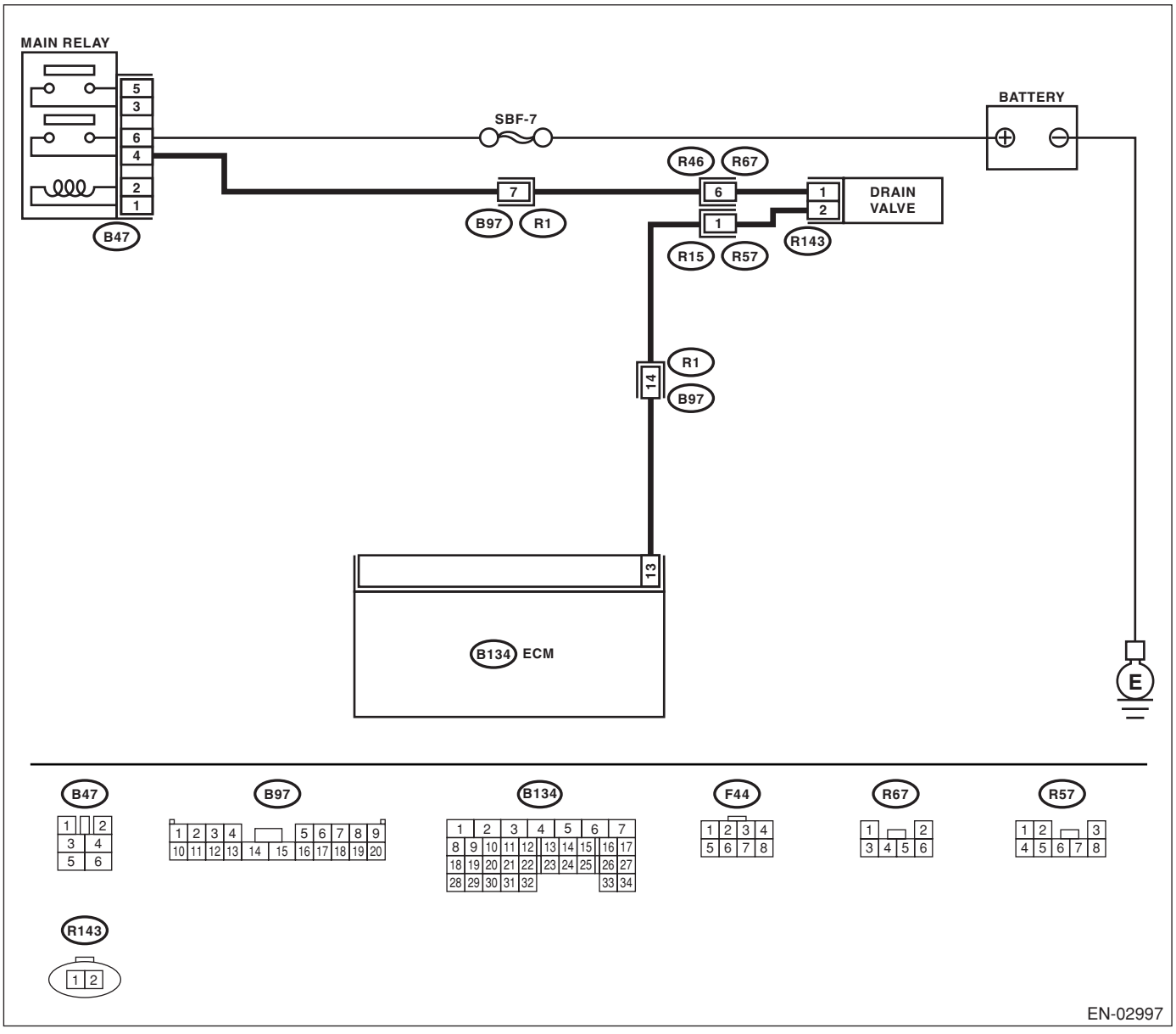

EN-02997

	Step	Check	Yes	No
1	**CHECK FOR ANY OTHER DTC ON DISPLAY.**	Is any other DTC displayed?	Inspect the relevant DTC using "List of Diagnostic Trouble Code (DTC)". <Ref. to EN(H4SO)(diag)-70, List of Diagnostic Trouble Code (DTC).>	Go to step **2.**
2	**CHECK DRAIN HOSE.** Check the drain hose for clogging.	Is there clogging in the drain hose?	Replace the drain hose.	Go to step **3.**
3	**CHECK DRAIN VALVE OPERATION.** 1) Turn ignition switch to OFF. 2) Connect the test mode connector at the lower portion of instrument panel (on the driver's side). 3) Turn ignition switch to ON. 4) Check the drain valve. NOTE: Drain valve operation can also be executed using Subaru Select Monitor. For the procedure, refer to "Compulsory Valve Operation Check Mode". <Ref. to EN(H4SO)(diag)-44, Compulsory Valve Operation Check Mode.>	Does the drain valve operate?	Contact SOA Service Center.	Replace the drain valve. <Ref. to EC(H4SO)-16, Drain Valve.>

CH:DTC P1446 FUEL TANK SENSOR CONTROL VALVE CIRCUIT LOW

DTC DETECTING CONDITION:

- Two consecutive driving cycles with fault
- GENERAL DESCRIPTION <Ref. to GD(H4SO)-188, DTC P1446 FUEL TANK SENSOR CONTROL VALVE CIRCUIT LOW, Diagnostic Trouble Code (DTC) Detecting Criteria.>

CAUTION:
After repair or replacement of faulty parts, conduct CLEAR MEMORY MODE <Ref. to EN(H4SO)(diag)-43, OPERATION, Clear Memory Mode.> and INSPECTION MODE <Ref. to EN(H4SO)(diag)-35, PROCEDURE, Inspection Mode.>.

WIRING DIAGRAM:

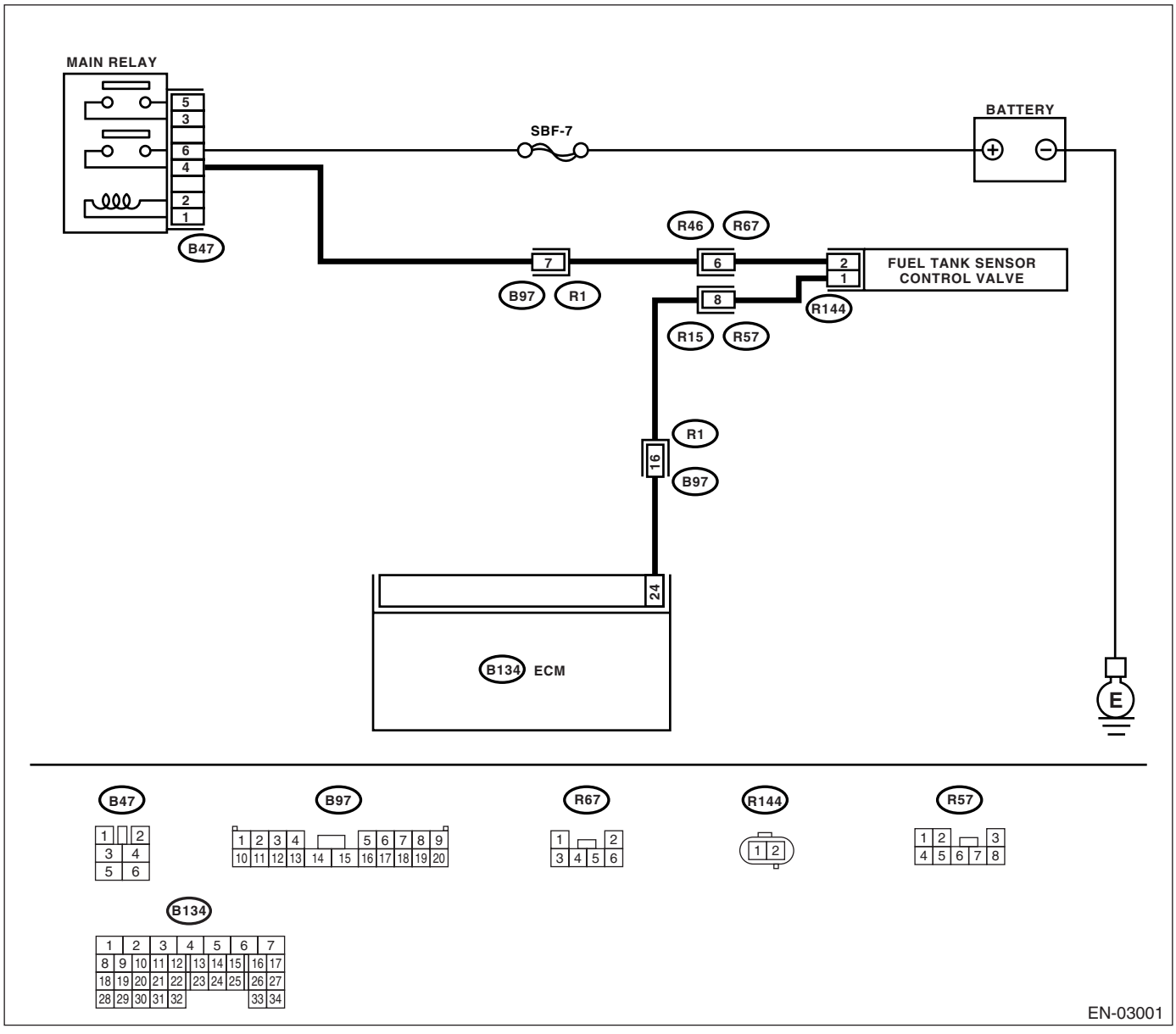

	Step	Check	Yes	No
1	**CHECK OUTPUT SIGNAL FROM ECM.** 1) Turn ignition switch to ON. 2) Measure the voltage between ECM and chassis ground. ***Connector & terminal*** ***(B134) No. 24 (+) — Chassis ground (−):***	Is the voltage more than 10 V?	Go to step **2.**	Go to step **3.**
2	**CHECK POOR CONTACT.** Check poor contact in ECM connector.	Is there poor contact in ECM connector?	Repair poor contact in ECM connector.	The malfunction indicator light may light up, however, the circuit is returned to the normal status at the moment. (However, the possibility of poor contact still remains.) NOTE: In this case, repair the following: • Poor contact in fuel tank sensor control valve connector • Poor contact in ECM connector • Poor contact in coupling connector
3	**CHECK HARNESS BETWEEN FUEL TANK SENSOR CONTROL VALVE AND ECM CONNECTOR.** 1) Turn ignition switch to OFF. 2) Disconnect the connectors from fuel tank sensor control valve and ECM. 3) Measure the resistance of harness between fuel tank sensor control valve connector and chassis ground. ***Connector & terminal*** ***(R144) No. 1 — Chassis ground:***	Is the resistance more than 1 MΩ?	Go to step **4.**	Repair short circuit to ground in harness between ECM and fuel tank sensor control valve connector.
4	**CHECK HARNESS BETWEEN FUEL TANK SENSOR CONTROL VALVE AND ECM CONNECTOR.** Measure the resistance of harness between ECM and fuel tank sensor control valve connector. ***Connector & terminal*** ***(B134) No. 24 — (R144) No. 1:***	Is the resistance less than 1 Ω?	Go to step **5.**	Repair harness and connector. NOTE: In this case, repair the following: • Open circuit in harness between ECM and fuel tank sensor control valve connector • Poor contact in coupling connector
5	**CHECK FUEL TANK SENSOR CONTROL VALVE.** Measure the resistance between fuel tank sensor control valve terminals. ***Terminals*** ***No. 1 — No. 2:***	Is the resistance 10 — 100 Ω?	Go to step **6.**	Replace the fuel tank sensor control valve. <Ref. to EC(H4SO)-16, Drain Valve.>

	Step	Check	Yes	No
6	**CHECK POWER SUPPLY TO FUEL TANK SENSOR CONTROL VALVE.** 1) Turn ignition switch to ON. 2) Measure the voltage between fuel tank sensor control valve and chassis ground. ***Connector & terminal*** ***(R144) No. 2 (+) — Chassis ground (−):***	Is the voltage more than 10 V?	Go to step **7.**	Repair harness and connector. NOTE: In this case, repair the following: • Open circuit in harness between main relay and fuel tank sensor control valve • Poor contact in coupling connector • Poor contact in main relay connector
7	**CHECK POOR CONTACT.** Check poor contact in fuel tank sensor control valve connector.	Is there poor contact in fuel tank sensor control valve connector?	Repair poor contact in fuel tank sensor control valve connector.	Contact SOA Service Center.

CI: DTC P1447 FUEL TANK SENSOR CONTROL VALVE CIRCUIT HIGH

DTC DETECTING CONDITION:

- Two consecutive driving cycles with fault
- GENERAL DESCRIPTION <Ref. to GD(H4SO)-190, DTC P1447 FUEL TANK SENSOR CONTROL VALVE CIRCUIT HIGH, Diagnostic Trouble Code (DTC) Detecting Criteria.>

CAUTION:
After repair or replacement of faulty parts, conduct CLEAR MEMORY MODE <Ref. to EN(H4SO)(diag)-43, OPERATION, Clear Memory Mode.> and INSPECTION MODE <Ref. to EN(H4SO)(diag)-35, PROCEDURE, Inspection Mode.>.

WIRING DIAGRAM:

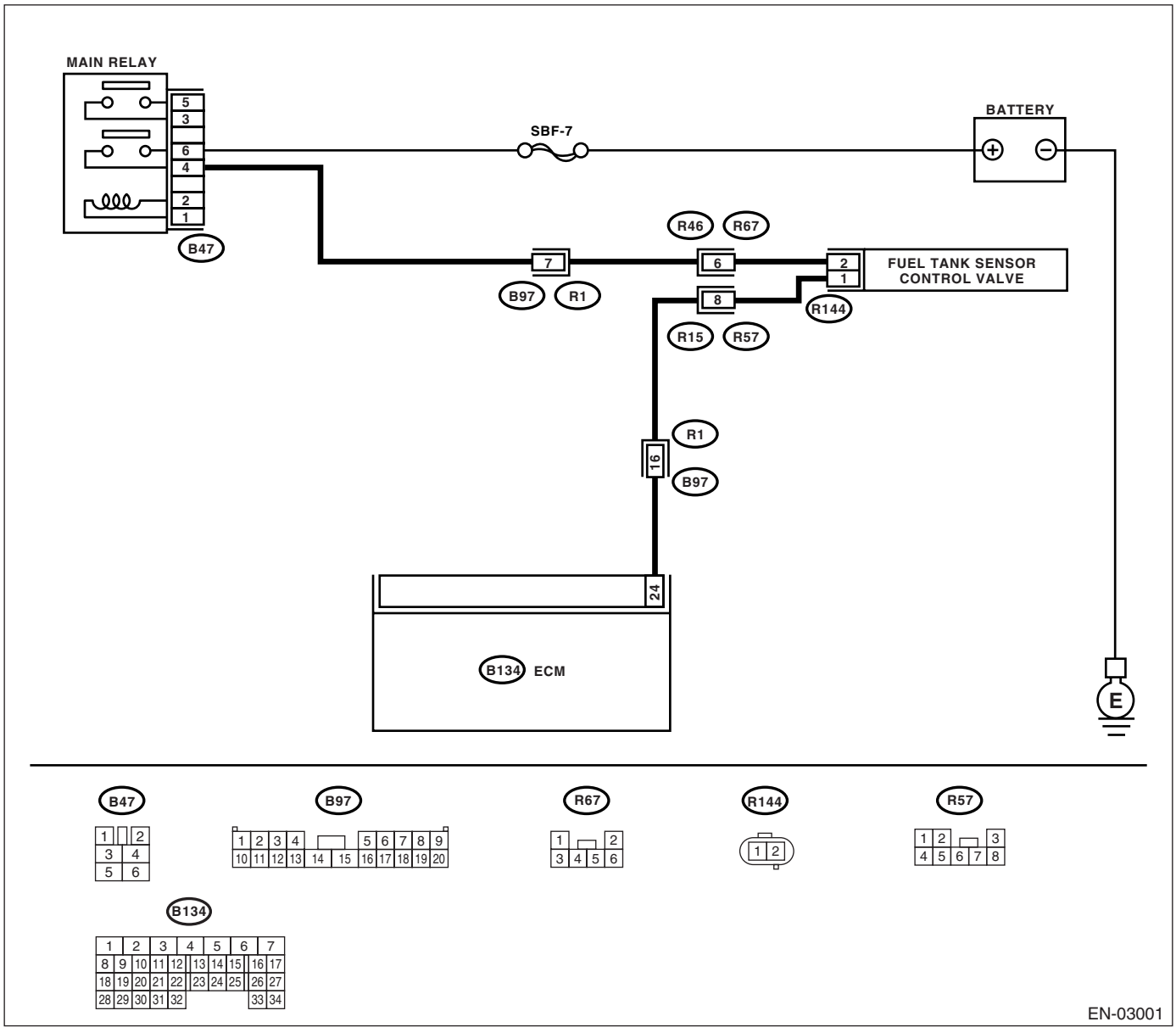

	Step	Check	Yes	No
1	**CHECK OUTPUT SIGNAL FROM ECM.** 1) Turn ignition switch to ON. 2) Measure the voltage between ECM and chassis ground. ***Connector & terminal*** ***(B134) No. 24 (+) — Chassis ground (−):***	Is the voltage more than 10 V?	Go to step **3.**	Go to step **2.**
2	**CHECK POOR CONTACT.** Check poor contact in ECM connector.	Is there poor contact in ECM connector?	Repair poor contact in ECM connector.	Replace the ECM. <Ref. to FU(H4SO)-35, Engine Control Module (ECM).>
3	**CHECK HARNESS BETWEEN FUEL TANK SENSOR CONTROL VALVE AND ECM CONNECTOR.** 1) Turn ignition switch to OFF. 2) Disconnect the connector from fuel tank sensor control valve. 3) Turn ignition switch to ON. 4) Measure the voltage between ECM and chassis ground. ***Connector & terminal*** ***(B134) No. 24 (+) — Chassis ground (−):***	Is the voltage more than 10 V?	Repair short circuit to battery in harness between ECM and fuel tank sensor control valve connector. After repair, replace the ECM. <Ref. to FU(H4SO)-35, Engine Control Module (ECM).>	Go to step **4.**
4	**CHECK FUEL TANK SENSOR CONTROL VALVE.** 1) Turn ignition switch to OFF. 2) Measure the resistance between fuel tank sensor control valve terminals. ***Terminals*** ***No. 1 — No. 2:***	Is the resistance less than 1 Ω?	Replace the fuel tank sensor control valve <Ref. to EC(H4SO)-16, Drain Valve.> and the ECM<Ref. to FU(H4SO)-35, Engine Control Module (ECM).> .	Go to step **5.**
5	**CHECK POOR CONTACT.** Check poor contact in ECM connector.	Is there poor contact in ECM connector?	Repair poor contact in ECM connector.	Replace the ECM. <Ref. to FU(H4SO)-35, Engine Control Module (ECM).>

CJ:DTC P1492 EGR SOLENOID VALVE SIGNAL #1 CIRCUIT MALFUNCTION (LOW INPUT)

NOTE:
For the diagnostic procedure, refer to DTC P1498. <Ref. to EN(H4SO)(diag)-249, DTC P1498 EGR SOLENOID VALVE SIGNAL #4 CIRCUIT MALFUNCTION (LOW INPUT), Diagnostic Procedure with Diagnostic Trouble Code (DTC).>

CK:DTC P1493 EGR SOLENOID VALVE SIGNAL #1 CIRCUIT MALFUNCTION (HIGH INPUT)

NOTE:
For the diagnostic procedure, refer to DTC P1499. <Ref. to EN(H4SO)(diag)-251, DTC P1499 EGR SOLENOID VALVE SIGNAL #4 CIRCUIT MALFUNCTION (HIGH INPUT), Diagnostic Procedure with Diagnostic Trouble Code (DTC).>

CL:DTC P1494 EGR SOLENOID VALVE SIGNAL #2 CIRCUIT MALFUNCTION (LOW INPUT)

NOTE:
For the diagnostic procedure, refer to DTC P1498. <Ref. to EN(H4SO)(diag)-249, DTC P1498 EGR SOLENOID VALVE SIGNAL #4 CIRCUIT MALFUNCTION (LOW INPUT), Diagnostic Procedure with Diagnostic Trouble Code (DTC).>

CM:DTC P1495 EGR SOLENOID VALVE SIGNAL #2 CIRCUIT MALFUNCTION (HIGH INPUT)

NOTE:
For the diagnostic procedure, refer to DTC P1499. <Ref. to EN(H4SO)(diag)-251, DTC P1499 EGR SOLENOID VALVE SIGNAL #4 CIRCUIT MALFUNCTION (HIGH INPUT), Diagnostic Procedure with Diagnostic Trouble Code (DTC).>

CN:DTC P1496 EGR SOLENOID VALVE SIGNAL #3 CIRCUIT MALFUNCTION (LOW INPUT)

NOTE:
For the diagnostic procedure, refer to DTC P1498. <Ref. to EN(H4SO)(diag)-249, DTC P1498 EGR SOLENOID VALVE SIGNAL #4 CIRCUIT MALFUNCTION (LOW INPUT), Diagnostic Procedure with Diagnostic Trouble Code (DTC).>

CO:DTC P1497 EGR SOLENOID VALVE SIGNAL #3 CIRCUIT MALFUNCTION (HIGH INPUT)

NOTE:
For the diagnostic procedure, refer to DTC P1499. <Ref. to EN(H4SO)(diag)-251, DTC P1499 EGR SOLENOID VALVE SIGNAL #4 CIRCUIT MALFUNCTION (HIGH INPUT), Diagnostic Procedure with Diagnostic Trouble Code (DTC).>

CP:DTC P1498 EGR SOLENOID VALVE SIGNAL #4 CIRCUIT MALFUNCTION (LOW INPUT)

DTC DETECTING CONDITION:

- Detect as soon as malfunction occurs.
- GENERAL DESCRIPTION <Ref. to GD(H4SO)-192, DTC P1492 EGR SOLENOID VALVE SIGNAL #1 CIRCUIT MALFUNCTION (LOW INPUT), Diagnostic Trouble Code (DTC) Detecting Criteria.>, <Ref. to GD(H4SO)-196, DTC P1494 EGR SOLENOID VALVE SIGNAL #2 CIRCUIT MALFUNCTION (LOW INPUT), Diagnostic Trouble Code (DTC) Detecting Criteria.>, <Ref. to GD(H4SO)-200, DTC P1496 EGR SOLENOID VALVE SIGNAL #3 CIRCUIT MALFUNCTION (LOW INPUT), Diagnostic Trouble Code (DTC) Detecting Criteria.> and <Ref. to GD(H4SO)-204, DTC P1498 EGR SOLENOID VALVE SIGNAL #4 CIRCUIT MALFUNCTION (LOW INPUT), Diagnostic Trouble Code (DTC) Detecting Criteria.>

TROUBLE SYMPTOM:

- Erroneous idling
- Poor driving performance
- Engine breathing

CAUTION:
After repair or replacement of faulty parts, conduct CLEAR MEMORY MODE <Ref. to EN(H4SO)(diag)-43, OPERATION, Clear Memory Mode.> and INSPECTION MODE <Ref. to EN(H4SO)(diag)-35, PROCEDURE, Inspection Mode.>.

WIRING DIAGRAM:

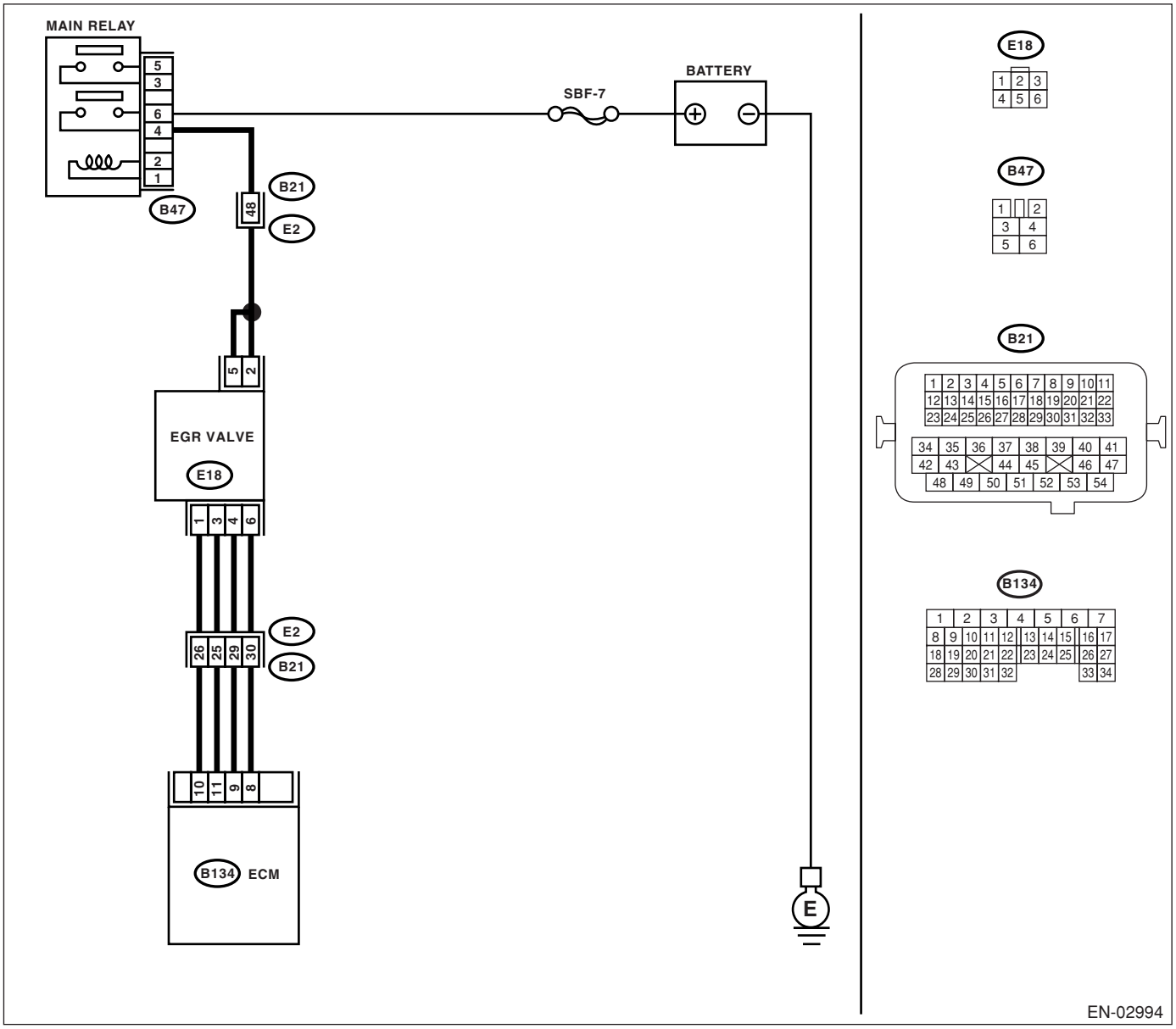

Step		Check	Yes	No
1	**CHECK POWER SUPPLY TO EGR SOLENOID VALVE.** 1) Turn ignition switch to OFF. 2) Disconnect connector from EGR solenoid valve. 3) Turn ignition switch to ON. 4) Measure the power supply voltage between EGR solenoid valve and engine ground. ***Connector & terminal*** ***(E18) No. 2 (+) — Engine ground (−):*** ***(E18) No. 5 (+) — Engine ground (−):***	Is the measured value more than 10 V?	Go to step **2.**	Repair harness and connector. NOTE: In this case, repair the following: • Open circuit in harness between EGR solenoid valve connector and main relay connector • Poor contact in coupling connector

	Step	Check	Yes	No
2	**CHECK HARNESS BETWEEN ECM AND EGR SOLENOID VALVE.** 1) Turn ignition switch to OFF. 2) Measure resistance between ECM and EGR solenoid valve connector. ***Connector & terminal*** ***DTC P1492; (B134) No. 11 — (E18) No. 3:*** ***DTC P1494; (B134) No. 10 — (E18) No. 1:*** ***DTC P1496; (B134) No. 9 — (E18) No. 4:*** ***DTC P1498; (B134) No. 8 — (E18) No. 6:***	Is the measured value less than 1 Ω?	Go to step **3.**	Repair harness and connector. NOTE: In this case, repair the following: • Open circuit in harness between EGR solenoid valve connector and main relay connector • Poor contact in coupling connector
3	**CHECK HARNESS BETWEEN ECM AND EGR SOLENOID VALVE.** 1) Disconnect connector from ECM. 2) Measure resistance between ECM connector and chassis ground. ***Connector & terminal*** ***DTC P1492; (B134) No. 11 — Chassis ground:*** ***DTC P1494; (B134) No. 10 — Chassis ground:*** ***DTC P1496; (B134) No. 9 — Chassis ground:*** ***DTC P1498; (B134) No. 8 — Chassis ground:***	Is the measured value more than 1 MΩ?	Go to step **4.**	Repair open or ground short circuit in harness between ECM and EGR solenoid valve connector.
4	**CHECK POOR CONTACT.** Check poor contact in ECM and EGR solenoid valve connector.	Is there poor contact in ECM or EGR solenoid valve connector?	Repair poor contact in ECM or EGR solenoid valve connector.	Replace EGR solenoid valve. <Ref. to FU(H4SO)-28, EGR Valve.>

CQ:DTC P1499 EGR SOLENOID VALVE SIGNAL #4 CIRCUIT MALFUNCTION (HIGH INPUT)

DTC DETECTING CONDITION:

- Detect as soon as malfunction occurs.
- GENERAL DESCRIPTION <Ref. to GD(H4SO)-194, DTC P1493 EGR SOLENOID VALVE SIGNAL #1 CIRCUIT MALFUNCTION (HIGH INPUT), Diagnostic Trouble Code (DTC) Detecting Criteria.>, <Ref. to GD(H4SO)-198, DTC P1495 EGR SOLENOID VALVE SIGNAL #2 CIRCUIT MALFUNCTION (HIGH INPUT), Diagnostic Trouble Code (DTC) Detecting Criteria.>, <Ref. to GD(H4SO)-202, DTC P1497 EGR SOLENOID VALVE SIGNAL #3 CIRCUIT MALFUNCTION (HIGH INPUT), Diagnostic Trouble Code (DTC) Detecting Criteria.> and <Ref. to GD(H4SO)-206, DTC P1499 EGR SOLENOID VALVE SIGNAL #4 CIRCUIT MALFUNCTION (HIGH INPUT), Diagnostic Trouble Code (DTC) Detecting Criteria.>

TROUBLE SYMPTOM:

- Erroneous idling
- Poor driving performance
- Engine breathing

CAUTION:

After repair or replacement of faulty parts, conduct CLEAR MEMORY MODE <Ref. to EN(H4SO)(diag)-43, OPERATION, Clear Memory Mode.> and INSPECTION MODE <Ref. to EN(H4SO)(diag)-35, PROCEDURE, Inspection Mode.>.

WIRING DIAGRAM:

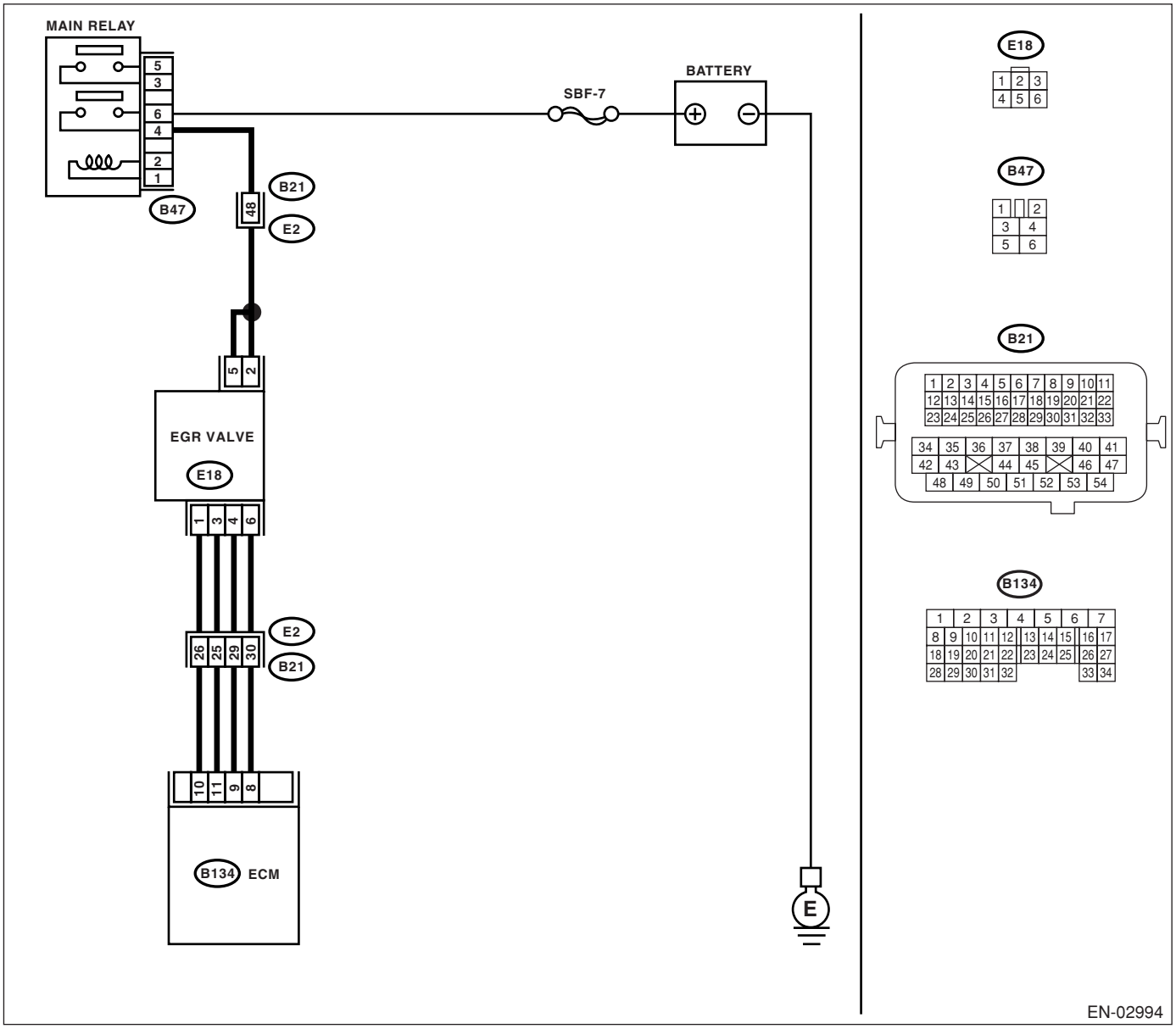

Step		Check	Yes	No
1	**CHECK FOR ANY OTHER DTC ON DISPLAY.**	Is any other DTC displayed?	Inspect DTC using "List of Diagnostic Trouble Code (DTC)". <Ref. to EN(H4SO)(diag)-70, List of Diagnostic Trouble Code (DTC).>	Go to step **2.**

	Step	Check	Yes	No
2	**CHECK HARNESS BETWEEN ECM AND EGR SOLENOID VALVE.** 1) Turn ignition switch to OFF. 2) Disconnect connector from EGR solenoid valve. 3) Turn ignition switch to OFF. 4) Measure voltage between EGR solenoid valve and engine ground. ***Connector & terminal*** ***DTC P1493; (B134) No. 11 (+) — Chassis ground (–):*** ***DTC P1495; (B134) No. 10 (+) — Chassis ground (–):*** ***DTC P1497; (B134) No. 9 (+) — Chassis ground (–):*** ***DTC P1499; (B134) No. 8 (+) — Chassis ground (–):***	Is the measured value more than 10 V?	Repair ground short circuit between ECM and EGR solenoid valve connector. After repair, replace ECM. <Ref. to FU(H4SO)-35, Engine Control Module (ECM).>	Replace ECM. <Ref. to FU(H4SO)-35, Engine Control Module (ECM).>

CR:DTC P1518 STARTER SWITCH CIRCUIT LOW INPUT

DTC DETECTING CONDITION:

- Two consecutive driving cycles with fault
- GENERAL DESCRIPTION <Ref. to GD(H4SO)-208, DTC P1518 STARTER SWITCH CIRCUIT LOW INPUT, Diagnostic Trouble Code (DTC) Detecting Criteria.>

TROUBLE SYMPTOM:

Failure of engine to start

CAUTION:

After repair or replacement of faulty parts, conduct Clear Memory Mode <Ref. to EN(H4SO)(diag)-43, OPERATION, Clear Memory Mode.> and Inspection Mode <Ref. to EN(H4SO)(diag)-35, PROCEDURE, Inspection Mode.>.

WIRING DIAGRAM:

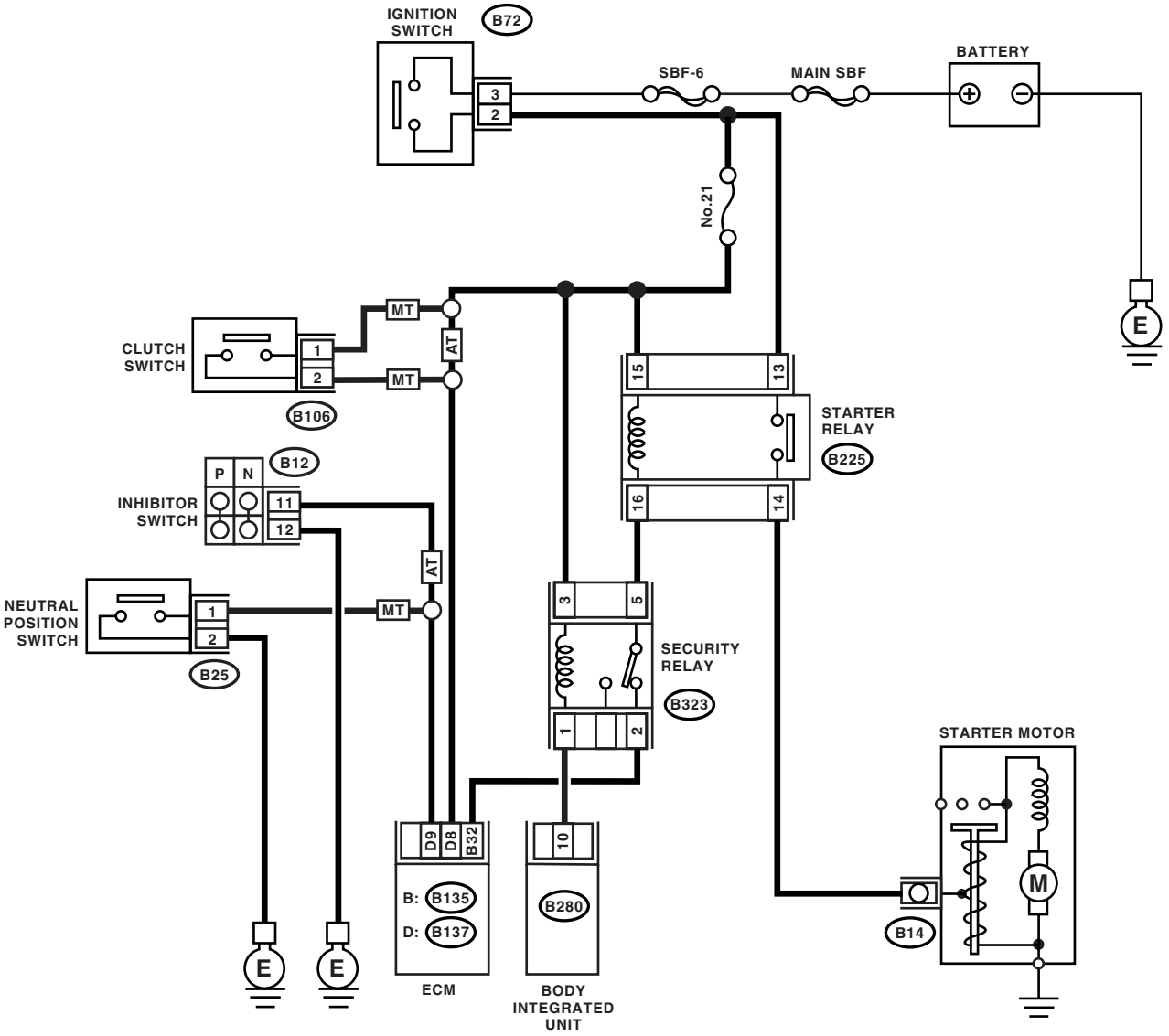

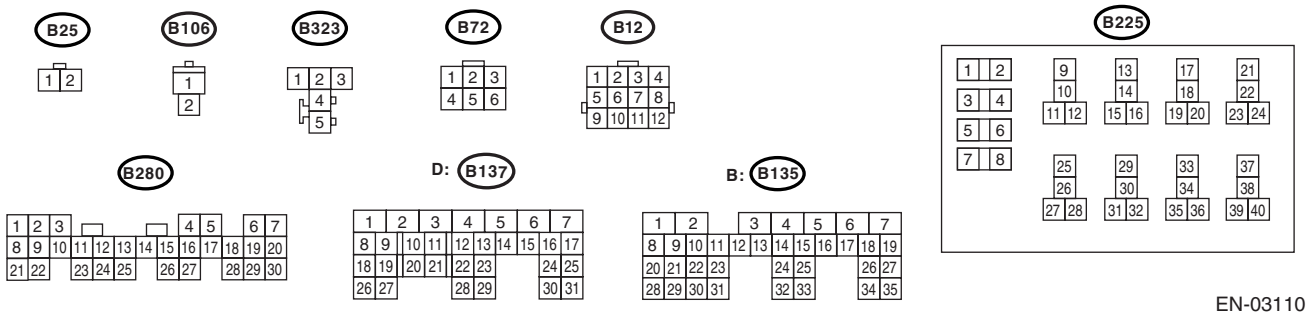

EN-03110

	Step	Check	Yes	No
1	**CHECK OPERATION OF STARTER MOTOR.** • Place the inhibitor switch in the “P” or “N” range. (AT model) • Depress the clutch pedal. (MT model) • Check that the security alarm does not beep.	Does the starter motor operate when ignition switch is turned to “ST”?	Repair harness and connector. NOTE: In this case, repair the following: • Open or ground short circuit in harness between ECM and starter motor connector • Poor contact in ECM connector	Check starter motor circuit. <Ref. to EN(H4SO)(diag)-56, STARTER MOTOR CIRCUIT, Diagnostics for Engine Starting Failure.>

CS:DTC P1560 BACK-UP VOLTAGE CIRCUIT MALFUNCTION

DTC DETECTING CONDITION:

- Detect as soon as malfunction occurs.
- GENERAL DESCRIPTION <Ref. to GD(H4SO)-209, DTC P1560 BACK-UP VOLTAGE CIRCUIT MALFUNCTION, Diagnostic Trouble Code (DTC) Detecting Criteria.>

CAUTION:
After repair or replacement of faulty parts, conduct Clear Memory Mode <Ref. to EN(H4SO)(diag)-43, OPERATION, Clear Memory Mode.> and Inspection Mode <Ref. to EN(H4SO)(diag)-35, PROCEDURE, Inspection Mode.>.

WIRING DIAGRAM:

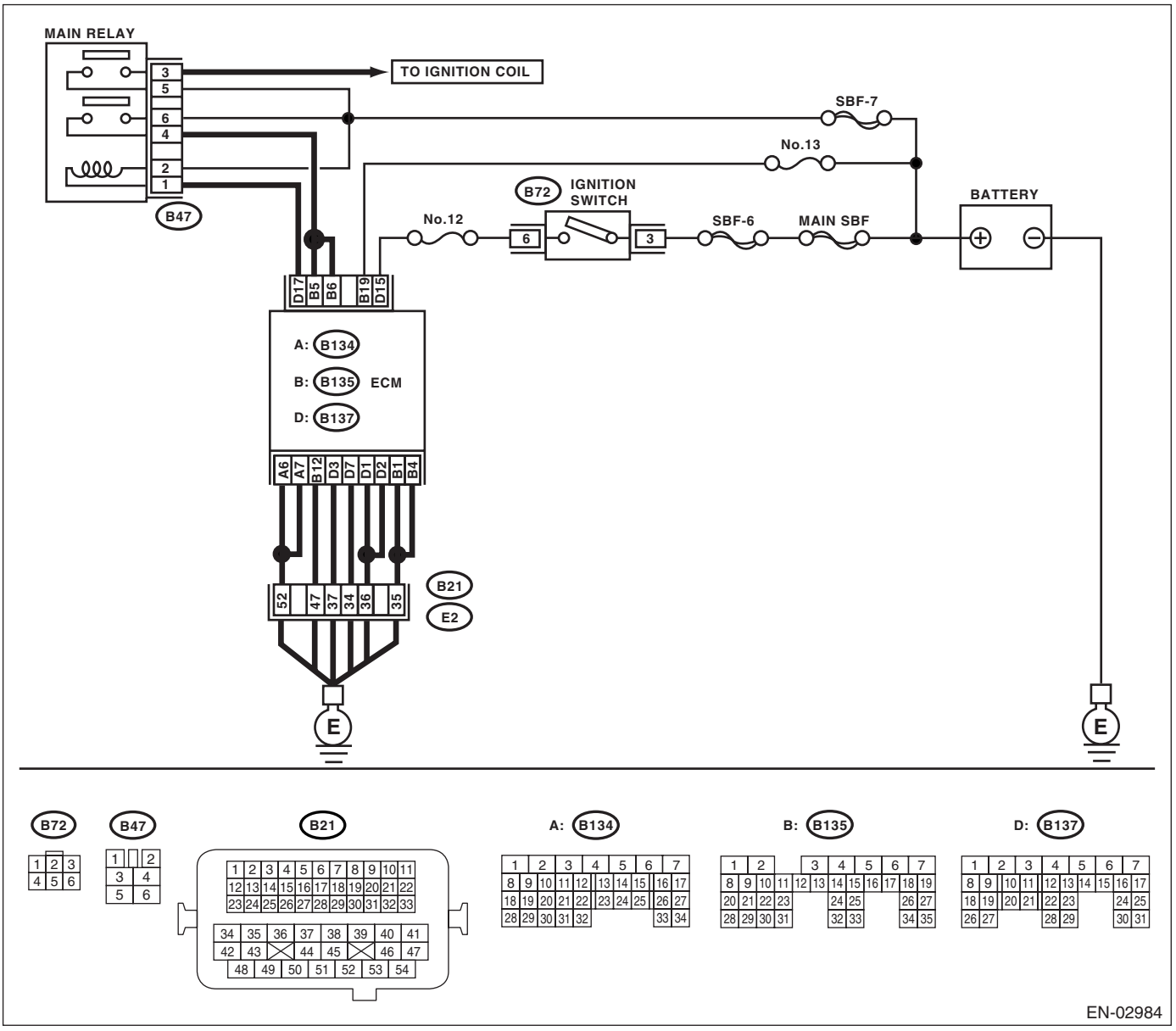

	Step	Check	Yes	No
1	**CHECK INPUT SIGNAL FOR ECM.** 1) Turn the ignition switch to OFF. 2) Measure the voltage between ECM and chassis ground. ***Connector & terminal*** ***(B135) No. 19 (+) — Chassis ground (−):***	Is the voltage more than 10 V?	Repair poor contact in ECM connector.	Go to step **2.**
2	**CHECK HARNESS BETWEEN ECM AND MAIN FUSE BOX CONNECTOR.** 1) Disconnect the connector from ECM. 2) Measure the resistance of harness between ECM and chassis ground. ***Connector & terminal*** ***(B135) No. 19 — Chassis ground:***	Is the resistance less than 10 Ω?	Repair ground short circuit in harness between ECM connector and battery terminal.	Go to step **3.**
3	**CHECK FUSE No. 13.**	Is the fuse blown out?	Replace the fuse.	Repair harness and connector. NOTE: In this case, repair the following: • Open circuit in harness between ECM and battery • Poor contact in ECM connector • Poor contact in battery terminal

CT:DTC P2096 POST CATALYST FUEL TRIM SYSTEM TOO LEAN BANK 1

DTC DETECTING CONDITION:

- Two consecutive driving cycles with fault
- GENERAL DESCRIPTION <Ref. to GD(H4SO)-210, DTC P2096 POST CATALYST FUEL TRIM SYSTEM TOO LEAN BANK 1, Diagnostic Trouble Code (DTC) Detecting Criteria.>

CAUTION:
After repair or replacement of faulty parts, conduct Clear Memory Mode <Ref. to EN(H4SO)(diag)-43, OPERATION, Clear Memory Mode.> and Inspection Mode <Ref. to EN(H4SO)(diag)-35, PROCEDURE, Inspection Mode.>.

WIRING DIAGRAM:

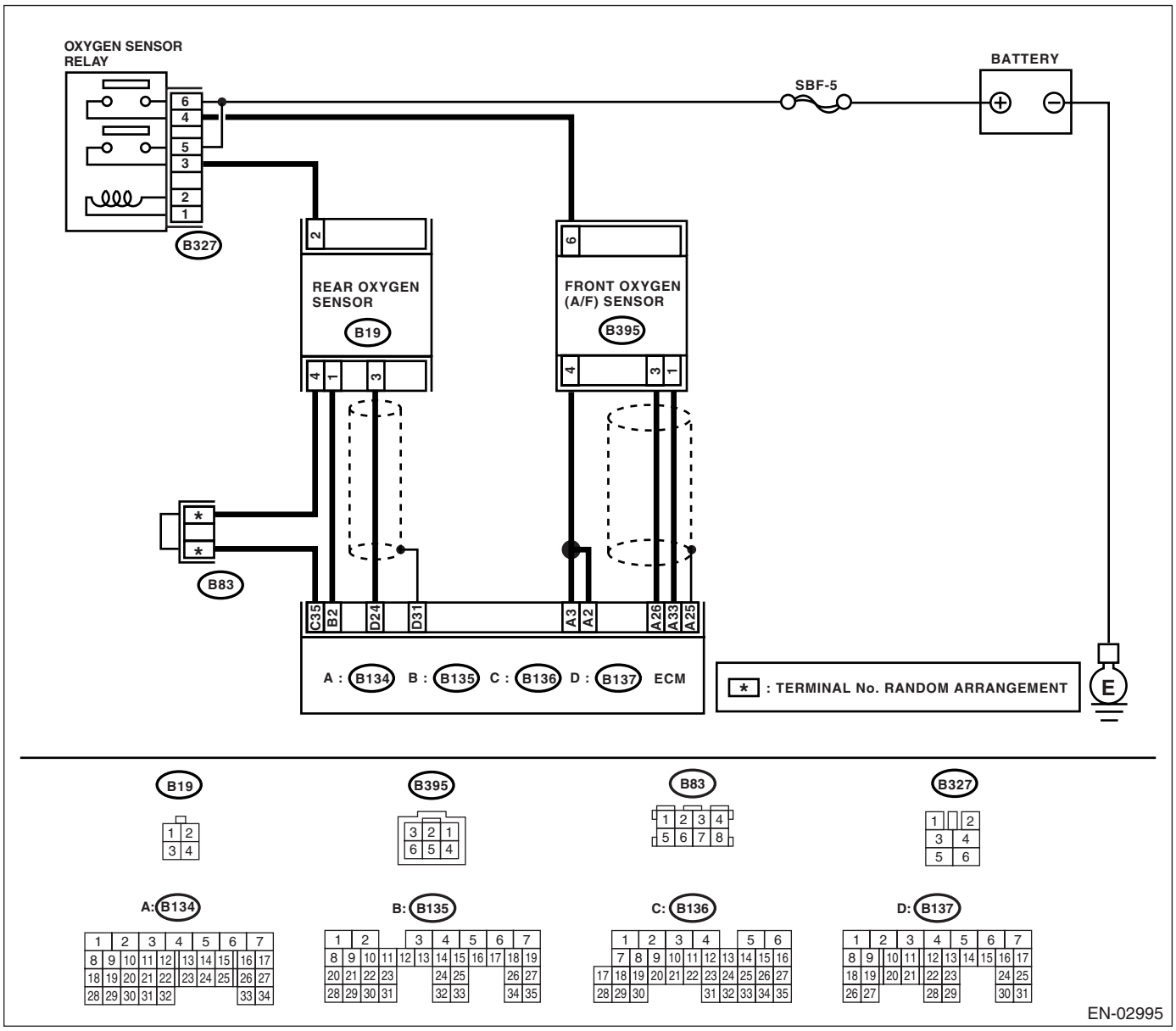

	Step	Check	Yes	No
1	**CHECK FOR ANY OTHER DTC ON DISPLAY.**	Is any other DTC displayed?	Check DTC using "List of Diagnostic Trouble Code (DTC)". <Ref. to EN(H4SO)(diag)-70, List of Diagnostic Trouble Code (DTC).> NOTE: In this case, it is not necessary to inspect DTC P2096.	Go to step **2.**
2	**CHECK HARNESS BETWEEN ECM AND REAR OXYGEN (A/F) SENSOR CONNECTOR.** 1) Turn the ignition switch to OFF. 2) Disconnect the connectors from ECM and front oxygen (A/F) sensor connector. 3) Measure the resistance of harness between ECM and front oxygen (A/F) sensor connector. ***Connector & terminal*** ***(B134) No. 26 — (B395) No. 3:*** ***(B134) No. 33 — (B395) No. 1:***	Is the measured value less than 1 Ω?	Go to step **3.**	Repair the harness and connector. NOTE: In this case, repair the following: • Open circuit in harness between ECM and front oxygen (A/F) sensor connector • Poor contact in front oxygen (A/F) sensor connector • Poor contact in ECM connector
3	**CHECK HARNESS BETWEEN ECM AND REAR OXYGEN (A/F) SENSOR CONNECTOR.** Measure the resistance of harness between ECM connector and chassis ground. ***Connector & terminal*** ***(B134) No. 26 — Chassis ground:*** ***(B134) No. 33 — Chassis ground:***	Is the measured value more than 1 MΩ?	Go to step **4.**	Repair the ground short circuit in harness between ECM and front oxygen (A/F) sensor connector.
4	**CHECK OUTPUT SIGNAL FOR ECM.** 1) Connect the connector to ECM. 2) Turn the ignition switch to ON. 3) Measure the voltage between ECM connector and chassis ground. ***Connector & terminal*** ***(B134) No. 26 (+) — Chassis ground (−):***	Is the measured value more than 4.5 V?	Go to step **5.**	Go to step **6.**
5	**CHECK OUTPUT SIGNAL FOR ECM.** Measure the voltage between ECM connector and chassis ground. ***Connector & terminal*** ***(B134) No. 26 (+) — Chassis ground (−):***	Is the measured value more than 10 V?	Repair the battery short circuit in harness between ECM and front oxygen (A/F) sensor connector. After repair, replace the ECM. <Ref. to FU(H4SO)-35, Engine Control Module (ECM).>	Repair the poor contact in ECM connector.

	Step	Check	Yes	No
6	**CHECK OUTPUT SIGNAL FOR ECM.** Measure the voltage between ECM connector and chassis ground. ***Connector & terminal*** ***(B134) No. 33 (+) — Chassis ground (−):***	Is the measured value more than 4.95 V?	Go to step **7.**	Go to step **8.**
7	**CHECK OUTPUT SIGNAL FOR ECM.** Measure the voltage between ECM connector and chassis ground. ***Connector & terminal*** ***(B134) No. 33 (+) — Chassis ground (−):***	Is the measured value more than 10 V?	Repair the battery short circuit in harness between ECM and front oxygen (A/F) sensor connector. After repair, replace the ECM. <Ref. to FU(H4SO)-35, Engine Control Module (ECM).>	Repair the poor contact in ECM connector.
8	**CHECK EXHAUST SYSTEM.**	Are there holes or loose bolts on exhaust system?	Repair the exhaust system.	Go to step **9.**
9	**CHECK AIR INTAKE SYSTEM.**	Are there holes, loose bolts or disconnection of hose on air intake system?	Repair the air intake system.	Go to step **10.**
10	**CHECK FUEL PRESSURE.** **Warning:** **• Place "NO FIRE" signs near the working area.** **• Be careful not to spill fuel on the floor.** Measure the fuel pressure while disconnecting pressure regulator vacuum hose from intake manifold. <Ref. to ME(H4SO)-25, INSPECTION, Fuel Pressure.> **Warning:** **Before removing the fuel pressure gauge, release fuel pressure.** NOTE: If the fuel pressure does not increase, squeeze fuel return hose 2 to 3 times, then measure fuel pressure again.	Is the measured value 284 — 314 kPa (2.9 — 3.2 kg/cm^2, 41 — 46 psi)?	Go to step **11.**	Repair the following items. Fuel pressure too high: • Clogged fuel return line or bent hose Fuel pressure too low: • Improper fuel pump discharge • Clogged fuel supply line
11	**CHECK FUEL PRESSURE.** After connecting the pressure regulator vacuum hose, measure fuel pressure. <Ref. to ME(H4SO)-25, INSPECTION, Fuel Pressure.> **Warning:** **Before removing the fuel pressure gauge, release fuel pressure.** NOTE: • If the fuel pressure does not increase, squeeze fuel return hose 2 to 3 times, then measure fuel pressure again. • If out of specification as measured at this step, check or replace the pressure regulator and pressure regulator vacuum hose.	Is the measured value 206 — 235 kPa (2.1 — 2.4 kg/cm^2, 30 — 34 psi)?	Go to step **12.**	Repair the following items. Fuel pressure too high: • Faulty pressure regulator • Clogged fuel return line or bent hose Fuel pressure too low: • Faulty pressure regulator • Improper fuel pump discharge • Clogged fuel supply line

	Step	Check	Yes	No
12	**CHECK ENGINE COOLANT TEMPERATURE SENSOR.** 1) Start the engine and warm-up completely. 2) Read the data of engine coolant temperature sensor signal using Subaru Select Monitor or general scan tool. NOTE: • Subaru Select Monitor For detailed operation procedure, refer to the "READ CURRENT DATA FOR ENGINE". <Ref. to EN(H4SO)(diag)-27, Subaru Select Monitor.> • General scan tool For detailed operation procedure, refer to the general scan tool instruction manual.	Is the temperature more than 60°C (140°F)?	Go to step **13.**	Replace the engine coolant temperature sensor. <Ref. to FU(H4SO)-21, Engine Coolant Temperature Sensor.>
13	**CHECK MASS AIR FLOW AND INTAKE AIR TEMPERATURE.** 1) Start the engine and warm-up engine until coolant temperature is greater than 60°C (140°F). 2) Place the shift lever in neutral position. 3) Turn the A/C switch to OFF. 4) Turn all accessory switches to OFF. 5) Read the data of mass air flow and intake air temperature sensor signal using Subaru Select Monitor or general scan tool. NOTE: • Subaru Select Monitor For detailed operation procedure, refer to the "READ CURRENT DATA FOR ENGINE". <Ref. to EN(H4SO)(diag)-27, Subaru Select Monitor.> • General scan tool For detailed operation procedure, refer to the general scan tool instruction manual.	Is the measured value 2.1 — 3.4 g/s (0.28 — 0.45 lb/m)?	Go to step **14.**	Replace the mass air flow and intake air temperature sensor. <Ref. to FU(H4SO)-27, Mass Air Flow and Intake Air Temperature Sensor.>
14	**CHECK MASS AIR FLOW AND INTAKE AIR TEMPERATURE SENSOR.** 1) Start the engine and warm-up engine until coolant temperature is greater than 60°C (140°F). 2) Place the shift lever in neutral position. 3) Turn the A/C switch to OFF. 4) Turn all accessory switches to OFF. 5) Open the front hood. 6) Measure the ambient temperature. 7) Read the data of mass air flow and intake air temperature sensor signal using Subaru Select Monitor or general scan tool. NOTE: • Subaru Select Monitor For detailed operation procedure, refer to the "READ CURRENT DATA FOR ENGINE". <Ref. to EN(H4SO)(diag)-27, Subaru Select Monitor.> • General scan tool For detailed operation procedure, refer to the general scan tool instruction manual.	Subtract ambient temperature from intake air temperature. Is the obtained value −10°C — 50°C (−18°F — 90°F)?	Go to step **15.**	Check the mass air flow and intake air temperature sensor. <Ref. to FU(H4SO)-27, Mass Air Flow and Intake Air Temperature Sensor.>

	Step	Check	Yes	No
15	**CHECK REAR OXYGEN SENSOR DATA.** 1) Warm-up the engine until engine coolant temperature is above 70°C (158°F), and keep the engine speed at 5,000 rpm. 2) Read the data of rear oxygen sensor signal using Subaru Select Monitor or general scan tool. NOTE: • Subaru Select Monitor For detailed operation procedure, refer to the "READ CURRENT DATA SHOWN ON DISPLAY FOR ENGINE". <Ref. to EN(H4SO)(diag)-27, Subaru Select Monitor.> • General scan tool For detailed operation procedure, refer to the general scan tool instruction manual.	Is the measured value more than 490 mV?	Go to step **18.**	Go to step **16.**
16	**CHECK HARNESS BETWEEN ECM AND REAR OXYGEN SENSOR CONNECTOR.** 1) Turn the ignition switch to OFF. 2) Disconnect the connectors from ECM and rear oxygen sensor. 3) Measure the resistance of harness between ECM and rear oxygen sensor connector. ***Connector & terminal*** ***(B137) No. 24 — (B19) No. 3:*** ***(B136) No. 35 — (B19) No. 4:***	Is the measured value more than 3 Ω?	Repair open circuit in harness between ECM and rear oxygen sensor connector.	Go to step **17.**
17	**CHECK HARNESS BETWEEN REAR OXYGEN SENSOR AND ECM CONNECTOR.** 1) Turn the ignition switch to OFF. 2) Disconnect the connector from rear oxygen sensor. 3) Turn the ignition switch to ON. 4) Measure the voltage between rear oxygen sensor harness connector and engine ground or chassis ground. ***Connector & terminal*** ***(B19) No. 3 (+) — Engine ground (−):***	Is the measured value within 0.2 to 0.5 V?	Replace the rear oxygen sensor. <Ref. to FU(H4SO)-34, Rear Oxygen Sensor.>	Repair harness and connector. NOTE: In this case, repair the following: • Open circuit in harness between rear oxygen sensor and ECM connector • Poor contact in rear oxygen sensor connector • Poor contact in ECM connector
18	**CHECK REAR OXYGEN SENSOR DATA.** 1) Warm-up the engine until engine coolant temperature is above 70°C (158°F), and immediately decrease the engine speed from 5,000 rpm. 2) Read the data of rear oxygen sensor signal using Subaru Select Monitor or general scan tool. NOTE: • Subaru Select Monitor For detailed operation procedure, refer to the "READ CURRENT DATA SHOWN ON DISPLAY FOR ENGINE". <Ref. to EN(H4SO)(diag)-27, Subaru Select Monitor.> • General scan tool For detailed operation procedure, refer to the general scan tool instruction manual.	Is the measured value less than 250 mV?	Go to step **19.**	Go to step **20.**

	Step	Check	Yes	No
19	**CHECK FRONT OXYGEN (A/F) SENSOR AND REAR OXYGEN SENSOR DATA.** 1) Warm-up the engine until the engine coolant temperature exceeds 70°C (158°F), and leave it at idle for more than 5 minutes. 2) Read the data of rear oxygen sensor signal using Subaru Select Monitor or general scan tool. NOTE: • Subaru Select Monitor For detailed operation procedure, refer to the "READ CURRENT DATA SHOWN ON DISPLAY FOR ENGINE". <Ref. to EN(H4SO)(diag)-27, Subaru Select Monitor.> • General scan tool For detailed operation procedure, refer to the general scan tool instruction manual.	Does the voltage keep 0.8 V for more than 5 minutes?	Replace the front oxygen (A/F) sensor. <Ref. to FU(H4SO)-32, Front Oxygen (A/F) Sensor.>	Go to step **20.**
20	**CHECK HARNESS BETWEEN ECM AND REAR OXYGEN SENSOR CONNECTOR.** 1) Turn the ignition switch to OFF. 2) Disconnect the connectors from ECM and rear oxygen sensor. 3) Measure the resistance of harness between ECM and rear oxygen sensor connector. ***Connector & terminal*** ***(B137) No. 24 — (B19) No. 3:*** ***(B136) No. 35 — (B19) No. 4:***	Is the measured value more than 3 Ω?	Repair open circuit in harness between ECM and rear oxygen sensor connector.	Go to step **21.**
21	**CHECK HARNESS BETWEEN REAR OXYGEN SENSOR AND ECM CONNECTOR.** 1) Turn the ignition switch to OFF. 2) Disconnect the connector from rear oxygen sensor. 3) Turn the ignition switch to ON. 4) Measure the voltage between rear oxygen sensor harness connector and engine ground or chassis ground. ***Connector & terminal*** ***(B19) No. 3 (+) — Engine ground (−):***	Is the measured value within 0.2 to 0.5 V?	Replace the rear oxygen sensor. <Ref. to FU(H4SO)-34, Rear Oxygen Sensor.>	Repair harness and connector. NOTE: In this case, repair the following: • Open circuit in harness between rear oxygen sensor and ECM connector • Poor contact in rear oxygen sensor connector • Poor contact in ECM connector

CU:DTC P2097 POST CATALYST FUEL TRIM SYSTEM TOO RICH BANK 1

DTC DETECTING CONDITION:

- Two consecutive driving cycles with fault
- GENERAL DESCRIPTION <Ref. to GD(H4SO)-212, DTC P2097 POST CATALYST FUEL TRIM SYSTEM TOO RICH BANK 1, Diagnostic Trouble Code (DTC) Detecting Criteria.>

CAUTION:
After repair or replacement of faulty parts, conduct Clear Memory Mode <Ref. to EN(H4SO)(diag)-43, OPERATION, Clear Memory Mode.> and Inspection Mode <Ref. to EN(H4SO)(diag)-35, PROCEDURE, Inspection Mode.>.

WIRING DIAGRAM:

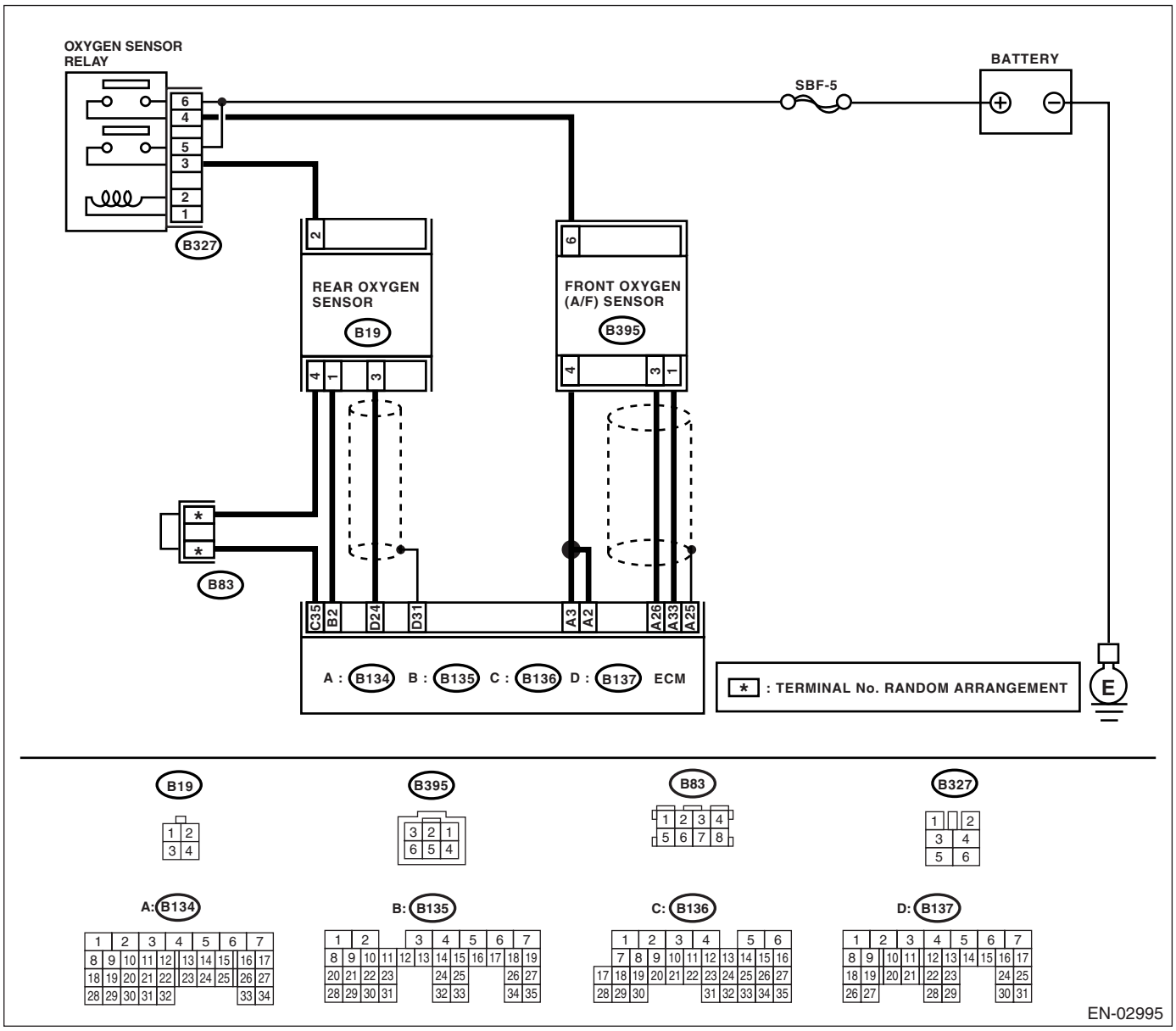

	Step	Check	Yes	No
1	**CHECK FOR ANY OTHER DTC ON DISPLAY.**	Is any other DTC displayed?	Check DTC using "List of Diagnostic Trouble Code (DTC)". <Ref. to EN(H4SO)(diag)-70, List of Diagnostic Trouble Code (DTC).> NOTE: In this case, it is not necessary to inspect DTC P2096.	Go to step **2.**
2	**CHECK HARNESS BETWEEN ECM AND REAR OXYGEN (A/F) SENSOR CONNECTOR.** 1) Turn the ignition switch to OFF. 2) Disconnect the connectors from ECM and front oxygen (A/F) sensor connector. 3) Measure the resistance of harness between ECM and front oxygen (A/F) sensor connector. ***Connector & terminal*** ***(B134) No. 26 — (B395) No. 3:*** ***(B134) No. 33 — (B395) No. 1:***	Is the measured value less than 1 Ω?	Go to step **3.**	Repair the harness and connector. NOTE: In this case, repair the following: • Open circuit in harness between ECM and front oxygen (A/F) sensor connector • Poor contact in front oxygen (A/F) sensor connector • Poor contact in ECM connector
3	**CHECK HARNESS BETWEEN ECM AND REAR OXYGEN (A/F) SENSOR CONNECTOR.** Measure the resistance of harness between ECM connector and chassis ground. ***Connector & terminal*** ***(B134) No. 26 — Chassis ground:*** ***(B134) No. 33 — Chassis ground:***	Is the measured value more than 1 MΩ?	Go to step **4.**	Repair the ground short circuit in harness between ECM and front oxygen (A/F) sensor connector.
4	**CHECK OUTPUT SIGNAL FOR ECM.** 1) Connect the connector to ECM. 2) Turn the ignition switch to ON. 3) Measure the voltage between ECM connector and chassis ground. ***Connector & terminal*** ***(B134) No. 26 (+) — Chassis ground (−):***	Is the measured value more than 4.5 V?	Go to step **5.**	Go to step **6.**
5	**CHECK OUTPUT SIGNAL FOR ECM.** Measure the voltage between ECM connector and chassis ground. ***Connector & terminal*** ***(B134) No. 26 (+) — Chassis ground (−):***	Is the measured value more than 10 V?	Repair the battery short circuit in harness between ECM and front oxygen (A/F) sensor connector. After repair, replace the ECM. <Ref. to FU(H4SO)-35, Engine Control Module (ECM).>	Repair the poor contact in ECM connector.

	Step	Check	Yes	No
6	**CHECK OUTPUT SIGNAL FOR ECM.** Measure the voltage between ECM connector and chassis ground. ***Connector & terminal*** ***(B134) No. 33 (+) — Chassis ground (−):***	Is the measured value more than 4.95 V?	Go to step **7.**	Go to step **8.**
7	**CHECK OUTPUT SIGNAL FOR ECM.** Measure the voltage between ECM connector and chassis ground. ***Connector & terminal*** ***(B134) No. 33 (+) — Chassis ground (−):***	Is the measured value more than 10 V?	Repair the battery short circuit in harness between ECM and front oxygen (A/F) sensor connector. After repair, replace the ECM. <Ref. to FU(H4SO)-35, Engine Control Module (ECM).>	Repair the poor contact in ECM connector.
8	**CHECK EXHAUST SYSTEM.**	Are there holes or loose bolts on exhaust system?	Repair the exhaust system.	Go to step **9.**
9	**CHECK AIR INTAKE SYSTEM.**	Are there holes, loose bolts or disconnection of hose on air intake system?	Repair the air intake system.	Go to step **10.**
10	**CHECK FUEL PRESSURE.** **Warning:** **• Place "NO FIRE" signs near the working area.** **• Be careful not to spill fuel on the floor.** Measure the fuel pressure while disconnecting pressure regulator vacuum hose from intake manifold. <Ref. to ME(H4SO)-25, INSPECTION, Fuel Pressure.> **Warning:** **Before removing the fuel pressure gauge, release fuel pressure.** NOTE: If the fuel pressure does not increase, squeeze fuel return hose 2 to 3 times, then measure fuel pressure again.	Is the measured value 284 — 314 kPa (2.9 — 3.2 kg/cm^2, 41 — 46 psi)?	Go to step **11.**	Repair the following items. Fuel pressure too high: • Clogged fuel return line or bent hose Fuel pressure too low: • Improper fuel pump discharge • Clogged fuel supply line
11	**CHECK FUEL PRESSURE.** After connecting the pressure regulator vacuum hose, measure fuel pressure. <Ref. to ME(H4SO)-25, INSPECTION, Fuel Pressure.> **Warning:** **Before removing the fuel pressure gauge, release fuel pressure.** NOTE: • If the fuel pressure does not increase, squeeze fuel return hose 2 to 3 times, then measure fuel pressure again. • If out of specification as measured at this step, check or replace the pressure regulator and pressure regulator vacuum hose.	Is the measured value 206 — 235 kPa (2.1 — 2.4 kg/cm^2, 30 — 34 psi)?	Go to step **12.**	Repair the following items. Fuel pressure too high: • Faulty pressure regulator • Clogged fuel return line or bent hose Fuel pressure too low: • Faulty pressure regulator • Improper fuel pump discharge • Clogged fuel supply line

	Step	Check	Yes	No
12	**CHECK ENGINE COOLANT TEMPERATURE SENSOR.** 1) Start the engine and warm-up completely. 2) Read the data of engine coolant temperature sensor signal using Subaru Select Monitor or general scan tool. NOTE: • Subaru Select Monitor For detailed operation procedure, refer to the "READ CURRENT DATA FOR ENGINE". <Ref. to EN(H4SO)(diag)-27, Subaru Select Monitor.> • General scan tool For detailed operation procedure, refer to the general scan tool instruction manual.	Is the temperature more than 60°C (140°F)?	Go to step **13.**	Replace the engine coolant temperature sensor. <Ref. to FU(H4SO)-21, Engine Coolant Temperature Sensor.>
13	**CHECK MASS AIR FLOW AND INTAKE AIR TEMPERATURE.** 1) Start the engine and warm-up engine until coolant temperature is greater than 60°C (140°F). 2) Place the shift lever in neutral position. 3) Turn the A/C switch to OFF. 4) Turn all accessory switches to OFF. 5) Read the data of mass air flow and intake air temperature sensor signal using Subaru Select Monitor or general scan tool. NOTE: • Subaru Select Monitor For detailed operation procedure, refer to the "READ CURRENT DATA FOR ENGINE". <Ref. to EN(H4SO)(diag)-27, Subaru Select Monitor.> • General scan tool For detailed operation procedure, refer to the general scan tool instruction manual.	Is the measured value 2.1 — 3.4 g/s (0.28 — 0.45 lb/m)?	Go to step **14.**	Replace the mass air flow and intake air temperature sensor. <Ref. to FU(H4SO)-27, Mass Air Flow and Intake Air Temperature Sensor.>
14	**CHECK MASS AIR FLOW AND INTAKE AIR TEMPERATURE SENSOR.** 1) Start the engine and warm-up engine until coolant temperature is greater than 60°C (140°F). 2) Place the shift lever in neutral position. 3) Turn the A/C switch to OFF. 4) Turn all accessory switches to OFF. 5) Open the front hood. 6) Measure the ambient temperature. 7) Read the data of mass air flow and intake air temperature sensor signal using Subaru Select Monitor or general scan tool. NOTE: • Subaru Select Monitor For detailed operation procedure, refer to the "READ CURRENT DATA FOR ENGINE". <Ref. to EN(H4SO)(diag)-27, Subaru Select Monitor.> • General scan tool For detailed operation procedure, refer to the general scan tool instruction manual.	Subtract ambient temperature from intake air temperature. Is the obtained value −10°C — 50°C (−18°F — 90°F)?	Go to step **15.**	Check the mass air flow and intake air temperature sensor. <Ref. to FU(H4SO)-27, Mass Air Flow and Intake Air Temperature Sensor.>

	Step	Check	Yes	No
15	**CHECK REAR OXYGEN SENSOR DATA.** 1) Warm-up the engine until engine coolant temperature is above 70°C (158°F), and keep the engine speed at 5,000 rpm. 2) Read the data of rear oxygen sensor signal using Subaru Select Monitor or general scan tool. NOTE: • Subaru Select Monitor For detailed operation procedure, refer to the "READ CURRENT DATA SHOWN ON DISPLAY FOR ENGINE". <Ref. to EN(H4SO)(diag)-27, Subaru Select Monitor.> • General scan tool For detailed operation procedure, refer to the general scan tool instruction manual.	Is the measured value more than 490 mV?	Go to step **18.**	Go to step **16.**
16	**CHECK HARNESS BETWEEN ECM AND REAR OXYGEN SENSOR CONNECTOR.** 1) Turn the ignition switch to OFF. 2) Disconnect the connectors from ECM and rear oxygen sensor. 3) Measure the resistance of harness between ECM and rear oxygen sensor connector. ***Connector & terminal*** ***(B137) No. 24 — (B19) No. 3:*** ***(B136) No. 35 — (B19) No. 4:***	Is the measured value more than 3 Ω?	Repair open circuit in harness between ECM and rear oxygen sensor connector.	Go to step **17.**
17	**CHECK HARNESS BETWEEN REAR OXYGEN SENSOR AND ECM CONNECTOR.** 1) Turn the ignition switch to OFF. 2) Disconnect the connector from rear oxygen sensor. 3) Turn the ignition switch to ON. 4) Measure the voltage between rear oxygen sensor harness connector and engine ground or chassis ground. ***Connector & terminal*** ***(B19) No. 3 (+) — Engine ground (−):***	Is the measured value within 0.2 to 0.5 V?	Replace the rear oxygen sensor. <Ref. to FU(H4SO)-34, Rear Oxygen Sensor.>	Repair harness and connector. NOTE: In this case, repair the following: • Open circuit in harness between rear oxygen sensor and ECM connector • Poor contact in rear oxygen sensor connector • Poor contact in ECM connector
18	**CHECK REAR OXYGEN SENSOR DATA.** 1) Warm-up the engine until engine coolant temperature is above 70°C (158°F), and immediately decrease the engine speed from 5,000 rpm. 2) Read the data of rear oxygen sensor signal using Subaru Select Monitor or general scan tool. NOTE: • Subaru Select Monitor For detailed operation procedure, refer to the "READ CURRENT DATA SHOWN ON DISPLAY FOR ENGINE". <Ref. to EN(H4SO)(diag)-27, Subaru Select Monitor.> • General scan tool For detailed operation procedure, refer to the general scan tool instruction manual.	Is the measured value less than 250 mV?	Go to step **19.**	Go to step **20.**

	Step	Check	Yes	No
19	**CHECK FRONT OXYGEN (A/F) SENSOR AND REAR OXYGEN SENSOR DATA.** 1) Warm-up the engine until the engine coolant temperature exceeds 70°C (158°F), and leave it at idle for more than 5 minutes. 2) Read the data of rear oxygen sensor signal using Subaru Select Monitor or general scan tool. NOTE: • Subaru Select Monitor For detailed operation procedure, refer to the "READ CURRENT DATA SHOWN ON DISPLAY FOR ENGINE". <Ref. to EN(H4SO)(diag)-27, Subaru Select Monitor.> • General scan tool For detailed operation procedure, refer to the general scan tool instruction manual.	Does the voltage keep 0.8 V for more than 5 minutes?	Replace the front oxygen (A/F) sensor. <Ref. to FU(H4SO)-32, Front Oxygen (A/F) Sensor.>	Go to step **20.**
20	**CHECK HARNESS BETWEEN ECM AND REAR OXYGEN SENSOR CONNECTOR.** 1) Turn the ignition switch to OFF. 2) Disconnect the connectors from ECM and rear oxygen sensor. 3) Measure the resistance of harness between ECM and rear oxygen sensor connector. ***Connector & terminal*** ***(B137) No. 24 — (B19) No. 3:*** ***(B136) No. 35 — (B19) No. 4:***	Is the measured value more than 3 Ω?	Repair open circuit in harness between ECM and rear oxygen sensor connector.	Go to step **21.**
21	**CHECK HARNESS BETWEEN REAR OXYGEN SENSOR AND ECM CONNECTOR.** 1) Turn the ignition switch to OFF. 2) Disconnect the connector from rear oxygen sensor. 3) Turn the ignition switch to ON. 4) Measure the voltage between rear oxygen sensor harness connector and engine ground or chassis ground. ***Connector & terminal*** ***(B19) No. 3 (+) — Engine ground (−):***	Is the measured value within 0.2 to 0.5 V?	Replace the rear oxygen sensor. <Ref. to FU(H4SO)-34, Rear Oxygen Sensor.>	Repair harness and connector. NOTE: In this case, repair the following: • Open circuit in harness between rear oxygen sensor and ECM connector • Poor contact in rear oxygen sensor connector • Poor contact in ECM connector

CV:DTC P2101 THROTTLE ACTUATOR CONTROL MOTOR CIRCUIT RANGE/ PERFORMANCE

DTC DETECTING CONDITION:

- Detect as soon as malfunction occurs.
- GENERAL DESCRIPTION <Ref. to GD(H4SO)-165, DTC P0638 THROTTLE ACTUATOR CONTROL RANGE/PERFORMANCE (BANK 1), Diagnostic Trouble Code (DTC) Detecting Criteria.>, <Ref. to GD(H4SO)-180, DTC P1160 RETURN SPRING FAILURE, Diagnostic Trouble Code (DTC) Detecting Criteria.> and <Ref. to GD(H4SO)-220, DTC P2109 THROTTLE/PEDAL POSITION SENSOR A MINIMUM STOP PERFORMANCE, Diagnostic Trouble Code (DTC) Detecting Criteria.>

TROUBLE SYMPTOM:

- Erroneous idling
- Poor driving performance
- Engine stalls.

WIRING DIAGRAM:

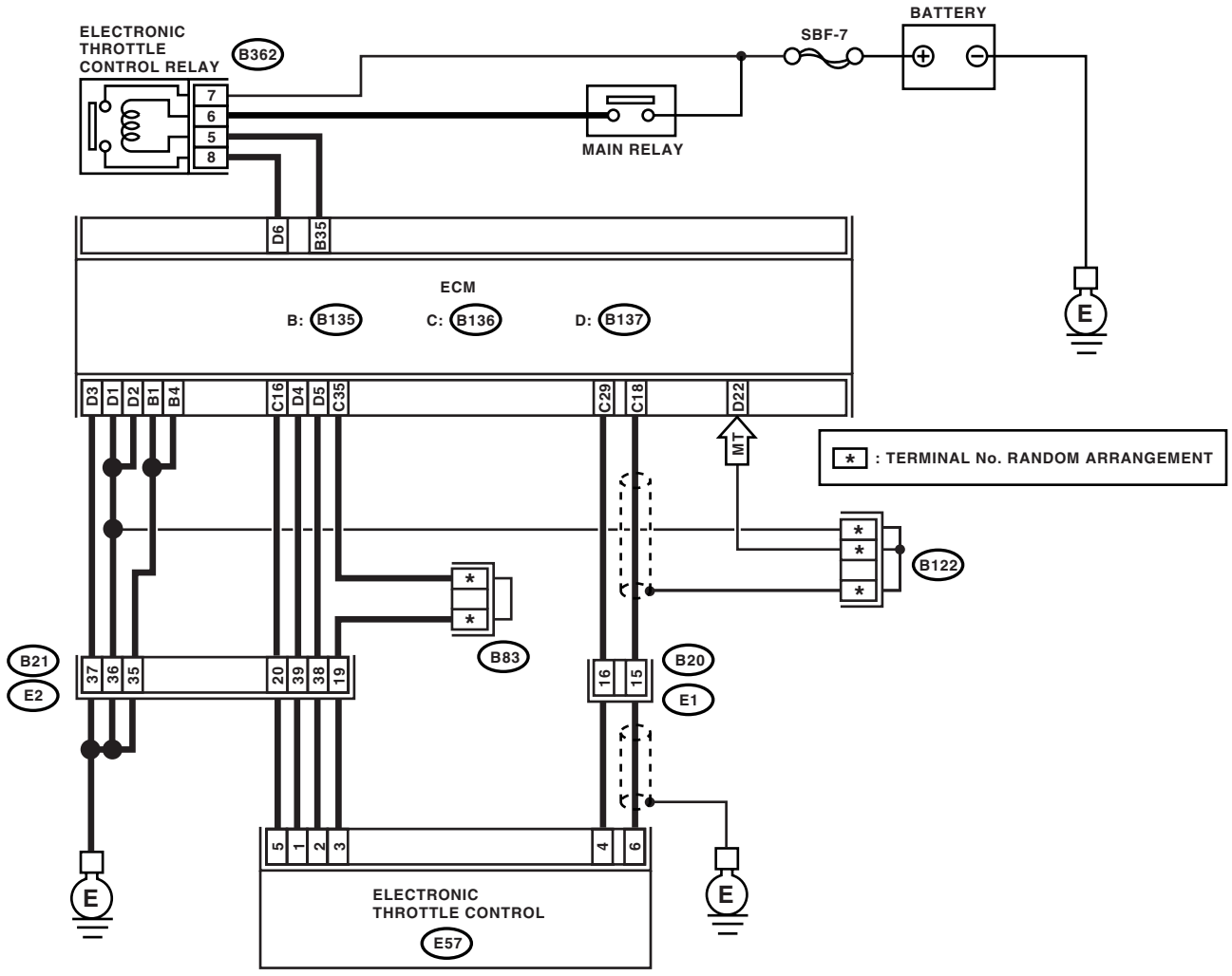

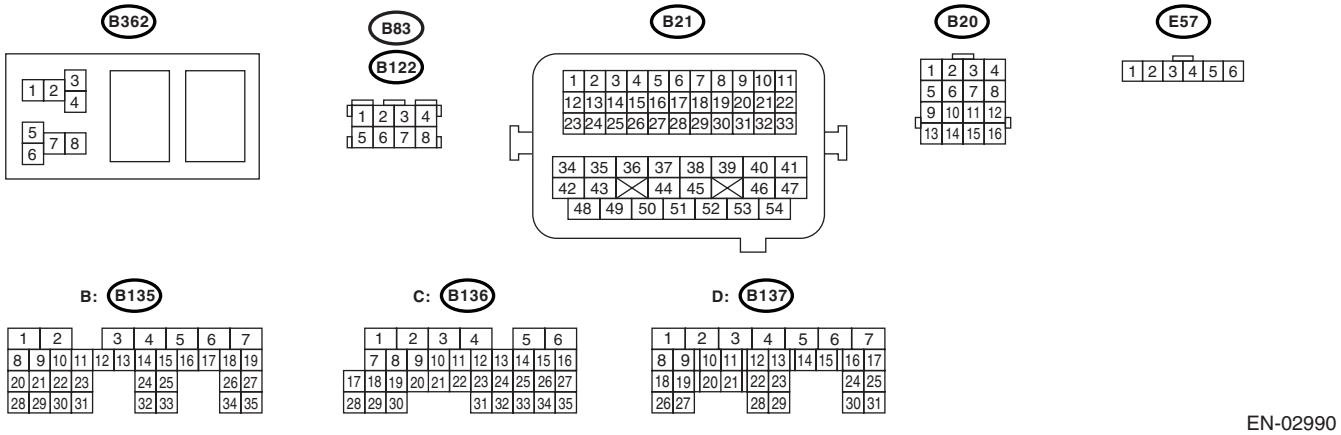

EN-02990

	Step	Check	Yes	No
1	**CHECK ELECTRONIC THROTTLE CONTROL RELAY.** 1) Turn the ignition switch to OFF. 2) Remove the electronic throttle control relay. 3) Connect the battery to electronic throttle control relay terminal No. 5 and No. 6. 4) Measure the resistance between electronic throttle control relay terminals. ***Terminals*** ***No. 7 — No. 8:***	Is the resistance less than 1 Ω?	Go to step **2.**	Replace the electronic throttle control relay.
2	**CHECK POWER SUPPLY TO ELECTRONIC THROTTLE CONTROL RELAY.** 1) Turn the ignition switch to ON. 2) Measure the voltage between electronic throttle control relay connector and chassis ground. ***Connector & terminal*** ***(B362) No. 7 (+) — Chassis ground (−):*** ***(B362) No. 6 (+) — Chassis ground (−):***	Is the voltage more than 10 V?	Go to step **3.**	Repair the open power supply circuit or ground short.
3	**CHECK HARNESS BETWEEN ECM AND ELECTRONIC THROTTLE CONTROL.** 1) Turn the ignition switch to OFF. 2) Disconnect the connector from ECM. 3) Turn the ignition switch to ON. 4) Measure the voltage between electronic throttle control relay connector and chassis ground. ***Connector & terminal*** ***(B362) No. 5 (+) — Chassis ground (−):***	Is the voltage more than 10 V?	Repair short of the power supply circuit between ECM and electronic throttle control.	Go to step **4.**
4	**CHECK HARNESS BETWEEN ECM AND ELECTRONIC THROTTLE CONTROL.** 1) Turn the ignition switch to OFF. 2) Measure the resistance between electronic throttle control electronic throttle control relay connector and chassis ground. ***Connector & terminal*** ***(B362) No. 5 — Chassis ground:*** ***(B362) No. 8 — Chassis ground:***	Is the resistance more than 1 MΩ?	Go to step **5.**	Repair the ground short of harness between ECM and electronic throttle control relay.
5	**CHECK HARNESS BETWEEN ECM AND ELECTRONIC THROTTLE CONTROL RELAY.** 1) Turn the ignition switch to OFF. 2) Measure the resistance between electronic throttle control connector and electronic throttle control relay connector. ***Connector & terminal*** ***(B135) No. 35 — (B362) No. 5:*** ***(B137) No. 6 — (B362) No. 8:***	Is the resistance less than 1 Ω?	Go to step **6.**	Repair the open circuit of harness between ECM and electronic throttle control relay.
6	**CHECK OUTPUT VOLTAGE OF SENSOR.** 1) Connect all the connectors. 2) Turn the ignition switch to ON. 3) Read the data of main throttle sensor signal, using the Subaru Select Monitor. NOTE: • Subaru Select Monitor For detailed operation procedure, refer to the "READ CURRENT DATA FOR ENGINE". <Ref. to EN(H4SO)(diag)-27, Subaru Select Monitor.>	Is the voltage more than 0.4 V?	Go to step **7.**	Go to step **9.**

	Step	Check	Yes	No
7	**CHECK OUTPUT VOLTAGE OF SENSOR.** 1) Connect all the connectors. 2) Turn the ignition switch to ON. 3) Read the data of sub throttle sensor signal, using the Subaru Select Monitor. NOTE: • Subaru Select Monitor For detailed operation procedure, refer to the "READ CURRENT DATA FOR ENGINE". <Ref. to EN(H4SO)(diag)-27, Subaru Select Monitor.>	Is the voltage more than 0.8 V?	Go to step **8.**	Go to step **9.**
8	**CHECK POOR CONTACT.** Check poor contact between ECM connector and electronic throttle control connector.	Is there poor contact between ECM connector and electronic throttle control connector?	Repair the poor contact.	Go to step **13.**
9	**CHECK HARNESS BETWEEN ECM AND ELECTRONIC THROTTLE CONTROL.** 1) Turn the ignition switch to OFF. 2) Disconnect the connector from ECM. 3) Disconnect the connector from electronic throttle control. 4) Measure the resistance between ECM connector and electronic throttle control connector. ***Connector & terminal*** ***(B136) No. 18 — (E57) No. 6:*** ***(B136) No. 29 — (E57) No. 4:*** ***(B136) No. 16 — (E57) No. 5:***	Is the resistance less than 1 Ω?	Go to step **10.**	Repair the open harness connector.
10	**CHECK THE HARNESS BETWEEN ECM AND ELECTRONIC THROTTLE CONTROL.** Measure the resistance between ECM connector and chassis ground. ***Connector & terminal*** ***(B136) No. 16 — Chassis ground:*** ***(B136) No. 18 — Chassis ground:*** ***(B136) No. 29 — Chassis ground:***	Is the resistance more than 1 MΩ?	Go to step **11.**	Repair the ground short of harness.
11	**CHECK POWER SUPPLY TO SENSOR.** 1) Connect the ECM connector. 2) Turn the ignition switch to ON. 3) Measure the resistance between electronic throttle control connector and engine ground. ***Connector & terminal*** ***(E57) No. 5 (+) — Engine ground (−):***	Is the voltage 4.5 — 5.5 V?	Go to step **12.**	Repair the poor contact in ECM connector. If problem persists, replace the ECM. <Ref. to FU(H4SO)-35, Engine Control Module (ECM).>
12	**CHECK SHORT OF ECM.** 1) Turn the ignition switch to OFF. 2) Measure the resistance between electronic throttle control connector and engine ground. ***Connector & terminal*** ***(E57) No. 6 — Engine ground:*** ***(E57) No. 4 — Engine ground:***	Is the resistance more than 10 Ω?	Go to step **13.**	Repair the poor contact in ECM connector. If problem persists, replace the ECM. <Ref. to FU(H4SO)-35, Engine Control Module (ECM).>

	Step	Check	Yes	No
13	**CHECK OUTPUT VOLTAGE OF SENSOR.** 1) Connect all the connectors. 2) Turn the ignition switch to ON. 3) Read the data of main throttle sensor signal, using the Subaru Select Monitor. NOTE: • Subaru Select Monitor For detailed operation procedure, refer to the "READ CURRENT DATA FOR ENGINE". <Ref. to EN(H4SO)(diag)-27, Subaru Select Monitor.>	Is the voltage less than 4.63 V?	Go to step **14.**	Go to step **16.**
14	**CHECK OUTPUT VOLTAGE OF SENSOR.** Read the data of sub throttle sensor signal, using the Subaru Select Monitor. NOTE: • Subaru Select Monitor For detailed operation procedure, refer to the "READ CURRENT DATA FOR ENGINE". <Ref. to EN(H4SO)(diag)-27, Subaru Select Monitor.>	Is the voltage less than 4.73 V?	Go to step **15.**	Go to step **16.**
15	**CHECK POOR CONTACT IN CONNECTORS.** Check poor contact in connectors between ECM and electronic throttle control?	Is there poor contact in connectors between ECM and electronic throttle control?	Repair the poor contact in connectors.	Go to step **21.**
16	**CHECK HARNESS BETWEEN ECM AND ELECTRONIC THROTTLE CONTROL.** 1) Turn the ignition switch to OFF. 2) Disconnect the connector from ECM. 3) Disconnect the connector from electronic throttle control. 4) Measure the resistance between ECM connector and electronic throttle control connector. ***Connector & terminal*** ***(B136) No. 35 — (E57) No. 3:*** ***(B136) No. 18 — (E57) No. 6:*** ***(B136) No. 29 — (E57) No. 4:***	Is the resistance less than 1 Ω?	Go to step **17.**	Repair the open harness connector.
17	**CHECK HARNESS BETWEEN ECM AND ELECTRONIC THROTTLE CONTROL.** 1) Connect the ECM connector. 2) Measure the resistance between electronic throttle control connector and engine ground. ***Connector & terminal*** ***(E57) No. 3 — Engine ground:***	Is the resistance less than 5 Ω?	Go to step **18.**	Repair the poor contact in ECM connector. If problem persists, replace the ECM.
18	**CHECK HARNESS BETWEEN ECM AND ELECTRONIC THROTTLE CONTROL.** 1) Turn the ignition switch to ON. 2) Measure the voltage between electronic throttle control connector and engine ground. ***Connector & terminal*** ***(E57) No. 5 (+) — Engine ground (–):***	Is the voltage less than 10 V?	Go to step **19.**	Repair the battery short of harness between ECM connector and electronic throttle control connector.
19	**CHECK HARNESS BETWEEN ECM AND ELECTRONIC THROTTLE CONTROL.** Measure the voltage between electronic throttle control connector and engine ground. ***Connector & terminal*** ***(E57) No. 6 (+) — Engine ground (–):*** ***(E57) No. 4 (+) — Engine ground (–):***	Is the voltage less than 10 V?	Go to step **20.**	Repair the short of harness between ECM connector and electronic throttle control connector.

	Step	Check	Yes	No
20	**CHECK HARNESS BETWEEN ECM AND ELECTRONIC THROTTLE CONTROL.** 1) Turn the ignition switch to OFF. 2) Remove the ECM. 3) Measure the voltage between ECM connectors. ***Connector & terminal*** ***(B136) No. 18 — (B136) No. 16:*** ***(B136) No. 29 — (B136) No. 16:***	Is the resistance more than 1 MΩ?	Go to step **21.**	Repair the short of sensor power supply.
21	**CHECK OUTPUT VOLTAGE OF SENSOR.** 1) Turn the ignition switch to OFF. 2) Connect all the connectors except electronic throttle control replay. 3) Turn the ignition switch to ON. 4) Read the data of main throttle sensor signals, using Subaru Select Monitor. NOTE: • Subaru Select Monitor For detailed operation procedure, refer to the "READ CURRENT DATA FOR ENGINE". <Ref. to EN(H4SO)(diag)-27, Subaru Select Monitor.>	Is the voltage 0.81 — 0.87 V?	Go to step **22.**	Repair the poor contact in electronic throttle control connector. If problem persists, replace the electronic throttle control.
22	**CHECK OUTPUT VOLTAGE OF SENSOR.** Read the data of sub throttle sensor signals, using Subaru Select Monitor. NOTE: • Subaru Select Monitor For detailed operation procedure, refer to the "READ CURRENT DATA FOR ENGINE". <Ref. to EN(H4SO)(diag)-27, Subaru Select Monitor.>	Is the voltage 1.64 — 1.70 V?	Go to step **23.**	Repair the poor contact in electronic throttle control connector. If problem persists, replace the electronic throttle control.
23	**CHECK HARNESS BETWEEN ECM AND ELECTRONIC THROTTLE CONTROL MOTOR.** 1) Turn the ignition switch to OFF. 2) Disconnect the connector from ECM. 3) Disconnect the connectors from electronic throttle control. 4) Measure the resistance between ECM connector and electronic throttle control connector. ***Connector & terminal*** ***(B137) No. 5 — (E57) No. 2:*** ***(B137) No. 4 — (E57) No. 1:***	Is the resistance less than 1 Ω?	Go to step **24.**	Repair the open harness connector.
24	**CHECK HARNESS BETWEEN ECM AND ELECTRONIC THROTTLE CONTROL MOTOR.** 1) Connect the connectors to ECM. 2) Turn the ignition switch to ON. 3) Measure the voltage between electronic throttle control connector and engine ground. ***Connector & terminal*** ***(E57) No. 2 (+) — Engine ground (−):*** ***(E57) No. 1 (+) — Engine ground (−):***	Is the voltage less than 5 V?	Go to step **25.**	Repair the short of harness to power supply circuit between ECM and electronic throttle control.

	Step	Check	Yes	No
25	**CHECK HARNESS BETWEEN ECM AND ELECTRONIC THROTTLE CONTROL MOTOR.** 1) Turn the ignition switch to OFF. 2) Disconnect the connector from ECM. 3) Measure the resistance between electronic throttle control connector and engine ground. ***Connector & terminal*** ***(E57) No. 2 — Engine ground:*** ***(E57) No. 1 — Engine ground:***	Is the resistance more than 1 MΩ?	Go to step **26.**	Repair the short of harness.
26	**CHECK ELECTRONIC THROTTLE CONTROL MOTOR HARNESS.** Measure the resistance between electronic throttle control connector terminals. ***Connector & terminal*** ***(E57) No. 2 — (E57) No. 1:***	Is the resistance more than 1 MΩ?	Go to step **27.**	Repair the short of harness.
27	**CHECK ELECTRONIC THROTTLE CONTROL GROUND CIRCUIT.** Measure the resistance between ECM connector and chassis ground. ***Connector & terminal*** ***(B137) No. 3 — Chassis ground:***	Is the resistance less than 10 Ω?	Go to step **28.**	Repair the open circuit harness.
28	**CHECK ELECTRONIC THROTTLE CONTROL.** Measure the resistance between electronic throttle control terminals. ***Terminals*** ***No. 1 — No. 2:***	Is the resistance less than 5 Ω?	Go to step **29.**	Replace the electronic throttle control.
29	**CHECK ELECTRONIC THROTTLE CONTROL.** Open and close the throttle valve to its full width with finger.	Does it return to specified position (3 mm (0.12 in) open from fully closed position.) when finger is released?	Repair the poor contact in ECM connector. If problem persists, replace the ECM. <Ref. to FU(H4SO)-35, Engine Control Module (ECM).>	Replace the electronic throttle control.

CW:DTC P2102 THROTTLE ACTUATOR CONTROL MOTOR CIRCUIT LOW

DTC DETECTING CONDITION:

- Detect as soon as malfunction occurs.
- GENERAL DESCRIPTION <Ref. to GD(H4SO)-216, DTC P2102 THROTTLE ACTUATOR CONTROL MOTOR CIRCUIT LOW, Diagnostic Trouble Code (DTC) Detecting Criteria.>

TROUBLE SYMPTOM:

- Erroneous idling
- Poor driving performance
- Engine stalls.

WIRING DIAGRAM:

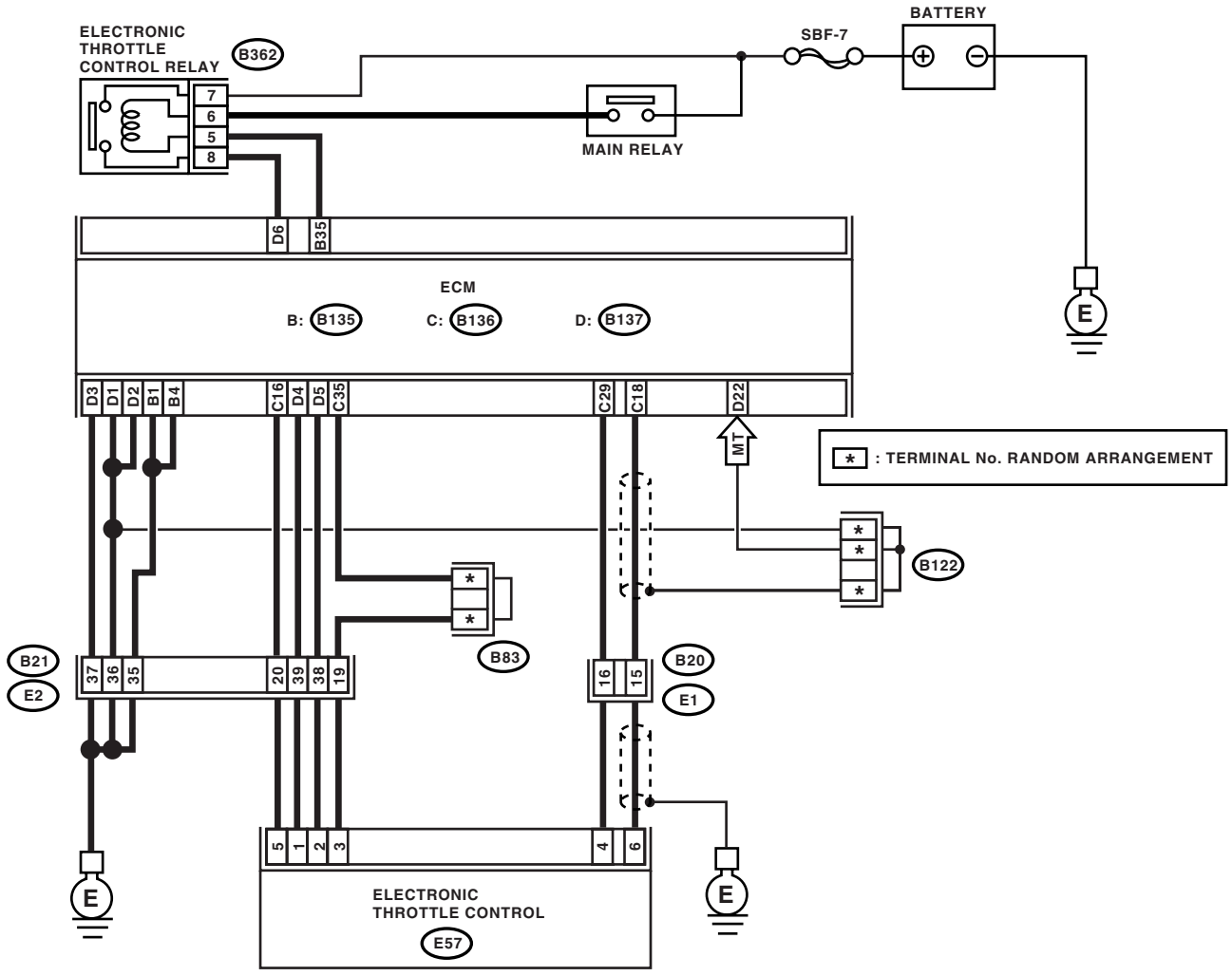

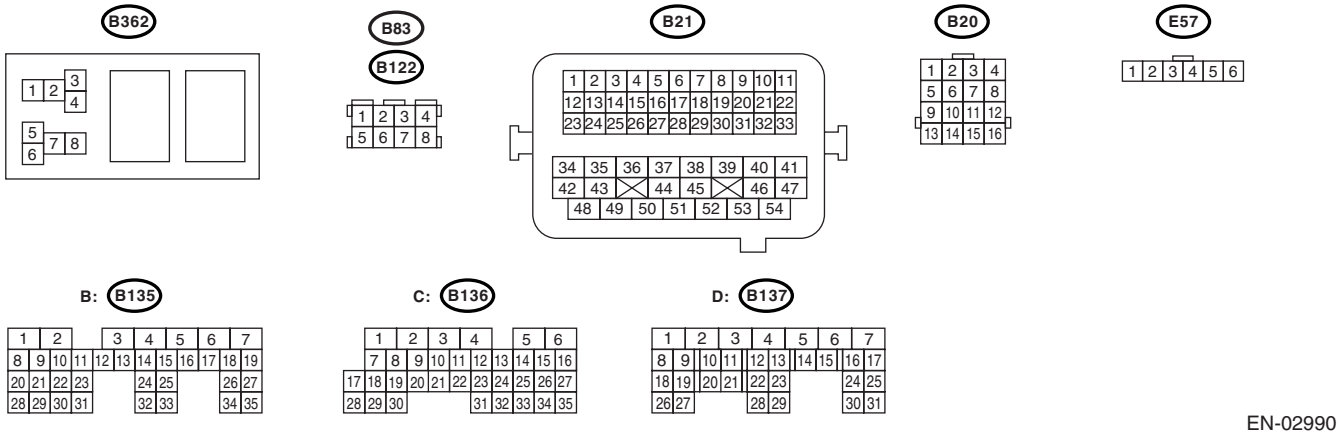

EN-02990

	Step	Check	Yes	No
1	**CHECK ELECTRONIC THROTTLE CONTROL RELAY.** 1) Turn the ignition switch to OFF. 2) Remove the electronic throttle control relay. 3) Connect the battery to electronic throttle control relay terminal No. 5 and No. 6. 4) Measure the resistance between electronic throttle control terminals. ***Connector & terminal*** ***No. 7 — No. 8:***	Is the resistance less than 1 Ω?	Go to step **2.**	Replace the electronic throttle control relay.
2	**CHECK POWER TO ELECTRONIC THROTTLE CONTROL RELAY** 1) Turn the ignition switch to ON. 2) Measure the voltage between electronic throttle control relay connector and chassis ground. ***Connector & terminal*** ***(B362) No. 7 (+) — Chassis ground (−):*** ***(B362) No. 6 (+) — Chassis ground (−):***	Is the voltage more than 10 V?	Go to step **3.**	Repair the open power supply circuit or ground short.
3	**CHECK HARNESS BETWEEN ECM AND ELECTRONIC THROTTLE CONTROL.** 1) Turn the ignition switch to OFF. 2) Disconnect the connector from ECM. 3) Turn the ignition switch to ON. 4) Measure the voltage between electronic throttle control relay connector and chassis ground. ***Connector & terminal*** ***(B362) No. 5 (+) — Chassis ground (−):***	Is the voltage more than 10 V?	Repair the short of power supply circuit between ECM and electronic throttle control.	Go to step **4.**
4	**CHECK HARNESS BETWEEN ECM AND ELECTRONIC THROTTLE CONTROL RELAY.** 1) Turn the ignition switch to OFF. 2) Measure the resistance between electronic throttle control relay connector and chassis ground. ***Connector & terminal*** ***(B362) No. 5 — Chassis ground:*** ***(B362) No. 8 — Chassis ground:***	Is the resistance more than 1 MΩ?	Go to step **5.**	Repair the ground short of harness between ECM and electronic throttle control relay.
5	**CHECK HARNESS BETWEEN ECM AND ELECTRONIC THROTTLE CONTROL RELAY.** Measure the resistance between ECM connector and electronic throttle control relay connector. ***Connector & terminal*** ***(B135) No. 35 — (B362) No. 5:*** ***(B137) No. 6 — (B362) No. 8:***	Is the resistance less than 1 Ω?	Repair the poor contact in ECM connector. If problem persists, replace the ECM. <Ref. to FU(H4SO)-35, Engine Control Module (ECM).>	Repair the open harness between ECM and electronic throttle control relay.

CX:DTC P2103 THROTTLE ACTUATOR CONTROL MOTOR CIRCUIT HIGH

DTC DETECTING CONDITION:

- Detect as soon as malfunction occurs.
- GENERAL DESCRIPTION <Ref. to GD(H4SO)-218, DTC P2103 THROTTLE ACTUATOR CONTROL MOTOR CIRCUIT HIGH, Diagnostic Trouble Code (DTC) Detecting Criteria.>

WIRING DIAGRAM:

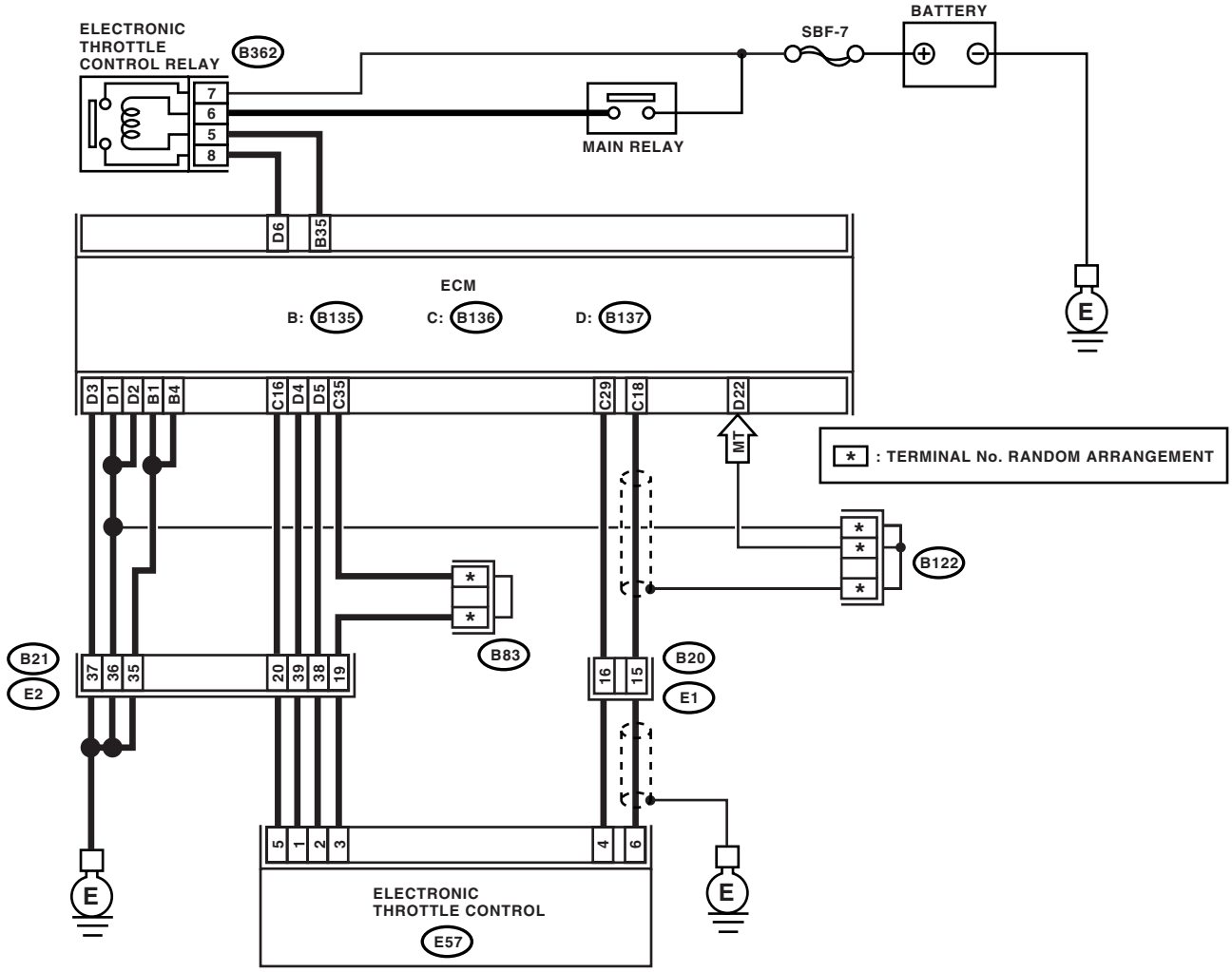

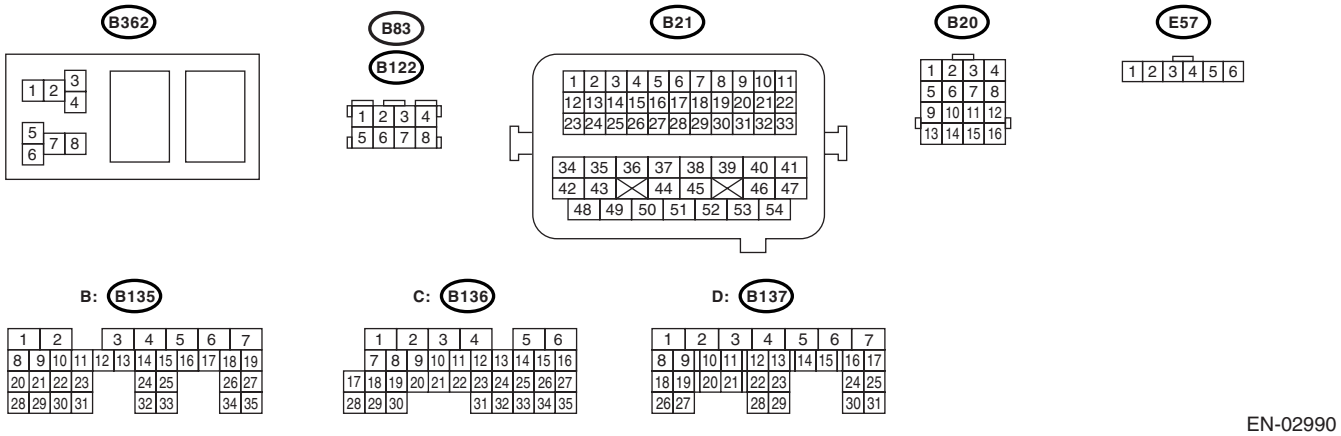

EN-02990

	Step	Check	Yes	No
1	**CHECK ELECTRONIC THROTTLE CONTROL RELAY.** 1) Turn the ignition switch to OFF. 2) Remove the electronic throttle control relay. 3) Measure the resistance between electronic throttle control relay terminals. ***Terminals*** ***No. 7 — No. 8:***	Is the resistance more than 1 MΩ?	Go to step **2.**	Replace the electronic throttle control relay.
2	**CHECK SHORT OF ELECTRONIC THROTTLE CONTROL RELAY POWER SUPPLY CIRCUIT.** 1) Turn the ignition switch to ON. 2) Measure the voltage between electronic throttle control relay connector and chassis ground. ***Connector & terminal*** ***(B362) No. 8 (+) — Chassis ground (−):***	Is the voltage more than 5 V?	Go to step **3.**	Repair the short of power supply to harness between ECM and electronic throttle control relay.
3	**CHECK HARNESS BETWEEN ECM AND ELECTRONIC THROTTLE CONTROL RELAY.** 1) Turn the ignition switch to OFF. 2) Disconnect the connectors from ECM. 3) Measure the resistance between ECM connector and engine ground. ***Connector & terminal*** ***(B135) No. 35 — Engine ground:***	Is the resistance more than 1 MΩ?	Repair the poor contact in ECM connector. If problem persists, replace the ECM. <Ref. to FU(H4SO)-35, Engine Control Module (ECM).>	Repair the ground short of harness between ECM and electronic throttle control relay.

CY:DTC P2109 THROTTLE/PEDAL POSITION SENSOR A MINIMUM STOP PERFORMANCE

NOTE:
For diagnostic procedure, refer to DTC P2101. <Ref. to EN(H4SO)(diag)-270, DTC P2101 THROTTLE ACTUATOR CONTROL MOTOR CIRCUIT RANGE/PERFORMANCE, Diagnostic Procedure with Diagnostic Trouble Code (DTC).>

CZ:DTC P2122 THROTTLE/PEDAL POSITION SENSOR/SWITCH “D” CIRCUIT LOW INPUT

DTC DETECTING CONDITION:

- Detect as soon as malfunction occurs.
- GENERAL DESCRIPTION <Ref. to GD(H4SO)-222, DTC P2122 THROTTLE/PEDAL POSITION SENSOR/SWITCH “D” CIRCUIT LOW INPUT, Diagnostic Trouble Code (DTC) Detecting Criteria.>

TROUBLE SYMPTOM:

- Erroneous idling
- Poor driving performance

WIRING DIAGRAM:

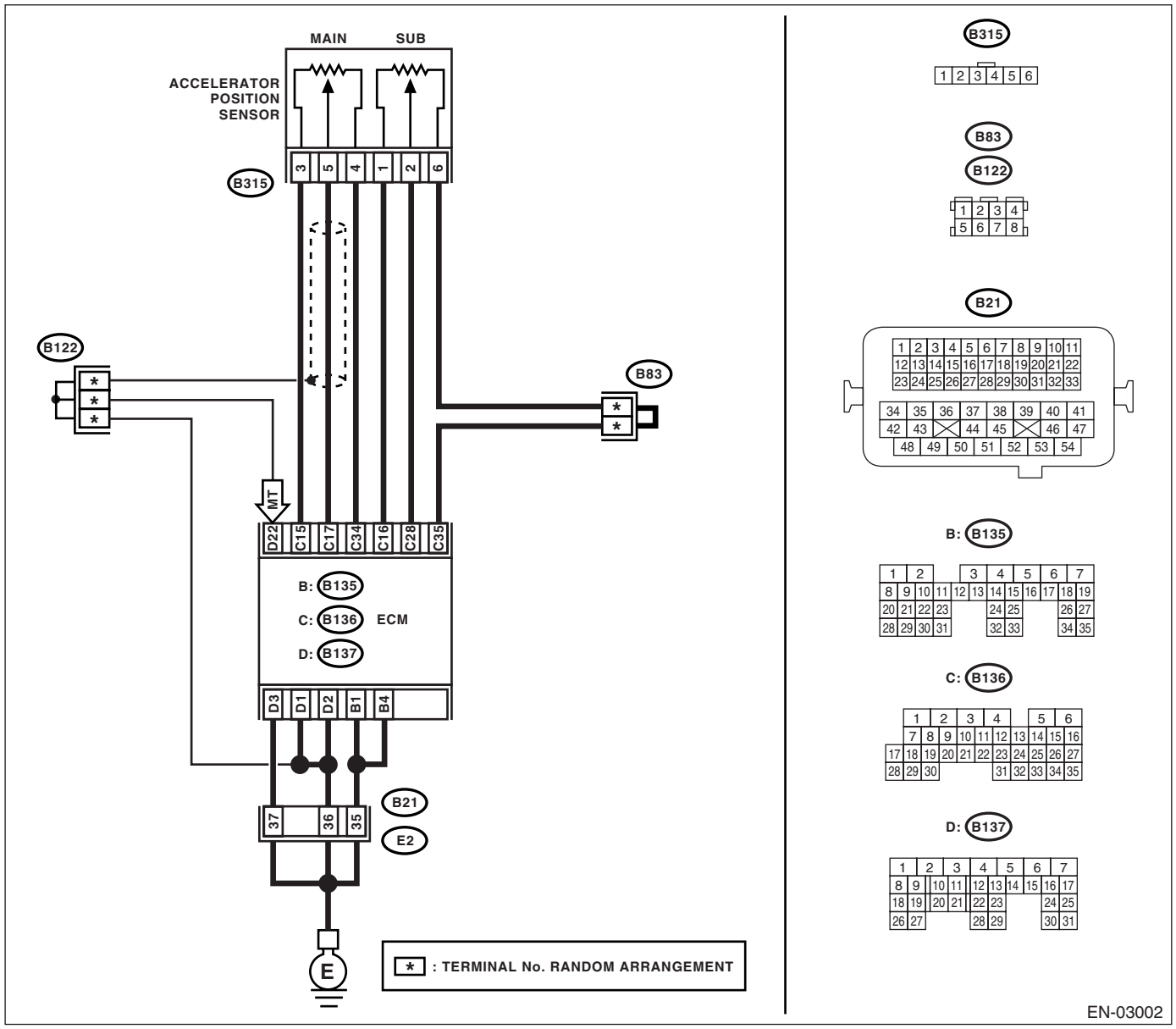

	Step	Check	Yes	No
1	**CHECK OUTPUT VOLTAGE OF ACCELERATOR POSITION SENSOR.** 1) Turn the ignition switch to ON. 2) Read the data of main accelerator position sensor signal using Subaru Select Monitor. NOTE: • Subaru Select Monitor For detailed operation procedure, refer to the "READ CURRENT DATA FOR ENGINE". <Ref. to EN(H4SO)(diag)-27, Subaru Select Monitor.>	Is the voltage more than 0.4 V?	Go to step **2.**	Go to step **3.**
2	**CHECK POOR CONTACT IN CONNECTORS.** Check poor contact in connectors between ECM and accelerator position sensor.	Is there poor contact in connectors between ECM and accelerator position sensor?	Repair the poor contact in connectors.	Connector has returned to its normal condition at this time. A temporary poor contact of the connector may be the cause.
3	**CHECK HARNESS BETWEEN ECM AND ACCELERATOR POSITION SENSOR.** 1) Turn the ignition switch to OFF. 2) Disconnect the connector from ECM. 3) Disconnect the connector from accelerator position sensor. 4) Measure the resistance between ECM connector and accelerator position sensor. ***Connector & terminal*** ***(B136) No. 17 — (B315) No. 5:*** ***(B136) No. 15 — (B315) No. 3:***	Is the resistance less than 1 Ω?	Go to step **4.**	Repair the open harness connector.
4	**CHECK HARNESS BETWEEN ECM AND ACCELERATOR POSITION SENSOR.** Measure the resistance between ECM connector and chassis ground. ***Connector & terminal*** ***(B136) No. 17 — Chassis ground:*** ***(B136) No. 15 — Chassis ground:***	Is the resistance more than 1 MΩ?	Go to step **5.**	Repair the open harness connector.
5	**CHECK ACCELERATOR POSITION SENSOR POWER SUPPLY** 1) Connect the ECM connector. 2) Turn the ignition switch to ON. 3) Measure the voltage between accelerator position sensor connector and chassis ground. ***Connector & terminal*** ***(B315) No. 3 (+) — Chassis ground (−):***	Is the voltage 4.5 — 5.5 V?	Go to step **6.**	Repair the poor contact in ECM connector. If problem persists, replace the ECM. <Ref. to FU(H4SO)-35, Engine Control Module (ECM).>
6	**CHECK ACCELERATOR POSITION SENSOR.** Measure the resistance of accelerator position sensor. ***Terminals*** ***No. 3 — No. 4:***	Is the resistance 1.2 — 4.8 kΩ?	Go to step **7.**	Replace the accelerator position sensor.
7	**CHECK ACCELERATOR POSITION SENSOR.** Measure the resistance of accelerator position sensor when accelerator pedal is released. ***Terminals*** ***No. 5 — No. 4:***	Is the resistance 0.2 — 1.0 kΩ?	Go to step **8.**	Replace the accelerator position sensor.

	Step	Check	Yes	No
8	**CHECK ACCELERATOR POSITION SENSOR.** Measure the resistance of accelerator position sensor when acceleration pedal is being depressed. ***Terminals*** ***No. 5 — No. 4:***	Is the resistance 0.5 — 2.5 kΩ?	Repair the poor contact in ECM connector. If problem persists, replace the ECM. <Ref. to FU(H4SO)-35, Engine Control Module (ECM).>	Replace the accelerator position sensor.

DA:DTC P2123 THROTTLE/PEDAL POSITION SENSOR/SWITCH "D" CIRCUIT HIGH INPUT

DTC DETECTING CONDITION:

- Detect as soon as malfunction occurs.
- GENERAL DESCRIPTION <Ref. to GD(H4SO)-224, DTC P2123 THROTTLE/PEDAL POSITION SENSOR/SWITCH "D" CIRCUIT HIGH INPUT, Diagnostic Trouble Code (DTC) Detecting Criteria.>

TROUBLE SYMPTOM:

- Erroneous idling
- Poor driving performance

WIRING DIAGRAM:

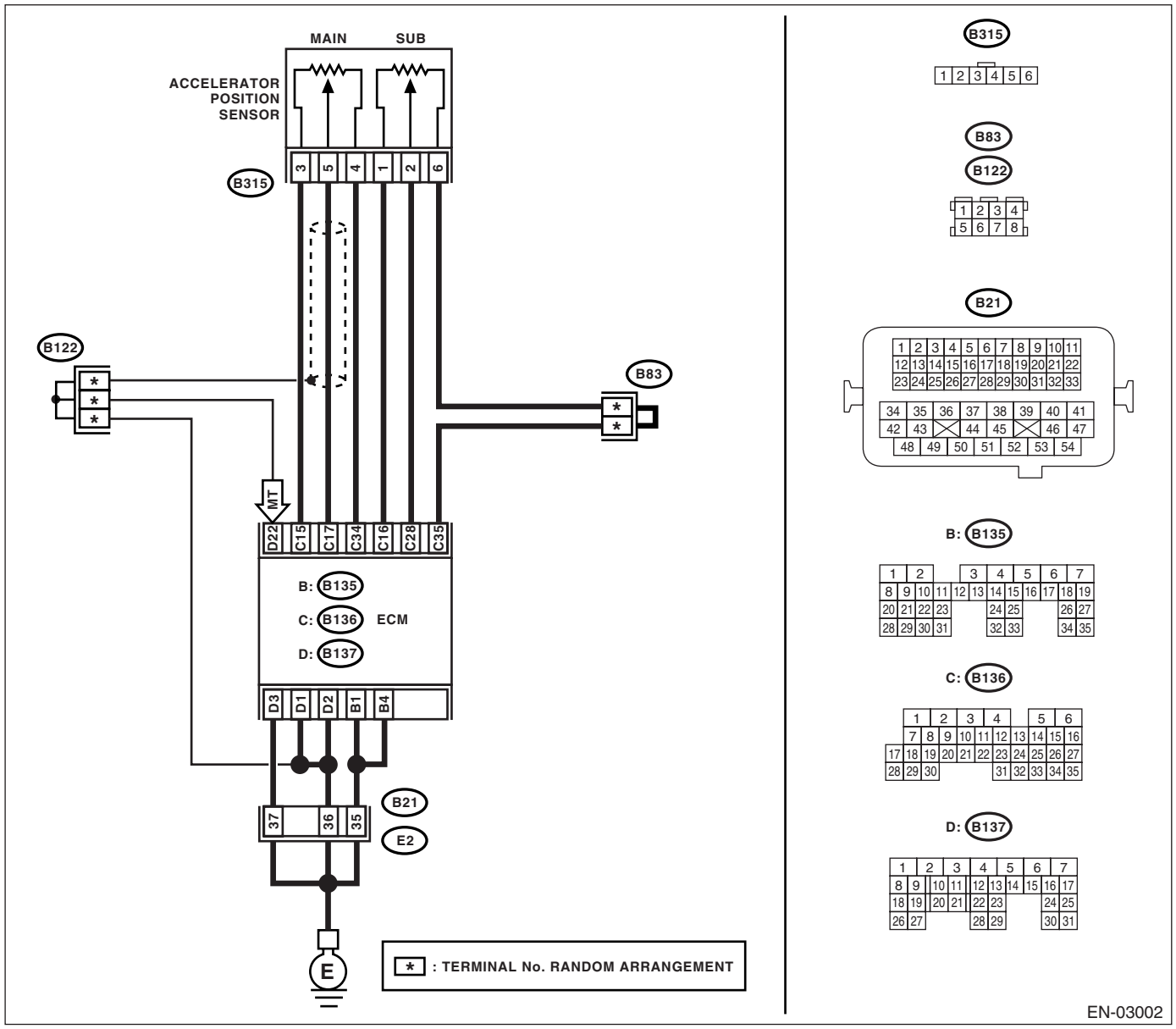

	Step	Check	Yes	No
1	**CHECK OUTPUT VOLTAGE OF ACCELERATOR POSITION SENSOR.** 1) Turn the ignition switch to ON. 2) Read the data of main accelerator position sensor signals, using Subaru Select Monitor. NOTE: • Subaru Select Monitor For detailed operation procedure, refer to the "READ CURRENT DATA FOR ENGINE". <Ref. to EN(H4SO)(diag)-27, Subaru Select Monitor.>	Is the voltage less than 4.8 V?	Go to step **2.**	Go to step **3.**
2	**CHECK POOR CONTACT IN CONNECTORS.** Check poor contact in connectors between ECM and accelerator position sensor.	Is there any poor contact in connectors between ECM and accelerator position sensor?	Repair the poor contact in connectors.	Connector has returned to its normal condition at this time. A temporary poor contact in the connector might have been the cause.
3	**CHECK HARNESS BETWEEN ECM AND ACCELERATOR POSITION SENSOR.** 1) Turn the ignition switch to OFF. 2) Disconnect the connector from ECM. 3) Disconnect the connector from accelerator position sensor. 4) Measure the resistance between ECM connector and accelerator position sensor. ***Connector & terminal*** ***(B136) No. 34 — (B315) No. 4:***	Is the resistance less than 1 Ω?	Go to step **4.**	Repair the open harness connector.
4	**CHECK HARNESS BETWEEN ECM AND ACCELERATOR POSITION SENSOR.** 1) Connect the ECM connector. 2) Measure the resistance between accelerator position sensor and chassis ground. ***Connector & terminal*** ***(B315) No. 4 — Chassis ground:***	Is the resistance less than 5 Ω?	Go to step **5.**	Repair the poor contact in ECM connector. If problem persists, replace the ECM. <Ref. to FU(H4SO)-35, Engine Control Module (ECM).>
5	**CHECK HARNESS BETWEEN ECM AND ACCELERATOR POSITION SENSOR.** 1) Connect the ECM connector. 2) Turn the ignition switch to ON. 3) Measure the voltage between accelerator position sensor connector and chassis ground. ***Connector & terminal*** ***(B315) No. 5 (+) — Chassis ground (−):***	Is the voltage less than 6 V?	Go to step **6.**	Repair the battery short of harness between ECM connector and accelerator position sensor.
6	**CHECK HARNESS BETWEEN ECM AND ACCELERATOR POSITION SENSOR.** 1) Turn the ignition switch to OFF. 2) Disconnect the connector from ECM. 3) Measure the resistance between ECM connectors. ***Connector & terminal*** ***(B136) No. 17 — (B136) No. 15:*** ***(B136) No. 17 — (B136) No. 16:***	Is the resistance more than 1 MΩ?	Repair the poor contact in electronic throttle control connector. If problem persists, replace the electronic throttle control.	Repair the short to sensor power supply.

DB:DTC P2127 THROTTLE/PEDAL POSITION SENSOR/SWITCH “E” CIRCUIT LOW INPUT

DTC DETECTING CONDITION:

- Detect as soon as malfunction occurs.
- GENERAL DESCRIPTION <Ref. to GD(H4SO)-226, DTC P2127 THROTTLE/PEDAL POSITION SENSOR/SWITCH “E” CIRCUIT LOW INPUT, Diagnostic Trouble Code (DTC) Detecting Criteria.>

TROUBLE SYMPTOM:

- Erroneous idling
- Poor driving performance

WIRING DIAGRAM:

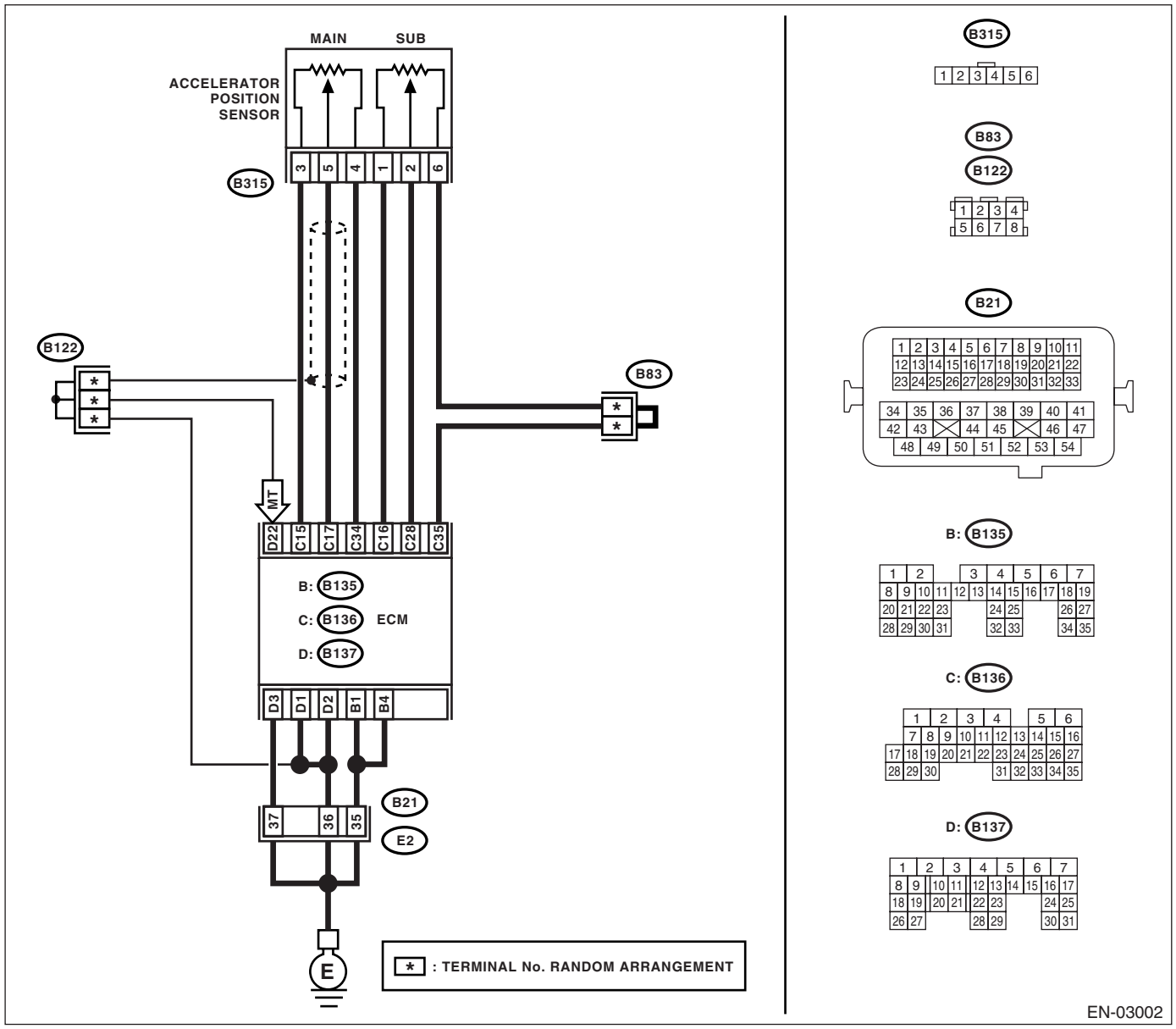

	Step	Check	Yes	No
1	**CHECK OUTPUT VOLTAGE OF ACCELERATOR POSITION SENSOR.** 1) Turn the ignition switch to ON. 2) Read the data of sub accelerator position sensor signal using Subaru Select Monitor. NOTE: • Subaru Select Monitor For detailed operation procedure, refer to the "READ CURRENT DATA FOR ENGINE". <Ref. to EN(H4SO)(diag)-27, Subaru Select Monitor.>	Is the voltage more than 0.4 V?	Go to step **2.**	Go to step **3.**
2	**CHECK POOR CONTACT IN CONNECTORS.** Check poor contact in connectors between ECM and accelerator position sensor.	Is there any poor contact in connectors between ECM and accelerator position sensor?	Repair the poor contact in connectors.	Connector has returned to its normal condition at this time. A temporary poor contact in the connector might have been the cause.
3	**CHECK HARNESS BETWEEN ECM AND ACCELERATOR POSITION SENSOR.** 1) Turn the ignition switch to OFF. 2) Disconnect the connector from ECM. 3) Disconnect the connector from accelerator position sensor. 4) Measure the resistance between ECM connector and accelerator position sensor. ***Connector & terminal*** ***(B136) No. 28 — (B315) No. 2:*** ***(B136) No. 16 — (B315) No. 1:***	Is the resistance less than 1 Ω?	Go to step **4.**	Repair the open harness connector.
4	**CHECK HARNESS BETWEEN ECM AND ACCELERATOR POSITION SENSOR.** Measure the resistance between ECM connector and chassis ground. ***Connector & terminal*** ***(B136) No. 28 — Chassis ground:*** ***(B136) No. 16 — Chassis ground:***	Is the resistance more than 1 MΩ?	Go to step **5.**	Repair the ground short of harness.
5	**CHECK POWER SUPPLY TO ACCELERATOR POSITION SENSOR.** 1) Connect the ECM connector. 2) Turn the ignition switch to ON. 3) Measure the voltage between accelerator position sensor connector and chassis ground. ***Connector & terminal*** ***(B315) No. 1 (+) — Chassis ground (−):***	Is the voltage 4.5 — 5.5 V?	Go to step **6.**	Repair the poor contact in ECM connector. If problem persists, replace the ECM. <Ref. to FU(H4SO)-35, Engine Control Module (ECM).>
6	**CHECK ACCELERATOR POSITION SENSOR.** Measure the resistance of accelerator position sensor. ***Terminals*** ***No. 1 — No. 6:***	Is the resistance 0.75 — 3.15 kΩ?	Go to step **7.**	Replace the accelerator position sensor.

	Step	Check	Yes	No
7	**CHECK ACCELERATOR POSITION SENSOR.** Measure the resistance of accelerator position sensor when accelerator pedal is released. ***Terminals*** ***No. 2 — No. 6:*** Check the measured value is within the specification without depressing the accelerator pedal.	Is the resistance 0.15 — 0.63 kΩ?	Go to step **8.**	Replace the accelerator position sensor.
8	**CHECK ACCELERATOR POSITION SENSOR.** Measure the resistance of accelerator position sensor when acceleration pedal is being depressed. ***Terminals*** ***No. 2 — No. 6:*** Check the measured value is within the specification without depressing the accelerator pedal.	Is the resistance 0.28 — 1.68 kΩ?	Repair the poor contact in ECM connector. If problem persists, replace the ECM. <Ref. to FU(H4SO)-35, Engine Control Module (ECM).>	Replace the accelerator position sensor.

DC:DTC P2128 THROTTLE/PEDAL POSITION SENSOR/SWITCH “E” CIRCUIT HIGH INPUT

DTC DETECTING CONDITION:

- Detect as soon as malfunction occurs.
- GENERAL DESCRIPTION <Ref. to GD(H4SO)-228, DTC P2128 THROTTLE/PEDAL POSITION SENSOR/SWITCH “E” CIRCUIT HIGH INPUT, Diagnostic Trouble Code (DTC) Detecting Criteria.>

TROUBLE SYMPTOM:

- Erroneous idling
- Poor driving performance

WIRING DIAGRAM:

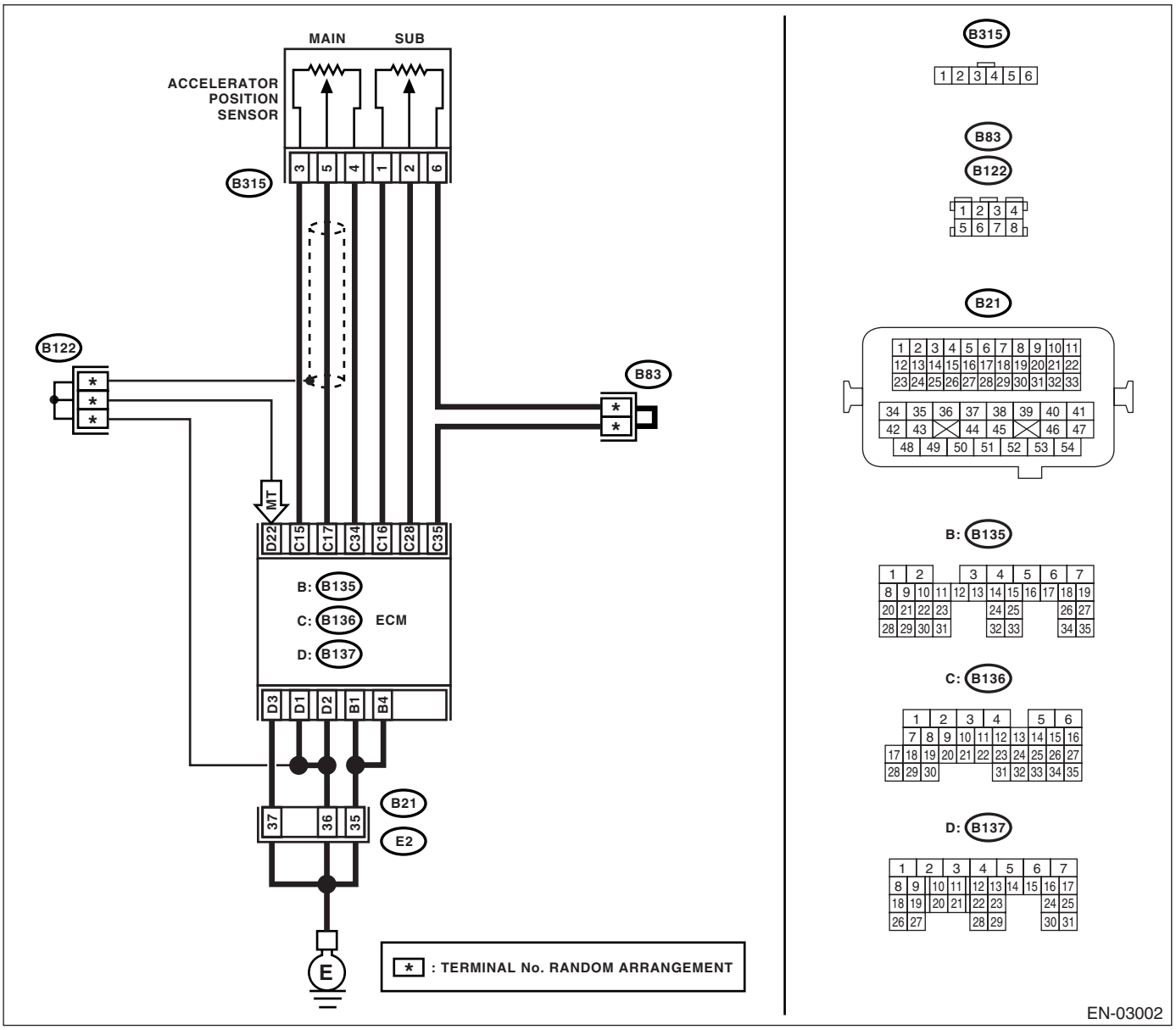

	Step	Check	Yes	No
1	**CHECK OUTPUT VOLTAGE OF ACCELERATOR POSITION SENSOR.** 1) Turn the ignition switch to ON. 2) Read the data of sub accelerator position sensor signals, using Subaru Select Monitor. NOTE: • Subaru Select Monitor For detailed operation procedure, refer to the "READ CURRENT DATA FOR ENGINE". <Ref. to EN(H4SO)(diag)-27, Subaru Select Monitor.>	Is the voltage less than 4.8 V?	Go to step **2.**	Go to step **3.**
2	**CHECK POOR CONTACT IN CONNECTORS.** Check poor contact in connectors between ECM and accelerator position sensor.	Is there any poor contact in connectors between ECM and accelerator position sensor?	Repair the poor contact in connectors.	Connector has returned to its normal condition at this time. A temporary poor contact in the connector might have been the cause.
3	**CHECK HARNESS BETWEEN ECM AND ACCELERATOR POSITION SENSOR.** 1) Turn the ignition switch to OFF. 2) Disconnect the connector from ECM. 3) Disconnect the connector from accelerator position sensor. 4) Measure the resistance between ECM connector and accelerator position sensor. ***Connector & terminal*** ***(B136) No. 35 — (B315) No. 6:***	Is the resistance less than 1 Ω?	Go to step **4.**	Repair the open harness connector.
4	**CHECK HARNESS BETWEEN ECM AND ACCELERATOR POSITION SENSOR.** 1) Connect the ECM connector. 2) Measure the resistance between accelerator position sensor connector and chassis ground. ***Connector & terminal*** ***(B315) No. 6 — Chassis ground:***	Is the resistance less than 5 Ω?	Go to step **5.**	Repair the poor contact in ECM connector. If problem persists, replace the ECM. <Ref. to FU(H4SO)-35, Engine Control Module (ECM).>
5	**CHECK HARNESS BETWEEN ECM AND ACCELERATOR POSITION SENSOR.** 1) Connect the ECM connector. 2) Turn the ignition switch to ON. 3) Measure the voltage between accelerator position sensor connector and chassis ground. ***Connector & terminal*** ***(B315) No. 2 (+) — Chassis ground (−):***	Is the voltage less than 6 V?	Go to step **6.**	Repair the battery short of harness between ECM connector and accelerator position sensor connector.
6	**CHECK HARNESS BETWEEN ECM AND ACCELERATOR POSITION SENSOR.** 1) Turn the ignition switch to OFF. 2) Disconnect the connector from ECM. 3) Measure the resistance between ECM connectors. ***Connector & terminal*** ***(B136) No. 28 — (B136) No. 15:*** ***(B136) No. 28 — (B136) No. 16:***	Is the resistance more than 1 MΩ?	Repair the poor contact in electronic throttle control connector. If problem persists, replace the electronic throttle control.	Repair the short to sensor power supply.

DD:DTC P2135 THROTTLE/PEDAL POSITION SENSOR/SWITCH “A”/“B” VOLTAGE RATIONALITY

DTC DETECTING CONDITION:

- Detect as soon as malfunction occurs.
- GENERAL DESCRIPTION <Ref. to GD(H4SO)-230, DTC P2135 THROTTLE/PEDAL POSITION SENSOR/SWITCH “A”/“B” VOLTAGE RATIONALITY, Diagnostic Trouble Code (DTC) Detecting Criteria.>

TROUBLE SYMPTOM:

- Erroneous idling
- Poor driving performance

CAUTION:
After repair or replacement of faulty parts, conduct Clear Memory Mode <Ref. to EN(H4SO)(diag)-43, OPERATION, Clear Memory Mode.> and Inspection Mode <Ref. to EN(H4SO)(diag)-35, PROCEDURE, Inspection Mode.>.

WIRING DIAGRAM:

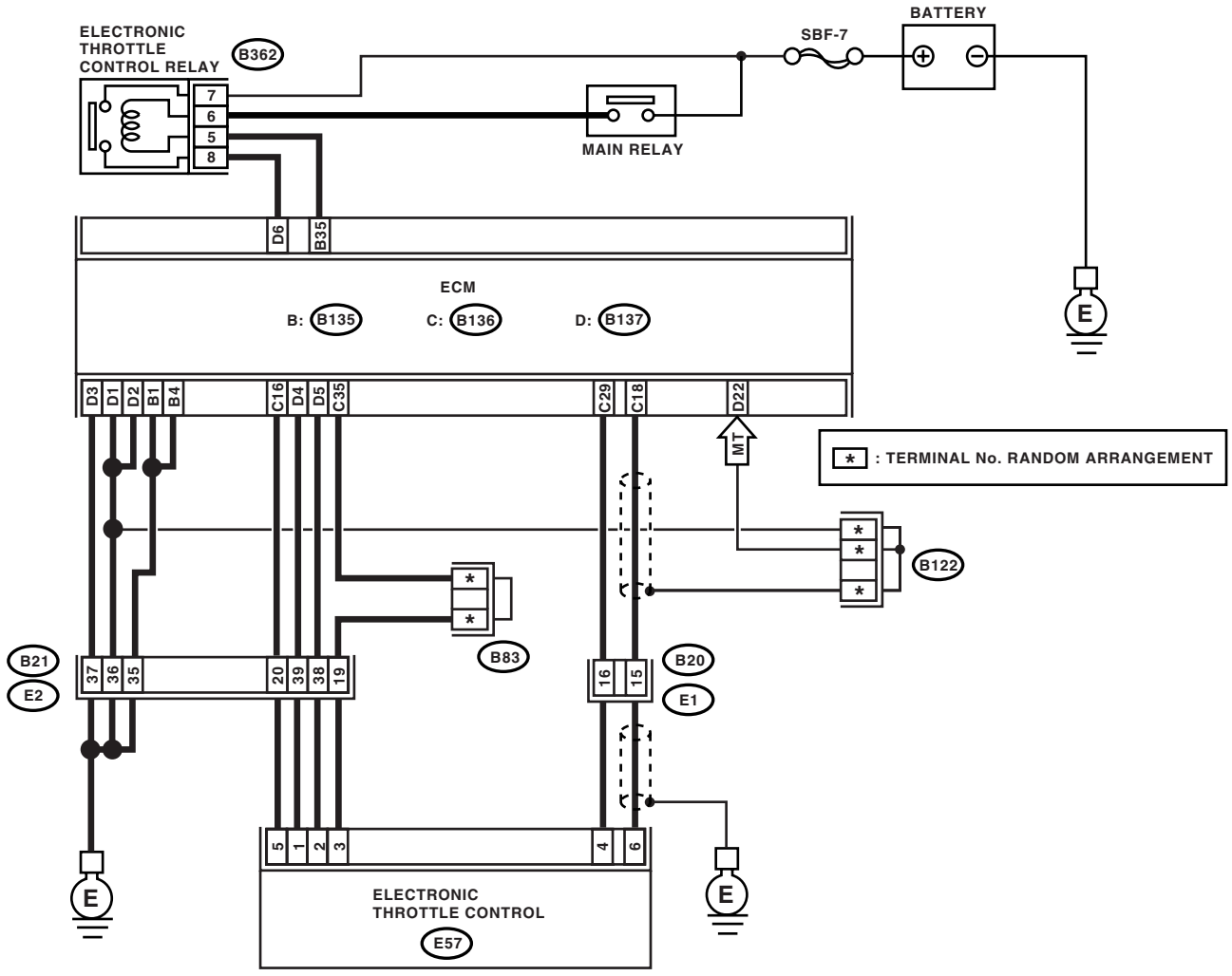

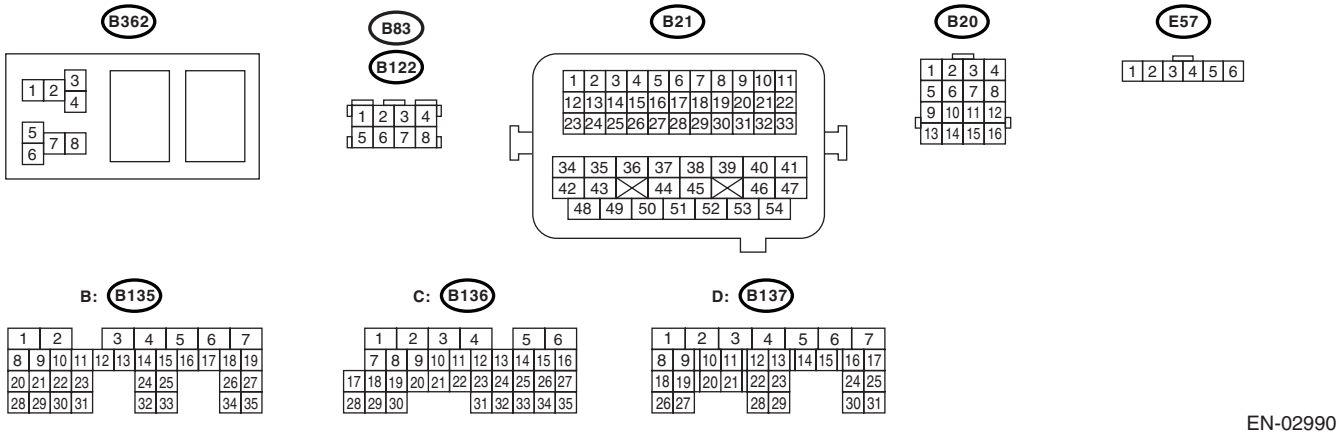

EN-02990

	Step	Check	Yes	No
1	**CHECK OUTPUT VOLTAGE OF ACCELERATOR POSITION SENSOR.** 1) Turn the ignition switch to ON. 2) Read the data of main throttle sensor signal, using Subaru Select Monitor. NOTE: • Subaru Select Monitor For detailed operation procedure, refer to the "READ CURRENT DATA FOR ENGINE". <Ref. to EN(H4SO)(diag)-27, Subaru Select Monitor.>	Is the measured value more than 0.4 V?	Go to step **2.**	Go to step **4.**
2	**CHECK OUTPUT VOLTAGE OF ACCELERATOR POSITION SENSOR.** Read the data of sub throttle sensor signal, using Subaru Select Monitor. NOTE: • Subaru Select Monitor For detailed operation procedure, refer to the "READ CURRENT DATA FOR ENGINE". <Ref. to EN(H4SO)(diag)-27, Subaru Select Monitor.>	Is the measured value more than 0.8 V?	Go to step **3.**	Go to step **4.**
3	**CHECK POOR CONTACT IN CONNECTORS.** Check poor contact in connectors between ECM and electronic throttle control.	Is there any poor contact in connectors between ECM and electronic throttle control?	Repair the poor contact in connectors.	Go to step **14.**
4	**CHECK HARNESS BETWEEN ECM AND ELECTRONIC THROTTLE CONTROL.** 1) Turn the ignition switch to OFF. 2) Disconnect the connector from ECM. 3) Disconnect the connector from electronic throttle control. 4) Measure the resistance between ECM connector and electronic throttle control connector. ***Connector & terminal*** ***(B136) No. 18 — (E57) No. 6:*** ***(B136) No. 29 — (E57) No. 4:*** ***(B136) No. 16 — (E57) No. 5:***	Is the measured value less than 1 Ω?	Go to step **5.**	Repair the open harness connector.
5	**CHECK HARNESS BETWEEN ECM AND ELECTRONIC THROTTLE CONTROL.** Measure the resistance between ECM connector and chassis ground. ***Connector & terminal*** ***(B136) No. 18 — Chassis ground:*** ***(B136) No. 29 — Chassis ground:*** ***(B136) No. 16 — Chassis ground:***	Is the resistance more than 1 MΩ?	Go to step **6.**	Repair the ground short of harness.
6	**CHECK POWER SUPPLY TO SENSOR.** 1) Connect the ECM connector. 2) Turn the ignition switch to ON. 3) Measure the voltage between electronic throttle control connector and engine ground. ***Connector & terminal*** ***(E57) No. 5 (+) — Engine ground (−):***	Is the measured value within 4.5 to 5.5 V?	Go to step **7.**	Repair the poor contact in ECM connector. If problem persists, replace the ECM. <Ref. to FU(H4SO)-35, Engine Control Module (ECM).>

	Step	Check	Yes	No
7	**CHECK SHORT OF ECM.** 1) Turn the ignition switch to OFF. 2) Measure the resistance between electronic throttle control connector and engine ground. ***Connector & terminal*** ***(E57) No. 6 — Engine ground:*** ***(E57) No. 4 — Engine ground:***	Is the measured value more than 10 Ω?	Go to step **8.**	Repair the poor contact in ECM connector. If problem persists, replace the ECM. <Ref. to FU(H4SO)-35, Engine Control Module (ECM).>
8	**CHECK OUTPUT VOLTAGE OF ACCELERATOR POSITION SENSOR.** 1) Connect all the connectors. 2) Turn the ignition switch to ON. 3) Read the data of main throttle sensor signals, using Subaru Select Monitors. NOTE: • Subaru Select Monitor For detailed operation procedure, refer to the "READ CURRENT DATA FOR ENGINE". <Ref. to EN(H4SO)(diag)-27, Subaru Select Monitor.>	Is the measured value less than 4.63 V?	Go to step **9.**	Go to step **11.**
9	**CHECK OUTPUT VOLTAGE OF ACCELERATOR POSITION SENSOR.** Read the data of sub throttle sensor signals, using Subaru Select Monitors. NOTE: • Subaru Select Monitor For detailed operation procedure, refer to the "READ CURRENT DATA FOR ENGINE". <Ref. to EN(H4SO)(diag)-27, Subaru Select Monitor.>	Is the measured value less than 4.73 V?	Go to step **10.**	Go to step **11.**
10	**CHECK POOR CONTACT IN CONNECTORS.** Check poor contact in connectors between ECM and electronic throttle control.	Is there any poor contact in connectors between ECM and electronic throttle control?	Repair the poor contact in connectors.	Connector has returned to a normal condition at this time. A temporary poor contact in the connector might have been the cause.
11	**CHECK HARNESS BETWEEN ECM AND ELECTRONIC THROTTLE CONTROL.** 1) Turn the ignition switch to OFF. 2) Disconnect the connector from ECM. 3) Disconnect the connector from electronic throttle control. 4) Measure the resistance between ECM connector and electronic throttle control connector. ***Connector & terminal*** ***(B136) No. 35 — (E57) No. 3:*** ***(B136) No. 18 — (E57) No. 6:*** ***(B136) No. 29 — (E57) No. 4:***	Is the measured value less than 1 Ω?	Go to step **12.**	Repair the open harness connector.
12	**CHECK HARNESS BETWEEN ECM AND ELECTRONIC THROTTLE CONTROL.** 1) Connect the ECM connector. 2) Measure the resistance between electronic throttle control connector and engine ground. ***Connector & terminal*** ***(E57) No. 3 — Engine ground:***	Is the measured value less than 5 Ω?	Go to step **13.**	Repair the poor contact in ECM connector. If problem persists, replace the ECM.<Ref. to FU(H4SO)-35, Engine Control Module (ECM).>

	Step	Check	Yes	No
13	**CHECK HARNESS BETWEEN ECM AND ELECTRONIC THROTTLE CONTROL.** 1) Connect the ECM connector. 2) Turn the ignition switch to ON. 3) Measure the voltage between electronic throttle control connector and engine ground. ***Connector & terminal*** ***(E57) No. 5 (+) — Engine ground (−):***	Is the measured value less than 10 V?	Go to step **14.**	Repair the battery short of harness between ECM connector and electronic throttle control connector.
14	**CHECK HARNESS BETWEEN ECM AND ELECTRONIC THROTTLE CONTROL.** Measure the voltage between electronic throttle control connector and engine ground. ***Connector & terminal*** ***(E57) No. 6 (+) — Engine ground (−):*** ***(E57) No. 4 (+) — Engine ground (−):***	Is the measured value less than 10 V?	Go to step **15.**	Repair the short of harness between ECM connector and electronic throttle control connector.
15	**CHECK HARNESS BETWEEN ECM AND ELECTRONIC THROTTLE CONTROL.** 1) Turn the ignition switch to OFF. 2) Disconnect the electronic throttle control connector. 3) Measure the resistance between ECM connectors. ***Connector & terminal*** ***(B136) No. 18 — (B136) No. 16:*** ***(B136) No. 29 — (B136) No. 16:***	Is the measured value more than 1 MΩ?	Go to step **16.**	Repair the short of power supply sensor.
16	**CHECK ELECTRONIC THROTTLE CONTROL HARNESS.** 1) Disconnect the connector from ECM. 2) Disconnect the connector from electronic throttle control. 3) Measure the resistance between electronic throttle control connector terminals. ***Connector & terminal*** ***(E57) No. 6 — (E57) No. 4:***	Is the measured value more than 1 MΩ?	Repair the poor contact in ECM connector. If problem persists, replace the ECM.	Repair the short of harness.

DE:DTC P2138 THROTTLE/PEDAL POSITION SENSOR/SWITCH “D”/“E” VOLTAGE RATIONALITY

DTC DETECTING CONDITION:

- Detect as soon as malfunction occurs.
- GENERAL DESCRIPTION <Ref. to GD(H4SO)-232, DTC P2138 THROTTLE/PEDAL POSITION SENSOR/SWITCH “D”/“E” VOLTAGE RATIONALITY, Diagnostic Trouble Code (DTC) Detecting Criteria.>

TROUBLE SYMPTOM:

- Erroneous idling
- Poor driving performance

WIRING DIAGRAM:

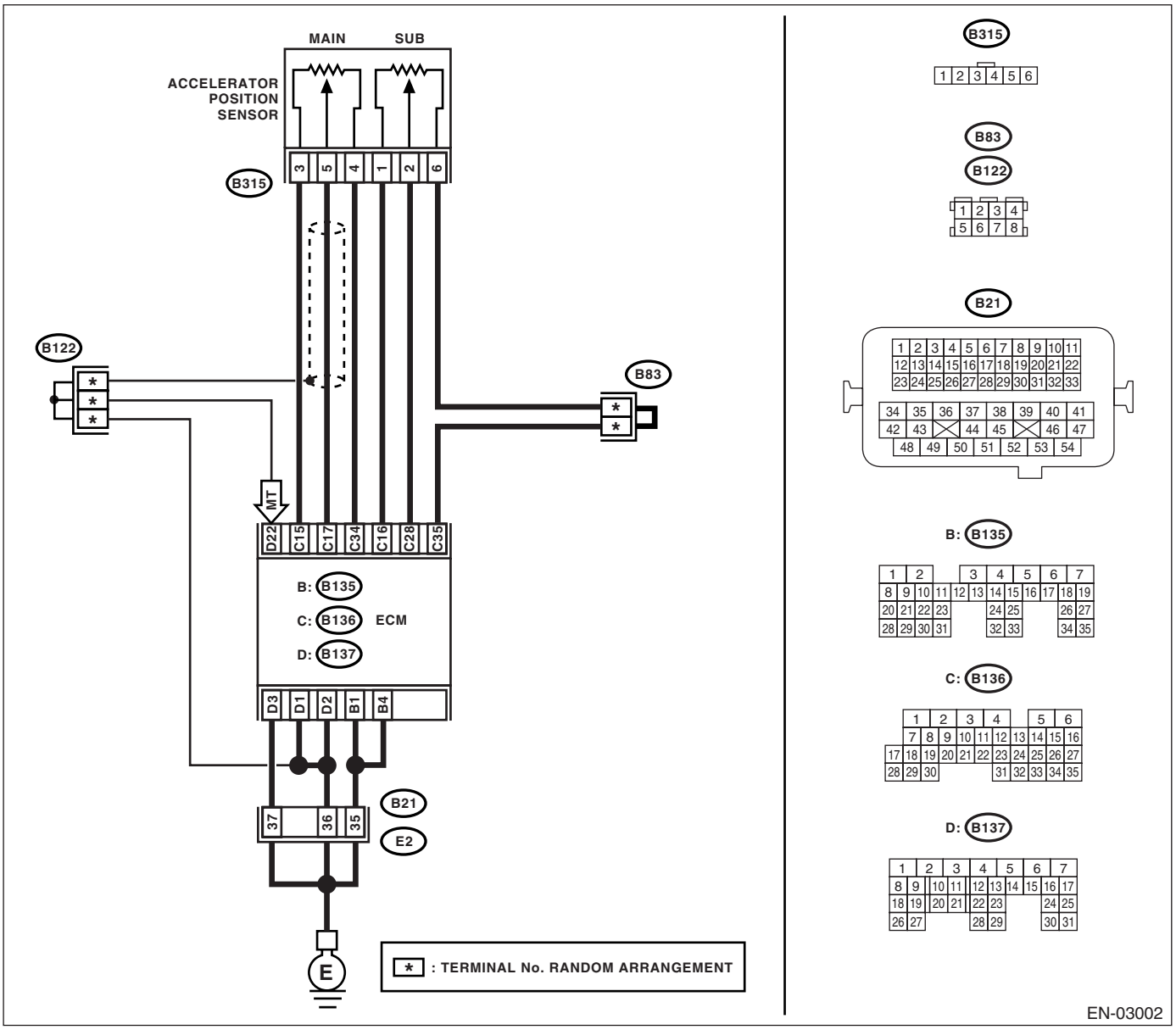

	Step	Check	Yes	No
1	**CHECK OUTPUT VOLTAGE OF ACCELERATOR POSITION SENSOR.** 1) Turn the ignition switch to ON. 2) Read the data of main and sub accelerator position sensor signals using Subaru Select Monitor. NOTE: • Subaru Select Monitor For detailed operation procedure, refer to the "READ CURRENT DATA FOR ENGINE". <Ref. to EN(H4SO)(diag)-27, Subaru Select Monitor.>	Is the measured value more than 0.4 V?	Go to step **2.**	Go to step **3.**
2	**CHECK POOR CONTACT IN CONNECTORS.** Check poor contact in connectors between ECM and electronic throttle control.	Is there any poor contact in connectors between ECM and electronic throttle control?	Repair the poor contact in connectors.	Go to step **9.**
3	**CHECK HARNESS BETWEEN ECM AND ACCELERATOR POSITION SENSOR.** 1) Turn the ignition switch to OFF. 2) Disconnect the connector from ECM. 3) Disconnect the connector from accelerator position sensor. 4) Measure the resistance between ECM connector and accelerator position sensor connector. ***Connector & terminal*** ***(B136) No. 17 — (B315) No. 5:*** ***(B136) No. 15 — (B315) No. 3:*** ***(B136) No. 28 — (B315) No. 2:*** ***(B136) No. 16 — (B315) No. 1:***	Is the measured value less than 1 Ω?	Go to step **4.**	Repair the open harness connector.
4	**CHECK HARNESS BETWEEN ECM AND ACCELERATOR POSITION SENSOR.** Measure the resistance between ECM connector and chassis ground. ***Connector & terminal*** ***(B136) No. 17 — Chassis ground:*** ***(B136) No. 15 — Chassis ground:*** ***(B136) No. 28 — Chassis ground:*** ***(B136) No. 16 — Chassis ground:***	Is the measured value more than 1 MΩ?	Go to step **5.**	Repair the ground short of harness.
5	**CHECK POWER SUPPLY TO ACCELERATOR POSITION SENSOR.** 1) Connect the ECM connector. 2) Turn the ignition switch to ON. 3) Measure the voltage between accelerator position sensor connector and engine ground. ***Connector & terminal*** ***(B315) No. 3 (+) — Engine ground (−):*** ***(B315) No. 1 (+) — Engine ground (−):***	Is the measured value within 4.5 to 5.5 V?	Go to step **6.**	Repair the poor contact in ECM connector. If problem persists, replace the ECM. <Ref. to FU(H4SO)-35, Engine Control Module (ECM).>
6	**CHECK ACCELERATOR POSITION SENSOR.** Measure the resistance of accelerator position sensor. ***Terminals*** ***No. 3 — No. 4:***	Is the measured value within 1.2 to 4.8 kΩ?	Go to step **7.**	Replace the accelerator position sensor.
7	**CHECK ACCELERATOR POSITION SENSOR.** Measure the resistance of accelerator position sensor. ***Terminals*** ***No. 1 — No. 6:***	Is the measured value within 0.75 to 3.15 kΩ?	Go to step **8.**	Replace the accelerator position sensor.

	Step	Check	Yes	No
8	**CHECK ACCELERATOR POSITION SENSOR.** Measure the resistance of accelerator position sensor when the acceleration pedal is released. ***Terminals*** ***No. 5 — No. 4:***	Is the measured value within 0.2 to 0.8 kΩ?	Go to step **9.**	Replace the accelerator position sensor.
9	**CHECK ACCELERATOR POSITION SENSOR.** Measure the resistance of accelerator position sensor when the acceleration pedal is released. ***Connector & terminal*** ***No. 2 — No. 6:***	Is the measured value within 0.15 to 0.63 kΩ?	Go to step **10.**	Replace the accelerator position sensor.
10	**CHECK ACCELERATOR POSITION SENSOR.** Measure the resistance of accelerator position sensor when the acceleration pedal is being depressed. ***Terminals*** ***No. 5 — No. 4:***	Is the measured value within 0.5 to 2.5 kΩ?	Go to step **11.**	Replace the accelerator position sensor.
11	**CHECK ACCELERATOR POSITION SENSOR.** Measure the resistance of accelerator position sensor when the acceleration pedal is being depressed. ***Terminals*** ***No. 2 — No. 6:***	Is the measured value within 0.28 to 1.68 kΩ?	Go to step **12.**	Replace the accelerator position sensor.
12	**CHECK OUTPUT VOLTAGE OF ACCELERATOR POSITION SENSOR.** 1) Turn the ignition switch to OFF. 2) Connect all the connectors. 3) Turn the ignition switch to ON. 4) Read the data of main accelerator position sensor signals and sub accelerator position sensor signals, using Subaru Select Monitor.	Is the measured value less than 4.8 V?	Go to step **13.**	Go to step **14.**
13	**CHECK POOR CONTACT IN CONNECTORS.** Check poor contact in connectors between ECM and electronic throttle control.	Is there any poor contact in connectors between ECM and electronic throttle control?	Repair the poor contact in connectors.	Go to step **18.**
14	**CHECK HARNESS BETWEEN ECM AND ACCELERATOR POSITION SENSOR.** 1) Turn the ignition switch to OFF. 2) Disconnect the connector from ECM. 3) Disconnect the connector from accelerator position sensor. 4) Measure the resistance between ECM connector and accelerator position sensor connector. ***Connector & terminal*** ***(B136) No. 34 — (B315) No. 4:*** ***(B136) No. 35 — (B315) No. 6:***	Is the measured value less than 1 Ω?	Go to step **15.**	Repair the open harness connector.
15	**CHECK HARNESS BETWEEN ECM AND ACCELERATOR POSITION SENSOR.** 1) Connect the ECM connector. 2) Measure the resistance between accelerator position sensor and chassis ground. ***Connector & terminal*** ***(B315) No. 4 — Chassis ground:*** ***(B315) No. 6 — Chassis ground:***	Is the measured value less than 5 Ω?	Go to step **16.**	Repair the poor contact in ECM connector. If problem persists, replace the ECM. <Ref. to FU(H4SO)-35, Engine Control Module (ECM).>

	Step	Check	Yes	No
16	**CHECK HARNESS BETWEEN ECM AND ACCELERATOR POSITION SENSOR.** 1) Connect the ECM connector. 2) Turn the ignition switch to ON. 3) Measure the voltage between accelerator position sensor and chassis ground. ***Connector & terminal*** ***(B315) No. 5 (+) — Chassis ground (−):*** ***(B315) No. 2 (+) — Chassis ground (−):***	Is the measured value less than 6 V?	Go to step **17.**	Repair the battery short of harness between ECM connector and accelerator position sensor.
17	**CHECK HARNESS BETWEEN ECM AND ACCELERATOR POSITION SENSOR.** 1) Turn the ignition switch to OFF. 2) Disconnect the connector from ECM. 3) Measure the resistance between ECM connectors. ***Connector & terminal*** ***(B136) No. 17 — (B136) No. 15:*** ***(B136) No. 17 — (B136) No. 16:*** ***(B136) No. 28 — (B136) No. 15:*** ***(B136) No. 28 — (B136) No. 16:***	Is the measured value more than 1 MΩ?	Go to step **18.**	Repair the short to sensor power supply.
18	**CHECK HARNESS BETWEEN ECM AND ACCELERATOR POSITION SENSOR.** 1) Turn the ignition switch to OFF. 2) Disconnect the connector from ECM. 3) Disconnect the connector from accelerator position sensor. 4) Measure the resistance between terminals of accelerator position sensor connector. ***Connector & terminal*** ***(B315) No. 5 — (B315) No. 2:***	Is the measured value more than 1 MΩ?	Repair the poor contact in ECM connector. If problem persists, replace the ECM. <Ref. to FU(H4SO)-35, Engine Control Module (ECM).>	Repair the short of harness between accelerator position sensor connector and accelerator position sensor connector.

DF:DTC P2227 BAROMETRIC PRESSURE CIRCUIT RANGE/PERFORMANCE

DTC DETECTING CONDITION:

- Two consecutive driving cycles with fault
- GENERAL DESCRIPTION <Ref. to GD(H4SO)-234, DTC P2227 BAROMETRIC PRESSURE CIRCUIT RANGE/PERFORMANCE, Diagnostic Trouble Code (DTC) Detecting Criteria.>

CAUTION:
After repair or replacement of faulty parts, conduct Clear Memory Mode <Ref. to EN(H4SO)(diag)-43, OPERATION, Clear Memory Mode.> and Inspection Mode <Ref. to EN(H4SO)(diag)-35, PROCEDURE, Inspection Mode.>.

	Step	Check	Yes	No
1	**CHECK FOR ANY OTHER DTC ON DISPLAY.**	Is any other DTC displayed?	Check DTC using "List of Diagnostic Trouble Code (DTC)". <Ref. to EN(H4SO)(diag)-70, List of Diagnostic Trouble Code (DTC).> NOTE: It is not necessary to inspect DTC P0129.	Replace the ECM. <Ref. to FU(H4SO)-35, Engine Control Module (ECM).>

DG:DTC P2228 BAROMETRIC PRESSURE CIRCUIT LOW INPUT

DTC DETECTING CONDITION:

- Detect as soon as malfunction occurs.
- GENERAL DESCRIPTION <Ref. to GD(H4SO)-235, DTC P2228 BAROMETRIC PRESSURE CIRCUIT LOW INPUT, Diagnostic Trouble Code (DTC) Detecting Criteria.>

CAUTION:
After repair or replacement of faulty parts, conduct Clear Memory Mode <Ref. to EN(H4SO)(diag)-43, OPERATION, Clear Memory Mode.> and Inspection Mode <Ref. to EN(H4SO)(diag)-35, PROCEDURE, Inspection Mode.>.

	Step	Check	Yes	No
1	**CHECK FOR ANY OTHER DTC ON DISPLAY.**	Is any other DTC displayed?	Check DTC using the List of Diagnostic Trouble Code (DTC). <Ref. to EN(H4SO)(diag)-70, List of Diagnostic Trouble Code (DTC).> NOTE: It is not necessary to inspect DTC P1110.	Replace the ECM. <Ref. to FU(H4SO)-35, Engine Control Module (ECM).>

DH:DTC P2229 BAROMETRIC PRESSURE CIRCUIT HIGH INPUT

DTC DETECTING CONDITION:

- Detect as soon as malfunction occurs.
- GENERAL DESCRIPTION <Ref. to GD(H4SO)-236, DTC P2229 BAROMETRIC PRESSURE CIRCUIT HIGH INPUT, Diagnostic Trouble Code (DTC) Detecting Criteria.>

CAUTION:
After repair or replacement of faulty parts, conduct Clear Memory Mode <Ref. to EN(H4SO)(diag)-43, OPERATION, Clear Memory Mode.> and Inspection Mode <Ref. to EN(H4SO)(diag)-35, PROCEDURE, Inspection Mode.>.

	Step	Check	Yes	No
1	**CHECK FOR ANY OTHER DTC ON DISPLAY.**	Is any other DTC displayed?	Check DTC using the List of Diagnostic Trouble Code (DTC). <Ref. to EN(H4SO)(diag)-70, List of Diagnostic Trouble Code (DTC).> NOTE: It is not necessary to inspect DTC P1111.	Replace the ECM. <Ref. to FU(H4SO)-35, Engine Control Module (ECM).>

19.General Diagnostic Table

A: INSPECTION

1. ENGINE

NOTE:
Malfunction of parts other than those listed is also possible. <Ref. to ME(H4SO)-85, Engine Trouble in General.>

Symptom	Problem parts
1. Engine stalls during idling.	1) Manifold absolute pressure sensor 2) Intake air temperature sensor 3) Air flow and ignition parts (*1) 4) Engine coolant temperature sensor (*2) 5) Crankshaft position sensor (*3) 6) Camshaft position sensor (*3) 7) Fuel injection parts (*4)
2. Rough idling	1) Manifold absolute pressure sensor 2) Intake air temperature sensor 3) Engine coolant temperature sensor (*2) 4) Air flow and ignition parts (*1) 5) Air intake system (*5) 6) Fuel injection parts (*4) 7) Electronic throttle control 8) Crankshaft position sensor (*3) 9) Camshaft position sensor (*3) 10) Oxygen sensor 11) Fuel pump and fuel pump relay 12) EGR valve
3. Engine does not return to idle.	1) Engine coolant temperature sensor 2) Throttle position sensor 3) Manifold absolute pressure sensor 4) Air flow and intake air temperature sensor 5) EGR valve
4. Poor acceleration	1) Manifold absolute pressure sensor 2) Air flow and intake air temperature sensor 3) Electronic throttle control 4) Fuel injection parts (*4) 5) Fuel pump and fuel pump relay 6) Engine coolant temperature sensor (*2) 7) Crankshaft position sensor (*3) 8) Camshaft position sensor (*3) 9) A/C switch and A/C cut relay 10) Engine torque control signal circuit 11) Ignition parts (*1) 12) EGR valve
5. Engine stalls or engine sags or hesitates at acceleration.	1) Manifold absolute pressure sensor 2) Air flow and intake air temperature sensor 3) Engine coolant temperature sensor (*2) 4) Crankshaft position sensor (*3) 5) Camshaft position sensor (*3) 6) Purge control solenoid valve 7) Fuel injection parts (*4) 8) Electronic throttle control 9) Fuel pump and fuel pump relay 10) EGR valve

Symptom	Problem parts
6. Surge	1) Air flow and intake air temperature sensor 2) Manifold absolute pressure sensor 3) Engine coolant temperature sensor (*2) 4) Crankshaft position sensor (*3) 5) Camshaft position sensor (*3) 6) Fuel injection parts (*4) 7) Electronic throttle control 8) Fuel pump and fuel pump relay 9) EGR valve
7. Spark knock	1) Air flow and intake air temperature sensor 2) Manifold absolute pressure sensor 3) Engine coolant temperature sensor 4) Knock sensor 5) Fuel injection parts (*4) 6) Fuel pump and fuel pump relay 7) EGR valve
8. After burning in exhaust system	1) Air flow and intake air temperature sensor 2) Manifold absolute pressure sensor 3) Engine coolant temperature sensor (*2) 4) Fuel injection parts (*4) 5) Fuel pump and fuel pump relay

*1: Check ignition coil and ignitor assembly and spark plug.
*2: Indicate the symptom occurring only in cold temperatures.
*3: Ensure the secure installation.
*4: Check fuel injector, fuel pressure regulator and fuel filter.
*5: Inspect air leak in air intake system.

2. AUTOMATIC TRANSMISSION

NOTE:
Check general diagnostics table with non-conformity symptom for automatic transmission. <Ref. to 4AT(D)(diag)-2, Basic Diagnostic Procedure.>

GENERAL DESCRIPTION

GD(H4SO)

Page

1. List of Diagnostic Trouble Code (DTC) 2
2. Diagnostic Trouble Code (DTC) Detecting Criteria 8

1. List of Diagnostic Trouble Code (DTC)

A: LIST

DTC	Item	Index
P0030	HO2S Heater Control Circuit (Bank 1 Sensor 1)	<Ref. to GD(H4SO)-8, DTC P0030 HO2S HEATER CONTROL CIRCUIT (BANK 1 SENSOR 1), Diagnostic Trouble Code (DTC) Detecting Criteria.>
P0031	HO2S Heater Control Circuit Low (Bank 1 Sensor 1)	<Ref. to GD(H4SO)-10, DTC P0031 HO2S HEATER CONTROL CIRCUIT LOW (BANK 1 SENSOR 1), Diagnostic Trouble Code (DTC) Detecting Criteria.>
P0032	HO2S Heater Control Circuit High (Bank 1 Sensor 1)	<Ref. to GD(H4SO)-12, DTC P0032 HO2S HEATER CONTROL CIRCUIT HIGH (BANK 1 SENSOR 1), Diagnostic Trouble Code (DTC) Detecting Criteria.>
P0037	HO2S Heater Control Circuit Low (Bank 1 Sensor 2)	<Ref. to GD(H4SO)-14, DTC P0037 HO2S HEATER CONTROL CIRCUIT LOW (BANK 1 SENSOR 2), Diagnostic Trouble Code (DTC) Detecting Criteria.>
P0038	HO2S Heater Control Circuit High (Bank 1 Sensor 2)	<Ref. to GD(H4SO)-16, DTC P0038 HO2S HEATER CONTROL CIRCUIT HIGH (BANK 1 SENSOR 2), Diagnostic Trouble Code (DTC) Detecting Criteria.>
P0068	MAP/MAF - Throttle Position Correlation	<Ref. to GD(H4SO)-18, DTC P0068 MAP/MAF - THROTTLE POSITION CORRELATION, Diagnostic Trouble Code (DTC) Detecting Criteria.>
P0101	Mass or Volume Air Flow Circuit Range/Performance	<Ref. to GD(H4SO)-20, DTC P0101 MASS OR VOLUME AIR FLOW CIRCUIT RANGE/PERFORMANCE, Diagnostic Trouble Code (DTC) Detecting Criteria.>
P0102	Mass or Volume Air Flow Circuit Low Input	<Ref. to GD(H4SO)-23, DTC P0102 MASS OR VOLUME AIR FLOW CIRCUIT LOW INPUT, Diagnostic Trouble Code (DTC) Detecting Criteria.>
P0103	Mass or Volume Air Flow Circuit High Input	<Ref. to GD(H4SO)-25, DTC P0103 MASS OR VOLUME AIR FLOW CIRCUIT HIGH INPUT, Diagnostic Trouble Code (DTC) Detecting Criteria.>
P0107	Manifold Absolute Pressure/Barometric Pressure Circuit Low Input	<Ref. to GD(H4SO)-27, DTC P0107 MANIFOLD ABSOLUTE PRESSURE/BAROMETRIC PRESSURE CIRCUIT LOW INPUT, Diagnostic Trouble Code (DTC) Detecting Criteria.>
P0108	Manifold Absolute Pressure/Barometric Pressure Circuit High Input	<Ref. to GD(H4SO)-29, DTC P0108 MANIFOLD ABSOLUTE PRESSURE/BAROMETRIC PRESSURE CIRCUIT HIGH INPUT, Diagnostic Trouble Code (DTC) Detecting Criteria.>
P0111	Intake Air Temperature Circuit Range/Performance	<Ref. to GD(H4SO)-31, DTC P0111 INTAKE AIR TEMPERATURE CIRCUIT RANGE/PERFORMANCE, Diagnostic Trouble Code (DTC) Detecting Criteria.>
P0112	Intake Air Temperature Circuit Low Input	<Ref. to GD(H4SO)-33, DTC P0112 INTAKE AIR TEMPERATURE CIRCUIT LOW INPUT, Diagnostic Trouble Code (DTC) Detecting Criteria.>
P0113	Intake Air Temperature Circuit High Input	<Ref. to GD(H4SO)-35, DTC P0113 INTAKE AIR TEMPERATURE CIRCUIT HIGH INPUT, Diagnostic Trouble Code (DTC) Detecting Criteria.>
P0117	Engine Coolant Temperature Circuit Low Input	<Ref. to GD(H4SO)-37, DTC P0117 ENGINE COOLANT TEMPERATURE CIRCUIT LOW INPUT, Diagnostic Trouble Code (DTC) Detecting Criteria.>
P0118	Engine Coolant Temperature Circuit High Input	<Ref. to GD(H4SO)-39, DTC P0118 ENGINE COOLANT TEMPERATURE CIRCUIT HIGH INPUT, Diagnostic Trouble Code (DTC) Detecting Criteria.>
P0122	Throttle/Pedal Position Sensor/Switch “A” Circuit Low Input	<Ref. to GD(H4SO)-41, DTC P0122 THROTTLE/PEDAL POSITION SENSOR/SWITCH “A” CIRCUIT LOW INPUT, Diagnostic Trouble Code (DTC) Detecting Criteria.>
P0123	Throttle/Pedal Position Sensor/Switch “A” Circuit High Input	<Ref. to GD(H4SO)-43, DTC P0123 THROTTLE/PEDAL POSITION SENSOR/SWITCH “A” CIRCUIT HIGH INPUT, Diagnostic Trouble Code (DTC) Detecting Criteria.>
P0125	Insufficient Coolant Temperature for Closed Loop Fuel Control	<Ref. to GD(H4SO)-45, DTC P0125 INSUFFICIENT ENGINE COOLANT TEMPERATURE FOR CLOSED LOOP FUEL CONTROL, Diagnostic Trouble Code (DTC) Detecting Criteria.>
P0126	Insufficient Coolant Temperature for Stable Operation	<Ref. to GD(H4SO)-47, DTC P0126 INSUFFICIENT ENGINE COOLANT TEMPERATURE FOR STABLE OPERATION, Diagnostic Trouble Code (DTC) Detecting Criteria.>

DTC	Item	Index
P0128	Coolant Thermostat (Coolant Temperature Below Thermostat Regulating Temperature)	<Ref. to GD(H4SO)-49, DTC P0128 COOLANT THERMOSTAT (ENGINE COOLANT TEMPERATURE BELOW THERMOSTAT REGULATING TEMPERATURE), Diagnostic Trouble Code (DTC) Detecting Criteria.>
P0131	O2 Sensor Circuit Low Voltage (Bank 1 Sensor 1)	<Ref. to GD(H4SO)-51, DTC P0131 O2 SENSOR CIRCUIT LOW VOLTAGE (BANK 1 SENSOR 1), Diagnostic Trouble Code (DTC) Detecting Criteria.>
P0132	O2 Sensor Circuit High Voltage (Bank 1 Sensor 1)	<Ref. to GD(H4SO)-53, DTC P0132 O2 SENSOR CIRCUIT HIGH VOLTAGE (BANK 1 SENSOR 1), Diagnostic Trouble Code (DTC) Detecting Criteria.>
P0133	O2 Sensor Circuit Slow Response (Bank 1 Sensor 1)	<Ref. to GD(H4SO)-55, DTC P0133 O2 SENSOR CIRCUIT SLOW RESPONSE (BANK 1 SENSOR 1), Diagnostic Trouble Code (DTC) Detecting Criteria.>
P0134	O2 Sensor Circuit No Activity Detected (Bank 1 Sensor 1)	<Ref. to GD(H4SO)-58, DTC P0134 O2 SENSOR CIRCUIT NO ACTIVITY DETECTED (BANK 1 SENSOR 1), Diagnostic Trouble Code (DTC) Detecting Criteria.>
P0137	O2 Sensor Circuit Low Voltage (Bank 1 Sensor 2)	<Ref. to GD(H4SO)-60, DTC P0137 O2 SENSOR CIRCUIT LOW VOLTAGE (BANK 1 SENSOR 2), Diagnostic Trouble Code (DTC) Detecting Criteria.>
P0138	O2 Sensor Circuit High Voltage (Bank 1 Sensor 2)	<Ref. to GD(H4SO)-62, DTC P0138 O2 SENSOR CIRCUIT HIGH VOLTAGE (BANK 1 SENSOR 2), Diagnostic Trouble Code (DTC) Detecting Criteria.>
P0139	O2 Sensor Circuit Slow Response (Bank 1 Sensor 2)	<Ref. to GD(H4SO)-64, DTC P0139 O2 SENSOR CIRCUIT SLOW RESPONSE (BANK 1 SENSOR 2), Diagnostic Trouble Code (DTC) Detecting Criteria.>
P0171	System Too Lean (Bank 1)	<Ref. to GD(H4SO)-69, DTC P0171 SYSTEM TOO LEAN (BANK 1), Diagnostic Trouble Code (DTC) Detecting Criteria.>
P0172	System Too Rich (Bank 1)	<Ref. to GD(H4SO)-71, DTC P0172 SYSTEM TOO RICH (BANK 1), Diagnostic Trouble Code (DTC) Detecting Criteria.>
P0181	Fuel Temperature Sensor “A” Circuit Range/Performance	<Ref. to GD(H4SO)-73, DTC P0181 FUEL TEMPERATURE SENSOR “A” CIRCUIT RANGE/PERFORMANCE, Diagnostic Trouble Code (DTC) Detecting Criteria.>
P0182	Fuel Temperature Sensor “A” Circuit Low Input	<Ref. to GD(H4SO)-76, DTC P0182 FUEL TEMPERATURE SENSOR “A” CIRCUIT LOW INPUT, Diagnostic Trouble Code (DTC) Detecting Criteria.>
P0183	Fuel Temperature Sensor “A” Circuit High Input	<Ref. to GD(H4SO)-78, DTC P0183 FUEL TEMPERATURE SENSOR “A” CIRCUIT HIGH INPUT, Diagnostic Trouble Code (DTC) Detecting Criteria.>
P0222	Throttle/Pedal Position Sensor/ Switch “B” Circuit Low Input	<Ref. to GD(H4SO)-80, DTC P0222 THROTTLE/PEDAL POSITION SENSOR/SWITCH “B” CIRCUIT LOW INPUT, Diagnostic Trouble Code (DTC) Detecting Criteria.>
P0223	Throttle/Pedal Position Sensor/ Switch “B” Circuit High Input	<Ref. to GD(H4SO)-82, DTC P0223 THROTTLE/PEDAL POSITION SENSOR/SWITCH “B” CIRCUIT HIGH INPUT, Diagnostic Trouble Code (DTC) Detecting Criteria.>
P0301	Cylinder 1 Misfire Detected	<Ref. to GD(H4SO)-84, DTC P0301 CYLINDER 1 MISFIRE DETECTED, Diagnostic Trouble Code (DTC) Detecting Criteria.>
P0302	Cylinder 2 Misfire Detected	<Ref. to GD(H4SO)-89, DTC P0302 CYLINDER 2 MISFIRE DETECTED, Diagnostic Trouble Code (DTC) Detecting Criteria.>
P0303	Cylinder 3 Misfire Detected	<Ref. to GD(H4SO)-89, DTC P0303 CYLINDER 3 MISFIRE DETECTED, Diagnostic Trouble Code (DTC) Detecting Criteria.>
P0304	Cylinder 4 Misfire Detected	<Ref. to GD(H4SO)-89, DTC P0304 CYLINDER 4 MISFIRE DETECTED, Diagnostic Trouble Code (DTC) Detecting Criteria.>
P0327	Knock Sensor 1 Circuit Low Input (Bank 1 or Single Sensor)	<Ref. to GD(H4SO)-90, DTC P0327 KNOCK SENSOR 1 CIRCUIT LOW INPUT (BANK 1 OR SINGLE SENSOR), Diagnostic Trouble Code (DTC) Detecting Criteria.>
P0328	Knock Sensor 1 Circuit High Input (Bank 1 or Single Sensor)	<Ref. to GD(H4SO)-92, DTC P0328 KNOCK SENSOR 1 CIRCUIT HIGH INPUT (BANK 1 OR SINGLE SENSOR), Diagnostic Trouble Code (DTC) Detecting Criteria.>
P0335	Crankshaft Position Sensor “A” Circuit	<Ref. to GD(H4SO)-94, DTC P0335 CRANKSHAFT POSITION SENSOR “A” CIRCUIT, Diagnostic Trouble Code (DTC) Detecting Criteria.>
P0336	Crankshaft Position Sensor “A” Circuit Range/Performance	<Ref. to GD(H4SO)-96, DTC P0336 CRANKSHAFT POSITION SENSOR “A” CIRCUIT RANGE/PERFORMANCE, Diagnostic Trouble Code (DTC) Detecting Criteria.>

DTC	Item	Index
P0340	Camshaft Position Sensor “A” Circuit (Bank 1 or Single Sensor)	<Ref. to GD(H4SO)-98, DTC P0340 CAMSHAFT POSITION SENSOR “A” CIRCUIT (BANK 1 OR SINGLE SENSOR), Diagnostic Trouble Code (DTC) Detecting Criteria.>
P0341	Camshaft Position Sensor “A” Circuit Range/Performance (Bank 1 or Single Sensor)	<Ref. to GD(H4SO)-100, DTC P0341 CAMSHAFT POSITION SENSOR “A” CIRCUIT RANGE/PERFORMANCE (BANK 1 OR SINGLE SENSOR), Diagnostic Trouble Code (DTC) Detecting Criteria.>
P0400	Exhaust Gas Recirculation Flow	<Ref. to GD(H4SO)-102, DTC P0400 EXHAUST GAS RECIRCULATION FLOW, Diagnostic Trouble Code (DTC) Detecting Criteria.>
P0420	Catalyst System Efficiency Below Threshold (Bank 1)	<Ref. to GD(H4SO)-106, DTC P0420 CATALYST SYSTEM EFFICIENCY BELOW THRESHOLD (BANK 1), Diagnostic Trouble Code (DTC) Detecting Criteria.>
P0442	Evaporative Emission Control System Leak Detected (Small Leak)	<Ref. to GD(H4SO)-109, DTC P0442 EVAPORATIVE EMISSION CONTROL SYSTEM LEAK DETECTED (SMALL LEAK), Diagnostic Trouble Code (DTC) Detecting Criteria.>
P0447	Evaporative Emission Control System Vent Control Circuit Open	<Ref. to GD(H4SO)-128, DTC P0447 EVAPORATIVE EMISSION CONTROL SYSTEM VENT CONTROL CIRCUIT OPEN, Diagnostic Trouble Code (DTC) Detecting Criteria.>
P0448	Evaporative Emission Control System Vent Control Circuit Shorted	<Ref. to GD(H4SO)-130, DTC P0448 EVAPORATIVE EMISSION CONTROL SYSTEM VENT CONTROL CIRCUIT SHORTED, Diagnostic Trouble Code (DTC) Detecting Criteria.>
P0451	Evaporative Emission Control System Pressure Sensor	<Ref. to GD(H4SO)-132, DTC P0451 EVAPORATIVE EMISSION CONTROL SYSTEM PRESSURE SENSOR, Diagnostic Trouble Code (DTC) Detecting Criteria.>
P0452	Evaporative Emission Control System Pressure Sensor Low Input	<Ref. to GD(H4SO)-134, DTC P0452 EVAPORATIVE EMISSION CONTROL SYSTEM PRESSURE SENSOR LOW INPUT, Diagnostic Trouble Code (DTC) Detecting Criteria.>
P0453	Evaporative Emission Control System Pressure Sensor High Input	<Ref. to GD(H4SO)-136, DTC P0453 EVAPORATIVE EMISSION CONTROL SYSTEM PRESSURE SENSOR HIGH INPUT, Diagnostic Trouble Code (DTC) Detecting Criteria.>
P0456	Evaporative Emission Control System Leak Detected (Very Small Leak)	<Ref. to GD(H4SO)-138, DTC P0456 EVAPORATIVE EMISSION CONTROL SYSTEM LEAK DETECTED (VERY SMALL LEAK), Diagnostic Trouble Code (DTC) Detecting Criteria.>
P0457	Evaporative Emission Control System Leak Detected (Fuel Cap Loose/Off)	<Ref. to GD(H4SO)-138, DTC P0457 EVAPORATIVE EMISSION CONTROL SYSTEM LEAK DETECTED (FUEL CAP LOOSE/OFF), Diagnostic Trouble Code (DTC) Detecting Criteria.>
P0458	Evaporative Emission Control System Purge Control Valve Circuit Low	<Ref. to GD(H4SO)-139, DTC P0458 EVAPORATIVE EMISSION CONTROL SYSTEM PURGE CONTROL VALVE CIRCUIT LOW, Diagnostic Trouble Code (DTC) Detecting Criteria.>
P0459	Evaporative Emission Control System Purge Control Valve Circuit High	<Ref. to GD(H4SO)-141, DTC P0459 EVAPORATIVE EMISSION CONTROL SYSTEM PURGE CONTROL VALVE CIRCUIT HIGH, Diagnostic Trouble Code (DTC) Detecting Criteria.>
P0461	Fuel Level Sensor Circuit Range/Performance	<Ref. to GD(H4SO)-143, DTC P0461 FUEL LEVEL SENSOR CIRCUIT RANGE/PERFORMANCE, Diagnostic Trouble Code (DTC) Detecting Criteria.>
P0462	Fuel Level Sensor Circuit Low Input	<Ref. to GD(H4SO)-145, DTC P0462 FUEL LEVEL SENSOR CIRCUIT LOW INPUT, Diagnostic Trouble Code (DTC) Detecting Criteria.>
P0463	Fuel Level Sensor Circuit High Input	<Ref. to GD(H4SO)-147, DTC P0463 FUEL LEVEL SENSOR CIRCUIT HIGH INPUT, Diagnostic Trouble Code (DTC) Detecting Criteria.>
P0464	Fuel Level Sensor Circuit Intermittent	<Ref. to GD(H4SO)-149, DTC P0464 FUEL LEVEL SENSOR CIRCUIT INTERMITTENT, Diagnostic Trouble Code (DTC) Detecting Criteria.>
P0483	Cooling Fan Rationality Check	<Ref. to GD(H4SO)-152, DTC P0483 COOLING FAN RATIONALITY CHECK, Diagnostic Trouble Code (DTC) Detecting Criteria.>
P0500	Vehicle Speed Sensor	<Ref. to GD(H4SO)-153, DTC P0500 VEHICLE SPEED SENSOR, Diagnostic Trouble Code (DTC) Detecting Criteria.>
P0506	Idle Control System RPM Lower Than Expected	<Ref. to GD(H4SO)-155, DTC P0506 IDLE CONTROL SYSTEM RPM LOWER THAN EXPECTED, Diagnostic Trouble Code (DTC) Detecting Criteria.>

DTC	Item	Index
P0507	Idle Control System RPM Higher Than Expected	<Ref. to GD(H4SO)-156, DTC P0507 IDLE CONTROL SYSTEM RPM HIGHER THAN EXPECTED, Diagnostic Trouble Code (DTC) Detecting Criteria.>
P0512	Starter Request Circuit	<Ref. to GD(H4SO)-157, DTC P0512 STARTER REQUEST CIRCUIT, Diagnostic Trouble Code (DTC) Detecting Criteria.>
P0519	Idle Control System Malfunction (Fail-Safe)	<Ref. to GD(H4SO)-158, DTC P0519 IDLE CONTROL SYSTEM MALFUNCTION (FAIL-SAFE), Diagnostic Trouble Code (DTC) Detecting Criteria.>
P0600	Serial Communication Link	<Ref. to GD(H4SO)-159, DTC P0600 SERIAL COMMUNICATION LINK, Diagnostic Trouble Code (DTC) Detecting Criteria.>
P0604	Internal Control Module Random Access Memory (RAM) Error	<Ref. to GD(H4SO)-160, DTC P0604 INTERNAL CONTROL MODULE RANDOM ACCESS MEMORY (RAM) ERROR, Diagnostic Trouble Code (DTC) Detecting Criteria.>
P0605	Internal Control Module Read Only Memory (ROM) Error	<Ref. to GD(H4SO)-161, DTC P0605 INTERNAL CONTROL MODULE READ ONLY MEMORY (ROM) ERROR, Diagnostic Trouble Code (DTC) Detecting Criteria.>
P0607	Control Module Performance	<Ref. to GD(H4SO)-162, DTC P0607 CONTROL MODULE PERFORMANCE, Diagnostic Trouble Code (DTC) Detecting Criteria.>
P0638	Throttle Actuator Control Range/ Performance (Bank 1)	<Ref. to GD(H4SO)-165, DTC P0638 THROTTLE ACTUATOR CONTROL RANGE/PERFORMANCE (BANK 1), Diagnostic Trouble Code (DTC) Detecting Criteria.>
P0691	Cooling Fan 1 Control Circuit Low	<Ref. to GD(H4SO)-168, DTC P0691 COOLING FAN 1 CONTROL CIRCUIT LOW, Diagnostic Trouble Code (DTC) Detecting Criteria.>
P0692	Cooling Fan 1 Control Circuit High	<Ref. to GD(H4SO)-169, DTC P0692 COOLING FAN 1 CONTROL CIRCUIT HIGH, Diagnostic Trouble Code (DTC) Detecting Criteria.>
P0700	Transmission Control System (MIL Request)	<Ref. to GD(H4SO)-170, DTC P0700 TRANSMISSION CONTROL SYSTEM (MIL REQUEST), Diagnostic Trouble Code (DTC) Detecting Criteria.>
P0851	Neutral Switch Input Circuit Low	<Ref. to GD(H4SO)-171, DTC P0851 NEUTRAL SWITCH INPUT CIRCUIT LOW (AT MODEL), Diagnostic Trouble Code (DTC) Detecting Criteria.> <Ref. to GD(H4SO)-172, DTC P0851 NEUTRAL SWITCH INPUT CIRCUIT LOW (MT MODEL), Diagnostic Trouble Code (DTC) Detecting Criteria.>
P0852	Neutral Switch Input Circuit High	<Ref. to GD(H4SO)-173, DTC P0852 NEUTRAL SWITCH INPUT CIRCUIT HIGH (AT MODEL), Diagnostic Trouble Code (DTC) Detecting Criteria.> <Ref. to GD(H4SO)-174, DTC P0852 NEUTRAL SWITCH INPUT CIRCUIT HIGH (MT MODEL), Diagnostic Trouble Code (DTC) Detecting Criteria.>
P1152	O2 Sensor Circuit Range/Performance (Low) (Bank1 Sensor1)	<Ref. to GD(H4SO)-175, DTC P1152 O2 SENSOR CIRCUIT RANGE/PERFORMANCE (LOW) (BANK1 SENSOR1), Diagnostic Trouble Code (DTC) Detecting Criteria.>
P1153	O2 Sensor Circuit Range/Performance (High) (Bank1 Sensor1)	<Ref. to GD(H4SO)-177, DTC P1153 O2 SENSOR CIRCUIT RANGE/PERFORMANCE (HIGH) (BANK1 SENSOR1), Diagnostic Trouble Code (DTC) Detecting Criteria.>
P1160	Return Spring Failure	<Ref. to GD(H4SO)-180, DTC P1160 RETURN SPRING FAILURE, Diagnostic Trouble Code (DTC) Detecting Criteria.>
P1400	Fuel Tank Pressure Control Solenoid Valve Circuit Low	<Ref. to GD(H4SO)-182, DTC P1400 FUEL TANK PRESSURE CONTROL SOLENOID VALVE CIRCUIT LOW, Diagnostic Trouble Code (DTC) Detecting Criteria.>
P1420	Fuel Tank Pressure Control Sol. Valve Circuit High	<Ref. to GD(H4SO)-184, DTC P1420 FUEL TANK PRESSURE CONTROL SOL. VALVE CIRCUIT HIGH, Diagnostic Trouble Code (DTC) Detecting Criteria.>
P1443	Vent Control Solenoid Valve Function Problem	<Ref. to GD(H4SO)-186, DTC P1443 VENT CONTROL SOLENOID VALVE FUNCTION PROBLEM, Diagnostic Trouble Code (DTC) Detecting Criteria.>
P1446	Fuel Tank Sensor Control Valve Circuit Low	<Ref. to GD(H4SO)-188, DTC P1446 FUEL TANK SENSOR CONTROL VALVE CIRCUIT LOW, Diagnostic Trouble Code (DTC) Detecting Criteria.>
P1447	Fuel Tank Sensor Control Valve Circuit High	<Ref. to GD(H4SO)-190, DTC P1447 FUEL TANK SENSOR CONTROL VALVE CIRCUIT HIGH, Diagnostic Trouble Code (DTC) Detecting Criteria.>
P1492	EGR Solenoid Valve Signal #1 Circuit Malfunction (Low Input)	<Ref. to GD(H4SO)-192, DTC P1492 EGR SOLENOID VALVE SIGNAL #1 CIRCUIT MALFUNCTION (LOW INPUT), Diagnostic Trouble Code (DTC) Detecting Criteria.>

DTC	Item	Index
P1493	EGR Solenoid Valve Signal #1 Circuit Malfunction (High Input)	<Ref. to GD(H4SO)-194, DTC P1493 EGR SOLENOID VALVE SIGNAL #1 CIRCUIT MALFUNCTION (HIGH INPUT), Diagnostic Trouble Code (DTC) Detecting Criteria.>
P1494	EGR Solenoid Valve Signal #2 Circuit Malfunction (Low Input)	<Ref. to GD(H4SO)-196, DTC P1494 EGR SOLENOID VALVE SIGNAL #2 CIRCUIT MALFUNCTION (LOW INPUT), Diagnostic Trouble Code (DTC) Detecting Criteria.>
P1495	EGR Solenoid Valve Signal #2 Circuit Malfunction (High Input)	<Ref. to GD(H4SO)-198, DTC P1495 EGR SOLENOID VALVE SIGNAL #2 CIRCUIT MALFUNCTION (HIGH INPUT), Diagnostic Trouble Code (DTC) Detecting Criteria.>
P1496	EGR Solenoid Valve Signal #3 Circuit Malfunction (Low Input)	<Ref. to GD(H4SO)-200, DTC P1496 EGR SOLENOID VALVE SIGNAL #3 CIRCUIT MALFUNCTION (LOW INPUT), Diagnostic Trouble Code (DTC) Detecting Criteria.>
P1497	EGR Solenoid Valve Signal #3 Circuit Malfunction (High Input)	<Ref. to GD(H4SO)-202, DTC P1497 EGR SOLENOID VALVE SIGNAL #3 CIRCUIT MALFUNCTION (HIGH INPUT), Diagnostic Trouble Code (DTC) Detecting Criteria.>
P1498	EGR Solenoid Valve Signal #4 Circuit Malfunction (Low Input)	<Ref. to GD(H4SO)-204, DTC P1498 EGR SOLENOID VALVE SIGNAL #4 CIRCUIT MALFUNCTION (LOW INPUT), Diagnostic Trouble Code (DTC) Detecting Criteria.>
P1499	EGR Solenoid Valve Signal #4 Circuit Malfunction (High Input)	<Ref. to GD(H4SO)-206, DTC P1499 EGR SOLENOID VALVE SIGNAL #4 CIRCUIT MALFUNCTION (HIGH INPUT), Diagnostic Trouble Code (DTC) Detecting Criteria.>
P1518	Starter Switch Circuit Low input	<Ref. to GD(H4SO)-208, DTC P1518 STARTER SWITCH CIRCUIT LOW INPUT, Diagnostic Trouble Code (DTC) Detecting Criteria.>
P1560	Back-up Voltage Circuit Malfunction	<Ref. to GD(H4SO)-209, DTC P1560 BACK-UP VOLTAGE CIRCUIT MALFUNCTION, Diagnostic Trouble Code (DTC) Detecting Criteria.>
P2096	Post Catalyst Fuel Trim System Too Lean Bank 1	<Ref. to GD(H4SO)-210, DTC P2096 POST CATALYST FUEL TRIM SYSTEM TOO LEAN BANK 1, Diagnostic Trouble Code (DTC) Detecting Criteria.>
P2097	Post Catalyst Fuel Trim System Too Rich Bank 1	<Ref. to GD(H4SO)-212, DTC P2097 POST CATALYST FUEL TRIM SYSTEM TOO RICH BANK 1, Diagnostic Trouble Code (DTC) Detecting Criteria.>
P2101	Throttle Actuator Control Motor Circuit Range/Performance	<Ref. to GD(H4SO)-214, DTC P2101 THROTTLE ACTUATOR CONTROL MOTOR CIRCUIT RANGE/PERFORMANCE, Diagnostic Trouble Code (DTC) Detecting Criteria.>
P2102	Throttle Actuator Control Motor Circuit Low	<Ref. to GD(H4SO)-216, DTC P2102 THROTTLE ACTUATOR CONTROL MOTOR CIRCUIT LOW, Diagnostic Trouble Code (DTC) Detecting Criteria.>
P2103	Throttle Actuator Control Motor Circuit High	<Ref. to GD(H4SO)-218, DTC P2103 THROTTLE ACTUATOR CONTROL MOTOR CIRCUIT HIGH, Diagnostic Trouble Code (DTC) Detecting Criteria.>
P2109	Throttle/Pedal Position Sensor A Minimum Stop Performance	<Ref. to GD(H4SO)-220, DTC P2109 THROTTLE/PEDAL POSITION SENSOR A MINIMUM STOP PERFORMANCE, Diagnostic Trouble Code (DTC) Detecting Criteria.>
P2122	Throttle/Pedal Position Sensor/ Switch “D” Circuit Low Input	<Ref. to GD(H4SO)-222, DTC P2122 THROTTLE/PEDAL POSITION SENSOR/SWITCH “D” CIRCUIT LOW INPUT, Diagnostic Trouble Code (DTC) Detecting Criteria.>
P2123	Throttle/Pedal Position Sensor/ Switch “D” Circuit High Input	<Ref. to GD(H4SO)-224, DTC P2123 THROTTLE/PEDAL POSITION SENSOR/SWITCH “D” CIRCUIT HIGH INPUT, Diagnostic Trouble Code (DTC) Detecting Criteria.>
P2127	Throttle/Pedal Position Sensor/ Switch “E” Circuit Low Input	<Ref. to GD(H4SO)-226, DTC P2127 THROTTLE/PEDAL POSITION SENSOR/SWITCH “E” CIRCUIT LOW INPUT, Diagnostic Trouble Code (DTC) Detecting Criteria.>
P2128	Throttle/Pedal Position Sensor/ Switch “E” Circuit High Input	<Ref. to GD(H4SO)-228, DTC P2128 THROTTLE/PEDAL POSITION SENSOR/SWITCH “E” CIRCUIT HIGH INPUT, Diagnostic Trouble Code (DTC) Detecting Criteria.>
P2135	Throttle/Pedal Position Sensor/ Switch “A”/“B” Voltage Rationality	<Ref. to GD(H4SO)-230, DTC P2135 THROTTLE/PEDAL POSITION SENSOR/SWITCH “A”/“B” VOLTAGE RATIONALITY, Diagnostic Trouble Code (DTC) Detecting Criteria.>

DTC	Item	Index
P2138	Throttle/Pedal Position Sensor/ Switch “D”/“E” Voltage Rationality	<Ref. to GD(H4SO)-232, DTC P2138 THROTTLE/PEDAL POSITION SENSOR/SWITCH “D”/“E” VOLTAGE RATIONALITY, Diagnostic Trouble Code (DTC) Detecting Criteria.>
P2227	Barometric Pressure Circuit Range/Performance	<Ref. to GD(H4SO)-234, DTC P2227 BAROMETRIC PRESSURE CIRCUIT RANGE/PERFORMANCE, Diagnostic Trouble Code (DTC) Detecting Criteria.>
P2228	Barometric Pressure Circuit Low Input	<Ref. to GD(H4SO)-235, DTC P2228 BAROMETRIC PRESSURE CIRCUIT LOW INPUT, Diagnostic Trouble Code (DTC) Detecting Criteria.>
P2229	Barometric Pressure Circuit High Input	<Ref. to GD(H4SO)-236, DTC P2229 BAROMETRIC PRESSURE CIRCUIT HIGH INPUT, Diagnostic Trouble Code (DTC) Detecting Criteria.>

2. Diagnostic Trouble Code (DTC) Detecting Criteria

A: DTC P0030 HO2S HEATER CONTROL CIRCUIT (BANK 1 SENSOR 1)

1. OUTLINE OF DIAGNOSIS

Detect the malfunction of front oxygen (A/F) sensor heater.
Judge NG when impedance of front oxygen (A/F) sensor is larger than the standard value by referring to the engine condition such as fuel shut-off in deceleration, etc.

2. COMPONENT DESCRIPTION

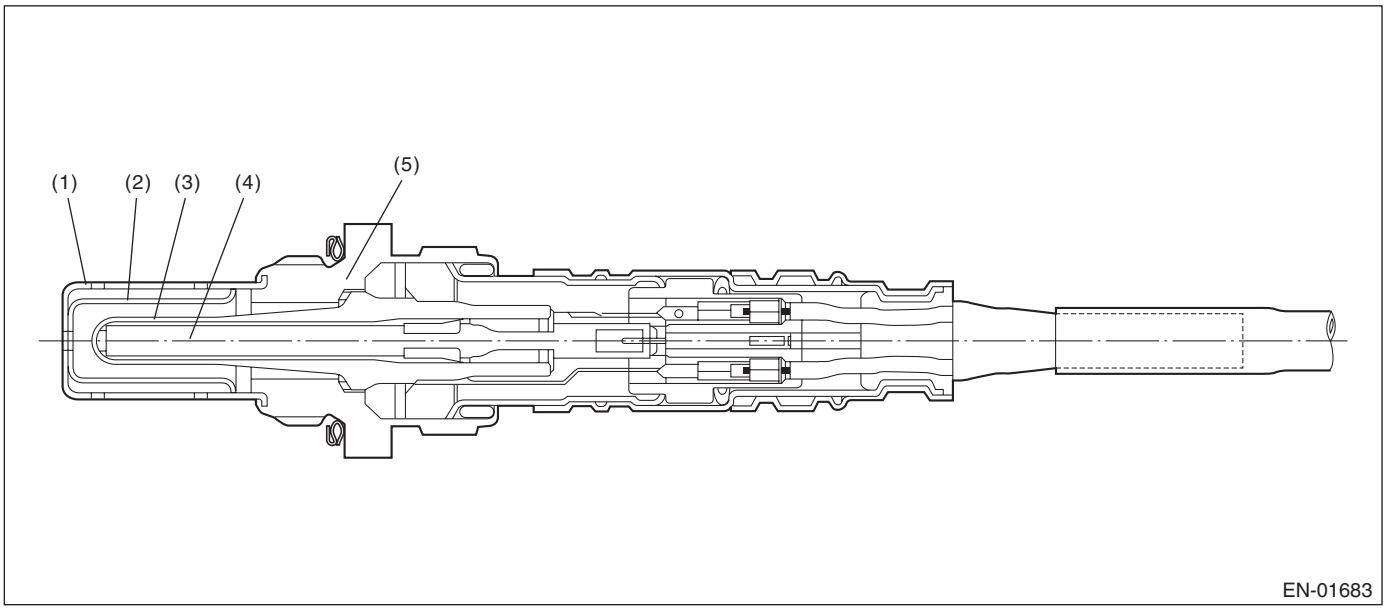

(1) Element cover (Outer)
(2) Element cover (Inner)
(3) Sensor element
(4) Ceramic heater
(5) Sensor housing

3. ENABLE CONDITION

Secondary Parameters	Enable Conditions
Continuous time which all the following conditions were filled.	30 seconds or more
Battery voltage	> 10.9 V
Heater continuity	Permitted
A/F sensor heater duty ratio	Experience of ≥ 35%
After fuel shut-off	20 seconds or more

4. GENERAL DRIVING CYCLE

Perform diagnosis continuously in 60 seconds after starting engine.

5. DIAGNOSTIC METHOD

Judge NG when the continuous time of completing the malfunction criteria below becomes more than 10 seconds. Judge OK and clear NG when the continuous time of not completing the malfunction criteria below becomes more than 10 seconds.

Judgment Value

Malfunction Criteria	Threshold Value
Impedance of front oxygen (A/F) sensor	> 50 Ω

Time Needed for Diagnosis: 10 seconds

Malfunction Indicator Light Illumination: Illuminates when malfunction occurs in 2 continuous driving cycles.

6. DTC CLEAR CONDITION

- When the OK idling cycle was completed 40 times in a row
- When “Clear Memory” was performed

7. MALFUNCTION INDICATOR LIGHT CLEAR CONDITION

- When the OK driving cycle was completed 3 times in a row
- When “Clear Memory” was performed

8. FAIL SAFE

- Front oxygen (A/F) sensor main learning correction: Not allowed to calculate
- Correction when re-starting at high temperature: Normally minimum value 0.06 → 0
- Purge control: Not allowed to purge

9. ECM OPERATION AT DTC SETTING

Memorize the freeze frame data. (For test mode $02)

B: DTC P0031 HO2S HEATER CONTROL CIRCUIT LOW (BANK 1 SENSOR 1)

1. OUTLINE OF DIAGNOSIS

Detect the open or short circuit of heater.
The heater conducts the duty control. The output terminal voltage at ON becomes 0 V, and the output terminal voltage at OFF becomes battery voltage.
Judge NG when the terminal voltage remains Low.

2. COMPONENT DESCRIPTION

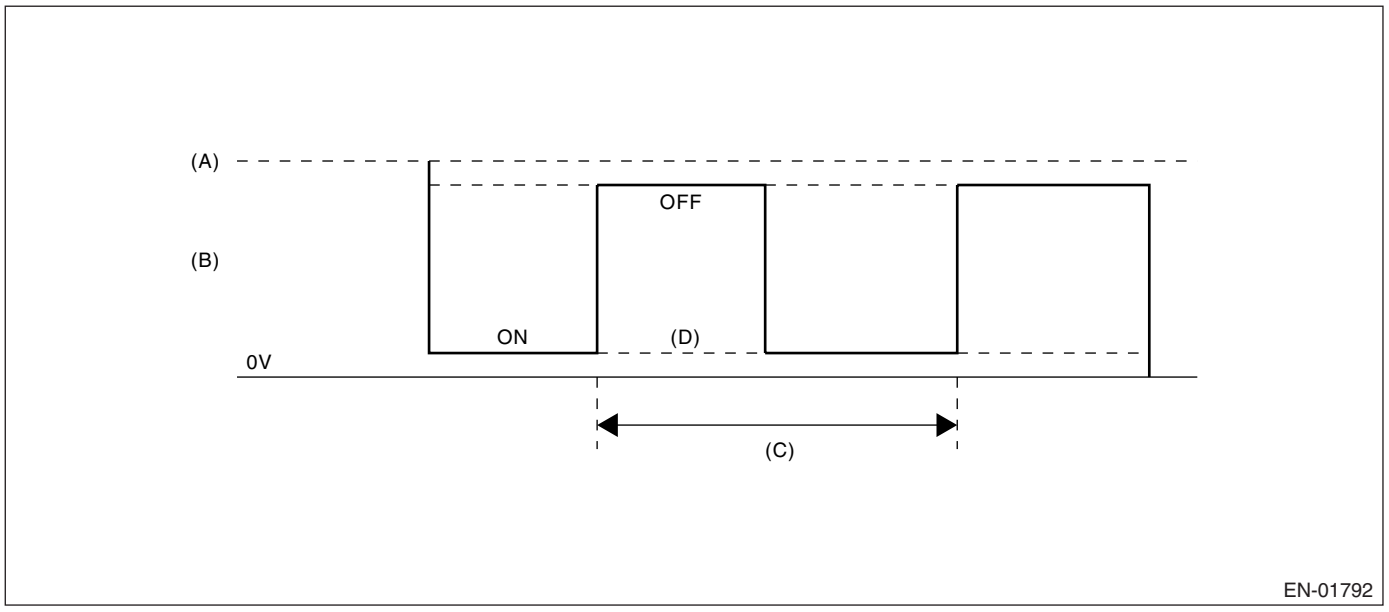

(A) Battery voltage
(B) Front oxygen (A/F) sensor heater output voltage
(C) 128 milliseconds
(D) Low abnormality

3. ENABLE CONDITION

Secondary Parameters	Enable Conditions
Battery voltage	≥ 10.9 V

4. GENERAL DRIVING CYCLE

Always perform diagnosis continuously.

5. DIAGNOSTIC METHOD

• Abnormality Judgment

Judge NG when the continuous time of completing the malfunction criteria below becomes more than 1 second (8 cycles).

Judgment Value

Malfunction Criteria	Threshold Value
Output voltage level	Low
Front oxygen (A/F) sensor heater control duty	< 87.5%

Time Needed for Diagnosis: 1 second
Malfunction Indicator Light Illumination: Illuminates as soon as malfunction occurs.

• Normality Judgment

Judge OK and clear the NG when all the malfunction criteria below are completed.

Judgment Value

Malfunction Criteria	Threshold Value
Output voltage level	High

6. DTC CLEAR CONDITION

- When the OK idling cycle was completed 40 times in a row
- When “Clear Memory” was performed

7. MALFUNCTION INDICATOR LIGHT CLEAR CONDITION

- When the OK driving cycle was completed 3 times in a row
- When “Clear Memory” was performed

8. FAIL SAFE

- Front oxygen (A/F) sensor heater control: Not allowed to turn on the heater.
- A/F main learning: Not allowed to calculate the A/F main learning compensation factor.
- A/F sub learning: Not allowed to calculate the A/F sub learning compensation factor.
- Compensation when starting the engine at high temperature: Make the MIN value to be 0 from 0.06 normally.
- Purge control: Not allowed to purge.

9. ECM OPERATION AT DTC SETTING

Memorize the freeze frame data. (For test mode $02)

C: DTC P0032 HO2S HEATER CONTROL CIRCUIT HIGH (BANK 1 SENSOR 1)

1. OUTLINE OF DIAGNOSIS

Detect the open or short circuit of heater.
The heater conducts the duty control. The output terminal voltage at ON becomes 0 V, and the output terminal voltage at OFF becomes battery voltage.
Judge NG when the terminal voltage remains High.

2. COMPONENT DESCRIPTION

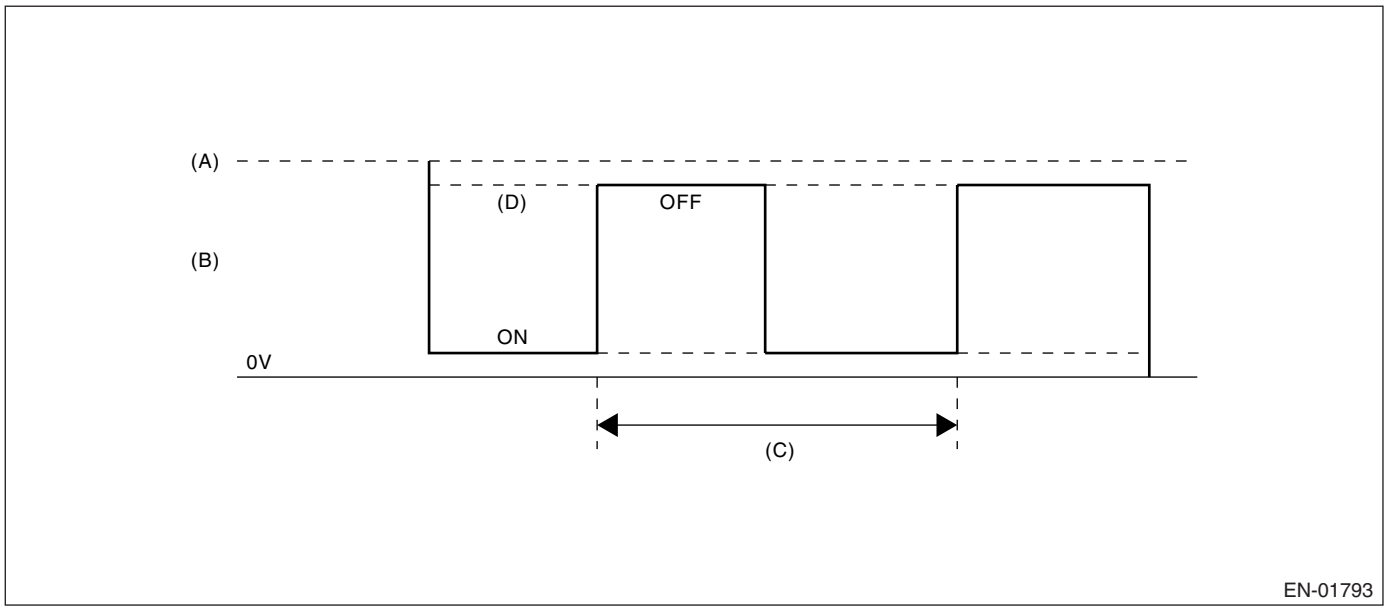

(A) Battery voltage
(B) Front oxygen (A/F) sensor heater output voltage
(C) 128 milliseconds
(D) High abnormality

3. ENABLE CONDITION

Secondary Parameters	Enable Conditions
Battery voltage	≥ 10.9 V

4. GENERAL DRIVING CYCLE

Always perform diagnosis continuously.

5. DIAGNOSTIC METHOD

• Abnormality Judgment

Judge NG when the continuous time of completing the malfunction criteria below becomes 1 second (8 cycles).

Judgment Value

Malfunction Criteria	Threshold Value
Output voltage level	High
Front oxygen (A/F) sensor heater control duty	≥ 12.5%

Time Needed for Diagnosis: 1 second
Malfunction Indicator Light Illumination: Illuminates as soon as malfunction occurs.

• Normality Judgment

Judge OK and clear the NG when all the malfunction criteria below are completed.

Judgment Value

Malfunction Criteria	Threshold Value
Output voltage level	Low

6. DTC CLEAR CONDITION

- When the OK idling cycle was completed 40 times in a row
- When “Clear Memory” was performed

7. MALFUNCTION INDICATOR LIGHT CLEAR CONDITION

- When the OK driving cycle was completed 3 times in a row
- When “Clear Memory” was performed

8. FAIL SAFE

- Front oxygen (A/F) sensor heater control: Not allowed to turn on the heater.
- A/F main learning: Not allowed to calculate the A/F main learning compensation factor.
- A/F sub learning: Not allowed to calculate the A/F sub learning compensation factor.
- Compensation when starting the engine at high temperature: Make the MIN value to be 0 from 0.06 normally.
- Purge control: Not allowed to purge.

9. ECM OPERATION AT DTC SETTING

Memorize the freeze frame data. (For test mode $02)

D: DTC P0037 HO2S HEATER CONTROL CIRCUIT LOW (BANK 1 SENSOR 2)

1. OUTLINE OF DIAGNOSIS

Detect open or short circuit of oxygen sensor heater.
Oxygen sensor heater conducted the duty control, and the output terminal voltage at ON is 0 V and the output terminal voltage at OFF is the battery voltage.
Judge NG when the terminal voltage remains Low.

2. COMPONENT DESCRIPTION

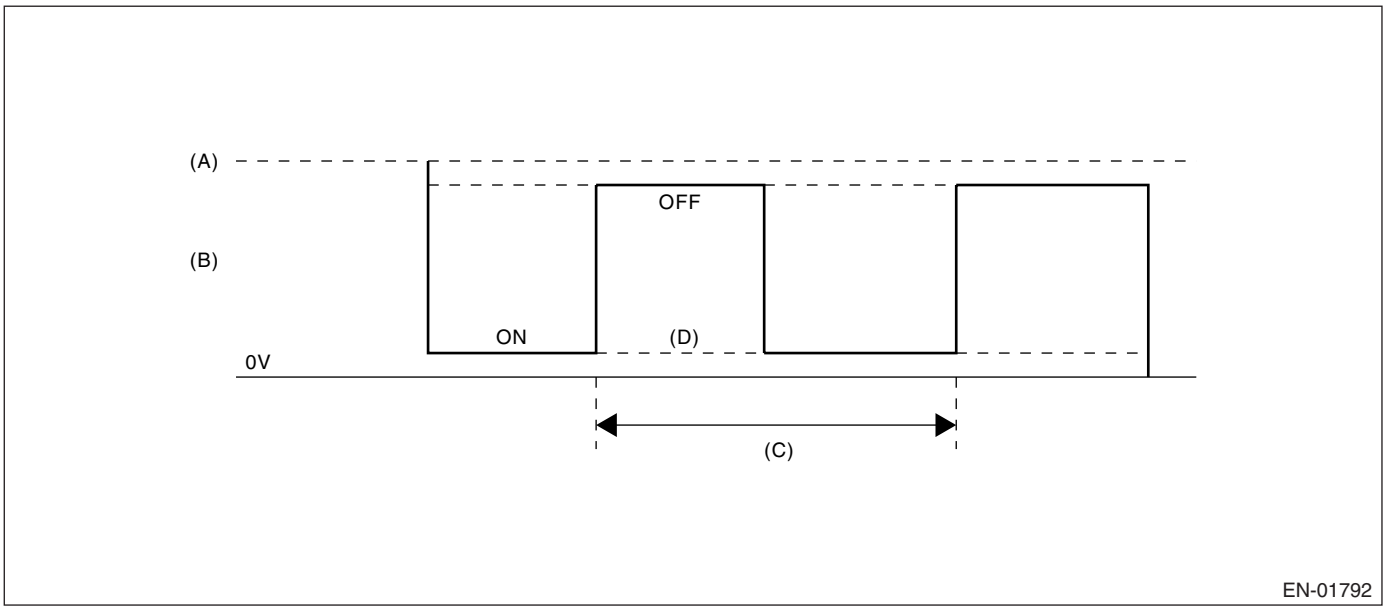

(A) Battery voltage
(B) Oxygen sensor heater output voltage
(C) 256 milliseconds (cycles)
(D) Low malfunction

3. ENABLE CONDITION

Secondary Parameters	Enable Conditions
Battery voltage	〉10.9 V
Time after engine starting	≥ 1 sec.
Heater output duty ratio	〈 75%

4. GENERAL DRIVING CYCLE

Perform the diagnosis continuously after engine starting.

5. DIAGNOSTIC METHOD

• Abnormality Judgment

Judge NG when the continuous time of completing all the malfunction criteria below becomes more than 2.56 seconds.

Judgment Value

Malfunction Criteria	Threshold Value
Terminal voltage	Low

Time Needed for Diagnosis: 2.56 seconds
Malfunction Indicator Light Illumination: Illuminates when malfunction occurs in 2 continuous driving cycles.

• Normality Judgment

Judge OK and clear the NG when all the malfunction criteria below are completed.
Judgment Value

Malfunction Criteria	Threshold Value
Terminal voltage	High

6. DTC CLEAR CONDITION

- When the OK idling cycle was completed 40 times in a row
- When “Clear Memory” was performed

7. MALFUNCTION INDICATOR LIGHT CLEAR CONDITION

- When the OK driving cycle was completed 3 times in a row
- When “Clear Memory” was performed

8. FAIL SAFE

Sub feedback control: Not allowed

9. ECM OPERATION AT DTC SETTING

Memorize the freeze frame data. (For test mode $02)

E: DTC P0038 HO2S HEATER CONTROL CIRCUIT HIGH (BANK 1 SENSOR 2)

1. OUTLINE OF DIAGNOSIS

Detect open or short circuit of oxygen heater.
Oxygen heater conducted the duty control, and the output terminal voltage at ON is 0 V and the output terminal voltage at OFF is the battery voltage.
Judge NG when the terminal voltage remains High.

2. COMPONENT DESCRIPTION

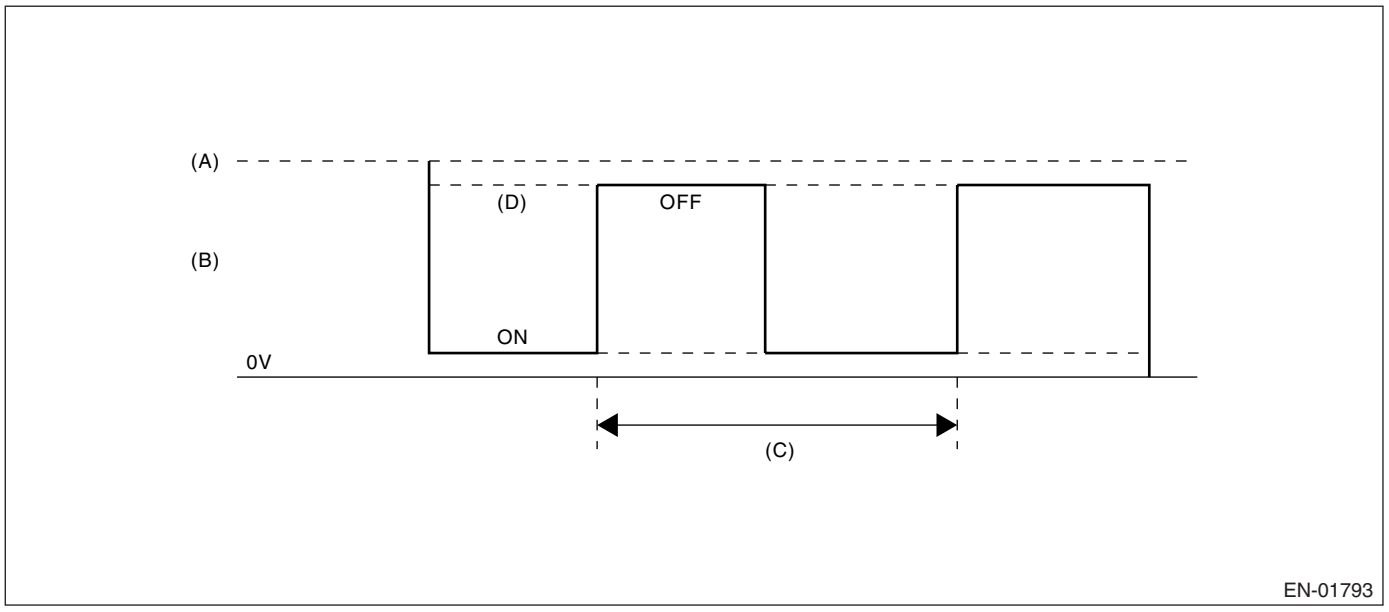

(A) Battery voltage
(B) Oxygen sensor heater output voltage
(C) 256 milliseconds (cycles)
(D) High malfunction

3. ENABLE CONDITION

Secondary Parameters	Enable Conditions
Battery voltage	〉10.9 V
Engine starting time	≥ 1 sec.
Heater output duty ratio	≥ 20%

4. GENERAL DRIVING CYCLE

Perform the diagnosis continuously after engine starting.

5. DIAGNOSTIC METHOD

• Abnormality Judgment

Judge NG when the continuous time of completing all the malfunction criteria below becomes more than 5 seconds.

Judgment Value

Malfunction Criteria	Threshold Value
Terminal voltage	High

Time Needed for Diagnosis: 5 seconds
Malfunction Indicator Light Illumination: Illuminates when malfunction occurs in 2 continuous driving cycles.

• Normality Judgment

Judge OK and clear the NG when all the malfunction criteria below are completed.
Judgment Value

Malfunction Criteria	Threshold Value
Terminal voltage	Low

6. DTC CLEAR CONDITION

- When the OK idling cycle was completed 40 times in a row
- When “Clear Memory” was performed

7. MALFUNCTION INDICATOR LIGHT CLEAR CONDITION

- When the OK driving cycle was completed 3 times in a row
- When “Clear Memory” was performed

8. FAIL SAFE

Sub feedback control: Not allowed

9. ECM OPERATION AT DTC SETTING

Memorize the freeze frame data. (For test mode $02)

F: DTC P0068 MAP/MAF - THROTTLE POSITION CORRELATION

1. OUTLINE OF DIAGNOSIS

Detect the malfunction of intake manifold pressure sensor output property. Judge NG when the intake air pressure AD value is Low whereas it seemed to be High from the viewpoint of engine condition, or when it is High whereas it seemed to be Low from the engine condition.

2. COMPONENT DESCRIPTION

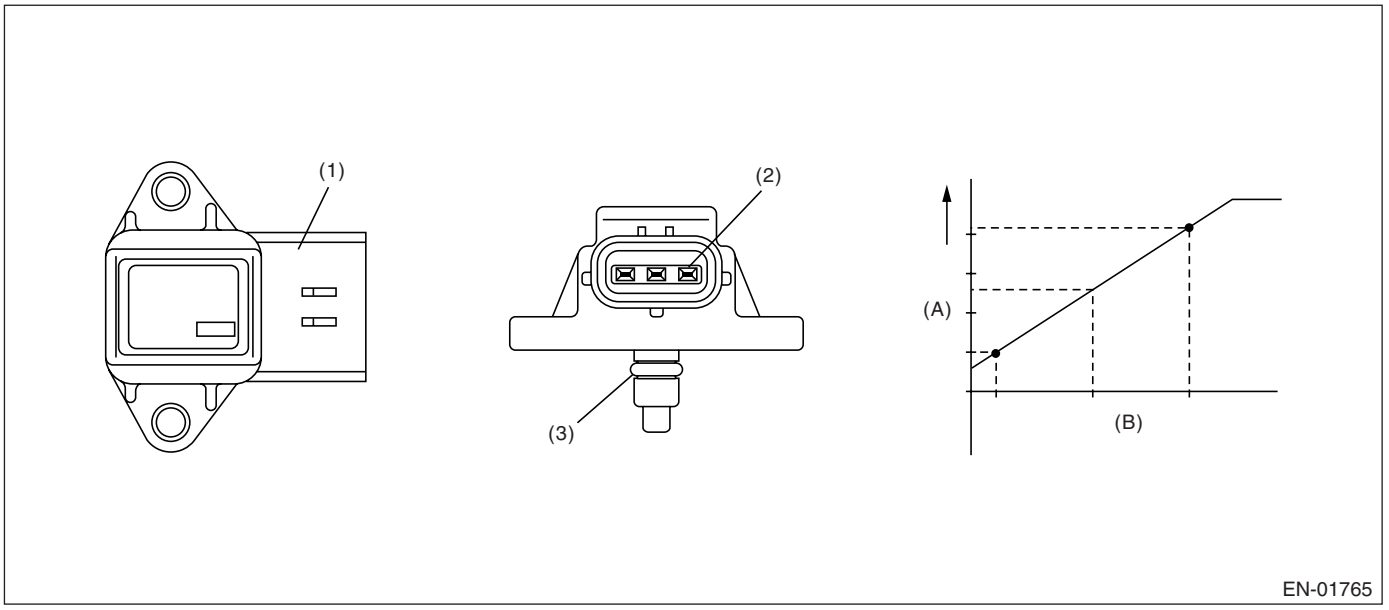

(1) Connector
(2) Terminal
(3) O-ring
(A) Output voltage
(B) Absolute pressure

3. ENABLE CONDITION

Secondary Parameters	Enable Conditions
Engine coolant temperature	≥ 70°C (158°F)

4. GENERAL DRIVING CYCLE

Perform the diagnosis continuously after idling.

5. DIAGNOSTIC METHOD

• Abnormality Judgment

Judge NG when either Low side or High side becomes NG. Judge NG when the continuous time of completing the malfunction criteria below becomes more than the predetermined time.

Judgment Value

Malfunction Criteria	Threshold Value
Low side	
Engine speed	< 2,500 rpm
Throttle position	≥ 13°
Intake air amount per engine 0.5 rev.	> 0.55 g (0.019 oz)/rev.
Output voltage	< 1.4 V
High side	
Engine speed	< 600 ←→ 900 rpm
Throttle position	≤ 2.44°
Intake air amount per engine 0.5 rev.	< 0.5 g (0.018 oz)/rev.
Output voltage	≥ 3.4 V

Time Needed for Diagnosis: Low side 3 seconds, high side 7 seconds
Malfunction Indicator Light Illumination: Illuminates when malfunction occurs in 2 continuous driving cycles.

• Normality Judgment

Judge OK and clear the NG when both Low side and High side become OK. Judge OK when the malfunction criteria below are completed.

Judgment Value

Malfunction Criteria	Threshold Value
Low side	
Engine speed	< 2,500 rpm
Throttle position	≥ 13°
Intake air amount per engine 0.5 rev.	> 0.55 g (0.019 oz)/rev.
Output voltage	≥ 1.4 V
High side	
Engine speed	< 600 ←→ 900 rpm
Throttle position	≤ 2.44°
Intake air amount per engine 0.5 rev.	< 0.5 g (0.018 oz)/rev.
Output voltage	< 3.4 V

6. DTC CLEAR CONDITION

- When the OK idling cycle was completed 40 times in a row
- When “Clear Memory” was performed

7. MALFUNCTION INDICATOR LIGHT CLEAR CONDITION

- When the OK driving cycle was completed 3 times in a row
- When “Clear Memory” was performed

8. FAIL SAFE

- Intake manifold pressure sensor process: Estimate the pressure from engine load.
- ISC feedback: Not allowed to calculate the amount of feedback.
- Heavy fuel judgment: Not allowed to carry out the heavy judgment.
- Fuel cut control: Perform fuel cut when intake manifold pressure sensor is NG. (When fuel injection is large.)

9. ECM OPERATION AT DTC SETTING

Memorize the freeze frame data. (For test mode $02)

G: DTC P0101 MASS OR VOLUME AIR FLOW CIRCUIT RANGE/PERFORMANCE

1. OUTLINE OF DIAGNOSIS

Detect the malfunction of air flow sensor output property. Judge Low side NG when the air flow voltage indicates low value in spite of the driving condition that the air flow voltage might be high; otherwise, judge High side NG when the air flow voltage indicates high value in spite of the driving condition that the air flow voltage might be low. Judge air flow sensor property NG when the Low side or High side becomes NG.

2. COMPONENT DESCRIPTION

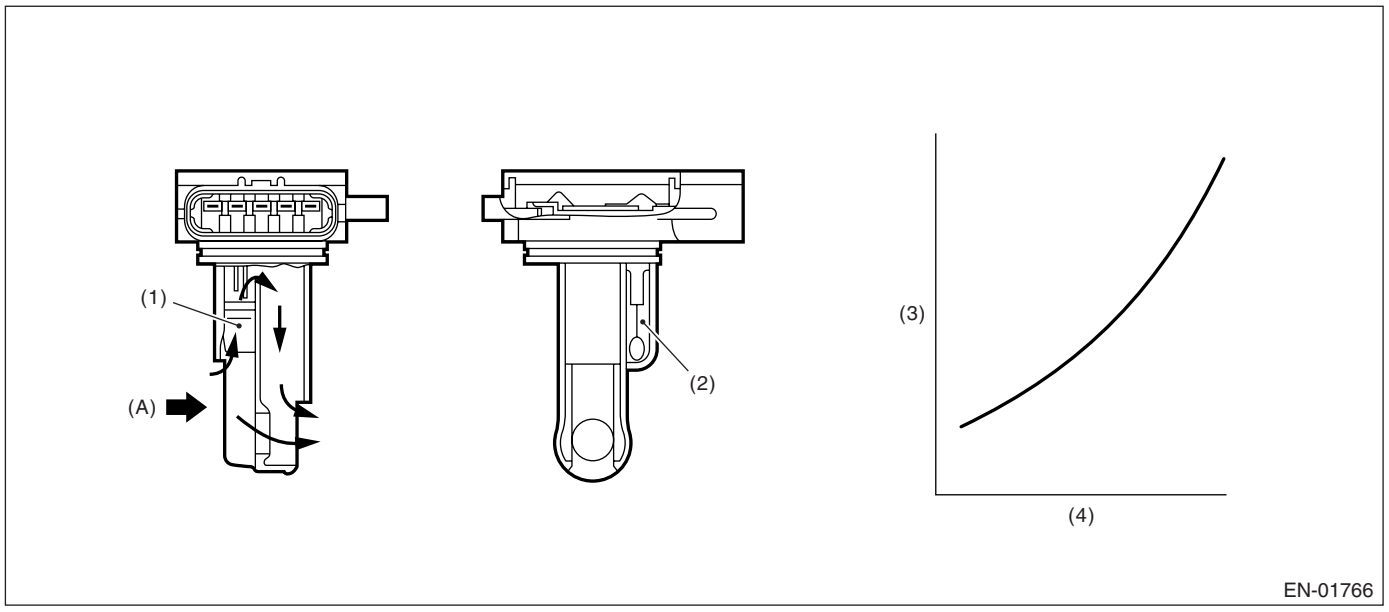

(1) Air flow sensor
(2) Intake air temperature sensor
(3) Voltage (V)
(4) Intake air volume (kg/s)
(A) Air

3. ENABLE CONDITION

Secondary Parameters	Enable Conditions
Engine coolant temperature	≥ 70°C (158°F)

4. GENERAL DRIVING CYCLE

Perform the diagnosis continuously after idling.

5. DIAGNOSTIC METHOD

• Abnormality Judgment

Judge NG when the continuous time of completing the malfunction criteria below becomes more than the time needed for diagnosis.

Judgment Value

Malfunction Criteria	Threshold Value
(Low side NG)	
Output voltage	< 1.2 V
Engine speed	≥ 2000 rpm
Throttle opening angle	≥ 13°
Intake manifold pressure	≥ 53.3 kPa (400 mmHg, 15.7 inHg)
(High side NG 1)	
Output voltage	≥ 2.66 V
Engine speed	600 ←→ 900 rpm
Throttle opening angle	< 2.44°
Intake manifold pressure	< 40.0 kPa (300 mmHg, 11.8 inHg)
(High side NG 2)	
Output voltage	≥ 1.45 V
Engine speed	600 ←→ 900 rpm
Throttle opening angle	< 2.44°
Intake manifold pressure	< 40.0 kPa (300 mmHg, 11.8 inHg)
Fuel system diagnosis	Rich side NG

Time Needed for Diagnosis:

Low side	3 seconds
High side	10 seconds

Malfunction Indicator Light Illumination: Illuminates when malfunction occurs in 2 continuous driving cycles.

• Normality Judgment

Judge OK the when the malfunction criteria below are completed.

Judgment Value

Malfunction Criteria	Threshold Value
(Low side NG)	
Output voltage	≥ 1.2 V
Engine speed	≥ 2000 rpm
Throttle opening angle	≥ 13°
Intake manifold pressure	≥ 53.3 kPa (400 mmHg, 15.7 inHg)
(High side NG)	
Output voltage	< 2.66 V
Engine speed	600 ←→ 900 rpm
Throttle opening angle	< 2.44°
Intake manifold pressure	< 40.0 kPa (300 mmHg, 11.8 inHg)
Fuel system diagnosis	Rich side OK

6. DTC CLEAR CONDITION

- When the OK idling cycle was completed 40 times in a row
- When “Clear Memory” was performed

7. MALFUNCTION INDICATOR LIGHT CLEAR CONDITION

- When the OK driving cycle was completed 3 times in a row
- When “Clear Memory” was performed

8. FAIL SAFE

- Air flow meter: Engine load is normally calculated by manifold pressure and engine speed; however, calculated only by manifold pressure.
- EVAP conc. learning (fuel): Not allowed to learn.
- Knock compensation:
  - At normal: learned ignition timing value = knock F/B timing value + whole learning timing value + partial learning timing
  - At trouble: learned ignition timing value = −3°CA (retard 3°CA)
    - Knock F/B timing value = 0°CA
    - Partial learning is not allowed.
    - Whole learning is not allowed.
- ISC control: Make the open loop compensation to be the given value (1 g (0.04 oz)/s). Stop calculating the throttle sensor temperature compensation. (Hold the previous value.)

9. ECM OPERATION AT DTC SETTING

Memorize the freeze frame data. (For test mode $02)

H: DTC P0102 MASS OR VOLUME AIR FLOW CIRCUIT LOW INPUT

1. OUTLINE OF DIAGNOSIS

Detect the open or short circuit of air flow sensor. Judge NG when out of the standard value.

2. COMPONENT DESCRIPTION

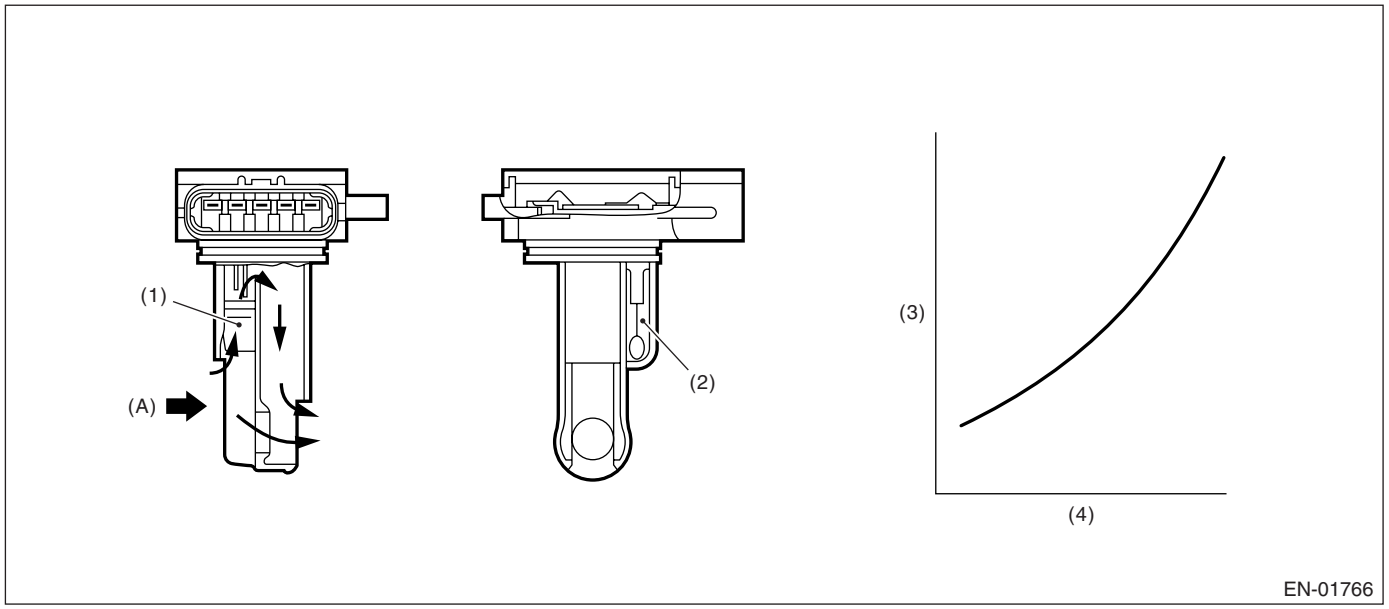

(1) Air flow sensor
(2) Intake air temperature sensor
(3) Voltage (V)
(4) Intake air volume (kg/s)
(A) Air

3. ENABLE CONDITION

Secondary Parameters	Enable Conditions
None	

4. GENERAL DRIVING CYCLE

Always perform the diagnosis continuously.

5. DIAGNOSTIC METHOD

Judge NG when the continuous time of completing the malfunction criteria below becomes more than 0.5 seconds. Judge OK and clear the NG when the malfunction criteria below are not completed.

Judgment Value

Malfunction Criteria	Threshold Value
Output voltage	0.2 V

Time Needed for Diagnosis: 0.5 seconds
Malfunction Indicator Light Illumination: Illuminates as soon as the malfunction occurs.

6. DTC CLEAR CONDITION

- When the OK idling cycle was completed 40 times in a row
- When “Clear Memory” was performed

7. MALFUNCTION INDICATOR LIGHT CLEAR CONDITION

- When the OK driving cycle was completed 3 times in a row
- When “Clear Memory” was performed

8. FAIL SAFE

• Air flow meter: Engine load is normally calculated by manifold pressure and engine speed; however, calculated only by manifold pressure.
• EVAP conc. learning (fuel): Not allowed to learn.
• Knock compensation:
  – At normal: learned ignition timing value = knock F/B timing value + whole learning timing value + partial learning timing value
  – At trouble: learned ignition timing value = –3°CA (retard 3°CA)
    • Knock F/B timing value = 0°CA
    • Whole learning is not allowed.
    • Partial learning is not allowed.
• ISC control: Make the open loop compensation to be the given value (1 g (0.04 oz)/s). Stop calculating the throttle sensor temperature compensation. (Hold the previous value.)

9. ECM OPERATION AT DTC SETTING

Memorize the freeze frame data. (For test mode $02)

I: DTC P0103 MASS OR VOLUME AIR FLOW CIRCUIT HIGH INPUT

1. OUTLINE OF DIAGNOSIS

Detect the open or short circuit of air flow sensor. Judge NG when out of the standard value.

2. COMPONENT DESCRIPTION

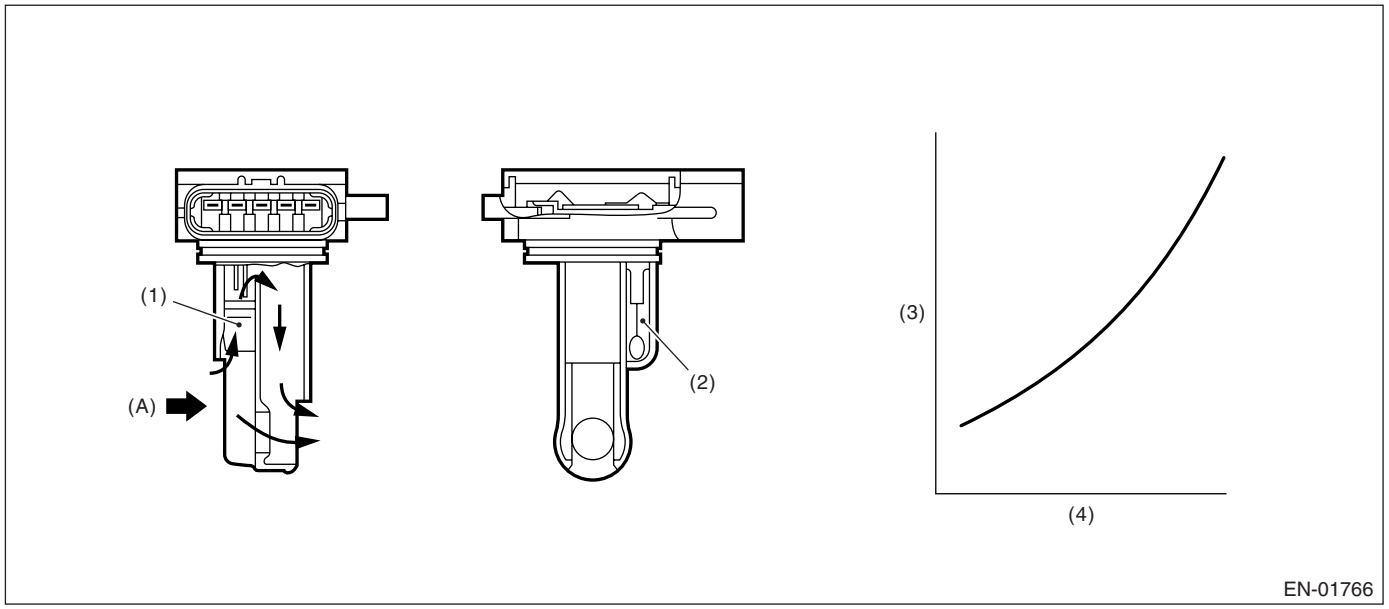

(1) Air flow sensor
(2) Intake air temperature sensor
(3) Voltage (V)
(4) Intake air volume (kg/s)
(A) Air

3. ENABLE CONDITION

Secondary Parameters	Enable Conditions
None	

4. GENERAL DRIVING CYCLE

Always perform the diagnosis continuously.

5. DIAGNOSTIC METHOD

Judge NG when the continuous time until completing the malfunction criteria below becomes more than 0.5 seconds. Judge OK and clear the NG when the malfunction criteria below are not completed.

Judgment Value

Malfunction Criteria	Threshold Value
Output voltage	≥ 4.985 V

Time Needed for Diagnosis: 0.5 seconds
Malfunction Indicator Light Illumination: Illuminates as soon as the malfunction occurs.

6. DTC CLEAR CONDITION

- When the OK idling cycle was completed 40 times in a row
- When “Clear Memory” was performed

7. MALFUNCTION INDICATOR LIGHT CLEAR CONDITION

- When the OK driving cycle was completed 3 times in a row
- When “Clear Memory” was performed

8. FAIL SAFE

- Air flow meter: Engine load is normally calculated by manifold pressure and engine speed; however, calculated only by manifold pressure.
- EVAP conc. learning (fuel): Not allowed to learn.
- Knock compensation:
  - At normal: learned ignition timing value = knock F/B timing value + whole learning timing value + partial learning timing value
  - At trouble: learned ignition timing value = −3°CA (retard 3°CA)
    - Knock F/B timing value = 0°CA
    - Whole learning is not allowed.
    - Partial learning is not allowed.
- ISC control: Make the open loop compensation to be the given value (1 g (0.04 oz)/s). Stop calculating the throttle sensor temperature compensation. (Hold the previous value.)

9. ECM OPERATION AT DTC SETTING

Memorize the freeze frame data. (For test mode $02)

J: DTC P0107 MANIFOLD ABSOLUTE PRESSURE/BAROMETRIC PRESSURE CIRCUIT LOW INPUT

1. OUTLINE OF DIAGNOSIS

Detect the open or short circuit of intake manifold pressure sensor. Judge NG when out of the standard value.

2. COMPONENT DESCRIPTION

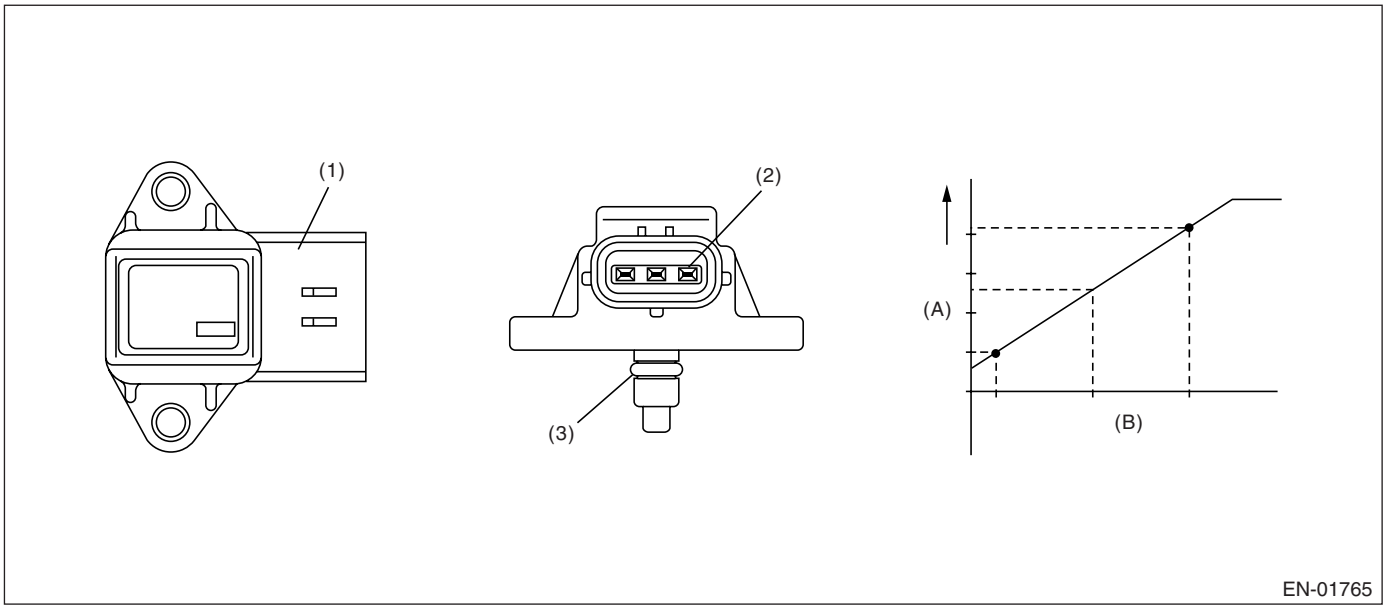

(1) Connector
(2) Terminal
(3) O-ring
(A) Output voltage
(B) Absolute pressure

3. ENABLE CONDITION

Secondary Parameters	Enable Conditions
None	

4. GENERAL DRIVING CYCLE

Always perform the diagnosis continuously.

5. DIAGNOSTIC METHOD

Judge NG when the continuous time of completing the malfunction criteria below becomes more than 0.5 seconds. Judge OK and clear the NG when the malfunction criteria below are not completed.

Judgment Value

Malfunction Criteria	Threshold Value
Output voltage	< 0.568 V

Time Needed for Diagnosis: 0.5 seconds
Malfunction Indicator Light Illumination: Illuminates as soon as the malfunction occurs.

6. DTC CLEAR CONDITION

- When the OK idling cycle was completed 40 times in a row
- When “Clear Memory” was performed

7. MALFUNCTION INDICATOR LIGHT CLEAR CONDITION

- When the OK driving cycle was completed 3 times in a row
- When “Clear Memory” was performed

8. FAIL SAFE

- Intake manifold pressure sensor process: Estimate the pressure from engine load.
- ISC feedback: Not allowed to calculate the amount of feedback.
- Heavy fuel judgment: Not allowed to carry out the heavy judgment.
- Fuel cut control: Perform fuel cut when intake manifold sensor is NG. (When amount of fuel injection is large)

9. ECM OPERATION AT DTC SETTING

Memorize the freeze frame data. (For test mode $02)

K: DTC P0108 MANIFOLD ABSOLUTE PRESSURE/BAROMETRIC PRESSURE CIRCUIT HIGH INPUT

1. OUTLINE OF DIAGNOSIS

Detect the open or short circuit of intake manifold pressure sensor. Judge NG when out of the standard value.

2. COMPONENT DESCRIPTION

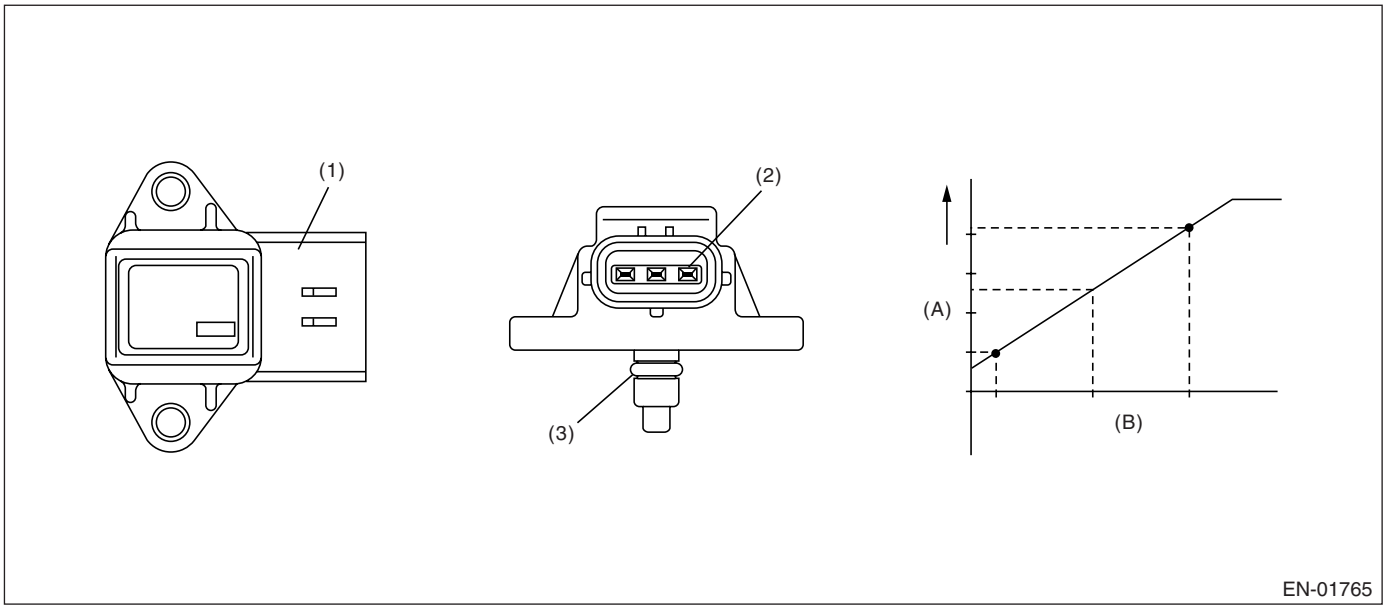

(1) Connector
(2) Terminal
(3) O-ring
(A) Output voltage
(B) Absolute pressure

3. ENABLE CONDITION

Secondary Parameters	Enable Conditions
None	

4. GENERAL DRIVING CYCLE

Always perform the diagnosis continuously.

5. DIAGNOSTIC METHOD

Judge NG when the continuous time of completing the malfunction criteria below becomes more than 0.5 seconds. Judge OK and clear the NG when the malfunction criteria below are not completed.

Judgment Value

Malfunction Criteria	Threshold Value
Output voltage	≥ 4.921 V

Time Needed for Diagnosis: 0.5 seconds
Malfunction Indicator Light Illumination: Illuminates as soon as the malfunction occurs.

6. DTC CLEAR CONDITION

- When the OK idling cycle was completed 40 times in a row
- When “Clear Memory” was performed

7. MALFUNCTION INDICATOR LIGHT CLEAR CONDITION

- When the OK driving cycle was completed 3 times in a row
- When “Clear Memory” was performed

8. FAIL SAFE

- Intake manifold pressure sensor process: Estimate the pressure from engine load.
- ISC feedback: Not allowed to calculate the amount of feedback.
- Heavy fuel judgment: Not allowed to carry out the heavy judgment.
- Fuel cut control: Perform fuel cut when intake manifold sensor is NG. (When amount of fuel injection is large)

9. ECM OPERATION AT DTC SETTING

Memorize the freeze frame data. (For test mode $02)

L: DTC P0111 INTAKE AIR TEMPERATURE CIRCUIT RANGE/PERFORMANCE

1. OUTLINE OF DIAGNOSIS

Detect the malfunction of intake air temperature sensor output property. Judge NG when the intake air temperature is not varied whereas it seemed to be varied from the viewpoint of engine condition.

2. COMPONENT DESCRIPTION

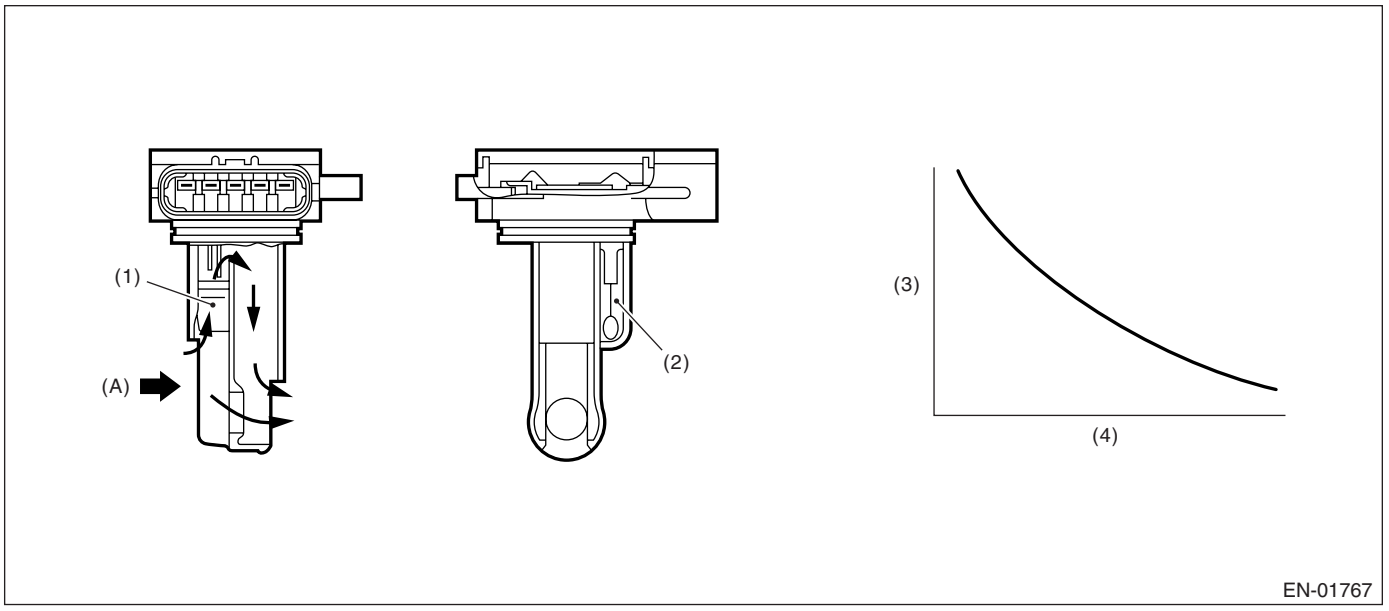

(1) Air flow sensor
(2) Intake air temperature sensor
(3) Resistance (Ω)
(4) Intake air temperature °C (°F)
(A) Air

3. ENABLE CONDITION

Secondary Parameters	Enable Conditions
Coolant temp. before engine start	< 30°C (86°F)
Coolant temperature	> 95°C (203°F)
Battery voltage	≥ 10.9 V
Continuous time when the vehicle speed is less than 60 km/h (37 MPH)	600 seconds or more

4. GENERAL DRIVING CYCLE

Perform the diagnosis when the vehicle speed condition is completed after idling from starting the cooled engine.

5. DIAGNOSTIC METHOD

• Abnormality Judgment

Judge NG when the continuous time of completing the malfunction criteria below becomes more than 1 second.

Judgment Value

Malfunction Criteria	Threshold Value
Output voltage difference between Max. and Min.	< 20 mV (Approx. 0.5°C (0.9°F) is equivalent to around 25°.)

Time Needed for Diagnosis: 1 second
Malfunction Indicator Light Illumination: Illuminates when malfunction occurs in 2 continuous driving cycles.

• Normality Judgment

Judge OK and clear the NG when the malfunction criteria below are completed.
Judgment Value

Malfunction Criteria	Threshold Value
Output voltage difference between Max. and Min.	≥ 20 mV

6. DTC CLEAR CONDITION

- When the OK idling cycle was completed 40 times in a row
- When “Clear Memory” was performed

7. MALFUNCTION INDICATOR LIGHT CLEAR CONDITION

- When the OK driving cycle was completed 3 times in a row
- When “Clear Memory” was performed

8. FAIL SAFE

Intake air temperature sensor process: Intake air temperature is fixed at 20°C (68°F).

9. ECM OPERATION AT DTC SETTING

Memorize the freeze frame data. (For test mode $02)

M: DTC P0112 INTAKE AIR TEMPERATURE CIRCUIT LOW INPUT

1. OUTLINE OF DIAGNOSIS

Detect the open or short circuit of intake air temperature sensor. Judge NG when out of the standard value.

2. COMPONENT DESCRIPTION

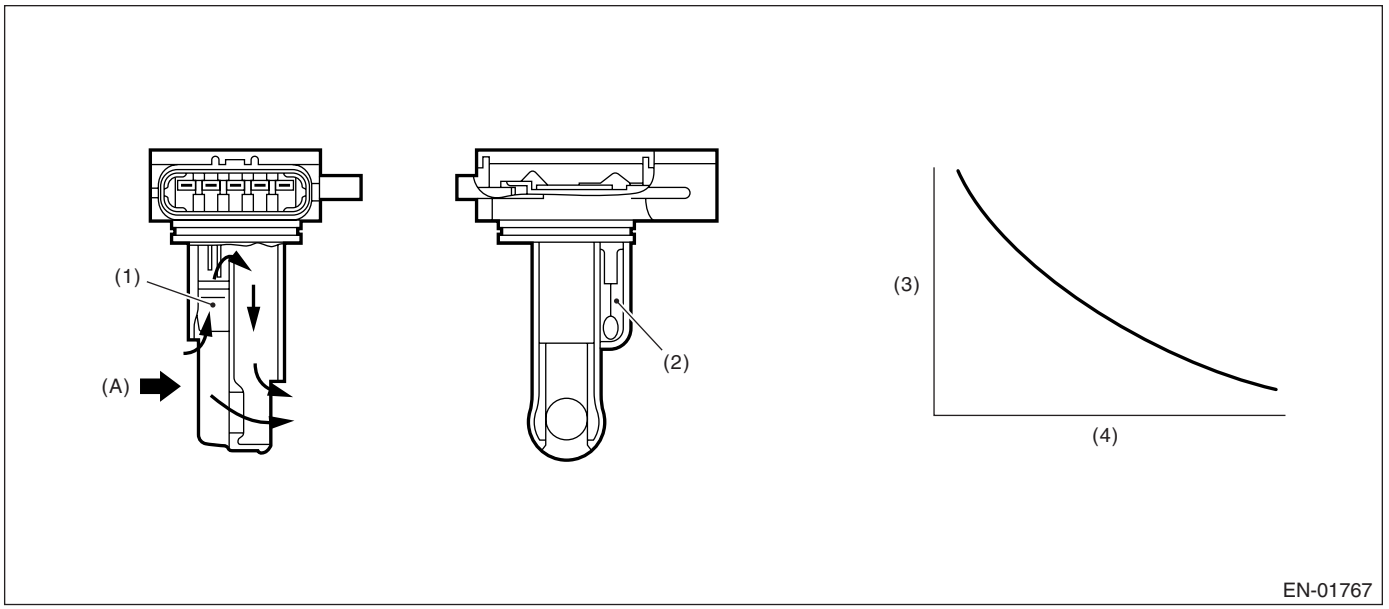

(1) Air flow sensor
(2) Intake air temperature sensor
(3) Resistance (Ω)
(4) Intake air temperature °C (°F)
(A) Air

3. ENABLE CONDITION

Secondary Parameters	Enable Conditions
None	

4. GENERAL DRIVING CYCLE

Always perform the diagnosis continuously.

5. DIAGNOSTIC METHOD

• Abnormality Judgment

Judge NG when the continuous time of completing the malfunction criteria below becomes more than 0.5 seconds.

Judgment Value

Malfunction Criteria	Threshold Value
Output voltage	< 0.165 V
Ignition switch	ON

Time Needed for Diagnosis: 0.5 seconds
Malfunction Indicator Light Illumination: Illuminates as soon as the malfunction occurs.

• Normality Judgment

Judge OK and clear the NG when the malfunction criteria below are completed.

Judgment Value

Malfunction Criteria	Threshold Value
Output voltage	≥ 0.165 V
Ignition switch	ON

6. DTC CLEAR CONDITION

- When the OK idling cycle was completed 40 times in a row
- When “Clear Memory” was performed

7. MALFUNCTION INDICATOR LIGHT CLEAR CONDITION

- When the OK driving cycle was completed 3 times in a row
- When “Clear Memory” was performed

8. FAIL SAFE

Intake air temperature sensor process: Intake air temperature is fixed at 20°C (68°F).

9. ECM OPERATION AT DTC SETTING

Memorize the freeze frame data. (For test mode $02)

N: DTC P0113 INTAKE AIR TEMPERATURE CIRCUIT HIGH INPUT

1. OUTLINE OF DIAGNOSIS

Detect the open or short circuit of intake air temperature sensor. Judge NG when out of the standard value.

2. COMPONENT DESCRIPTION

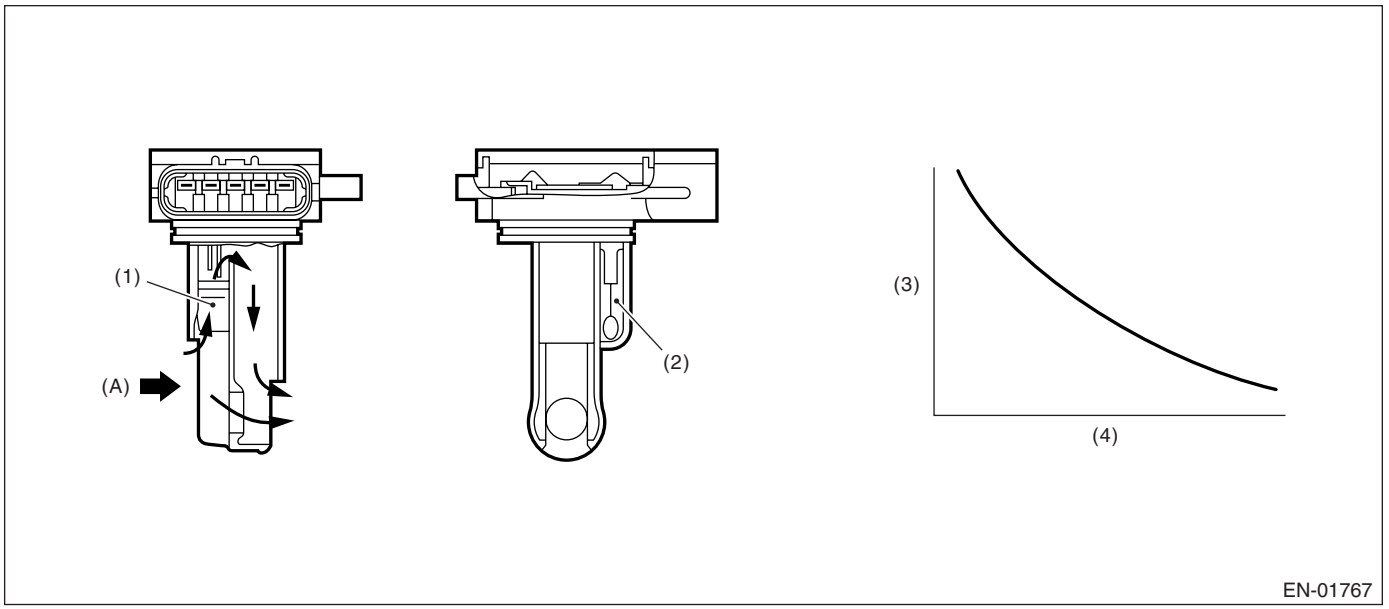

(1) Air flow sensor
(2) Intake air temperature sensor
(3) Resistance (Ω)
(4) Intake air temperature °C (°F)
(A) Air

3. ENABLE CONDITION

Secondary Parameters	Enable Conditions
None	

4. GENERAL DRIVING CYCLE

Always perform the diagnosis continuously.

5. DIAGNOSTIC METHOD

• Abnormality Judgment

Judge NG when the continuous time of completing the malfunction criteria below becomes more than 0.5 seconds.

Judgment Value

Malfunction Criteria	Threshold Value
Output voltage	≥ 4.716 V
Ignition switch	ON

Time Needed for Diagnosis: 0.5 seconds
Malfunction Indicator Light Illumination: Illuminates as soon as the malfunction occurs.

• Normality Judgment

Judge OK and clear the NG when the malfunction criteria below are completed.

Judgment Value

Malfunction Criteria	Threshold Value
Output voltage	< 4.716 V
Ignition switch	ON

6. DTC CLEAR CONDITION

- When the OK idling cycle was completed 40 times in a row
- When “Clear Memory” was performed

7. MALFUNCTION INDICATOR LIGHT CLEAR CONDITION

- When the OK driving cycle was completed 3 times in a row
- When “Clear Memory” was performed

8. FAIL SAFE

Intake air temperature sensor process: Intake air temperature is fixed at 20°C (68°F).

9. ECM OPERATION AT DTC SETTING

Memorize the freeze frame data. (For test mode $02)

O: DTC P0117 ENGINE COOLANT TEMPERATURE CIRCUIT LOW INPUT

1. OUTLINE OF DIAGNOSIS

Detect the open or short circuit of engine coolant temperature sensor. Judge NG when out of the standard value.

2. COMPONENT DESCRIPTION

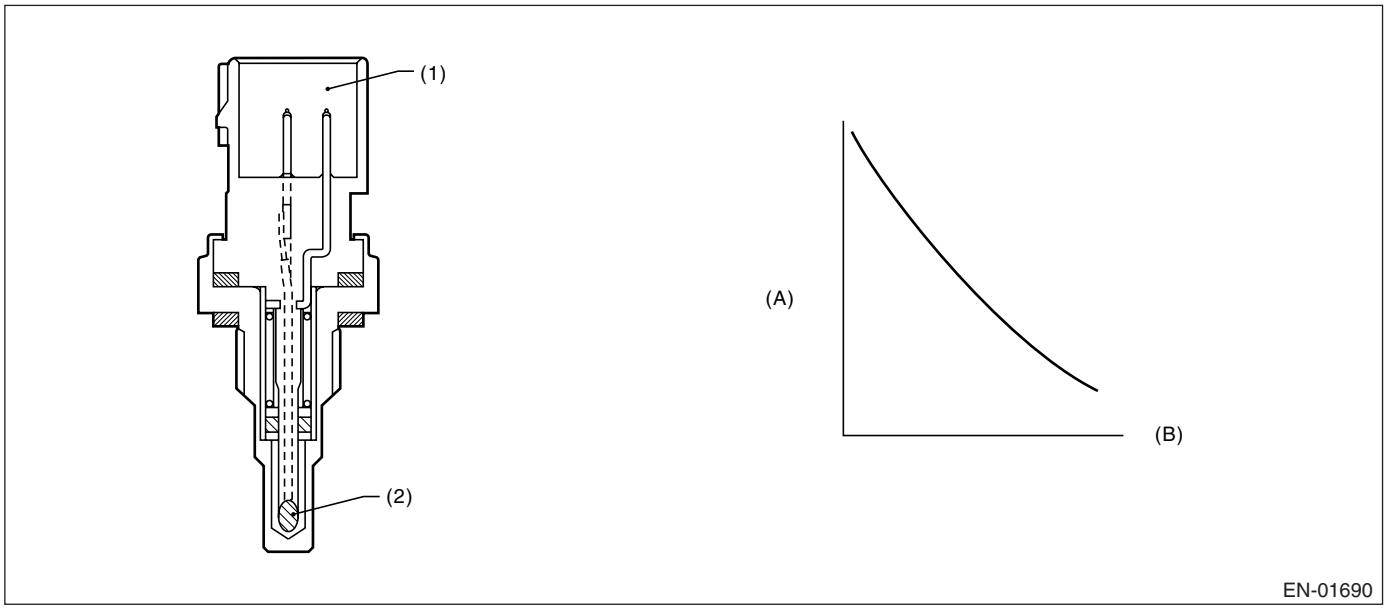

(1) Connector
(2) Thermistor element
(A) Resistance value (kΩ)
(B) Temperature °C (°F)

3. ENABLE CONDITION

Secondary Parameters	Enable Conditions
None	

4. GENERAL DRIVING CYCLE

Always perform the diagnosis continuously.

5. DIAGNOSTIC METHOD

Judge NG when the continuous time of completing the malfunction criteria below becomes more than 0.5 seconds. Judge OK and clear the NG when the malfunction criteria below are not completed.

Judgment Value

Malfunction Criteria	Threshold Value
Output voltage	〈 0.165 V

Time Needed for Diagnosis: 0.5 seconds
Malfunction Indicator Light Illumination: Illuminates as soon as the malfunction occurs.

6. DTC CLEAR CONDITION

- When the OK idling cycle was completed 40 times in a row
- When “Clear Memory” was performed

7. MALFUNCTION INDICATOR LIGHT CLEAR CONDITION

- When the OK driving cycle was completed 3 times in a row
- When “Clear Memory” was performed

8. FAIL SAFE

- Engine coolant temperature process: Fix the engine coolant temperature at 70°C (158°F).
- ISC feedback: Calculate the target engine speed setting the engine coolant temperature to 70°C (158°F).
- ISC learning: Not allowed to learn.
- Heavy fuel judgment control: Not allowed to carry out the heavy judgment.
- Air conditioner control: Not allowed to turn the air conditioner to ON.
- Radiator fan control: Both main and sub fan turn to ON.
- Increase compensation factor at high coolant temperature: Increase normally occurs with high temperature and other conditions; however, occurs with other conditions except coolant temperature condition.

9. ECM OPERATION AT DTC SETTING

Memorize the freeze frame data. (For test mode $02)

P: DTC P0118 ENGINE COOLANT TEMPERATURE CIRCUIT HIGH INPUT

1. OUTLINE OF DIAGNOSIS

Detect the open or short circuit of engine coolant temperature sensor. Judge NG when out of the standard value.

2. COMPONENT DESCRIPTION

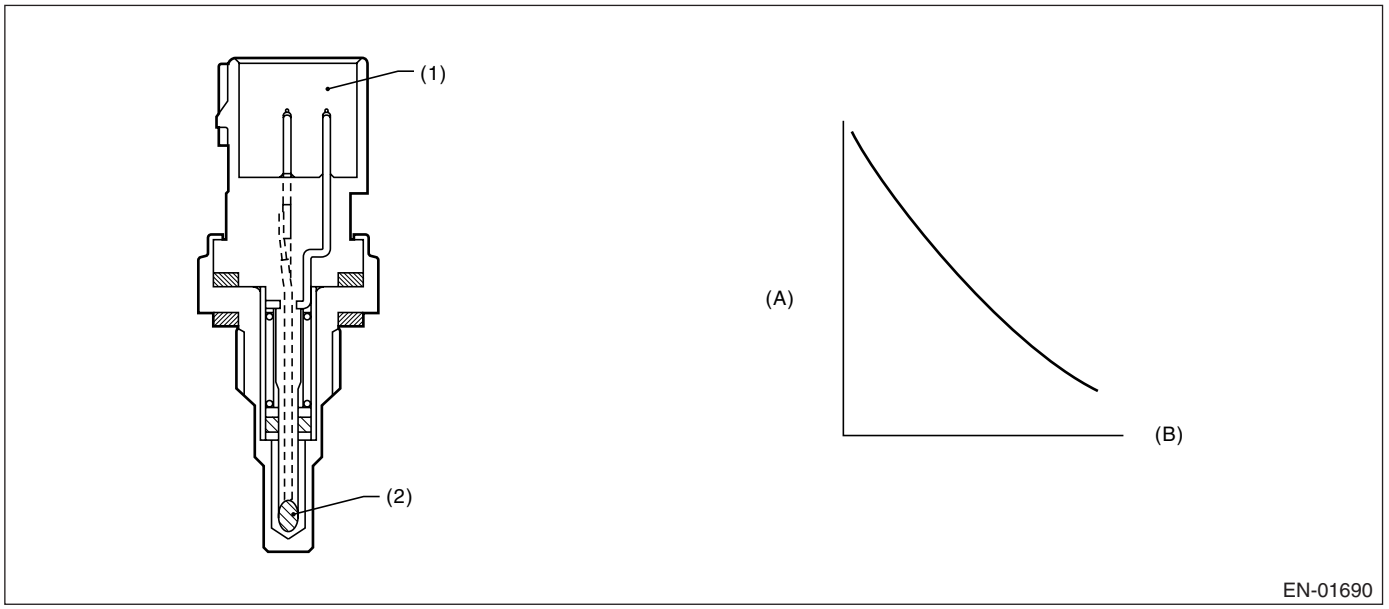

(1) Connector
(2) Thermistor element
(A) Resistance value (kΩ)
(B) Temperature °C (°F)

3. ENABLE CONDITION

Secondary Parameters	Enable Conditions
None	

4. GENERAL DRIVING CYCLE

Always perform the diagnosis continuously.

5. DIAGNOSTIC METHOD

Judge NG when the continuous time of completing the malfunction criteria below becomes more than 0.5 seconds. Judge OK and clear the NG when the malfunction criteria below are not completed.

Judgment Value

Malfunction Criteria	Threshold Value
Output voltage	≥ 4.716 V

Time Needed for Diagnosis: 0.5 seconds
Malfunction Indicator Light Illumination: Illuminates as soon as the malfunction occurs.

6. DTC CLEAR CONDITION

- When the OK idling cycle was completed 40 times in a row
- When “Clear Memory” was performed

7. MALFUNCTION INDICATOR LIGHT CLEAR CONDITION

- When the OK driving cycle was completed 3 times in a row
- When “Clear Memory” was performed

8. FAIL SAFE

- Engine coolant temperature process: Fix the engine coolant temperature at 70°C (158°F).
- ISC feedback: Calculate the target engine speed setting the engine coolant temperature to 70°C (158°F).
- ISC learning: Not allowed to learn.
- Heavy fuel judgment control: Not allowed to carry out the heavy judgment.
- Air conditioner control: Not allowed to turn the air conditioner to ON.
- Radiator fan control: Both main and sub fan turn to ON.
- Increase compensation factor at high coolant temperature: Increase normally occurs with high temperature and other conditions; however, occurs with other conditions except coolant temperature condition.

9. ECM OPERATION AT DTC SETTING

Memorize the freeze frame data. (For test mode $02)

Q: DTC P0122 THROTTLE/PEDAL POSITION SENSOR/SWITCH “A” CIRCUIT LOW INPUT

1. OUTLINE OF DIAGNOSIS

Detect the open or short circuit of throttle position sensor 1.
Judge NG when out of the standard value.

2. COMPONENT DESCRIPTION

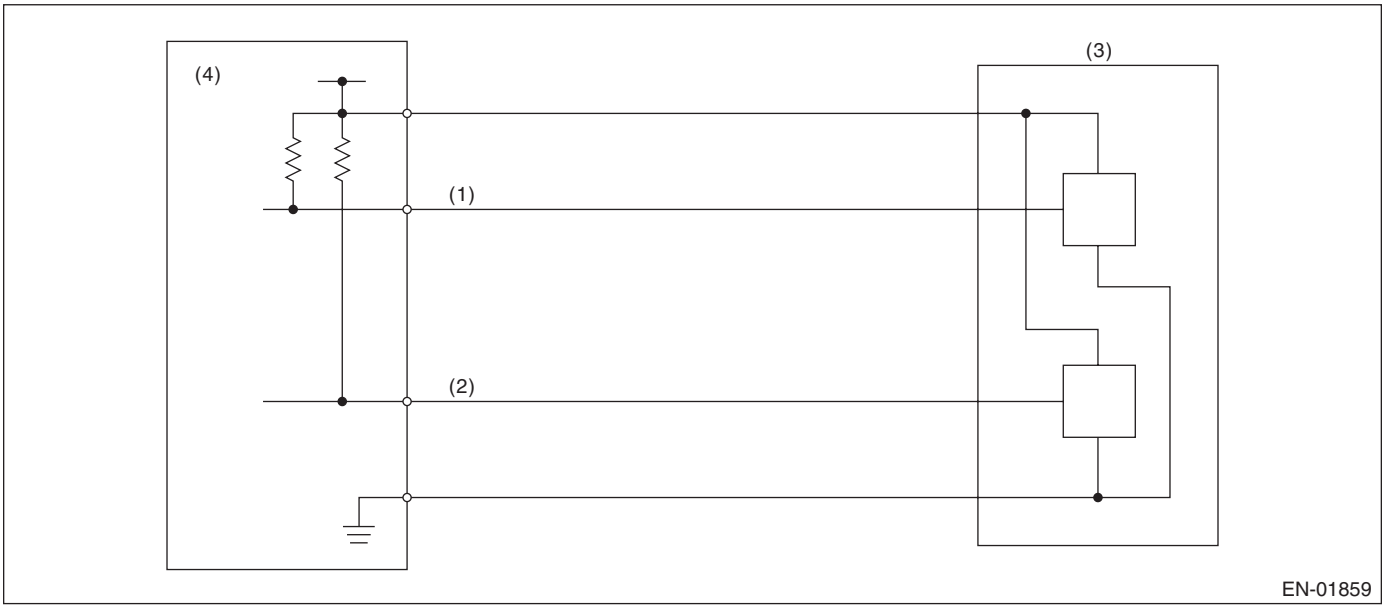

(1) Throttle position sensor 1 signal
(2) Throttle position sensor 2 signal
(3) Throttle position sensor
(4) Engine control module (ECM)

3. ENABLE CONDITION

Secondary Parameters	Enable Conditions
Ignition switch	ON

4. GENERAL DRIVING CYCLE

Always perform the diagnosis continuously.

5. DIAGNOSTIC METHOD

Judge OK and clear the NG when the malfunction criteria below are completed.
Judgment Value

Malfunction Criteria	Threshold Value
Sensor 1 input voltage	≥ 0.309 V

Time Needed for Diagnosis: 24 milliseconds
Malfunction Indicator Light Illumination: Illuminates as soon as malfunction occurs.

6. DTC CLEAR CONDITION

- When the OK idling cycle was completed 40 times in a row
- When “Clear Memory” was performed (Only with engine stopped)

7. MALFUNCTION INDICATOR LIGHT CLEAR CONDITION

- When the OK driving cycle was completed 3 times in a row
- When “Clear Memory” was performed (Only with engine stopped)

8. FAIL SAFE

Stop power distribution to electronic throttle control motor. (Throttle opening is fixed to 6°.)

9. ECM OPERATION AT DTC SETTING

Memorize the freeze frame data. (For test mode $02)

R: DTC P0123 THROTTLE/PEDAL POSITION SENSOR/SWITCH "A" CIRCUIT HIGH INPUT

1. OUTLINE OF DIAGNOSIS

Detect the open or short circuit of throttle position sensor 1.
Judge NG when out of the standard value.

2. COMPONENT DESCRIPTION

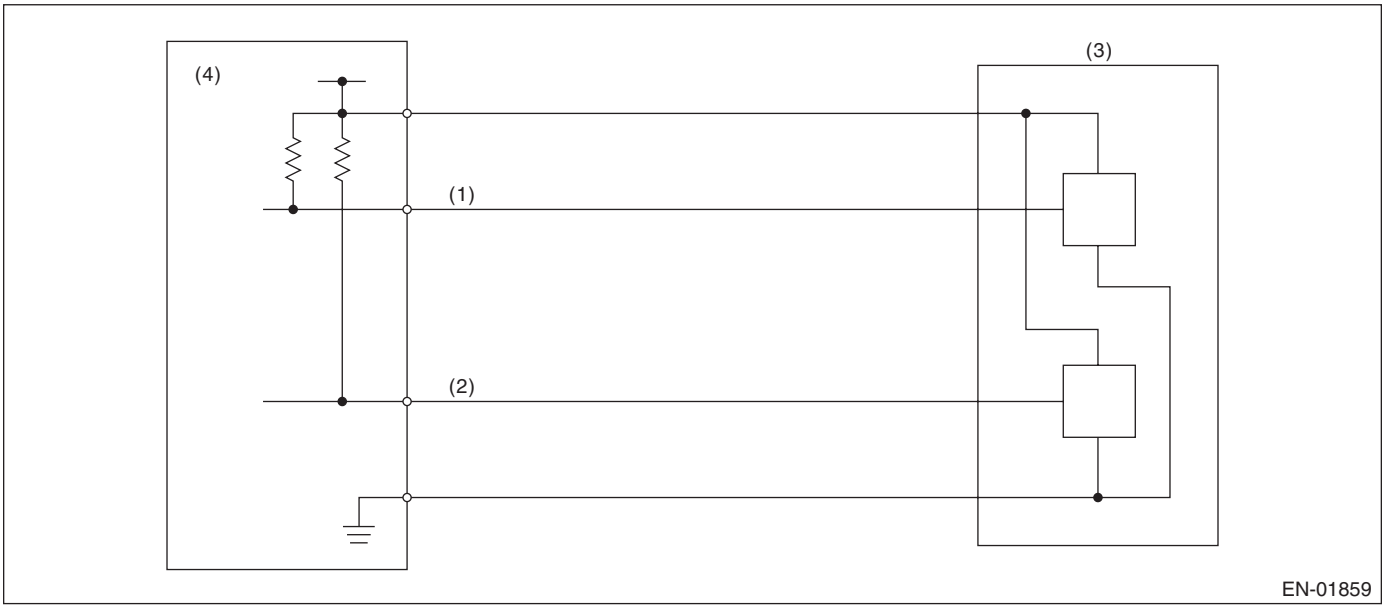

(1) Throttle position sensor 1 signal
(2) Throttle position sensor 2 signal
(3) Throttle position sensor
(4) Engine control module (ECM)

3. ENABLE CONDITION

Secondary Parameters	Enable Conditions
Ignition switch	ON

4. GENERAL DRIVING CYCLE

Always perform the diagnosis continuously.

5. DIAGNOSTIC METHOD

Judge OK and clear the NG when the malfunction criteria below are completed.
Judgment Value

Malfunction Criteria	Threshold Value
Sensor 1 input voltage	≤ 4.646 V

Time Needed for Diagnosis: 24 milliseconds
Malfunction Indicator Light Illumination: Illuminates as soon as malfunction occurs.

6. DTC CLEAR CONDITION

- When the OK idling cycle was completed 40 times in a row
- When "Clear Memory" was performed (Only with engine stopped)

7. MALFUNCTION INDICATOR LIGHT CLEAR CONDITION

- When the OK driving cycle was completed 3 times in a row
- When "Clear Memory" was performed (Only with engine stopped)

8. FAIL SAFE

Stop power distribution to electronic throttle control motor. (Throttle opening is fixed to 6°.)

9. ECM OPERATION AT DTC SETTING

Memorize the freeze frame data. (For test mode $02)

S: DTC P0125 INSUFFICIENT ENGINE COOLANT TEMPERATURE FOR CLOSED LOOP FUEL CONTROL

1. OUTLINE OF DIAGNOSIS

Detect the malfunction of engine coolant temperature output property. Judge NG when the engine coolant temperature does not rise whereas it seemed to rise from the viewpoint of the engine condition.

2. COMPONENT DESCRIPTION

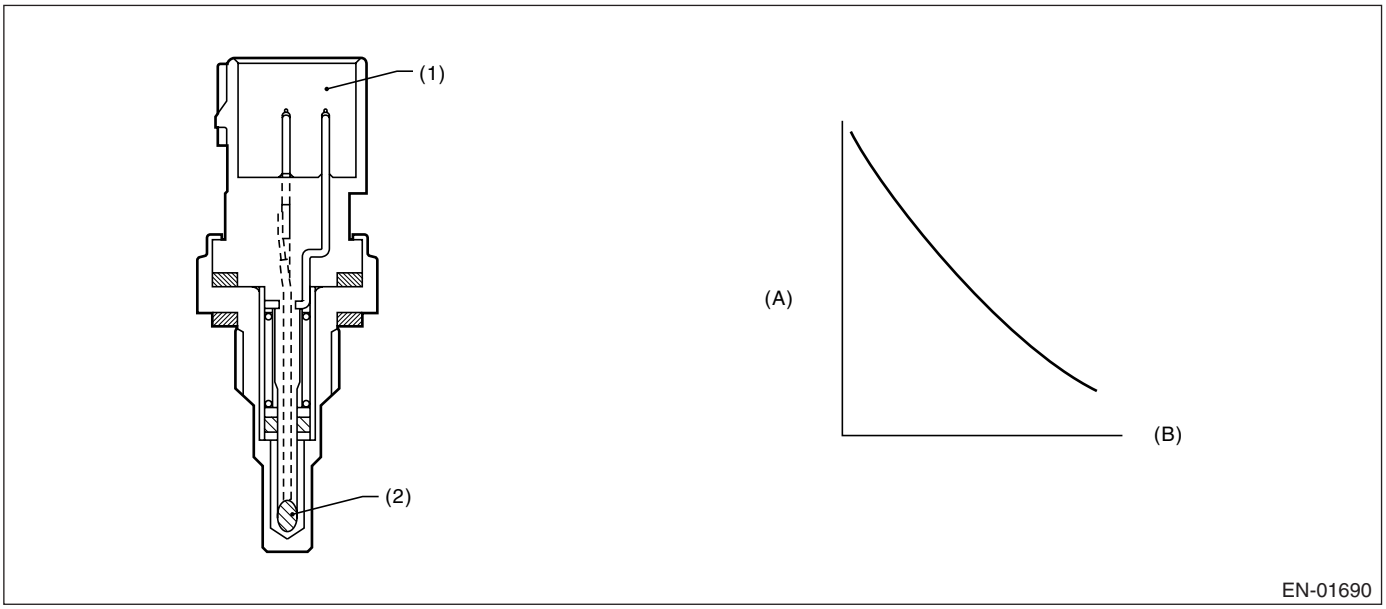

(1) Connector
(2) Thermistor element
(A) Resistance value (kΩ)
(B) Temperature °C (°F)

3. ENABLE CONDITION

Secondary Parameters	Enable Conditions
Engine speed	≥ 500 rpm
Battery voltage	〉10.9 V

4. GENERAL DRIVING CYCLE

Perform the diagnosis only once after engine starting.

5. DIAGNOSTIC METHOD

• Abnormality Judgment

Judge NG when the malfunction criteria below are completed.

Judgment Value

Malfunction Criteria	Threshold Value
Engine coolant temperature	〈 20°C (68°F)
Timer for diagnosis after engine starting	≥ Timer judgment value after engine starting

Timer for diagnosis after engine starting
a) Timer stop at fuel cut mode.
b) During the driving conditions (except a) above), timer count up by 64 milliseconds + TWCNT milliseconds (at every 64 milliseconds).
Where, TWCNT is determined as follows,
TWCNT = 0 (at idle switch ON),

Refer to the following table for TWCNT with idle switch OFF.

Temperature °C (°F)	Vehicle speed km/h (MPH)							
	0 (0)	8 (4.97)	16 (9.94)	24 (14.9)	32 (19.9)	40 (24.9)	48 (29.8)	56 (34.8)
−20 (−4)	0 ms	37.136 ms	74.272 ms	111.41 ms	126.66 ms	141.91 ms	163.59 ms	185.26 ms
−10 (14)	0 ms	27.39 ms	54.782 ms	82.173 ms	99.65 ms	117.13 ms	135.96 ms	154.80 ms
0 (32)	0 ms	17.646 ms	35.292 ms	52.938 ms	72.64 ms	92.34 ms	108.34 ms	124.33 ms
10 (50)	0 ms	7.9012 ms	15.802 ms	23.704 ms	45.63 ms	67.556 ms	80.711 ms	93.867 ms

Judgment value of timer after engine starting
$t = 455 - 27 \times Ti$
Ti is the lowest coolant temperature after starting the engine.
Time Needed for Diagnosis: To be determined. (It is varied by the Min. engine coolant temperature and engine conditions such as vehicle speed and engine coolant temperature.)
Malfunction Indicator Light Illumination: Illuminates when malfunction occurs in 2 continuous driving cycles.
• Normality Judgment

Judge OK and clear the NG when the malfunction criteria below are completed.
Judgment Value

Malfunction Criteria	Threshold Value
Engine coolant temperature	≥ 20°C (68°F)

6. DTC CLEAR CONDITION

- When the OK idling cycle was completed 40 times in a row
- When “Clear Memory” was performed

7. MALFUNCTION INDICATOR LIGHT CLEAR CONDITION

- When the OK driving cycle was completed 3 times in a row
- When “Clear Memory” was performed

8. FAIL SAFE

- Engine coolant temperature process: Fix the engine coolant temperature at 70°C (158°F).
- ISC feedback: Calculate the target engine speed setting the engine coolant temperature to 70°C (158°F).
- ISC learning: Not allowed to learn.
- Heavy fuel judgment control: Not allowed to carry out the heavy judgment.
- Air conditioner control: Not allowed to turn the air conditioner to ON.
- Radiator fan control: Both main and sub fan turn to ON.
- Increase compensation factor at high coolant temperature: Increase normally occurs with high temperature and other conditions; however, occurs with other conditions except coolant temperature condition.

9. ECM OPERATION AT DTC SETTING

Memorize the freeze frame data. (For test mode $02)

T: DTC P0126 INSUFFICIENT ENGINE COOLANT TEMPERATURE FOR STABLE OPERATION

1. OUTLINE OF DIAGNOSIS

Detect the malfunction of engine coolant temperature output property. Judge NG when the engine coolant temperature sensor output does not change whereas it seemed to change from the viewpoint of the engine condition.

2. COMPONENT DESCRIPTION

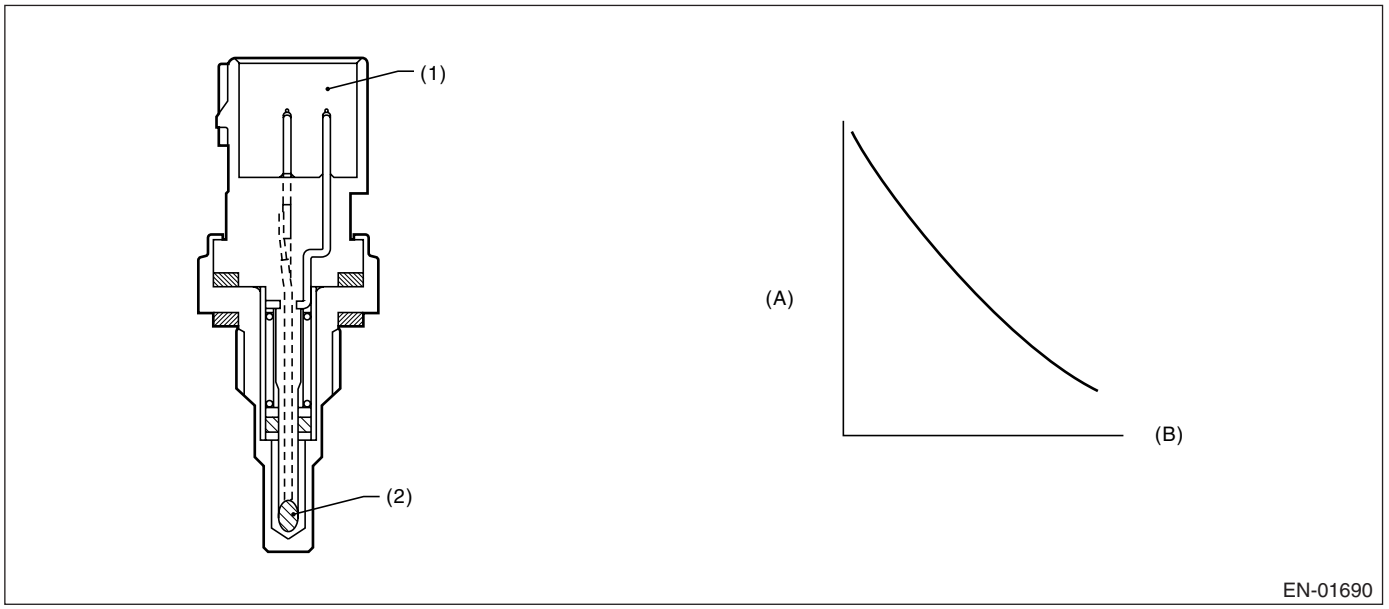

(1) Connector
(2) Thermistor element
(A) Resistance value (kΩ)
(B) Temperature °C (°F)

3. ENABLE CONDITION

Secondary Parameters	Enable Conditions
Battery voltage	〉10.9 V
More than 20 seconds after engine starting	5 Times experienced
More than 20 seconds with vehicle running at more than 30 km/h (18.6 MPH)	5 Times experienced

4. GENERAL DRIVING CYCLE

After idling and running for the specified time, perform the diagnosis only once for OK/NG judgment.

5. DIAGNOSTIC METHOD

Judge NG when the malfunction criteria below are completed and judge OK when not completed.
Judgment Value

Malfunction Criteria	Threshold Value
Engine coolant temperature sensor Max. voltage − Min. voltage	〈 0.015 V

Time Needed for Diagnosis: To be determined. (It is varied by the Min. engine coolant temperature and engine conditions such as vehicle speed and engine coolant temperature.)
Malfunction Indicator Light Illumination: Illuminates when malfunction occurs in 2 continuous driving cycles.

6. DTC CLEAR CONDITION

- When the OK idling cycle was completed 40 times in a row
- When “Clear Memory” was performed

7. MALFUNCTION INDICATOR LIGHT CLEAR CONDITION

- When the OK driving cycle was completed 3 times in a row
- When “Clear Memory” was performed

8. FAIL SAFE

None

9. ECM OPERATION AT DTC SETTING

Memorize the freeze frame data. (For test mode $02)

U: DTC P0128 COOLANT THERMOSTAT (ENGINE COOLANT TEMPERATURE BELOW THERMOSTAT REGULATING TEMPERATURE)

1. OUTLINE OF DIAGNOSIS

Detect the malfunction of thermostat function. Judge NG when the engine coolant temperature is lower than the estimated engine coolant temperature and the difference between them is large. Judge OK when the engine coolant temperature becomes 70°C (158°F) and the difference is small before judging NG.

2. COMPONENT DESCRIPTION

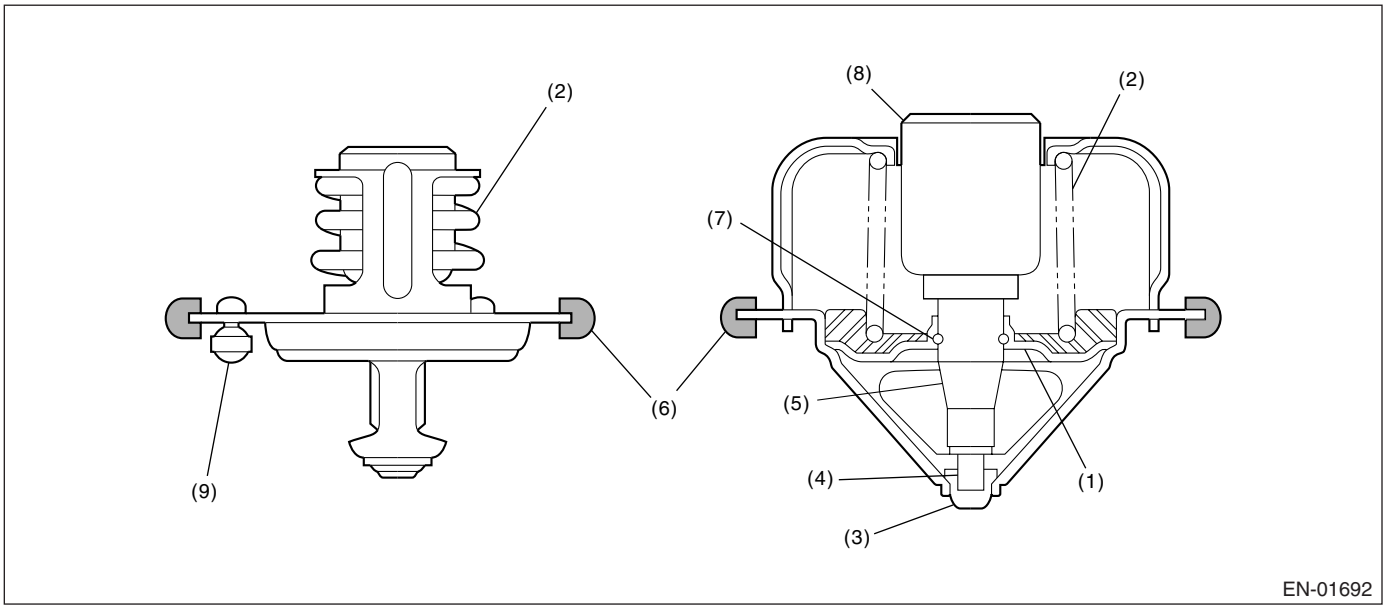

(1) Valve
(2) Spring
(3) Stopper
(4) Piston
(5) Guide
(6) Rubber packing
(7) Stop ring
(8) Wax element
(9) Jiggle valve

3. ENABLE CONDITION

Secondary Parameters	Enable Conditions
None	

4. GENERAL DRIVING CYCLE

Always perform the diagnosis continuously.

5. DIAGNOSTIC METHOD

• Abnormality Judgment

Judge NG when the continuous time of completing the malfunction criteria below becomes more than 30 seconds.

Judgment Value

Malfunction Criteria	Threshold Value
Battery voltage	≥ 10.9 V
Engine coolant temperature at engine starting	< 55°C (131°F)
Engine coolant temperature	< 70°C (158°F)
(Estimated − measured) coolant temperature	> 30°C (86°F)
Vehicle speed	≥ 30 km/h (19 MPH)
Estimated coolant temperature	≥ 70°C (158°F)
Estimated temperature	≥ −7°C (19°F)

Time Needed for Diagnosis: To be determined
Malfunction Indicator Light Illumination: Illuminates when malfunction occurs in 2 continuous driving cycles.

• Normality Judgment

Judge OK and clear the NG when the malfunction criteria below are completed.

Judgment Value

Malfunction Criteria	Threshold Value
Battery voltage	≥ 10.9 V
Engine coolant temperature at engine starting	< 55°C (131°F)
Engine coolant temperature	≥ 70°C (158°F)
(Estimated − measured) coolant temperature	≤ 30°C (86°F)

6. DTC CLEAR CONDITION

- When the OK idling cycle was completed 40 times in a row
- When “Clear Memory” was performed

7. MALFUNCTION INDICATOR LIGHT CLEAR CONDITION

- When the OK driving cycle was completed 3 times in a row
- When “Clear Memory” was performed

8. FAIL SAFE

None

9. ECM OPERATION AT DTC SETTING

Memorize the freeze frame data. (For test mode $02)

V: DTC P0131 O2 SENSOR CIRCUIT LOW VOLTAGE (BANK 1 SENSOR 1)

1. OUTLINE OF DIAGNOSIS

Detect the open or short circuit of sensor.
Judge NG when the element impressed voltage is out of range, or the element current is out of range.

2. COMPONENT DESCRIPTION

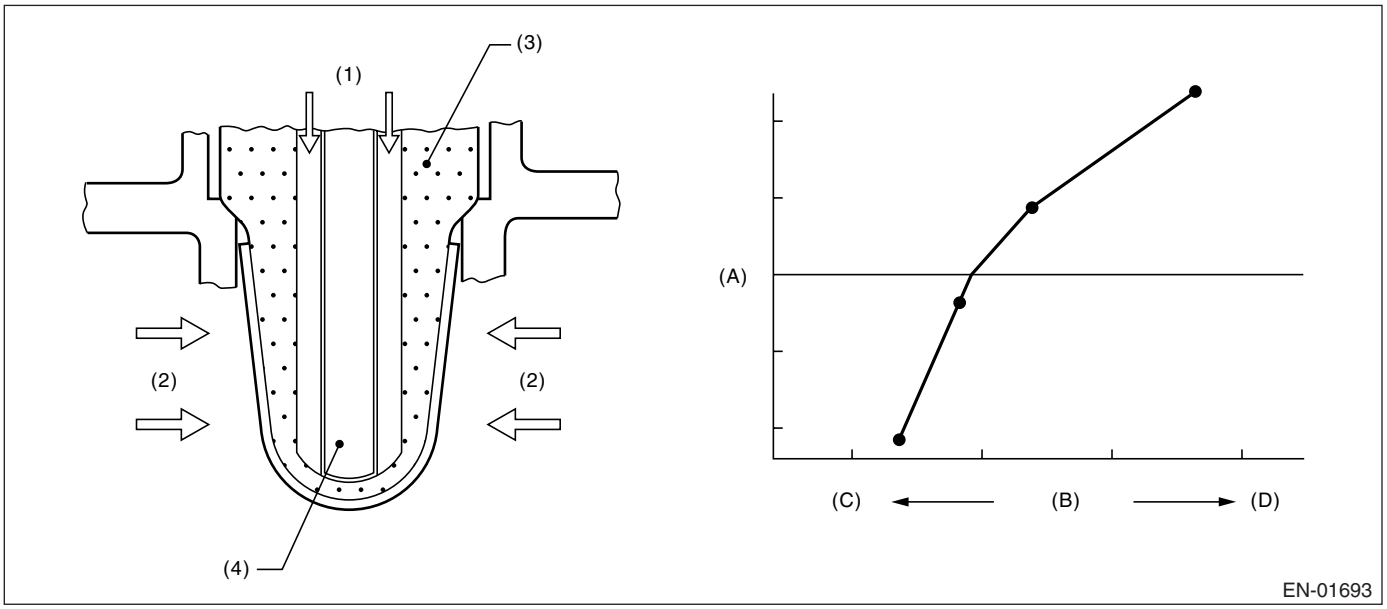

(1) Atmosphere
(2) Exhaust
(3) ZrO2
(4) Ceramic heater
(A) Electromotive force
(B) Air fuel ratio
(C) Lean
(D) Rich

3. ENABLE CONDITION

Secondary Parameters	Enable Conditions
Voltage	≥ 10.9 V

4. GENERAL DRIVING CYCLE

Always perform the diagnosis continuously.

5. DIAGNOSTIC METHOD

Judge NG when the continuous time of completing any malfunction criteria below becomes more than 1 second.

Judgment Value

Malfunction Criteria	Threshold Value
Input voltage	< 1.8 V
Input current	< –0.005 A

Time Needed for Diagnosis: 1 second
Malfunction Indicator Light Illumination: Illuminates as soon as the malfunction occurs.

6. DTC CLEAR CONDITION

- When the OK idling cycle was completed 40 times in a row
- When “Clear Memory” was performed

7. MALFUNCTION INDICATOR LIGHT CLEAR CONDITION

- When the OK driving cycle was completed 3 times in a row
- When “Clear Memory” was performed

8. FAIL SAFE

- Front oxygen (A/F) sensor heater control: Not allowed to turned on the heater.
- A/F main learning: Not allowed to calculate the A/F main learning compensation factor.
- A/F sub learning: Not allowed to calculate the A/F sub learning compensation factor.
- Compensation when starting the engine at high temperature: Make the MIN value to be 0 from 0.06 normally.
- Purge control: Not allowed to purge.

9. ECM OPERATION AT DTC SETTING

Memorize the freeze frame data. (For test mode $02)

W: DTC P0132 O2 SENSOR CIRCUIT HIGH VOLTAGE (BANK 1 SENSOR 1)

1. OUTLINE OF DIAGNOSIS

Detect the open or short circuit of sensor.
Judge NG when the element impressed voltage is out of range, or the element current is out of range.

2. COMPONENT DESCRIPTION

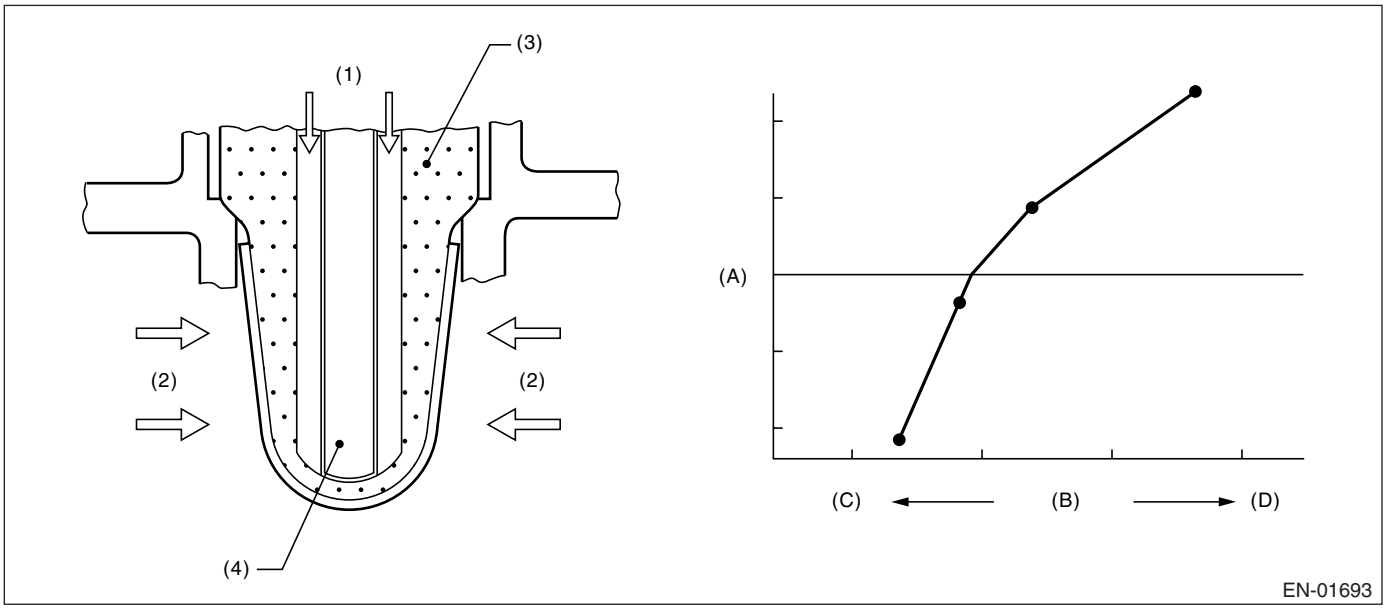

(1) Atmosphere
(2) Exhaust
(3) ZrO2
(4) Ceramic heater
(A) Electromotive force
(B) Air fuel ratio
(C) Lean
(D) Rich

3. ENABLE CONDITION

Secondary Parameters	Enable Conditions
Voltage	≥ 10.9 V

4. GENERAL DRIVING CYCLE

Always perform the diagnosis continuously.

5. DIAGNOSTIC METHOD

Judge NG when the continuous time of completing any malfunction criteria below becomes more than 1 second.

Judgment Value

Malfunction Criteria	Threshold Value
Input voltage	≥ 3.8 V
Input current	≥ 0.005 A

Time Needed for Diagnosis: 1 second
Malfunction Indicator Light Illumination: Illuminates as soon as the malfunction occurs.

6. DTC CLEAR CONDITION

- When the OK idling cycle was completed 40 times in a row
- When “Clear Memory” was performed

7. MALFUNCTION INDICATOR LIGHT CLEAR CONDITION

- When the OK driving cycle was completed 3 times in a row
- When “Clear Memory” was performed

8. FAIL SAFE

- Front oxygen (A/F) sensor heater control: Not allowed to turned on the heater.
- A/F main learning: Not allowed to calculate the A/F main learning compensation factor.
- A/F sub learning: Not allowed to calculate the A/F sub learning compensation factor.
- Compensation when starting the engine at high temperature: Make the MIN value to be 0 from 0.06 normally.
- Purge control: Not allowed to purge.

9. ECM OPERATION AT DTC SETTING

Memorize the freeze frame data. (For test mode $02)

X: DTC P0133 O2 SENSOR CIRCUIT SLOW RESPONSE (BANK 1 SENSOR 1)

1. OUTLINE OF DIAGNOSIS

Detect time-lag of front oxygen (A/F) sensor response. Front oxygen (A/F) sensor cover has some ventilation holes for exhaust gas. Clogged ventilation holes are diagnosed. When the holes are clogged, the A/F output variation becomes slow comparing with the actual A/F variation because oxygen which reaches the zirconia layer is insufficient. Therefore, if the cover has clogged holes, the rich to lean judgment in ECM is delayed when the change from rich to lean is caused. Judge NG when the actual A/F variation is slow comparing with the ECM control amount.

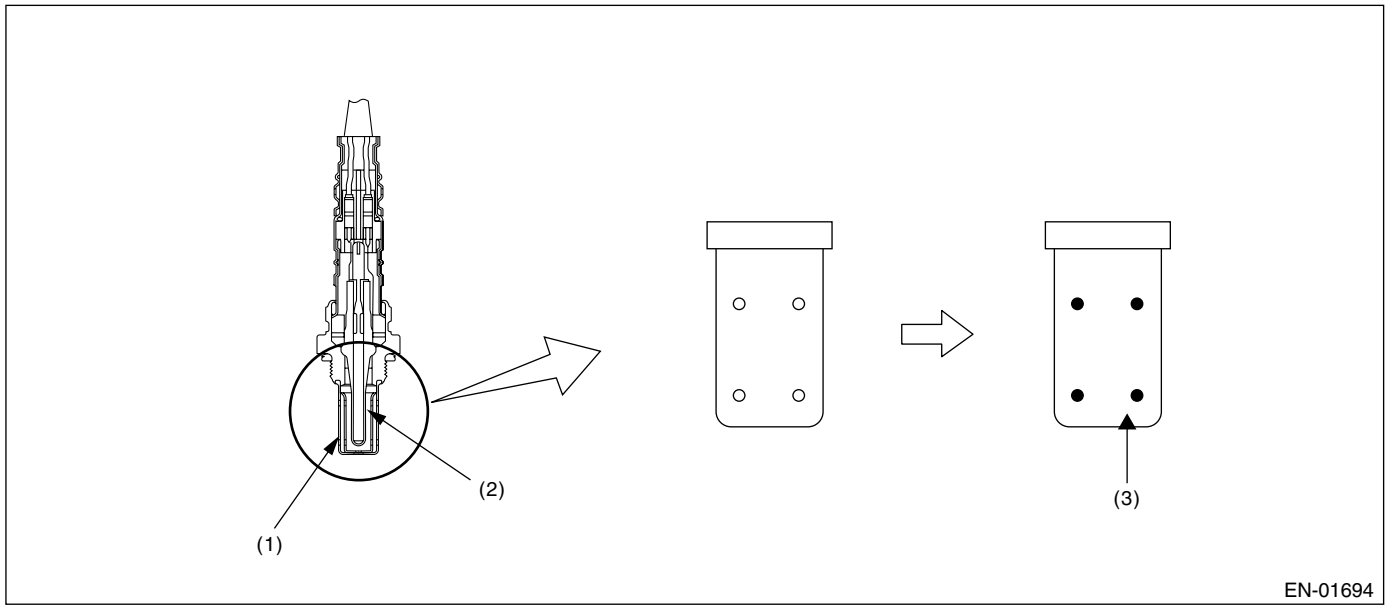

(1) Cover
(2) Zirconia
(3) Clogging

2. COMPONENT DESCRIPTION

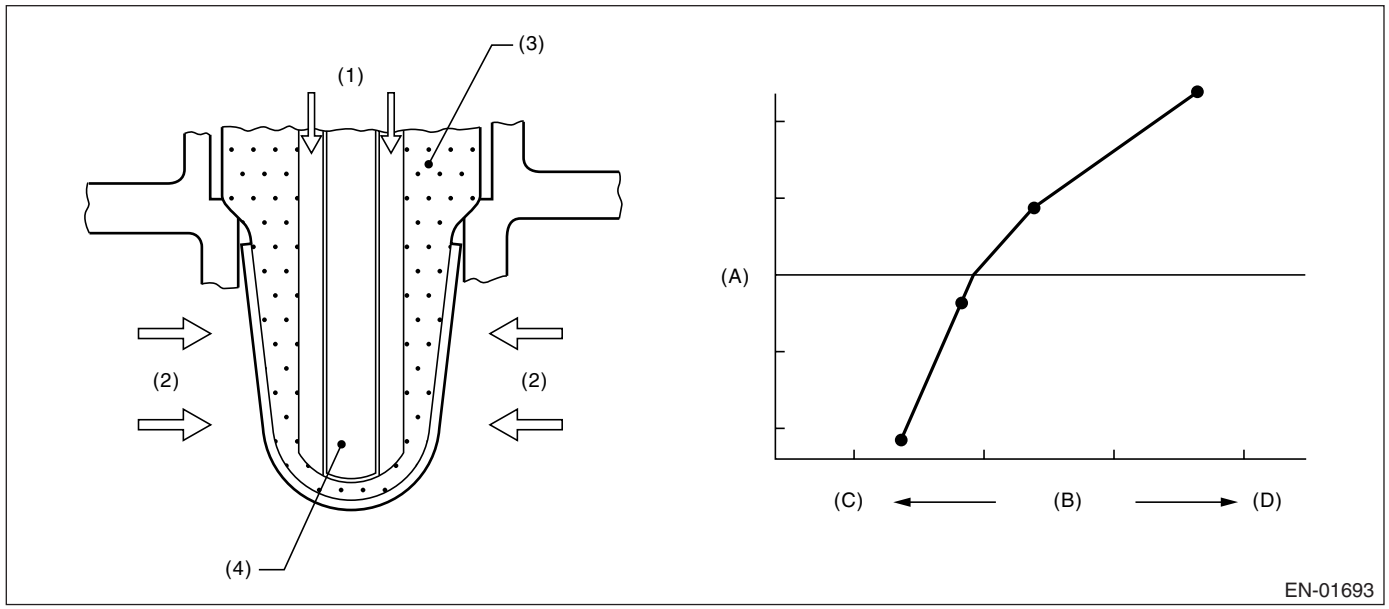

(1) Atmosphere
(2) Exhaust
(3) ZrO2
(4) Ceramic heater
(A) Electromotive force
(B) Air fuel ratio
(C) Lean
(D) Rich

3. ENABLE CONDITION

Secondary Parameters	Enable Conditions
All secondary parameter enable conditions	more than 1 second
Battery voltage	> 10.9 V
Atmospheric pressure	> 75.1 kPa (563 mmHg, 22.2 inHg)
Closed loop control with main feedback	operating
Impedance of front oxygen (A/F) sensor	0 ←→ 50 Ω
After engine starting	120 seconds or more
Engine coolant temperature	≥ 70°C (158°F)
Engine speed	1000 ←→ 3200 rpm
Vehicle speed	10 ←→ 120 km/h (6.21 ←→ 74.6 MPH)
Amount of intake air	10 ←→ 40 g (0.35 ←→ 1.41 oz)/s
Engine load change during 0.5 engine rev.	≤ 0.02 g (0.001 oz)/rev
Learning value of EVAP conc. during purge	≤ 0.2
Accumulated time of operating canister purge	20 seconds or more

4. GENERAL DRIVING CYCLE

Perform diagnosis only once at a constant speed of 10 to 120 km/h (6.21 to 74.6 MPH) in 120 seconds after starting the engine.

5. DIAGNOSTIC METHOD

Integrate the difference of faf in every 128 milliseconds and difference of λ value.
After integrate 210 seconds, calculate the diagnosis value.
Judge NG when the malfunction criteria below are completed. Judge OK and clear NG when the malfunction criteria below are not completed.

Judgment Value

Malfunction Criteria	Threshold Value
parafca = td2faf/td2lmd where, td2faf (N) = td2faf (n−1) + |d2faf (n)| td2lmd (N) = td2lmd (n−1) + |d2lmd (n)| add up for a total of 210 seconds d2faf (n) = (faf (n) − faf (n−1)) − (faf (n−1) − faf (n−2)) d2lmd (n) = (lmd (n) − lmd (n−1)) − (lmd (n−1) − lmd (n−2)) faf = main feedback compensation coefficient every 128 milliseconds lmd = output lambda every 128 milliseconds	0.269

Time Needed for Diagnosis: 210 seconds
Malfunction Indicator Light Illumination: Illuminates when malfunction occurs in 2 continuous driving cycles.

6. DTC CLEAR CONDITION

- When the OK idling cycle was completed 40 times in a row
- When “Clear Memory” was performed

7. MALFUNCTION INDICATOR LIGHT CLEAR CONDITION

- When the OK driving cycle was completed 3 times in a row
- When “Clear Memory” was performed

8. FAIL SAFE

- Front oxygen (A/F) sensor main learning correction: Not allowed to calculate.
- A/F sub learning correction: Not allowed to calculate.
- Correction when re-starting at high temperature: Normally minimum value 0.3 → 0.
- Purge control: Not allowed to purge.

9. ECM OPERATION AT DTC SETTING

- Memorize the freeze frame data. (For test mode $02)
- Memorize the diagnostic value and trouble standard value. (For test mode $06)

Y: DTC P0134 O2 SENSOR CIRCUIT NO ACTIVITY DETECTED (BANK 1 SENSOR 1)

1. OUTLINE OF DIAGNOSIS

Detect the open circuit of sensor.
Judge NG when the element impedance is large.

2. COMPONENT DESCRIPTION

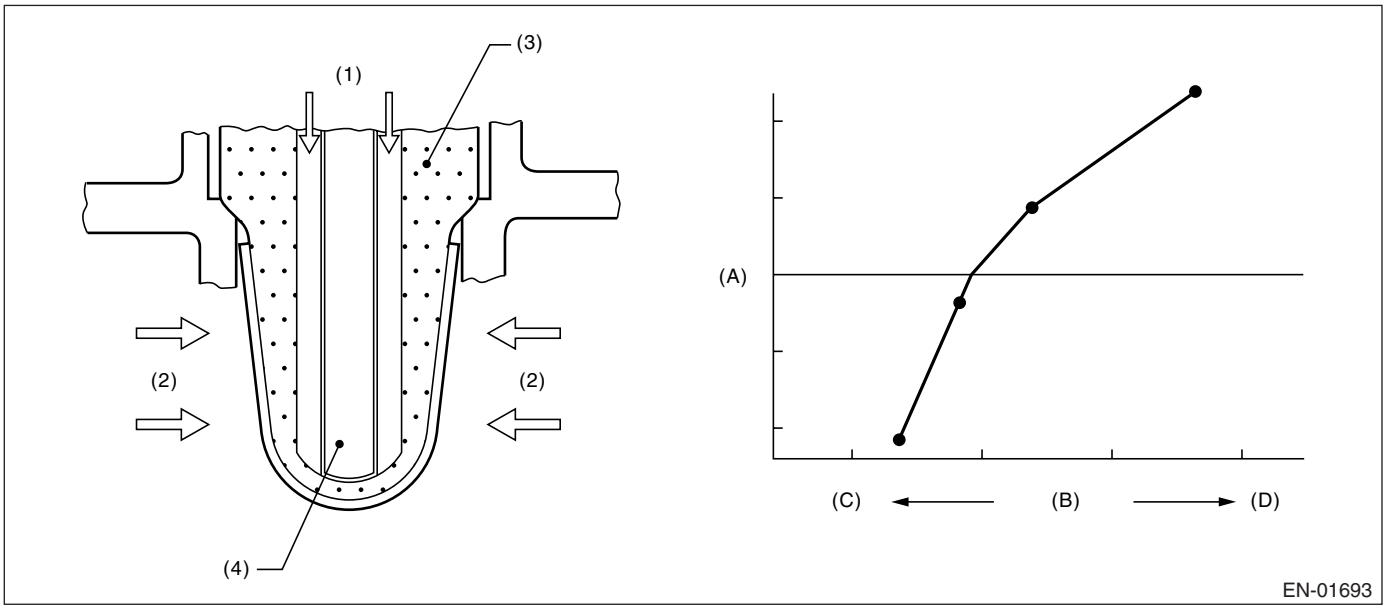

(1) Atmosphere
(2) Exhaust
(3) ZrO2
(4) Ceramic heater
(A) Electromotive force
(B) Air fuel ratio
(C) Lean
(D) Rich

3. ENABLE CONDITION

Secondary Parameters	Enable Conditions
None	

4. GENERAL DRIVING CYCLE

Always perform the diagnosis continuously.

5. DIAGNOSTIC METHOD

Judge NG when the continuous time of completing the malfunction criteria below becomes more than 5 seconds.

Judgment Value

Malfunction Criteria	Threshold Value
Voltage	≥ 10.9 V
Heater duty ≥ 70% of time	≥ 30 seconds
Front lambda sensor impedance	≥ 500 Ω

Time Needed for Diagnosis: 5 seconds
Malfunction Indicator Light Illumination: Illuminates as soon as the malfunction occurs.

6. DTC CLEAR CONDITION

- When the OK idling cycle was completed 40 times in a row
- When “Clear Memory” was performed

7. MALFUNCTION INDICATOR LIGHT CLEAR CONDITION

- When the OK driving cycle was completed 3 times in a row
- When “Clear Memory” was performed

8. FAIL SAFE

- Front oxygen (A/F) sensor heater control: Not allowed to turned on the heater.
- A/F main learning: Not allowed to calculate the A/F main learning compensation factor.
- A/F sub learning: Not allowed to calculate the A/F sub learning compensation factor.
- Compensation when starting the engine at high temperature: Make the MIN value to be 0 from 0.06 normally.
- Purge control: Not allowed to purge.

9. ECM OPERATION AT DTC SETTING

Memorize the freeze frame data. (For test mode $02)

Z: DTC P0137 O2 SENSOR CIRCUIT LOW VOLTAGE (BANK 1 SENSOR 2)

1. OUTLINE OF DIAGNOSIS

Detect the malfunction of oxygen sensor open or short circuit. Judge NG when the oxygen sensor voltage may be abnormal from oxygen sensor voltage value with considering the conditions such as intake air amount, engine coolant temperature, main feedback control.

2. COMPONENT DESCRIPTION

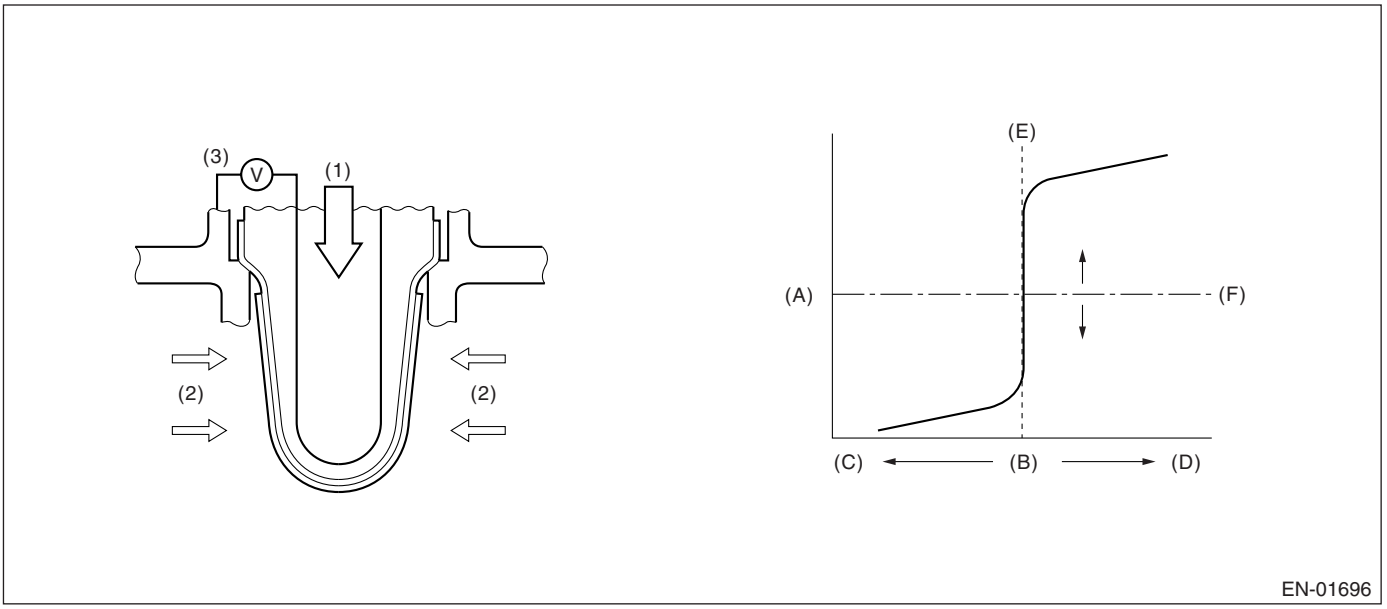

(1) Atmosphere
(2) Exhaust
(3) Electromotive force
(A) Electromotive force
(B) Air fuel ratio
(C) Rich
(D) Lean
(E) Theoretical air fuel ratio
(F) Comparative voltage

3. ENABLE CONDITION (USED ONLY FOR MALFUNCTION JUDGMENT)

Secondary Parameters	Enable Conditions
Closed loop control of oxygen sensor	In operation
Target output voltage of oxygen sensor	≥ 0.6 V
Amount of intake air	≥ 10 g/s
Engine coolant temperature	≥ 70°C (158°F)
Misfire detection during 200 engine revs.	< 5 times
Compensation factor for front oxygen (A/F) sensor	Not in limit value
Battery voltage	> 10.9 V
6 seconds or more fuel shut-off at deceleration from more than engine speed 1,700 rpm.	Experienced

4. GENERAL DRIVING CYCLE

Perform the diagnosis once after starting the engine.

5. DIAGNOSTIC METHOD

• Abnormality Judgment

Judge NG when the malfunction criteria below are completed.

Judgment Value

Malfunction Criteria	Threshold Value
Max. output voltage	〈 550 mV

Time Needed for Diagnosis: 200 seconds
Malfunction Indicator Light Illumination: Illuminates when malfunction occurs in 2 continuous driving cycles.

• Normality Judgment

Judge OK when the malfunction criteria below are completed.

Judgment Value

Malfunction Criteria	Threshold Value
Low side diagnosis of oxygen sensor voltage	Incomplete
Max. output voltage	≥ 550 mV

6. DTC CLEAR CONDITION

- When the OK idling cycle was completed 40 times in a row
- When “Clear Memory” was performed

7. MALFUNCTION INDICATOR LIGHT CLEAR CONDITION

- When the OK driving cycle was completed 3 times in a row
- When “Clear Memory” was performed

8. FAIL SAFE

Sub feedback control: Not allowed

9. ECM OPERATION AT DTC SETTING

- Memorize the freeze frame data. (For test mode $02)
- Memorize the diagnostic value and malfunction standard value. (For test mode $06)

AA:DTC P0138 O2 SENSOR CIRCUIT HIGH VOLTAGE (BANK 1 SENSOR 2)

1. OUTLINE OF DIAGNOSIS

Detect the malfunction of oxygen sensor open or short circuit. Judge NG when the oxygen sensor voltage may be abnormal with considering the conditions such as intake air amount, engine coolant temperature, main feedback control.

2. COMPONENT DESCRIPTION

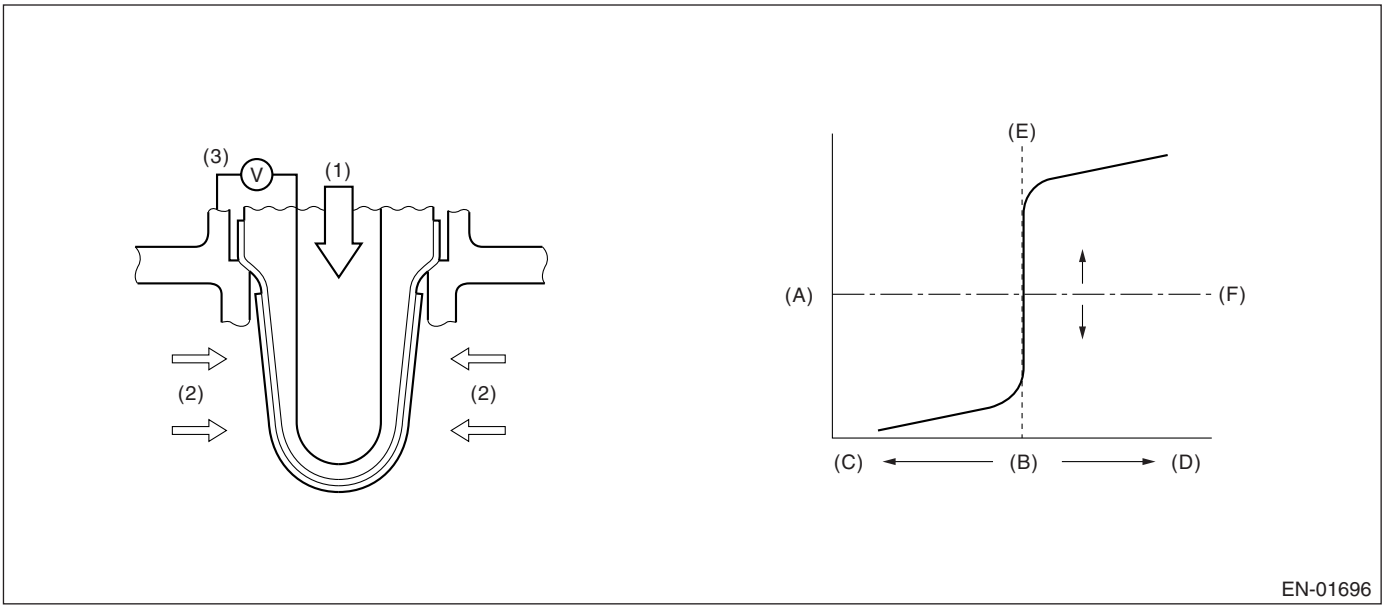

(1) Atmosphere
(2) Exhaust
(3) Electromotive force
(A) Electromotive force
(B) Air fuel ratio
(C) Rich
(D) Lean
(E) Theoretical air fuel ratio
(F) Comparative voltage

3. ENABLE CONDITION (USED ONLY FOR MALFUNCTION JUDGMENT)

Secondary Parameters	Enable Conditions
Closed loop control of oxygen sensor	In operation
Target output voltage of oxygen sensor	≥ 0.6 V
Amount of intake air	≥ 10 g/s
Engine coolant temperature	≥ 70°C (158°F)
Misfire detection during 200 engine revs.	< 5 times
Compensation factor for front oxygen (A/F) sensor	Not in limit value
Battery voltage	> 10.9 V
6 seconds or more fuel shut-off at deceleration from more than engine speed 1,700 rpm.	Experienced

4. GENERAL DRIVING CYCLE

Perform the diagnosis once after starting the engine.

5. DIAGNOSTIC METHOD

• Abnormality Judgment

Judge NG when the malfunction criteria below are completed.

Judgment Value

Malfunction Criteria	Threshold Value
Min. output voltage	> 250 mV

Time Needed for Diagnosis: 200 seconds
Malfunction Indicator Light Illumination: Detect when malfunction occurs in 2 continuous driving cycles.
• Normality Judgment

Judge OK when the malfunction criteria below are completed.
Judgment Value

Malfunction Criteria	Threshold Value
High side diagnosis of oxygen sensor voltage	Incomplete
Min. output voltage	≤ 250 mV

6. DTC CLEAR CONDITION

- When the OK idling cycle was completed 40 times in a row
- When “Clear Memory” was performed

7. MALFUNCTION INDICATOR LIGHT CLEAR CONDITION

- When the OK driving cycle was completed 3 times in a row
- When “Clear Memory” was performed

8. FAIL SAFE

Sub feedback control: Not allowed

9. ECM OPERATION AT DTC SETTING

- Memorize the freeze frame data. (For test mode $02)
- Memorize the diagnostic value and malfunction fiducial value. (For test mode $06)

AB:DTC P0139 O2 SENSOR CIRCUIT SLOW RESPONSE (BANK 1 SENSOR 2)

1. OUTLINE OF DIAGNOSIS

Detect the slow response of rear oxygen sensor.
Judge NG when the Rich → Lean response diagnosis or Lean → Rich response diagnosis is NG and judge OK when both response diagnoses are OK.
[Rich → Lean diagnosis response]
(1) When the measured response time is larger than a threshold, since the A/F ratio is rich, the response time of the output change of O2 sensor when changing from Rich to Lean is measured, and it judges with NG, and when small, it judges with OK.
(2) When O2 sensor voltage at the time of a fuel shut-off in deceleration return is large (rich), it judges with NG.
[Lean → Rich diagnosis response]
(1) The response time of output change of O2 sensor when an A/F ratio changes from Lean to Rich is measured, and it is referred to as NG when the measured response time is larger than a threshold.
(2) It is referred to as NG when O2 sensor voltage after recovery of fuel shut-off in deceleration is small and still small.

• Diagnostic Method

Measure the response time of the output change of the oxygen sensor when the A/F ratio changes from rich to lean. And Judge NG when the measured response time is larger than the threshold value.

2. COMPONENT DESCRIPTION

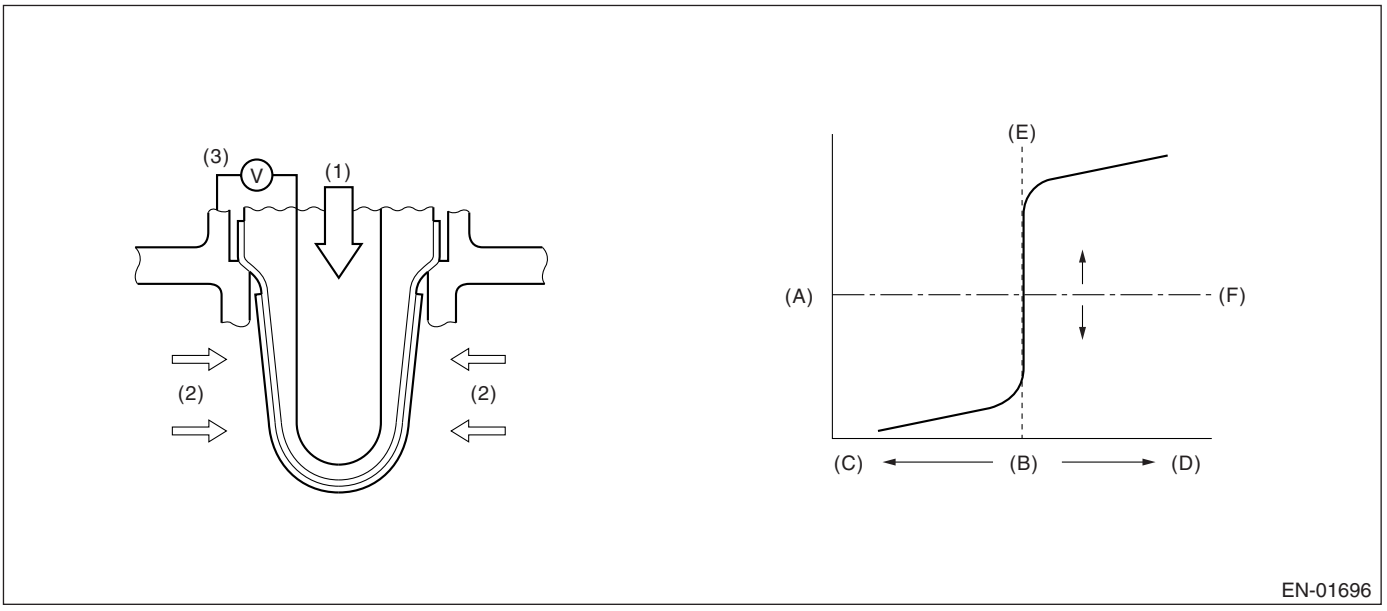

(1) Atmosphere
(2) Exhaust
(3) Electromotive force
(A) Electromotive force
(B) Air fuel ratio
(C) Rich
(D) Lean
(E) Theoretical air fuel ratio
(F) Comparative voltage

3. ENABLE CONDITION

• Rich → Lean response diagnosis

Secondary Parameters	Enable Conditions
Battery voltage	〉10.9 V
A/F sub feedback control condition	Completed
6 seconds or more fuel shut-off indecel.	Experienced
After fuel cut	≥ 2 seconds
Accumulated time with rear oxygen sensor heater ON	≥ 60 seconds
Continuous time with rear oxygen sensor heater ON	≥ 30 seconds
Catalyst couture warm up	≥ 8,500 times

4. GENERAL DRIVING CYCLE

Perform the diagnosis only once when fuel shut-off in deceleration after rapid acceleration. (Pay attention to oxygen sensor voltage for the timing of deceleration.)

5. DIAGNOSTIC METHOD

When the oxygen sensor output voltage changes from 0.55 V (rich) to 0.25 V (lean), calculate the Min. value of response time regarded as judgment value while the output varies from 0.5 V to 0.3 V.

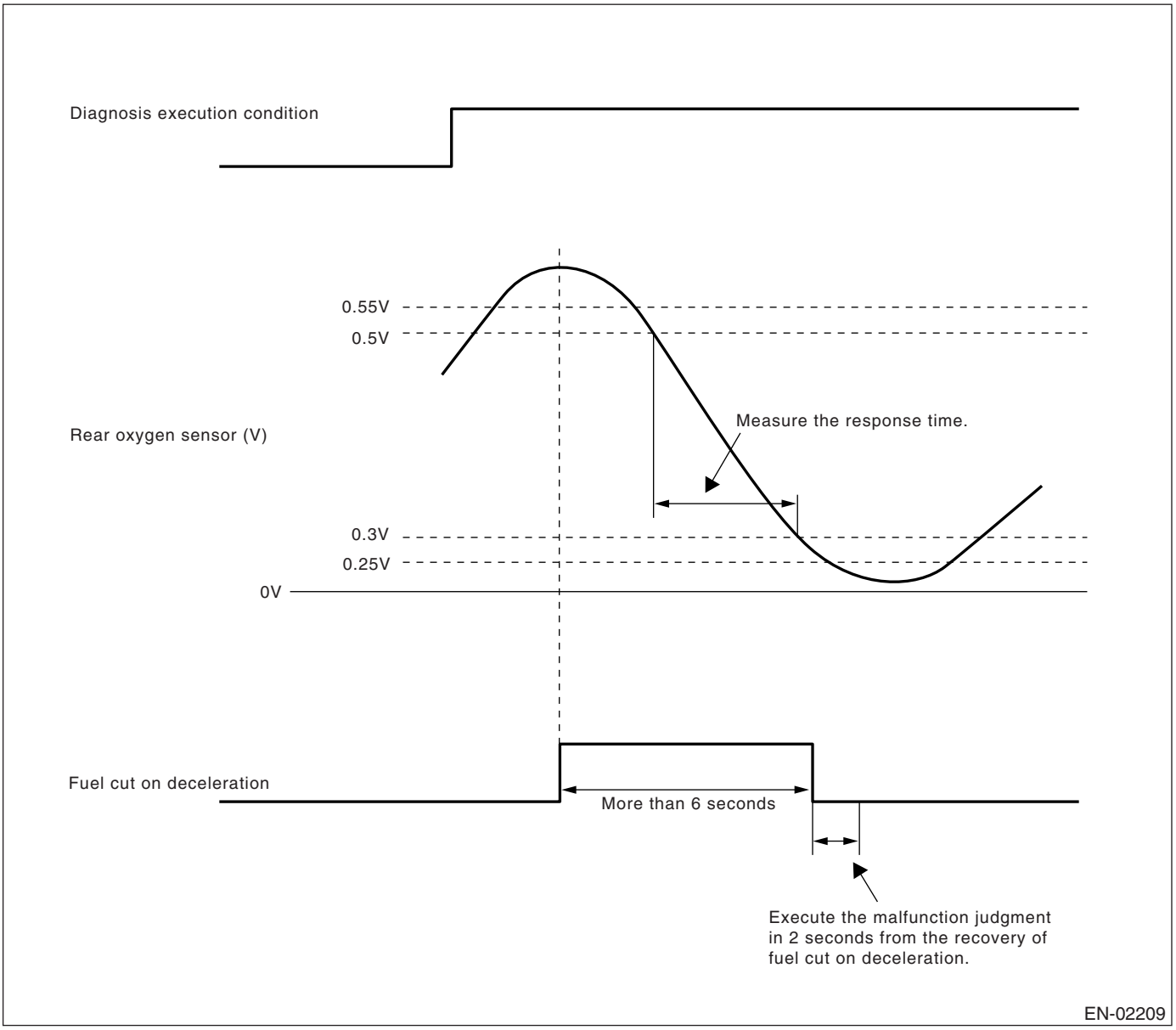

• Abnormality Judgment

(1) Judge NG when the judgment value is larger than the threshold value after fuel shut-off in deceleration.
Response time (Diagnosis value) > Threshold value → Abnormal

NOTE:
Variation time of rear oxygen sensor output voltage is short during fuel shut-off in deceleration. Carry out the NG judgment only after the fuel shut-off in deceleration. As for OK judgment, without the condition of fuel shut-off in deceleration, judge OK if the value is below the threshold value.

Judge NG when the malfunction criteria below are completed in 2 seconds after the recovery of fuel shut-off in deceleration which requires 6 seconds or more.

(2) Judge NG when the O2 sensor voltage after recovery of fuel shut-off in deceleration is large. Judge NG when fuel shut-off in deceleration is also long (6s or more), and although carried out the fuel shut-off in deceleration cut return, when O2 sensor voltage is large (more than 0.55 V).

Judgment Value

Malfunction Criteria	Threshold Value
Shortest time change from rich (500 mV O2 output) to lean (300 mV) if voltage reduces from 550 mV to 250 mV.	> 0.698 seconds
Or	
More than 550 mV time	> 2 seconds

Time Needed for Diagnosis: Once

Malfunction Indicator Light Illumination: Illuminates when malfunction occurs in 2 continuous driving cycles.

• Normality Judgment

(1) Judge Normal when the response time (diagnostic value) is smaller than threshold (judgment value) when changing to lean since O2 sensor voltage.

(2) A normal judging is not carried out.

Judgment Value

Judge OK when the following standards value are completed.

Malfunction Criteria	Threshold Value
Change of the shortest time from rich (500 mV O2 output), when voltage decreases from 550 mV to 250 mV to lean (300 mV).	≤ 0.510 seconds

6. DTC CLEAR CONDITION

- When the OK idling cycle was completed 40 times in a row
- When “Clear Memory” was performed

7. MALFUNCTION INDICATOR LIGHT CLEAR CONDITION

- When the OK driving cycle was completed 3 times in a row
- When “Clear Memory” was performed

8. FAIL SAFE

Sub feedback control: Not allowed

9. ECM OPERATION AT DTC SETTING

- Memorize the freeze frame data. (For test mode $02)
- Memorize the diagnostic value and trouble standard value. (For test mode $06)

10.ENABLE CONDITION

- Lean → Rich response diagnosis

Secondary Parameters	Enable Conditions
Battery voltage	> 10.9 V
A/F main feedback control condition	Completed
6 seconds or more fuel shut-off in decel.	Experienced
After fuel cut	≥ 2 seconds

11.GENERAL DRIVING CYCLE

Perform the diagnosis only once when fuel shut-off in deceleration after rapid acceleration. (Pay attention to oxygen sensor voltage for the timing of deceleration.)

12.DIAGNOSTIC METHOD

When the oxygen sensor output voltage changes from 0.25 V (lean) to 0.55 V (rich), calculate the Min. value of response time regarded as judgment value while the output varies from 0.3 V to 0.5 V.

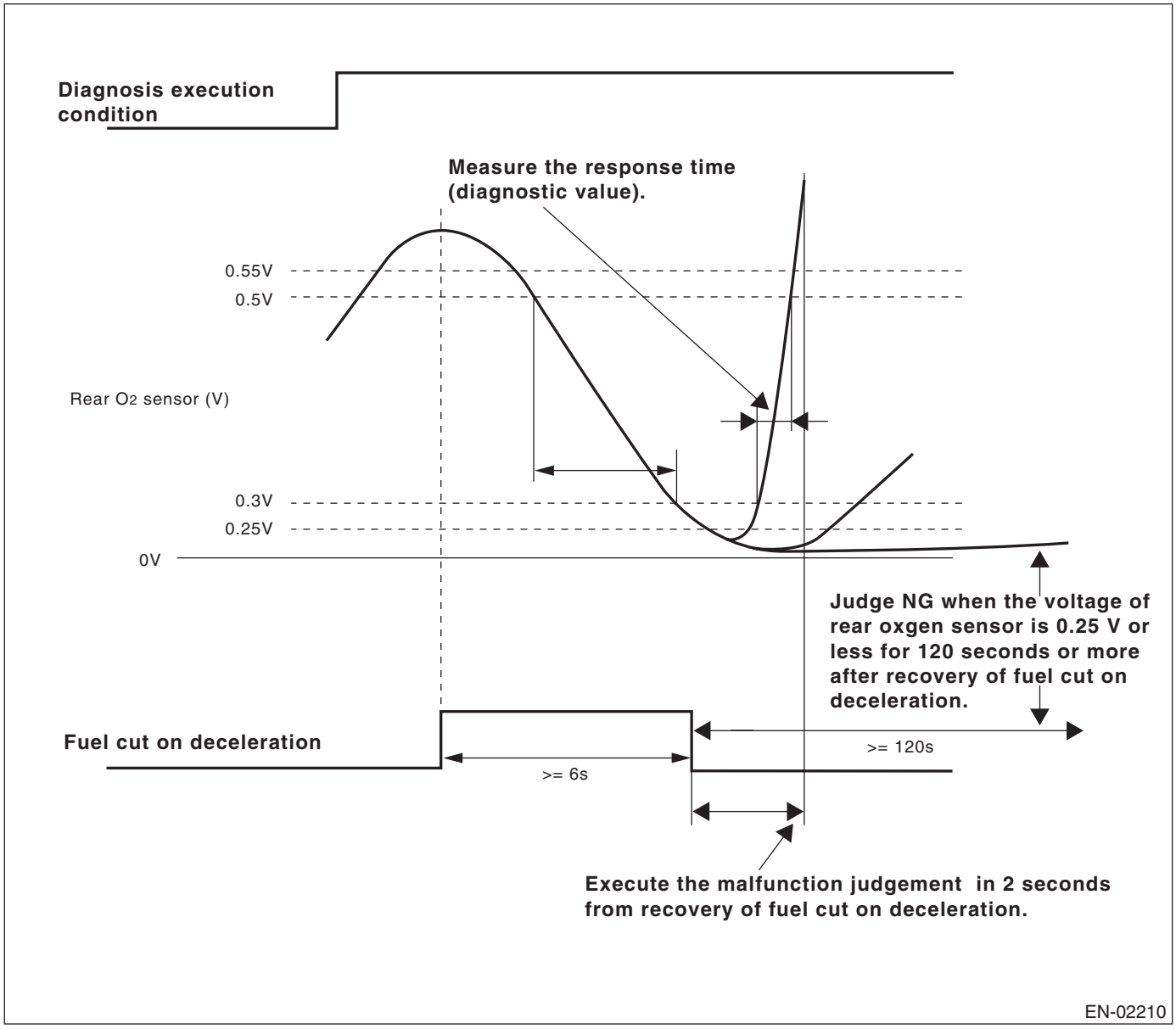

• Abnormality Judgment

(1) Judge NG when the judgment value is larger than the threshold value after recovery of fuel shut-off in deceleration.
Response time (Diagnosis value) > Threshold value → Abnormal

(2) Judge NG when the O2 sensor voltage after recovery of fuel shut-off in deceleration is small.

Judgment Value

Malfunction Criteria	Threshold Value
Shortest time change from lean (300 mV O2 output) to rich (500 mV) if voltage reduces from 500 mV to 250 mV.	〉2 seconds
Or Longest time to change to 250 mV	〉120 seconds

Time Needed for Diagnosis: Once

Malfunction Indicator Light Illumination: Illuminates when malfunction occurs in 2 continuous driving cycles.

• Normality Judgment

(1) Judge Normal when the response time (diagnostic value) is smaller than threshold (judgment value) when changing to lean since O2 sensor voltage.

Response Time (diagnosis value) ≤ Threshold value → Normal

(2) A normal judging is not carried out.

Judgment Value

Judge OK when the following standards value are completed.

Malfunction Criteria	Threshold Value
Change of the shortest time from rich (300 mV O2 output), when voltage decreases from 550 mV to 250 mV to lean (500 mV).	≤ 2 seconds

13.DTC CLEAR CONDITION

- When the OK idling cycle was completed 40 times in a row
- When “Clear Memory” was performed

14.MALFUNCTION INDICATOR LIGHT CLEAR CONDITION

- When the OK driving cycle was completed 3 times in a row
- When “Clear Memory” was performed

15.FAIL SAFE

Sub feedback control: Not allowed

16.ECM OPERATION AT DTC SETTING

- Memorize the freeze frame data. (For test mode $02)
- Memorize the diagnostic value and trouble standard value. (For test mode $06)

AC:DTC P0171 SYSTEM TOO LEAN (BANK 1)

1. OUTLINE OF DIAGNOSIS

Detect the fuel system malfunction by the amount of main feedback control.

• Fuel System Diagnosis

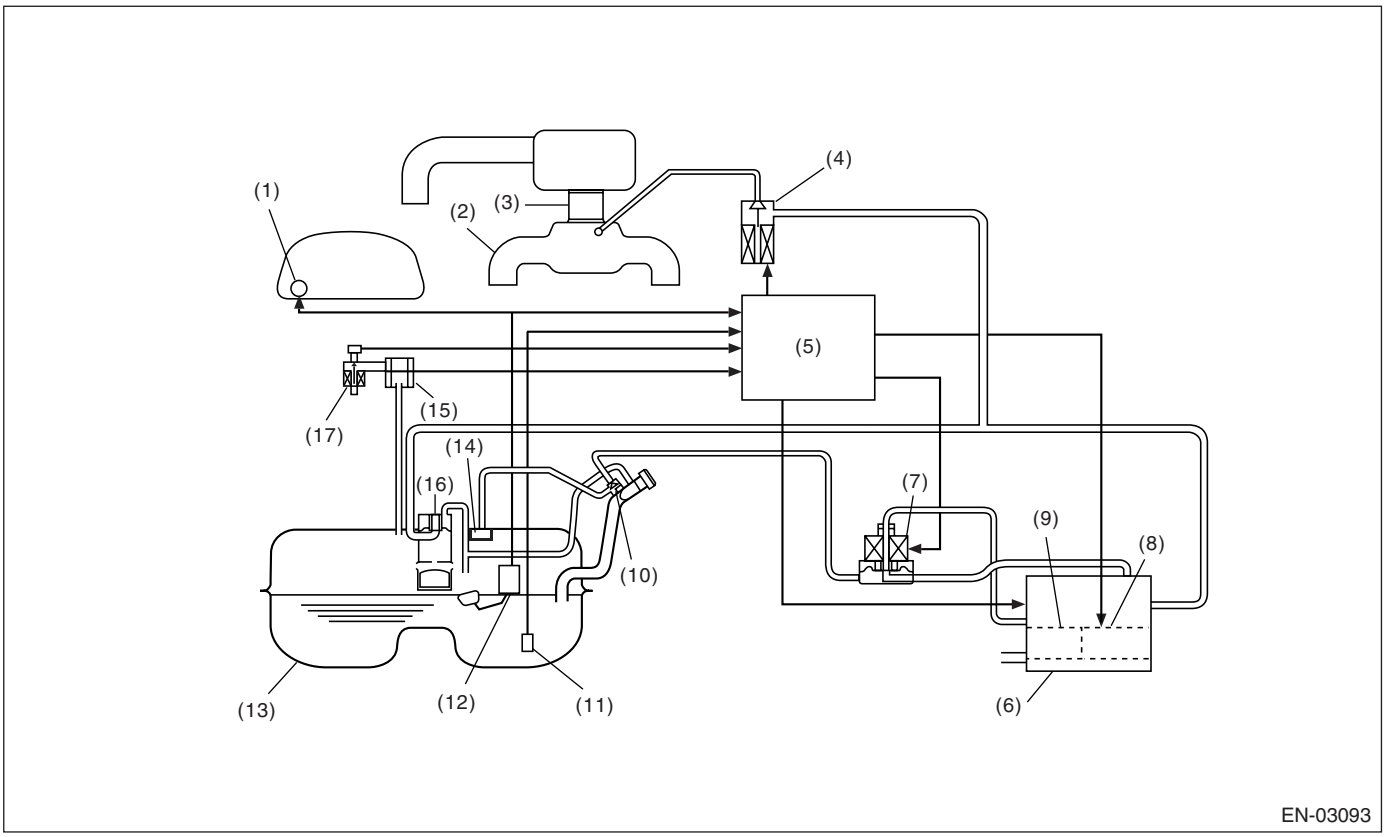

(1)	Fuel meter	(7)	Pressure control solenoid valve	(13)	Fuel tank
(2)	Intake manifold	(8)	Drain valve	(14)	Fuel cut valve
(3)	Throttle body	(9)	Drain filter	(15)	Fuel tank pressure sensor
(4)	Purge control solenoid valve	(10)	Shut-off valve	(16)	Vent valve
(5)	Engine control module (ECM)	(11)	Fuel temperature sensor	(17)	Fuel tank sensor control valve
(6)	Canister	(12)	Fuel level sensor		

• Diagnostic Method

Fuel system is diagnosed by comparing the target air fuel ratio calculated by ECM with the actual air fuel ratio measured by sensor.

2. ENABLE CONDITION

• Lean side

Secondary Parameters	Enable Conditions
A/F main learning system	In operation
Engine coolant temperature	≥ 70°C (158°F)
Intake air amount	≥ Map 5
Intake air change during 0.5 engine rev.	≤ 0.02 g (0.001 oz)/rev

Map 5

Engine speed (rpm)	idle	650	1000	1500	2000	2500	3000	3500	4000	4500
Measured value (g (oz)/ rev)	NA	0.201 (0.007)	0.150 (0.005)	0.150 (0.005)	0.156 (0.006)	0.161 (0.006)	0.157 (0.006)	0.167 (0.006)	0.184 (0.006)	0.198 (0.007)

3. GENERAL DRIVING CYCLE

Perform the diagnosis continuously at engine idling after warm-up or a constant speed.

4. DIAGNOSTIC METHOD

• Abnormality Judgment

Judge that the fuel system malfunction occurs when the time during completing the malfunction criteria below continues 50 seconds or more by comparing the diagnosed value (fsobd) with threshold value.

Judgment Value

Malfunction Criteria	Threshold Value
fsobd = (sglmd − tglmda) + faf + flaf where, sglmd = measured lambda tglmda = target lambda faf = main feedback compensation coefficient (every 64 milliseconds) flaf = main feedback learning compensation coefficient	≥ fsobdL1 See Map 4 fsobdL1 = lean side threshold value of fsobd

Map 4 Threshold value for fuel system malfunction criteria

Amount of air [g (oz)/s]	0 (0)	3.2 (0.113)	6.4 (0.226)	9.6 (0.339)	12.8 (0.451)	16 (0.564)	19.2 (0.677)
fsobdL1 (%)	40	40	33.2	26.5	26.5	26.5	26.5

Time Needed for Diagnosis: 10 seconds × 50 times
Malfunction Indicator Light Illumination: Illuminates when malfunction occurs in 2 continuous driving cycles.

• Normality Judgment

Judge OK when the malfunction criteria below are continued for 10 seconds.

Judgment Value

Malfunction Criteria	Threshold Value
fsobd = (sglmd − tglmda) + faf + flaf	< 19%

5. DTC CLEAR CONDITION

- When the OK idling cycle was completed 40 times in a row
- When “Clear Memory” was performed

6. MALFUNCTION INDICATOR LIGHT CLEAR CONDITION

- When OK with similar drive in 3 driving cycles.
- When “Clear Memory” was performed

7. FAIL SAFE

None

8. ECM OPERATION AT DTC SETTING

Memorize the freeze frame data. (For test mode $02)

AD:DTC P0172 SYSTEM TOO RICH (BANK 1)

1. OUTLINE OF DIAGNOSIS

Detect the fuel system malfunction by the amount of main feedback control.

• Fuel System Diagnosis

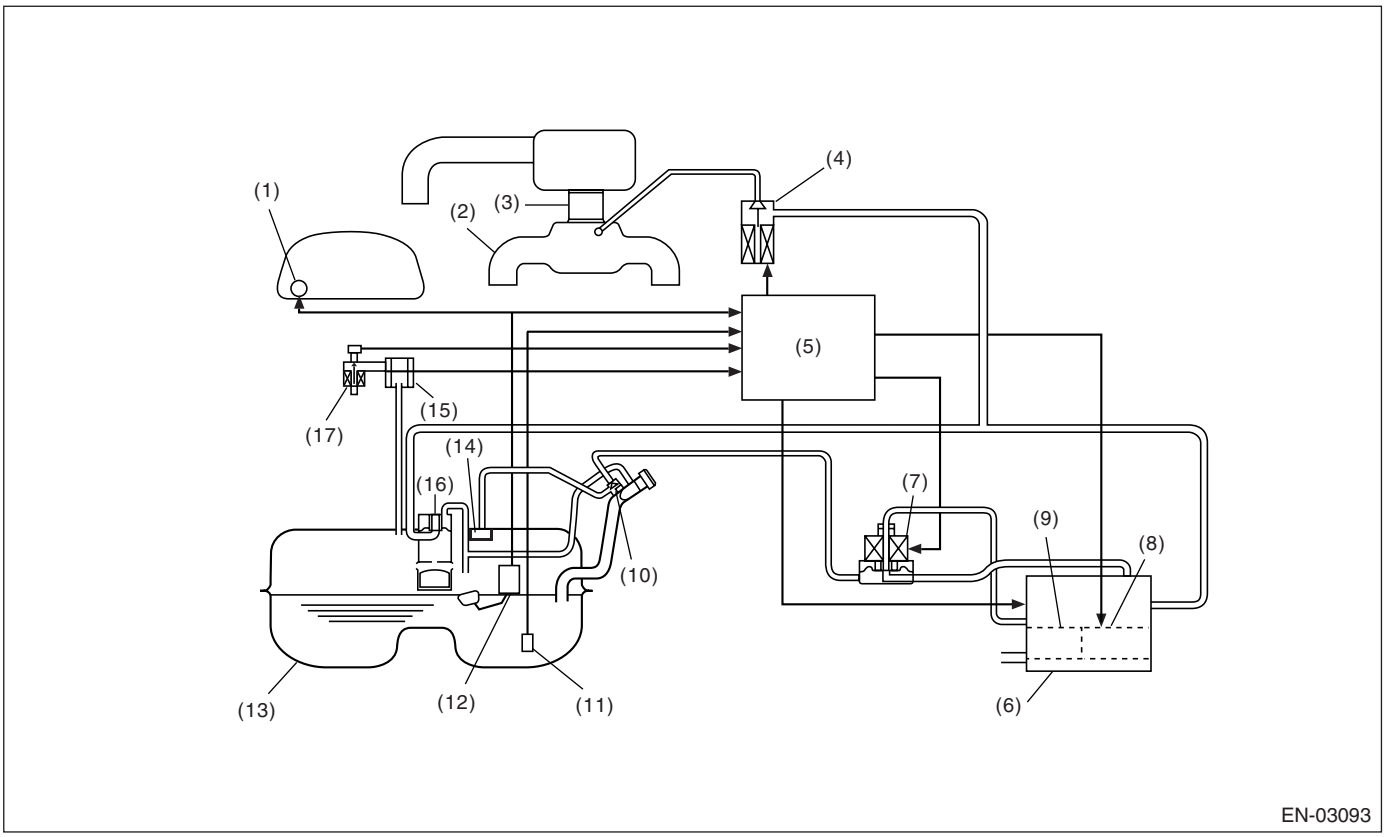

(1)	Fuel meter	(7)	Pressure control solenoid valve	(13)	Fuel tank
(2)	Intake manifold	(8)	Drain valve	(14)	Fuel cut valve
(3)	Throttle body	(9)	Drain filter	(15)	Fuel tank pressure sensor
(4)	Purge control solenoid valve	(10)	Shut-off valve	(16)	Vent valve
(5)	Engine control module (ECM)	(11)	Fuel temperature sensor	(17)	Fuel tank sensor control valve
(6)	Canister	(12)	Fuel level sensor		

• Diagnostic Method

Fuel system is diagnosed by comparing the target air fuel ratio calculated by ECM with the actual air fuel ratio measured by sensor.

2. ENABLE CONDITION

Secondary Parameters	Enable Conditions
A/F main learning system	In operation
Engine coolant temperature	≥ 70°C (158°F)
Intake air amount	≥ Map 5
Intake air change during 0.5 engine rev.	≤ 0.02 g (0.001 oz)/rev
Learning value of EVAP conc. during purge	< 0.1
Cumulative time of canister purge after engine start	20 seconds or more
Continuous period after canister purge starting	30 seconds or more

Map 5

Engine speed (rpm)	idle	650	1000	1500	2000	2500	3000	3500	4000	4500
Measured value (g (oz)/ rev)	NA	0.201 (0.007)	0.150 (0.005)	0.150 (0.005)	0.156 (0.006)	0.161 (0.006)	0.157 (0.006)	0.167 (0.006)	0.184 (0.006)	0.198 (0.007)

3. GENERAL DRIVING CYCLE

Perform the diagnosis continuously at engine idling after warm-up or a constant speed.

4. DIAGNOSTIC METHOD

• Abnormality Judgment

Judge that the fuel system malfunction occurs when the time during completing the malfunction criteria below continues 50 seconds or more by comparing the diagnosed value (fsobd) with threshold value.

Judgment Value

Malfunction Criteria	Threshold Value
fsobd = (sglmd − tglmda) + faf + flaf where, sglmd = measured lambda tglmda = target lambda faf = main feedback compensation coefficient every 64 milliseconds flaf = main feedback learning compensation coefficient	≤ fsobdR1 See Map 4 fsobdR1 = rich side threshold value of fsobd

Map 4 Threshold value for fuel system malfunction criteria

Amount of air [g (oz)/s]	0 (0)	3.2 (0.113)	6.4 (0.226)	9.6 (0.339)	12.8 (0.451)	11.7 (0.413)	19.2 (0.677)
fsobdR1 (%)	−40	−40	−33.2	−26.5	−26.5	−26.5	−26.5

Time Needed for Diagnosis: 10 seconds × 50 times
Malfunction Indicator Light Illumination: Illuminates when malfunction occurs in 2 continuous driving cycles.

• Normality Judgment

Judge OK when the malfunction criteria below are continued for 10 seconds.

Judgment Value

Malfunction Criteria	Threshold Value
fsobd = (sglmd − tglmda) + faf + flaf	≥ −20%

5. DTC CLEAR CONDITION

- When the OK idling cycle was completed 40 times in a row
- When “Clear Memory” was performed

6. MALFUNCTION INDICATOR LIGHT CLEAR CONDITION

- When OK with similar drive in 3 drive cycles.
- When “Clear Memory” was performed

7. FAIL SAFE

- Purge control solenoid valve control: Not allowed to purge.
- Heavy fuel judgment control: Not allowed to carry out the heavy judgment.

8. ECM OPERATION AT DTC SETTING

Memorize the freeze frame data. (For test mode $02)

AE:DTC P0181 FUEL TEMPERATURE SENSOR “A” CIRCUIT RANGE/PERFORMANCE

1. OUTLINE OF DIAGNOSIS

Detect the malfunction of fuel temperature sensor output property. Perform the diagnosis in two methods; namely, drift diagnosis and stuck diagnosis. Judge NG when either of them results in NG, and judge OK when both of them result in OK.

• Drift Diagnosis

Normally fuel temperature is lower than engine coolant temperature. When the fuel temperature becomes higher than the engine coolant temperature, the range is considered to be shifted, and make an NG judgment.

2. COMPONENT DESCRIPTION

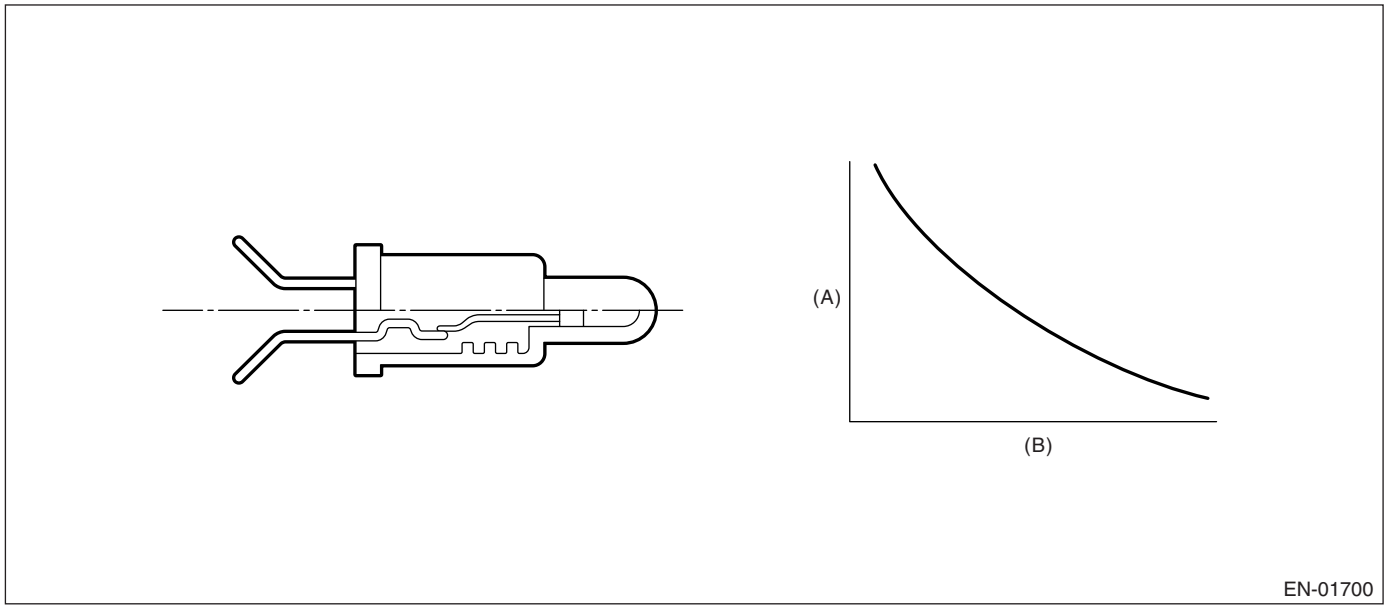

(A) Resistance (Ω) (B) Fuel temperature °C (°F)

3. ENABLE CONDITION

Secondary Parameters	Enable Conditions
None	

4. GENERAL DRIVING CYCLE

Always perform the diagnosis continuously.

5. DIAGNOSTIC METHOD

• Abnormality Judgment

Judge NG when the continuous time of completing the malfunction criteria below becomes more than 120 seconds.

Judgment Value

Malfunction Criteria	Threshold Value
Fuel level	≥ 9.6 ℓ (2.54 US gal, 2.11 Imp gal)
After engine starting	20 seconds or more
Engine coolant temperature – engine coolant temperature at engine starting	≥ 10°C (18°F)
Fuel temperature – engine coolant temperature	≥ 10°C (18°F)
Battery voltage	〉10.9 V

Time Needed for Diagnosis: 120 seconds
Malfunction Indicator Light Illumination: Illuminates when malfunction occurs in 2 continuous driving cycles.

• Normality Judgment

Judge OK when the malfunction criteria below are completed.
Judgment Value

Malfunction Criteria	Threshold Value
Fuel level	≥ 9.6 ℓ (2.54 US gal, 2.11 Imp gal)
After engine starting	20 seconds or more
Engine coolant temperature – engine coolant temperature at engine starting	≥ 10°C (18°F)
Fuel temperature – engine coolant temperature	〈 10°C (18°F)
Battery voltage	〉10.9 V
Engine coolant temperature	〈 75°C (167°F)

• Stuck Diagnosis

If the fuel temperature which might rise along with the engine idling (the cumulative amount of intake air after engine starting is large) does not increase, the engine is considered to be stuck and make an NG judgment.

6. ENABLE CONDITION

Secondary Parameters	Enable Conditions
After engine starting	20 seconds or more
Battery voltage	〉10.9 V

7. GENERAL DRIVING CYCLE

Perform the diagnosis continuously in 20 seconds or more after starting the engine.

8. DIAGNOSTIC METHOD

• Abnormality Judgment

Judge NG when the malfunction criteria below are completed.
Judgment Value

Malfunction Criteria	Threshold Value
Accumulated amount of intake air	≥ 551 kg (1215 lb)
Fuel temperature difference between Max. and Min.	〈 2°C (3.6°F)

Time Needed for Diagnosis: To be determined.
Malfunction Indicator Light Illumination: Illuminates when malfunction occurs in 2 continuous driving cycles.

• Normality Judgment

Judge OK when the malfunction criteria below are completed.
Judgment Value

Malfunction Criteria	Threshold Value
Accumulated amount of intake air	≥ 551 kg (1215 lb)
Fuel temperature difference between Max. and Min.	≥ 2°C (3.6°F)

9. DTC CLEAR CONDITION

- When the OK idling cycle was completed 40 times in a row
- When “Clear Memory” was performed

10.MALFUNCTION INDICATOR LIGHT CLEAR CONDITION

- When the OK driving cycle was completed 3 times in a row
- When “Clear Memory” was performed

11.FAIL SAFE

None

12.ECM OPERATION AT DTC SETTING

Memorize the freeze frame data. (For test mode $02)

AF:DTC P0182 FUEL TEMPERATURE SENSOR “A” CIRCUIT LOW INPUT

1. OUTLINE OF DIAGNOSIS

Detect the open or short circuit of fuel temperature sensor. Judge NG when out of the standard value.

2. COMPONENT DESCRIPTION

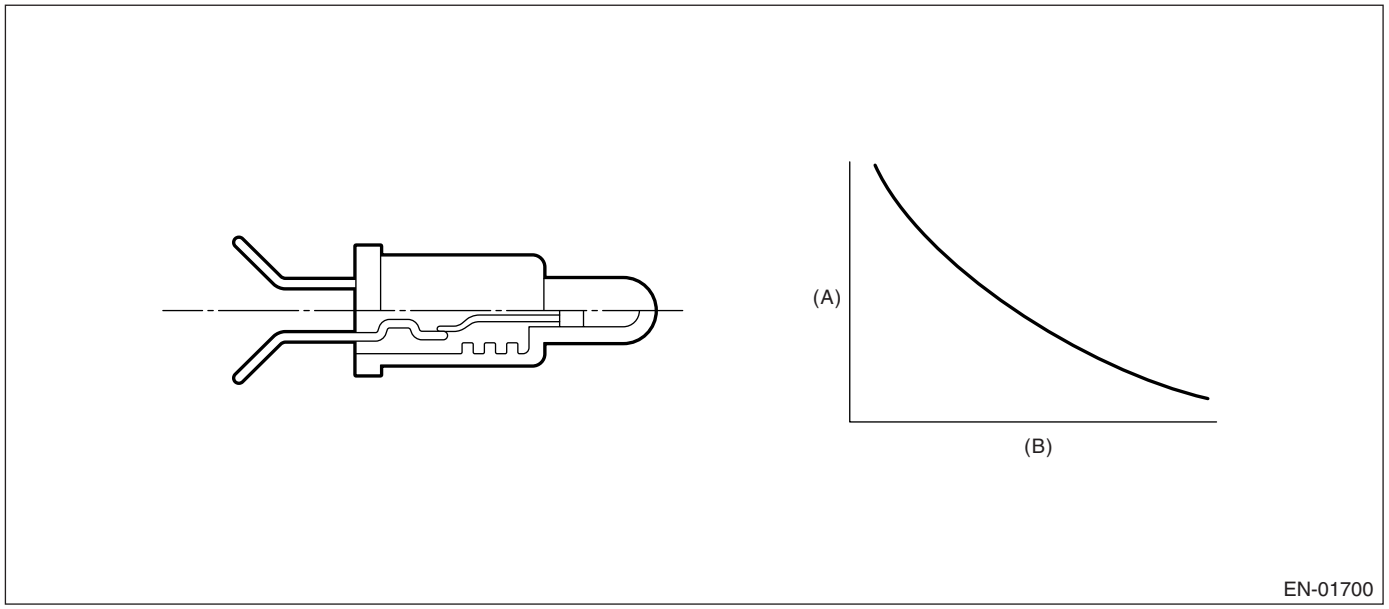

(A) Resistance (Ω) (B) Fuel temperature °C (°F)

3. ENABLE CONDITION

Secondary Parameters	Enable Conditions
None	

4. GENERAL DRIVING CYCLE

Always perform the diagnosis continuously.

5. DIAGNOSTIC METHOD

• Abnormality Judgment

Judge NG when the continuous time of completing the malfunction criteria below becomes more than 2.5 seconds.

Judgment Value

Malfunction Criteria	Threshold Value
Output voltage	〈 0.164 V
Battery voltage	≥ 10.9 V

Time Needed for Diagnosis: 2.5 seconds

Malfunction Indicator Light Illumination: Illuminates as soon as the malfunction occurs.

• Normality Judgment

Judge OK and clear NG when the malfunction criteria below are completed.

Judgment Value

Malfunction Criteria	Threshold Value
Output voltage	≥ 0.164 V
Battery voltage	≥ 10.9 V

6. DTC CLEAR CONDITION

- When the OK idling cycle was completed 40 times in a row
- When “Clear Memory” was performed

7. MALFUNCTION INDICATOR LIGHT CLEAR CONDITION

- When the OK driving cycle was completed 3 times in a row
- When “Clear Memory” was performed

8. FAIL SAFE

None

9. ECM OPERATION AT DTC SETTING

Memorize the freeze frame data. (For test mode $02)

AG:DTC P0183 FUEL TEMPERATURE SENSOR “A” CIRCUIT HIGH INPUT

1. OUTLINE OF DIAGNOSIS

Detect the open or short circuit of fuel temperature sensor. Judge NG when out of the standard value.

2. COMPONENT DESCRIPTION

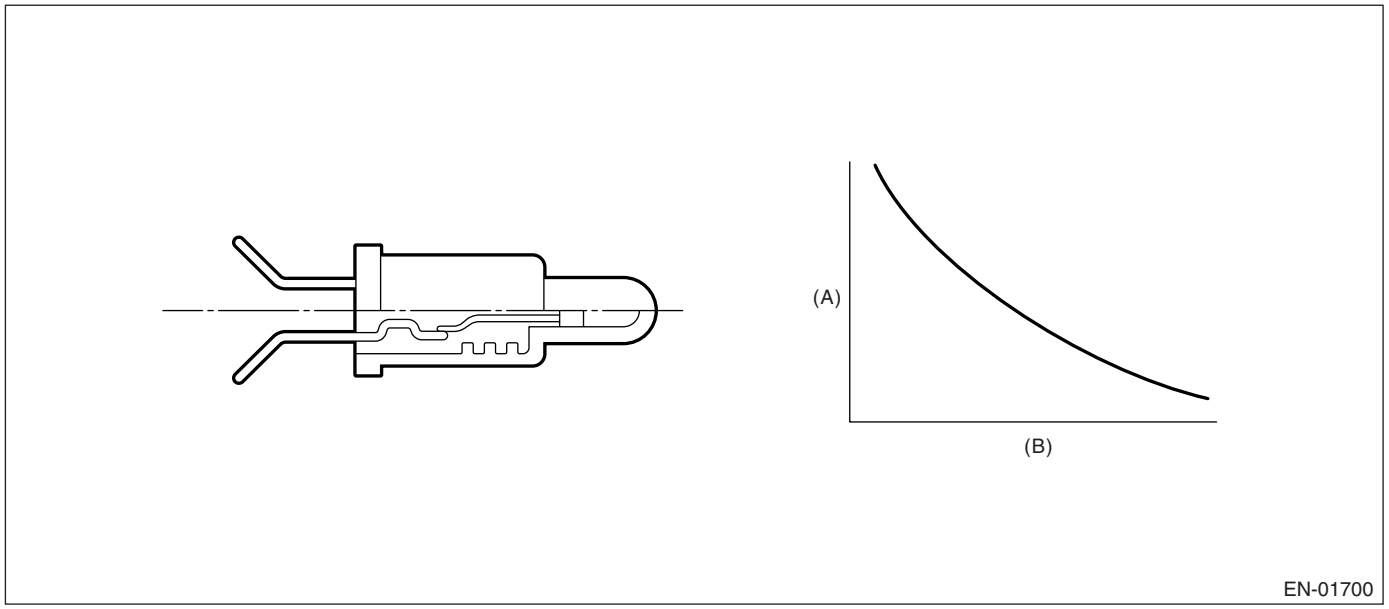

(A) Resistance (Ω) (B) Fuel temperature °C (°F)

3. ENABLE CONDITION

Secondary Parameters	Enable Conditions
None	

4. GENERAL DRIVING CYCLE

Always perform the diagnosis continuously.

5. DIAGNOSTIC METHOD

• Abnormality Judgment

Judge NG when the continuous time of completing the malfunction criteria below becomes more than 2.5 seconds.

Judgment Value

Malfunction Criteria	Threshold Value
Output voltage	≥ 4.716 V
Battery voltage	≥ 10.9 V

Time Needed for Diagnosis: 2.5 seconds

Malfunction Indicator Light Illumination: Illuminates as soon as the malfunction occurs.

• Normality Judgment

Judge OK and clear NG when the malfunction criteria below are completed.

Judgment Value

Malfunction Criteria	Threshold Value
Output voltage	< 4.716 V
Battery voltage	≥ 10.9 V

6. DTC CLEAR CONDITION

- When the OK idling cycle was completed 40 times in a row
- When “Clear Memory” was performed

7. MALFUNCTION INDICATOR LIGHT CLEAR CONDITION

- When the OK driving cycle was completed 3 times in a row
- When “Clear Memory” was performed

8. FAIL SAFE

None

9. ECM OPERATION AT DTC SETTING

Memorize the freeze frame data. (For test mode $02)

AH:DTC P0222 THROTTLE/PEDAL POSITION SENSOR/SWITCH “B” CIRCUIT LOW INPUT

1. OUTLINE OF DIAGNOSIS

Detect the open or short circuit of throttle position sensor 2.
Judge NG when out of the standard value.

2. COMPONENT DESCRIPTION

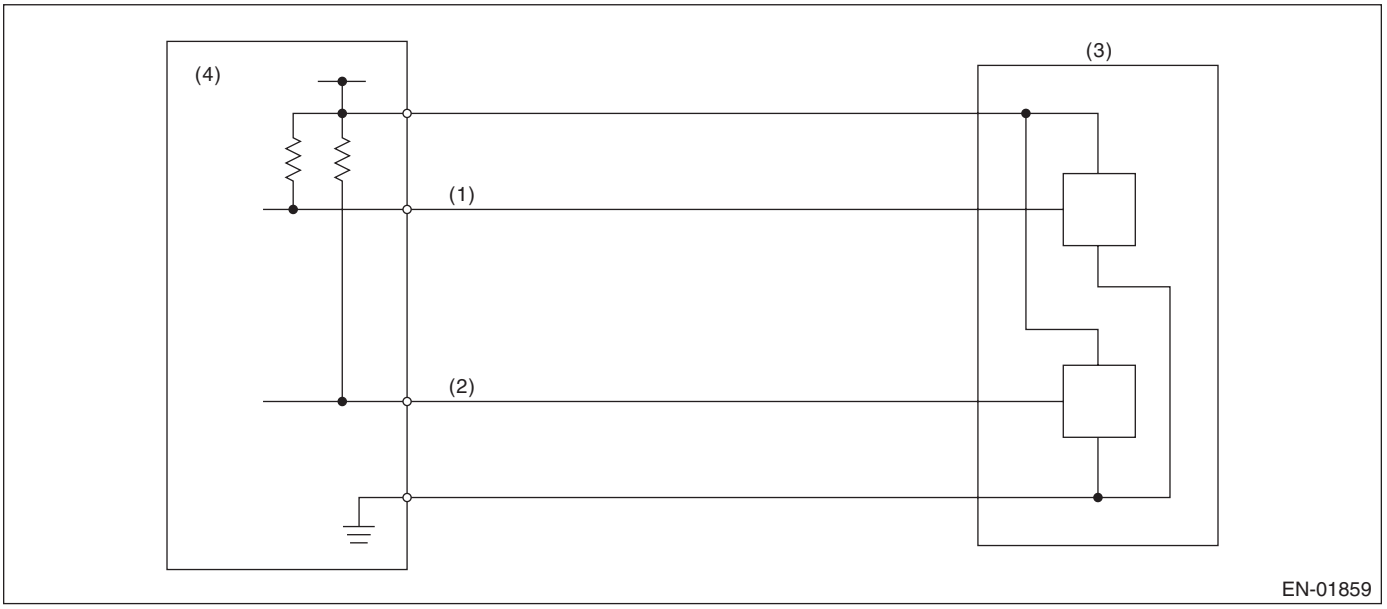

(1) Throttle position sensor 1 signal
(2) Throttle position sensor 2 signal
(3) Throttle position sensor
(4) Engine control module (ECM)

3. ENABLE CONDITION

Secondary Parameters	Enable Conditions
Ignition switch	ON

4. GENERAL DRIVING CYCLE

Always perform the diagnosis continuously.

5. DIAGNOSTIC METHOD

Judge OK and clear the NG when the malfunction criteria below are completed.
Judgment Value

Malfunction Criteria	Threshold Value
Sensor 2 input voltage	≥ 0.749 V

Time Needed for Diagnosis: 24 milliseconds
Malfunction Indicator Light Illumination: Illuminates as soon as malfunction occurs.

6. DTC CLEAR CONDITION

- When the OK idling cycle was completed 40 times in a row
- When “Clear Memory” was performed (Only with engine stopped)

7. MALFUNCTION INDICATOR LIGHT CLEAR CONDITION

- When the OK driving cycle was completed 3 times in a row
- When “Clear Memory” was performed (Only with engine stopped)

8. FAIL SAFE

Stop power distribution to electronic throttle control motor. (Throttle opening is fixed to 6°.)

9. ECM OPERATION AT DTC SETTING

Memorize the freeze frame data. (For test mode $02)

AI: DTC P0223 THROTTLE/PEDAL POSITION SENSOR/SWITCH “B” CIRCUIT HIGH INPUT

1. OUTLINE OF DIAGNOSIS

Detect the open or short circuit of throttle position sensor 2.
Judge NG when out of the standard value.

2. COMPONENT DESCRIPTION

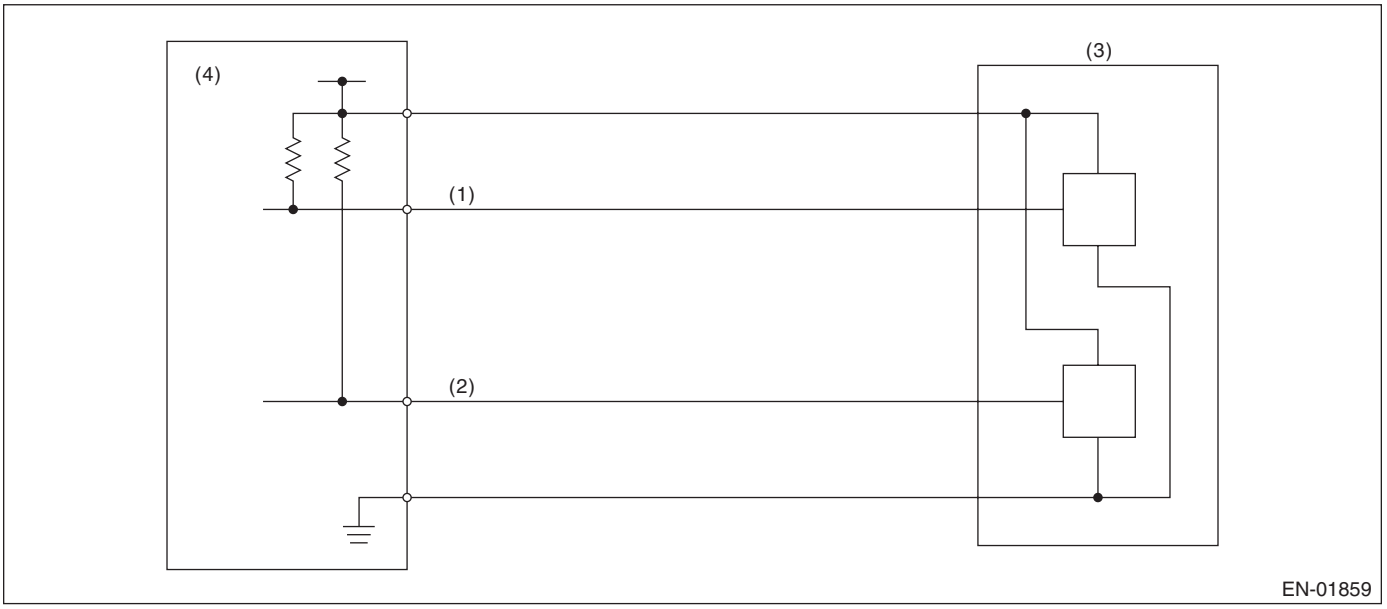

(1) Throttle position sensor 1 signal
(2) Throttle position sensor 2 signal
(3) Throttle position sensor
(4) Engine control module (ECM)

3. ENABLE CONDITION

Secondary Parameters	Enable Conditions
Ignition switch	ON

4. GENERAL DRIVING CYCLE

Always perform the diagnosis continuously.

5. DIAGNOSTIC METHOD

Judge OK and clear the NG when the malfunction criteria below are completed.
Judgment Value

Malfunction Criteria	Threshold Value
Sensor 2 input voltage	≤ 4.747 V

Time Needed for Diagnosis: 24 milliseconds
Malfunction Indicator Light Illumination: Illuminates as soon as malfunction occurs.

6. DTC CLEAR CONDITION

- When the OK idling cycle was completed 40 times in a row
- When “Clear Memory” was performed (Only with engine stopped)

7. MALFUNCTION INDICATOR LIGHT CLEAR CONDITION

- When the OK driving cycle was completed 3 times in a row
- When “Clear Memory” was performed (Only with engine stopped)

8. FAIL SAFE

Stop power distribution to electronic throttle control motor. (Throttle opening is fixed to 6°.)

9. ECM OPERATION AT DTC SETTING

Memorize the freeze frame data. (For test mode $02)

AJ:DTC P0301 CYLINDER 1 MISFIRE DETECTED

1. OUTLINE OF DIAGNOSIS

Detect whether the misfire occurred or not. (Revolution fluctuation method) Monitoring the misfire which influences exhaust deterioration (1.5 times of FTP) and catalyst damage is made obligatory by the law. Misfire affecting these two has three patterns below.

- Intermittent misfire (The same cylinder misfires in random, or different cylinders misfire in random.): FTP 1.5 times misfire
- Every time misfire (The same cylinder misfires every time.): FTP 1.5 times misfire, Catalyst damage misfire

The following detecting methods are adopted for these detection.

1) Intermittent misfire: FTP 1.5 times misfire
- 180° Interval Difference Method (MT: 1,800 rpm or less; AT: None)
- 360° Interval Difference Method (whole range)
- 720° Interval Difference Method (3,000 rpm or less)

2) Every time misfire: FTP 1.5 times misfire, Catalyst damage misfire
- 360° Interval Difference Method

2. ENABLE CONDITION

Secondary Parameters	Enable Conditions
Enable Conditions all secondary parameters enable condition	1 sec. or more
Intake manifold pressure change during 0.5 engine rev.	< 13.3 kPa (100 mmHg, 3.94 inHg)
Engine speed change	< 700 rpm/32 milliseconds
Throttle position change during 16 milliseconds	< 21°
Fuel shut-off function	Not operating
Fuel level	≥ 9.6 ℓ (2.54 US gal, 2.11 Imp gal)
AT torque control	Not in operation
Evaporative system leak check	Not in operation
Engine speed	460 — 6,200 rpm
Intake manifold pressure	> Map 3
Battery voltage	≥ 8 V
Atmospheric pressure	> 75.1 kPa (563 mmHg, 22.1 inHg)
Fuel	Mas judge

Map3

MT

Vehicle Speed < 64.4 km/h (40 MPH)

rpm	650	1,000	1,500	2,000	2,500	3,000	3,500	4,000	4,500	5,000	5,500	6,000	6,500
kPa (mmHg, inHg)	24.8 (186, 7.32)	21.3 (160, 6.30)	20.5 (154, 6.06)	20.9 (157, 6.18)	20.5 (154, 6.06)	21.9 (164, 6.46)	24.3 (182, 7.17)	26.1 (186, 7.72)	28.7 (215, 8.46)	30.8 (231, 9.09)	34.7 (260, 10.23)	38.5 (289, 11.38)	40.1 (301, 11.85)

MT

Vehicle Speed ≥ 64.4 km/h (40 MPH)

rpm	650	1,000	1,500	2,000	2,500	3,000	3,500	4,000	4,500	5,000	5,500	6,000	6,500
kPa (mmHg, inHg)	40.0 (300, 11.81)	40.0 (300, 11.81)	33.6 (252, 9.92)	34.2 (257, 10.11)	33.5 (251, 9.88)	35.6 (267, 10.51)	34.7 (260, 10.24)	27.7 (208, 8.19)	28.7 (215, 8.46)	30.8 (231, 9.09)	34.7 (260, 10.23)	38.5 (289, 11.38)	40.1 (301, 11.85)

AT

rpm	700	1,000	1,500	2,000	2,500	3,000	3,500	4,000	4,500	5,000	5,500	6,000	6,500
kPa (mmHg, inHg)	26.0 (195, 7.68)	23.3 (175, 6.89)	22.3 (167, 6.57)	22.8 (171, 6.73)	22.7 (170, 6.69)	24.0 (180, 7.09)	27.9 (209, 8.23)	30.0 (225, 8.86)	31.7 (238, 9.37)	35.2 (264, 10.39)	40.0 (300, 11.81)	44.4 (333, 13.11)	45.7 (343, 13.50)

3. GENERAL DRIVING CYCLE

- Detecting misfire between idling and high revolution.
- Perform the diagnosis continuously.

4. DIAGNOSTIC METHOD

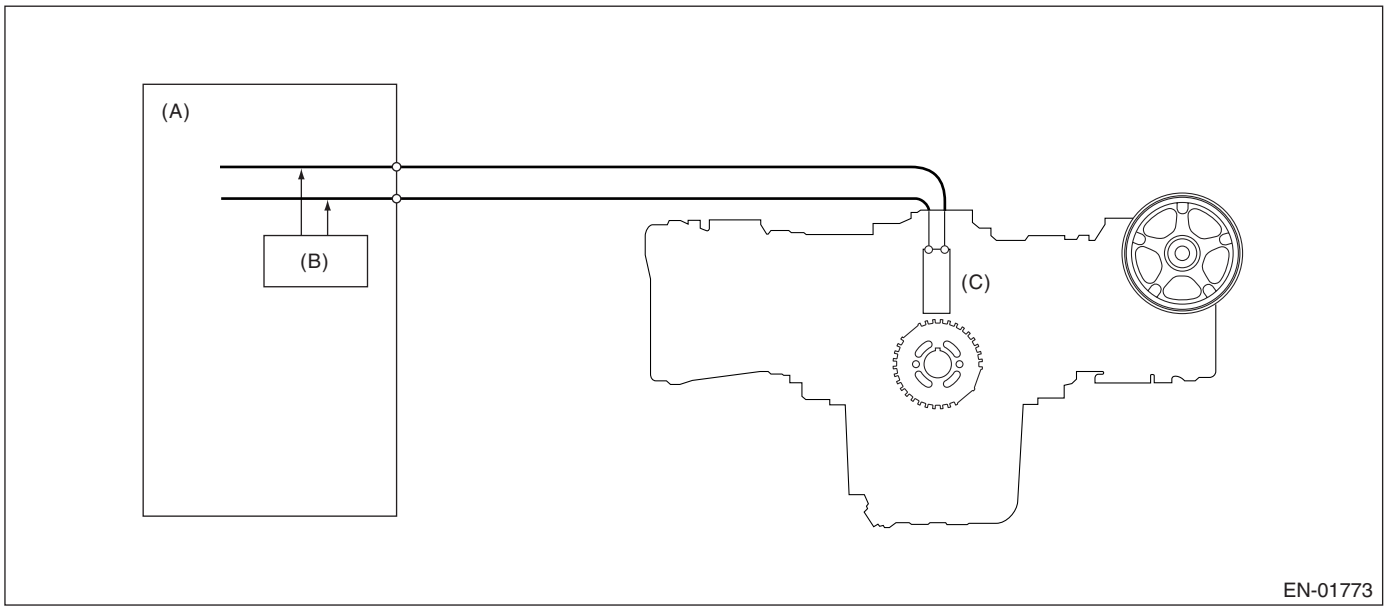

(A) Engine control module (ECM) (B) Diagnosis circuit (C) Crankshaft position sensor

When the misfire occurred, the engine speed is decreased and the crankshaft position speed will change. Calculate the interval difference value (diagnostic value) from crankshaft position speed by the following formula, and judge whether the misfire occurs or not comparing the calculated result with judgment value. Counting the number of misfire up, and if the misfire ratio is higher during 1000 rev. or 200 rev., judge NG for the corresponding cylinder.

Calculate the diagnostic value (from crankshaft position speed) → Misfire detection every single ignition (Compare diagnostic value with judgment value)
- 180° Interval Difference Method
- 360° Interval Difference Method
- 720° Interval Difference Method

→ NG judgment (Judge misfire occurrence required by the law) (Compare number of misfire with judgment)
- FTP1.5 times misfire NG judgment
- Catalyst damage misfire NG judgment

As the following figure, pick out a random cylinder as the standard and name it omg 0. And the former crankshaft position speed is named omg 1, the second former crankshaft position speed is named omg 2, the third is named omg 3, and the following is the same.

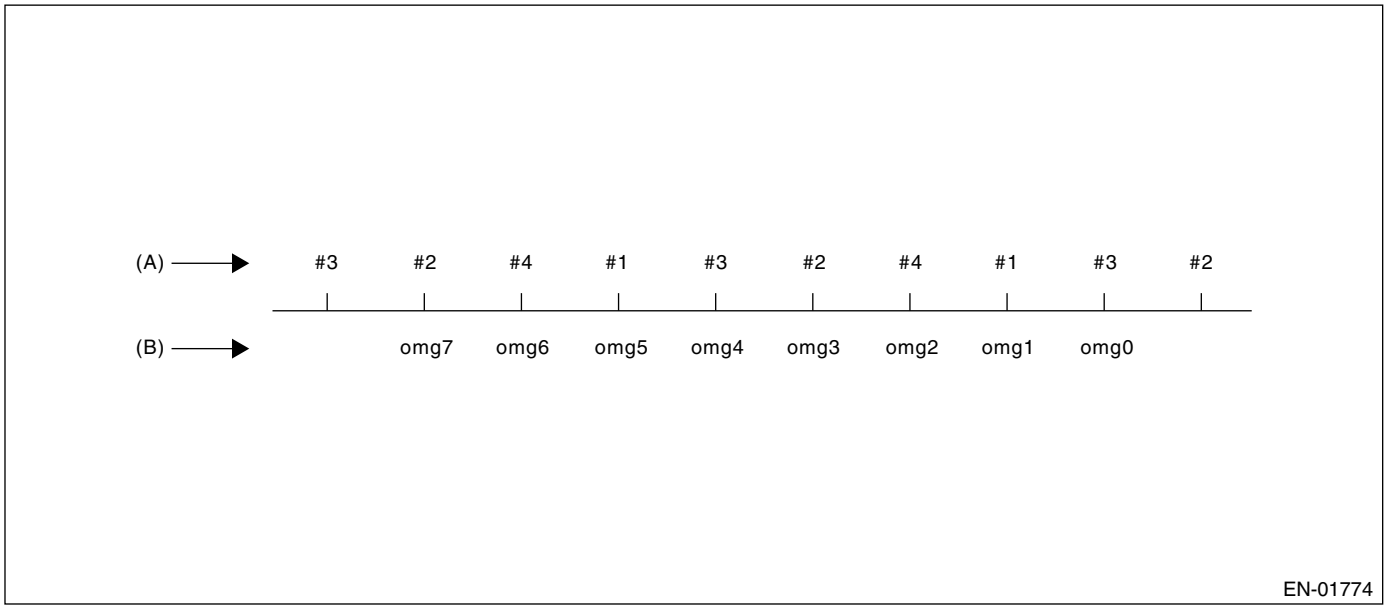

(A) Ignition order (B) Crankshaft position speed

• 180° Interval Difference Method

Diagnosis value domg 180 = (omg –1 omg 0) – (omg 7 – omg 1)/6

Judge misfire occurs in the following cases.

- domg 180 > judgment value of positive side
- domg 180 ≤ judgment value of negative side

(judgment value before 180°CA)

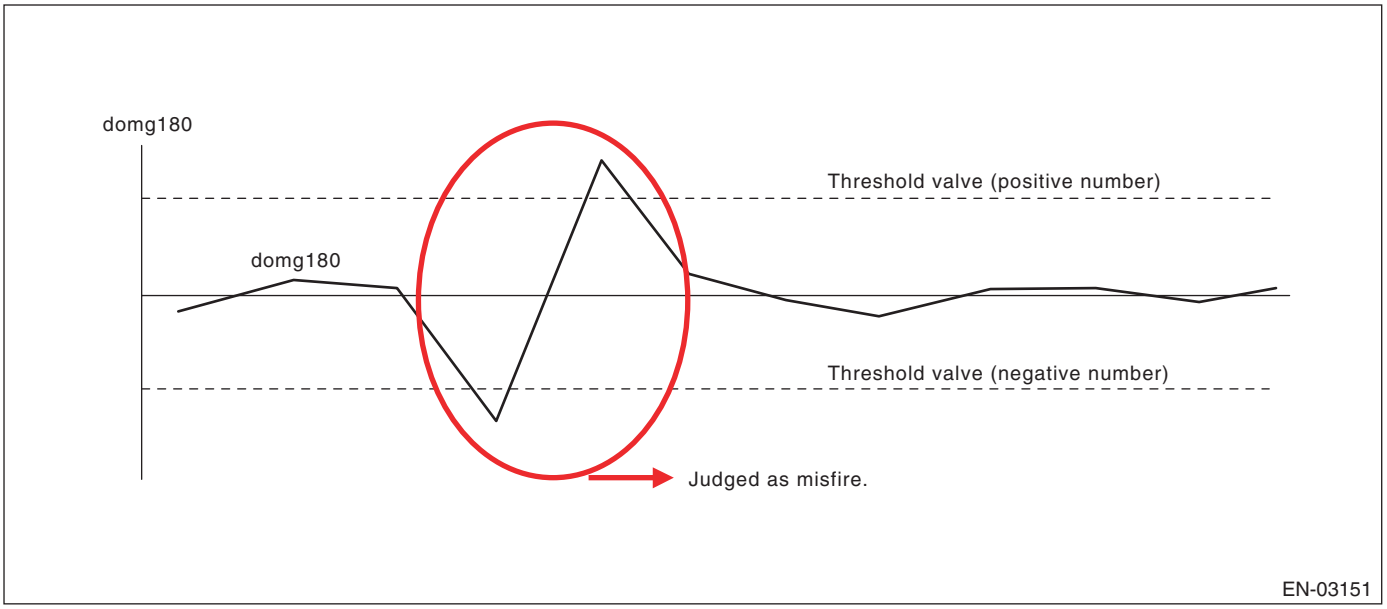

• 360° Interval Difference Method

Diagnosis value	domg 360 = (omg 1 – omg 0) – (omg 4 – omg 3)		
Misfire judgment	domg 360 > judgment value	→	Misfire occurs

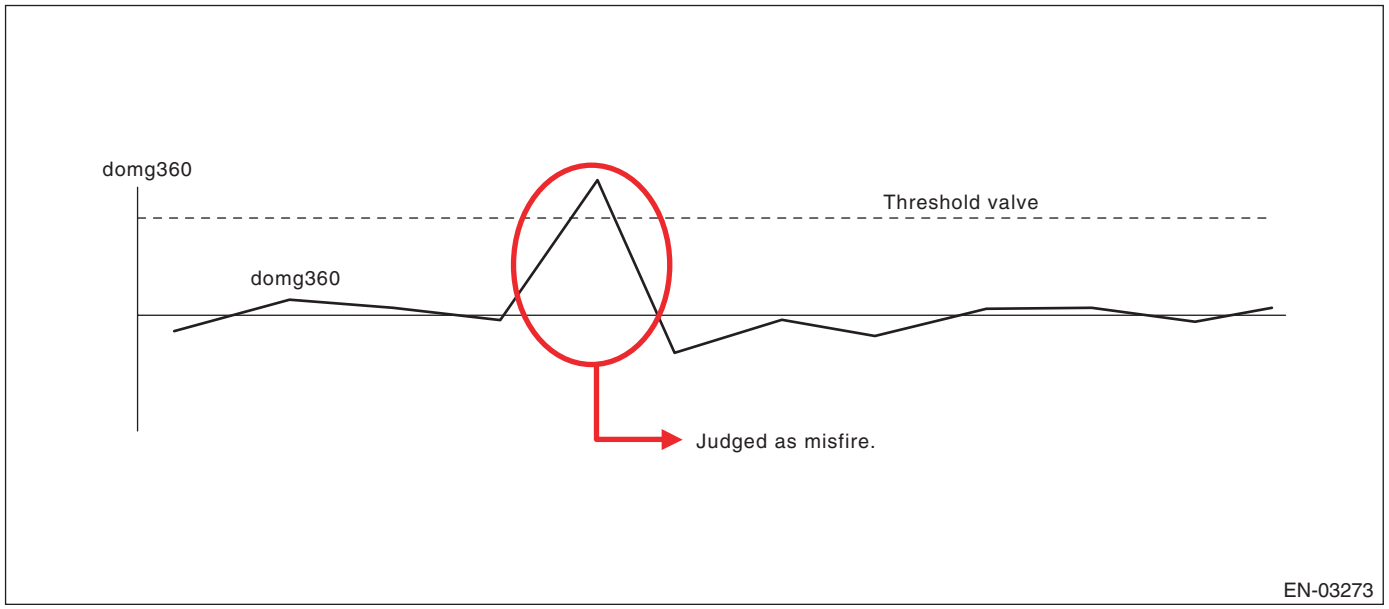

• 720° Interval Difference Method

Diagnosis value	domg 720 = (omg 1 – omg 0) – (omg 7 – omg 6)		
Misfire judgment	domg 720 > judgment value	→	Misfire occurs

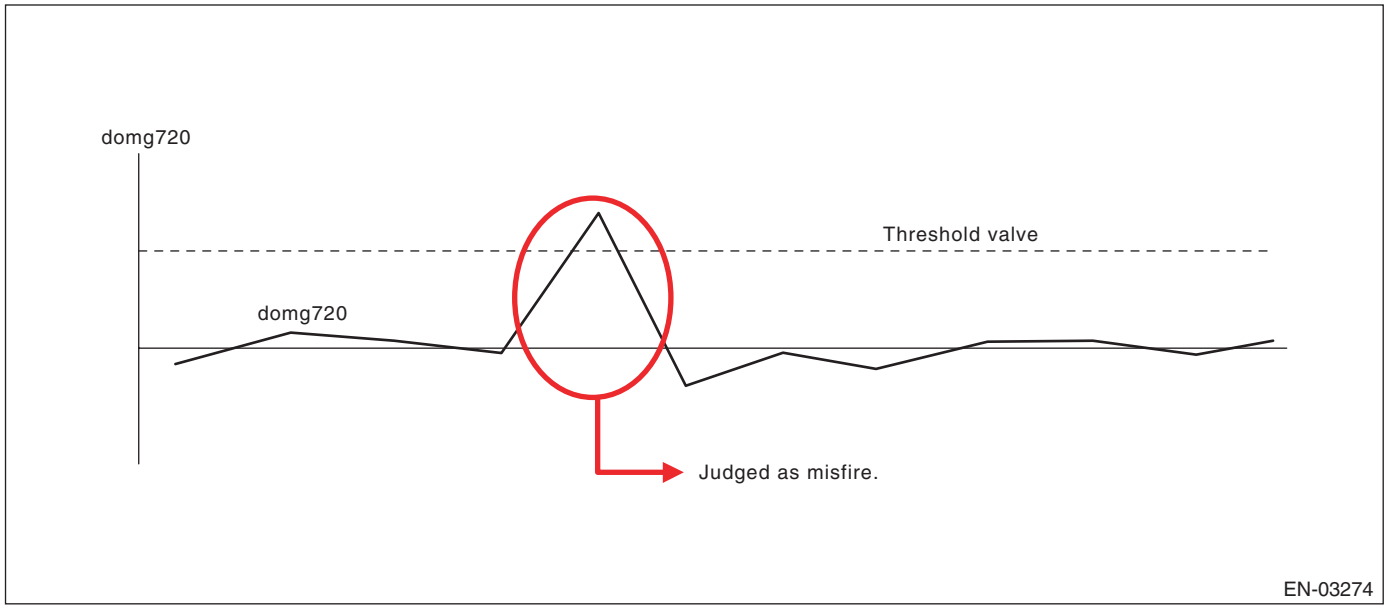

• FTP 1.5 times misfire (Misfire occurrence level affecting exhaust gas)

Judgment Value (Judge that malfunction occurs when the misfire ratio is high in 1000 engine revs.)

Malfunction Criteria	Threshold Value
FTP emission judgment value	> 1.0% in 1000 revs.

Time Needed for Diagnosis: 1000 engine revs.
Malfunction Indicator Light Illumination: Illuminates when malfunction occurs in 2 continuous driving cycles.

• Catalyst damage misfire (Misfire occurrence level damaging catalyst)

Judgment Value (Judge that malfunction occurs when the misfire ratio is high in 200 engine revs. (400 ignitions))

Malfunction Criteria	Threshold Value
Catalyst damage misfire judgment value	See Map 1

Map 1 Fault criteria threshold for misfire which would result in catalyst damage

Percentage		Intake air (g (oz)/rev.)							
		0.16 (0.006)	0.28 (0.010)	0.4 (0.014)	0.52 (0.018)	0.64 (0.023)	0.76 (0.027)	0.92 (0.032)	1.1 (0.039)
Engine speed (rpm)	700	22.5	22.5	22.5	19.0	17.0	19.5	19.5	19.5
	1,000	22.5	22.5	22.0	19.0	17.0	19.5	19.5	19.5
	1,500	22.3	22.0	20.0	16.0	14.0	15.5	15.5	15.5
	2,000	22.0	21.0	16.0	10.0	9.0	8.8	8.8	8.8
	2,500	22.0	20.0	14.0	9.0	6.0	8.5	8.5	8.5
	3,000	16.0	14.0	6.5	5.8	8.0	8.3	8.3	8.3
	3,500	12.5	10.0	6.0	6.0	8.0	8.0	8.0	8.0
	4,000	10.0	9.5	7.5	6.5	5.0	5.0	5.0	5.0
	4,500	12.5	7.0	5.0	5.0	5.0	5.0	5.0	5.0
	5,000	10.0	7.5	5.0	5.0	5.0	5.0	5.0	5.0
	5,500	10.0	6.3	6.5	5.0	5.0	5.0	5.0	5.0
	6,000	9.0	8.0	6.3	5.0	5.0	5.0	5.0	5.0
	6,200	8.0	8.0	5.0	5.0	5.0	5.0	5.0	5.0

These figures mean the misfire ratio (%) in 400 ignitions; for example, 22.5 (%) means 400 (ignition) × 22.5 (%) = 90 (ignition) or more, so this case is judged misfire.
Time Needed for Diagnosis: 200 engine revs.
Malfunction Indicator Light Illumination: Illuminates as soon as the malfunction occurs.

5. DTC CLEAR CONDITION

- When the OK idling cycle was completed 40 times in a row
- When “Clear Memory” was performed

6. MALFUNCTION INDICATOR LIGHT CLEAR CONDITION

- When the OK driving cycle was completed 3 times in a row
- When “Clear Memory” was performed

7. FAIL SAFE

None

8. ECM OPERATION AT DTC SETTING

Memorize the freeze frame data. (For test mode $02)

AK:DTC P0302 CYLINDER 2 MISFIRE DETECTED

1. OUTLINE OF DIAGNOSIS

NOTE:
For the detecting criteria, refer to DTC P0301. <Ref. to GD(H4SO)-84, DTC P0301 CYLINDER 1 MISFIRE DETECTED, Diagnostic Trouble Code (DTC) Detecting Criteria.>

AL:DTC P0303 CYLINDER 3 MISFIRE DETECTED

1. OUTLINE OF DIAGNOSIS

NOTE:
For the detecting criteria, refer to DTC P0301. <Ref. to GD(H4SO)-84, DTC P0301 CYLINDER 1 MISFIRE DETECTED, Diagnostic Trouble Code (DTC) Detecting Criteria.>

AM:DTC P0304 CYLINDER 4 MISFIRE DETECTED

1. OUTLINE OF DIAGNOSIS

NOTE:
For the detecting criteria, refer to DTC P0301. <Ref. to GD(H4SO)-84, DTC P0301 CYLINDER 1 MISFIRE DETECTED, Diagnostic Trouble Code (DTC) Detecting Criteria.>

AN:DTC P0327 KNOCK SENSOR 1 CIRCUIT LOW INPUT (BANK 1 OR SINGLE SENSOR)

1. OUTLINE OF DIAGNOSIS

Detect the open or short circuit of the knock sensor. Judge NG when out of the standard value.

2. COMPONENT DESCRIPTION

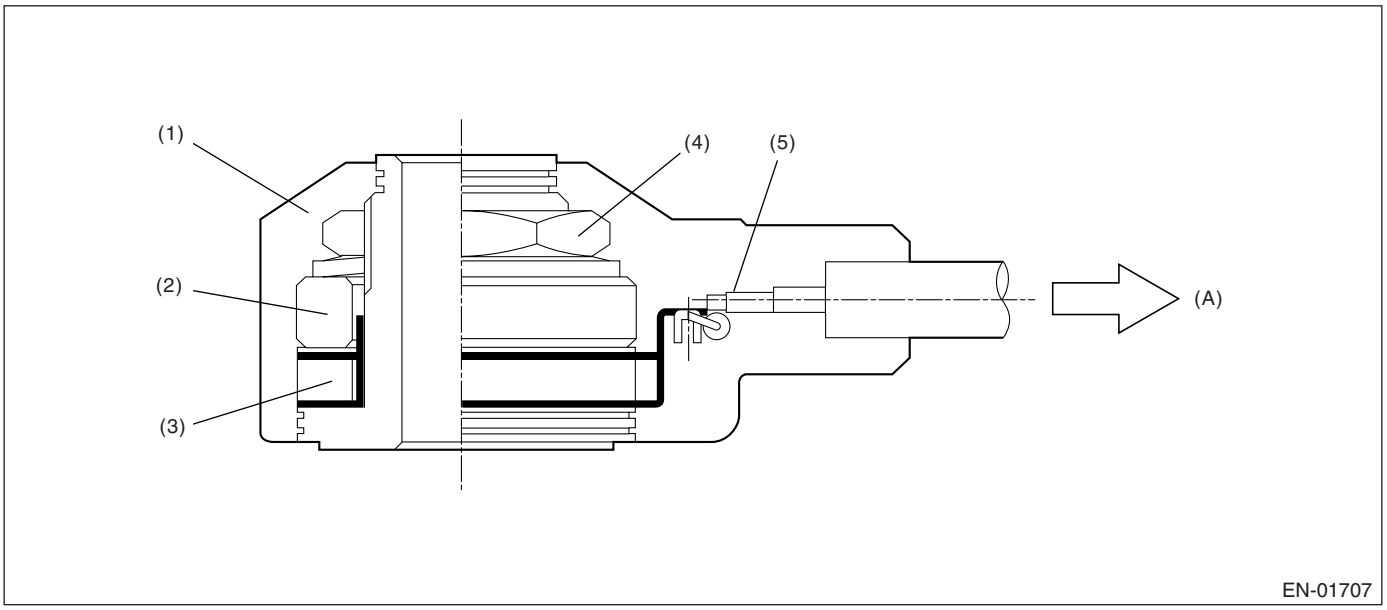

(1) Case
(2) Weight
(3) Piezoelectric element
(4) Nut
(5) Resistance
(A) To knock sensor harness

3. ENABLE CONDITION

Secondary Parameters	Enable Conditions
None	

4. GENERAL DRIVING CYCLE

Always perform the diagnosis continuously.

5. DIAGNOSTIC METHOD

• Abnormality Judgment

Judge NG when the continuous time of completing the malfunction criteria below becomes more than 1 second.

Judgment Value

Malfunction Criteria	Threshold Value
Output voltage	< 0.238 V
Ignition switch	ON

Time Needed for Diagnosis: 1 second
Malfunction Indicator Light Illumination: Illuminates as soon as the malfunction occurs.

• Normality Judgment

Judge OK and clear NG when the malfunction criteria below are completed.

Judgment Value

Malfunction Criteria	Threshold Value
Output voltage	≥ 0.238 V
Ignition switch	ON

6. DTC CLEAR CONDITION

- When the OK idling cycle was completed 40 times in a row
- When “Clear Memory” was performed

7. MALFUNCTION INDICATOR LIGHT CLEAR CONDITION

- When the OK driving cycle was completed 3 times in a row
- When “Clear Memory” was performed

8. FAIL SAFE

Knock compensation:

- At normal: Learned ignition timing value = knock F/B timing value + whole learning timing value + partial learning timing value.
- At trouble: Learned ignition timing = −3°CA (Retard 3°CA)
  - Knock F/B timing value = 0°CA
  - Whole learning is not allowed.
  - Partial learning is not allowed.

9. ECM OPERATION AT DTC SETTING

Memorize the freeze frame data. (For test mode $02)

AO:DTC P0328 KNOCK SENSOR 1 CIRCUIT HIGH INPUT (BANK 1 OR SINGLE SENSOR)

1. OUTLINE OF DIAGNOSIS

Detect the open or short circuit of the knock sensor. Judge NG when out of the standard value.

2. COMPONENT DESCRIPTION

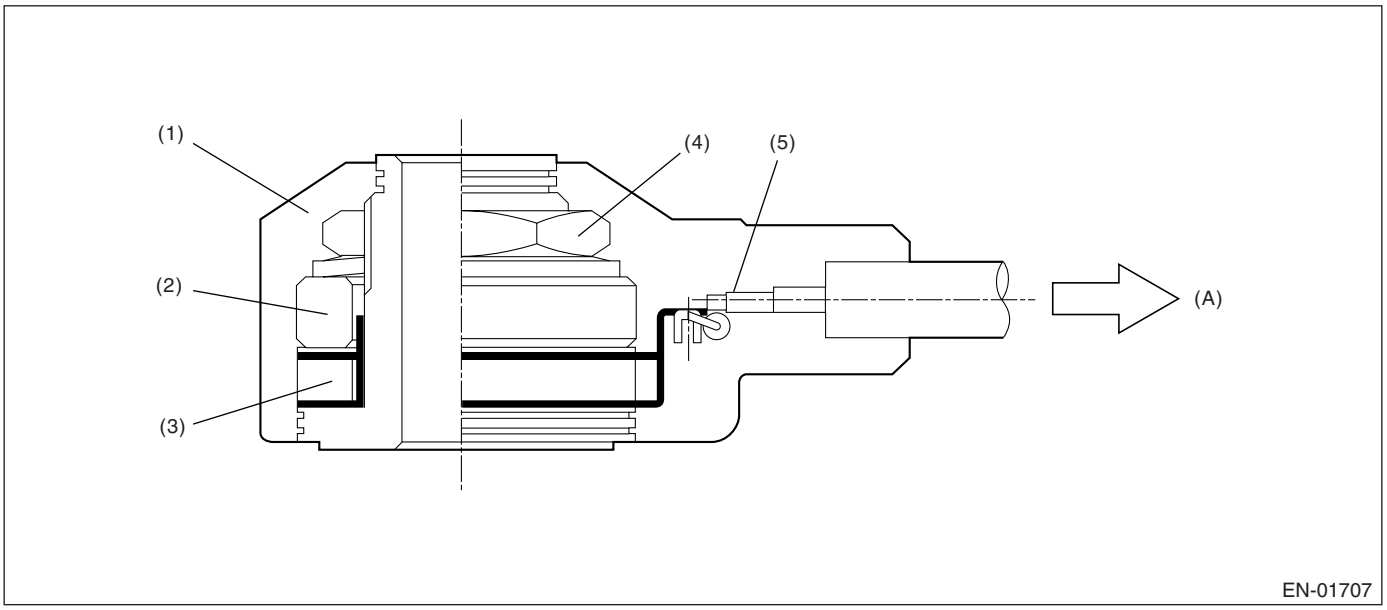

(1) Case
(2) Weight
(3) Piezoelectric element
(4) Nut
(5) Resistance
(A) To knock sensor harness

3. ENABLE CONDITION

Secondary Parameters	Enable Conditions
None	

4. GENERAL DRIVING CYCLE

Always perform diagnosis continuously.

5. DIAGNOSTIC METHOD

• Abnormality Judgment

Judge NG when the continuous time of completing the malfunction criteria below becomes more than 1 second.

Judgment Value

Malfunction Criteria	Threshold Value
Output voltage	≥ 4.714 V
Ignition switch	ON

Time Needed for Diagnosis: 1 second
Malfunction Indicator Light Illumination: Illuminates as soon as the malfunction occurs.

• Normality Judgment

Judge OK and clear NG when the malfunction criteria below are completed.

Judgment Value

Malfunction Criteria	Threshold Value
Output voltage	< 4.714 V
Ignition switch	ON

6. DTC CLEAR CONDITION

- When the OK idling cycle was completed 40 times in a row
- When “Clear Memory” was performed

7. MALFUNCTION INDICATOR LIGHT CLEAR CONDITION

- When the OK driving cycle was completed 3 times in a row
- When “Clear Memory” was performed

8. FAIL SAFE

Knock compensation:

- At normal: Learned ignition timing value = knock F/B timing value + whole learning timing value + partial learning timing value.
- At trouble: Learned ignition timing = −3°CA (Retard 3°CA)
  - Knock F/B timing value = 0°CA
  - Whole learning is not allowed.
  - Partial learning is not allowed.

9. ECM OPERATION AT DTC SETTING

Memorize the freeze frame data. (For test mode $02)

AP:DTC P0335 CRANKSHAFT POSITION SENSOR “A” CIRCUIT

1. OUTLINE OF DIAGNOSIS

Detect the open or short circuit of crankshaft position sensor. Judge NG when the crankshaft signal does not input regardless of turning the starter.

2. COMPONENT DESCRIPTION

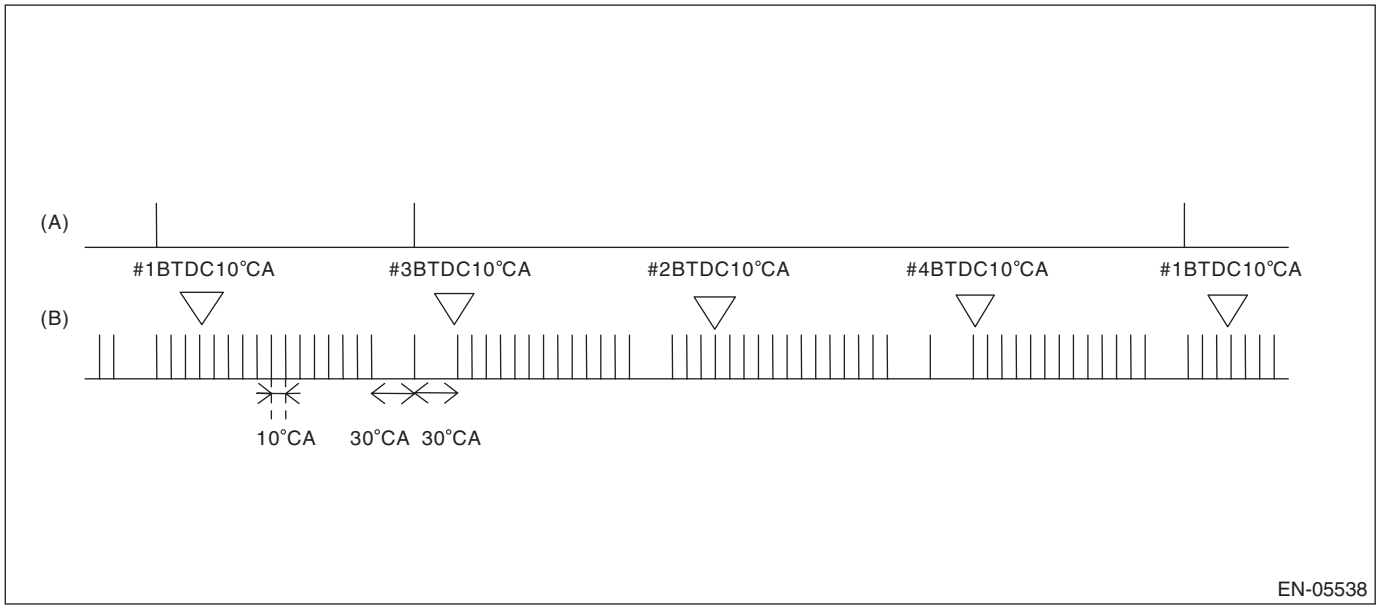

(A) Camshaft signal (B) Crankshaft signal

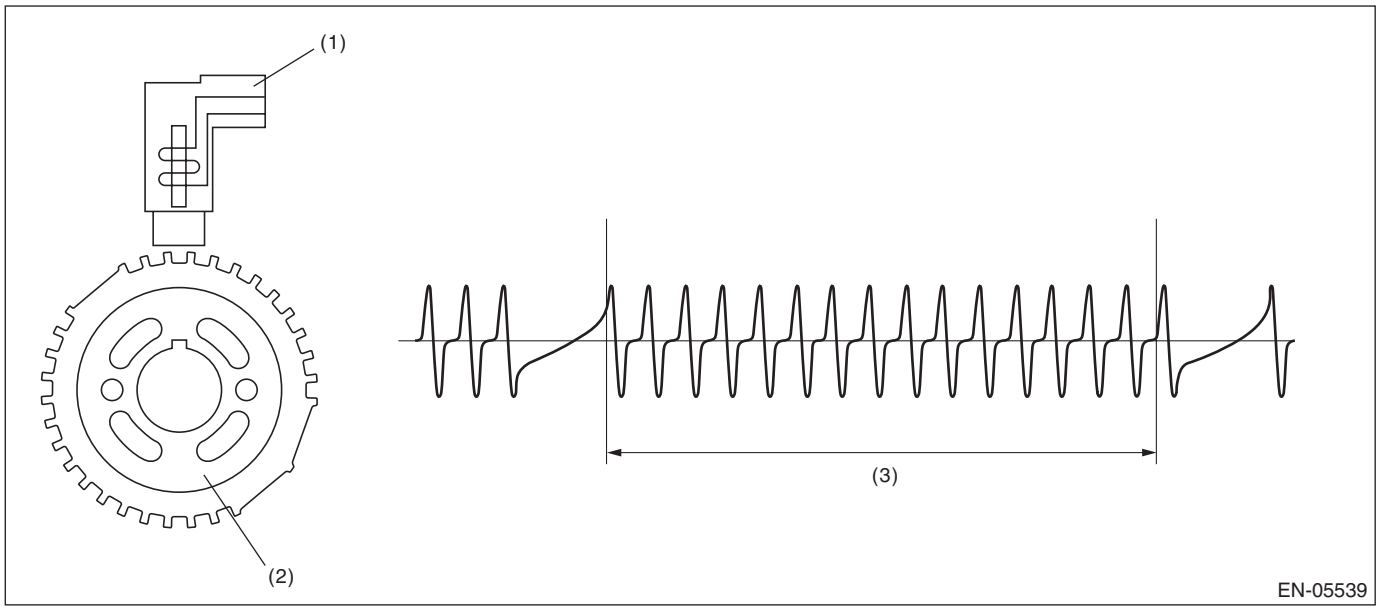

(1) Crankshaft position sensor (2) Crank sprocket (3) Crankshaft half-turn

3. ENABLE CONDITION

Secondary Parameters	Enable Conditions
None	

4. GENERAL DRIVING CYCLE

Always perform the diagnosis continuously.

5. DIAGNOSTIC METHOD

• Abnormality Judgment

Judge NG when the continuous time of completing the malfunction criteria below becomes more than 3 seconds.

Judgment Value

Malfunction Criteria	Threshold Value
Starter switch	ON
Crankshaft position sensor signal	Not detected
Battery voltage	≥ 8 V

Time Needed for Diagnosis: 3 seconds
Malfunction Indicator Light Illumination: Illuminates as soon as the malfunction occurs.

• Normality Judgment

Judge OK when the malfunction criteria below are completed.

Judgment Value

Malfunction Criteria	Threshold Value
Crankshaft position sensor signal	Input exists
Battery voltage	≥ 8 V

6. DTC CLEAR CONDITION

- When the OK idling cycle was completed 40 times in a row
- When “Clear Memory” was performed

7. MALFUNCTION INDICATOR LIGHT CLEAR CONDITION

- When the OK driving cycle was completed 3 times in a row
- When “Clear Memory” was performed

8. FAIL SAFE

None

9. ECM OPERATION AT DTC SETTING

Memorize the freeze frame data. (For test mode $02)

AQ:DTC P0336 CRANKSHAFT POSITION SENSOR “A” CIRCUIT RANGE/PERFORMANCE

1. OUTLINE OF DIAGNOSIS

Detect the malfunction of crankshaft position sensor output property. Judge NG when the number of crankshaft signal every 1 revolution becomes abnormal.

2. COMPONENT DESCRIPTION

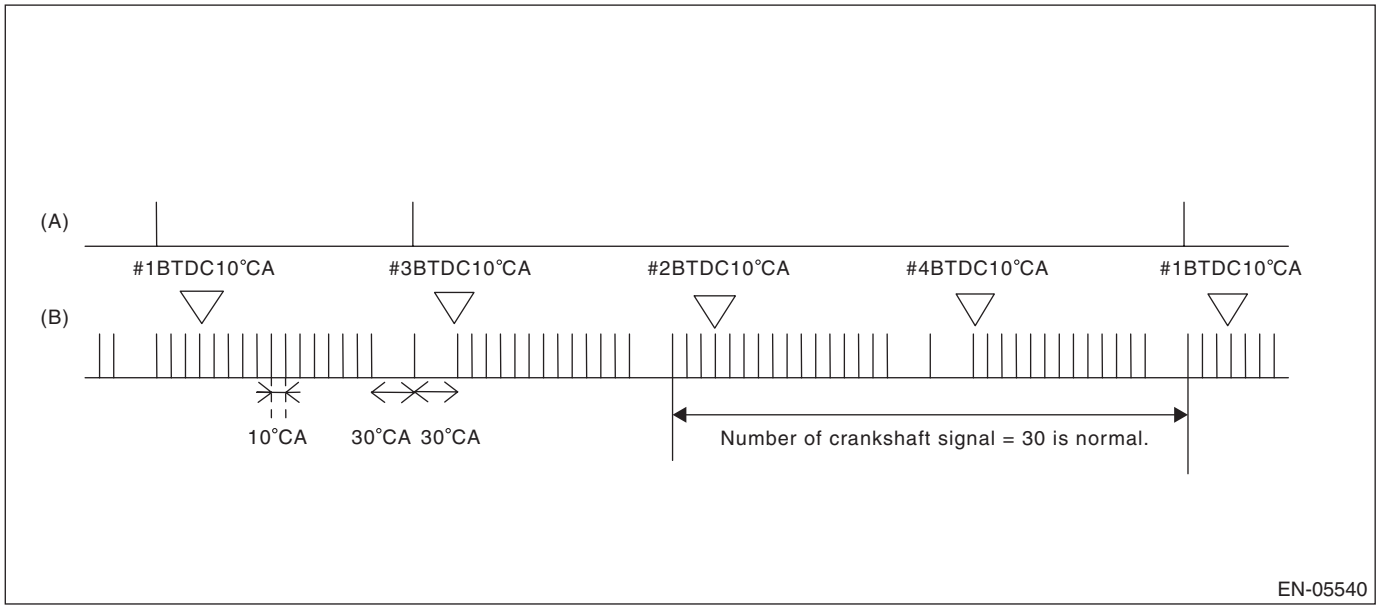

(A) Camshaft signal (B) Crankshaft signal

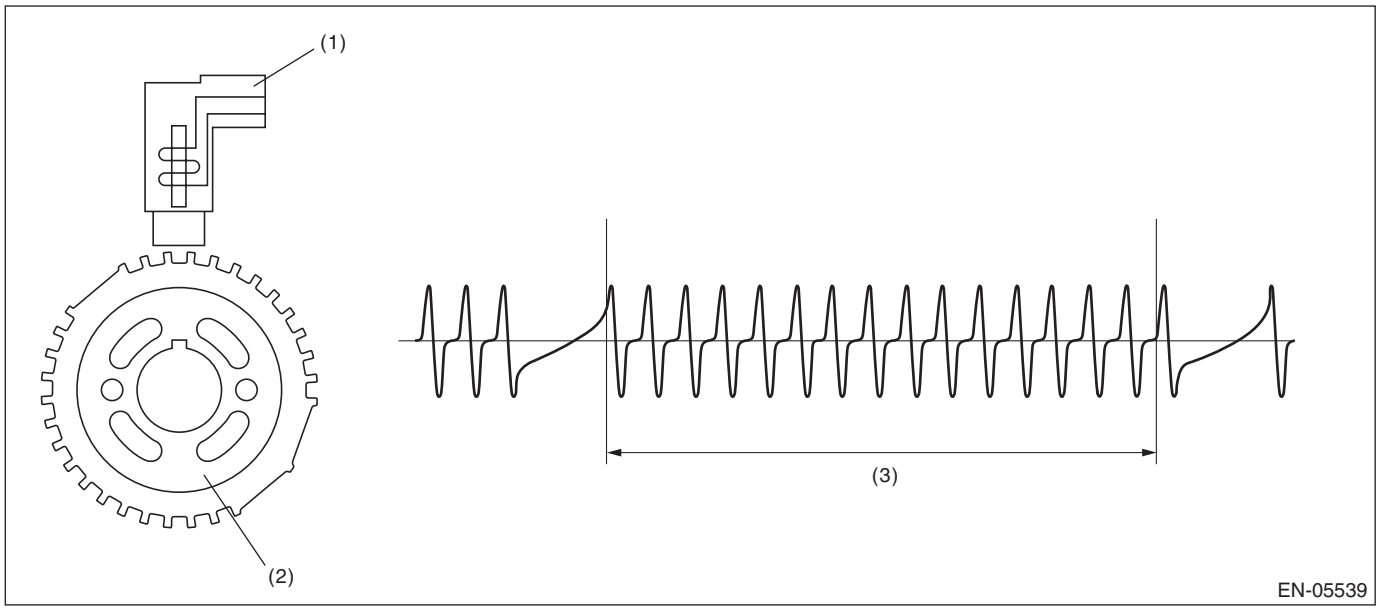

(1) Crankshaft position sensor (2) Crank sprocket (3) Crankshaft half-turn

3. ENABLE CONDITION

Secondary Parameters	Enable Conditions
Battery voltage	≥ 8 V
Engine speed	< 4000 rpm

4. GENERAL DRIVING CYCLE

Perform the diagnosis continuously under 4000 rpm engine speed.

5. DIAGNOSTIC METHOD

• Abnormality Judgment

Judge NG when all the malfunction criteria below are completed more than 10 times in a row.
Judgment Value

Malfunction Criteria	Threshold Value
Cylinder number distinction	Completed
Amount of crank sensor signal during 1 rev.	Not = 30

Time Needed for Diagnosis: 10 engine revs.
Malfunction Indicator Light Illumination: Illuminates when malfunction occurs in 2 continuous driving cycles.

• Normality Judgment

Judge OK and clear the NG when the malfunction criteria below are completed.
Judgment Value

Malfunction Criteria	Threshold Value
Cylinder number distinction	Completed
Amount of crank sensor signal during 1 rev.	= 30

6. DTC CLEAR CONDITION

- When the OK idling cycle was completed 40 times in a row
- When “Clear Memory” was performed

7. MALFUNCTION INDICATOR LIGHT CLEAR CONDITION

- When the OK driving cycle was completed 3 times in a row
- When “Clear Memory” was performed

8. FAIL SAFE

None

9. ECM OPERATION AT DTC SETTING

Memorize the freeze frame data. (For test mode $02)

AR:DTC P0340 CAMSHAFT POSITION SENSOR “A” CIRCUIT (BANK 1 OR SINGLE SENSOR)

1. OUTLINE OF DIAGNOSIS

Detect the open or short circuit of camshaft position sensor. Judge NG when the number of camshaft signal remains to be abnormal.

2. COMPONENT DESCRIPTION

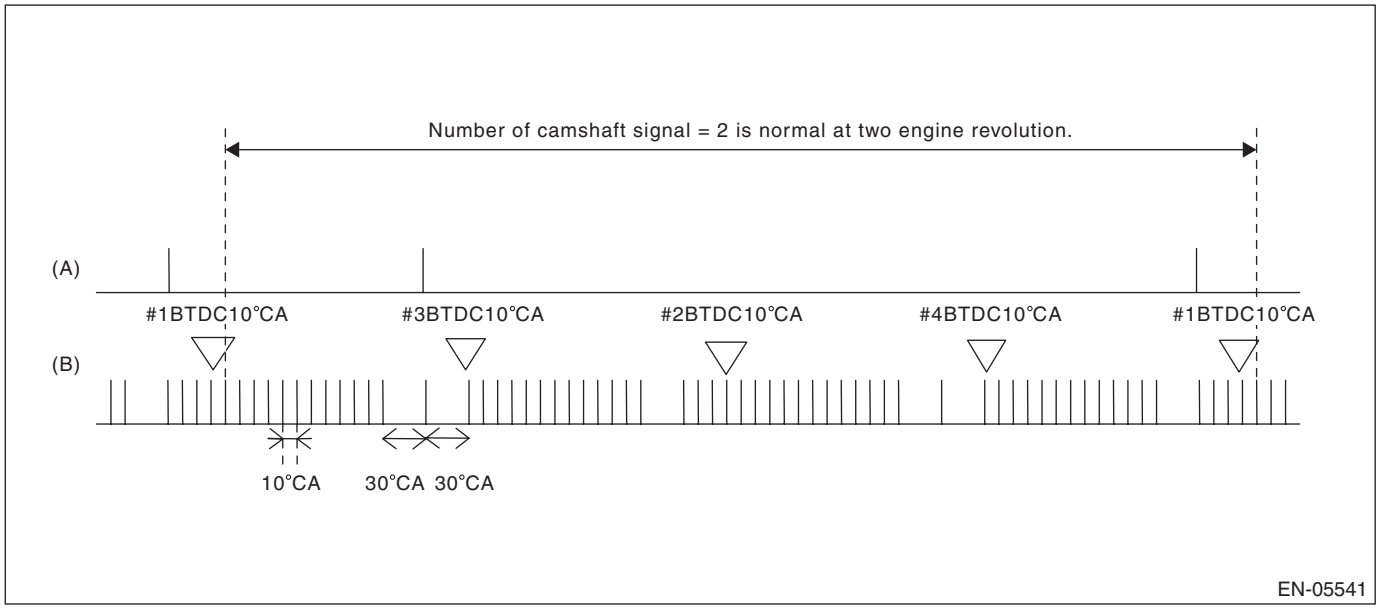

(A) Camshaft signal
(B) Crankshaft signal

3. ENABLE CONDITION

Secondary Parameters	Enable Conditions
None	

4. GENERAL DRIVING CYCLE

Always perform the diagnosis continuously.

5. DIAGNOSTIC METHOD

• Abnormality Judgment

Judge NG when the engine speed continues 8 revolutions or more for the malfunction criteria below.
Judgment Value

Malfunction Criteria	Threshold Value
Voltage	≥ 8 V
Number of camshaft position sensor signal during 2 rev.	Except 2

Time Needed for Diagnosis: 8 rev.
Malfunction Indicator Light Illumination: Illuminates as soon as the malfunction occurs.
• Normality Judgment

Judge OK and clear the NG when the malfunction criteria below are completed.

Judgment Value

Malfunction Criteria	Threshold Value
Voltage	≥ 8 V
Number of camshaft position sensor signal during 2 rev.	Except 2

6. DTC CLEAR CONDITION

- When the OK idling cycle was completed 40 times in a row
- When “Clear Memory” was performed

7. MALFUNCTION INDICATOR LIGHT CLEAR CONDITION

- When the OK driving cycle was completed 3 times in a row
- When “Clear Memory” was performed

8. FAIL SAFE

None

9. ECM OPERATION AT DTC SETTING

Memorize the freeze frame data. (For test mode $02)

AS:DTC P0341 CAMSHAFT POSITION SENSOR “A” CIRCUIT RANGE/PERFORMANCE (BANK 1 OR SINGLE SENSOR)

1. OUTLINE OF DIAGNOSIS

Detect the malfunction of camshaft position sensor output property. Judge NG when the camshaft line signal input timing is shifted from the crankshaft signal because of timing belt tooth chip, etc.

2. COMPONENT DESCRIPTION

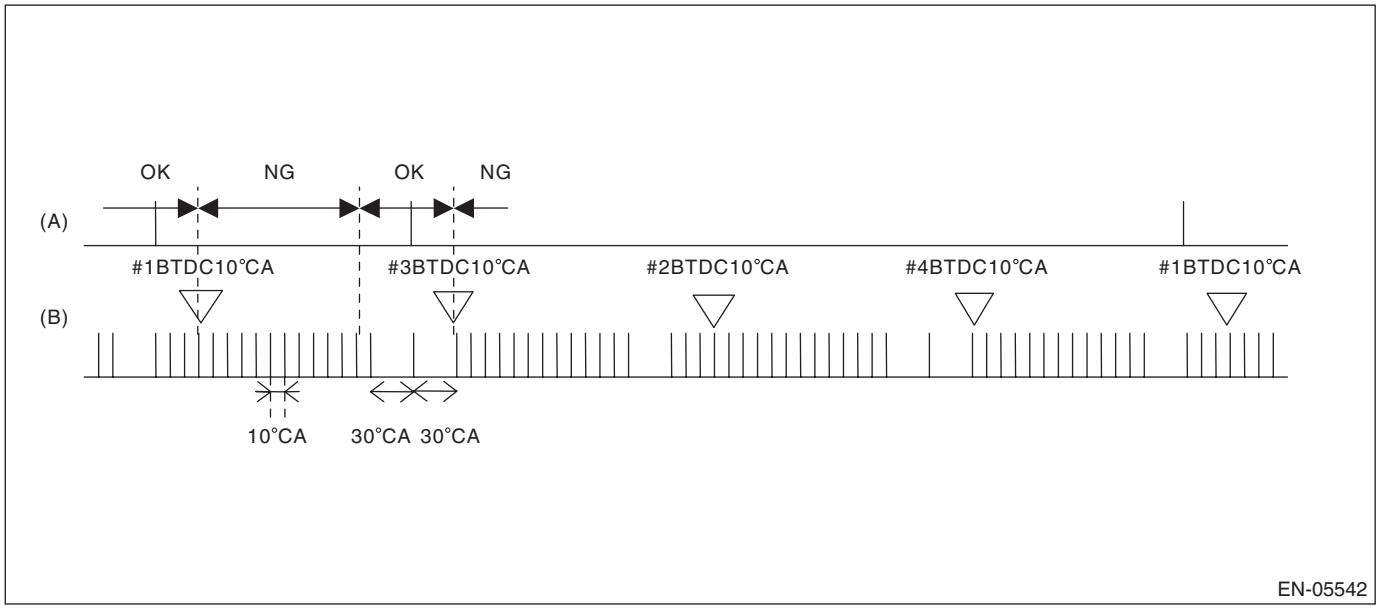

(A) Camshaft signal
(B) Crankshaft signal

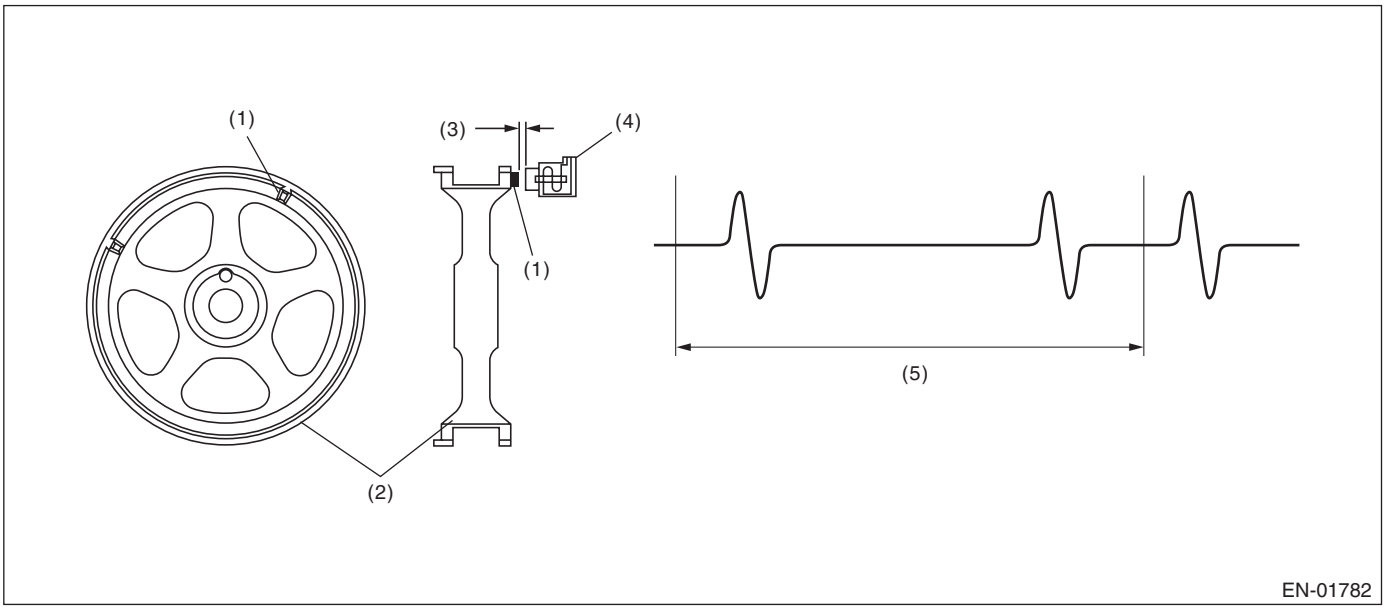

(1) Boss
(2) Cam sprocket
(3) Air gap
(4) Camshaft position sensor
(5) Camshaft one revolution (Engine two revolutions)

3. ENABLE CONDITION

Secondary Parameters	Enable Conditions
Cylinder number distinction	Completed
Battery voltage	≥ 8 V
Engine speed	550 ←→ 1000 rpm
Engine operation	In idle
Misfire	Not detect

4. GENERAL DRIVING CYCLE

Perform the diagnosis at idling continuously.

5. DIAGNOSTIC METHOD

Judge NG when the engine speed continues 4 revolutions for the malfunction criteria below. Judge OK and clear the NG when the malfunction criteria below are not completed.

Judgment Value

Malfunction Criteria	Threshold Value
Position of camshaft position sensor signal	Not between BTDC 10°CA and BTDC 80°CA

Time Needed for Diagnosis: 4 revs.

Malfunction Indicator Light Illumination: Illuminates when malfunction occurs in 2 continuous driving cycles.

6. DTC CLEAR CONDITION

- When the OK idling cycle was completed 40 times in a row
- When “Clear Memory” was performed

7. MALFUNCTION INDICATOR LIGHT CLEAR CONDITION

- When the OK driving cycle was completed 3 times in a row
- When “Clear Memory” was performed

8. FAIL SAFE

None

9. ECM OPERATION AT DTC SETTING

Memorize the freeze frame data. (For test mode $02)

AT:DTC P0400 EXHAUST GAS RECIRCULATION FLOW

1. OUTLINE OF DIAGNOSIS

Detect the malfunction of EGR system.
Intake manifold pressure (negative pressure) is stable because the throttle valve is fully closed during the fuel shut-off in deceleration. In this case, the intake manifold pressure changes when EGR valve is opened or closed. Judge EGR system is OK or NG according to intake manifold pressure change amount.

2. COMPONENT DESCRIPTION

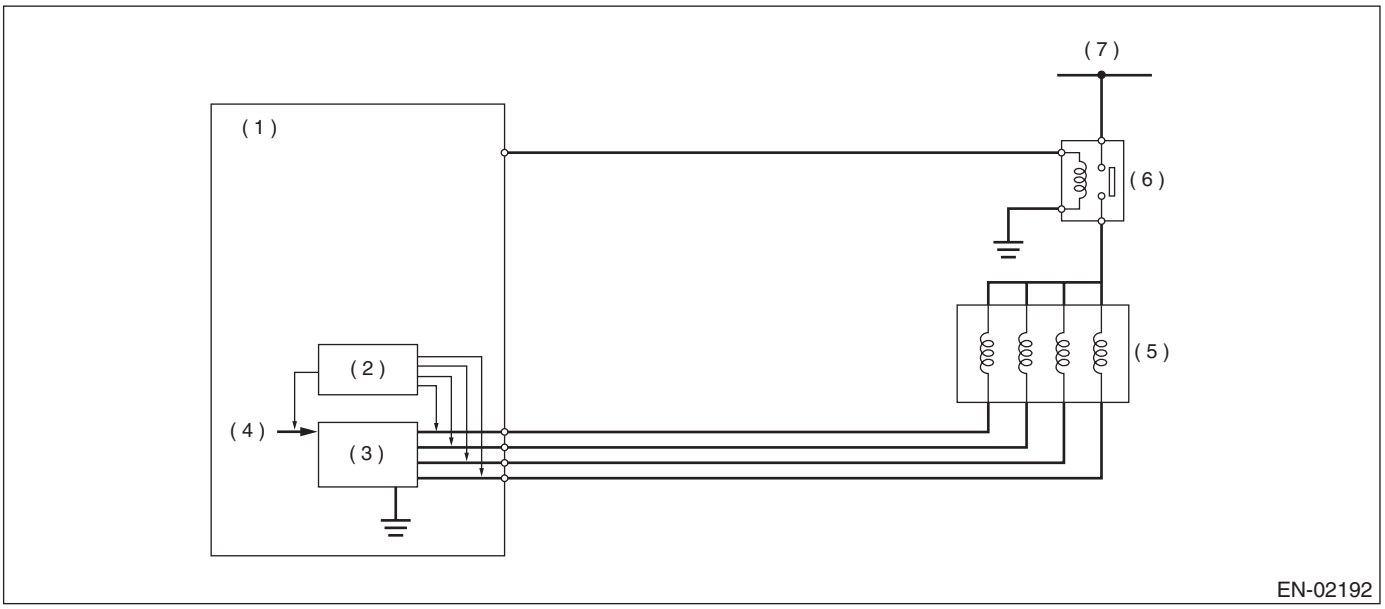

(1) ECM
(2) Detecting circuit
(3) Switching circuit
(4) CPU
(5) EGR valve
(6) Main relay
(7) Battery voltage

3. ENABLE CONDITION

Secondary Parameters	Enable Conditions
After engine starting	40 secs. or more
Engine coolant temperature	≥ 70°C (158°F)
Engine speed	1,200 ←→ 2,950 rpm
Intake manifold pressure (absolute pressure)	〈 38.7 kPa (290 mmHg, 11.42 inHg)
Estimated ambient temperature	≥ 5°C (41°F)
Throttle position	〈 0.25°
Battery voltage	〉 10.9 V
Atmospheric pressure	≥ 75.0 kPa (563 mmHg, 22.17 inHg)
Vehicle speed	≥ 53 km/h (33 MPH)
Fuel shut-off function	Operation
Neutral switch	OFF and 1 second after changing from “ON” to “OFF”
Load (air conditioner, power steering, lights, rear defroster, heater fun and radiator fan)	5 secs. or more no change

4. GENERAL DRIVING CYCLE

Perform the diagnosis only once at the fuel shut-off in deceleration in vehicle speed more than 53 km/h (approx. 33 MPH). Pay attention to vehicle speed and engine speed. (The diagnosis is not completed if vehicle speed and engine speed are out of condition due to deceleration.)

5. DIAGNOSTIC METHOD

Measure the pressure in the following procedures when the enable conditions are completed, and then diagnosis by calculating the result.
(1) PMOF1 is equal to the intake manifold pressure at enable condition completed, and EGR target step is set to 50 steps (almost fully opened).
(2) PMON is equal to the intake manifold pressure in 1 second after EGR target step is set 50 steps (when enable conditions are completed), and EGR target step is set to 0 step.
(3) PMOF2 is equal to the intake manifold pressure in 1 second after EGR target step is set to 0 step (in 2 seconds after enable conditions are completed).
Calculate the judged value using the following formula.
Judged value = [PMON − (PMOF1 + PMOF2)/2]
Judged value < 18.63 mmHg, 2.48 kPa (18.63 mmHg, 0.733 inHg) → NG
Judged value ≥ 2.48 kPa (18.63 mmHg, 0.733 inHg) → OK
Time Needed for Diagnosis: Once

Malfunction Indicator Light Illumination: Illuminates when malfunction occurs in 2 continuous driving cycles.

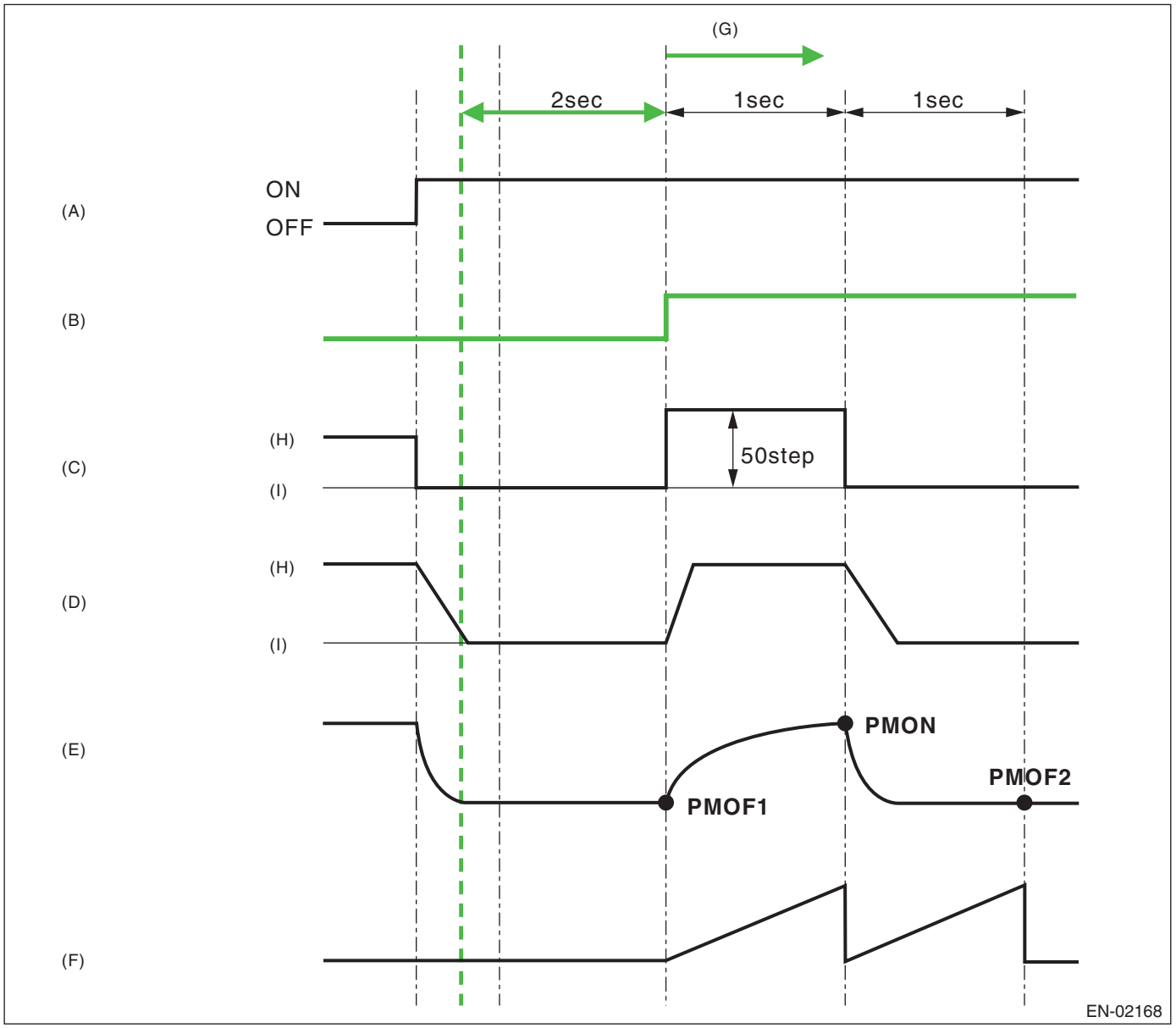

(A) Fuel shut-off in deceleration
(B) Diagnosis enable condition
(C) EGR target step
(D) EGR actual step
(E) Intake manifold pressure (At normal condition)
(F) Diagnosis mode timer
(G) Diagnosis starts.
(H) Open
(I) Close

6. DTC CLEAR CONDITION

- When the OK idling cycle was completed 40 times in a row
- When “Clear Memory” was performed

7. MALFUNCTION INDICATOR LIGHT CLEAR CONDITION

- When the OK driving cycle was completed 3 times in a row
- When “Clear Memory” was performed

8. FAIL SAFE

A/F main learning: Not allowed
Knock learning = Not allowed
EGR control: Not allowed to operate

9. ECM OPERATION AT DTC SETTING

- Memorize the freeze frame data. (For test mode $02)
- Memorize the diagnosis value and trouble standard value. (For test mode $06)

AU:DTC P0420 CATALYST SYSTEM EFFICIENCY BELOW THRESHOLD (BANK 1)

1. OUTLINE OF DIAGNOSIS

Detect the deterioration of catalyst function.
Though the front oxygen sensor output would change slowly with a new catalyst, the sensor output with a deteriorated catalyst becomes high and the inversion time is shortened. For this reason, the catalyst diagnosis is carried out by monitoring the front oxygen sensor output and comparing it with the front A/F sensor output.

2. COMPONENT DESCRIPTION

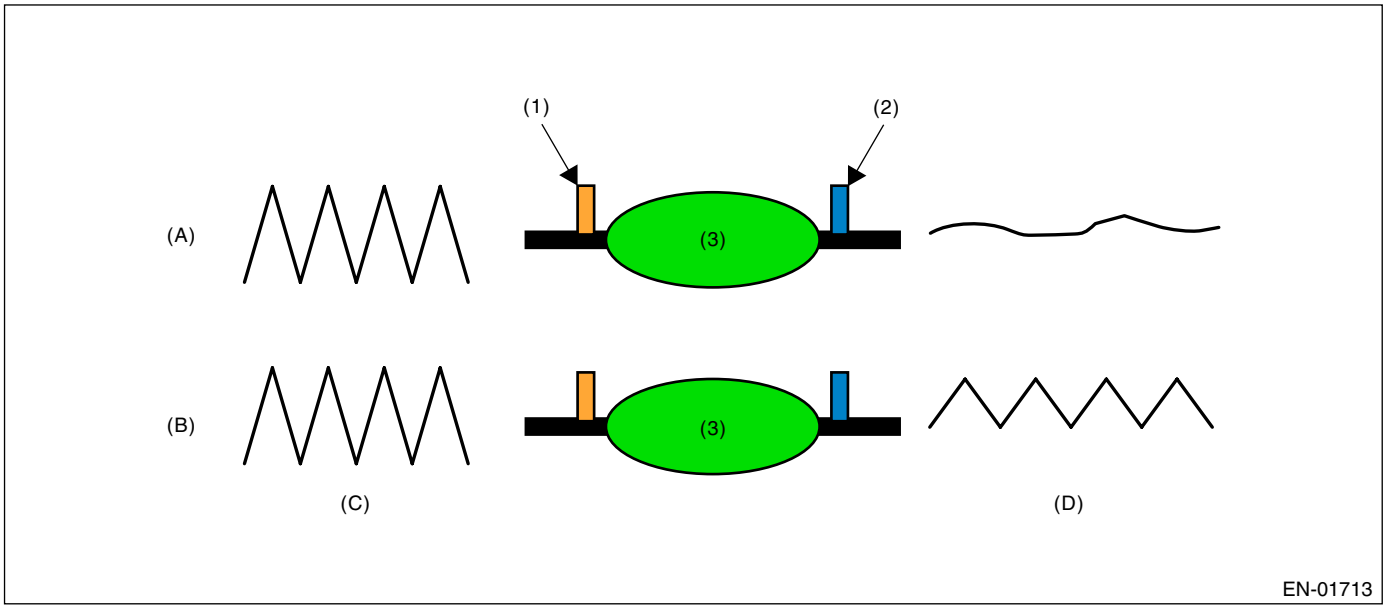

(1) Front oxygen (A/F) sensor
(2) Front oxygen sensor
(3) Catalyst
(A) Normal
(B) Deterioration
(C) Front oxygen (A/F) sensor waveform
(D) Front oxygen sensor waveform

3. ENABLE CONDITION

Secondary Parameters	Enable Conditions
Battery voltage	> 10.9 V
Atmospheric pressure	> 75.1 kPa (563 mmHg, 22.2 inHg)
Engine coolant temperature	≥ 70°C (158°F)
Catalyst warm-up counter on Map 2	≥ 8000
Misfire detection during 200 engine revs.	< 5 times
Learning value of evaporation gas density	≤ 0.20
Sub feedback	Operating
Evaporative system diagnostic	Not in operation
Difference between actual and target time lambda < 0.10	1000 milliseconds or more
Vehicle speed	> 70 km/h (43.5 MPH)
Amount of intake air	10 ←→ 40 g (0.35 ←→ 1.41 oz)/s
Engine load change every 0.5 engine revs.	< 0.02 g/rev
Rear O2 output change from below 660 mV to over	Experienced after fuel cut
After engine starting	≥ 205 seconds
Purge execution cumulative time	5 seconds or more

• Map 2

Add the following value every 512 milliseconds.

Amount of intake air (g (oz)/s)	0 (0)	3.2 (0.113)	6.4 (0.226)	9.6 (0.339)	12.8 (0.451)	16 (0.564)	19.2 (0.677)	22.4 (0.790)	25.6 (0.903)	28.8 (1.016)	32 (1.129)	35.2 (1.242)
Integrated value for warm-up counter	−8	−8	20	32	52	82	113	143	173	204	234	264

4. GENERAL DRIVING CYCLE

Perform the diagnosis once at the constant vehicle speed 70 km/h (43 MPH).

5. DIAGNOSTIC METHOD

After the malfunction criteria are completed, calculate cumulative value of front oxygen (A/F) sensor lambda deviation (Σ |(sglmd$_n$ − sglmd$_{n-1}$)|) every 128 milliseconds and cumulative value of rear oxygen sensor output voltage deviation (Σ |(ro2sad$_n$ − ro2sad$_{n-1}$)|).
Calculate the diagnosis value when the front oxygen (A/F) sensor output fluctuation value more than specified value.
Judge NG when the malfunction criteria below are completed, and judge OK when they are not completed.
Judgment Value

Malfunction Criteria	Threshold Value
Σ |(ro2sad$_n$ − ro2sad$_{n-1}$)| / Σ |(sglmd$_n$ − sglmd$_{n-1}$)|	> 7.5

Time Needed for Diagnosis: 30 — 55 seconds
Malfunction Indicator Light Illumination: Illuminates when malfunction occurs in 2 continuous driving cycles.

6. DTC CLEAR CONDITION

- When the OK idling cycle was completed 40 times in a row
- When “Clear Memory” was performed

7. MALFUNCTION INDICATOR LIGHT CLEAR CONDITION

- When the OK driving cycle was completed 3 times in a row
- When “Clear Memory” was performed

8. FAIL SAFE

None

9. ECM OPERATION AT DTC SETTING

- Memorize the freeze frame data. (For test mode $02)
- Memorize the diagnostic value and trouble standard value. (For test mode $06)

AV:DTC P0442 EVAPORATIVE EMISSION CONTROL SYSTEM LEAK DETECTED (SMALL LEAK)

1. OUTLINE OF DIAGNOSIS

Perform the diagnosis of leakage of fuels system and valve functions.

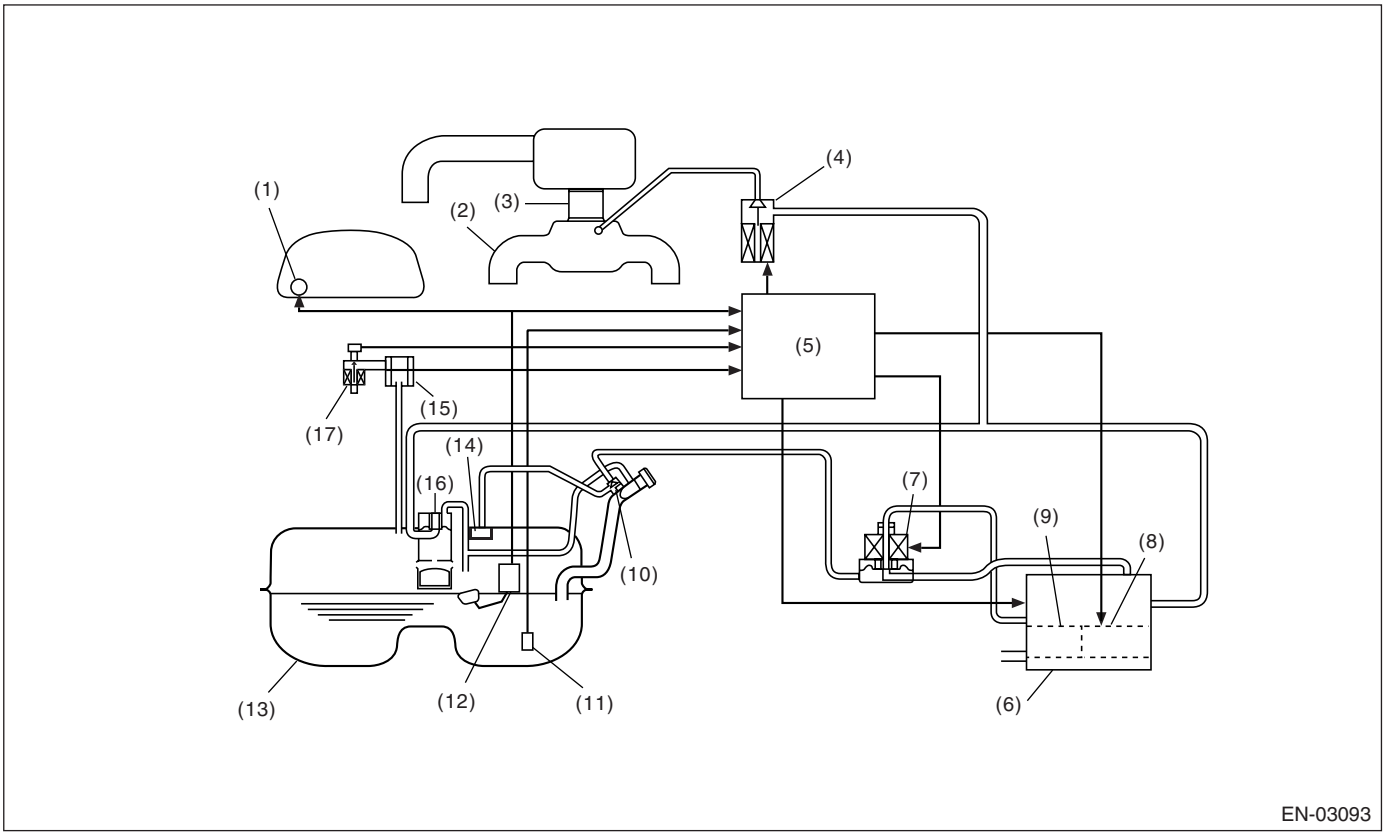

(1)	Fuel meter	(7)	Pressure control solenoid valve	(13)	Fuel tank
(2)	Intake manifold	(8)	Drain valve	(14)	Fuel cut valve
(3)	Throttle body	(9)	Drain filter	(15)	Fuel tank pressure sensor
(4)	Purge control solenoid valve	(10)	Shut-off valve	(16)	Vent valve
(5)	Engine control module (ECM)	(11)	Fuel temperature sensor	(17)	Fuel tank sensor control valve
(6)	Canister	(12)	Fuel level sensor		

In this system diagnosis, checking for leakage and valve operation is conducted by changing the fuel tank pressure, and monitoring the pressure change using the fuel tank pressure sensor. 0.04-inch diagnosis is performed in the order of mode Z, mode A, mode B, mode C and mode D, and 0.02-inch diagnosis is performed in the order of mode A, mode B, mode C, mode D and mode E.

• 0.04-inch Diagnosis

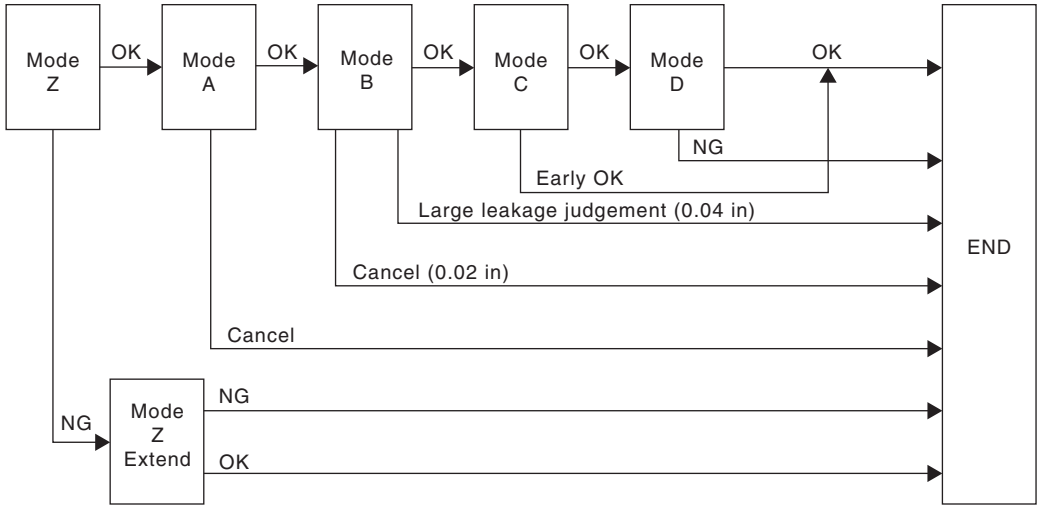

EN-02193

Mode	Mode Description	Diagnosis Period
Mode Z (CPC open fail diagnosis)	Perform the diagnosis of CPC open fail depending on the amount of the tank pressure change after the diagnosis has started.	3 — 16 seconds
Mode A (Estimated evaporation amount)	Calculate the tank pressure change amount (P1).	10 seconds
Mode B (Sealed negative pressure, large leakage judgment)	Introduce the intake manifold pressure to the fuel tank and reduce the tank pressure to the desired value. If the tank pressure cannot be reduced, it is diagnosed as large leak.	5 — 25 seconds
Mode C (Pressure increase check advanced OK judgment)	Wait until the tank pressure becomes the desired value (detection starting pressure of P2). If the tank pressure does not become the value, make advanced OK judgment.	1 — 15 seconds
Mode D (Negative pressure variation measurement evaporation leakage diagnosis)	Calculate the tank pressure variation (P2), and obtain the diagnostic value using P1 of Mode A. Perform the evaporation leakage diagnosis using the diagnostic value.	10 seconds

• 0.02-inch Diagnosis

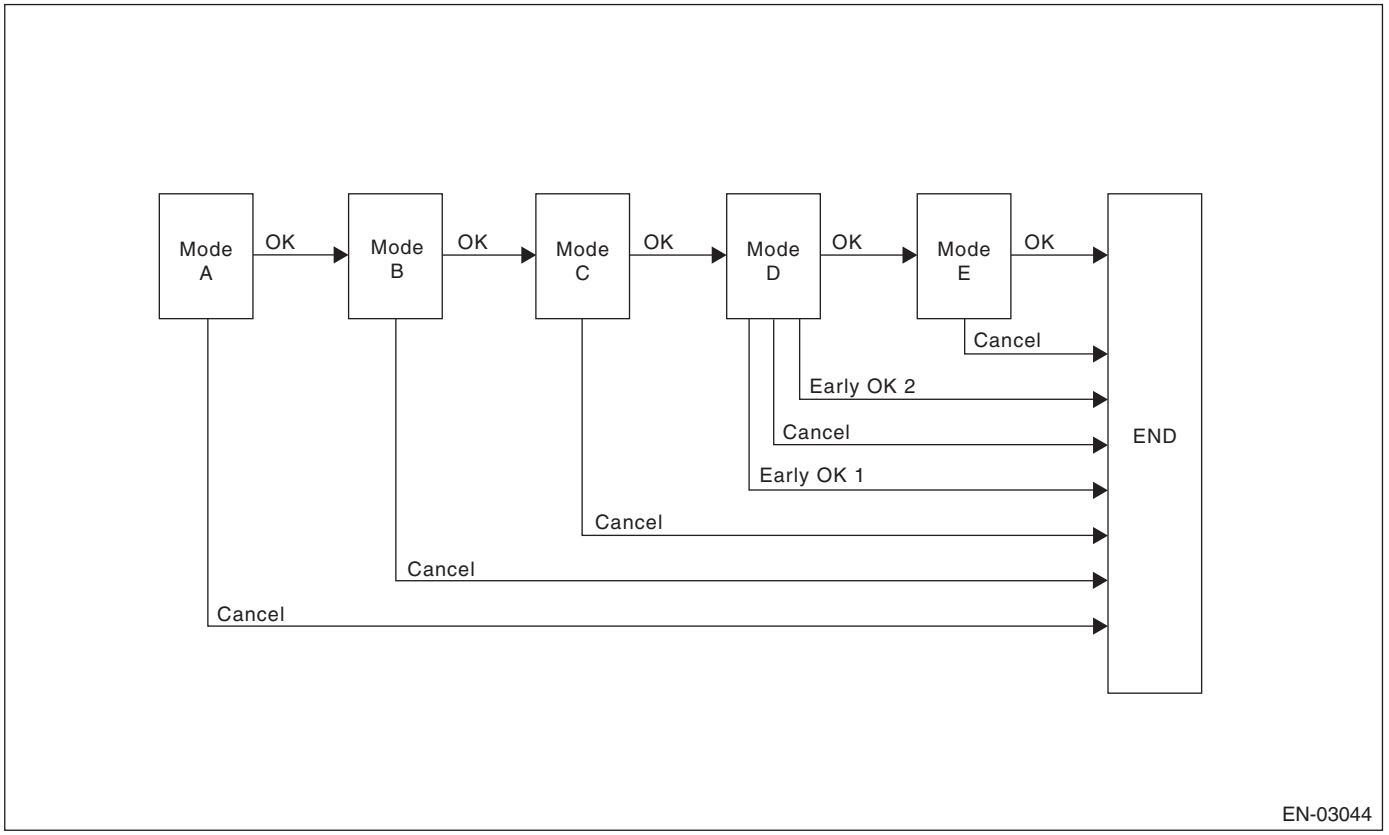

Mode	Mode Description	Diagnosis Period
Mode A (0 point correction)	Wait until the tank pressure returns to 0 point 0 kPa (0 mmHg, 0 inHg) when tank pressure is high.	0 — 12 seconds
Mode B (Introduce negative pressure)	Introduce the intake manifold pressure to the fuel tank and reduce the tank pressure to the desired value.	0 — 27 seconds
Mode C (Hold negative pressure)	Wait until the tank pressure returns to the start pressure of P2 calculation.	0 — 20 seconds
Mode D (Negative pressure variation calculation)	Calculate the time until the tank pressure becomes the end pressure of P2 calculation. Make advanced OK judgment when the tank pressure does not become the end pressure of P2 calculation.	0 — 200 seconds
Mode E (Evaporative gas amount calculation)	Calculate the amount of evaporative gas yield (P1).	0 — 280 seconds

• Mode Table for Evaporative Emission Control System Diagnosis

Mode	Behavior of tank pressure under normal conditions	Diagnostic item	DTC
Mode Z	Nearly same as atmospheric pressure (equivalent pressure of 0 kPa (0 mmHg, 0 inHg))	CPC is judged to be stuck open.	P0457
Mode A	Pressure is in proportion to amount of evaporative emission.		
Mode B	Negative pressure is formed due to intake manifold negative pressure	Large leakage	P0457
Mode C	Target pressure is reached.		None
Mode D	Pressure change is small.	EVAP system is judged to have large leak [1.0 mm (0.04 in)].	P0442

2. COMPONENT DESCRIPTION

• Pressure Control Solenoid Valve

PCV controls the fuel tank pressure to be equal to the atmospheric air pressure.
Normally, the solenoid is set to OFF. And the valve opens and closes mechanically in accordance with the pressure difference between tank and atmospheric air, or tank and canister.
During the diagnosis, the valve is forcibly opened by setting the solenoid to ON.

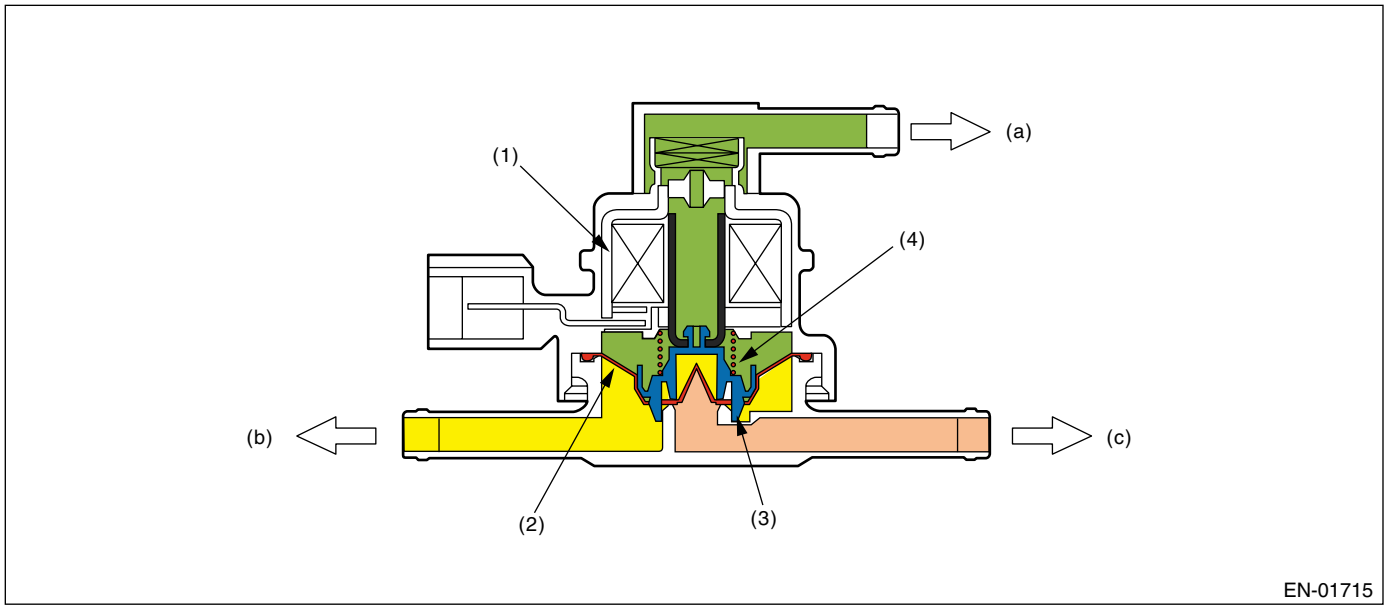

(1) Solenoid
(2) Diaphragm
(3) Valve
(4) Spring
(a) Atmospheric pressure
(b) Fuel tank
(c) Canister

• Valve Operation and Air Flow

In the figure below, divided by the diaphragm, the part above X is charged with atmospheric air pressure, and the part below X is charged with tank pressure. Also, the part above Y is charged with tank pressure, and the part below Y is charged with canister pressure.
If the atmospheric air pressure port is A, tank pressure port is B, and canister pressure port is C, the air flows according to pressure difference from each port as shown in the table below.

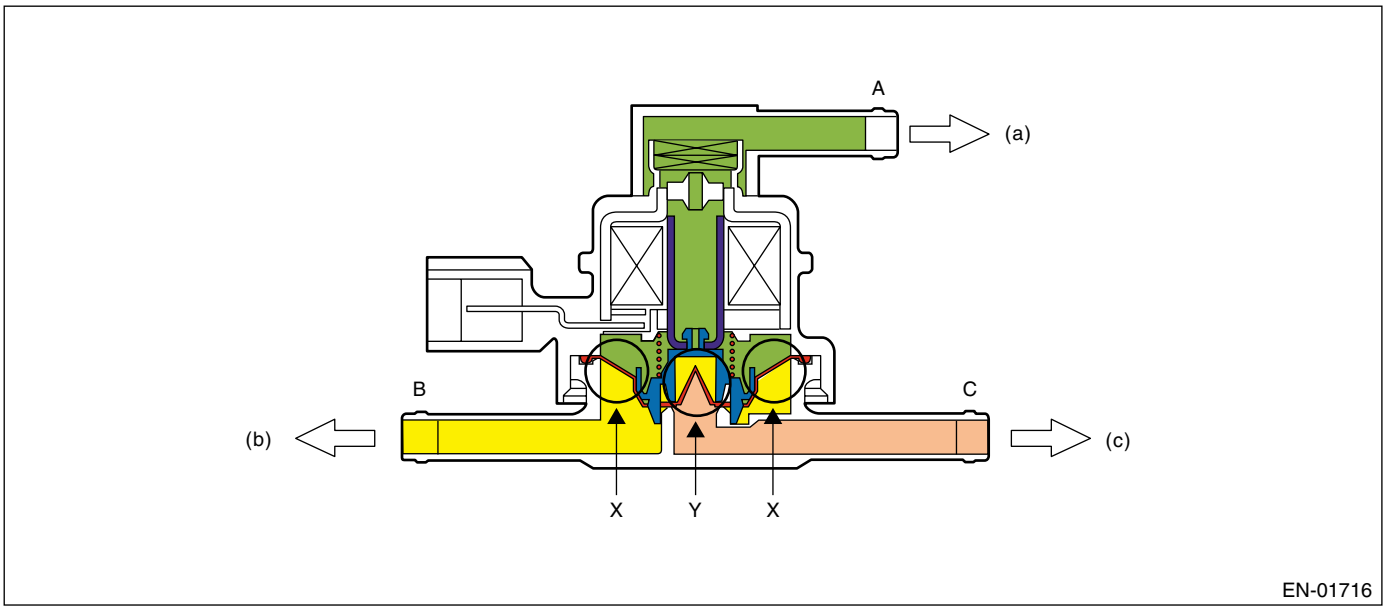

(a) Atmospheric pressure (b) Fuel tank (c) Canister

Condition of pressure	Flow
A < B (solenoid OFF)	B → C
B < C (solenoid OFF)	C → B
Solenoid ON	B ←→ C

• When A < B (Solenoid OFF)

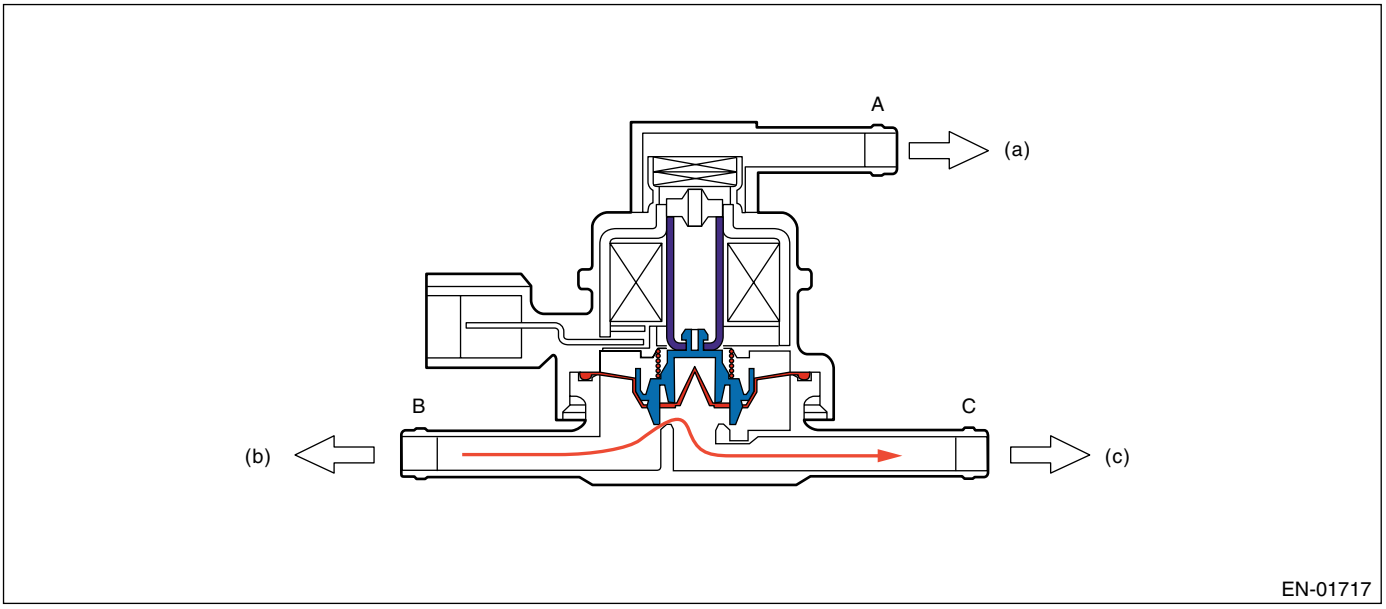

(a) Atmospheric pressure (b) Fuel tank (c) Canister

• When B < C (Solenoid OFF)

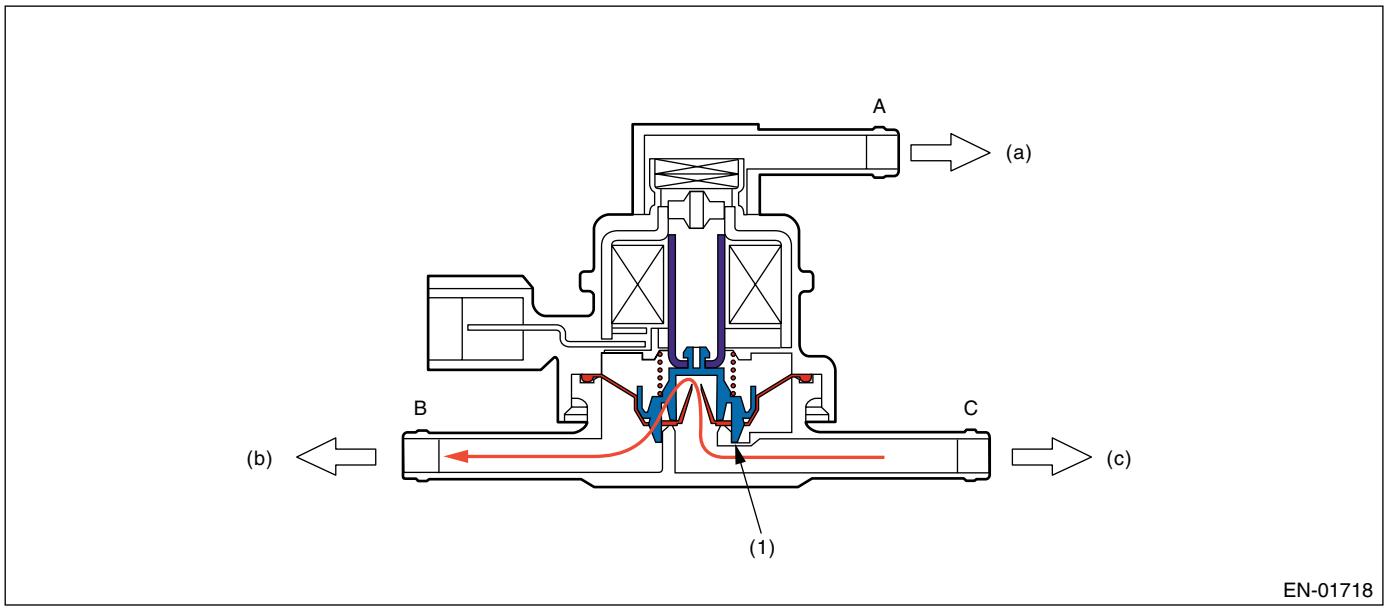

(1) Valve

(a) Atmospheric pressure
(b) Fuel tank
(c) Canister

• When Solenoid is ON

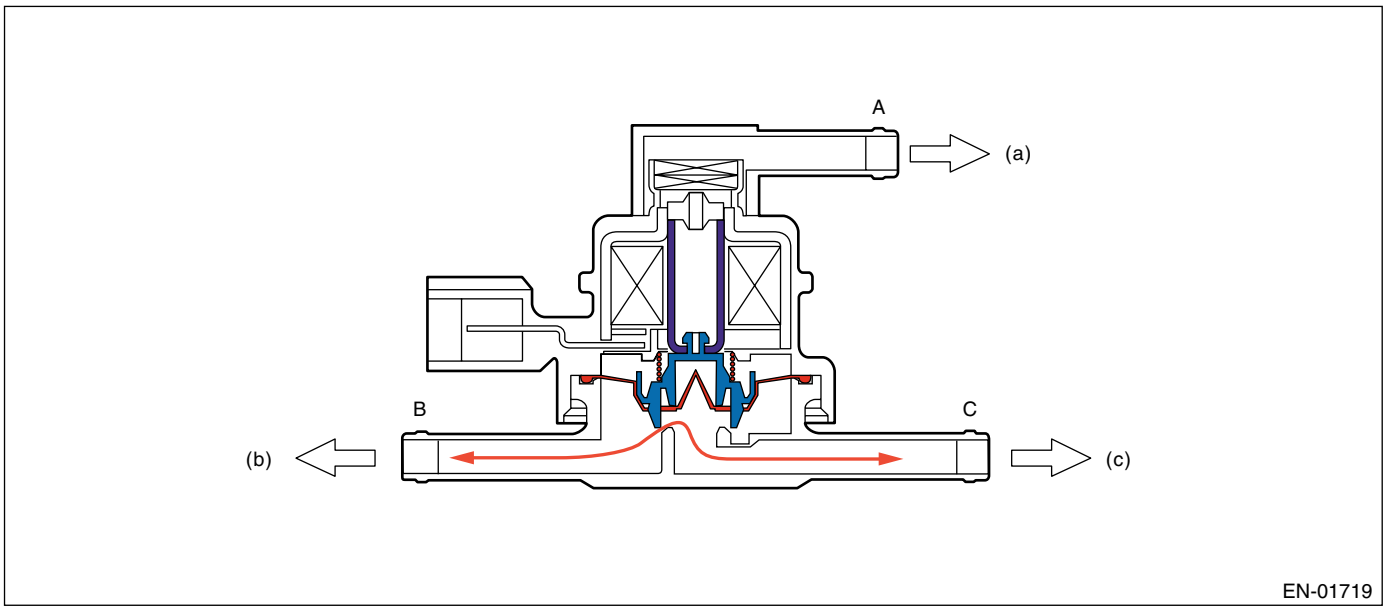

(a) Atmospheric pressure

(b) Fuel tank

(c) Canister

• Drain valve

Drain valve controls the ambient air to be introduced to the canister.

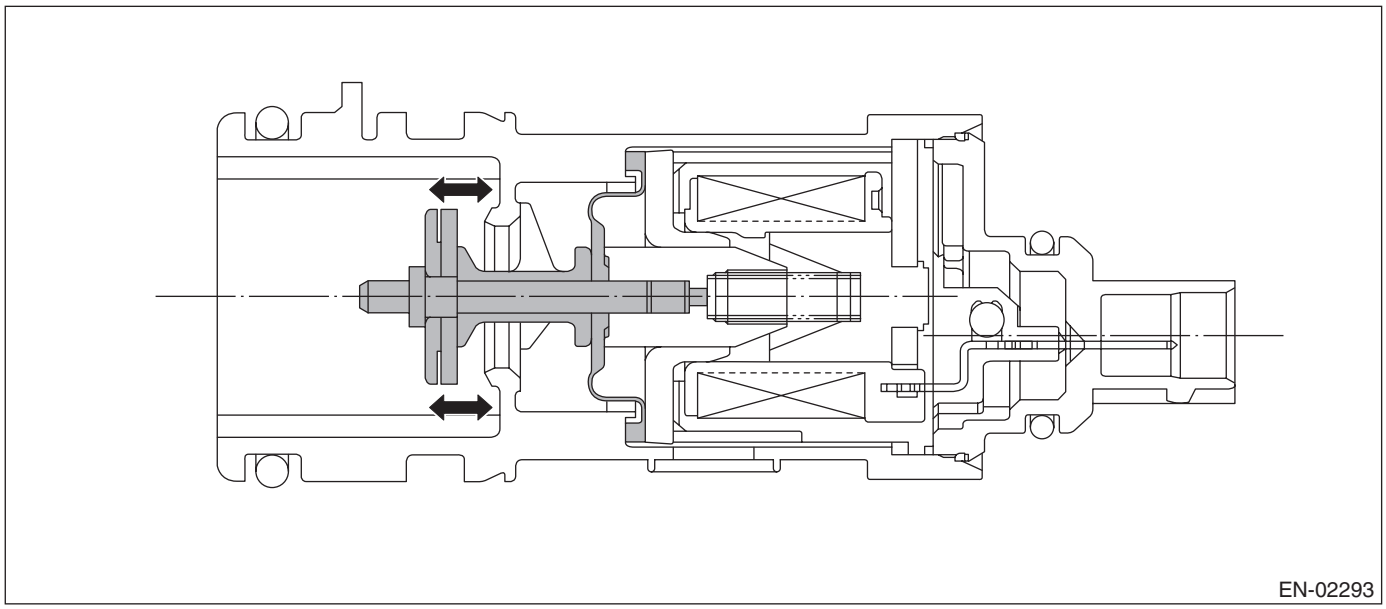

• Fuel Tank Sensor Control Valve

One of the fuel tank sensor control valve is connected to fuel tank pressure sensor and the other is released to atmosphere. The passage to fuel tank pressure sensor is usually released to atmosphere because the solenoid is set to OFF, but the solenoid is set to ON at diagnosis and the passage open to atmosphere can be closed.

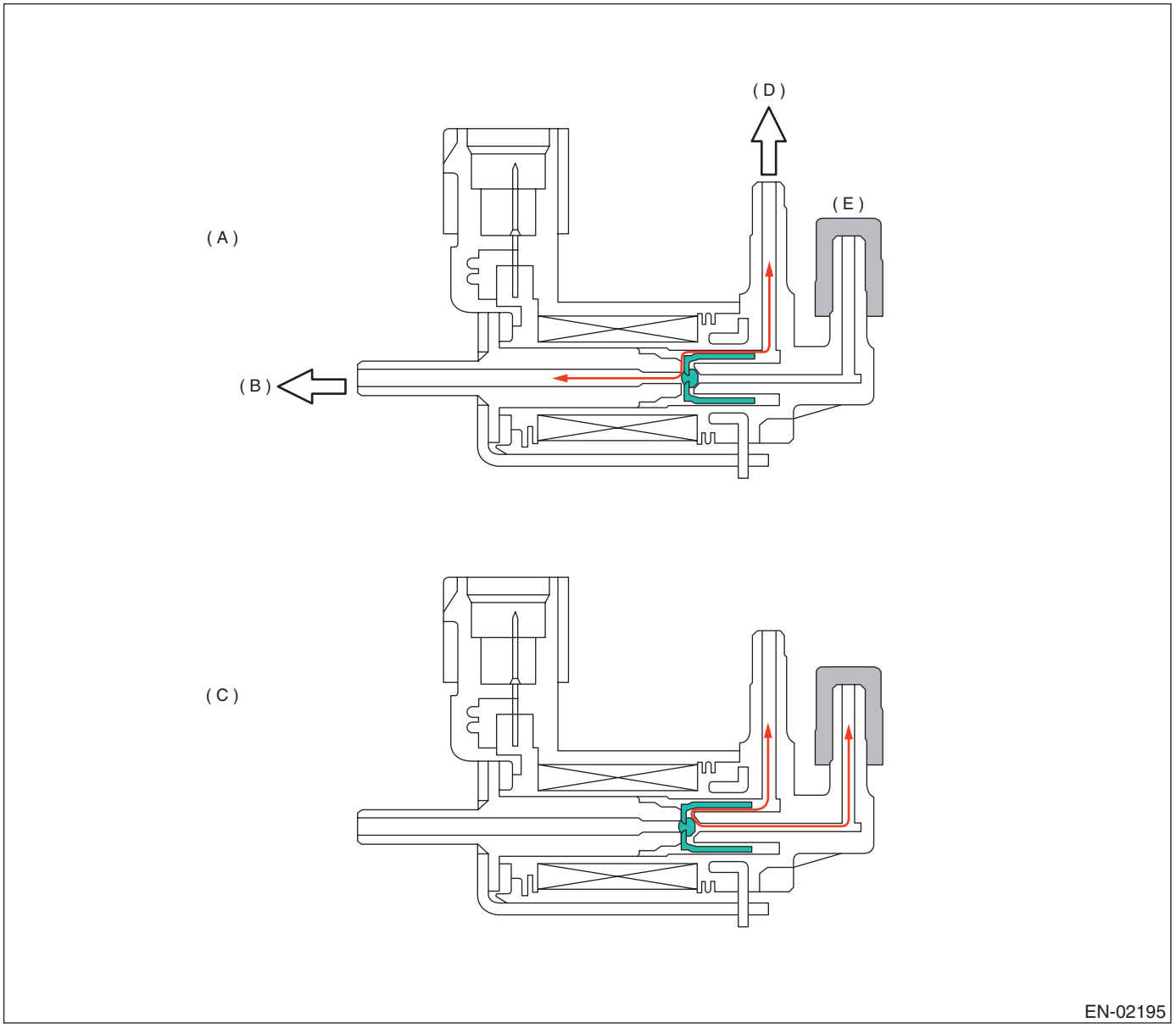

(A) Released to atmosphere (Solenoid OFF)
(B) Ambient air
(C) During diagnostics (Solenoid ON)
(D) To pressure sensor
(E) Plug

• Purpose of this solenoid

Fuel tank pressure sensor detects the difference between the atmospheric air pressure and the tank pressure and the ECM monitors the pressure difference.
Even if the tank pressure is constant, the atmospheric air pressure varies depending on the vehicle altitude, and the pressure signal transmitted to ECM will change.

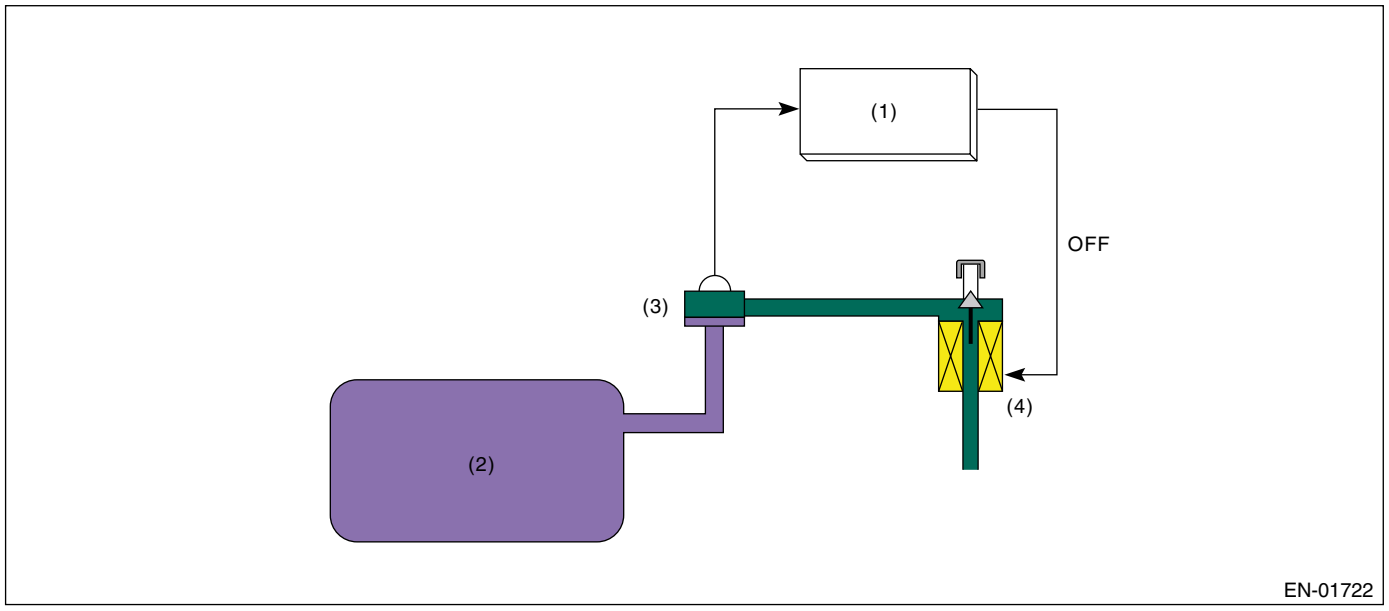

(1) Engine control module (ECM)
(2) Fuel tank
(3) Fuel tank pressure sensor
(4) Fuel tank sensor control valve

Especially, in the small leakage [0.5 mm (0.02 in)], minute change in the tank pressure has to be detected. This diagnosis period is long (approx. 29 seconds). And the vehicle altitude change during the diagnosis will lead the atmospheric air pressure change. In this case, it becomes difficult to precisely detect the tank pressure variation, resulting erroneous diagnosis. Therefore, using the fuel tank sensor control valve, atmospheric air is sealed between the fuel tank pressure sensor and fuel tank sensor control valve, maintaining the air pressure constant and enabling the detection of minute variation of tank pressure.

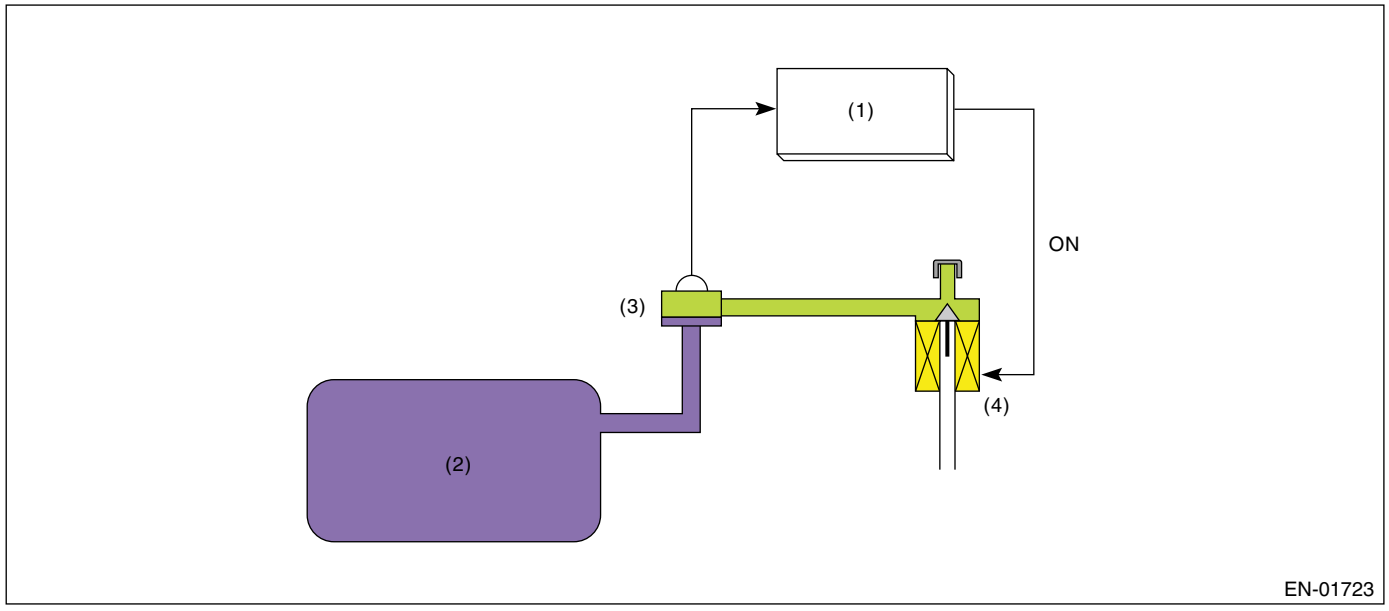

(1) Engine control module (ECM)
(2) Fuel tank
(3) Fuel tank pressure sensor
(4) Fuel tank sensor control valve

NOTE:
ECM also has the atmospheric air pressure sensor, and always monitors atmospheric air. However, as the monitoring range is large, that is, 53 to 107 kPa (400 to 800 mmHg, 16 to 32 inHg) it is not suitable for detection of minute pressure variation.
In the case of small leakage diagnosis, the tank pressure variation is very small, that is, 0.13 to 0.27 kPa (1 to 2 mmHg, 0.04 to 0.08 inHg) and the fuel tank pressure sensor is equipped.

3. ENABLE CONDITION

0.04-inch Diagnosis

Secondary Parameters	Enable Conditions
Battery voltage	≥ 10.9 V
Barometric pressure	≥ 75.1 kPa (563 mmHg, 22.2 inHg)
Accumulated time of canister purge	120 seconds or more
After engine starting	856 seconds or more
Learning value of evaporation gas density	≤ 0.08
Engine speed	1050 ←→ 6,000 rpm
Fuel tank pressure	≥ –4.00 kPa (–30 mmHg, –1.18 inHg)
Intake manifold vacuum (relative pressure)	< –26.7 kPa (–200 mmHg, –7.87 inHg)
Vehicle speed	≥ 32 km/h (20 MPH)
Fuel level	9.6 ←→ 54.4 ℓ (2.54 ←→ 14.37 US gal, 2.11 ←→ 11.97 Imp gal)
Closed air/fuel ratio control	In operation
Fuel temperature	–10 ←→ 45°C (14 ←→ 113°F)
Intake air temperature	≥ –10°C (14°F)
Pressure change per second	< 0.13 kPa (0.96 mmHg, 0.04 inHg)
Min. pressure change per second – Max. pressure change per second	< 0.23 kPa (1.70 mmHg, 0.07 inHg)
Fuel level change	< 3.0 ℓ (3.2 US qt, 2.6 Imp gal)/128 milliseconds
Air fuel ratio	0.76 — 1.25

0.02-inch Diagnosis

Secondary Parameters	Enable Conditions
(At starting a diagnosis)	
Evap. diagnosis	Not finished
Battery voltage	≥ 10.9 V
Atmospheric pressure	≥ 75.1 kPa (563 mmHg, 22.2 inHg)
Since last incomplete diagnosis event of 0.02-inch leakage	> 600 seconds
Accumulated time of canister purge	120 seconds or more
After engine starting	770 second or more
Fuel temperature	−10 ←→ 55°C (14 ←→ 131°F)
Or engine coolant temperature at engine start	< 40°C (104°F) < 2,400 seconds
And time after engine start	
Fuel level	9.6 ←→ 54.4 ℓ (2.54 ←→ 14.37 US gal, 2.11 ←→ 11.97 Imp gal)
Intake manifold vacuum (relative pressure)	< −8.0 kPa (−60 mmHg, −2.36 inHg)
Fuel tank pressure	−0.43 — 1.43 kPa (−3.2 — 10.7 mmHg, −0.13 — 0.42 inHg)
Vehicle speed	≥ 68 km/h (42 MPH)
Closed air/fuel ratio control	In operation
Engine speed	550 ←→ 6,000 rpm
(During diagnosis)	
Fuel level change	≤ 5 ℓ (5.3 US qt, 4.4 Imp qt)
Pressure change per second	< 0.06 kPa (0.44 mmHg, 0.02 inHg)
Min. tank pressure change per second — Max. tank pressure change per second	< 0.07 kPa (0.51 mmHg, 0.02 inHg)
|Tank pressure change per second|	≤ 0.1 kPa (0.75 mmHg, 0.03 inHg)
Pressure change (Mode D)	−0.47 ←→ 0.32 kPa (−3.5 ←→ 2.4 mmHg, −0.14 ←→ 0.09 inHg)
Pressure change (Mode E)	−0.32 ←→ 0.32 kPa (−2.4 ←→ 2.4 mmHg, −0.09 ←→ 0.09 inHg)

4. GENERAL DRIVING CYCLE

• 0.04-inch Diagnosis

• Perform the diagnosis only once in more than 856 seconds after the engine start at the constant driving speed of 32 km/h (20 MPH) or more.
• Pay attention to the fuel temperature and fuel level.

• 0.02-inch Diagnosis

• Perform diagnosis in more than 770 seconds after engine start at the constant speed of 68 km/h (42 MPH) or more, and judged OK or NG.
• If not judged OK or NG, repeat the diagnosis.
• Pay attention to the fuel temperature and fuel level.

5. DIAGNOSTIC METHOD

• MODE Z (Purge control solenoid valve open malfunction diagnosis, CPC close malfunction diagnosis)

DTC P0457

• Purpose of Mode Z

When performing the leakage diagnosis of EVAP system, CPC has to operate normally. Therefore, mode Z is used to diagnose the CPC open fixation.
If the CPC open fixation trouble is detected, the EVAP system leakage diagnosis is cancelled.

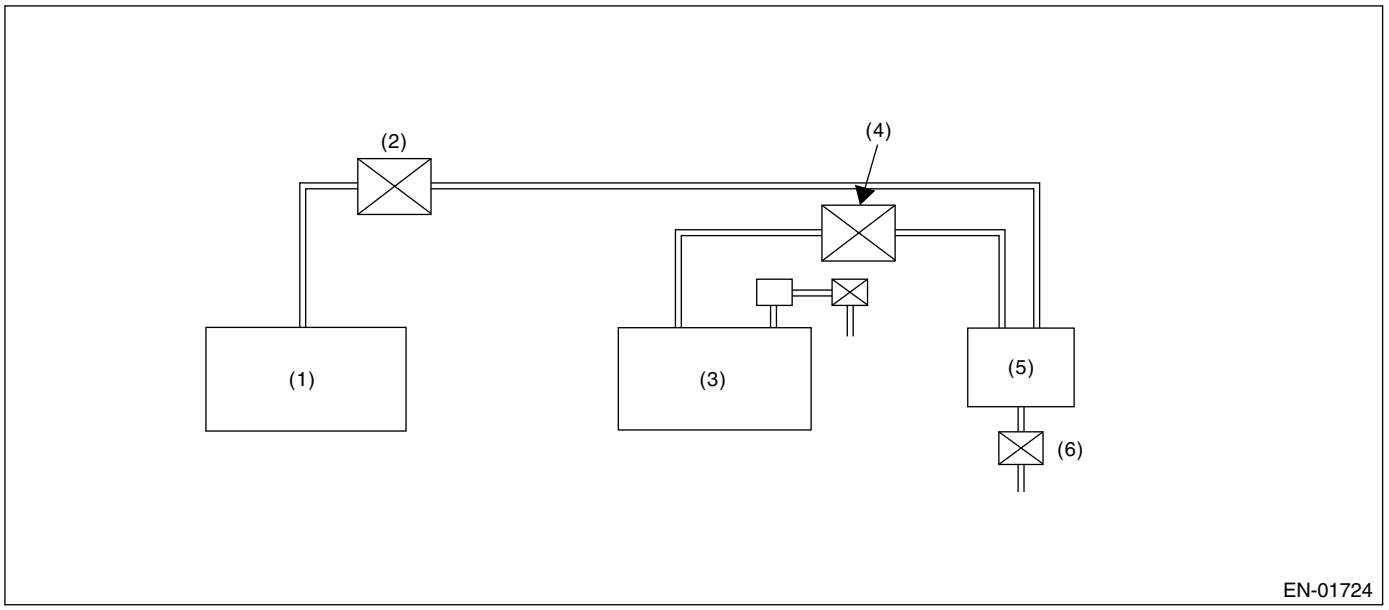

(1) Engine
(2) Purge control solenoid valve open
(3) Fuel tank
(4) Pressure control solenoid valve close
(5) Canister
(6) Drain valve stuck close

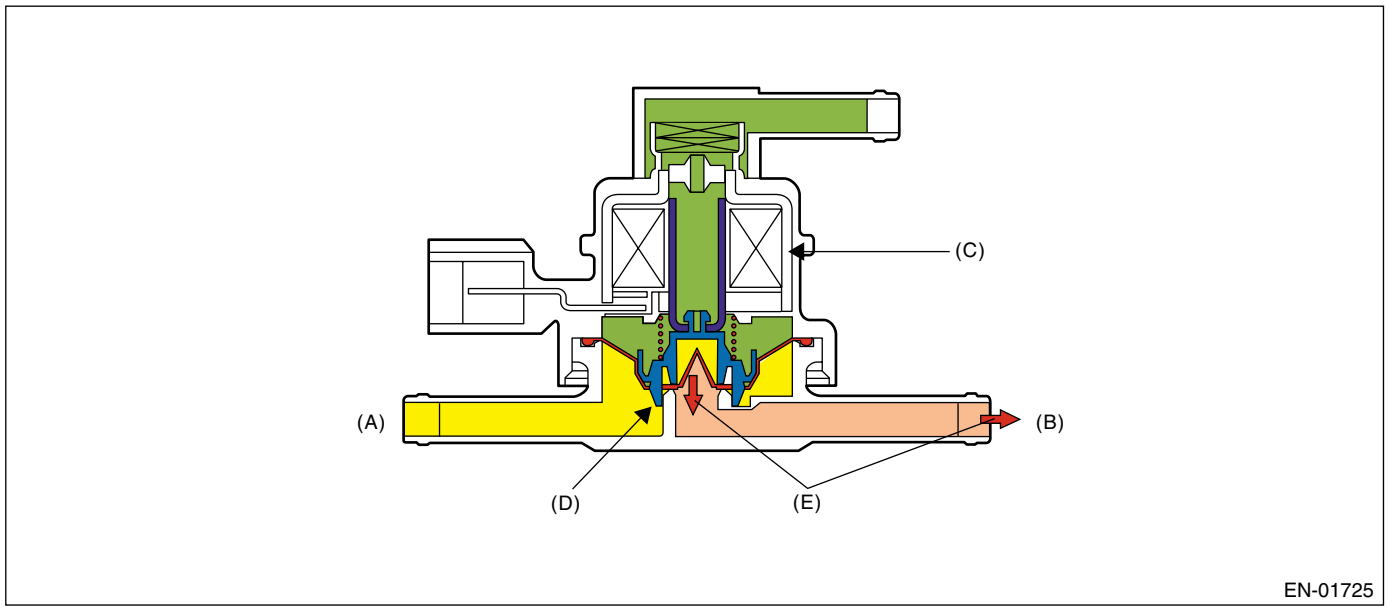

(A) To fuel tank
(B) To canister (Negative pressure)
(C) Solenoid ON
(D) Valve cannot be open.
(E) Negative pressure

• Diagnostic method

CPC open fixation diagnosis are performed in mode Z as shown in the figure below.

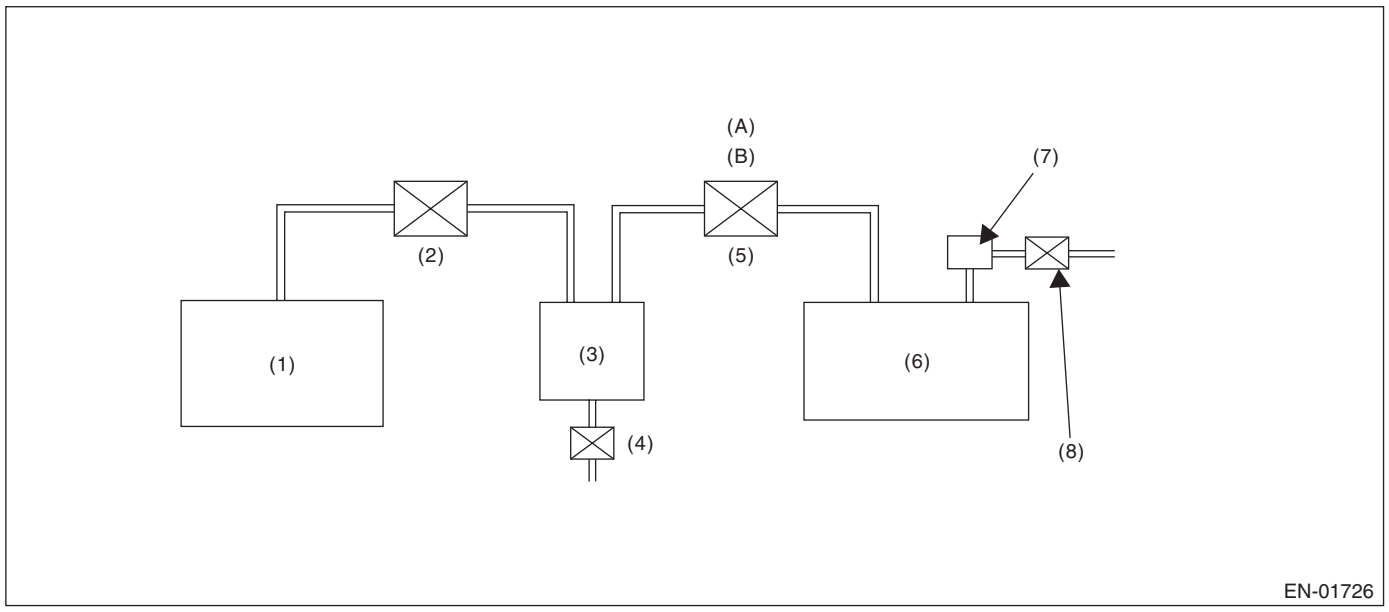

(1) Engine
(2) Purge control solenoid valve
(3) Canister
(4) Drain valve
(5) Pressure control solenoid valve
(6) Fuel tank
(7) Fuel tank pressure sensor
(8) Fuel tank sensor control valve

(A) Normal condition: mechanical control
(B) During diagnosis: electronic control

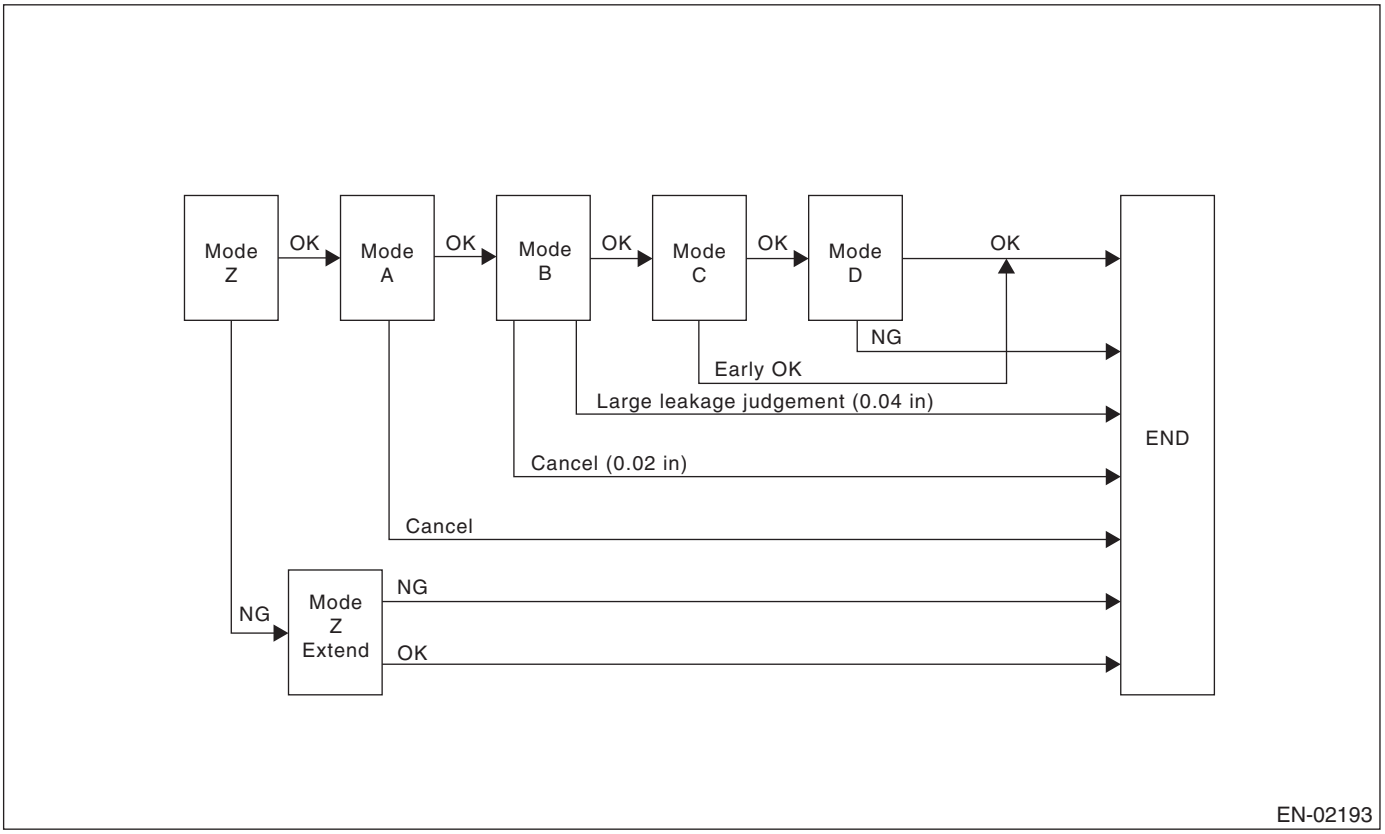

• Diagnosing function of CPC [P0457]

CPC functional diagnosis is performed by monitoring the tank pressure in Mode Z.

Normality Judgment

Make OK judgment in 3 seconds after Mode Z started, and change to Mode A if OK.

Judgment Value

Malfunction Criteria	Threshold Value	DTC
(Tank pressure when Mode Z started) — (Tank pressure when Mode Z finished)	≤ 0.4 kPa (3 mmHg, 0.12 inHg)	P0457

• Normal Operation

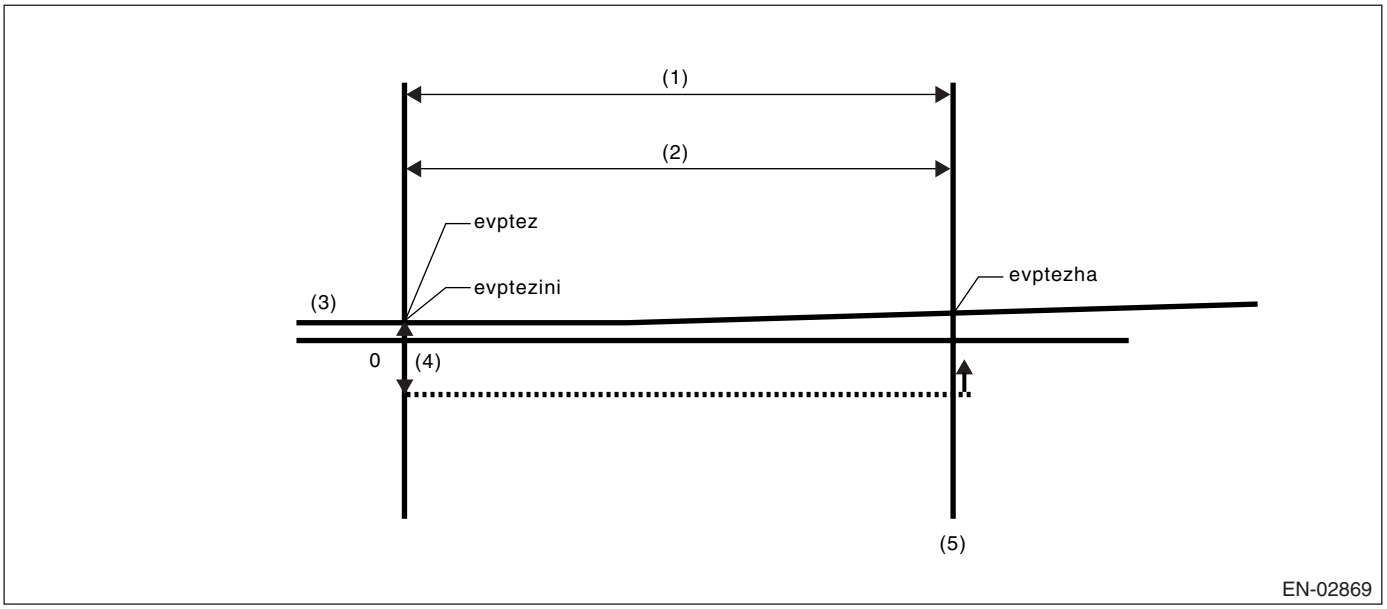

(1) Mode Z
(2) 3 seconds
(3) Fuel tank pressure
(4) 0.4 kPa (3.0 mmHg, 0.12 inHg)
(5) OK judgment

- evptez − evptezha ≤ 0.4 kPa (3.0 mmHg, 0.12 inHg)
- evptezini − evptezha ≤ 0.4 kPa (3.0 mmHg, 0.12 inHg)

With judge normal when calculation is completed.

Abnormality Judgment

If OK judgment cannot be made, extend Mode Z 16 seconds more, and judge NG when all the criteria below are completed in 16 seconds.

Judgment Value

Malfunction Criteria	Threshold Value	DTC
(Tank pressure when Mode Z started) − (Tank pressure when Mode Z finished)	> 0.6 kPa (4.5 mmHg, 0.18 inHg)	P0457
Tank pressure when Mode Z started	≤ 1.43 kPa (10.7 mmHg, 0.42 inHg)	
Time for no fuel rolling of 2 ℓ or more	≥ 40 seconds	

Time Needed for Diagnosis: 16 seconds

Malfunction Indicator Light Illumination: Illuminates when malfunction occurs in 2 continuous driving cycles.

Finish the Evap. diagnosis when making NG judgment for purge control solenoid valve open fixation.

Cancel the Evap. diagnosis when the OK/NG judgment for drain valve close fixation and purge control solenoid valve open fixation cannot be made in Mode Z.

• Purge Control Solenoid Valve Open Fixation

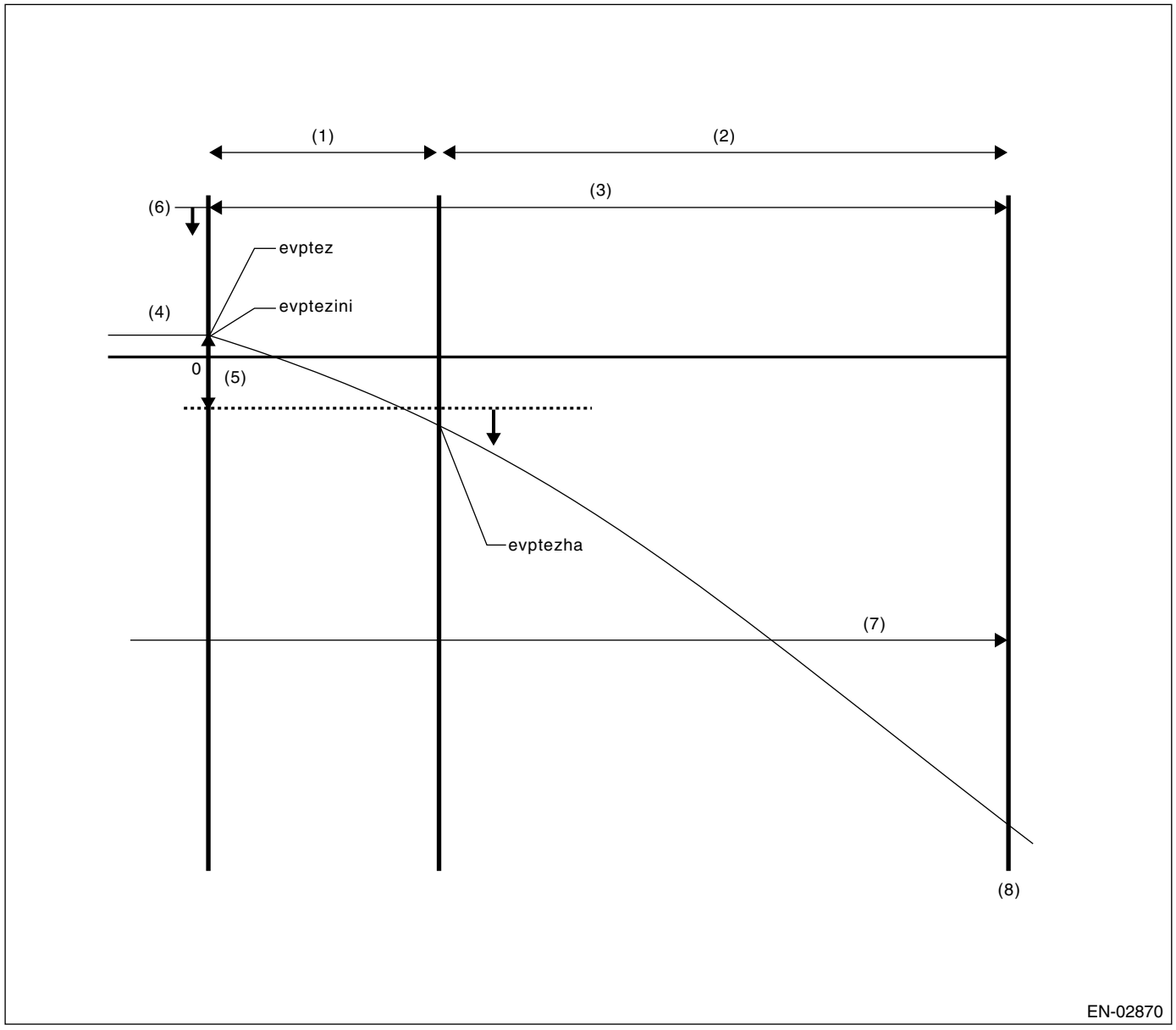

(1)	Mode Z	(4)	Fuel tank pressure	(7)	No fuel rolling for more than 40 seconds
(2)	Mode Z extension	(5)	0.87 kPa (6.5 mmHg, 0.26 inHg)		
(3)	16 seconds	(6)	1.43 kPa (10.7 mmHg, 0.42 inHg)	(8)	NG judgment

- evptezini, evptez ≤ 1.43 kPa (10.7 mmHg, 0.42 inHg)
- evptez − evptezha ≤ 0.87 kPa (6.5 mmHg, 0.26 inHg)
- evptezini − evptezha ≤ 0.87 kPa (6.5 mmHg, 0.26 inHg)
- No fuel rolling of above 2 ℓ (0.53 US gal, 0.44 Imp gal) for more than 40 seconds.

All judge normal when these calculations are completed.

• Leak Diagnosis

DTC P0442
DTC P0456
DTC P0457

• Diagnostic method

• The diagnostic method consists of creating a sealed vacuum in the fuel tank and then determining the presence of leakage from the speed at which the tank internal pressure returns to atmospheric pressure.

- The diagnosis is divided into the following five phases.

• 0.04 inch Diagnosis

Mode A: (Estimation of evaporation gas yield)
The amount of change of tank pressure (P1) in Mode A is calculated. After calculating P1, change to Mode B.

Mode B: (Seal negative pressure)
Introduce the negative pressure in the intake manifold to the tank.
Approx. 0 → −1.4 kPa (0 → −10.5 mmHg, 0 → −0.41 inHg)
When the pressure above (desired negative pressure) is reached, Mode C is entered.
In this case, if the tank pressure does not become the desired negative pressure, judge that there is a large leakage in the system and judge as large leak (10 or 25 seconds).

Abnormality Judgment
Judge NG (large leak) when the criteria below are completed in the specified time.

Judgment Value

Malfunction Criteria	Threshold Value	DTC
Time before reaching desired negative pressure	≥ 25 seconds	P0457
Or time for Mode B	≥ 10 seconds	
(Min. value of tank pressure during Mode B) − (Tank pressure when Mode B started)	< −0.3 kPa (−2.5 mmHg, −0.1 inHg)	

Mode C: (Check increasing pressure)
Stop the introduction of negative pressure. (Wait until the tank pressure returns to the start level of P2 calculation.)
Change to Mode D when the tank pressure returns to the start level of P2 calculation.
Judge immediate OK and change to Mode E when it does not return in spite of spending the specified time.

Tank pressure when P2 calculation started	Time for immediate OK judgment
−1.3 kPa (−9.75 mmHg, −0.38 inHg)	15 seconds

Mode D: (Measurement of negative pressure changes)
Monitor the pressure variation in the tank in Mode Z. In this case, the tank pressure increases, that is, the pressure becomes as high as the atmospheric air pressure, because evaporator is generated. However, if any leakage exists, the pressure increases additionally in proportion to this leakage. The pressure variation of this tank is P2.
After calculating P2, perform following small leak diagnosis.

• After Mode D

Assigning P1 and P2, which are tank variations measured in Mode A and Mode B, to the formula below, judge the small leakage of the system. If the measured judgment value exceeds the threshold value, it is judged to be malfunction.
Judge NG when the criteria below are completed and judge OK when not completed.

Judgment Value

Malfunction Criteria	Threshold Value	DTC
P2 − 1.5 × P1 P2: Change of tank pressure within 10 seconds on Mode D P1: Change of tank pressure within 10 seconds on Mode A	> Value on Map 7. * Threshold value: Figure (Fuel level vs Tank temperature)	P0442

***1.5:** Compensation value of the amount of evaporator occurrence. (Because evaporator increases more when becoming negative pressure.)

Map 7 Limit of malfunction criteria for 0.04-inch leak as Evap. diagnosis.

Fuel temperature & Fuel level	25°C (77°F)	30°C (86°F)	35°C (95°F)	40°C (104°F)	45°C (113°F)
10 L (2.6 US gal, 2.2 Imp gal)	0.28 kPa (2.1 mmHg, 0.083 inHg)	0.29 kPa (2.2 mmHg, 0.087 inHg)	0.31 kPa (2.3 mmHg, 0.091 inHg)	0.31 kPa (2.35 mmHg, 0.093 inHg)	0.32 kPa (2.4 mmHg, 0.094 inHg)
20 L (5.3 US gal, 4.4 Imp gal)	0.28 kPa (2.1 mmHg, 0.083 inHg)	0.32 kPa (2.4 mmHg, 0.094 inHg)	0.33 kPa (2.5 mmHg, 0.098 inHg)	0.35 kPa (2.6 mmHg, 0.102 inHg)	0.36 kPa (2.7 mmHg, 0.106 inHg)
30 L (7.9 US gal, 6.6 Imp gal)	0.39 kPa (2.9 mmHg, 0.114 inHg)	0.41 kPa (3.05 mmHg, 0.120 inHg)	0.42 kPa (3.15 mmHg, 0.124 inHg)	0.43 kPa (3.25 mmHg, 0.128 inHg)	0.45 kPa (3.35 mmHg, 0.131 inHg)
40 L (10.6 US gal, 8.8 Imp gal)	0.39 kPa (2.9 mmHg, 0.114 inHg)	0.42 kPa (3.15 mmHg, 0.124 inHg)	0.44 kPa (3.3 mmHg, 0.130 inHg)	0.45 kPa (3.4 mmHg, 0.134 inHg)	0.47 kPa (3.5 mmHg, 0.138 inHg)
50 L (13.2 US gal, 11.0 Imp gal)	0.43 kPa (3.2 mmHg, 0.126 inHg)	0.44 kPa (3.3 mmHg, 0.130 inHg)	0.47 kPa (3.5 mmHg, 0.138 inHg)	0.48 kPa (3.6 mmHg, 0.142 inHg)	0.49 kPa (3.7 mmHg, 0.146 inHg)

Time Needed for Diagnosis: 30 — 100 seconds

• 0.02-inch Diagnosis

Mode A: (0 point correction)

Wait until the tank pressure returns to 0 point (0 kPa (0 mmHg, 0 inHg)) when the tank pressure is high. Change to Mode B when the tank pressure becomes 0. Cancel the diagnosis when the tank pressure does not return to 0 point in spite of spending the specified time.

Mode B: (Introduce negative pressure)

Introduce the intake manifold negative pressure to fuel tank.

About 0 → –2.0 kPa (0 mmHg → –15 mmHg, 0 → –0.59 inHg)

Change to Mode C when the tank pressure becomes the pressure (desired negative pressure) above. Cancel the diagnosis when the tank pressure does not become the value above.

Mode C: (Hold negative pressure)

Stop introducing the negative pressure and wait the tank pressure returns to the start level of P2 calculation. Change to Mode D when the tank pressure returns to the start level of P2 calculation or when spending the specified time.

Mode D: (Calculation of negative pressure variation)

Monitor the tank pressure on Mode D, and calculate the tank pressure variation (P2) and time until it returns to the end level of P2 (evpdset). When it returns, change to Mode E. Make advanced OK judgment or cancel depending on the P2 level, when it doesn't return in spite of spending the specified time.

Judge OK when the criteria below are completed.

Judgment Value

Malfunction Criteria	Threshold Value
Advanced OK judgment #1	
Mode D time	≥ 30 s
Tank pressure	≤ –1.79 kPa (–13.4 mmHg, –0.53 inHg)
Advanced OK judgment #2	
Mode D time	≥ 200 s
P2	≤ 0.93 — 1.28 kPa (7 — 9.6 mmHg, 0.28 — 0.38 inHg)

Mode E: (Calculation of evaporation gas yield)

Calculate the tank pressure variation P1 in time evpdset, judge NG/OK from P1 value. (Gray judgment possible)

Abnormal judgment

Judge NG when the criteria below are completed.

Judgment Value

Malfunction Criteria	Threshold Value
P1	〈 Map 7 value * Threshold value: map (fuel level vs evp-dset)

Map 7 Limit of malfunction criteria for 0.02-inch leak as Evap. diagnosis

Time evpdset & Fuel level	0 second	30 seconds	50 seconds	100 seconds	160 seconds	200 seconds
10 L (2.6 US gal, 2.2 Imp gal)	0 kPa (0 mmHg, 0 inHg)	0.07 kPa (0.5 mmHg, 0.02 inHg)	0.23 kPa (1.7 mmHg, 0.07 inHg)	0.36 kPa (2.7 mmHg, 0.11 inHg)	0.36 kPa (2.7 mmHg, 0.11 inHg)	0.36 kPa (2.7 mmHg, 0.11 inHg)
20 L (5.3 US gal, 4.4 Imp gal)	0 kPa (0 mmHg, 0 inHg)	0.07 kPa (0.5 mmHg, 0.02 inHg)	0.23 kPa (1.7 mmHg, 0.07 inHg)	0.36 kPa (2.7 mmHg, 0.11 inHg)	0.36 kPa (2.7 mmHg, 0.11 inHg)	0.36 kPa (2.7 mmHg, 0.11 inHg)
30 L (7.9 US gal, 6.6 Imp gal)	0 kPa (0 mmHg, 0 inHg)	0.07 kPa (0.5 mmHg, 0.02 inHg)	0.23 kPa (1.7 mmHg, 0.07 inHg)	0.36 kPa (2.7 mmHg, 0.11 inHg)	0.36 kPa (2.7 mmHg, 0.11 inHg)	0.36 kPa (2.7 mmHg, 0.11 inHg)
40 L (10.6 US gal, 8.8 Imp gal)	0 kPa (0 mmHg, 0 inHg)	0.07 kPa (0.5 mmHg, 0.02 inHg)	0.25 kPa (1.85 mmHg, 0.07 inHg)	0.33 kPa (2.5 mmHg, 0.10 inHg)	0.33 kPa (2.5 mmHg, 0.10 inHg)	0.33 kPa (2.5 mmHg, 0.10 inHg)
50 L (13.2 US gal, 11.0 Imp gal)	0 kPa (0 mmHg, 0 inHg)	0.07 kPa (0.5 mmHg, 0.02 inHg)	0.27 kPa (2.0 mmHg, 0.08 inHg)	0.31 kPa (2.3 mmHg, 0.09 inHg)	0.31 kPa (2.3 mmHg, 0.09 inHg)	0 kPa (0 mmHg, 0 inHg)

• Normality Judgment

Judge OK when all the malfunction criteria below are completed.

Judgment Value

Malfunction Criteria	Threshold Value
P1	〉Value of Map 8 * Threshold value: Map (Fuel level vs evp-dset)

Map 8

Time evpdset & Fuel level	0 second	30 seconds	50 seconds	100 seconds	160 seconds	200 seconds
10 L (2.6 US gal, 2.2 Imp gal)	0.13 kPa (1.0 mmHg, 0.04 inHg)	0.47 kPa (3.5 mmHg, 0.14 inHg)	0.56 kPa (4.2 mmHg, 0.17 inHg)	0.56 kPa (4.2 mmHg, 0.17 inHg)	0.56 kPa (4.2 mmHg, 0.17 inHg)	0.56 kPa (4.2 mmHg, 0.17 inHg)
20 L (5.3 US gal, 4.4 Imp gal)	0.13 kPa (1.0 mmHg, 0.04 inHg)	0.43 kPa (3.25 mmHg, 0.13 inHg)	0.55 kPa (4.1 mmHg, 0.16 inHg)	0.55 kPa (4.1 mmHg, 0.16 inHg)	0.55 kPa (4.1 mmHg, 0.16 inHg)	0.55 kPa (4.1 mmHg, 0.16 inHg)
30 L (7.9 US gal, 6.6 Imp gal)	0.13 kPa (1.0 mmHg, 0.04 inHg)	0.40 kPa (3.0 mmHg, 0.12 inHg)	0.52 kPa (3.9 mmHg, 0.15 inHg)	0.52 kPa (3.9 mmHg, 0.15 inHg)	0.52 kPa (3.9 mmHg, 0.15 inHg)	0.52 kPa (3.9 mmHg, 0.15 inHg)
40 L (10.6 US gal, 8.8 Imp gal)	0.13 kPa (1.0 mmHg, 0.04 inHg)	0.43 kPa (3.25 mmHg, 0.13 inHg)	0.45 kPa (3.4 mmHg, 0.13 inHg)	0.45 kPa (3.4 mmHg, 0.13 inHg)	0.45 kPa (3.4 mmHg, 0.13 inHg)	0.45 kPa (3.4 mmHg, 0.13 inHg)
50 L (13.2 US gal, 11.0 Imp gal)	0.13 kPa (1.0 mmHg, 0.04 inHg)	0.20 kPa (1.5 mmHg, 0.06 inHg)	0.39 kPa (2.9 mmHg, 0.11 inHg)	0.39 kPa (2.9 mmHg, 0.11 inHg)	0.39 kPa (2.9 mmHg, 0.11 inHg)	0.39 kPa (2.9 mmHg, 0.11 inHg)

Time Needed for Diagnosis: 65 — 514 seconds

Malfunction Indicator Light Illumination: Illuminates when malfunction occurs in 2 continuous drive cycles.

6. DTC CLEAR CONDITION

- When the OK idling cycle was completed 40 times in a row

- When “Clear Memory” was performed

7. MALFUNCTION INDICATOR LIGHT CLEAR CONDITION

- When the OK driving cycle was completed 3 times in a row
- When “Clear Memory” was performed

8. FAIL SAFE

None

9. ECM OPERATION AT DTC SETTING

- Memorize the freeze frame data. (For test mode $02)
- Memorize the diagnostic value and trouble standard value. (For test mode $06)

AW:DTC P0447 EVAPORATIVE EMISSION CONTROL SYSTEM VENT CONTROL CIRCUIT OPEN

1. OUTLINE OF DIAGNOSIS

Detect the open or short circuit of drain valve.
Judge NG when the ECM output level is different from the actual terminal level.

2. COMPONENT DESCRIPTION

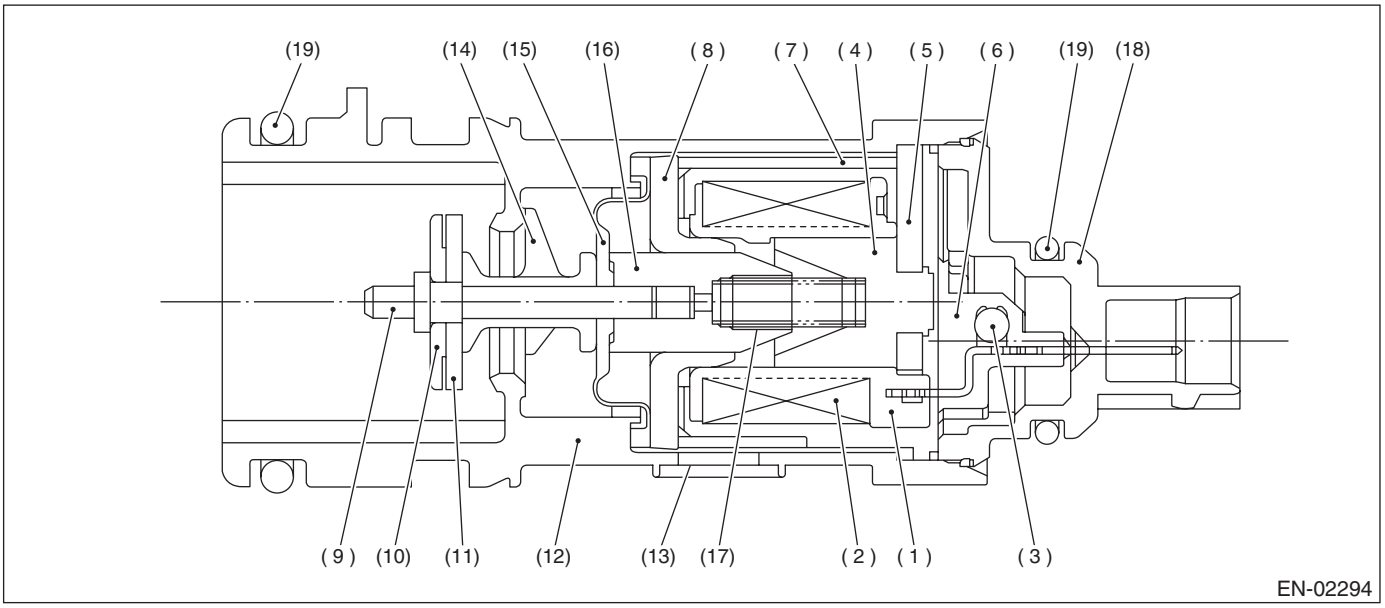

(1) Bobbin
(2) Coil
(3) Diode
(4) Stator core
(5) End plate
(6) Body
(7) Yoke
(8) Magnetic plate
(9) Shaft
(10) Plate
(11) Valve
(12) Housing
(13) Filter
(14) Retainer
(15) Diaphragm
(16) Moving core
(17) Spring
(18) Cover
(19) O-ring

3. ENABLE CONDITION

Secondary Parameters	Enable Conditions
None	

4. GENERAL DRIVING CYCLE

Always perform the diagnosis continuously.

5. DIAGNOSTIC METHOD

• Abnormality Judgment

Judge NG when the continuous time of completing the malfunction criteria below becomes more than 2.5 seconds.

Judgment Value

Malfunction Criteria	Threshold Value
Ignition switch	ON
Battery voltage	≥ 10.9 V
After engine starting	1 second or more
Terminal output voltage when ECM sends OFF signal	Low

Time Needed for Diagnosis: 2.5 seconds
Malfunction Indicator Light Illumination: Illuminates as soon as the malfunction occurs.
• Normality Judgment

Judge OK and clear the NG when the malfunction criteria below are completed.
Judgment Value

Malfunction Criteria	Threshold Value
Ignition switch	ON
Battery voltage	≥ 10.9 V
After engine starting	1 second or more
Terminal output voltage when ECM sends OFF signal	High

6. DTC CLEAR CONDITION

- When the OK idling cycle was completed 40 times in a row
- When “Clear Memory” was performed

7. MALFUNCTION INDICATOR LIGHT CLEAR CONDITION

- When the OK driving cycle was completed 3 times in a row
- When “Clear Memory” was performed

8. FAIL SAFE

PCV control: Open the PCV solenoid.

9. ECM OPERATION AT DTC SETTING

Memorize the freeze frame data. (For test mode $02)

AX:DTC P0448 EVAPORATIVE EMISSION CONTROL SYSTEM VENT CONTROL CIRCUIT SHORTED

1. OUTLINE OF DIAGNOSIS

Detect the open or short circuit of drain valve.
Judge NG when the ECM output level is different from the actual terminal level.

2. COMPONENT DESCRIPTION

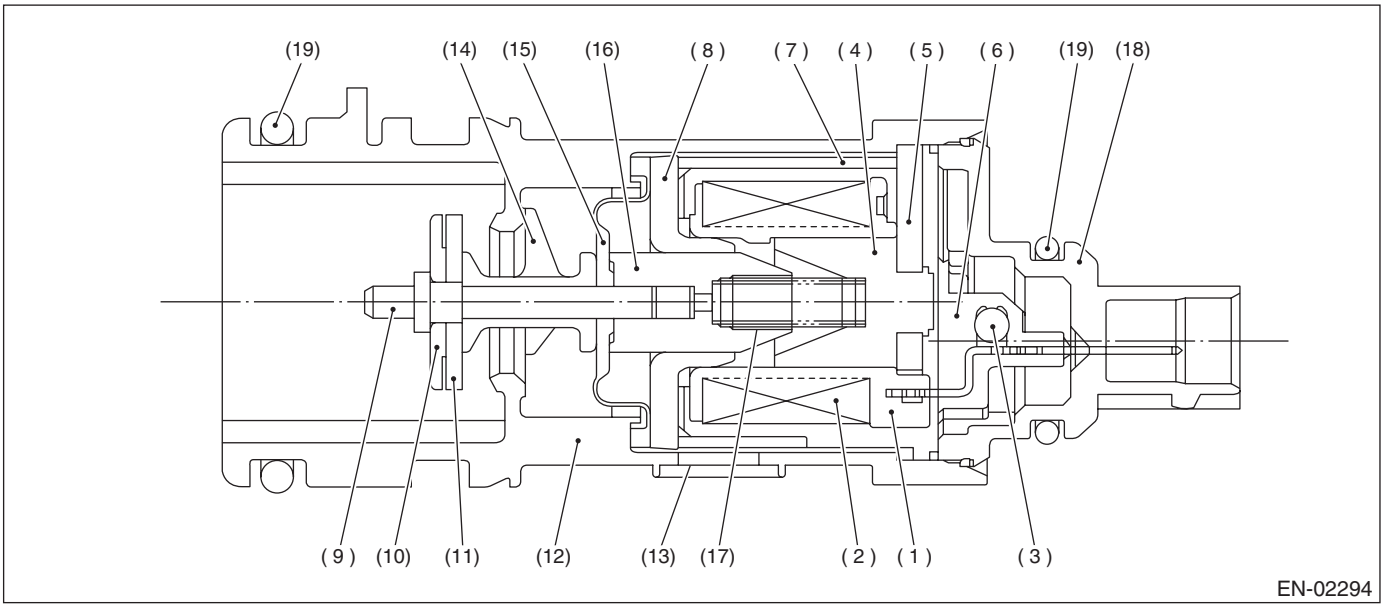

(1) Bobbin
(2) Coil
(3) Diode
(4) Stator core
(5) End plate
(6) Body
(7) Yoke
(8) Magnetic plate
(9) Shaft
(10) Plate
(11) Valve
(12) Housing
(13) Filter
(14) Retainer
(15) Diaphragm
(16) Moving core
(17) Spring
(18) Cover
(19) O-ring

3. ENABLE CONDITION

Secondary Parameters	Enable Conditions
None	

4. GENERAL DRIVING CYCLE

Always perform the diagnosis continuously.

5. DIAGNOSTIC METHOD

• Abnormality Judgment

Judge NG when the continuous time of completing the malfunction criteria below becomes more than 2.5 seconds.

Judgment Value

Malfunction Criteria	Threshold Value
Ignition switch	ON
Battery voltage	≥ 10.9 V
After engine starting	1 second or more
Terminal output voltage when ECM sends ON signal	High

Time Needed for Diagnosis: 2.5 seconds
Malfunction Indicator Light Illumination: Illuminates as soon as the malfunction occurs.
• Normality Judgment

Judge OK and clear the NG when the malfunction criteria below are completed.
Judgment Value

Malfunction Criteria	Threshold Value
Ignition switch	ON
Battery voltage	≥ 10.9 V
After engine starting	1 second or more
Terminal output voltage when ECM sends ON signal	Low

6. DTC CLEAR CONDITION

- When the OK idling cycle was completed 40 times in a row
- When “Clear Memory” was performed

7. MALFUNCTION INDICATOR LIGHT CLEAR CONDITION

- When the OK driving cycle was completed 3 times in a row
- When “Clear Memory” was performed

8. FAIL SAFE

PCV control: Open the PCV solenoid.

9. ECM OPERATION AT DTC SETTING

Memorize the freeze frame data. (For test mode $02)

AY:DTC P0451 EVAPORATIVE EMISSION CONTROL SYSTEM PRESSURE SENSOR

1. OUTLINE OF DIAGNOSIS

Detect the tank pressure sensor output property abnormality.
Judge NG when there is no pressure variation, which should exist in the tank, considering the engine status.

2. COMPONENT DESCRIPTION

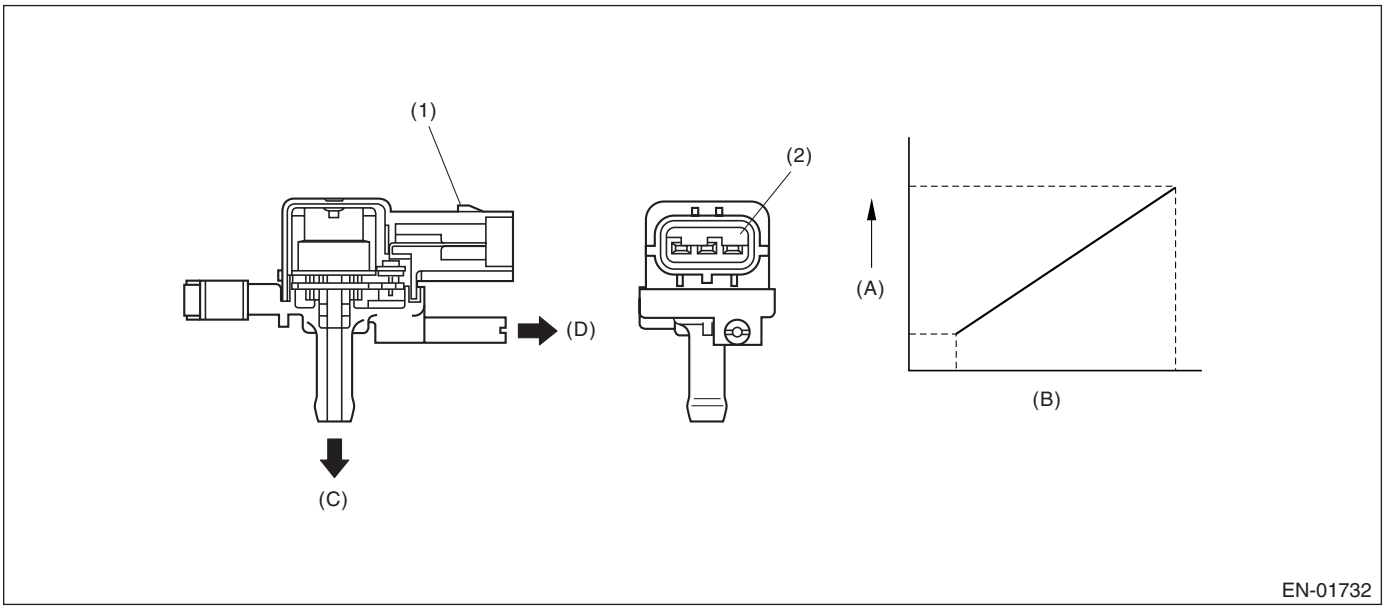

(1) Connector
(2) Terminal
(A) Output voltage
(B) Input voltage
(C) To fuel tank
(D) To fuel tank sensor control valve

3. ENABLE CONDITION

Secondary Parameters	Enable Conditions
After starting the engine	60 second or more
Fuel level	≥ 9.6 ℓ (2.53 US gal, 2.11 Imp gal)
Fuel temperature	〈 35°C (95°F)
Battery voltage	≥ 10.9 V
Atmospheric pressure	〉 75.1 kPa (563 mmHg, 22.2 inHg)

4. GENERAL DRIVING CYCLE

- Perform the diagnosis continuously in 60 seconds or more after starting the engine.
- Be sure to check the fuel level and fuel temperature.

5. DIAGNOSTIC METHOD

• Abnormality Judgment

Judge NG when the malfunction criteria below is completed.

Judgment Value

Malfunction Criteria	Threshold Value
Number of times when the difference between the Max. fuel level and the Min., fuel level every 60 seconds is 2 ℓ (0.53 US gal, 0.44Imp gal) or more (with enable condition completed)	≥ 16 times
Max. − Min. tank pressure (with enable condition completed)	< 0.05 kPa (0.375 mmHg, 0.02 inHg)
Max. − Min. fuel temperature (with enable condition completed)	≥ 7°C (12.6 °F)

If the fuel level (Max. − Min.) in every 60 seconds is less than 2 ℓ , extend 60 seconds more and make judgment with the Max. and Min. fuel level in 120 seconds.
If the difference did not appear though the time extended, extend the time (180, 240, 300 seconds) and continue the judgment.
Diagnosis counter will count up when the difference of fuel level (Max. − Min.) is more than 2 ℓ .
Time Needed for Diagnosis: 1 minute × 16 times or more
Malfunction Indicator Light Illumination: Illuminates when malfunction occurs in two continuous drive cycles.

• Normality Judgment

Judge OK when the malfunction criteria below is completed.
Judgment Value

Malfunction Criteria	Threshold Value
Max. − Min. tank pressure	≥ 0.05 kPa (0.375 mmHg, 0.02 inHg)

6. DTC CLEAR CONDITION

- When the OK idling cycle was completed 40 times in a row
- When “Clear Memory” was performed

7. MALFUNCTION INDICATOR LIGHT CLEAR CONDITION

- When the OK driving cycle was completed 3 times in a row
- When “Clear Memory” was performed

8. FAIL SAFE

Purge control solenoid valve control: Purge fixation mode is prohibited.

9. ECM OPERATION AT DTC SETTING

Memorize the freeze frame data. (For test mode $02)

AZ:DTC P0452 EVAPORATIVE EMISSION CONTROL SYSTEM PRESSURE SENSOR LOW INPUT

1. OUTLINE OF DIAGNOSIS

Detect the open or short circuit of the fuel tank pressure sensor.
Judge NG when out of the standard value.

2. COMPONENT DESCRIPTION

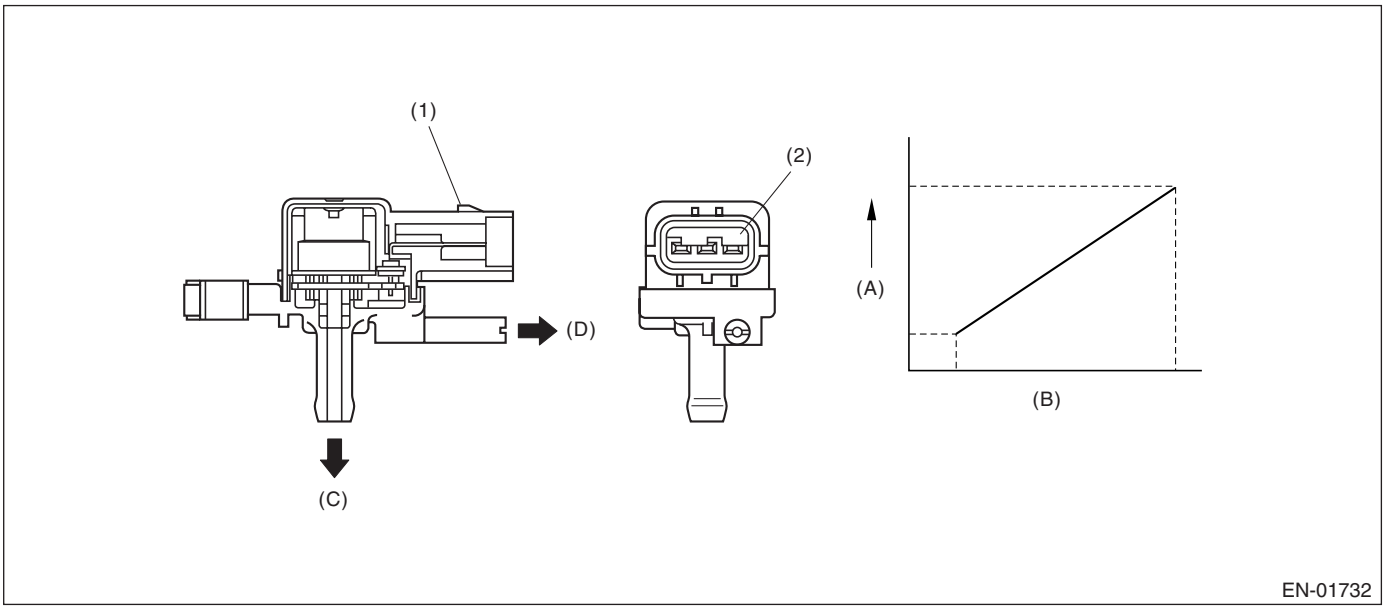

(1) Connector
(2) Terminal
(A) Output voltage
(B) Input voltage
(C) To fuel tank
(D) To fuel tank sensor control valve

3. ENABLE CONDITION

Secondary Parameters	Enable Conditions
Battery voltage	≥ 10.9 V

4. GENERAL DRIVING CYCLE

Always perform the diagnosis continuously.

5. DIAGNOSTIC METHOD

• Abnormality Judgment

Judge NG when the continuous time of completing the malfunction criteria below becomes more than 15 seconds.

Judgment Value

Malfunction Criteria	Threshold Value
Fuel tank pressure	≤ –7.44 kPa (–55.86 mmHg, –2.20 inHg)

Time Needed for Diagnosis: 15 seconds
Malfunction Indicator Light Illumination: Illuminates as soon as malfunction occurs.

• Normality Judgment

Judge OK when the malfunction criteria below is completed.

Judgment Value

Malfunction Criteria	Threshold Value
Fuel tank pressure	> –7.44 kPa (–55.86 mmHg, –2.20 inHg)

6. DTC CLEAR CONDITION

- When the OK idling cycle was completed 40 times in a row
- When “Clear Memory” was performed

7. MALFUNCTION INDICATOR LIGHT CLEAR CONDITION

- When the OK driving cycle was completed 3 times in a row
- When “Clear Memory” was performed

8. FAIL SAFE

Purge control solenoid valve control: Purge fixation mode is prohibited.

9. ECM OPERATION AT DTC SETTING

Memorize the freeze frame data. (For test mode $02)

BA:DTC P0453 EVAPORATIVE EMISSION CONTROL SYSTEM PRESSURE SENSOR HIGH INPUT

1. OUTLINE OF DIAGNOSIS

Detect the breaking/shortage of the fuel tank pressure sensor.
Judge NG when out of the standard value.

2. COMPONENT DESCRIPTION

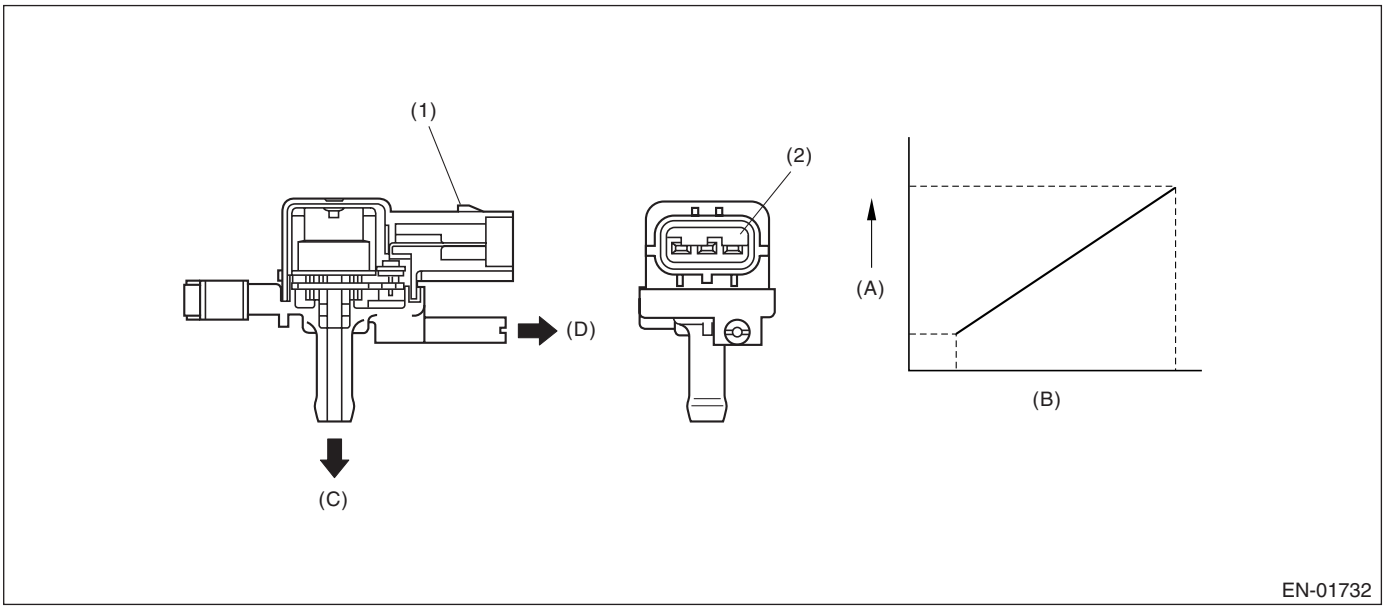

(1) Connector
(2) Terminal
(A) Output voltage
(B) Input voltage
(C) To fuel tank
(D) To fuel tank sensor control valve

3. ENABLE CONDITION

Secondary Parameters	Enable Conditions
Vehicle speed	≥ 2 km/h (1.24 MPH)
All conditions of EVAP canister purge	Complete
Evaporation gas density learning value	≤ 0.08
Main feedback compensation coefficient	≥ 0.9
Battery voltage	≥ 10.9 V

4. GENERAL DRIVING CYCLE

Perform the diagnosis continuously when purging.

5. DIAGNOSTIC METHOD

• Abnormality Judgment

Judge NG when the continuous time until completing the malfunction criteria below becomes more than 15 seconds.

Judgment Value

Malfunction Criteria	Threshold Value
Fuel tank pressure	≥ 7.98 kPa (59.86 mmHg, 2.36 inHg)
Fuel temperature	〈 35°C (95°F)
Atmospheric pressure	≥ 75.1 kPa (563 mmHg, 22.2 inHg)

Time Needed for Diagnosis: 15 seconds
Malfunction Indicator Light Illumination: Illuminates as soon as malfunction occurs.
• Normality Judgment

Judge OK when the malfunction criteria below is completed.
Judgment Value

Malfunction Criteria	Threshold Value
Fuel tank pressure	≤ 7.98 kPa (59.86 mmHg, 2.36 inHg)

6. DTC CLEAR CONDITION

- When the OK idling cycle was completed 40 times in a row
- When “Clear Memory” was performed

7. MALFUNCTION INDICATOR LIGHT CLEAR CONDITION

- When the OK driving cycle was completed 3 times in a row
- When “Clear Memory” was performed

8. FAIL SAFE

Purge control solenoid valve control: Purge fixation mode is prohibited.

9. ECM OPERATION AT DTC SETTING

Memorize the freeze frame data. (For test mode $02)

BB:DTC P0456 EVAPORATIVE EMISSION CONTROL SYSTEM LEAK DETECTED (VERY SMALL LEAK)

1. OUTLINE OF DIAGNOSIS

For detecting conditions, refer to DTC P0442 EVAPORATIVE EMISSION CONTROL SYSTEM LEAK DETECTED (SMALL LEAK). <Ref. to GD(H4SO)-109, DTC P0442 EVAPORATIVE EMISSION CONTROL SYSTEM LEAK DETECTED (SMALL LEAK), Diagnostic Trouble Code (DTC) Detecting Criteria.>

BC:DTC P0457 EVAPORATIVE EMISSION CONTROL SYSTEM LEAK DETECTED (FUEL CAP LOOSE/OFF)

1. OUTLINE OF DIAGNOSIS

For detecting conditions, refer to DTC P0442 EVAPORATIVE EMISSION CONTROL SYSTEM LEAK DETECTED (SMALL LEAK). <Ref. to GD(H4SO)-109, DTC P0442 EVAPORATIVE EMISSION CONTROL SYSTEM LEAK DETECTED (SMALL LEAK), Diagnostic Trouble Code (DTC) Detecting Criteria.>

BD:DTC P0458 EVAPORATIVE EMISSION CONTROL SYSTEM PURGE CONTROL VALVE CIRCUIT LOW

1. OUTLINE OF DIAGNOSIS

Detect open or short circuit of purge control solenoid valve.
Judge NG when ECM output level is different from actual terminal level.

2. COMPONENT DESCRIPTION

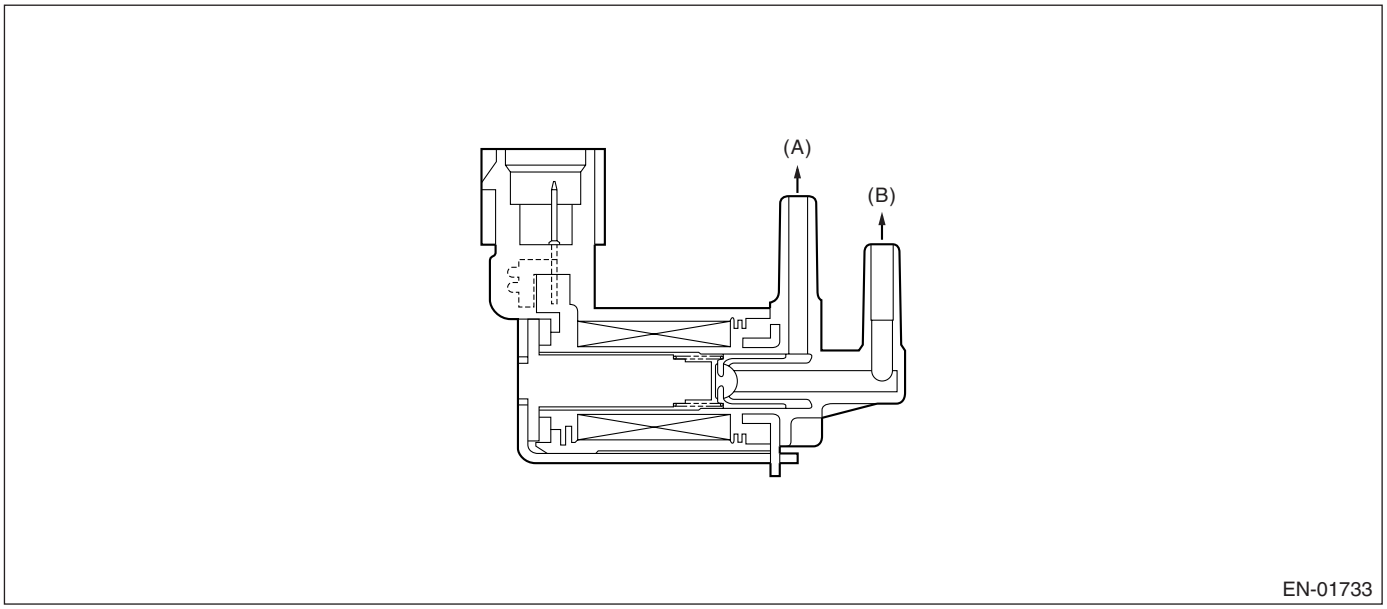

(A) To canister (B) To intake manifold

3. ENABLE CONDITION

Secondary Parameters	Enable Conditions
Ignition switch	ON
Battery voltage	≥ 10.9 V
After engine starting	1 second or more

4. GENERAL DRIVING CYCLE

Always perform the diagnosis after starting the engine.

5. DIAGNOSTIC METHOD

• Abnormality Judgment

Judge NG when the malfunction criteria below are completed.
Judgment Value

Malfunction Criteria	Threshold Value
Continuous time of completing criteria below.	≥ 2.5 seconds
Duty ratio of 'ON'	< 75%
Terminal output voltage	Low

Time Needed for Diagnosis: 2.5 seconds
Malfunction Indicator Light Illumination: Illuminates as soon as malfunction occurs.

• Normality Judgment

Judge OK and clear NG when the malfunction criterion below is completed.
Judgment Value

Malfunction Criteria	Threshold Value
Terminal output voltage	High

6. DTC CLEAR CONDITION

- When the OK idling cycle was completed 40 times in a row
- When “Clear Memory” was performed

7. MALFUNCTION INDICATOR LIGHT CLEAR CONDITION

- When the OK driving cycle was completed 3 times in a row
- When “Clear Memory” was performed

8. FAIL SAFE

None

9. ECM OPERATION AT DTC SETTING

Memorize the freeze frame data. (For test mode $02)

BE:DTC P0459 EVAPORATIVE EMISSION CONTROL SYSTEM PURGE CONTROL VALVE CIRCUIT HIGH

1. OUTLINE OF DIAGNOSIS

Detect open or short circuit of purge control solenoid valve.
Judge NG when ECM output level is different from actual terminal level.

2. COMPONENT DESCRIPTION

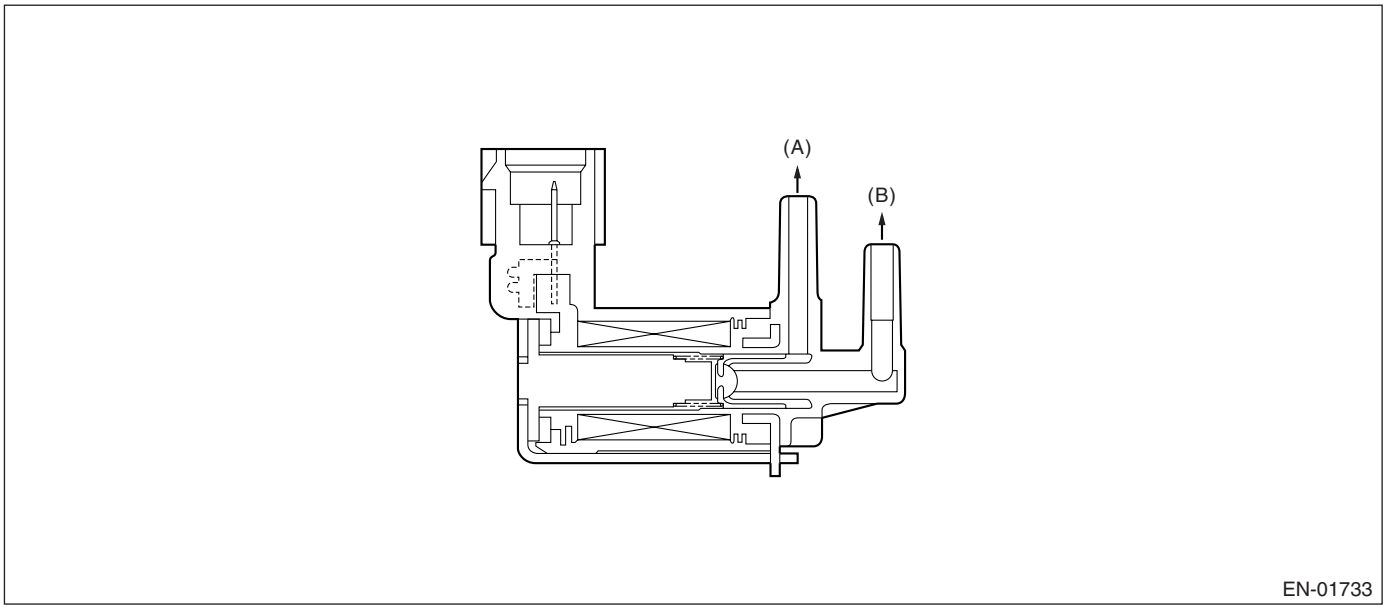

(A) To canister (B) To intake manifold

3. ENABLE CONDITION

Secondary Parameters	Enable Conditions
Ignition switch	ON
Battery voltage	≥ 10.9 V
After engine starting	1 second or more

4. GENERAL DRIVING CYCLE

Always perform the diagnosis after starting the engine.

5. DIAGNOSTIC METHOD

• Abnormality Judgment

Judge NG when the malfunction criteria below are completed.
Judgment Value

Malfunction Criteria	Threshold Value
Continuous time of completing criteria below.	≥ 2.5 seconds
Duty ratio of 'ON'	≥ 25%
Terminal output voltage	High

Time Needed for Diagnosis: 2.5 seconds
Malfunction Indicator Light Illumination: Illuminates when malfunction occurs in 2 continuous driving cycles.

• Normality Judgment

Judge OK and clear NG when the malfunction criterion below is completed.
Judgment Value

Malfunction Criteria	Threshold Value
Terminal output voltage	Low

6. DTC CLEAR CONDITION

- When the OK idling cycle was completed 40 times in a row
- When “Clear Memory” was performed

7. MALFUNCTION INDICATOR LIGHT CLEAR CONDITION

- When the OK driving cycle was completed 3 times in a row
- When “Clear Memory” was performed

8. FAIL SAFE

None

9. ECM OPERATION AT DTC SETTING

Memorize the freeze frame data. (For test mode $02)

BF:DTC P0461 FUEL LEVEL SENSOR CIRCUIT RANGE/PERFORMANCE

1. OUTLINE OF DIAGNOSIS

Detect the malfunction of fuel level sensor output property.
Judge NG when the fuel level does not vary whereas it seemed to vary be in a usual driving speed.

2. COMPONENT DESCRIPTION

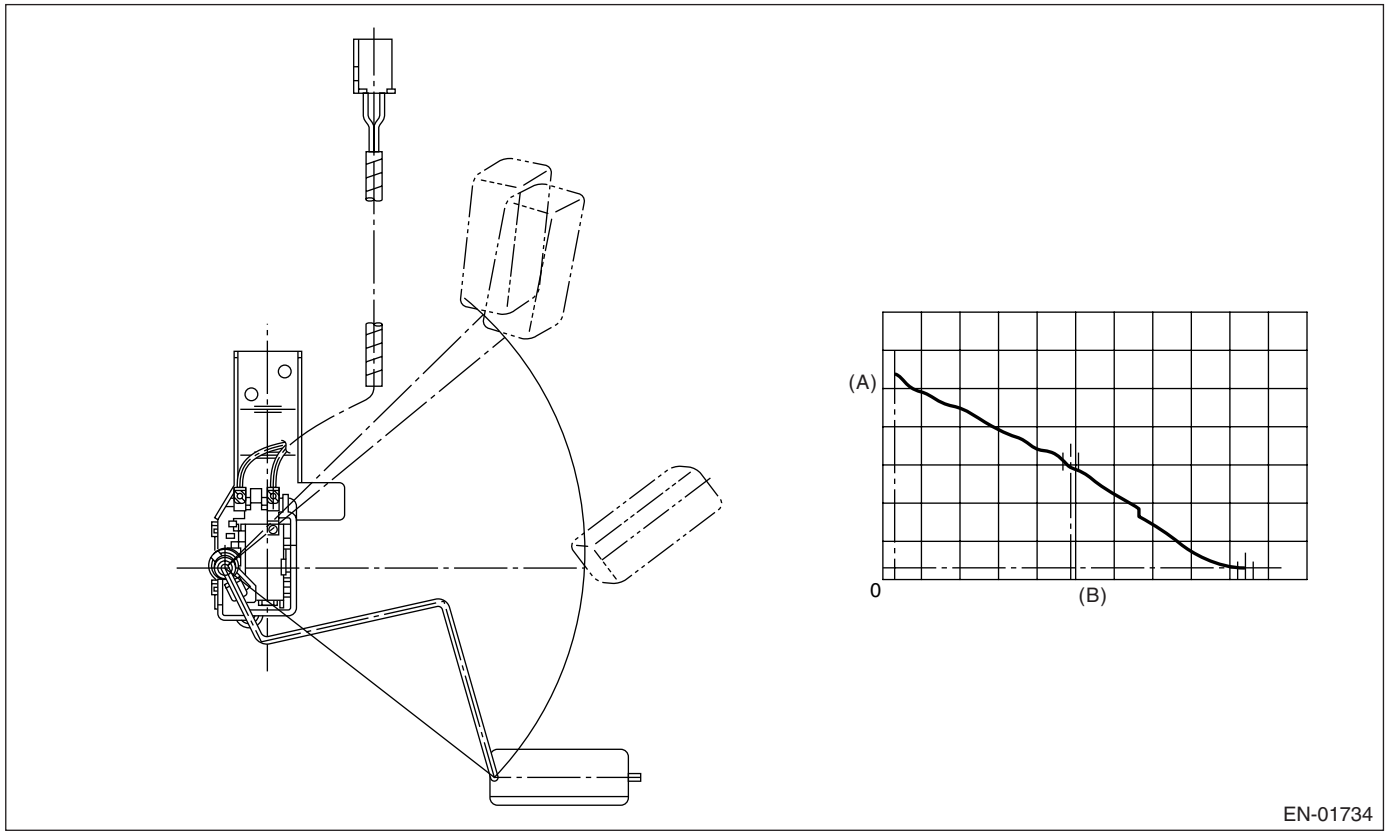

(A) Fuel level (B) Resistance

3. ENABLE CONDITION

Secondary Parameters	Enable Conditions
None	

4. GENERAL DRIVING CYCLE

Always perform the diagnosis continuously.

5. DIAGNOSTIC METHOD

• Abnormality Judgment

Judge NG when the malfunction criteria below are completed.
Judgment Value

Malfunction Criteria	Threshold Value
Accumulated amount of intake air	〉331 kg (729.9 lb)
Max.– Min. fuel level output	〈2.6 ℓ (0.69 US gal, 0.57 Imp gal)
Battery voltage	≥ 10.9 V
After engine start	More than 5 seconds

Time Needed for Diagnosis: To be determined.

Malfunction Indicator Light Illumination: Illuminates when malfunction occurs in 2 continuous driving cycles.

• Normality Judgment

Judge OK and clear the NG when the malfunction criteria below are completed.

Judgment Value

Malfunction Criteria	Threshold Value
Accumulated amount of intake air	> 331 kg (729.9 lb)
Max.– Min. fuel level output	≥ 2.6 ℓ (0.69 US gal, 0.57 Imp gal)
Battery voltage	≥ 10.9 V
After engine start	More than 5 seconds

6. DTC CLEAR CONDITION

- When the OK idling cycle was completed 40 times in a row
- When “Clear Memory” was performed

7. MALFUNCTION INDICATOR LIGHT CLEAR CONDITION

- When the OK driving cycle was completed 3 times in a row
- When “Clear Memory” was performed

8. FAIL SAFE

None

9. ECM OPERATION AT DTC SETTING

Memorize the freeze frame data. (For test mode $02)

BG:DTC P0462 FUEL LEVEL SENSOR CIRCUIT LOW INPUT

1. OUTLINE OF DIAGNOSIS

Detect the open or short circuit of fuel level sensor. Judge NG when out of the standard value.

2. COMPONENT DESCRIPTION

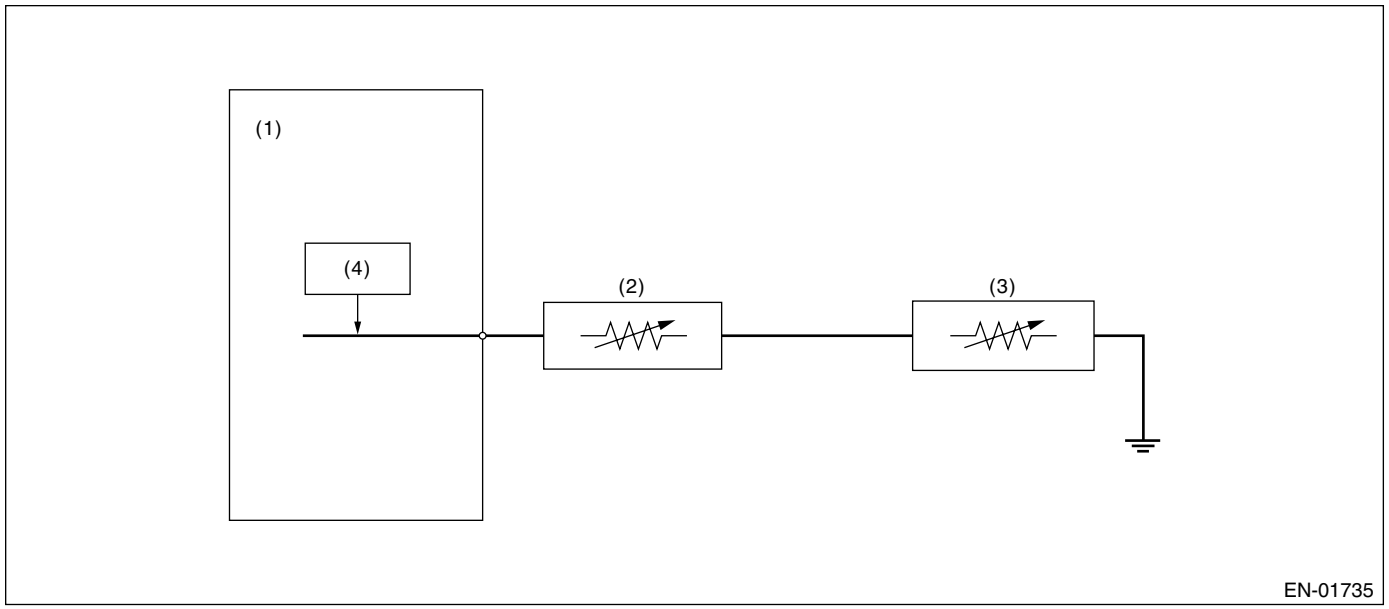

(1) Engine control module (ECM)
(2) Fuel level sensor
(3) Fuel sub level sensor
(4) Detecting circuit

3. ENABLE CONDITION

Secondary Parameters	Enable Conditions
None	

4. GENERAL DRIVING CYCLE

Always perform the diagnosis continuously

5. DIAGNOSTIC METHOD

• Abnormality Judgment

Judge NG when the continuous time of completing the malfunction criteria below becomes more than the time needed for diagnosis (2.5 seconds).

Judgment Value

Malfunction Criteria	Threshold Value
Ignition switch	ON
Battery voltage	≥ 10.9 V
After engine starting	3 seconds or more
Output voltage	< 0.173 V

Time Needed for Diagnosis: 2.5 seconds

Malfunction Indicator Light Illumination: Illuminates when malfunction occurs in 2 continuous driving cycles.

• Normality Judgment

Judge OK and clear the NG when the malfunction criteria below are completed.

Judgment Value

Malfunction Criteria	Threshold Value
Ignition switch	ON
Battery voltage	≥ 10.9 V
After engine starting	3 seconds or more
Output voltage	≥ 0.173 V

6. DTC CLEAR CONDITION

- When the OK idling cycle was completed 40 times in a row
- When “Clear Memory” was performed

7. MALFUNCTION INDICATOR LIGHT CLEAR CONDITION

- When the OK driving cycle was completed 3 times in a row
- When “Clear Memory” was performed

8. FAIL SAFE

None

9. ECM OPERATION AT DTC SETTING

Memorize the freeze frame data. (For test mode $02)

BH:DTC P0463 FUEL LEVEL SENSOR CIRCUIT HIGH INPUT

1. OUTLINE OF DIAGNOSIS

Detect the open or short circuit of fuel level sensor. Judge NG when out of the standard value.

2. COMPONENT DESCRIPTION

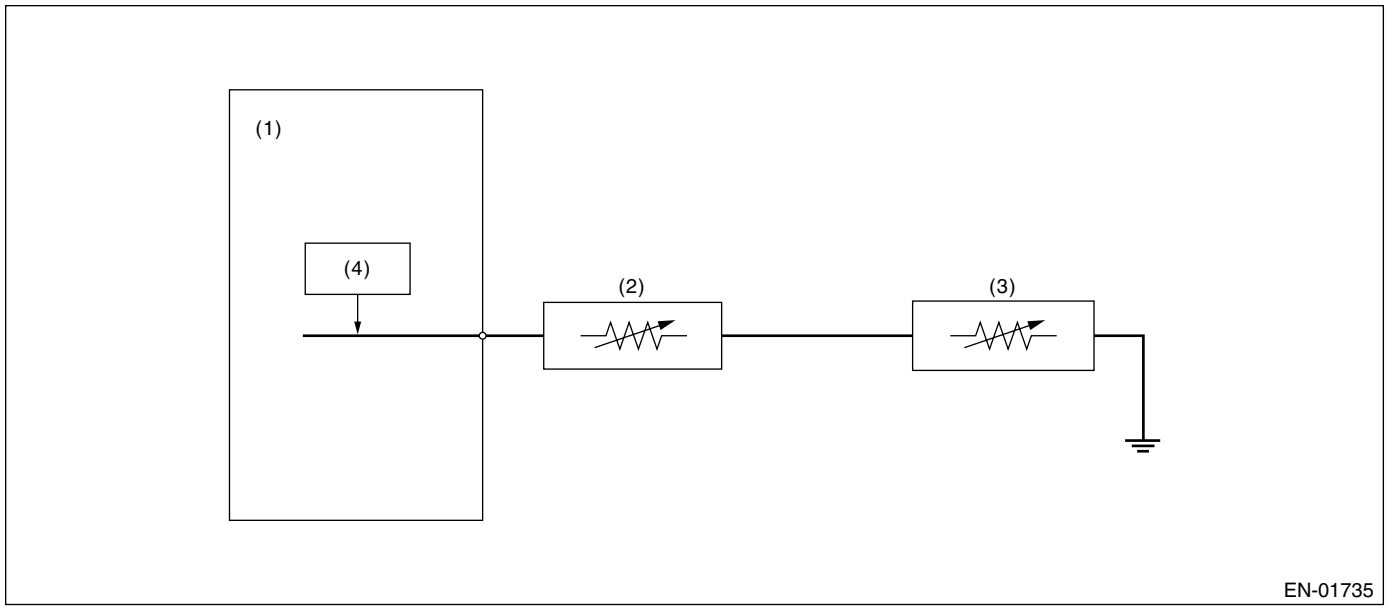

(1) Engine control module (ECM)
(2) Fuel level sensor
(3) Fuel sub level sensor
(4) Detecting circuit

3. ENABLE CONDITION

Secondary Parameters	Enable Conditions
None	

4. GENERAL DRIVING CYCLE

Always perform the diagnosis continuously.

5. DIAGNOSTIC METHOD

• Abnormality Judgment

Judge NG when the continuous time of completing the malfunction criteria below becomes more than the time needed for diagnosis (2.5 seconds).

Judgment Value

Malfunction Criteria	Threshold Value
Ignition switch	ON
Battery voltage	≥ 10.9 V
After engine starting	3 seconds or more
Output voltage	≥ 7.212 V

Time Needed for Diagnosis: 2.5 seconds

Malfunction Indicator Light Illumination: Illuminates when malfunction occurs in 2 continuous driving cycles.

• Normality Judgment

Judge OK and clear the NG when the malfunction criteria below are completed.

Judgment Value

Malfunction Criteria	Threshold Value
Ignition switch	ON
Battery voltage	≥ 10.9 V
After engine starting	3 seconds or more
Output voltage	< 7.212 V

6. DTC CLEAR CONDITION

- When the OK idling cycle was completed 40 times in a row
- When “Clear Memory” was performed

7. MALFUNCTION INDICATOR LIGHT CLEAR CONDITION

- When the OK driving cycle was completed 3 times in a row
- When “Clear Memory” was performed

8. FAIL SAFE

None

9. ECM OPERATION AT DTC SETTING

Memorize the freeze frame data. (For test mode $02)

BI: DTC P0464 FUEL LEVEL SENSOR CIRCUIT INTERMITTENT

1. OUTLINE OF DIAGNOSIS

Detect the malfunction of unstable output from fuel level sensor caused by noise.
Judge NG when the max. value and cumulative value of output voltage variation of fuel level sensor is larger than the threshold value.

2. ENABLE CONDITION

Secondary Parameters	Enable Conditions
Engine speed	≥ 500 rpm
After engine starting	1 second or more
Ignition switch	ON
Battery voltage	〉10.9 V
Idle switch	ON
Fuel level	9.6 ←→ 54.4 ℓ (2.54 ←→ 14.37 US gal, 2.11 ←→ 11.97 Imp gal)
Vehicle speed = 0 km/h (0 MPH)	10 seconds or more

3. GENERAL DRIVING CYCLE

- Perform the diagnosis continuously in idling condition.
- Pay attention to the fuel level.

4. DIAGNOSTIC METHOD

Calculate the Max. value (delflmax) and cumulative value (sumfl) of output voltage variation of fuel level sensor during 12.2 seconds. Judge it normal when both max. and cumulative values are not over the threshold value. Otherwise, when either of them is over the threshold value, count the diagnosis counter up. And judge NG if the counter indicated 4 counts.

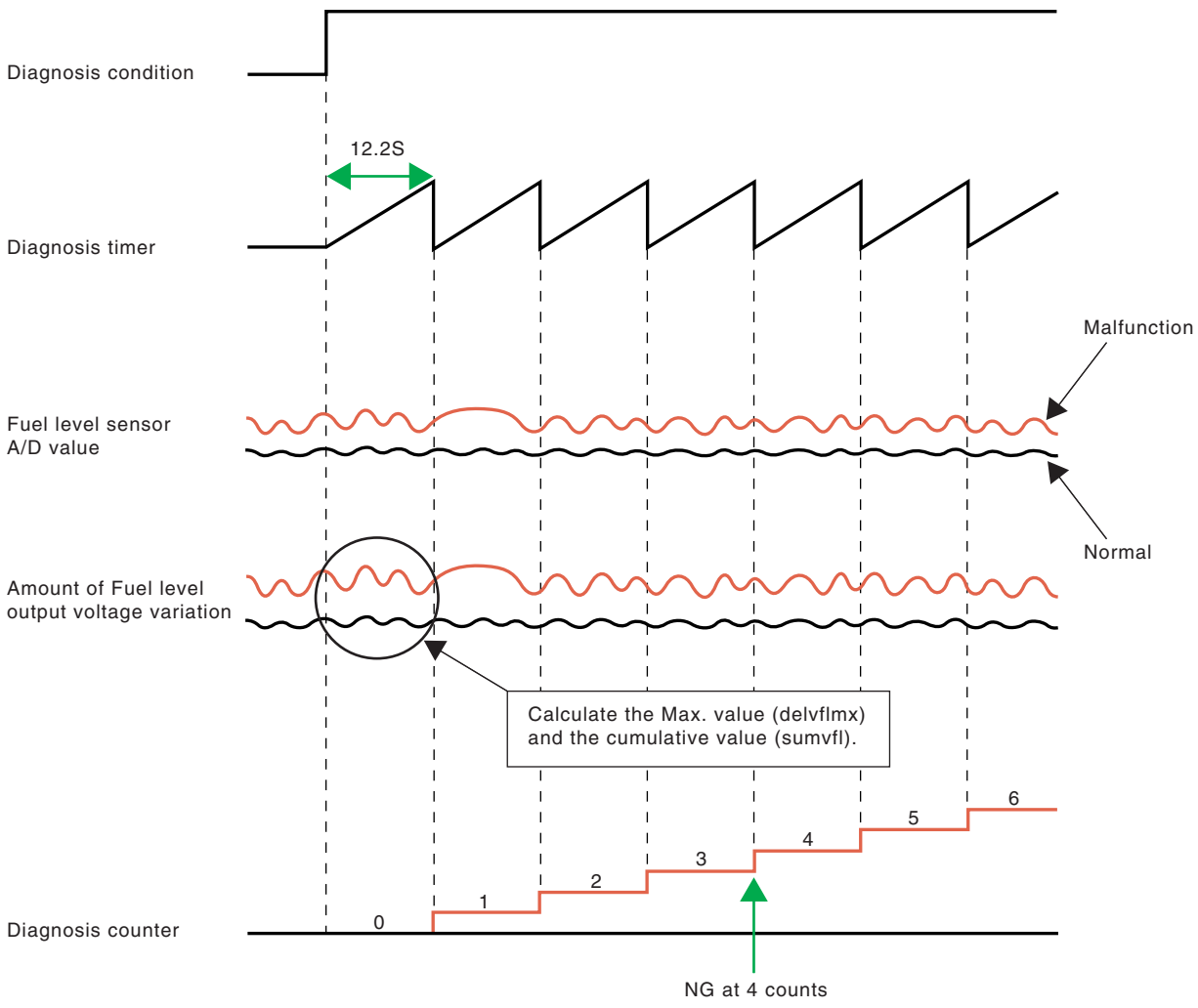

• Abnormality Judgment

Judge NG when the malfunction criteria below are completed.
Judgment Value

Malfunction Criteria	Threshold Value
Integrated times of the condition reaching follows, DELFLMAX ≥ 0.2 ←→ 0.26 V or SUMFL ≥ 16 V where, DELFLMAX is Max. deviation of sensor output during 12.2 seconds. SUMFL is integrated value of sensor output deviation during 12.2 seconds.	≥ 4 times

Do not count the diagnosis counter up when the following conditions are completed during 12.2 seconds.

Max − Min of tank pressure during 12.2 seconds	≥ 0.05 kPa (0.375 mmHg, 0.02 inHg)
Max − Min of battery voltage during 12.2 seconds	≥ 0.609 V

Time Needed for Diagnosis: 12.2 seconds × 4 times
Malfunction Indicator Light Illumination: Illuminates when malfunction occurs in 2 continuous driving cycles.

• Normality Judgment

Judge OK and clear the NG when the malfunction criteria below are completed.
Judgment Value

Malfunction Criteria	Threshold Value
DELFLMAX	< 0.2 ←→ 0.26 V
SUMFL Where, DELFLMAX is Max. deviation of sensor output during 12.2 seconds. SUMFL is integrated value of sensor output deviation during 12.2 seconds.	< 16 V

5. DTC CLEAR CONDITION

- When the OK idling cycle was completed 40 times in a row
- When “Clear Memory” was performed

6. MALFUNCTION INDICATOR LIGHT CLEAR CONDITION

- When the OK driving cycle was completed 3 times in a row
- When “Clear Memory” was performed

7. FAIL SAFE

None

8. ECM OPERATION AT DTC SETTING

Memorize the freeze frame data. (For test mode $02)

BJ:DTC P0483 COOLING FAN RATIONALITY CHECK

1. OUTLINE OF DIAGNOSIS

Detect the function abnormality of the radiator fan.
Judge NG when the engine coolant temperature slowly decreases even when the radiator fan is rotating.

2. ENABLE CONDITION

Diagnostic enable condition is completed if the radiator fan changes from OFF to ON when all of the conditions below are completed. When one of the conditions below is not completed, the diagnostic enable condition is not completed.

Secondary Parameters	Enable Conditions
Engine Speed	560 — 900 rpm
Idle switch	ON
Vehicle speed	< 2 km/h (1 MPH)
Battery voltage	≥ 10.9 V

3. GENERAL DRIVING CYCLE

Perform the diagnosis continuously when the radiator fan changes from OFF to ON when idling.

4. DIAGNOSTIC METHOD

• Abnormality Judgment

Judge NG when the continuous time of completing the malfunction criteria below becomes more than 5 minutes.

Judgment Value

Malfunction Criteria	Threshold Value
Engine coolant temperature	≥ 100°C (212°F)
Radiator fan signal changes	OFF to ON
Engine coolant temperature	Not reducing

Time Needed for Diagnosis: 5 minutes
Malfunction Indicator Light Illumination: Illuminates when malfunction occurs in 2 continuous driving cycles.

• Normality Judgment

Judge OK and clear NG when the malfunction criteria below are completed.

Judgment Value

Malfunction Criteria	Threshold Value
Radiator fan signal changes	OFF to ON
Engine coolant temperature	Reducing

5. DTC CLEAR CONDITION

- When the OK idling cycle was completed 40 times in a row
- When “Clear Memory” was performed

6. MALFUNCTION INDICATOR LIGHT CLEAR CONDITION

- When the OK driving cycle was completed 3 times in a row
- When “Clear Memory” was performed

7. FAIL SAFE

None

8. ECM OPERATION AT DTC SETTING

Memorize the freeze frame data. (For test mode $02)

BK:DTC P0500 VEHICLE SPEED SENSOR

1. OUTLINE OF DIAGNOSIS

Judge NG when out of standard value. Judge NG when the received data from ABSCM&H/U is abnormal, and the vehicle speed data is impossible.

2. COMPONENT DESCRIPTION

The vehicle speed signal is transmitted ABSCM&H/U. Then the OK/NG data of vehicle speed and ABS wheel speed sensor is transmitted from ABSCM&H/U through CAN communication.

3. ENABLE CONDITION

Secondary Parameters	Enable Conditions
After engine starting	≥ 2 seconds
Battery voltage	≥ 10.9 V

4. GENERAL DRIVING CYCLE

Perform the diagnosis continuously in 2 seconds or more after starting the engine.

5. DIAGNOSTIC METHOD

• Abnormality Judgment

Judge NG when the continuous time of completing the malfunction criteria below becomes more than 2.5 seconds.

Judgment Value

Malfunction Criteria	Threshold Value
Front ABS wheel speed sensor	Abnormal
When either of the following is completed	
Front left wheel speed	≥ 300 km/h (186 MPH)
Front right wheel speed	≥ 300 km/h (186 MPH)

Time Needed for Diagnosis: 2.5 seconds
Malfunction Indicator Light Illumination: Illuminates as soon as the malfunction occurs.

• Normality Judgment

Judge OK and clear the NG when all malfunction criteria below are completed.

Judgment Value

Malfunction Criteria	Threshold Value
Front left wheel speed	> 0 km/h (0 MPH) and < 300 km/h (186 MPH)
Front right wheel speed	> 0 km/h (0 MPH) and < 300 km/h (186 MPH)

6. DTC CLEAR CONDITION

- When the OK idling cycle was completed 40 times in a row
- When “Clear Memory” was performed

7. MALFUNCTION INDICATOR LIGHT CLEAR CONDITION

- When the OK driving cycle was completed 3 times in a row
- When “Clear Memory” was performed

8. FAIL SAFE

- Accelerator sensor signal process: Not allowed all closed points learning.
- Vehicle speed sensor signal process: Vehicle speed = 10 km/h (6 MPH)
- Fuel cut control: Not allowed vehicle speed 0 km/h (0 MPH) fuel cut. Normally the high vehicle speed fuel cut performs on vehicle speed condition and engine speed, but perform the fuel cut only on engine speed condition (4,400 rpm or more).
- ISC control: Set the open loop compensation to specified value (1 g (0.04 oz)/s). Not allowed ISC feedback volume calculation.
- Air conditioner control: Not allowed air conditioner cut at accelerating.
- Radiator fan control: ON both main/sub.
- Judge gear ratio: Control as gear fixed on 6th.

9. ECM OPERATION AT DTC SETTING

Memorize the freeze frame data. (For test mode $02)

BL:DTC P0506 IDLE CONTROL SYSTEM RPM LOWER THAN EXPECTED

1. OUTLINE OF DIAGNOSIS

Detect the malfunction that actual engine speed is not close to target engine speed during idling.
Judge NG when actual engine speed is not close to target engine speed during idling.

2. ENABLE CONDITION

Secondary Parameters	Enable Conditions
Engine coolant temperature	≥ 70°C (158°F)
Battery voltage	≥ 10.9 V
Atmospheric pressure	> 75.1 kPa (563 mmHg, 22.2 inHg)
Fuel level	≥ 9.6 ℓ (2.54 US gal, 2.11 Imp gal)
After engine starting	10.5 seconds or more
Feedback in ISC	In operation
Measured lambda (left and right)	0.81 ←→ 1.1
After air condition switching ON-OFF, OFF-ON	5.1 seconds or more
After in-manifold pressure change more than 4 kPa (30 mmHg, 1.2 inHg)	> 5.1 seconds
After neutral switch ON-OFF event	> 5.1 seconds
Vehicle speed	0 km/h (0 MPH)

3. GENERAL DRIVING CYCLE

Always perform diagnosis during idling after engine warmed.

4. DIAGNOSTIC METHOD

• Abnormality Judgment

Judge NG when the cumulative time of completing the malfunction criterion below becomes more than the time needed for diagnosis (10 seconds × 3 times).

Judgment Value

Malfunction Criteria	Threshold Value
Actual – target engine speed	< –100 rpm
Feedback correction for idle air control solenoid valve	Max.

Time Needed for Diagnosis: 10 seconds × 3 times
Malfunction Indicator Light Illumination: Illuminates when malfunction occurs in 2 continuous driving cycles.

• Normality Judgment

Judge OK and clear NG when the continuous time of completing the malfunction criterion below becomes more than the time needed for diagnosis (10 seconds).

Judgment Value

Malfunction Criteria	Threshold Value
Actual – target engine speed	≥ –100 rpm

5. DTC CLEAR CONDITION

- When the OK idling cycle was completed 40 times in a row
- When “Clear Memory” was performed

6. MALFUNCTION INDICATOR LIGHT CLEAR CONDITION

- When the OK driving cycle was completed 3 times in a row
- When “Clear Memory” was performed

7. FAIL SAFE

None

8. ECM OPERATION AT DTC SETTING

Memorize the freeze frame data. (For test mode $02)

BM:DTC P0507 IDLE CONTROL SYSTEM RPM HIGHER THAN EXPECTED

1. OUTLINE OF DIAGNOSIS

Detect the malfunction that actual engine speed is not close to target engine speed during idling.
Judge NG when actual engine speed is not close to target engine speed during idling.

2. ENABLE CONDITION

Secondary Parameters	Enable Conditions
Engine coolant temperature	≥ 70°C (158°F)
Battery voltage	≥ 10.9 V
Atmospheric pressure	〉75.1 kPa (563 mmHg, 22.2 inHg)
Fuel level	≥ 9.6 ℓ (2.54 US gal, 2.11 Imp gal)
After engine starting	10.5 seconds or more
Feedback in ISC	In operation
Lambda (left and right)	0.81 ←→ 1.1
After A/C switch ON-OFF event	5.1 seconds or more
After in-manifold pressure change more than 4 kPa (30 mmHg, 1.2 inHg)	〉5.1 seconds
After neutral switch ON-OFF event	〉5.1 seconds
Vehicle speed	0 km/h (0 MPH)

3. GENERAL DRIVING CYCLE

Always perform diagnosis during idling after engine warmed.

4. DIAGNOSTIC METHOD

• Abnormality Judgment

Judge NG when the continuous time of completing the malfunction criterion below becomes more than the time needed for diagnosis (10 seconds × 3 times).

Judgment Value

Malfunction Criteria	Threshold Value
Actual – target eng. speed	≥ 200 rpm
Feedback correction for idle air control solenoid valve	Min.

Time Needed for Diagnosis: 10 seconds × 3 times
Malfunction Indicator Light Illumination: Illuminates when malfunction occurs in 2 continuous driving cycles.

• Normality Judgment

Judge OK and clear NG when the continuous time of completing the malfunction criterion below becomes more than the time needed for diagnosis (10 seconds).

Judgment Value

Malfunction Criteria	Threshold Value
Actual – target eng. speed	〈 200 rpm

5. DTC CLEAR CONDITION

- When the OK idling cycle was completed 40 times in a row

- When “Clear Memory” was performed

6. MALFUNCTION INDICATOR LIGHT CLEAR CONDITION

- When the OK driving cycle was completed 3 times in a row
- When “Clear Memory” was performed

7. FAIL SAFE

None

8. ECM OPERATION AT DTC SETTING

Memorize the freeze frame data. (For test mode $02)

BN:DTC P0512 STARTER REQUEST CIRCUIT

1. OUTLINE OF DIAGNOSIS

Detect the open or short circuit of starter SW.
Judge ON NG when the starter SW signal remains on.

2. ENABLE CONDITION

Secondary Parameters	Enable Conditions
None	

3. GENERAL DRIVING CYCLE

Always perform the diagnosis continuously.

4. DIAGNOSTIC METHOD

• Abnormality Judgment

Judge NG when the continuous time of completing the malfunction criteria below becomes more than 3 minutes.

Judgment Value

Malfunction Criteria	Threshold Value
Engine speed	〉500 rpm
Starter OFF signal	Not detect
Battery voltage	〉8 V

Time Needed for Diagnosis: 180 seconds
Malfunction Indicator Light Illumination: Illuminates when malfunction occurs in 2 continuous driving cycles.

• Normality Judgment

Judge ON OK and clear the NG when the malfunction criteria below are completed.

Judgment Value

Malfunction Criteria	Threshold Value
Starter OFF signal	Detect
Battery voltage	〉8 V

5. DTC CLEAR CONDITION

- When the OK idling cycle was completed 40 times in a row
- When “Clear Memory” was performed

6. MALFUNCTION INDICATOR LIGHT CLEAR CONDITION

- When the OK driving cycle was completed 3 times in a row
- When “Clear Memory” was performed

7. FAIL SAFE

None

8. ECM OPERATION AT DTC SETTING

Memorize the freeze frame data. (For test mode $02)

BO:DTC P0519 IDLE CONTROL SYSTEM MALFUNCTION (FAIL-SAFE)

1. OUTLINE OF DIAGNOSIS

Detect the malfunction that engine speed increases more than that in normal condition during idling.

2. ENABLE CONDITION

Secondary Parameters	Enable Conditions
Battery voltage	≥ 10.9 V
Feedback in ISC	In operation
Vehicle speed	〈 4 km/h (2.49 MPH)
After engine starting	1 seconds or more

3. GENERAL DRIVING CYCLE

Always perform diagnosis at less than 4 km/h (2.49 MPH) of vehicle speed.

4. DIAGNOSTIC METHOD

• Abnormality Judgment

Judge NG when the continuous time until completing the all malfunction criteria below becomes more than the time needed for diagnosis (2 seconds).

Judgment Value

Malfunction Criteria	Threshold Value
Engine speed – target eng. speed	〉2,000 rpm
Feedback value for ISC	≤ 0
Engine speed change every 180 degree engine rev.	≥ –5 rpm

Time Needed for Diagnosis: 2 seconds
Malfunction Indicator Light Illumination: Illuminates as soon as malfunction occurs.

• Normality Judgment

Judge OK and clear NG when the continuous time until completing the malfunction criteria below becomes more than the time needed for diagnosis (5 seconds).

Judgment Value

Malfunction Criteria	Threshold Value
Engine speed – target eng. speed	〈 200 rpm

5. DTC CLEAR CONDITION

- When the OK idling cycle was completed 40 times in a row
- When “Clear Memory” was performed

6. MALFUNCTION INDICATOR LIGHT CLEAR CONDITION

- When the OK driving cycle was completed 3 times in a row
- When “Clear Memory” was performed

7. FAIL SAFE

Fuel shut-off: Shut-off fuel for only #1 and #2 cylinder, or for all cylinder in accordance with vehicle speed, engine speed, throttle position

8. ECM OPERATION AT DTC SETTING

Memorize the freeze frame data. (For test mode $02)

BP:DTC P0600 SERIAL COMMUNICATION LINK

1. OUTLINE OF DIAGNOSIS

Detect the malfunction of CAN communication.
It judges as NG when CAN communication becomes impossible, the CAN communication with AT becomes impossible, and the data from AT is not normal.

2. COMPONENT DISCRIPTION

CAN connects between ECM and TCM with high speed.

(Common Specification)
CAN PROTCOL 2.0B (active)
Frame format: 11 bit ID Frame (Standard frame)
(High Speed CAN)
ISO 11898 compliance
Communication Speed: 500 kbps

3. ENABLE CONDITION

Secondary Parameters	Enable Conditions
Battery Voltages	≥ 10.9 V
Starter switch	OFF
Engine	run

4. GENERAL DRIVING CYCLE

Perform the diagnosis continuously after starting the engine.

5. DIAGNOSTIC METHOD

• JUDGMENT OF MALFUNCTION

It judges as NG if any of the following conditions are judged as NG. It judges as OK if all of the following conditions are judged as OK within 1s, and the NG memory is cleared.
Judgment Value

Malfunction Criteria	Threshold Value
Buss off flag or error warning flag	Set
ID cannot be received from body integrated unit	= 500 ms
Data can not be renewal from body integrated unit	= 500 ms

Time needed for Diagnosis: 1 time
Malfunction Indicator Light Illumination: Illuminates simultaneously when malfunction is detected.

6. DTC CLEAR CONDITION

When the OK driving cycle was completed 40 consecutive times.
When “Clear Memory” was performed.

7. MALFUNCTION INDICATOR LIGHT CLEAR CONDITION

- When the OK driving cycle was completed 3 consecutive times.
- When “Clear Memory” was performed.

8. FAIL-SAFE

None

9. ECM OPERATION AT DTC SETTING

Store the freeze frame data. (For test mode $02)

BQ:DTC P0604 INTERNAL CONTROL MODULE RANDOM ACCESS MEMORY (RAM) ERROR

1. OUTLINE OF DIAGNOSIS

Detect the function abnormality of the micro-computer (RAM).
Judge NG when either the main CPU normal RAM or sub CPU normal RAM is abnormal. Judge OK when both of them are normal.
At initial routine, write the data to all area of RAM. Judge OK when same data can be read out, and judge NG when same data cannot be read out.

2. ENABLE CONDITION

Secondary Parameters	Enable Conditions
None	

Perform the diagnosis in the initial routine.

3. GENERAL DRIVING CYCLE

Perform the diagnosis immediately after IG key SW is turned ON.

4. DIAGNOSTIC METHOD

• Abnormality Judgment

Judge NG when the malfunction criteria below are completed.
Judgment Value

Malfunction Criteria	Threshold Value
Main CPU normal RAM abnormality	
Write 5AA5A55A, and read out. (All area of RAM)	Cannot be read out 5AA5A55A.
Or write A55A5AA5, and read out. (All area of RAM)	Cannot be read out A55A5AA5.
Sub CPU normal RAM abnormality.	
Write 5AA5, and read out. (All area of RAM)	Cannot be read out 5AA5.
Or write A55A, and read out. (All area of RAM)	Cannot be read out A55A.

Time Needed for Diagnosis: Indefinite
Malfunction Indicator Light Illumination: Illuminates as soon as malfunction occurs.
• Normality Judgment

Judge NG when the malfunction criteria below are completed.
Judgment Value

Malfunction Criteria	Threshold Value
Main CPU normal RAM abnormality	
Write 5AA5A55A, and read out. (All area of RAM)	Cannot be read out 5AA5A55A.
Or write A55A5AA5, and read out. (All area of RAM)	Cannot be read out A55A5AA5.
Sub CPU normal RAM abnormality.	
Write 5AA5, and read out. (All area of RAM)	Cannot be read out 5AA5.
Or write A55A, and read out. (All area of RAM)	Cannot be read out A55A.

5. DTC CLEAR CONDITION

- When the OK idling cycle was completed 40 times in a row
- When “Clear Memory” was performed

6. MALFUNCTION INDICATOR LIGHT CLEAR CONDITION

- When the OK driving cycle was completed 3 times in a row
- When “Clear Memory” was performed

7. FAIL SAFE

None

8. ECM OPERATION AT DTC SETTING

Memorize the freeze frame data. (For test mode $02)

BR:DTC P0605 INTERNAL CONTROL MODULE READ ONLY MEMORY (ROM) ERROR

1. OUTLINE OF DIAGNOSIS

Judge NG when SUM value of ROM is out of the standard value.

2. ENABLE CONDITION

Secondary Parameters	Enable Conditions
Ignition switch	ON

3. GENERAL DRIVING CYCLE

Always perform the diagnosis continuously.

4. DIAGNOSTIC METHOD

• Abnormality Judgment

Judge NG when the continuous time of completing the malfunction criteria below becomes more than 0.5 seconds.

Judgment Value

Malfunction Criteria	Threshold Value
SUM value of ROM	Standard value

Time Needed for Diagnosis: To be determined.
Malfunction Indicator Light Illumination: Illuminates as soon as malfunction occurs.

5. DTC CLEAR CONDITION

- When the OK idling cycle was completed 40 times in a row
- When “Clear Memory” was performed (Only at engine stop)

6. MALFUNCTION INDICATOR LIGHT CLEAR CONDITION

- When the OK driving cycle was completed 3 times in a row
- When “Clear Memory” was performed

7. FAIL SAFE

Stop the current to electronic throttle control motor. (Fix the throttle opening angle to 6°.)

8. ECM OPERATION AT DTC SETTING

Memorize the freeze frame data. (For test mode $02)

BS:DTC P0607 CONTROL MODULE PERFORMANCE

1. OUTLINE OF DIAGNOSIS

Judge NG when either the following is completed.
- When the read value of throttle position sensor 1 signal is mismatched between main CPU and sub CPU.
- When the read value of accelerator position sensor 1 signal is mismatched between main CPU and sub CPU.
- When the sub CPU operates abnormally.
- When the communication between main CPU and sub CPU is abnormal.
- When the input amplifier circuit of throttle position sensor 1 is abnormal.
- When the cruise control cannot be canceled correctly.
- When the signal of brake SW1 and 2 is mismatched.
- When the directed angle from main CPU is abnormal.

2. COMPONENT DESCRIPTION

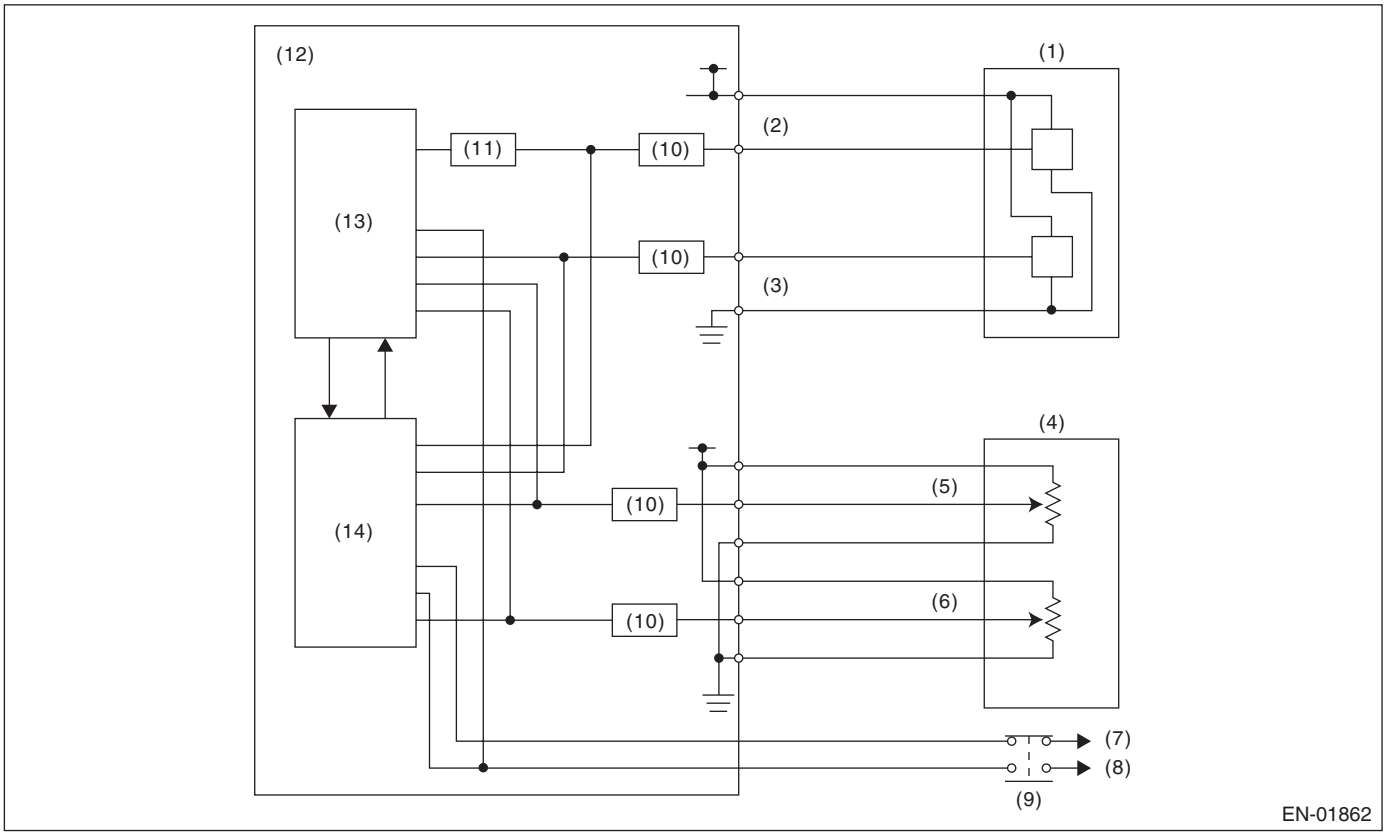

(1) Throttle position sensor
(2) Throttle position sensor 1
(3) Throttle position sensor 2
(4) Accelerator pedal position sensor
(5) Accelerator pedal position sensor 1
(6) Accelerator pedal position sensor 2
(7) Battery
(8) Stop light
(9) Brake switch
(10) I/F circuit
(11) Amplifier circuit
(12) Engine control module (ECM)
(13) Sub CPU
(14) Main CPU

3. ENABLE CONDITION

Secondary Parameters	Enable Conditions
(1) Ignition switch	ON
(2) Ignition switch	ON
(3) None	—
(4) None	—
(5) Throttle opening angle	
(6) Brake SW (with cruise control)	ON
(7) None	—
(8) Cruise control	OFF

4. GENERAL DRIVING CYCLE

(1) — (4): Always perform the diagnosis continuously.
(5): Always perform the diagnosis continuously on idling.
(6): Perform the diagnosis when the brake pedal is depressed.
(7): Always perform the diagnosis continuously.
(8): Always perform the diagnosis continuously when the cruise control pedal is not operating.

5. DIAGNOSTIC METHOD

Judge OK and clear NG when the malfunction criteria below are completed.

Judgment Value

Malfunction Criteria	Threshold Value
(1) Difference of CPU on reading value of throttle position sensor signal	Within 0.116 V
(2) Difference of CPU on reading value of accelerator position sensor signal	Within 0.615 V
(3) WD pulse from sub CPU	WD pulse occur
(4) Communication between CPU	Possible to communicate
(5) Difference of signal on connection of amplifier	Within × 4±0.56 V
(6) Cruise control cancel signal at brake ON	Cruise control cancel signal ON
(7) Brake switch 1, 2 signal	SW 1 and 2 are matched
(8) Throttle opening angle directing value	Within the opening angle +3.4° which calculated from accelerator opening angle coefficient

Time Needed for Diagnosis:
(1) 200 milliseconds
(2) 250 milliseconds
(3) 200 milliseconds
(4) 200 milliseconds
(5) 24 milliseconds
(6) 250 milliseconds
(7) 200 milliseconds
(8) 250 milliseconds

Malfunction Indicator Light Illumination: Illuminates as soon as malfunction occurs.

6. DTC CLEAR CONDITION

- When the OK idling cycle was completed 40 times in a row
- When “Clear Memory” was performed

7. MALFUNCTION INDICATOR LIGHT CLEAR CONDITION

- When the OK driving cycle was completed 3 times in a row
- When “Clear Memory” was performed

8. FAIL SAFE

Stop the current to electronic throttle control motor. (Fix the throttle opening angle to 6°.)

9. ECM OPERATION AT DTC SETTING

Memorize the freeze frame data. (For test mode $02)

BT:DTC P0638 THROTTLE ACTUATOR CONTROL RANGE/PERFORMANCE (BANK 1)

1. OUTLINE OF DIAGNOSIS

Judge NG when the target opening angle and actual opening angle is mismatched or the current to motor is more than specified duty for specified time continuously.

2. COMPONENT DESCRIPTION

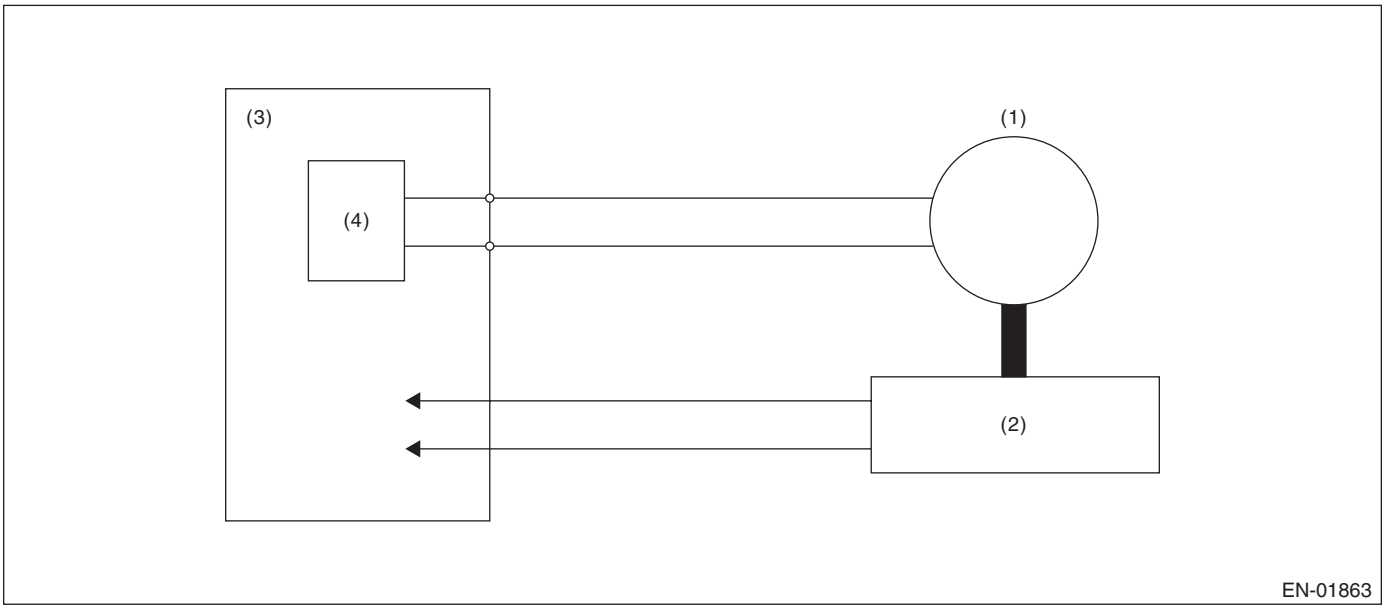

(1) Motor
(2) Throttle position sensor
(3) Engine control module (ECM)
(4) Drive circuit

3. ENABLE CONDITION

Secondary Parameters	Enable Conditions
Ignition switch	ON
Normal operation of electronic throttle control	ON

4. GENERAL DRIVING CYCLE

Always perform the diagnosis continuously when the electronic throttle control is operating.

5. DIAGNOSTIC METHOD

Judge OK and clear NG when the malfunction criteria below are completed.

Judgment Value

Malfunction Criteria	Threshold Value
Difference between target opening angle and actual opening angle	Less than 3.5°
Output duty to drive circuit	Less than 95%

Time Needed for Diagnosis:

Target opening angle and actual opening angle: 250 milliseconds (For NG) 2000 milliseconds (For OK)
Output duty to drive circuit: 2000 milliseconds

Details of Judgment

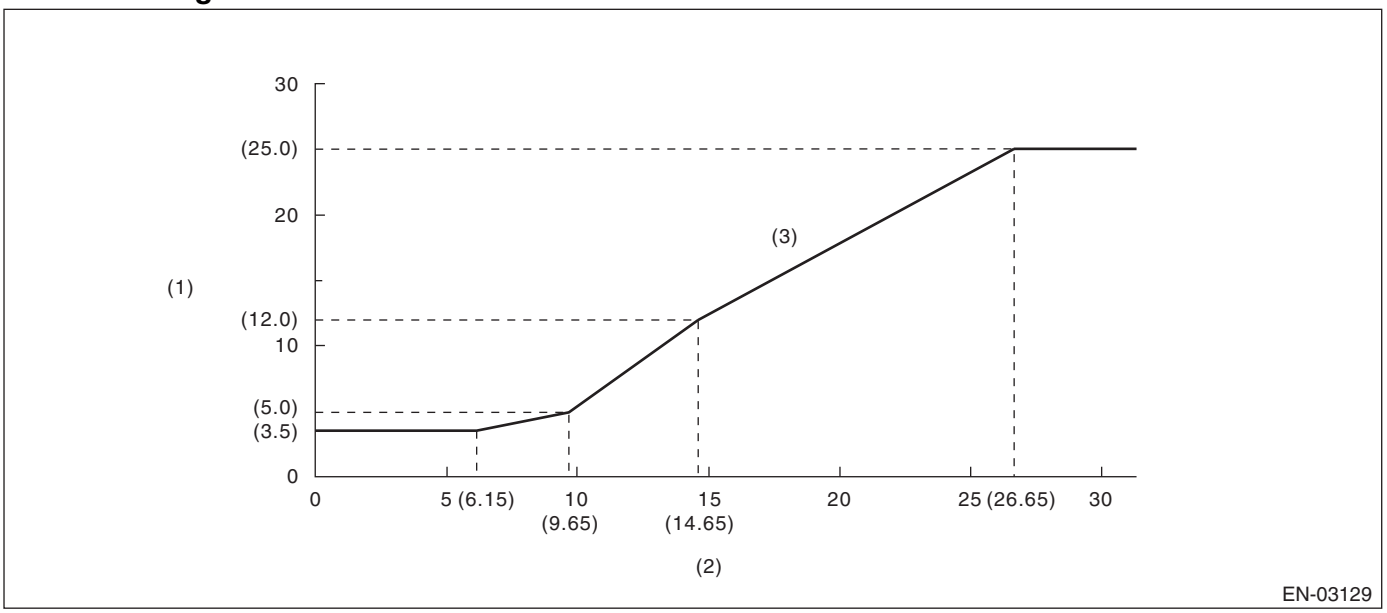

(1) Difference between target opening angle and actual opening angle (°)
(2) Target throttle opening angle (°)
(3) NG area

Details of Judgment (Always 1000 milliseconds when the actual opening angle ≤ target opening angle)

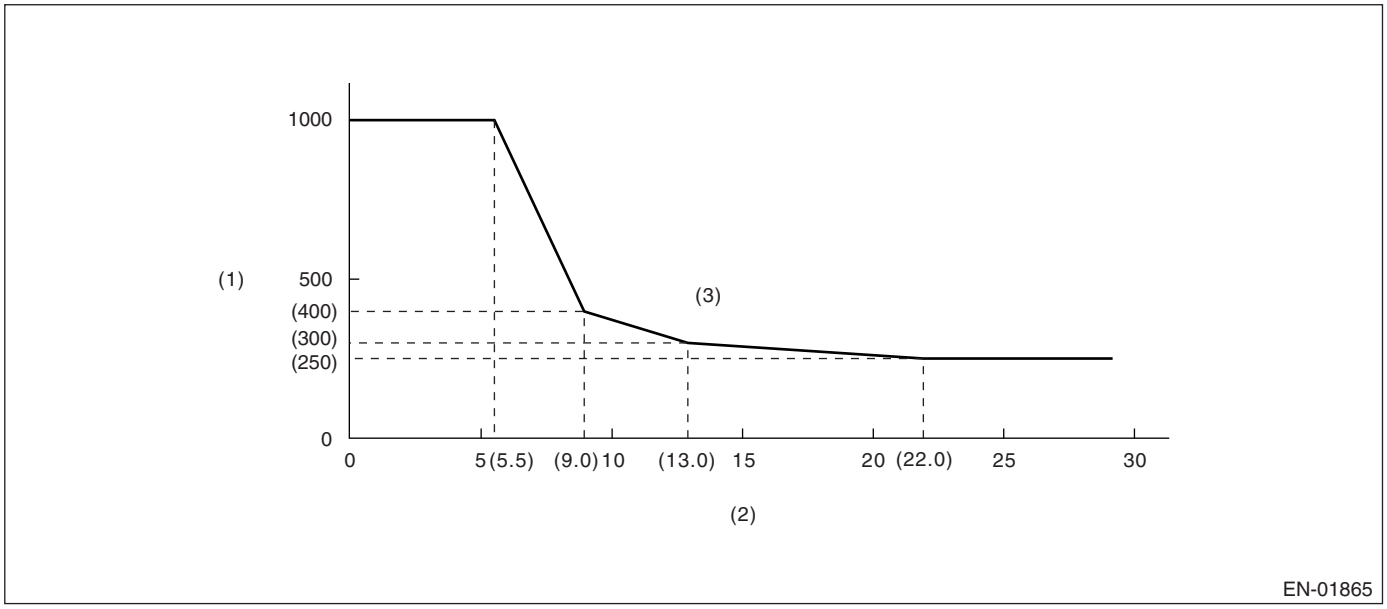

(1) Judgment time (milliseconds)
(2) Throttle position sensor 1 opening angle
(3) NG area

Malfunction Indicator Light Illumination: Illuminates as soon as malfunction occurs.

6. DTC CLEAR CONDITION

- When the OK idling cycle was completed 40 times in a row
- When “Clear Memory” was performed (Only with engine stoppedped)

7. MALFUNCTION INDICATOR LIGHT CLEAR CONDITION

- When the OK driving cycle was completed 3 times in a row
- When “Clear Memory” was performed (Only with engine stoppedped)

8. FAIL SAFE

Stop the current to electronic throttle control motor. (Fix the throttle opening angle to 6°.)

9. ECM OPERATION AT DTC SETTING

Memorize the freeze frame data. (For test mode $02)

BU:DTC P0691 COOLING FAN 1 CONTROL CIRCUIT LOW

1. OUTLINE OF DIAGNOSIS

Detect the open or short circuit of the radiator fan circuit.
Judge NG when the ECM output level differs from the actual terminal level.

2. ENABLE CONDITION

Secondary Parameters	Enable Conditions
None	

3. GENERAL DRIVING CYCLE

Always perform the diagnosis continuously.

4. DIAGNOSTIC METHOD

• Abnormality Judgment

Judge NG when the cumulative time of completing the malfunction criteria below becomes more than 2.5 seconds.

Judgment Value

Malfunction Criteria	Threshold Value
After starting the engine	1 second or more
Engine speed	≥ 500 rpm
Ignition switch	ON
Battery voltage	≥ 10.9 V
Terminal voltage level when ECM transmits OFF signal	Low level

Time Needed for Diagnosis: 2.5 seconds
Malfunction Indicator Light Illumination: Illuminates when malfunction occurs in 2 continuous driving cycles.

• Normality Judgment

Judge OK and clear NG when the malfunction criteria below are completed.

Judgment Value

Malfunction Criteria	Threshold Value
After starting the engine	1 second or more
Engine speed	≥ 500 rpm
Ignition switch	ON
Battery voltage	≥ 10.9 V
Terminal voltage level when ECM transmits OFF signal	High level

5. DTC CLEAR CONDITION

- When the OK idling cycle was completed 40 times in a row
- When “Clear Memory” was performed

6. MALFUNCTION INDICATOR LIGHT CLEAR CONDITION

- When the OK driving cycle was completed 3 times in a row
- When “Clear Memory” was performed

7. FAIL SAFE

None

8. ECM OPERATION AT DTC SETTING

Memorize the freeze frame data. (For test mode $02)

BV:DTC P0692 COOLING FAN 1 CONTROL CIRCUIT HIGH

1. OUTLINE OF DIAGNOSIS

Detect the open or short circuit of the radiator fan circuit.
Judge NG when the ECM output level differs from the actual terminal level.

2. ENABLE CONDITION

Secondary Parameters	Enable Conditions
None	

3. GENERAL DRIVING CYCLE

Always perform the diagnosis continuously.

4. DIAGNOSTIC METHOD

• Abnormality Judgment

Judge NG when the cumulative time of completing the malfunction criteria below becomes more than 2.5 seconds.

Judgment Value

Malfunction Criteria	Threshold Value
After starting the engine	1 second or more
Engine speed	≥ 500 rpm
Ignition switch	ON
Battery voltage	≥ 10.9 V
Terminal voltage level when ECM transmits ON signal	High level

Time Needed for Diagnosis: 2.5 seconds
Malfunction Indicator Light Illumination: Illuminates when malfunction occurs in 2 continuous driving cycles.

• Normality Judgment

Judge OK and clear NG when the malfunction criteria below are completed.

Judgment Value

Malfunction Criteria	Threshold Value
After starting the engine	1 second or more
Engine speed	≥ 500 rpm
Ignition switch	ON
Battery voltage	≥ 10.9 V
Terminal voltage level when ECM transmits ON signal	Low level

5. DTC CLEAR CONDITION

- When the OK idling cycle was completed 40 times in a row
- When “Clear Memory” was performed

6. MALFUNCTION INDICATOR LIGHT CLEAR CONDITION

- When the OK driving cycle was completed 3 times in a row
- When “Clear Memory” was performed

7. FAIL SAFE

None

8. ECM OPERATION AT DTC SETTING

Memorize the freeze frame data. (For test mode $02)

BW:DTC P0700 TRANSMISSION CONTROL SYSTEM (MIL REQUEST)

1. OUTLINE OF DIAGNOSIS

AT C/U performs CAN communication. It judges as NG if malfunction is detected.

2. ENABLE CONDITION

Secondary Parameters	Enable Conditions
Batery Voltage	≥ 10.9 V

3. GENERAL DRIVING CYCLE

Always perform diagnosis continously.

4. DIAGNOSTIC METHOD

It judges as NG if the following condition malfunctions more than the predetermined time (2.5s). It judges as OK if the following condition does not malfunction, and the NG memory is cleared.

Judgment Value

Malfunction Criteria	Threshold Value
MIL light up request from TCM	set

Time needed for diagnosis: 2.5 seconds
Malfunction Indicator Light Illumination: Illuminates simultaneously when malfunction is detected.

5. DTC CLEAR CONDITION

- When the OK driving cycle was completed 40 consecutive times.
- When “Clear Memory” was performed.

6. MALFUNCTION INDICATOR LIGHT CLEAR CONDITION

- When the OK driving cycle was completed 3 consecutive times.
- When “Clear Memory” was performed.

7. FAIL-SAFE

None

8. ECM OPERATION AT DTC SETTING

Store the freeze frame data. (For test mode $02)

BX:DTC P0851 NEUTRAL SWITCH INPUT CIRCUIT LOW (AT MODEL)

1. OUTLINE OF DIAGNOSIS

Detect the open or short circuit of the neutral SW.
Judge NG when the ECM neutral terminal input differs from the reception data from TCM.

2. ENABLE CONDITION

Secondary Parameters	Enable Conditions
Ignition switch	ON
Battery voltage	≥ 10.9 V
After starting the engine	2 seconds or more
Starter switch	OFF

3. GENERAL DRIVING CYCLE

Perform the diagnosis continuously in 2 seconds or more after starting the engine.

4. DIAGNOSTIC METHOD

Judge NG when the continuous time of completing the malfunction criteria below becomes more than 2.56 seconds. Judge OK and clear NG when the malfunction criteria below are not completed.
Judgment Value

Malfunction Criteria	Threshold Value
Neutral switch signal when park/neutral = “OFF” & other switches = “ON” on AT	Low (ON)

Time Needed for Diagnosis: 2.56 seconds
Malfunction Indicator Light Illumination: Illuminates when malfunction occurs in 2 continuous driving cycles.

5. DTC CLEAR CONDITION

- When the OK idling cycle was completed 40 times in a row
- When “Clear Memory” was performed

6. MALFUNCTION INDICATOR LIGHT CLEAR CONDITION

- When the OK driving cycle was completed 3 times in a row
- When “Clear Memory” was performed

7. FAIL SAFE

Cruise control: Not allowed to command cruise control.

8. ECM OPERATION AT DTC SETTING

Memorize the freeze frame data. (For test mode $02)

BY:DTC P0851 NEUTRAL SWITCH INPUT CIRCUIT LOW (MT MODEL)

1. OUTLINE OF DIAGNOSIS

Judge the open or short circuit of the neutral SW.
Judge NG when there is no change in the neutral SW even if the driving shift was applied. (There is neutral SW ON/OFF inversion from the vehicle speed and engine speed.)

2. ENABLE CONDITION

Secondary Parameters	Enable Conditions
Ignition switch	ON
Battery voltage	≥ 10.9 V
After starting the engine	2 seconds or more
Starter switch	OFF

3. GENERAL DRIVING CYCLE

Perform the diagnosis continuously in 2 seconds or more after starting the engine.

4. DIAGNOSTIC METHOD

Judge NG when the malfunction criteria below are completed 3 time or more after the neutral SW change.
Judge OK and clear NG if there is change in the neutral SW.

Judgment Value

Malfunction Criteria	Threshold Value
Neutral switch signal (while changing from a to b below)	Low
Driving condition change	a) to b)
a) Vehicle speed = 0 km/h (0 MPH) & engine speed 600 — 900 rpm	
b) Vehicle speed ≥ 64 km/h (40 MPH) & engine speed 1600 — 2550 rpm	

Time Needed for Diagnosis: 3 monitoring
Malfunction Indicator Light Illumination: Illuminates when malfunction occurs in 2 continuous driving cycles.

5. DTC CLEAR CONDITION

- When the OK idling cycle was completed 40 times in a row
- When “Clear Memory” was performed

6. MALFUNCTION INDICATOR LIGHT CLEAR CONDITION

- When the OK driving cycle was completed 3 times in a row
- When “Clear Memory” was performed

7. FAIL SAFE

Cruise control: Not allowed to command cruise control.

8. ECM OPERATION AT DTC SETTING

Memorize the freeze frame data. (For test mode $02)

BZ:DTC P0852 NEUTRAL SWITCH INPUT CIRCUIT HIGH (AT MODEL)

1. OUTLINE OF DIAGNOSIS

Detect the open or short circuit of the neutral SW.
Judge NG when the ECM neutral terminal input differs from the reception data from TCM.

2. ENABLE CONDITION

Secondary Parameters	Enable Conditions
Ignition switch	ON
Battery voltage	≥ 10.9 V
After starting the engine	2 seconds or more
Starter switch	OFF

3. GENERAL DRIVING CYCLE

Perform the diagnosis continuously in 2 seconds or more after starting the engine.

4. DIAGNOSTIC METHOD

Judge NG when the continuous time until completing the malfunction criteria below becomes more than 2.56 seconds. Judge OK and clear NG when the malfunction criteria below are not completed.
Judgment Value

Malfunction Criteria	Threshold Value
Neutral switch signal when park/neutral = “ON” & other switches = “OFF” on AT	High (OFF)

Time Needed for Diagnosis: 2.56 seconds
Malfunction Indicator Light Illumination: Illuminates when malfunction occurs in 2 continuous driving cycles.

5. DTC CLEAR CONDITION

- When the OK idling cycle was completed 40 times in a row
- When “Clear Memory” was performed

6. MALFUNCTION INDICATOR LIGHT CLEAR CONDITION

- When the OK driving cycle was completed 3 times in a row
- When “Clear Memory” was performed

7. FAIL SAFE

Cruise control: Not allowed to command cruise control.

8. ECM OPERATION AT DTC SETTING

Memorize the freeze frame data. (For test mode $02)

CA:DTC P0852 NEUTRAL SWITCH INPUT CIRCUIT HIGH (MT MODEL)

1. OUTLINE OF DIAGNOSIS

Judge the open or short circuit of the neutral SW.
Judge NG when there is no change in the neutral SW even if the driving shift was applied. (There is neutral SW ON/OFF inversion from the vehicle speed and engine speed.)

2. ENABLE CONDITION

Secondary Parameters	Enable Conditions
Ignition switch	ON
Battery voltage	≥ 10.9 V
After starting the engine	2 seconds or more
Starter switch	OFF

3. GENERAL DRIVING CYCLE

Perform the diagnosis continuously in 2 seconds or more after starting the engine.

4. DIAGNOSTIC METHOD

Judge NG when the malfunction criteria below are completed 3 time or more after the neutral SW change.
Judge OK and clear NG if there is change in the neutral SW.

Judgment Value

Malfunction Criteria	Threshold Value
Neutral switch signal (while changing from a to b below)	High
Driving condition change	a) to b)
a) Vehicle speed = 0 km/h (0 MPH) & engine speed 600 — 900 rpm	
b) Vehicle speed ≥ 64 km/h (40 MPH) & engine speed 1,600 — 2,550 rpm	

Time Needed for Diagnosis: 3 monitoring
Malfunction Indicator Light Illumination: Illuminates when malfunction occurs in 2 continuous driving cycles.

5. DTC CLEAR CONDITION

- When the OK idling cycle was completed 40 times in a row
- When “Clear Memory” was performed

6. MALFUNCTION INDICATOR LIGHT CLEAR CONDITION

- When the OK driving cycle was completed 3 times in a row
- When “Clear Memory” was performed

7. FAIL SAFE

Cruise control: Not allowed to command cruise control.

8. ECM OPERATION AT DTC SETTING

Memorize the freeze frame data. (For test mode $02)

CB:DTC P1152 O2 SENSOR CIRCUIT RANGE/PERFORMANCE (LOW) (BANK1 SENSOR1)

1. OUTLINE OF DIAGNOSIS

Detect that lambda value remains Low.
Judge NG when lambda value is abnormal in accordance with lambda value of front oxygen (A/F) sensor and running condition that is vehicle speed, amount of intake air engine coolant temperature, sub feedback control, etc.
Lambda value = Actual air fuel ratio/Theoretical air fuel ratio
Lambda > 1: Lean
Lambda < 1: Rich

2. COMPONENT DESCRIPTION

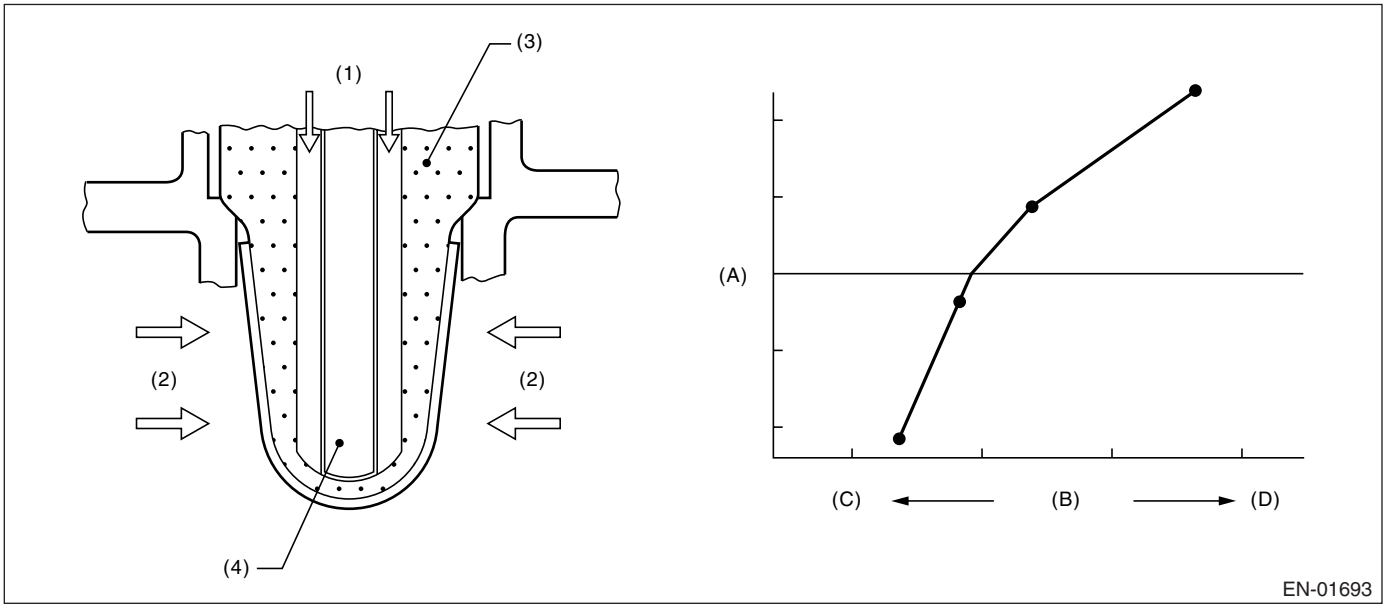

(1) Atmosphere
(2) Exhaust
(3) ZrO2
(4) Ceramic heater
(A) Electromotive force
(B) Air fuel ratio
(C) Lean
(D) Rich

3. ENABLE CONDITION

Secondary Parameters	Enable Conditions
All secondary parameters to be in enable conditions	4 seconds or more
Battery voltage	〉10.9 V
Atmospheric pressure	〉75.1 kPa (563 mmHg, 22.2 inHg)
Rear oxygen sensor sub feedback	Operating
Rear oxygen sensor output voltage – feedback target voltage	–0.2 V ←→ 0.1 V
Rear oxygen sensor sub feedback compensation coefficient or	On Min.
Rear oxygen sensor sub feedback compensation coefficient or	On Max.
After engine starting	60 seconds or more
Engine coolant temperature	≥ 70°C (158°F)
Vehicle speed	≥ 20 km/h (12 MPH)
Amount of intake air	≥ 6 g (0.21 oz)/s
Load change during 0.5 engine rev.	≤ 0.02 g (0.001 oz)/rev
Impedance of front oxygen (A/F) sensor	0 ←→ 50 Ω
Learning value of evaporation gas density	≤ 0.2
Accumulated time of operating canister purge	20 seconds or more
Target of lambda load compensation coefficient	–0.03 — 0

4. GENERAL DRIVING CYCLE

Perform diagnosis continuously at a constant speed of 20 km/h (12 MPH) or more since 60 seconds after starting the engine.

5. DIAGNOSTIC METHOD

Judge NG when the continuous time of completing the malfunction criteria below becomes more than the time needed for diagnosis (10 seconds). Judge OK and clear NG when the malfunction criteria below are not completed.

Judgment Value

Malfunction Criteria	Threshold Value
Output lambda when rear oxygen sensor sub feedback compensation coefficient being at not high limit	≤ 0.85

Time Needed for Diagnosis: 10 seconds
Malfunction Indicator Light Illumination: Illuminates when malfunction occurs in 2 continuous driving cycles.

6. DTC CLEAR CONDITION

- When the OK idling cycle was completed 40 times in a row
- When “Clear Memory” was performed

7. MALFUNCTION INDICATOR LIGHT CLEAR CONDITION

- When the OK driving cycle was completed 3 times in a row
- When “Clear Memory” was performed

8. FAIL SAFE

- Front oxygen (A/F) sensor main learning compensation: Not allowed to calculate
- Front oxygen (A/F) sensor sub learning compensation: Not allowed to calculate
- Correction when re-starting at high temperature: Normally minimum value 0.06 → 0
- Purge control: Not allowed to purge

9. ECM OPERATION AT DTC SETTING

Memorize the freeze frame data. (For test mode $02)

CC:DTC P1153 O2 SENSOR CIRCUIT RANGE/PERFORMANCE (HIGH) (BANK1 SENSOR1)

1. OUTLINE OF DIAGNOSIS

Detect that lambda value remains High.
Judge NG when lambda value is abnormal in accordance with lambda value of front oxygen (A/F) sensor and running condition that is vehicle speed, amount of intake air engine coolant temperature, sub feedback control, etc.
Lambda value = Actual air fuel ratio/Theoretical air fuel ratio
Lambda > 1: Lean
Lambda < 1: Rich

2. COMPONENT DESCRIPTION

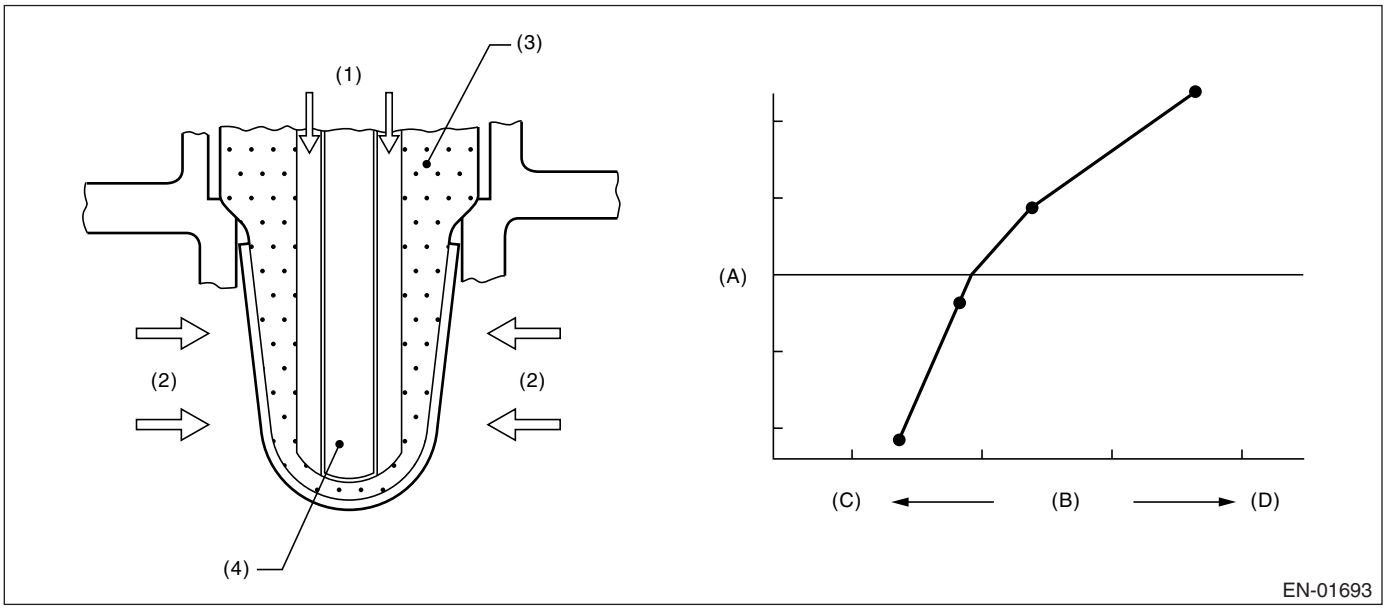

(1) Atmosphere
(2) Exhaust
(3) ZrO2
(4) Ceramic heater
(A) Electromotive force
(B) Air fuel ratio
(C) Lean
(D) Rich

3. ENABLE CONDITION

Secondary Parameters	Enable Conditions
All secondary parameters to be in enable conditions	4 seconds or more
Battery voltage	〉10.9 V
Atmospheric pressure	〉75.1 kPa (563 mmHg, 22.2 inHg)
Rear oxygen sensor sub feedback	Operating
Rear oxygen sensor output voltage – feedback target voltage	–0.2 V ←→ 0.1 V
Rear oxygen sensor sub feedback compensation coefficient or	On Min.
Rear oxygen sensor sub feedback compensation coefficient or	On Max.
After engine starting	60 seconds or more
Engine coolant temperature	≥ 70°C (158°F)
Vehicle speed	≥ 20 km/h (12 MPH)
Amount of intake air	≥ 6 g (0.21 oz)/s
Load change during 0.5 engine rev.	≤ 0.02 g (0.001 oz)/rev
Impedance of front oxygen (A/F) sensor	0 ←→ 50 Ω
Learning value of evaporation gas density	≤ 0.2
Accumulated time of operating canister purge	20 seconds or more
Target of lambda load compensation coefficient	–0.03 — 0

4. GENERAL DRIVING CYCLE

Perform diagnosis continuously at a constant speed of 20 km/h (12 MPH) or more since 60 seconds after starting the engine.

5. DIAGNOSTIC METHOD

Judge NG when the continuous time of completing the malfunction criteria below becomes more than the time needed for diagnosis (10 seconds). Judge OK and clear NG when the malfunction criteria below are not completed.

Judgment Value

Malfunction Criteria	Threshold Value
Output lambda when rear oxygen sensor sub feedback compensation coefficient value being at not low limit	≥ 1.15

Time Needed for Diagnosis: 10 seconds
Malfunction Indicator Light Illumination: Illuminates when malfunction occurs in 2 continuous driving cycles.

6. DTC CLEAR CONDITION

- When the OK idling cycle was completed 40 times in a row
- When “Clear Memory” was performed

7. MALFUNCTION INDICATOR LIGHT CLEAR CONDITION

- When the OK driving cycle was completed 3 times in a row
- When “Clear Memory” was performed

8. FAIL SAFE

- Front oxygen (A/F) sensor main learning compensation: Not allowed to calculate
- Front oxygen (A/F) sensor sub learning compensation: Not allowed to calculate.
- Correction when re-starting at high temperature: Normally minimum value 0.06 → 0
- Purge control: Not allowed to purge

9. ECM OPERATION AT DTC SETTING

Memorize the freeze frame data. (For test mode $02)

CD:DTC P1160 RETURN SPRING FAILURE

1. OUTLINE OF DIAGNOSIS

Judge NG when the valve does not move to the close direction with the motor power stopped and the valve open more than the default opening.

2. COMPONENT DESCRIPTION

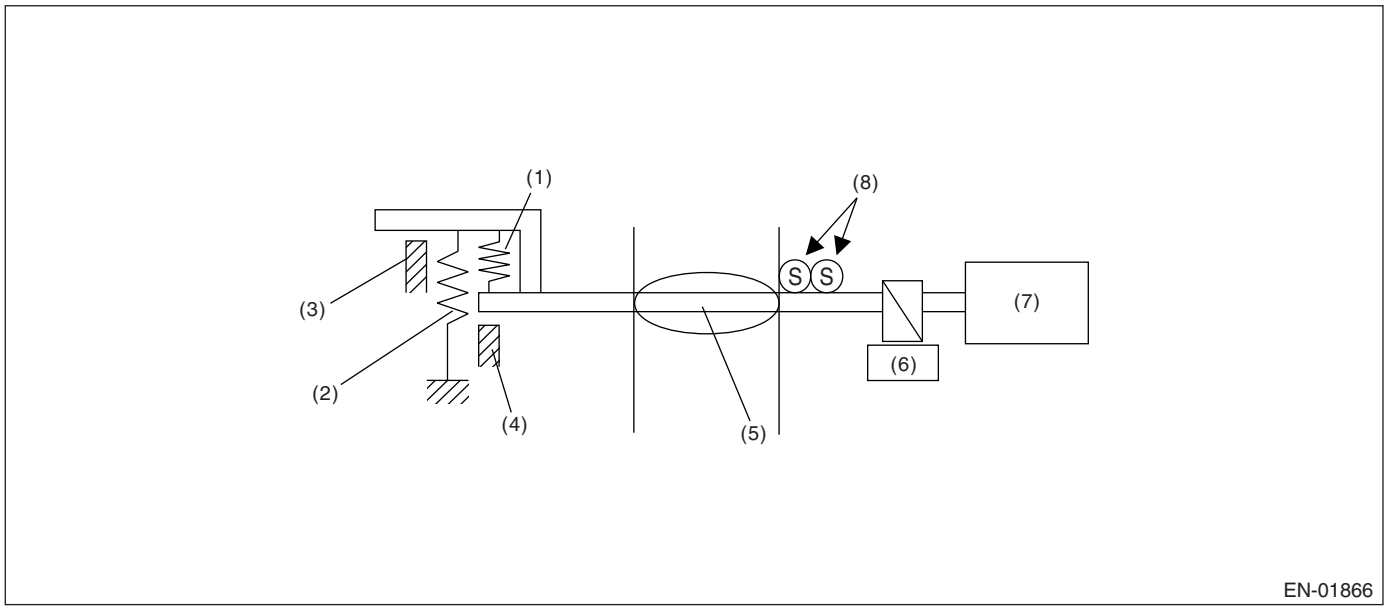

(1) Opener spring
(2) Return spring
(3) Intermediate stopper
(4) Full closed stopper
(5) Throttle valve
(6) Gear
(7) DC motor
(8) Main and sub throttle sensor

3. ENABLE CONDITION

Secondary Parameters	Enable Conditions
Throttle opening	OFF
Motor continuity	OFF

4. GENERAL DRIVING CYCLE

- Ignition switch ON → OFF
- Ignition switch OFF → ON (After clear memory only)

5. DIAGNOSTIC METHOD

Judge OK and clear the NG when the malfunction criteria below are completed.
Judgment Value

Malfunction Criteria	Threshold Value
Opening variation after continuity is set to OFF	≥ 2°

Time Needed for Diagnosis: 600 milliseconds
Malfunction Indicator Light Illumination: Illuminates as soon as malfunction occurs.

6. DTC CLEAR CONDITION

- When the OK idling cycle was completed 40 times in a row
- When “Clear Memory” was performed (Only with engine stopped)

7. MALFUNCTION INDICATOR LIGHT CLEAR CONDITION

- When the OK driving cycle was completed 3 times in a row
- When “Clear Memory” was performed (Only with engine stopped)

8. FAIL SAFE

Fix the throttle opening to 6°.

9. ECM OPERATION AT DTC SETTING

Memorize the freeze frame data. (For test mode $02)

CE:DTC P1400 FUEL TANK PRESSURE CONTROL SOLENOID VALVE CIRCUIT LOW

1. OUTLINE OF DIAGNOSIS

Detect open or short circuit of pressure control solenoid valve. Judge NG when ECM output level is different from actual terminal level.

2. COMPONENT DESCRIPTION

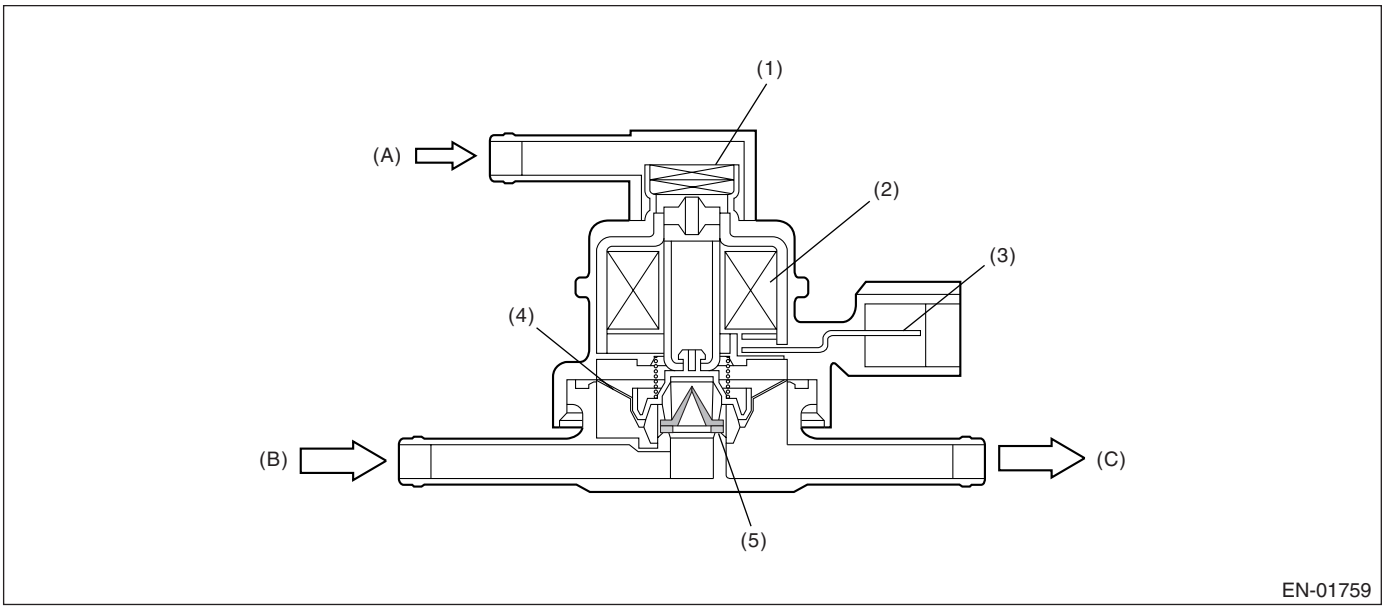

(1) Filter
(2) Coil
(3) Connector terminal
(4) Diaphragm
(5) Valve
(A) Atmospheric pressure
(B) Shut off valve
(C) To fuel tank

3. ENABLE CONDITION

Secondary Parameters	Enable Conditions
Ignition switch	ON
Battery voltage	≥ 10.9 V
After engine starting	1 second or more

4. GENERAL DRIVING CYCLE

Always perform the diagnosis after starting the engine.

5. DIAGNOSTIC METHOD

Judge NG when the continuous time of completing the malfunction criteria below becomes more than time needed for diagnosis (2.5 seconds). Judge OK and clear the NG when the malfunction criteria below are not completed.

Judgment Value

Malfunction Criteria	Threshold Value
Terminal voltage when ECM outputs OFF signal	Low

Time Needed for Diagnosis: 2.5 seconds

Malfunction Indicator Light Illumination: Illuminates when malfunction occurs in two continuous drive cycles.

6. DTC CLEAR CONDITION

- When the OK idling cycle was completed 40 times in a row
- When “Clear Memory” was performed

7. MALFUNCTION INDICATOR LIGHT CLEAR CONDITION

- When the OK driving cycle was completed 3 times in a row
- When “Clear Memory” was performed

8. FAIL SAFE

None

9. ECM OPERATION AT DTC SETTING

Memorize the freeze frame data. (For test mode $02)

CF:DTC P1420 FUEL TANK PRESSURE CONTROL SOL. VALVE CIRCUIT HIGH

1. OUTLINE OF DIAGNOSIS

Detect open or short circuit of pressure control solenoid valve.
Judge NG when ECM output level is different from actual terminal level.

2. COMPONENT DESCRIPTION

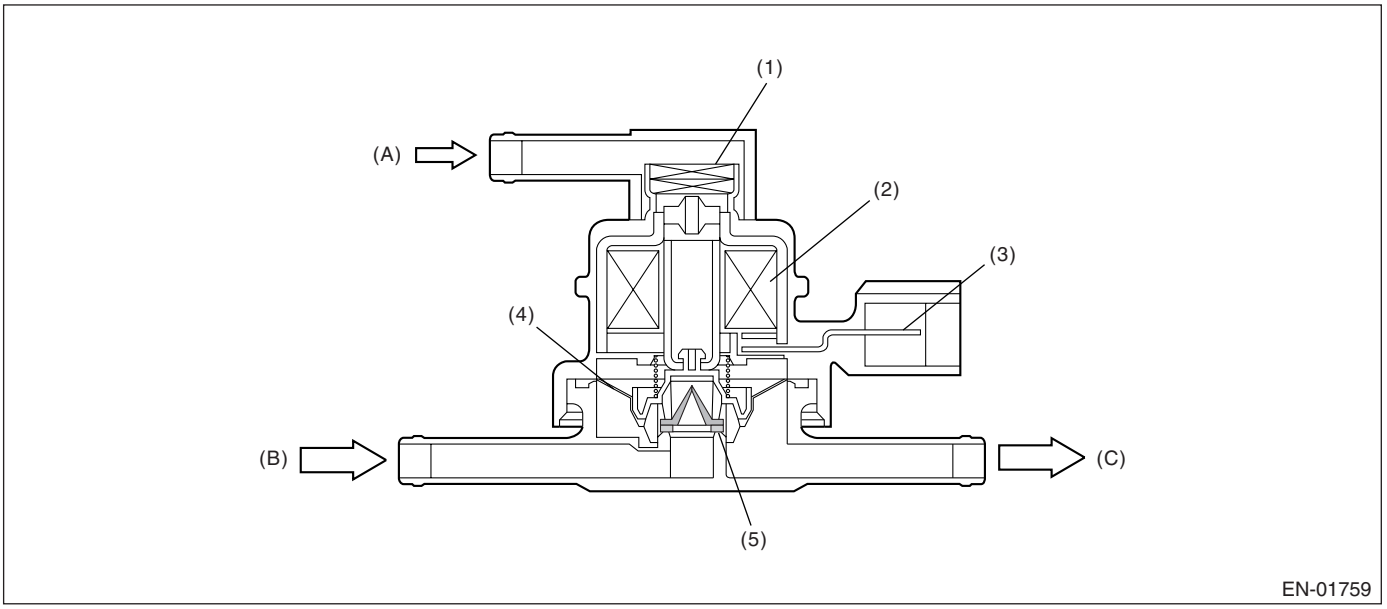

(1) Filter
(2) Coil
(3) Connector terminal
(4) Diaphragm
(5) Valve
(A) Atmospheric pressure
(B) Shut off valve
(C) To fuel tank

3. ENABLE CONDITION

Secondary Parameters	Enable Conditions
Ignition switch	ON
Battery voltage	≥ 10.9 V
After engine starting	1 second or more

4. GENERAL DRIVING CYCLE

Always perform the diagnosis after starting the engine.

5. DIAGNOSTIC METHOD

Judge NG when the continuous time of completing the malfunction criteria below becomes more than time needed for diagnosis (2.5 seconds). Judge OK and clear the NG when the malfunction criteria below are not completed.

Judgment Value

Malfunction Criteria	Threshold Value
Terminal voltage when ECM outputs ON signal	High

Time Needed for Diagnosis: 2.5 seconds
Malfunction Indicator Light Illumination: Illuminates when malfunction occurs in two continuous drive cycles.

6. DTC CLEAR CONDITION

- When the OK idling cycle was completed 40 times in a row
- When “Clear Memory” was performed

7. MALFUNCTION INDICATOR LIGHT CLEAR CONDITION

- When the OK driving cycle was completed 3 times in a row
- When “Clear Memory” was performed

8. FAIL SAFE

None

9. ECM OPERATION AT DTC SETTING

Memorize the freeze frame data. (For test mode $02)

CG:DTC P1443 VENT CONTROL SOLENOID VALVE FUNCTION PROBLEM

1. OUTLINE OF DIAGNOSIS

Detect malfunction of drain valve (close fixing).
Judge NG when the fuel tank pressure is small.

2. COMPONENT DESCRIPTION

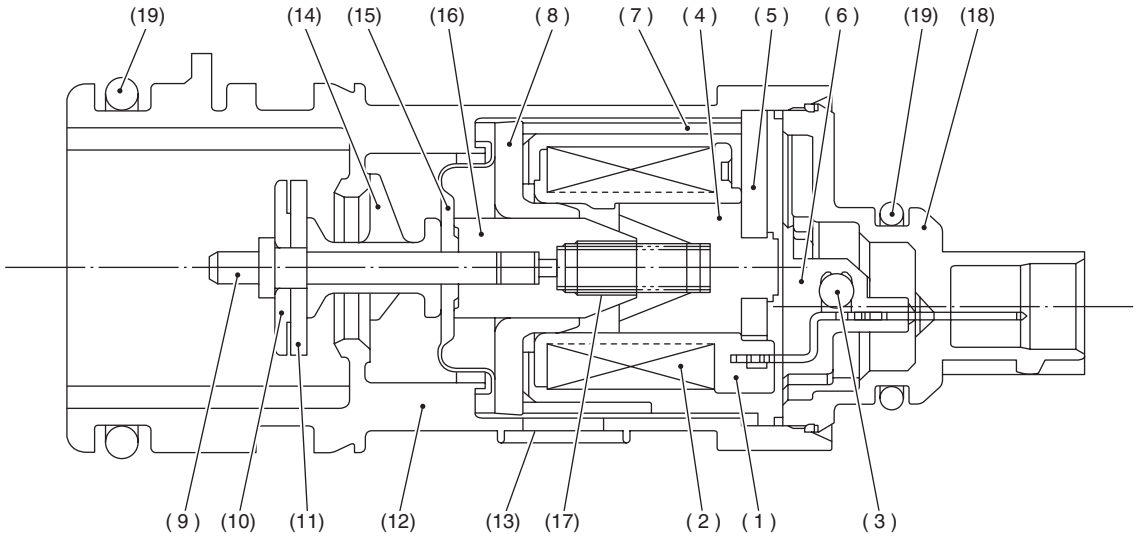

(1) Bobbin
(2) Coil
(3) Diode
(4) Stator core
(5) End plate
(6) Body
(7) Yoke
(8) Magnetic plate
(9) Shaft
(10) Plate
(11) Valve
(12) Housing
(13) Filter
(14) Retainer
(15) Diaphragm
(16) Movable core
(17) Spring
(18) Cover
(19) O-ring

3. ENABLE CONDITION

Secondary Parameter	Enable Condition
Drain valve	Open
Battery voltage	≥ 10.9 V
Atmospheric pressure	≥ 75.0 kPa (563 mmHg, 22.17 inHg)
Tank pressure when starter ON → OFF	−0.43←→1.43 kPa (−3.2 ←→10.7 mmHg, −0.13 ←→ 0.42 inHg)

4. GENERAL DRIVING CYCLE

Always perform the diagnosis continuously.

5. DIAGNOSTIC METHOD

• Abnormality Judgment

Judge NG when the continuous time of completing the malfunction criteria below becomes more than 3 seconds.

Judgment Value

Malfunction Criteria	Threshold Value
Tank pressure	≤ –4.0 kPa (–30 mmHg, –1.18 inHg)

Time Needed for Diagnosis: 3 seconds
Malfunction Indicator Light Illumination: Illuminates as soon as the malfunction occurs.
• Normality Judgment

Judge OK and clear the NG when the malfunction criteria below are completed.
Judgment Value

Malfunction Criteria	Threshold Value
Tank pressure	> –4.0 kPa (–30 mmHg, –1.18 inHg)
Cumulative time for completing the malfunction criteria below	≥ 30 seconds
Purge control solenoid valve duty ratio	Except 0
Fuel temperature	–10 ←→ 45°C (14 ←→ 113°F)
Intake manifold relative pressure	≤ –26.7 kPa (–200 mmHg, –7.87 inHg)

6. DTC CLEAR CONDITION

- When the OK idling cycle was completed 40 times in a row
- When “Clear Memory” was performed

7. MALFUNCTION INDICATOR LIGHT CLEAR CONDITION

- When the OK driving cycle was completed 3 times in a row
- When “Clear Memory” was performed

8. FAIL SAFE

PCV control: Open the PCV solenoid.

9. ECM OPERATION AT DTC SETTING

Memorize the freeze frame data. (For test mode $02)

CH:DTC P1446 FUEL TANK SENSOR CONTROL VALVE CIRCUIT LOW

1. OUTLINE OF DIAGNOSIS

Detect the open or short circuit of fuel tank sensor control valve.
Judge NG when the ECM output level is different from actual terminal level.

2. COMPONENT DESCRIPTION

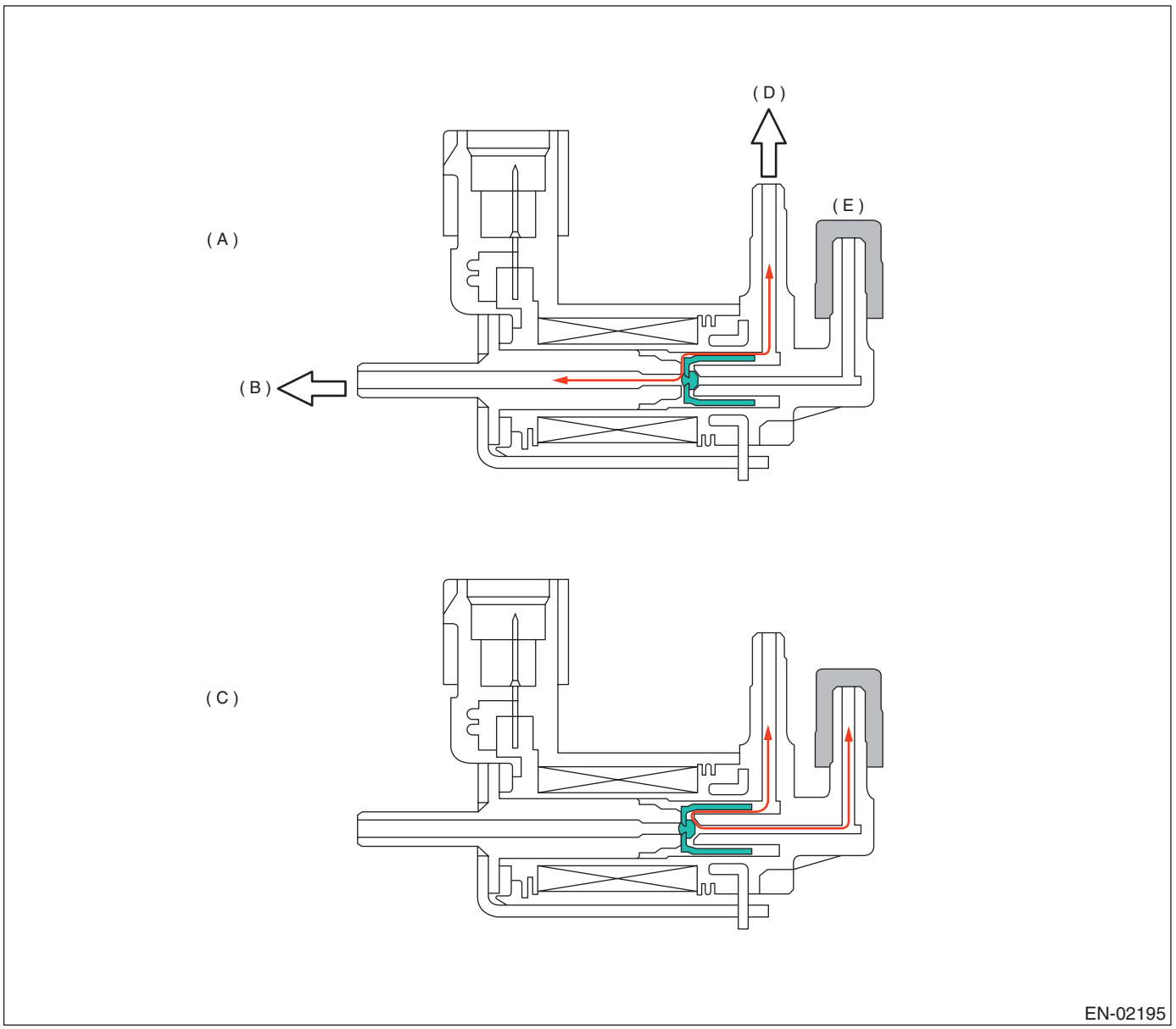

(A) Open atmosphere (solenoid OFF)
(B) Ambient air
(C) During diagnosis (solenoid ON)
(D) To pressure sensor
(E) Plug

3. ENABLE CONDITION

Secondary Parameters	Enable Conditions
None	

4. GENERAL DRIVING CYCLE

Always perform the diagnosis continuously.

5. DIAGNOSTIC METHOD

• Abnormality Judgment

Judge NG when the continuous time of completing the malfunction criteria below becomes more than 2.5 seconds.

Judgment Value

Malfunction Criteria	Threshold Value
Battery voltage	≥ 10.9 V
After engine starting	1 second or more
Terminal output voltage when ECM output OFF signals	Low
Ignition switch	ON

Time Needed for Diagnosis: 2.5 seconds
Malfunction Indicator Light Illumination: Illuminates when malfunction occurs in 2 continuous driving cycles.

• Normality Judgment

Judge OK when the malfunction criteria below are completed.

Judgment Value

Malfunction Criteria	Threshold Value
Battery voltage	≥ 10.9 V
After engine starting	1 second or more
Terminal output voltage when ECM output OFF signals	High
Ignition switch	ON

6. DTC CLEAR CONDITION

- When the OK idling cycle is completed 40 times in a row
- When “Clear Memory” was performed

7. MALFUNCTION INDICATOR LIGHT CLEAR CONDITION

- When the OK driving cycle is completed 3 times in a row
- When “Clear Memory” was performed

8. FAIL SAFE

None

9. ECM OPERATION AT DTC SETTING

Memorize the freeze frame data. (For test mode $02)

CI: DTC P1447 FUEL TANK SENSOR CONTROL VALVE CIRCUIT HIGH

1. OUTLINE OF DIAGNOSIS

Detect the open or short circuit of fuel tank sensor control valve.
Judge NG when the ECM output level is different from actual terminal level.

2. COMPONENT DESCRIPTION

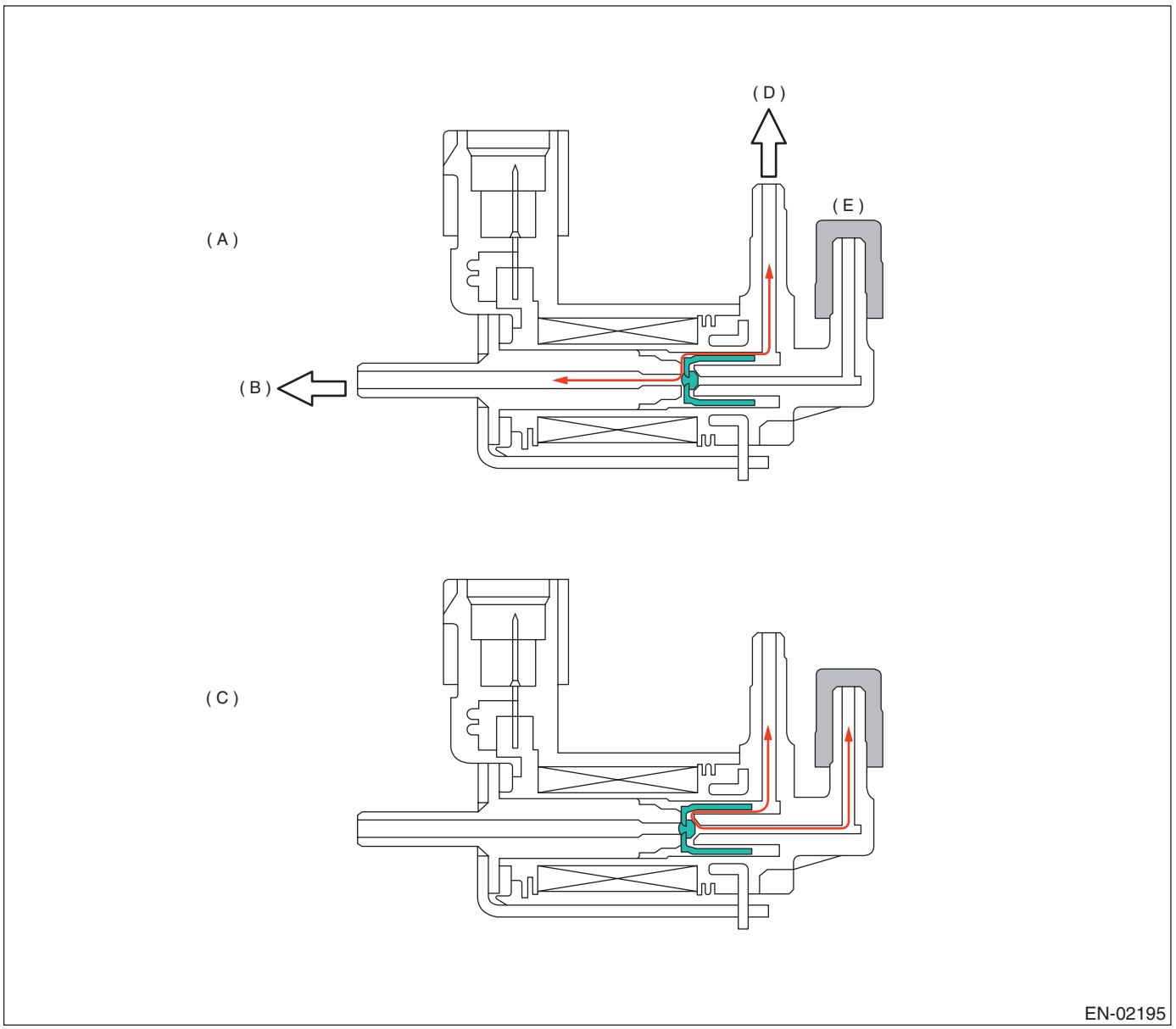

(A) Open atmosphere (solenoid OFF)
(B) Ambient air
(C) During diagnosis (solenoid ON)
(D) To pressure sensor
(E) Plug

3. ENABLE CONDITION

Secondary Parameters	Enable Conditions
None	

4. GENERAL DRIVING CYCLE

Always perform the diagnosis continuously.

5. DIAGNOSTIC METHOD

• Abnormality Judgment

Judge NG when the cumulative time of completing the malfunction criteria below becomes more than 2.5 seconds.

Judgment Value

Malfunction Criteria	Threshold Value
Battery voltage	≥ 10.9 V
After engine starting	1 second or more
Terminal output voltage when ECM output ON signals	High
Ignition switch	ON

Time Needed for Diagnosis: 2.5 seconds
Malfunction Indicator Light Illumination: Illuminates when malfunction occurs in two continuous drive cycles.

• Normality Judgment

Judge OK when the malfunction criteria below are completed.

Judgment Value

Malfunction Criteria	Threshold Value
Battery voltage	≥ 10.9 V
After engine starting	1 second or more
Terminal output voltage when ECM output OFF signals	Low
Ignition switch	ON

6. DTC CLEAR CONDITION

- When the OK idling cycle is completed 40 times in a row
- When “Clear Memory” was performed

7. MALFUNCTION INDICATOR LIGHT CLEAR CONDITION

- When the OK driving cycle is completed 3 times in a row
- When “Clear Memory” was performed

8. FAIL SAFE

None

9. ECM OPERATION AT DTC SETTING

Memorize the freeze frame data. (For test mode $02)

CJ:DTC P1492 EGR SOLENOID VALVE SIGNAL #1 CIRCUIT MALFUNCTION (LOW INPUT)

1. OUTLINE OF DIAGNOSIS

- Detect the open/short circuit of EGR.
- Judge NG when ECM output level is different from actual terminal level.

2. COMPONENT DESCRIPTION

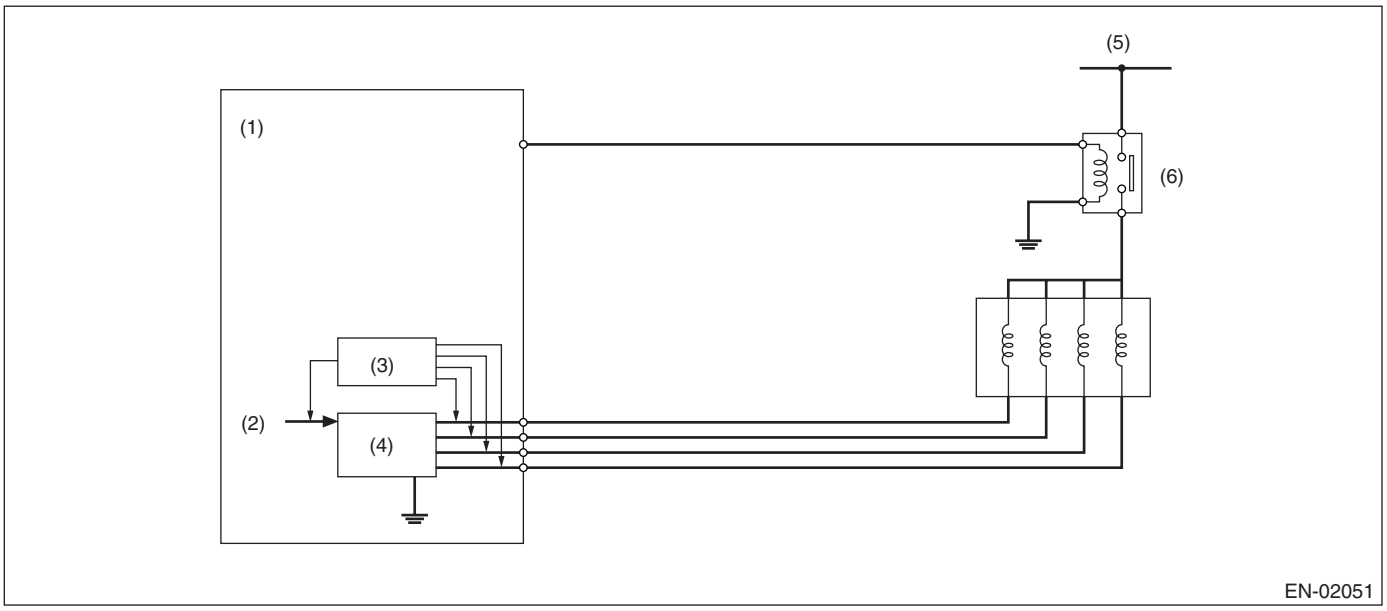

(1) Engine control module (ECM)
(2) CPU
(3) Detecting circuit
(4) Switching circuit
(5) Battery voltage
(6) Main relay

3. ENABLE CONDITION

Secondary Parameters	Enable Conditions
Target position of EGR valve	〉0 step
Battery voltage	〉10.9 V

4. GENERAL DRIVING CYCLE

Perform the diagnosis continuously when EGR operating.

5. DIAGNOSTIC METHOD

• Abnormality Judgment

Judge NG when the continuous time until completing the malfunction criteria below becomes more than time needed for diagnosis.

Judgment Value

Malfunction Criteria	Threshold Value
Terminal voltage level when ECM outputs OFF signal	Low level

Time Needed for Diagnosis: 2.5 seconds
Malfunction Indicator Light Illumination: Illuminates as soon as malfunction occurs.

• Normality Judgment

Judge OK and clear the NG when the malfunction criteria below are not completed.

Judgment Value

Malfunction Criteria	Threshold Value
Terminal voltage level when ECM outputs OFF signal	High level

6. DTC CLEAR CONDITION

- When the OK idling cycle was completed 40 times in a row
- When “Clear Memory” was performed

7. MALFUNCTION INDICATOR LIGHT CLEAR CONDITION

- When the OK driving cycle was completed 3 times in a row
- When “Clear Memory” was performed

8. FAIL SAFE

- Front oxygen (A/F) sensor main learning compensation: Not allowed to calculate
- Knock sensor learning compensation: Not allowed to calculate
- EGR control: Not allowed to operate

9. ECM OPERATION AT DTC SETTING

Memorize the freeze frame data. (For test mode $02)

CK:DTC P1493 EGR SOLENOID VALVE SIGNAL #1 CIRCUIT MALFUNCTION (HIGH INPUT)

1. OUTLINE OF DIAGNOSIS

- Detect the open/short circuit of EGR.
- Judge NG when ECM output level is different from actual terminal level.

2. COMPONENT DESCRIPTION

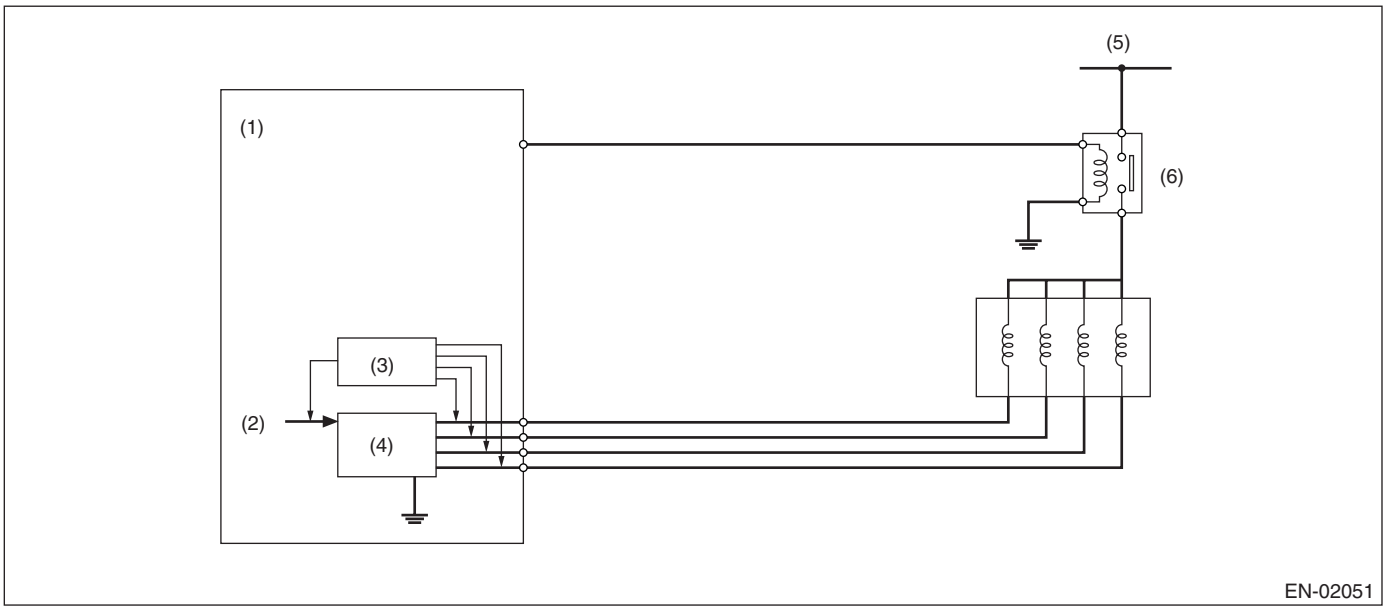

(1) Engine control module (ECM)
(2) CPU
(3) Detecting circuit
(4) Switching circuit
(5) Battery voltage
(6) Main relay

3. ENABLE CONDITION

Secondary Parameters	Enable Conditions
Battery voltage	〉10.9 V
EGR target point	〉0 step

4. GENERAL DRIVING CYCLE

Always perform the diagnosis continuously.

5. DIAGNOSTIC METHOD

• Abnormality Judgment

Judge NG when the continuous time until completing the malfunction criteria below becomes more than time needed for diagnosis.

Judgment Value

Malfunction Criteria	Threshold Value
Terminal voltage level when ECM outputs ON signal	High level

Time Needed for Diagnosis: 2.5 seconds
Malfunction Indicator Light Illumination: Illuminates as soon as malfunction occurs.

• Normality Judgment

Judge OK and clear the NG when the malfunction criteria below are not completed.

Judgment Value

Malfunction Criteria	Threshold Value
Terminal voltage level when ECM outputs ON signal	Low level

6. DTC CLEAR CONDITION

- When the OK idling cycle is completed 40 times in a row
- When “Clear Memory” was performed

7. MALFUNCTION INDICATOR LIGHT CLEAR CONDITION

- When the OK driving cycle was completed 3 times in a row
- When “Clear Memory” was performed

8. FAIL SAFE

- Front oxygen (A/F) sensor main learning compensation: Not allowed to calculate
- Knock sensor learning compensation: Not allowed to calculate
- EGR control: Not allowed to operate

9. ECM OPERATION AT DTC SETTING

Memorize the freeze frame data. (For test mode $02)

CL:DTC P1494 EGR SOLENOID VALVE SIGNAL #2 CIRCUIT MALFUNCTION (LOW INPUT)

1. OUTLINE OF DIAGNOSIS

- Detect the open/short circuit of EGR.
- Judge NG when ECM output level is different from actual terminal level.

2. COMPONENT DESCRIPTION

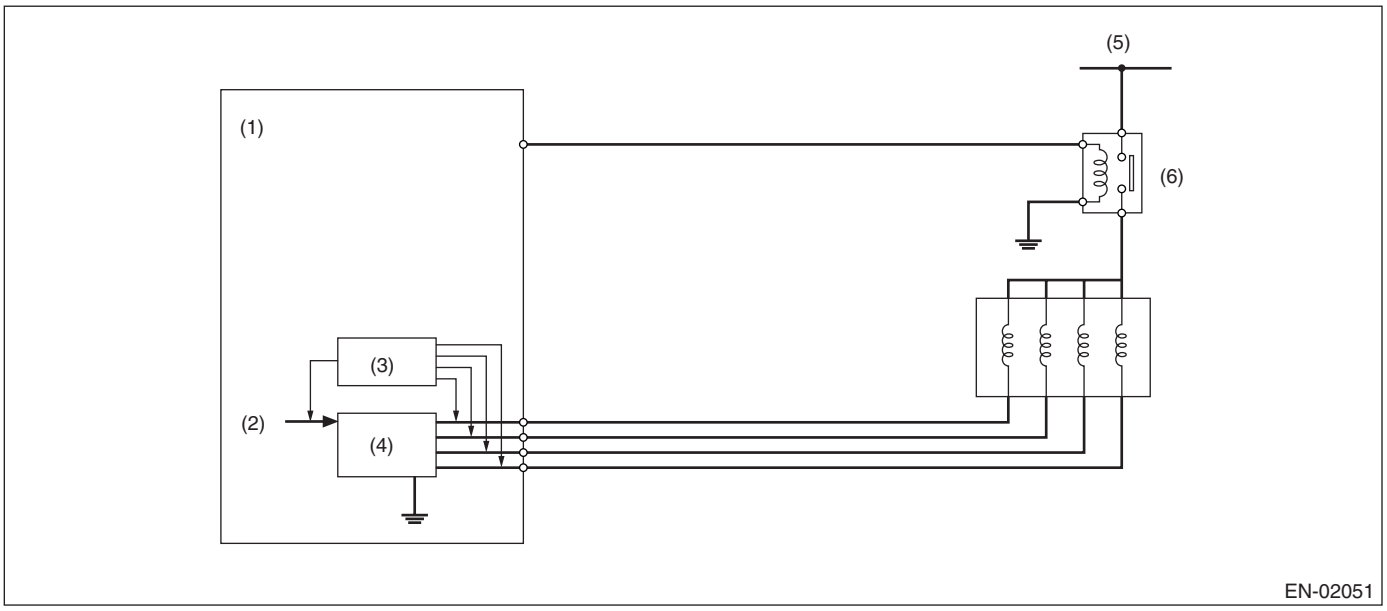

(1) Engine control module (ECM)
(2) CPU
(3) Detecting circuit
(4) Switching circuit
(5) Battery voltage
(6) Main relay

3. ENABLE CONDITION

Secondary Parameters	Enable Conditions
Target position of EGR valve	〉0 step
Battery voltage	〉10.9 V

4. GENERAL DRIVING CYCLE

Perform the diagnosis continuously when EGR operating.

5. DIAGNOSTIC METHOD

• Abnormality Judgment

Judge NG when the continuous time until completing the malfunction criteria below becomes more than time needed for diagnosis.

Judgment Value

Malfunction Criteria	Threshold Value
Terminal voltage level when ECM outputs OFF signal	Low level

Time Needed for Diagnosis: 2.5 seconds
Malfunction Indicator Light Illumination: Illuminates as soon as malfunction occurs.

• Normality Judgment

Judge OK and clear the NG when the malfunction criteria below are not completed.
Judgment Value

Malfunction Criteria	Threshold Value
Terminal voltage level when ECM outputs ON signal	High level

6. DTC CLEAR CONDITION

- When the OK idling cycle is completed 40 times in a row
- When “Clear Memory” was performed

7. MALFUNCTION INDICATOR LIGHT CLEAR CONDITION

- When the OK driving cycle was completed 3 times in a row
- When “Clear Memory” was performed

8. FAIL SAFE

- Front oxygen (A/F) sensor main learning compensation: Not allowed to calculate
- Knock sensor learning compensation: Not allowed to calculate
- EGR control: Not allowed to operate

9. ECM OPERATION AT DTC SETTING

Memorize the freeze frame data. (For test mode $02)

CM:DTC P1495 EGR SOLENOID VALVE SIGNAL #2 CIRCUIT MALFUNCTION (HIGH INPUT)

1. OUTLINE OF DIAGNOSIS

- Detect the open/short circuit of EGR.
- Judge NG when ECM output level is different from actual terminal level.

2. COMPONENT DESCRIPTION

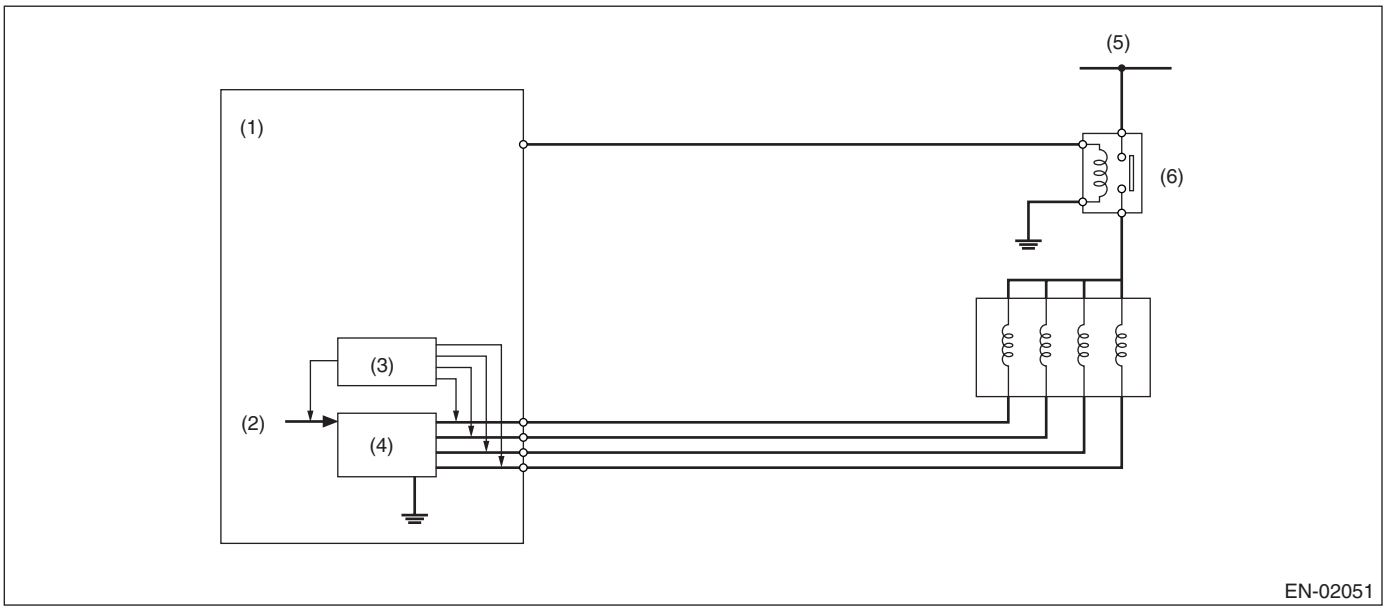

(1) Engine control module (ECM)
(2) CPU
(3) Detecting circuit
(4) Switching circuit
(5) Battery voltage
(6) Main relay

3. ENABLE CONDITION

Secondary Parameters	Enable Conditions
Battery voltage	〉10.9 V

4. GENERAL DRIVING CYCLE

Always perform the diagnosis continuously.

5. DIAGNOSTIC METHOD

• Abnormality Judgment

Judge NG when the continuous time until completing the malfunction criteria below becomes more than time needed for diagnosis.

Judgment Value

Malfunction Criteria	Threshold Value
Terminal voltage level when ECM outputs ON signal	High level

Time Needed for Diagnosis: 2.5 seconds
Malfunction Indicator Light Illumination: Illuminates as soon as malfunction occurs.

• Normality Judgment

Judge OK and clear the NG when the malfunction criteria below are not completed.
Judgment Value

Malfunction Criteria	Threshold Value
Terminal voltage level when ECM outputs OFF signal	Low level

6. DTC CLEAR CONDITION

- When the OK idling cycle is completed 40 times in a row
- When “Clear Memory” was performed

7. MALFUNCTION INDICATOR LIGHT CLEAR CONDITION

- When the OK driving cycle was completed 3 times in a row
- When “Clear Memory” was performed

8. FAIL SAFE

- Front oxygen (A/F) sensor main learning compensation: Not allowed to calculate
- Knock sensor learning compensation: Not allowed to calculate
- EGR control: Not allowed to operate

9. ECM OPERATION AT DTC SETTING

Memorize the freeze frame data. (For test mode $02)

CN:DTC P1496 EGR SOLENOID VALVE SIGNAL #3 CIRCUIT MALFUNCTION (LOW INPUT)

1. OUTLINE OF DIAGNOSIS

- Detect the open/short circuit of EGR.
- Judge NG when ECM output level is different from actual terminal level.

2. COMPONENT DESCRIPTION

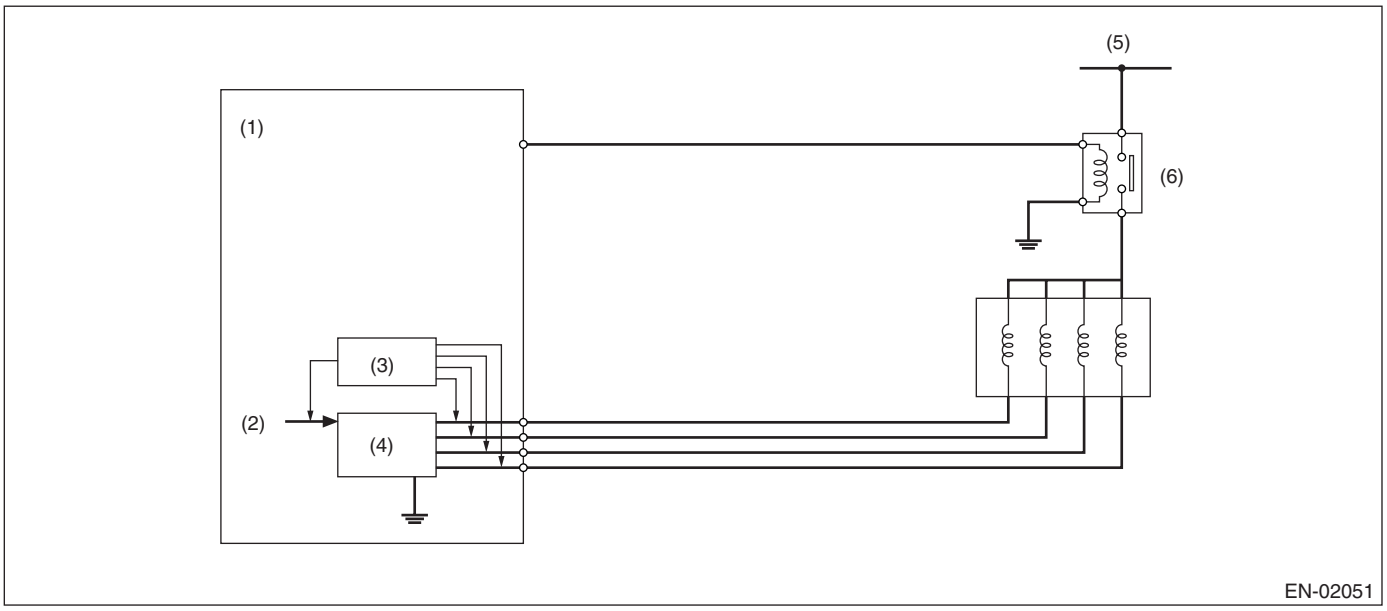

(1) Engine control module (ECM)
(2) CPU
(3) Detecting circuit
(4) Switching circuit
(5) Battery voltage
(6) Main relay

3. ENABLE CONDITION

Secondary Parameters	Enable Conditions
Target position of EGR valve	〉0 step
Battery voltage	〉10.9 V

4. GENERAL DRIVING CYCLE

Perform the diagnosis continuously when EGR operating.

5. DIAGNOSTIC METHOD

• Abnormality Judgment

Judge NG when the continuous time until completing the malfunction criteria below becomes more than time needed for diagnosis.

Judgment Value

Malfunction Criteria	Threshold Value
Terminal voltage level when ECM outputs OFF signal	Low level

Time Needed for Diagnosis: 2.5 seconds
Malfunction Indicator Light Illumination: Illuminates as soon as malfunction occurs.

• Normality Judgment

Judge OK and clear the NG when the malfunction criteria below are not completed.
Judgment Value

Malfunction Criteria	Threshold Value
Terminal voltage level when ECM outputs ON signal	High level

6. DTC CLEAR CONDITION

- When the OK idling cycle is completed 40 times in a row
- When “Clear Memory” was performed

7. MALFUNCTION INDICATOR LIGHT CLEAR CONDITION

- When the OK driving cycle was completed 3 times in a row
- When “Clear Memory” was performed

8. FAIL SAFE

- Front oxygen (A/F) sensor main learning compensation: Not allowed to calculate
- Knock sensor learning compensation: Not allowed to calculate
- EGR control: Not allowed to operate

9. ECM OPERATION AT DTC SETTING

Memorize the freeze frame data. (For test mode $02)

CO:DTC P1497 EGR SOLENOID VALVE SIGNAL #3 CIRCUIT MALFUNCTION (HIGH INPUT)

1. OUTLINE OF DIAGNOSIS

- Detect the open/short circuit of EGR.
- Judge NG when ECM output level is different from actual terminal level.

2. COMPONENT DESCRIPTION

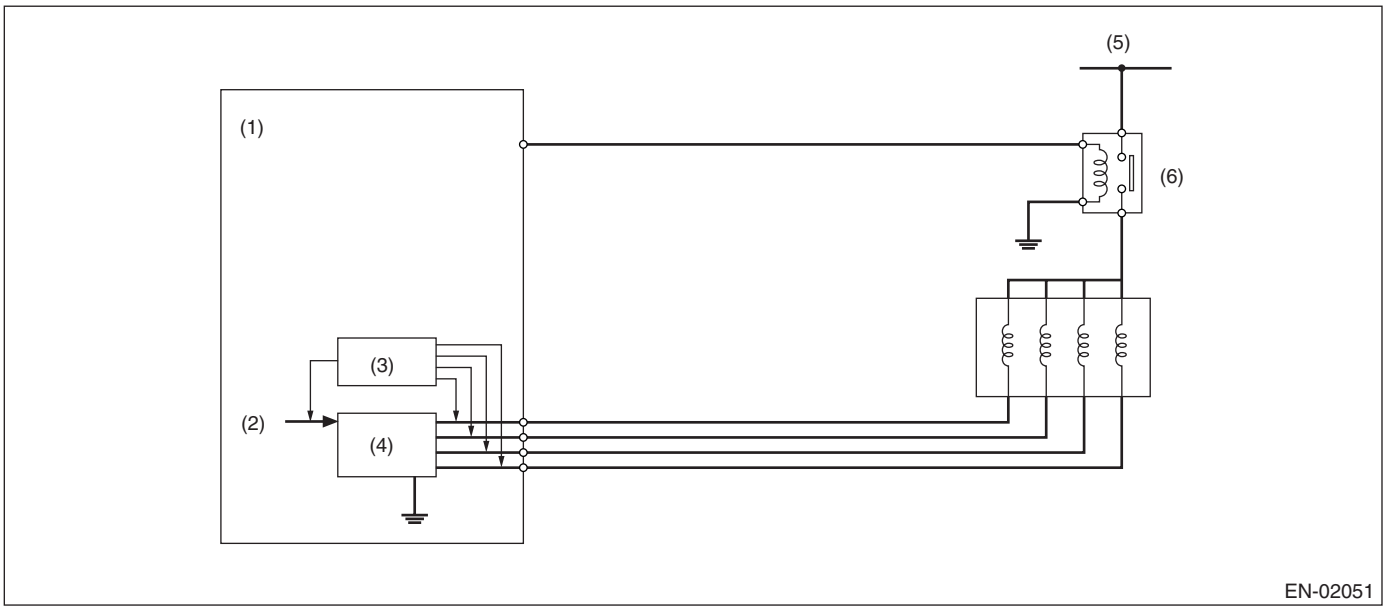

(1) Engine control module (ECM)
(2) CPU
(3) Detecting circuit
(4) Switching circuit
(5) Battery voltage
(6) Main relay

3. ENABLE CONDITION

Secondary Parameters	Enable Conditions
Battery voltage	〉10.9 V

4. GENERAL DRIVING CYCLE

Always perform the diagnosis continuously.

5. DIAGNOSTIC METHOD

• Abnormality Judgment

Judge NG when the continuous time until completing the malfunction criteria below becomes more than time needed for diagnosis.

Judgment Value

Malfunction Criteria	Threshold Value
Terminal voltage level when ECM outputs ON signal	High level

Time Needed for Diagnosis: 2.5 seconds
Malfunction Indicator Light Illumination: Illuminates as soon as malfunction occurs.

• Normality Judgment

Judge OK and clear the NG when the malfunction criteria below are not completed.
Judgment Value

Malfunction Criteria	Threshold Value
Terminal voltage level when ECM outputs OFF signal	Low level

6. DTC CLEAR CONDITION

- When the OK idling cycle is completed 40 times in a row
- When “Clear Memory” was performed

7. MALFUNCTION INDICATOR LIGHT CLEAR CONDITION

- When the OK driving cycle was completed 3 times in a row
- When “Clear Memory” was performed

8. FAIL SAFE

- Front oxygen (A/F) sensor main learning compensation: Not allowed to calculate
- Knock sensor learning compensation: Not allowed to calculate
- EGR control: Not allowed to operate

9. ECM OPERATION AT DTC SETTING

Memorize the freeze frame data. (For test mode $02)

CP:DTC P1498 EGR SOLENOID VALVE SIGNAL #4 CIRCUIT MALFUNCTION (LOW INPUT)

1. OUTLINE OF DIAGNOSIS

- Detect the open/short circuit of EGR.
- Judge NG when ECM output level is different from actual terminal level.

2. COMPONENT DESCRIPTION

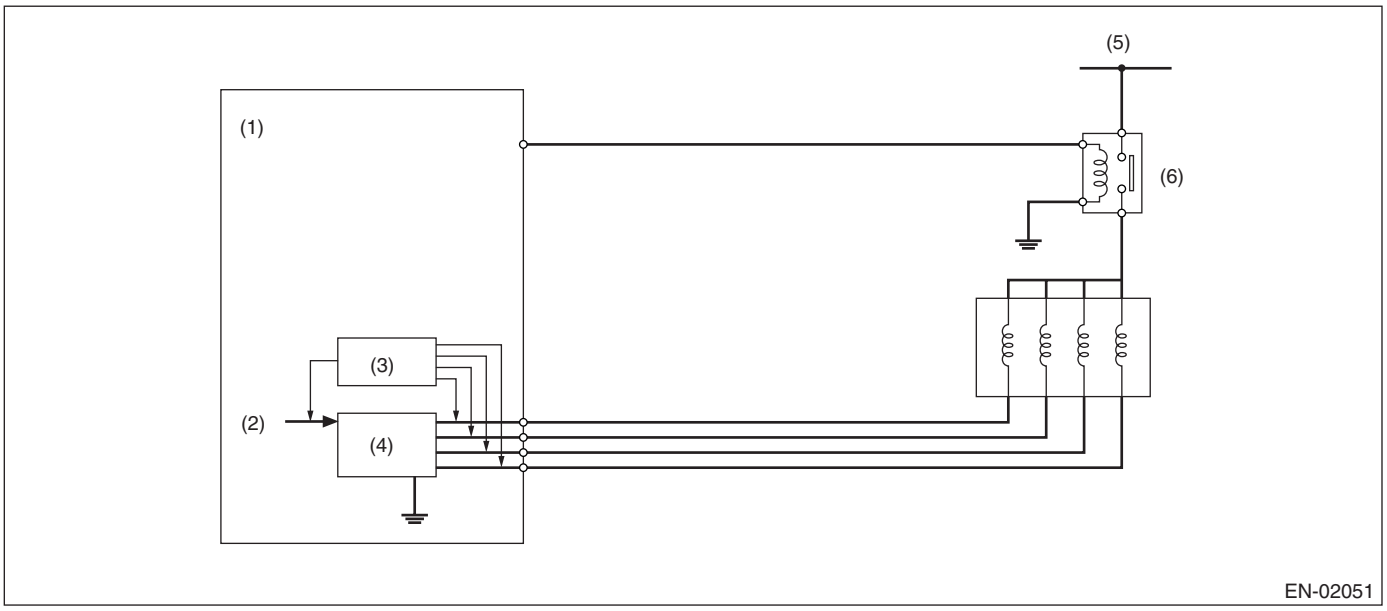

(1) Engine control module (ECM)
(2) CPU
(3) Detecting circuit
(4) Switching circuit
(5) Battery voltage
(6) Main relay

3. ENABLE CONDITION

Secondary Parameters	Enable Conditions
Target position of EGR valve	〉0 step
Battery voltage	〉10.9 V

4. GENERAL DRIVING CYCLE

Perform the diagnosis continuously when EGR operating.

5. DIAGNOSTIC METHOD

• Abnormality Judgment

Judge NG when the continuous time until completing the malfunction criteria below becomes more than time needed for diagnosis.

Judgment Value

Malfunction Criteria	Threshold Value
Terminal voltage level when ECM outputs OFF signal	Low level

Time Needed for Diagnosis: 2.5 seconds
Malfunction Indicator Light Illumination: Illuminates as soon as malfunction occurs.

• Normality Judgment

Judge OK and clear the NG when the malfunction criteria below are not completed.
Judgment Value

Malfunction Criteria	Threshold Value
Terminal voltage level when ECM outputs ON signal	High level

6. DTC CLEAR CONDITION

- When the OK idling cycle is completed 40 times in a row
- When “Clear Memory” was performed

7. MALFUNCTION INDICATOR LIGHT CLEAR CONDITION

- When the OK driving cycle was completed 3 times in a row
- When “Clear Memory” was performed

8. FAIL SAFE

- Front oxygen (A/F) sensor main learning compensation: Not allowed to calculate
- Knock sensor learning compensation: Not allowed to calculate
- EGR control: Not allowed to operate

9. ECM OPERATION AT DTC SETTING

Memorize the freeze frame data. (For test mode $02)

CQ:DTC P1499 EGR SOLENOID VALVE SIGNAL #4 CIRCUIT MALFUNCTION (HIGH INPUT)

1. OUTLINE OF DIAGNOSIS

- Detect the open/short circuit of EGR.
- Judge NG when ECM output level is different from actual terminal level.

2. COMPONENT DESCRIPTION

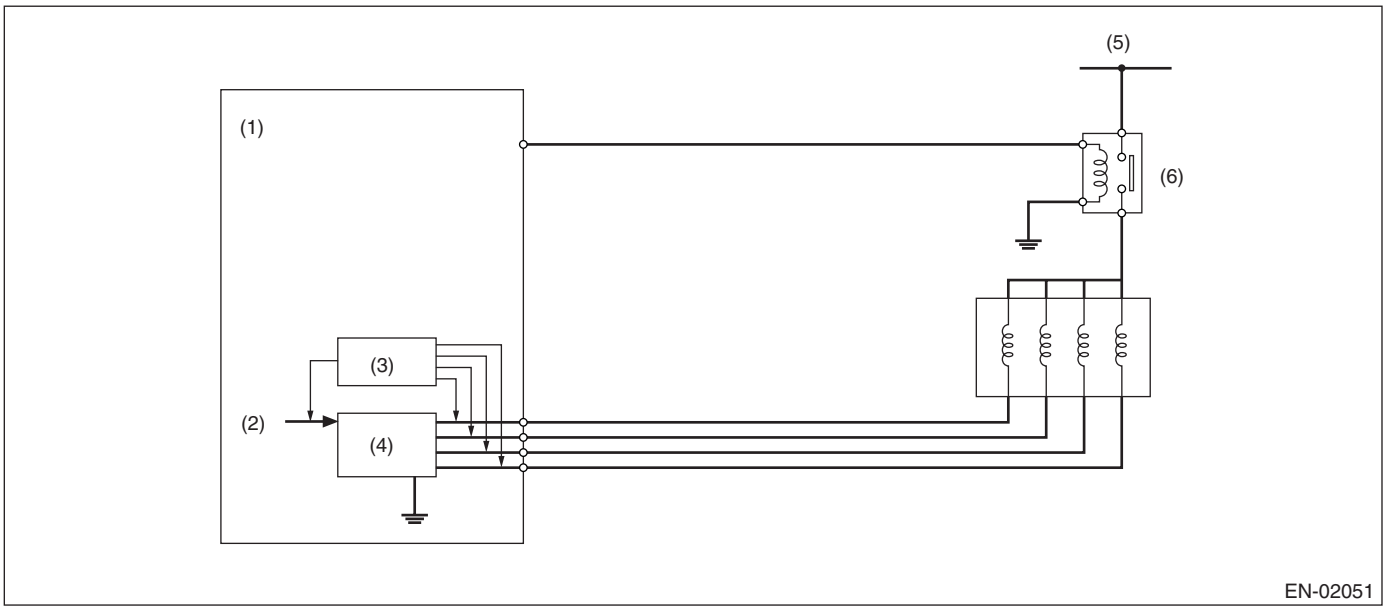

(1) Engine control module (ECM)
(2) CPU
(3) Detecting circuit
(4) Switching circuit
(5) Battery voltage
(6) Main relay

3. ENABLE CONDITION

Secondary Parameters	Enable Conditions
Battery voltage	〉10.9 V

4. GENERAL DRIVING CYCLE

Always perform the diagnosis continuously.

5. DIAGNOSTIC METHOD

• Abnormality Judgment

Judge NG when the continuous time until completing the malfunction criteria below becomes more than time needed for diagnosis.

Judgment Value

Malfunction Criteria	Threshold Value
Terminal voltage level when ECM outputs ON signal	High level

Time Needed for Diagnosis: 2.5 seconds
Malfunction Indicator Light Illumination: Illuminates as soon as malfunction occurs.

• Normality Judgment

Judge OK and clear the NG when the malfunction criteria below are not completed.
Judgment Value

Malfunction Criteria	Threshold Value
Terminal voltage level when ECM outputs OFF signal	Low level

6. DTC CLEAR CONDITION

- When the OK idling cycle is completed 40 times in a row
- When “Clear Memory” was performed

7. MALFUNCTION INDICATOR LIGHT CLEAR CONDITION

- When the OK driving cycle was completed 3 times in a row
- When “Clear Memory” was performed

8. FAIL SAFE

- Front oxygen (A/F) sensor main learning compensation: Not allowed to calculate
- Knock sensor learning compensation: Not allowed to calculate
- EGR control: Not allowed to operate

9. ECM OPERATION AT DTC SETTING

Memorize the freeze frame data. (For test mode $02)

CR:DTC P1518 STARTER SWITCH CIRCUIT LOW INPUT

1. OUTLINE OF DIAGNOSIS

Detect the open or short circuit of starter SW.
Judge OFF NG when the engine starts without starter ON experience.

2. ENABLE CONDITION

Secondary Parameters	Enable Conditions
None	

3. GENERAL DRIVING CYCLE

Always perform the diagnosis continuously.

4. DIAGNOSTIC METHOD

• Abnormality Judgment

Judge OFF NG when the malfunction criteria below are completed.
Judgment Value

Malfunction Criteria	Threshold Value
Vehicle speed	< 1 km/h (0.62 MPH)
Starter ON signal	Not detected
Engine speed after the engine speed of less than 500 rpm continues 0.8 seconds or more	≥ 500 rpm

Time Needed for Diagnosis: 1 second
Malfunction Indicator Light Illumination: Illuminates when malfunction occurs in 2 continuous driving cycles.

• Normality Judgment

Judge OFF OK and clear the NG when the malfunction criteria below are completed.
Judgment Value

Malfunction Criteria	Threshold Value
Starter ON	Experienced
Battery voltage	> 8 V

5. DTC CLEAR CONDITION

- When the OK idling cycle was completed 40 times in a row
- When “Clear Memory” was performed

6. MALFUNCTION INDICATOR LIGHT CLEAR CONDITION

- When the OK driving cycle was completed 3 times in a row
- When “Clear Memory” was performed

7. FAIL SAFE

None

8. ECM OPERATION AT DTC SETTING

Memorize the freeze frame data. (For test mode $02)

CS:DTC P1560 BACK-UP VOLTAGE CIRCUIT MALFUNCTION

1. OUTLINE OF DIAGNOSIS

Detect open or short circuit of the back-up voltage circuit.
Judge NG when the back-up voltage becomes smaller than the battery voltage.

2. ENABLE CONDITION

Secondary Parameter	Enable Condition
None	

3. GENERAL DRIVING CYCLE

Always perform the diagnosis continuously.

4. DIAGNOSTIC METHOD

• Abnormality Judgment

Judge NG when the continuous time of completing the malfunction criteria below becomes more than 2.5 seconds.

Judgment Value

Malfunction Criteria	Threshold Value
Voltage of back-up power	Low
Battery voltage	≥ 10.9 V
Engine speed	≥ 500 rpm

Time Needed for Diagnosis: 2.5 seconds
Malfunction Indicator Light Illumination: Illuminates as soon as malfunction occurs.

• Normality Judgment

Judge OK and clear NG when the malfunction criteria below is completed.

Judgment Value

Malfunction Criteria	Threshold Value
Voltage of back-up power supply	High
Battery voltage	≥ 10.9 V
Engine speed	≥ 500 rpm

5. DTC CLEAR CONDITION

- When the OK idling cycle was completed 40 times in a row
- When “Clear Memory” was performed

6. MALFUNCTION INDICATOR LIGHT CLEAR CONDITION

- When the OK driving cycle was completed 3 times in a row
- When “Clear Memory” was performed

7. FAIL SAFE

None

8. ECM OPERATION AT DTC SETTING

Memorize the freeze frame data. (For test mode $02)

CT:DTC P2096 POST CATALYST FUEL TRIM SYSTEM TOO LEAN BANK 1

1. OUTLINE OF DIAGNOSIS

Detect the malfunction of fuel system from the amount of sub feedback learning value.
Judge NG when the sub feedback learning value sticks to lean sides during sub feedback learning control.

2. COMPONENT DESCRIPTION

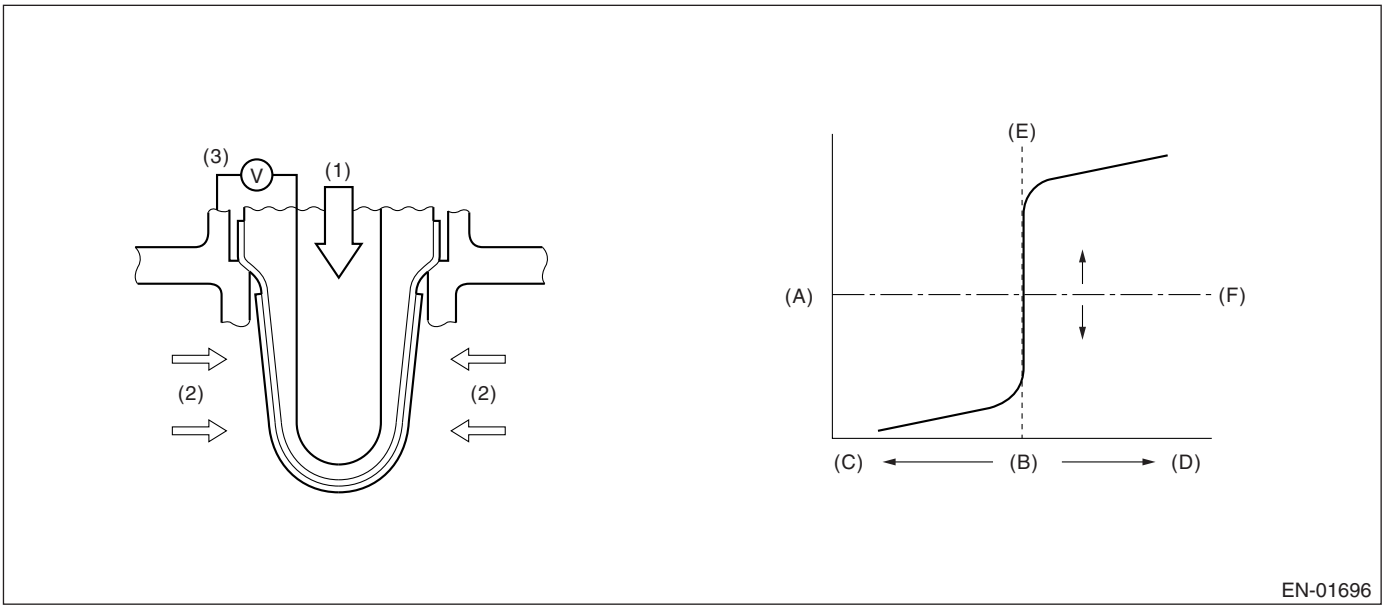

(1) Atmosphere
(2) Exhaust gas
(3) Electromotive force
(A) Electromotive force
(B) Air fuel ratio
(C) Rich
(D) Lean
(E) Theoretical air fuel ratio
(F) Comparative voltage

3. ENABLE CONDITION

Secondary Parameters	Enable Conditions
Continuous time of completing all conditions	1 second or more
Sub feedback learning enable condition	Completed

4. GENERAL DRIVING CYCLE

Perform the diagnosis continuously at an idling or a constant 80 km/h (50 MPH).

5. DIAGNOSTIC METHOD

Judge NG when the continuous time of completing the malfunction criteria below becomes more than 5 seconds. Judge OK when continuous time of not completing the malfunction criteria becomes more than 5 seconds.

Judgment Value

Malfunction Criteria	Threshold Value
Sub feedback learning value	< -0.02

Time Needed for Diagnosis: 5 seconds ×1 time
Malfunction Indicator Light Illumination: Illuminates when malfunction occurs in 2 continuous driving cycles.

6. DTC CLEAR CONDITION

- When the OK idling cycle was completed 40 times in a row
- When “Clear Memory” was performed

7. MALFUNCTION INDICATOR LIGHT CLEAR CONDITION

- When OK with similar drive in 3 drive cycles
- When “Clear Memory” was performed

8. FAIL SAFE

None

9. ECM OPERATION AT DTC SETTING

Memorize the freeze frame data. (For test mode $02)

CU:DTC P2097 POST CATALYST FUEL TRIM SYSTEM TOO RICH BANK 1

1. OUTLINE OF DIAGNOSIS

Detect the malfunction of fuel system from the amount of sub feedback learning value.
Judge NG when the sub feedback learning value sticks to rich sides during sub feedback learning control.

2. COMPONENT DESCRIPTION

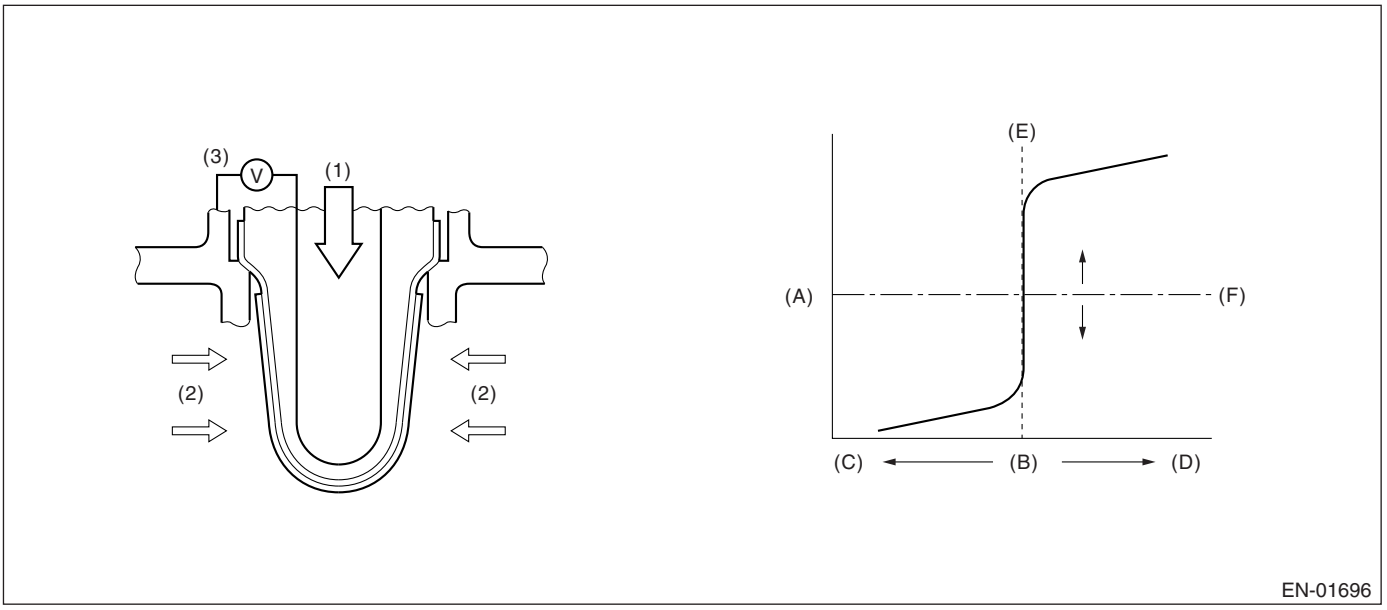

(1) Atmosphere
(2) Exhaust gas
(3) Electromotive force
(A) Electromotive force
(B) Air fuel ratio
(C) Rich
(D) Lean
(E) Theoretical air fuel ratio
(F) Comparative voltage

3. ENABLE CONDITION

Secondary Parameters	Enable Conditions
Continuous time of completing all conditions	1 second or more
Sub feedback learning enable condition	Completed

4. GENERAL DRIVING CYCLE

Perform the diagnosis continuously at an idling or a constant 80 km/h (50 MPH).

5. DIAGNOSTIC METHOD

Judge NG when the continuous time of completing the malfunction criteria below becomes more than 5 seconds. Judge OK when it becomes less than 5 seconds.
Judgment Value

Malfunction Criteria	Threshold Value
Sub feedback learning value	≥ 0.018

Time Needed for Diagnosis: 5 seconds ×1 time
Malfunction Indicator Light Illumination: Illuminates when malfunction occurs in 2 continuous drive cycles.

6. DTC CLEAR CONDITION

- When the OK idling cycle was completed 40 times in a row
- When “Clear Memory” was performed

7. MALFUNCTION INDICATOR LIGHT CLEAR CONDITION

- When OK with similar drive in 3 drive cycles.
- When “Clear Memory” was performed

8. FAIL SAFE

None

9. ECM OPERATION AT DTC SETTING

Memorize the freeze frame data. (For test mode $02)

CV:DTC P2101 THROTTLE ACTUATOR CONTROL MOTOR CIRCUIT RANGE/ PERFORMANCE

1. OUTLINE OF DIAGNOSIS

Judge NG when the motor current becomes large or drive circuit is heated.

2. COMPONENT DESCRIPTION

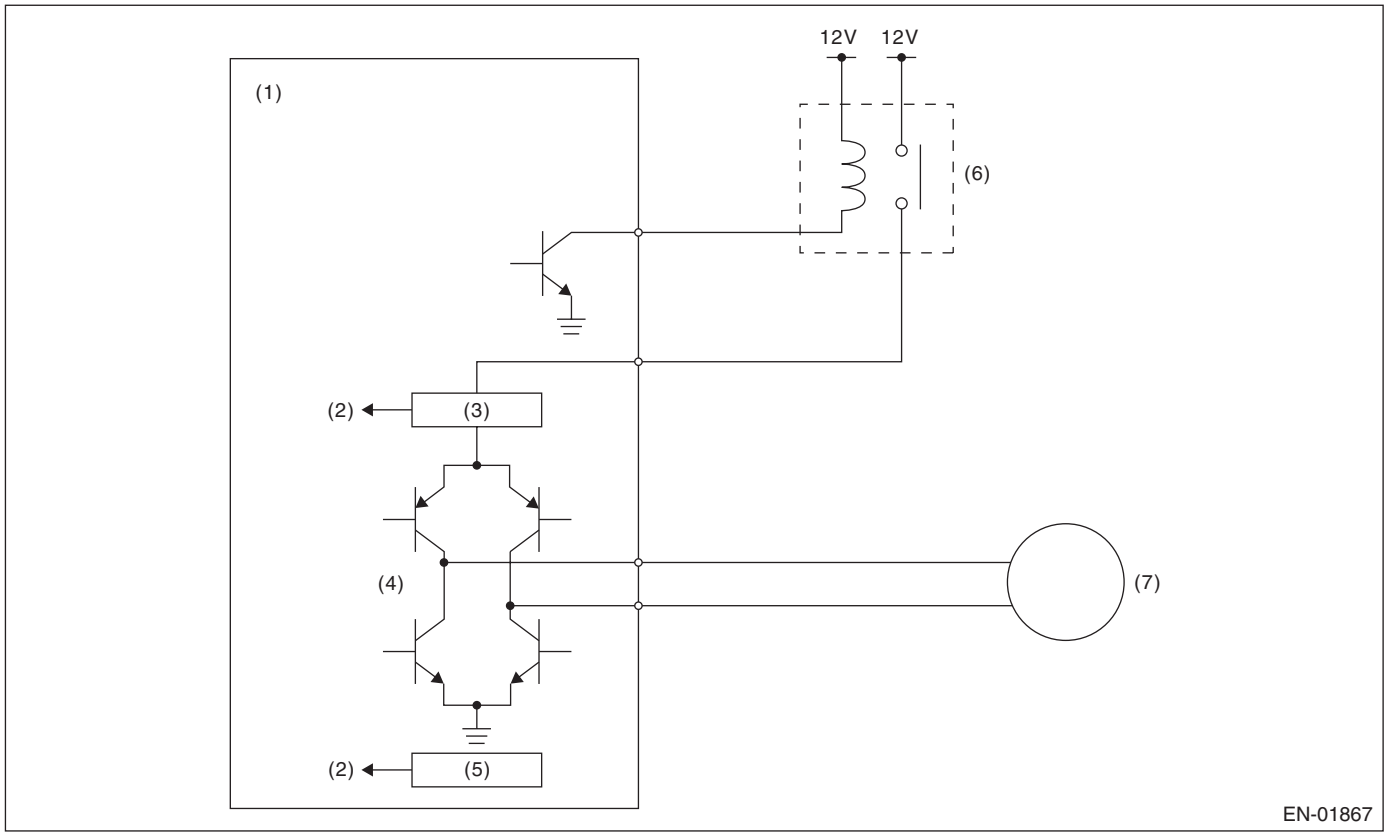

(1) Engine control module (ECM)
(2) Detection circuit
(3) Overcurrent detection circuit
(4) Drive circuit
(5) Temperature detection circuit
(6) Electronic throttle control relay
(7) Motor

3. ENABLE CONDITION

Secondary Parameters	Enable Conditions
Under control of electronic throttle control	ON

4. GENERAL DRIVING CYCLE

Always perform the diagnosis continuously.

5. DIAGNOSTIC METHOD

Judge OK and clear the NG when the malfunction criteria below are completed.

Judgment Value

Malfunction Criteria	Threshold Value
Motor current	≤ 8 A
Drive circuit inner temperature	≤ 175°C (347°F)

Time Needed for Diagnosis:

- 500 milliseconds (NG judgment)

- 2000 milliseconds (OK judgment)

Malfunction Indicator Light Illumination: Illuminates as soon as malfunction occurs.

6. DTC CLEAR CONDITION

- When the OK idling cycle was completed 40 times in a row
- When “Clear Memory” was performed (Only with engine stopped)

7. MALFUNCTION INDICATOR LIGHT CLEAR CONDITION

- When the OK driving cycle was completed 3 times in a row
- When “Clear Memory” was performed (Only with engine stopped)

8. FAIL SAFE

Stop the continuity to the electronic throttle control motor. (Fix the throttle opening angle to 6°.)

9. ECM OPERATION AT DTC SETTING

Memorize the freeze frame data. (For test mode $02)

CW:DTC P2102 THROTTLE ACTUATOR CONTROL MOTOR CIRCUIT LOW

1. OUTLINE OF DIAGNOSIS

Judge NG when the electronic throttle control power is not supplied even when ECM sets the electronic throttle control relay to ON.

2. COMPONENT DESCRIPTION

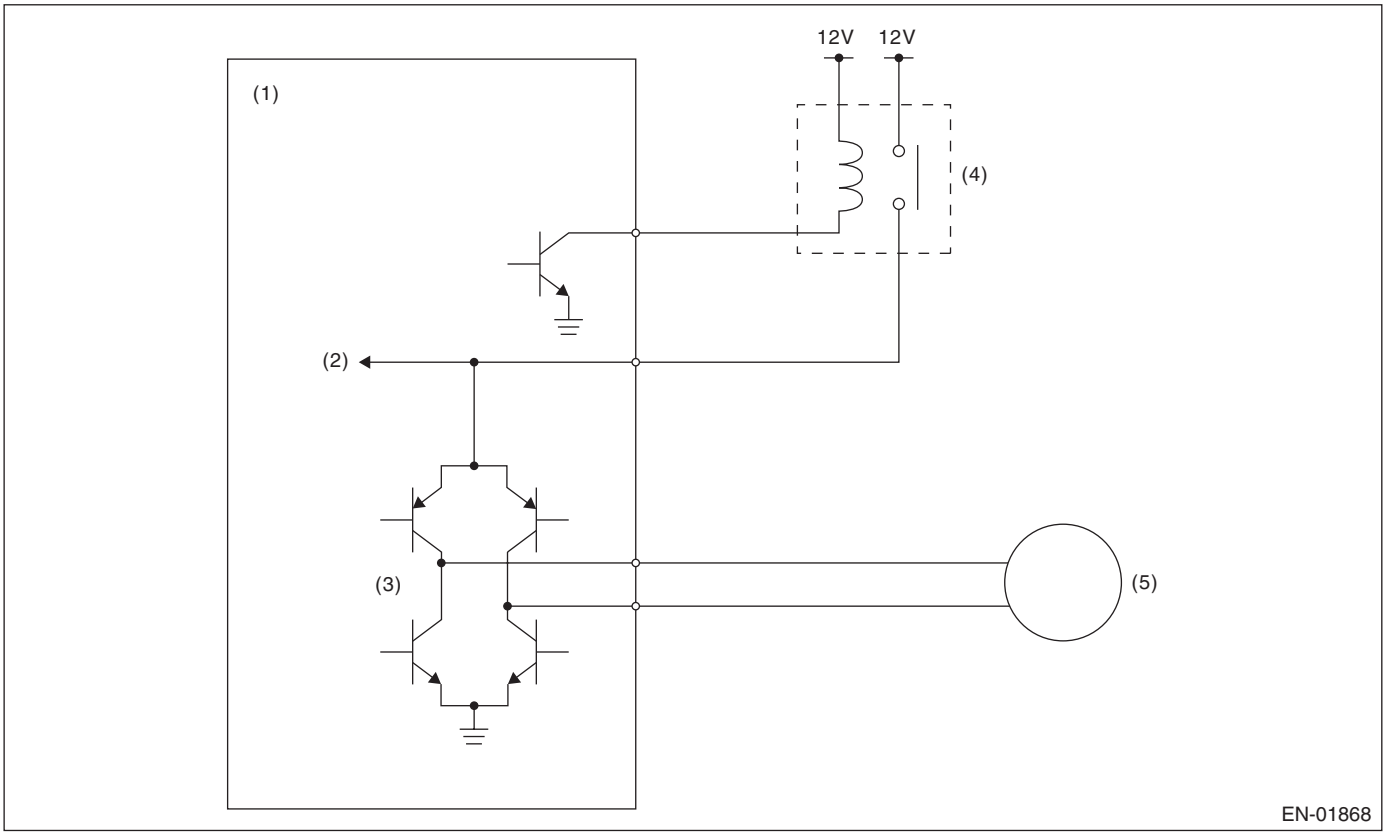

(1) Engine control module (ECM)
(2) Voltage detection circuit
(3) Drive circuit
(4) Electronic throttle control relay
(5) Motor

3. ENABLE CONDITION

Secondary Parameters	Enable Conditions
Electronic throttle control relay output	ON

4. GENERAL DRIVING CYCLE

Always perform the diagnosis continuously.

5. DIAGNOSTIC METHOD

Judge OK and clear the NG when the malfunction criteria below are cmpleted.

Judgment Value

Malfunction Criteria	Threshold Value
Motor power voltage	≥ 5 V

Time Needed for Diagnosis:

- 400 milliseconds (For NG)
- 2000 milliseconds (For OK)

Malfunction Indicator Light Illumination: Illuminates as soon as malfunction occurs.

6. DTC CLEAR CONDITION

- When the OK idling cycle was completed 40 times in a row
- When “Clear Memory” was performed (Only with engine stopped)

7. MALFUNCTION INDICATOR LIGHT CLEAR CONDITION

- When the OK driving cycle was completed 3 times in a row
- When “Clear Memory” was performed (Only with engine stopped)

8. FAIL SAFE

Stop the continuity to the electronic throttle control motor. (Fix the throttle opening angle to 6°.)

9. ECM OPERATION AT DTC SETTING

Memorize the freeze frame data. (For test mode $02)

CX:DTC P2103 THROTTLE ACTUATOR CONTROL MOTOR CIRCUIT HIGH

1. OUTLINE OF DIAGNOSIS

Judge NG when the electronic throttle control power is not supplied even when ECM sets the electronic throttle control relay to OFF.

2. COMPONENT DESCRIPTION

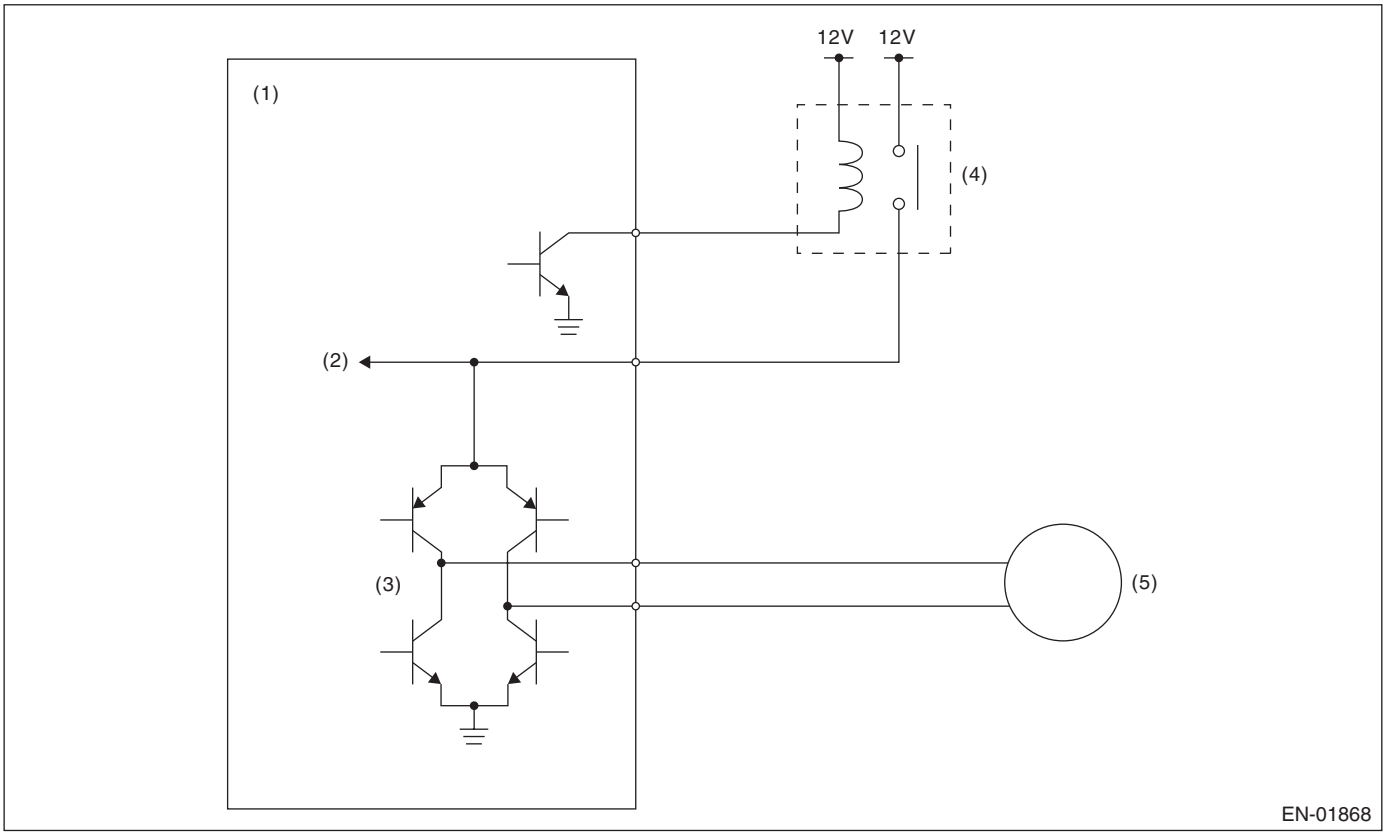

(1) Engine control module (ECM)
(2) Voltage detection circuit
(3) Drive circuit
(4) Electronic throttle control relay
(5) Motor

3. ENABLE CONDITION

Secondary Parameters	Enable Conditions
Electronic throttle control relay output	OFF

4. GENERAL DRIVING CYCLE

- Ignition switch ON → OFF
- Ignition switch OFF → ON (After clear memory only)

5. DIAGNOSTIC METHOD

Judge OK and clear the NG when the malfunction criteria below are completed.

Judgment Value

Malfunction Criteria	Threshold Value
Motor power voltage	≤ 5 V

Time Needed for Diagnosis:

- 600 milliseconds (For NG)
- 400 milliseconds (For OK)

Malfunction Indicator Light Illumination: Illuminates as soon as malfunction occurs.

6. DTC CLEAR CONDITION

- When the OK idling cycle was completed 40 times in a row
- When “Clear Memory” was performed (Only with engine stopped)

7. MALFUNCTION INDICATOR LIGHT CLEAR CONDITION

- When the OK driving cycle was completed 3 times in a row
- When “Clear Memory” was performed (Only with engine stopped)

8. FAIL SAFE

Stop the continuity to the electronic throttle control motor. (Fix the throttle opening angle to 6°.)

9. ECM OPERATION AT DTC SETTING

Memorize the freeze frame data. (For test mode $02)

CY:DTC P2109 THROTTLE/PEDAL POSITION SENSOR A MINIMUM STOP PERFORMANCE

1. OUTLINE OF DIAGNOSIS

Judge NG when all close point learning cannot conducted or abnormal value is detected.

2. COMPONENT DESCRIPTION

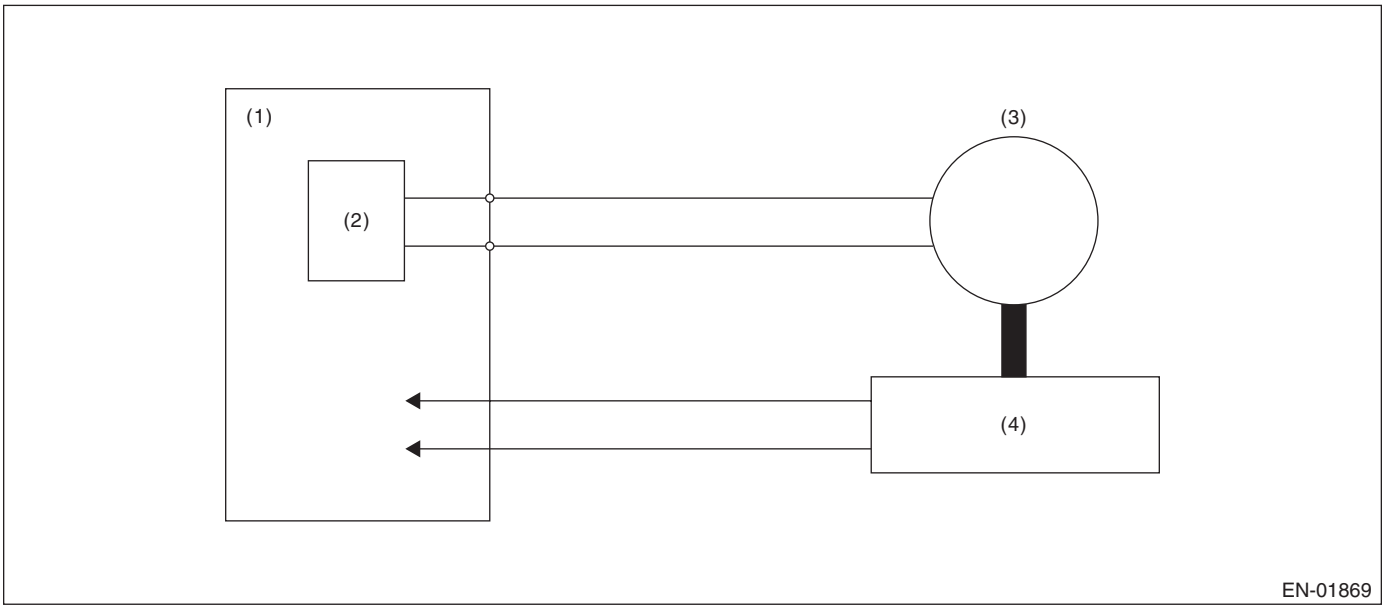

(1) Engine control module (ECM)
(2) Drive circuit
(3) Motor
(4) Throttle position sensor

3. ENABLE CONDITION

Secondary Parameters	Enable Conditions
Ignition switch	ON → OFF
Ignition switch (after clear memory only)	OFF → ON

4. GENERAL DRIVING CYCLE

Perform the diagnosis at all close point learning.

5. DIAGNOSTIC METHOD

Judge OK and clear the NG when the malfunction criteria below are completed.

Judgment Value

Malfunction Criteria	Threshold Value
Throttle sensor voltage at all close point learning	0.41 — 0.79 V
Time for all close point learning completion	Within 80 milliseconds

Time Needed for Diagnosis: None
Malfunction Indicator Light Illumination: Illuminates as soon as malfunction occurs.

6. DTC CLEAR CONDITION

- When the OK idling cycle was completed 40 times in a row
- When “Clear Memory” was performed (Only with engine stopped)

7. MALFUNCTION INDICATOR LIGHT CLEAR CONDITION

- When the OK driving cycle was completed 3 times in a row
- When “Clear Memory” was performed (Only with engine stopped)

8. FAIL SAFE

Stop the continuity to the electronic throttle control motor. (Fix the throttle opening angle to 6°.)

9. ECM OPERATION AT DTC SETTING

Memorize the freeze frame data. (For test mode $02)

CZ:DTC P2122 THROTTLE/PEDAL POSITION SENSOR/SWITCH “D” CIRCUIT LOW INPUT

1. OUTLINE OF DIAGNOSIS

Detect the open or short circuit of accelerator pedal position sensor 1.
Judge NG when out of the standard value.

2. COMPONENT DESCRIPTION

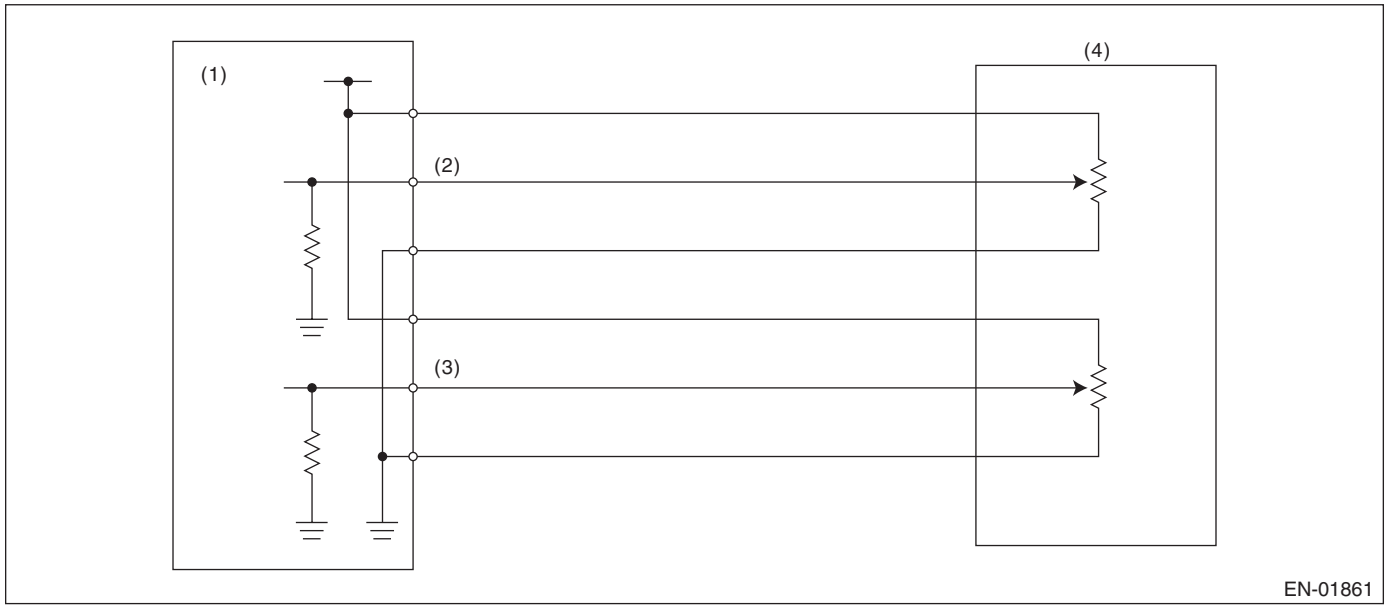

(1) Engine control module (ECM)
(2) Accelerator pedal position sensor 1 signal
(3) Accelerator pedal position sensor 2 signal
(4) Accelerator pedal position sensor

3. ENABLE CONDITION

Secondary Parameters	Enable Conditions
Ignition switch	ON

4. GENERAL DRIVING CYCLE

Always perform the diagnosis continuously.

5. DIAGNOSTIC METHOD

Judge OK and clear the NG when the malfunction criteria below are completed.
Judgment Value

Malfunction Criteria	Threshold Value
Sensor 1 input voltage	≥ 0.308 V

Time Needed for Diagnosis: 100 milliseconds
Malfunction Indicator Light Illumination: Illuminates as soon as malfunction occurs.

6. DTC CLEAR CONDITION

- When the OK idling cycle was completed 40 times in a row
- When “Clear Memory” was performed (Only with engine stopped)

7. MALFUNCTION INDICATOR LIGHT CLEAR CONDITION

- When the OK driving cycle was completed 3 times in a row
- When “Clear Memory” was performed (Only with engine stopped)

8. FAIL SAFE

- Single malfunction: Control with normal sensor
- Multi malfunction: Fix the throttle opening angle to 6°.

9. ECM OPERATION AT DTC SETTING

Memorize the freeze frame data. (For test mode $02)

DA:DTC P2123 THROTTLE/PEDAL POSITION SENSOR/SWITCH “D” CIRCUIT HIGH INPUT

1. OUTLINE OF DIAGNOSIS

Detect the open or short circuit of accelerator pedal position sensor 1.
Judge NG when out of the standard value.

2. COMPONENT DESCRIPTION

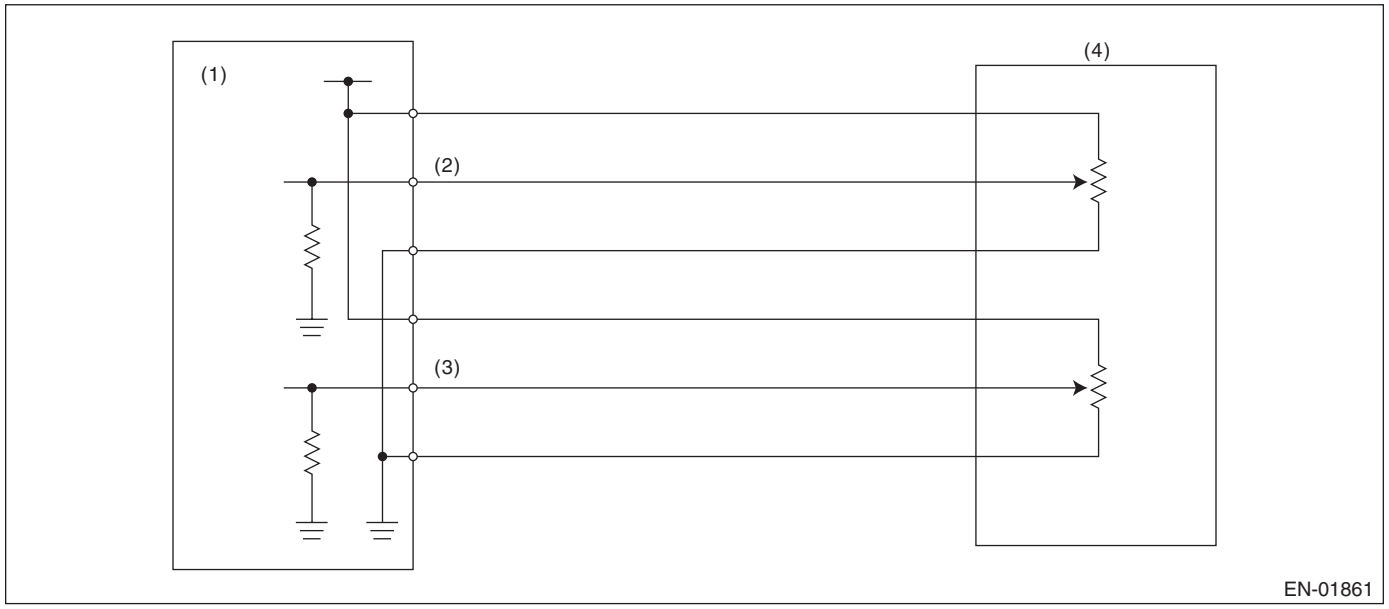

(1) Engine control module (ECM)
(2) Accelerator pedal position sensor 1 signal
(3) Accelerator pedal position sensor 2 signal
(4) Accelerator pedal position sensor

3. ENABLE CONDITION

Secondary Parameters	Enable Conditions
Ignition switch	ON

4. GENERAL DRIVING CYCLE

Always perform the diagnosis continuously.

5. DIAGNOSTIC METHOD

Judge OK and clear the NG when the malfunction criteria below are completed.
Judgment Value

Malfunction Criteria	Threshold Value
Sensor 1 input voltage	≤ 4.865 V

Time Needed for Diagnosis: 100 milliseconds
Malfunction Indicator Light Illumination: Illuminates as soon as malfunction occurs.

6. DTC CLEAR CONDITION

- When the OK idling cycle was completed 40 times in a row
- When “Clear Memory” was performed (Only with engine stopped)

7. MALFUNCTION INDICATOR LIGHT CLEAR CONDITION

- When the OK driving cycle was completed 3 times in a row
- When “Clear Memory” was performed (Only with engine stopped)

8. FAIL SAFE

- Single malfunction: Control with normal sensor
- Multi malfunction: Fix the throttle opening angle to 6°.

9. ECM OPERATION AT DTC SETTING

Memorize the freeze frame data. (For test mode $02)

DB:DTC P2127 THROTTLE/PEDAL POSITION SENSOR/SWITCH “E” CIRCUIT LOW INPUT

1. OUTLINE OF DIAGNOSIS

Detect the open or short circuit of accelerator pedal position sensor 2.
Judge NG when out of the standard value.

2. COMPONENT DESCRIPTION

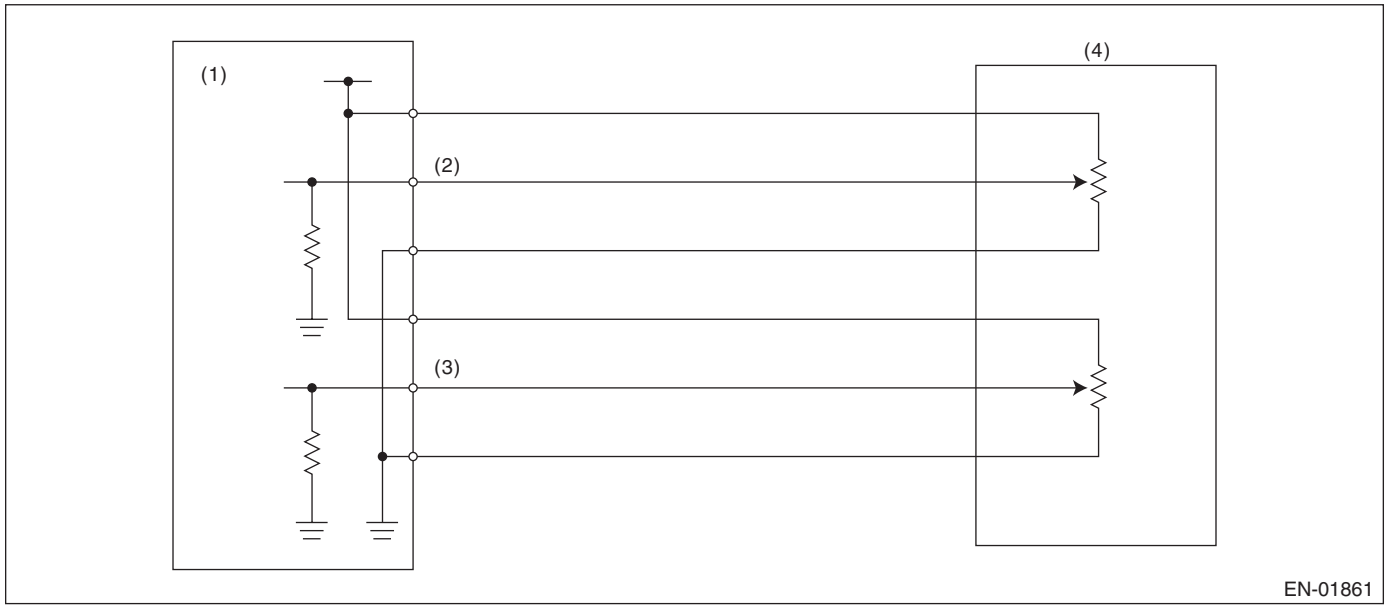

(1) Engine control module (ECM)
(2) Accelerator pedal position sensor 1 signal
(3) Accelerator pedal position sensor 2 signal
(4) Accelerator pedal position sensor

3. ENABLE CONDITION

Secondary Parameters	Enable Conditions
Ignition switch	ON

4. GENERAL DRIVING CYCLE

Always perform the diagnosis continuously.

5. DIAGNOSTIC METHOD

Judge OK and clear the NG when the malfunction criteria below are completed.
Judgment Value

Malfunction Criteria	Threshold Value
Sensor 2 input voltage	≥ 0.308 V

Time Needed for Diagnosis: 100 milliseconds
Malfunction Indicator Light Illumination: Illuminates as soon as malfunction occurs.

6. DTC CLEAR CONDITION

- When the OK idling cycle was completed 40 times in a row
- When “Clear Memory” was performed (Only with engine stopped)

7. MALFUNCTION INDICATOR LIGHT CLEAR CONDITION

- When the OK driving cycle was completed 3 times in a row
- When “Clear Memory” was performed (Only with engine stopped)

8. FAIL SAFE

- Single malfunction: Control with normal sensor
- Multi malfunction: Fix the throttle opening angle to 6°.

9. ECM OPERATION AT DTC SETTING

Memorize the freeze frame data. (For test mode $02)

DC:DTC P2128 THROTTLE/PEDAL POSITION SENSOR/SWITCH “E” CIRCUIT HIGH INPUT

1. OUTLINE OF DIAGNOSIS

Detect the open or short circuit of accelerator pedal position sensor 2.
Judge NG when out of the standard value.

2. COMPONENT DESCRIPTION

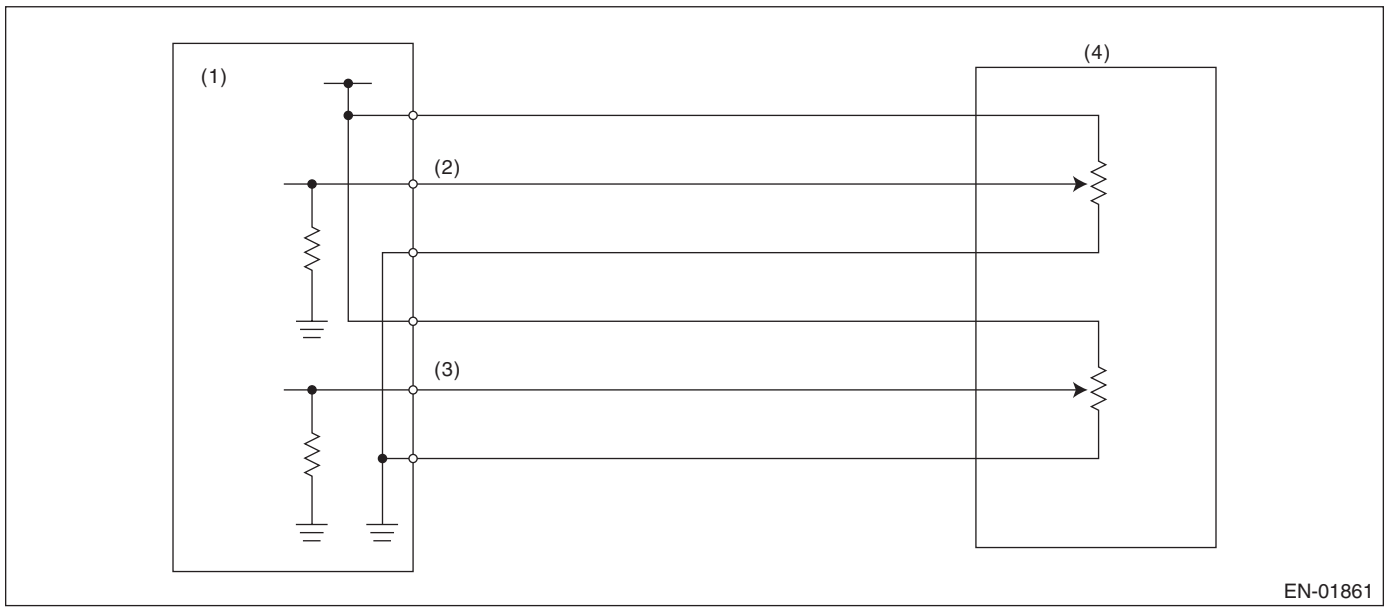

(1) Engine control module (ECM)
(2) Accelerator pedal position sensor 1 signal
(3) Accelerator pedal position sensor 2 signal
(4) Accelerator pedal position sensor

3. ENABLE CONDITION

Secondary Parameters	Enable Conditions
Ignition switch	ON

4. GENERAL DRIVING CYCLE

Always perform the diagnosis continuously.

5. DIAGNOSTIC METHOD

Judge OK and clear the NG when the malfunction criteria below are completed.
Judgment Value

Malfunction Criteria	Threshold Value
Sensor 2 input voltage	≤ 4.865 V

Time Needed for Diagnosis: 100 milliseconds
Malfunction Indicator Light Illumination: Illuminates as soon as malfunction occurs.

6. DTC CLEAR CONDITION

- When the OK idling cycle was completed 40 times in a row
- When “Clear Memory” was performed (Only with engine stopped)

7. MALFUNCTION INDICATOR LIGHT CLEAR CONDITION

- When the OK driving cycle was completed 3 times in a row
- When “Clear Memory” was performed (Only with engine stopped)

8. FAIL SAFE

- Single malfunction: Control with normal sensor
- Multi malfunction: Fix the throttle opening angle to 6°.

9. ECM OPERATION AT DTC SETTING

Memorize the freeze frame data. (For test mode $02)

DD:DTC P2135 THROTTLE/PEDAL POSITION SENSOR/SWITCH “A”/“B” VOLTAGE RATIONALITY

1. OUTLINE OF DIAGNOSIS

Judge NG when the signal level of throttle position sensor 1 is different from the throttle position sensor 2.

2. COMPONENT DESCRIPTION

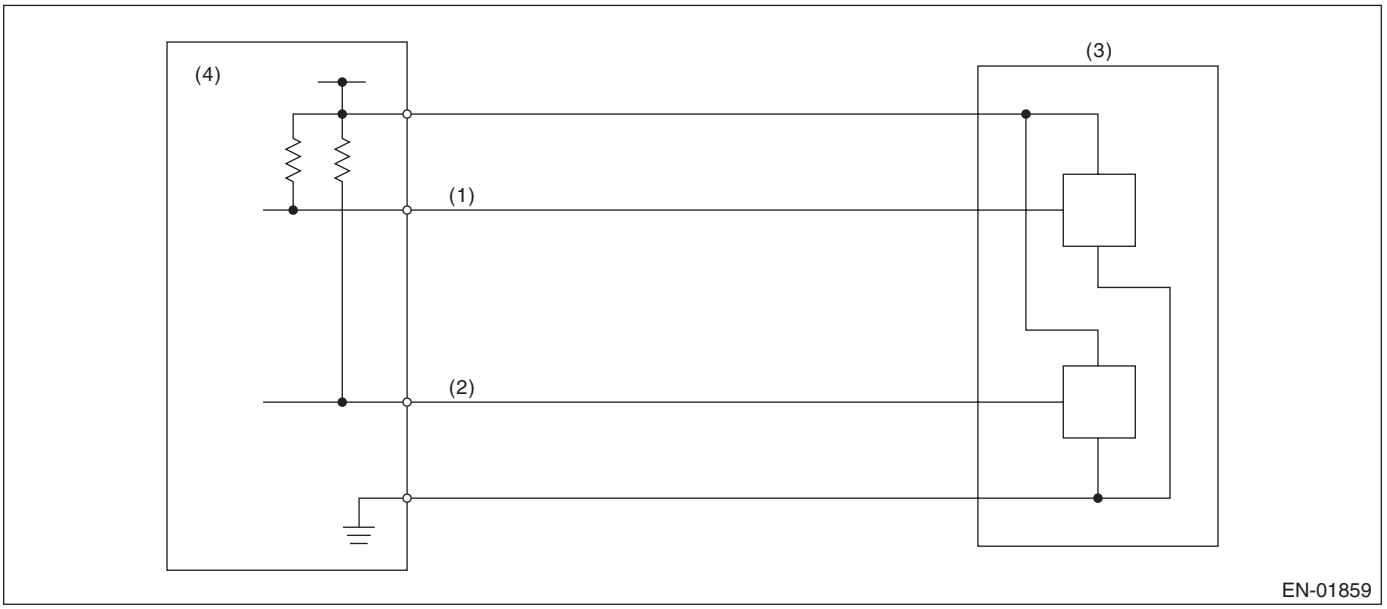

(1) Throttle position sensor 1 signal
(2) Throttle position sensor 2 signal
(3) Throttle position sensor
(4) Engine control module (ECM)

3. ENABLE CONDITION

Secondary Parameters	Enable Conditions
Ignition switch	ON

4. GENERAL DRIVING CYCLE

Always perform the diagnosis continuously.

5. DIAGNOSTIC METHOD

Judge OK and clear the NG when the malfunction criteria below are completed.

Judgment Value

Malfunction Criteria	Threshold Value
Signal difference between two sensors	≤ 4.25 °

Details of Judgment Value

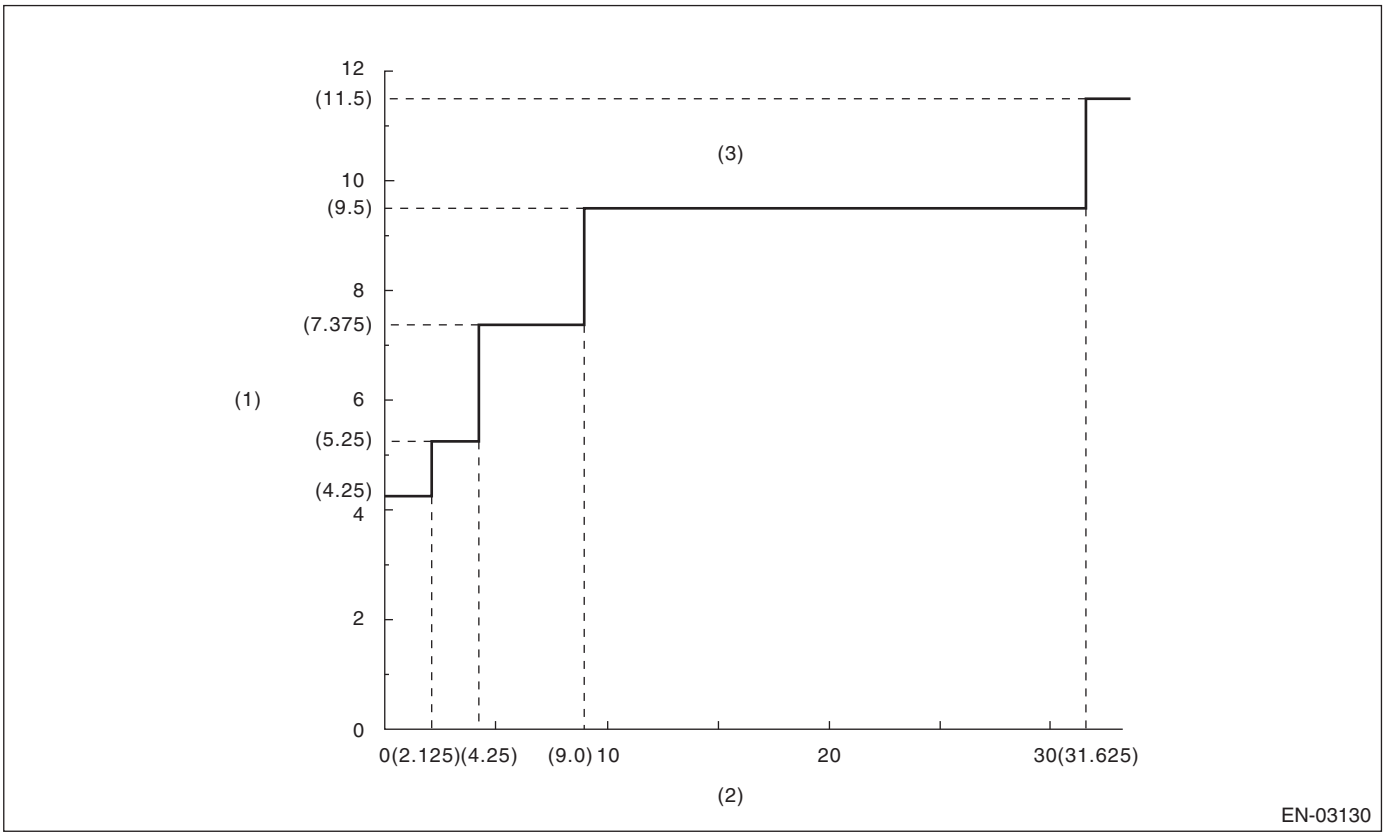

(1) Sensor output difference (°)
(2) Throttle position sensor 1 opening angle (°)
(3) NG area

Time Needed for Diagnosis: 212 milliseconds(NG judgment) 24 milliseconds (OK judgment)
Malfunction Indicator Light Illumination: Illuminates as soon as malfunction occurs.

6. DTC CLEAR CONDITION

- When the OK idling cycle was completed 40 times in a row
- When “Clear Memory” was performed (Only with engine stopped)

7. MALFUNCTION INDICATOR LIGHT CLEAR CONDITION

- When the OK driving cycle was completed 3 times in a row
- When “Clear Memory” was performed (Only with engine stopped)

8. FAIL SAFE

Stop the continuity to electronic throttle control motor. (Fix the throttle opening angle to 6°.)

9. ECM OPERATION AT DTC SETTING

Memorize the freeze frame data. (For test mode $02)

DE:DTC P2138 THROTTLE/PEDAL POSITION SENSOR/SWITCH “D”/“E” VOLTAGE RATIONALITY

1. OUTLINE OF DIAGNOSIS

Judge NG when the signal level of throttle position sensor 1 is different from the throttle position sensor 2.

2. COMPONENT DESCRIPTION

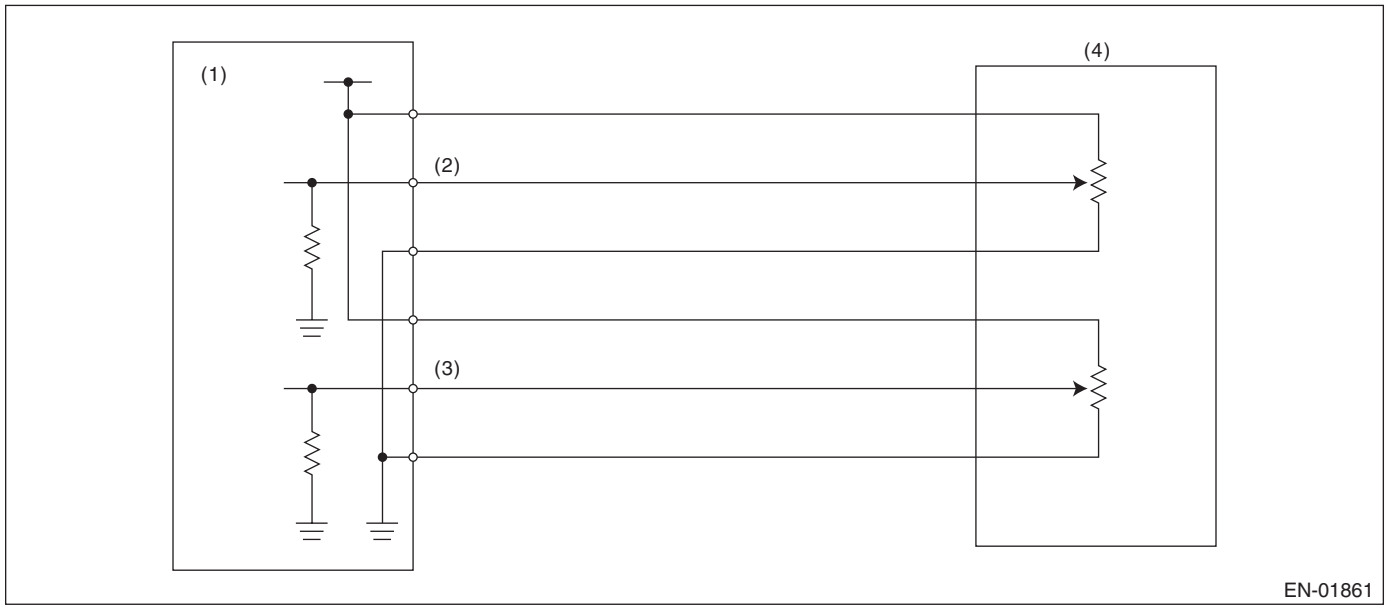

(1) Engine control module (ECM)
(2) Accelerator pedal position sensor 1 signal
(3) Accelerator pedal position sensor 2 signal
(4) Accelerator pedal position sensor

3. ENABLE CONDITION

Secondary Parameters	Enable Conditions
Ignition switch	ON

4. GENERAL DRIVING CYCLE

Always perform the diagnosis continuously.

5. DIAGNOSTIC METHOD

Judge OK and clear the NG when the malfunction criteria below are completed.

Judgment Value

Malfunction Criteria	Threshold Value
Signal difference between two sensors	≤ 0.8°

Details of Judgment Value

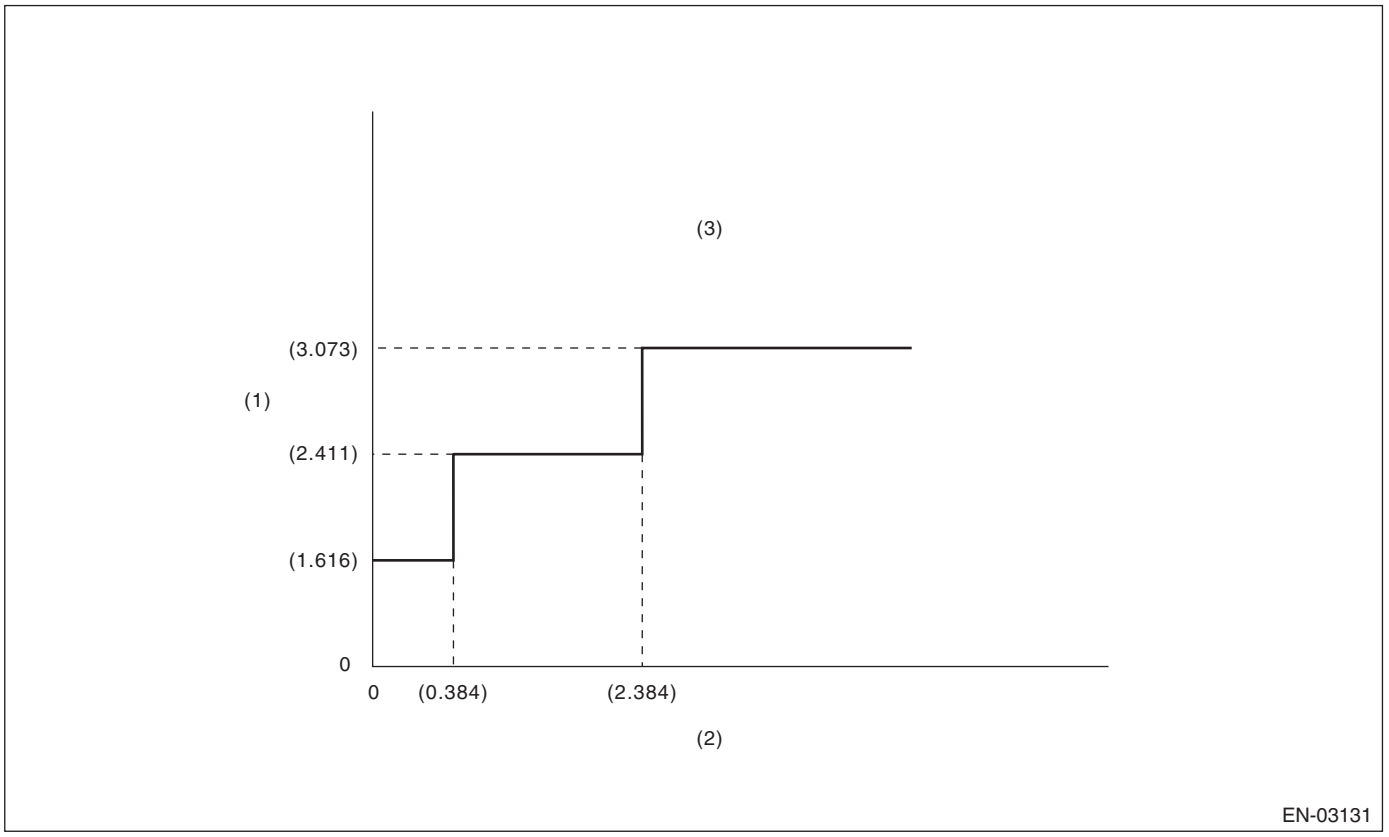

(1) Sensor output difference (°)
(2) Accelerator pedal position sensor 2 opening angle (°)
(3) NG area

Time Needed for Diagnosis:
- 116 milliseconds (For NG)
- 1000 milliseconds (For OK)

Malfunction Indicator Light Illumination: Illuminates as soon as malfunction occurs.

6. DTC CLEAR CONDITION

- When the OK idling cycle was completed 40 times in a row
- When “Clear Memory” was performed

7. MALFUNCTION INDICATOR LIGHT CLEAR CONDITION

- When the OK driving cycle was completed 3 times in a row
- When “Clear Memory” was performed

8. FAIL SAFE

Fix the throttle opening angle to 6°.

9. ECM OPERATION AT DTC SETTING

Memorize the freeze frame data. (For test mode $02)

DF:DTC P2227 BAROMETRIC PRESSURE CIRCUIT RANGE/PERFORMANCE

1. OUTLINE OF DIAGNOSIS

Detect the malfunction of atmospheric pressure sensor output property. Judge NG when the atmospheric pressure sensor output is largely different from the intake manifold pressure at engine starting.

2. COMPONENT DESCRIPTION

Atmospheric pressure sensor is built in ECM.

3. ENABLE CONDITION

Secondary Parameters	Enable Conditions
Engine speed	< 300 rpm
Vehicle speed	< 1 km/h (0.62 MPH)

4. GENERAL DRIVING CYCLE

Perform the diagnosis before engine starting with the ignition switch ON.

5. DIAGNOSTIC METHOD

• Abnormality Judgment

Judge NG when the continuous time of completing the malfunction criteria below becomes more than 0.3 seconds.

Judgment Value

Malfunction Criteria	Threshold Value
|Atmospheric – manifold absolute pressure|	≥ 26.7 kPa (200 mmHg, 7.88 inHg)
|Intake manifold pressure at engine starting – manifold absolute pressure|	< 1.33 kPa (10 mmHg, 0.39 inHg)

Time Needed for Diagnosis: 0.3 seconds
Malfunction Indicator Light Illumination: Detect when malfunction occurs in 2 continuous driving cycles.

• Normality Judgment

Judge OK and clear the NG when the continuous time of completing the malfunction criteria below becomes more than 0.3 seconds.

Judgment Value

Malfunction Criteria	Threshold Value
Atmospheric – manifold absolute pressure	< 26.7 kPa (200 mmHg, 7.88 inHg)

6. DTC CLEAR CONDITION

- When the OK idling cycle was completed 40 times in a row
- When “Clear Memory” was performed

7. MALFUNCTION INDICATOR LIGHT CLEAR CONDITION

- When the OK driving cycle was completed 3 times in a row
- When “Clear Memory” was performed

8. FAIL SAFE

Atmospheric pressure sensor process: Fix the atmospheric pressure to 101 kPa (760 mmHg, 29.8 inHg).

9. ECM OPERATION AT DTC SETTING

Memorize the freeze frame data. (For test mode $02)

DG:DTC P2228 BAROMETRIC PRESSURE CIRCUIT LOW INPUT

1. OUTLINE OF DIAGNOSIS

Detect the open or short circuit of atmospheric pressure sensor.
Judge NG when out of the standard value.

2. COMPONENT DESCRIPTION

Atmospheric pressure sensor is built in ECM.

3. ENABLE CONDITION

Secondary Parameters	Enable Conditions
None	

4. GENERAL DRIVING CYCLE

Always perform the diagnosis continuously.

5. DIAGNOSTIC METHOD

• Abnormality Judgment

Judge NG when the continuous time of completing the malfunction criteria below becomes more than 0.5 seconds.

Judgment Value

Malfunction Criteria	Threshold Value
Ignition switch	ON
Output voltage	$<$ 0.118 V

Time Needed for Diagnosis: 0.5 seconds
Malfunction Indicator Light Illumination: Illuminates as soon as malfunction occurs.

• Normality Judgment

Judge OK and clear the NG when the malfunction criteria below are completed.

Judgment Value

Malfunction Criteria	Threshold Value
Ignition switch	ON
Output voltage	$\geq$ 0.118 V

6. DTC CLEAR CONDITION

- When the OK idling cycle was completed 40 times in a row
- When “Clear Memory” was performed

7. MALFUNCTION INDICATOR LIGHT CLEAR CONDITION

- When the OK driving cycle was completed 3 times in a row
- When “Clear Memory” was performed

8. FAIL SAFE

Atmospheric pressure sensor process: Fix the atmospheric pressure to 101.3 kPa (760 mmHg, 29.9 inHg).

9. ECM OPERATION AT DTC SETTING

Memorize the freeze frame data. (For test mode $02)

DH:DTC P2229 BAROMETRIC PRESSURE CIRCUIT HIGH INPUT

1. OUTLINE OF DIAGNOSIS

Detect the open or short circuit of atmospheric pressure sensor.
Judge NG when out of the standard value.

2. COMPONENT DESCRIPTION

Atmospheric pressure sensor is built in ECM.

3. ENABLE CONDITION

Secondary Parameters	Enable Conditions
None	

4. GENERAL DRIVING CYCLE

Always perform the diagnosis continuously.

5. DIAGNOSTIC METHOD

• Abnormality Judgment

Judge NG when the continuous time of completing the malfunction criteria below becomes more than 0.5 seconds.

Judgment Value

Malfunction Criteria	Threshold Value
Ignition switch	ON
Output voltage	≥ 4.936 V

Time Needed for Diagnosis: 0.5 seconds
Malfunction Indicator Light Illumination: Illuminates as soon as malfunction occurs.

• Normality Judgment

Judge OK and clear the NG when the malfunction criteria below are completed.

Judgment Value

Malfunction Criteria	Threshold Value
Ignition switch	ON
Output voltage	< 4.936 V

6. DTC CLEAR CONDITION

- When the OK idling cycle was completed 40 times in a row
- When “Clear Memory” was performed

7. MALFUNCTION INDICATOR LIGHT CLEAR CONDITION

- When the OK driving cycle was completed 3 times in a row
- When “Clear Memory” was performed

8. FAIL SAFE

Atmospheric pressure sensor process: Fix the atmospheric pressure to 101.3 kPa (760 mmHg, 29.9 inHg).

9. ECM OPERATION AT DTC SETTING

Memorize the freeze frame data. (For test mode $02)

FUEL INJECTION (FUEL SYSTEMS)

FU(H4SO U5)

		Page
1.	General Description	2
2.	Throttle Body	12
3.	Intake Manifold	13
4.	Engine Coolant Temperature Sensor	23
5.	Crankshaft Position Sensor	24
6.	Camshaft Position Sensor	25
7.	Knock Sensor	26
8.	Throttle Position Sensor	27
9.	Manifold Absolute Pressure Sensor	28
10.	Mass Air Flow and Intake Air Temperature Sensor	29
11.	Tumble Generator Valve Assembly	30
12.	Tumble Generator Valve Actuator	31
13.	Tumble Generator Valve Position Sensor	32
14.	EGR Valve	33
15.	Fuel Injector	34
16.	Front Oxygen (A/F) Sensor	37
17.	Front Oxygen Sensor	40
18.	Rear Oxygen Sensor	43
19.	Engine Control Module (ECM)	44
20.	Main Relay	45
21.	Fuel Pump Relay	46
22.	Electronic Throttle Control Relay	47
23.	Fuel	48
24.	Fuel Tank	49
25.	Fuel Filler Pipe	55
26.	Fuel Pump	58
27.	Fuel Level Sensor	60
28.	Fuel Sub Level Sensor	61
29.	Fuel Filter	62
30.	Fuel Damper Valve	63
31.	Fuel Delivery, Return and Evaporation Lines	64
32.	Fuel System Trouble in General	67

1. General Description

A: SPECIFICATION

Fuel tank	Capacity	64 ℓ (16.9 US gal, 14.1 Imp gal)
	Location	Under rear seat
Fuel pump	Type	Impeller
	Shutoff discharge pressure	441 — 686 kPa (4.50 — 7.00 kg/cm^2, 64.0 — 99.5 psi)
	Discharge	75 ℓ (19.8 US gal, 16.5 Imp gal)/h or more [12 V at 300 kPa (3.06 kg/cm^2, 43.5 psi)]
Fuel filter		In-tank type

B: COMPONENT

1. INTAKE MANIFOLD

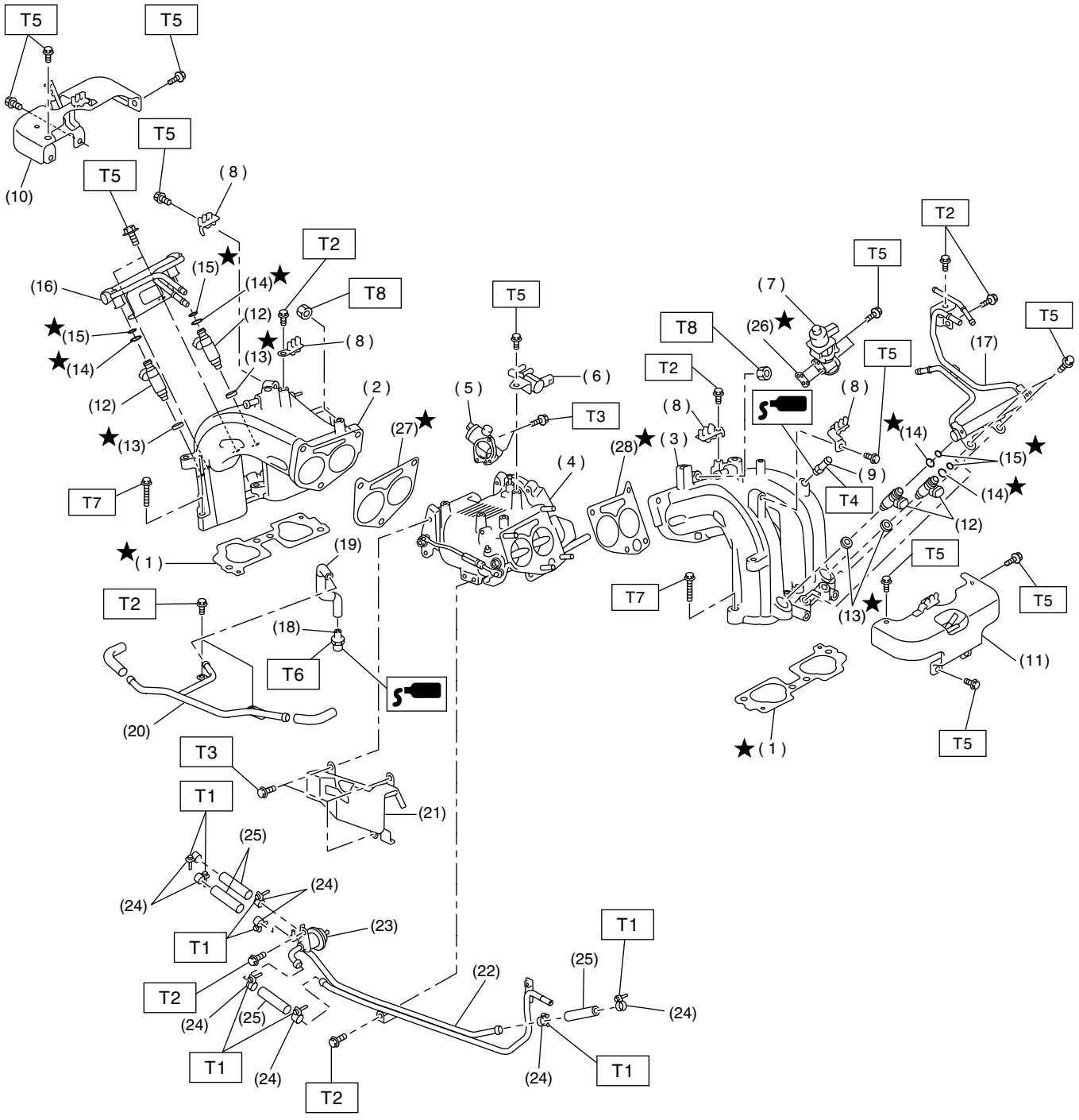

FU-02420

(1) Intake manifold gasket
(2) Intake manifold RH
(3) Intake manifold LH
(4) Tumble generator valve ASSY
(5) Tumble generator valve actuator
(6) Purge control solenoid valve
(7) EGR valve
(8) Plug cord holder
(9) Nipple
(10) Fuel pipe protector RH
(11) Fuel pipe protector LH
(12) Fuel injector
(13) O-ring
(14) O-ring
(15) O-ring
(16) Fuel injector pipe RH
(17) Fuel injector pipe LH
(18) PCV valve
(19) PCV hose
(20) PCV pipe
(21) Protector
(22) Fuel pipe ASSY
(23) Pressure regulator
(24) Clamp
(25) Fuel hose
(26) EGR valve gasket
(27) Tumble generator valve gasket RH
(28) Tumble generator valve gasket LH

Tightening torque: N·m (kgf-m, ft-lb)

T1: 1.5 (0.15, 1.1)
T2: 5 (0.5, 3.6)
T3: 5.9 (0.6, 4.3)
T4: 17 (1.7, 12.5)
T5: 19 (1.9, 14)
T6: 22.5 (2.29, 16.6)
T7: 25 (2.5, 18)
T8: <Ref. to FU(H4SO U5)-17, DISASSEMBLY, Intake Manifold.>

2. AIR INTAKE SYSTEM

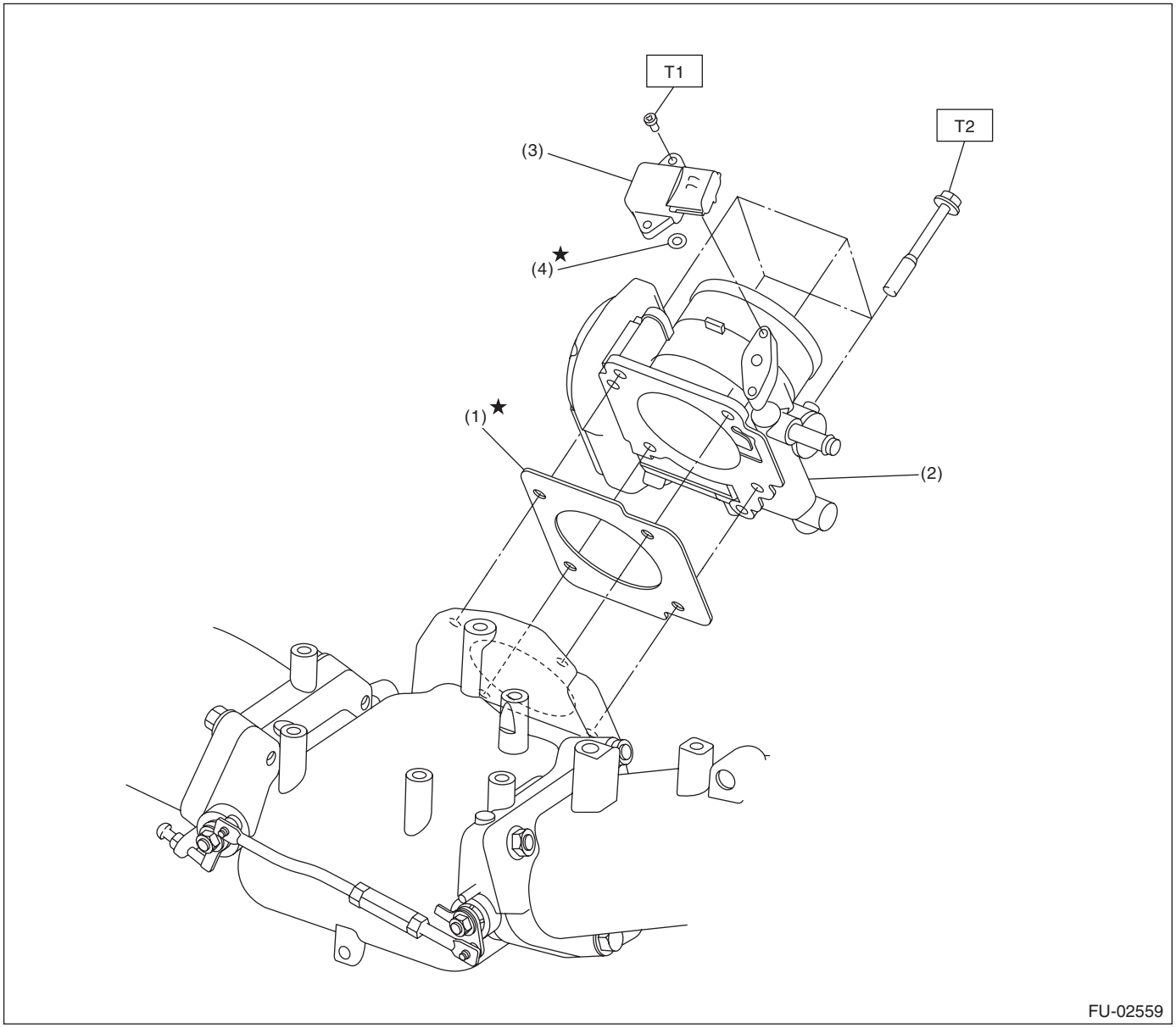

(1) Gasket
(2) Throttle body
(3) Manifold absolute pressure sensor
(4) O-ring

Tightening torque: N·m (kgf-m, ft-lb)
T1: 1.6 (0.16, 1.2)
T2: 8 (0.8, 5.9)

3. CRANKSHAFT POSITION, CAMSHAFT POSITION AND KNOCK SENSORS

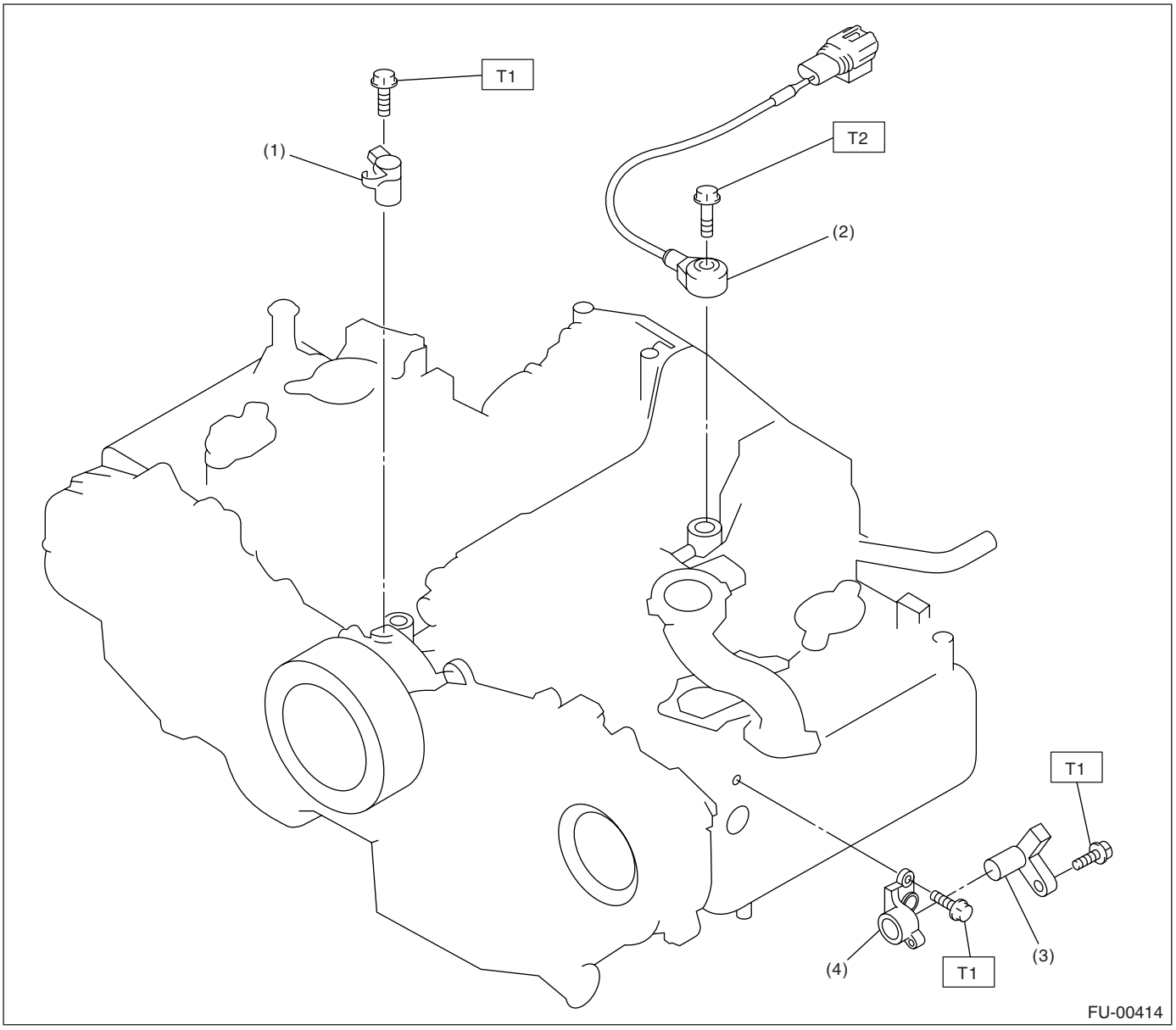

(1) Crankshaft position sensor
(2) Knock sensor
(3) Camshaft position sensor
(4) Camshaft position sensor support

Tightening torque: N·m (kgf-m, ft-lb)
T1: 6.4 (0.65, 4.7)
T2: 24 (2.4, 17.4)

4. FUEL TANK

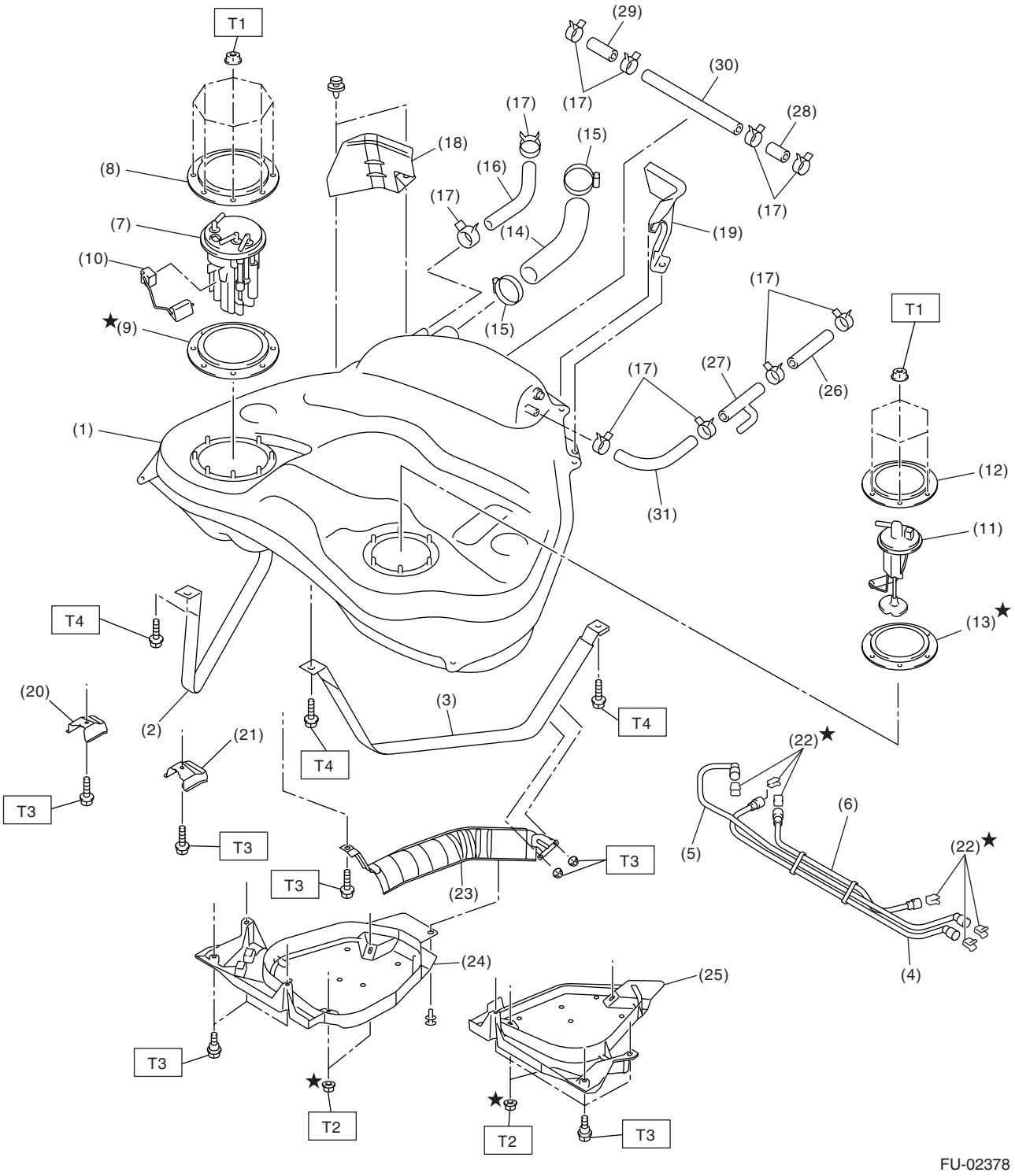

FU-02378

(1) Fuel tank
(2) Fuel tank band RH
(3) Fuel tank band LH
(4) Delivery tube
(5) Return tube
(6) Jet pump tube
(7) Fuel pump assembly
(8) Fuel pump upper plate
(9) Fuel pump gasket
(10) Fuel level sensor
(11) Fuel sub level sensor
(12) Fuel sub level sensor upper plate
(13) Fuel sub level sensor gasket
(14) Fuel filler hose
(15) Clamp
(16) Evaporation hose A
(17) Clip
(18) Fuel tank protector RH (Rear)
(19) Fuel tank protector LH (Rear)
(20) Stopper RH
(21) Stopper LH
(22) Retainer
(23) Heat shield cover
(24) Fuel tank protector RH (Front)
(25) Fuel tank protector LH (Front)
(26) Evaporation hose B
(27) Connector
(28) Evaporation hose C
(29) Evaporation hose D
(30) Evaporation pipe
(31) Evaporation hose E

Tightening torque: N·m (kgf-m, ft-lb)
T1: 4.4 (0.45, 3.2)
T2: 9 (0.9, 6.6)
T3: 17.5 (1.78, 12.9)
T4: 33 (3.4, 25)

5. FUEL LINE

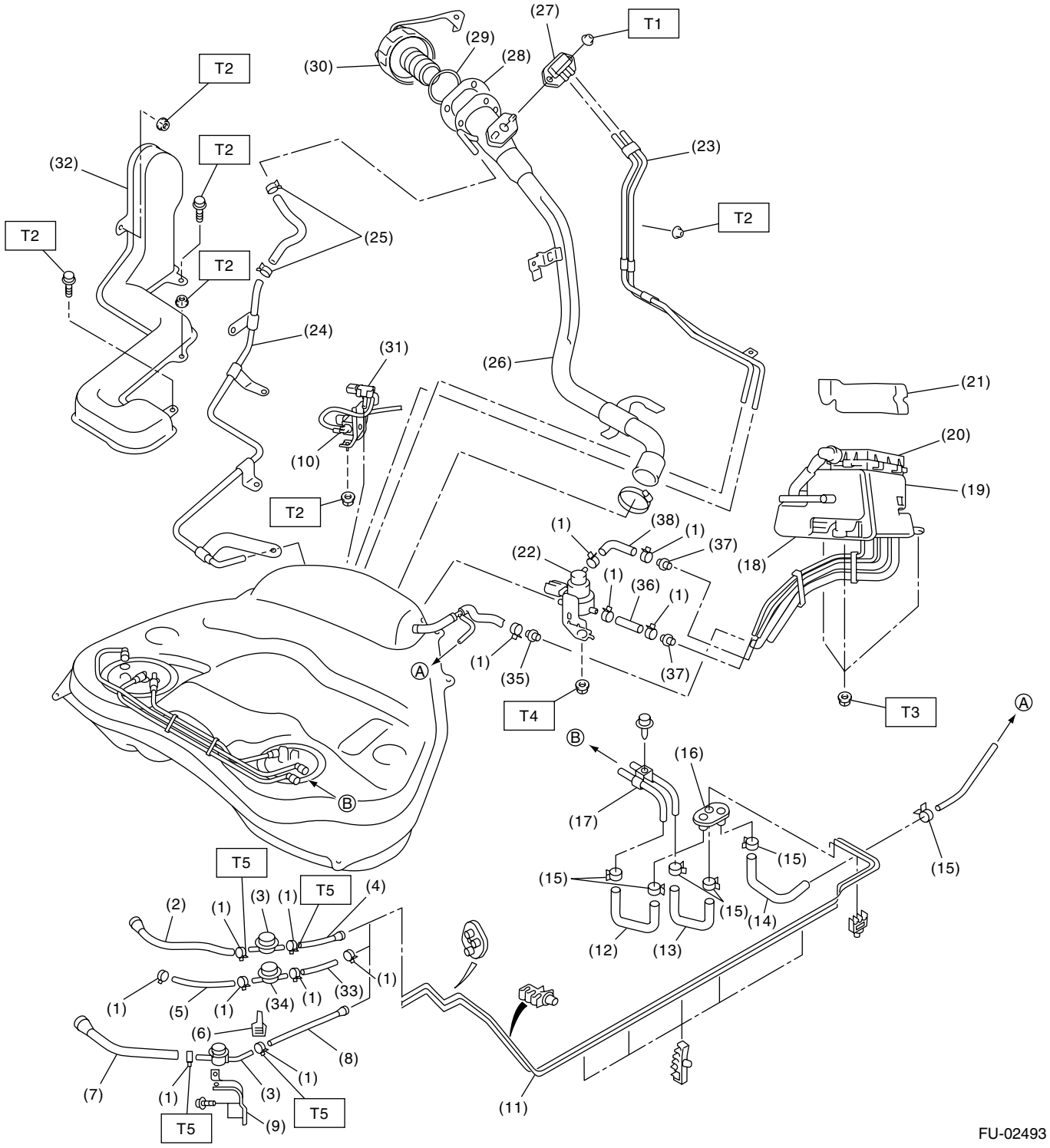
(27)
T1
(29)
(28)
(30)
T2
T2
(32)
(23)
T2
T2
(25)
T2
(24)
(31)
(26)
(21)
(20)
(10)
(19)
T2
(1)
(38)
(1)
(37)
(22)
(18)
(1)
(36)
(1)
(1)
(35)
(37)
A
T4
T3
A
B
(16)
(17)
B
(15)
(15)
(15)
(15)
(14)
(12)
(13)
T5
T5
(4)
(2)
(1)
(3)
(1)
(1)
(1)
(33)
(1)
(5)
(1)
(34)
(6)
(8)
(7)
(1)
(3)
(1)
(1)
T5
T5
(9)
(11)
FU-02493

(1) Clamp
(2) Fuel return hose A
(3) Fuel damper valve
(4) Fuel return hose B
(5) Evaporation hose A
(6) Clip
(7) Fuel delivery hose A
(8) Fuel delivery hose B
(9) Fuel dumper valve bracket
(10) Fuel tank sensor control valve
(11) Fuel pipe ASSY
(12) Fuel delivery hose C
(13) Fuel return hose C
(14) Evaporation hose C
(15) Clamp
(16) Grommet
(17) Fuel pipe ASSY
(18) Canister
(19) Drain valve
(20) Drain filter
(21) Canister protector
(22) Pressure control solenoid valve
(23) Evaporation pipe A
(24) Evaporation pipe B
(25) Clip
(26) Fuel filler pipe
(27) Shut valve
(28) Packing
(29) Ring
(30) Fuel filler cap
(31) Fuel tank pressure sensor
(32) Evaporation pipe protector
(33) Evaporation hose B
(34) Purge damper valve
(35) Connector A
(36) Canister hose A
(37) Connector B
(38) Canister hose B

Tightening torque: N·m (kgf-m, ft-lb)
T1: 4.4 (0.45, 3.2)
T2: 7.5 (0.76, 5.5)
T3: 8 (0.8, 5.9)
T4: 17.6 (1.8, 13)
T5: 1.25 (0.13, 0.94)

C: CAUTION

- Wear work clothing, including a cap, protective goggles and protective shoes during operation.
- Remove contamination including dirt and corrosion before removal, installation or disassembly.
- Keep the disassembled parts in order and protect them from dust and dirt.
- Before removal, installation or disassembly, be sure to clarify the failure. Avoid unnecessary removal, installation, disassembly and replacement.
- Be careful not to burn yourself, because each part on the vehicle is hot after running.
- Be sure to tighten fasteners including bolts and nuts to the specified torque.
- Place shop jacks or rigid racks at the specified points.
- Before disconnecting electrical connectors of sensors or units, be sure to disconnect the ground cable from battery.
- Place “NO FIRE” signs near the working area.
- Be careful not to spill fuel on the floor.

D: PREPARATION TOOL

ILLUSTRATION	TOOL NUMBER	DESCRIPTION	REMARKS
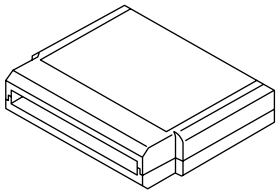 ST24082AA260	24082AA260	CARTRIDGE	Troubleshooting for electrical system.
ST22771AA030	22771AA030	SUBARU SELECT MONITOR KIT	Troubleshooting for electrical system.
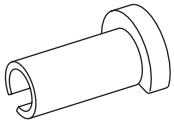 ST42099AE000	42099AE000	CONNECTOR REMOVER	Used for removing quick connector in engine compartment.

2. Throttle Body

A: REMOVAL

1) Disconnect the ground cable from battery.

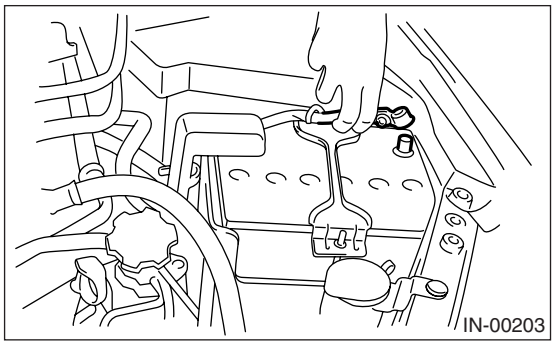

2) Remove the air intake chamber. <Ref. to IN(H4SO)-9, REMOVAL, Air Intake Chamber.>
3) Disconnect the connectors from the throttle position sensor and manifold absolute pressure sensor.

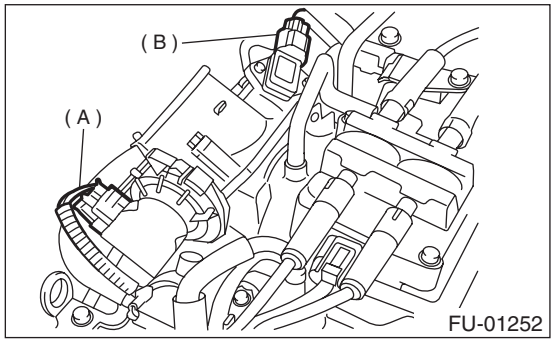

(A) Throttle position sensor
(B) Manifold absolute pressure sensor

4) Disconnect the engine coolant hoses (A) from throttle body.
5) Remove the bolts (B) which secure throttle body to intake manifold.

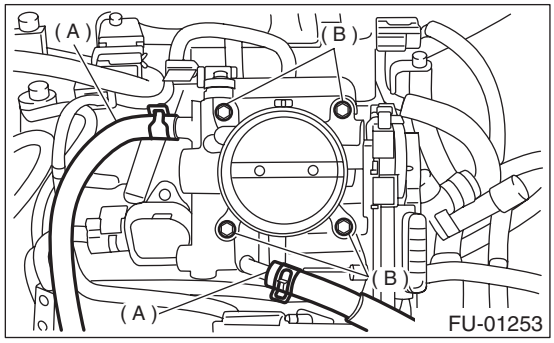

B: INSTALLATION

Install in the reverse order of removal.

NOTE:
Use a new gasket.

Tightening torque:
8 N·m (0.8 kgf-m, 5.9 ft-lb)

3. Intake Manifold

A: REMOVAL

1) Release the fuel pressure. <Ref. to FU(H4SO U5)-48, RELEASING OF FUEL PRESSURE, PROCEDURE, Fuel.>
2) Open the fuel filler flap lid, and remove the fuel filler cap.
3) Disconnect the ground cable from battery.

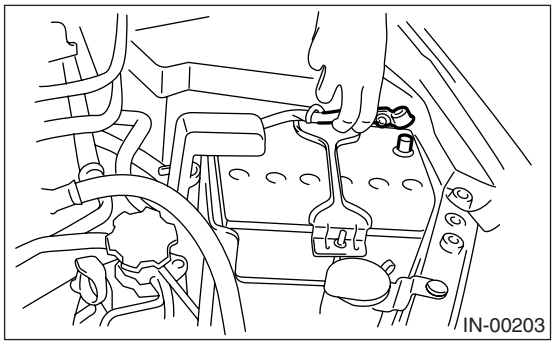

4) Remove the air cleaner case and air intake chamber. <Ref. to IN(H4SO)-7, REMOVAL, Air Cleaner Case.> <Ref. to IN(H4SO)-9, REMOVAL, Air Intake Chamber.>
5) Remove the generator. <Ref. to SC(H4SO)-20, REMOVAL, Generator.>
6) Disconnect the spark plug cords from spark plugs.
7) Disconnect the PCV hose from intake manifold.

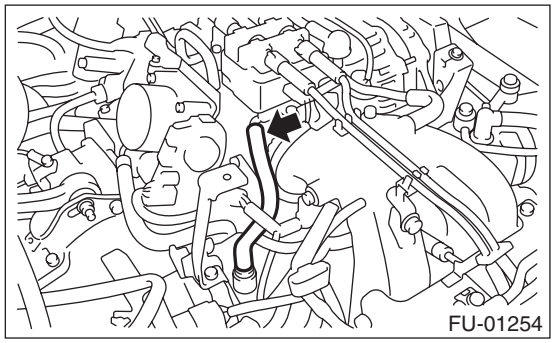

8) Disconnect the engine coolant hoses (A) from throttle body.

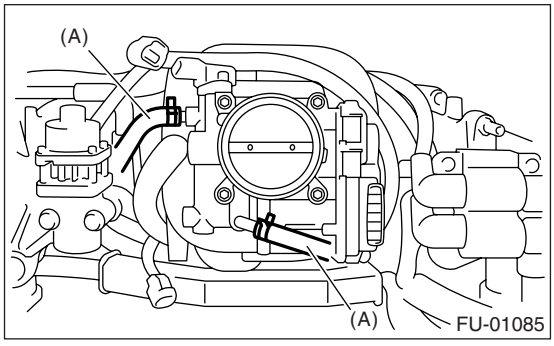

9) Disconnect the brake booster hose.

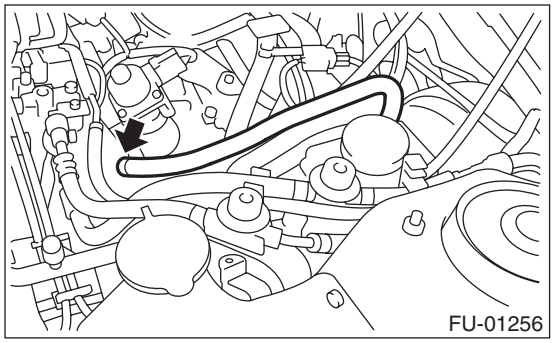

10) Disconnect the engine harness connectors from bulkhead harness connectors.

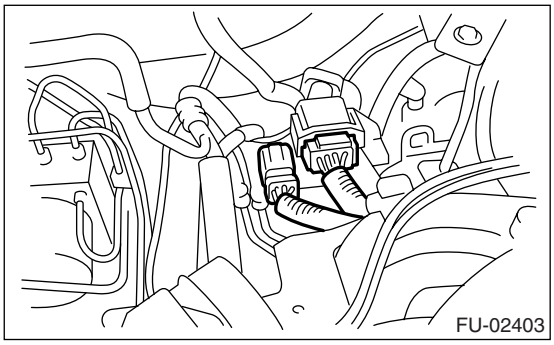

11) Disconnect the knock sensor connector.

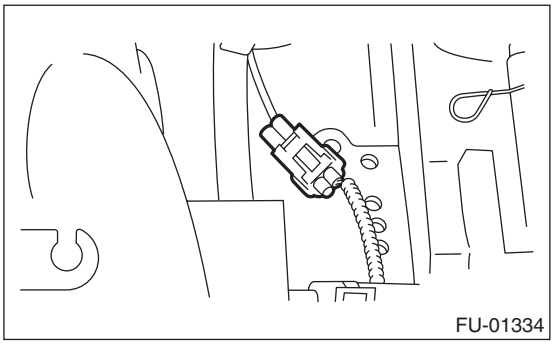

12) Disconnect the connector from crankshaft position sensor.

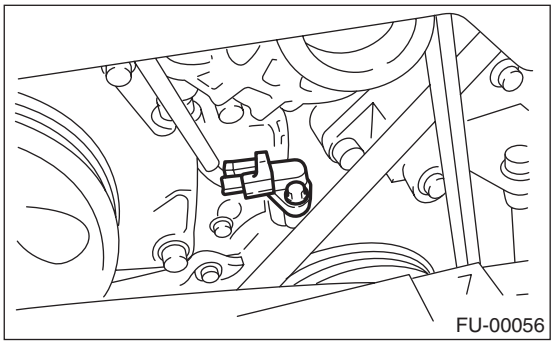

13) Disconnect the connector from power steering pump switch (A).

14) Disconnect the connector from oil pressure switch (B).

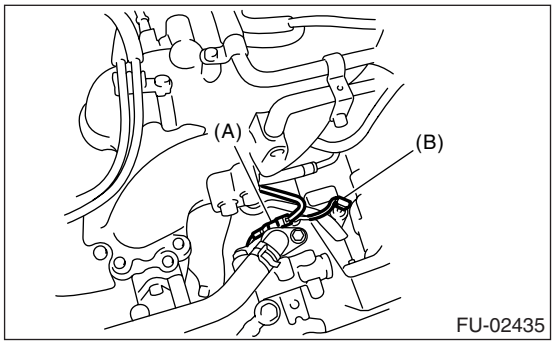

15) Disconnect the connector from camshaft position sensor.

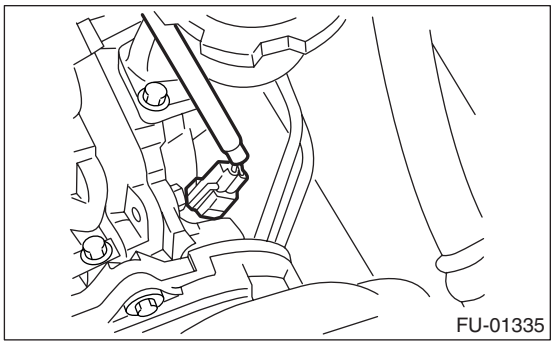

16) Disconnect the connector from front oxygen (A/F) sensor.

- LH side

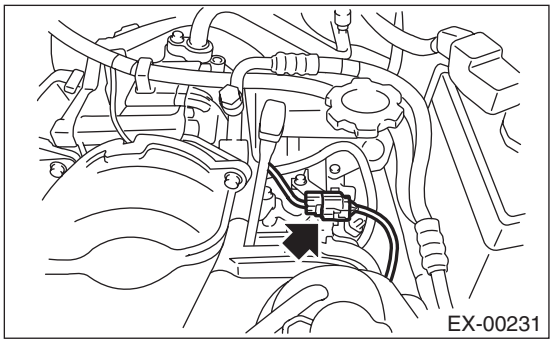

- RH side

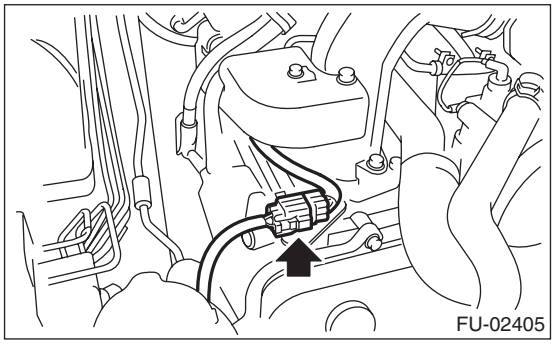

17) Disconnect the connectors from engine coolant temperature sensor.

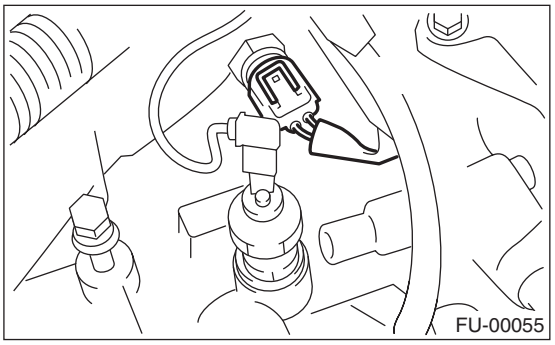

18) Remove the EGR pipe from intake manifold and cylinder head.

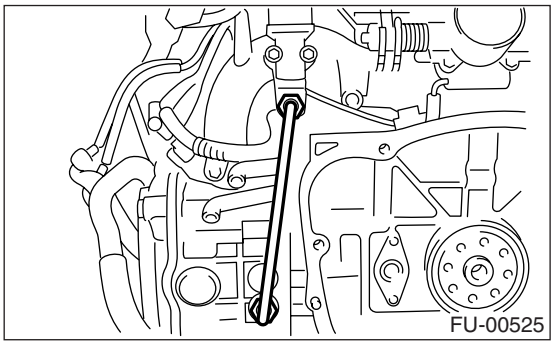

19) Disconnect the fuel hoses from fuel pipes using ST.

WARNING:
- **Be careful not to spill fuel.**
- **Catch the fuel from hoses using a container or cloth.**

ST 42099AE000 CONNECTOR REMOVER

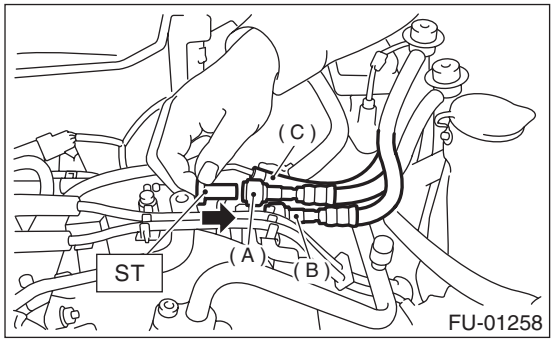

(A) Fuel delivery hose
(B) Return hose
(C) Evaporation hose

20) Remove the bolts which secure intake manifold to cylinder head.

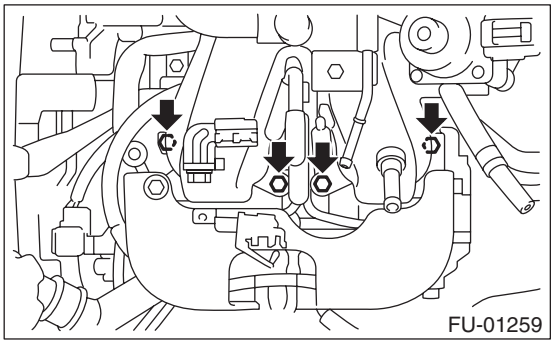

21) Remove the intake manifold.

B: INSTALLATION

1) Install the intake manifold onto cylinder heads.

NOTE:
Use a new gasket.

Tightening torque:
25 N·m (2.5 kgf-m, 18 ft-lb)

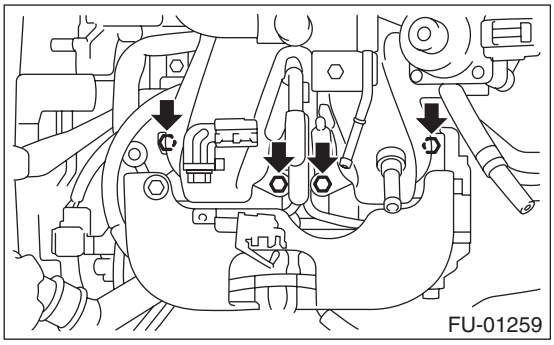

2) Connect the fuel hoses.

NOTE:
If fuel hoses or clamps are damaged, replace them with new ones.

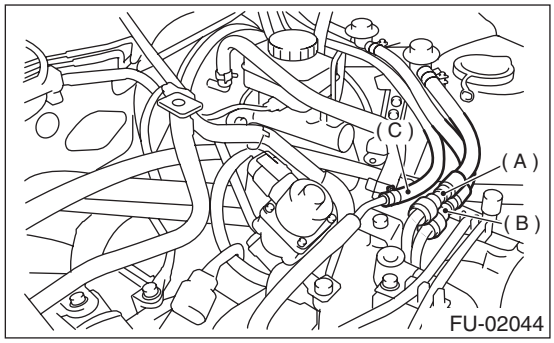

(A) Fuel delivery hose
(B) Return hose
(C) Evaporation hose

3) Install the EGR pipe to intake manifold and cylinder head.

Tightening torque:
34 N·m (3.4 kgf-m, 24.6 ft-lb)

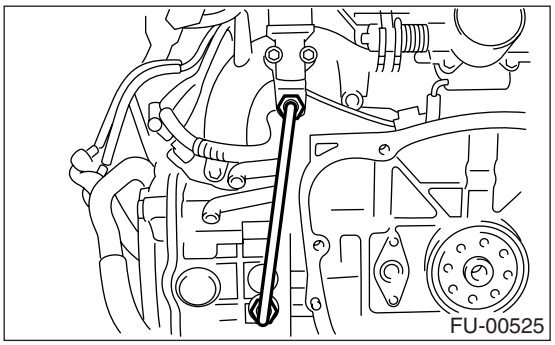

4) Connect the connectors to engine coolant temperature sensor.

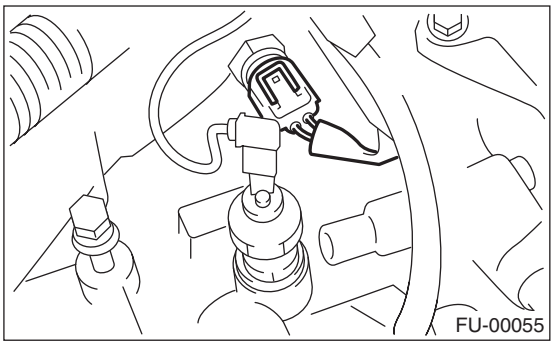

5) Connect the connector to front oxygen (A/F) sensor.

- LH side

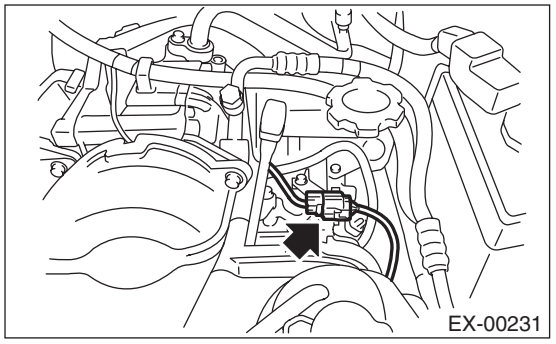

- RH side

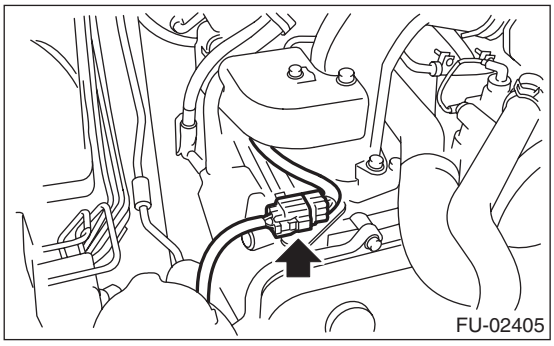

6) Connect the connector to camshaft position sensor.

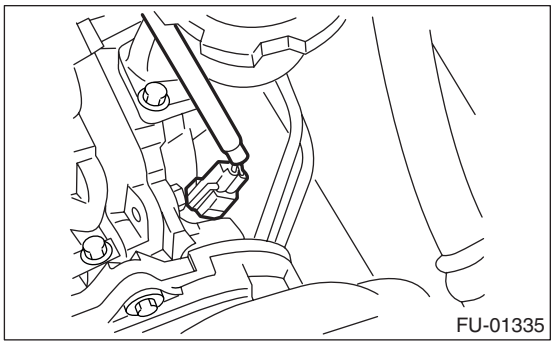

7) Connect the connector to power steering pump switch (A).
8) Connect the connector to oil pressure switch (B).

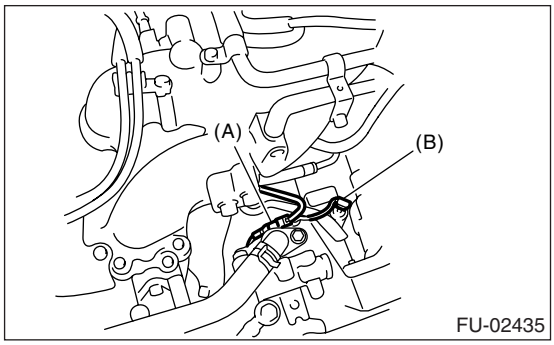

9) Connect the connector to crankshaft position sensor.

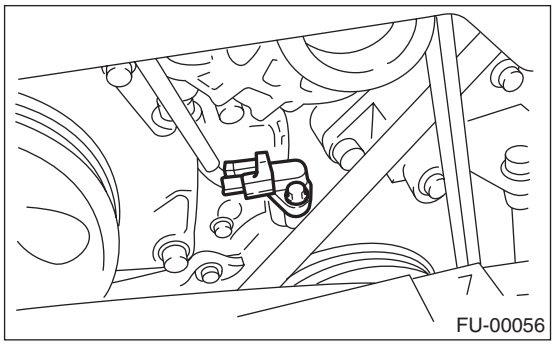

10) Connect the knock sensor connector.

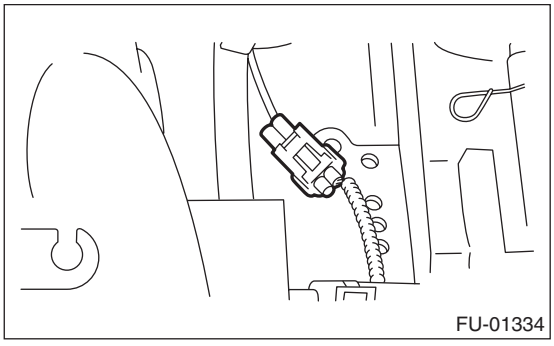

11) Connect the engine harness connectors to bulkhead harness connectors.

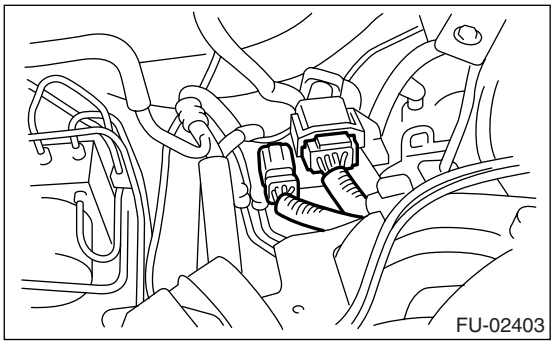

12) Connect the brake booster hose.

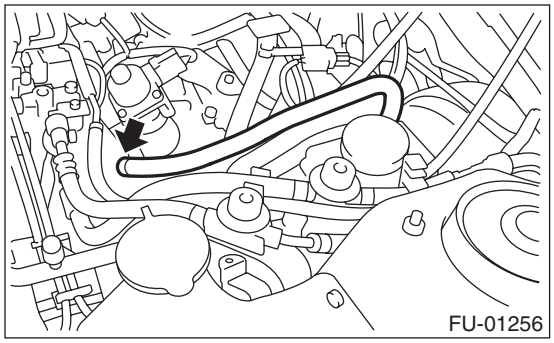

13) Connect the engine coolant hoses (A) to throttle body.

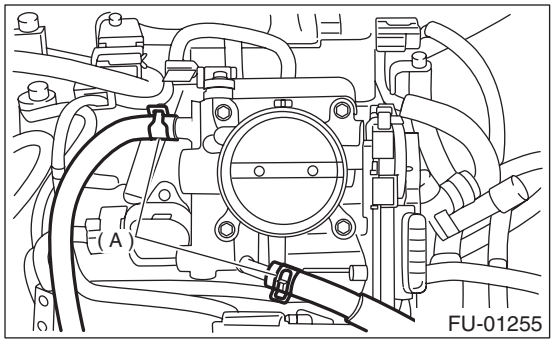

14) Connect the PCV hose to intake manifold.

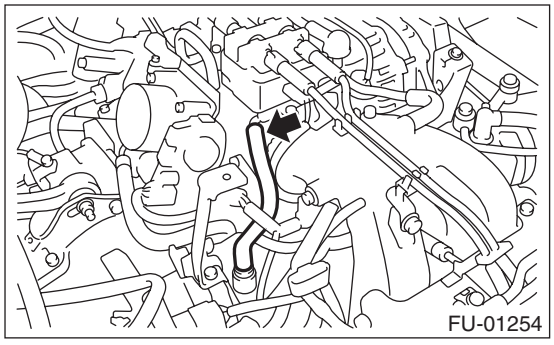

15) Install the generator. <Ref. to SC(H4SO)-20, INSTALLATION, Generator.>
16) Connect the spark plug cords to spark plugs.

17) Install the air cleaner case and air intake chamber. <Ref. to IN(H4SO)-7, INSTALLATION, Air Cleaner Case.> <Ref. to IN(H4SO)-9, INSTALLATION, Air Intake Chamber.>
18) Install the fuse of fuel pump to main fuse box.
19) Connect the battery ground cable to battery.

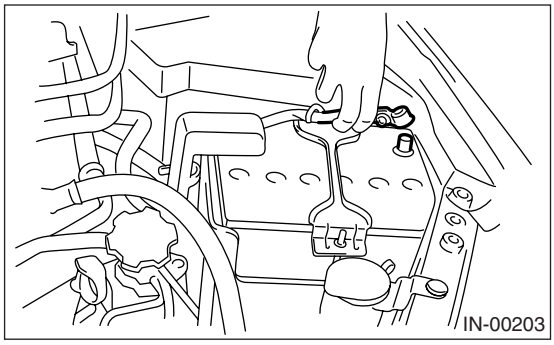

C: DISASSEMBLY

1) Disconnect the engine ground terminal from intake manifold.
- LH side

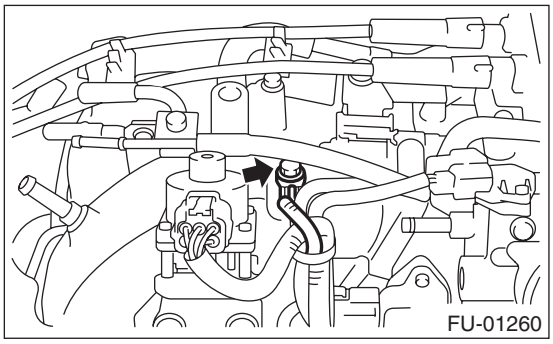

- RH side

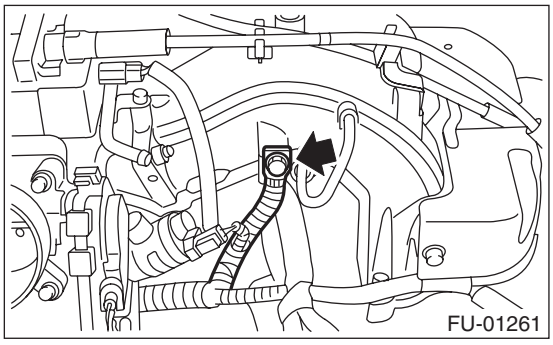

2) Remove the ignition coil and ignitor assembly. <Ref. to IG(H4SO)-8, REMOVAL, Ignition Coil and Ignitor Assembly.>
3) Remove the throttle body. <Ref. to FU(H4SO U5)-12, REMOVAL, Throttle Body.>
4) Remove the EGR valve. <Ref. to FU(H4SO U5)-33, REMOVAL, EGR Valve.>
5) Remove the PCV pipe.

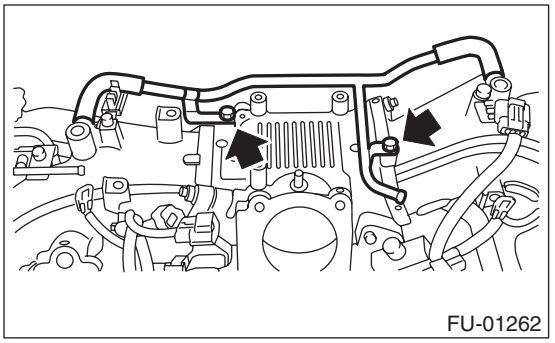

6) Remove the fuel pipe protector LH.

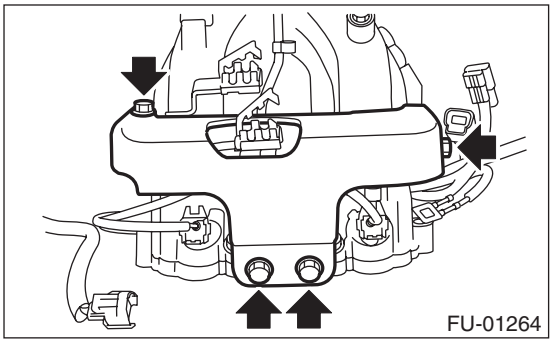

7) Remove the fuel pipe protector RH.

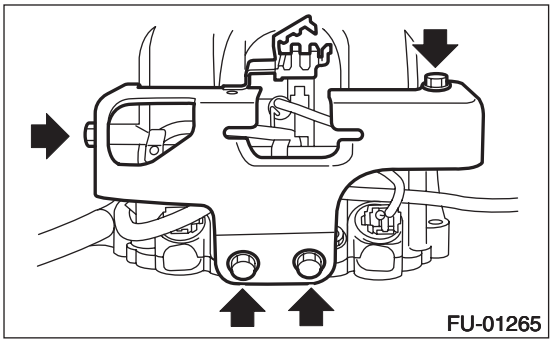

8) Disconnect the pressure regulator vacuum hose from intake manifold.

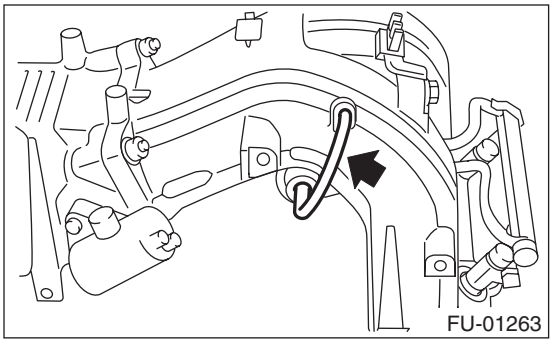

9) Disconnect the connectors (A) from fuel injector.

10) Remove the clip (B) which holds engine harness to injector pipe.

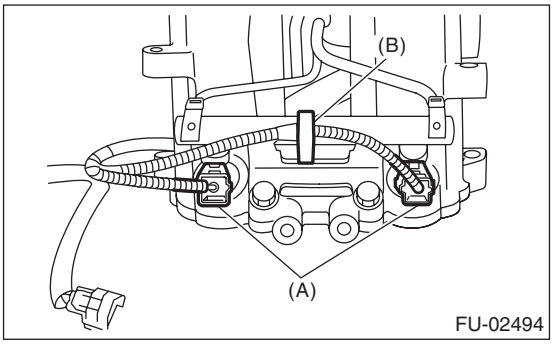

11) Remove the tumble generator valve actuator. <Ref. to FU(H4SO U5)-31, REMOVAL, Tumble Generator Valve Actuator.>
12) Remove the purge control solenoid valve. <Ref. to EC(H4SO)-6, REMOVAL, Purge Control Solenoid Valve.>
13) Remove the harness band clips which install the engine harness.

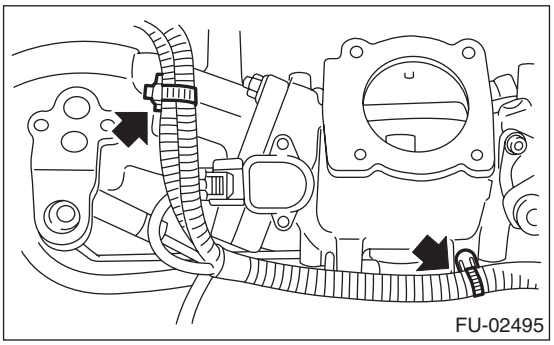

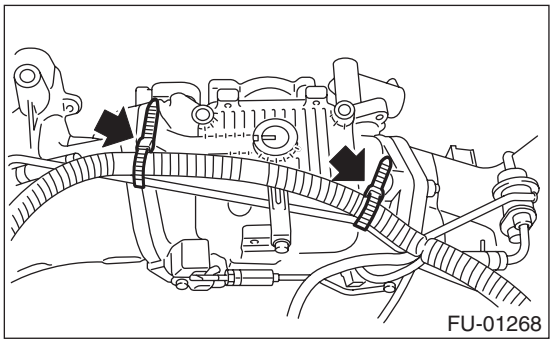

14) Remove the engine harness from intake manifold.
15) Remove the bolts which install injector pipe on the intake manifold as shown in the figure.

- RH side

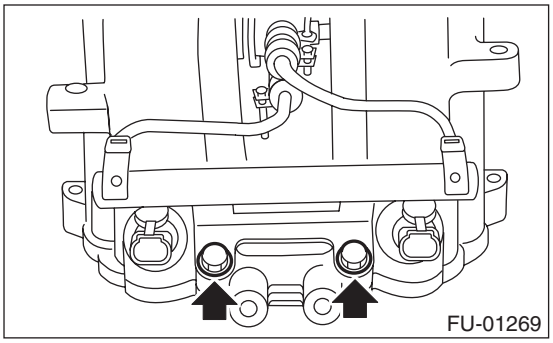

- LH side

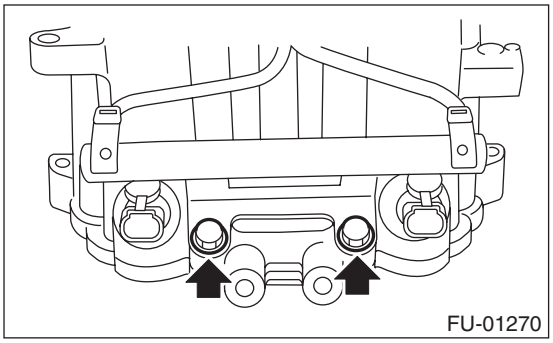

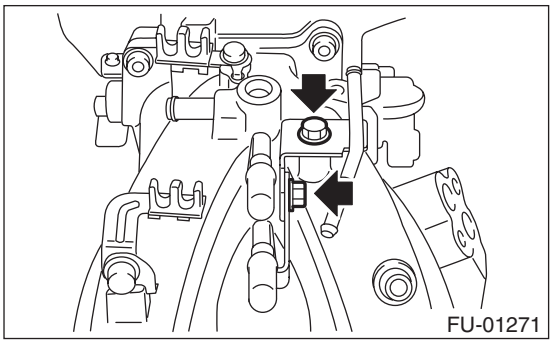

16) Remove the fuel injectors from injector pipe.
17) Loosen the clamp which holds fuel injector pipe RH to fuel hose, and then disconnect the pipe from fuel hose.

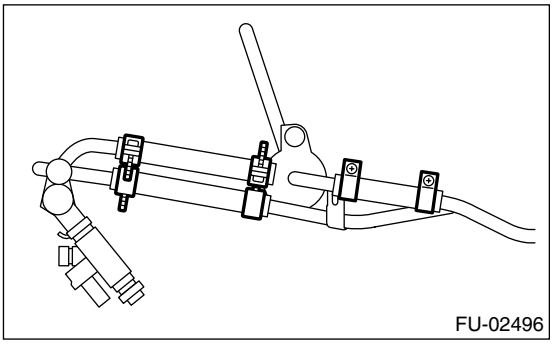

18) Loosen the clamp which holds fuel injector pipe LH to fuel hose, and then disconnect the pipe from fuel hose.

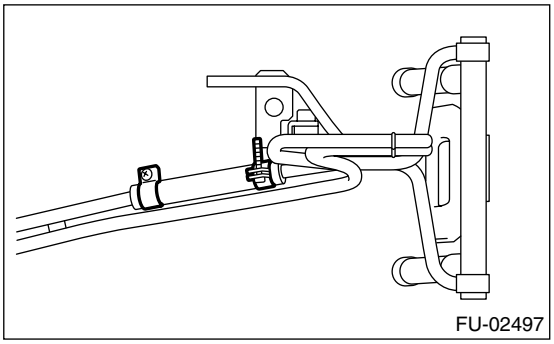

19) Remove the bolt which installs the fuel pipes on intake manifold.

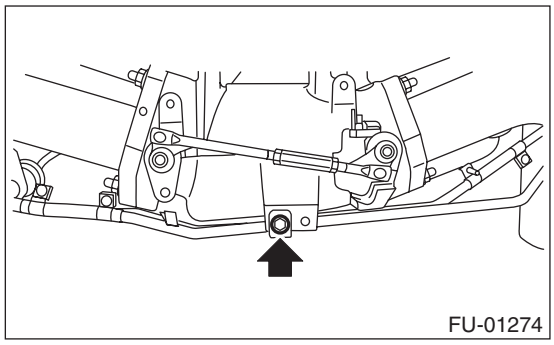

20) Remove the bolt which installs pressure regulator on intake manifold.
21) Remove the intake manifold from tumble generator assembly.

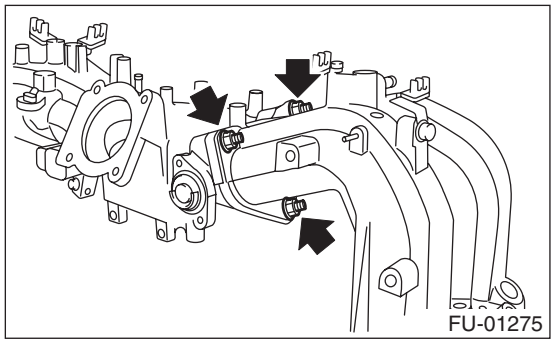

D: ASSEMBLY

1) Install the intake manifold to tumble generator assembly.

NOTE:
Use a new gasket.

CAUTION:
This work should be done on cylinder head. (Do not use gasket for the mating surface of cylinder head and intake manifold at this time.)

(1) Temporarily tighten (a) — (b) in alphabetical order.
(2) Tighten (e) — (k) to 5 N·m (0.5 kgf-m, 4 ft-lb).
(3) Tighten (a) — (d) and (l) — (o) to 10 N·m (1.0 kgf-m, 7 ft-lb).
(4) Tighten (e) — (g) to 25 N·m (2.6 kgf-m, 18 ft-lb).
(5) Tighten (h) — (k) to 25 N·m (2.6 kgf-m, 18 ft-lb).
(6) Loosen (a) — (d) and (l) — (o) to remove.

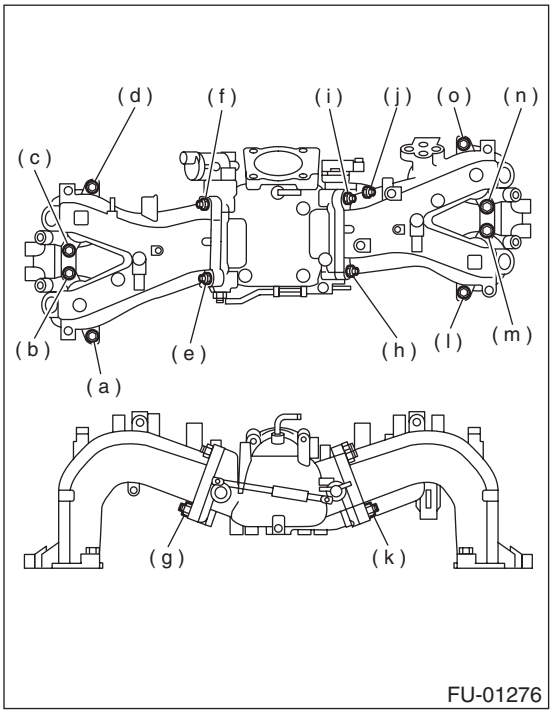

2) Tighten the bolt which installs pressure regulator on intake manifold.

Tightening torque:
5 N·m (0.5 kgf-m, 3.6 ft-lb)

3) Tighten the bolt which installs the fuel pipes on intake manifold.

Tightening torque:
5 N·m (0.5 kgf-m, 3.6 ft-lb)

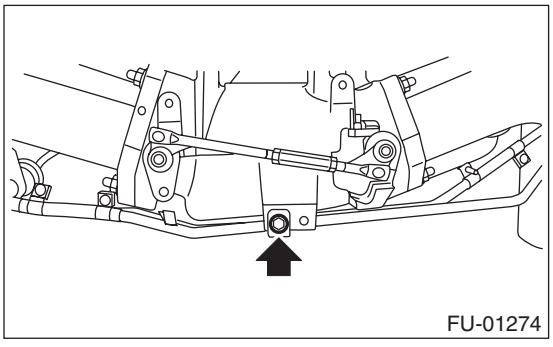

4) Connect the fuel injector pipe to fuel hose, and tighten the clamp screw.

NOTE:
Tighten the clamp screw as shown in the figure.

L: 2 — 5 mm (0.08 — 0.20 in)

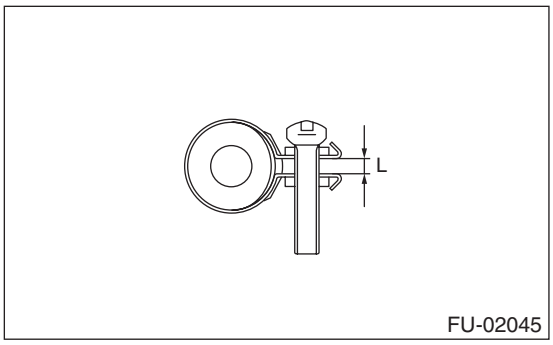

Tightening torque:
1.5 N·m (0.15 kgf-m, 1.1 ft-lb)

- LH side

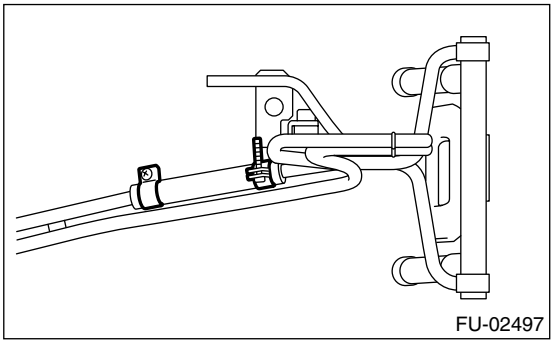

- RH side

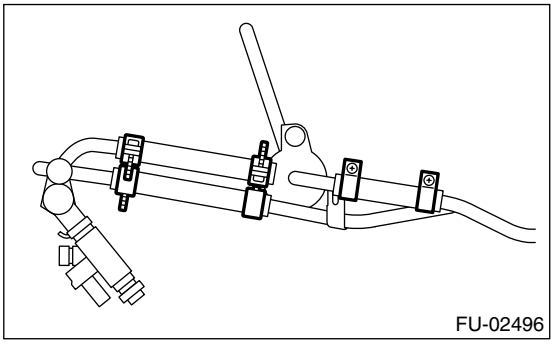

5) Install the fuel injectors.
6) Tighten the bolts which install injector pipe on intake manifold.

- RH side

Tightening torque:
19 N·m (1.9 kgf-m, 14 ft-lb)

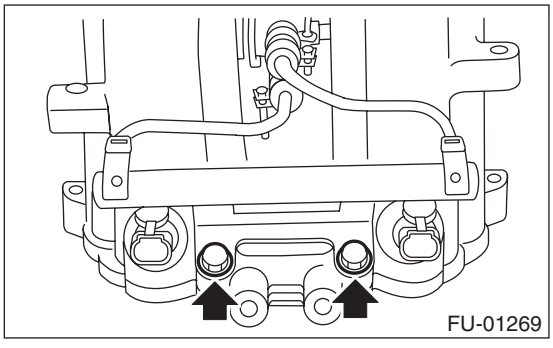

- LH side

Tightening torque:
19 N·m (1.9 kgf-m, 14 ft-lb)

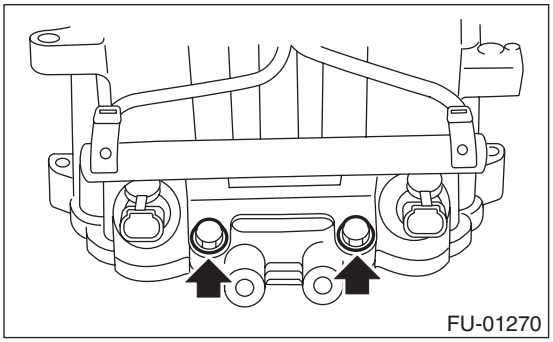

Tightening torque:
5 N·m (0.5 kgf-m, 3.6 ft-lb)

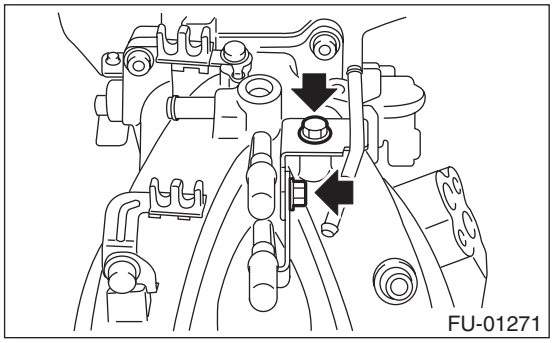

7) Hold the engine harness by harness band clips.

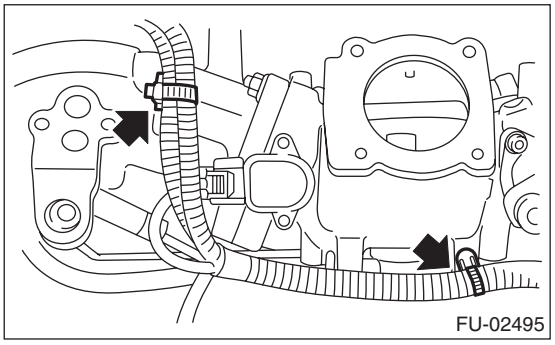

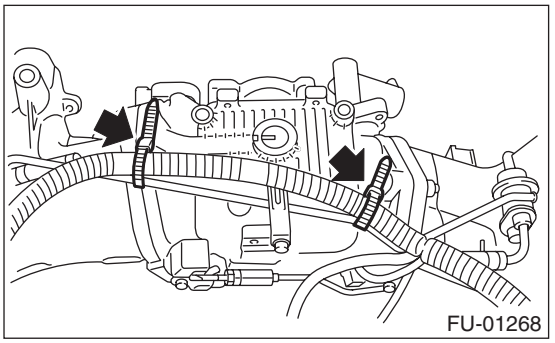

8) Install the purge control solenoid valve. <Ref. to EC(H4SO)-6, INSTALLATION, Purge Control Solenoid Valve.>

9) Install the tumble generator valve actuator. <Ref. to FU(H4SO U5)-31, INSTALLATION, Tumble Generator Valve Actuator.>
10) Connect the connectors (A) to fuel injector.
11) Hold the engine harness to injector pipe by clip (B).

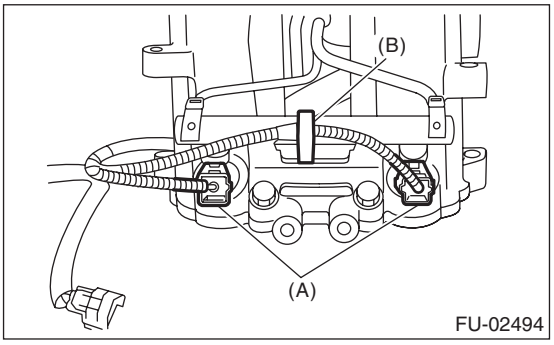

12) Connect the pressure regulator vacuum hose to intake manifold.

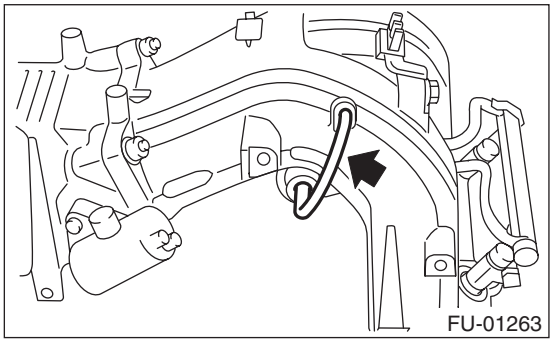

13) Install the fuel pipe protector RH.

Tightening torque:
19 N·m (1.9 kgf-m, 14 ft-lb)

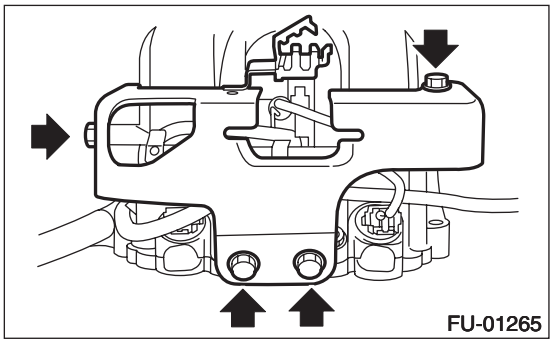

14) Install the fuel pipe protector LH.

Tightening torque:
19 N·m (1.9 kgf-m, 14 ft-lb)

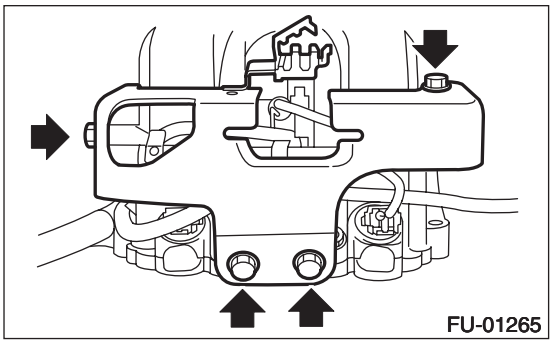

15) Install the PCV pipe.

Tightening torque:
5 N·m (0.5 kgf-m, 3.6 ft-lb)

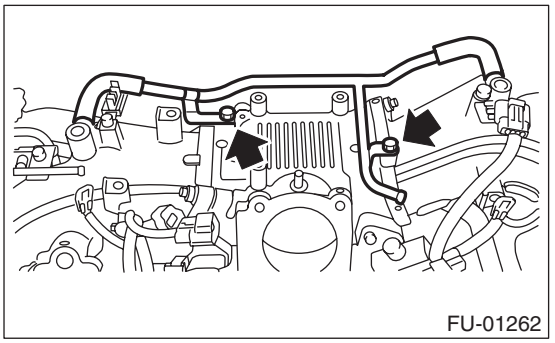

16) Install the EGR valve. <Ref. to FU(H4SO U5)-33, INSTALLATION, EGR Valve.>
17) Install the throttle body to intake manifold. <Ref. to FU(H4SO U5)-12, INSTALLATION, Throttle Body.>
18) Install the ignition coil & ignitor assembly. <Ref. to IG(H4SO)-8, INSTALLATION, Ignition Coil and Ignitor Assembly.>
19) Install the engine ground terminal to intake manifold.

Tightening torque:
19 N·m (1.9 kgf-m, 14 ft-lb)

- LH side

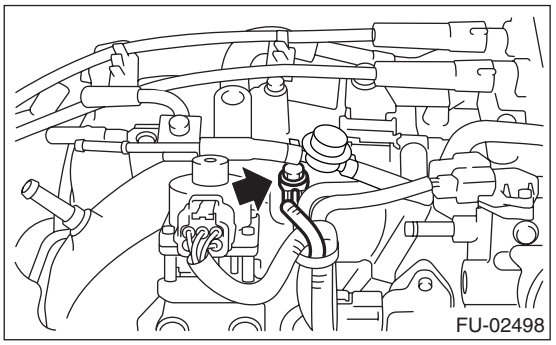

- RH side

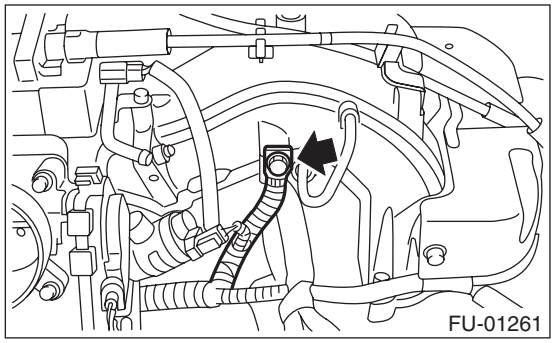

E: INSPECTION

Make sure the fuel pipe and fuel hoses are not damaged and the connections are tightened firmly.

4. Engine Coolant Temperature Sensor

A: REMOVAL

1) Disconnect the ground cable from battery.

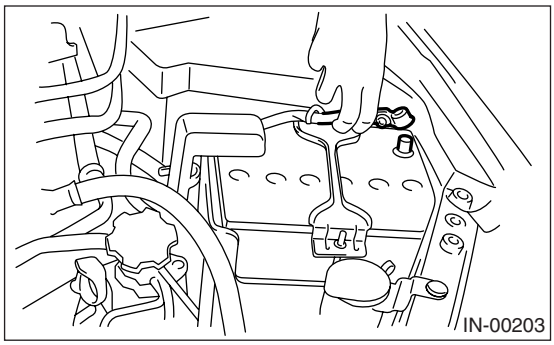

2) Remove the generator. <Ref. to SC(H4SO)-20, REMOVAL, Generator.>

3) Disconnect the connectors from engine coolant temperature sensor.

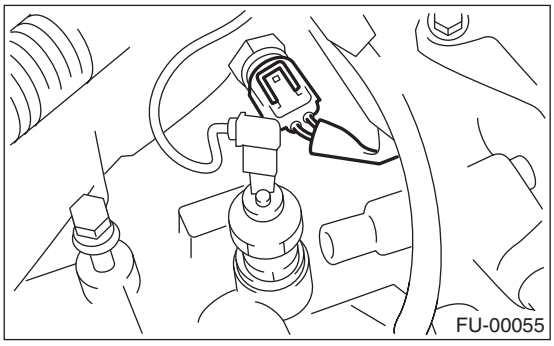

4) Remove the engine coolant temperature sensor.

B: INSTALLATION

Install in the reverse order of removal.

Tightening torque:
18 N·m (1.8 kgf-m, 13.3 ft-lb)

5. Crankshaft Position Sensor

A: REMOVAL

1) Disconnect the ground cable from battery.

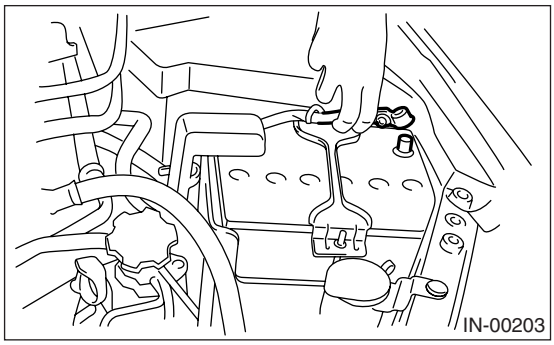

2) Remove the generator. <Ref. to SC(H4SO)-20, REMOVAL, Generator.>
3) Remove the bolt which installs crankshaft position sensor to cylinder block.

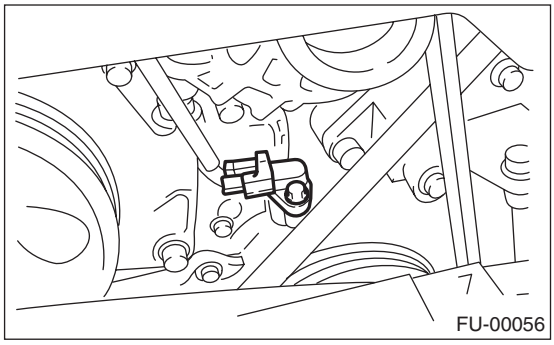

4) Remove the crankshaft position sensor, and disconnect the connector from it.

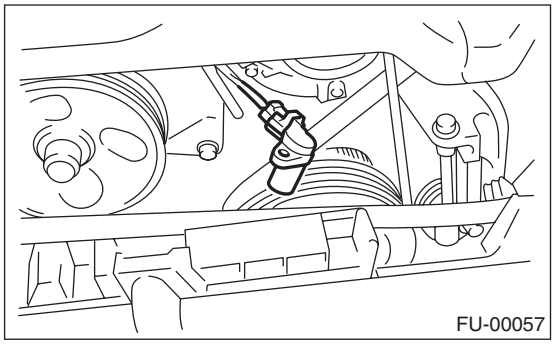

B: INSTALLATION

Install in the reverse order of removal.

Tightening torque:
T: 6.4 N·m (0.65 kgf-m, 4.7 ft-lb)

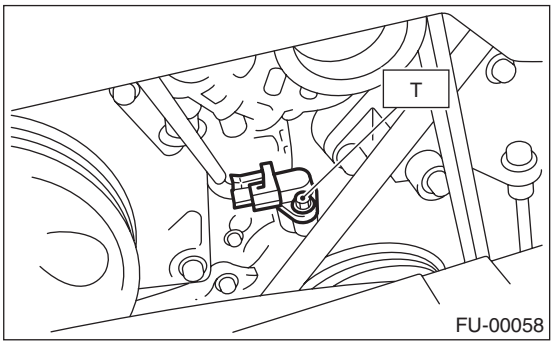

6. Camshaft Position Sensor

A: REMOVAL

1) Disconnect the ground cable from battery.

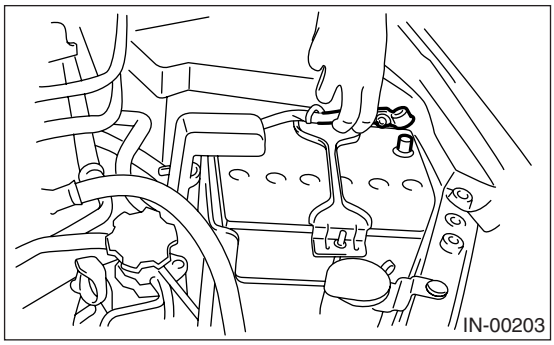

2) Disconnect the connector from camshaft position sensor.

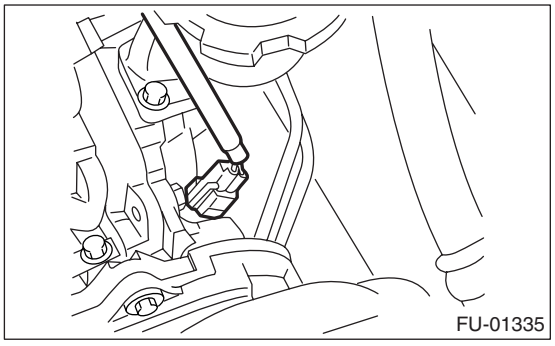

3) Remove the bolt which installs camshaft position sensor to the support.

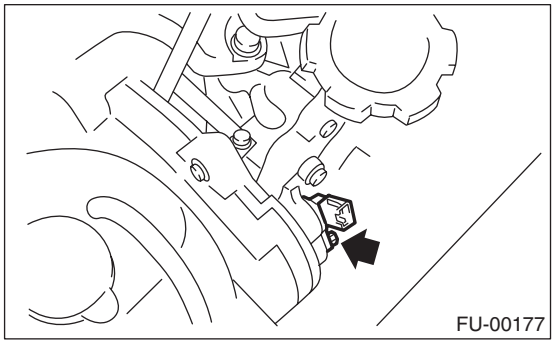

4) Remove the bolt which installs the camshaft position sensor support to camshaft cap LH.

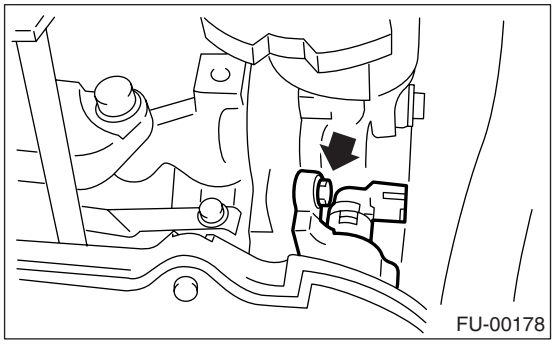

5) Remove the camshaft position sensor and the support as a unit.

6) Remove the camshaft position sensor itself.

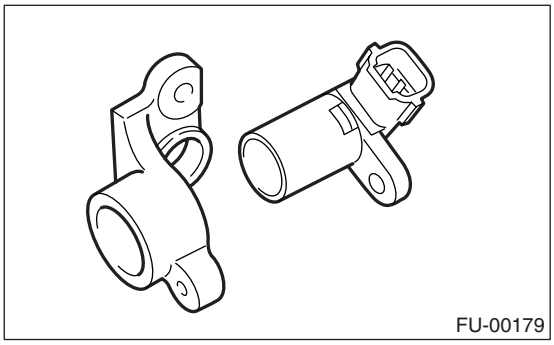

B: INSTALLATION

Install in the reverse order of removal.

Tightening torque:
Camshaft position sensor support
6.4 N·m (0.65 kgf-m, 4.7 ft-lb)
Camshaft position sensor
6.4 N·m (0.65 kgf-m, 4.7 ft-lb)

7. Knock Sensor

A: REMOVAL

1) Disconnect the ground cable from battery.

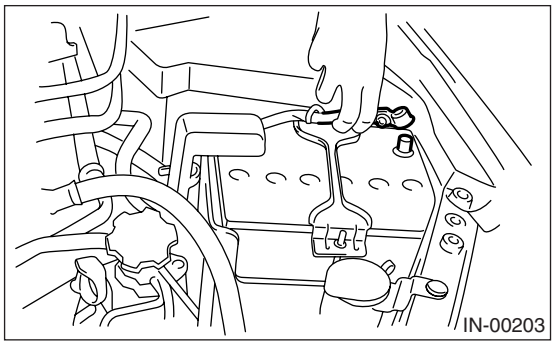

2) Remove the air intake chamber. <Ref. to IN(H4SO)-9, REMOVAL, Air Intake Chamber.>
3) Disconnect the knock sensor connector.

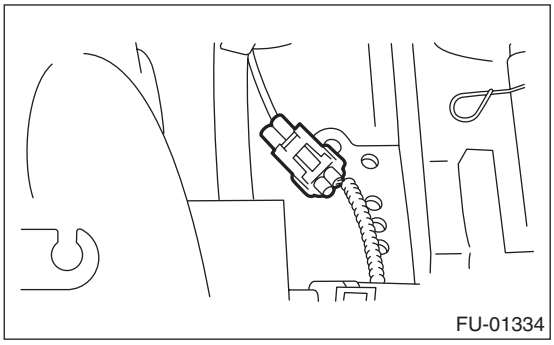

4) Remove the knock sensor from cylinder block.

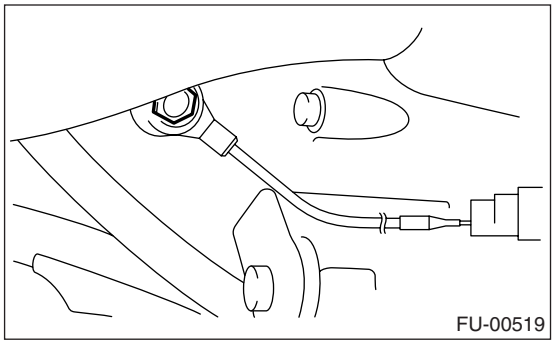

B: INSTALLATION

1) Install the knock sensor to cylinder block.

NOTE:
Extraction area of knock sensor cord must be positioned at a 60° angle relative to the engine rear.

Tightening torque:
24 N·m (2.4 kgf-m, 17.4 ft-lb)

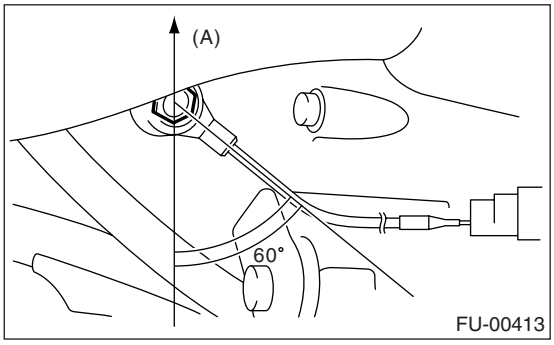

(A) Front side

2) Connect the knock sensor connector.

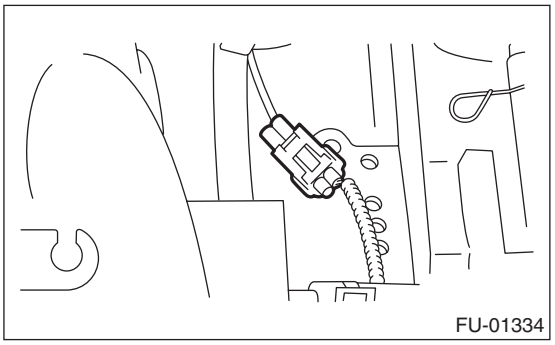

3) Install the air intake chamber. <Ref. to IN(H4SO)-9, INSTALLATION, Air Intake Chamber.>
4) Connect the battery ground cable to battery.

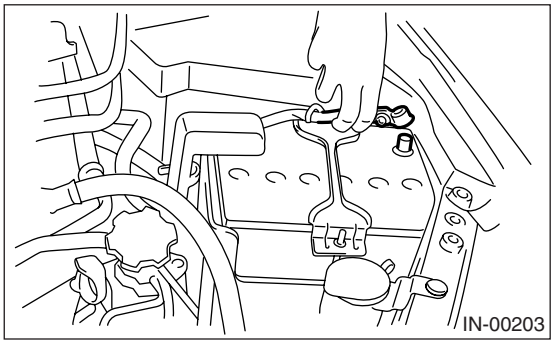

8. Throttle Position Sensor

A: SPECIFICATION

Throttle body is a non-disassembled part, so do not remove the throttle position sensor from throttle body.
Refer to “Throttle Body” for removal and installation procedure. <Ref. to FU(H4SO U5)-12, REMOVAL, Throttle Body.> <Ref. to FU(H4SO U5)-12, INSTALLATION, Throttle Body.>

9. Manifold Absolute Pressure Sensor

A: REMOVAL

1) Disconnect the ground cable from battery.

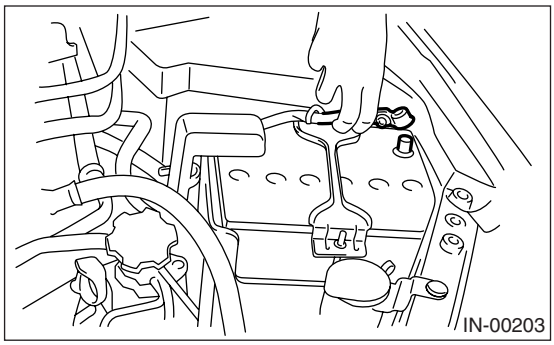

2) Disconnect the connector from manifold absolute pressure sensor.

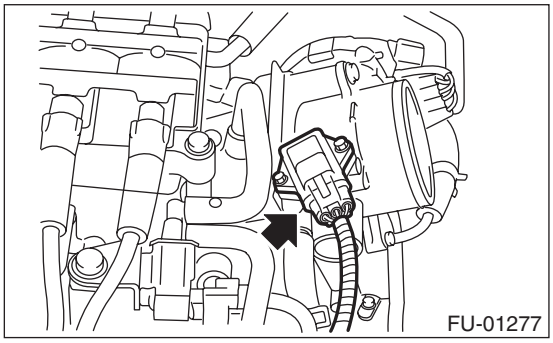

3) Remove the manifold absolute pressure sensor from throttle body.

B: INSTALLATION

Install in the reverse order of removal.

NOTE:
Use new O-rings.

Tightening torque:
1.6 N·m (0.16 kgf-m, 1.2 ft-lb)

10.Mass Air Flow and Intake Air Temperature Sensor

A: REMOVAL

1) Disconnect the ground cable from battery.

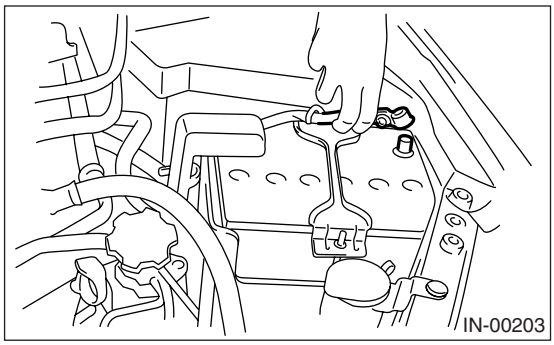

2) Disconnect the connector from mass air flow and intake air temperature sensor.
3) Remove the mass air flow and intake air temperature sensor.

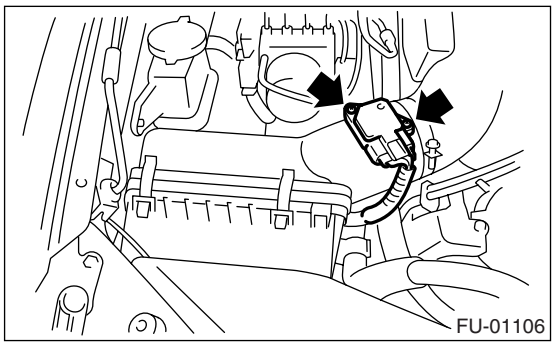

B: INSTALLATION

Install in the reverse order of removal.

Tightening torque:
1 N·m (0.1 kgf-m, 0.7 ft-lb)

11.Tumble Generator Valve Assembly

A: SPECIFICATION

For removal and installation procedures, refer to “Intake Manifold”. <Ref. to FU(H4SO U5)-17, DISASSEMBLY, Intake Manifold.> <Ref. to FU(H4SO U5)-19, ASSEMBLY, Intake Manifold.>

12.Tumble Generator Valve Actuator

A: REMOVAL

1) Release the fuel pressure.
<Ref. to FU(H4SO U5)-48, RELEASING OF FUEL PRESSURE, PROCEDURE, Fuel.>
2) Open the fuel filler flap lid and remove the fuel filler cap.
3) Disconnect the ground cable from battery.

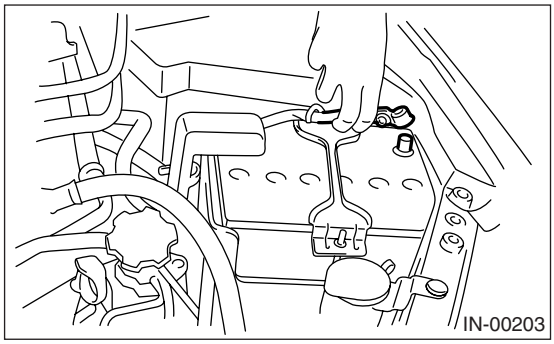

4) Remove the throttle body.
<Ref. to FU(H4SO U5)-12, REMOVAL, Throttle Body.>
5) Disconnect the connector from tumble generator valve actuator.
6) Remove the tumble generator valve actuator.

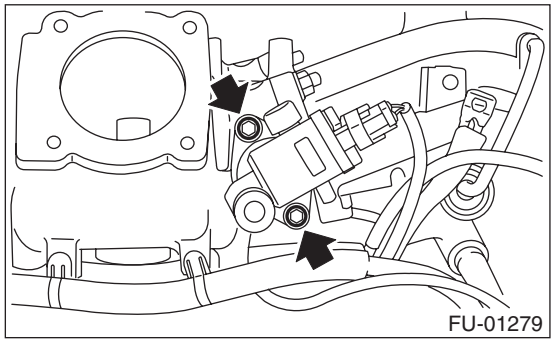

B: INSTALLATION

Install in the reverse order of removal.

Tightening torque:
5.9 N·m (0.6 kgf-m, 4.3 ft-lb)

13. Tumble Generator Valve Position Sensor

A: SPECIFICATION

Do not remove the tumble generator valve position sensor from tumble generator valve assembly, since it cannot be adjusted during installation.

Refer to “Tumble Generator Valve Assembly” for removal and installation procedures. <Ref. to FU(H4SO U5)-17, DISASSEMBLY, Intake Manifold.> <Ref. to FU(H4SO U5)-19, ASSEMBLY, Intake Manifold.>

14.EGR Valve

A: REMOVAL

1) Disconnect the ground cable from battery.

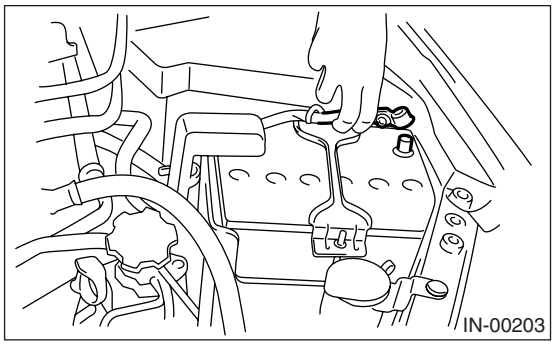

2) Disconnect the connector from EGR valve.

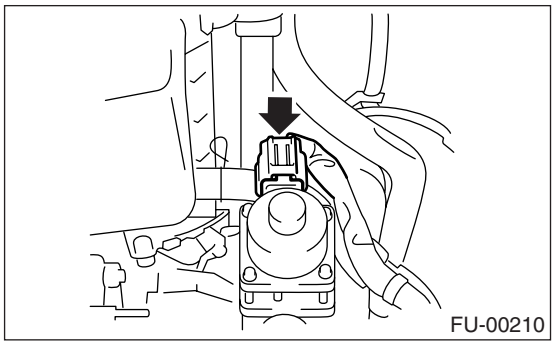

3) Remove the EGR valve from intake manifold.

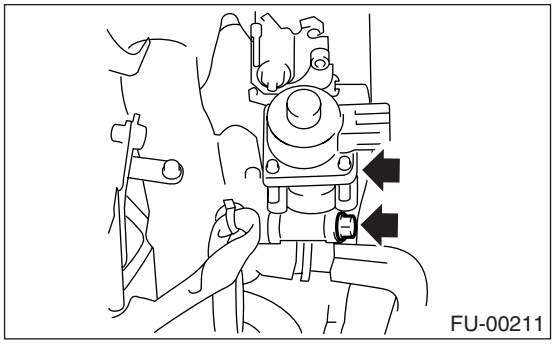

B: INSTALLATION

Install in the reverse order of removal.

NOTE:
Use a new gasket.

Tightening torque:
19 N·m (1.9 kgf-m, 14 ft-lb)

15.Fuel Injector

A: REMOVAL

1. RH SIDE

1) Release the fuel pressure.
<Ref. to FU(H4SO U5)-48, RELEASING OF FUEL PRESSURE, PROCEDURE, Fuel.>
2) Open the fuel filler flap lid, and remove the fuel filler cap.
3) Disconnect the ground cable from battery.

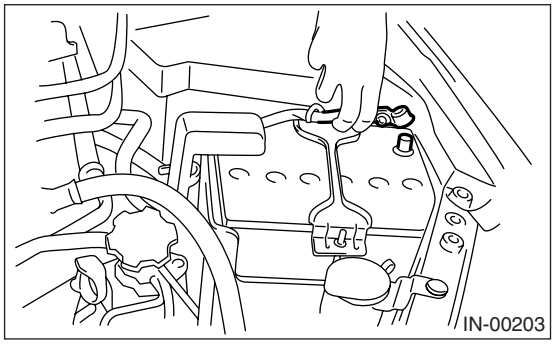

4) Remove the air cleaner case. <Ref. to IN(H4SO)-7, REMOVAL, Air Cleaner Case.>
5) Remove the spark plug cords from spark plugs (#1 and #3 cylinders).
6) Remove the fuel pipe protector RH.

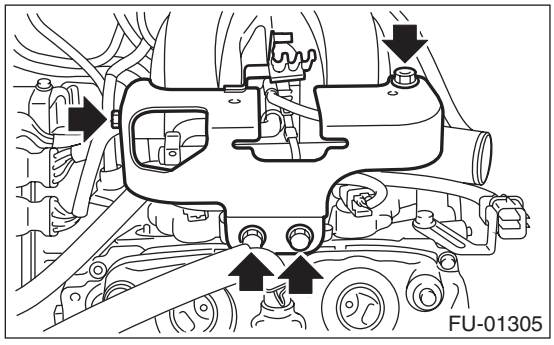

7) Disconnect the connector (A) from fuel injector.
8) Remove the clip (B) which holds engine harness to injector pipe.

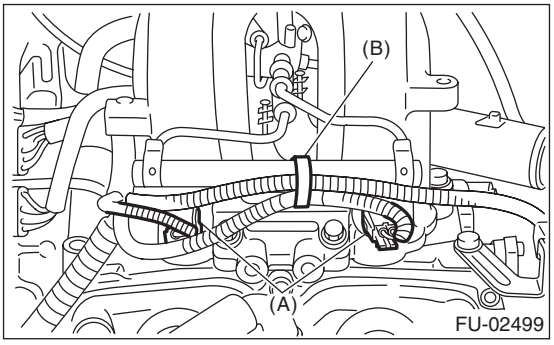

9) Remove the bolts which hold fuel injector pipe onto intake manifold.

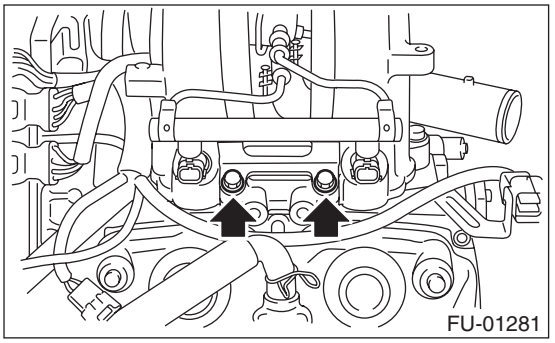

10) Remove the fuel injector while lifting up the fuel injector pipe.

2. LH SIDE

1) Release the fuel pressure.
<Ref. to FU(H4SO U5)-48, RELEASING OF FUEL PRESSURE, PROCEDURE, Fuel.>
2) Open the fuel filler flap lid, and remove the fuel filler cap.
3) Remove the battery.
<Ref. to SC(H4SO)-26, REMOVAL, Battery.>
4) Remove the spark plug cords from spark plugs (#2 and #4 cylinders).
5) Remove the fuel pipe protector LH.

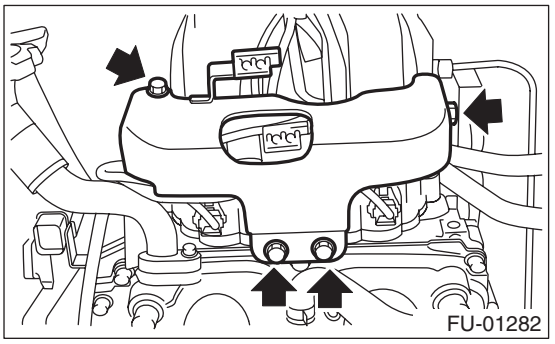

6) Disconnect the connector (A) from fuel injector.
7) Remove the clip (B) which holds engine harness to injector pipe.

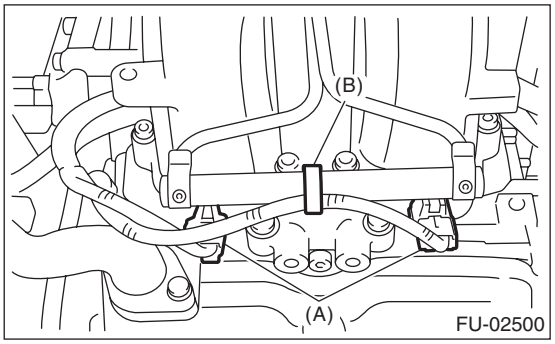

8) Remove the bolts which hold fuel injector pipe onto intake manifold.

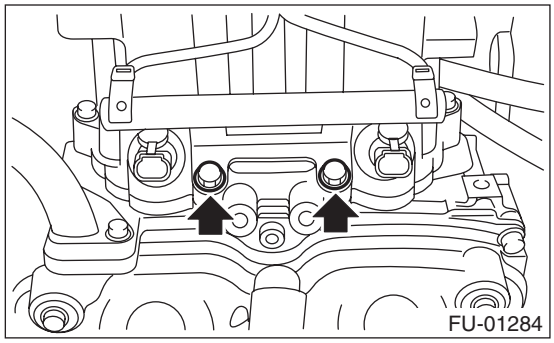

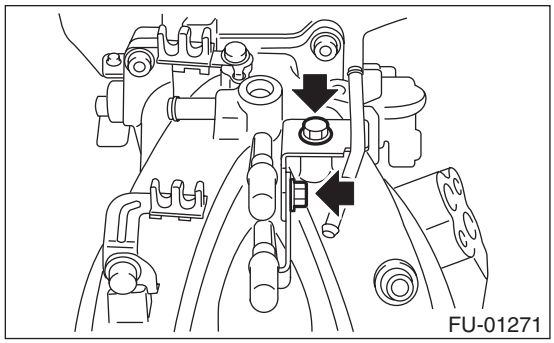

9) Remove the fuel injector while lifting up the fuel injector pipe.

B: INSTALLATION

1. RH SIDE

Install in the reverse order of removal.

NOTE:
Use new O-rings.

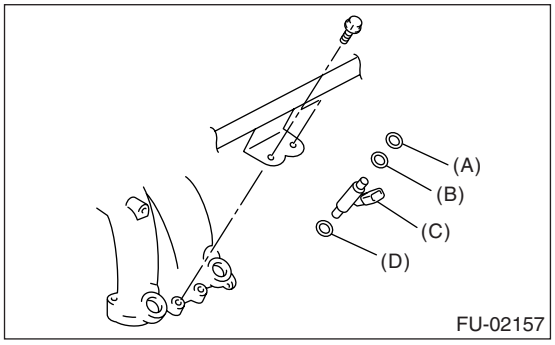

(A) O-ring
(B) O-ring
(C) Fuel injector
(D) O-ring

Tightening torque:
19 N·m (1.9 kgf-m, 14 ft-lb)

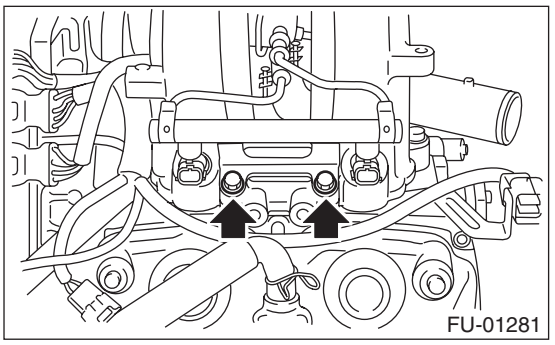

Tightening torque:
19 N·m (1.9 kgf-m, 14 ft-lb)

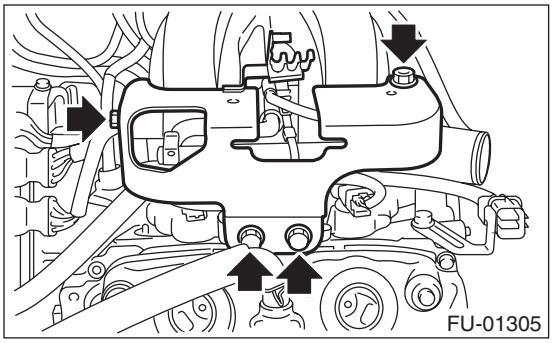

2. LH SIDE

Install in the reverse order of removal.

NOTE:
Use new O-rings.

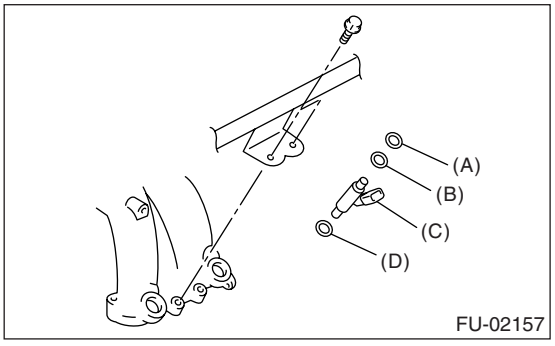

(A) O-ring
(B) O-ring
(C) Fuel injector
(D) O-ring

Tightening torque:
5 N·m (0.5 kgf-m, 3.6 ft-lb)

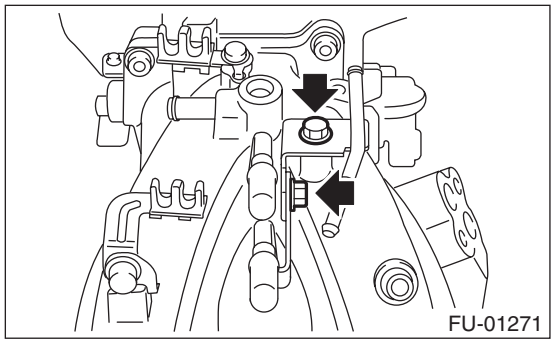

Tightening torque:
19 N·m (1.9 kgf-m, 14 ft-lb)

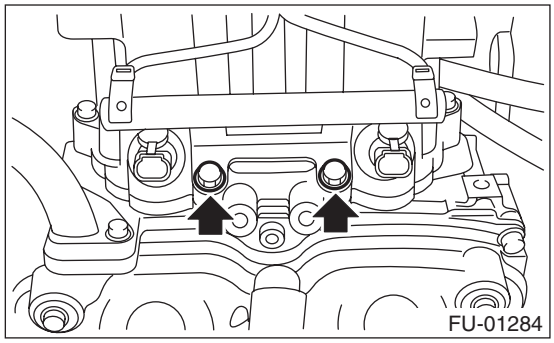

Tightening torque:
19 N·m (1.9 kgf-m, 14 ft-lb)

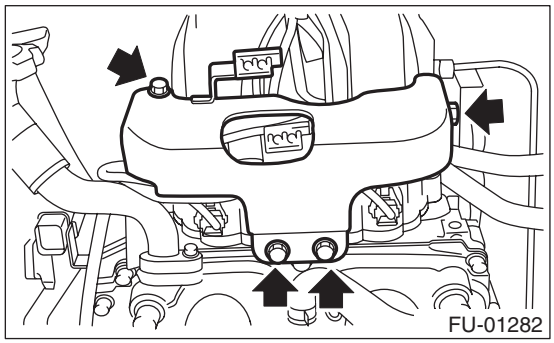

16.Front Oxygen (A/F) Sensor

A: REMOVAL

1. LH side

1) Disconnect the ground cable from battery.

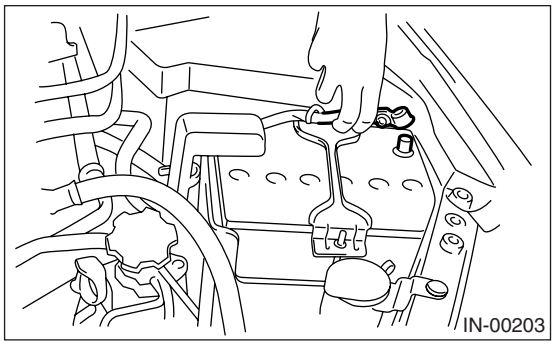

2) Remove the connector of front oxygen (A/F) sensor from bracket, and disconnect the connector.

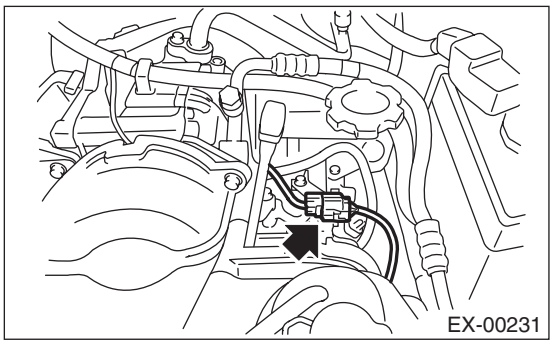

3) Lift-up the vehicle.
4) Remove the under cover.
5) Remove the front oxygen (A/F) sensor harness from bracket.

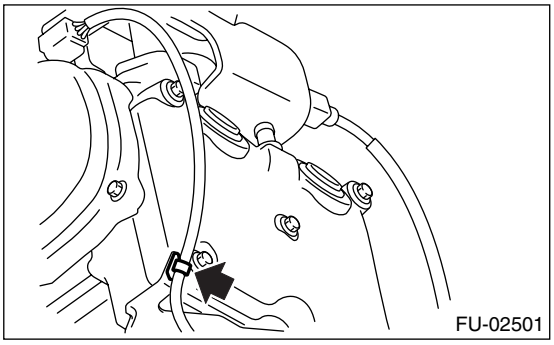

6) Apply spray-type lubricant to the threaded portion of front oxygen (A/F) sensor, and leave it for one minute or more.
7) Remove the front oxygen (A/F) sensor.

CAUTION:
When removing the front oxygen (A/F) sensor, wait until exhaust pipe cools, otherwise it will damage the exhaust pipe.

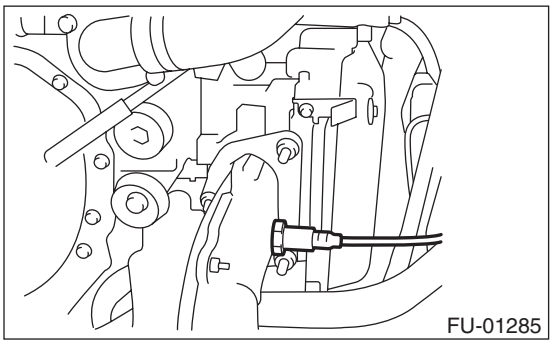

2. RH side

1) Disconnect the ground cable from battery.

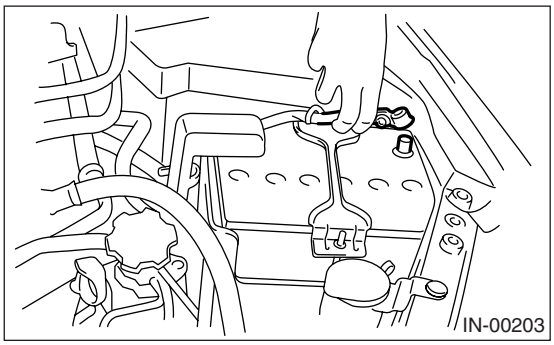

2) Remove the connector of front oxygen (A/F) sensor from bracket, and disconnect the connector.

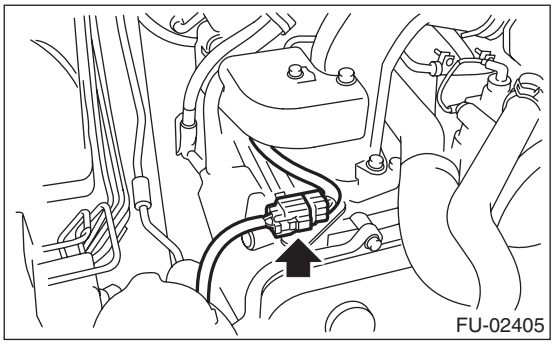

3) Lift-up the vehicle.
4) Remove the under cover.

5) Remove the front oxygen (A/F) sensor harness from bracket.

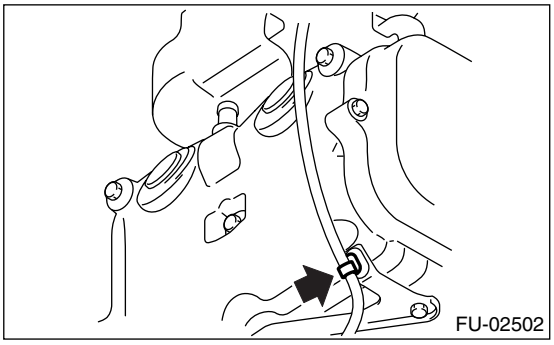

6) Apply spray-type lubricant to the threaded portion of front oxygen (A/F) sensor, and leave it for one minute or more.
7) Remove the front oxygen (A/F) sensor.

CAUTION:
When removing the front oxygen (A/F) sensor, wait until exhaust pipe cools, otherwise it will damage the exhaust pipe.

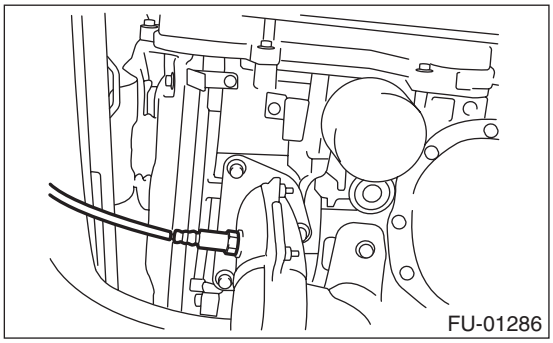

B: INSTALLATION

1. LH side

1) Before installing front oxygen (A/F) sensor, apply anti-seize compound only to the threaded portion of front oxygen (A/F) sensor to make the next removal easier.

Anti-seize compound:
SS-30 JET LUBE

CAUTION:
Never apply anti-seize compound to the protector of front oxygen (A/F) sensor.

2) Install the front oxygen (A/F) sensor.

Tightening torque:
21 N·m (2.1 kgf-m, 15.2 ft-lb)

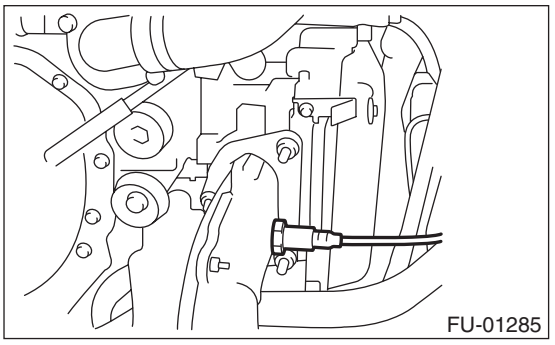

3) Install the front oxygen (A/F) sensor harness to bracket.

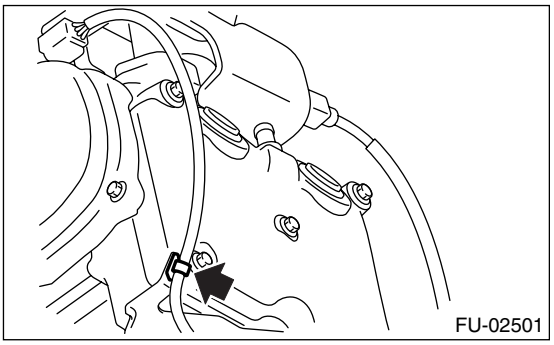

4) Install the under cover.
5) Lower the vehicle.
6) Connect the connector of front oxygen (A/F) sensor, and connect the connector to bracket.

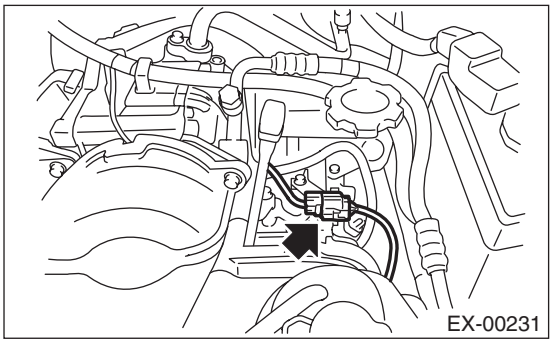

7) Connect the battery ground cable to battery.

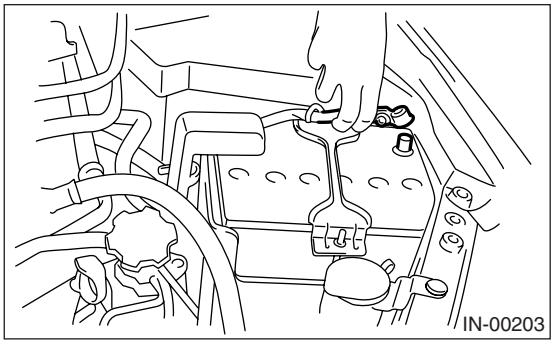

2. RH side

1) Before installing front oxygen (A/F) sensor, apply anti-seize compound only to the threaded portion of front oxygen (A/F) sensor to make the next removal easier.

Anti-seize compound:
SS-30 JET LUBE

CAUTION:
Never apply anti-seize compound to the protector of front oxygen (A/F) sensor.

2) Install the front oxygen (A/F) sensor.

Tightening torque:
21 N·m (2.1 kgf-m, 15.2 ft-lb)

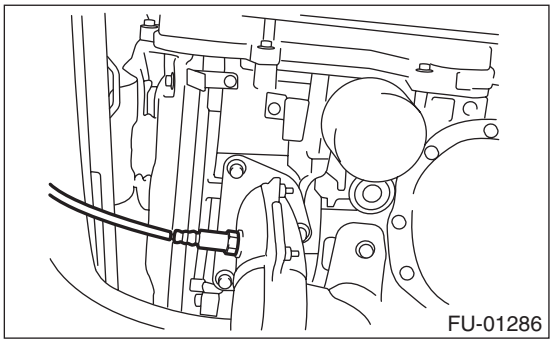
FU-01286

3) Install the front oxygen (A/F) sensor harness to bracket.

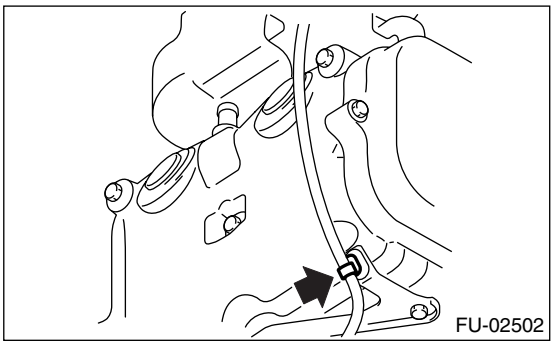
FU-02502

4) Install the under cover.
5) Lower the vehicle.
6) Connect the connector of front oxygen (A/F) sensor, and install the connector to bracket.

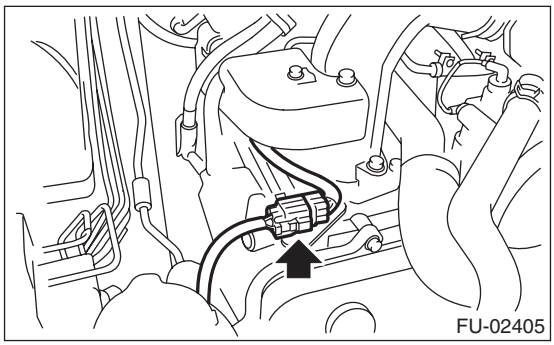
FU-02405

7) Connect the battery ground cable to battery.

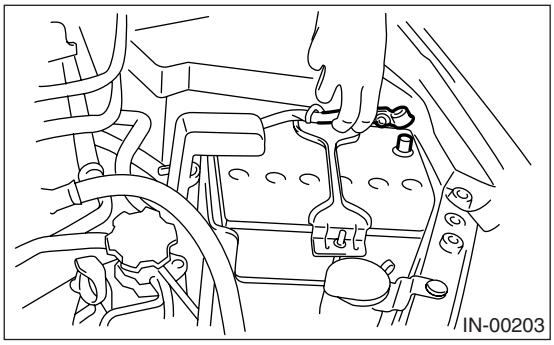
IN-00203

17.Front Oxygen Sensor

A: REMOVAL

1. LH side

1) Disconnect the ground cable from battery.

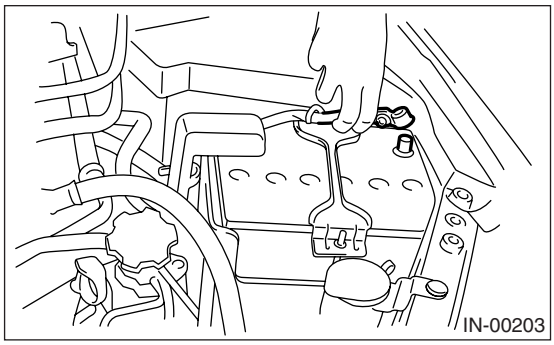

2) Remove the connector of front oxygen sensor.

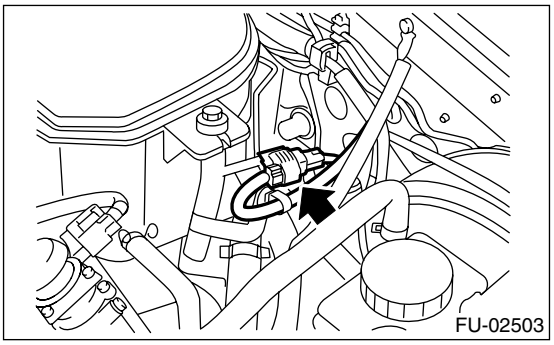

3) Lift-up the vehicle.
4) Remove the clip holding front oxygen sensor harness.

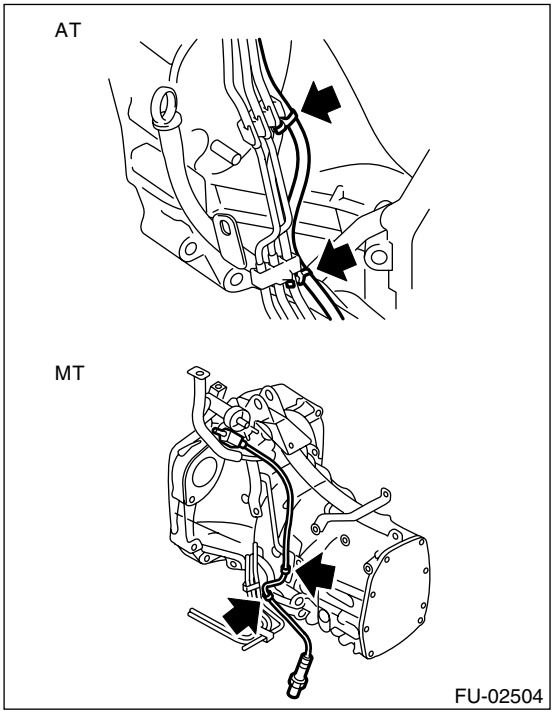

5) Apply spray-type lubricant to the threaded portion of front oxygen sensor, and leave it for one minute or more.
6) Remove the front oxygen sensor.

CAUTION:
When removing the front oxygen sensor, wait until exhaust pipe cools, otherwise it will damage the exhaust pipe.

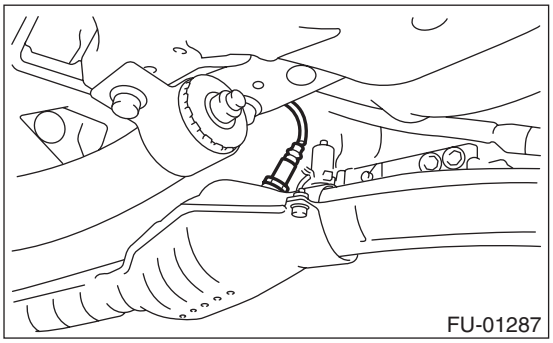

2. RH side

1) Disconnect the ground cable from battery.

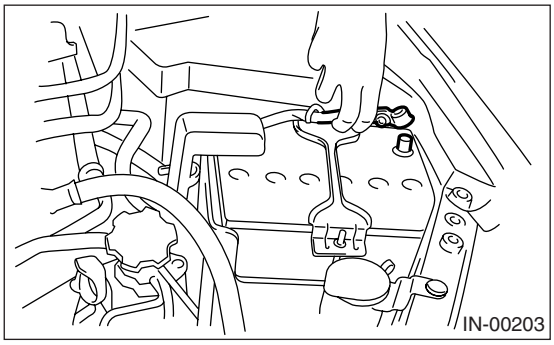

2) Remove the connector of front oxygen sensor.

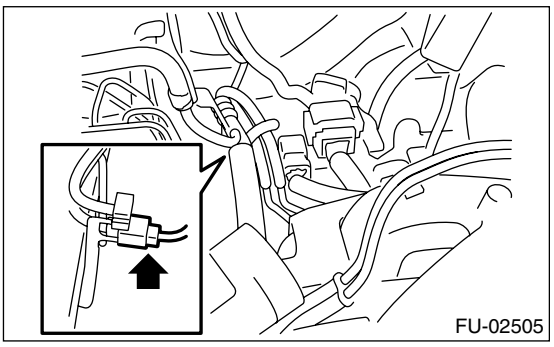

3) Lift-up the vehicle.

4) Remove the front oxygen sensor harness from bracket.

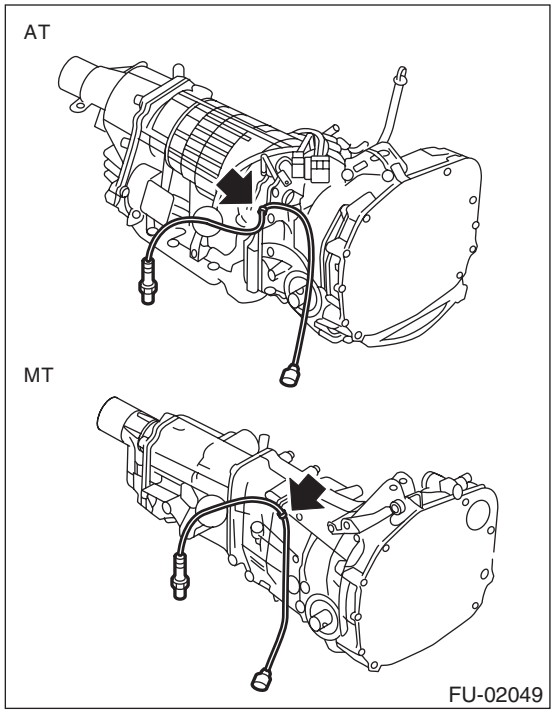

5) Apply spray-type lubricant to the threaded portion of front oxygen sensor, and leave it for one minute or more.
6) Remove the front oxygen sensor.

CAUTION:
When removing the front oxygen sensor, wait until exhaust pipe cools, otherwise it will damage the exhaust pipe.

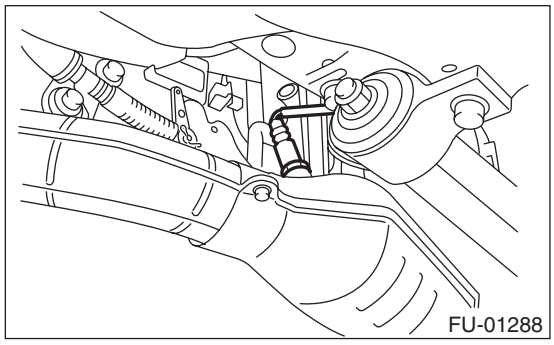

B: INSTALLATION

1. LH side

1) Before installing front oxygen sensor, apply anti-seize compound only to the threaded portion of front oxygen sensor to make the next removal easier.

Anti-seize compound:
SS-30 JET LUBE

CAUTION:
Never apply anti-seize compound to the protector of front oxygen sensor.

2) Install the front oxygen sensor.

Tightening torque:
21 N·m (2.1 kgf-m, 15.2 ft-lb)

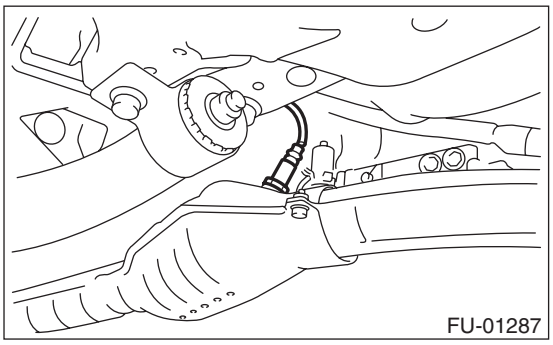

3) Hold the front oxygen sensor harness with clip.

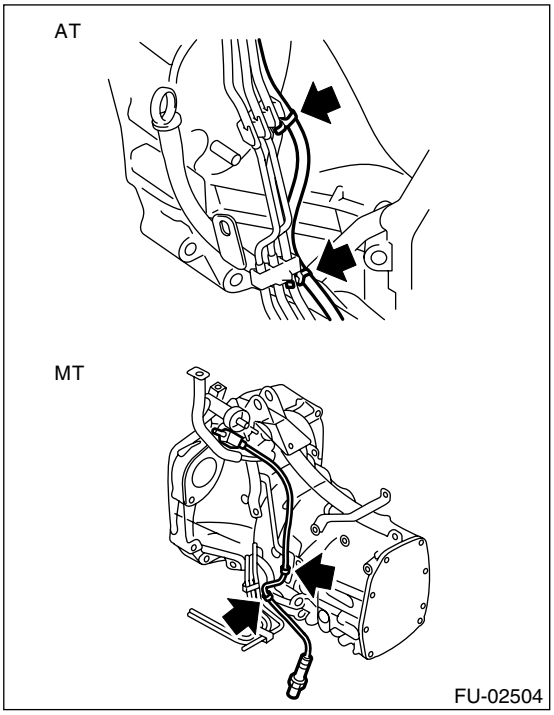

4) Lower the vehicle.
5) Connect the connector of front oxygen sensor.

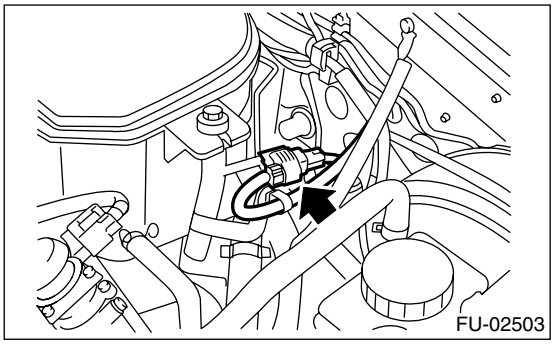

6) Connect the battery ground cable to battery.

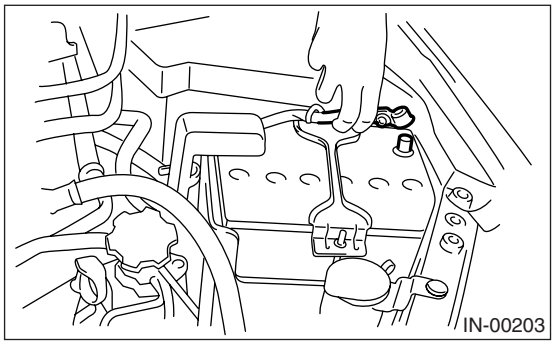

2. RH side

1) Before installing front oxygen sensor, apply anti-seize compound only to the threaded portion of front oxygen sensor to make the next removal easier.

Anti-seize compound:
SS-30 JET LUBE

CAUTION:
Never apply anti-seize compound to the protector of front oxygen sensor.

2) Install the front oxygen sensor.

Tightening torque:
21 N·m (2.1 kgf-m, 15.2 ft-lb)

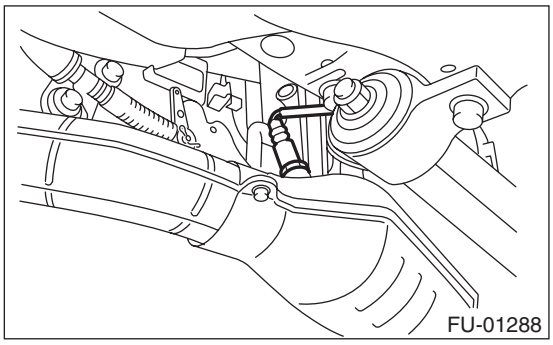

3) Install the front oxygen sensor harness to bracket.

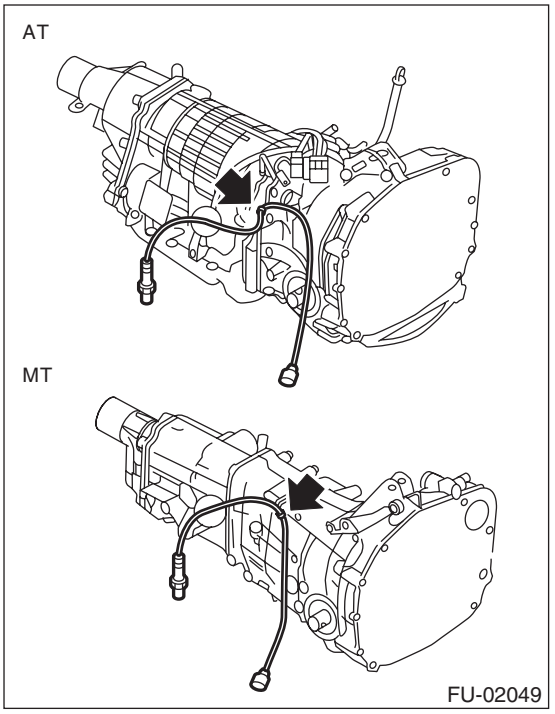

4) Lower the vehicle.
5) Connect the connector of front oxygen sensor.

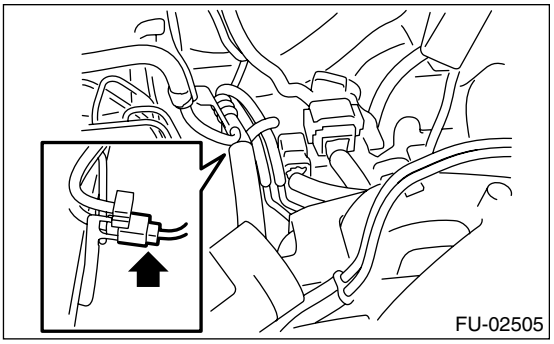

6) Connect the battery ground cable to battery.

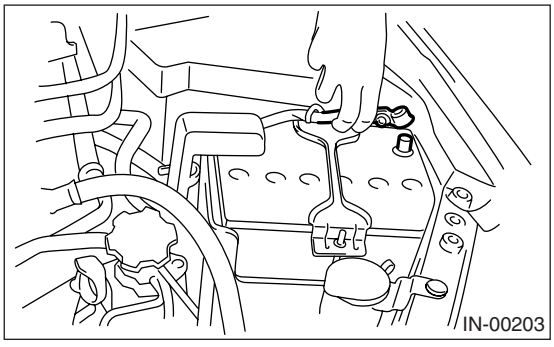

18.Rear Oxygen Sensor

A: REMOVAL

1) Disconnect the ground cable from battery.

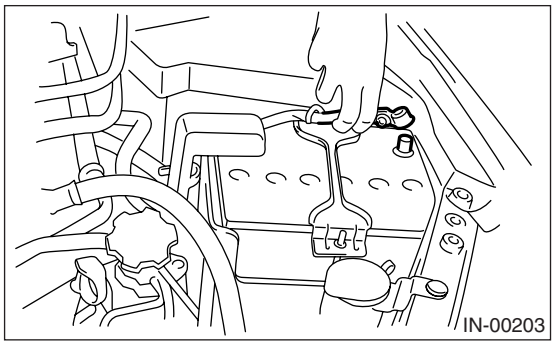

2) Lift-up the vehicle.
3) Disconnect the connector from rear oxygen sensor.

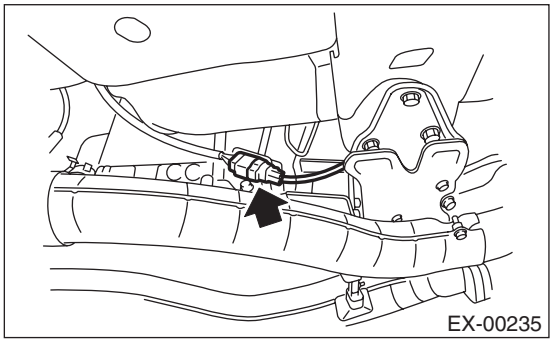

4) Apply spray-type lubricant to the threaded portion of rear oxygen sensor, and leave it for one minute or more.
5) Remove the rear oxygen sensor.

CAUTION:
When removing the rear oxygen sensor, wait until exhaust pipe cools, otherwise it will damage the exhaust pipe.

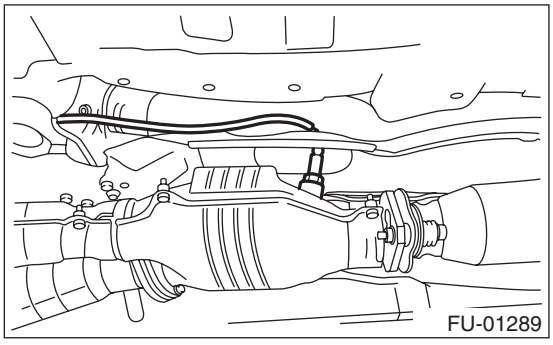

B: INSTALLATION

1) Before installing rear oxygen sensor, apply anti-seize compound only to the threaded portion of rear oxygen sensor to make the next removal easier.

Anti-seize compound:
SS-30 JET LUBE

CAUTION:
Never apply anti-seize compound to the protector of rear oxygen sensor.

2) Install the rear oxygen sensor.

Tightening torque:
21 N·m (2.1 kgf-m, 15.2 ft-lb)

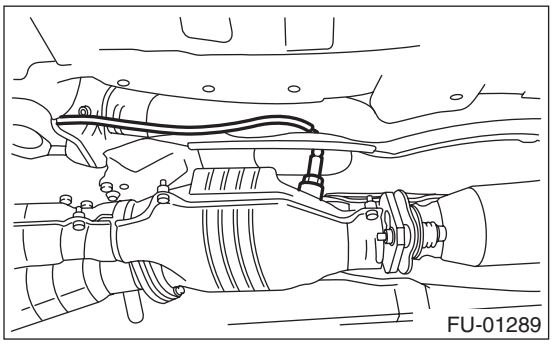

3) Connect the connector to rear oxygen sensor.

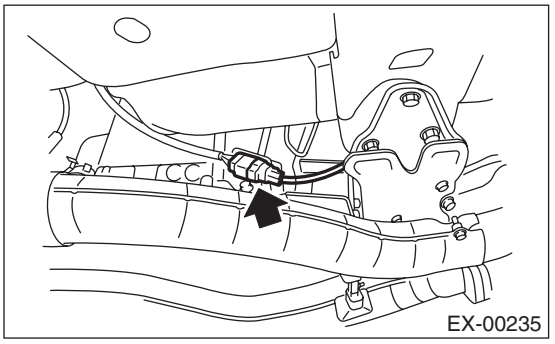

4) Lower the vehicle.
5) Connect the battery ground cable to battery.

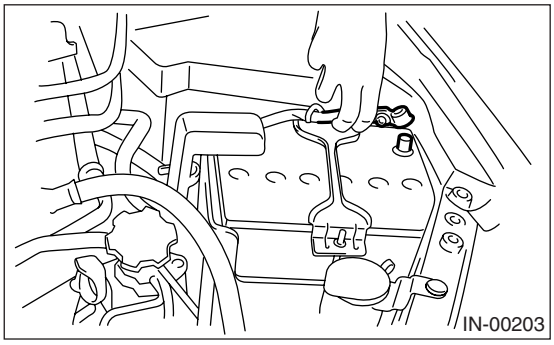

19.Engine Control Module (ECM)

A: REMOVAL

1) Disconnect the ground cable from battery.

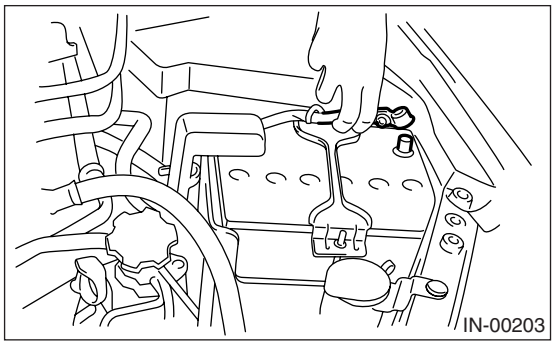

2) Remove the lower inner trim of passenger's side. <Ref. to EI-60, REMOVAL, Lower Inner Trim.>
3) Detach the floor mat of front passenger seat.
4) Remove the protect cover.

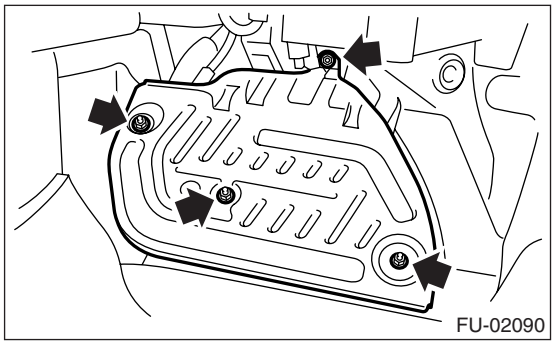

5) Remove the bolt and nut which hold the ECM to bracket.
6) Remove the clip (A) from bracket.

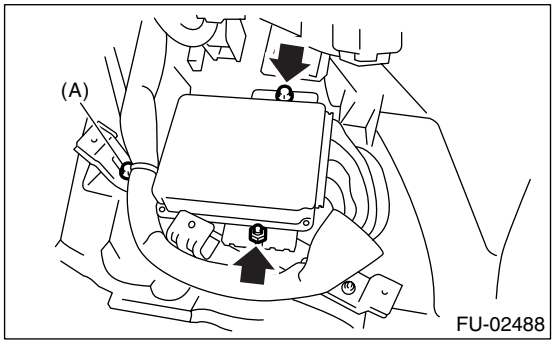

7) Disconnect the ECM connectors and take out the ECM.

B: INSTALLATION

Install in the reverse order of removal.

Tightening torque:
5 N·m (0.5 kgf-m, 3.6 ft-lb)

CAUTION:
• When replacing the ECM, be careful not to use the wrong spec. ECM to avoid any damage to fuel injection system.
• When replacing the ECM, be careful not to damage the harnesses and connectors.

20.Main Relay

A: REMOVAL

1) Disconnect the ground cable from battery.

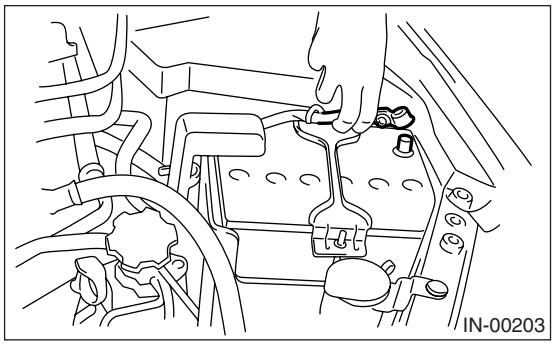

2) Remove the glove box. <Ref. to EI-51, REMOVAL, Glove Box.>
3) Remove the harness cover (A).

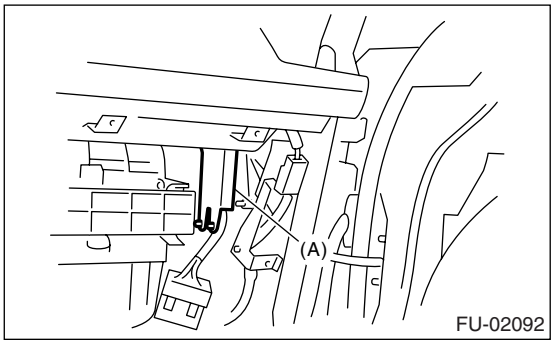

4) Disconnect the connector from main relay.

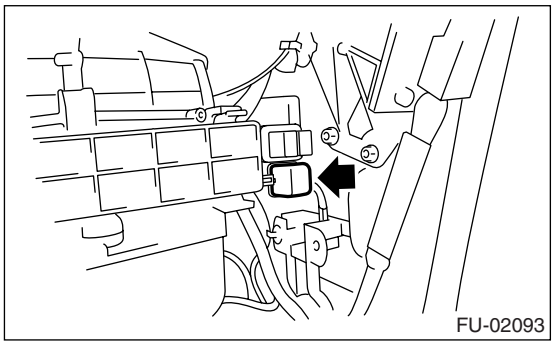

B: INSTALLATION

Install in the reverse order of removal.

21.Fuel Pump Relay

A: REMOVAL

1) Disconnect the ground cable from battery.

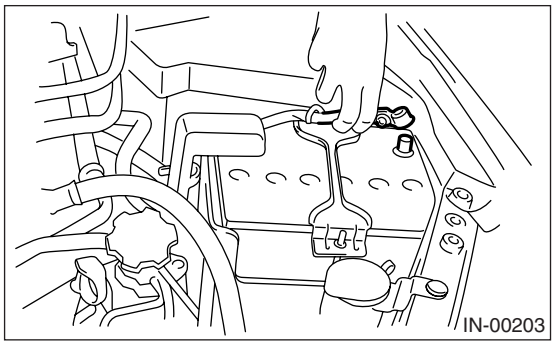

2) Remove the glove box. <Ref. to EI-51, REMOVAL, Glove Box.>
3) Remove the harness cover (A).

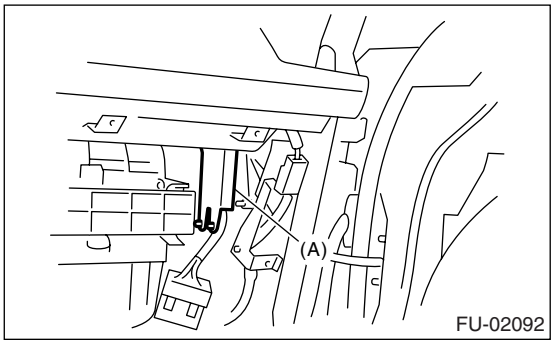

4) Disconnect the connector from fuel pump relay.

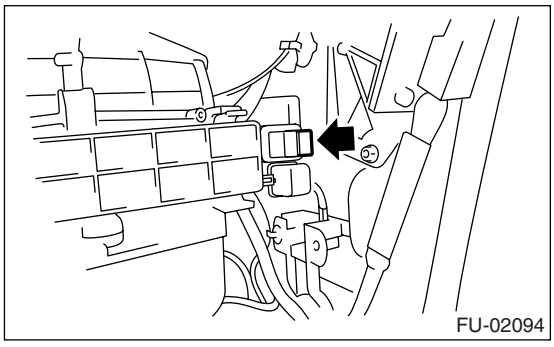

B: INSTALLATION

Install in the reverse order of removal.

22. Electronic Throttle Control Relay

A: REMOVAL

1) Disconnect the ground cable from battery.

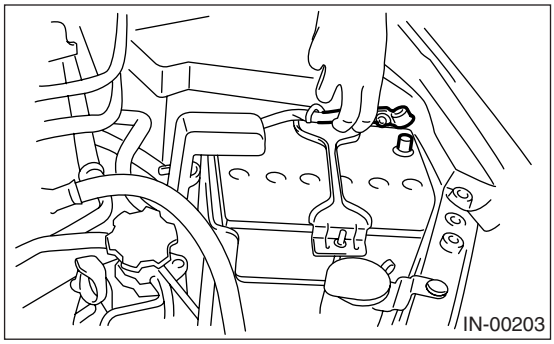

2) Remove the glove box. <Ref. to EI-51, REMOVAL, Glove Box.>

3) Remove the harness cover (A).

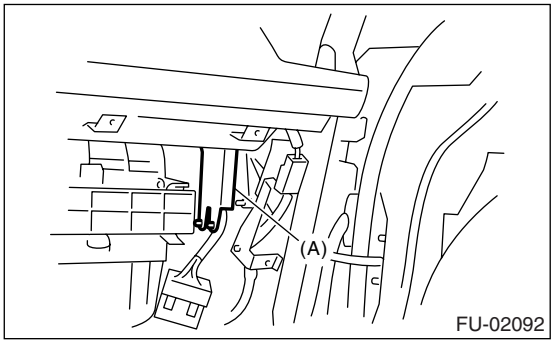

4) Disconnect the connector from electric throttle control relay.

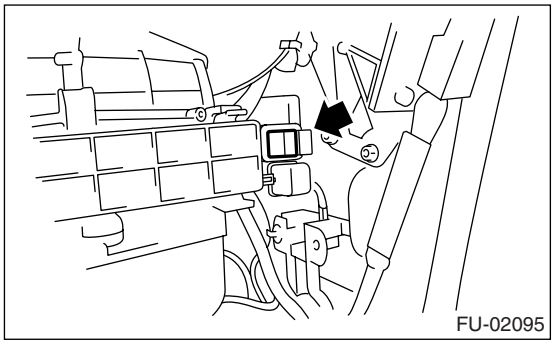

B: INSTALLATION

Install in the reverse order of removal.

23.Fuel

A: PROCEDURE

1. RELEASING OF FUEL PRESSURE

WARNING:
- **Place "NO FIRE" signs near the working area.**
- **Be careful not to spill fuel on the floor.**

1) Remove the fuse of fuel pump from main fuse box.

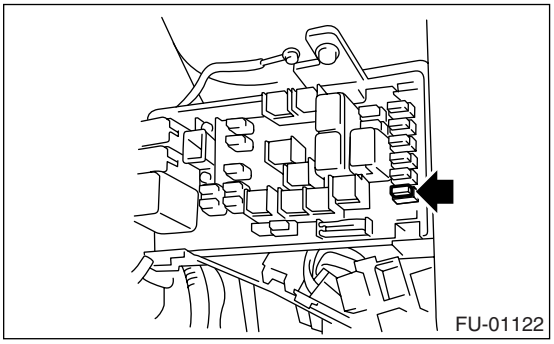

2) Start the engine and run it until it stalls.
3) After the engine stalls, crank it for five more seconds.
4) Turn the ignition switch to OFF.

2. DRAINING FUEL

WARNING:
- **Place "NO FIRE" signs near the working area.**
- **Be careful not to spill fuel on the floor.**

1) Set the vehicle on a lift.
2) Disconnect the ground cable from battery.

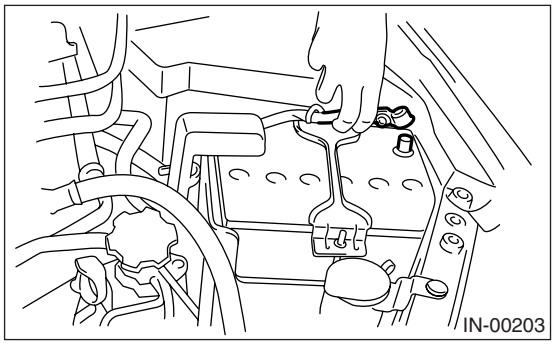

3) Open the fuel filler flap lid, and remove the fuel filler cap.
4) Lift-up the vehicle.
5) Remove the fuel tank protector.
6) Set a container under the vehicle and remove the drain plug from fuel tank to drain fuel from fuel tank.

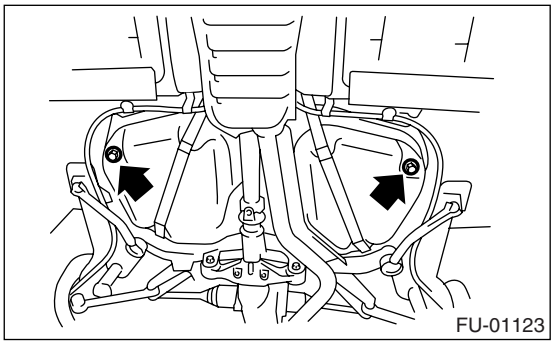

7) Tighten the fuel drain plug.

NOTE:
Use a new gasket.

Tightening torque:
26 N·m (2.65 kgf-m, 19.2 ft-lb)

8) Install the fuel tank protector.

NOTE:
Use a new nut.

Tightening torque:
Nut
9 N·m (0.9 kgf-m, 6.6 ft-lb)
Bolt
17.5 N·m (1.78 kgf-m, 12.9 ft-lb)

24.Fuel Tank

A: REMOVAL

WARNING:
- **Place "NO FIRE" signs near the working area.**
- **Be careful not to spill fuel on the floor.**

1) Set the vehicle on a lift.
2) Release the fuel pressure.
<Ref. to FU(H4SO U5)-48, RELEASING OF FUEL PRESSURE, PROCEDURE, Fuel.>
3) Drain fuel from the fuel tank.
<Ref. to FU(H4SO U5)-48, DRAINING FUEL, PROCEDURE, Fuel.>
4) Remove the rear seat.
5) Remove the service hole cover from fuel pump.

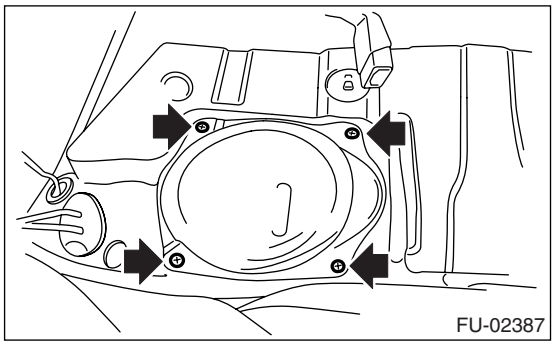
FU-02387

6) Disconnect the connector from fuel pump.

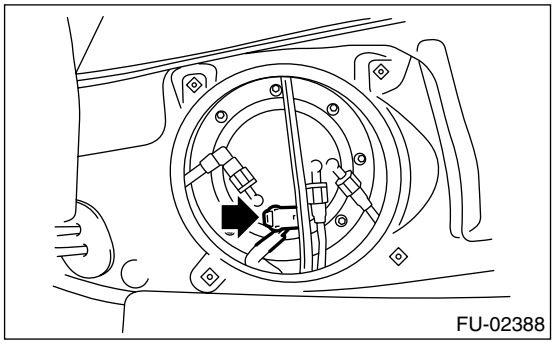
FU-02388

7) Remove the connector (A) and clips (B).

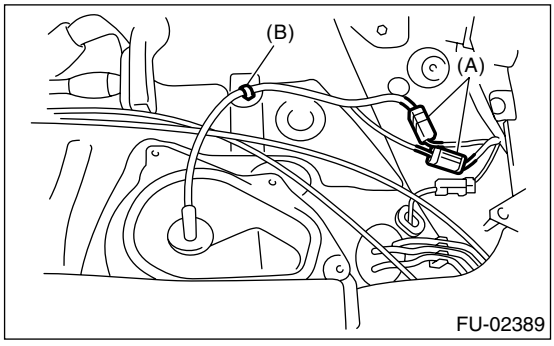

FU-02389

8) Remove the service hole cover from fuel sub level sensor.
(1) Remove the bolts (A).
(2) Push the grommet (B) down under the body and remove service hole cover.

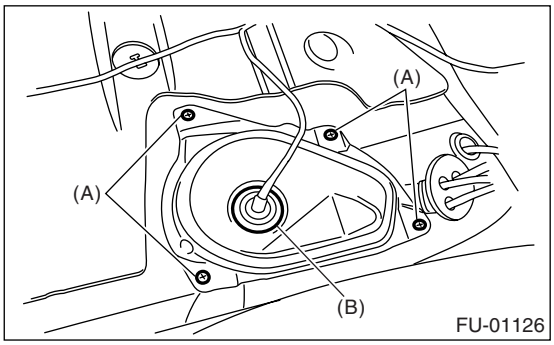

FU-01126

9) Disconnect the connector (A) from fuel sub level sensor.
10) Disconnect the quick connector from the fuel delivery (B) and return hose (C). <Ref. to FU(H4SO U5)-64, REMOVAL, Fuel Delivery, Return and Evaporation Lines.>

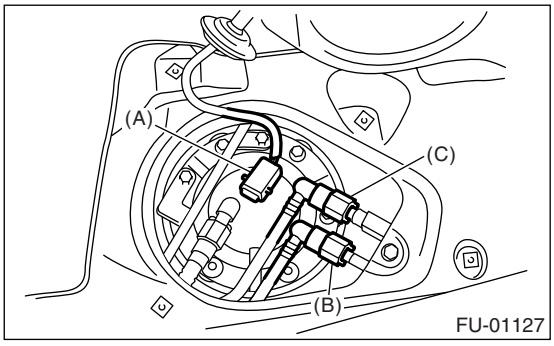

FU-01127

11) Remove trunk room trim. (Sedan model)
<Ref. to EI-70, REMOVAL, Trunk Room Trim.>
12) Remove rear quarter trim. (Wagon model)
<Ref. to EI-62, WAGON MODEL, REMOVAL, Rear Quarter Trim.>
13) Remove pipe protector.

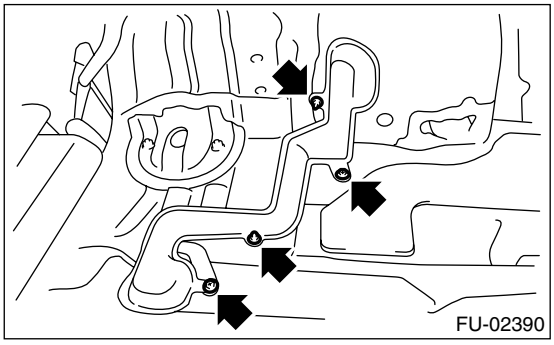
FU-02390

14) Remove the grommet, and then disconnect the quick connector of evaporation pipes. <Ref. to FU(H4SO U5)-64, REMOVAL, Fuel Delivery, Return and Evaporation Lines.>

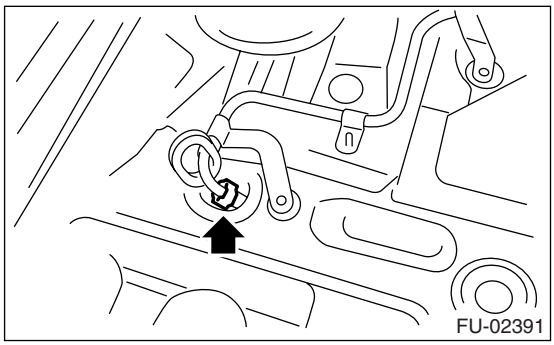

15) Remove the rear wheels.
16) Remove the bolts which secure the rear brake hose installation bracket.

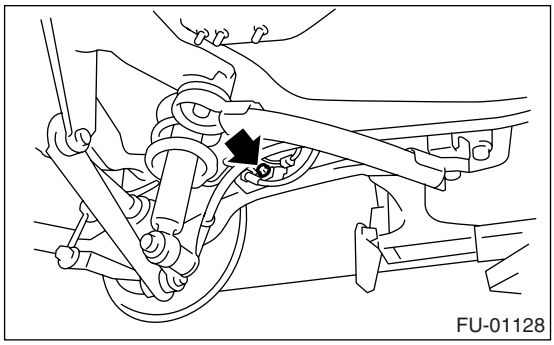

17) Remove the rear brake caliper and tie it to the vehicle body side.

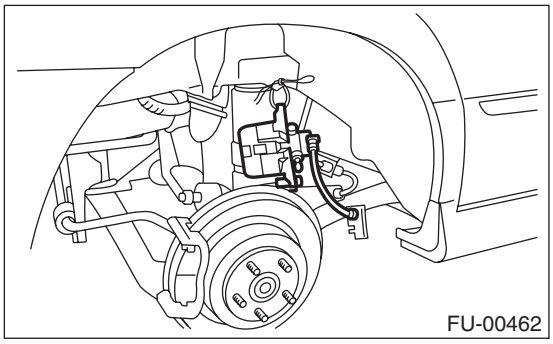

18) Remove the parking brake cable from parking brake assembly. <Ref. to PB-6, REMOVAL, Parking Brake Assembly (Rear Disc Brake).>
19) Lift-up the vehicle.
20) Remove the rear exhaust pipe.
<Ref. to EX(H4SO U5)-9, REMOVAL, Rear Exhaust Pipe.>
21) Remove the propeller shaft. <Ref. to DS-10, REMOVAL, Propeller Shaft.>
22) Remove the heat shield cover.

23) Disconnect the connector from rear ABS wheel speed sensor.

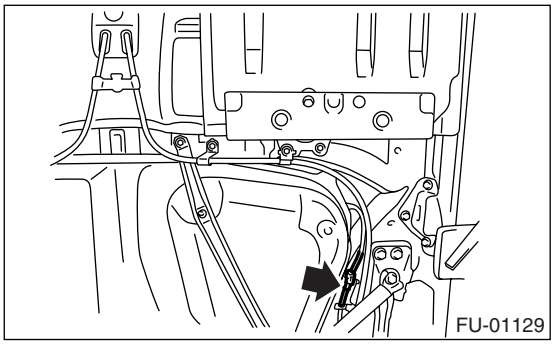

24) Remove the bolts which install the parking brake cable clamp.

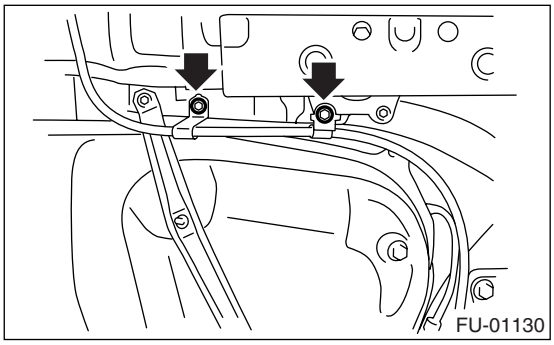

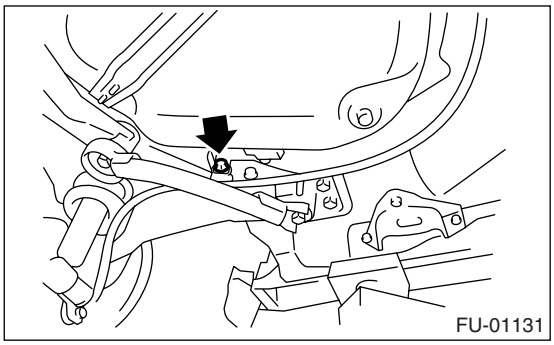

25) Remove the rear suspension assembly.

CAUTION:
A helper is required to perform this work.

(1) Support the rear differential with transmission jack.
(2) Remove the bolt which installs the rear shock absorber to rear suspension arm.

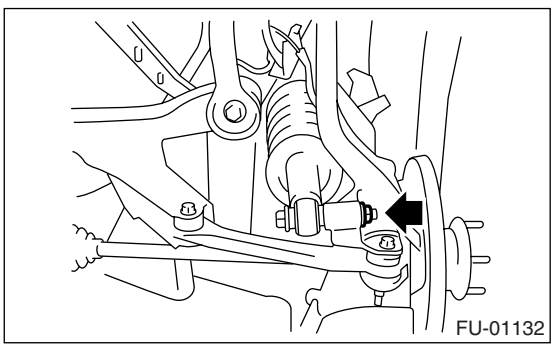

(3) Remove the bolts which secure the rear suspension assembly to body.

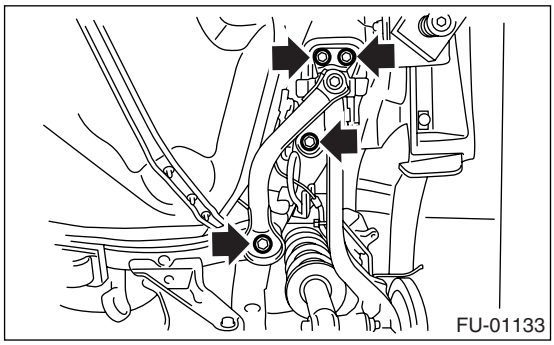

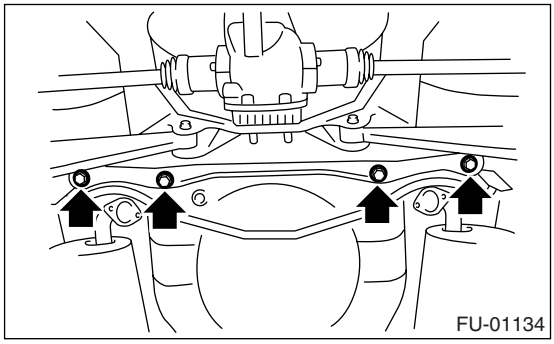

(4) Remove the rear suspension assembly.

26) Disconnect the connector.

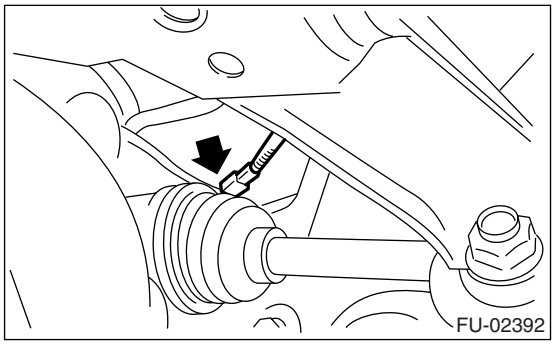

27) Disconnect the evaporation hoses.

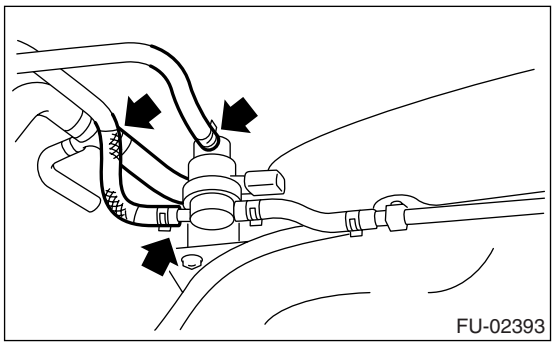

28) Disconnect the fuel filler hoses (A) and evaporation hoses (B).

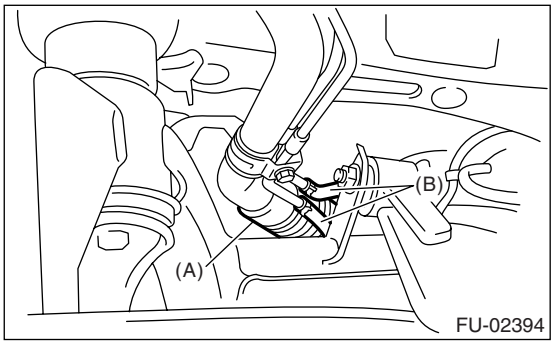

29) Support the fuel tank with transmission jack, remove the bolts from fuel tank bands, and dismount the fuel tank from vehicle.

WARNING:
A helper is required to perform this work.

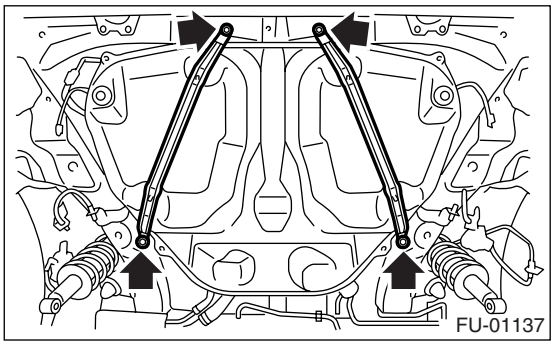

B: INSTALLATION

1) Support the fuel tank with transmission jack, set the fuel tank, and then temporarily tighten the bolts of fuel tank band.

WARNING:
A helper is required to perform this work.

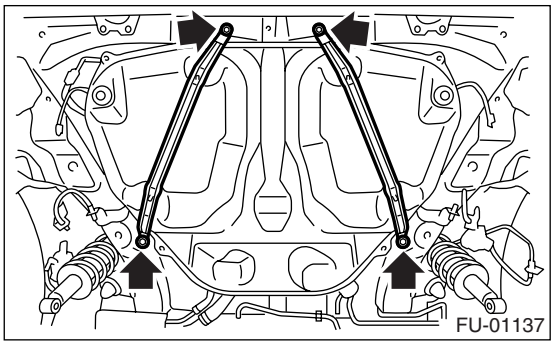

2) Correctly insert the fuel filler hose (A) and evaporation hose (B) to specified position, and then tighten the clamp.

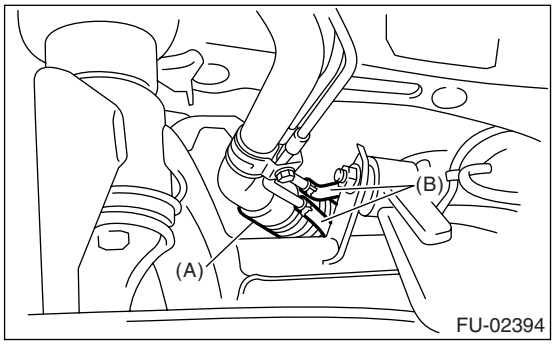

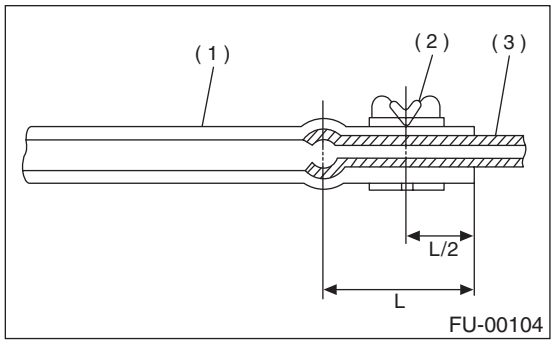

(1) Hose
(2) Clip or clamp
(3) Pipe

3) Connect the evaporation hose.

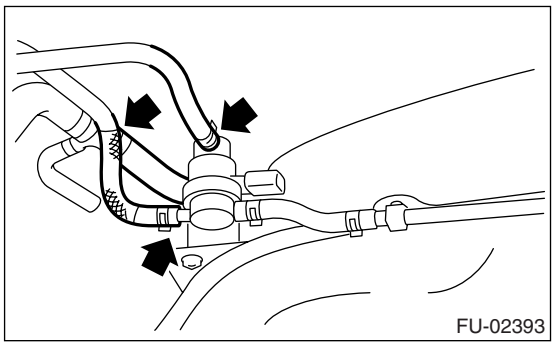

4) Tighten the bolts of fuel tank band.

Tightening torque:
33 N·m (3.4 kgf-m, 25 ft-lb)

5) Connect the connector.

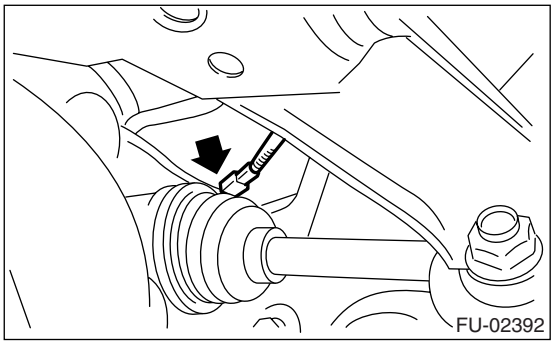

6) Install the rear suspension assembly.

CAUTION:
A helper is required to perform this work.

(1) Support the rear differential with transmission jack.
(2) Support the rear suspension assembly, and then tighten the bolts which secure the rear suspension assembly to body.

Tightening torque:
T1: 125 N·m (12.7 kgf-m, 92.2 ft-lb)
T2: 65 N·m (6.2 kgf-m, 48 ft-lb)
T3: 175 N·m (17.8 kgf-m, 129 ft-lb)

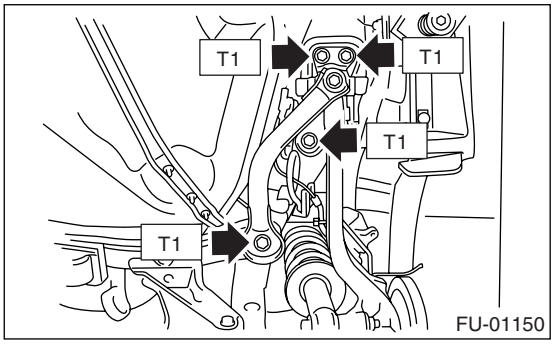

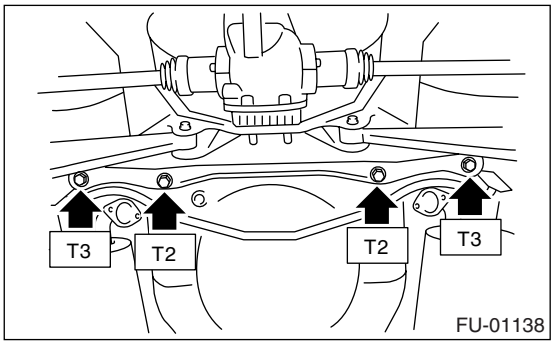

(3) Tighten the bolts which install the rear shock absorber to rear suspension arm. <Ref. to RS-11, INSTALLATION, Rear Arm.>

Tightening torque:
62 N·m (6.3 kgf-m, 46 ft-lb)

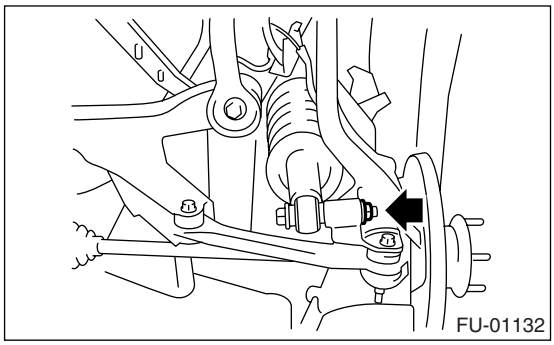

7) Tighten the bolts which install the parking brake cable clamp.

Tightening torque:
18 N·m (1.8 kgf-m, 13.3 ft-lb)

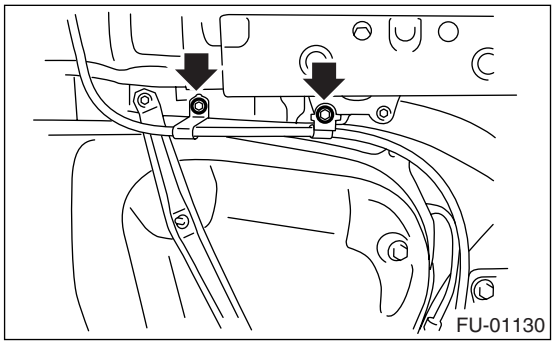

Tightening torque:
32 N·m (3.3 kgf-m, 23.9 ft-lb)

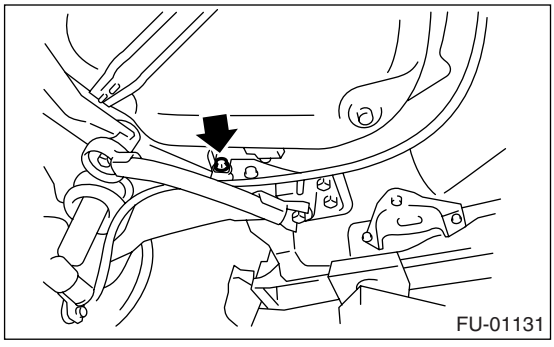

8) Connect the connector to rear ABS wheel speed sensor.

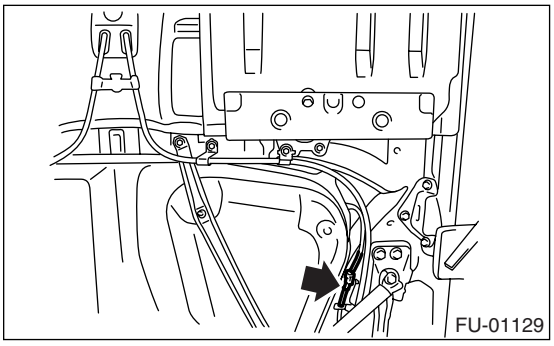

9) Install the heat shield cover.

10) Install the propeller shaft. <Ref. to DS-11, INSTALLATION, Propeller Shaft.>
11) Install the rear exhaust pipe. <Ref. to EX(H4SO U5)-9, INSTALLATION, Rear Exhaust Pipe.>
12) Lower the vehicle.
13) Connect the parking brake cable to parking brake assembly. <Ref. to PB-7, INSTALLATION, Parking Brake Assembly (Rear Disc Brake).>
14) Install the rear brake caliper.
15) Tighten the bolt which secures rear brake hose installation bracket.

Tightening torque:
33 N·m (3.4 kgf-m, 25 ft-lb)

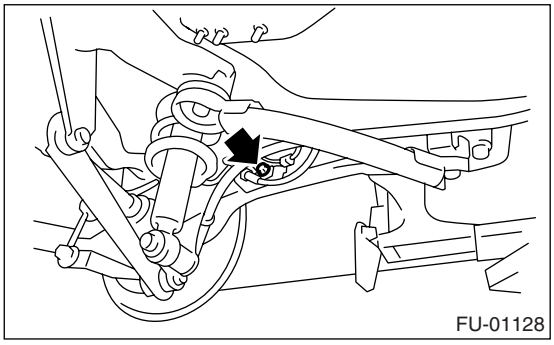

16) Install the rear wheels.
17) Lower the vehicle.
18) Connect the quick connector of evaporation pipe. <Ref. to FU(H4SO U5)-65, INSTALLATION, Fuel Delivery, Return and Evaporation Lines.>

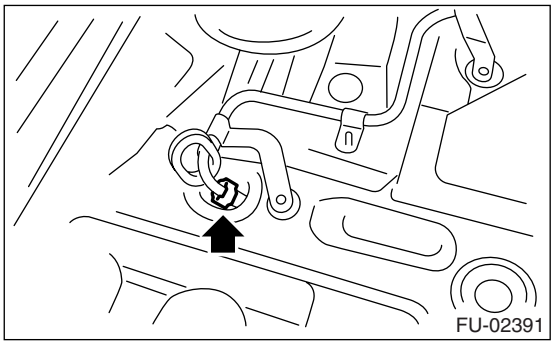

19) Install pipe protector.

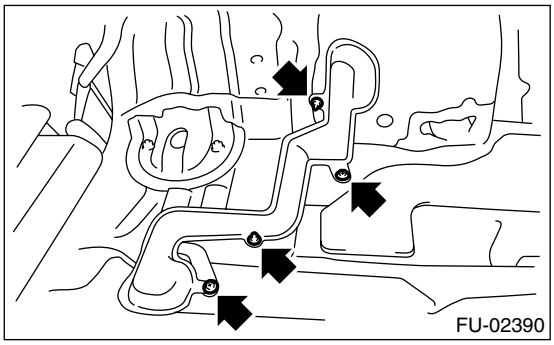

20) Install trunk room trim. (Sedan model) <Ref. to EI-71, INSTALLATION, Trunk Room Trim.>

21) Install rear quarter trim. (Wagon model) <Ref. to EI-63, WAGON MODEL, INSTALLATION, Rear Quarter Trim.>
22) Connect the connector (A) to fuel sub level sensor.
23) Connect the quick connector to the fuel delivery (B) and return hose (C). <Ref. to FU(H4SO U5)-65, INSTALLATION, Fuel Delivery, Return and Evaporation Lines.>

NOTE:
Be careful not to misconnect the delivery side and return side.

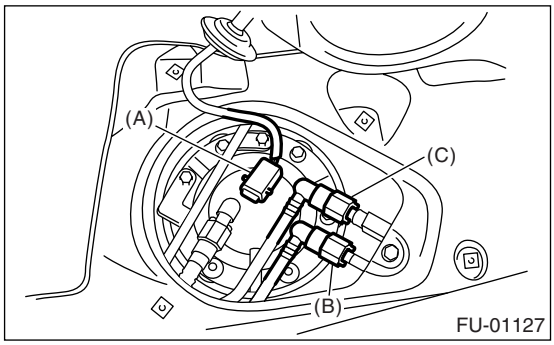

24) Install the service hole cover of fuel sub level sensor.

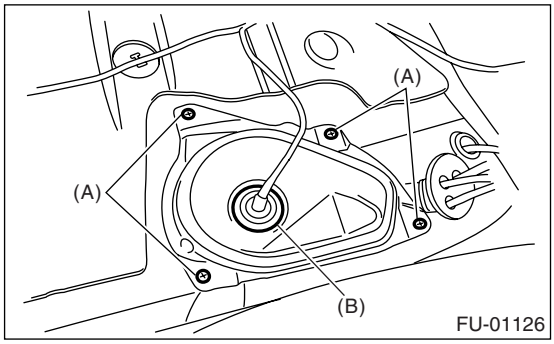

(A) Bolts
(B) Grommet

25) Connect the connector (A), and then install the clips (B).

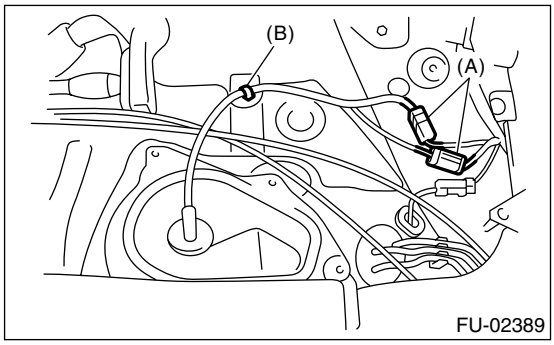

26) Connect the connector to fuel pump.

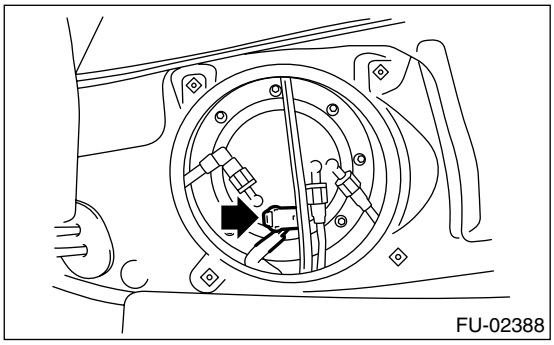

27) Install the service hole cover of fuel pump.

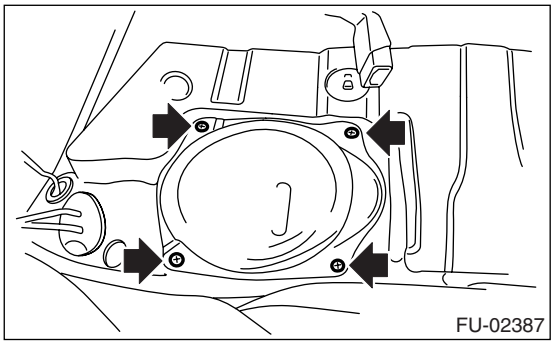

28) Install the rear seat.
29) Install the fuse of fuel pump to main fuse box.

C: INSPECTION

1) Check that the fuel tank is not holed, cracked or otherwise damaged.
2) Make sure that the fuel hoses and fuel pipes are not cracked and those connections are tight.

25.Fuel Filler Pipe

A: REMOVAL

WARNING:
- **Place "NO FIRE" signs near the working area.**
- **Be careful not to spill fuel on the floor.**

1) Disconnect the ground cable from battery.

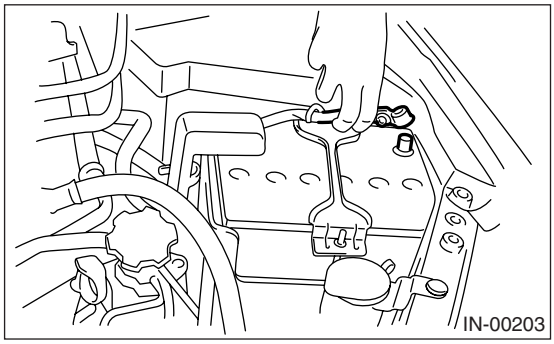

2) Open the fuel filler flap lid, and remove the filler cap.
3) Remove the screws which secure the packing.

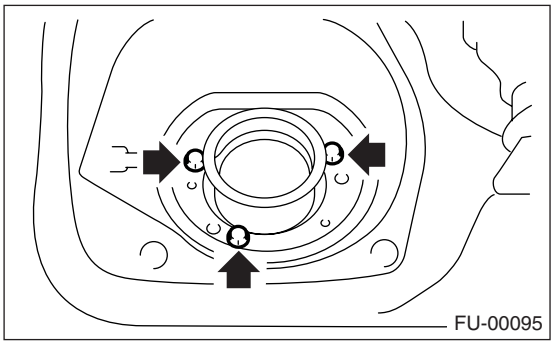

4) Lift-up the vehicle.
5) Remove the rear wheel RH.

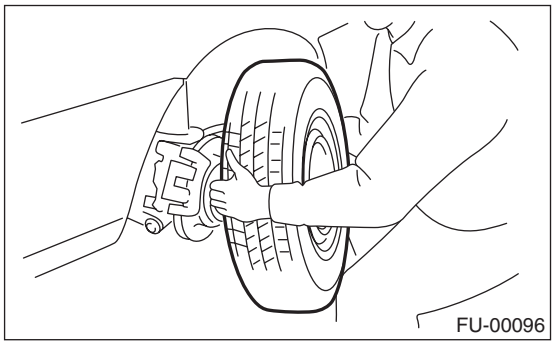

6) Drain fuel from fuel tank. <Ref. to FU(H4SO U5)-48, DRAINING FUEL, PROCEDURE, Fuel.>
7) Remove the mud guard. <Ref. to EI-29, REMOVAL, Mud Guard.>
8) Remove the rear sub frame. <Ref. to RS-23, REMOVAL, Rear Sub Frame.>
9) Remove the bolts which hold the fuel filler pipe bracket on the body.

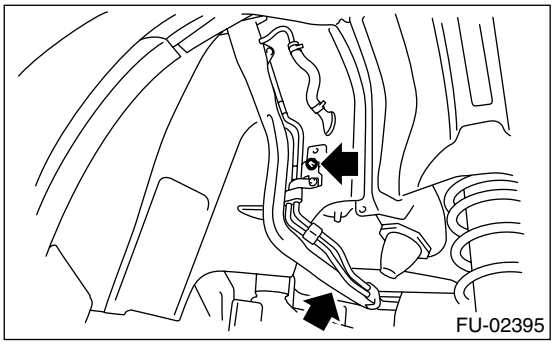

10) Loosen the clamp and disconnect the fuel filler hose (A) and evaporation hose (B).

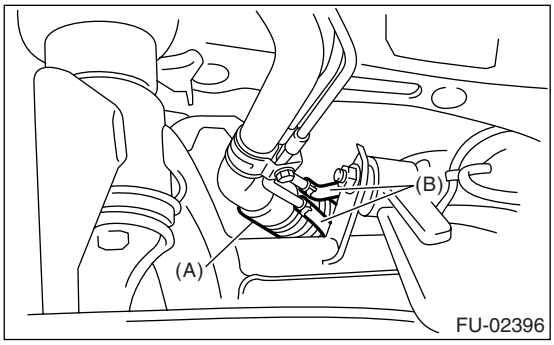

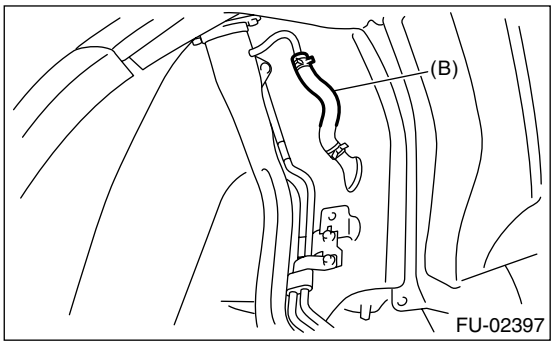

11) Remove the fuel filler pipe to under side of the vehicle.

B: INSTALLATION

1) Open the fuel filler flap lid.
2) Set the fuel saucer (A) with rubber packing (C) and insert the fuel filler pipe into hole from the inner side of apron.
3) Align the holes in fuel filler pipe neck and set the cup (B), and tighten the screws.

NOTE:
If the edges of rubber packing are folded toward the inside, straighten it with a flat tip screwdriver.

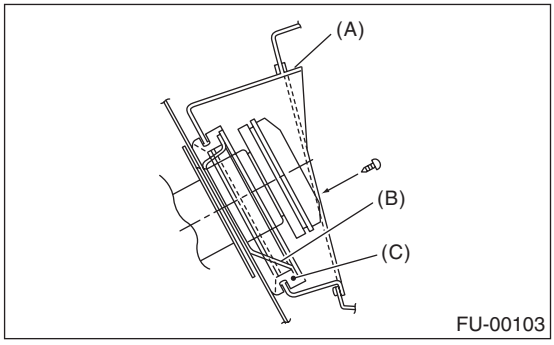

4) Correctly insert the fuel filler hose (A) and evaporation hose (B) to specified position, and then tighten the clamp.

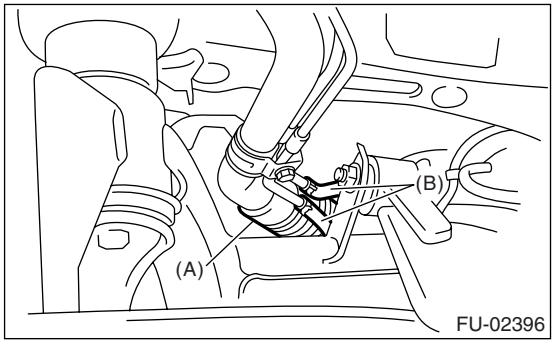

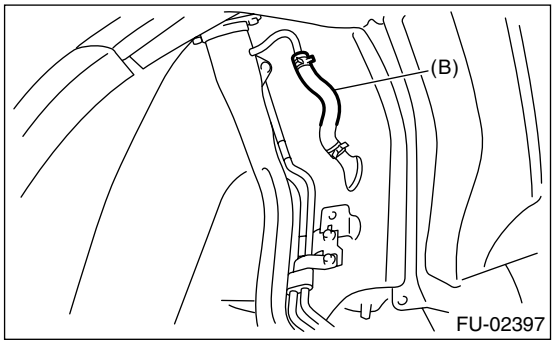

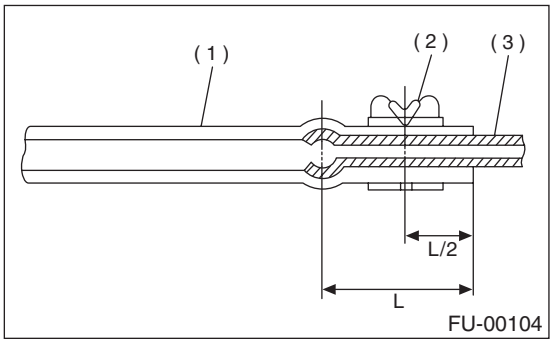

(1) Hose
(2) Clip or clamp
(3) Pipe

5) Tighten the bolts which hold the fuel filler pipe bracket on the body.

Tightening torque:
7.5 N·m (0.76 kgf-m, 5.5 ft-lb)

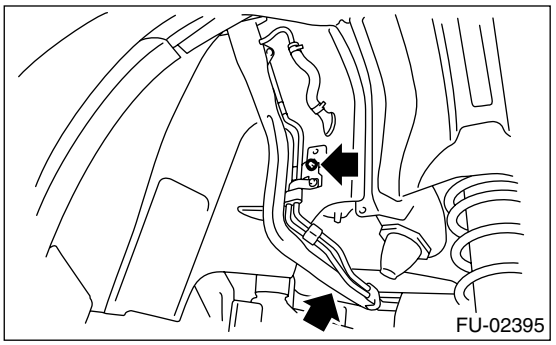

6) Install the rear sub frame. <Ref. to RS-23, INSTALLATION, Rear Sub Frame.>
7) Install the mud guard. <Ref. to EI-29, INSTALLATION, Mud Guard.>
8) Install the rear wheel RH.

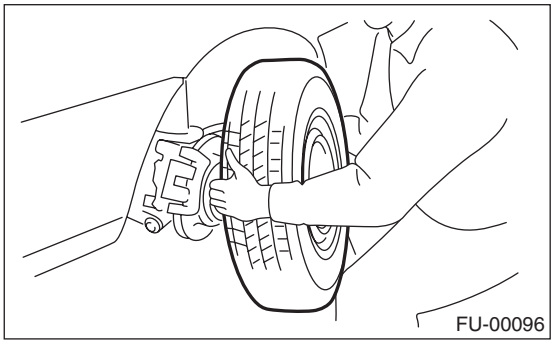

9) Lower the vehicle.
10) Connect the battery ground cable to battery.

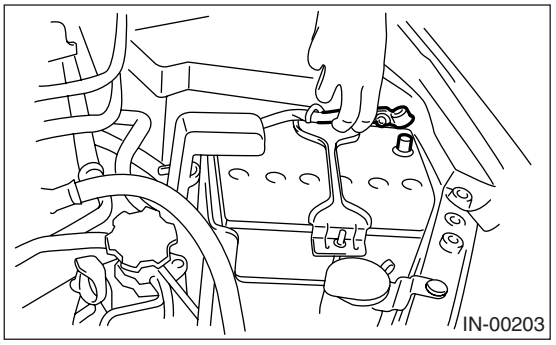

C: DISASSEMBLY

1) Move the clamp, and disconnect the evaporation hose from shut valve.

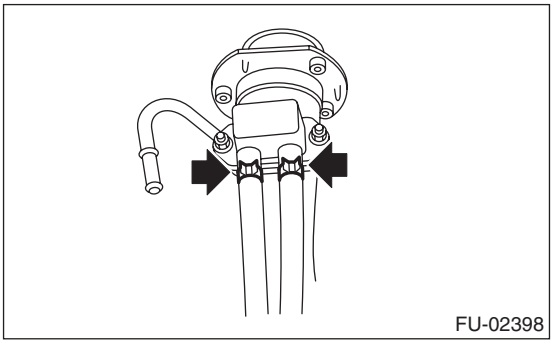

2) Remove the nut which hold the evaporation to fuel filler pipe.

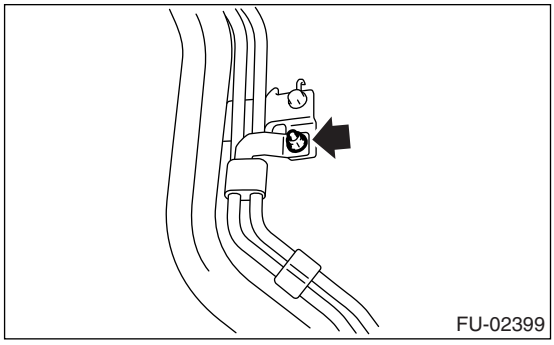

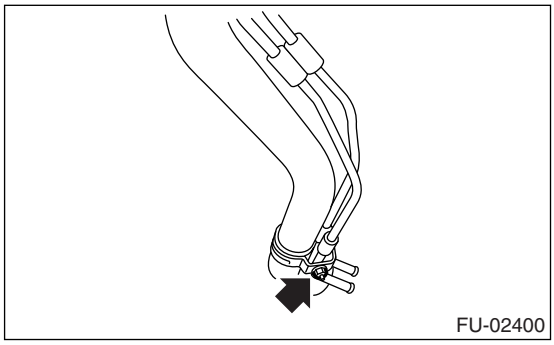

3) Remove the shut valve from fuel filler pipe. <Ref. to EC(H4SO)-15, REMOVAL, Shut Valve.>

D: ASSEMBLY

1) Install the shut valve to fuel filler pipe. <Ref. to EC(H4SO)-15, INSTALLATION, Shut Valve.>

2) Tighten the nut which hold the evaporation pipe assembly on the fuel filler pipe.

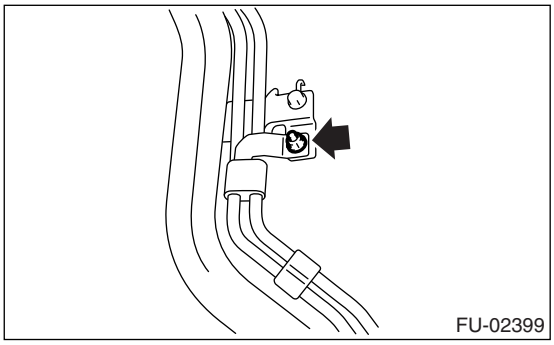

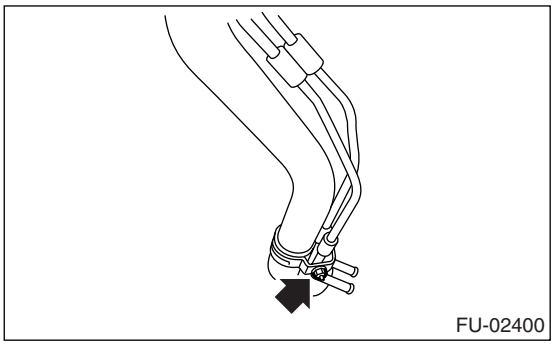

3) Connect the evaporation hose to shut valve.

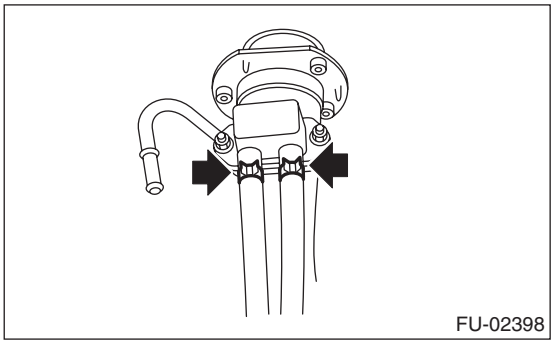

26.Fuel Pump

A: REMOVAL

WARNING:
- **Place "NO FIRE" signs near the working area.**
- **Be careful not to spill fuel on the floor.**

NOTE:
Fuel pump assembly consists of fuel pump and fuel level sensor.

1) Release the fuel pressure.
<Ref. to FU(H4SO U5)-48, RELEASING OF FUEL PRESSURE, PROCEDURE, Fuel.>
2) Drain the fuel. <Ref. to FU(H4SO U5)-48, DRAINING FUEL, PROCEDURE, Fuel.>
3) Remove the rear seat.
4) Remove the service hole cover.

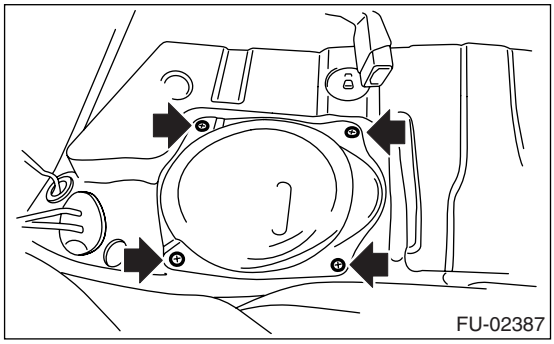
FU-02387

5) Disconnect the connector from fuel pump.

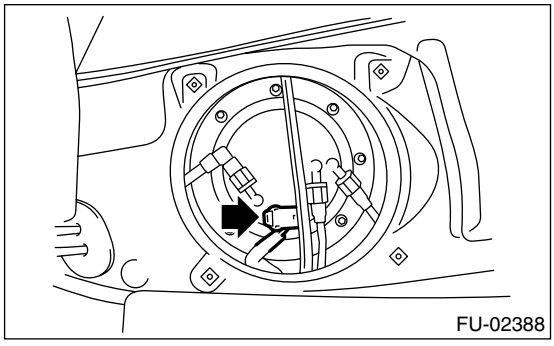
FU-02388

6) Disconnect the quick connector and then disconnect the fuel delivery hose, return hose and jet pump hose. <Ref. to FU(H4SO U5)-64, REMOVAL, Fuel Delivery, Return and Evaporation Lines.>

7) Remove the nuts which install the fuel pump assembly onto fuel tank.

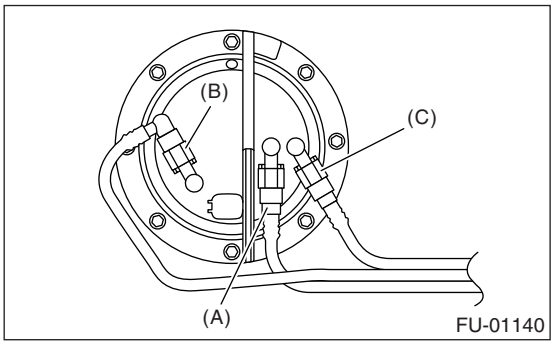

FU-01140

(A) Delivery hose
(B) Return hose
(C) Jet pump hose

8) Take off the fuel pump assembly from fuel tank.

B: INSTALLATION

Install in the reverse order of removal.

NOTE:
Use a new gasket.
(1) Ensure the sealing portion is free from fuel or foreign particles before installation.
(2) Tighten the nuts to specified torque in the order as shown in the figure.

Tightening torque:
4.4 N·m (0.45 kgf-m, 3.2 ft-lb)

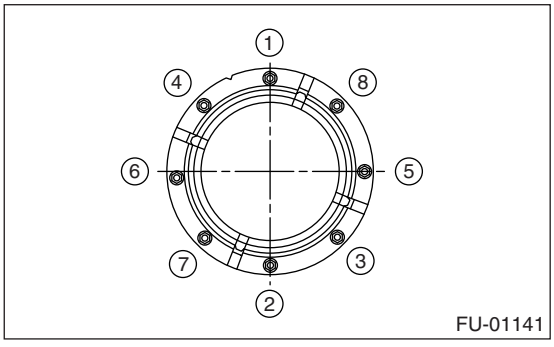

FU-01141

C: INSPECTION

Connect the lead harness to the connector terminal of fuel pump and apply the battery power supply to check whether the pump operates.

WARNING:
- **Wipe off the fuel completely.**
- **Keep battery as far apart from fuel pump as possible.**
- **Be sure to turn the battery supply to ON and OFF on the battery side.**

• Do not run fuel pump for a long time under non-load condition.

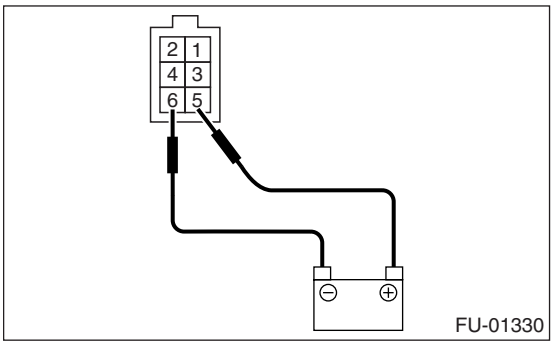

27.Fuel Level Sensor

A: REMOVAL

WARNING:
- **Place “NO FIRE” signs near the working area.**
- **Be careful not to spill fuel on the floor.**

NOTE:
Fuel level sensor is built in fuel pump assembly.

1) Remove the fuel pump assembly. <Ref. to FU(H4SO U5)-58, REMOVAL, Fuel Pump.>
2) Disconnect the connector from fuel pump bracket.
3) Remove the fuel level sensor and fuel temperature sensor.

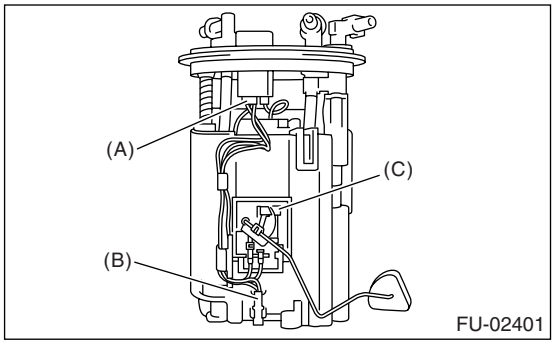

(A) Connector
(B) Fuel temperature sensor
(C) Fuel level sensor

B: INSTALLATION

Install in the reverse order of removal.

28.Fuel Sub Level Sensor

A: REMOVAL

WARNING:
- **Place "NO FIRE" signs near the working area.**
- **Be careful not to spill fuel on the floor.**

1) Drain fuel. <Ref. to FU(H4SO U5)-48, DRAINING FUEL, PROCEDURE, Fuel.>
2) Remove the rear seat.
3) Remove the service hole cover.
   (1) Remove the bolts (A).
   (2) Push the grommet (B) down under the body and remove the service hole cover.

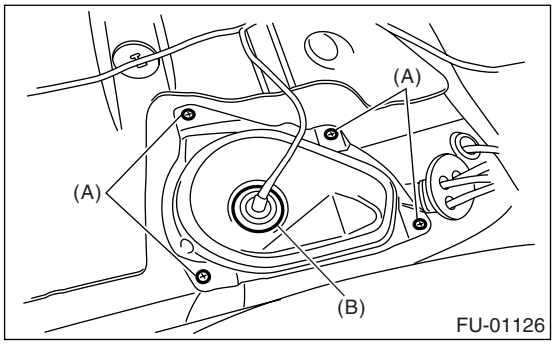

4) Disconnect the connector from fuel sub level sensor.

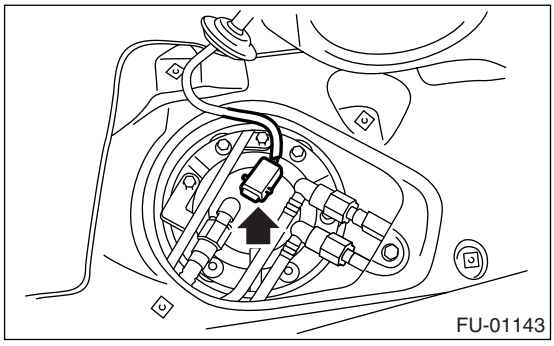

5) Disconnect the quick connector and then disconnect the fuel delivery hose, return hose and jet pump hose. <Ref. to FU(H4SO U5)-64, REMOVAL, Fuel Delivery, Return and Evaporation Lines.>

6) Remove the nuts and bolts which install the fuel sub level sensor on fuel tank.

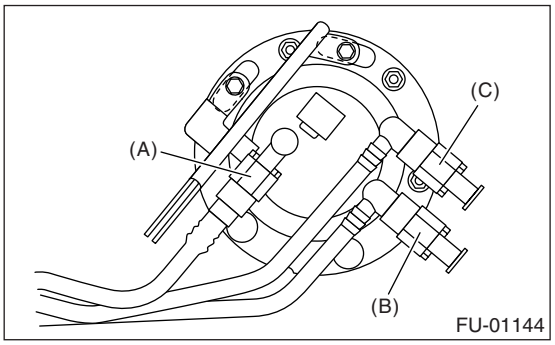

(A) Jet pump hose
(B) Delivery hose
(C) Return hose

7) Remove the fuel sub level sensor.

B: INSTALLATION

Install in the reverse order of removal.

NOTE:
Use a new gasket.
(1) Ensure the sealing portion is free from fuel or foreign particles before installation.
(2) Tighten the nuts and bolts to specified torque in the order as shown in the figure.

Tightening torque:
4.4 N·m (0.45 kgf-m, 3.2 ft-lb)

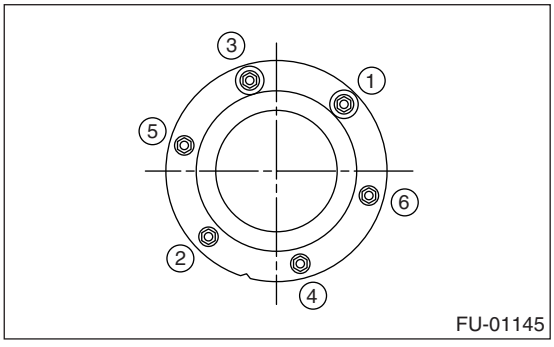

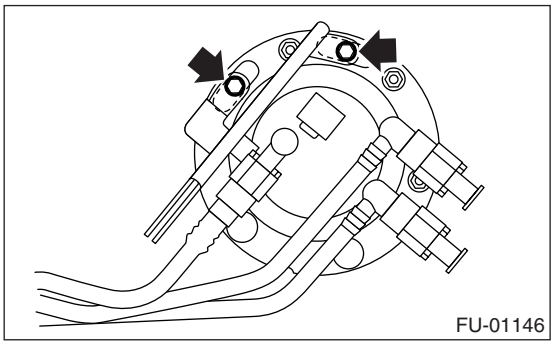

29.Fuel Filter

A: SPECIFICATION

Fuel filter forms a unit with fuel pump.
Refer to Fuel Pump for removal and installation procedures.
<Ref. to FU(H4SO U5)-58, REMOVAL, Fuel Pump.>
<Ref. to FU(H4SO U5)-58, INSTALLATION, Fuel Pump.>

30.Fuel Damper Valve

A: REMOVAL

1) Release the fuel pressure.
<Ref. to FU(H4SO U5)-48, RELEASING OF FUEL PRESSURE, PROCEDURE, Fuel.>
2) Remove the fuel damper valve from fuel delivery line and fuel return line.

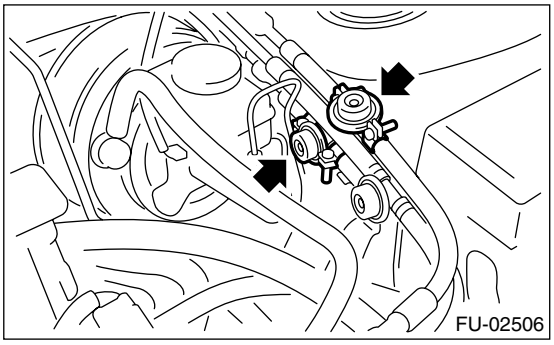

3) Remove the purge damper valve from evaporation line.

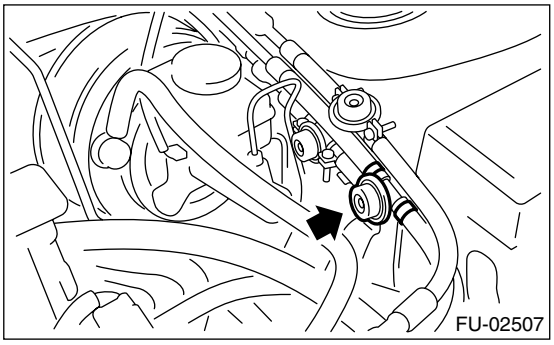

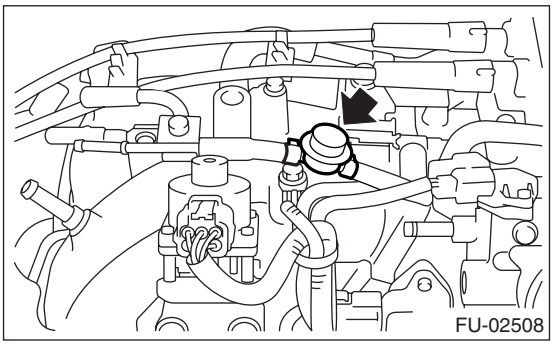

B: INSTALLATION

Install in the reverse order of removal.

Tightening torque:
Fuel damper valve
1.25 N·m (0.13 kgf-m, 0.94 ft-lb)

31.Fuel Delivery, Return and Evaporation Lines

A: REMOVAL

1) Set the vehicle on a lift.
2) Release the fuel pressure. <Ref. to FU(H4SO U5)-48, RELEASING OF FUEL PRESSURE, PROCEDURE, Fuel.>
3) Open the fuel filler flap lid, and remove the fuel filler cap.
4) Remove the floor mat. <Ref. to EI-72, REMOVAL, Floor Mat.>
5) Disconnect the fuel delivery pipes and hoses, and then disconnect the fuel return pipes and hoses, evaporation pipes and hoses.

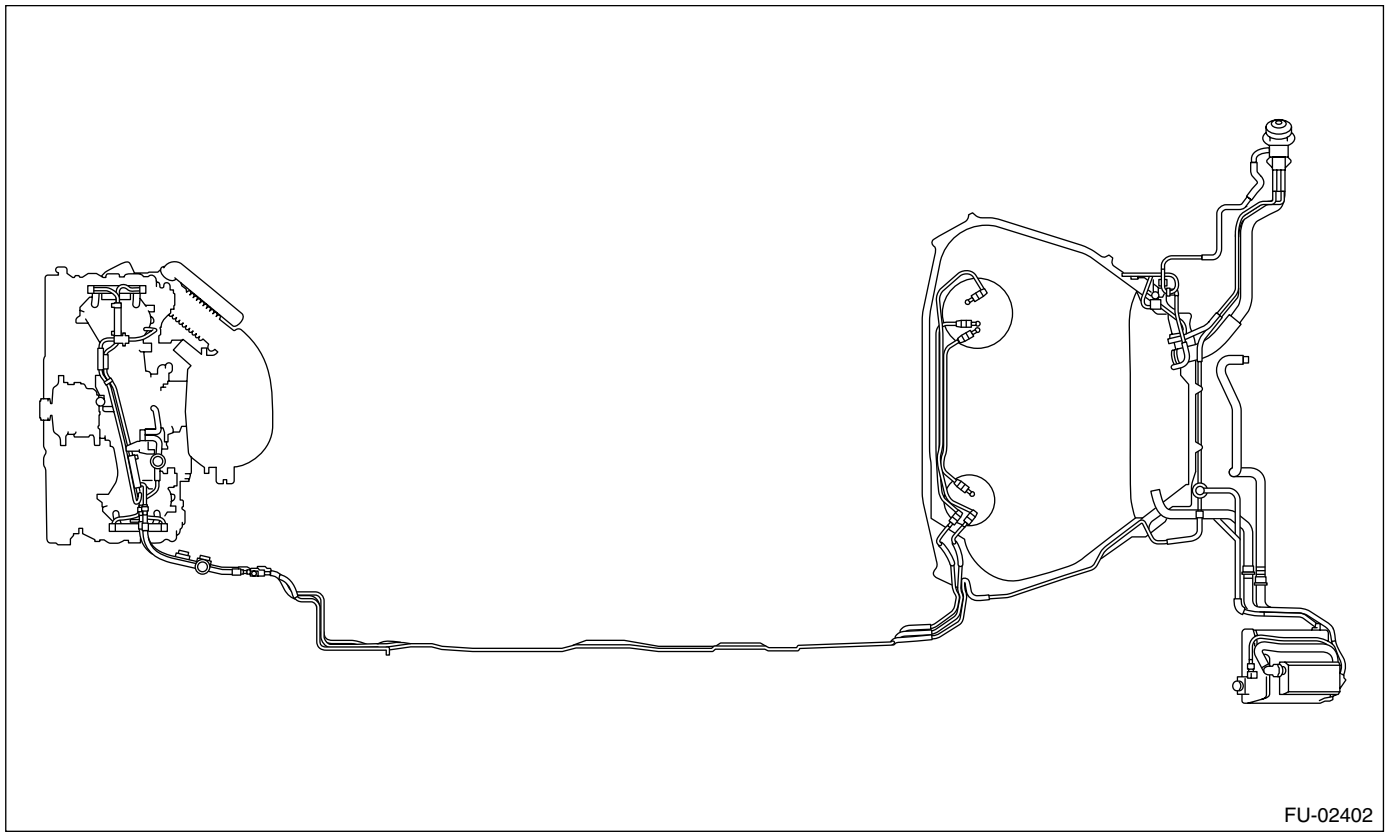
FU-02402

6) In the engine compartment, disconnect the fuel delivery hoses, return hoses, and evaporation hose.
   (1) Disconnect the quick connector of fuel delivery line and return line by pushing the ST in the direction of arrow.
   (2) Remove the clip, and disconnect the evaporation hose from pipe.

WARNING:
- **Be careful not to spill fuel.**
- **Catch the fuel from hoses using a container or cloth.**

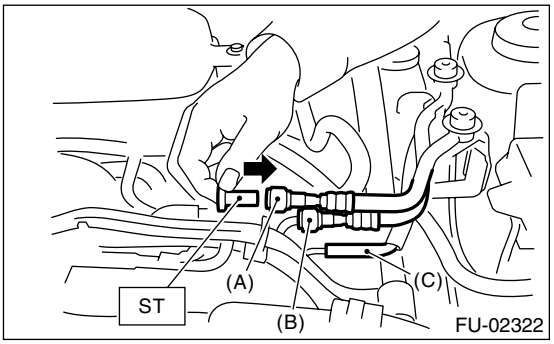

(A) Fuel delivery hose
(B) Return hose
(C) Evaporation hose

7) Lift-up the vehicle.

8) Remove the fuel tank. <Ref. to FU(H4SO U5)-49, REMOVAL, Fuel Tank.>
9) Separate the quick connector on fuel line.
(1) Clean the pipe and connector, if they are covered with dust.
(2) To prevent from damaging or entering foreign matter, wrap the pipes and connectors with plastic bag, etc.

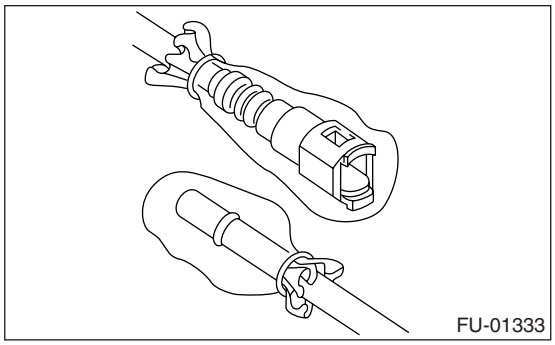

(3) Hold the connector (A) and push retainer (B) down.
(4) Pull out the connector (A) from retainer (B).

CAUTION:
Always use a new retainer except in use of engine compartment.

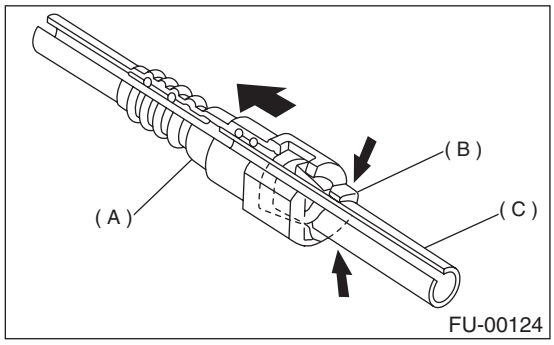

(A) Connector
(B) Retainer
(C) Pipe

B: INSTALLATION

1) Connect the quick connector on fuel line.

CAUTION:
• Always use a new retainer except in use of engine compartment.
• Make sure that the connected portion is not damaged or dust-covered. If necessary, clean the seal surface of pipe.

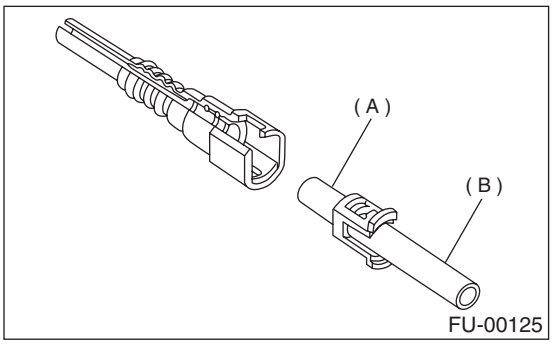

(A) Seal surface
(B) Pipe

(1) Set the new retainer (B) to connector (A).
(2) Push the pipe into the connector completely.

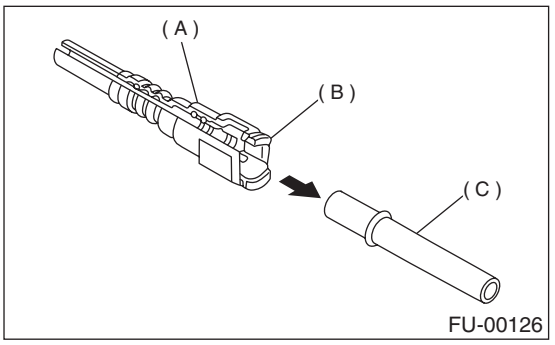

(A) Connector
(B) Retainer
(C) Pipe

CAUTION:
• Pull the connector to ensure it is connected securely.
• Ensure the two retainer pawls are engaged in their mating positions in the connector.

• Be sure to inspect the hoses and their connections for fuel leakage.

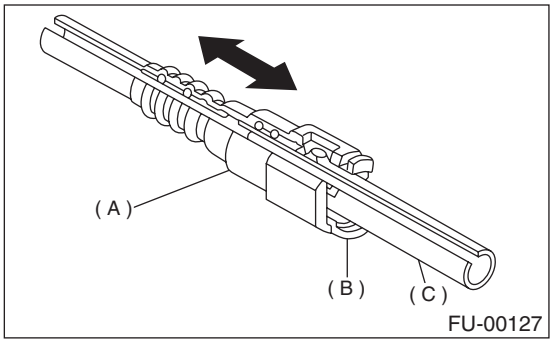

(A) Connector
(B) Retainer
(C) Pipe

2) Connect the fuel delivery hose to the pipe with an overlap of 20 to 25 mm (0.79 to 0.98 in).
Type A: When the amount to be inserted is specified.
Type B: When the amount to be inserted is not specified.

ℓ : 2.5±1.5 mm (0.098±0.059 in)

L: 22.5±2.5 mm (0.886±0.098 in)

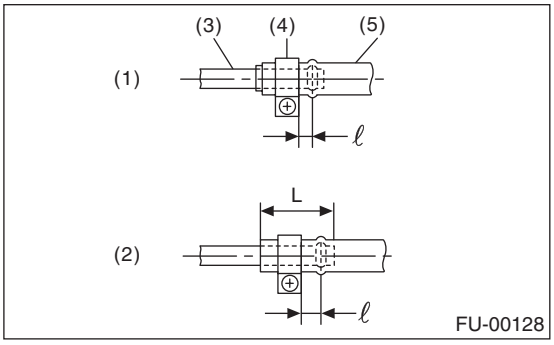

(1) Type A
(2) Type B
(3) Pipe
(4) Clamp
(5) Hose

3) Connect the return hose and evaporation hose to the pipe by approx. 15 mm (0.59 in) from hose end.

Fuel return hose:
L = 22.5±2.5 mm (0.886±0.098 in)
Fuel evaporation hose:
L = 17.5±2.5 mm (0.689±0.098 in)

CAUTION:
Be sure to inspect the hoses and their connections for fuel leakage.

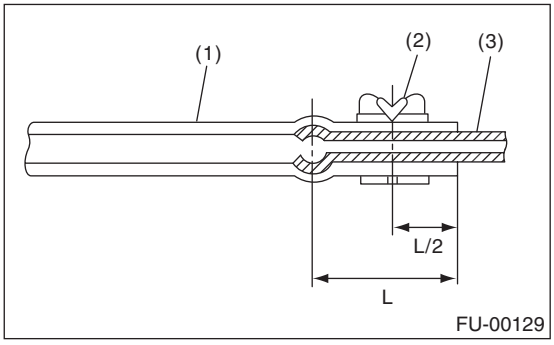

(1) Hose
(2) Clip
(3) Pipe

C: INSPECTION

1) Make sure that there are no cracks on the fuel pipes and fuel hoses.
2) Make sure the fuel pipe and fuel hose connections are tightened firmly.

32.Fuel System Trouble in General

A: INSPECTION

Trouble and possible cause		Corrective action
1. Insufficient fuel supply to injector		
1)	Fuel pump does not operate.	
	❍ Defective terminal contact	Inspect contact, especially ground, and tighten it securely.
	❍ Trouble in electromagnetic or electronic circuit parts	Replace the faulty parts.
2)	Decline of fuel pump function	Replace the fuel pump.
3)	Clogged dust or water in the fuel filter	Replace fuel filter, clean or replace fuel tank.
4)	Clogged or bent fuel pipe or hose	Clean, correct or replace the fuel pipe or hose.
5)	Air mixed in the fuel system	Inspect or retighten each connection part.
6)	Clogged or bent air breather tube or pipe	Clean, correct or replace air breather tube or pipe.
7)	Damaged diaphragm of pressure regulator	Replace.
2. Leakage or blow out of fuel		
1)	Loosened joints of the fuel pipe	Retighten.
2)	Cracked fuel pipe, hose, and fuel tank	Replace.
3)	Defective welding part on the fuel tank	Replace.
4)	Defective drain packing of the fuel tank	Replace.
5)	Clogged or bent air breather tube or air vent tube	Clean, correct or replace air breather tube or air vent tube.
3. Gasoline smell inside of compartment		
1)	Loose joints at air breather tube, air vent tube, and fuel filler pipe	Retighten.
2)	Defective packing air tightness on the fuel saucer	Correct or replace the packing.
3)	Inoperative fuel pump modulator or circuit	Replace.
4. Defective fuel meter indicator		
1)	Defective operation of fuel level sensor	Replace.
2)	Defective operation of fuel meter	Replace.
5. Noise		
1)	Large operation noise or vibration of fuel pump	Replace.

NOTE:
• When the vehicle is left unused for an extended period of time, water may accumulate in the fuel tank. Fill fuel fully to prevent those problem. And also drain the water condensation from fuel filter.
• In snow-covered areas, mountainous areas, skiing areas, etc. where ambient temperatures drop below 0°C (32°F) throughout the winter season, use water removing agent in the fuel system to prevent freezing fuel system and accumulating water. Fill the water removing agent each time the fuel is reduced to half to maintain the advantage.
• When water condensation is noticed in the fuel filter, drain the water from both the fuel filter and fuel tank or use water removing agent in the fuel tank.
• Before using water removing agent, follow the cautions noted on the bottle.

EMISSION CONTROL
(AUX. EMISSION CONTROL DEVICES)
EC(H4SO U5)

Page
1. General Description 2

1. General Description

A: SPECIFICATION

Specifications for SOHC U5 model are included in EC(H4SO) section. <Ref. to EC(H4SO)-2, General Description.>

INTAKE (INDUCTION)

IN(H4SO U5)

Page

1. General Description 2

1. General Description

A: SPECIFICATION

Specifications for SOHC U5 model are included in IN(H4SO) section. <Ref. to IN(H4SO)-2, General Description.>

MECHANICAL

ME(H4SO U5)

Page
1. General Description 2

1. General Description

A: SPECIFICATION

Specifications for SOHC U5 model are included in ME(H4SO) section. <Ref. to ME(H4SO)-2, General Description.>

EXHAUST

EX(H4SO U5)

Page

1. General Description 2
2. Front Exhaust Pipe 4
3. Rear Exhaust Pipe 9
4. Muffler 11

1. General Description

A: COMPONENT

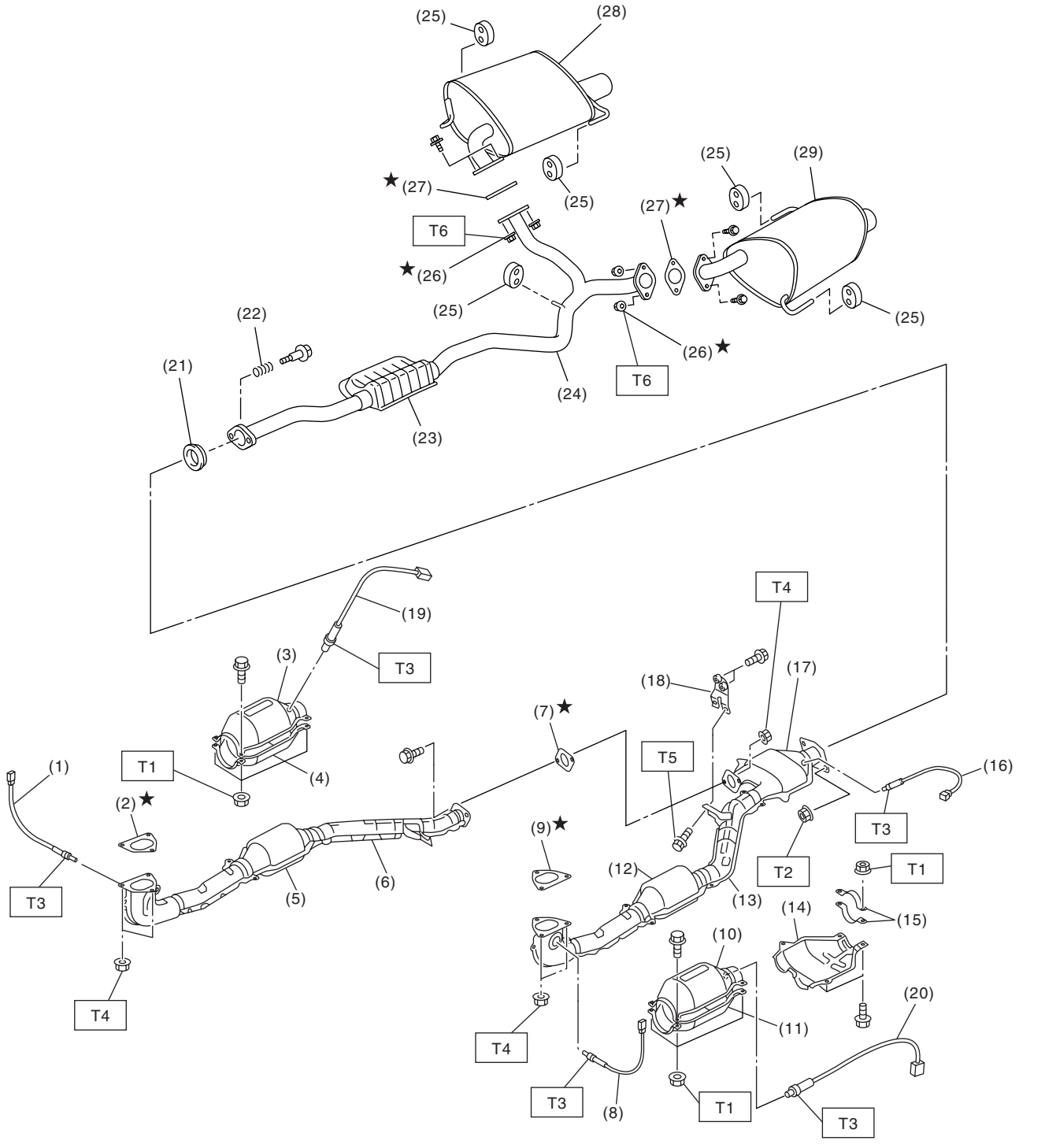

EX-02063

(1) Front oxygen (A/F) sensor (RH)
(2) Gasket
(3) Front catalytic converter upper cover (RH)
(4) Front catalytic converter lower cover (RH)
(5) Front catalytic converter (RH)
(6) Front exhaust pipe (RH)
(7) Gasket
(8) Front oxygen (A/F) sensor (LH)
(9) Gasket
(10) Front catalytic converter upper cover (LH)
(11) Front catalytic converter lower cover (LH)
(12) Front catalytic converter (LH)
(13) Front exhaust pipe (LH)
(14) Rear catalytic converter lower cover
(15) Clamp
(16) Rear oxygen sensor (RH)
(17) Rear catalytic converter
(18) Bracket
(19) Front oxygen sensor (RH)
(20) Front oxygen sensor (LH)
(21) Gasket
(22) Spring
(23) Chamber
(24) Rear exhaust pipe
(25) Cushion rubber
(26) Self-locking nut
(27) Gasket
(28) Muffler (RH)
(29) Muffler (LH)

Tightening torque: N·m (kgf-m, ft-lb)
T1: 13 (1.3, 9.4)
T2: 18 (1.8, 13.0)
T3: 21 (2.1, 15.2)
T4: 30 (3.1, 22.4)
T5: 35 (3.6, 26.0)
T6: 48 (4.9, 35.4)

B: CAUTION

• Wear work clothing, including a cap, protective goggles and protective shoes during operation.
• Remove contamination including dirt and corrosion before removal, installation or disassembly.
• Keep the disassembled parts in order and protect them from dust and dirt.
• Before removal, installation or disassembly, be sure to clarify the failure. Avoid unnecessary removal, installation, disassembly and replacement.
• Be careful not to burn yourself, because each part on the vehicle is hot after running.
• Be sure to tighten fasteners including bolts and nuts to the specified torque.
• Place shop jacks or rigid racks at the specified points.
• Before disconnecting electrical connectors of sensors or units, be sure to disconnect the ground cable from battery.

2. Front Exhaust Pipe

A: REMOVAL

1) Disconnect the battery ground cable.

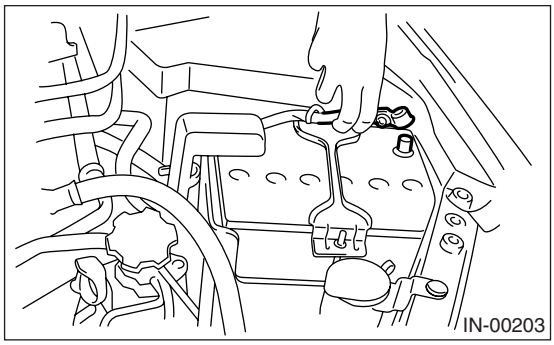

2) Disconnect the front oxygen (A/F) sensor connector.

- LH side

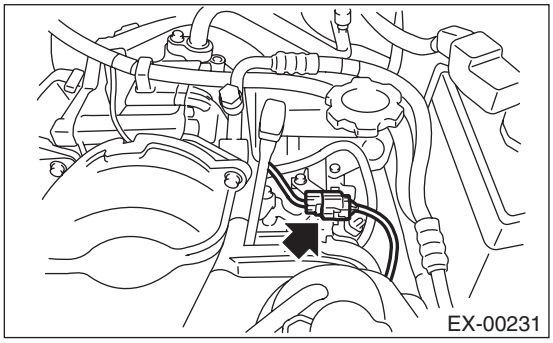

- RH side

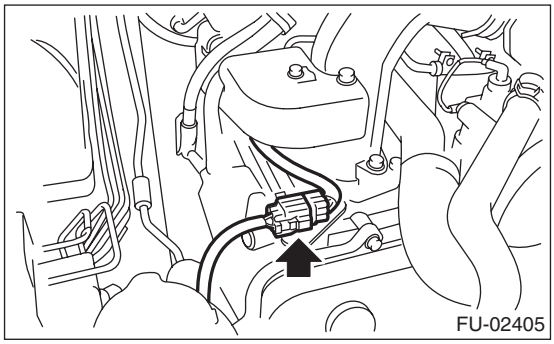

3) Disconnect the front oxygen sensor connector.

- LH side

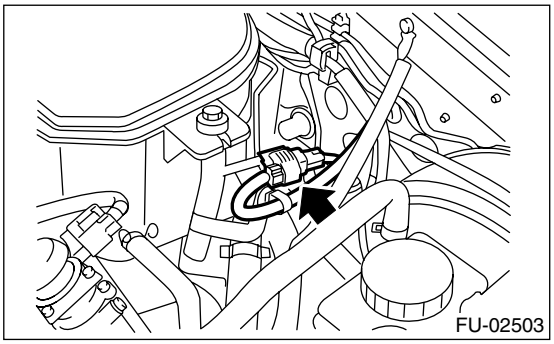

- RH side

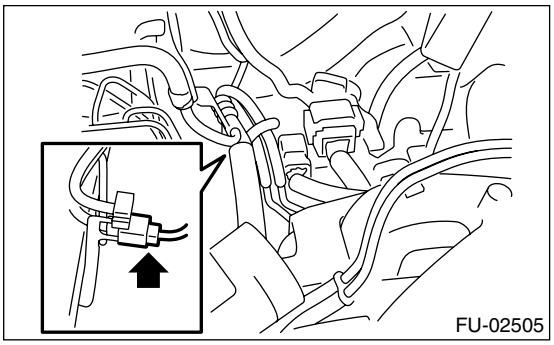

4) Lift-up the vehicle.
5) Remove the under cover.
6) Remove the front oxygen (A/F) sensor harness from bracket.

- LH side

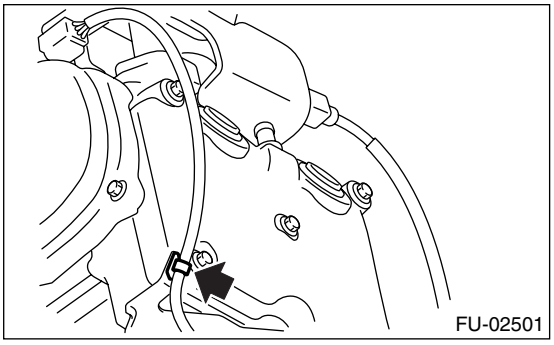

- RH side

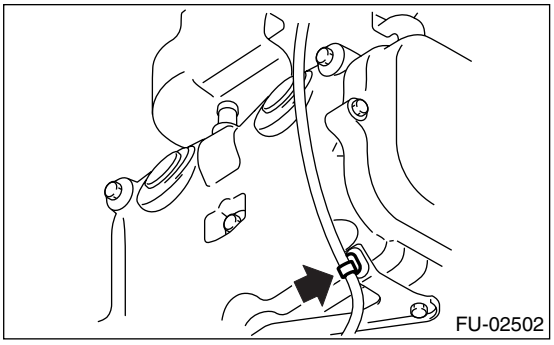

7) Remove the clips which hold LH side oxygen sensor harness.

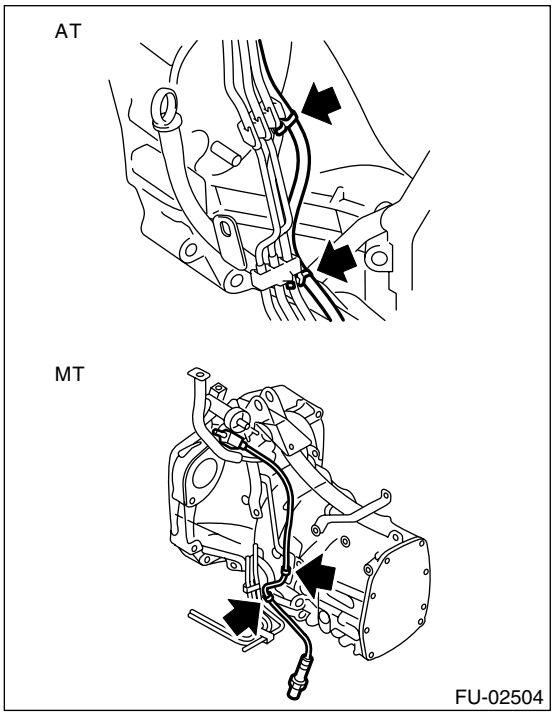

8) Remove the RH side front oxygen sensor harness from bracket.

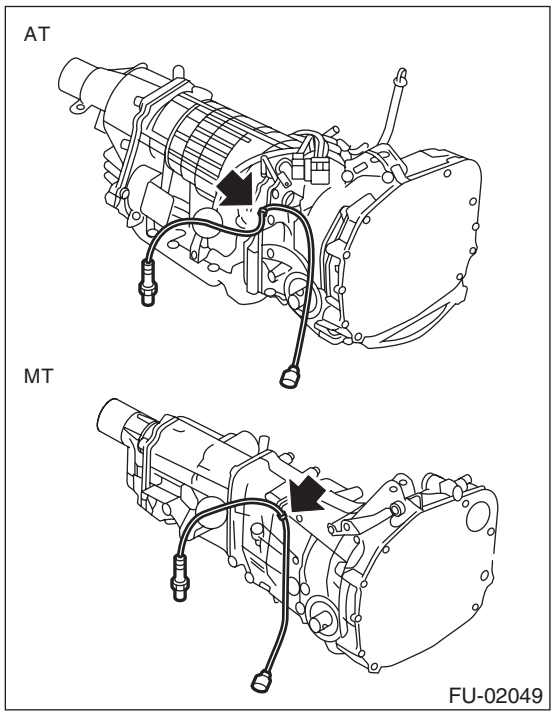

9) Disconnect the rear oxygen sensor connector.

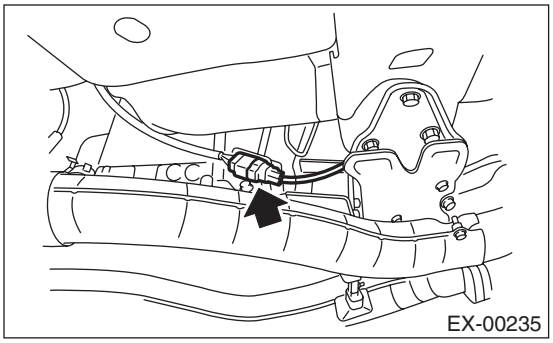

10) Separate the front exhaust pipe assembly from rear exhaust pipe.

WARNING:
Be careful, exhaust pipe is hot.

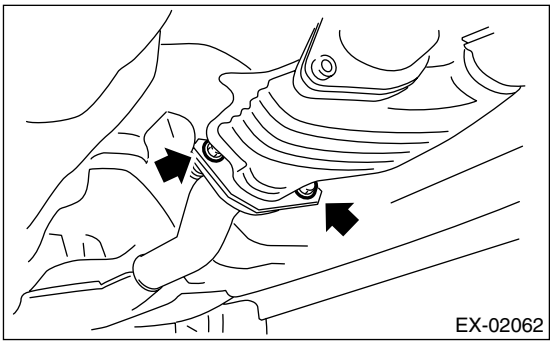

11) Remove the nuts which hold front exhaust pipe onto cylinder heads.

CAUTION:
Be careful not to pull down front exhaust pipe assembly.

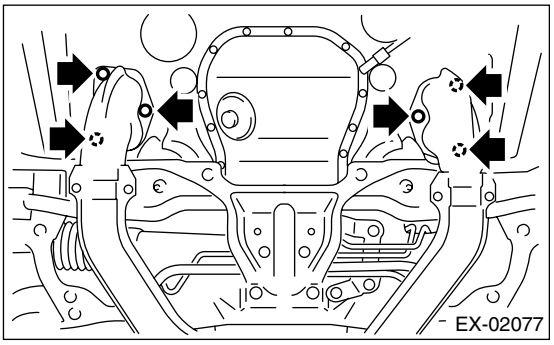

12) Remove the bolt which secures front exhaust pipe assembly to hanger bracket.

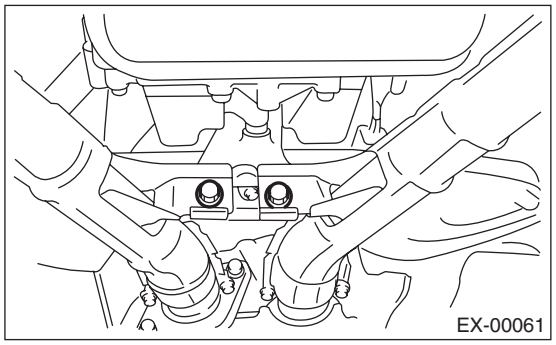

13) Remove the front exhaust pipe from the vehicle.

CAUTION:
• Disconnect front oxygen (A/F) sensor, front oxygen sensor and rear oxygen sensor harness from bracket.
• Be careful not to let front exhaust pipe assembly fall off when removing as it is quite heavy.
• After removing front exhaust pipe assembly, do not apply excessive pulling force on rear exhaust pipe.

14) Separate the front exhaust pipe (RH) from front exhaust pipe assembly.

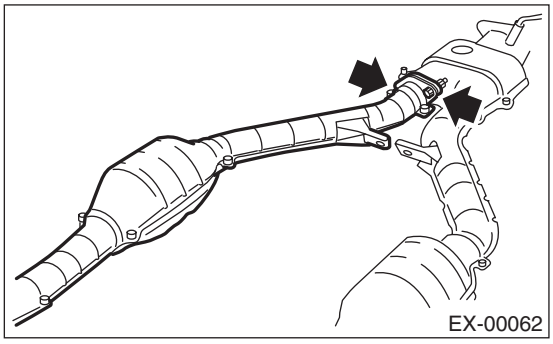

15) Disconnect the front oxygen (A/F) sensor, front oxygen sensor and rear oxygen sensor. <Ref. to FU(H4SO U5)-37, REMOVAL, Front Oxygen (A/F) Sensor.>, <Ref. to FU(H4SO U5)-40, REMOVAL, Front Oxygen Sensor.> and <Ref. to FU(H4SO U5)-43, REMOVAL, Rear Oxygen Sensor.>

B: INSTALLATION

1) Install the front oxygen (A/F) sensor, front oxygen sensor and rear oxygen sensor. <Ref. to FU(H4SO U5)-38, INSTALLATION, Front Oxygen (A/F) Sensor.>, <Ref. to FU(H4SO U5)-41, INSTALLATION, Front Oxygen Sensor.> and <Ref. to FU(H4SO U5)-43, INSTALLATION, Rear Oxygen Sensor.>
2) Install the front exhaust pipe (RH) to front exhaust pipe assembly.

NOTE:
Replace the gaskets with new ones.

Tightening torque:
30 N·m (3.1 kgf-m, 22.4 ft-lb)

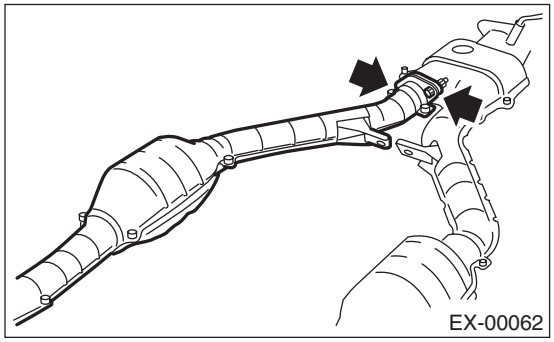

3) Install the front exhaust pipe assembly to the vehicle.
4) Temporarily tighten the bolt which installs front exhaust pipe assembly to hanger bracket.

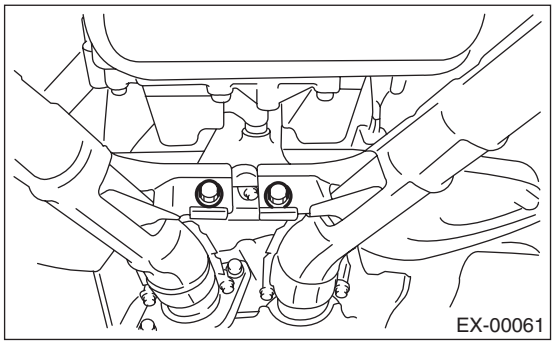

5) Tighten the nuts which hold front exhaust pipe onto cylinder heads.

Tightening torque:
30 N·m (3.1 kgf-m, 22.4 ft-lb)

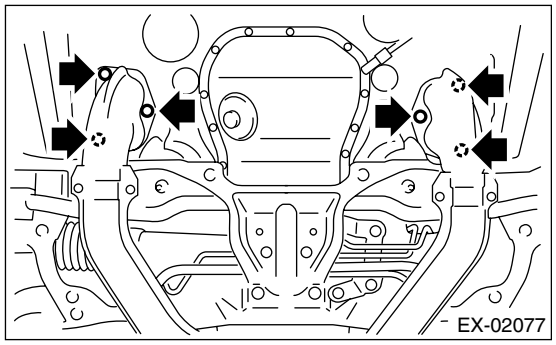

6) Tighten the bolts which install front exhaust pipe to rear exhaust pipe.

Tightening torque:
18 N·m (1.8 kgf-m, 13.0 ft-lb)

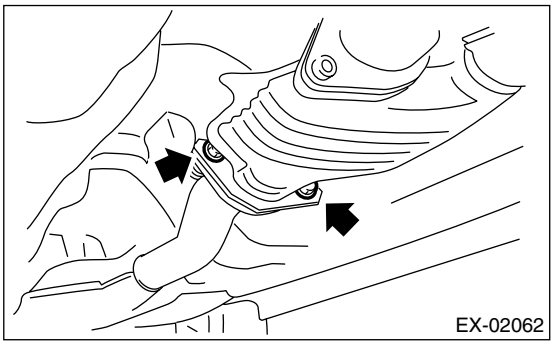

7) Tighten the bolt which holds front exhaust pipe assembly to hanger bracket.

Tightening torque:
35 N·m (3.6 kgf-m, 26.0 ft-lb)

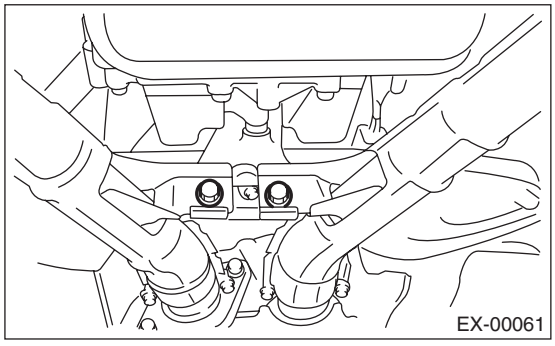

8) Install the front oxygen (A/F) sensor harness to bracket.
- LH side

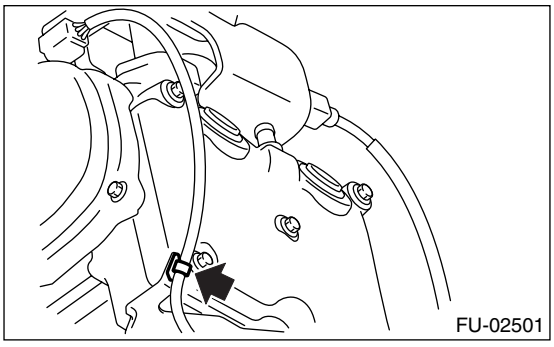

- RH side

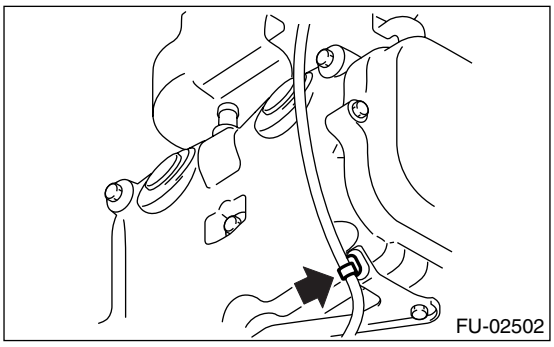

9) Hold the LH side front oxygen sensor harness with clip.

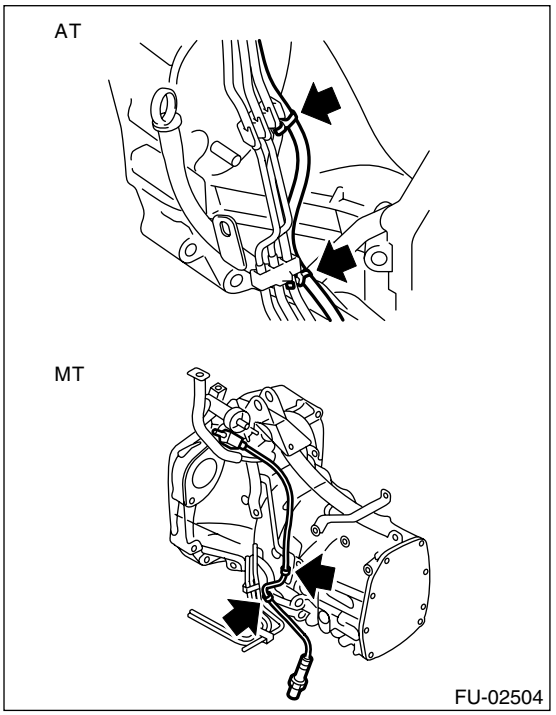

10) Install the RH side front oxygen sensor harness to bracket.

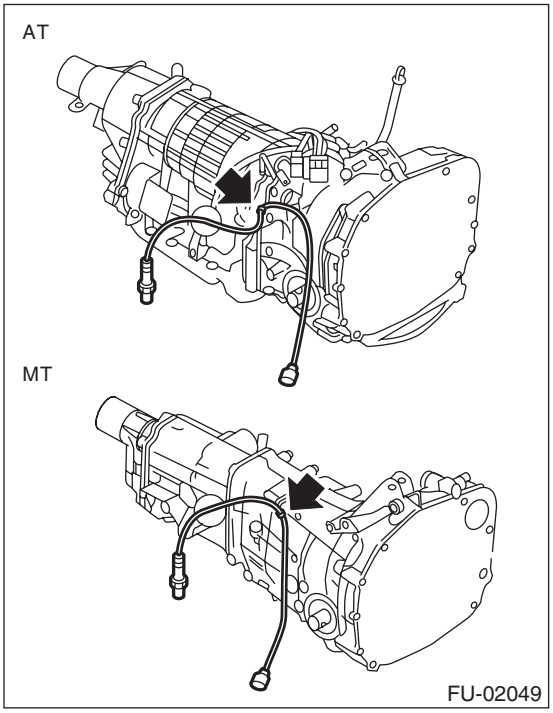

11) Connect the rear oxygen sensor connector.

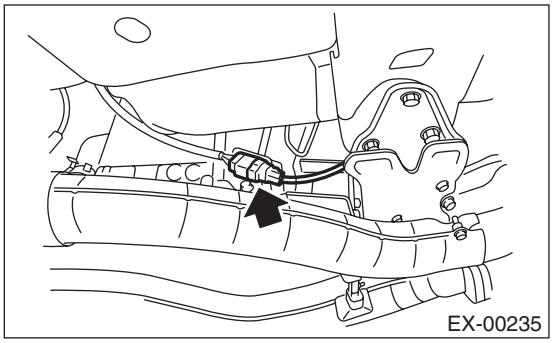

12) Install the under cover.
13) Lower the vehicle.
14) Connect the front oxygen (A/F) sensor connector.

- LH side

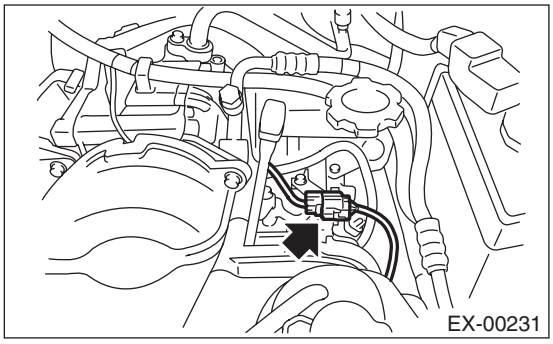

- RH side

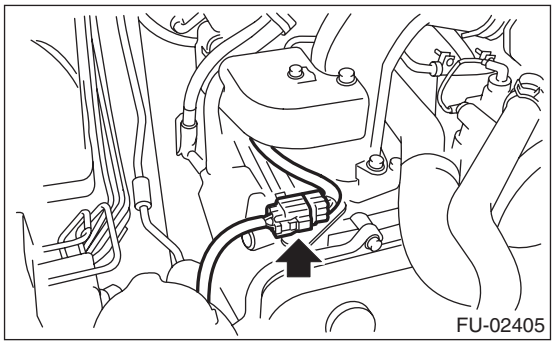

15) Connect the front oxygen sensor connector.

- LH side

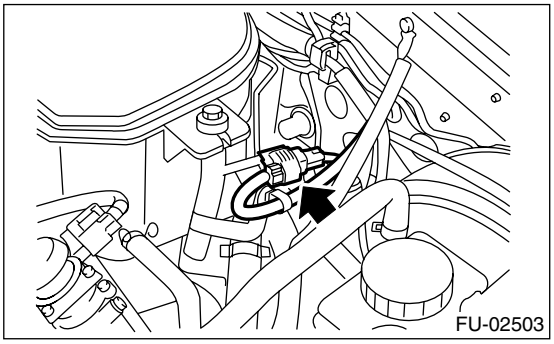

- RH side

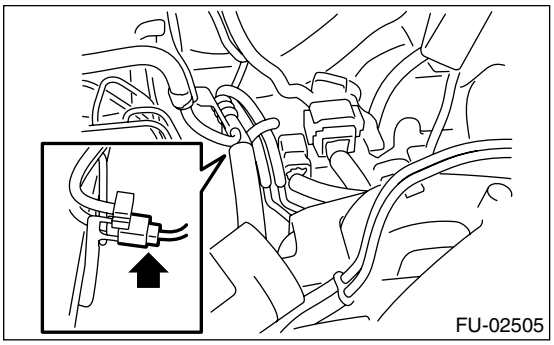

16) Connect the battery ground cable.

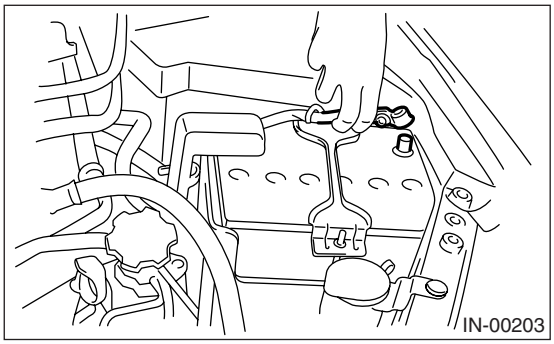

C: INSPECTION

1) Make sure there are no exhaust leaks from connections and welds.
2) Make sure there are no holes or rusting.

3. Rear Exhaust Pipe

A: REMOVAL

1) Separate the rear exhaust pipe from front exhaust pipe.

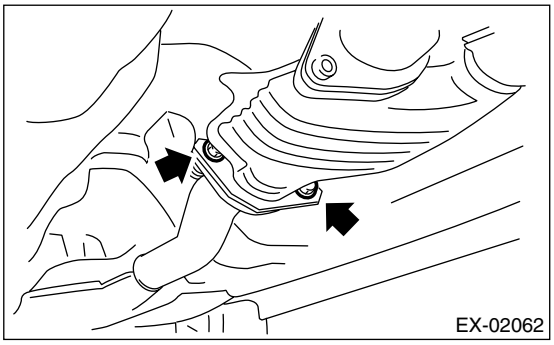

2) Separate the rear exhaust pipe from muffler.

CAUTION:
Be careful not to pull down the rear exhaust pipe.

- LH side

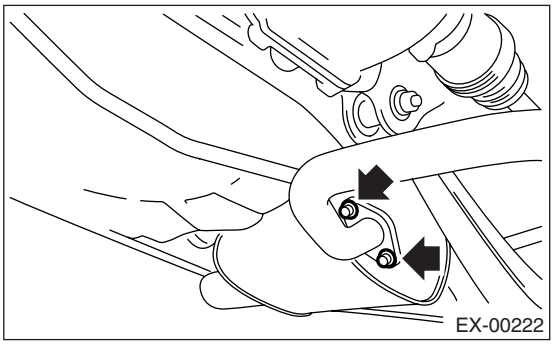

- RH side

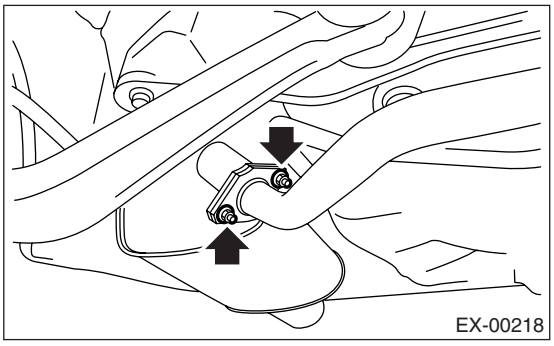

3) Apply a coat of spray type lubricant to mating area of cushion rubber.

4) Remove the rear exhaust pipe bracket from cushion rubber.

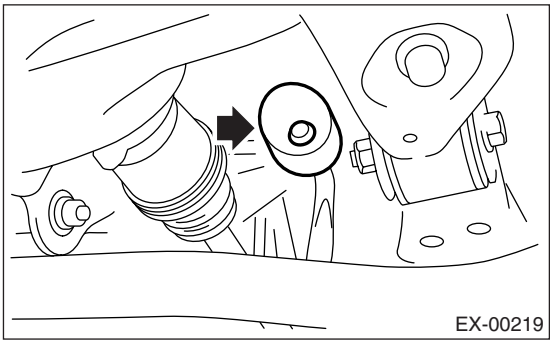

B: INSTALLATION

1) Apply a coat of spray type lubricant to mating area of cushion rubber.
2) Install the rear exhaust pipe bracket to cushion rubber.

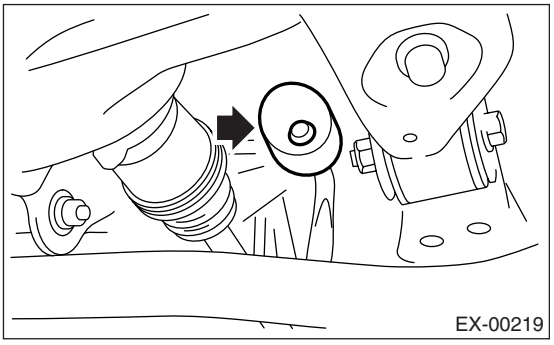

3) Install the rear exhaust pipe to muffler.

NOTE:
Use a new gasket and self-locking nut.

Tightening torque:
48 N·m (4.9 kgf-m, 35.4 ft-lb)

- LH side

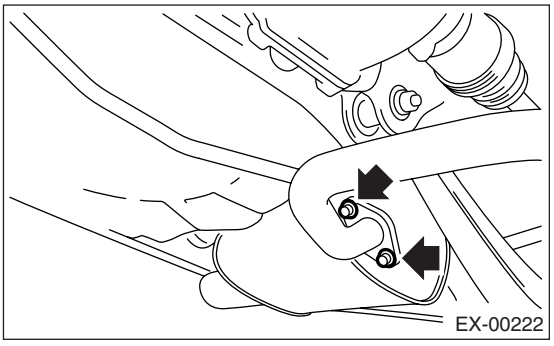

- RH side

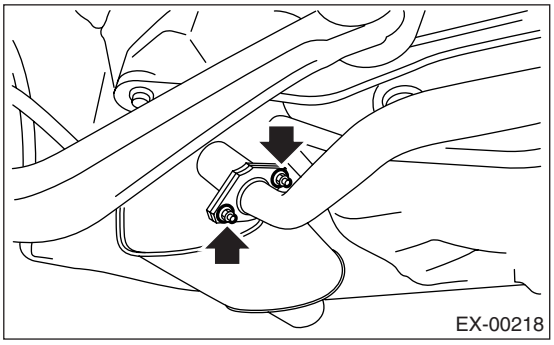

4) Install the rear exhaust pipe to front exhaust pipe.

Tightening torque:
18 N·m (1.8 kgf-m, 13.0 ft-lb)

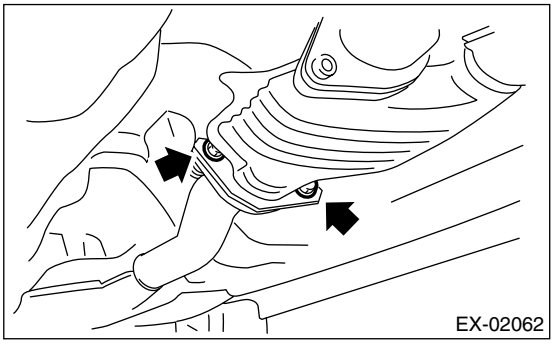

C: INSPECTION

1) Make sure there are no exhaust leaks from connections and welds.
2) Make sure there are no holes or rusting.
3) Make sure the cushion rubber is not worn or cracked.

4. Muffler

A: REMOVAL

1) Separate the muffler from rear exhaust pipe.
- LH side

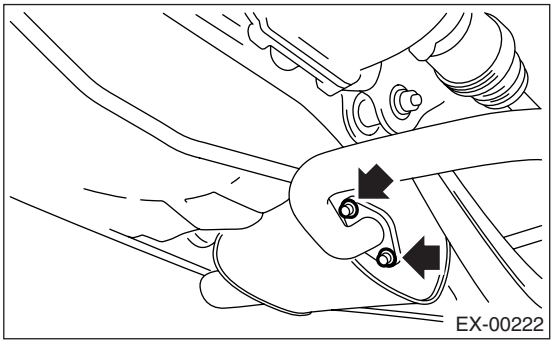

- RH side

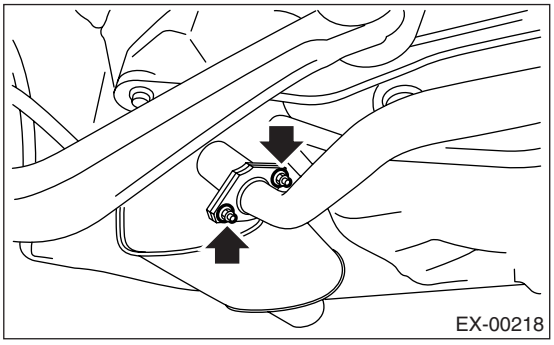

2) Apply a coat of spray type lubricant to mating area of cushion rubber.
- LH side

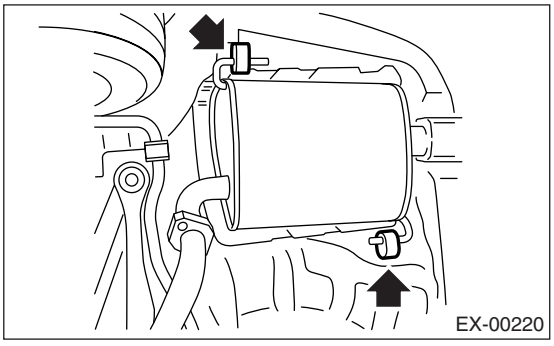

- RH side

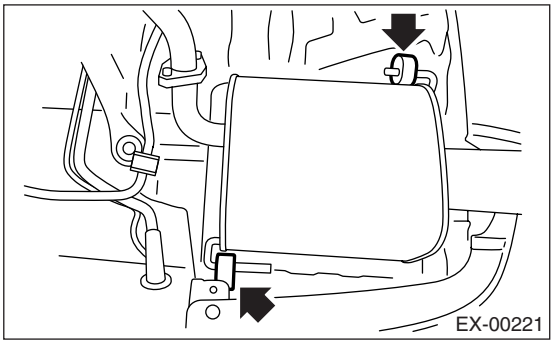

3) Remove the front and rear cushion rubber, and then remove the muffler.

B: INSTALLATION

Install in the reverse order of removal.

NOTE:
Use a new gasket and self-locking nut.

Tightening torque:
48 N·m (4.9 kgf-m, 35.4 ft-lb)

- LH side

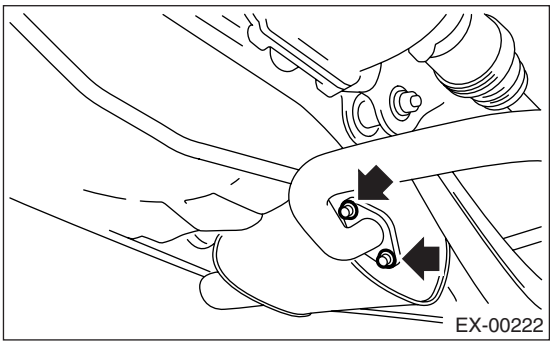

- RH side

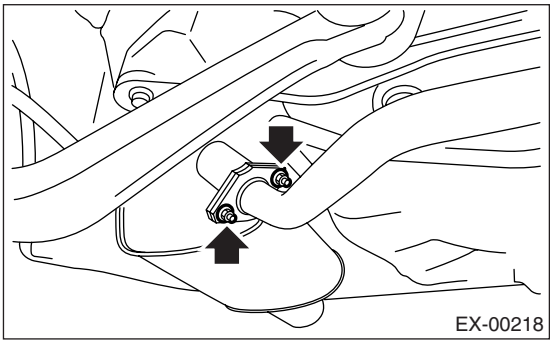

C: INSTALLATION

1) Make sure there are no exhaust leaks from connections and welds.
2) Make sure there are no holes or rusting.
3) Make sure the cushion rubber is not worn or cracked.

COOLING

CO(H4SO U5)

Page
1. General Description 2

1. General Description

A: SPECIFICATION

Specifications for SOHC U5 model are the same as SOHC model. <Ref. to CO(H4SO)-2, General Description.>

LUBRICATION

LU(H4SO U5)

Page
1. General Description 2

1. General Description

A: SPECIFICATION

Specifications for SOHC U5 model are the same as SOHC model. <Ref. to LU(H4SO)-2, General Description.>

SPEED CONTROL SYSTEMS

SP(H4SO U5)

Page

1. General Description 2

1. General Description

A: SPECIFICATION

Specifications for SOHC U5 model are the same as SOHC model. <Ref. to SP(H4SO)-2, General Description.>

IGNITION

IG(H4SO U5)

Page
1. General Description 2

1. General Description

A: SPECIFICATION

Specifications for SOHC U5 model are included in IG(H4SO) section. <Ref. to IG(H4SO)-2, General Description.>

STARTING/CHARGING SYSTEMS

SC(H4SO U5)

Page

1. General Description 2

1. General Description

A: SPECIFICATION

Specifications for SOHC U5 model are the same as SOHC model. <Ref. to SC(H4SO)-2, General Description.>

ENGINE (DIAGNOSTICS)

EN(H4SO U5)(diag)

		Page
1.	Basic Diagnostic Procedure	2
2.	Check List for Interview	3
3.	General Description	5
4.	Electrical Component Location	9
5.	Engine Control Module (ECM) I/O Signal	19
6.	Engine Condition Data	23
7.	Data Link Connector	24
8.	General Scan Tool	25
9.	Subaru Select Monitor	28
10.	Read Diagnostic Trouble Code (DTC)	36
11.	Inspection Mode	37
12.	Drive Cycle	42
13.	Clear Memory Mode	46
14.	Compulsory Valve Operation Check Mode	47
15.	Malfunction Indicator Light	49
16.	Diagnostics for Engine Starting Failure	58
17.	List of Diagnostic Trouble Code (DTC)	73
18.	Diagnostic Procedure with Diagnostic Trouble Code (DTC)	81
19.	General Diagnostic Table	371

1. Basic Diagnostic Procedure

A: PROCEDURE

1. ENGINE

	Step	Check	Yes	No
1	**CHECK ENGINE START FAILURE.** 1) Ask the customer when and how the trouble occurred using the interview check list. <Ref. to EN(H4SO U5)(diag)-3, CHECK, Check List for Interview.> 2) Start the engine.	Does the engine start?	Go to step **2.**	Inspection using "Diagnostics for Engine Starting Failure". <Ref. to EN(H4SO U5)(diag)-58, Diagnostics for Engine Starting Failure.>
2	**CHECK ILLUMINATION OF MALFUNCTION INDICATOR LIGHT.**	Does the malfunction indicator light illuminate?	Go to step **3.**	Inspection using "General Diagnostic Table". <Ref. to EN(H4SO U5)(diag)-371, INSPECTION, General Diagnostic Table.>
3	**CHECK INDICATION OF DTC ON DISPLAY.** 1) Turn the ignition switch to OFF. 2) Connect the Subaru Select Monitor or general scan tool to data link connector. 3) Turn the ignition switch to ON. 4) Read DTC Subaru Select Monitor or general scan tool. NOTE: • Subaru Select Monitor For detailed operation procudure, refer to the "Diagnostic Trouble Code (DTC)". <Ref. to EN(H4SO U5)(diag)-36, Read Diagnostic Trouble Code (DTC).> • General scan tool For detailed operation procedure, refer to the general scan tool instruction manual.	Is DTC displayed on the Subaru Select Monitor or general scan tool?	Record the DTC. Repair the trouble cause. <Ref. to EN(H4SO U5)(diag)-73, List of Diagnostic Trouble Code (DTC).> Go to step **4.**	Repair the related parts. NOTE: If DTC is not shown on display although the engine warning light illuminates, perform the diagnostics of malfunction indicator light circuit or combination meter. <Ref. to EN(H4SO U5)(diag)-49, Malfunction Indicator Light.>
4	**PERFORM DIAGNOSIS.** 1) Perform the clear memory mode. <Ref. to EN(H4SO U5)(diag)-46, Clear Memory Mode.> 2) Perform the inspection mode. <Ref. to EN(H4SO U5)(diag)-37, Inspection Mode.>	Is DTC displayed on the Subaru Select Monitor or general scan tool?	Check on "Diagnostic Chart with Diagnostic Trouble Code (DTC)" <Ref. to EN(H4SO U5)(diag)-81, Diagnostic Procedure with Diagnostic Trouble Code (DTC).>	Finish the diagnosis.

2. Check List for Interview

A: CHECK

1. CHECK LIST No. 1

Check the following items when problem has occurred.

NOTE:
Use copies of this page for interviewing customers.

Customer's name		Engine No.	
Date of sale		Fuel brand	
Date of repair		Odometer reading	km
V.I.N.			miles
Weather	❑ Fine ❑ Cloudy ❑ Rainy ❑ Snowy ❑ Various/Others:		
Ambient air temperature	°C (°F)		
	❑ Hot ❑ Warm ❑ Cool ❑ Cold		
Place	❑ Highway ❑ Suburbs ❑ Inner city ❑ Uphill ❑ Downhill ❑ Rough road ❑ Others:		
Engine temperature	❑ Cold ❑ Warming-up ❑ After warming-up ❑ Any temperature ❑ Others:		
Engine speed	rpm		
Vehicle speed	km/h (MPH)		
Driving conditions	❑ Not affected ❑ At starting ❑ While idling ❑ At racing ❑ While accelerating ❑ While cruising ❑ While decelerating ❑ While turning (RH/LH)		
Headlight	❑ ON / ❑ OFF	Rear defogger	❑ ON / ❑ OFF
Blower	❑ ON / ❑ OFF	Audio	❑ ON / ❑ OFF
A/C compressor	❑ ON / ❑ OFF	Car phone	❑ ON / ❑ OFF
Radiator fan	❑ ON / ❑ OFF		
Front wiper	❑ ON / ❑ OFF		
Rear wiper	❑ ON / ❑ OFF		

2. CHECK LIST No. 2

Check the following items about the vehicle's state when malfunction indicator light turns on.

NOTE:
Use copies of this page for interviewing customers.

a) Other warning lights or indicators turn on. ❑ Yes / ❑ No
❑ Low fuel warning light ❑ Charge indicator light ❑ AT diagnostic indicator light ❑ ABS warning light ❑ Oil pressure indicator light
b) Fuel level
• Lack of gasoline: ❑ Yes / ❑ No • Indicator position of fuel gauge: • Experienced running out of fuel: ❑ Yes / ❑ No
c) Intentional connecting or disconnecting of harness connectors or spark plug cords: ❑ Yes / ❑ No
• What:
d) Intentional connecting or disconnecting of hoses: ❑ Yes / ❑ No
• What:
e) Installing of other parts except genuine parts: ❑ Yes / ❑ No
• What: • Where:
f) Occurrence of noise: ❑ Yes / ❑ No
• From where: • What kind:
g) Occurrence of smell: ❑ Yes / ❑ No
• From where: • What kind:
h) Intrusion of water into engine compartment or passenger compartment: ❑ Yes / ❑ No
i) Troubles occurred
❑ Engine does not start. ❑ Engine stalls during idling. ❑ Engine stalls while driving. ❑ Engine speed decreases. ❑ Engine speed does not decrease. ❑ Rough idling ❑ Poor acceleration ❑ Back fire ❑ After fire ❑ Does not shift. ❑ Excessive shift shock

3. General Description

A: CAUTION

1) Airbag system wiring harness is routed near the ECM, main relay and fuel pump relay.

CAUTION:
• All airbag system wiring harnesses and connectors are colored yellow. Do not use electrical test equipment on these circuits.
• Be careful not to damage the airbag system wiring harness when servicing the ECM, TCM, main relay and fuel pump relay.

2) Never connect the battery in reverse polarity.
• The ECM will be destroyed instantly.
• The fuel injector and other parts will be damaged.

3) Do not disconnect the battery terminals while the engine is running.
A large counter electromotive force will be generated in the generator, and this voltage may damage electronic parts such as ECM, etc.

4) Before disconnecting the connectors of each sensor and ECM, be sure to turn the ignition switch to OFF. Perform the inspection mode after connecting the connectors.

5) Poor contact has been identified as a primary cause of this problem. Measure the voltage or resistance of individual sensor or all electrical control modules using a tapered pin with a diameter of less than 0.64 mm (0.025 in). Do not insert the pin more than 5 mm (0.20 in) into the part.

6) Remove the ECM from the located position after disconnecting two cables on battery.
Otherwise, the ECM may be damaged.

CAUTION:
When replacing the ECM, be careful not to use the wrong spec. ECM to avoid any damage on the fuel injection system.

7) Connectors of each sensor in the engine compartment and the harness connectors on the engine side and body side are all designed to be waterproof. However, it is still necessary to take care not to allow water to get into the connectors when washing the vehicle, or when servicing the vehicle on a rainy day.

8) Use ECM mounting stud bolts as the grounding point to body when measuring voltage and resistance inside the passenger compartment.

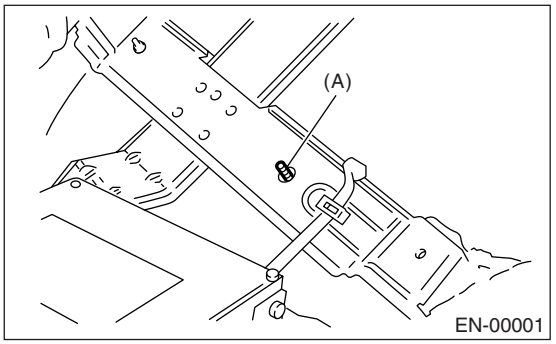

(A) Stud bolt

9) Use engine grounding terminal or engine as the grounding point to body when measuring voltage and resistance in the engine compartment.
• LH side

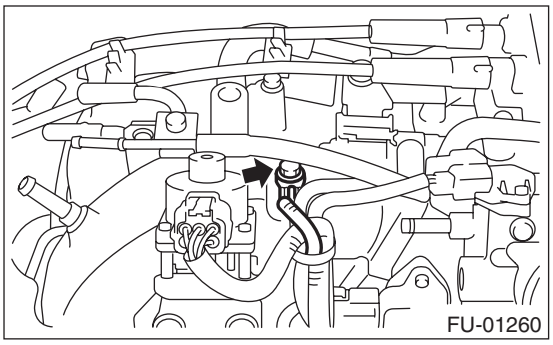

• RH side

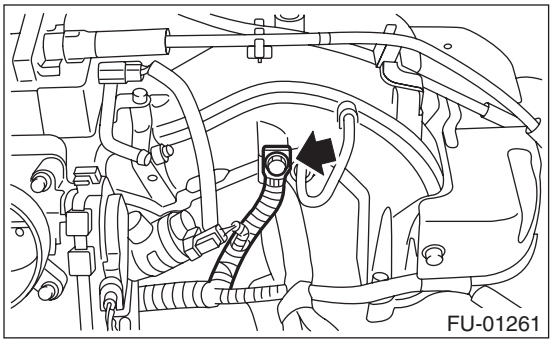

10) Use TCM mounting stud bolts as the grounding point to body when measuring voltage and resistance inside the passenger compartment.

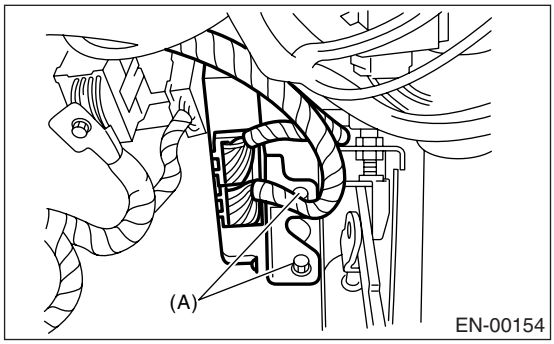

(A) Stud bolt

11) Every MFI-related part is a precision part. Do not drop them.
12) Observe the following cautions when installing a radio in MFI equipped models.

CAUTION:
• The antenna must be kept as far apart as possible from the control unit. (The ECM is located under the steering column, inside of instrument panel lower trim panel.)
• The antenna feeder must be placed as far apart as possible from the ECM and MFI harness.
• Carefully adjust the antenna for correct matching.
• When mounting a large power type radio, pay special attention to the three items mentioned above.
• Incorrect installation of the radio may affect the operation of ECM.

13) Before disconnecting the fuel hose, disconnect the fuel pump connector and crank the engine for more than five seconds to release pressure in the fuel system. If engine starts during this operation, run it until it stops.
14) Problems in the electronic-controlled automatic transmission may be caused by failure of the engine, the electronic control system, the transmission proper, or by a combination of these. These three causes must be distinguished clearly when performing diagnostics.
15) Diagnostics should be conducted by rotating with simple, easy operations and proceeding to complicated, difficult operations. The most important thing in diagnostics is to understand the customer's complaint, and distinguish between the three causes.
16) For AT models, do not hold the stall for more than five seconds. (from closed throttle, fully open throttle to stall engine speed.)
17) On the model with ABS, when performing driving test in jacked-up or lifted-up position, sometimes the warning light may be lit, but this is not a malfunction of the system. The reason for this is the speed difference between the front and rear wheels. After diagnosis of engine control system, perform the ABS memory clear procedure of self-diagnosis function.

B: INSPECTION

Before performing diagnostics, check the following items which might affect engine problems.

1. BATTERY

1) Measure battery voltage and specific gravity of electrolyte.

Standard voltage: 12 V

Specific gravity: Above 1.260

2) Check the condition of the main and other fuses, and harnesses and connectors. Also check for proper grounding.

2. ENGINE GROUND

Make sure the engine grounding terminal is properly connected to engine.

- LH side

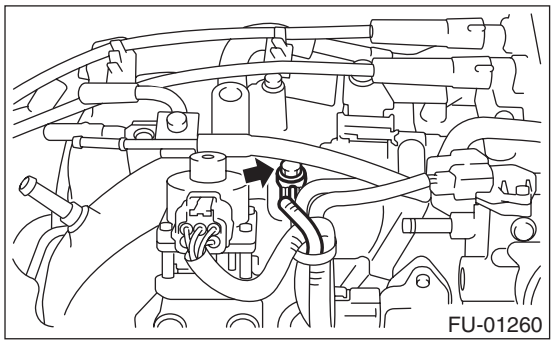

- RH side

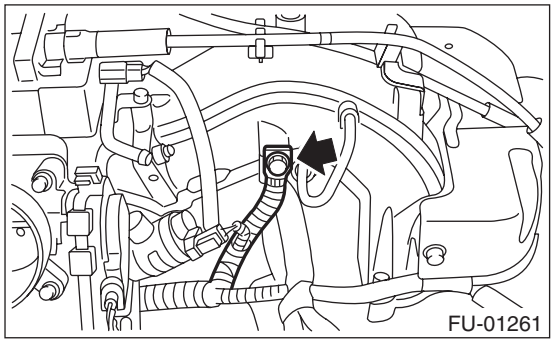

C: NOTE

1. DESCRIPTION

• The on-board diagnostics (OBD) system detects and indicates a fault in various inputs and outputs of the complex electronic control. Malfunction indicator light in the combination meter indicates occurrence of a fault or trouble.
• Further, against such a failure or sensors as may disable the drive, the fail-safe function is provided to ensure the minimal driveability.
• The OBD system incorporated with the vehicles within this engine family complies with OBD-II Regulations. The OBD system monitors the components and the system malfunction listed in Engine Section which affects on emissions.
• When the system decides that a malfunction occurs, malfunction indicator light illuminates. At the same time of the malfunction indicator light illumination or blinking, a DTC and a freeze frame engine conditions are stored into on-board computer.
• The OBD system stores freeze frame engine condition data (engine load, engine coolant temperature, fuel trim, engine speed and vehicle speed, etc.) into on-board computer when it detects a malfunction first.
• If the OBD system detects the various malfunctions including the fault of fuel trim or misfire, the OBD system first stores freeze frame engine conditions about the fuel trim or misfire.
• When the malfunction does not occur again for three consecutive driving cycles, malfunction indicator light is turned off, but DTC remains at on-board computer.
• When troubleshooting the vehicle which complies with OBD-II Regulations, connect the Subaru Select Monitor or general scan tool to the vehicle.

2. ENGINE AND EMISSION CONTROL SYSTEM

• The Multipoint Fuel Injection (MFI) system is a system that supplies the optimum air-fuel mixture to the engine for all the various operating conditions through the use of the latest electronic technology.
With this system fuel, which is pressurized at a constant pressure, is injected into the intake air passage of the cylinder head. The injection quantity of fuel is controlled by an intermittent injection system where the electro-magnetic injection valve (fuel injector) opens only for a short period of time, depending on the quantity of air required for one cycle of operation. In actual operation, the injection quantity is determined by the duration of an electric pulse applied to the fuel injector and this permits simple, yet highly precise metering of the fuel.
• Further, all the operating conditions of the engine are converted into electric signals, and this results in additional features of the system, such as large improved adaptability, easier addition of compensating element, etc.
The MFI system also has the following features:
- Reduced emission of harmful exhaust gases.
- Reduction in fuel consumption.
- Increased engine output.
- Superior acceleration and deceleration.
- Superior startability and warm-up performance in cold weather since compensation is made for engine coolant and intake air temperature.

D: PREPARATION TOOL

ILLUSTRATION	TOOL NUMBER	DESCRIPTION	REMARKS
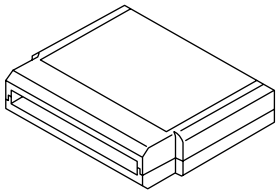 ST24082AA260	24082AA260	CARTRIDGE	Troubleshooting for electrical system.
ST22771AA030	22771AA030	SUBARU SELECT MONITOR KIT	Troubleshooting for electrical system.

4. Electrical Component Location

A: LOCATION

1. ENGINE

- Control module

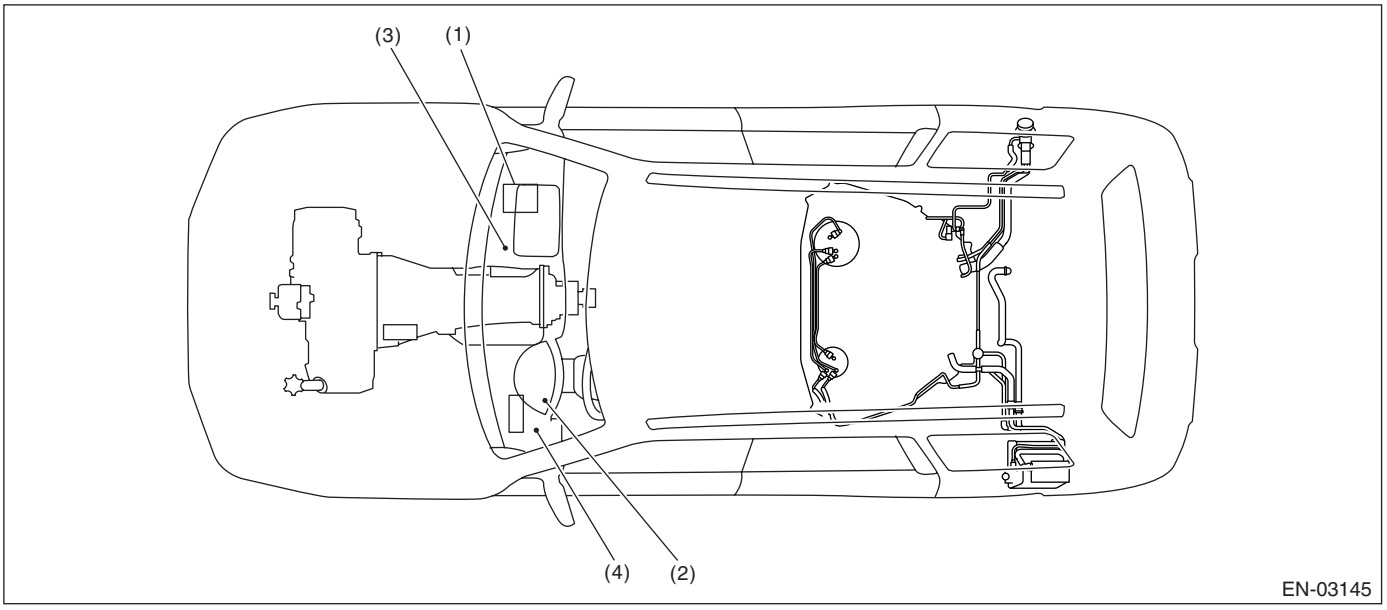

(1) Engine control module (ECM)
(2) Malfunction indicator light
(3) Test mode connector
(4) Data link connector

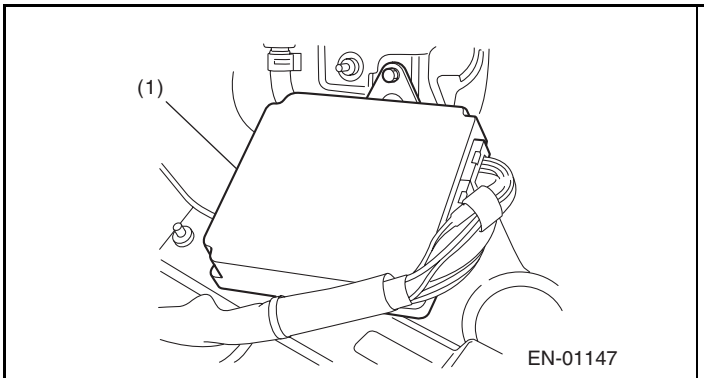

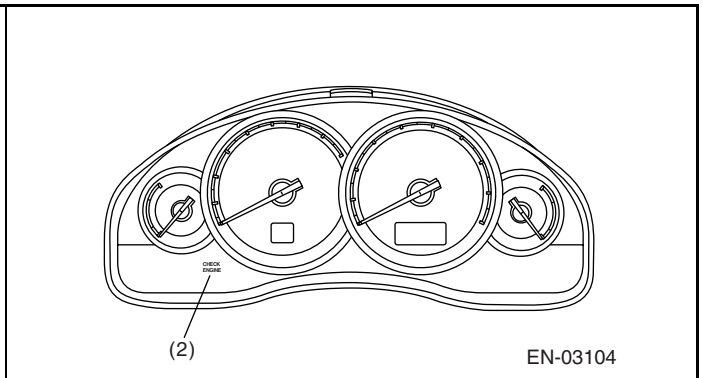

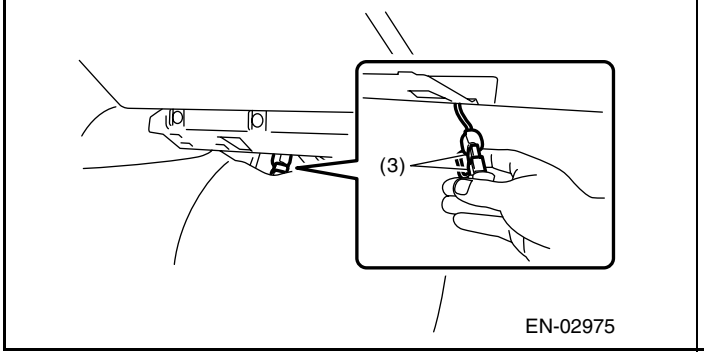

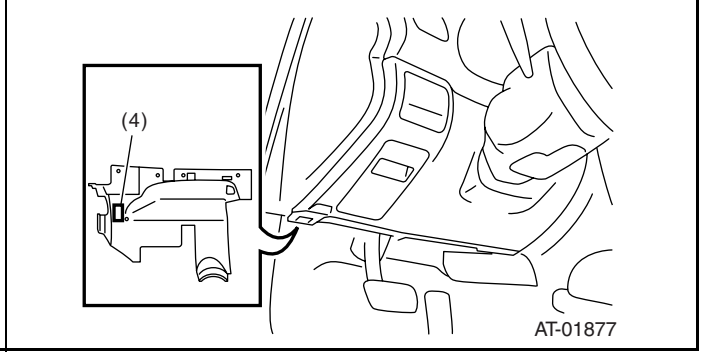

- Sensor

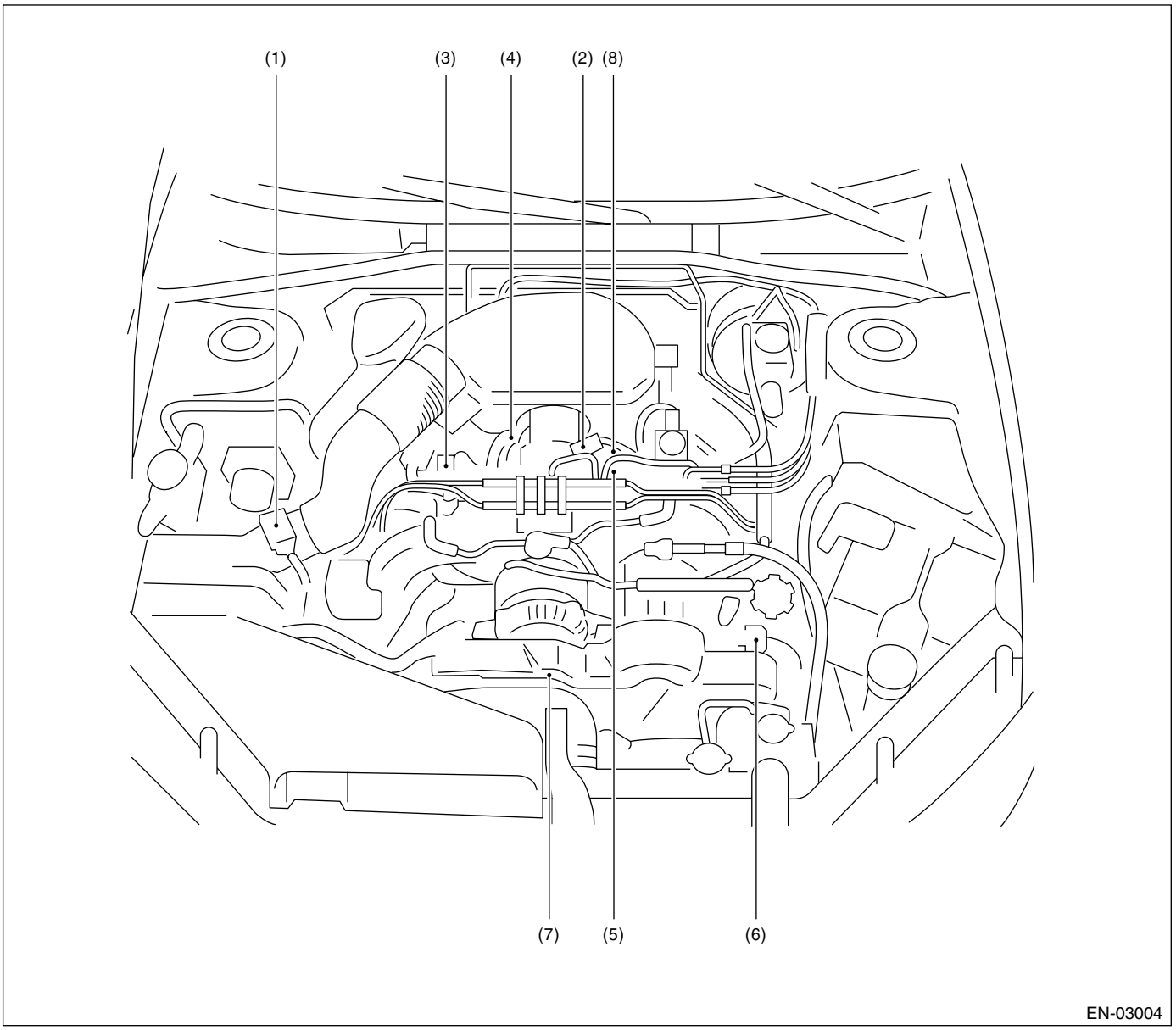

(1) Mass air flow and intake air temperature sensor
(2) Manifold absolute pressure sensor
(3) Engine coolant temperature sensor
(4) Electronic throttle control
(5) Knock sensor
(6) Camshaft position sensor
(7) Crankshaft position sensor
(8) Tumble generator valve position sensor

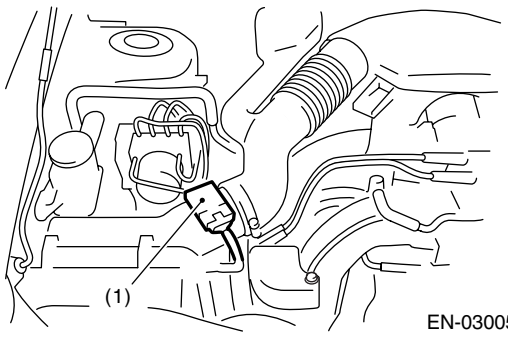

EN-03005

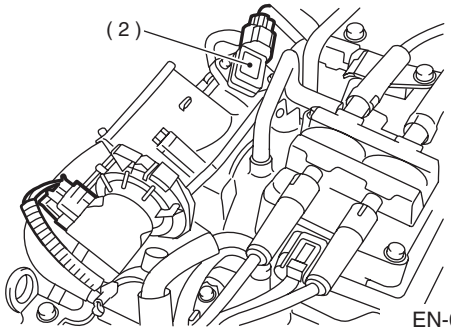

EN-02223

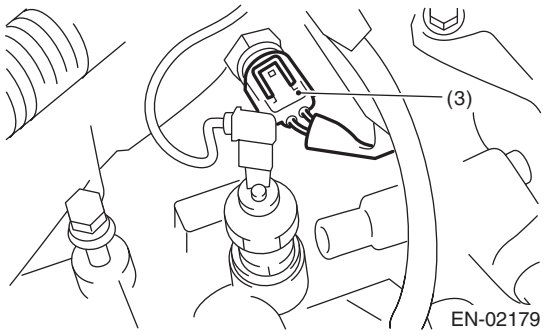

EN-02179

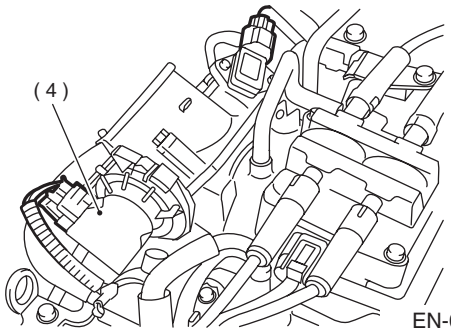

EN-02224

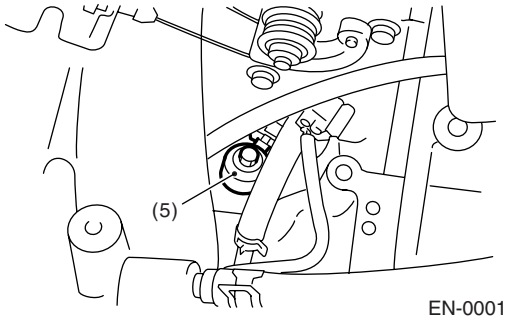

EN-00010

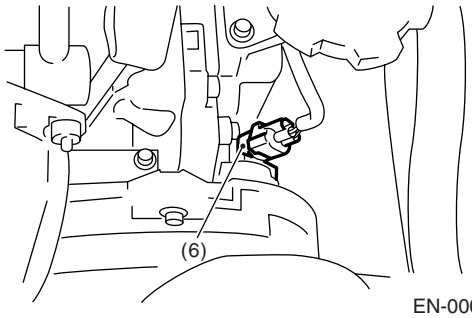

EN-00011

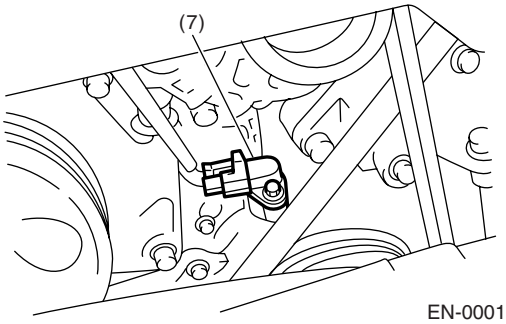

EN-00012

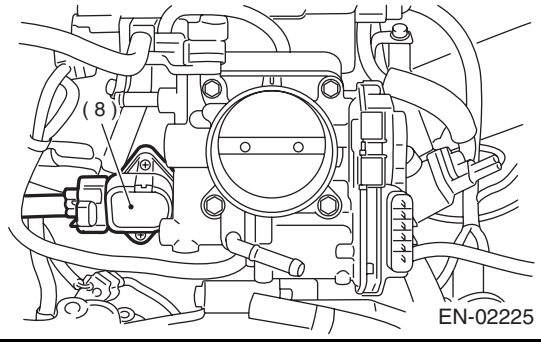

EN-02225

Electrical Component Location

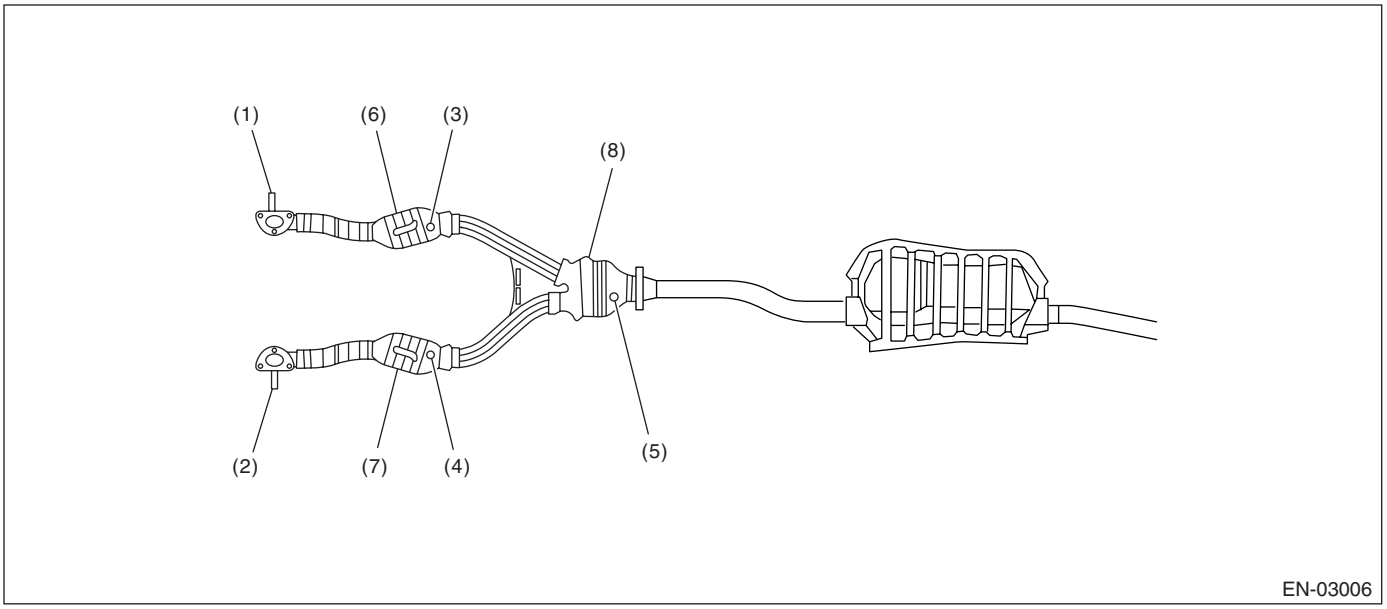

(1) Front oxygen (A/F) sensor RH
(2) Front oxygen (A/F) sensor LH
(3) Front oxygen sensor RH
(4) Front oxygen sensor LH
(5) Rear oxygen sensor
(6) Front catalytic converter RH
(7) Front catalytic converter LH
(8) Rear catalytic converter

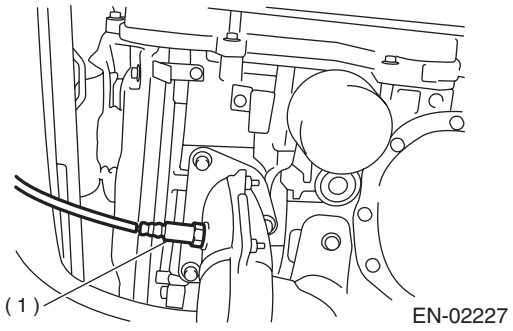

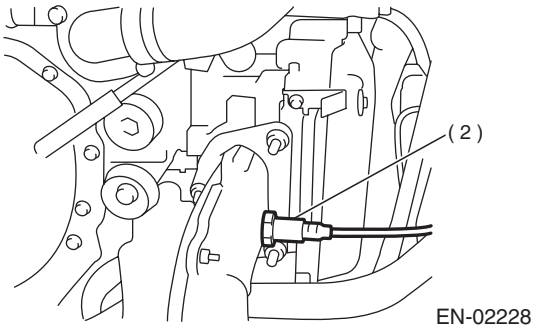

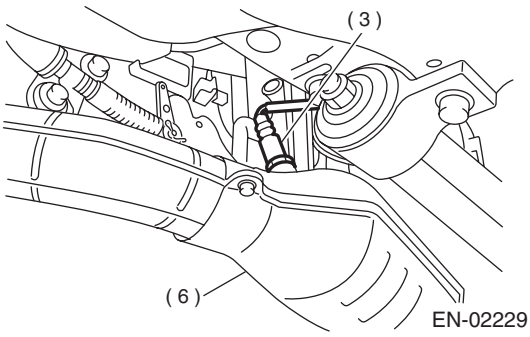

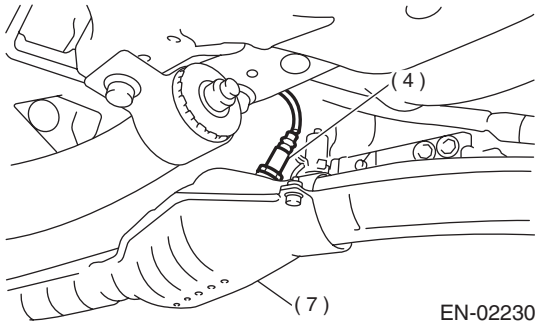

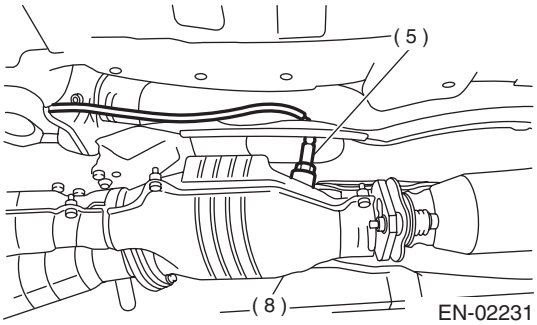

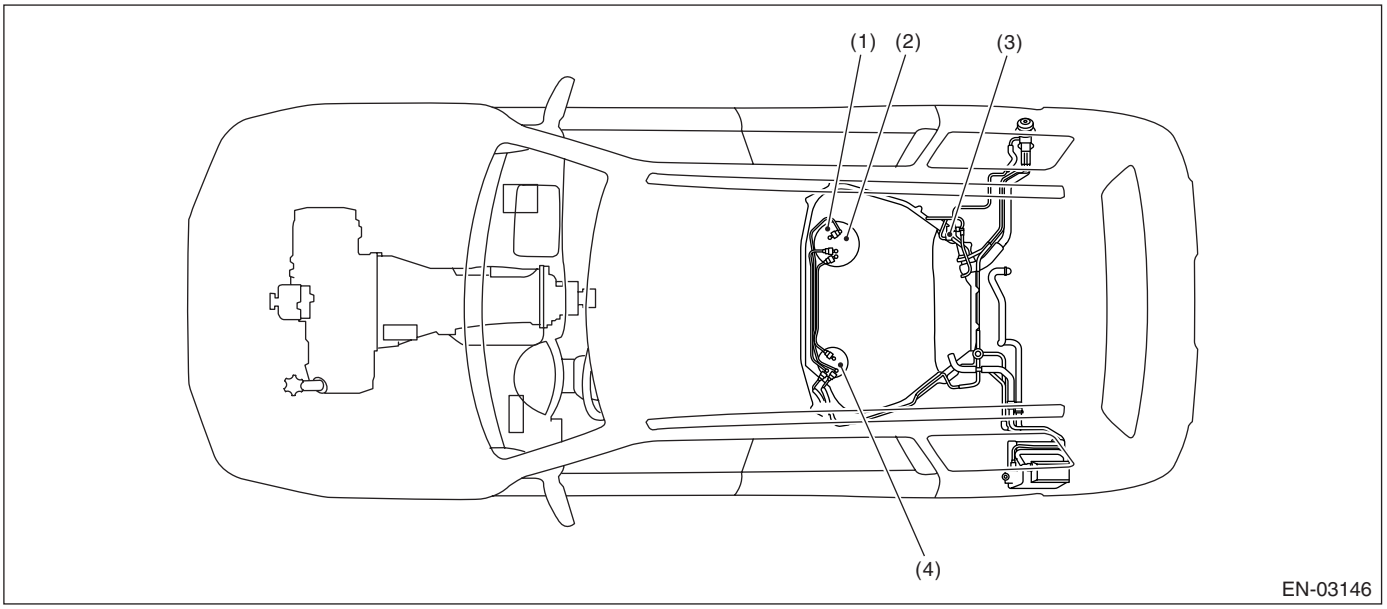

(1) Fuel level sensor
(2) Fuel temperature sensor
(3) Fuel tank pressure sensor
(4) Fuel sub level sensor

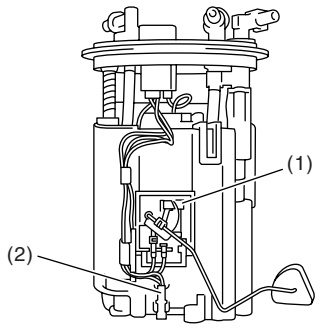

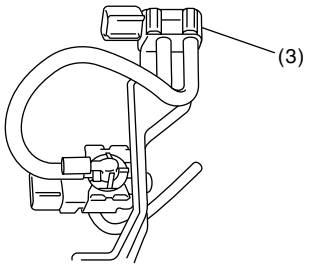

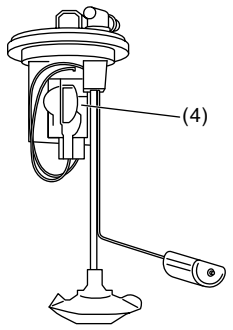

EN-03132

- Solenoid valve, actuator, emission control system parts and ignition system parts

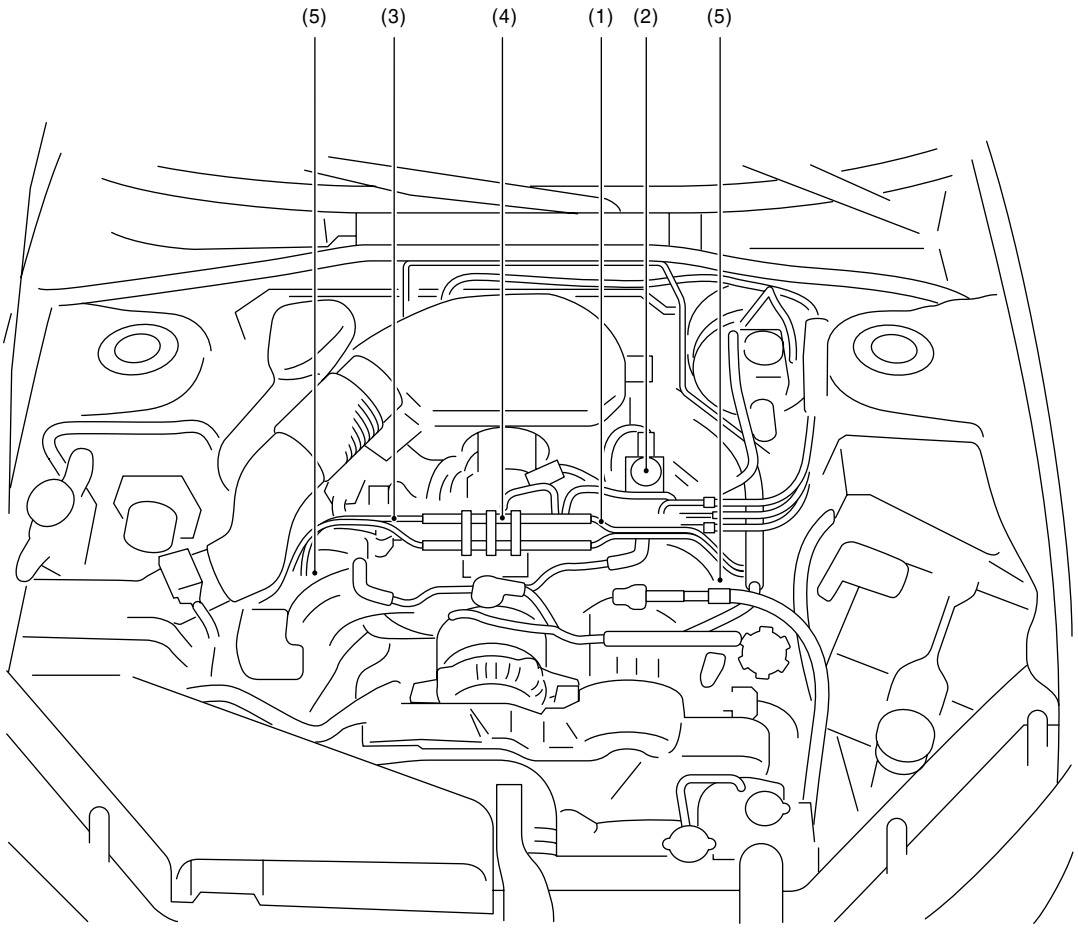

EN-03007

(1) Purge control solenoid valve
(2) EGR Valve
(3) Tumble generator valve actuator
(4) Ignition coil & ignitor ASSY
(5) Fuel injector

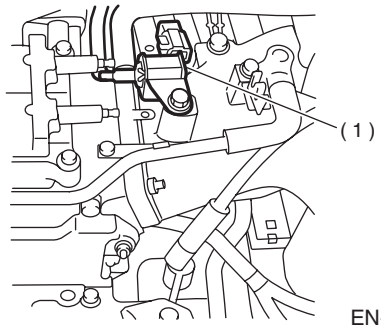

EN-02235

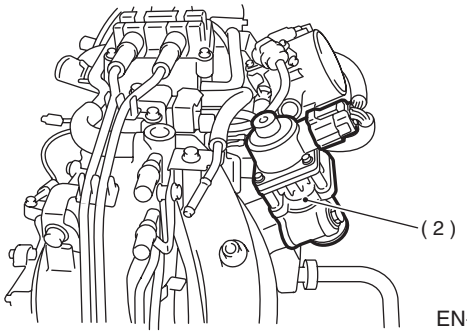

EN-02236

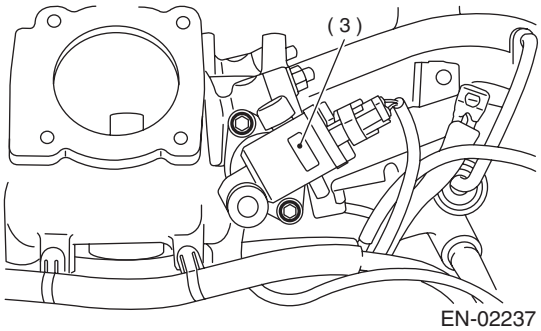

EN-02237

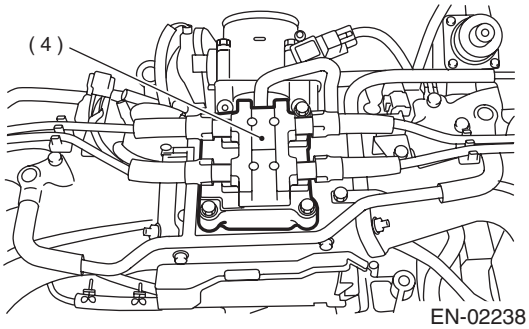

EN-02238

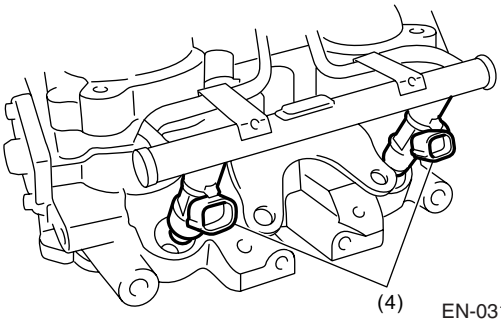

EN-03106

Electrical Component Location

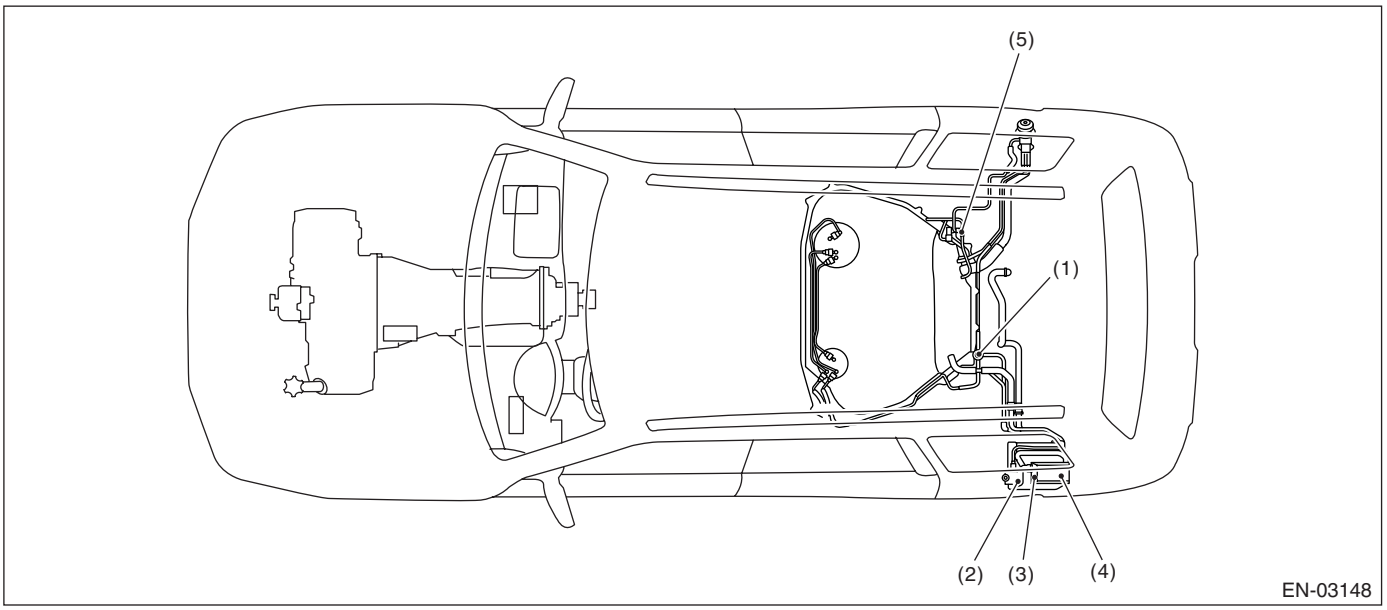

(1) Pressure control solenoid valve
(2) Canister
(3) Drain valve
(4) Drain filter
(5) Fuel tank sensor control valve

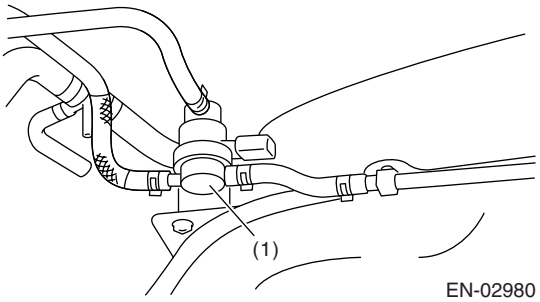

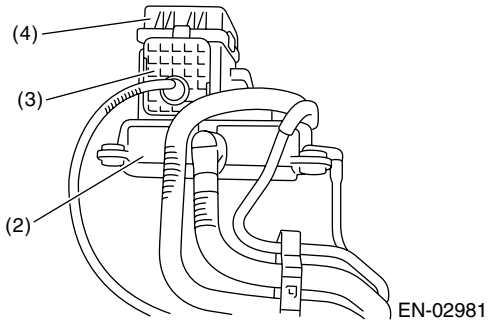

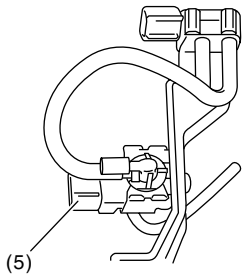

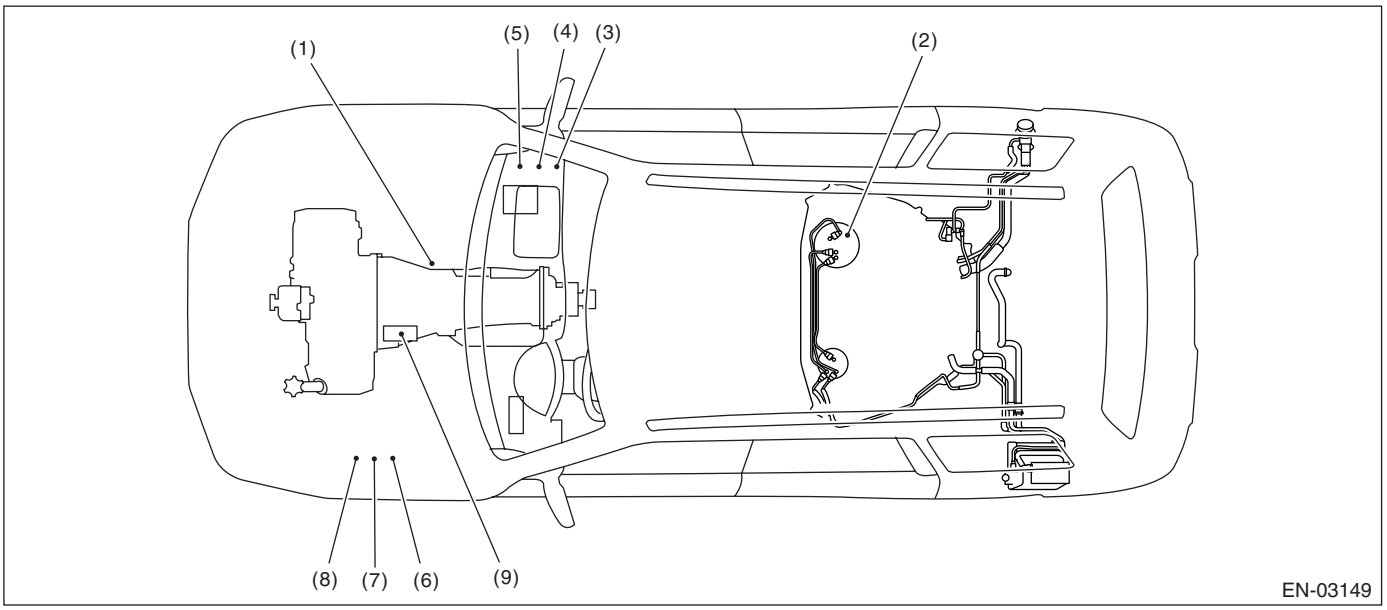

(1) Inhibitor switch
(2) Fuel pump
(3) Main relay
(4) Fuel pump relay
(5) Electronic throttle control relay
(6) Radiator main fan relay 1
(7) Radiator sub fan relay
(8) Radiator main fan relay 2
(9) Starter

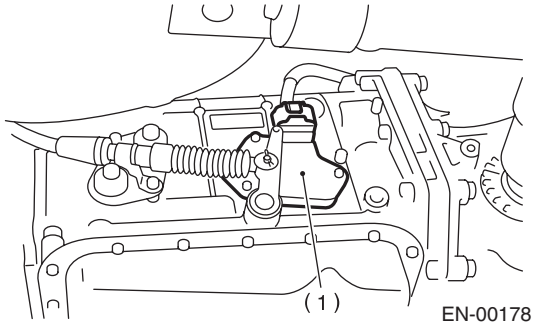

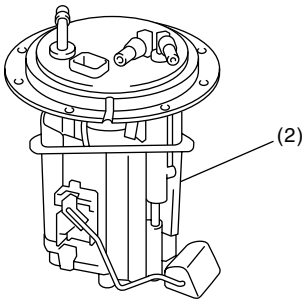

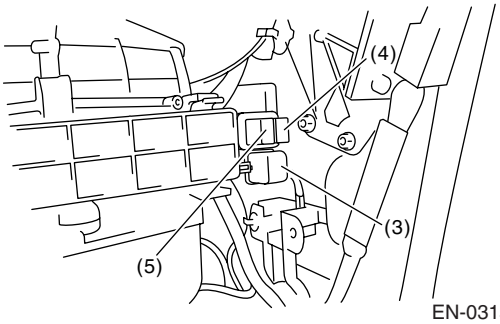

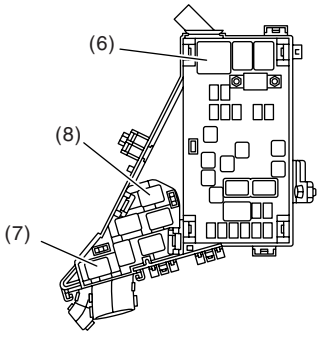

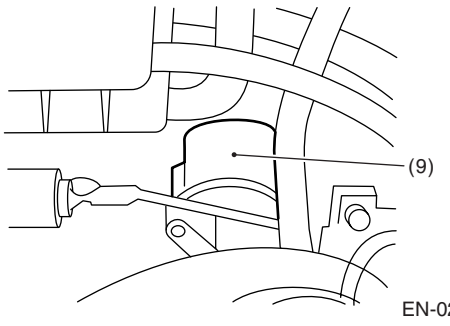
(9)
EN-02096

5. Engine Control Module (ECM) I/O Signal

A: ELECTRICAL SPECIFICATION

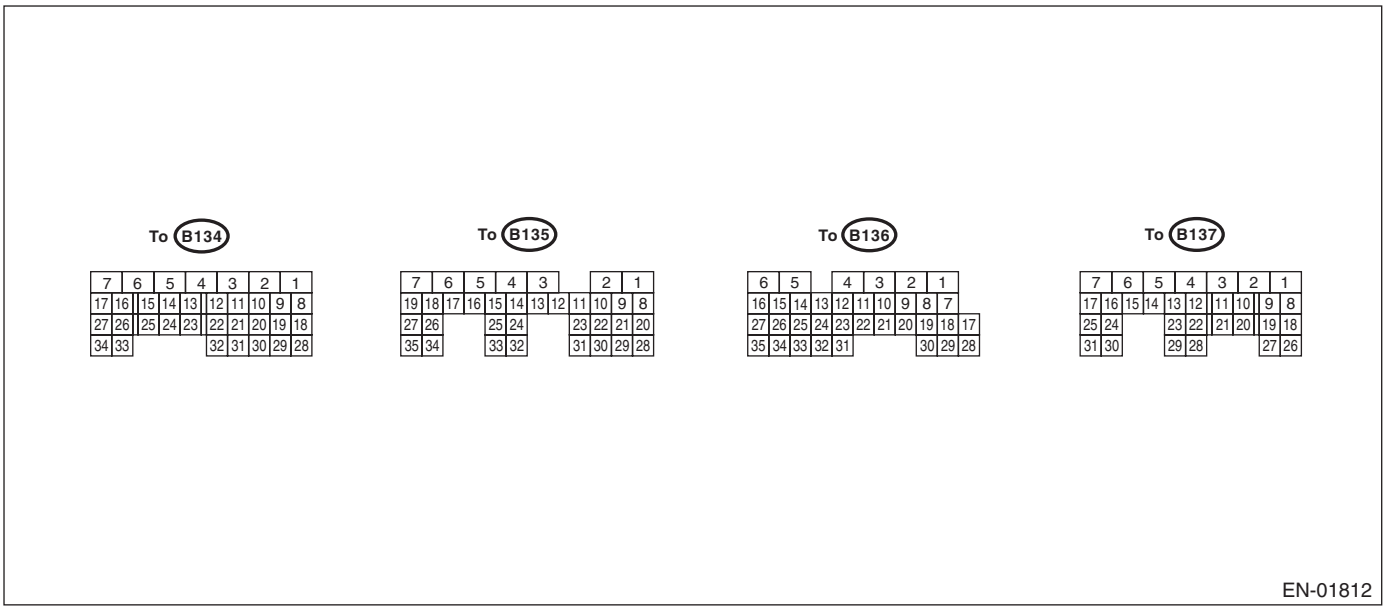

DESCRIPTION		Connector No.	Terminal No.	Signal (V)		NOTE
				Ignition SW ON (engine OFF)	Engine ON (idling)	
Crankshaft position sensor	Signal (+)	B135	10	0	–7 — +7	Waveform
	Signal (–)	B135	22	0	0	—
	Shield	B135	31	0	0	—
Camshaft position sensor	Signal (+)	B135	11	0	–7 — +7	Waveform
	Signal (–)	B135	23	0	0	—
	Shield	B135	31	0	0	—
Electronic throttle control	Main	B136	18	0.64 — 0.72 Fully opens: 3.96	0.64 — 0.72 (After engine is warmed-up.)	Fully closed: 0.6 Fully open: 3.96
	Sub	B136	29	1.51 — 1.58 Fully opens: 4.17	1.51 — 1.58 (After engine is warmed-up.)	Fully closed: 1.48 Fully open: 4.17
Electronic throttle control motor (+)		B137	5	Duty waveform	Duty waveform	Drive frequency: 500 Hz
Electronic throttle control motor (–)		B137	4	Duty waveform	Duty waveform	Drive frequency: 500 Hz
Electronic throttle control motor power supply		B137	6	10 — 13	13 — 14	—
Electronic throttle control motor relay		B135	35	ON: 0 OFF: 10 — 13	ON: 0 OFF: 13 — 14	When ignition switch is turned to ON: ON
Accelerator position sensor	Main	B136	17	Fully closed: 1 Fully opens: 3.3	Fully closed: 1 Fully opens: 3.3	—
	Power supply	B136	15	5	5	—
	Ground	B136	34	0	0	—
	Sub	B136	28	Fully closed: 1 Fully opens: 3.3	Fully closed: 1 Fully opens: 3.3	—
Front oxygen (A/F) sensor RH	Signal (+)	B134	33	—	2.6 — 3.0	—
	Signal (–)	B134	26	—	2.2 — 2.6	—
	Shield	B134	25	0	0	

Engine Control Module (ECM) I/O Signal

DESCRIPTION		Connector No.	Terminal No.	Signal (V)		NOTE
				Ignition SW ON (engine OFF)	Engine ON (idling)	
Front oxygen (A/F) sensor heater RH	Signal 1	B134	3	—	0 or 13 — 14	Duty waveform
	Signal 2	B134	2	—	0 or 13 — 14	Duty waveform
Front oxygen (A/F) sensor LH	Signal (+)	B134	34	—	2.6 — 3.0	—
	Signal (–)	B134	27	—	2.2 — 2.6	—
	Shield	B134	25	0	0	
Front oxygen (A/F) sensor heater LH	Signal 1	B134	1	—	0 or 13 — 14	Duty waveform
	Signal 2	B135	7	—	0 or 13 — 14	Duty waveform
Front oxygen sensor RH	Signal	B136	24	0	0 — 0.9	—
	Shield	B137	31	0	0	—
Front oxygen sensor heater RH signal		B136	2	—	0 or 13 — 14	Duty waveform
Front oxygen sensor LH	Signal	B137	25	0	0 — 0.9	—
	Shield	B137	31	0	0	—
Front oxygen sensor heater LH signal		B135	3	—	0 or 13 — 14	Duty waveform
Rear oxygen sensor	Signal	B137	24	0	0 — 0.9	—
	Shield	B137	31	0	0	—
Rear oxygen sensor heater signal		B135	2	—	0 or 13 — 14	Duty waveform
GND (Front oxygen (A/F) sensor heater RH 1)		B134	7	0	0	—
GND (Front oxygen (A/F) sensor heater RH 2)		B134	6	0	0	—
GND (Front oxygen (A/F) sensor heater LH 1)		B134	5	0	0	—
GND (Front oxygen (A/F) sensor heater LH 2)		B134	4	0	0	—
Engine coolant temperature sensor		B136	14	1.0 — 1.4	1.0 — 1.4	After engine is warmed-up.
Tumble generator valve (open)		B134	19	0 or 10 — 13	0 or 13 — 14	Duty waveform
Tumble generator valve (close)		B134	18	0 or 10 — 13	0 or 13 — 14	Duty waveform
Tumble generator valve position sensor		B136	27	Fully open: 0.2 — 1.0 Fully closed: 4.2 — 4.7		—
Starter switch		B137	8	0	0	Cranking: 8 — 14
Starter relay		B135	32	ON: 0 OFF: 10 — 13	ON: 0 OFF: 13 — 14	—
A/C switch		B137	16	ON: 10 — 13 OFF: 0	ON: 13 — 14 OFF: 0	—
Ignition switch		B137	15	10 — 13	13 — 14	—
Neutral position switch	AT	B137	9	ON: 0 OFF: 12±0.5		Switch is ON when select or shift lever is shifted into “P” or “N” range. (AT model)
	MT			ON: 12±0.5 OFF: 0		Switch is ON when select or shift lever is shifted into “N” range. (MT model)
Test mode connector		B137	14	5	5	When connected: 0
Knock sensor	Signal	B136	25	2.8	2.8	—
	Shield	B136	33	0	0	—

DESCRIPTION		Connector No.	Terminal No.	Signal (V)		NOTE
				Ignition SW ON (engine OFF)	Engine ON (idling)	
Back-up power supply		B135	19	10 — 13	13 — 14	Ignition switch “OFF”: 10 — 13
Control module power supply		B135	6	10 — 13	13 — 14	—
		B135	5	10 — 13	13 — 14	—
Sensor power supply		B136	16	5	5	—
Ignition control	1	B135	18	0	1 — 3.4	Waveform
	2	B135	17	0	1 — 3.4	Waveform
Fuel injector	#1	B136	6	10 — 13	1 — 14	Waveform
	#2	B136	5	10 — 13	1 — 14	Waveform
	#3	B136	4	10 — 13	1 — 14	Waveform
	#4	B136	3	10 — 13	1 — 14	Waveform
Fuel pump relay control		B135	26	ON: 0.5 or less OFF: 10 — 13	0.5 or less	—
A/C relay control		B135	33	ON: 0.5 or less OFF: 10 — 13	ON: 0.5 or less OFF: 13 — 14	—
Radiator fan relay 1 control		B134	31	ON: 0.5 or less OFF: 10 — 13	ON: 0.5 or less OFF: 13 — 14	—
Radiator fan relay 2 control		B135	34	ON: 0.5 or less OFF: 10 — 13	ON: 0.5 or less OFF: 13 — 14	—
Self-shutoff control		B137	17	0.5 or less	0.5 or less	—
Malfunction indicator light		B134	17	—	—	Light “ON”: 1 or less Light “OFF”: 10 — 14
Engine speed output		B134	23	—	0 — 13 or more	Waveform
Purge control solenoid valve		B134	14	ON: 1 or less OFF: 10 — 13	ON: 1 or less OFF: 13 — 14	Duty waveform
EGR solenoid valve	Signal A+	B134	11	0 or 10 — 13	0 or 10 — 13	Waveform
	Signal A–	B134	10	0 or 10 — 13	0 or 10 — 13	Waveform
	Signal B+	B134	9	0 or 10 — 13	0 or 10 — 13	Waveform
	Signal B–	B134	8	0 or 10 — 13	0 or 10 — 13	Waveform
Power steering switch		B137	10	ON: 1 or less OFF: 10 — 13	ON: 1 or less OFF: 13 — 14	—
Blower fan switch		B137	13	ON: 0 OFF: 10 — 13	ON: 0 OFF: 13 — 14	—
A/C middle pressure switch		B136	30	ON: 0 OFF: 10 — 13	ON: 0 OFF: 13 — 14	—
Manifold absolute pressure sensor		B136	22	4.0 — 4.8	1.1 — 1.9	—
Air flow sensor	Signal	B136	23	—	0.3 — 4.5	—
	Shield	B136	32	0	0	—
	Ground	B136	31	0	0	—
Intake air temperature sensor		B136	13	3.15 — 3.33	3.15 — 3.33	intake air temperature: 25°C (75°F)
SSM communication line		B137	20	Less than 1←→ More than 4	Less than 1←→ More than 4	—
GND (sensor)		B136	35	0	0	—
GND (injector)		B137	7	0	0	—
GND (ignition system)		B135	12	0	0	—
GND (power supply)		B135	4	0	0	—
		B135	1	0	0	—
GND (control system)		B137	2	0	0	—
		B137	1	0	0	—

Engine Control Module (ECM) I/O Signal

DESCRIPTION	Connector No.	Terminal No.	Signal (V)		NOTE
			Ignition SW ON (engine OFF)	Engine ON (idling)	
GND (Electronic throttle control)	B137	3	0	0	—
Main switch	B136	7	ON: 0 OFF: 5	ON: 0 OFF: 5	—
Clutch switch	B136	10	When clutch pedal is depressed: 0 When clutch pedal is released: 10 — 13	When clutch pedal is depressed: 0 When clutch pedal is released: 13 — 14	—
Brake switch 1	B136	9	When brake pedal is depressed: 0 When brake pedal is released: 10 — 13	When brake pedal is depressed: 0 When brake pedal is released: 13 — 14	—
Brake switch 2	B136	8	When brake pedal is depressed: 10 — 13 When brake pedal is released: 0	When brake pedal is depressed: 13 — 14 When brake pedal is released: 0	—
Cruise control command switch	B136	11	When operating nothing: 3.5 — 4.5 When operating RES/ACC: 2.5 — 3.5 When operating SET/COAST: 0.5 — 1.5 When operating CANCEL: 0 — 0.5	When operating nothing: 3.5 — 4.5 When operating RES/ACC: 2.5 — 3.5 When operating SET/COAST: 0.5 — 1.5 When operating CANCEL: 0 — 0.5	—
Fuel temperature sensor	B136	12	2.5 — 3.8	2.5 — 3.8	Ambient temperature: 25°C (75°F)
Fuel tank pressure sensor	B136	21	2.3 — 2.7	2.3 — 2.7	Value after taking out the fuel filler cap and putting it back.
Fuel tank sensor control solenoid valve	B134	24	ON: 1 or less OFF: 10 — 13	ON: 1 or less OFF: 13 — 14	—
Pressure control solenoid valve	B134	12	ON: 1 or less OFF: 10 — 13	ON: 1 or less OFF: 13 — 14	—
Drain valve	B134	13	ON: 1 or less OFF: 10 — 13	ON: 1 or less OFF: 13 — 14	—
CAN communication line (+)	B137	18	2.5 — 3.5	2.5 — 3.5	Waveform
CAN communication line (–)	B137	26	1.5 — 2.5	1.5 — 3.5	Waveform
AT/MT identification switch	B137	13	0	0	MT model only

6. Engine Condition Data

A: ELECTRICAL SPECIFICATION

Remarks	SPECIFICATION
Engine load	1.9 — 3.9 (%): Idling
	5.7 — 11.5 (%): 2,500 rpm Racing

Measuring condition:
- After engine is warmed-up.
- Gear position is in “N” or “P” range.
- A/C is turned OFF.
- All accessory switches are turned OFF.

7. Data Link Connector

A: NOTE

This connector is used for both general scan tool and Subaru Select Monitor.

CAUTION:
Do not connect any scan tools except for general scan tool and Subaru Select Monitor, because the circuit for Subaru Select Monitor may be damaged.

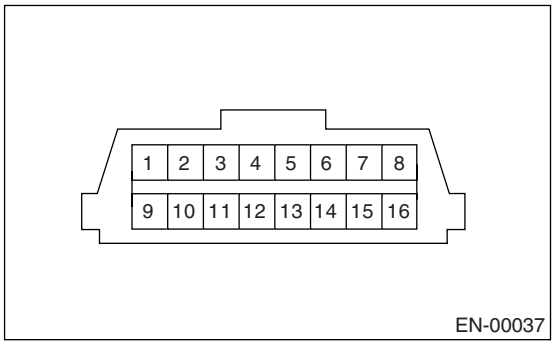

Terminal No.	Remarks	Terminal No.	Remarks
1	Power supply	9	Empty
2	Empty	10	Subaru Select Monitor signal
3	Empty	11	Empty
4	Empty	12	Ground
5	Empty	13	Ground
6	Empty	14	Empty
7	Empty	15	Empty
8	Empty	16	Empty

8. General Scan Tool

A: OPERATION

1. HOW TO USE GENERAL SCAN TOOL

1) Prepare a general scan tool required by SAE J1978.
2) Open the cover and connect the general scan tool to data link connector located in the lower portion of instrument panel (on the driver's side).

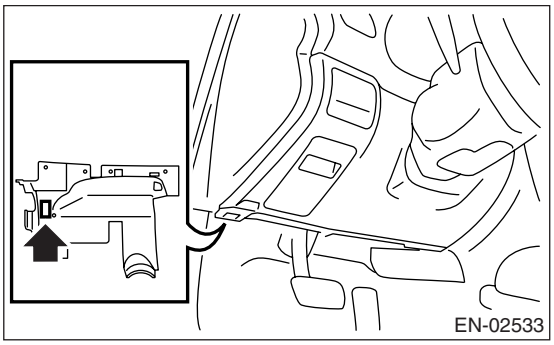

3) Using the general scan tool, call up DTC and freeze frame data.
General scan tool functions consist of:
(1) MODE $01: Current powertrain diagnostic data
(2) MODE $02: Powertrain freeze frame data
(3) MODE $03: Emission-related powertrain DTC
(4) MODE $04: Clear/Reset emission-related diagnostic information
(5) MODE $06: Request on-board monitoring test results for non-continuously monitored systems
(6) MODE $07: Request on-board monitoring test results for continuously monitored systems
(7) MODE $09: Request vehicle information
Read out the data according to repair procedures. (For detailed operation procedure, refer to the operation manual of general scan tool.)

NOTE:
For details concerning DTC, refer to "List of Diagnostic Trouble Code (DTC)". <Ref. to EN(H4SO U5)(diag)-73, List of Diagnostic Trouble Code (DTC).>

2. MODE $01 (CURRENT POWERTRAIN DIAGNOSTIC DATA)

Refer to data denoting the current operating condition of analog input/output, digital input/output and/or the powertrain system.
A list of the support data and PID (Parameter Identification) codes are shown in the following table.

PID	Data	Unit of measure
01	Number of emission-related powertrain DTC and malfunction indicator light status and diagnosis support information	—
03	Fuel system control status	—
04	Calculated engine load value	%
05	Engine coolant temperature	°C
06	Short term fuel trim (Bank 1 Sensor 1)	%
07	Long term fuel trim (Bank 1 Sensor 1)	%
08	Short term fuel trim (Bank 2 Sensor 1)	%
09	Long term fuel trim (Bank 2 Sensor 1)	%
0B	Intake manifold absolute pressure	kPa
0C	Engine revolution	rpm
0D	Vehicle speed	MPH
0E	Ignition timing advance	°
0F	Intake air temperature	°C
10	Air flow rate from mass air flow sensor	g/sec
11	Throttle valve absolute opening angle	%
13	Check whether oxygen sensor is installed.	—
15	Oxygen sensor output voltage and short term fuel trim associated with oxygen sensor (Bank 1 Sensor 2)	V and %
16	Oxygen sensor output voltage and short term fuel trim (Bank 1 Sensor 3)	V and %
19	Oxygen sensor output voltage and short term fuel trim (Bank 2 Sensor 2)	V and %
1C	Supporting OBD system	—
24	A/F value and front oxygen (A/F) sensor output voltage (Bank 1 Sensor 1)	— and V
28	A/F value and front oxygen (A/F) sensor output voltage (Bank 2 Sensor 1)	— and V

PID	Data	Unit of measure
34	Front oxygen (A/F) sensor current (Bank 1 Sensor 1)	mA
38	Front oxygen (A/F) sensor current (Bank 2 Sensor 1)	mA

NOTE:
Refer to general scan tool manufacturer's instruction manual to access generic OBD-II PIDs (MODE $01).

3. MODE $02 (POWERTRAIN FREEZE FRAME DATA)

Refer to data denoting the operating condition when trouble is detected by the on-board diagnosis system. A list of the support data and PID (Parameter Identification) codes are shown in the following table.

PID	Data	Unit of measure
02	DTC that caused CARB required freeze frame data storage	—
03	Fuel system control status	—
04	Calculated engine load value	%
05	Engine coolant temperature	°C
06	Short term fuel trim (Bank 1 Sensor 1)	%
07	Long term fuel trim (Bank 1 Sensor 1)	%
08	Short term fuel trim (Bank 2 Sensor 1)	%
09	Long term fuel trim (Bank 2 Sensor 1)	%
0B	Intake manifold absolute pressure	kPa
0C	Engine speed	rpm
0D	Vehicle speed	MPH
0E	Ignition timing advance	°
0F	Intake air temperature	°C
10	Air flow rate from mass air flow sensor	g/sec
11	Throttle valve opening angle	%
13	Check whether oxygen sensor is installed.	—
15	Oxygen sensor output voltage and short term fuel trim (Bank 1 Sensor 2)	V and %
16	Oxygen sensor output voltage and short term fuel trim (Bank 1 Sensor 3)	V and %
19	Oxygen sensor output voltage and short term fuel trim (Bank 2 Sensor 2)	V and %
1C	Supporting OBD system	—

NOTE:
Refer to general scan tool manufacturer's operation manual to access freeze frame data (MODE $02).

4. MODE $03 (EMISSION-RELATED POWERTRAIN DIAGNOSTIC TROUBLE CODE (DTC))

Refer to "List of Diagnostic Trouble Code (DTC)" for information about data denoting emission-related powertrain DTC. <Ref. to EN(H4SO U5)(diag)-73, List of Diagnostic Trouble Code (DTC).>

5. MODE $04 (CLEAR/RESET EMISSION-RELATED DIAGNOSTIC INFORMATION)

Refer to the mode used to clear or reset emission-related diagnostic information (OBD-II trouble diagnostic information).

NOTE:
Refer to general scan tool manufacturer's operation manual to clear or reset emission-related diagnostic information (MODE $04).

6. MODE $06

Refer to test value of troubleshooting and data of test limit on support data bit sequence table. List of support data is shown in the following table.

TID	CID	Test value & Test limit
$81	$01	Catalyst system efficiency below threshold
$82	$81	Exhaust gas recirculation control circuit range/performance
	$83	
$83	$01	Evaporative emission control system (0.04 inch leak)
	$02	Evaporative emission control system (0.04 inch leak)
	$03	Evaporative emission control system (0.04 inch leak)
	$04	Evaporative emission control system (0.04 inch leak)
	$05	Evaporative emission control system (0.02 inch leak)
	$86	Evaporative emission control system (0.02 inch leak)
$41	$81	O_2 sensor circuit (Bank 1 Sensor 2)
	$02	O_2 sensor circuit (Bank 1 Sensor 2)
$42	$81	O_2 sensor circuit (Bank 1 Sensor 3)
	$02	O_2 sensor circuit (Bank 1 Sensor 3)
$43	$81	O_2 sensor circuit (Bank 2 Sensor 2)
	$02	O_2 sensor circuit (Bank 2 Sensor 2)
$84	$01	Front oxygen (A/F) sensor slow response (Bank 1 Sensor 1)
$85	$01	O_2 sensor circuit slow response (Bank 1 Sensor 2) Rich → Lean
	$02	O_2 sensor circuit slow response (Bank 1 Sensor 2) Lean → Rich
$87	$01	Front oxygen (A/F) sensor slow response (Bank 2 Sensor 1)
$88	$01	O_2 sensor circuit (Bank 2 Sensor 2) Rich → Lean
	$02	O_2 sensor circuit (Bank 2 Sensor 2) Lean → Rich

7. MODE $07

Refer to the data of DTC (pending code) for troubleshooting result about emission in first time.

8. MODE $09

Refer to the data of vehicle specification (VIN, calibration ID, diagnostic frequency, etc.).

9. Subaru Select Monitor

A: OPERATION

1. HOW TO USE SUBARU SELECT MONITOR

1) Prepare the Subaru Select Monitor kit. <Ref. to EN(H4SO U5)(diag)-8, PREPARATION TOOL, General Description.>

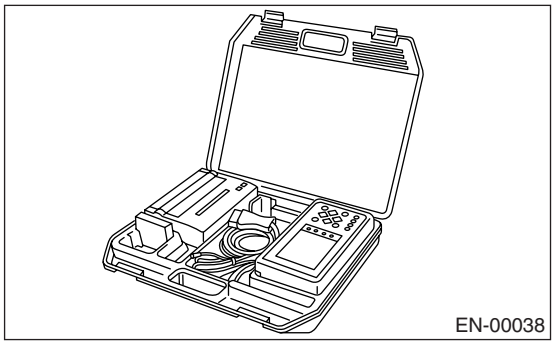

2) Connect the diagnosis cable to Subaru Select Monitor.
3) Insert the cartridge to Subaru Select Monitor. <Ref. to EN(H4SO U5)(diag)-8, PREPARATION TOOL, General Description.>

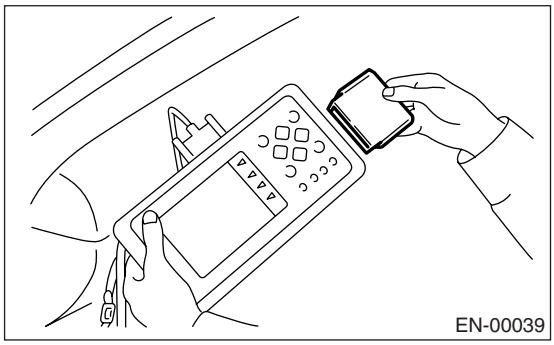

4) Connect the Subaru Select Monitor to data link connector.

(1) Data link connectors is located in the lower portion of instrument panel (on the driver's side).

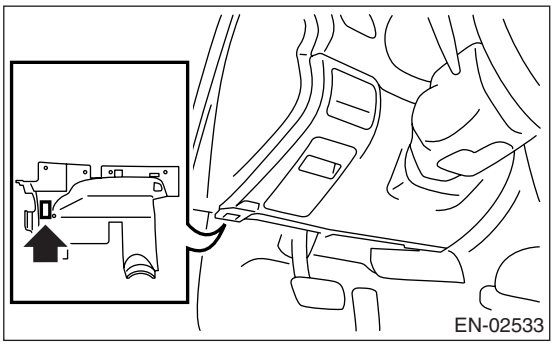

(2) Connect the diagnosis cable to data link connector.

CAUTION:
Do not connect the scan tools except for general scan tool and Subaru Select Monitor.

5) Turn the ignition switch to ON (engine OFF) and Subaru Select Monitor switch to ON.

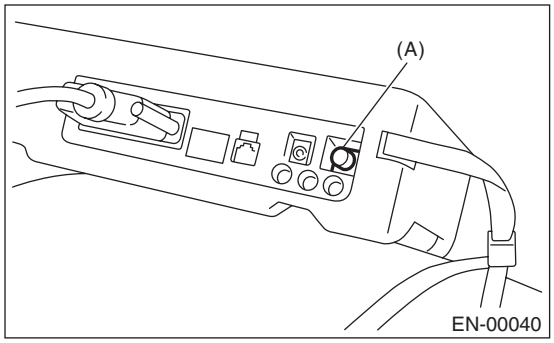

(A) Power switch

6) Using the Subaru Select Monitor, call up DTCs and data, then record them.

2. READ DIAGNOSTIC TROUBLE CODE (DTC) FOR ENGINE (NORMAL MODE)

Refer to "Read Diagnostic Trouble Code (DTC)" for information about how to indicate DTCs. <Ref. to EN(H4SO U5)(diag)-36, Read Diagnostic Trouble Code (DTC).>

3. READ DIAGNOSTIC TROUBLE CODE (DTC) FOR ENGINE (OBD MODE)

Refer to "Read Diagnostic Trouble Code (DTC)" for information about how to indicate DTCs. <Ref. to EN(H4SO U5)(diag)-36, Read Diagnostic Trouble Code (DTC).>

4. READ CURRENT DATA FOR ENGINE. (NORMAL MODE)

1) On the «Main Menu» display screen, select the {Each System Check} and press the [YES] key.
2) On the «System Selection Menu» display screen, select the {Engine} and press the [YES] key.
3) Press the [YES] key after the information of engine type has been displayed.
4) On the «Engine Diagnosis» display screen, select the {Current Data Display/Save}, and then press the [YES] key.
5) On the «Data Display Menu» display screen, select the {Data Display} and press the [YES] key.
6) Using the scroll key, scroll the display screen up or down until the desired data is shown.
• A list of the support data is shown in the following table.

Remarks	Display	Unit of measure	Note (at idling)
Engine load	Engine Load	%	3.5%
Engine coolant temperature signal	Coolant Temp.	°C or °F	≥ 75 °C or 167 °F
A/F correction 1	A/F Correction #1	%	−10 — +10%
A/F learning 1	A/F Learning #1	%	−15 — +15%
A/F correction 2	A/F Correction #2	%	+1.6%
A/F learning 2	A/F Learning #2	%	−2.3%
Intake manifold absolute pressure	Mani. Absolute Pressure	mmHg, kPa, inHg or psig	200 — 300 mmHg, 26.7 — 40 kPa, 7.8 — 11.8 inHg or 3.8 — 5.8 psig
Engine speed signal	Engine Speed	rpm	600 — 800 rpm (Agree with the tachometer indication)
Vehicle speed signal	Vehicle Speed	km/h or MPH	0 km/h or MPH (at parking)
Ignition timing signal	Ignition Timing	deg	12.5 — 13.5 deg
Intake air temperature signal	Intake Air Temp.	°C or °F	(Ambient air temperature)
Amount of intake air	Mass Air Flow	g/s or lb/m	2.8 — 3.2 g/s or 0.37 — 0.42 lb/m
Throttle opening angle signal	Throttle Opening Angle	%	1.2 — 1.6%
Front oxygen sensor voltage 1	Front O2 Sensor #1	V	0.590 V
Rear oxygen sensor voltage	Rear O2 Sensor	V	0.6 — 0.85 V
Front oxygen sensor voltage 2	Front O2 Sensor #2	V	0.625 V
Battery voltage	Battery Voltage	V	12 — 14 V
Mass air flow voltage	Air Flow Sensor Voltage	V	1.1 — 1.2 V
Injection 1 pulse width	Fuel Injection #1 Pulse	ms	2.56 — 3.3 ms
Injection 2 pulse width	Fuel Injection #2 Pulse	ms	3.33 ms
Knock sensor correction	Knocking Correction	deg	0.0 deg
Atmospheric pressure signal	Atmosphere Pressure	mmHg, kPa, inHg or psig	(Atmosphere pressure)
Intake manifold relative pressure	Mani. Relative Pressure	mmHg, kPa, inHg or psig	(Mani. Absolute Pressure − Atmosphere pressure)
Fuel tank pressure signal		mmHg, kPa, inHg or psig	+3.8 mmHg, +0.51 kPa, +0.15 inHg or +0.07 psig
Acceleration opening angle signal	Accel. Opening Angle	%	0.0%
Fuel temperature signal		°C or °F	+8°C or +46°F
Fuel level signal		V	1.02 V
Purge control solenoid duty ratio	CPC Valve Duty Ratio	%	0 — 3%
Tumble generator valve position sensor signal	TGV Position Sensor R	V	1.26 V
EGR steps	No. of EGR Steps	STEP	0
A/F sensor current value 1	A/F Sensor #1 Current	mA	−0.2 — 0.2 mA
A/F sensor current value 2	A/F Sensor #2 Current	mA	0.00 mA
A/F sensor resistance value 1	A/F Sensor #1 Resistance	ohm	28 — 31 mA

Remarks	Display	Unit of measure	Note (at idling)
A/F sensor resistance value 2	A/F Sensor #2 Resistance	Ω	31 Ω
A/F sensor output lambda 1	A/F Sensor #1	—	0.85 — 1.05
A/F sensor output lambda 2	A/F Sensor #2	—	1.00
A/F correction 3	A/F Correction #3	%	5.08%
A/F learning 3	A/F Learning #3	%	0%
Throttle motor duty	Throttle Motor Duty	%	–12 — –20%
Throttle power supply voltage	Throttle Motor Voltage	V	(Battery voltage)
Sub throttle sensor voltage	Sub-throttle Sensor	V	1.48 — 1.50 V
Main throttle sensor voltage	Main-throttle Sensor	V	0.62 V
Sub acceleration sensor voltage	Sub-accelerator Sensor	V	1.12 V
Main acceleration sensor voltage	Main-accelerator Sensor	V	0.98 — 1.0 V
Memory vehicle speed	Memorized Cruise Speed	km/h or MPH	0 km/h or 0 MPH
A/F correction 4	A/F Correction #4	%	+0.31%
A/F learning 4	A/F Learning #4	%	–0.00%
Fuel level sensor resistance	Fuel Level Resistance	Ω	8.0 Ω
#1 cylinder roughness monitor	Roughness Monitor #1	—	0
#2 cylinder roughness monitor	Roughness Monitor #2	—	0
#3 cylinder roughness monitor	Roughness Monitor #3	—	0
#4 cylinder roughness monitor	Roughness Monitor #4	—	0
AT/MT identification terminal	AT Vehicle ID Signal	—	ON/OFF
Test mode terminal	Test Mode Signal	—	OFF
Neutral position switch signal	Neutral Position Switch	—	ON
Soft idle switch signal	Idle Switch Signal	—	ON
Ignition switch signal	Ignition Switch	—	ON
Power steering switch input signal	P/S Switch	—	OFF (At OFF)
Air conditioning switch signal	A/C Switch	—	OFF (At OFF)
Starter switch signal	Starter Switch	—	OFF
Front oxygen monitor 1	Front O2 #1 Rich Signal	—	OFF
Rear oxygen monitor	Rear O2 Rich Signal	—	OFF
Front oxygen monitor 2	Front O2 #2 Rich Signal	—	OFF
Knocking signal	Knocking Signal	—	OFF
Crankshaft position sensor signal	Crankshaft Position Sig.	—	OFF
Camshaft position sensor signal	Camshaft Position Sig.	—	OFF
Rear defogger switch signal	Rear Defogger SW	—	OFF (At OFF)
Blower fan switch signal	Blower Fan SW	—	OFF (At OFF)
Light switch signal	Light Switch	—	OFF (At OFF)
A/C middle pressure switch signal	A/C Mid Pressure Switch	—	OFF (At OFF)
Air conditioner compressor relay output signal	A/C Compressor Signal	—	OFF (At OFF)
Radiator fan relay 1 signal	Radiator Fan Relay #1	—	OFF (At OFF)
Radiator fan relay 2 signal	Radiator Fan Relay #2	—	OFF (At OFF)
Fuel pump relay signal	Fuel Pump Relay	—	ON
Pressure control solenoid valve signal	PCV Solenoid	—	OFF
Tumble generator valve output signal	TGV Output	—	OFF
Tumble generated valve drive signal	TGV Drive	—	Open
Drain valve signal	Vent Control Solenoid	—	OFF
Fuel tank sensor control solenoid valve signal	Tank Sensor Cntl Valve	—	OFF
AT coordinate retard angle demand signal	Retard Signal from AT	—	OFF
AT coordinate fuel cut demand signal	Fuel Cut Signal from AT	—	OFF

Remarks	Display	Unit of measure	Note (at idling)
AT coordinate permission demand	Torque Permission Signal	—	ON
Electronic throttle control motor relay signal	ETC Motor Relay	—	ON
Clutch switch signal	Clutch Switch	—	OFF (At OFF)
Stop light switch signal	Stop Light Switch	—	OFF (At OFF)
SET/COAST switch signal	SET/COAST Switch	—	OFF (At OFF)
RES/ACC switch signal	RESUME/ACCEL Switch	—	OFF (At OFF)
Brake switch signal	Brake Switch	—	OFF (At OFF)
Main switch signal	Main Switch	—	OFF (At OFF)
Integrated unit data reception	Body Int. Unit Data	—	ON
Integrated unit data update	Body Int. Unit Count	—	ON
Cancel switch signal	Cancel Switch	—	OFF (At OFF)

NOTE:
For detailed operation procedure, refer to the “SUBARU SELECT MONITOR OPERATION MANUAL”.

5. READ CURRENT DATA FOR ENGINE (OBD MODE)

1) On the «Main Menu» display screen, select the {Each System Check} and press the [YES] key.
2) On the «System Selection Menu» display screen, select the {Engine} and press the [YES] key.
3) Press the [YES] key after the information of engine type has been displayed.
4) On the «Engine Diagnosis» display screen, select the {OBD system} and press the [YES] key.
5) On the «OBD Menu» display screen, select the {Current Data Display & Save}, and press the [YES] key.
6) On the «Data Display Menu» display screen, select the {Data Display} and press the [YES] key.
7) Using the scroll key, move the display screen up or down until the desired data is shown.

• A list of the support data is shown in the following table.

Description	Display	Unit of measure	Note (at idling)
Number of diagnosis code	Number of Diag. Code:	—	0
Condition of malfunction indicator light	MI (MIL)	—	OFF
Monitoring test of misfire	Misfire monitoring	—	complete
Monitoring test of fuel system	Fuel system monitoring	—	complete
Monitoring test of comprehensive component	Component monitoring	—	complete
Test of catalyst	Catalyst Diagnosis	—	incomplete
Test of heating-type catalyst	Heated catalyst	—	no support
Test of evaporative emission purge control system	Evaporative purge system	—	incomplete
Test of secondary air system	Secondary air system	—	no support
Test of air conditioning system refrigerant	A/C system refrigerant	—	no support
Test of oxygen sensor	Oxygen sensor	—	incomplete
Test of oxygen sensor heater	O2 Heater Diagnosis	—	complete
Test of EGR system	EGR system	—	incomplete
A/F control #1	Fuel system for Bank 1	—	CLOSE normal
A/F control #2	Fuel system for Bank 2	—	CLOSE normal
Load	Calculated load valve	%	2.70%
Engine coolant temperature signal	Coolant Temp.	°C or °F	94°C or 201°F
A/F correction 1	A/F Correction #1	%	0%
A/F learning 1	A/F Learning #1	%	−7.0%
A/F correction 2	A/F Correction #2	%	−0.8%
A/F learning 2	A/F Learning #2	%	−0.8%
Intake manifold absolute pressure	Mani. Absolute Pressure	mmHg, kPa, inHg or psig	218 mmHg, 29.1 kPa, 8.58 inHg or 4.22 psig
Engine speed signal	Engine Speed	rpm	705 rpm

Description	Display	Unit of measure	Note (at idling)
Vehicle speed signal	Vehicle Speed	km/h or MPH	0 km/h or 0 MPH
Ignition timing #1	Ignition timing adv. #1	°	+10°
Intake air temperature signal	Intake Air Temp.	°C or °F	34°C or 93°F
Amount of intake air	Mass Air Flow	g/s or lb/m	2.9 g/s or 0.38 lb/m
Throttle opening angle signal	Throttle Opening Angle	%	13%
Oxygen sensor (Bank 1 Sensor 2)	Oxygen sensor #12	V	0.235 V
A/F correction (Bank 1 Sensor 2)	A/F Correction #12	%	0.00%
Oxygen sensor (Bank 1 Sensor 3)	Oxygen sensor #13	V	0.690 V
A/F correction (Bank 1 Sensor 3)	A/F correction #13	%	0.00%
Oxygen sensor (Bank 2 Sensor 2)	Oxygen sensor #22	V	0.720 V
A/F correction (Bank 2 Sensor 2)	A/F correction #22	%	0.00%
OBD system	OBD system	—	CARB-OBD2
Front oxygen (A/F) sensor (Bank 1 Sensor 1)	Oxygen sensor #11	—	Support
Oxygen sensor (Bank 1 Sensor 2)	Oxygen sensor #12	—	Support
Oxygen sensor (Bank 1 Sensor 3)	Oxygen sensor #13	—	Support
Front oxygen (A/F) sensor (Bank 2 Sensor 1)	Oxygen sensor #21	—	Support
Oxygen sensor (Bank 2 Sensor 2)	Oxygen sensor #22	—	Support
Front oxygen (A/F) sensor (Bank 1 Sensor 1)	A/F sensor #11	—	0.996
Front oxygen (A/F) sensor (Bank 1 Sensor 1)	A/F sensor #11	V	2.782 V
Front oxygen (A/F) sensor (Bank 2 Sensor 1)	A/F sensor #21	—	0.995
Front oxygen (A/F) sensor (Bank 2 Sensor 1)	A/F sensor #21	V	2.761 V
Front oxygen (A/F) sensor (Bank 1 Sensor 1)	A/F sensor #11	—	0.995
Front oxygen (A/F) sensor (Bank 1 Sensor 1)	A/F sensor #11	mA	–0.02 mA
Front oxygen (A/F) sensor (Bank 2 Sensor 1)	A/F sensor #21	—	0.993
Front oxygen (A/F) sensor (Bank 2 Sensor 1)	A/F sensor #21	mA	–0.02 mA

NOTE:
For detailed operation procedure, refer to “SUBARU SELECT MONITOR OPERATION MANUAL”.

6. READ FREEZE FRAME DATA FOR ENGINE (OBD MODE)

1) On the «Main Menu» display screen, select the {Each System Check} and press the [YES] key.
2) On the «System Selection Menu» display screen, select the {Engine Control System} and press the [YES] key.
3) Press the [YES] key after the information of engine type has been displayed.
4) On the «Engine Diagnosis» display screen, select the {OBD System} and press the [YES] key.
5) On the «OBD Menu» display screen, select the {Freeze Frame Data} and press the [YES] key.
• A list of support data is shown in the following table.

Contents	Display	Unit of measure
DTC for freeze frame data	Freeze frame data	DTC
Air fuel ratio control system (Bank 1)	Fuel system for Bank1	—
Air fuel ratio control system (Bank 2)	Fuel system for Bank2	—
Engine load data	Engine Load	%
Engine coolant temperature signal	Coolant Temp.	°C or °F
Short term fuel trim by front oxygen (A/F) sensor (Bank 1)	Short term fuel trim B1	%
Short term fuel trim by front oxygen (A/F) sensor (Bank 2)	Short term fuel trim B2	%
Long term fuel trim by front oxygen (A/F) sensor (Bank 1)	Long term fuel trim B1	%
Long term fuel trim by front oxygen (A/F) sensor (Bank 2)	Long term fuel trim B2	%
Intake manifold absolute pressure signal	Mani. Absolute Pressure	mmHg, kPa, inHg or psig
Engine speed signal	Engine Speed	rpm
Vehicle speed signal	Vehicle Speed	km/h or MPH
Ignition timing signal	Ignition Timing	°
Intake air volume	Mass Air Flow	g/s or lb/m
Intake air temperature signal	Intake Air Temp	°C or °F
Throttle position signal	Throttle Opening Angle	%
Oxygen sensor (Bank 1 Sensor 2)	Oxygen sensor #12	V
A/F correction (Bank 1 Sensor 2)	Short term fuel trim #12	%
Oxygen sensor (Bank 1 Sensor 3)	Oxygen sensor #13	V
A/F correction (Bank 1 Sensor 3)	Short term fuel trim #13	%
Oxygen sensor (Bank 2 Sensor 2)	Oxygen sensor #22	V
A/F correction (Bank 2 Sensor 2)	Short term fuel trim #22	%
Front oxygen (A/F) sensor (Bank 1 Sensor 1)	Oxygen sensor #11	Support
Oxygen sensor (Bank 1 Sensor 2)	Oxygen sensor #12	Support
Oxygen sensor (Bank 1 Sensor 3)	Oxygen sensor #13	Support
Front oxygen (A/F) sensor (Bank 2 Sensor 1)	Oxygen sensor #21	Support
Oxygen sensor (Bank 2 Sensor 2)	Oxygen sensor #22	Support

NOTE:
For detailed operation procedure, refer to “SUBARU SELECT MONITOR OPERATION MANUAL”.

7. LED OPERATION MODE FOR ENGINE

1) On the «Main Menu» display screen, select the {Each System Check} and press the [YES] key.
2) On the «System Selection Menu» display screen, select the {Engine} and press the [YES] key.
3) Press the [YES] key after the information of engine type has been displayed.
4) On the «Engine Diagnosis» display screen, select the {Current Data Display/Save}, and then press the [YES] key.
5) On the «Data Display Menu» display screen, select the {Data & LED Display} and press the [YES] key.
6) Using the scroll key, move the display screen up or down until the desired data is shown.
• A list of the support data is shown in the following table.

Remarks	Display	Message	LED "ON" requirements
AT/MT identification signal	AT Vehicle ID Signal	ON or OFF	Illuminate (AT model)
Test mode signal	Test Mode Signal	ON or OFF	D check
Neutral position switch signal	Neutral Position Switch	ON or OFF	When neutral position signal is entered.
Idle switch signal	Idle Switch Signal	ON or OFF	When idle switch signal is entered.
Ignition switch signal	Ignition Switch	ON or OFF	When ignition switch is turned ON.
Power steering switch signal	P/S Switch	ON or OFF	When power steering switch is entered.
Air conditioning switch signal	A/C Switch	ON or OFF	When air conditioning switch is input.
Starter switch signal	Starter Switch	ON or OFF	When starter switch is input.
Front oxygen sensor rich signal	Front O2 #1 Rich Signal	ON or OFF	When front oxygen sensor mixture ratio is rich.
Rear oxygen sensor rich signal	Rear O2 Rich Signal	ON or OFF	When rear oxygen sensor mixture ratio is rich.
Front oxygen sensor rich signal	Front O2 #2 Rich Signal	ON or OFF	When front oxygen sensor mixture ratio is rich.
Knocking signal	Knocking Signal	ON or OFF	When knocking signal is input.
Crankshaft position sensor signal	Crankshaft Position Signal	ON or OFF	When crankshaft position sensor signal is input.
Camshaft position sensor signal	Camshaft Position Signal	ON or OFF	When camshaft position sensor signal is entered.
Rear defogger switch signal	Rear Defogger Switch	ON or OFF	When rear defogger switch is turned ON.
Blower fan switch signal	Blower Fan Switch	ON or OFF	When blower fan switch is turned ON.
Light switch signal	Light Switch	ON or OFF	When light switch is turned ON.
A/C middle pressure switch signal	A/C Mid Pressure Switch	ON or OFF	When A/C middle pressure switch is turned ON.
Air conditioning relay signal	A/C Compressor Signal	ON or OFF	When air conditioning relay is in function.
Radiator fan relay 1 signal	Radiator Fan Relay #1	ON or OFF	When radiator fan relay 1 is in function.
Radiator fan relay 2 signal	Radiator Fan Relay #2	ON or OFF	When radiator fan relay 2 is in function.
Fuel pump relay signal	Fuel Pump Relay	ON or OFF	ON output
Pressure control solenoid valve signal	PCV Solenoid	ON or OFF	When pressure control solenoid valve is running.
Tumble generated valve output signal	TGV Output	ON or OFF	When tumble generated valve output signal is entered.
Tumble generated valve drive signal	TGV Drive	Open or Close	When tumble generated valve is in function.

Remarks	Display	Message	LED “ON” requirements
Drain valve signal	Vent Control Solenoid	ON or OFF	When drain valve is operated.
Fuel tank sensor control valve signal	Tank Sensor Control Valve	ON or OFF	When fuel tank sensor control valve is in function.
AT retard angle demand signal	Retard Signal	ON or OFF	When AT retard angle demand signal is input.
AT fuel cut signal	Fuel Cut	ON or OFF	When AT fuel cut signal is input.
AT coordinate permission signal	Torque Control Permission	ON or OFF	When AT coordinate permission signal is input.
Electronic control throttle motor relay signal	ETC Motor Relay	ON or OFF	When electronic control throttle motor relay is in function.
Clutch switch signal	Clutch Switch	ON or OFF	When clutch switch is turned to ON.
Stop light switch signal	Stop Light Switch	ON or OFF	When stop switch is turned to ON.
SET/COAST switch signal	SET/COAST Switch	ON or OFF	When SET/COAST switch is turned to ON.
RES/ACC switch signal	RESUME/ACCEL Switch	ON or OFF	When RES/ACC switch is turned to ON.
Brake switch signal	Brake Switch	ON or OFF	When brake switch is turned to ON.
Main switch signal	Main Switch	ON or OFF	When main switch is turned to ON.
Data reception signal	Body Int. Unit Data	ON or OFF	When data reception signal is entered.
Counter update signal	Body Int. Unit Count	ON or OFF	When counter update signal is entered.
Cancel switch signal	Cancel Switch	ON or OFF	When cancel switch is turned to ON.

NOTE:
For detailed operation procedure, refer to “SUBARU SELECT MONITOR OPERATION MANUAL”.

8. VIN REGISTRATION

1) On the «Main Menu» display screen, select the {Each System Check} and press the [YES] key.
2) On the «System Selection Menu» display screen, select the {Engine} and press the [YES] key.
3) Press the [YES] key after the information of engine type has been displayed.
4) On the «Engine Diagnosis» display screen, select the {VIN Registration} and press the [YES] key.
5) Perform the procedure displayed on screen.

NOTE:
For detailed operation procedure, refer to “SUBARU SELECT MONITOR OPERATION MANUAL”.

10.Read Diagnostic Trouble Code (DTC)

A: OPERATION

1. SUBARU SELECT MONITOR (NORMAL MODE)

1) On the «Main Menu» display screen, select the {Each System Check} and press the [YES] key.
2) On the «System Selection Menu» display screen, select the {Engine} and press the [YES] key.
3) Press the [YES] key after the information of engine type has been displayed.
4) On the «Engine Diagnosis» screen, select the {DTC Display}, and then press the [YES] key.
5) On the «Diagnostic Code(s) Display» screen, select the {Current Diagnostic Code(s)} or {History Diagnostic Code(s)}, and then press the [YES] key.

NOTE:
• For detailed operation procedure, refer to “SUBARU SELECT MONITOR OPERATION MANUAL”.
• For details concerning DTC, refer to “List of Diagnostic Trouble Code (DTC)”. <Ref. to EN(H4SO U5)(diag)-73, List of Diagnostic Trouble Code (DTC).>

2. SUBARU SELECT MONITOR (OBD MODE)

1) On the «Main Menu» display screen, select the {Each System Check} and press the [YES] key.
2) On the «System Selection Menu» display screen, select the {Engine} and press the [YES] key.
3) Press the [YES] key after the information of engine type has been displayed.
4) On the «Engine Diagnosis» display screen, select the {OBD System} and press the [YES] key.
5) On the «OBD Menu» display screen, select the {DTC Display} and press the [YES] key.
6) Make sure DTC is shown on the screen.

NOTE:
• For detailed operation procedure, refer to “SUBARU SELECT MONITOR OPERATION MANUAL”.
• For details concerning DTC, refer to “List of Diagnostic Trouble Code (DTC)”. <Ref. to EN(H4SO U5)(diag)-73, List of Diagnostic Trouble Code (DTC).>

3. GENERAL SCAN TOOL

Refers to data denoting emission-related powertrain DTC.
For details concerning DTC, refer to the List of Diagnostic Trouble Code (DTC). <Ref. to EN(H4SO U5)(diag)-73, List of Diagnostic Trouble Code (DTC).>

NOTE:
Refer to general scan tool manufacturer’s instruction manual to access emission-related powertrain DTC (MODE $03).

11.Inspection Mode

A: OPERATION

Carry out trouble diagnosis shown in the following DTC table.
When performing trouble diagnosis which is not shown in the DTC table, refer to the next item Drive cycle. <Ref. to EN(H4SO U5)(diag)-42, Drive Cycle.>

DTC	Item
P0031	HO2S Heater Control Circuit Low (Bank 1 Sensor 1)
P0032	HO2S Heater Control Circuit High (Bank 1 Sensor 1)
P0037	HO2S Heater Control Circuit Low (Bank 1 Sensor 2)
P0038	HO2S Heater Control Circuit High (Bank 1 Sensor 2)
P0043	HO2S Heater Control Circuit Low (Bank 1 Sensor 3)
P0044	HO2S Heater Control Circuit High (Bank 1 Sensor 3)
P0051	HO2S Heater Control Circuit Low (Bank 2 Sensor 1)
P0052	HO2S Heater Control Circuit High (Bank 2 Sensor 1)
P0057	HO2S Heater Control Circuit Low (Bank 2 Sensor 2)
P0058	HO2S Heater Control Circuit High (Bank 2 Sensor 2)
P0102	Mass or Volume Air Flow Circuit Low Input
P0103	Mass or Volume Air Flow Circuit High Input
P0107	Manifold Absolute Pressure/Barometric Pressure Circuit Low Input
P0108	Manifold Absolute Pressure/Barometric Pressure Circuit High Input
P0112	Intake Air Temperature Circuit Low Input
P0113	Intake Air Temperature Circuit High Input
P0117	Engine Coolant Temperature Circuit Low Input
P0118	Engine Coolant Temperature Circuit High Input
P0122	Throttle/Pedal Position Sensor/Switch “A” Circuit Low Input
P0123	Throttle/Pedal Position Sensor/Switch “A” Circuit High Input
P0131	O2 Sensor Circuit Low Voltage (Bank 1 Sensor 1)
P0132	O2 Sensor Circuit High Voltage (Bank 1 Sensor 1)
P0137	O2 Sensor Circuit Low Voltage (Bank 1 Sensor 2)
P0138	O2 Sensor Circuit High Voltage (Bank 1 Sensor 2)
P0143	O2 Sensor Circuit Low Voltage (Bank 1 Sensor 3)
P0144	O2 Sensor Circuit High Voltage (Bank 1 Sensor 3)
P0151	O2 Sensor Circuit Low Voltage (Bank 2 Sensor 1)
P0152	O2 Sensor Circuit High Voltage (Bank 2 Sensor 1)
P0157	O2 Sensor Circuit Low Voltage (Bank 2 Sensor 2)
P0158	O2 Sensor Circuit High Voltage (Bank 2 Sensor 2)
P0182	Fuel Temperature Sensor “A” Circuit Low Input
P0183	Fuel Temperature Sensor “A” Circuit High Input
P0222	Throttle/Pedal Position Sensor/Switch “B” Circuit Low Input
P0223	Throttle/Pedal Position Sensor/Switch “B” Circuit High Input
P0327	Knock Sensor 1 Circuit Low Input (Bank 1 or Single Sensor)
P0328	Knock Sensor 1 Circuit High Input (Bank 1 or Single Sensor)
P0335	Crankshaft Position Sensor “A” Circuit
P0336	Crankshaft Position Sensor “A” Circuit Range/Performance
P0340	Camshaft Position Sensor “A” Circuit (Bank 1 or Single Sensor)
P0341	Camshaft Position Sensor “A” Circuit Range/Performance (Bank 1 or Single Sensor)
P0447	Evaporative Emission Control System Vent Control Circuit Open
P0448	Evaporative Emission Control System Vent Control Circuit Shorted
P0452	Evaporative Emission Control System Pressure Sensor Low Input
P0453	Evaporative Emission Control System Pressure Sensor High Input
P0458	Evaporative Emission Control System Purge Control Valve Circuit Low

DTC	Item
P0462	Fuel Level Sensor Circuit Low Input
P0463	Fuel Level Sensor Circuit High Input
P0500	Vehicle Speed Sensor
P0512	Starter Request Circuit
P0519	Idle air contol circuit system performance
P0600	CAN Communication Circuit
P0604	Internal Control Module Random Access Memory (RAM) Error
P0605	Internal Control Module Read Only Memory (ROM) Error
P0607	Control Module Performance
P0638	Throttle Actuator Control Range/Performance (Bank 1)
P0691	Cooling Fan 1 Control Circuit Low
P0692	Radiator Fun Relay 1 Circuit Malfunction
P0700	Transmission Control System (MIL Request)
P0851	Neutral Switch Input Circuit Low
P0852	Neutral Switch Input Circuit High
P1152	O2 Sensor Circuit Range/Performance (Low) (Bank1 Sensor1)
P1153	O2 Sensor Circuit Range/Performance (High) (Bank1 Sensor1)
P1154	O2 Sensor Circuit Range/Performance (Low) (Bank2 Sensor1)
P1155	O2 Sensor Circuit Range/Performance (High) (Bank2 Sensor1)
P1160	Return Spring Failure
P1400	Fuel Tank Pressure Control Solenoid Valve Circuit Low
P1420	Fuel Tank Pressure Control Solenoid Valve Circuit High
P1446	Fuel Tank Sensor Control Valve Circuit Low
P1447	Fuel Tank Sensor Control Valve Circuit High
P1518	Starter Switch Circuit Low Input
P1560	Back-up Voltage Circuit Malfunction
P2006	Tumble Generated Valve System 1 (Valve Close)
P2008	Tumble Generated Valve Signal 1 Circuit Malfunction (Open)
P2009	Tumble Generated Valve Signal 1 Circuit Malfunction (Short)
P2016	Tumble Generated Valve Position Sensor 1 Circuit Low
P2017	Tumble Generated Valve Position Sensor 1 Circuit High
P2101	Throttle Actuator Control Motor Circuit Range/Performance
P2102	Throttle Actuator Control Motor Circuit Low
P2103	Throttle Actuator Control Motor Circuit High
P2109	Throttle/Pedal Position Sensor A Minimum Stop Performance
P2122	Throttle/Pedal Position Sensor/Switch “D” Circuit Low Input
P2123	Throttle/Pedal Position Sensor/Switch “D” Circuit High Input
P2127	Throttle/Pedal Position Sensor/Switch “E” Circuit Low Input
P2128	Throttle/Pedal Position Sensor/Switch “E” Circuit High Input
P2135	Throttle/Pedal Position Sensor/Switch “A” / “B” Voltage Rationality
P2138	Throttle/Pedal Position Sensor/Switch “D” / “E” Voltage Rationality
P2227	Atmospheric Pressure Sensor Circuit Range/Performance
P2228	Atmospheric Pressure Sensor Circuit Malfunction (Low Input)
P2229	Atmospheric Pressure Sensor Circuit Malfunction (High Input)

1. PREPARATION FOR THE INSPECTION MODE

1) Check that the battery voltage is more than 12 V and fuel remains half [20 — 40 ℓ (5.3 — 10.6 US gal, 4.4 — 8.8 Imp gal)].
2) Lift-up the vehicle using a garage jack and place it on rigid racks, or drive the vehicle onto free rollers.

WARNING:
• Before lifting-up the vehicle, ensure parking brakes are applied.
• Do not use a pantograph jack in place of a rigid rack.
• Secure a rope or wire to the front or rear towing hooks to prevent the lateral runout of front wheels.
• Do not abruptly depress/release clutch pedal or accelerator pedal during works even when the engine is operating at low speeds since this may cause vehicle to jump off free rollers.
• In order to prevent the vehicle from slipping due to vibration, do not place any wooden blocks or similar items between the rigid racks and vehicle.
• Since the rear wheels will also rotate, do not place anything near them. Also, make sure that nobody goes in front of the vehicle.

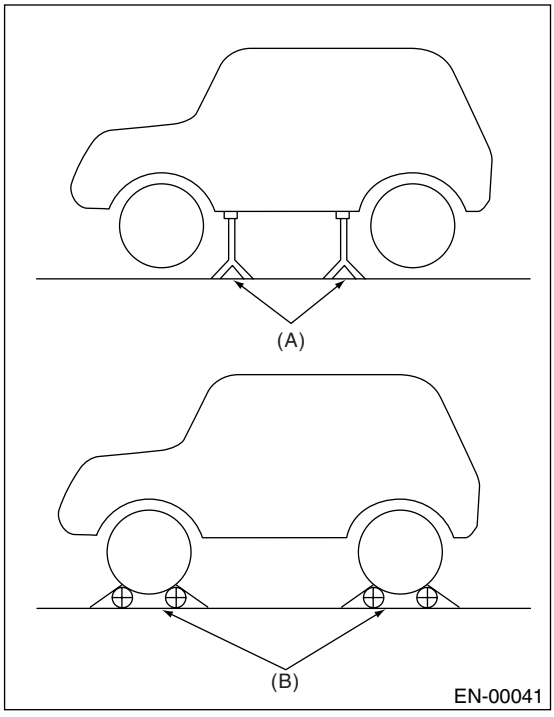

(A) Rigid rack
(B) Free rollers

2. SUBARU SELECT MONITOR

1) After clearing the memory, check for any remaining unresolved trouble data. <Ref. to EN(H4SO U5)(diag)-46, Clear Memory Mode.>
2) Idle the engine.
3) Prepare the Subaru Select Monitor kit. <Ref. to EN(H4SO U5)(diag)-8, PREPARATION TOOL, General Description.>

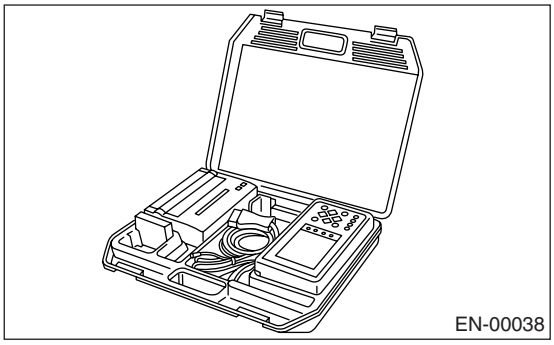

4) Connect the diagnosis cable to Subaru Select Monitor.
5) Insert the cartridge to Subaru Select Monitor. <Ref. to EN(H4SO U5)(diag)-8, PREPARATION TOOL, General Description.>

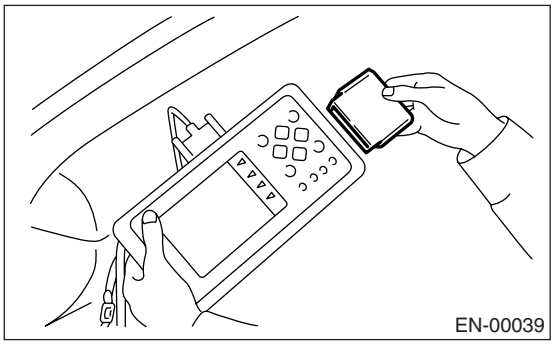

6) Connect the test mode connector (A) located at the lower portion of glove box.

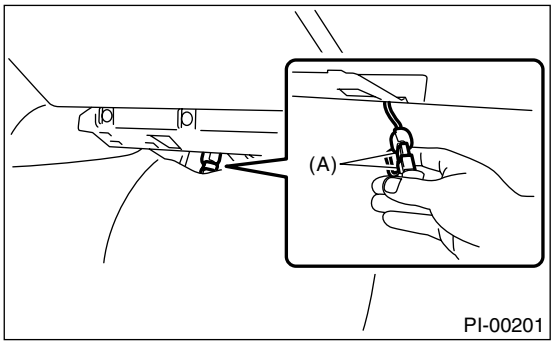

7) Connect the Subaru Select Monitor to data link connector located in the lower portion of the instrument panel (on the driver's side).

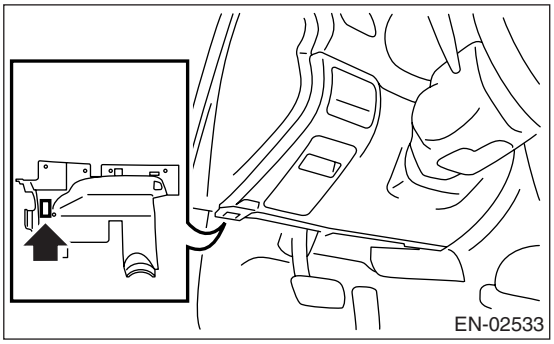

CAUTION:
Do not connect the scan tools except for Subaru Select Monitor.

8) Turn the ignition switch to ON (engine OFF) and turn Subaru Select Monitor switch to ON.

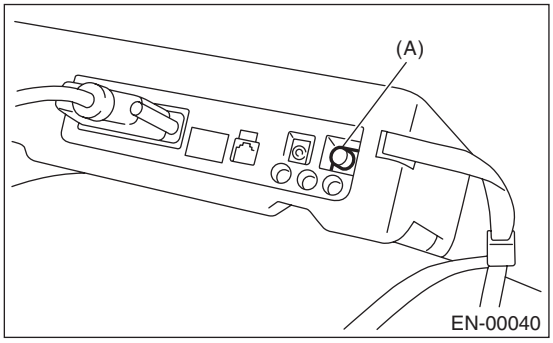

(A) Power switch

9) On the «Main Menu» display screen, select the {Each System Check} and press the [YES] key.
10) On the «System Selection Menu» display screen, select the {Engine} and press the [YES] key.
11) Press the [YES] key after the information of engine type has been displayed.
12) On the «Engine Diagnosis» screen, select the {D Check} and press the [YES] key.
13) When the "Perform D Check?" is shown on the screen, press the [YES] key.
14) Perform subsequent procedures as instructed on the display screen.

• If trouble still remains in the memory, the corresponding DTC appears on the display screen.

NOTE:
• For detailed operation procedure, refer to "SUBARU SELECT MONITOR OPERATION MANUAL".
• For the details concerning DTCs, refer to "List of Diagnostic Trouble Code (DTC)".
<Ref. to EN(H4SO U5)(diag)-73, List of Diagnostic Trouble Code (DTC).>
• Release the parking brake.
• The speed difference between front and rear wheels may light the ABS warning light, but this indicates no malfunctions. When engine control diagnosis is finished, perform the ABS memory clearance procedure of self-diagnosis function.

3. GENERAL SCAN TOOL

1) After clearing memory, check for any remaining unresolved trouble data: <Ref. to EN(H4SO U5)(diag)-46, Clear Memory Mode.>
2) Warm up the engine.
3) Connect the test mode connector (A) at the lower side of instrument panel (on the driver's side).

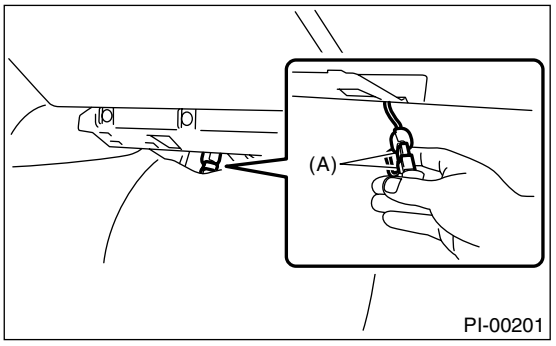

4) Connect the general scan tool to its data link connector in the lower portion of instrument panel (on the driver's side).

CAUTION:
Do not connect the scan tools except for Subaru Select Monitor and general scan tool.

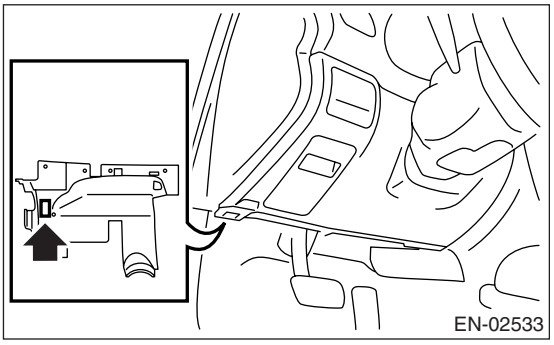

5) Start the engine.

NOTE:
• Ensure the select lever is placed in "P" position before starting. (AT model)
• Depress the clutch pedal when starting engine. (MT model)

6) Using the select lever or shift lever, turn the "P" position switch and "N" position switch to ON.
7) Depress the brake pedal to turn brake switch ON. (AT model)
8) Keep the engine speed in 2,500 — 3,000 rpm range for 40 seconds.

9) Place the select lever or shift lever in “D” position (AT model) or “1st” gear (MT model) and drive the vehicle at 5 to 10 km/h (3 to 6 MPH).

NOTE:
• On AWD vehicles, release the parking brake.
• The speed difference between front and rear wheels may light ABS warning light, but this indicates no malfunctions. When the engine control diagnosis is finished, perform the ABS memory clearance procedure of self-diagnosis system.

10) Using the general scan tool, check for DTC and record the result(s).

NOTE:
• For detailed operation procedure, refer to the operation manual of general scan tool.
• For details concerning DTC, refer to “List of Diagnostic Trouble Code (DTC)”.
<Ref. to EN(H4SO U5)(diag)-73, List of Diagnostic Trouble Code (DTC).>

12.Drive Cycle

A: PROCEDURE

There are five drive patterns of drive cycles A — E for the trouble diagnosis. Performing the specified drive pattern allows to diagnose malfunctioning items listed below. After the malfunctioning items listed below are repaired, always check if they correctly resume their functions by performing the required drive pattern.

1. PREPARATION FOR DRIVE CYCLE

1) Make sure that the fuel remains approx. half amount [20 — 40 ℓ (5.3 — 10.6 US gal, 4.4 — 8.8 Imp gal)], and battery voltage is 12 V or more.
2) After performing the diagnostics and cleaning memory, check for any remaining unresolved trouble data. <Ref. to EN(H4SO U5)(diag)-46, Clear Memory Mode.>
3) Disconnect the test mode connector.

NOTE:
• Except for the engine coolant temperature specified items at starting, the diagnosis is carried out after engine warm up.
• Carry out the diagnosis which is marked * on DTC twice, then, after finishing first diagnosis, stop the engine and do second time at the same condition.

2. DRIVE CYCLE A (AFTER RUNNING 20 MINUTES AT 80 KM/H (50 MPH), IDLE ENGINE FOR 1 MINUTE.)

DTC	Item	Condition
*P0125	Insufficient Coolant Temperature for Closed Loop Fuel Control	Coolant temperature at start is less than 20°C (68°F).
*P0126	Insufficient Coolant Temperature for Stable Operation	—
*P0128	Coolant Thermostat (Coolant Temperature Below Thermostat Regulating Temperature)	—
*P0133	O2 Sensor Circuit Slow Response (Bank 1 Sensor 1)	—
*P0153	O2 Sensor Circuit Slow Response (Bank 2 Sensor 1)	—
*P0171	System Too Lean (Bank 1)	Diagnosis completes in drive cycle B or C as well.
*P0172	System Too Rich (Bank 1)	Diagnosis completes in drive cycle B or C as well.
*P0174	System Too Lean (Bank 2)	Diagnosis completes in drive cycle B or C as well.
*P0175	System Too Rich (Bank 2)	Diagnosis completes in drive cycle B or C as well.
*P0301	Cylinder 1 Misfire Detected	Diagnosis completes in drive cycle B or C as well.
*P0302	Cylinder 2 Misfire Detected	Diagnosis completes in drive cycle B or C as well.
*P0303	Cylinder 3 Misfire Detected	Diagnosis completes in drive cycle B or C as well.
*P0304	Cylinder 4 Misfire Detected	Diagnosis completes in drive cycle B or C as well.
*P0420	Catalyst System Efficiency Below Threshold (Bank 1)	—
*P0442	Evaporative Emission Control System Leak Detected (small leak)	Coolant temperature at start is less than 25°C (77°F).
*P0451	Evaporative Emission Control System Pressure Sensor Range/Performance	—
*P0456	Evaporative Emission Control System Leak Detected (very small leak)	Coolant temperature at start is less than 25°C (77°F).
*P0457	Evaporative Emission Control System Leak Detected (fuel cap loose/off)	Coolant temperature at start is less than 25°C (77°F).
*P0459	Evaporative Emission Control System Purge Control Valve Circuit High	—
P1443	Vent Control Solenoid Valve Function Problem	—

DTC	Item	Condition
*P2096	Post Catalyst Fuel Trim System Too Lean Bank 1	Diagnosis completes in drive cycle B or C as well.
*P2097	Post Catalyst Fuel Trim System Too Rich Bank 1	Diagnosis completes in drive cycle B or C as well.
*P2098	Post Catalyst Fuel Trim System Too Lean Bank 2	Diagnosis completes in drive cycle B or C as well.
*P2099	Post Catalyst Fuel Trim System Too Rich Bank 2	Diagnosis completes in drive cycle B or C as well.

3. DRIVE CYCLE B (10 MINUTES IDLING)

NOTE:
Drive the vehicle at 10 km/h (6 MPH) or more before diagnosis.

DTC	Item	Condition
*P0111	Intake Air Temperature Circuit Range/Performance	Coolant temperature at start is less than 30°C (86°F).
*P0171	System Too Lean (Bank 1)	Diagnosis completes in drive cycle A or C as well.
*P0172	System Too Rich (Bank 1)	Diagnosis completes in drive cycle A or C as well.
*P0174	System Too Lean (Bank 2)	Diagnosis completes in drive cycle A or C as well.
*P0175	System Too Rich (Bank 2)	Diagnosis completes in drive cycle A or C as well.
*P0301	Cylinder 1 Misfire Detected	Diagnosis completes in drive cycle A or C as well.
*P0302	Cylinder 2 Misfire Detected	Diagnosis completes in drive cycle A or C as well.
*P0303	Cylinder 3 Misfire Detected	Diagnosis completes in drive cycle A or C as well.
*P0304	Cylinder 4 Misfire Detected	Diagnosis completes in drive cycle A or C as well.
*P0464	Fuel Level Sensor Circuit Intermittent	—
*P0483	Cooling Fan Rationality Check	—
*P0506	Idle Control System RPM Lower Than Expected	—
*P0507	Idle Control System RPM Higher Than Expected	—
*P2096	Post Catalyst Fuel Trim System Too Lean (Bank 1)	Diagnosis completes in drive cycle A or C as well.
*P2097	Post Catalyst Fuel Trim System Too Rich (Bank 1)	Diagnosis completes in drive cycle A or C as well.
*P2098	Post Catalyst Fuel Trim System Too Lean (Bank 2)	Diagnosis completes in drive cycle A or C as well.
*P2099	Post Catalyst Fuel Trim System Too Rich (Bank 2)	Diagnosis completes in drive cycle A or C as well.

4. DRIVE CYCLE C (DRIVE ACCORDING TO THE FOLLOWING DRIVE PATTERN)

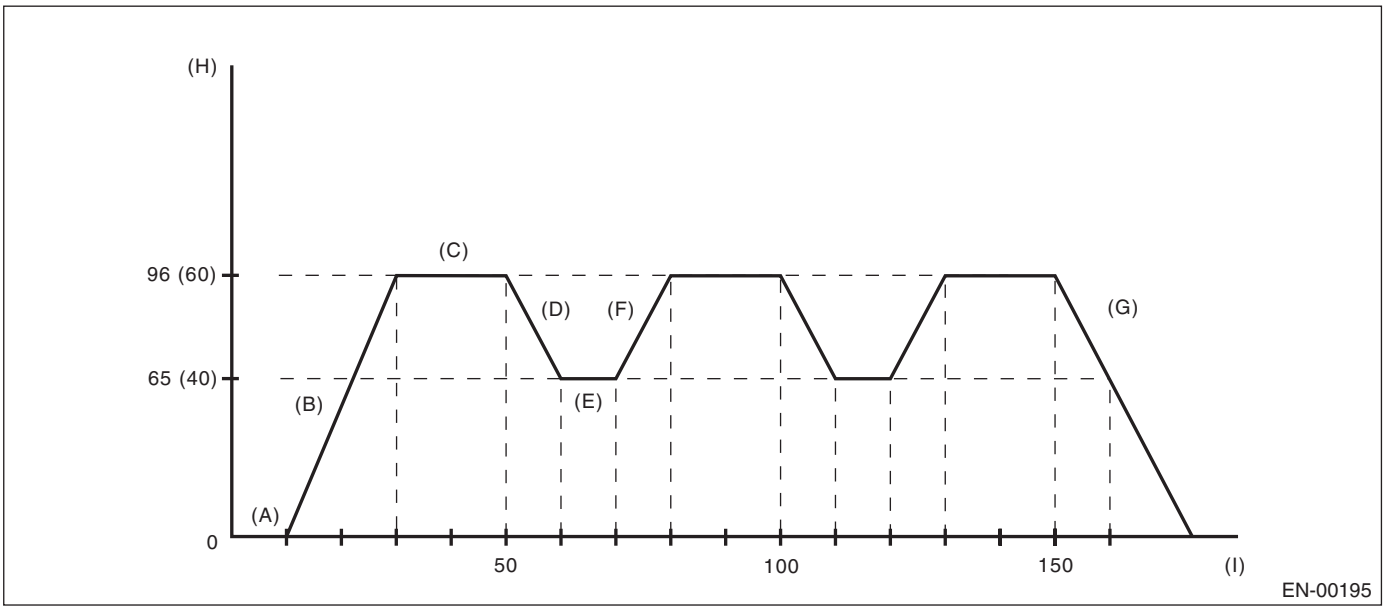

(A) Idle engine for 1 minute.
(B) Accelerate to 96 km/h (60 MPH) within 20 seconds.
(C) Drive vehicle at 96 km/h (60 MPH) for 20 seconds.
(D) Decelerate with fully closed throttle to 65 km/h (40 MPH).
(E) Drive vehicle at 65 km/h (40 MPH) for 10 seconds.
(F) Accelerate to 96 km/h (60 MPH) within 10 seconds.
(G) Stop vehicle with throttle fully closed.
(H) km/h (MPH)
(I) seconds

DTC	Item	Condition
*P0030	HO2S Heater Control Circuit (Bank 1 Sensor 1)	—
*P0050	HO2S Heater Control Circuit (Bank 2 Sensor 1)	—
*P0068	MAP/MAF - Throttle Position Correlation	—
*P0101	Mass or Volume Air Flow Circuit Range/Performance	—
P0134	O2 Sensor Circuit No Activity Detected (Bank 1 Sensor 1)	—
*P0139	O2 Sensor Circuit Slow Response (Bank 1 Sensor 2)	—
P0154	O2 Sensor Circuit No Activity Detected (Bank 2 Sensor 1)	—
*P0159	O2 Sensor Circuit Slow Response (Bank 2 Sensor 2)	—
*P0171	System Too Lean (Bank 1)	Diagnosis completes in drive cycle A or B as well.
*P0172	System Too Rich (Bank 1)	Diagnosis completes in drive cycle A or B as well.
*P0174	System Too Lean (Bank 2)	Diagnosis completes in drive cycle A or B as well.
*P0175	System Too Rich (Bank 2)	Diagnosis completes in drive cycle A or B as well.
*P0301	Cylinder 1 Misfire Detected	Diagnosis completes in drive cycle A or B as well.
*P0302	Cylinder 2 Misfire Detected	Diagnosis completes in drive cycle A or B as well.
*P0303	Cylinder 3 Misfire Detected	Diagnosis completes in drive cycle A or B as well.
*P0304	Cylinder 4 Misfire Detected	Diagnosis completes in drive cycle A or B as well.
*P0400	Exhaust Gas Recirculation	—
P1492	EGR Solenoid Valve Signal #1 Circuit Malfunction (Low Input)	—

DTC	Item	Condition
P1493	EGR Solenoid Valve Signal #1 Circuit Malfunction (High Input)	—
P1494	EGR Solenoid Valve Signal #2 Circuit Malfunction (Low Input)	—
P1495	EGR Solenoid Valve Signal #2 Circuit Malfunction (High Input)	—
P1496	EGR Solenoid Valve Signal #3 Circuit Malfunction (Low Input)	—
P1497	EGR Solenoid Valve Signal #3 Circuit Malfunction (High Input)	—
P1498	EGR Solenoid Valve Signal #4 Circuit Malfunction (Low Input)	—
P1499	EGR Solenoid Valve Signal #5 Circuit Malfunction (High Input)	—
P2004	Tumble Generated Valve System 1 (Valve Open)	—
*P2096	Post Catalyst Fuel Trim System Too Lean (Bank 1)	Diagnosis completes in drive cycle A or B as well.
*P2097	Post Catalyst Fuel Trim System Too Rich (Bank 1)	Diagnosis completes in drive cycle A or B as well.
*P2098	Post Catalyst Fuel Trim System Too Lean (Bank 2)	Diagnosis completes in drive cycle A or B as well.
*P2099	Post Catalyst Fuel Trim System Too Rich (Bank 2)	Diagnosis completes in drive cycle A or B as well.

5. DRIVE CYCLE D

• DRIFT DIAGNOSIS

1) Make sure that the engine coolant temperature at engine starting is less than 30°C (86°F).
2) Make sure that fuel of more than 9.6 ℓ (2.5 US gal, 2.1 Imp gal) remains and the battery voltage is more than 10.9 V.
3) Make sure that the engine coolant temperature rises for more than 10°C (50°F) from the level of engine starting and is also more than 75°C (167°F).
4) Idle the engine for more than 120 seconds in the condition of step 3.

• STUCK DIAGNOSIS

1) Make sure that the battery voltage is more than 10.9 V.
2) Perform the clear memory mode. <Ref. to EN(H4SO U5)(diag)-46, Clear Memory Mode.>
3) Drive the vehicle for the distance equal to fuel of 50 ℓ (13.2 US gal, 11 Imp gal).

NOTE:
• It is possible to drive intermittently.
• Do not disconnect the terminal of battery during diagnosis. (If disconnecting the terminal of battery, the data will be cleared.)

DTC	Item	Condition
P0181	Fuel Temperature Sensor “A” Circuit Range/Performance	—

6. DRIVE CYCLE E

1) Make sure that the battery voltage is more than 10.9 V.
2) Perform the clear memory mode. <Ref. to EN(H4SO U5)(diag)-46, Clear Memory Mode.>
3) Drive the vehicle for the distance equal to fuel of 30 ℓ (7.9 US gal, 6.6 Imp gal).

NOTE:
• It is possible to drive intermittently.
• Do not disconnect the terminal of battery during diagnosis. (If disconnecting the terminal of battery, the data will be cleared.)

DTC	Item	Condition
P0461	Fuel Level Sensor Circuit Range/Performance	—

13.Clear Memory Mode

A: OPERATION

1. SUBARU SELECT MONITOR (NORMAL MODE)

1) On the «Main Menu» display screen, select the {Each System Check} and press the [YES] key.
2) On the «System Selection Menu» display screen, select the {Engine} and press the [YES] key.
3) Press the [YES] key after the information of engine type has been displayed.
4) On the «Engine Diagnosis» display screen, select the {Memory Clear} and press the [YES] key.
5) When the “Done” and “Turn Ignition Switch OFF” are shown on the display screen, turn the ignition switch to OFF and then Subaru Select Monitor switch to OFF.

NOTE:
• Initial diagnosis of electronic control throttle is performed after memory clearance. For this reason, start the engine after 10 seconds or more have elapsed since the ignition switch was turned to ON.
• For detailed operation procedure, refer to “SUBARU SELECT MONITOR OPERATION MANUAL”.

2. SUBARU SELECT MONITOR (OBD MODE)

1) On the «Main Menu» display screen, select the {Each System Check} and press the [YES] key.
2) On the «System Selection Menu» display screen, select the {Engine} and press the [YES] key.
3) Press the [YES] key after the information of engine type has been displayed.
4) On the «Engine Diagnosis» display screen, select the {OBD System} and press the [YES] key.
5) On the «OBD Menu» display screen, select the {DTC Clear} and press the [YES] key.
6) When the “Perform Diagnostic Code(s) Clear?” is shown on the screen, press the [YES] key.
7) Turn the ignition switch to OFF and then turn the Subaru Select Monitor switch to OFF.

NOTE:
• Initial diagnosis of electronic control throttle is performed after memory clearance. For this reason, start the engine after 10 seconds or more have elapsed since the ignition switch was turned to ON.
• For detailed operation procedure, refer to “SUBARU SELECT MONITOR OPERATION MANUAL”.

3. GENERAL SCAN TOOL

For clear memory procedures using the general scan tool, refer to the general scan tool instruction manual.

NOTE:
Initial diagnosis of electronic control throttle is performed after memory clearance. For this reason, start the engine after 10 seconds or more have elapsed since the ignition switch was turned to ON.

14.Compulsory Valve Operation Check Mode

A: PROCEDURE

1) Prepare the Subaru Select Monitor kit. <Ref. to EN(H4SO U5)(diag)-8, PREPARATION TOOL, General Description.>

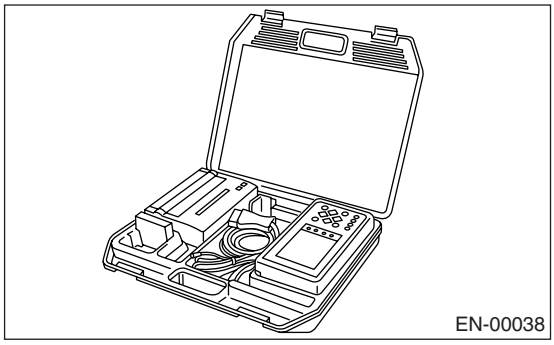
EN-00038

2) Connect the diagnosis cable to Subaru Select Monitor.
3) Insert the cartridge to Subaru Select Monitor. <Ref. to EN(H4SO U5)(diag)-8, PREPARATION TOOL, General Description.>

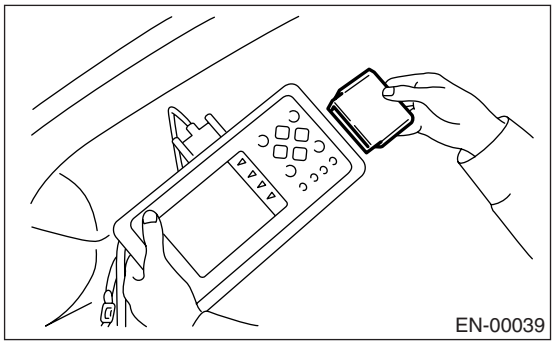
EN-00039

4) Connect the test mode connector (A) located at the lower portion of glove box.

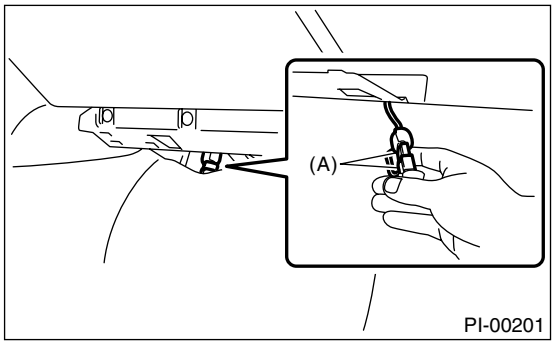

PI-00201

5) Connect the Subaru Select Monitor to data link connector located in the lower portion of instrument panel (on the driver's side).

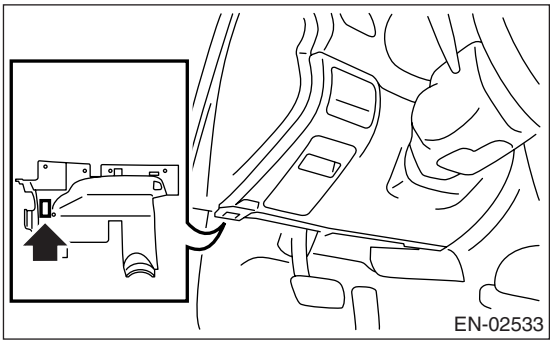
EN-02533

CAUTION:
Do not connect the scan tools except for Subaru Select Monitor and general scan tool.

6) Turn the ignition switch to ON (engine OFF) and turn Subaru Select Monitor switch to ON.

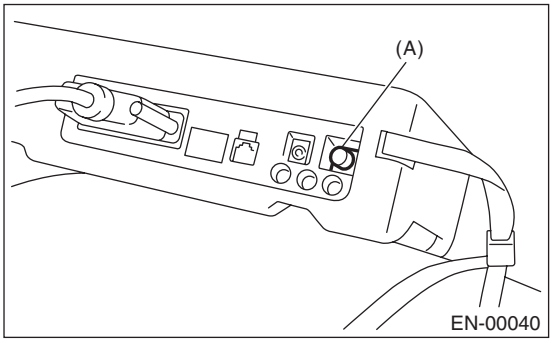

EN-00040

(A) Power switch

7) On the «Main Menu» display screen, select the {Each System Check} and press the [YES] key.
8) On the «System Selection Menu» display screen, select the {Engine} and press the [YES] key.
9) Press the [YES] key after the information of engine type has been displayed.
10) On the «Engine Diagnosis» display screen, select the {System Operation Check Mode} and press the [YES] key.
11) On the «System Operation Check Mode» display screen, select the {Actuator ON/OFF Operation} and press the [YES] key.
12) Select the desired compulsory actuator on the «Actuator ON/OFF Operation» display screen and press the [YES] key.
13) Pressing the [NO] key completes the compulsory operation check mode. The display will then return to the «Actuator ON/OFF Operation» screen.

• A list of support data is shown in the following table.

Contents	Display
Compulsory fuel pump relay operation check	Fuel Pump Relay
Compulsory radiator fan relay operation check	Radiator Fan Relay
Compulsory air conditioning relay operation check	A/C Compressor Relay
Compulsory purge control solenoid valve operation check	CPC Solenoid Valve
Compulsory pressure control solenoid valve operation check	PCV Solenoid Valve
Compulsory air assist vent control solenoid valve operation check	Vent Control Solenoid Valve
Compulsory fuel tank sensor control solenoid valve operation check	Fuel Tank Sensor Control Valve

NOTE:
• The following parts will be displayed but not functional.

Display
EGR Solenoid Valve
AAI Solenoid Valve
ASV Solenoid Valve
FICD Solenoid
Pressure Switching Sol. 1
Pressure Switching Sol. 2
Turbocharger Wastegate Solenoid
EXH. Bypass Control Permit Flag

• For detailed operation procedure, refer to SUBARU SELECT MONITOR OPERATION MANUAL.

15.Malfunction Indicator Light

A: PROCEDURE

1. Activation of malfunction indicator light. <Ref. to EN(H4SO U5)(diag)-50, ACTIVATION OF MALFUNCTION INDICATOR LIGHT, Malfunction Indicator Light.>
↓
2. Check that the malfunction indicator light does not come on. <Ref. to EN(H4SO U5)(diag)-51, MALFUNCTION INDICATOR LIGHT DOES NOT COME ON, Malfunction Indicator Light.>
↓
3. Check that the malfunction indicator light does not go off. <Ref. to EN(H4SO U5)(diag)-53, MALFUNCTION INDICATOR LIGHT DOES NOT GO OFF., Malfunction Indicator Light.>
↓
4. Check that the malfunction indicator light does not blink. <Ref. to EN(H4SO U5)(diag)-54, MALFUNCTION INDICATOR LIGHT DOES NOT BLINK., Malfunction Indicator Light.>
↓
5. Check that the malfunction indicator light remains blinking. <Ref. to EN(H4SO U5)(diag)-56, MALFUNCTION INDICATOR LIGHT REMAINS BLINKING., Malfunction Indicator Light.>

B: ACTIVATION OF MALFUNCTION INDICATOR LIGHT

1) When the ignition switch is turned to ON (engine OFF), the malfunction indicator light (A) in the combination meter illuminates.

NOTE:
If the malfunction indicator light does not illuminate, perform the diagnosis of malfunction indicator light circuit or the combination meter circuit. <Ref. to EN(H4SO U5)(diag)-51, MALFUNCTION INDICATOR LIGHT DOES NOT COME ON, Malfunction Indicator Light.>

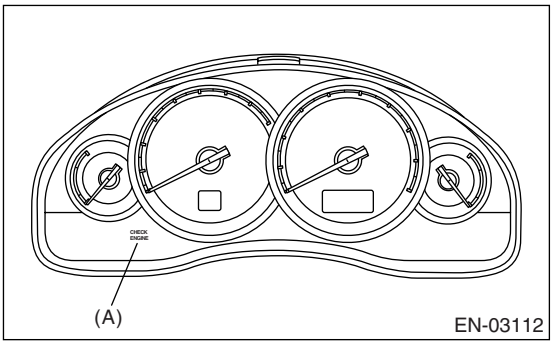

2) After starting the engine, the malfunction indicator light goes out. If it does not, either the engine or emission control system is malfunctioning.

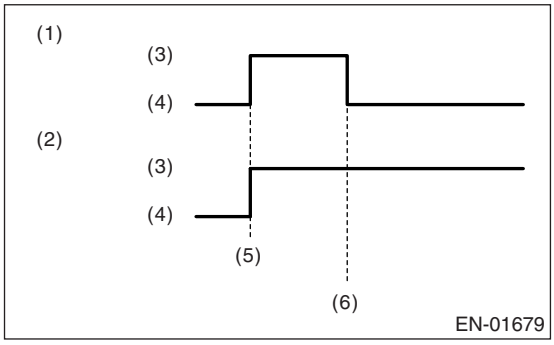

(1) No faulty
(2) Trouble occurs
(3) ON
(4) OFF
(5) Ignition switch ON
(6) Engine start

3) Turn the ignition switch to OFF and connect the test mode connector.

(1) When the ignition switch is turned to ON (engine OFF), the malfunction indicator light illuminates.

(2) Malfunction indicator light blinks at a cycle of 0.5 Hz after starting the engine. (During diagnosis)

(3) Malfunction indicator light blinks at a cycle of 3 Hz after diagnosis if there is no trouble. Malfunction indicator light illuminates if faulty.

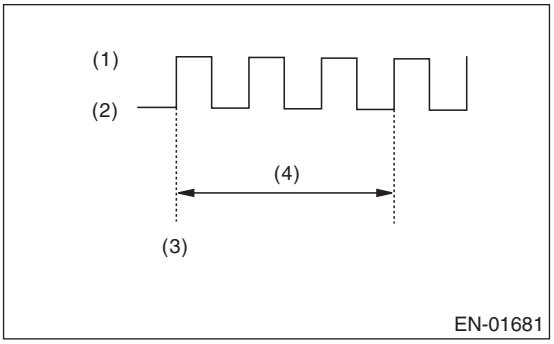

(1) ON
(2) OFF
(3) Ignition switch ON
(4) 1 second

C: MALFUNCTION INDICATOR LIGHT DOES NOT COME ON

DIAGNOSIS:

The malfunction indicator light circuit is open or shorted.

TROUBLE SYMPTOM:

When the ignition switch is turned to ON (engine OFF), malfunction indicator light does not come on.

WIRING DIAGRAM:

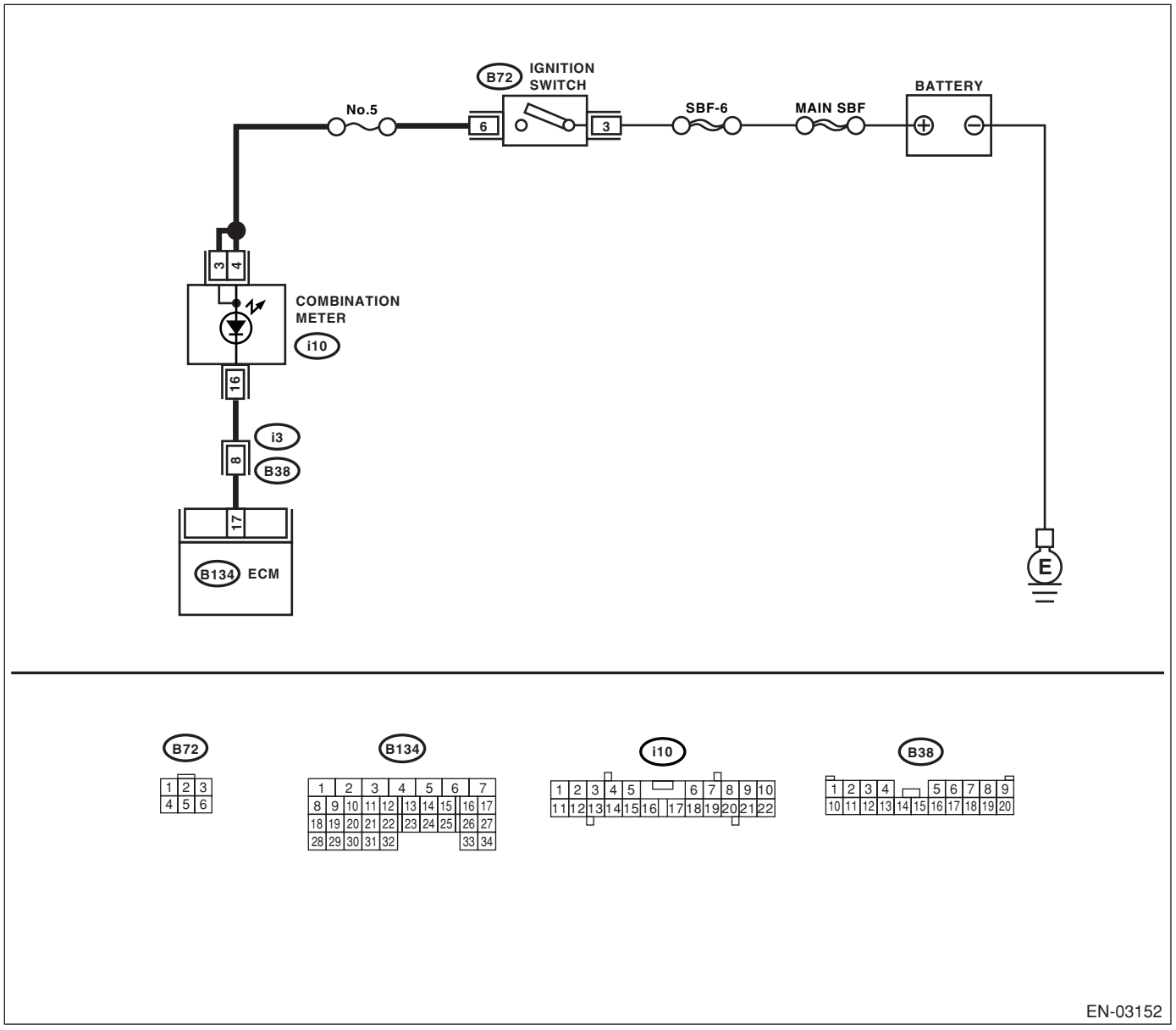

	Step	Check	Yes	No
1	**CHECK OUTPUT SIGNAL FROM ECM.** 1) Turn the ignition switch to ON. 2) Measure the voltage between ECM connector and chassis ground. ***Connector & terminal*** ***(B134) No. 17 (+) — Chassis ground (−):***	Is the voltage less than 1 V?	Go to step **4.**	Go to step **2.**
2	**CHECK POOR CONTACT.** Check for poor connection by shaking or pulling ECM connector and harness.	Does the malfunction indicator light illuminate?	Repair the poor contact in ECM connector.	Go to step **3.**
3	**CHECK ECM CONNECTOR.** Check the connection of ECM connector.	Is the ECM connector correctly connected?	Replace the ECM. <Ref. to FU(H4SO U5)-44, Engine Control Module (ECM).>	Repair the connection of ECM connector.
4	**CHECK HARNESS BETWEEN COMBINATION METER AND ECM CONNECTOR.** 1) Turn the ignition switch to OFF. 2) Remove the combination meter. <Ref. to IDI-15, Combination Meter.> 3) Disconnect the connector from ECM and combination meter. 4) Measure the resistance of harness between ECM and combination meter connector. ***Connector & terminal*** ***(B134) No. 17 — (i10) No. 16:***	Is the resistance less than 1 Ω?	Go to step **5.**	Repair the harness and connector. NOTE: In this case, repair the following: • Open circuit in harness between ECM and combination meter connector • Poor contact in coupling connector
5	**CHECK POOR CONTACT.** Check poor contact in combination meter connector.	Is there poor contact in combination meter connector?	Repair the poor contact in combination meter connector.	Go to step **6.**
6	**CHECK HARNESS BETWEEN COMBINATION METER AND IGNITION SWITCH CONNECTOR.** 1) Turn the ignition switch to ON. 2) Measure the voltage between combination meter connector and chassis ground. ***Connector & terminal*** ***(i10) No. 3 (+) — Chassis ground (−):*** ***(i10) No. 4 (+) — Chassis ground (−):***	Is the voltage more than 10 V?	Replace the board of combination meter. <Ref. to IDI-15, Combination Meter.>	Check the following and repair if necessary. NOTE: • Blown out fuse (No. 5) • Open or short circuit in harness between fuse (No. 5) and battery terminal • Poor contact in ignition switch connector

D: MALFUNCTION INDICATOR LIGHT DOES NOT GO OFF.

DIAGNOSIS:
The malfunction indicator light circuit is shorted.

TROUBLE SYMPTOM:
Although malfunction indicator light comes on when the engine runs, DTC is not shown on the Subaru Select Monitor or general scan tool display.

WIRING DIAGRAM:

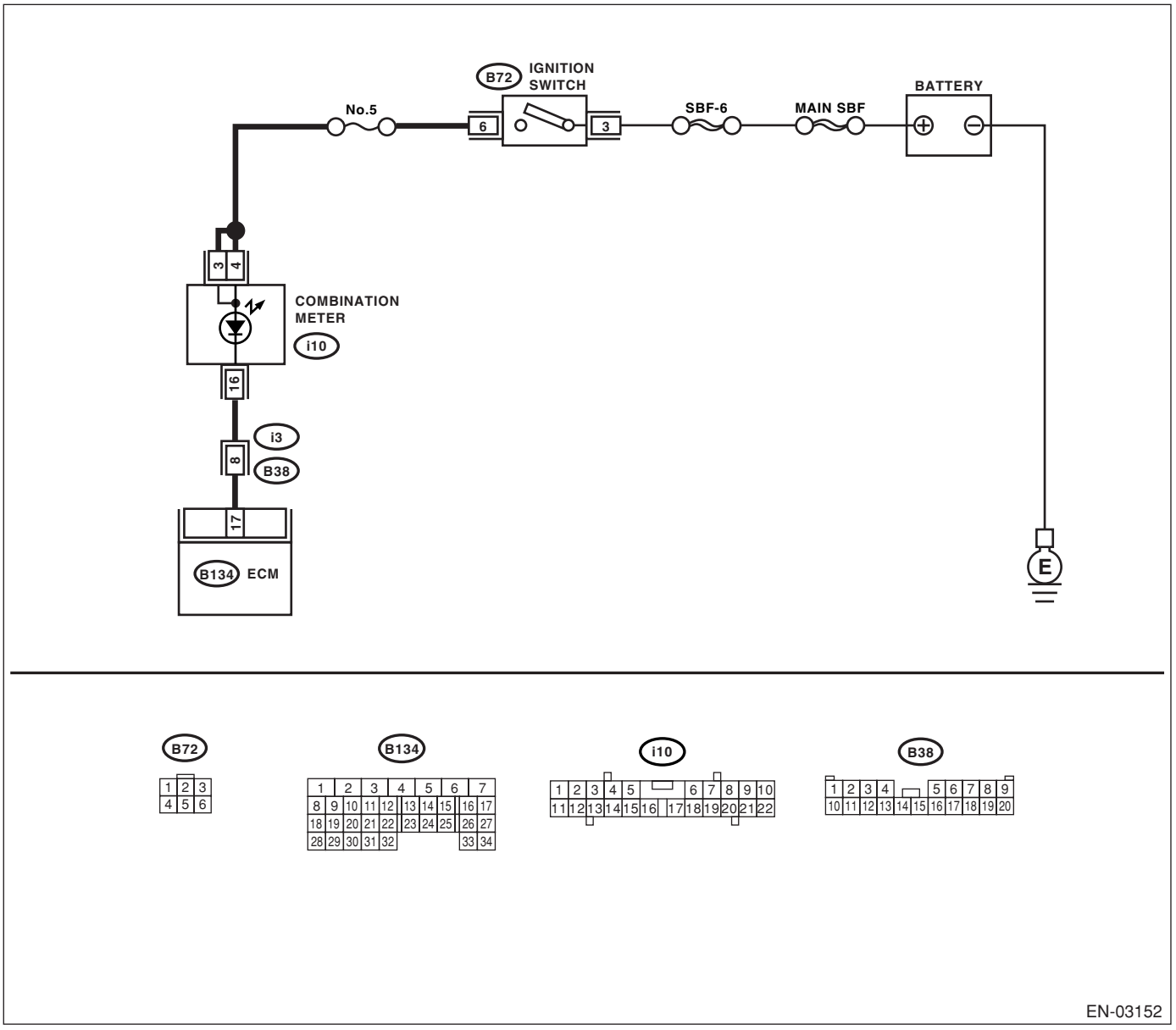

Step		Check	Yes	No
1	**CHECK HARNESS BETWEEN COMBINATION METER AND ECM CONNECTOR.** 1) Turn the ignition switch to OFF. 2) Disconnect the connector from ECM. 3) Turn the ignition switch to ON.	Does the malfunction indicator light illuminate?	Repair the short circuit in harness between combination meter and ECM connector.	Replace the ECM. <Ref. to FU(H4SO U5)-44, Engine Control Module (ECM).>

E: MALFUNCTION INDICATOR LIGHT DOES NOT BLINK.

DIAGNOSIS:

- The malfunction indicator light circuit is open or shorted.
- Test mode connector circuit is in open.

TROUBLE SYMPTOM:

Malfunction indicator light does not blink during inspection mode.

WIRING DIAGRAM:

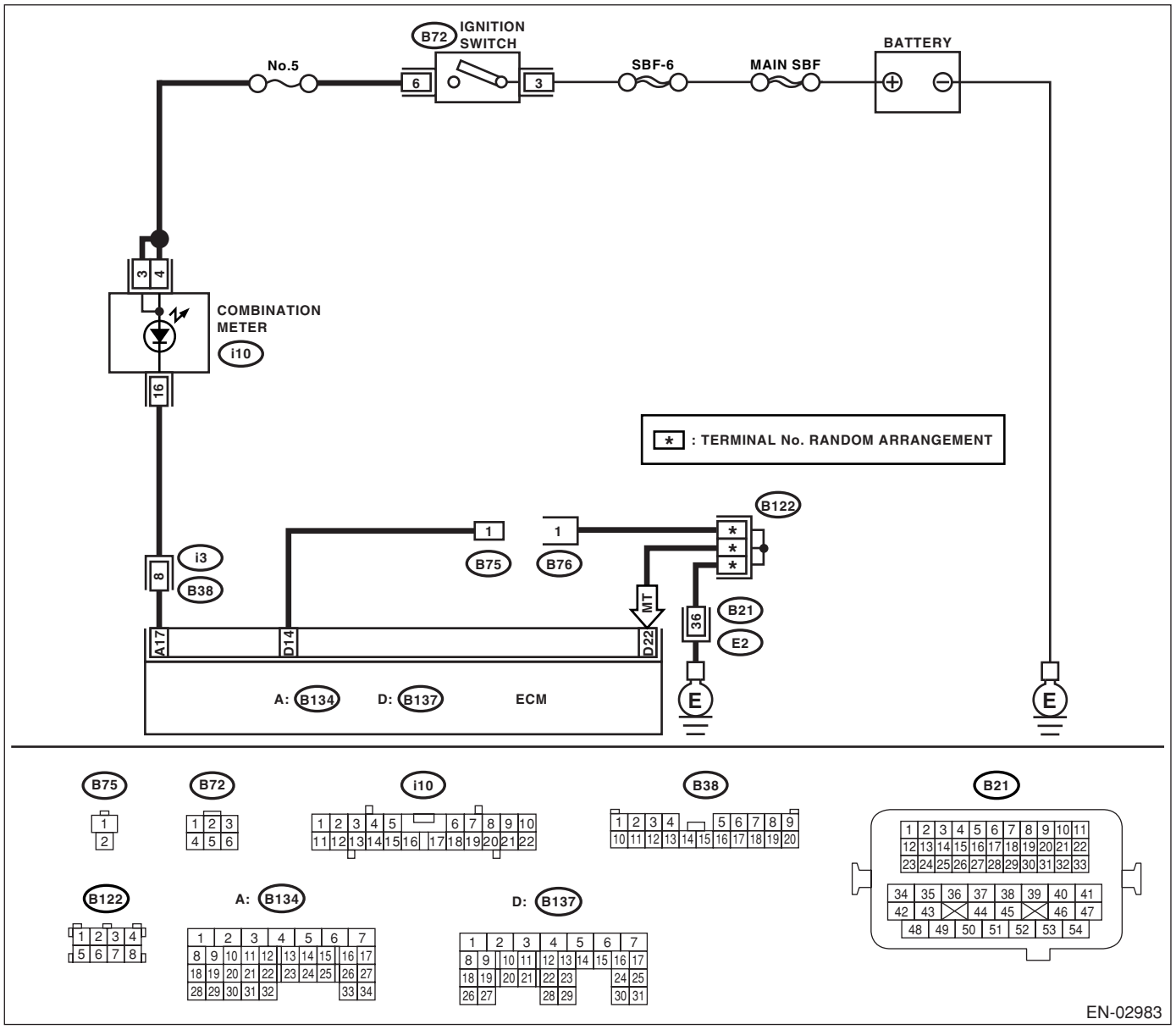

EN-02983

	Step	Check	Yes	No
1	**CHECK STATUS OF MALFUNCTION INDICATOR LIGHT.** 1) Turn the ignition switch to OFF. 2) Disconnect the test mode connector. 3) Turn the ignition switch to ON. (engine OFF)	Does the malfunction indicator light illuminate?	Go to step **2.**	Repair the malfunction indictor light circuit. <Ref. to EN(H4SO U5)(diag)-51, MALFUNCTION INDICATOR LIGHT DOES NOT COME ON, Malfunction Indicator Light.>
2	**CHECK HARNESS BETWEEN COMBINATION METER AND ECM CONNECTOR.** 1) Turn the ignition switch to OFF. 2) Disconnect the connector from ECM. 3) Turn the ignition switch to ON.	Does the malfunction indicator light illuminate?	Repair the short circuit in harness between combination meter and ECM connector.	Go to step **3.**
3	**CHECK HARNESS BETWEEN TEST MODE CONNECTOR AND CHASSIS GROUND.** 1) Turn the ignition switch to OFF. 2) Disconnect the connector from ECM. 3) Measure the resistance of harness between test mode connector and chassis ground. ***Connector & terminal*** ***(B76) No. 1 — Chassis ground:***	Is the resistance less than 1 Ω?	Go to step **4.**	Repair the harness and connector. NOTE: In this case, repair the following: • Open circuit in harness between test mode connector and chassis ground
4	**CHECK POOR CONTACT.** Check poor contact in ECM connector.	Is there poor contact in ECM connector?	Repair the poor contact in ECM connector.	Go to step **5.**
5	**CHECK HARNESS BETWEEN ECM AND TEST MODE CONNECTOR.** 1) Connect the test mode connector. 2) Measure the resistance of harness between ECM and chassis ground. ***Connector & terminal*** ***(B137) No. 14 — Chassis ground:***	Is the resistance less than 1 Ω?	Go to step **6.**	Repair the open circuit in harness between ECM and test mode connector.
6	**CHECK POOR CONTACT.** Check poor contact in ECM connector.	Is there poor contact in ECM connector?	Repair the poor contact in ECM connector.	Replace the ECM. <Ref. to FU(H4SO U5)-44, Engine Control Module (ECM).>

F: MALFUNCTION INDICATOR LIGHT REMAINS BLINKING.

DIAGNOSIS:
Test mode connector circuit is shorted.
TROUBLE SYMPTOM:
Malfunction indicator light blinks when test mode connector is not connected.
WIRING DIAGRAM:

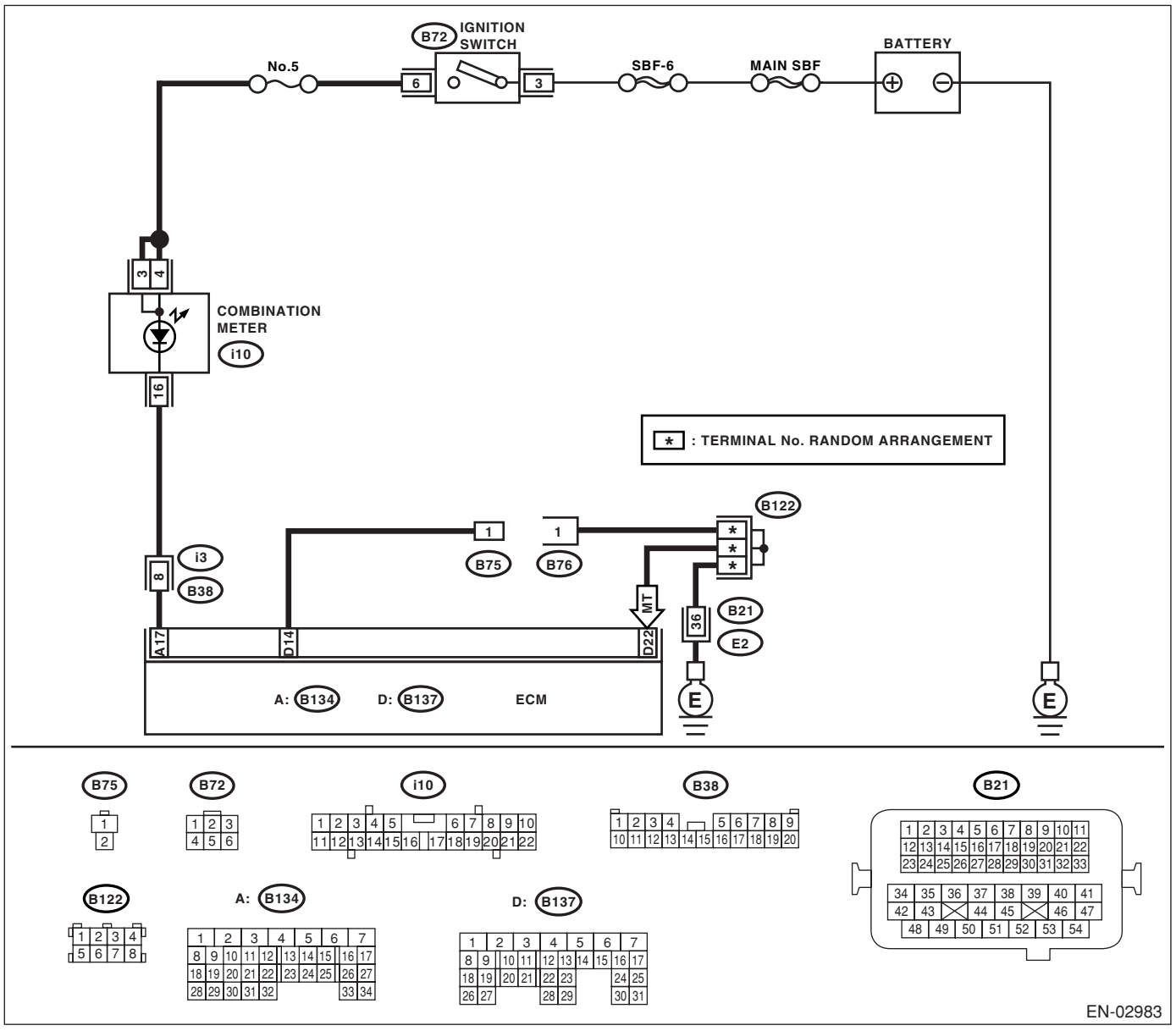

	Step	Check	Yes	No
1	**CHECK TEST MODE CONNECTOR.** 1) Disconnect the test mode connector. 2) Turn the ignition switch to ON.	Does the malfunction indicator light blink?	Go to step **2.**	System is in good order. NOTE: Malfunction indicator light blinks when test mode connector is connected.
2	**CHECK HARNESS BETWEEN ECM CONNECTOR AND CHASSIS GROUNDING TERMINAL.** 1) Turn the ignition switch to OFF. 2) Disconnect the connector from ECM. 3) Measure the resistance of harness between ECM connector and chassis ground. ***Connector & terminal*** ***(B137) No. 14 — Chassis ground:***	Is the resistance less than 5 Ω?	Repair the short circuit in harness between ECM and test mode connector.	Replace the ECM. <Ref. to FU(H4SO U5)-44, Engine Control Module (ECM).>

16.Diagnostics for Engine Starting Failure

A: PROCEDURE

1. Check for fuel amount.
↓
2. Inspection of starter motor circuit. <Ref. to EN(H4SO U5)(diag)-59, STARTER MOTOR CIRCUIT, Diagnostics for Engine Starting Failure.>
↓
3. Inspection of ECM power supply and ground line. <Ref. to EN(H4SO U5)(diag)-63, CHECK POWER SUPPLY AND GROUND LINE OF ENGINE CONTROL MODULE (ECM), Diagnostics for Engine Starting Failure.>
↓
4. Inspection of ignition control system. <Ref. to EN(H4SO U5)(diag)-65, IGNITION CONTROL SYSTEM, Diagnostics for Engine Starting Failure.>
↓
5. Inspection of fuel pump circuit. <Ref. to EN(H4SO U5)(diag)-68, FUEL PUMP CIRCUIT, Diagnostics for Engine Starting Failure.>
↓
6. Inspection of fuel injector circuit. <Ref. to EN(H4SO U5)(diag)-71, FUEL INJECTOR CIRCUIT, Diagnostics for Engine Starting Failure.>

B: STARTER MOTOR CIRCUIT

CAUTION:
After repair or replacement of faulty parts, conduct Clear Memory Mode <Ref. to EN(H4SO U5)(diag)-46, OPERATION, Clear Memory Mode.> and Inspection Mode <Ref. to EN(H4SO U5)(diag)-37, OPERATION, Inspection Mode.>.

WIRING DIAGRAM:

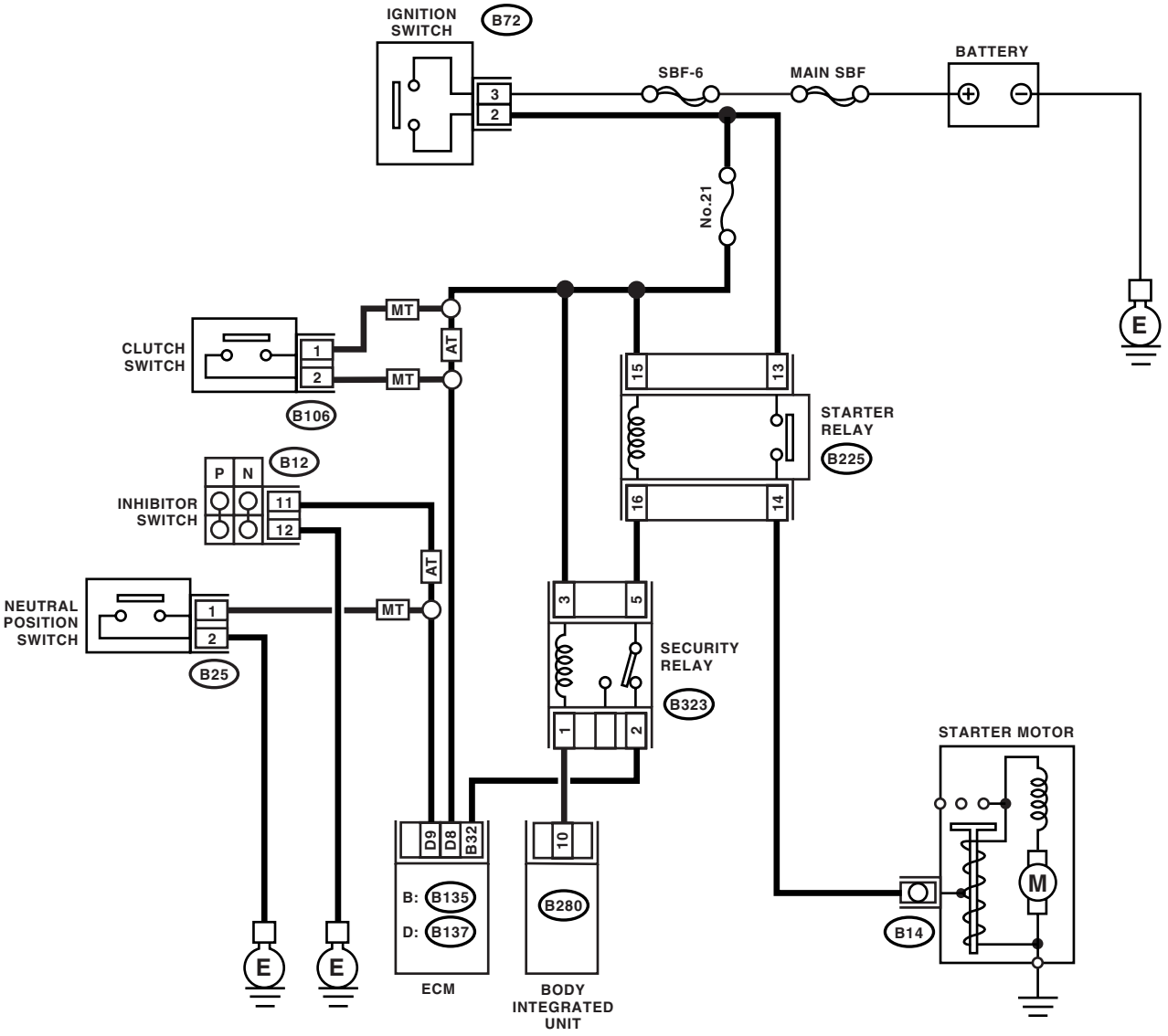

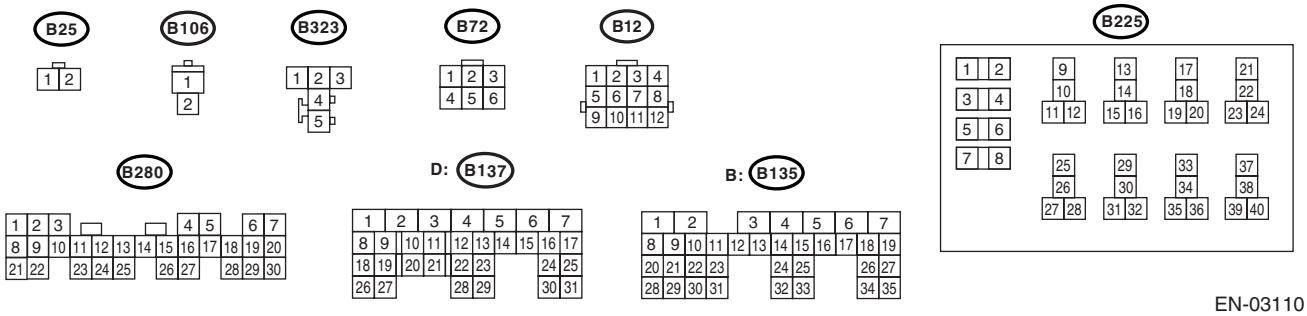

EN-03110

Diagnostics for Engine Starting Failure

	Step	Check	Yes	No
1	**CHECK BATTERY.** Check the battery voltage.	Is the voltage more than 12 V?	Go to step **2.**	Charge or replace the battery.
2	**CHECK OPERATION OF STARTER MOTOR.** NOTE: Check the security alarm is not sounding.	Does the starter motor operate?	Go to step **3.**	Go to step **4.**
3	**CHECK DTC.**	Is DTC displayed? <Ref. to EN(H4SO U5)(diag)-36, OPERATION, Read Diagnostic Trouble Code (DTC).>	Inspect the relevant DTC using List of Diagnostic Trouble Code (DTC). <Ref. to EN(H4SO U5)(diag)-73, List of Diagnostic Trouble Code (DTC).>	Repair the poor contact in ECM connector.
4	**CHECK INPUT SIGNAL FOR STARTER MOTOR.** 1) Turn the ignition switch to OFF. 2) Disconnect the connector from starter motor. 3) Turn the ignition switch to START. 4) Measure the power supply voltage between starter motor connector terminal and engine ground. ***Connector & terminal*** ***(B14) No. 1 (+) — Engine ground (−):*** NOTE: • On AT model, set the selector lever in the "P" or "N" range. • On MT model, depress the clutch pedal.	Is the voltage more than 10 V?	Check the starter motor. <Ref. to SC(H4SO)-6, Starter.>	Go to step **5.**
5	**CHECK HARNESS BETWEEN BATTERY AND IGNITION SWITCH CONNECTOR.** 1) Disconnect the connector from ignition switch. 2) Measure the power supply voltage between ignition switch connector and chassis ground. ***Connector & terminal*** ***(B72) No. 3 (+) — Chassis ground (−):***	Is the voltage more than 10 V?	Go to step **6.**	Repair the open or ground short circuit in harness between ignition switch and battery, and check fuse SBF No. 6 and MAIN SBF.
6	**CHECK IGNITION SWITCH.** 1) Disconnect the connector from ignition switch. 2) Measure the resistance between ignition switch terminals after turning the ignition switch to START position. ***Terminals*** ***No. 2 — No. 3:***	Is the resistance less than 5 Ω?	Go to step **7.**	Replace the ignition switch.
7	**CHECK INPUT VOLTAGE OF STARTER RELAY.** 1) Turn the ignition switch to OFF. 2) Disconnect the connector from starter relay. 3) Connect the connector to ignition switch. 4) Measure the input voltage between starter relay connector and chassis ground after turning the ignition switch to START position. ***Connector & terminal*** ***(B225) No. 13 (+) — Chassis ground (−):*** ***(B225) No. 15 (+) — Chassis ground (−):***	Is the voltage more than 10 V?	Go to step **8.**	Repair the open or ground short circuit in harness between starter fan relay and ignition switch.

	Step	Check	Yes	No
8	**CHECK STARTER RELAY.** 1) Connect the battery to starter relay terminals No. 15 and No. 16. 2) Measure the resistance between starter relay terminals. ***Terminals*** ***No. 13 — No. 14:***	Is the resistance less than 1 Ω?	Go to step **9.**	Replace the starter relay.
9	**CHECK HARNESS BETWEEN STARTER RELAY AND STARTER MOTOR** 1) Disconnect the connector from starter motor. 2) Measure the resistance of harness between starter relay and starter motor. ***Connector & terminal*** ***(B225) No. 14 — (B14) No. 1:***	Is the resistance less than 1 Ω?	Go to step **10.**	Replace the open or ground short circuit of harness between starter relay and starter motor.
10	**CHECK HARNESS BETWEEN STARTER RELAY AND SECURITY RELAY.** 1) Disconnect the connector from security relay. 2) Measure the resistance of harness between starter relay and security relay. ***Connector & terminal*** ***(B225) No. 16 — (B323) No. 5:***	Is the resistance less than 1 Ω?	Go to step **11.**	Replace the open or ground short circuit of harness between starter relay and security relay.
11	**CHECK INPUT VOLTAGE OF SECURITY RELAY.** 1) Turn the ignition switch to START. 2) Measure the input voltage between security relay connector and chassis ground. ***Connector & terminal*** ***(B323) No. 3 (+) — Chassis ground (−):***	Is the voltage more than 10 V?	Go to step **12.**	Repair the open or ground short circuit of harness between security relay and ignition switch.
12	**CHECK SECURITY RELAY.** 1) Turn the ignition switch to OFF. 2) Measure the resistance between security relay terminals. ***Terminal*** ***No. 2 — No. 5:***	is the resistance less than 1 Ω?	Go to step **13.**	Replace the security relay.
13	**CHECK HARNESS BETWEEN ECM AND SECURITY RELAY.** 1) Disconnect the connector from ECM. 2) Measure the resistance of harness connector between ECM and security relay. ***Connector & terminal*** ***(B135) No. 32 — (B323) No. 2:***	Is the resistance less than 1 Ω?	Go to step **14.**	Repair the open or ground short circuit of harness between ECM and security relay.
14	**CHECK HARNESS BETWEEN BODY INTEGRATED UNIT AND SECURITY RELAY.** 1) Disconnect the connector from body integrated unit. 2) Measure the resistance of harness connector between body integrated unit and security relay. ***Connector & terminal*** ***(B280) No. 10 — (B323) No. 1:***	Is the resistance less than 1 Ω?	Go to step **15.**	Repair the open or ground short circuit of harness between body integrated unit and security relay.
15	**CHECK TRANSMISSION TYPE.**	Is the transmission type AT?	Go to step **16.**	Go to step **20.**
16	**CHECK INPUT VOLTAGE OF ECM.** 1) Turn the ignition switch to START. 2) Measure the input input voltage between ECM connector and chassis ground. ***Connector & terminal*** ***(B137) No. 8 (+) — Chassis ground (−):***	Is the voltage more than 10 V?	Go to step **17.**	Repair the open or ground short circuit of harness between ECM and ignition switch.

	Step	Check	Yes	No
17	**CHECK HARNESS ECM AND INHIBITOR SWITCH.** 1) Turn the ignition switch to OFF. 2) Disconnect the connector from inhibitor switch. 3) Measure the resistance of harness connector between ECM and inhibitor switch. ***Connector & terminal*** ***(B137) No. 9 — (B12) No. 11:***	Is the resistance less than 1 Ω?	Go to step **18.**	Repair the open or ground short circuit of harness between ECM and inhibitor switch.
18	**CHECK GROUND CIRCUIT OF INHIBITOR SWITCH.** Measure the resistance between inhibitor switch and chassis ground. ***Connector & terminal*** ***(B12) No. 12 — Chassis ground:***	Is the resistance less than 5 Ω?	Go to step **19.**	Repair the open circuit of ground circuit.
19	**CHECK INHIBITOR SWITCH.** 1) Place the shift lever except in “N” and “P” range. 2) Measure the resistance between inhibitor switch terminals. ***Terminal*** ***No. 11 — No. 12:***	Is the resistance more than 1 MΩ?	Correct with SOA service center	Replace the inhibitor switch.
20	**CHECK INPUT VOLTAGE OF ECM.** 1) Turn the ignition switch to START. 2) Measure the input voltage between ECM connector and chassis ground. ***Connector & terminal*** ***(B137) No. 8 (+) — Chassis ground (−):*** NOTE: Depress the clutch pedal.	Is the voltage more than 10 V?	Go to step **21.**	Repair the open or ground short circuit of harness between ECM and ignition switch.
21	**CHECK CLUTCH SWITCH.** 1) Turn the ignition switch to OFF. 2) Disconnect the connector from clutch switch. 3) Measure the resistance between clutch switch terminals with the clutch pedal depressed. ***Terminal*** ***No. 1 — No. 2:***	Is the resistance less than 1 Ω?	Go to step **22.**	Replace the clutch switch.
22	**CHECK HARNESS BETWEEN ECM AND NEUTRAL POSITION SWITCH.** 1) Disconnect the connector from neutral position switch. 2) Measure the resistance of harness connector between ECM and neutral position switch. ***Connector & terminal*** ***(B137) No. 9 — (B25) No. 1:***	Is the resistance less than 1 Ω?	Go to step **23.**	Repair the open or ground short circuit of harness between ECM and neutral position switch.
23	**CHECK GROUND CIRCUIT OF NEUTRAL POSITION SWITCH.** Measure the resistance of harness between neutral position switch and chassis ground. ***Connector & terminal*** ***(B25) No. 2 — Chassis ground:***	Is the resistance less than 5 Ω?	Go to step **24.**	Repair the open circuit of ground circuit.
24	**CHECK NEUTRAL POSITION SWITCH.** 1) Place the shift lever in “N” range. 2) Measure the resistance between neutral position switch connector terminals. ***Terminal*** ***No. 1 — No. 2:***	Is the resistance more than 1 MΩ?	Contact your SOA service center.	Replace the neutral position switch.

C: CHECK POWER SUPPLY AND GROUND LINE OF ENGINE CONTROL MODULE (ECM)

CAUTION:
After repair or replacement of faulty parts, conduct Clear Memory Mode <Ref. to EN(H4SO U5)(diag)-46, OPERATION, Clear Memory Mode.> and Inspection Mode <Ref. to EN(H4SO U5)(diag)-37, OPERATION, Inspection Mode.>.

WIRING DIAGRAM:

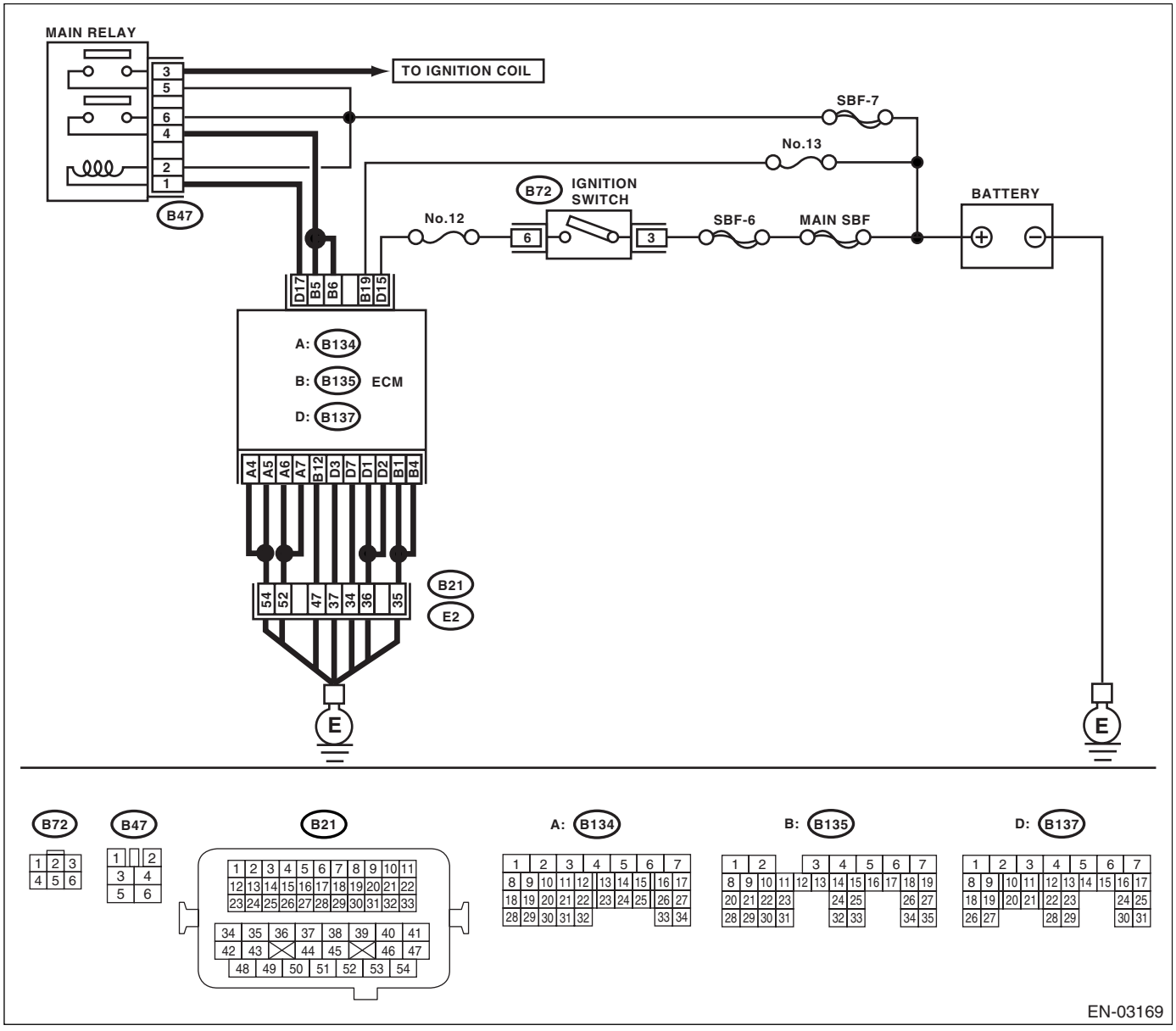

Diagnostics for Engine Starting Failure

	Step	Check	Yes	No
1	**CHECK MAIN RELAY.** 1) Turn the ignition switch to OFF. 2) Remove the main relay. 3) Connect the battery to main relay terminals No. 1 and No. 2. 4) Measure the resistance between main relay terminals. ***Terminals*** ***No. 3 — No. 5:*** ***No. 4 — No. 6:***	Is the resistance less than 10 Ω?	Go to step **2.**	Replace the main relay.
2	**CHECK GROUND CIRCUIT FOR ECM.** 1) Disconnect the connector from ECM. 2) Measure the resistance of harness between ECM and chassis ground. ***Connector & terminal*** ***(B134) No. 4 — Chassis ground:*** ***(B134) No. 5 — Chassis ground:*** ***(B134) No. 6 — Chassis ground:*** ***(B134) No. 7 — Chassis ground:*** ***(B135) No. 1 — Chassis ground:*** ***(B135) No. 4 — Chassis ground:*** ***(B135) No. 12 — Chassis ground:*** ***(B137) No. 1 — Chassis ground:*** ***(B137) No. 2 — Chassis ground:*** ***(B137) No. 3 — Chassis ground:*** ***(B137) No. 7 — Chassis ground:***	Is the resistance less than 5 Ω?	Go to step **3.**	Repair the open circuit in harness between ECM connector and engine grounding terminal.
3	**CHECK INPUT VOLTAGE OF ECM.** Measure the voltage between ECM connector and chassis ground. ***Connector & terminal*** ***(B135) No. 19 (+) — Chassis ground (−):*** ***(B137) No. 15 (+) — Chassis ground (−):***	Is the voltage more than 10 V?	Go to step **4.**	Repair the open or ground short circuit of power supply circuit.
4	**CHECK INPUT VOLTAGE OF MAIN RELAY.** Measure the voltage between main relay connector and chassis ground. ***Connector & terminal*** ***(B47) No. 1 (+) — Chassis ground (−):*** ***(B47) No. 5 (+) — Chassis ground (−):*** ***(B47) No. 6 (+) — Chassis ground (−):***	Is the voltage more than 10 V?	Go to step **5.**	Repair the open or ground short circuit in harness of power supply circuit.
5	**CHECK INPUT VOLTAGE OF ECM.** 1) Turn the ignition switch to ON. 2) Measure the voltage between ECM connector and chassis ground. ***Connector & terminal*** ***(B135) No. 5 (+) — Chassis ground (−):*** ***(B135) No. 6 (+) — Chassis ground (−):*** ***(B137) No. 17 (+) — Chassis ground (−):***	Is the voltage more than 10 V?	Check ignition control system. <Ref. to EN(H4SO U5)(diag)-65, IGNITION CONTROL SYSTEM, Diagnostics for Engine Starting Failure.>	Repair the open or ground short circuit in harness between ECM connector and main relay connector.

D: IGNITION CONTROL SYSTEM

CAUTION:
After repair or replacement of faulty parts, conduct Clear Memory Mode <Ref. to EN(H4SO U5)(diag)-46, OPERATION, Clear Memory Mode.> and Inspection Mode <Ref. to EN(H4SO U5)(diag)-37, OPERATION, Inspection Mode.>.

WIRING DIAGRAM:

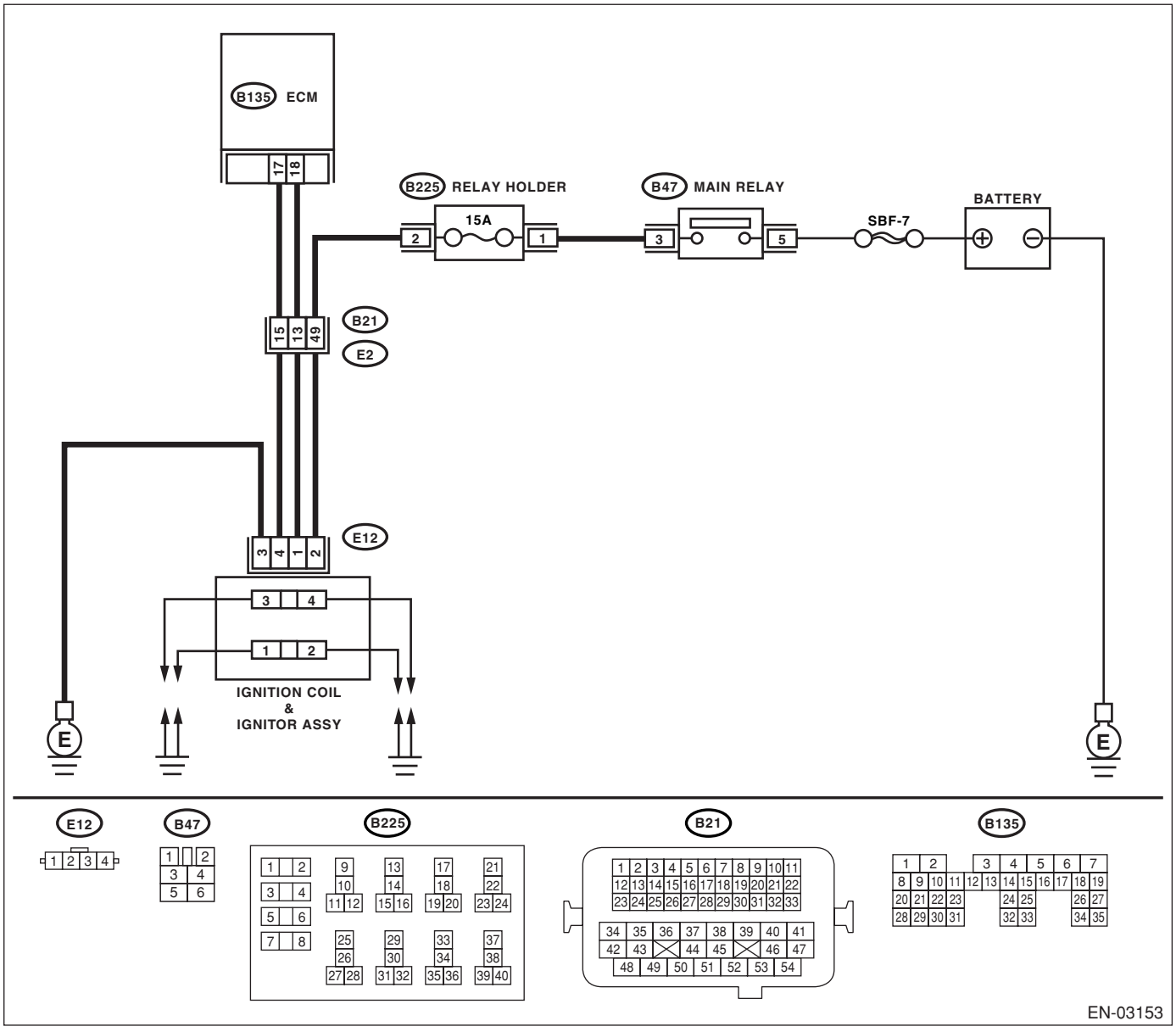

Diagnostics for Engine Starting Failure

	Step	Check	Yes	No
1	**CHECK IGNITION SYSTEM FOR SPARKS.** 1) Remove the plug cord cap from each spark plug. 2) Install a new spark plug on plug cord cap. **CAUTION:** **Do not remove the spark plug from engine.** 3) Contact the spark plug's thread portion on engine. 4) While opening the throttle valve fully, crank the engine to check that spark occurs at each cylinder.	Does spark occur at each cylinder?	Check fuel pump system. <Ref. to EN(H4SO U5)(diag)-68, FUEL PUMP CIRCUIT, Diagnostics for Engine Starting Failure.>	Go to step **2.**
2	**CHECK POWER SUPPLY CIRCUIT FOR IGNITION COIL AND IGNITOR ASSEMBLY.** 1) Turn the ignition switch to OFF. 2) Disconnect the connector from ignition coil and ignitor assembly. 3) Turn the ignition switch to ON. 4) Measure the power supply voltage between ignition coil and ignitor assembly connector and engine ground. ***Connector & terminal*** ***(E12) No. 2 (+) — Engine ground (–):***	Is the voltage more than 10 V?	Go to step **3.**	Repair the harness and connector. NOTE: In this case, repair the following: • Open circuit in harness between ignition coil and ignitor assembly, and main relay connector • Poor contact in coupling connector • Blown out fuse
3	**CHECK HARNESS OF IGNITION COIL AND IGNITOR ASSEMBLY GROUND CIRCUIT.** 1) Turn the ignition switch to OFF. 2) Measure the resistance between ignition coil and ignitor assembly connector and engine ground. ***Connector & terminal*** ***(E12) No. 3 — Engine ground:***	Is the resistance less than 5 Ω?	Go to step **4.**	Repair the harness and connector. NOTE: In this case, repair the following: • Open circuit in harness between ignition coil and ignitor assembly connector and engine grounding terminal
4	**CHECK IGNITION COIL AND IGNITOR ASSEMBLY.** 1) Remove the spark plug cords. 2) Measure the resistance between spark plug cord contact portions to check secondary coil. ***Terminals*** ***No. 1 — No. 2:*** ***No. 3 — No. 4:***	Is the resistance 10 — 15 kΩ?	Go to step **5.**	Replace the ignition coil and ignitor assembly. <Ref. to IG(H4SO)-8, Ignition Coil and Ignitor Assembly.>
5	**CHECK INPUT SIGNAL FOR IGNITION COIL and IGNITOR ASSEMBLY.** 1) Connect the connector to ignition coil and ignitor assembly. 2) Check if voltage varies synchronously with engine speed when cranking, while monitoring voltage between ignition coil and ignitor assembly connector and engine ground. ***Connector & terminal*** ***(E12) No. 1 (+) — Engine ground (–):*** ***(E12) No. 4 (+) — Engine ground (–):***	Does the voltage vary more than 10 V?	Go to step **6.**	Replace the ignition coil and ignitor assembly. <Ref. to IG(H4SO)-8, Ignition Coil and Ignitor Assembly.>

	Step	Check	Yes	No
6	**CHECK HARNESS BETWEEN ECM AND IGNITION COIL AND IGNITOR ASSEMBLY CONNECTOR.** 1) Turn the ignition switch to OFF. 2) Disconnect the connector from ECM. 3) Disconnect the connector from ignition coil and ignitor assembly. 4) Measure the resistance of harness between ECM and ignition coil and ignitor assembly connector. ***Connector & terminal*** ***(B135) No. 18 — (E12) No. 1:*** ***(B135) No. 17 — (E12) No. 4:***	Is the resistance less than 1 Ω?	Go to step **7.**	Repair the harness and connector. NOTE: In this case, repair the following: • Open circuit in harness between ECM and ignition coil and ignitor assembly connector • Poor contact in coupling connector
7	**CHECK HARNESS BETWEEN ECM AND IGNITION COIL AND IGNITOR ASSEMBLY CONNECTOR.** Measure the resistance of harness between ECM and engine ground. ***Connector & terminal:*** ***(B135) No. 18 — Engine ground:*** ***(B135) No. 17 — Engine ground:***	Is the resistance more than 1 MΩ?	Go to step **8.**	Repair the ground short circuit in harness between ECM and ignition coil and ignitor assembly connector.
8	**CHECK POOR CONTACT.** Check poor contact in ECM connector.	Is there poor contact in ECM connector?	Repair the poor contact in ECM connector.	Check the fuel pump circuit. <Ref. to EN(H4SO U5)(diag)-68, FUEL PUMP CIRCUIT, Diagnostics for Engine Starting Failure.>

E: FUEL PUMP CIRCUIT

CAUTION:
After repair or replacement of faulty parts, conduct Clear Memory Mode <Ref. to EN(H4SO U5)(diag)-46, OPERATION, Clear Memory Mode.> and Inspection Mode <Ref. to EN(H4SO U5)(diag)-37, OPERATION, Inspection Mode.>.

WIRING DIAGRAM:

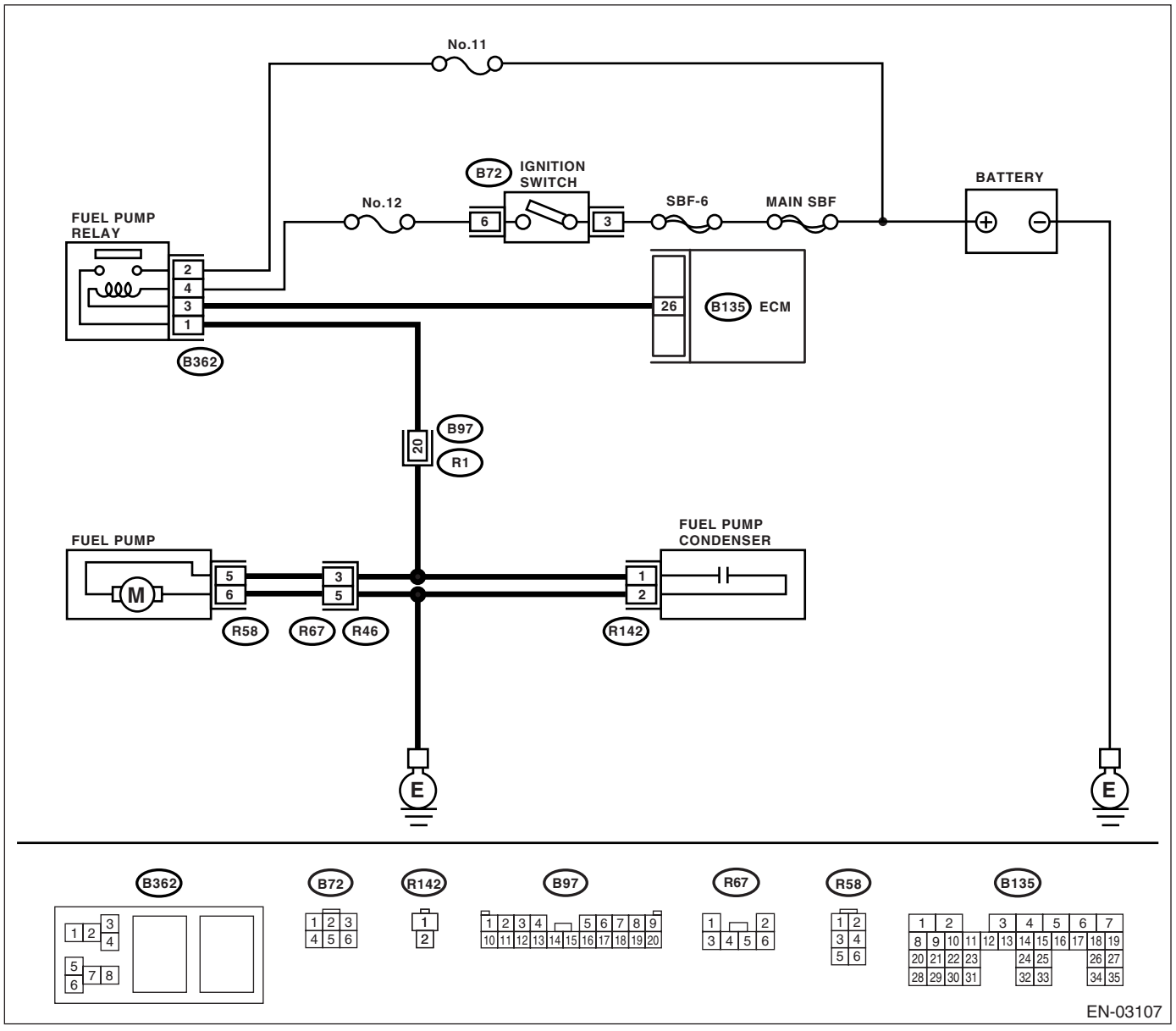

	Step	Check	Yes	No
1	**CHECK OPERATING SOUND OF FUEL PUMP.** Check if the fuel pump is in operation for two seconds when turning the ignition switch to ON. NOTE: Fuel pump operation can also be executed using Subaru Select Monitor. Refer to "Compulsory Valve Operation Check Mode" for procedures. <Ref. to EN(H4SO U5)(diag)-47, Compulsory Valve Operation Check Mode.>	Does the fuel pump produce operating sound?	Check the fuel injector circuit. <Ref. to EN(H4SO U5)(diag)-71, FUEL INJECTOR CIRCUIT, Diagnostics for Engine Starting Failure.>	Go to step **2.**
2	**CHECK GROUND CIRCUIT OF FUEL PUMP.** 1) Turn the ignition switch to OFF. 2) Remove the fuel pump access hole lid. 3) Disconnect the connector from fuel pump. 4) Measure the resistance of harness connector between fuel pump and chassis ground. ***Connector & terminal*** ***(R58) No. 6 — Chassis ground:***	Is the resistance less than 5 Ω?	Go to step **3.**	Repair the harness and connector. NOTE: In this case, repair the following: • Open circuit in harness between fuel pump connector and chassis grounding terminal
3	**CHECK POWER SUPPLY TO FUEL PUMP.** 1) Turn the ignition switch to ON. 2) Measure the voltage of power supply circuit between fuel pump connector and chassis ground. ***Connector & terminal*** ***(R58) No. 5 (+) — Chassis ground (−):***	Is the voltage more than 10 V?	Replace the fuel pump. <Ref. to FU(H4SO U5)-58, Fuel Pump.>	Go to step **4.**
4	**CHECK HARNESS BETWEEN FUEL PUMP AND FUEL PUMP RELAY CONNECTOR.** 1) Turn the ignition switch to OFF. 2) Measure the resistance of harness connector between fuel pump and fuel pump relay. ***Connector & terminal*** ***(R58) No. 5 — (B362) No. 1:***	Is the resistance less than 1 Ω?	Go to step **5.**	Repair the harness and connector. NOTE: In this case, repair the following: • Open circuit in harness between fuel pump connector and chassis grounding terminal • Poor contact in coupling connector
5	**CHECK HARNESS BETWEEN FUEL PUMP AND FUEL PUMP RELAY CONNECTOR.** Measure the resistance of harness between fuel pump and fuel pump relay connector. ***Connector & terminal*** ***(R58) No. 5 — Chassis ground:***	Is the resistance more than 1 MΩ?	Go to step **6.**	Repair the short circuit in harness between fuel pump and fuel pump relay connector.
6	**CHECK FUEL PUMP RELAY.** 1) Disconnect the connectors from fuel pump relay and main relay. 2) Remove the fuel pump relay and main relay with bracket. 3) Connect the battery to fuel pump relay connector terminals No. 3 and No. 4. 4) Measure the resistance between connector terminals of fuel pump relay. ***Terminals*** ***No. 2 — No. 1:***	Is the resistance less than 10 Ω?	Go to step **7.**	Replace the fuel pump relay. <Ref. to FU(H4SO U5)-58, Fuel Pump.>

	Step	Check	Yes	No
7	**CHECK HARNESS BETWEEN ECM AND FUEL PUMP RELAY CONNECTOR.** 1) Disconnect the connector from ECM. 2) Measure the resistance of harness between ECM and fuel pump relay connector. ***Connector & terminal (B135) No. 26 — (B362) No. 3:***	Is the resistance less than 1 Ω?	Go to step **8.**	Repair the open circuit in harness between ECM and fuel pump relay connector.
8	**CHECK POOR CONTACT.** Check poor contact in ECM connector.	Is there poor contact in ECM connector?	Repair the poor contact in ECM connector.	Check the fuel injector circuit. <Ref. to EN(H4SO U5)(diag)-71, FUEL INJECTOR CIRCUIT, Diagnostics for Engine Starting Failure.>

F: FUEL INJECTOR CIRCUIT

CAUTION:
- **Check or repair only faulty parts.**
- **After repair or replacement of faulty parts, conduct Clear Memory Mode <Ref. to EN(H4SO U5)(diag)-46, OPERATION, Clear Memory Mode.> and Inspection Mode <Ref. to EN(H4SO U5)(diag)-37, OPERATION, Inspection Mode.>.**

WIRING DIAGRAM:

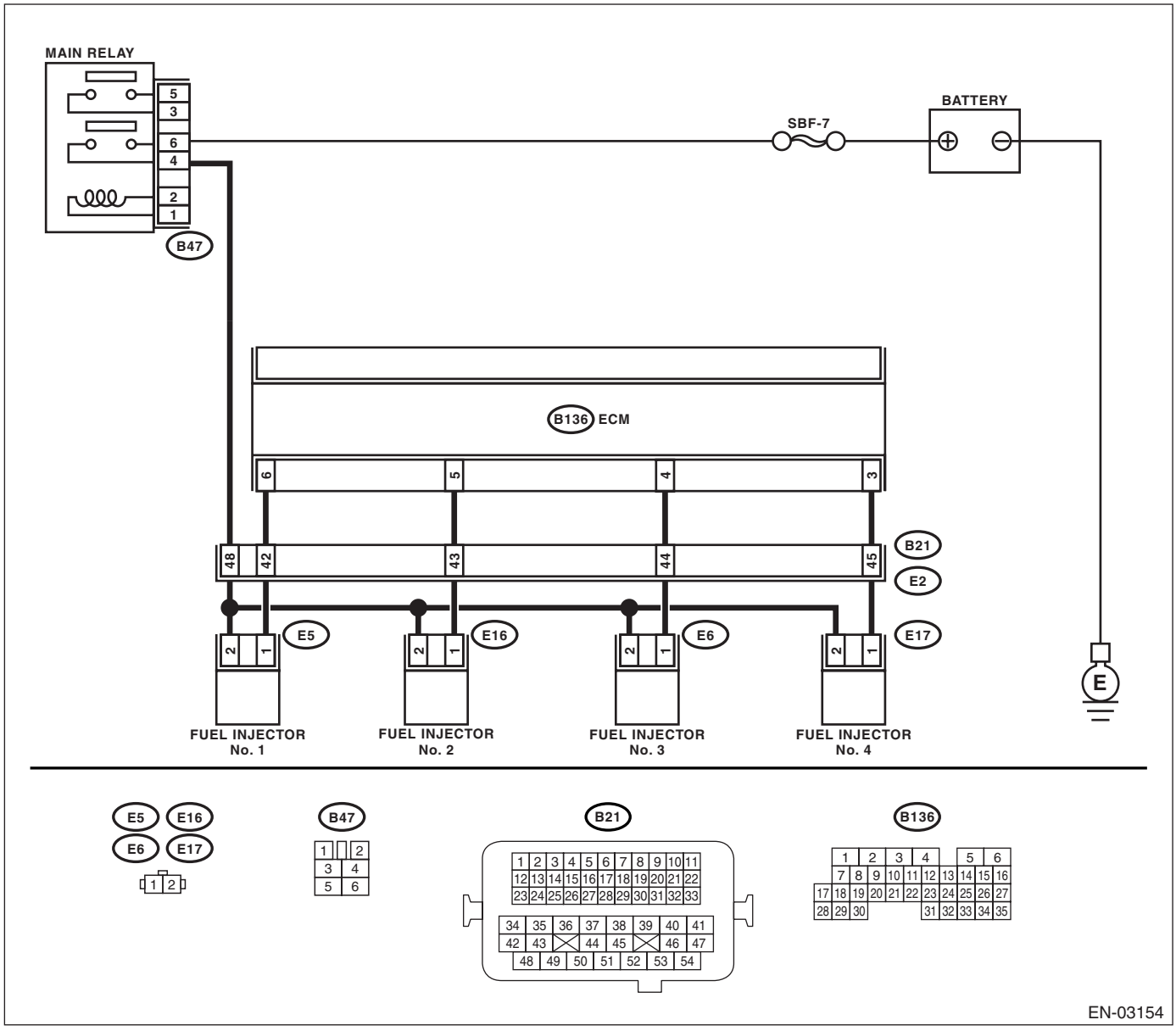

	Step	Check	Yes	No
1	**CHECK OPERATION OF EACH FUEL INJECTOR.** While cranking the engine, check each fuel injector emits operating sound. Use a sound scope or apply a screwdriver to the injector for this check.	Does the fuel pump emit operating sound?	Check the fuel pressure. <Ref. to ME(H4SO)-25, INSPECTION, Fuel Pressure.>	Go to step **2.**

	Step	Check	Yes	No
2	**CHECK POWER SUPPLY TO EACH FUEL INJECTOR.** 1) Turn the ignition switch to OFF. 2) Disconnect the connector from fuel injector. 3) Turn the ignition switch to ON. 4) Measure the power supply voltage between fuel injector terminal and engine ground. ***Connector & terminal*** ***#1 (E5) No. 2 (+) — Engine ground (–):*** ***#2 (E16) No. 2 (+) — Engine ground (–):*** ***#3 (E6) No. 2 (+) — Engine ground (–):*** ***#4 (E17) No. 2 (+) — Engine ground (–):***	Is the voltage more than 10 V?	Go to step **3.**	Repair the harness and connector. NOTE: In this case, repair the following: • Open circuit in harness between main relay and fuel injector connector • Poor contact in main relay connector • Poor contact in coupling connector • Poor contact in fuel injector connector
3	**CHECK HARNESS BETWEEN ECM AND FUEL INJECTOR CONNECTOR.** 1) Disconnect the connector from ECM. 2) Measure the resistance of harness between ECM and fuel injector connector. ***Connector & terminal*** ***#1 (B136) No. 6 — (E5) No. 1:*** ***#2 (B136) No. 5 — (E16) No. 1:*** ***#3 (B136) No. 4 — (E6) No. 1:*** ***#4 (B136) No. 3 — (E17) No. 1:***	Is the resistance less than 1 Ω?	Go to step **4.**	Repair the harness and connector. NOTE: In this case, repair the following: • Open circuit in harness between ECM and fuel injector connector • Poor contact in coupling connector
4	**CHECK HARNESS BETWEEN ECM AND FUEL INJECTOR CONNECTOR.** Measure the resistance of harness between ECM and fuel injector connector. ***Connector & terminal*** ***#1 (B136) No. 6 — Chassis ground:*** ***#2 (B136) No. 5 — Chassis ground:*** ***#3 (B136) No. 4 — Chassis ground:*** ***#4 (B136) No. 3 — Chassis ground:***	Is the resistance more than 1 MΩ?	Go to step **5.**	Repair the ground short circuit in harness between ECM and fuel injector connector.
5	**CHECK EACH FUEL INJECTOR.** 1) Turn the ignition switch to OFF. 2) Measure the resistance between each fuel injector terminals. ***Terminals*** ***No. 1 — No. 2:***	Is the resistance 5 — 20 Ω?	Go to step **6.**	Replace the faulty fuel injector.
6	**CHECK POOR CONTACT.** Check poor contact in ECM connector.	Is there poor contact in ECM connector?	Repair the poor contact in ECM connector.	Inspection using “General Diagnostic Table” <Ref. to EN(H4SO U5)(diag)-371, INSPECTION, General Diagnostic Table.>

17.List of Diagnostic Trouble Code (DTC)

A: LIST

DTC	Item	Index
P0030	HO2S Heater Control Circuit (Bank 1 Sensor 1)	<Ref. to EN(H4SO U5)(diag)-81, DTC P0030 HO2S HEATER CONTROL CIRCUIT (BANK 1 SENSOR 1), Diagnostic Procedure with Diagnostic Trouble Code (DTC).>
P0031	HO2S Heater Control Circuit Low (Bank 1 Sensor 1)	<Ref. to EN(H4SO U5)(diag)-83, DTC P0031 HO2S HEATER CONTROL CIRCUIT LOW (BANK 1 SENSOR 1), Diagnostic Procedure with Diagnostic Trouble Code (DTC).>
P0032	HO2S Heater Control Circuit High (Bank 1 Sensor 1)	<Ref. to EN(H4SO U5)(diag)-85, DTC P0032 HO2S HEATER CONTROL CIRCUIT HIGH (BANK 1 SENSOR 1), Diagnostic Procedure with Diagnostic Trouble Code (DTC).>
P0037	HO2S Heater Control Circuit Low (Bank 1 Sensor 2)	<Ref. to EN(H4SO U5)(diag)-87, DTC P0037 HO2S HEATER CONTROL CIRCUIT LOW (BANK 1 SENSOR 2), Diagnostic Procedure with Diagnostic Trouble Code (DTC).>
P0038	HO2S Heater Control Circuit High (Bank 1 Sensor 2)	<Ref. to EN(H4SO U5)(diag)-90, DTC P0038 HO2S HEATER CONTROL CIRCUIT HIGH (BANK 1 SENSOR 2), Diagnostic Procedure with Diagnostic Trouble Code (DTC).>
P0043	HO2S Heater Control Circuit Low (Bank 1 Sensor 3)	<Ref. to EN(H4SO U5)(diag)-92, DTC P0043 HO2S HEATER CONTROL CIRCUIT LOW (BANK 1 SENSOR 3), Diagnostic Procedure with Diagnostic Trouble Code (DTC).>
P0044	HO2S Heater Control Circuit High (Bank 1 Sensor 3)	<Ref. to EN(H4SO U5)(diag)-95, DTC P0044 HO2S HEATER CONTROL CIRCUIT HIGH (BANK 1 SENSOR 3), Diagnostic Procedure with Diagnostic Trouble Code (DTC).>
P0050	HO2S Heater Control Circuit (Bank 2 Sensor 1)	<Ref. to EN(H4SO U5)(diag)-97, DTC P0050 HO2S HEATER CONTROL CIRCUIT (BANK 2 SENSOR 1), Diagnostic Procedure with Diagnostic Trouble Code (DTC).>
P0051	HO2S Heater Control Circuit Low (Bank 2 Sensor 1)	<Ref. to EN(H4SO U5)(diag)-99, DTC P0051 HO2S HEATER CONTROL CIRCUIT LOW (BANK 2 SENSOR 1), Diagnostic Procedure with Diagnostic Trouble Code (DTC).>
P0052	HO2S Heater Control Circuit High (Bank 2 Sensor 1)	<Ref. to EN(H4SO U5)(diag)-101, DTC P0052 HO2S HEATER CONTROL CIRCUIT HIGH (BANK 2 SENSOR 1), Diagnostic Procedure with Diagnostic Trouble Code (DTC).>
P0057	HO2S Heater Control Circuit Low (Bank 2 Sensor 2)	<Ref. to EN(H4SO U5)(diag)-103, DTC P0057 HO2S HEATER CONTROL CIRCUIT LOW (BANK 2 SENSOR 2), Diagnostic Procedure with Diagnostic Trouble Code (DTC).>
P0058	HO2S Heater Control Circuit High (Bank 2 Sensor 2)	<Ref. to EN(H4SO U5)(diag)-106, DTC P0058 HO2S HEATER CONTROL CIRCUIT HIGH (BANK 2 SENSOR 2), Diagnostic Procedure with Diagnostic Trouble Code (DTC).>
P0068	MAP/MAF - Throttle Position Correlation	<Ref. to EN(H4SO U5)(diag)-108, DTC P0068 MAP/MAF - THROTTLE POSITION CORRELATION, Diagnostic Procedure with Diagnostic Trouble Code (DTC).>
P0101	Mass or Volume Air Flow Circuit Range/Performance	<Ref. to EN(H4SO U5)(diag)-110, DTC P0101 MASS OR VOLUME AIR FLOW CIRCUIT RANGE/PERFORMANCE, Diagnostic Procedure with Diagnostic Trouble Code (DTC).>
P0102	Mass or Volume Air Flow Circuit Low Input	<Ref. to EN(H4SO U5)(diag)-112, DTC P0102 MASS OR VOLUME AIR FLOW CIRCUIT LOW INPUT, Diagnostic Procedure with Diagnostic Trouble Code (DTC).>
P0103	Mass or Volume Air Flow Circuit High Input	<Ref. to EN(H4SO U5)(diag)-115, DTC P0103 MASS OR VOLUME AIR FLOW CIRCUIT HIGH INPUT, Diagnostic Procedure with Diagnostic Trouble Code (DTC).>
P0107	Manifold Absolute Pressure/Barometric Pressure Circuit Low Input	<Ref. to EN(H4SO U5)(diag)-117, DTC P0107 MANIFOLD ABSOLUTE PRESSURE/BAROMETRIC PRESSURE CIRCUIT LOW INPUT, Diagnostic Procedure with Diagnostic Trouble Code (DTC).>
P0108	Manifold Absolute Pressure/Barometric Pressure Circuit High Input	<Ref. to EN(H4SO U5)(diag)-120, DTC P0108 MANIFOLD ABSOLUTE PRESSURE/BAROMETRIC PRESSURE CIRCUIT HIGH INPUT, Diagnostic Procedure with Diagnostic Trouble Code (DTC).>

DTC	Item	Index
P0111	Intake Air Temperature Circuit Range/Performance	<Ref. to EN(H4SO U5)(diag)-123, DTC P0111 INTAKE AIR TEMPERATURE CIRCUIT RANGE/PERFORMANCE, Diagnostic Procedure with Diagnostic Trouble Code (DTC).>
P0112	Intake Air Temperature Circuit Low Input	<Ref. to EN(H4SO U5)(diag)-125, DTC P0112 INTAKE AIR TEMPERATURE CIRCUIT LOW INPUT, Diagnostic Procedure with Diagnostic Trouble Code (DTC).>
P0113	Intake Air Temperature Circuit High Input	<Ref. to EN(H4SO U5)(diag)-127, DTC P0113 INTAKE AIR TEMPERATURE CIRCUIT HIGH INPUT, Diagnostic Procedure with Diagnostic Trouble Code (DTC).>
P0117	Engine Coolant Temperature Circuit Low Input	<Ref. to EN(H4SO U5)(diag)-130, DTC P0117 ENGINE COOLANT TEMPERATURE CIRCUIT LOW INPUT, Diagnostic Procedure with Diagnostic Trouble Code (DTC).>
P0118	Engine Coolant Temperature Circuit High Input	<Ref. to EN(H4SO U5)(diag)-132, DTC P0118 ENGINE COOLANT TEMPERATURE CIRCUIT HIGH INPUT, Diagnostic Procedure with Diagnostic Trouble Code (DTC).>
P0122	Throttle/Pedal Position Sensor/ Switch “A” Circuit Low Input	<Ref. to EN(H4SO U5)(diag)-134, DTC P0122 THROTTLE/PEDAL POSITION SENSOR/SWITCH “A” CIRCUIT LOW INPUT, Diagnostic Procedure with Diagnostic Trouble Code (DTC).>
P0123	Throttle/Pedal Position Sensor/ Switch “A” Circuit High Input	<Ref. to EN(H4SO U5)(diag)-137, DTC P0123 THROTTLE/PEDAL POSITION SENSOR/SWITCH “A” CIRCUIT HIGH INPUT, Diagnostic Procedure with Diagnostic Trouble Code (DTC).>
P0125	Insufficient Coolant Temperature for Closed Loop Fuel Control	<Ref. to EN(H4SO U5)(diag)-140, DTC P0125 INSUFFICIENT ENGINE COOLANT TEMPERATURE FOR CLOSED LOOP FUEL CONTROL, Diagnostic Procedure with Diagnostic Trouble Code (DTC).>
P0126	Insufficient Coolant Temperature for Stable Operation	<Ref. to EN(H4SO U5)(diag)-142, DTC P0126 INSUFFICIENT ENGINE COOLANT TEMPERATURE FOR STABLE OPERATION, Diagnostic Procedure with Diagnostic Trouble Code (DTC).>
P0128	Coolant Thermostat (Coolant Temperature Below Thermostat Regulating Temperature)	<Ref. to EN(H4SO U5)(diag)-144, DTC P0128 COOLANT THERMOSTAT (ENGINE COOLANT TEMPERATURE BELOW THERMOSTAT REGULATING TEMPERATURE), Diagnostic Procedure with Diagnostic Trouble Code (DTC).>
P0131	O2 Sensor Circuit Low Voltage (Bank 1 Sensor 1)	<Ref. to EN(H4SO U5)(diag)-145, DTC P0131 O2 SENSOR CIRCUIT LOW VOLTAGE (BANK 1 SENSOR 1), Diagnostic Procedure with Diagnostic Trouble Code (DTC).>
P0132	O2 Sensor Circuit High Voltage (Bank 1 Sensor 1)	<Ref. to EN(H4SO U5)(diag)-147, DTC P0132 O2 SENSOR CIRCUIT HIGH VOLTAGE (BANK 1 SENSOR 1), Diagnostic Procedure with Diagnostic Trouble Code (DTC).>
P0133	O2 Sensor Circuit Slow Response (Bank 1 Sensor 1)	<Ref. to EN(H4SO U5)(diag)-149, DTC P0133 O2 SENSOR CIRCUIT SLOW RESPONSE (BANK 1 SENSOR 1), Diagnostic Procedure with Diagnostic Trouble Code (DTC).>
P0134	O2 Sensor Circuit No Activity Detected (Bank 1 Sensor 1)	<Ref. to EN(H4SO U5)(diag)-151, DTC P0134 O2 SENSOR CIRCUIT NO ACTIVITY DETECTED (BANK 1 SENSOR 1), Diagnostic Procedure with Diagnostic Trouble Code (DTC).>
P0137	O2 Sensor Circuit Low Voltage (Bank 1 Sensor 2)	<Ref. to EN(H4SO U5)(diag)-153, DTC P0137 O2 SENSOR CIRCUIT LOW VOLTAGE (BANK 1 SENSOR 2), Diagnostic Procedure with Diagnostic Trouble Code (DTC).>
P0138	O2 Sensor Circuit High Voltage (Bank 1 Sensor 2)	<Ref. to EN(H4SO U5)(diag)-155, DTC P0138 O2 SENSOR CIRCUIT HIGH VOLTAGE (BANK 1 SENSOR 2), Diagnostic Procedure with Diagnostic Trouble Code (DTC).>
P0139	O2 Sensor Circuit Slow Response (Bank 1 Sensor 2)	<Ref. to EN(H4SO U5)(diag)-157, DTC P0139 O2 SENSOR CIRCUIT SLOW RESPONSE (BANK 1 SENSOR 2), Diagnostic Procedure with Diagnostic Trouble Code (DTC).>
P0143	O2 Sensor Circuit Low Voltage (Bank 1 Sensor 3)	<Ref. to EN(H4SO U5)(diag)-159, DTC P0143 O2 SENSOR CIRCUIT LOW VOLTAGE (BANK 1 SENSOR 3), Diagnostic Procedure with Diagnostic Trouble Code (DTC).>
P0144	O2 Sensor Circuit High Voltage (Bank 1 Sensor 3)	<Ref. to EN(H4SO U5)(diag)-161, DTC P0144 O2 SENSOR CIRCUIT HIGH VOLTAGE (BANK 1 SENSOR 3), Diagnostic Procedure with Diagnostic Trouble Code (DTC).>

DTC	Item	Index
P0151	O2 Sensor Circuit Low Voltage (Bank 2 Sensor 1)	<Ref. to EN(H4SO U5)(diag)-163, DTC P0151 O2 SENSOR CIRCUIT LOW VOLTAGE (BANK 2 SENSOR 1), Diagnostic Procedure with Diagnostic Trouble Code (DTC).>
P0152	O2 Sensor Circuit High Voltage (Bank 2 Sensor 1)	<Ref. to EN(H4SO U5)(diag)-165, DTC P0152 O2 SENSOR CIRCUIT HIGH VOLTAGE (BANK 2 SENSOR 1), Diagnostic Procedure with Diagnostic Trouble Code (DTC).>
P0153	O2 Sensor Circuit Slow Response (Bank 2 Sensor 1)	<Ref. to EN(H4SO U5)(diag)-167, DTC P0153 O2 SENSOR CIRCUIT SLOW RESPONSE (BANK 2 SENSOR 1), Diagnostic Procedure with Diagnostic Trouble Code (DTC).>
P0154	O2 Sensor Circuit No Activity Detected (Bank 2 Sensor 1)	<Ref. to EN(H4SO U5)(diag)-169, DTC P0154 O2 SENSOR CIRCUIT NO ACTIVITY DETECTED (BANK 2 SENSOR 1), Diagnostic Procedure with Diagnostic Trouble Code (DTC).>
P0157	O2 Sensor Circuit Low Voltage (Bank 2 Sensor 2)	<Ref. to EN(H4SO U5)(diag)-171, DTC P0157 O2 SENSOR CIRCUIT LOW VOLTAGE (BANK 2 SENSOR 2), Diagnostic Procedure with Diagnostic Trouble Code (DTC).>
P0158	O2 Sensor Circuit High Voltage (Bank 2 Sensor 2)	<Ref. to EN(H4SO U5)(diag)-173, DTC P0158 O2 SENSOR CIRCUIT HIGH VOLTAGE (BANK 2 SENSOR 2), Diagnostic Procedure with Diagnostic Trouble Code (DTC).>
P0159	O2 Sensor Circuit Slow Response (Bank 2 Sensor 2)	<Ref. to EN(H4SO U5)(diag)-175, DTC P0159 O2 SENSOR CIRCUIT SLOW RESPONSE (BANK 2 SENSOR 2), Diagnostic Procedure with Diagnostic Trouble Code (DTC).>
P0171	System Too Lean (Bank 1)	<Ref. to EN(H4SO U5)(diag)-176, DTC P0171 SYSTEM TOO LEAN (BANK 1), Diagnostic Procedure with Diagnostic Trouble Code (DTC).>
P0172	System Too Rich (Bank 1)	<Ref. to EN(H4SO U5)(diag)-176, DTC P0172 SYSTEM TOO RICH (BANK 1), Diagnostic Procedure with Diagnostic Trouble Code (DTC).>
P0174	System Too Lean (Bank 2)	<Ref. to EN(H4SO U5)(diag)-176, DTC P0174 SYSTEM TOO LEAN (BANK 2), Diagnostic Procedure with Diagnostic Trouble Code (DTC).>
P0175	System Too Rich (Bank 2)	<Ref. to EN(H4SO U5)(diag)-177, DTC P0175 SYSTEM TOO RICH (BANK 2), Diagnostic Procedure with Diagnostic Trouble Code (DTC).>
P0181	Fuel Temperature Sensor “A” Circuit Range/Performance	<Ref. to EN(H4SO U5)(diag)-179, DTC P0181 FUEL TEMPERATURE SENSOR “A” CIRCUIT RANGE/PERFORMANCE, Diagnostic Procedure with Diagnostic Trouble Code (DTC).>
P0182	Fuel Temperature Sensor “A” Circuit Low Input	<Ref. to EN(H4SO U5)(diag)-181, DTC P0182 FUEL TEMPERATURE SENSOR “A” CIRCUIT LOW INPUT, Diagnostic Procedure with Diagnostic Trouble Code (DTC).>
P0183	Fuel Temperature Sensor “A” Circuit High Input	<Ref. to EN(H4SO U5)(diag)-183, DTC P0183 FUEL TEMPERATURE SENSOR “A” CIRCUIT HIGH INPUT, Diagnostic Procedure with Diagnostic Trouble Code (DTC).>
P0222	Throttle/Pedal Position Sensor/ Switch “B” Circuit Low Input	<Ref. to EN(H4SO U5)(diag)-185, DTC P0222 THROTTLE/PEDAL POSITION SENSOR/SWITCH “B” CIRCUIT LOW INPUT, Diagnostic Procedure with Diagnostic Trouble Code (DTC).>
P0223	Throttle/Pedal Position Sensor/ Switch “B” Circuit High Input	<Ref. to EN(H4SO U5)(diag)-188, DTC P0223 THROTTLE/PEDAL POSITION SENSOR/SWITCH “B” CIRCUIT HIGH INPUT, Diagnostic Procedure with Diagnostic Trouble Code (DTC).>
P0301	Cylinder 1 Misfire Detected	<Ref. to EN(H4SO U5)(diag)-191, DTC P0301 CYLINDER 1 MISFIRE DETECTED, Diagnostic Procedure with Diagnostic Trouble Code (DTC).>
P0302	Cylinder 2 Misfire Detected	<Ref. to EN(H4SO U5)(diag)-191, DTC P0302 CYLINDER 2 MISFIRE DETECTED, Diagnostic Procedure with Diagnostic Trouble Code (DTC).>
P0303	Cylinder 3 Misfire Detected	<Ref. to EN(H4SO U5)(diag)-191, DTC P0303 CYLINDER 3 MISFIRE DETECTED, Diagnostic Procedure with Diagnostic Trouble Code (DTC).>
P0304	Cylinder 4 Misfire Detected	<Ref. to EN(H4SO U5)(diag)-192, DTC P0304 CYLINDER 4 MISFIRE DETECTED, Diagnostic Procedure with Diagnostic Trouble Code (DTC).>
P0327	Knock Sensor 1 Circuit Low Input (Bank 1 or Single Sensor)	<Ref. to EN(H4SO U5)(diag)-198, DTC P0327 KNOCK SENSOR 1 CIRCUIT LOW INPUT (BANK 1 OR SINGLE SENSOR), Diagnostic Procedure with Diagnostic Trouble Code (DTC).>

DTC	Item	Index
P0328	Knock Sensor 1 Circuit High Input (Bank 1 or Single Sensor)	<Ref. to EN(H4SO U5)(diag)-200, DTC P0328 KNOCK SENSOR 1 CIRCUIT HIGH INPUT (BANK 1 OR SINGLE SENSOR), Diagnostic Procedure with Diagnostic Trouble Code (DTC).>
P0335	Crankshaft Position Sensor “A” Circuit	<Ref. to EN(H4SO U5)(diag)-202, DTC P0335 CRANKSHAFT POSITION SENSOR “A” CIRCUIT, Diagnostic Procedure with Diagnostic Trouble Code (DTC).>
P0336	Crankshaft Position Sensor “A” Circuit Range/Performance	<Ref. to EN(H4SO U5)(diag)-204, DTC P0336 CRANKSHAFT POSITION SENSOR “A” CIRCUIT RANGE/PERFORMANCE, Diagnostic Procedure with Diagnostic Trouble Code (DTC).>
P0340	Camshaft Position Sensor “A” Circuit (Bank 1 or Single Sensor)	<Ref. to EN(H4SO U5)(diag)-206, DTC P0340 CAMSHAFT POSITION SENSOR “A” CIRCUIT (BANK 1 OR SINGLE SENSOR), Diagnostic Procedure with Diagnostic Trouble Code (DTC).>
P0341	Camshaft Position Sensor “A” Circuit Range/Performance (Bank 1 or Single Sensor)	<Ref. to EN(H4SO U5)(diag)-208, DTC P0341 CAMSHAFT POSITION SENSOR “A” CIRCUIT RANGE/PERFORMANCE (BANK 1 OR SINGLE SENSOR), Diagnostic Procedure with Diagnostic Trouble Code (DTC).>
P0400	Exhaust Gas Recirculation Flow	<Ref. to EN(H4SO U5)(diag)-211, DTC P0400 EXHAUST GAS RECIRCULATION FLOW, Diagnostic Procedure with Diagnostic Trouble Code (DTC).>
P0420	Catalyst System Efficiency Below Threshold (Bank 1)	<Ref. to EN(H4SO U5)(diag)-214, DTC P0420 CATALYST SYSTEM EFFICIENCY BELOW THRESHOLD (BANK 1), Diagnostic Procedure with Diagnostic Trouble Code (DTC).>
P0442	Evaporative Emission Control System Leak Detected (Small Leak)	<Ref. to EN(H4SO U5)(diag)-220, DTC P0442 EVAPORATIVE EMISSION CONTROL SYSTEM LEAK DETECTED (SMALL LEAK), Diagnostic Procedure with Diagnostic Trouble Code (DTC).>
P0447	Evaporative Emission Control System Vent Control Circuit Open	<Ref. to EN(H4SO U5)(diag)-224, DTC P0447 EVAPORATIVE EMISSION CONTROL SYSTEM VENT CONTROL CIRCUIT OPEN, Diagnostic Procedure with Diagnostic Trouble Code (DTC).>
P0448	Evaporative Emission Control System Vent Control Circuit Shorted	<Ref. to EN(H4SO U5)(diag)-227, DTC P0448 EVAPORATIVE EMISSION CONTROL SYSTEM VENT CONTROL CIRCUIT SHORTED, Diagnostic Procedure with Diagnostic Trouble Code (DTC).>
P0451	Evaporative Emission Control System Pressure Sensor	<Ref. to EN(H4SO U5)(diag)-229, DTC P0451 EVAPORATIVE EMISSION CONTROL SYSTEM PRESSURE SENSOR, Diagnostic Procedure with Diagnostic Trouble Code (DTC).>
P0452	Evaporative Emission Control System Pressure Sensor Low Input	<Ref. to EN(H4SO U5)(diag)-231, DTC P0452 EVAPORATIVE EMISSION CONTROL SYSTEM PRESSURE SENSOR LOW INPUT, Diagnostic Procedure with Diagnostic Trouble Code (DTC).>
P0453	Evaporative Emission Control System Pressure Sensor High Input	<Ref. to EN(H4SO U5)(diag)-234, DTC P0453 EVAPORATIVE EMISSION CONTROL SYSTEM PRESSURE SENSOR HIGH INPUT, Diagnostic Procedure with Diagnostic Trouble Code (DTC).>
P0456	Evaporative Emission Control System Leak Detected (Very Small Leak)	<Ref. to EN(H4SO U5)(diag)-237, DTC P0456 EVAPORATIVE EMISSION CONTROL SYSTEM LEAK DETECTED (VERY SMALL LEAK), Diagnostic Procedure with Diagnostic Trouble Code (DTC).>
P0457	Evaporative Emission Control System Leak Detected (Fuel Cap Loose/Off)	<Ref. to EN(H4SO U5)(diag)-240, DTC P0457 EVAPORATIVE EMISSION CONTROL SYSTEM LEAK DETECTED (FUEL CAP LOOSE/OFF), Diagnostic Procedure with Diagnostic Trouble Code (DTC).>
P0458	Evaporative Emission Control System Purge Control Valve Circuit Low	<Ref. to EN(H4SO U5)(diag)-244, DTC P0458 EVAPORATIVE EMISSION CONTROL SYSTEM PURGE CONTROL VALVE CIRCUIT LOW, Diagnostic Procedure with Diagnostic Trouble Code (DTC).>
P0459	Evaporative Emission Control System Purge Control Valve Circuit High	<Ref. to EN(H4SO U5)(diag)-246, DTC P0459 EVAPORATIVE EMISSION CONTROL SYSTEM PURGE CONTROL VALVE CIRCUIT HIGH, Diagnostic Procedure with Diagnostic Trouble Code (DTC).>
P0461	Fuel Level Sensor Circuit Range/Performance	<Ref. to EN(H4SO U5)(diag)-248, DTC P0461 FUEL LEVEL SENSOR CIRCUIT RANGE/PERFORMANCE, Diagnostic Procedure with Diagnostic Trouble Code (DTC).>
P0462	Fuel Level Sensor Circuit Low Input	<Ref. to EN(H4SO U5)(diag)-248, DTC P0462 FUEL LEVEL SENSOR CIRCUIT LOW INPUT, Diagnostic Procedure with Diagnostic Trouble Code (DTC).>

DTC	Item	Index
P0463	Fuel Level Sensor Circuit High Input	<Ref. to EN(H4SO U5)(diag)-248, DTC P0463 FUEL LEVEL SENSOR CIRCUIT HIGH INPUT, Diagnostic Procedure with Diagnostic Trouble Code (DTC).>
P0464	Fuel Level Sensor Circuit Intermittent	<Ref. to EN(H4SO U5)(diag)-248, DTC P0464 FUEL LEVEL SENSOR CIRCUIT INTERMITTENT, Diagnostic Procedure with Diagnostic Trouble Code (DTC).>
P0483	Cooling Fan Rationality Check	<Ref. to EN(H4SO U5)(diag)-249, DTC P0483 COOLING FAN RATIONALITY CHECK, Diagnostic Procedure with Diagnostic Trouble Code (DTC).>
P0500	Vehicle Speed Sensor	<Ref. to EN(H4SO U5)(diag)-249, DTC P0500 VEHICLE SPEED SENSOR, Diagnostic Procedure with Diagnostic Trouble Code (DTC).>
P0506	Idle Control System RPM Lower Than Expected	<Ref. to EN(H4SO U5)(diag)-250, DTC P0506 IDLE CONTROL SYSTEM RPM LOWER THAN EXPECTED, Diagnostic Procedure with Diagnostic Trouble Code (DTC).>
P0507	Idle Control System RPM Higher Than Expected	<Ref. to EN(H4SO U5)(diag)-252, DTC P0507 IDLE CONTROL SYSTEM RPM HIGHER THAN EXPECTED, Diagnostic Procedure with Diagnostic Trouble Code (DTC).>
P0512	Starter Request Circuit	<Ref. to EN(H4SO U5)(diag)-254, DTC P0512 STARTER REQUEST CIRCUIT, Diagnostic Procedure with Diagnostic Trouble Code (DTC).>
P0519	Idle Control System Malfunction (Fail-Safe)	<Ref. to EN(H4SO U5)(diag)-256, DTC P0519 IDLE CONTROL SYSTEM MALFUNCTION (FAIL-SAFE), Diagnostic Procedure with Diagnostic Trouble Code (DTC).>
P0600	Serial Communication Link	<Ref. to EN(H4SO U5)(diag)-258, DTC P0600 SERIAL COMMUNICATION LINK, Diagnostic Procedure with Diagnostic Trouble Code (DTC).>
P0604	Internal Control Module Random Access Memory (RAM) Error	<Ref. to EN(H4SO U5)(diag)-259, DTC P0604 INTERNAL CONTROL MODULE RANDOM ACCESS MEMORY (RAM) ERROR, Diagnostic Procedure with Diagnostic Trouble Code (DTC).>
P0605	Internal Control Module Read Only Memory (ROM) Error	<Ref. to EN(H4SO U5)(diag)-260, DTC P0605 INTERNAL CONTROL MODULE READ ONLY MEMORY (ROM) ERROR, Diagnostic Procedure with Diagnostic Trouble Code (DTC).>
P0607	Control Module Performance	<Ref. to EN(H4SO U5)(diag)-261, DTC P0607 CONTROL MODULE PERFORMANCE, Diagnostic Procedure with Diagnostic Trouble Code (DTC).>
P0638	Throttle Actuator Control Range/Performance (Bank 1)	<Ref. to EN(H4SO U5)(diag)-262, DTC P0638 THROTTLE ACTUATOR CONTROL RANGE/PERFORMANCE (BANK 1), Diagnostic Procedure with Diagnostic Trouble Code (DTC).>
P0691	Cooling Fan 1 Control Circuit Low	<Ref. to EN(H4SO U5)(diag)-262, DTC P0691 COOLING FAN 1 CONTROL CIRCUIT LOW, Diagnostic Procedure with Diagnostic Trouble Code (DTC).>
P0692	Cooling Fan 1 Control Circuit High	<Ref. to EN(H4SO U5)(diag)-263, DTC P0692 COOLING FAN 1 CONTROL CIRCUIT HIGH, Diagnostic Procedure with Diagnostic Trouble Code (DTC).>
P0700	Transmission Control System (MIL Request)	<Ref. to EN(H4SO U5)(diag)-263, DTC P0700 TRANSMISSION CONTROL SYSTEM (MIL REQUEST), Diagnostic Procedure with Diagnostic Trouble Code (DTC).>
P0851	Neutral Switch Input Circuit Low	<Ref. to EN(H4SO U5)(diag)-264, DTC P0851 NEUTRAL SWITCH INPUT CIRCUIT LOW (AT MODEL), Diagnostic Procedure with Diagnostic Trouble Code (DTC).> <Ref. to EN(H4SO U5)(diag)-266, DTC P0851 NEUTRAL SWITCH INPUT CIRCUIT LOW (MT MODEL), Diagnostic Procedure with Diagnostic Trouble Code (DTC).>
P0852	Neutral Switch Input Circuit High	<Ref. to EN(H4SO U5)(diag)-268, DTC P0852 NEUTRAL SWITCH INPUT CIRCUIT HIGH (AT MODEL), Diagnostic Procedure with Diagnostic Trouble Code (DTC).> <Ref. to EN(H4SO U5)(diag)-271, DTC P0852 NEUTRAL SWITCH INPUT CIRCUIT HIGH (MT MODEL), Diagnostic Procedure with Diagnostic Trouble Code (DTC).>
P1152	O2 Sensor Circuit Range/Performance (Low) (Bank1 Sensor1)	<Ref. to EN(H4SO U5)(diag)-273, DTC P1152 O2 SENSOR CIRCUIT RANGE/PERFORMANCE (LOW) (BANK1 SENSOR1), Diagnostic Procedure with Diagnostic Trouble Code (DTC).>

DTC	Item	Index
P1153	O2 Sensor Circuit Range/Performance (High) (Bank1 Sensor1)	<Ref. to EN(H4SO U5)(diag)-275, DTC P1153 O2 SENSOR CIRCUIT RANGE/PERFORMANCE (HIGH) (BANK1 SENSOR1), Diagnostic Procedure with Diagnostic Trouble Code (DTC).>
P1154	O2 Sensor Circuit Range/Performance (Low) (Bank 2 Sensor 1)	<Ref. to EN(H4SO U5)(diag)-277, DTC P1154 O2 SENSOR CIRCUIT RANGE/PERFORMANCE (LOW) (BANK 2 SENSOR 1), Diagnostic Procedure with Diagnostic Trouble Code (DTC).>
P1155	O2 Sensor Circuit Range/Performance (High) (Bank 2 Sensor 1)	<Ref. to EN(H4SO U5)(diag)-279, DTC P1155 O2 SENSOR CIRCUIT RANGE/PERFORMANCE (HIGH) (BANK 2 SENSOR 1), Diagnostic Procedure with Diagnostic Trouble Code (DTC).>
P1160	Return Spring Failure	<Ref. to EN(H4SO U5)(diag)-280, DTC P1160 RETURN SPRING FAILURE, Diagnostic Procedure with Diagnostic Trouble Code (DTC).>
P1400	Fuel Tank Pressure Control Solenoid Valve Circuit Low	<Ref. to EN(H4SO U5)(diag)-281, DTC P1400 FUEL TANK PRESSURE CONTROL SOLENOID VALVE CIRCUIT LOW, Diagnostic Procedure with Diagnostic Trouble Code (DTC).>
P1420	Fuel Tank Pressure Control Solenoid Valve Circuit High	<Ref. to EN(H4SO U5)(diag)-283, DTC P1420 FUEL TANK PRESSURE CONTROL SOL. VALVE CIRCUIT HIGH, Diagnostic Procedure with Diagnostic Trouble Code (DTC).>
P1443	Vent Control Solenoid Valve Function Problem	<Ref. to EN(H4SO U5)(diag)-285, DTC P1443 VENT CONTROL SOLENOID VALVE FUNCTION PROBLEM, Diagnostic Procedure with Diagnostic Trouble Code (DTC).>
P1446	Fuel Tank Sensor Control Valve Circuit Low	<Ref. to EN(H4SO U5)(diag)-287, DTC P1446 FUEL TANK SENSOR CONTROL VALVE CIRCUIT LOW, Diagnostic Procedure with Diagnostic Trouble Code (DTC).>
P1447	Fuel Tank Sensor Control Valve Circuit High	<Ref. to EN(H4SO U5)(diag)-290, DTC P1447 FUEL TANK SENSOR CONTROL VALVE CIRCUIT HIGH, Diagnostic Procedure with Diagnostic Trouble Code (DTC).>
P1492	EGR Solenoid Valve Signal #1 Circuit Malfunction (Low Input)	<Ref. to EN(H4SO U5)(diag)-292, DTC P1492 EGR SOLENOID VALVE SIGNAL #1 CIRCUIT MALFUNCTION (LOW INPUT), Diagnostic Procedure with Diagnostic Trouble Code (DTC).>
P1493	EGR Solenoid Valve Signal #1 Circuit Malfunction (High Input)	<Ref. to EN(H4SO U5)(diag)-292, DTC P1493 EGR SOLENOID VALVE SIGNAL #1 CIRCUIT MALFUNCTION (HIGH INPUT), Diagnostic Procedure with Diagnostic Trouble Code (DTC).>
P1494	EGR Solenoid Valve Signal #2 Circuit Malfunction (Low Input)	<Ref. to EN(H4SO U5)(diag)-292, DTC P1494 EGR SOLENOID VALVE SIGNAL #2 CIRCUIT MALFUNCTION (LOW INPUT), Diagnostic Procedure with Diagnostic Trouble Code (DTC).>
P1495	EGR Solenoid Valve Signal #2 Circuit Malfunction (High Input)	<Ref. to EN(H4SO U5)(diag)-292, DTC P1495 EGR SOLENOID VALVE SIGNAL #2 CIRCUIT MALFUNCTION (HIGH INPUT), Diagnostic Procedure with Diagnostic Trouble Code (DTC).>
P1496	EGR Solenoid Valve Signal #3 Circuit Malfunction (Low Input)	<Ref. to EN(H4SO U5)(diag)-292, DTC P1496 EGR SOLENOID VALVE SIGNAL #3 CIRCUIT MALFUNCTION (LOW INPUT), Diagnostic Procedure with Diagnostic Trouble Code (DTC).>
P1497	EGR Solenoid Valve Signal #3 Circuit Malfunction (High Input)	<Ref. to EN(H4SO U5)(diag)-292, DTC P1497 EGR SOLENOID VALVE SIGNAL #3 CIRCUIT MALFUNCTION (HIGH INPUT), Diagnostic Procedure with Diagnostic Trouble Code (DTC).>
P1498	EGR Solenoid Valve Signal #4 Circuit Malfunction (Low Input)	<Ref. to EN(H4SO U5)(diag)-293, DTC P1498 EGR SOLENOID VALVE SIGNAL #4 CIRCUIT MALFUNCTION (LOW INPUT), Diagnostic Procedure with Diagnostic Trouble Code (DTC).>
P1499	EGR Solenoid Valve Signal #4 Circuit Malfunction (High Input)	<Ref. to EN(H4SO U5)(diag)-295, DTC P1499 EGR SOLENOID VALVE SIGNAL #4 CIRCUIT MALFUNCTION (HIGH INPUT), Diagnostic Procedure with Diagnostic Trouble Code (DTC).>
P1518	Starter Switch Circuit Low input	<Ref. to EN(H4SO U5)(diag)-297, DTC P1518 STARTER SWITCH CIRCUIT LOW INPUT, Diagnostic Procedure with Diagnostic Trouble Code (DTC).>
P1560	Back-up Voltage Circuit Malfunction	<Ref. to EN(H4SO U5)(diag)-300, DTC P1560 BACK-UP VOLTAGE CIRCUIT MALFUNCTION, Diagnostic Procedure with Diagnostic Trouble Code (DTC).>

DTC	Item	Index
P2004	Intake Manifold Runner Control Stuck Open (Bank 1)	<Ref. to EN(H4SO U5)(diag)-301, DTC P2004 INTAKE MANIFOLD RUNNER CONTROL STUCK OPEN (BANK 1), Diagnostic Procedure with Diagnostic Trouble Code (DTC).>
P2006	Intake Manifold Runner Control Stuck Closed (Bank 1)	<Ref. to EN(H4SO U5)(diag)-302, DTC P2006 INTAKE MANIFOLD RUNNER CONTROL STUCK CLOSED (BANK 1), Diagnostic Procedure with Diagnostic Trouble Code (DTC).>
P2008	Intake Manifold Runner Control Circuit/Open (Bank 1)	<Ref. to EN(H4SO U5)(diag)-303, DTC P2008 INTAKE MANIFOLD RUNNER CONTROL CIRCUIT / OPEN (BANK 1), Diagnostic Procedure with Diagnostic Trouble Code (DTC).>
P2009	Intake Manifold Runner Control Circuit Low (Bank 1)	<Ref. to EN(H4SO U5)(diag)-305, DTC P2009 INTAKE MANIFOLD RUNNER CONTROL CIRCUIT LOW (BANK 1), Diagnostic Procedure with Diagnostic Trouble Code (DTC).>
P2016	Intake Manifold Runner Position Sensor/Switch Circuit Low (Bank 1)	<Ref. to EN(H4SO U5)(diag)-307, DTC P2016 INTAKE MANIFOLD RUNNER POSITION SENSOR / SWITCH CIRCUIT LOW (BANK 1), Diagnostic Procedure with Diagnostic Trouble Code (DTC).>
P2017	Intake Manifold Runner Position Sensor/Switch Circuit High (Bank 1)	<Ref. to EN(H4SO U5)(diag)-310, DTC P2017 INTAKE MANIFOLD RUNNER POSITION SENSOR / SWITCH CIRCUIT HIGH (BANK 1), Diagnostic Procedure with Diagnostic Trouble Code (DTC).>
P2096	Post Catalyst Fuel Trim System Too Lean Bank 1	<Ref. to EN(H4SO U5)(diag)-312, DTC P2096 POST CATALYST FUEL TRIM SYSTEM TOO LEAN BANK 1, Diagnostic Procedure with Diagnostic Trouble Code (DTC).>
P2097	Post Catalyst Fuel Trim System Too Rich Bank 1	<Ref. to EN(H4SO U5)(diag)-319, DTC P2097 POST CATALYST FUEL TRIM SYSTEM TOO RICH BANK 1, Diagnostic Procedure with Diagnostic Trouble Code (DTC).>
P2098	Post Catalyst Fuel Trim System Too Lean Bank 2	<Ref. to EN(H4SO U5)(diag)-326, DTC P2098 POST CATALYST FUEL TRIM SYSTEM TOO LEAN BANK 2, Diagnostic Procedure with Diagnostic Trouble Code (DTC).>
P2099	Post Catalyst Fuel Trim System Too Rich Bank 2	<Ref. to EN(H4SO U5)(diag)-333, DTC P2099 POST CATALYST FUEL TRIM SYSTEM TOO RICH BANK 2, Diagnostic Procedure with Diagnostic Trouble Code (DTC).>
P2101	Throttle Actuator Control Motor Circuit Range/Performance	<Ref. to EN(H4SO U5)(diag)-339, DTC P2101 THROTTLE ACTUATOR CONTROL MOTOR CIRCUIT RANGE/PERFORMANCE, Diagnostic Procedure with Diagnostic Trouble Code (DTC).>
P2102	Throttle Actuator Control Motor Circuit Low	<Ref. to EN(H4SO U5)(diag)-345, DTC P2102 THROTTLE ACTUATOR CONTROL MOTOR CIRCUIT LOW, Diagnostic Procedure with Diagnostic Trouble Code (DTC).>
P2103	Throttle Actuator Control Motor Circuit High	<Ref. to EN(H4SO U5)(diag)-348, DTC P2103 THROTTLE ACTUATOR CONTROL MOTOR CIRCUIT HIGH, Diagnostic Procedure with Diagnostic Trouble Code (DTC).>
P2109	Throttle/Pedal Position Sensor A Minimum Stop Performance	<Ref. to EN(H4SO U5)(diag)-349, DTC P2109 THROTTLE/PEDAL POSITION SENSOR A MINIMUM STOP PERFORMANCE, Diagnostic Procedure with Diagnostic Trouble Code (DTC).>
P2122	Throttle/Pedal Position Sensor/Switch “D” Circuit Low Input	<Ref. to EN(H4SO U5)(diag)-350, DTC P2122 THROTTLE/PEDAL POSITION SENSOR/SWITCH “D” CIRCUIT LOW INPUT, Diagnostic Procedure with Diagnostic Trouble Code (DTC).>
P2123	Throttle/Pedal Position Sensor/Switch “D” Circuit High Input	<Ref. to EN(H4SO U5)(diag)-353, DTC P2123 THROTTLE/PEDAL POSITION SENSOR/SWITCH “D” CIRCUIT HIGH INPUT, Diagnostic Procedure with Diagnostic Trouble Code (DTC).>
P2127	Throttle/Pedal Position Sensor/Switch “E” Circuit Low Input	<Ref. to EN(H4SO U5)(diag)-355, DTC P2127 THROTTLE/PEDAL POSITION SENSOR/SWITCH “E” CIRCUIT LOW INPUT, Diagnostic Procedure with Diagnostic Trouble Code (DTC).>
P2128	Throttle/Pedal Position Sensor/Switch “E” Circuit High Input	<Ref. to EN(H4SO U5)(diag)-358, DTC P2128 THROTTLE/PEDAL POSITION SENSOR/SWITCH “E” CIRCUIT HIGH INPUT, Diagnostic Procedure with Diagnostic Trouble Code (DTC).>
P2135	Throttle/Pedal Position Sensor/Switch “A”/“B” Voltage Rationality	<Ref. to EN(H4SO U5)(diag)-360, DTC P2135 THROTTLE/PEDAL POSITION SENSOR/SWITCH “A”/“B” VOLTAGE RATIONALITY, Diagnostic Procedure with Diagnostic Trouble Code (DTC).>

DTC	Item	Index
P2138	Throttle/Pedal Position Sensor/ Switch “D”/“E” Voltage Rationality	<Ref. to EN(H4SO U5)(diag)-365, DTC P2138 THROTTLE/PEDAL POSITION SENSOR/SWITCH “D”/“E” VOLTAGE RATIONALITY, Diagnostic Procedure with Diagnostic Trouble Code (DTC).>
P2227	Barometric Pressure Circuit Range/ Performance	<Ref. to EN(H4SO U5)(diag)-369, DTC P2227 BAROMETRIC PRESSURE CIRCUIT RANGE/PERFORMANCE, Diagnostic Procedure with Diagnostic Trouble Code (DTC).>
P2228	Barometric Pressure Circuit Low Input	<Ref. to EN(H4SO U5)(diag)-369, DTC P2228 BAROMETRIC PRESSURE CIRCUIT LOW INPUT, Diagnostic Procedure with Diagnostic Trouble Code (DTC).>
P2229	Barometric Pressure Circuit High Input	<Ref. to EN(H4SO U5)(diag)-370, DTC P2229 BAROMETRIC PRESSURE CIRCUIT HIGH INPUT, Diagnostic Procedure with Diagnostic Trouble Code (DTC).>

18.Diagnostic Procedure with Diagnostic Trouble Code (DTC)

A: DTC P0030 HO2S HEATER CONTROL CIRCUIT (BANK 1 SENSOR 1)

DTC DETECTING CONDITION:

- Two consecutive driving cycles with fault
- GENERAL DESCRIPTION <Ref. to GD(H4SO U5)-9, DTC P0030 HO2S HEATER CONTROL CIRCUIT (BANK 1 SENSOR 1), Diagnostic Trouble Code (DTC) Detecting Criteria.>

CAUTION:
After repair or replacement of faulty parts, conduct Clear Memory Mode <Ref. to EN(H4SO U5)(diag)-46, OPERATION, Clear Memory Mode.> and Inspection Mode <Ref. to EN(H4SO U5)(diag)-37, OPERATION, Inspection Mode.>.

WIRING DIAGRAM:

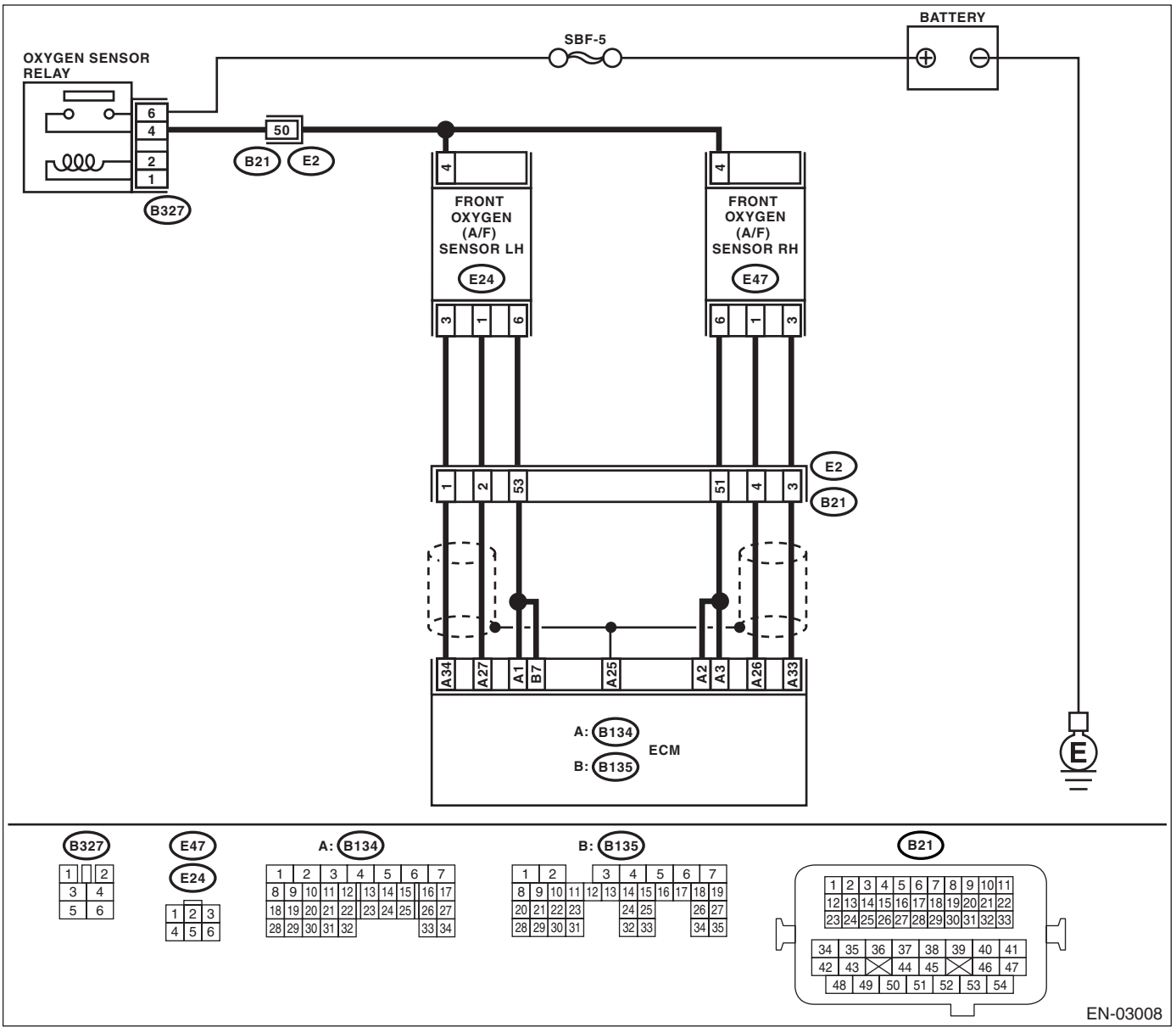

	Step	Check	Yes	No
1	**CHECK HARNESS BETWEEN ECM AND FRONT OXYGEN (A/F) SENSOR CONNECTOR.** 1) Start the engine and warm-up engine. 2) Turn the ignition switch to OFF. 3) Disconnect the connectors from ECM and front oxygen (A/F) sensor. 4) Measure the resistance of harness between ECM and front oxygen (A/F) sensor connector. ***Connector & terminal*** ***(B134) No. 2 — (E47) No. 6:*** ***(B134) No. 3 — (E47) No. 6:***	Is the measured value less than 1 Ω?	Go to step **2.**	Repair the open circuit in harness between ECM and front oxygen (A/F) sensor connector.
2	**CHECK HARNESS BETWEEN ECM AND FRONT OXYGEN (A/F) SENSOR CONNECTOR.** Measure the resistance of harness between ECM and front oxygen (A/F) sensor connector. ***Connector & terminal*** ***(B134) No. 26 — (E47) No. 1:*** ***(B134) No. 33 — (E47) No. 3:***	Is the measured value less than 1 Ω?	Go to step **3.**	Repair the open circuit in harness between main relay and front oxygen (A/F) sensor connector.
3	**CHECK HARNESS BETWEEN OXYGEN SENSOR RELAY AND FRONT OXYGEN (A/F) SENSOR CONNECTOR.** Measure the resistance of harness between oxygen sensor relay and front oxygen (A/F) sensor connector. ***Connector & terminal*** ***(B327) No. 4 — (E47) No. 4:***	Is the measured value less than 1 Ω?	Go to step **4.**	Repair the open circuit in harness between oxygen sensor relay and front oxygen (A/F) sensor connector.
4	**CHECK FRONT OXYGEN (A/F) SENSOR.** Measure the resistance between front oxygen (A/F) sensor connector terminals. ***Terminals*** ***No. 6 — No. 4:***	Is the measured value less than 5 Ω?	Go to step **5.**	Replace the front oxygen (A/F) sensor. <Ref. to FU(H4SO U5)-37, Front Oxygen (A/F) Sensor.>
5	**CHECK POOR CONTACT.** Check the poor contact in ECM and front oxygen (A/F) sensor connector.	Is there poor contact in ECM or front oxygen (A/F) sensor connector?	Repair the poor contact in ECM or front oxygen (A/F) sensor connector.	Replace the front oxygen (A/F) sensor. <Ref. to FU(H4SO U5)-37, Front Oxygen (A/F) Sensor.>

B: DTC P0031 HO2S HEATER CONTROL CIRCUIT LOW (BANK 1 SENSOR 1)

DTC DETECTING CONDITION:

- Detect as soon as malfunction occurs.
- GENERAL DESCRIPTION <Ref. to GD(H4SO U5)-11, DTC P0031 HO2S HEATER CONTROL CIRCUIT LOW (BANK 1 SENSOR 1), Diagnostic Trouble Code (DTC) Detecting Criteria.>

CAUTION:
After repair or replacement of faulty parts, conduct Clear Memory Mode <Ref. to EN(H4SO U5)(diag)-46, OPERATION, Clear Memory Mode.> and Inspection Mode <Ref. to EN(H4SO U5)(diag)-37, OPERATION, Inspection Mode.>.

WIRING DIAGRAM:

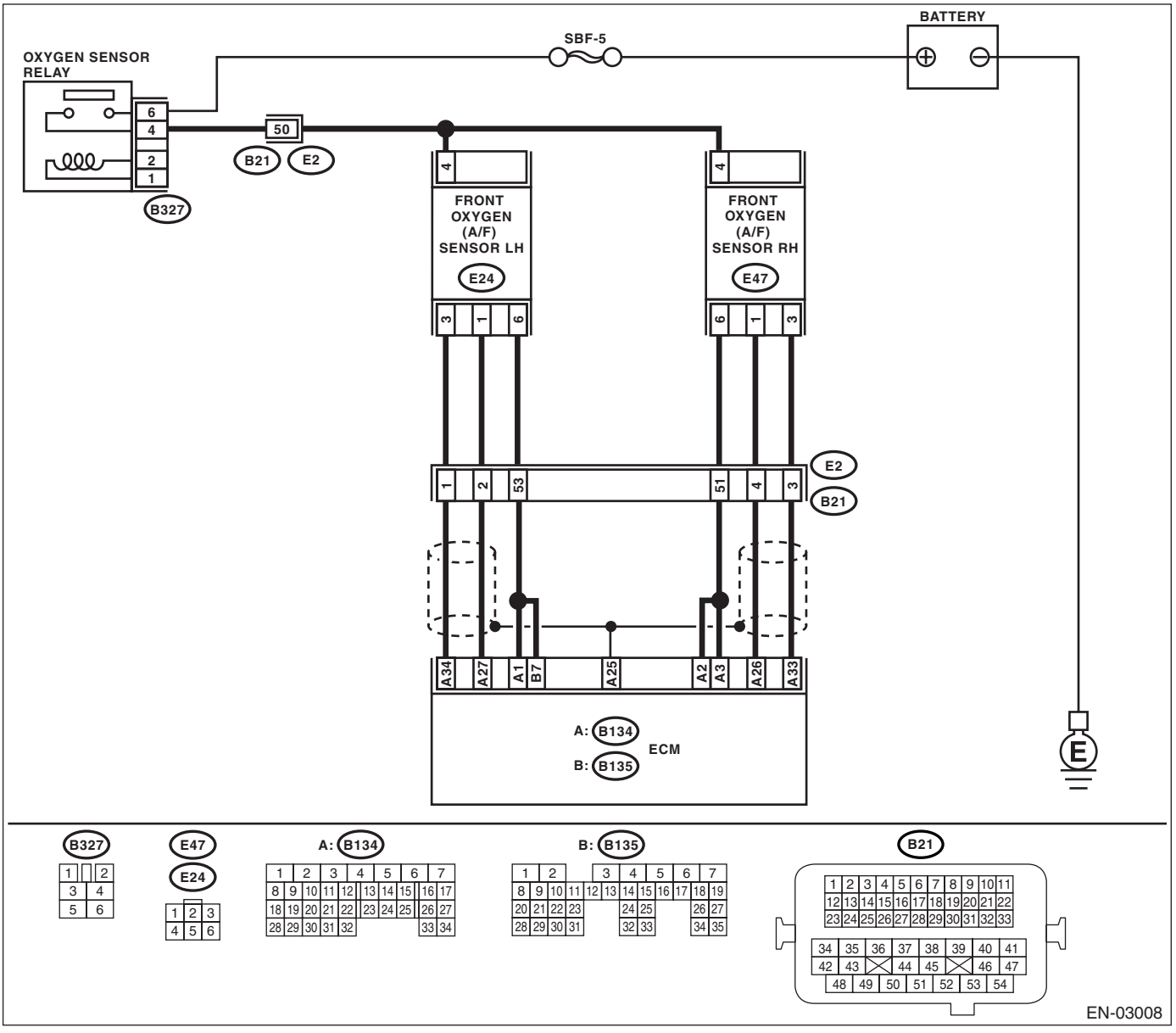

Step		Check	Yes	No
1	**CHECK FOR ANY OTHER DTC ON DISPLAY.**	Is any other DTC displayed?	Go to step **2.**	Go to step **4.**

	Step	Check	Yes	No
2	**CHECK POWER SUPPLY TO FRONT OXYGEN (A/F) SENSOR.** 1) Turn the ignition switch to OFF. 2) Disconnect the connector from front oxygen (A/F) sensor. 3) Turn the ignition switch to ON. 4) Measure the voltage between front oxygen (A/F) sensor connector and engine ground. ***Connector & terminal*** ***(E47) No. 4 (+) — Engine ground (−):***	Is the measured value more than 10 V?	Go to step **3.**	Repair the power supply line or replace the main relay. NOTE: In this case, repair the following: • Open circuit in harness between oxygen sensor relay and front oxygen (A/F) sensor connector • Poor contact in oxygen sensor relay connector • Poor contact in coupling connector
3	**CHECK CURRENT DATA.** 1) Start the engine. 2) Read the data of front oxygen (A/F) sensor heater current using Subaru Select Monitor or general scan tool. NOTE: • Subaru Select Monitor For detailed operation procedure, refer to the "READ CURRENT DATA FOR ENGINE". <Ref. to EN(H4SO U5)(diag)-28, Subaru Select Monitor.> • General scan tool For detailed operation procedure, refer to the general scan tool instruction manual.	Is the measured value more than 0.2 A?	Repair poor contact in connector. NOTE: In this case, repair the following: • Poor contact in front oxygen (A/F) sensor connector • Poor contact in ECM connector	Go to step **4.**
4	**CHECK INPUT SIGNAL FROM ECM.** 1) Start and idle the engine. 2) Measure the voltage between ECM connector and chassis ground. ***Connector & terminal*** ***(B134) No. 2 (+) — Chassis ground (−):*** ***(B134) No. 3 (+) — Chassis ground (−):***	Is the measured value less than 1 V?	Go to step **6.**	Go to step **5.**
5	**CHECK OUTPUT SIGNAL FROM ECM.** Measure the voltage between ECM connector and chassis ground. ***Connector & terminal*** ***(B134) No. 2 (+) — Chassis ground (−):*** ***(B134) No. 3 (+) — Chassis ground (−):***	Does the voltage change by shaking the ECM harness and connector?	Repair poor contact in ECM connector.	Go to step **6.**
6	**CHECK FRONT OXYGEN (A/F) SENSOR.** 1) Turn the ignition switch to OFF. 2) Measure the resistance between front oxygen (A/F) sensor connector terminals. ***Terminals*** ***No. 6 — No. 4:***	Is the measured value less than 10 Ω?	Repair harness and connector. NOTE: In this case, repair the following: • Open or ground short circuit in harness between front oxygen (A/F) sensor and ECM connector • Poor contact in front oxygen (A/F) sensor connector • Poor contact in ECM connector	Replace the front oxygen (A/F) sensor. <Ref. to FU(H4SO U5)-37, Front Oxygen (A/F) Sensor.>

C: DTC P0032 HO2S HEATER CONTROL CIRCUIT HIGH (BANK 1 SENSOR 1)

DTC DETECTING CONDITION:

- Detect as soon as malfunction occurs.
- GENERAL DESCRIPTION <Ref. to GD(H4SO U5)-13, DTC P0032 HO2S HEATER CONTROL CIRCUIT HIGH (BANK 1 SENSOR 1), Diagnostic Trouble Code (DTC) Detecting Criteria.>

CAUTION:
After repair or replacement of faulty parts, conduct Clear Memory Mode <Ref. to EN(H4SO U5)(diag)-46, OPERATION, Clear Memory Mode.> and Inspection Mode <Ref. to EN(H4SO U5)(diag)-37, OPERATION, Inspection Mode.>.

WIRING DIAGRAM:

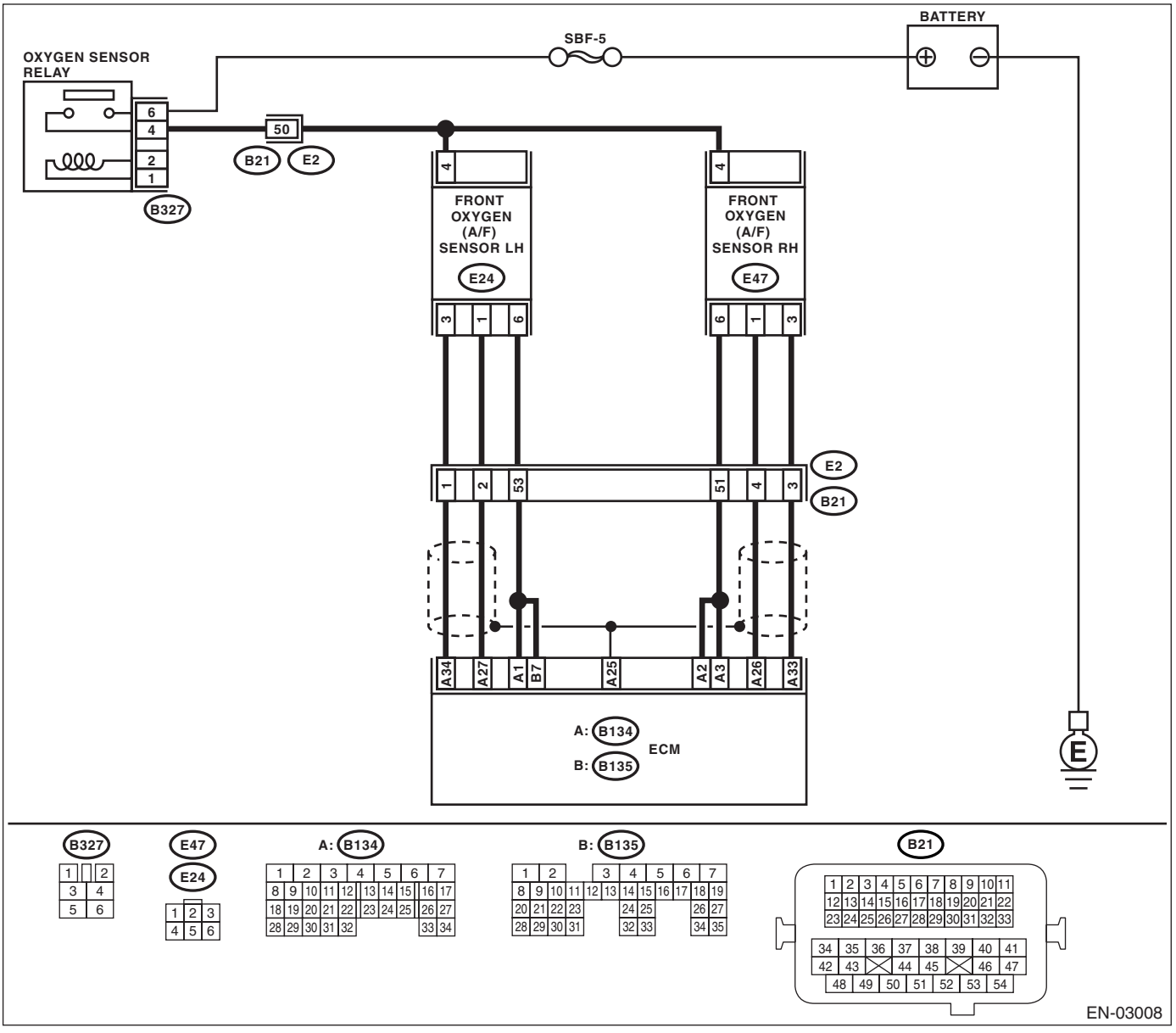

	Step	Check	Yes	No
1	**CHECK OUTPUT SIGNAL FROM ECM.** 1) Turn the ignition switch to ON. 2) Measure the voltage between ECM connector and chassis ground. ***Connector & terminal*** ***(B134) No. 2 (+) — Chassis ground (−):*** ***(B134) No. 3 (+) — Chassis ground (−):***	Is the measured value more than 8 V?	Go to step **2.**	Go to step **3.**
2	**CHECK FRONT OXYGEN (A/F) SENSOR HEATER CURRENT.** 1) Turn the ignition switch to OFF. 2) Repair the battery short circuit in harness between ECM and front oxygen (A/F) sensor connector. 3) Turn the ignition switch to ON. 4) Read the data of front oxygen (A/F) sensor heater current using Subaru Select Monitor or general scan tool. NOTE: • Subaru Select Monitor For detailed operation procedure, refer to the "READ CURRENT DATA FOR ENGINE".<Ref. to EN(H4SO U5)(diag)-28, Subaru Select Monitor.> • General scan tool For detailed operation procedure, refer to the general scan tool instruction manual.	Is the measured value more than 2.3 A?	Replace the ECM. <Ref. to FU(H4SO U5)-44, Engine Control Module (ECM).>	END
3	**CHECK OUTPUT SIGNAL FROM ECM.** Measure the voltage between ECM connector and chassis ground. ***Connector & terminal*** ***(B134) No. 2 (+) — Chassis ground (−):*** ***(B134) No. 3 (+) — Chassis ground (−):***	Does the voltage change by shaking the ECM harness and connector?	Repair battery short circuit in harness between ECM and front oxygen (A/F) sensor connector.	END

D: DTC P0037 HO2S HEATER CONTROL CIRCUIT LOW (BANK 1 SENSOR 2)

DTC DETECTING CONDITION:

- Two consecutive driving cycles with fault
- GENERAL DESCRIPTION <Ref. to GD(H4SO U5)-15, DTC P0037 HO2S HEATER CONTROL CIRCUIT LOW (BANK 1 SENSOR 2), Diagnostic Trouble Code (DTC) Detecting Criteria.>

CAUTION:
After repair or replacement of faulty parts, conduct Clear Memory Mode <Ref. to EN(H4SO U5)(diag)-46, OPERATION, Clear Memory Mode.> and Inspection Mode <Ref. to EN(H4SO U5)(diag)-37, OPERATION, Inspection Mode.>.

WIRING DIAGRAM:

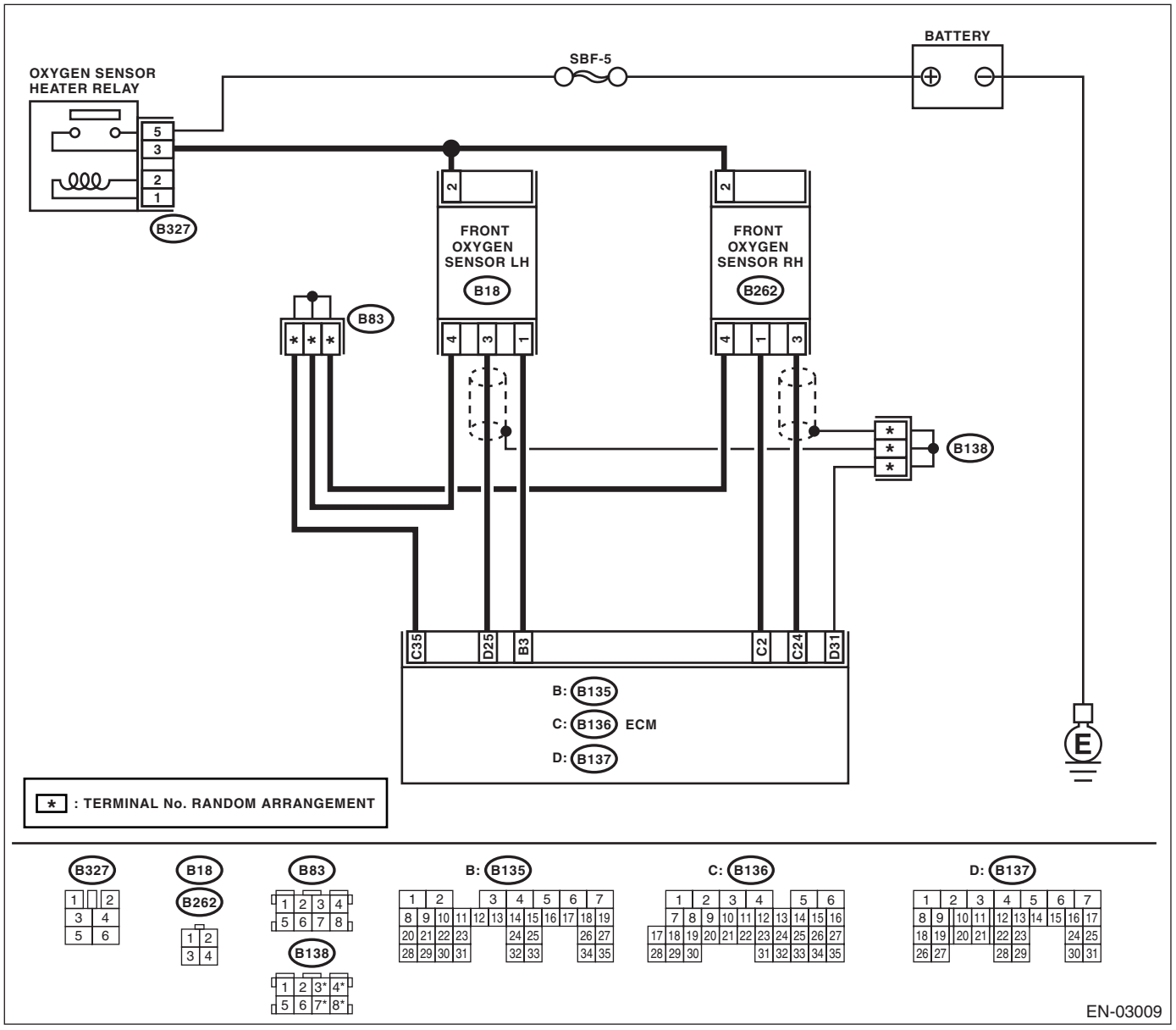

	Step	Check	Yes	No
1	**CHECK CURRENT DATA.** 1) Start the engine. 2) Read the data of front oxygen sensor heater current using Subaru Select Monitor or general scan tool. NOTE: • Subaru Select Monitor For detailed operation procedure, refer to the "READ CURRENT DATA FOR ENGINE". <Ref. to EN(H4SO U5)(diag)-28, Subaru Select Monitor.> • General scan tool For detailed operation procedure, refer to the general scan tool instruction manual.	Is the measured value more than 0.2 A?	Repair the connector. NOTE: In this case, repair the following: • Poor contact in front oxygen sensor connector • Poor contact in front oxygen sensor connecting harness connector • Poor contact in ECM connector	Go to step **2.**
2	**CHECK OUTPUT SIGNAL FROM ECM.** 1) Start and idle the engine. 2) Measure the voltage between ECM connector and chassis ground. ***Connector & terminal*** ***(B136) No. 2 (+) — Chassis ground (−):***	Is the measured value less than 1 V?	Go to step **5.**	Go to step **3.**
3	**CHECK OUTPUT SIGNAL FROM ECM.** Measure the voltage between ECM connector and chassis ground. ***Connector & terminal*** ***(B136) No. 2 (+) — Chassis ground (−):***	Does the voltage change by shaking the ECM harness and connector?	Repair poor contact in ECM connector.	Go to step **4.**
4	**CHECK OUTPUT SIGNAL FROM ECM.** 1) Disconnect the connector from front oxygen sensor. 2) Measure the voltage between ECM connector and chassis ground. ***Connector & terminal*** ***(B136) No. 2 (+) — Chassis ground (−):***	Is the measured value less than 1 V?	Replace the ECM. <Ref. to FU(H4SO U5)-44, Engine Control Module (ECM).>	Repair battery short circuit in harness between ECM and front oxygen sensor connector. After repair, replace the ECM. <Ref. to FU(H4SO U5)-44, Engine Control Module (ECM).>
5	**CHECK POWER SUPPLY TO FRONT OXYGEN SENSOR.** 1) Turn the ignition switch to OFF. 2) Disconnect the connector from front oxygen sensor. 3) Turn the ignition switch to ON. 4) Measure the voltage between front oxygen sensor connector and engine ground or chassis ground. ***Connector & terminal*** ***(B262) No. 2 (+) — Chassis ground (−):***	Is the measured value more than 10 V?	Go to step **6.**	Repair the power supply line or replace the main relay. NOTE: In this case, repair the following: • Open circuit in harness between oxygen sensor relay and front oxygen sensor connector • Poor contact in oxygen sensor relay connector

	Step	Check	Yes	No
6	**CHECK FRONT OXYGEN SENSOR.** 1) Turn the ignition switch to OFF. 2) Measure the resistance between front oxygen sensor connector terminals. ***Terminals*** ***No. 1 — No. 2:***	Is the measured value less than 30 Ω?	Repair harness and connector. NOTE: In this case, repair the following: • Open circuit in harness between front oxygen sensor and ECM connector • Poor contact in front oxygen sensor connector • Poor contact in ECM connector • Poor contact in coupling connector	Replace the front oxygen sensor. <Ref. to FU(H4SO U5)-40, Front Oxygen Sensor.>

E: DTC P0038 HO2S HEATER CONTROL CIRCUIT HIGH (BANK 1 SENSOR 2)

DTC DETECTING CONDITION:

- Two consecutive driving cycles with fault
- GENERAL DESCRIPTION <Ref. to GD(H4SO U5)-17, DTC P0038 HO2S HEATER CONTROL CIRCUIT HIGH (BANK 1 SENSOR 2), Diagnostic Trouble Code (DTC) Detecting Criteria.>

CAUTION:
After repair or replacement of faulty parts, conduct Clear Memory Mode <Ref. to EN(H4SO U5)(diag)-46, OPERATION, Clear Memory Mode.> and Inspection Mode <Ref. to EN(H4SO U5)(diag)-37, OPERATION, Inspection Mode.>.

WIRING DIAGRAM:

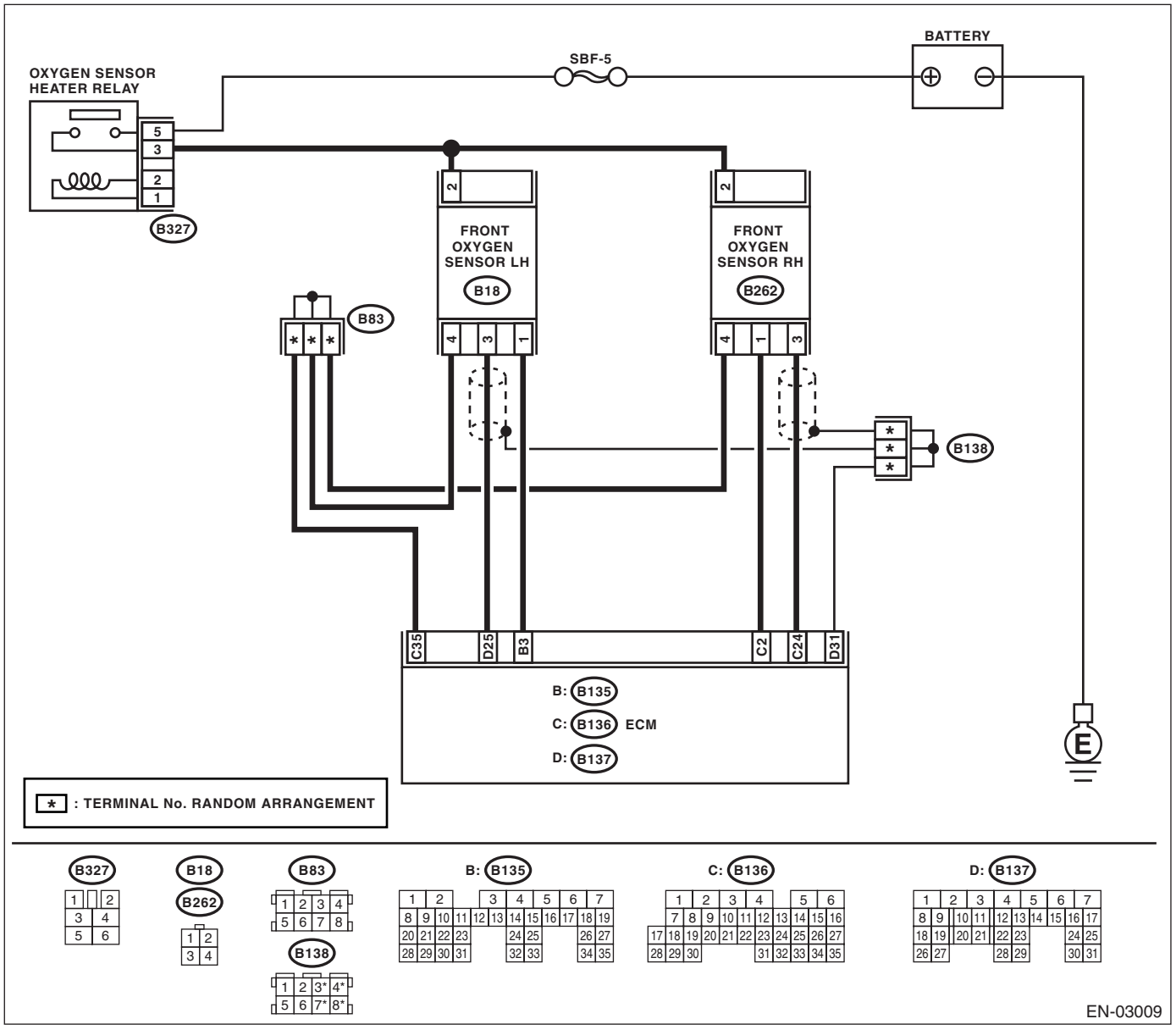

	Step	Check	Yes	No
1	**CHECK INPUT SIGNAL FOR ECM.** Measure the voltage between ECM connector and chassis ground. ***Connector & terminal*** ***(B136) No. 2 (+) — Chassis ground (−):***	Is the measured value more than 8 V?	Go to step **2.**	Go to step **3.**
2	**CHECK CURRENT DATA.** 1) Turn the ignition switch to OFF. 2) Repair the battery short circuit in harness between ECM and front oxygen sensor connector. 3) Turn the ignition switch to ON. 4) Read the data of front oxygen sensor heater current using Subaru Select Monitor or general scan tool. NOTE: • Subaru Select Monitor For detailed operation procedure, refer to the "READ CURRENT DATA FOR ENGINE". <Ref. to EN(H4SO U5)(diag)-28, Subaru Select Monitor.> • General scan tool For detailed operation procedure, refer to the general scan tool instruction manual.	Is the measured value more than 7 A?	Replace the ECM. <Ref. to FU(H4SO U5)-44, Engine Control Module (ECM).>	END
3	**CHECK POOR CONTACT.** Check poor contact in ECM connector.	Is there poor contact in ECM connector?	Repair poor contact in ECM connector.	END

F: DTC P0043 HO2S HEATER CONTROL CIRCUIT LOW (BANK 1 SENSOR 3)

DTC DETECTING CONDITION:

- Two consecutive driving cycles with fault
- GENERAL DESCRIPTION <Ref. to GD(H4SO U5)-19, DTC P0043 HO2S HEATER CONTROL CIRCUIT LOW (BANK 1 SENSOR 3), Diagnostic Trouble Code (DTC) Detecting Criteria.>

CAUTION:
After repair or replacement of faulty parts, conduct Clear Memory Mode <Ref. to EN(H4SO U5)(diag)-46, OPERATION, Clear Memory Mode.> and Inspection Mode <Ref. to EN(H4SO U5)(diag)-37, OPERATION, Inspection Mode.>.

WIRING DIAGRAM:

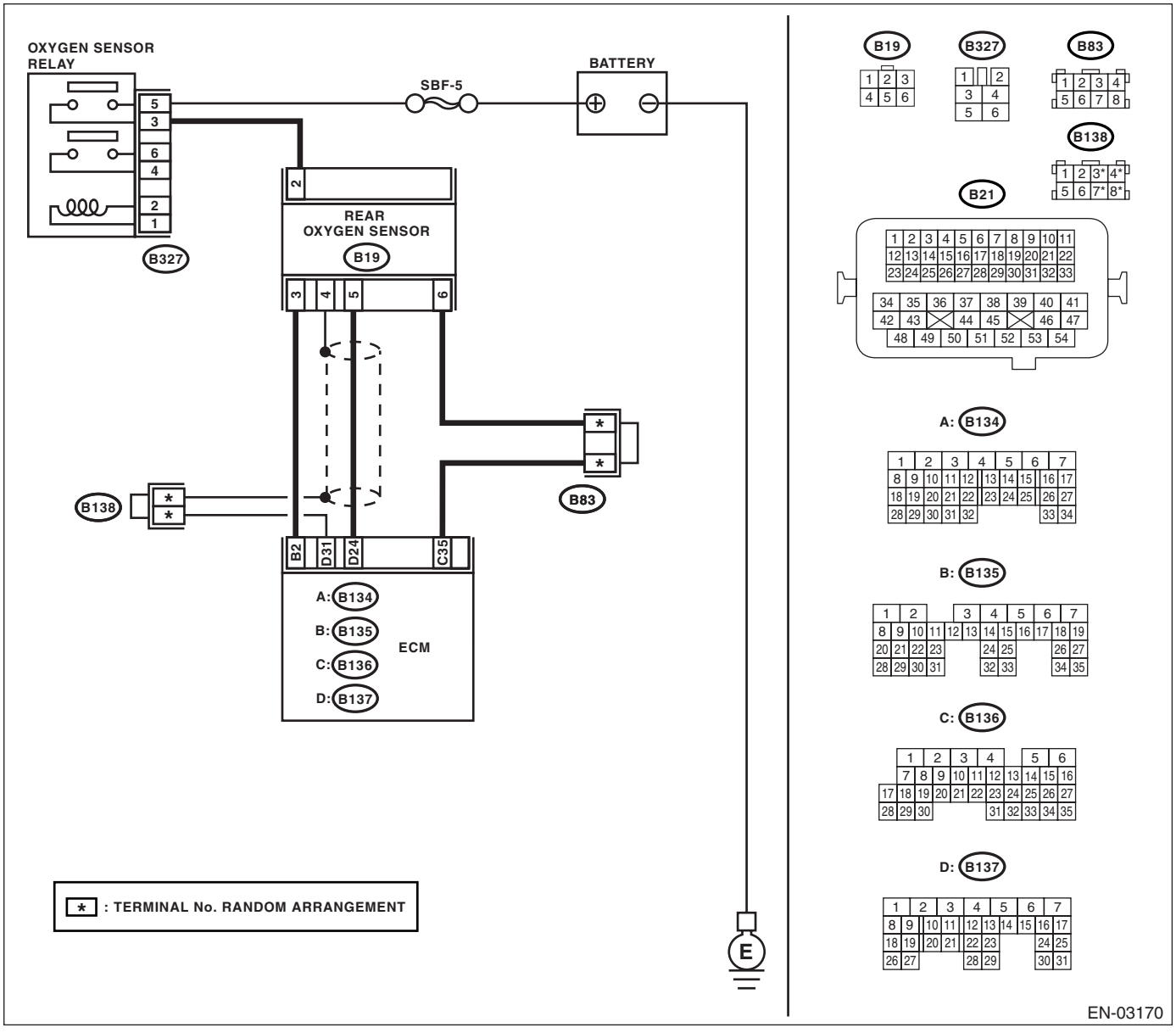

	Step	Check	Yes	No
1	**CHECK CURRENT DATA.** 1) Start the engine. 2) Read the data of rear oxygen sensor heater current using Subaru Select Monitor or general scan tool. NOTE: • Subaru Select Monitor For detailed operation procedure, refer to the "READ CURRENT DATA FOR ENGINE". <Ref. to EN(H4SO U5)(diag)-28, Subaru Select Monitor.> • General scan tool For detailed operation procedure, refer to the general scan tool instruction manual.	Is the measured value more than 0.2 A?	Repair the connector. NOTE: In this case, repair the following: • Poor contact in rear oxygen sensor connector • Poor contact in rear oxygen sensor connecting harness connector • Poor contact in ECM connector	Go to step **2.**
2	**CHECK OUTPUT SIGNAL FROM ECM.** 1) Start and idle the engine. 2) Measure the voltage between ECM connector and chassis ground. ***Connector & terminal*** ***(B135) No. 2 (+) — Chassis ground (−):***	Is the measured value less than 1 V?	Go to step **5.**	Go to step **3.**
3	**CHECK OUTPUT SIGNAL FROM ECM.** Measure the voltage between ECM connector and chassis ground. ***Connector & terminal*** ***(B135) No. 2 (+) — Chassis ground (−):***	Does the voltage change by shaking the ECM harness and connector?	Repair poor contact in ECM connector.	Go to step **4.**
4	**CHECK OUTPUT SIGNAL FROM ECM.** 1) Disconnect the connector from rear oxygen sensor. 2) Measure the voltage between ECM connector and chassis ground. ***Connector & terminal*** ***(B135) No. 2 (+) — Chassis ground (−):***	Is the measured value less than 1 V?	Replace the ECM. <Ref. to FU(H4SO U5)-44, Engine Control Module (ECM).>	Repair battery short circuit in harness between ECM and rear oxygen sensor connector. After repair, replace the ECM. <Ref. to FU(H4SO U5)-44, Engine Control Module (ECM).>
5	**CHECK POWER SUPPLY TO REAR OXYGEN SENSOR.** 1) Turn the ignition switch to OFF. 2) Disconnect the connector from rear oxygen sensor. 3) Turn the ignition switch to ON. 4) Measure the voltage between rear oxygen sensor connector and engine ground or chassis ground. ***Connector & terminal*** ***(B19) No. 2 (+) — Chassis ground (−):***	Is the measured value more than 10 V?	Go to step **6.**	Repair power supply line. NOTE: In this case, repair the following: • Open circuit in harness between main relay and rear oxygen sensor connector • Poor contact in rear oxygen sensor connector • Poor contact in coupling connector

Step		Check	Yes	No
6	**CHECK REAR OXYGEN SENSOR.** 1) Turn the ignition switch to OFF. 2) Measure the resistance between rear oxygen sensor connector terminals. ***Terminals*** ***No. 3 — No. 2:***	Is the measured value less than 30 Ω?	Repair harness and connector. NOTE: In this case, repair the following: • Open circuit in harness between rear oxygen sensor and ECM connector • Poor contact in rear oxygen sensor connector • Poor contact in ECM connector • Poor contact in coupling connector	Replace the rear oxygen sensor. <Ref. to FU(H4SO U5)-43, Rear Oxygen Sensor.>

G: DTC P0044 HO2S HEATER CONTROL CIRCUIT HIGH (BANK 1 SENSOR 3)

DTC DETECTING CONDITION:

- Two consecutive driving cycles with fault
- GENERAL DESCRIPTION <Ref. to GD(H4SO U5)-21, DTC P0044 HO2S HEATER CONTROL CIRCUIT HIGH (BANK 1 SENSOR 3), Diagnostic Trouble Code (DTC) Detecting Criteria.>

CAUTION:
After repair or replacement of faulty parts, conduct Clear Memory Mode <Ref. to EN(H4SO U5)(diag)-46, OPERATION, Clear Memory Mode.> and Inspection Mode <Ref. to EN(H4SO U5)(diag)-37, OPERATION, Inspection Mode.>.

WIRING DIAGRAM:

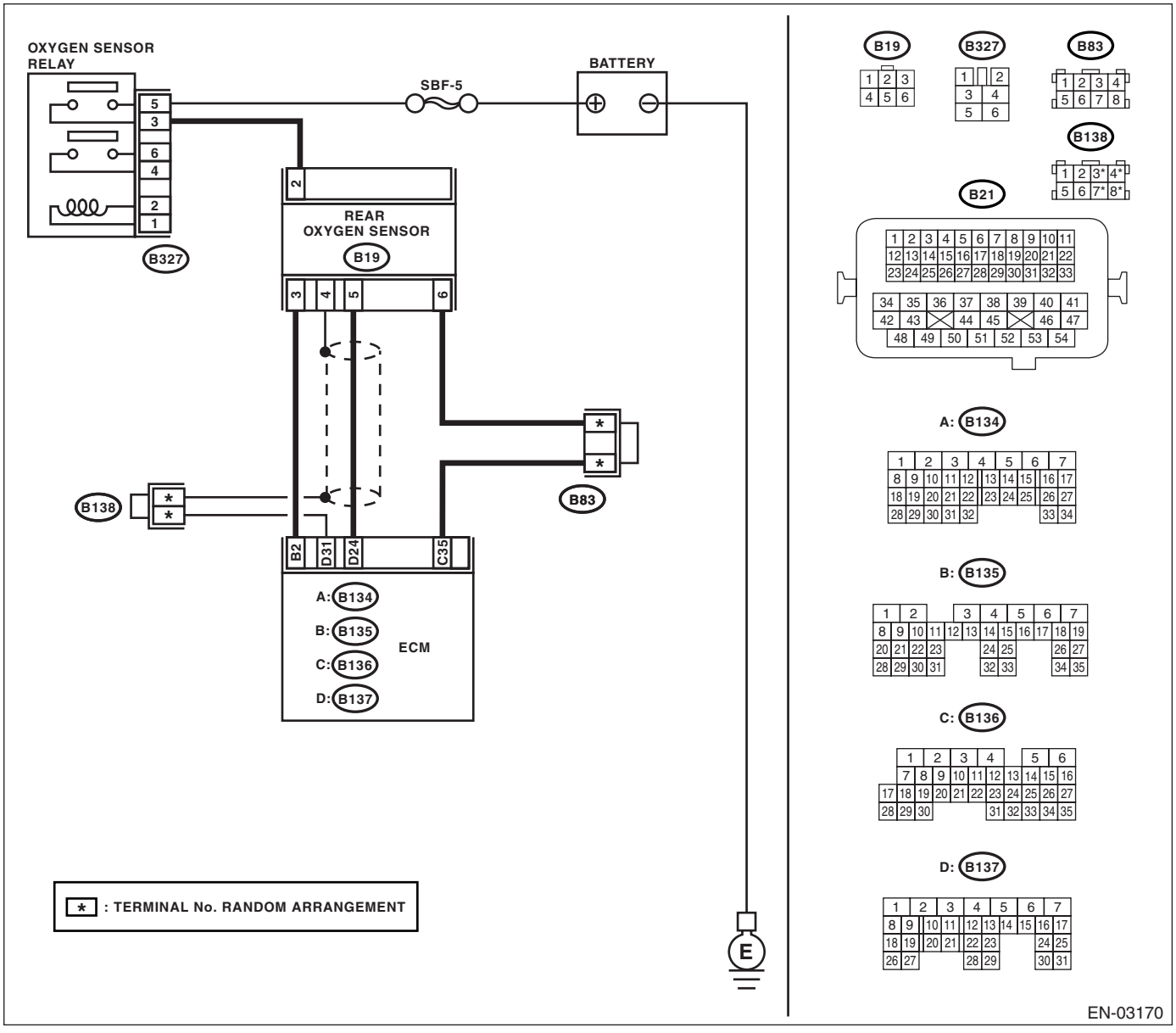

	Step	Check	Yes	No
1	**CHECK INPUT SIGNAL FOR ECM.** Measure the voltage between ECM connector and chassis ground. ***Connector & terminal*** ***(B135) No. 2 (+) — Chassis ground (−):***	Is the measured value more than 8 V?	Go to step **2.**	Go to step **3.**
2	**CHECK CURRENT DATA.** 1) Turn the ignition switch to OFF. 2) Repair the battery short circuit in harness between ECM and rear oxygen sensor connector. 3) Turn the ignition switch to ON. 4) Read the data of rear oxygen sensor heater current using Subaru Select Monitor or general scan tool. NOTE: • Subaru Select Monitor For detailed operation procedure, refer to the "READ CURRENT DATA FOR ENGINE". <Ref. to EN(H4SO U5)(diag)-28, Subaru Select Monitor.> • General scan tool For detailed operation procedure, refer to the general scan tool instruction manual.	Is the measured value more than 7 A?	Replace the ECM. <Ref. to FU(H4SO U5)-44, Engine Control Module (ECM).>	END
3	**CHECK POOR CONTACT.** Check poor contact in ECM connector.	Is there poor contact in ECM connector?	Repair poor contact in ECM connector.	END

H: DTC P0050 HO2S HEATER CONTROL CIRCUIT (BANK 2 SENSOR 1)

DTC DETECTING CONDITION:

- Two consecutive driving cycles with fault
- GENERAL DESCRIPTION <Ref. to GD(H4SO U5)-23, DTC P0050 HO2S HEATER CONTROL CIRCUIT (BANK 2 SENSOR 1), Diagnostic Trouble Code (DTC) Detecting Criteria.>

CAUTION:
After repair or replacement of faulty parts, conduct Clear Memory Mode <Ref. to EN(H4SO U5)(diag)-46, OPERATION, Clear Memory Mode.> and Inspection Mode <Ref. to EN(H4SO U5)(diag)-37, OPERATION, Inspection Mode.>.

WIRING DIAGRAM:

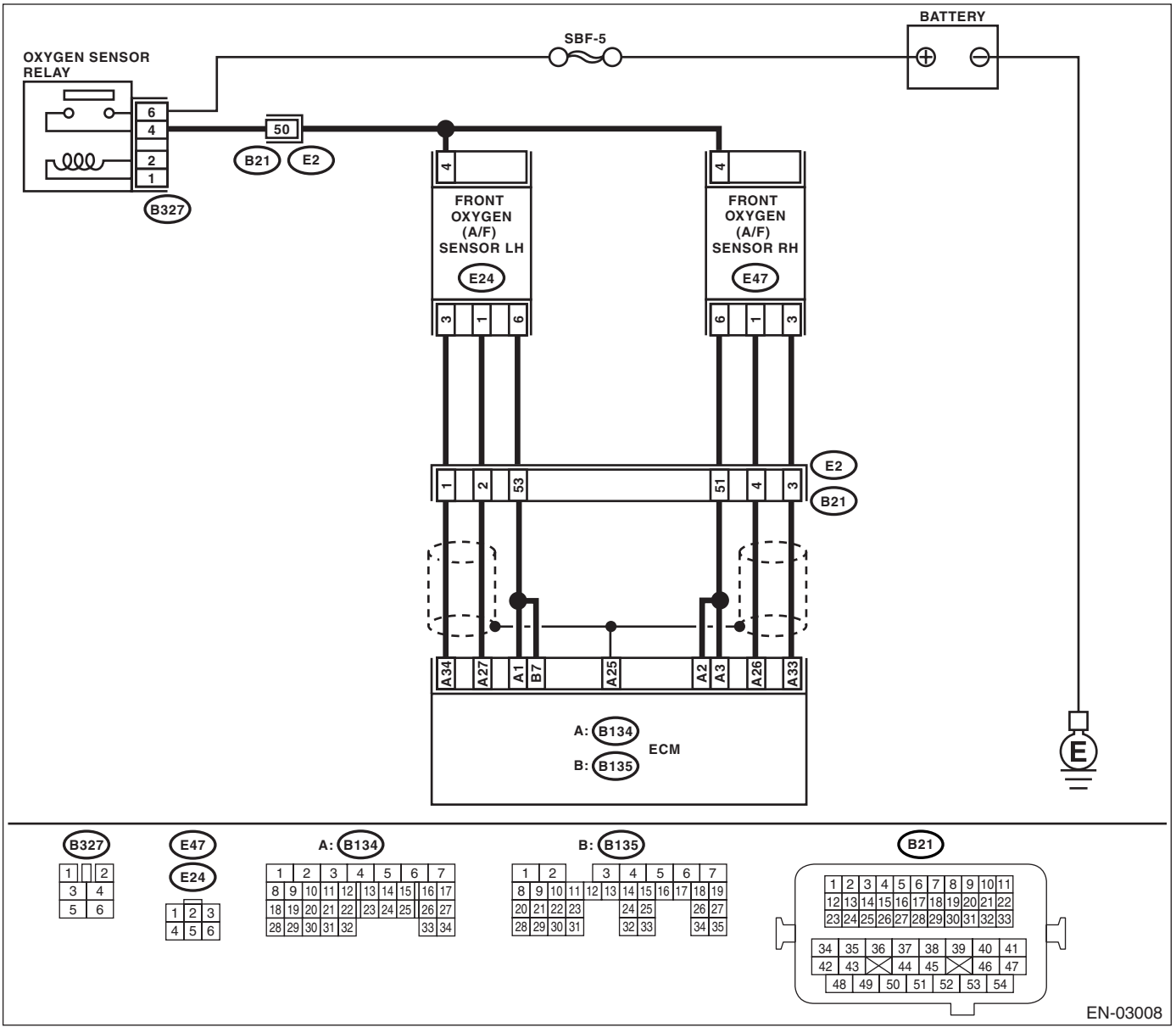

	Step	Check	Yes	No
1	**CHECK HARNESS BETWEEN ECM AND FRONT OXYGEN (A/F) SENSOR CONNECTOR.** 1) Start the engine and warm-up engine. 2) Turn the ignition switch to OFF. 3) Disconnect the connectors from ECM and front oxygen (A/F) sensor. 4) Measure the resistance of harness between ECM and front oxygen (A/F) sensor connector. ***Connector & terminal*** ***(B134) No. 1 — (E24) No. 6:*** ***(B135) No. 7 — (E24) No. 6:***	Is the measured value less than 1 Ω?	Go to step **2.**	Repair the open circuit in harness between ECM and front oxygen (A/F) sensor connector.
2	**CHECK HARNESS BETWEEN ECM AND FRONT OXYGEN (A/F) SENSOR CONNECTOR.** Measure the resistance of harness between ECM and front oxygen (A/F) sensor connector. ***Connector & terminal*** ***(B134) No. 27 — (E24) No. 1:*** ***(B134) No. 34 — (E24) No. 3:***	Is the resistance less than 1 Ω?	Go to step **3.**	Repair the open circuit in harness between main relay and front oxygen (A/F) sensor connector.
3	**CHECK HARNESS BETWEEN OXYGEN SENSOR RELAY AND FRONT OXYGEN (A/F) SENSOR CONNECTOR.** Measure the resistance of harness between oxygen sensor relay and front oxygen (A/F) sensor connector. ***Connector & terminal*** ***(B327) No. 4 — (E24) No. 4:***	Is the measured value less than 1 Ω?	Go to step **4.**	Repair the open circuit in harness between oxygen sensor relay and front oxygen (A/F) sensor connector.
4	**CHECK FRONT OXYGEN (A/F) SENSOR.** Measure the resistance between front oxygen (A/F) sensor connector terminals. ***Terminals*** ***No. 6 — No. 4:***	Is the measured value less than 5 Ω?	Go to step **5.**	Replace the front oxygen (A/F) sensor. <Ref. to FU(H4SO U5)-37, Front Oxygen (A/F) Sensor.>
5	**CHECK POOR CONTACT.** Check the poor contact in ECM and front oxygen (A/F) sensor connector.	Is there poor contact in ECM or front oxygen (A/F) sensor connector?	Repair the poor contact in ECM or front oxygen (A/F) sensor connector.	Replace the front oxygen (A/F) sensor. <Ref. to FU(H4SO U5)-37, Front Oxygen (A/F) Sensor.>

I: DTC P0051 HO2S HEATER CONTROL CIRCUIT LOW (BANK 2 SENSOR 1)

DTC DETECTING CONDITION:

- Detect as soon as malfunction occurs.
- GENERAL DESCRIPTION <Ref. to GD(H4SO U5)-23, DTC P0051 HO2S HEATER CONTROL CIRCUIT LOW (BANK 2 SENSOR 1), Diagnostic Trouble Code (DTC) Detecting Criteria.>

CAUTION:
After repair or replacement of faulty parts, conduct Clear Memory Mode <Ref. to EN(H4SO U5)(diag)-46, OPERATION, Clear Memory Mode.> and Inspection Mode <Ref. to EN(H4SO U5)(diag)-37, OPERATION, Inspection Mode.>.

WIRING DIAGRAM:

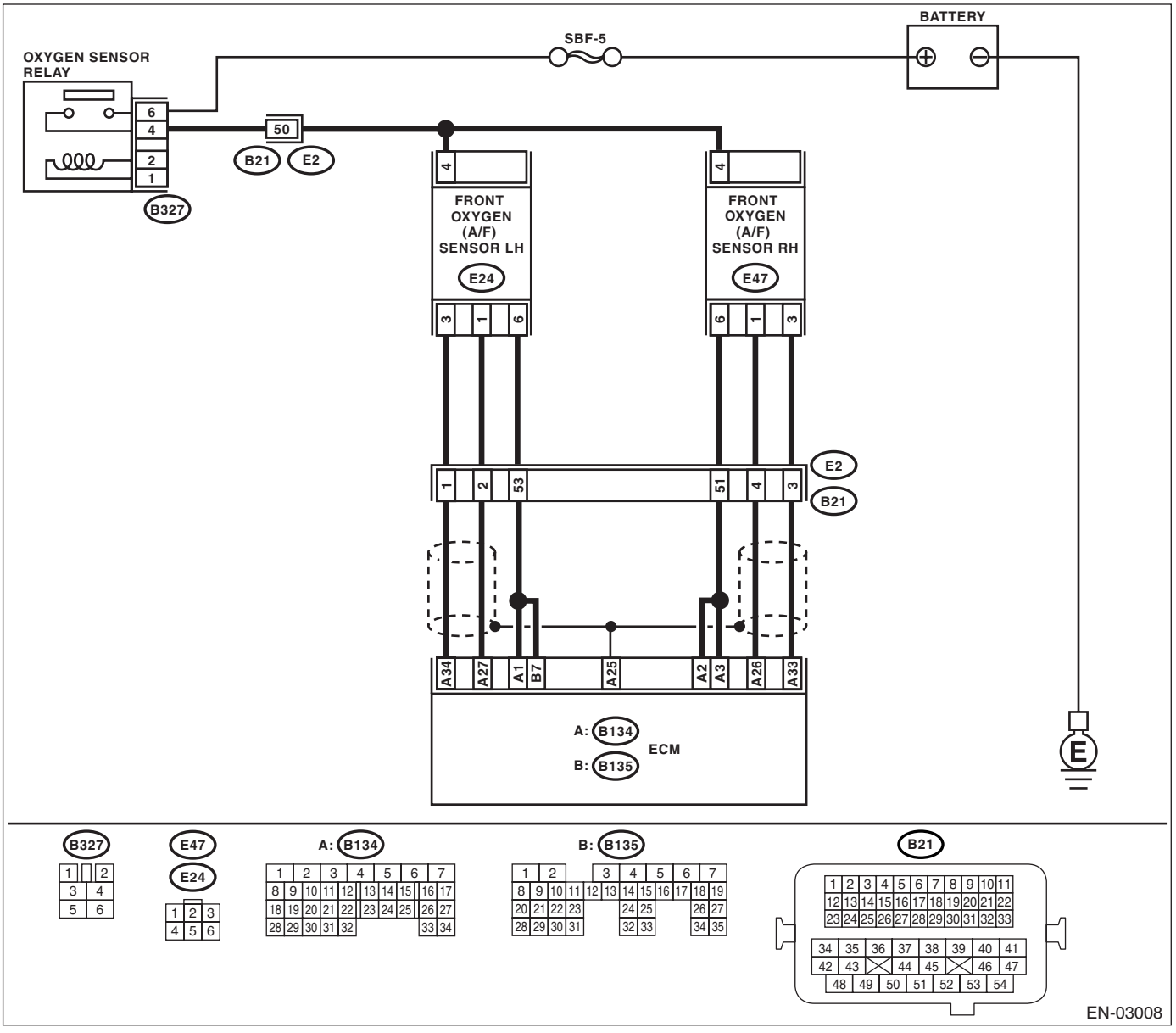

Step		Check	Yes	No
1	**CHECK FOR ANY OTHER DTC ON DISPLAY.**	Is any other DTC displayed?	Go to step **2.**	Go to step **4.**

	Step	Check	Yes	No
2	**CHECK POWER SUPPLY TO FRONT OXYGEN (A/F) SENSOR.** 1) Turn the ignition switch to OFF. 2) Disconnect the connector from front oxygen (A/F) sensor. 3) Turn the ignition switch to ON. 4) Measure the voltage between front oxygen (A/F) sensor connector and engine ground. ***Connector & terminal*** ***(E24) No. 4 (+) — Engine ground (−):***	Is the measured value more than 10 V?	Go to step **3.**	Repair the power supply line or replace the main relay. NOTE: In this case, repair the following: • Open circuit in harness between oxygen sensor relay and front oxygen (A/F) sensor connector • Poor contact in oxygen sensor relay connector • Poor contact in coupling connector
3	**CHECK CURRENT DATA.** 1) Start the engine. 2) Read the data of front oxygen (A/F) sensor heater current using Subaru Select Monitor or general scan tool. NOTE: • Subaru Select Monitor For detailed operation procedure, refer to the "READ CURRENT DATA FOR ENGINE". <Ref. to EN(H4SO U5)(diag)-28, Subaru Select Monitor.> • General scan tool For detailed operation procedure, refer to the general scan tool instruction manual.	Is the measured value more than 0.2 A?	Repair poor contact in connector. NOTE: In this case, repair the following: • Poor contact in front oxygen (A/F) sensor connector • Poor contact in ECM connector	Go to step **4.**
4	**CHECK INPUT SIGNAL FROM ECM.** 1) Start and idle the engine. 2) Measure the voltage between ECM connector and chassis ground. ***Connector & terminal*** ***(B134) No. 1 (+) — Chassis ground (−):*** ***(B135) No. 7 (+) — Chassis ground (−):***	Is the voltage less than 1 V?	Go to step **6.**	Go to step **5.**
5	**CHECK OUTPUT SIGNAL FROM ECM.** Measure the voltage between ECM connector and chassis ground. ***Connector & terminal*** ***(B134) No. 1 (+) — Chassis ground (−):*** ***(B135) No. 7 (+) — Chassis ground (−):***	Does the voltage change by shaking the ECM harness and connector?	Repair poor contact in ECM connector.	Go to step **6.**
6	**CHECK FRONT OXYGEN (A/F) SENSOR.** 1) Turn the ignition switch to OFF. 2) Measure the resistance between front oxygen (A/F) sensor connector terminals. ***Terminals*** ***No. 6 — No. 4:***	Is the measured value less than 10 Ω?	Repair harness and connector. NOTE: In this case, repair the following: • Open or ground short circuit in harness between front oxygen (A/F) sensor and ECM connector • Poor contact in front oxygen (A/F) sensor connector • Poor contact in ECM connector	Replace the front oxygen (A/F) sensor. <Ref. to FU(H4SO U5)-37, Front Oxygen (A/F) Sensor.>

J: DTC P0052 HO2S HEATER CONTROL CIRCUIT HIGH (BANK 2 SENSOR 1)

DTC DETECTING CONDITION:

- Detect as soon as malfunction occurs.
- GENERAL DESCRIPTION <Ref. to GD(H4SO U5)-23, DTC P0052 HO2S HEATER CONTROL CIRCUIT HIGH (BANK 2 SENSOR 1), Diagnostic Trouble Code (DTC) Detecting Criteria.>

CAUTION:
After repair or replacement of faulty parts, conduct Clear Memory Mode <Ref. to EN(H4SO U5)(diag)-46, OPERATION, Clear Memory Mode.> and Inspection Mode <Ref. to EN(H4SO U5)(diag)-37, OPERATION, Inspection Mode.>.

WIRING DIAGRAM:

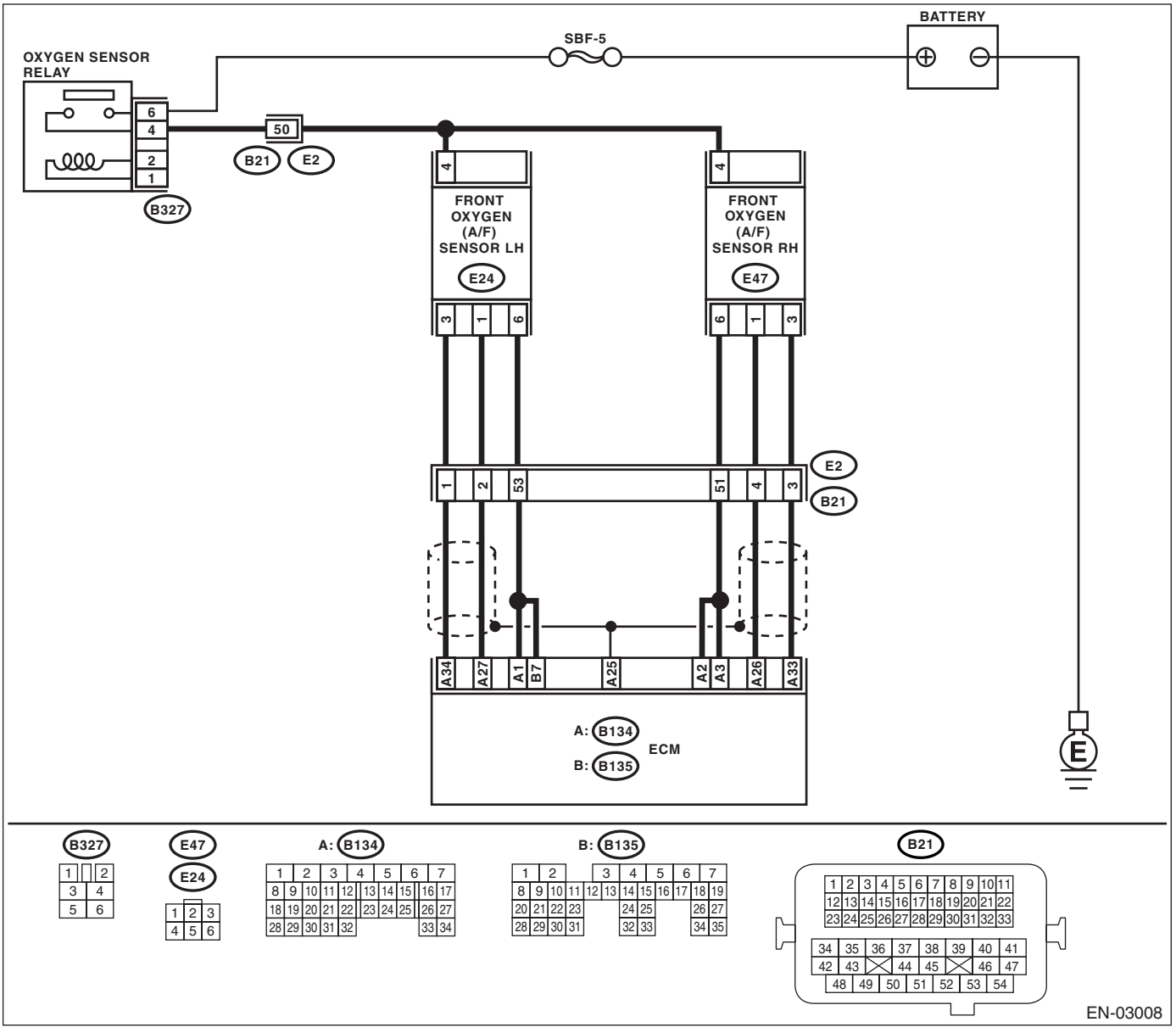

	Step	Check	Yes	No
1	**CHECK OUTPUT SIGNAL FROM ECM.** 1) Turn the ignition switch to ON. 2) Measure the voltage between ECM connector and chassis ground. ***Connector & terminal*** ***(B134) No. 1 (+) — Chassis ground (−):*** ***(B135) No. 7 (+) — Chassis ground (−):***	Is the measured value more than 8 V?	Go to step **2.**	Go to step **3.**
2	**CHECK FRONT OXYGEN (A/F) SENSOR HEATER CURRENT.** 1) Turn the ignition switch to OFF. 2) Repair the battery short circuit in harness between ECM and front oxygen (A/F) sensor connector. 3) Turn the ignition switch to ON. 4) Read the data of front oxygen (A/F) sensor heater current using Subaru Select Monitor or general scan tool. NOTE: • Subaru Select Monitor For detailed operation procedure, refer to the "READ CURRENT DATA FOR ENGINE". <Ref. to EN(H4SO U5)(diag)-28, Subaru Select Monitor.> • General scan tool For detailed operation procedure, refer to the general scan tool instruction manual.	Is the measured value more than 2.3 A?	Replace the ECM. <Ref. to FU(H4SO U5)-44, Engine Control Module (ECM).>	END
3	**CHECK OUTPUT SIGNAL FROM ECM.** Measure the voltage between ECM connector and chassis ground. ***Connector & terminal*** ***(B134) No. 1 (+) — Chassis ground (−):*** ***(B135) No. 7 (+) — Chassis ground (−):***	Does the voltage change by shaking the ECM harness and connector?	Repair battery short circuit in harness between ECM and front oxygen (A/F) sensor connector.	END

K: DTC P0057 HO2S HEATER CONTROL CIRCUIT LOW (BANK 2 SENSOR 2)

DTC DETECTING CONDITION:

- Two consecutive driving cycles with fault
- GENERAL DESCRIPTION <Ref. to GD(H4SO U5)-23, DTC P0057 HO2S HEATER CONTROL CIRCUIT LOW (BANK 2 SENSOR 2), Diagnostic Trouble Code (DTC) Detecting Criteria.>

CAUTION:
After repair or replacement of faulty parts, conduct Clear Memory Mode <Ref. to EN(H4SO U5)(diag)-46, OPERATION, Clear Memory Mode.> and Inspection Mode <Ref. to EN(H4SO U5)(diag)-37, OPERATION, Inspection Mode.>.

WIRING DIAGRAM:

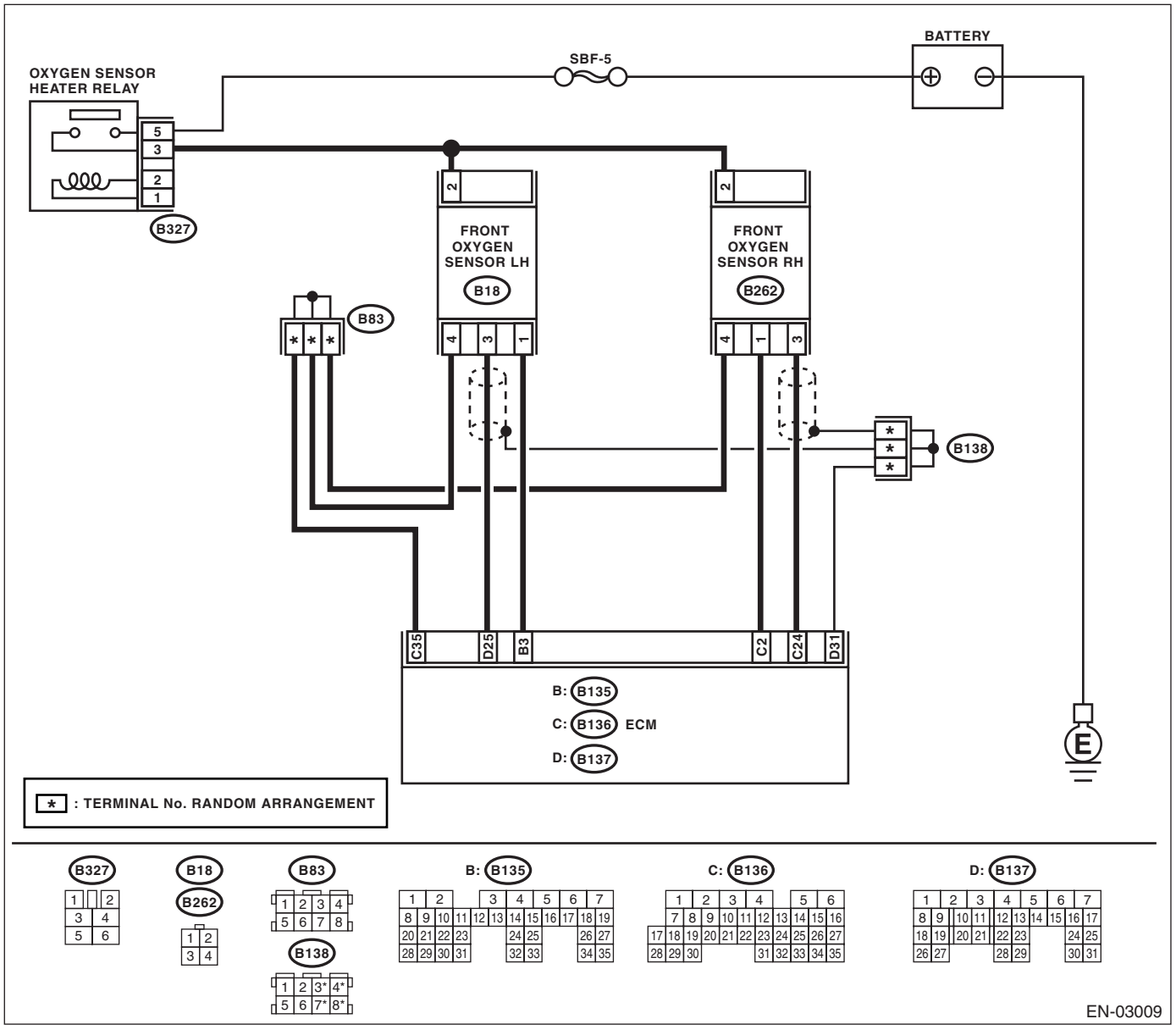

	Step	Check	Yes	No
1	**CHECK CURRENT DATA.** 1) Start the engine. 2) Read the data of front oxygen sensor heater current using Subaru Select Monitor or general scan tool. NOTE: • Subaru Select Monitor For detailed operation procedure, refer to the "READ CURRENT DATA FOR ENGINE". <Ref. to EN(H4SO U5)(diag)-28, Subaru Select Monitor.> • General scan tool For detailed operation procedure, refer to the general scan tool instruction manual.	Is the measured value more than 0.2 A?	Repair the connector. NOTE: In this case, repair the following: • Poor contact in front oxygen sensor connector • Poor contact in front oxygen sensor connecting harness connector • Poor contact in ECM connector	Go to step **2.**
2	**CHECK OUTPUT SIGNAL FROM ECM.** 1) Start and idle the engine. 2) Measure the voltage between ECM connector and chassis ground. ***Connector & terminal*** ***(B135) No. 3 (+) — Chassis ground (−):***	Is the measured value less than 1 V?	Go to step **5.**	Go to step **3.**
3	**CHECK OUTPUT SIGNAL FROM ECM.** Measure the voltage between ECM connector and chassis ground. ***Connector & terminal*** ***(B135) No. 3 (+) — Chassis ground (−):***	Does the voltage change by shaking the ECM harness and connector?	Repair poor contact in ECM connector.	Go to step **4.**
4	**CHECK OUTPUT SIGNAL FROM ECM.** 1) Disconnect the connector from front oxygen sensor. 2) Measure the voltage between ECM connector and chassis ground. ***Connector & terminal*** ***(B135) No. 3 (+) — Chassis ground (−):***	Is the measured value less than 1 V?	Replace the ECM. <Ref. to FU(H4SO U5)-44, Engine Control Module (ECM).>	Repair battery short circuit in harness between ECM and front oxygen sensor connector. After repair, replace the ECM. <Ref. to FU(H4SO U5)-44, Engine Control Module (ECM).>
5	**CHECK POWER SUPPLY TO FRONT OXYGEN SENSOR.** 1) Turn the ignition switch to OFF. 2) Disconnect the connector from front oxygen sensor. 3) Turn the ignition switch to ON. 4) Measure the voltage between front oxygen sensor connector and engine ground or chassis ground. ***Connector & terminal*** ***(B18) No. 2 (+) — Chassis ground (−):***	Is the voltage more than 10 V?	Go to step **6.**	Repair the power supply line or replace the main relay. NOTE: In this case, repair the following: • Open circuit in harness between oxygen sensor relay and front oxygen sensor connector • Poor contact in oxygen sensor relay connector

Step		Check	Yes	No
6	**CHECK FRONT OXYGEN SENSOR.** 1) Turn the ignition switch to OFF. 2) Measure the resistance between front oxygen sensor connector terminals. ***Terminals*** ***No. 1 — No. 2:***	Is the measured value less than 30 Ω?	Repair harness and connector. NOTE: In this case, repair the following: • Open circuit in harness between front oxygen sensor and ECM connector • Poor contact in front oxygen sensor connector • Poor contact in ECM connector • Poor contact in coupling connector	Replace the front oxygen sensor. <Ref. to FU(H4SO U5)-40, Front Oxygen Sensor.>

L: DTC P0058 HO2S HEATER CONTROL CIRCUIT HIGH (BANK 2 SENSOR 2)

DTC DETECTING CONDITION:

- Two consecutive driving cycles with fault
- GENERAL DESCRIPTION <Ref. to GD(H4SO U5)-23, DTC P0058 HO2S HEATER CONTROL CIRCUIT HIGH (BANK 2 SENSOR 2), Diagnostic Trouble Code (DTC) Detecting Criteria.>

CAUTION:
After repair or replacement of faulty parts, conduct Clear Memory Mode <Ref. to EN(H4SO U5)(diag)-46, OPERATION, Clear Memory Mode.> and Inspection Mode <Ref. to EN(H4SO U5)(diag)-37, OPERATION, Inspection Mode.>.

WIRING DIAGRAM:

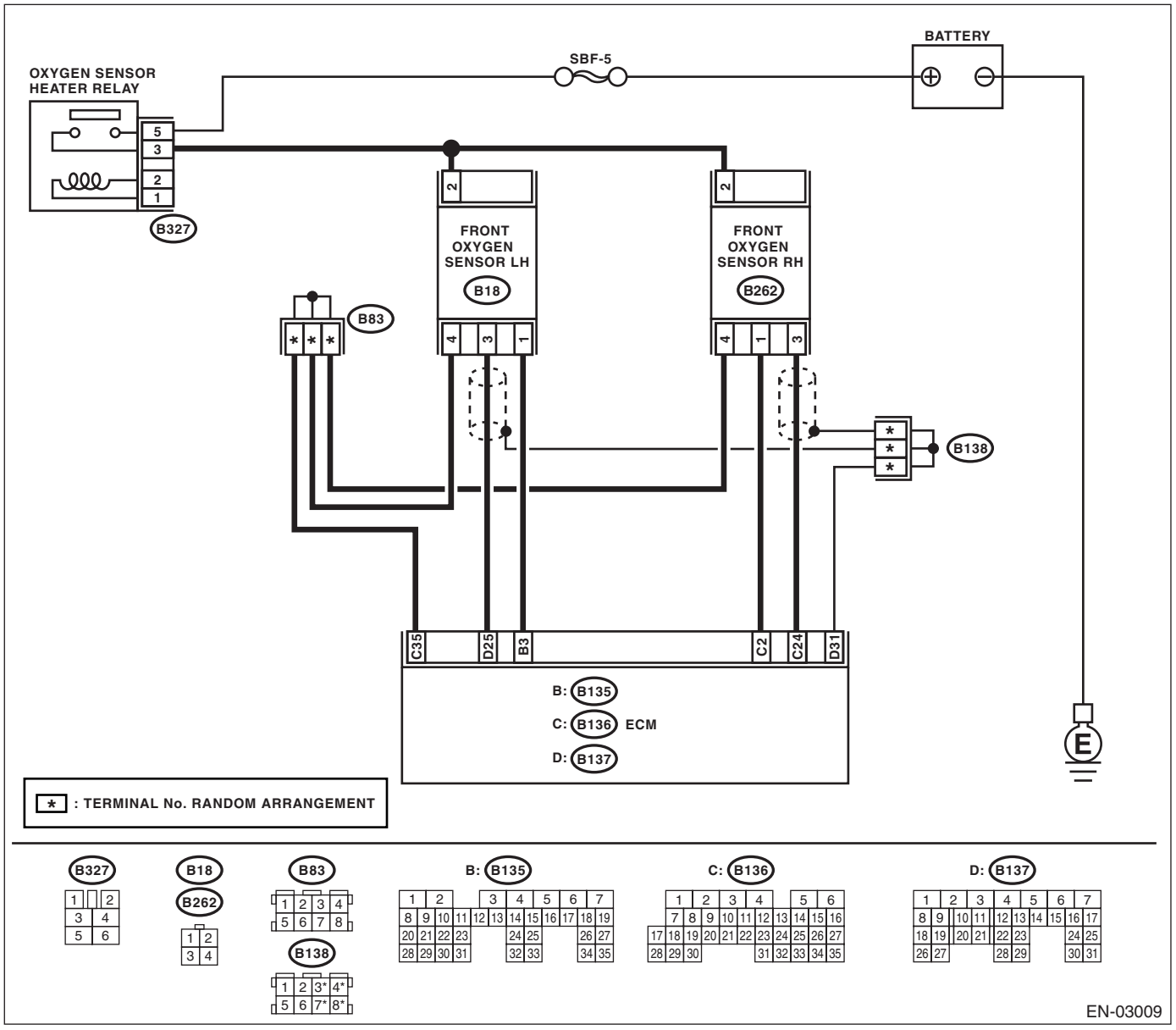

	Step	Check	Yes	No
1	**CHECK INPUT SIGNAL FOR ECM.** Measure the voltage between ECM connector and chassis ground. ***Connector & terminal*** ***(B135) No. 3 (+) — Chassis ground (−):***	Is the measured value more than 8 V?	Go to step **2.**	Go to step **3.**
2	**CHECK CURRENT DATA.** 1) Turn the ignition switch to OFF. 2) Repair the battery short circuit in harness between ECM and front oxygen sensor connector. 3) Turn the ignition switch to ON. 4) Read the data of front oxygen sensor heater current using Subaru Select Monitor or general scan tool. NOTE: • Subaru Select Monitor For detailed operation procedure, refer to the "READ CURRENT DATA FOR ENGINE". <Ref. to EN(H4SO U5)(diag)-28, Subaru Select Monitor.> • General scan tool For detailed operation procedure, refer to the general scan tool instruction manual.	Is the measured value more than 7 A?	Replace the ECM. <Ref. to FU(H4SO U5)-44, Engine Control Module (ECM).>	END
3	**CHECK POOR CONTACT.** Check poor contact in ECM connector.	Is there poor contact in ECM connector?	Repair poor contact in ECM connector.	END

M: DTC P0068 MAP/MAF - THROTTLE POSITION CORRELATION

DTC DETECTING CONDITION:

- Two consecutive driving cycles with fault
- GENERAL DESCRIPTION <Ref. to GD(H4SO U5)-24, DTC P0068 MAP/MAF - THROTTLE POSITION CORRELATION, Diagnostic Trouble Code (DTC) Detecting Criteria.>

CAUTION:
After repair or replacement of faulty parts, conduct CLEAR MEMORY MODE <Ref. to EN(H4SO U5)(diag)-46, OPERATION, Clear Memory Mode.> and INSPECTION MODE <Ref. to EN(H4SO U5)(diag)-37, OPERATION, Inspection Mode.>.

WIRING DIAGRAM:

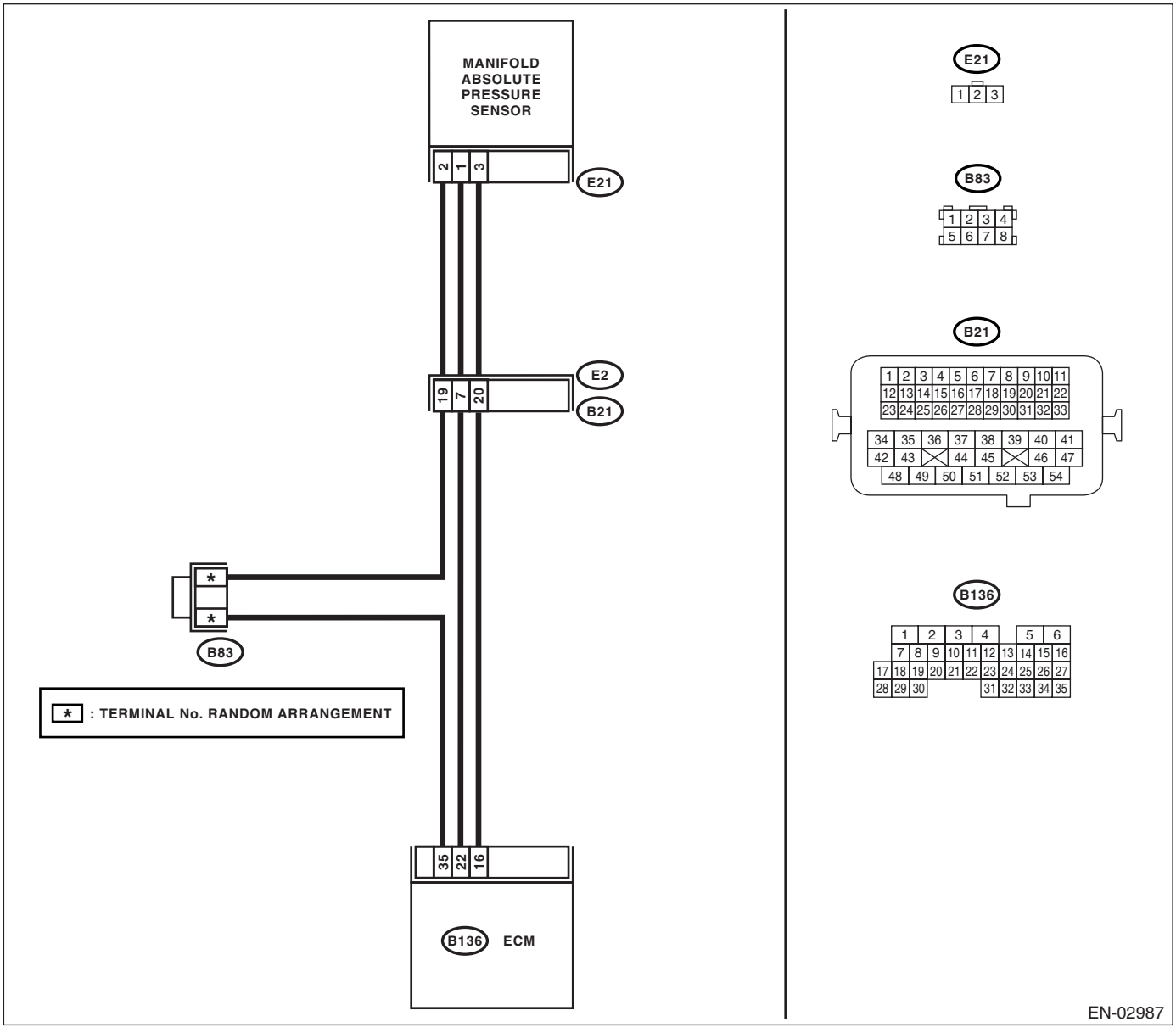

	Step	Check	Yes	No
1	**CHECK FOR ANY OTHER DTC ON DISPLAY.**	Is any other DTC displayed?	Inspect DTC using "List of Diagnostic Trouble Code (DTC)". <Ref. to EN(H4SO U5)(diag)-73, List of Diagnostic Trouble Code (DTC).>	Go to step **2.**
2	**CHECK AIR INTAKE SYSTEM.**	Are there holes, loose bolts or disconnection of hose on air intake system?	Repair air intake system.	Go to step **3.**
3	**CHECK PRESSURE SENSOR.** 1) Start the engine and warm-up engine until coolant temperature is greater than 60°C (140°F). 2) Place the selector lever or shift lever in "P" or "N" position. 3) Turn the A/C switch to OFF. 4) All accessory switches OFF. 5) Read the data of intake manifold pressure sensor signal using Subaru Select Monitor or general scan tool. NOTE: • Subaru Select Monitor For detailed operation procedure, refer to "READ CURRENT DATA FOR ENGINE". <Ref. to EN(H4SO U5)(diag)-28, Subaru Select Monitor.> • General scan tool For detailed operation procedure, refer to the general scan tool instruction manual.	Ignition ON: Is the measured value 73.3 — 106.6 kPa (550 — 800 mmHg, 21.65 — 31.50 inHg)? Idling: Is the measured value 20.0 — 46.7 kPa (150 — 350 mmHg, 5.91 — 13.78 inHg)?	Go to step **4.**	Replace the manifold absolute pressure sensor. <Ref. to FU(H4SO U5)-28, Manifold Absolute Pressure Sensor.>
4	**CHECK THROTTLE POSITION.** Read the data of throttle position signal using Subaru Select Monitor or general scan tool. NOTE: • Subaru Select Monitor For detailed operation procedure, refer to "READ CURRENT DATA FOR ENGINE". <Ref. to EN(H4SO U5)(diag)-28, Subaru Select Monitor.> • General scan tool For detailed operation procedure, refer to the general scan tool instruction manual.	Is the measured value less than 5% when throttle is fully closed?	Go to step **5.**	Adjust or replace the throttle position sensor. <Ref. to FU(H4SO U5)-27, Throttle Position Sensor.>
5	**CHECK THROTTLE POSITION.**	Is the measured value more than 85% when throttle is wide open?	Replace the manifold absolute pressure sensor. <Ref. to FU(H4SO U5)-28, Manifold Absolute Pressure Sensor.>	Replace the throttle position sensor. <Ref. to FU(H4SO U5)-27, Throttle Position Sensor.>

N: DTC P0101 MASS OR VOLUME AIR FLOW CIRCUIT RANGE/PERFORMANCE

DTC DETECTING CONDITION:

- Two consecutive driving cycles with fault
- GENERAL DESCRIPTION <Ref. to GD(H4SO U5)-26, DTC P0101 MASS OR VOLUME AIR FLOW CIRCUIT RANGE/PERFORMANCE, Diagnostic Trouble Code (DTC) Detecting Criteria.>

TROUBLE SYMPTOM:

- Erroneous idling
- Engine stalls.
- Poor driving performance

CAUTION:

After repair or replacement of faulty parts, conduct Clear Memory Mode <Ref. to EN(H4SO U5)(diag)-46, OPERATION, Clear Memory Mode.> and Inspection Mode <Ref. to EN(H4SO U5)(diag)-37, OPERATION, Inspection Mode.>.

WIRING DIAGRAM:

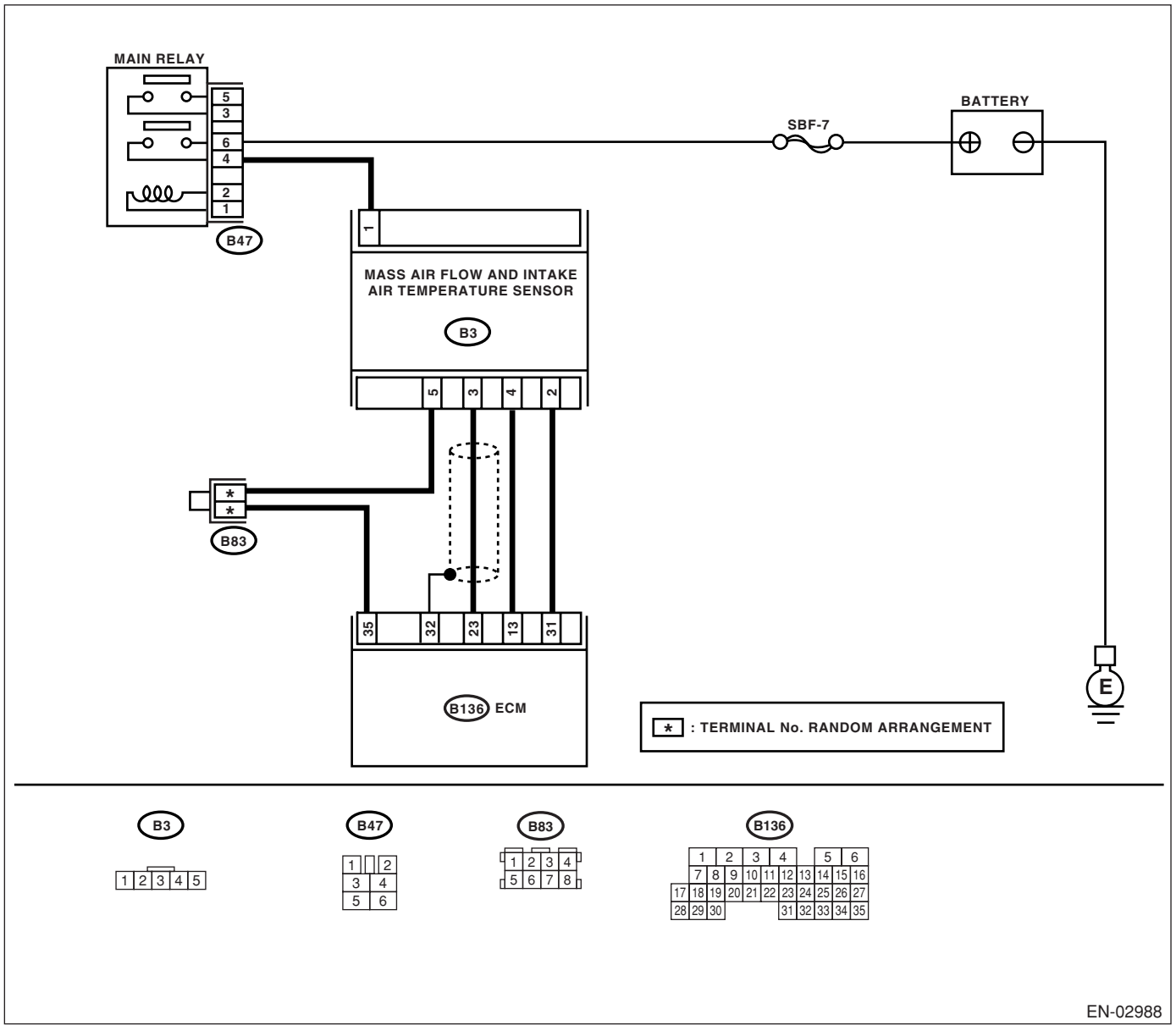

	Step	Check	Yes	No
1	**CHECK FOR ANY OTHER DTC ON DISPLAY.**	Is any other DTC displayed?	Inspect the relevant DTC using "List of Diagnostic Trouble Code (DTC)". <Ref. to EN(H4SO U5)(diag)-73, List of Diagnostic Trouble Code (DTC).> NOTE: In this case, it is not necessary to inspect DTC P0101.	Replace the mass air flow and intake air temperature sensor. <Ref. to FU(H4SO U5)-29, Mass Air Flow and Intake Air Temperature Sensor.>

O: DTC P0102 MASS OR VOLUME AIR FLOW CIRCUIT LOW INPUT

DTC DETECTING CONDITION:

- Detect as soon as malfunction occurs.
- GENERAL DESCRIPTION <Ref. to GD(H4SO U5)-29, DTC P0102 MASS OR VOLUME AIR FLOW CIRCUIT LOW INPUT, Diagnostic Trouble Code (DTC) Detecting Criteria.>

TROUBLE SYMPTOM:

- Erroneous idling
- Engine stalls.
- Poor driving performance

CAUTION:

After repair or replacement of faulty parts, conduct Clear Memory Mode <Ref. to EN(H4SO U5)(diag)-46, OPERATION, Clear Memory Mode.> and Inspection Mode <Ref. to EN(H4SO U5)(diag)-37, OPERATION, Inspection Mode.>.

WIRING DIAGRAM:

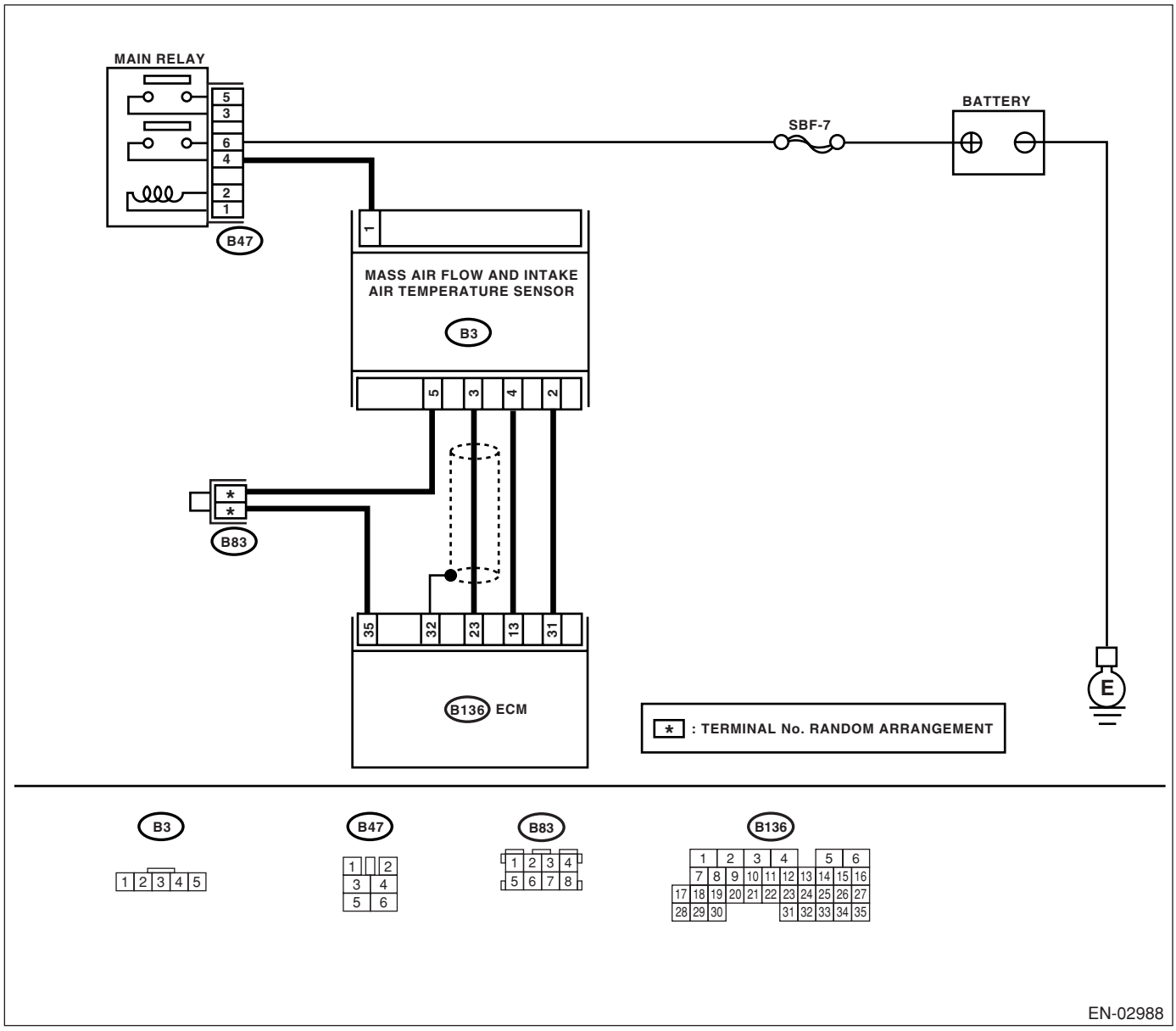

	Step	Check	Yes	No
1	**CONNECT SUBARU SELECT MONITOR OR THE GENERAL SCAN TOOL, AND READ DATA.** 1) Turn the ignition switch to OFF. 2) Connect the Subaru Select Monitor or general scan tool to data link connector. 3) Turn the ignition switch to ON and Subaru Select Monitor or general scan tool switch to ON. 4) Start the engine. 5) Read the mass air flow sensor voltage using Subaru Select Monitor or general scan tool. NOTE: • Subaru Select Monitor For detailed operation procedure, refer to the "READ CURRENT DATA FOR ENGINE". <Ref. to EN(H4SO U5)(diag)-28, Subaru Select Monitor.> • General scan tool For detailed operation procedure, refer to the general scan tool instruction manual.	Is the measured value within 0.2 to 4.7 V?	Even if malfunction indicator light lights up, the circuit has returned to a normal condition at this time. A temporary poor contact of the connector or harness may be the cause. Repair the harness or connector in the mass air flow sensor. NOTE: In this case, repair the following: • Open or ground short circuit in harness between mass air flow sensor and ECM connector • Poor contact in mass air flow sensor or ECM connector	Go to step **2.**
2	**CHECK INPUT SIGNAL FOR ECM.** Measure the voltage between ECM connector and chassis ground while engine is idling. ***Connector & terminal*** ***(B136) No. 23 (+) — Chassis ground (−):***	Is the measured value less than 0.2 V?	Go to step **4.**	Go to step **3.**
3	**CHECK INPUT SIGNAL FOR ECM (USING SUBARU SELECT MONITOR).** Measure the voltage between ECM connector and chassis ground while engine is idling.	Shake the ECM harness and connector, while monitoring value of Subaru Select Monitor. Does the voltage change?	Repair the poor contact in ECM connector.	Contact your SOA Service Center.
4	**CHECK POWER SUPPLY TO MASS AIR FLOW SENSOR.** 1) Turn the ignition switch to OFF. 2) Disconnect the connector from mass air flow sensor. 3) Turn the ignition switch to ON. 4) Measure the voltage between mass air flow sensor connector and chassis ground. ***Connector & terminal*** ***(B3) No. 1 (+) — Chassis ground (−):***	Is the voltage more than 5 V?	Go to step **5.**	Repair the open circuit between mass air flow sensor and main relay.
5	**CHECK HARNESS BETWEEN ECM AND MASS AIR FLOW SENSOR CONNECTOR.** 1) Turn the ignition switch to OFF. 2) Disconnect the connector from ECM. 3) Measure the resistance of harness between ECM and mass air flow sensor connector. ***Connector & terminal*** ***(B136) No. 23 — (B3) No. 3:*** ***(B136) No. 31 — (B3) No. 2:*** ***(B136) No. 35 — (B3) No. 5:***	Is the measured value less than 1 Ω?	Go to step **6.**	Repair the open circuit between ECM and mass air flow sensor connector.

	Step	Check	Yes	No
6	**CHECK HARNESS BETWEEN ECM AND MASS AIR FLOW SENSOR CONNECTOR** Measure the resistance of harness between ECM and chassis ground. ***Connector & terminal*** ***(B136) No. 23 — Chassis ground:*** ***(B136) No. 31 — Chassis ground:*** ***(B136) No. 35 — Chassis ground:***	Is the measured value more than 1 MΩ?	Go to step **7.**	Repair the ground short circuit between ECM and mass air flow sensor connector.
7	**CHECK POOR CONTACT** Check poor contact in mass air flow sensor connector.	Is there poor contact in mass air flow sensor connector?	Repair the poor contact in mass air flow sensor connector.	Replace the mass air flow and intake air temperature sensor. <Ref. to FU(H4SO U5)-29, Mass Air Flow and Intake Air Temperature Sensor.>

P: DTC P0103 MASS OR VOLUME AIR FLOW CIRCUIT HIGH INPUT

DTC DETECTING CONDITION:

- Detect as soon as malfunction occurs.
- GENERAL DESCRIPTION <Ref. to GD(H4SO U5)-31, DTC P0103 MASS OR VOLUME AIR FLOW CIRCUIT HIGH INPUT, Diagnostic Trouble Code (DTC) Detecting Criteria.>

TROUBLE SYMPTOM:

- Erroneous idling
- Engine stalls.
- Poor driving performance

CAUTION:

After repair or replacement of faulty parts, conduct Clear Memory Mode <Ref. to EN(H4SO U5)(diag)-46, OPERATION, Clear Memory Mode.> and Inspection Mode <Ref. to EN(H4SO U5)(diag)-37, OPERATION, Inspection Mode.>.

WIRING DIAGRAM:

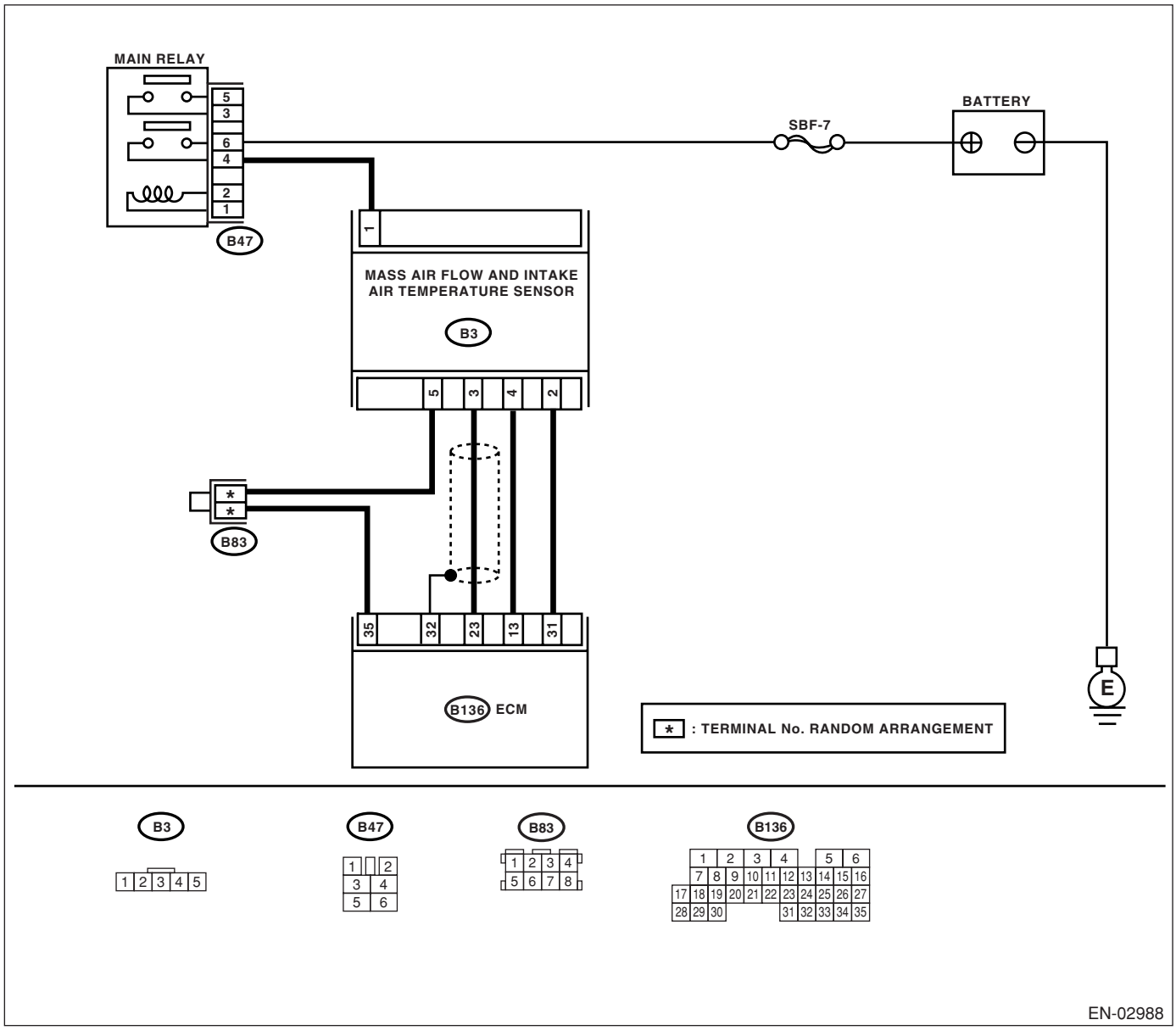

	Step	Check	Yes	No
1	**CONNECT SUBARU SELECT MONITOR OR THE GENERAL SCAN TOOL, AND READ DATA.** 1) Turn the ignition switch to OFF. 2) Connect the Subaru Select Monitor or general scan tool to data link connector. 3) Turn the ignition switch to ON and Subaru Select Monitor or general scan tool switch to ON. 4) Start the engine. 5) Read the mass air flow sensor voltage using Subaru Select Monitor or general scan tool. NOTE: • Subaru Select Monitor For detailed operation procedure, refer to the "READ CURRENT DATA FOR ENGINE". <Ref. to EN(H4SO U5)(diag)-28, Subaru Select Monitor.> • General scan tool For detailed operation procedure, refer to the general scan tool instruction manual.	Is the measured value within 0.2 to 4.7 V?	Even if malfunction indicator light lights up, the circuit has returned to a normal condition at this time.	Go to step **2.**
2	**CHECK HARNESS BETWEEN ECM AND MASS AIR FLOW SENSOR CONNECTOR.** 1) Turn the ignition switch to OFF. 2) Disconnect the connector from mass air flow sensor. 3) Turn the ignition switch to ON. 4) Measure the voltage between mass air flow sensor connector and chassis ground. ***Connector & terminal*** ***(B3) No. 3 (+) — Chassis ground (−):***	Is the measured value more than 5 V?	Repair the battery short of harness between mass air flow sensor connector and ECM connector.	Go to step **3.**
3	**CHECK HARNESS BETWEEN ECM AND MASS AIR FLOW SENSOR CONNECTOR.** 1) Turn the ignition switch to OFF. 2) Disconnect the connector from ECM. 3) Measure the resistance between ECM connector and mass air flow sensor connector. ***Connector & terminal*** ***(B3) No. 2 — (B136) No. 31:***	Is the measured value less than 1 Ω?	Replace the mass air flow sensor. <Ref. to FU(H4SO U5)-29, Mass Air Flow and Intake Air Temperature Sensor.>	Repair the open harness between mass air flow sensor connector and ECM connector.

Q: DTC P0107 MANIFOLD ABSOLUTE PRESSURE/BAROMETRIC PRESSURE CIRCUIT LOW INPUT

DTC DETECTING CONDITION:

- Detect as soon as malfunction occurs.
- GENERAL DESCRIPTION <Ref. to GD(H4SO U5)-33, DTC P0107 MANIFOLD ABSOLUTE PRESSURE/ BAROMETRIC PRESSURE CIRCUIT LOW INPUT, Diagnostic Trouble Code (DTC) Detecting Criteria.>

CAUTION:

After repair or replacement of faulty parts, conduct Clear Memory Mode <Ref. to EN(H4SO U5)(diag)-46, OPERATION, Clear Memory Mode.> and Inspection Mode <Ref. to EN(H4SO U5)(diag)-37, OPERATION, Inspection Mode.>.

WIRING DIAGRAM:

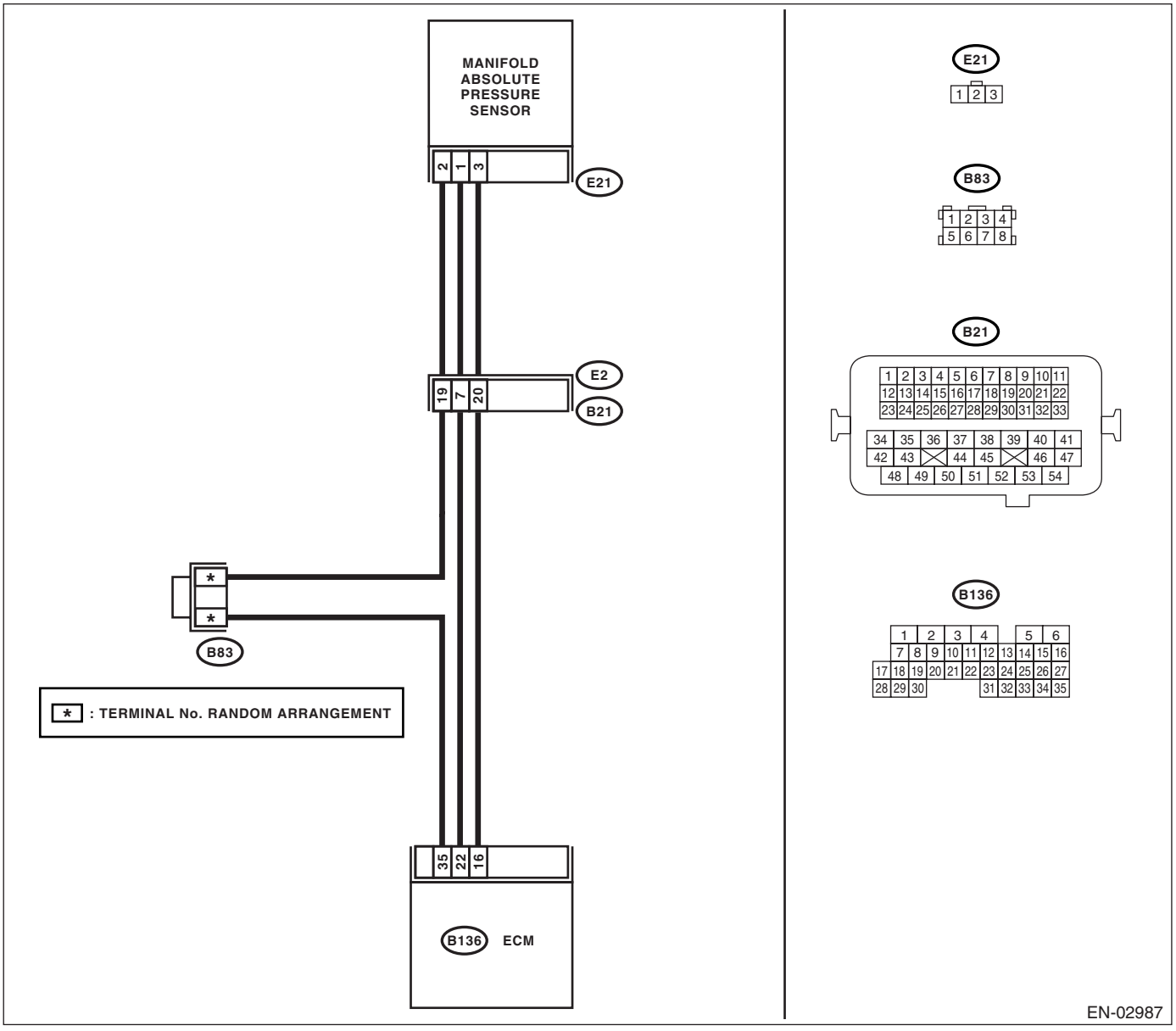

	Step	Check	Yes	No
1	**CHECK CURRENT DATA.** 1) Start the engine. 2) Read the data of intake manifold absolute pressure signal using Subaru Select Monitor or general scan tool. NOTE: • Subaru Select Monitor For detailed operation procedure, refer to the "READ CURRENT DATA FOR ENGINE". <Ref. to EN(H4SO U5)(diag)-28, Subaru Select Monitor.> • General scan tool For detailed operation procedure, refer to the general scan tool instruction manual.	Is the measured value less than 13.3 kPa (100 mmHg, 3.94 inHg)?	Go to step **3.**	Go to step **2.**
2	**CHECK POOR CONTACT.** Check poor contact in ECM and manifold absolute pressure sensor connector.	Is there poor contact in ECM or manifold absolute pressure sensor connector?	Repair poor contact in ECM or manifold absolute pressure sensor connector.	Even if malfunction indicator light lights up, the circuit has returned to a normal condition at this time.
3	**CHECK OUTPUT SIGNAL FOR ECM.** Measure the voltage between ECM connector and chassis ground. ***Connector & terminal*** ***(B136) No. 16 (+) — Chassis ground (–):***	Is the voltage more than 4.5 V?	Go to step **5.**	Go to step **4.**
4	**CHECK OUTPUT SIGNAL FOR ECM.** Measure the voltage between ECM connector and chassis ground. ***Connector & terminal*** ***(B136) No. 16 (+) — Chassis ground (–):***	Does the voltage change by shaking the ECM harness and connector?	Repair poor contact in ECM connector.	Contact SOA Service Center.
5	**CHECK INPUT SIGNAL FOR ECM.** Measure the voltage between ECM and chassis ground. ***Connector & terminal*** ***(B136) No. 22 (+) — Chassis ground (–):***	Is the voltage less than 0.2 V?	Go to step **7.**	Go to step **6.**
6	**CHECK INPUT SIGNAL FOR ECM. (USING SUBARU SELECT MONITOR)** Read the data of atmospheric absolute pressure signal using Subaru Select Monitor. NOTE: • Subaru Select Monitor For detailed operation procedure, refer to the "READ CURRENT DATA FOR ENGINE". <Ref. to EN(H4SO U5)(diag)-28, Subaru Select Monitor.>	Is the measured value more than 13.3 kPa (100 mmHg, 3.94 inHg) by shaking the harness and connector of ECM?	Repair poor contact in ECM connector.	Go to step **7.**
7	**CHECK HARNESS BETWEEN MANIFOLD ABSOLUTE PRESSURE SENSOR AND ECM CONNECTOR.** 1) Turn the ignition switch to OFF. 2) Disconnect the connector from manifold absolute pressure sensor. 3) Turn the ignition switch to ON. 4) Measure the voltage between manifold absolute pressure sensor connector and engine ground. ***Connector & terminal*** ***(E21) No. 3 (+) — Engine ground (–):***	Is the voltage more than 4.5 V?	Go to step **8.**	Repair open circuit in harness between ECM and manifold absolute pressure sensor connector.

	Step	Check	Yes	No
8	**CHECK HARNESS BETWEEN MANIFOLD ABSOLUTE PRESSURE SENSOR AND ECM CONNECTOR.** 1) Turn the ignition switch to OFF. 2) Disconnect the connector from ECM. 3) Measure the resistance of harness between ECM and manifold absolute pressure sensor connector. ***Connector & terminal*** ***(B136) No. 35 — (E21) No. 2:***	Is the resistance less than 1 Ω?	Go to step **9.**	Repair open circuit in harness between ECM and manifold absolute pressure sensor connector.
9	**CHECK POOR CONTACT.** Check poor contact in manifold absolute pressure sensor connector.	Is there poor contact in manifold absolute pressure sensor connector?	Repair poor contact in manifold absolute pressure sensor connector.	Replace the manifold absolute pressure sensor. <Ref. to FU(H4SO U5)-28, Manifold Absolute Pressure Sensor.>

R: DTC P0108 MANIFOLD ABSOLUTE PRESSURE/BAROMETRIC PRESSURE CIRCUIT HIGH INPUT

DTC DETECTING CONDITION:

- Detect as soon as malfunction occurs.
- GENERAL DESCRIPTION <Ref. to GD(H4SO U5)-35, DTC P0108 MANIFOLD ABSOLUTE PRESSURE/ BAROMETRIC PRESSURE CIRCUIT HIGH INPUT, Diagnostic Trouble Code (DTC) Detecting Criteria.>

CAUTION:

After repair or replacement of faulty parts, conduct Clear Memory Mode <Ref. to EN(H4SO U5)(diag)-46, OPERATION, Clear Memory Mode.> and Inspection Mode <Ref. to EN(H4SO U5)(diag)-37, OPERATION, Inspection Mode.>.

WIRING DIAGRAM:

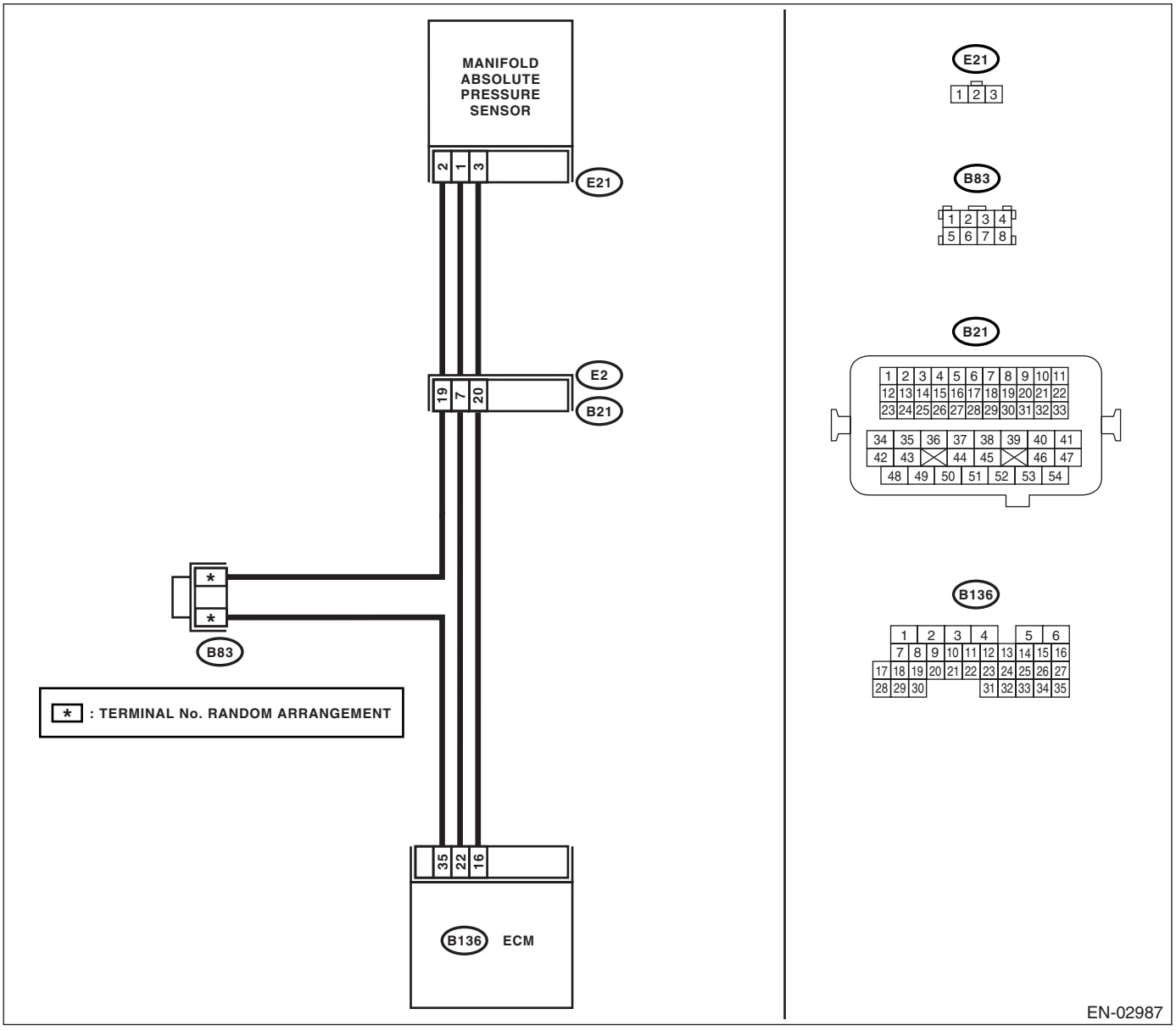

	Step	Check	Yes	No
1	**CHECK CURRENT DATA.** 1) Start the engine. 2) Read the data of intake manifold absolute pressure signal using Subaru Select Monitor or general scan tool. NOTE: • Subaru Select Monitor For detailed operation procedure, refer to the "READ CURRENT DATA FOR ENGINE". <Ref. to EN(H4SO U5)(diag)-28, Subaru Select Monitor.> • General scan tool For detailed operation procedure, refer to the general scan tool instruction manual.	Is the measured value more than 119.5 kPa (896.5 mmHg, 35.29 inHg)?	Go to step **10.**	Go to step **2.**
2	**CHECK OUTPUT SIGNAL FOR ECM.** Measure the voltage between ECM connector and chassis ground. ***Connector & terminal*** ***(B136) No. 16 (+) — Chassis ground (–):***	Is the voltage more than 4.5 V?	Go to step **4.**	Go to step **3.**
3	**CHECK OUTPUT SIGNAL FOR ECM.** Measure the voltage between ECM connector and chassis ground. ***Connector & terminal*** ***(B136) No. 16 (+) — Chassis ground (–):***	Does the voltage change by shaking the ECM harness and connector?	Repair poor contact in ECM connector.	Contact SOA Service Center.
4	**CHECK INPUT SIGNAL FOR ECM.** Measure the voltage between ECM connector and chassis ground. ***Connector & terminal*** ***(B136) No. 22 (+) — Chassis ground (–):***	Is the voltage less than 0.2 V?	Go to step **6.**	Go to step **5.**
5	**CHECK INPUT SIGNAL FOR ECM. (USING SUBARU SELECT MONITOR)** Read the data of atmospheric absolute pressure signal using Subaru Select Monitor. NOTE: • Subaru Select Monitor For detailed operation procedure, refer to the "READ CURRENT DATA FOR ENGINE". <Ref. to EN(H4SO U5)(diag)-28, Subaru Select Monitor.>	Is the measured value more than 13.3 kPa (100 mmHg, 3.94 inHg) by shaking the harness and connector of ECM?	Repair poor contact in ECM connector.	Go to step **6.**
6	**CHECK HARNESS BETWEEN MANIFOLD ABSOLUTE PRESSURE SENSOR AND ECM CONNECTOR.** 1) Turn the ignition switch to OFF. 2) Disconnect the connector from manifold absolute pressure sensor. 3) Turn the ignition switch to ON. 4) Measure the voltage between manifold absolute pressure sensor connector and engine ground. ***Connector & terminal*** ***(E21) No. 3 (+) — Engine ground (–):***	Is the voltage more than 4.5 V?	Go to step **7.**	Repair open circuit in harness between ECM and manifold absolute pressure sensor connector.

	Step	Check	Yes	No
7	**CHECK HARNESS BETWEEN MANIFOLD ABSOLUTE PRESSURE SENSOR AND ECM CONNECTOR.** 1) Turn the ignition switch to OFF. 2) Disconnect the connector from ECM. 3) Measure the resistance of harness between ECM and manifold absolute pressure sensor connector. ***Connector & terminal*** ***(B136) No. 22 — (E21) No. 1:***	Is the resistance less than 1 Ω?	Go to step **8.**	Repair open circuit in harness between ECM and manifold absolute pressure sensor connector.
8	**CHECK HARNESS BETWEEN MANIFOLD ABSOLUTE PRESSURE SENSOR AND ECM CONNECTOR.** Measure the resistance of harness between ECM and manifold absolute pressure sensor connector. ***Connector & terminal*** ***(B136) No. 35 — (E21) No. 2:***	Is the resistance less than 1 Ω?	Go to step **9.**	Repair open circuit in harness between ECM and manifold absolute pressure sensor connector.
9	**CHECK POOR CONTACT.** Check poor contact in manifold absolute pressure sensor connector.	Is there poor contact in manifold absolute pressure sensor connector?	Repair poor contact in manifold absolute pressure sensor connector.	Replace the manifold absolute pressure sensor. <Ref. to FU(H4SO U5)-28, Manifold Absolute Pressure Sensor.>
10	**CHECK HARNESS BETWEEN MANIFOLD ABSOLUTE PRESSURE SENSOR AND ECM CONNECTOR.** 1) Turn the ignition switch to OFF and Subaru Select Monitor or general scan tool switch to OFF. 2) Disconnect the connector from manifold absolute pressure sensor. 3) Turn the ignition switch to ON and Subaru Select Monitor or general scan tool switch to ON. 4) Read the data of intake manifold absolute pressure signal using Subaru Select Monitor or general scan tool. NOTE: • Subaru Select Monitor For detailed operation procedure, refer to the “READ CURRENT DATA FOR ENGINE”. <Ref. to EN(H4SO U5)(diag)-28, Subaru Select Monitor.> • General scan tool For detailed operation procedure, refer to the general scan tool instruction manual.	Is the measured value more than 119.5 kPa (896.5 mmHg, 35.29 inHg)?	Repair battery short circuit in harness between ECM and manifold absolute pressure sensor connector.	Replace the manifold absolute pressure sensor. <Ref. to FU(H4SO U5)-28, Manifold Absolute Pressure Sensor.>

S: DTC P0111 INTAKE AIR TEMPERATURE CIRCUIT RANGE/PERFORMANCE

DTC DETECTING CONDITION:

- Two consecutive driving cycles with fault
- GENERAL DESCRIPTION <Ref. to GD(H4SO U5)-37, DTC P0111 INTAKE AIR TEMPERATURE CIRCUIT RANGE/PERFORMANCE, Diagnostic Trouble Code (DTC) Detecting Criteria.>

TROUBLE SYMPTOM:

- Erroneous idling
- Poor driving performance

CAUTION:

After repair or replacement of faulty parts, conduct Clear Memory Mode <Ref. to EN(H4SO U5)(diag)-46, OPERATION, Clear Memory Mode.> and Inspection Mode <Ref. to EN(H4SO U5)(diag)-37, OPERATION, Inspection Mode.>.

WIRING DIAGRAM:

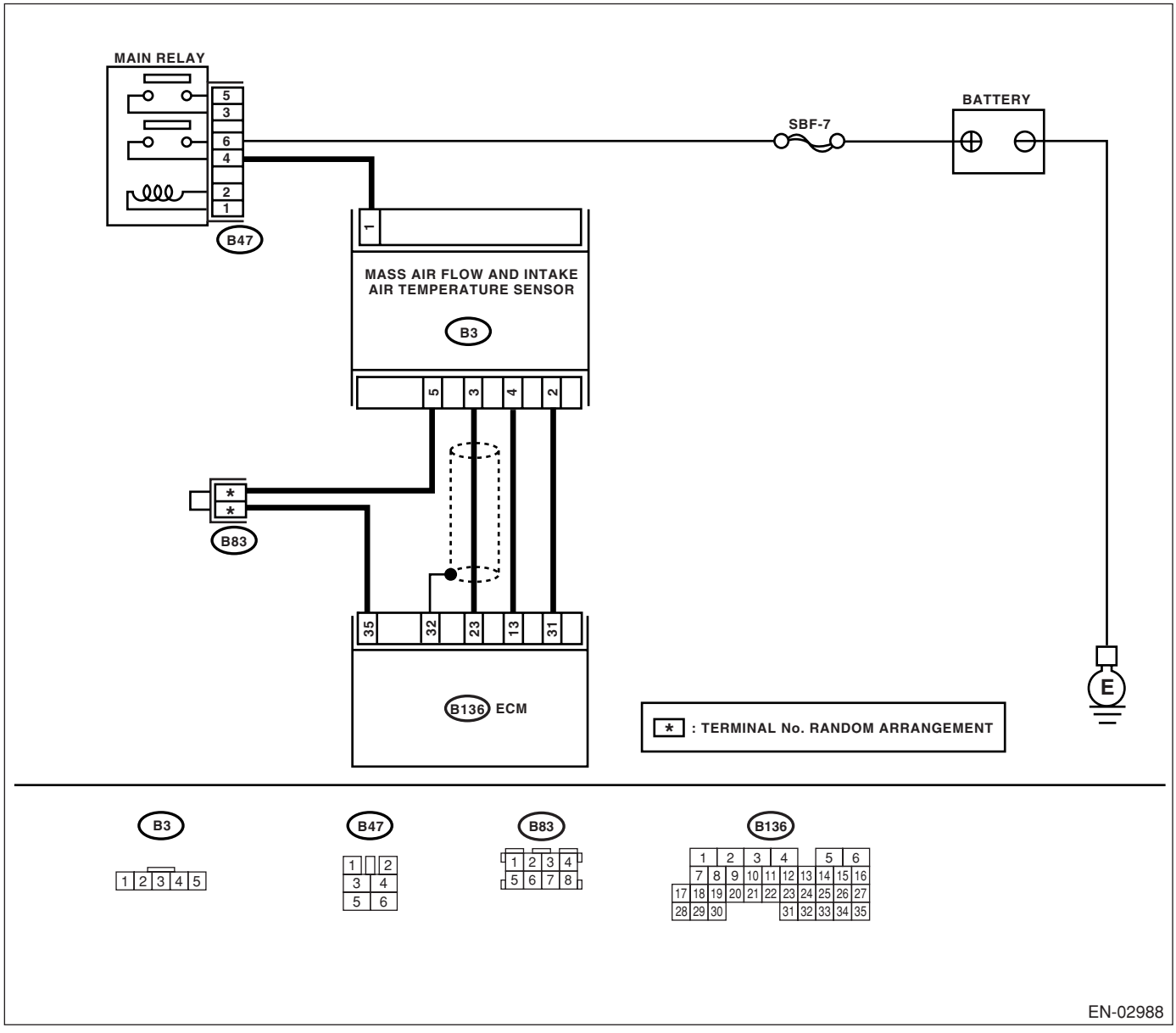

Step		Check	Yes	No
1	**CHECK FOR ANY OTHER DTC ON DISPLAY.**	Is any other DTC displayed?	Inspect DTC using "List of Diagnostic Trouble Code (DTC)". <Ref. to EN(H4SO U5)(diag)-73, List of Diagnostic Trouble Code (DTC).> NOTE: In this case, it is not necessary to inspect DTC P0111.	Replace the intake air temperature sensor. <Ref. to FU(H4SO U5)-29, Mass Air Flow and Intake Air Temperature Sensor.>

T: DTC P0112 INTAKE AIR TEMPERATURE CIRCUIT LOW INPUT

DTC DETECTING CONDITION:

- Detect as soon as malfunction occurs.
- GENERAL DESCRIPTION <Ref. to GD(H4SO U5)-39, DTC P0112 INTAKE AIR TEMPERATURE CIRCUIT LOW INPUT, Diagnostic Trouble Code (DTC) Detecting Criteria.>

TROUBLE SYMPTOM:

- Erroneous idling
- Poor driving performance

CAUTION:

After repair or replacement of faulty parts, conduct Clear Memory Mode <Ref. to EN(H4SO U5)(diag)-46, OPERATION, Clear Memory Mode.> and Inspection Mode <Ref. to EN(H4SO U5)(diag)-37, OPERATION, Inspection Mode.>.

WIRING DIAGRAM:

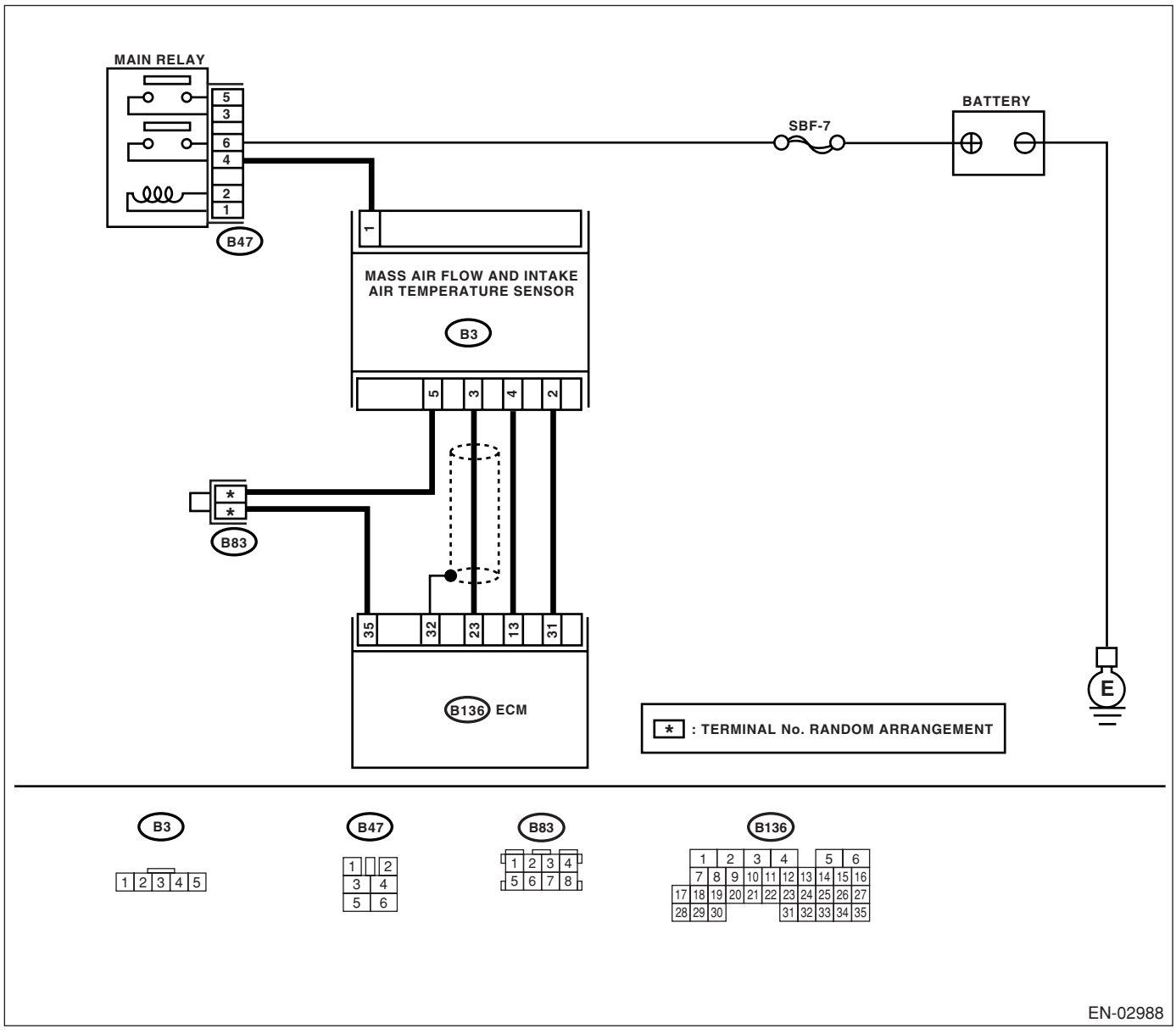

	Step	Check	Yes	No
1	**CHECK CURRENT DATA.** 1) Start the engine. 2) Read the data of intake air temperature sensor signal using Subaru Select Monitor or general scan tool. NOTE: • Subaru Select Monitor For detailed operation procedure, refer to the "READ CURRENT DATA FOR ENGINE". <Ref. to EN(H4SO U5)(diag)-28, Subaru Select Monitor.> • General scan tool For detailed operation procedure, refer to the general scan tool instruction manual.	Is the measured value more than 120°C (248°F)?	Go to step **2.**	Repair poor contact. NOTE: In this case, repair the following: • Poor contact in intake air temperature sensor • Poor contact in ECM • Poor contact in coupling connector • Poor contact in joint connector
2	**CHECK HARNESS BETWEEN INTAKE AIR TEMPERATURE SENSOR AND ECM CONNECTOR.** 1) Turn the ignition switch to OFF. 2) Disconnect the connector from intake air temperature sensor. 3) Turn the ignition switch to ON. 4) Read the data of intake air temperature sensor signal using Subaru Select Monitor or general scan tool. NOTE: • Subaru Select Monitor For detailed operation procedure, refer to the "READ CURRENT DATA FOR ENGINE". <Ref. to EN(H4SO U5)(diag)-28, Subaru Select Monitor.> • General scan tool For detailed operation procedure, refer to the general scan tool instruction manual.	Is the measured value less than −40°C (−40°F)?	Replace the intake air temperature sensor. <Ref. to FU(H4SO U5)-29, Mass Air Flow and Intake Air Temperature Sensor.>	Repair ground short circuit in harness between intake air temperature sensor and ECM connector.

U: DTC P0113 INTAKE AIR TEMPERATURE CIRCUIT HIGH INPUT

DTC DETECTING CONDITION:

- Detect as soon as malfunction occurs.
- GENERAL DESCRIPTION <Ref. to GD(H4SO U5)-41, DTC P0113 INTAKE AIR TEMPERATURE CIRCUIT HIGH INPUT, Diagnostic Trouble Code (DTC) Detecting Criteria.>

TROUBLE SYMPTOM:

- Erroneous idling
- Poor driving performance

CAUTION:

After repair or replacement of faulty parts, conduct Clear Memory Mode <Ref. to EN(H4SO U5)(diag)-46, OPERATION, Clear Memory Mode.> and Inspection Mode <Ref. to EN(H4SO U5)(diag)-37, OPERATION, Inspection Mode.>.

WIRING DIAGRAM:

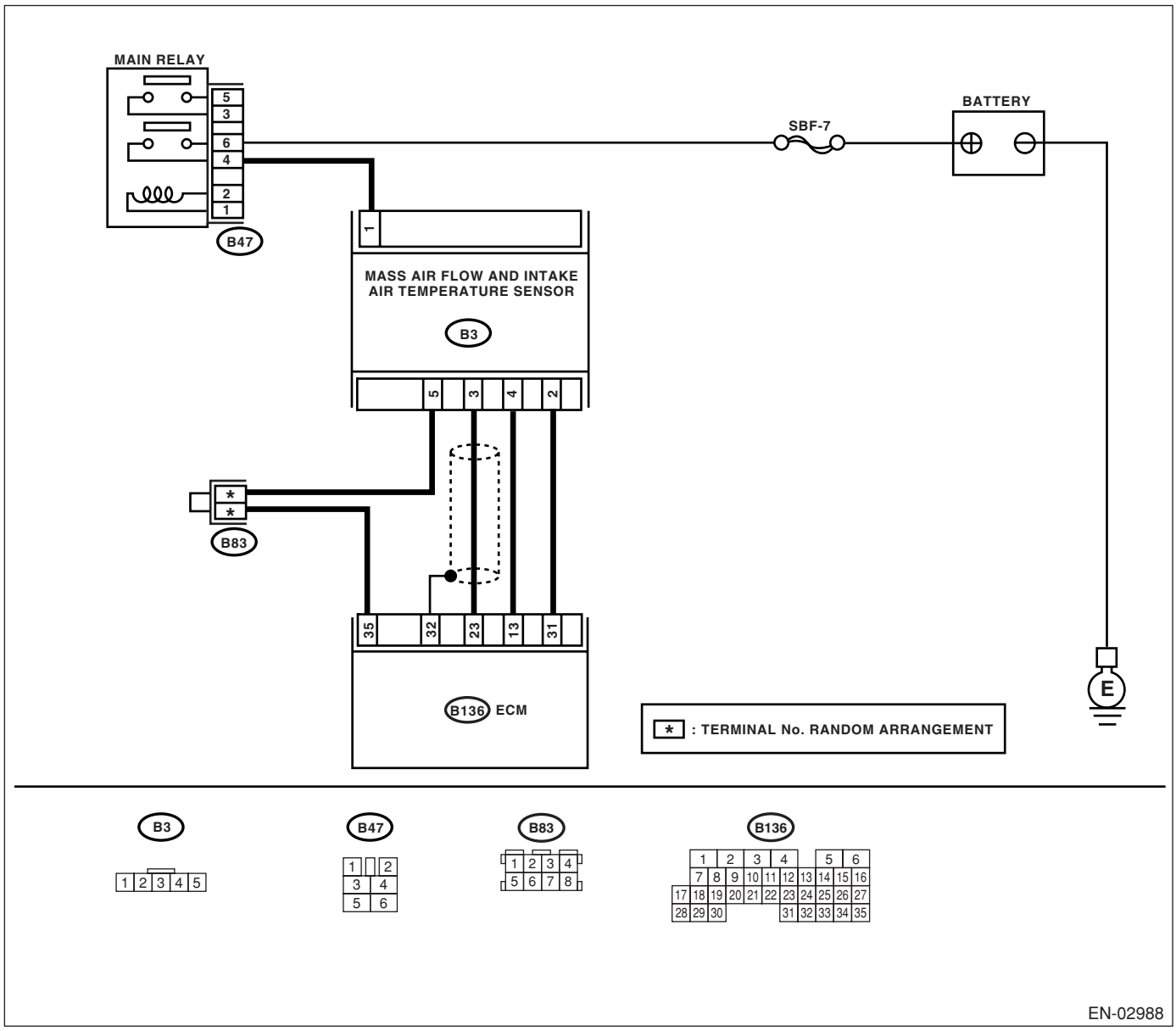

	Step	Check	Yes	No
1	**CHECK CURRENT DATA.** 1) Start the engine. 2) Read the data of intake air temperature sensor signal using Subaru Select Monitor or general scan tool. NOTE: • Subaru Select Monitor For detailed operation procedure, refer to the "READ CURRENT DATA FOR ENGINE". <Ref. to EN(H4SO U5)(diag)-28, Subaru Select Monitor.> • General scan tool For detailed operation procedure, refer to the general scan tool instruction manual.	Is the measured value less than −40°C (−40°F)?	Go to step **2.**	Repair poor contact. NOTE: In this case, repair the following: • Poor contact in intake air temperature sensor • Poor contact in ECM • Poor contact in coupling connector • Poor contact in joint connector
2	**CHECK HARNESS BETWEEN INTAKE AIR TEMPERATURE SENSOR AND ECM CONNECTOR.** 1) Turn the ignition switch to OFF. 2) Disconnect the connector from intake air temperature sensor. 3) Measure the voltage between intake air temperature and manifold absolute pressure sensor connector and engine ground. ***Connector & terminal*** ***(B3) No. 4 (+) — Engine ground (−):***	Is the measured value more than 10 V?	Repair battery short circuit in harness between intake air temperature sensor and ECM connector.	Go to step **3.**
3	**CHECK HARNESS BETWEEN INTAKE AIR TEMPERATURE SENSOR AND ECM CONNECTOR.** 1) Turn the ignition switch to ON. 2) Measure the voltage between intake air temperature sensor connector and engine ground. ***Connector & terminal*** ***(B3) No. 4 (+) — Engine ground (−):***	Is the measured value more than 10 V?	Repair battery short circuit in harness between intake air temperature sensor and ECM connector.	Go to step **4.**
4	**CHECK HARNESS BETWEEN INTAKE AIR TEMPERATURE SENSOR AND ECM CONNECTOR.** Measure the voltage between intake air temperature sensor connector and engine ground. ***Connector & terminal*** ***(B3) No. 4 (+) — Engine ground (−):***	Is the measured value more than 3 V?	Go to step **5.**	Repair harness and connector. NOTE: In this case, repair the following: • Open circuit in harness between intake air temperature sensor and ECM connector • Poor contact in intake air temperature sensor • Poor contact in ECM • Poor contact in coupling connector • Poor contact in joint connector

	Step	Check	Yes	No
5	**CHECK HARNESS BETWEEN INTAKE AIR TEMPERATURE SENSOR AND ECM CONNECTOR.** 1) Turn the ignition switch to OFF. 2) Measure the resistance of harness between intake air temperature sensor connector and engine ground. ***Connector & terminal*** ***(B3) No. 5 — Engine ground:***	Is the measured value less than 5 Ω?	Replace the intake air temperature sensor. <Ref. to FU(H4SO U5)-29, Mass Air Flow and Intake Air Temperature Sensor.>	Repair harness and connector. NOTE: In this case, repair the following: • Open circuit in harness between intake air temperature sensor and ECM connector • Poor contact in intake air temperature sensor • Poor contact in ECM • Poor contact in coupling connector • Poor contact in joint connector

V: DTC P0117 ENGINE COOLANT TEMPERATURE CIRCUIT LOW INPUT

DTC DETECTING CONDITION:

- Detect as soon as malfunction occurs.
- GENERAL DESCRIPTION <Ref. to GD(H4SO U5)-43, DTC P0117 ENGINE COOLANT TEMPERATURE CIRCUIT LOW INPUT, Diagnostic Trouble Code (DTC) Detecting Criteria.>

TROUBLE SYMPTOM:

- Hard to start
- Erroneous idling
- Poor driving performance

CAUTION:

After repair or replacement of faulty parts, conduct Clear Memory Mode <Ref. to EN(H4SO U5)(diag)-46, OPERATION, Clear Memory Mode.> and Inspection Mode <Ref. to EN(H4SO U5)(diag)-37, OPERATION, Inspection Mode.>.

WIRING DIAGRAM:

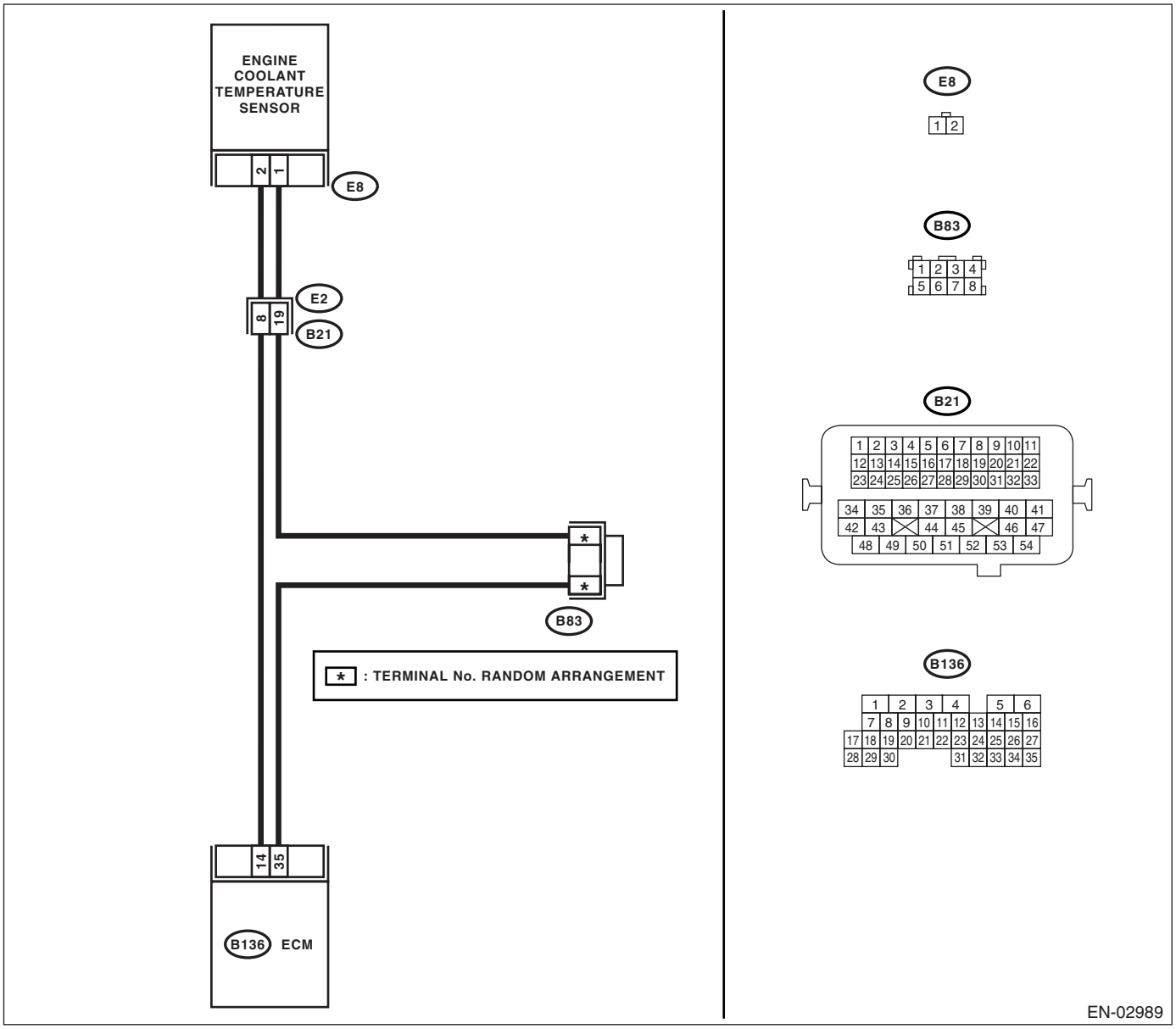

	Step	Check	Yes	No
1	**CHECK CURRENT DATA.** 1) Start the engine. 2) Read the data of engine coolant temperature sensor signal using Subaru Select Monitor or general scan tool. NOTE: • Subaru Select Monitor For detailed operation procedure, refer to the "READ CURRENT DATA FOR ENGINE". <Ref. to EN(H4SO U5)(diag)-28, Subaru Select Monitor.> • General scan tool For detailed operation procedure, refer to the general scan tool instruction manual.	Is the engine coolant temperature more than 150°C (302°F)?	Go to step **2.**	Repair poor contact. NOTE: In this case, repair the following: • Poor contact in engine coolant temperature sensor • Poor contact in ECM • Poor contact in coupling connector • Poor contact in joint connector
2	**CHECK HARNESS BETWEEN ENGINE COOLANT TEMPERATURE SENSOR AND ECM CONNECTOR.** 1) Turn the ignition switch to OFF. 2) Disconnect the connector from engine coolant temperature sensor. 3) Turn the ignition switch to ON. 4) Read the data of engine coolant temperature sensor signal using Subaru Select Monitor or general scan tool. NOTE: • Subaru Select Monitor For detailed operation procedure, refer to the "READ CURRENT DATA FOR ENGINE". <Ref. to EN(H4SO U5)(diag)-28, Subaru Select Monitor.> • General scan tool For detailed operation procedure, refer to the general scan tool instruction manual.	Is the engine coolant temperature less than −40°C (−40°F)?	Replace the engine coolant temperature sensor. <Ref. to FU(H4SO U5)-23, Engine Coolant Temperature Sensor.>	Repair ground short circuit in harness between engine coolant temperature sensor and ECM connector.

W: DTC P0118 ENGINE COOLANT TEMPERATURE CIRCUIT HIGH INPUT

DTC DETECTING CONDITION:

- Detect as soon as malfunction occurs.
- GENERAL DESCRIPTION <Ref. to GD(H4SO U5)-45, DTC P0118 ENGINE COOLANT TEMPERATURE CIRCUIT HIGH INPUT, Diagnostic Trouble Code (DTC) Detecting Criteria.>

TROUBLE SYMPTOM:

- Hard to start
- Erroneous idling
- Poor driving performance

CAUTION:

After repair or replacement of faulty parts, conduct Clear Memory Mode <Ref. to EN(H4SO U5)(diag)-46, OPERATION, Clear Memory Mode.> and Inspection Mode <Ref. to EN(H4SO U5)(diag)-37, OPERATION, Inspection Mode.>.

WIRING DIAGRAM:

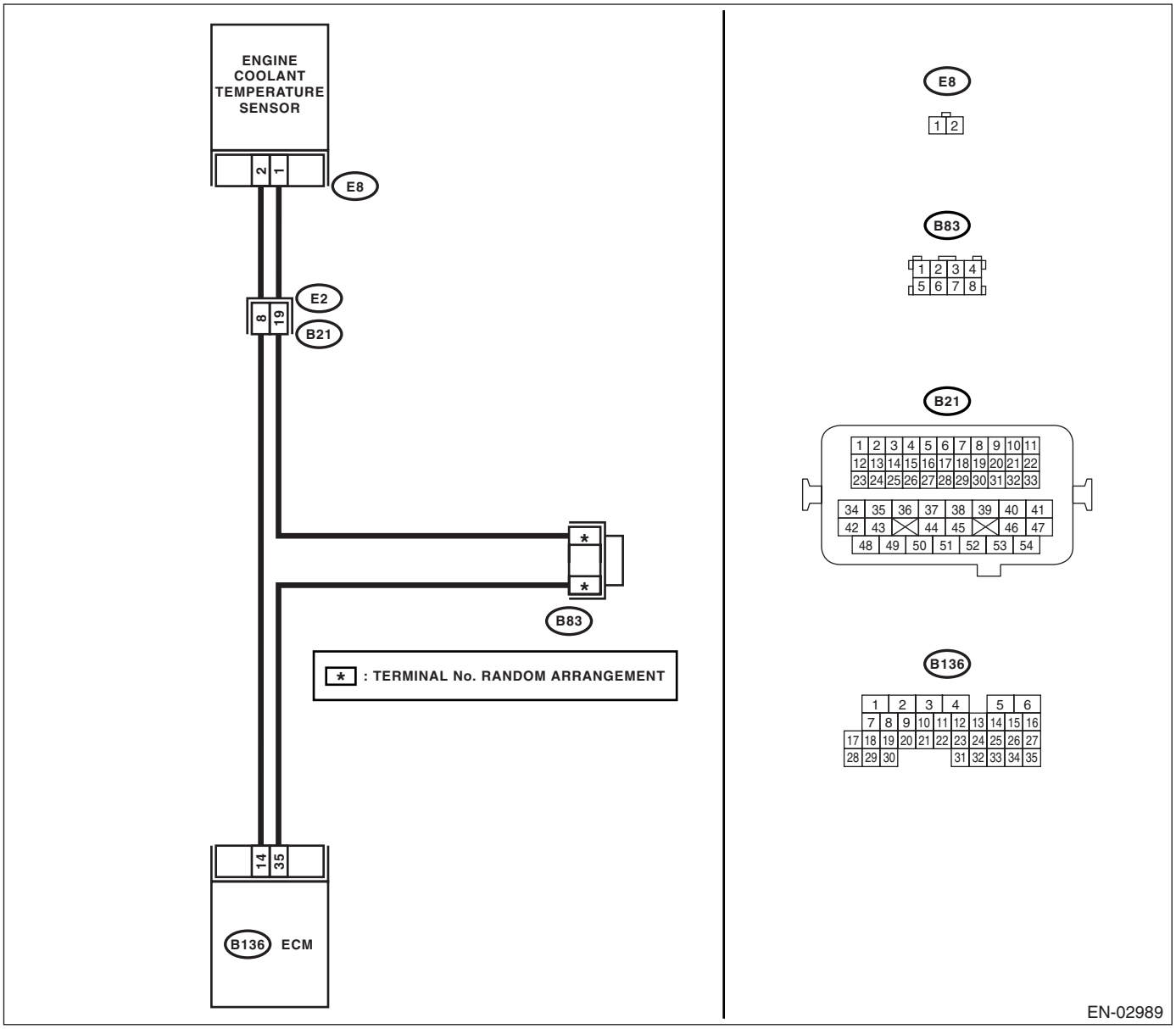

	Step	Check	Yes	No
1	**CHECK CURRENT DATA.** 1) Start the engine. 2) Read the data of engine coolant temperature sensor signal using Subaru Select Monitor or general scan tool. NOTE: • Subaru Select Monitor For detailed operation procedure, refer to the "READ CURRENT DATA FOR ENGINE". <Ref. to EN(H4SO U5)(diag)-28, Subaru Select Monitor.> • General scan tool For detailed operation procedure, refer to the general scan tool instruction manual.	Is the engine coolant temperature less than −40°C (−40°F)?	Go to step **2.**	Repair poor contact. NOTE: In this case, repair the following: • Poor contact in engine coolant temperature sensor • Poor contact in ECM • Poor contact in coupling connector • Poor contact in joint connector
2	**CHECK HARNESS BETWEEN ENGINE COOLANT TEMPERATURE SENSOR AND ECM CONNECTOR.** 1) Turn the ignition switch to OFF. 2) Disconnect the connector from engine coolant temperature sensor. 3) Measure the voltage between engine coolant temperature sensor connector and engine ground. ***Connector & terminal*** ***(E8) No. 2 (+) — Engine ground (−):***	Is the voltage more than 10 V?	Repair battery short circuit in harness between ECM and engine coolant temperature sensor connector.	Go to step **3.**
3	**CHECK HARNESS BETWEEN ENGINE COOLANT TEMPERATURE SENSOR AND ECM CONNECTOR.** 1) Turn the ignition switch to ON. 2) Measure the voltage between engine coolant temperature sensor connector and engine ground. ***Connector & terminal*** ***(E8) No. 2 (+) — Engine ground (−):***	Is the voltage more than 10 V?	Repair battery short circuit in harness between ECM and engine coolant temperature sensor connector.	Go to step **4.**
4	**CHECK HARNESS BETWEEN ENGINE COOLANT TEMPERATURE SENSOR AND ECM CONNECTOR.** Measure the voltage between engine coolant temperature sensor connector and engine ground. ***Connector & terminal*** ***(E8) No. 2 (+) — Engine ground (−):***	Is the voltage more than 4 V?	Go to step **5.**	Repair harness and connector. NOTE: In this case, repair the following: • Open circuit in harness between ECM and engine coolant temperature sensor connector • Poor contact in engine coolant temperature sensor connector • Poor contact in ECM connector • Poor contact in coupling connector • Poor contact in joint connector

	Step	Check	Yes	No
5	**CHECK HARNESS BETWEEN ENGINE COOLANT TEMPERATURE SENSOR AND ECM CONNECTOR.** 1) Turn the ignition switch to OFF. 2) Measure the resistance of harness between engine coolant temperature sensor connector and engine ground. ***Connector & terminal*** ***(E8) No. 1 — Engine ground:***	Is the resistance less than 5 Ω?	Replace the engine coolant temperature sensor. <Ref. to FU(H4SO U5)-23, Engine Coolant Temperature Sensor.>	Repair harness and connector. NOTE: In this case, repair the following: • Open circuit in harness between ECM and engine coolant temperature sensor connector • Poor contact in engine coolant temperature sensor connector • Poor contact in ECM connector • Poor contact in coupling connector • Poor contact in joint connector

X: DTC P0122 THROTTLE/PEDAL POSITION SENSOR/SWITCH “A” CIRCUIT LOW INPUT

DTC DETECTING CONDITION:

- Detect as soon as malfunction occurs.
- GENERAL DESCRIPTION <Ref. to GD(H4SO U5)-47, DTC P0122 THROTTLE/PEDAL POSITION SENSOR/SWITCH “A” CIRCUIT LOW INPUT, Diagnostic Trouble Code (DTC) Detecting Criteria.>

TROUBLE SYMPTOM:

- Erroneous idling
- Engine stalls.
- Poor driving performance

CAUTION:

After repair or replacement of faulty parts, conduct Clear Memory Mode <Ref. to EN(H4SO U5)(diag)-46, OPERATION, Clear Memory Mode.> and Inspection Mode <Ref. to EN(H4SO U5)(diag)-37, OPERATION, Inspection Mode.>.

WIRING DIAGRAM:

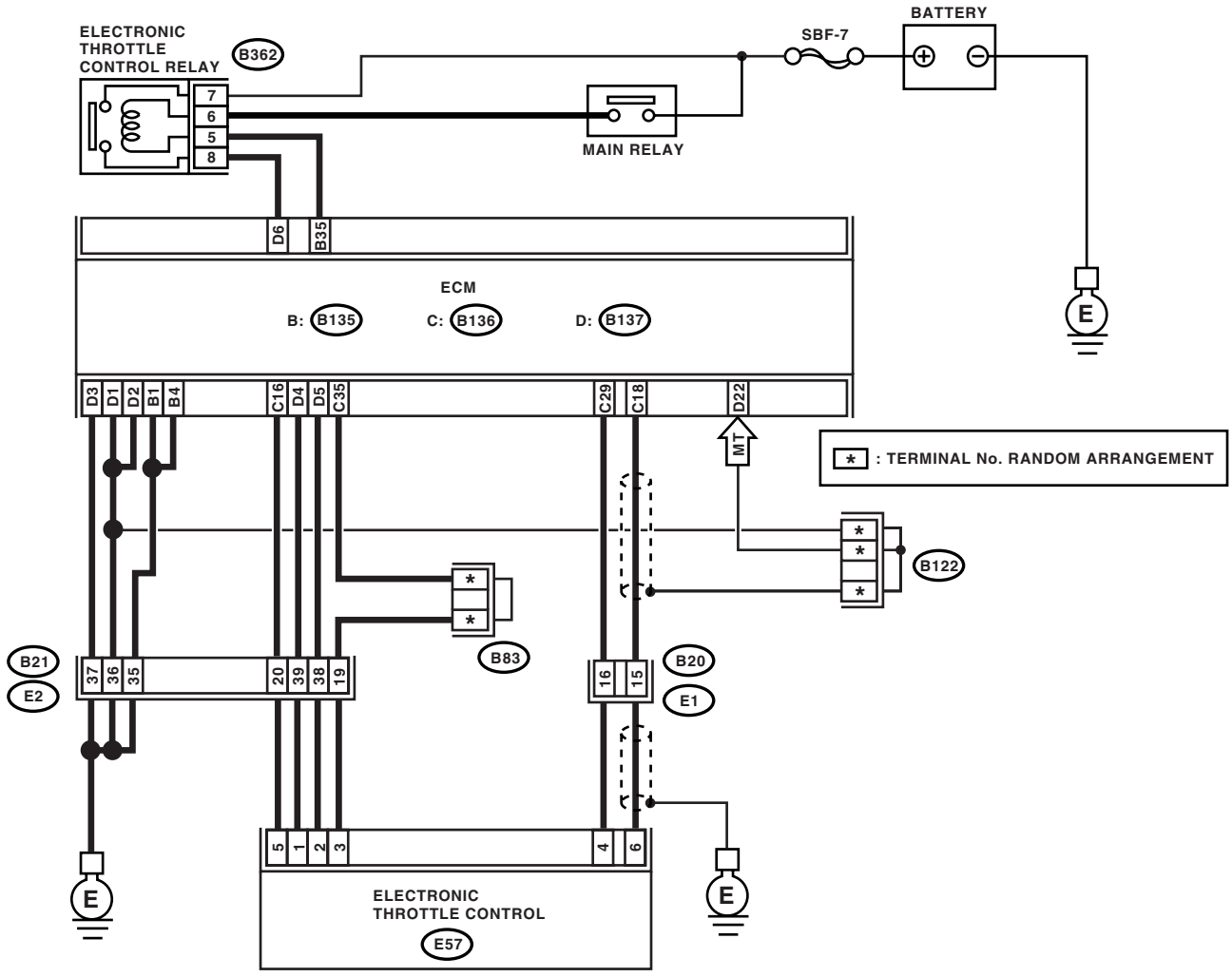

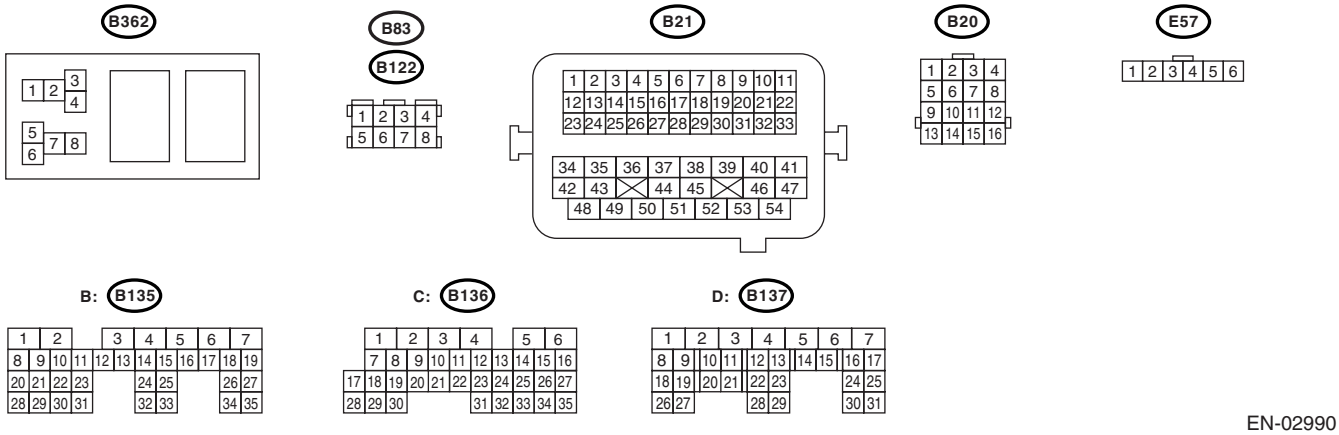

EN-02990

	Step	Check	Yes	No
1	**CHECK SENSOR OUTPUT.** 1) Turn the ignition switch to ON. 2) Read the data of main throttle sensor signal using Subaru Select Monitor. NOTE: Subaru Select Monitor For detailed operation procedure, refer to "READ CURRENT DATA FOR ENGINE". <Ref. to EN(H4SO U5)(diag)-28, Subaru Select Monitor.>	Is the voltage more than 0.4 V?	Go to step **2.**	Go to step **3.**
2	**CHECK POOR CONTACT.** Check poor contact in connector between ECM and electronic throttle control.	Is there poor contact in connector between ECM and electronic throttle control?	Repair the poor contact.	Temporary poor contact occurred, but it is normal at present.
3	**CHECK HARNESS BETWEEN ECM AND ELECTRONIC THROTTLE CONTROL.** 1) Turn the ignition switch to OFF. 2) Disconnect the connector from ECM. 3) Disconnect the connectors from electronic throttle control. 4) Measure the resistance between ECM connector and electronic throttle control connector. ***Connector & terminal*** ***(B136) No. 18 — (E57) No. 6:*** ***(B136) No. 16 — (E57) No. 5:***	Is the resistance less than 1 Ω?	Go to step **4.**	Repair the open circuit of harness connector.
4	**CHECK HARNESS BETWEEN ECM AND ELECTRONIC THROTTLE CONTROL.** Measure the resistance between ECM connector and chassis ground. ***Connector & terminal*** ***(B136) No. 18 — Chassis ground:*** ***(B136) No. 16 — Chassis ground:***	Is the resistance more than 1 MΩ?	Go to step **5.**	Repair the chassis short circuit of harness.
5	**CHECK POWER SUPPLY OF ELECTRONIC THROTTLE CONTROL.** 1) Connect the ECM connector. 2) Turn the ignition switch to ON. 3) Measure the voltage between electronic throttle control connector and engine ground. ***Connector & terminal*** ***(E57) No. 5 (+) — Engine ground (−):***	Is the voltage 4.5 — 5.5 V?	Go to step **6.**	Repair the poor contact in ECM connector. Replace the ECM if defective. <Ref. to FU(H4SO U5)-44, Engine Control Module (ECM).>
6	**CHECK SHORT CIRCUIT INSIDE THE ECM.** 1) Turn the ignition switch to OFF. 2) Measure the resistance between electronic throttle control connector and engine ground. ***Connector & terminal*** ***(E57) No. 6 — Engine ground:***	Is the resistance more than 10 Ω?	Repair poor contact of electronic throttle control connector. Replace the electronic throttle control if defective.	Repair the poor contact in ECM connector. Replace the ECM if defective. <Ref. to FU(H4SO U5)-44, Engine Control Module (ECM).>

Y: DTC P0123 THROTTLE/PEDAL POSITION SENSOR/SWITCH “A” CIRCUIT HIGH INPUT

DTC DETECTING CONDITION:

- Detect as soon as malfunction occurs.
- GENERAL DESCRIPTION <Ref. to GD(H4SO U5)-49, DTC P0123 THROTTLE/PEDAL POSITION SENSOR/SWITCH “A” CIRCUIT HIGH INPUT, Diagnostic Trouble Code (DTC) Detecting Criteria.>

TROUBLE SYMPTOM:

- Erroneous idling
- Engine stalls.
- Poor driving performance

CAUTION:

After repair or replacement of faulty parts, conduct Clear Memory Mode <Ref. to EN(H4SO U5)(diag)-46, OPERATION, Clear Memory Mode.> and Inspection Mode <Ref. to EN(H4SO U5)(diag)-37, OPERATION, Inspection Mode.>.

WIRING DIAGRAM:

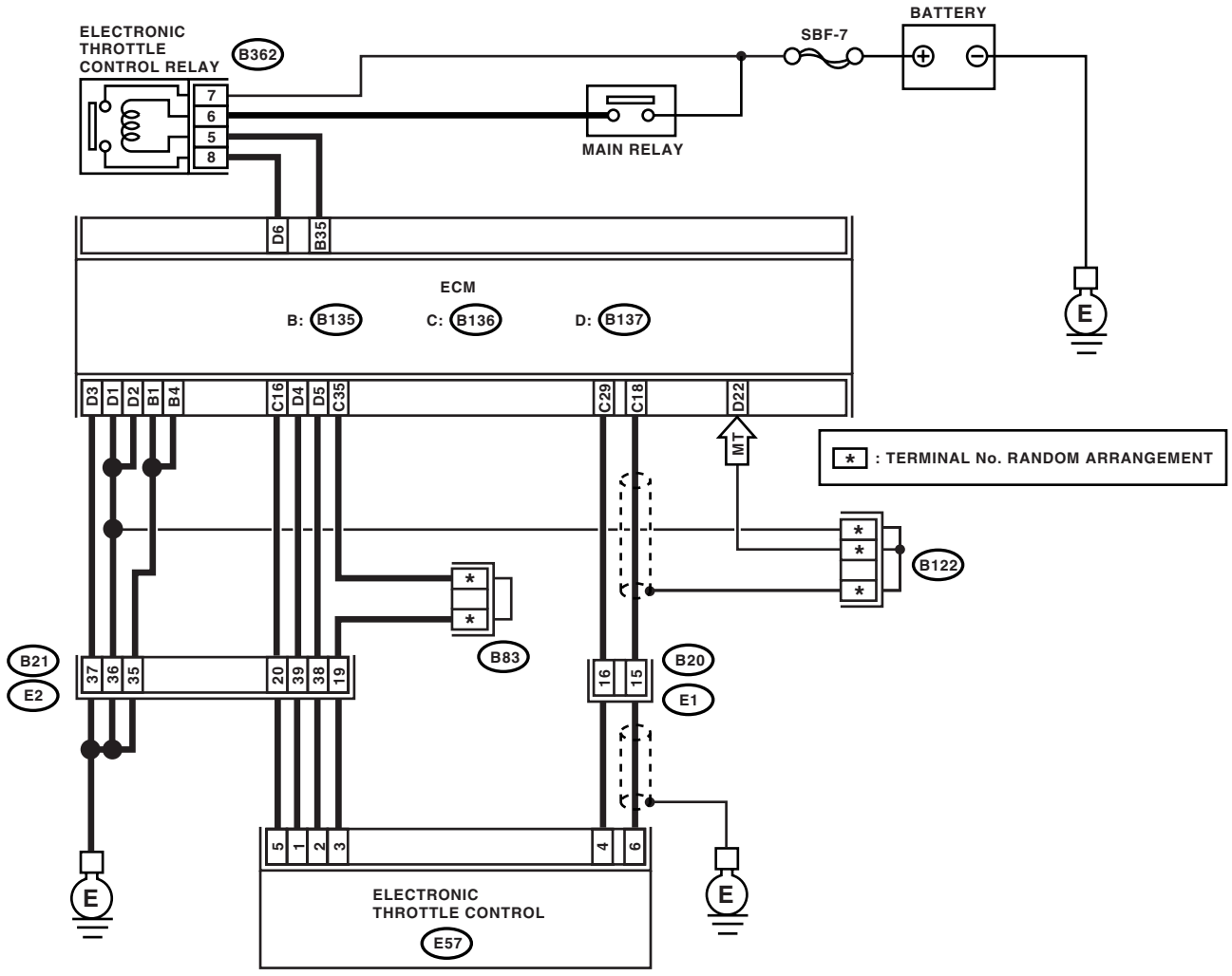

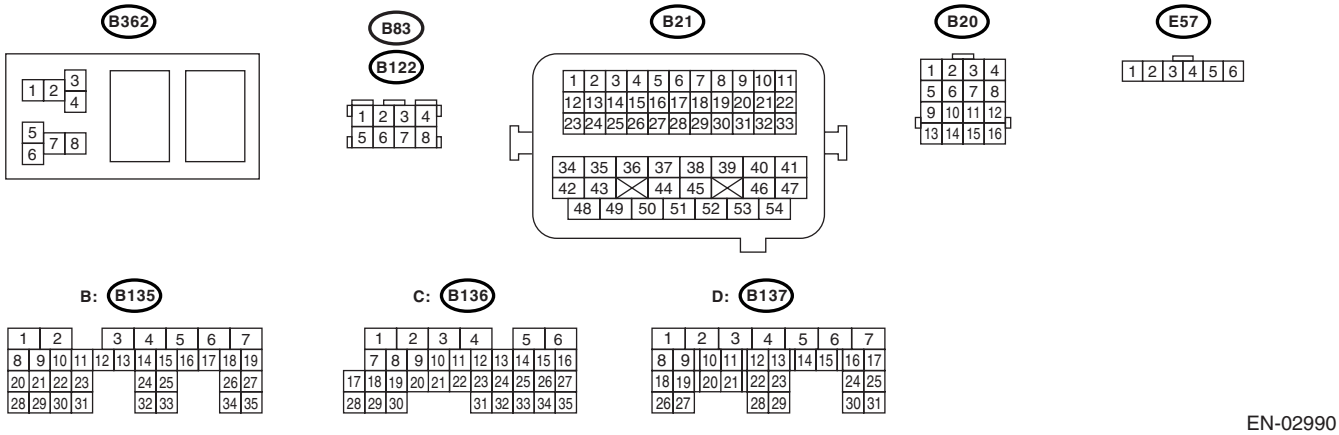

EN-02990

	Step	Check	Yes	No
1	**CHECK SENSOR OUTPUT.** 1) Turn the ignition switch to ON. 2) Read the data of main throttle sensor signal using Subaru Select Monitor. NOTE: Subaru Select Monitor For detailed operation procedure, refer to "READ CURRENT DATA FOR ENGINE". <Ref. to EN(H4SO U5)(diag)-28, Subaru Select Monitor.>	Is the voltage less than 4.63 V?	Go to step **2.**	Go to step **3.**
2	**CHECK POOR CONTACT.** Check poor contact in connector between ECM and electronic throttle control.	Is there poor contact in connector between ECM and electronic throttle control?	Repair the poor contact.	Temporary poor contact occurred, but it is normal at present.
3	**CHECK HARNESS BETWEEN ECM AND ELECTRONIC THROTTLE CONTROL.** 1) Turn the ignition switch to OFF. 2) Disconnect the connector from ECM. 3) Disconnect the connectors from electronic throttle control. 4) Measure the resistance between ECM connector and electronic throttle control connector. ***Connector & terminal*** ***(B136) No. 18 — (E57) No. 6:*** ***(B136) No. 35 — (E57) No. 3:***	Is the resistance less than 1 Ω?	Go to step **4.**	Repair the open circuit of harness connector.
4	**CHECK HARNESS BETWEEN ECM AND ELECTRONIC THROTTLE CONTROL.** 1) Connect the ECM connector. 2) Measure the resistance between electronic throttle control connector and engine ground. ***Connector & terminal*** ***(E57) No. 3 — Engine ground:***	Is the resistance less than 1 Ω?	Go to step **5.**	Repair the poor contact in ECM connector. Replace the ECM if defective. <Ref. to FU(H4SO U5)-44, Engine Control Module (ECM).>
5	**CHECK SENSOR OUTPUT POWER SUPPLY.** Measure the voltage between electronic throttle control connector and engine ground. ***Connector & terminal*** ***(E57) No. 6 (+) — Engine ground (−):***	Is the voltage less than 10 V?	Go to step **6.**	Repair battery short circuit in harness between ECM connector and electronic throttle control connector.
6	**CHECK HARNESS BETWEEN ECM AND ELECTRONIC THROTTLE CONTROL.** 1) Turn the ignition switch to OFF. 2) Disconnect the connector from ECM. 3) Measure the resistance between ECM connectors. ***Connector & terminal*** ***(B136) No. 18 — (B136) No. 16:***	Is the resistance more than 1 MΩ?	Repair poor contact in harness. Repair the electronic throttle control.	Repair short circuit to sensor power supply.

Z: DTC P0125 INSUFFICIENT ENGINE COOLANT TEMPERATURE FOR CLOSED LOOP FUEL CONTROL

DTC DETECTING CONDITION:

- Two consecutive driving cycles with fault
- GENERAL DESCRIPTION <Ref. to GD(H4SO U5)-51, DTC P0125 INSUFFICIENT ENGINE COOLANT TEMPERATURE FOR CLOSED LOOP FUEL CONTROL, Diagnostic Trouble Code (DTC) Detecting Criteria.>

TROUBLE SYMPTOM:

Engine would not return to idling.

CAUTION:

After repair or replacement of faulty parts, conduct Clear Memory Mode <Ref. to EN(H4SO U5)(diag)-46, OPERATION, Clear Memory Mode.> and Inspection Mode <Ref. to EN(H4SO U5)(diag)-37, OPERATION, Inspection Mode.>.

WIRING DIAGRAM:

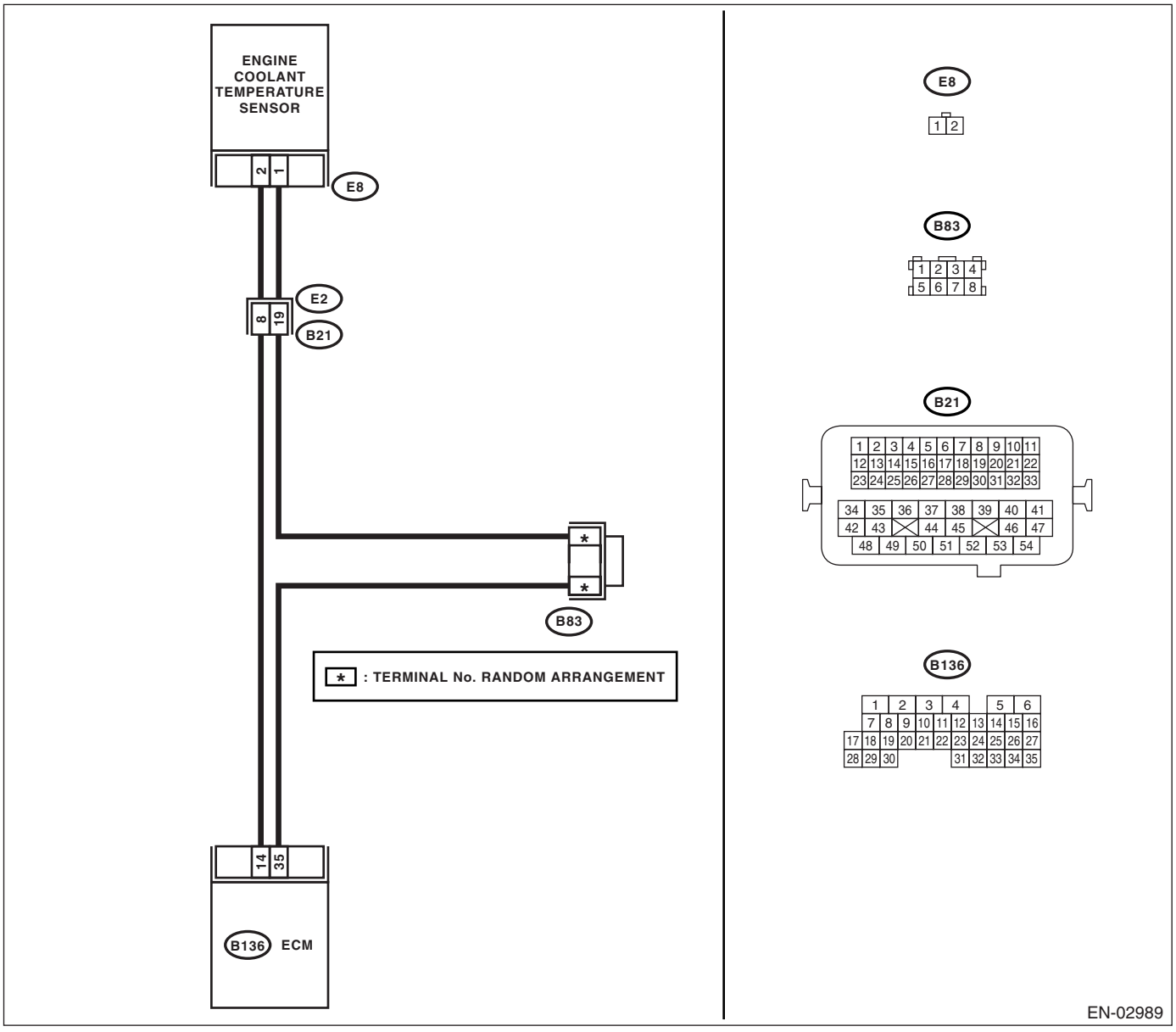

	Step	Check	Yes	No
1	**CHECK FOR ANY OTHER DTC ON DISPLAY.**	Is any other DTC displayed?	Check DTC using "List of Diagnostic Trouble Code (DTC)". <Ref. to EN(H4SO U5)(diag)-73, List of Diagnostic Trouble Code (DTC).> NOTE: In this case, it is not necessary to inspect DTC P0125.	Go to step **2.**
2	**CHECK THERMOSTAT.**	Does the thermostat remain opened?	Replace the thermostat. <Ref. to CO(H4SO)-17, Thermostat.>	Replace the engine coolant temperature sensor. <Ref. to FU(H4SO U5)-23, Engine Coolant Temperature Sensor.>

AA:DTC P0126 INSUFFICIENT ENGINE COOLANT TEMPERATURE FOR STABLE OPERATION

DTC DETECTING CONDITION:

- Two consecutive driving cycles with fault
- GENERAL DESCRIPTION <Ref. to GD(H4SO U5)-53, DTC P0126 INSUFFICIENT ENGINE COOLANT TEMPERATURE FOR STABLE OPERATION, Diagnostic Trouble Code (DTC) Detecting Criteria.>

TROUBLE SYMPTOM:

Engine would not return to idling.

CAUTION:

After repair or replacement of faulty parts, conduct Clear Memory Mode <Ref. to EN(H4SO U5)(diag)-46, OPERATION, Clear Memory Mode.> and Inspection Mode <Ref. to EN(H4SO U5)(diag)-37, OPERATION, Inspection Mode.>.

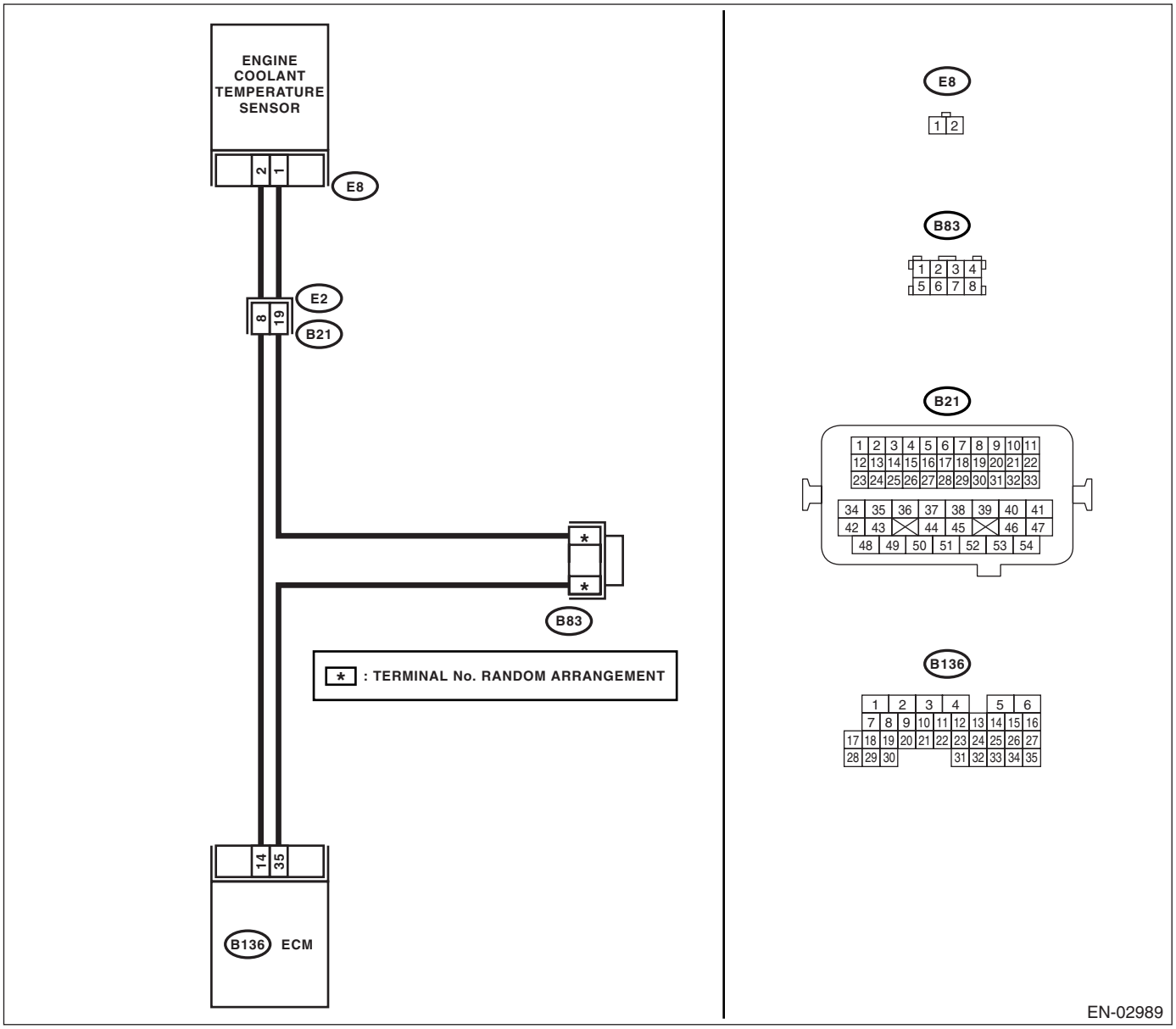

	Step	Check	Yes	No
1	**CHECK FOR ANY OTHER DTC ON DISPLAY.**	Is any other DTC displayed?	Inspect the DTC using “List of Diagnostic Trouble Code (DTC)”. <Ref. to EN(H4SO U5)(diag)-73, List of Diagnostic Trouble Code (DTC).>	Go to step **2.**
2	**CHECK ENGINE COOLANT TEMPERATURE SENSOR.** Measure the resistance between engine coolant temperature sensor terminals when engine coolant is cold and after warmed-up. ***Terminals*** ***No. 1 — No. 2:***	Is the resistance of engine coolant temperature sensor different between when engine coolant is cold and after warmed-up?	Contact your SOA Service Center.	Replace the engine coolant temperature sensor. <Ref. to FU(H4SO U5)-23, Engine Coolant Temperature Sensor.>

AB:DTC P0128 COOLANT THERMOSTAT (ENGINE COOLANT TEMPERATURE BELOW THERMOSTAT REGULATING TEMPERATURE)

DTC DETECTING CONDITION:

- Two consecutive driving cycles with fault
- GENERAL DESCRIPTION <Ref. to GD(H4SO U5)-55, DTC P0128 COOLANT THERMOSTAT (ENGINE COOLANT TEMPERATURE BELOW THERMOSTAT REGULATING TEMPERATURE), Diagnostic Trouble Code (DTC) Detecting Criteria.>

TROUBLE SYMPTOM:

Thermostat remains open.

CAUTION:

After repair or replacement of faulty parts, conduct CLEAR MEMORY MODE <Ref. to EN(H4SO U5)(diag)-46, OPERATION, Clear Memory Mode.> and INSPECTION MODE <Ref. to EN(H4SO U5)(diag)-37, OPERATION, Inspection Mode.>

	Step	Check	Yes	No
1	**CHECK VEHICLE CONDITION.**	Was the vehicle driven or idled with the engine partially submerged under water?	In this case, it is not necessary to inspect DTC P0128.	Go to step **2.**
2	**CHECK FOR ANY OTHER DTC ON DISPLAY.**	Is any other DTC displayed?	Inspect DTC using “List of Diagnostic Trouble Code (DTC)”. <Ref. to EN(H4SO U5)(diag)-73, List of Diagnostic Trouble Code (DTC).>	Go to step **3.**
3	**CHECK ENGINE COOLANT.**	Are coolant level and mixture ratio of cooling water to antifreeze solution correct?	Go to step **4.**	Replace the engine coolant. <Ref. to CO(H4SO)-12, REPLACEMENT, Engine Coolant.>
4	**CHECK RADIATOR FAN.** 1) Start the engine. 2) Check radiator fan operation.	Does the radiator fan continuously rotate for more than 3 minutes during idling?	Repair radiator fan circuit. <Ref. to CO(H4SO)-23, Radiator Main Fan and Fan Motor.> and <Ref. to CO(H4SO)-25, Radiator Sub Fan and Fan Motor.>	Replace the thermostat. <Ref. to CO(H4SO)-17, Thermostat.>

AC:DTC P0131 O2 SENSOR CIRCUIT LOW VOLTAGE (BANK 1 SENSOR 1)

DTC DETECTING CONDITION:

- Detect as soon as malfunction occurs.
- GENERAL DESCRIPTION <Ref. to GD(H4SO U5)-57, DTC P0131 O2 SENSOR CIRCUIT LOW VOLTAGE (BANK 1 SENSOR 1), Diagnostic Trouble Code (DTC) Detecting Criteria.>

CAUTION:

After repair or replacement of faulty parts, conduct Clear Memory Mode <Ref. to EN(H4SO U5)(diag)-46, OPERATION, Clear Memory Mode.> and Inspection Mode <Ref. to EN(H4SO U5)(diag)-37, OPERATION, Inspection Mode.>.

WIRING DIAGRAM:

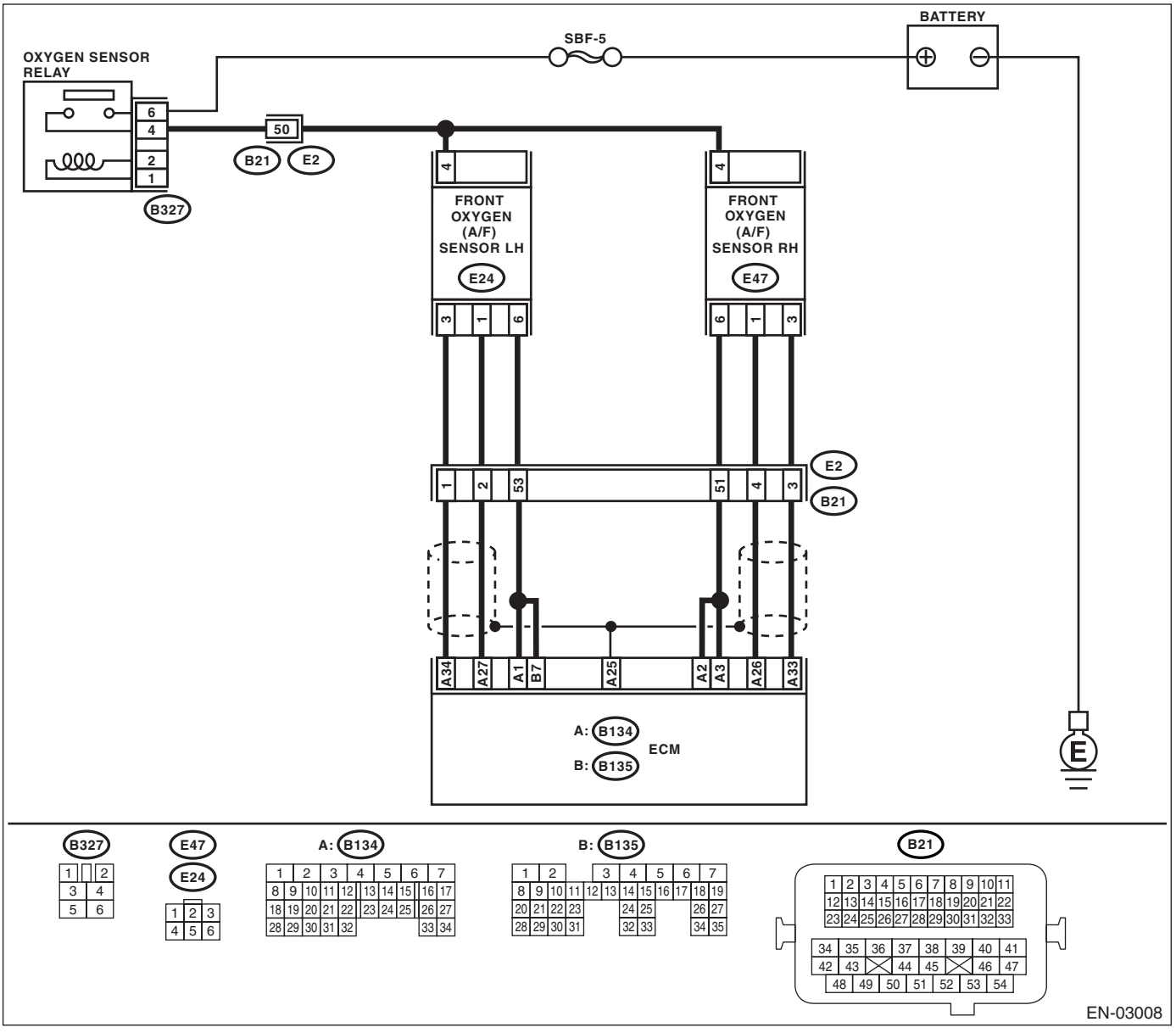

	Step	Check	Yes	No
1	**CHECK HARNESS BETWEEN ECM AND FRONT OXYGEN (A/F) SENSOR CONNECTOR.** 1) Turn the ignition switch to OFF. 2) Disconnect the connectors from ECM and front oxygen (A/F) sensor connector. 3) Measure the resistance of harness between ECM and front oxygen (A/F) sensor connector. ***Connector & terminal*** ***(B134) No. 26 — Chassis ground:*** ***(B134) No. 33 — Chassis ground:***	Is the measured value more than 1 MΩ?	Replace the front oxygen (A/F) sensor. <Ref. to FU(H4SO U5)-37, Front Oxygen (A/F) Sensor.>	Repair ground short circuit in harness between ECM and front oxygen (A/F) sensor connector.

AD:DTC P0132 O2 SENSOR CIRCUIT HIGH VOLTAGE (BANK 1 SENSOR 1)

DTC DETECTING CONDITION:

- Detect as soon as malfunction occurs.
- GENERAL DESCRIPTION <Ref. to GD(H4SO U5)-59, DTC P0132 O2 SENSOR CIRCUIT HIGH VOLTAGE (BANK 1 SENSOR 1), Diagnostic Trouble Code (DTC) Detecting Criteria.>

CAUTION:
After repair or replacement of faulty parts, conduct Clear Memory Mode <Ref. to EN(H4SO U5)(diag)-46, OPERATION, Clear Memory Mode.> and Inspection Mode <Ref. to EN(H4SO U5)(diag)-37, OPERATION, Inspection Mode.>.

WIRING DIAGRAM:

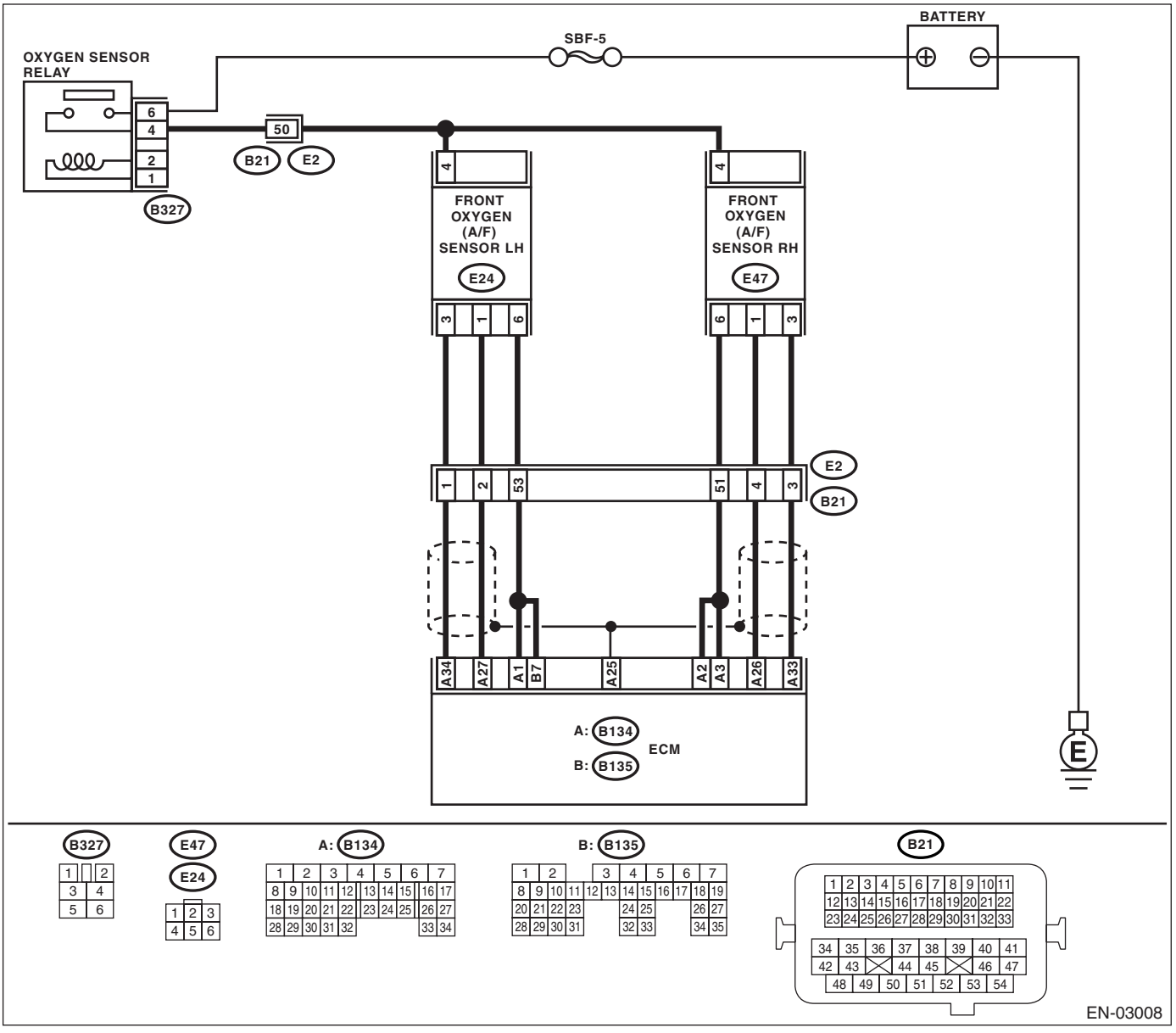

	Step	Check	Yes	No
1	**CHECK HARNESS BETWEEN ECM AND FRONT OXYGEN (A/F) SENSOR CONNECTOR.** 1) Turn the ignition switch to ON. 2) Disconnect the connectors from front oxygen (A/F) sensor. 3) Measure the voltage of harness between ECM connector and chassis ground. ***Connector & terminal*** ***(B134) No. 26 (+) — Chassis ground (−):*** ***(B134) No. 33 (+) — Chassis ground (−):***	Is the measured value more than 8 V?	Replace the front oxygen (A/F) sensor. <Ref. to FU(H4SO U5)-37, Front Oxygen (A/F) Sensor.>	Repair battery short circuit in harness between ECM and front oxygen (A/F) sensor connector.

AE:DTC P0133 O2 SENSOR CIRCUIT SLOW RESPONSE (BANK 1 SENSOR 1)

DTC DETECTING CONDITION:

- Two consecutive driving cycles with fault
- GENERAL DESCRIPTION <Ref. to GD(H4SO U5)-61, DTC P0133 O2 SENSOR CIRCUIT SLOW RESPONSE (BANK 1 SENSOR 1), Diagnostic Trouble Code (DTC) Detecting Criteria.>

CAUTION:

After repair or replacement of faulty parts, conduct Clear Memory Mode <Ref. to EN(H4SO U5)(diag)-46, OPERATION, Clear Memory Mode.> and Inspection Mode <Ref. to EN(H4SO U5)(diag)-46, OPERATION, Clear Memory Mode.>.

WIRING DIAGRAM:

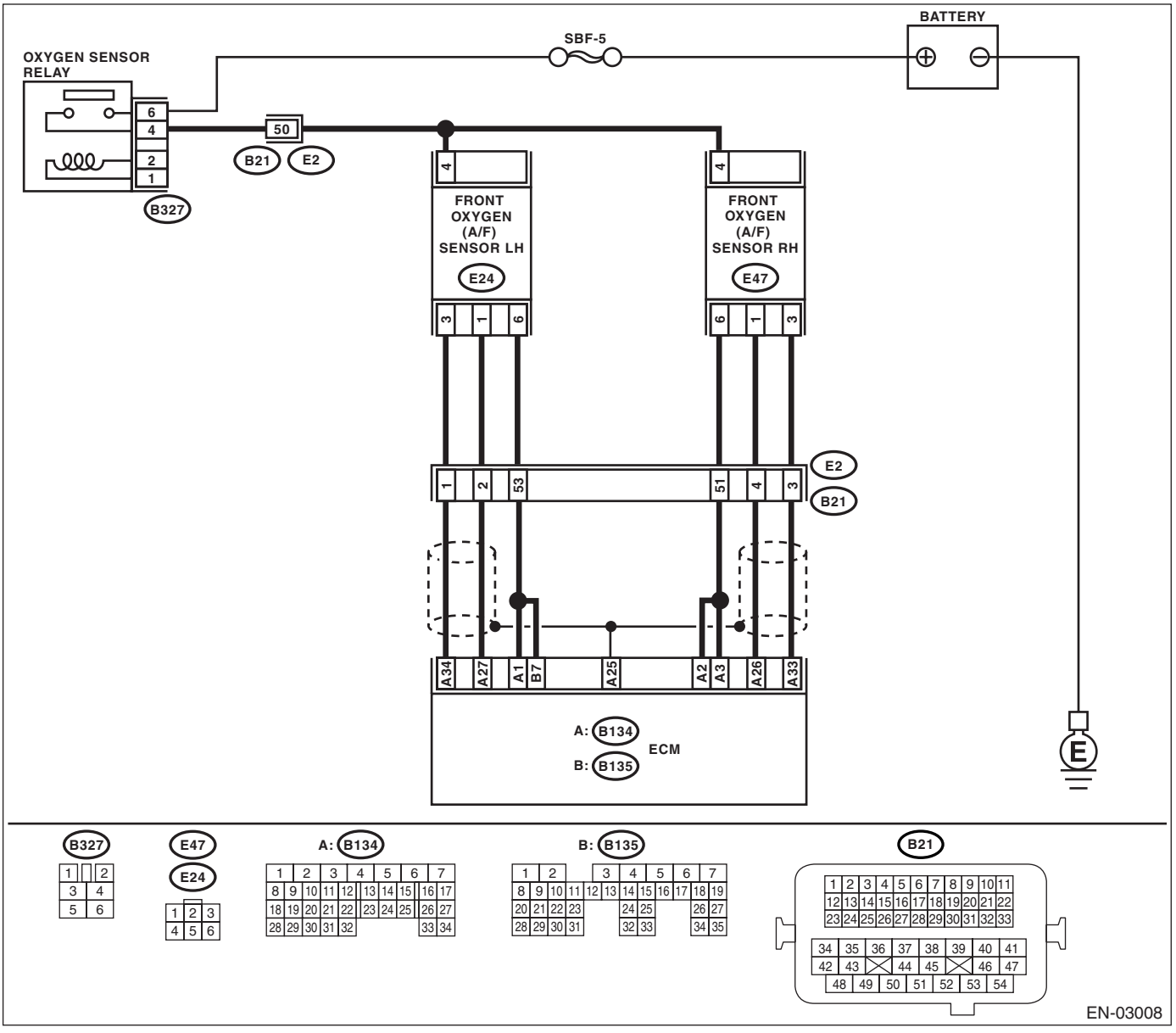

	Step	Check	Yes	No
1	**CHECK FOR ANY OTHER DTC ON DISPLAY.**	Is any other DTC displayed?	Check DTC using "List of Diagnostic Trouble Code (DTC)". <Ref. to EN(H4SO U5)(diag)-73, List of Diagnostic Trouble Code (DTC).> NOTE: In this case, it is not necessary to inspect DTC P0133.	Go to step **2.**
2	**CHECK EXHAUST SYSTEM.** NOTE: Check the following items. • Loose installation of exhaust pipe • Damage of exhaust pipe resulting in a hole	Is there any fault in exhaust system?	Repair or replace the faulty part.	Replace the front oxygen (A/F) sensor. <Ref. to FU(H4SO U5)-37, Front Oxygen (A/F) Sensor.>

AF:DTC P0134 O2 SENSOR CIRCUIT NO ACTIVITY DETECTED (BANK 1 SENSOR 1)

DTC DETECTING CONDITION:

- Detect as soon as malfunction occurs.
- GENERAL DESCRIPTION <Ref. to GD(H4SO U5)-64, DTC P0134 O2 SENSOR CIRCUIT NO ACTIVITY DETECTED (BANK 1 SENSOR 1), Diagnostic Trouble Code (DTC) Detecting Criteria.>

CAUTION:

After repair or replacement of faulty parts, conduct Clear Memory Mode <Ref. to EN(H4SO U5)(diag)-46, OPERATION, Clear Memory Mode.> and Inspection Mode <Ref. to EN(H4SO U5)(diag)-37, OPERATION, Inspection Mode.>.

WIRING DIAGRAM:

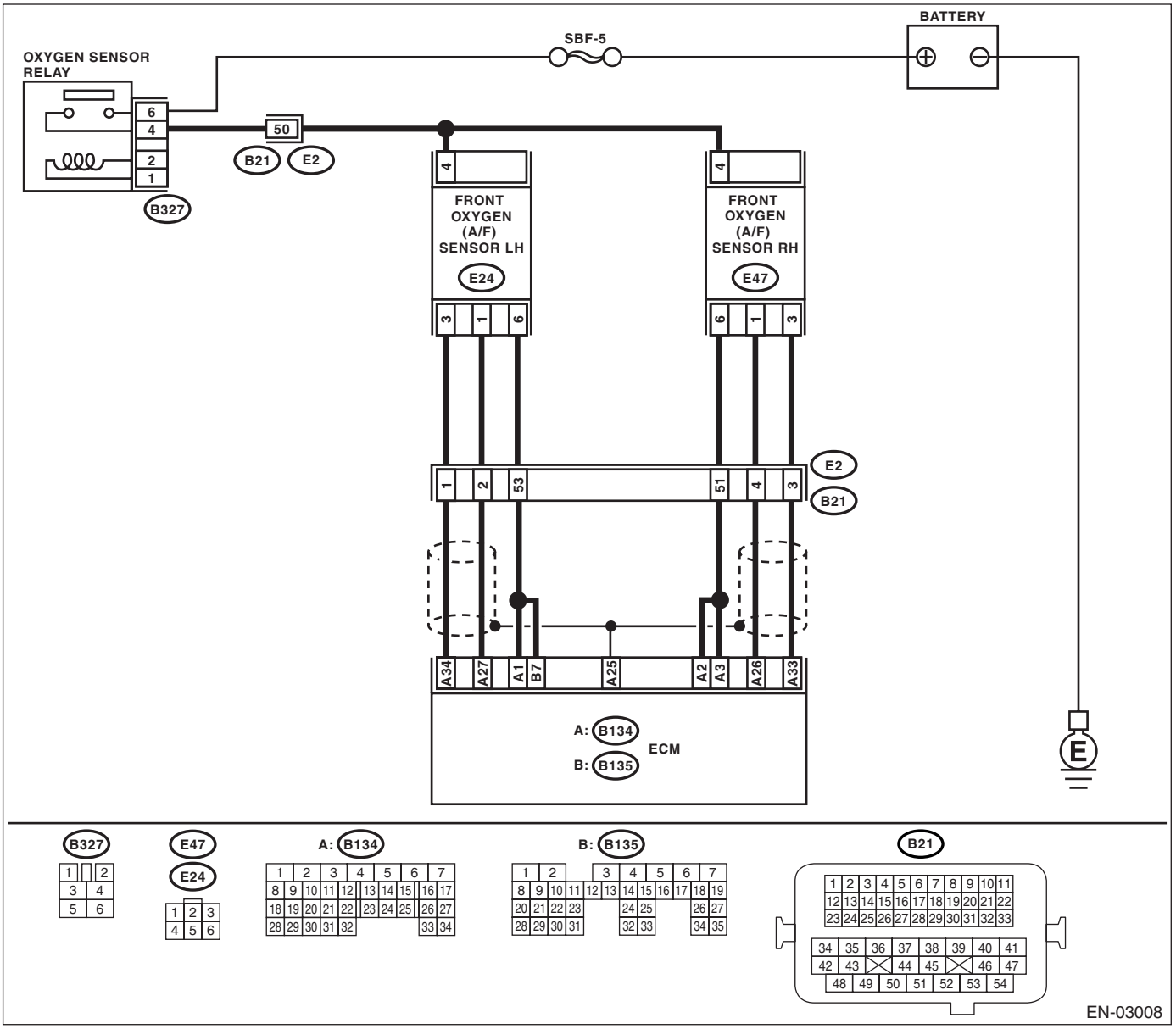

	Step	Check	Yes	No
1	**CHECK HARNESS BETWEEN ECM AND FRONT OXYGEN (A/F) SENSOR CONNECTOR.** 1) Turn the ignition switch to OFF. 2) Disconnect the connectors from ECM and front oxygen (A/F) sensor connector. 3) Measure the resistance of harness between ECM and front oxygen (A/F) sensor connector. ***Connector & terminal*** ***(B134) No. 26 — (E47) No. 1:*** ***(B134) No. 33 — (E47) No. 3:***	Is the measured value less than 1 Ω?	Go to step **2.**	Repair harness and connector. NOTE: In this case, repair the following: • Open circuit in harness between ECM and front oxygen (A/F) sensor connector • Poor contact in front oxygen (A/F) sensor connector • Poor contact in ECM connector
2	**CHECK POOR CONTACT.** Check poor contact in front oxygen (A/F) sensor connector.	Is there poor contact in front oxygen (A/F) sensor connector?	Repair poor contact in front oxygen (A/F) sensor connector.	Replace the front oxygen (A/F) sensor. <Ref. to FU(H4SO U5)-37, Front Oxygen (A/F) Sensor.>

AG:DTC P0137 O2 SENSOR CIRCUIT LOW VOLTAGE (BANK 1 SENSOR 2)

DTC DETECTING CONDITION:

- Two consecutive driving cycles with fault
- GENERAL DESCRIPTION <Ref. to GD(H4SO U5)-66, DTC P0137 O2 SENSOR CIRCUIT LOW VOLTAGE (BANK 1 SENSOR 2), Diagnostic Trouble Code (DTC) Detecting Criteria.>

CAUTION:

After repair or replacement of faulty parts, conduct Clear Memory Mode <Ref. to EN(H4SO U5)(diag)-46, OPERATION, Clear Memory Mode.> and Inspection Mode <Ref. to EN(H4SO U5)(diag)-37, OPERATION, Inspection Mode.>.

WIRING DIAGRAM:

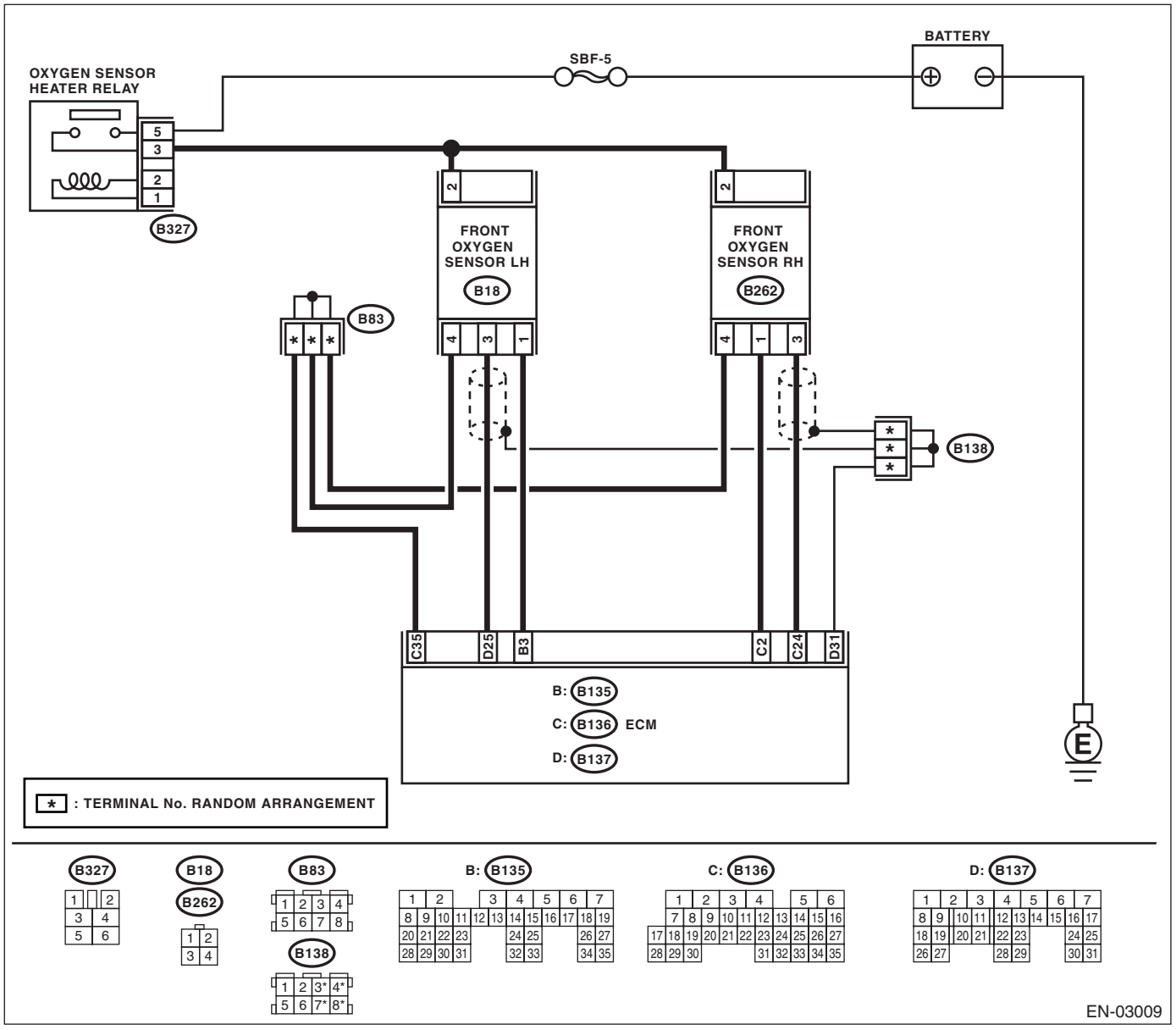

	Step	Check	Yes	No
1	**CHECK FOR ANY OTHER DTC ON DISPLAY.**	Is any other DTC displayed?	Check DTC using "List of Diagnostic Trouble Code (DTC)". <Ref. to EN(H4SO U5)(diag)-73, List of Diagnostic Trouble Code (DTC).> NOTE: In this case, it is not necessary to inspect DTC P0137.	Go to step **2.**
2	**CHECK FRONT OXYGEN SENSOR DATA.** 1) Warm-up the engine until engine coolant temperature is above 70°C (158°F), and keep the engine speed at 5,000 rpm. 2) Read the data of front oxygen sensor signal using Subaru Select Monitor or general scan tool. NOTE: • Subaru Select Monitor For detailed operation procedure, refer to the "READ CURRENT DATA SHOWN ON DISPLAY FOR ENGINE". <Ref. to EN(H4SO U5)(diag)-28, Subaru Select Monitor.> • General scan tool For detailed operation procedure, refer to the general scan tool instruction manual.	Is the measured value more than 490 mV?	Go to step **5.**	Go to step **3.**
3	**CHECK HARNESS BETWEEN ECM AND FRONT OXYGEN SENSOR CONNECTOR.** 1) Turn the ignition switch to OFF. 2) Disconnect the connectors from ECM and front oxygen sensor. 3) Measure the resistance of harness between ECM and front oxygen sensor connector. ***Connector & terminal*** ***(B136) No. 24 — (B262) No. 3:*** ***(B136) No. 35 — (B262) No. 4:***	Is the measured value more than 3 Ω?	Repair open circuit in harness between ECM and front oxygen sensor connector.	Go to step **4.**
4	**CHECK HARNESS BETWEEN FRONT OXYGEN SENSOR AND ECM CONNECTOR.** 1) Turn the ignition switch to OFF. 2) Disconnect the connector from front oxygen sensor. 3) Turn the ignition switch to ON. 4) Measure the voltage between front oxygen sensor harness connector and engine ground or chassis ground. ***Connector & terminal*** ***(B262) No. 3 (+) — Engine ground (−):***	Is the measured value within 0.2 to 0.5 V?	Replace the front oxygen sensor. <Ref. to FU(H4SO U5)-40, Front Oxygen Sensor.>	Repair harness and connector. NOTE: In this case, repair the following: • Open circuit in harness between front oxygen sensor and ECM connector • Poor contact in front oxygen sensor connector • Poor contact in ECM connector
5	**CHECK EXHAUST SYSTEM.** NOTE: Check the following items. • Loose installation of exhaust pipe • Damage of exhaust pipe resulting in a hole	Is there any fault in exhaust system?	Repair or replace faulty parts.	Replace the front oxygen sensor. <Ref. to FU(H4SO U5)-40, Front Oxygen Sensor.>

AH:DTC P0138 O2 SENSOR CIRCUIT HIGH VOLTAGE (BANK 1 SENSOR 2)

DTC DETECTING CONDITION:

- Two consecutive driving cycles with fault
- GENERAL DESCRIPTION <Ref. to GD(H4SO U5)-68, DTC P0138 O2 SENSOR CIRCUIT HIGH VOLTAGE (BANK 1 SENSOR 2), Diagnostic Trouble Code (DTC) Detecting Criteria.>

CAUTION:

After repair or replacement of faulty parts, conduct Clear Memory Mode <Ref. to EN(H4SO U5)(diag)-46, OPERATION, Clear Memory Mode.> and Inspection Mode <Ref. to EN(H4SO U5)(diag)-37, OPERATION, Inspection Mode.>.

WIRING DIAGRAM:

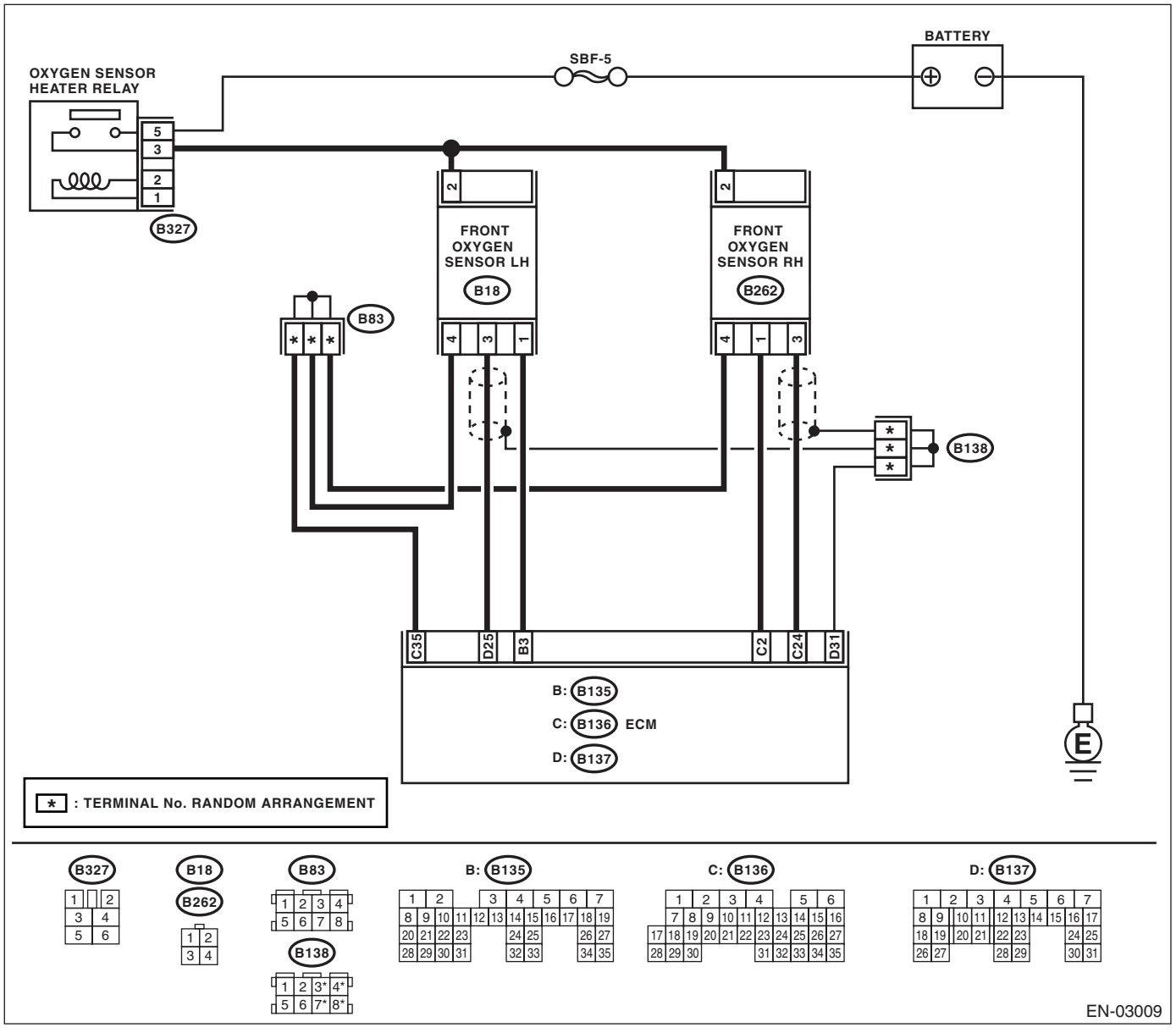

	Step	Check	Yes	No
1	**CHECK FOR ANY OTHER DTC ON DISPLAY.**	Is any other DTC displayed?	Check DTC using "List of Diagnostic Trouble Code (DTC)". <Ref. to EN(H4SO U5)(diag)-73, List of Diagnostic Trouble Code (DTC).> NOTE: In this case, it is not necessary to inspect DTC P0138.	Go to step **2.**
2	**CHECK FRONT OXYGEN SENSOR DATA.** 1) Warm-up the engine until engine coolant temperature is above 70°C (158°F), and immediately decrease the engine speed from 5,000 rpm. 2) Read the data of front oxygen sensor signal using Subaru Select Monitor or general scan tool. NOTE: • Subaru Select Monitor For detailed operation procedure, refer to the "READ CURRENT DATA SHOWN ON DISPLAY FOR ENGINE". <Ref. to EN(H4SO U5)(diag)-28, Subaru Select Monitor.> • General scan tool For detailed operation procedure, refer to the general scan tool instruction manual.	Is the measured value less than 250 mV?	Go to step **5.**	Go to step **3.**
3	**CHECK HARNESS BETWEEN ECM AND FRONT OXYGEN SENSOR CONNECTOR.** 1) Turn the ignition switch to OFF. 2) Disconnect the connectors from ECM and front oxygen sensor. 3) Measure the resistance of harness between ECM and front oxygen sensor connector. ***Connector & terminal*** ***(B136) No. 24 — (B262) No. 3:*** ***(B136) No. 35 — (B262) No. 4:***	Is the measured value more than 3 Ω?	Repair open circuit in harness between ECM and front oxygen sensor connector.	Go to step **4.**
4	**CHECK HARNESS BETWEEN FRONT OXYGEN SENSOR AND ECM CONNECTOR.** 1) Turn the ignition switch to OFF. 2) Disconnect the connector from front oxygen sensor. 3) Turn the ignition switch to ON. 4) Measure the voltage between front oxygen sensor harness connector and engine ground or chassis ground. ***Connector & terminal*** ***(B262) No. 3 (+) — Engine ground (−):***	Is the measured value within 0.2 to 0.5 V?	Replace the front oxygen sensor. <Ref. to FU(H4SO U5)-40, Front Oxygen Sensor.>	Repair harness and connector. NOTE: In this case, repair the following: • Open circuit in harness between front oxygen sensor and ECM connector • Poor contact in front oxygen sensor connector • Poor contact in ECM connector

Step		Check	Yes	No
5	**CHECK EXHAUST SYSTEM.** NOTE: Check the following items. • Loose installation of exhaust pipe • Damage of exhaust pipe resulting in a hole	Is there any fault in exhaust system?	Repair or replace faulty parts.	Replace the front oxygen sensor. <Ref. to FU(H4SO U5)-40, Front Oxygen Sensor.>

AI: DTC P0139 O2 SENSOR CIRCUIT SLOW RESPONSE (BANK 1 SENSOR 2)

DTC DETECTING CONDITION:

- Two consecutive driving cycles with fault
- GENERAL DESCRIPTION <Ref. to GD(H4SO U5)-70, DTC P0139 O2 SENSOR CIRCUIT SLOW RESPONSE (BANK 1 SENSOR 2), Diagnostic Trouble Code (DTC) Detecting Criteria.>

CAUTION:
After repair or replacement of faulty parts, conduct Clear Memory Mode <Ref. to EN(H4SO U5)(diag)-46, OPERATION, Clear Memory Mode.> and Inspection Mode <Ref. to EN(H4SO U5)(diag)-37, OPERATION, Inspection Mode.>.

WIRING DIAGRAM:

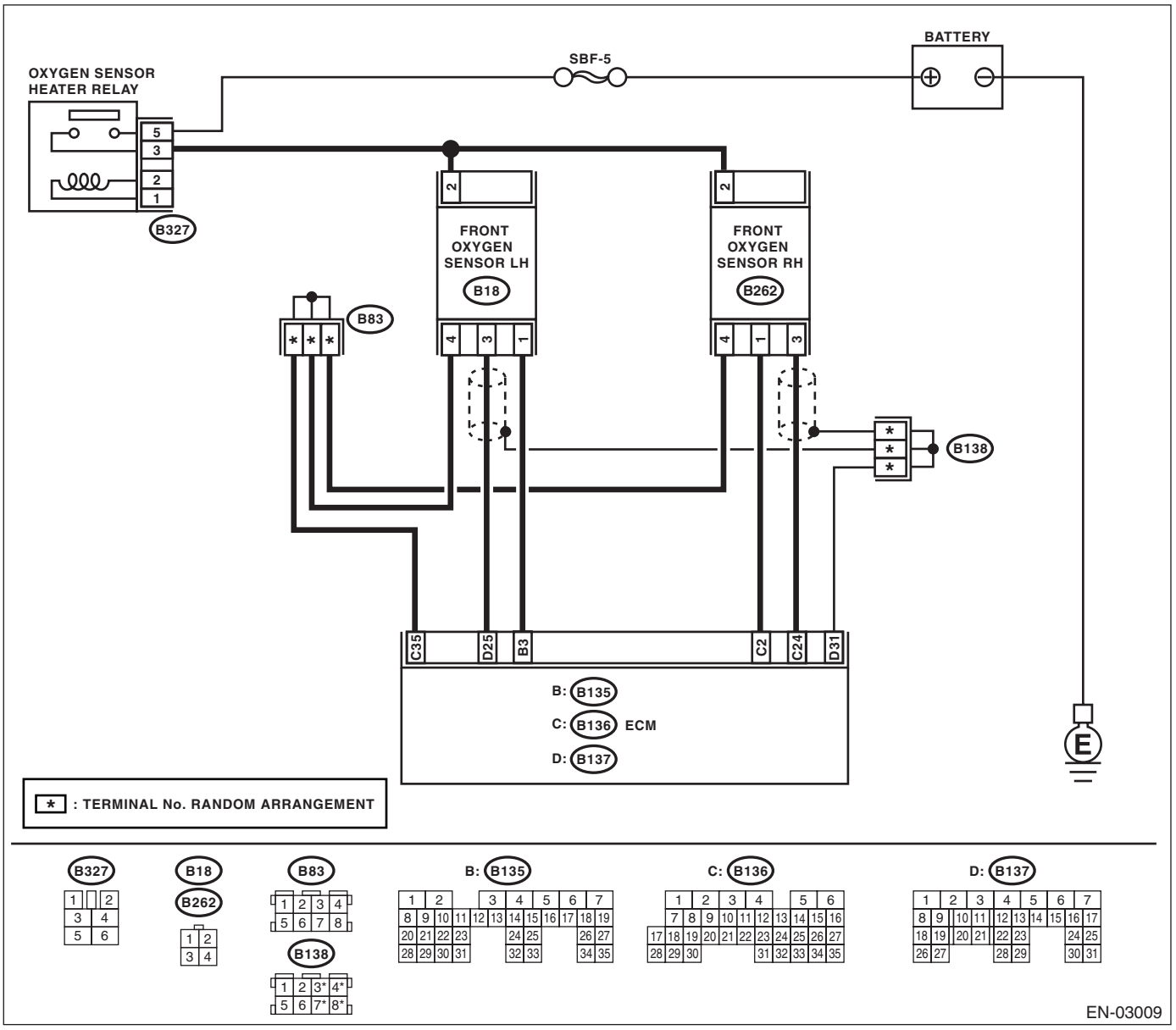

	Step	Check	Yes	No
1	**CHECK FOR ANY OTHER DTC ON DISPLAY.**	Is any other DTC displayed?	Check DTC using "List of Diagnostic Trouble Code (DTC)". <Ref. to EN(H4SO U5)(diag)-73, List of Diagnostic Trouble Code (DTC).> NOTE: In this case, it is not necessary to inspect DTC P0139.	Go to step **2.**
2	**CHECK HARNESS BETWEEN ECM AND FRONT OXYGEN SENSOR CONNECTOR.** 1) Turn the ignition switch to OFF. 2) Disconnect the connectors from ECM and front oxygen sensor. 3) Measure the resistance of harness between ECM and front oxygen sensor connector. ***Connector & terminal*** ***(B137) No. 24 — (B262) No. 3:***	Is the resistance less than 1 Ω?	Go to step **3.**	Repair open circuit in harness between ECM and front oxygen sensor connector.
3	**CHECK HARNESS BETWEEN REAR OXYGEN SENSOR AND ECM CONNECTOR.** Measure the resistance between rear oxygen sensor harness connector and chassis ground. ***Connector & terminal*** ***(B262) No. 3 — Chassis ground:***	Is the resistance more than 1 MΩ?	Go to step **4.**	Repair short circuit to ground in harness.
4	**CHECK FRONT OXYGEN SENSOR DATA.** Measure the resistance between connector terminals of front oxygen sensor. ***terminals*** ***No. 3 — No. 4:***	Is the resistance less than 1 Ω?	Replace the front oxygen sensor. <Ref. to FU(H4SO U5)-40, Front Oxygen Sensor.>	A temporary poor contact occurs. Check poor contact in connector.

AJ:DTC P0143 O2 SENSOR CIRCUIT LOW VOLTAGE (BANK 1 SENSOR 3)

DTC DETECTING CONDITION:

- Two consecutive driving cycles with fault
- GENERAL DESCRIPTION <Ref. to GD(H4SO U5)-75, DTC P0143 O2 SENSOR CIRCUIT LOW VOLTAGE (BANK 1 SENSOR 3), Diagnostic Trouble Code (DTC) Detecting Criteria.>

CAUTION:
After repair or replacement of faulty parts, conduct Clear Memory Mode <Ref. to EN(H4SO U5)(diag)-46, OPERATION, Clear Memory Mode.> and Inspection Mode <Ref. to EN(H4SO U5)(diag)-37, OPERATION, Inspection Mode.>.

WIRING DIAGRAM:

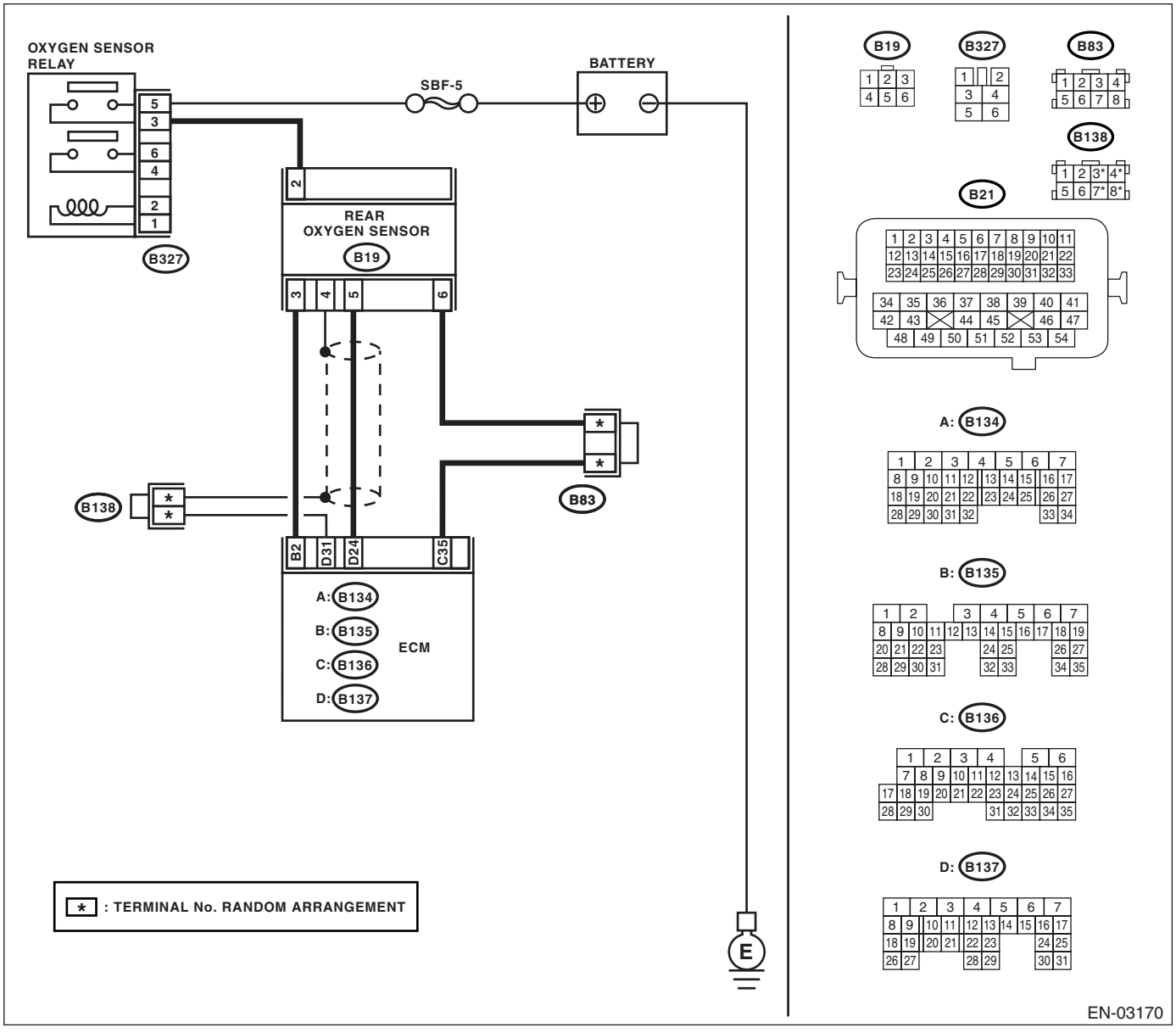

	Step	Check	Yes	No
1	**CHECK FOR ANY OTHER DTC ON DISPLAY.**	Is any other DTC displayed?	Check DTC using "List of Diagnostic Trouble Code (DTC)". <Ref. to EN(H4SO U5)(diag)-73, List of Diagnostic Trouble Code (DTC).> NOTE: In this case, it is not necessary to inspect DTC P0143.	Go to step **2.**
2	**CHECK REAR OXYGEN SENSOR DATA.** 1) Warm-up the engine until engine coolant temperature is above 70°C (158°F), and keep the engine speed at 5,000 rpm. 2) Read the data of rear oxygen sensor signal using Subaru Select Monitor or general scan tool. NOTE: • Subaru Select Monitor For detailed operation procedure, refer to the "READ CURRENT DATA SHOWN ON DISPLAY FOR ENGINE". <Ref. to EN(H4SO U5)(diag)-28, Subaru Select Monitor.> • General scan tool For detailed operation procedure, refer to the general scan tool instruction manual.	Is the measured value 490 mV?	Go to step **5.**	Go to step **3.**
3	**CHECK HARNESS BETWEEN ECM AND REAR OXYGEN SENSOR CONNECTOR.** 1) Turn the ignition switch to OFF. 2) Disconnect the connectors from ECM and rear oxygen sensor. 3) Measure the resistance of harness between ECM and rear oxygen sensor connector. ***Connector & terminal*** ***(B137) No. 24 — (B19) No. 5:*** ***(B136) No. 35 — (B19) No. 6:***	Is the measured value more than 3 Ω?	Repair open circuit in harness between ECM and rear oxygen sensor connector.	Go to step **4.**
4	**CHECK HARNESS BETWEEN REAR OXYGEN SENSOR AND ECM CONNECTOR.** 1) Turn the ignition switch to OFF. 2) Disconnect the connector from rear oxygen sensor. 3) Turn the ignition switch to ON. 4) Measure the voltage between rear oxygen sensor harness connector and engine ground or chassis ground. ***Connector & terminal*** ***(B19) No. 5 (+) — Engine ground (−):***	Is the measured value within 0.2 to 0.5 V?	Replace the rear oxygen sensor. <Ref. to FU(H4SO U5)-43, Rear Oxygen Sensor.>	Repair harness and connector. NOTE: In this case, repair the following: • Open circuit in harness between rear oxygen sensor and ECM connector • Poor contact in rear oxygen sensor connector • Poor contact in ECM connector
5	**CHECK EXHAUST SYSTEM.** NOTE: Check the following items. • Loose installation of exhaust pipe • Damage of exhaust pipe resulting in a hole	Is there any fault in exhaust system?	Repair or replace faulty parts.	Replace the rear oxygen sensor. <Ref. to FU(H4SO U5)-43, Rear Oxygen Sensor.>

AK:DTC P0144 O2 SENSOR CIRCUIT HIGH VOLTAGE (BANK 1 SENSOR 3)

DTC DETECTING CONDITION:

- Two consecutive driving cycles with fault
- GENERAL DESCRIPTION <Ref. to GD(H4SO U5)-77, DTC P0144 O2 SENSOR CIRCUIT HIGH VOLTAGE (BANK 1 SENSOR 3), Diagnostic Trouble Code (DTC) Detecting Criteria.>

CAUTION:
After repair or replacement of faulty parts, conduct Clear Memory Mode <Ref. to EN(H4SO U5)(diag)-46, OPERATION, Clear Memory Mode.> and Inspection Mode <Ref. to EN(H4SO U5)(diag)-37, OPERATION, Inspection Mode.>.

WIRING DIAGRAM:

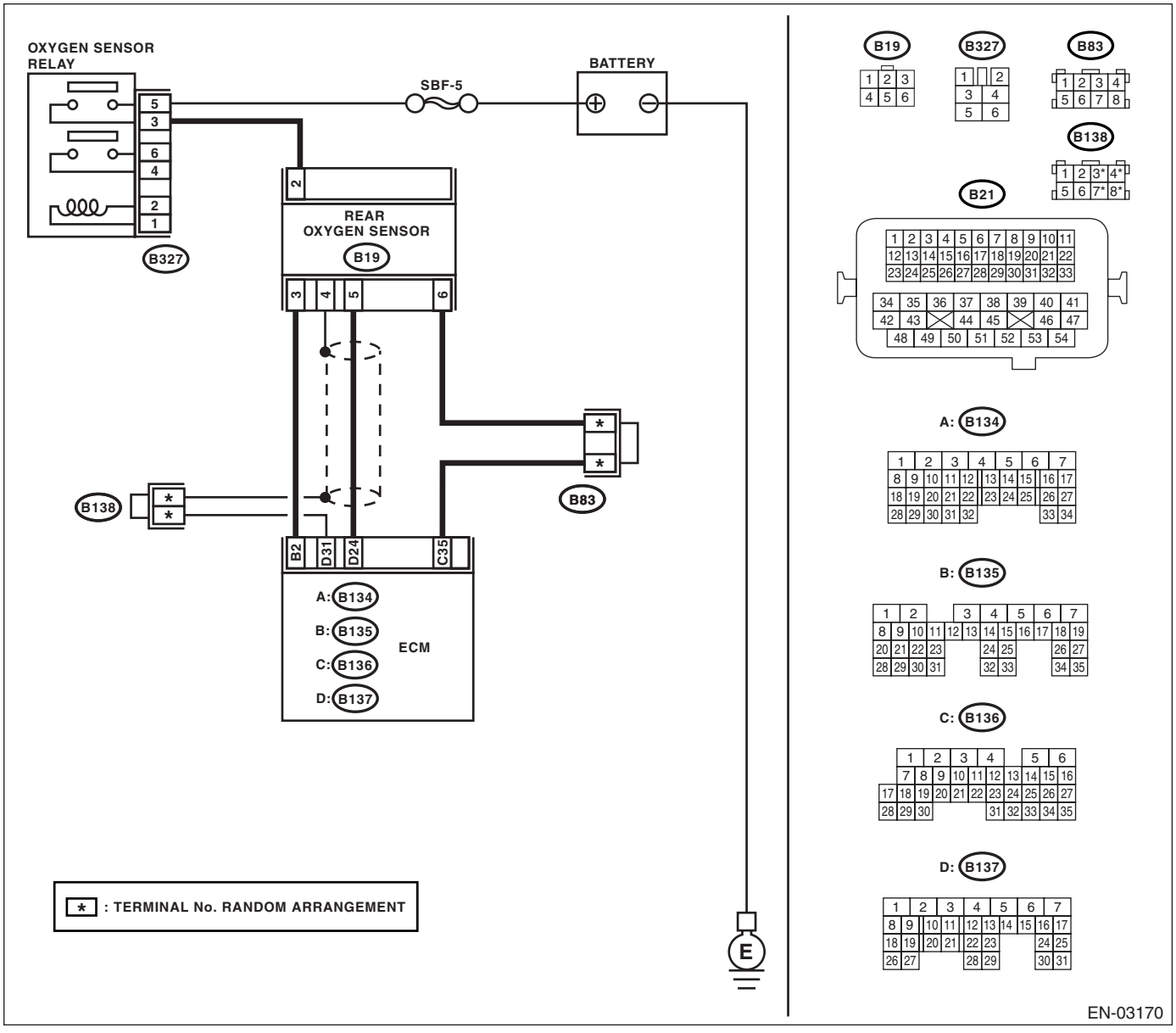

	Step	Check	Yes	No
1	**CHECK FOR ANY OTHER DTC ON DISPLAY.**	Is any other DTC displayed?	Check DTC using "List of Diagnostic Trouble Code (DTC)". <Ref. to EN(H4SO U5)(diag)-73, List of Diagnostic Trouble Code (DTC).> NOTE: In this case, it is not necessary to inspect DTC P0144.	Go to step **2.**
2	**CHECK REAR OXYGEN SENSOR DATA.** 1) Warm-up the engine until engine coolant temperature is above 70°C (158°F), and immediately decrease the engine speed from 5,000 rpm. 2) Read the data of rear oxygen sensor signal using Subaru Select Monitor or general scan tool. NOTE: • Subaru Select Monitor For detailed operation procedure, refer to the "READ CURRENT DATA SHOWN ON DISPLAY FOR ENGINE". <Ref. to EN(H4SO U5)(diag)-28, Subaru Select Monitor.> • General scan tool For detailed operation procedure, refer to the general scan tool instruction manual.	Is the measured value 250 mV?	Go to step **5.**	Go to step **3.**
3	**CHECK HARNESS BETWEEN ECM AND REAR OXYGEN SENSOR CONNECTOR.** 1) Turn the ignition switch to OFF. 2) Disconnect the connectors from ECM and rear oxygen sensor. 3) Measure the resistance of harness between ECM and rear oxygen sensor connector. ***Connector & terminal*** ***(B137) No. 24 — (B19) No. 5:*** ***(B136) No. 35 — (B19) No. 6:***	Is the measured value more than 3 Ω?	Repair open circuit in harness between ECM and rear oxygen sensor connector.	Go to step **4.**
4	**CHECK HARNESS BETWEEN REAR OXYGEN SENSOR AND ECM CONNECTOR.** 1) Turn the ignition switch to OFF. 2) Disconnect the connector from rear oxygen sensor. 3) Turn the ignition switch to ON. 4) Measure the voltage between rear oxygen sensor harness connector and engine ground or chassis ground. ***Connector & terminal*** ***(B19) No. 5 (+) — Engine ground (−):***	Is the measured value within 0.2 to 0.5 V?	Replace the rear oxygen sensor. <Ref. to FU(H4SO U5)-43, Rear Oxygen Sensor.>	Repair harness and connector. NOTE: In this case, repair the following: • Open circuit in harness between rear oxygen sensor and ECM connector • Poor contact in rear oxygen sensor connector • Poor contact in ECM connector

Step		Check	Yes	No
5	**CHECK EXHAUST SYSTEM.** NOTE: Check the following items. • Loose installation of exhaust pipe • Damage of exhaust pipe resulting in a hole	Is there any fault in exhaust system?	Repair or replace faulty parts.	Replace the rear oxygen sensor. <Ref. to FU(H4SO U5)-43, Rear Oxygen Sensor.>

AL:DTC P0151 O2 SENSOR CIRCUIT LOW VOLTAGE (BANK 2 SENSOR 1)

DTC DETECTING CONDITION:

- Detect as soon as malfunction occurs.
- GENERAL DESCRIPTION <Ref. to GD(H4SO U5)-79, DTC P0151 O2 SENSOR CIRCUIT LOW VOLTAGE (BANK 2 SENSOR 1), Diagnostic Trouble Code (DTC) Detecting Criteria.>

CAUTION:
After repair or replacement of faulty parts, conduct Clear Memory Mode <Ref. to EN(H4SO U5)(diag)-46, OPERATION, Clear Memory Mode.> and Inspection Mode <Ref. to EN(H4SO U5)(diag)-37, OPERATION, Inspection Mode.>.

WIRING DIAGRAM:

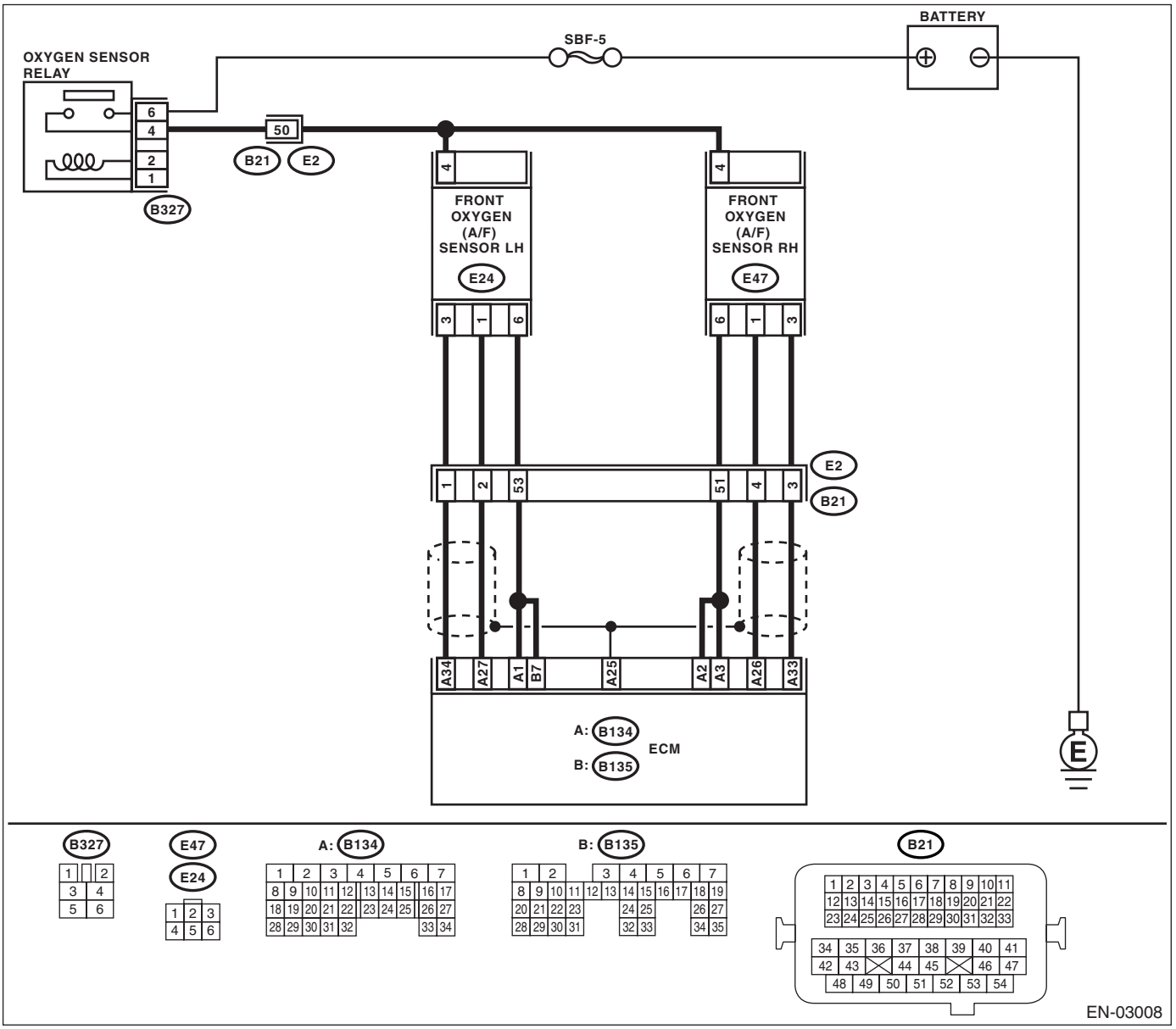

Step		Check	Yes	No
1	**CHECK HARNESS BETWEEN ECM AND FRONT OXYGEN (A/F) SENSOR CONNECTOR.** 1) Turn the ignition switch to OFF. 2) Disconnect the connectors from ECM and front oxygen (A/F) sensor connector. 3) Measure the resistance of harness between ECM and front oxygen (A/F) sensor connector. ***Connector & terminal*** ***(B134) No. 27 — Chassis ground:*** ***(B134) No. 34 — Chassis ground:***	Is the measured value more than 1 MΩ?	Replace the front oxygen (A/F) sensor. <Ref. to FU(H4SO U5)-37, Front Oxygen (A/F) Sensor.>	Repair ground short circuit in harness between ECM and front oxygen (A/F) sensor connector.

AM:DTC P0152 O2 SENSOR CIRCUIT HIGH VOLTAGE (BANK 2 SENSOR 1)

DTC DETECTING CONDITION:

- Detect as soon as malfunction occurs.
- GENERAL DESCRIPTION <Ref. to GD(H4SO U5)-79, DTC P0152 O2 SENSOR CIRCUIT HIGH VOLTAGE (BANK 2 SENSOR 1), Diagnostic Trouble Code (DTC) Detecting Criteria.>

CAUTION:

After repair or replacement of faulty parts, conduct Clear Memory Mode <Ref. to EN(H4SO U5)(diag)-46, OPERATION, Clear Memory Mode.> and Inspection Mode <Ref. to EN(H4SO U5)(diag)-37, OPERATION, Inspection Mode.>.

WIRING DIAGRAM:

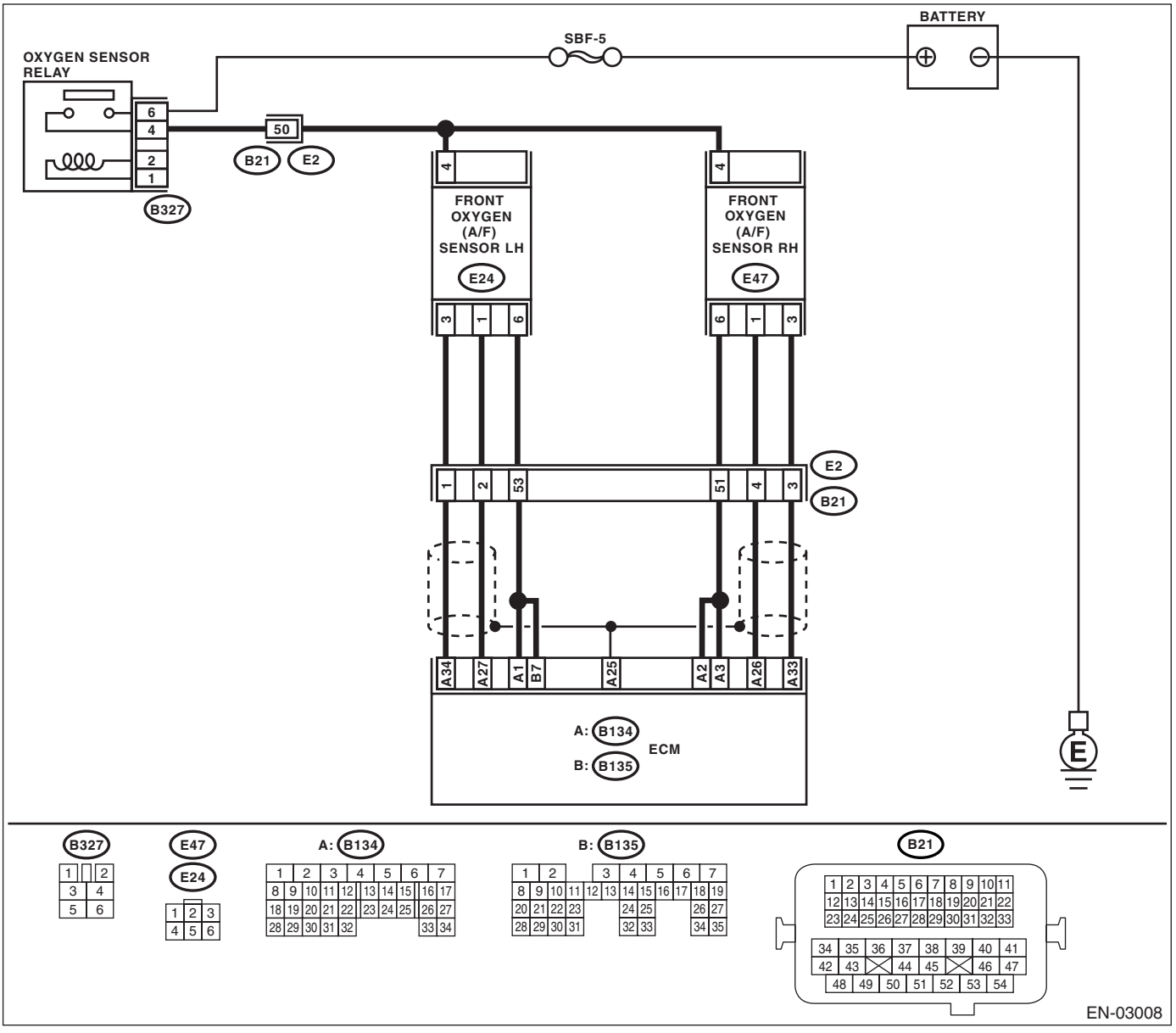

	Step	Check	Yes	No
1	**CHECK HARNESS BETWEEN ECM AND FRONT OXYGEN (A/F) SENSOR CONNECTOR.** 1) Turn the ignition switch to ON. 2) Disconnect the connectors from front oxygen (A/F) sensor. 3) Measure the voltage of harness between ECM connector and chassis ground. ***Connector & terminal*** ***(B134) No. 27 (+) — Chassis ground (−):*** ***(B134) No. 34 (+) — Chassis ground (−):***	Is the measured value more than 8 V?	Replace the front oxygen (A/F) sensor. <Ref. to FU(H4SO U5)-37, Front Oxygen (A/F) Sensor.>	Repair battery short circuit in harness between ECM and front oxygen (A/F) sensor connector.

AN:DTC P0153 O2 SENSOR CIRCUIT SLOW RESPONSE (BANK 2 SENSOR 1)

DTC DETECTING CONDITION:

- Two consecutive driving cycles with fault
- GENERAL DESCRIPTION <Ref. to GD(H4SO U5)-79, DTC P0153 O2 SENSOR CIRCUIT SLOW RESPONSE (BANK 2 SENSOR 1), Diagnostic Trouble Code (DTC) Detecting Criteria.>

CAUTION:

After repair or replacement of faulty parts, conduct Clear Memory Mode <Ref. to EN(H4SO U5)(diag)-46, OPERATION, Clear Memory Mode.> and Inspection Mode <Ref. to EN(H4SO U5)(diag)-37, OPERATION, Inspection Mode.>.

WIRING DIAGRAM:

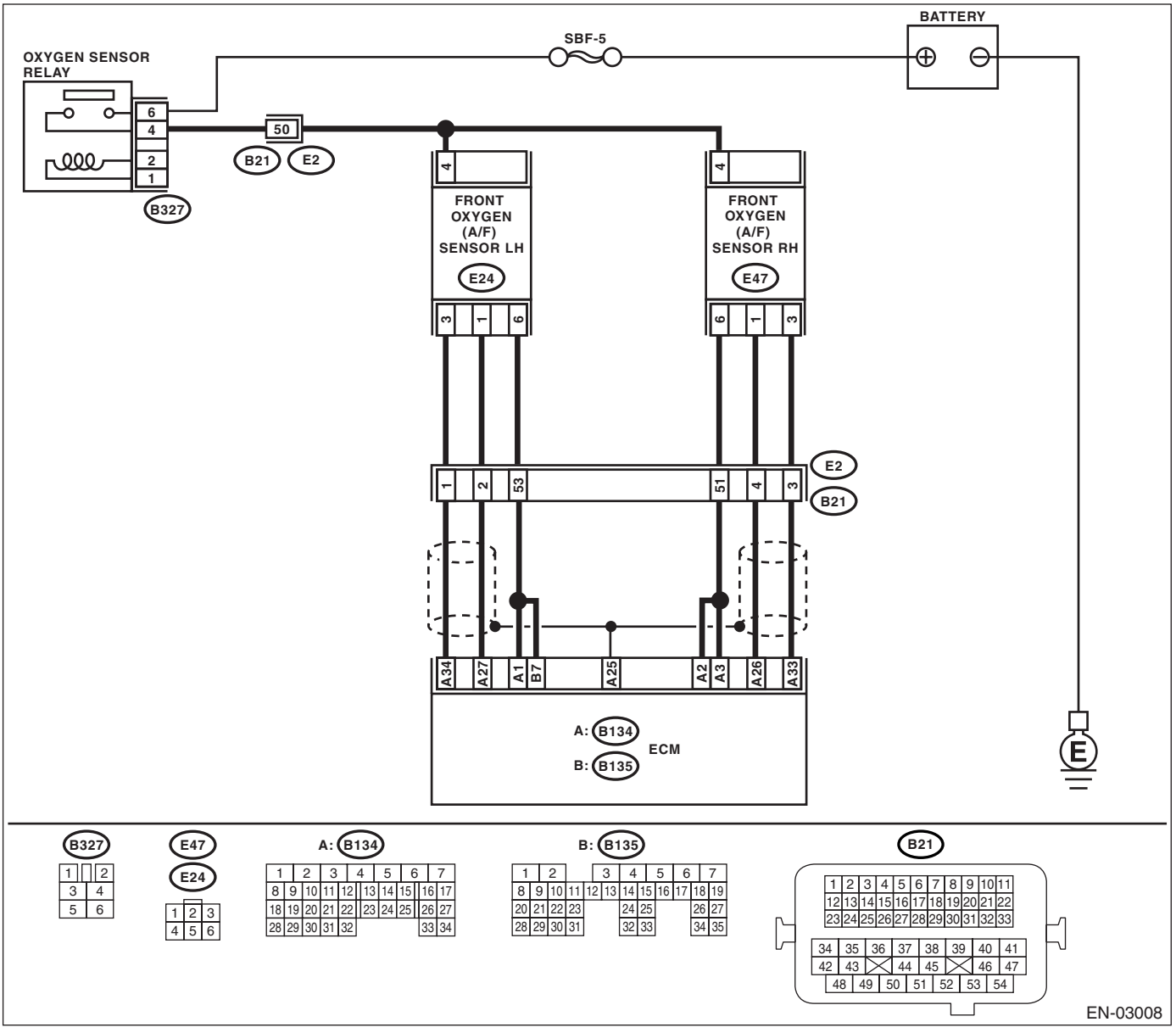

	Step	Check	Yes	No
1	**CHECK FOR ANY OTHER DTC ON DISPLAY.**	Is any other DTC displayed?	Check DTC using "List of Diagnostic Trouble Code (DTC)". <Ref. to EN(H4SO U5)(diag)-73, List of Diagnostic Trouble Code (DTC).> NOTE: In this case, it is not necessary to inspect DTC P0153.	Go to step **2.**
2	**CHECK EXHAUST SYSTEM.** NOTE: Check the following items. • Loose installation of exhaust pipe • Damage of exhaust pipe resulting in a hole	Is there any fault in exhaust system?	Repair or replace the faulty part.	Replace the front oxygen (A/F) sensor. <Ref. to FU(H4SO U5)-37, Front Oxygen (A/F) Sensor.>

AO:DTC P0154 O2 SENSOR CIRCUIT NO ACTIVITY DETECTED (BANK 2 SENSOR 1)

DTC DETECTING CONDITION:

- Detect as soon as malfunction occurs.
- GENERAL DESCRIPTION <Ref. to GD(H4SO U5)-79, DTC P0154 O2 SENSOR CIRCUIT NO ACTIVITY DETECTED (BANK 2 SENSOR 1), Diagnostic Trouble Code (DTC) Detecting Criteria.>

CAUTION:

After repair or replacement of faulty parts, conduct Clear Memory Mode <Ref. to EN(H4SO U5)(diag)-46, OPERATION, Clear Memory Mode.> and Inspection Mode <Ref. to EN(H4SO U5)(diag)-37, OPERATION, Inspection Mode.>.

WIRING DIAGRAM:

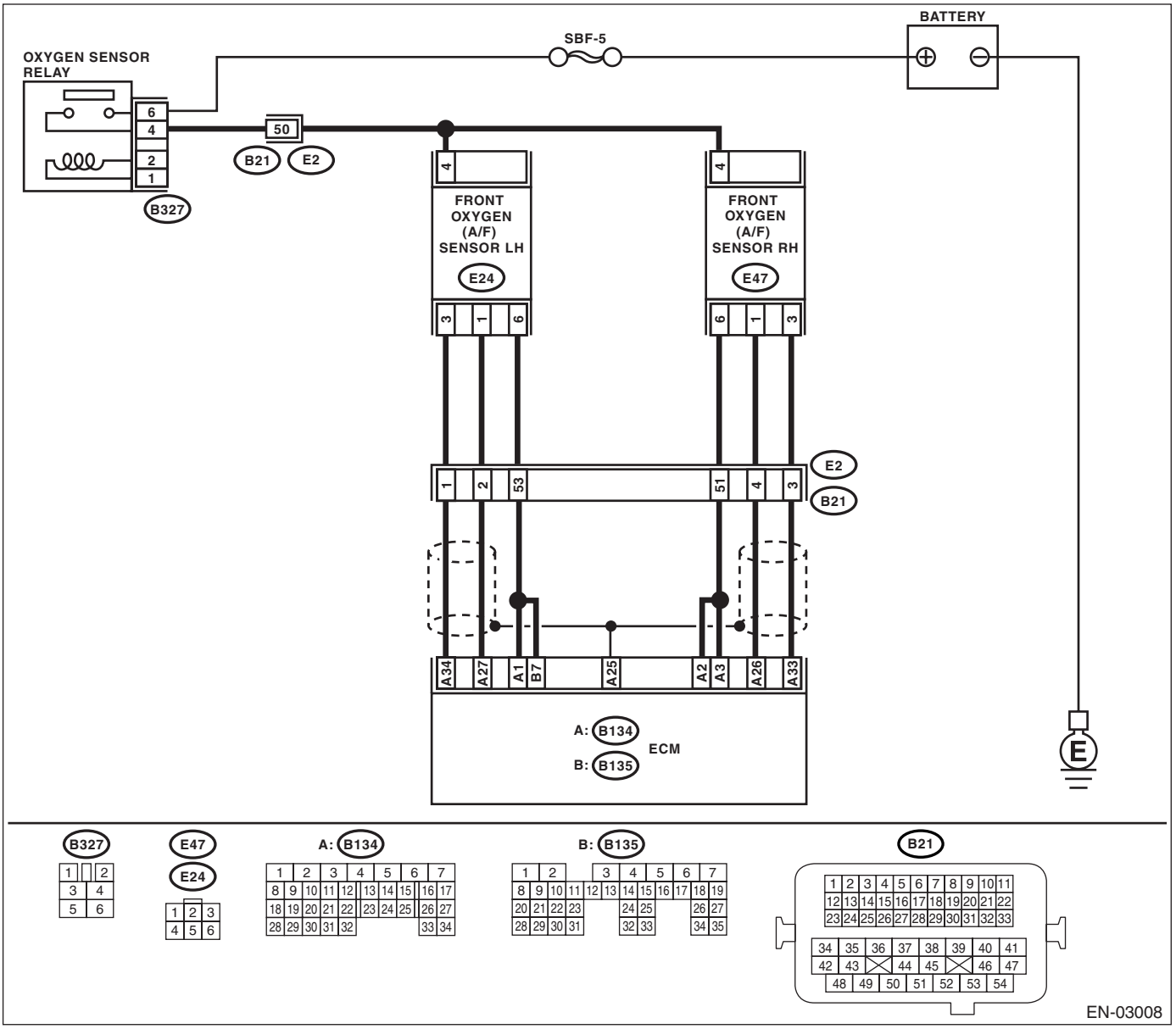

	Step	Check	Yes	No
1	**CHECK HARNESS BETWEEN ECM AND FRONT OXYGEN (A/F) SENSOR CONNECTOR.** 1) Turn the ignition switch to OFF. 2) Disconnect the connectors from ECM and front oxygen (A/F) sensor connector. 3) Measure the resistance of harness between ECM and front oxygen (A/F) sensor connector. ***Connector & terminal*** ***(B134) No. 27 — (E24) No. 1:*** ***(B134) No. 34 — (E24) No. 3:***	Is the measured value less than 1 Ω?	Go to step **2.**	Repair harness and connector. NOTE: In this case, repair the following: • Open circuit in harness between ECM and front oxygen (A/F) sensor connector • Poor contact in front oxygen (A/F) sensor connector • Poor contact in ECM connector
2	**CHECK POOR CONTACT.** Check poor contact in front oxygen (A/F) sensor connector.	Is there poor contact in front oxygen (A/F) sensor connector?	Repair poor contact in front oxygen (A/F) sensor connector.	Replace the front oxygen (A/F) sensor. <Ref. to FU(H4SO U5)-37, Front Oxygen (A/F) Sensor.>

AP:DTC P0157 O2 SENSOR CIRCUIT LOW VOLTAGE (BANK 2 SENSOR 2)

DTC DETECTING CONDITION:

- Two consecutive driving cycles with fault
- GENERAL DESCRIPTION <Ref. to GD(H4SO U5)-79, DTC P0157 O2 SENSOR CIRCUIT LOW VOLTAGE (BANK 2 SENSOR 2), Diagnostic Trouble Code (DTC) Detecting Criteria.>

CAUTION:
After repair or replacement of faulty parts, conduct Clear Memory Mode <Ref. to EN(H4SO U5)(diag)-46, OPERATION, Clear Memory Mode.> and Inspection Mode <Ref. to EN(H4SO U5)(diag)-37, OPERATION, Inspection Mode.>.

WIRING DIAGRAM:

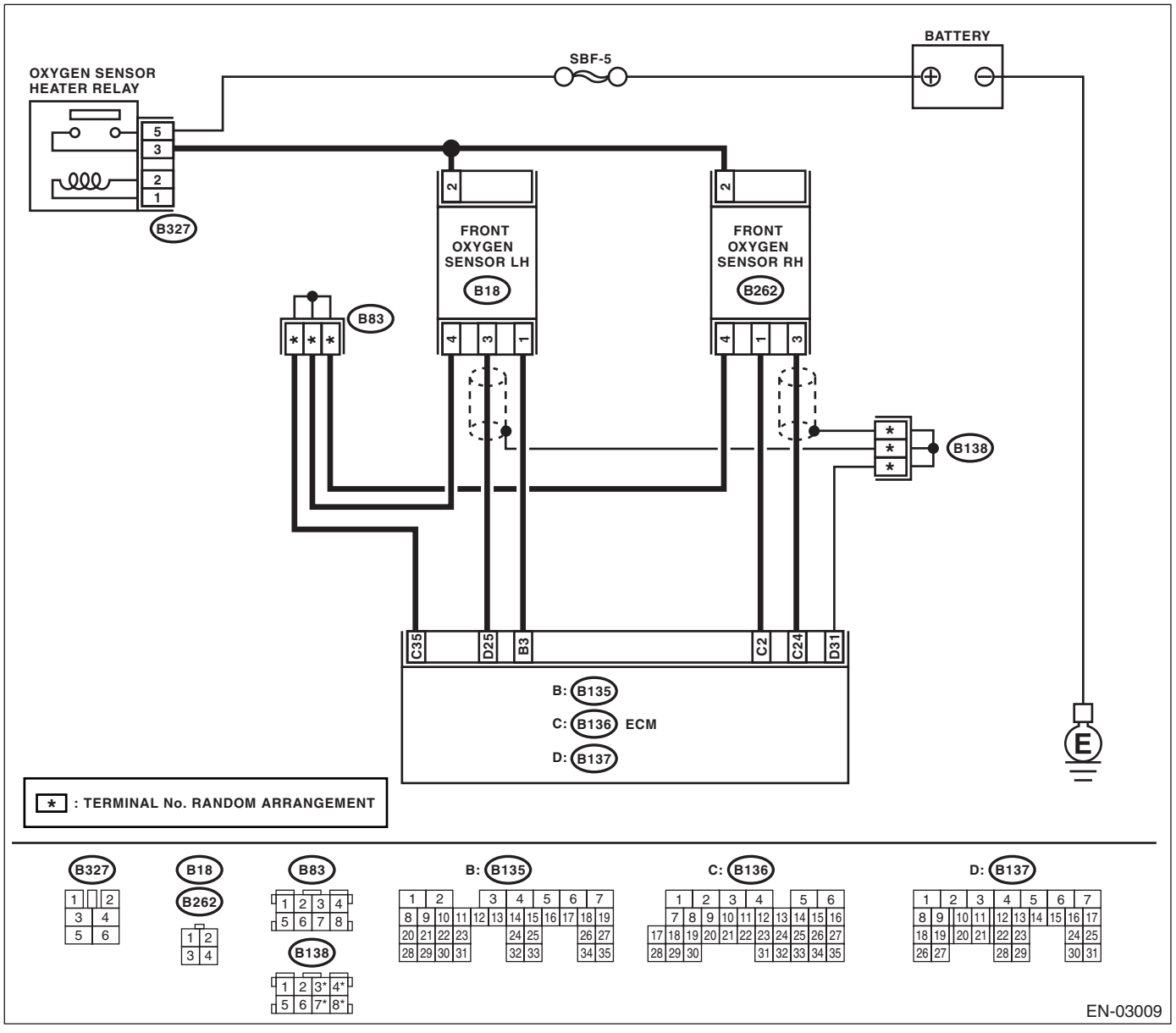

	Step	Check	Yes	No
1	**CHECK FOR ANY OTHER DTC ON DISPLAY.**	Is any other DTC displayed?	Check DTC using "List of Diagnostic Trouble Code (DTC)". <Ref. to EN(H4SO U5)(diag)-73, List of Diagnostic Trouble Code (DTC).> NOTE: In this case, it is not necessary to inspect DTC P0157.	Go to step **2.**
2	**CHECK FRONT OXYGEN SENSOR DATA.** 1) Warm-up the engine until engine coolant temperature is above 70°C (158°F), and keep the engine speed at 5,000 rpm. 2) Read the data of front oxygen sensor signal using Subaru Select Monitor or general scan tool. NOTE: • Subaru Select Monitor For detailed operation procedure, refer to the "READ CURRENT DATA SHOWN ON DISPLAY FOR ENGINE". <Ref. to EN(H4SO U5)(diag)-28, Subaru Select Monitor.> • General scan tool For detailed operation procedure, refer to the general scan tool instruction manual.	Is the measured value more than 490 mV?	Go to step **5.**	Go to step **3.**
3	**CHECK HARNESS BETWEEN ECM AND FRONT OXYGEN SENSOR CONNECTOR.** 1) Turn the ignition switch to OFF. 2) Disconnect the connectors from ECM and front oxygen sensor. 3) Measure the resistance of harness between ECM and front oxygen sensor connector. ***Connector & terminal*** ***(B137) No. 25 — (B18) No. 3:*** ***(B136) No. 35 — (B18) No. 4:***	Is the measured value more than 3 Ω?	Repair open circuit in harness between ECM and front oxygen sensor connector.	Go to step **4.**
4	**CHECK HARNESS BETWEEN FRONT OXYGEN SENSOR AND ECM CONNECTOR.** 1) Turn the ignition switch to OFF. 2) Disconnect the connector from front oxygen sensor. 3) Turn the ignition switch to ON. 4) Measure the voltage between front oxygen sensor harness connector and engine ground or chassis ground. ***Connector & terminal*** ***(B18) No. 3 (+) — Engine ground (−):***	Is the measured value within 0.2 to 0.5 V?	Replace the front oxygen sensor. <Ref. to FU(H4SO U5)-40, Front Oxygen Sensor.>	Repair harness and connector. NOTE: In this case, repair the following: • Open circuit in harness between front oxygen sensor and ECM connector • Poor contact in front oxygen sensor connector • Poor contact in ECM connector
5	**CHECK EXHAUST SYSTEM.** NOTE: Check the following items. • Loose installation of exhaust pipe • Damage of exhaust pipe resulting in a hole	Is there any fault in exhaust system?	Repair or replace faulty parts.	Replace the front oxygen sensor. <Ref. to FU(H4SO U5)-40, Front Oxygen Sensor.>

AQ:DTC P0158 O2 SENSOR CIRCUIT HIGH VOLTAGE (BANK 2 SENSOR 2)

DTC DETECTING CONDITION:

- Two consecutive driving cycles with fault
- GENERAL DESCRIPTION <Ref. to GD(H4SO U5)-79, DTC P0158 O2 SENSOR CIRCUIT HIGH VOLTAGE (BANK 2 SENSOR 2), Diagnostic Trouble Code (DTC) Detecting Criteria.>

CAUTION:

After repair or replacement of faulty parts, conduct Clear Memory Mode <Ref. to EN(H4SO U5)(diag)-46, OPERATION, Clear Memory Mode.> and Inspection Mode <Ref. to EN(H4SO U5)(diag)-37, OPERATION, Inspection Mode.>.

WIRING DIAGRAM:

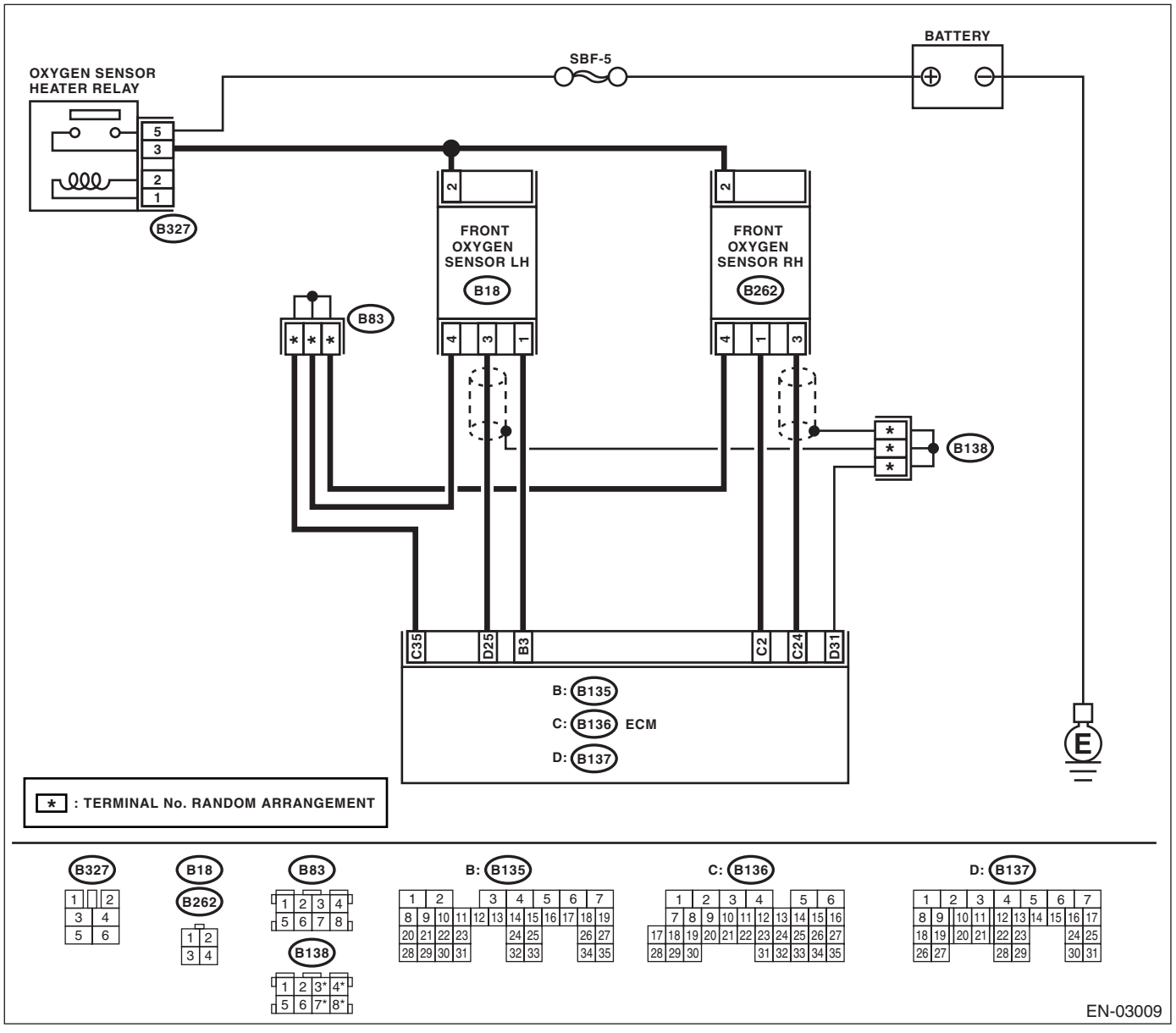

	Step	Check	Yes	No
1	**CHECK FOR ANY OTHER DTC ON DISPLAY.**	Is any other DTC displayed?	Check DTC using "List of Diagnostic Trouble Code (DTC)". <Ref. to EN(H4SO U5)(diag)-73, List of Diagnostic Trouble Code (DTC).> NOTE: In this case, it is not necessary to inspect DTC P0158.	Go to step **2.**
2	**CHECK FRONT OXYGEN SENSOR DATA.** 1) Warm-up the engine until engine coolant temperature is above 70°C (158°F), and immediately decrease the engine speed from 5,000 rpm. 2) Read the data of front oxygen sensor signal using Subaru Select Monitor or general scan tool. NOTE: • Subaru Select Monitor For detailed operation procedure, refer to the "READ CURRENT DATA SHOWN ON DISPLAY FOR ENGINE". <Ref. to EN(H4SO U5)(diag)-28, Subaru Select Monitor.> • General scan tool For detailed operation procedure, refer to the general scan tool instruction manual.	Is the measured value less than 250 mV?	Go to step **5.**	Go to step **3.**
3	**CHECK HARNESS BETWEEN ECM AND FRONT OXYGEN SENSOR CONNECTOR.** 1) Turn the ignition switch to OFF. 2) Disconnect the connectors from ECM and front oxygen sensor. 3) Measure the resistance of harness between ECM and front oxygen sensor connector. ***Connector & terminal*** ***(B137) No. 25 — (B18) No. 3:*** ***(B136) No. 35 — (B18) No. 4:***	Is the measured value more than 3 Ω?	Repair open circuit in harness between ECM and front oxygen sensor connector.	Go to step **4.**
4	**CHECK HARNESS BETWEEN FRONT OXYGEN SENSOR AND ECM CONNECTOR.** 1) Turn the ignition switch to OFF. 2) Disconnect the connector from front oxygen sensor. 3) Turn the ignition switch to ON. 4) Measure the voltage between front oxygen sensor harness connector and engine ground or chassis ground. ***Connector & terminal*** ***(B18) No. 3 (+) — Engine ground (−):***	Is the measured value within 0.2 to 0.5 V?	Replace the front oxygen sensor. <Ref. to FU(H4SO U5)-40, Front Oxygen Sensor.>	Repair harness and connector. NOTE: In this case, repair the following: • Open circuit in harness between front oxygen sensor and ECM connector • Poor contact in front oxygen sensor connector • Poor contact in ECM connector

Step		Check	Yes	No
5	**CHECK EXHAUST SYSTEM.** NOTE: Check the following items. • Loose installation of exhaust pipe • Damage of exhaust pipe resulting in a hole	Is there any fault in exhaust system?	Repair or replace faulty parts.	Replace the front oxygen sensor. <Ref. to FU(H4SO U5)-40, Front Oxygen Sensor.>

AR:DTC P0159 O2 SENSOR CIRCUIT SLOW RESPONSE (BANK 2 SENSOR 2)

DTC DETECTING CONDITION:

- Two consecutive driving cycles with fault
- GENERAL DESCRIPTION <Ref. to GD(H4SO U5)-79, DTC P0159 O2 SENSOR CIRCUIT SLOW RESPONSE (BANK 2 SENSOR 2), Diagnostic Trouble Code (DTC) Detecting Criteria.>

CAUTION:

After repair or replacement of faulty parts, conduct Clear Memory Mode <Ref. to EN(H4SO U5)(diag)-46, OPERATION, Clear Memory Mode.> and Inspection Mode <Ref. to EN(H4SO U5)(diag)-37, OPERATION, Inspection Mode.>.

WIRING DIAGRAM:

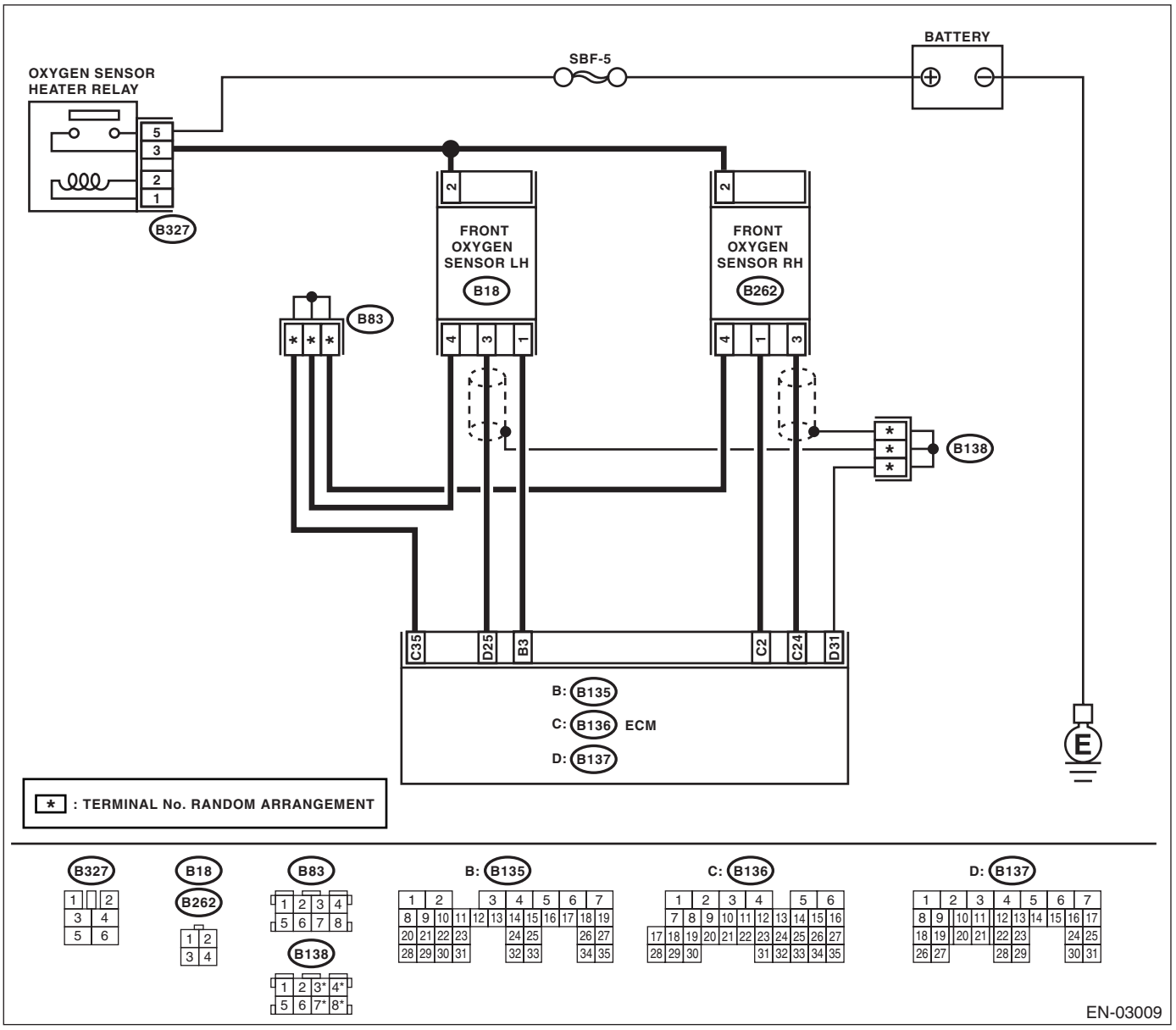

	Step	Check	Yes	No
1	**CHECK FOR ANY OTHER DTC ON DISPLAY.**	Is any other DTC displayed?	Check DTC using "List of Diagnostic Trouble Code (DTC)". <Ref. to EN(H4SO U5)(diag)-73, List of Diagnostic Trouble Code (DTC).> NOTE: In this case, it is not necessary to inspect DTC P0139.	Go to step **2.**
2	**CHECK HARNESS BETWEEN ECM AND FRONT OXYGEN SENSOR CONNECTOR.** 1) Turn the ignition switch to OFF. 2) Disconnect the connectors from ECM and front oxygen sensor. 3) Measure the resistance of harness between ECM and front oxygen sensor connector. ***Connector & terminal*** ***(B137) No. 25 — (B18) No. 3:***	Is the resistance less than 1 Ω?	Go to step **3.**	Repair open circuit in harness between ECM and front oxygen sensor connector.
3	**CHECK HARNESS BETWEEN FRONT OXYGEN SENSOR AND ECM CONNECTOR.** Measure the resistance between front oxygen sensor harness connector and chassis ground. ***Connector & terminal*** ***(B18) No. 3 — Chassis ground:***	Is the resistance more than 1 MΩ?	Go to step **4.**	Repair short circuit to ground in harness.
4	**CHECK FRONT OXYGEN SENSOR DATA.** Measure the resistance between connector terminals of front oxygen sensor. ***terminals*** ***No. 3 — No. 4:***	Is the resistance less than 1 Ω?	Replace the front oxygen sensor. <Ref. to FU(H4SO U5)-40, Front Oxygen Sensor.>	A temporary poor contact occurs. Check poor contact in connector.

AS:DTC P0171 SYSTEM TOO LEAN (BANK 1)

Refer to DTC P0175 for diagnostic procedure. <Ref. to EN(H4SO U5)(diag)-177, DTC P0175 SYSTEM TOO RICH (BANK 2), Diagnostic Procedure with Diagnostic Trouble Code (DTC).>

AT:DTC P0172 SYSTEM TOO RICH (BANK 1)

Refer to DTC P0175 for diagnostic procedure. <Ref. to EN(H4SO U5)(diag)-177, DTC P0175 SYSTEM TOO RICH (BANK 2), Diagnostic Procedure with Diagnostic Trouble Code (DTC).>

AU:DTC P0174 SYSTEM TOO LEAN (BANK 2)

Refer to DTC P0175 for diagnostic procedure. <Ref. to EN(H4SO U5)(diag)-177, DTC P0175 SYSTEM TOO RICH (BANK 2), Diagnostic Procedure with Diagnostic Trouble Code (DTC).>

AV:DTC P0175 SYSTEM TOO RICH (BANK 2)

DTC DETECTING CONDITION:

- Two consecutive driving cycles with fault
- GENERAL DESCRIPTION <Ref. to GD(H4SO U5)-80, DTC P0171 SYSTEM TOO LEAN (BANK 1), Diagnostic Trouble Code (DTC) Detecting Criteria.> <Ref. to GD(H4SO U5)-82, DTC P0172 SYSTEM TOO RICH (BANK 1), Diagnostic Trouble Code (DTC) Detecting Criteria.> and <Ref. to GD(H4SO U5)-84, DTC P0174 SYSTEM TOO LEAN (BANK 2), Diagnostic Trouble Code (DTC) Detecting Criteria.> <Ref. to GD(H4SO U5)-84, DTC P0175 SYSTEM TOO RICH (BANK 2), Diagnostic Trouble Code (DTC) Detecting Criteria.>

TROUBLE SYMPTOM:

- Erroneous idling
- Engine stalls.
- Poor driving performance

CAUTION:

After repair or replacement of faulty parts, conduct Clear Memory Mode <Ref. to EN(H4SO U5)(diag)-46, OPERATION, Clear Memory Mode.> and Inspection Mode <Ref. to EN(H4SO U5)(diag)-37, OPERATION, Inspection Mode.>.

	Step	Check	Yes	No
1	**CHECK EXHAUST SYSTEM.**	Are there holes or loose bolts on exhaust system?	Repair the exhaust system.	Go to step **2.**
2	**CHECK AIR INTAKE SYSTEM.**	Are there holes, loose bolts or disconnection of hose on air intake system?	Repair the air intake system.	Go to step **3.**
3	**CHECK FUEL PRESSURE.** **Warning:** **• Place "NO FIRE" signs near the working area.** **• Be careful not to spill fuel on the floor.** Measure the fuel pressure while disconnecting pressure regulator vacuum hose from intake manifold. <Ref. to ME(H4SO)-25, INSPECTION, Fuel Pressure.> **Warning:** **Before removing the fuel pressure gauge, release fuel pressure.** NOTE: If the fuel pressure does not increase, squeeze fuel return hose 2 to 3 times, then measure fuel pressure again.	Is the measured value 284 — 314 kPa (2.9 — 3.2 kg/cm^2, 41 — 46 psi)?	Go to step **4.**	Repair the following items. Fuel pressure too high: • Clogged fuel return line or bent hose Fuel pressure too low: • Improper fuel pump discharge • Clogged fuel supply line
4	**CHECK FUEL PRESSURE.** After connecting the pressure regulator vacuum hose, measure fuel pressure. <Ref. to ME(H4SO)-25, INSPECTION, Fuel Pressure.> **Warning:** **Before removing the fuel pressure gauge, release fuel pressure.** NOTE: • If the fuel pressure does not increase, squeeze fuel return hose 2 to 3 times, then measure fuel pressure again. • If out of specification as measured at this step, check or replace the pressure regulator and pressure regulator vacuum hose.	Is the measured value 206 — 235 kPa (2.1 — 2.4 kg/cm^2, 30 — 34 psi)?	Go to step **5.**	Repair the following items. Fuel pressure too high: • Faulty pressure regulator • Clogged fuel return line or bent hose Fuel pressure too low: • Faulty pressure regulator • Improper fuel pump discharge • Clogged fuel supply line

	Step	Check	Yes	No
5	**CHECK ENGINE COOLANT TEMPERATURE SENSOR.** 1) Start the engine and warm-up completely. 2) Read the data of engine coolant temperature sensor signal using Subaru Select Monitor or general scan tool. NOTE: • Subaru Select Monitor For detailed operation procedure, refer to the "READ CURRENT DATA FOR ENGINE". <Ref. to EN(H4SO U5)(diag)-28, Subaru Select Monitor.> • General scan tool For detailed operation procedure, refer to the general scan tool instruction manual.	Is the temperature more than 60°C (140°F)?	Go to step **6.**	Replace the engine coolant temperature sensor. <Ref. to FU(H4SO U5)-23, Engine Coolant Temperature Sensor.>
6	**CHECK MASS AIR FLOW AND INTAKE AIR TEMPERATURE SENSOR.** 1) Start the engine and warm-up engine until coolant temperature is greater than 60°C (140°F). 2) Place the shift lever in neutral position. 3) Turn the A/C switch to OFF. 4) Turn all accessory switches to OFF. 5) Read the data of mass air flow and intake air temperature sensor signal using Subaru Select Monitor or general scan tool. NOTE: • Subaru Select Monitor For detailed operation procedure, refer to the "READ CURRENT DATA FOR ENGINE". <Ref. to EN(H4SO U5)(diag)-28, Subaru Select Monitor.> • General scan tool For detailed operation procedure, refer to the general scan tool instruction manual.	Is the measured value 2.1 — 3.4 g/s (0.28 — 0.45 lb/m)?	Go to step **7.**	Replace the mass air flow and intake air temperature sensor. <Ref. to FU(H4SO U5)-29, Mass Air Flow and Intake Air Temperature Sensor.>
7	**CHECK MASS AIR FLOW AND INTAKE AIR TEMPERATURE SENSOR.** 1) Start the engine and warm-up engine until coolant temperature is greater than 60°C (140°F). 2) Place the shift lever in neutral position. 3) Turn the A/C switch to OFF. 4) Turn all accessory switches to OFF. 5) Open the front hood. 6) Measure the ambient temperature. 7) Read the data of mass air flow and intake air temperature sensor signal using Subaru Select Monitor or general scan tool. NOTE: • Subaru Select Monitor For detailed operation procedure, refer to the "READ CURRENT DATA FOR ENGINE". <Ref. to EN(H4SO U5)(diag)-28, Subaru Select Monitor.> • General scan tool For detailed operation procedure, refer to the general scan tool instruction manual.	Subtract ambient temperature from intake air temperature. Is the obtained value −10°C — 50°C (14°F — 122°F)?	Contact your SOA Service Center.	Check the mass air flow and intake air temperature sensor. <Ref. to FU(H4SO U5)-29, Mass Air Flow and Intake Air Temperature Sensor.>

AW:DTC P0181 FUEL TEMPERATURE SENSOR “A” CIRCUIT RANGE/PERFORMANCE

DTC DETECTING CONDITION:

- Fault occurs in two consecutive driving cycles
- GENERAL DESCRIPTION <Ref. to GD(H4SO U5)-84, DTC P0181 FUEL TEMPERATURE SENSOR “A” CIRCUIT RANGE/PERFORMANCE, Diagnostic Trouble Code (DTC) Detecting Criteria.>

CAUTION:

After repair or replacement of faulty parts, conduct CLEAR MEMORY MODE <Ref. to EN(H4SO U5)(diag)-46, OPERATION, Clear Memory Mode.> and INSPECTION MODE <Ref. to EN(H4SO U5)(diag)-37, OPERATION, Inspection Mode.>.

WIRING DIAGRAM:

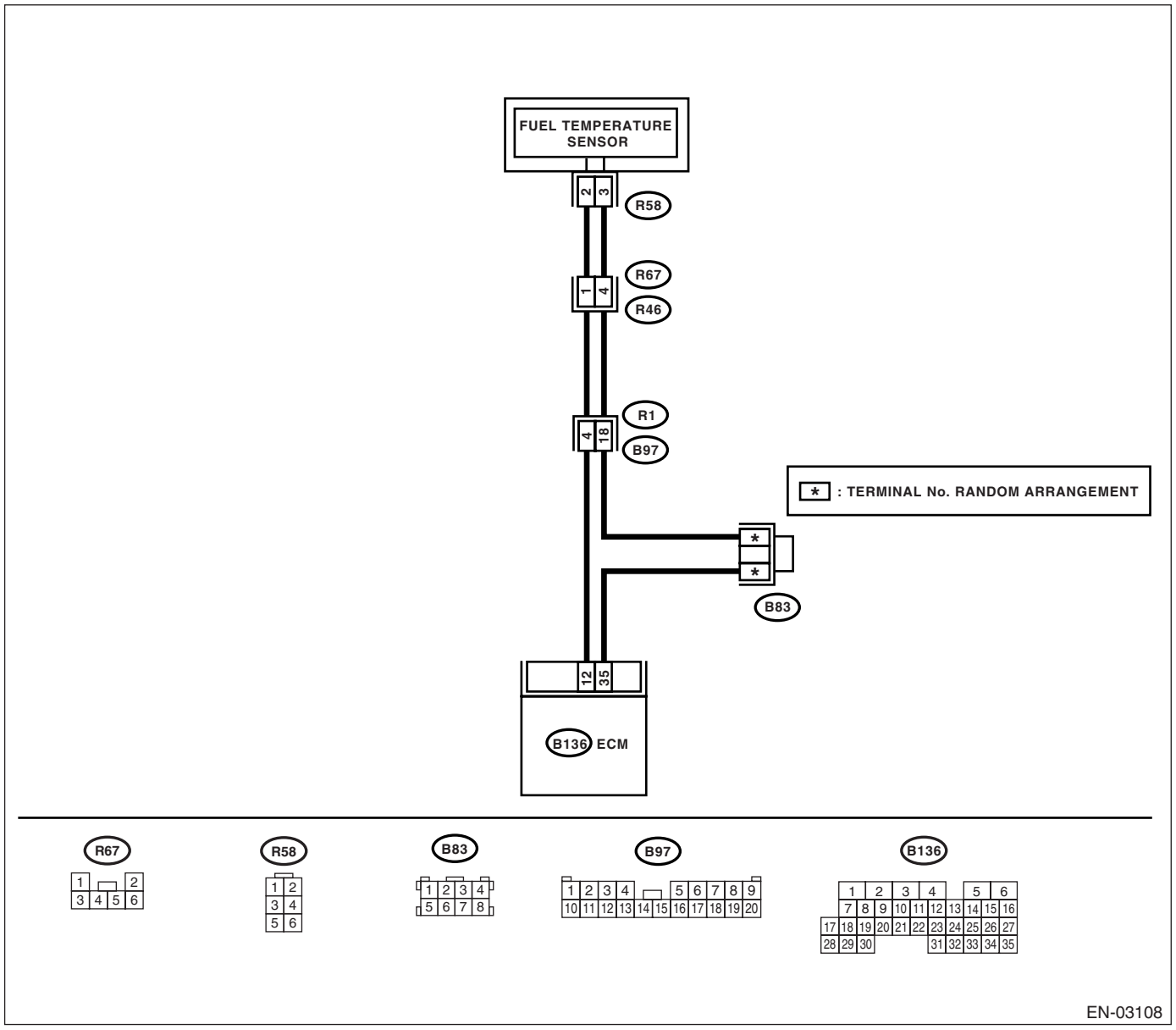

Step		Check	Yes	No
1	**CHECK FOR ANY OTHER DTC ON DISPLAY.**	Is any other DTC displayed?	Inspect DTC using "List of Diagnostic Trouble Code (DTC)". <Ref. to EN(H4SO U5)(diag)-73, List of Diagnostic Trouble Code (DTC).> NOTE: In this case, it is not necessary to inspect DTC P0181.	Replace the fuel temperature sensor. <Ref. to EC(H4SO)-9, Fuel Temperature Sensor.>

AX:DTC P0182 FUEL TEMPERATURE SENSOR “A” CIRCUIT LOW INPUT

DTC DETECTING CONDITION:

- Detect as soon as malfunction occurs.
- GENERAL DESCRIPTION <Ref. to GD(H4SO U5)-87, DTC P0182 FUEL TEMPERATURE SENSOR “A” CIRCUIT LOW INPUT, Diagnostic Trouble Code (DTC) Detecting Criteria.>

CAUTION:
After repair or replacement of faulty parts, conduct CLEAR MEMORY MODE <Ref. to EN(H4SO U5)(diag)-46, OPERATION, Clear Memory Mode.> and INSPECTION MODE <Ref. to EN(H4SO U5)(diag)-37, OPERATION, Inspection Mode.>.

WIRING DIAGRAM:

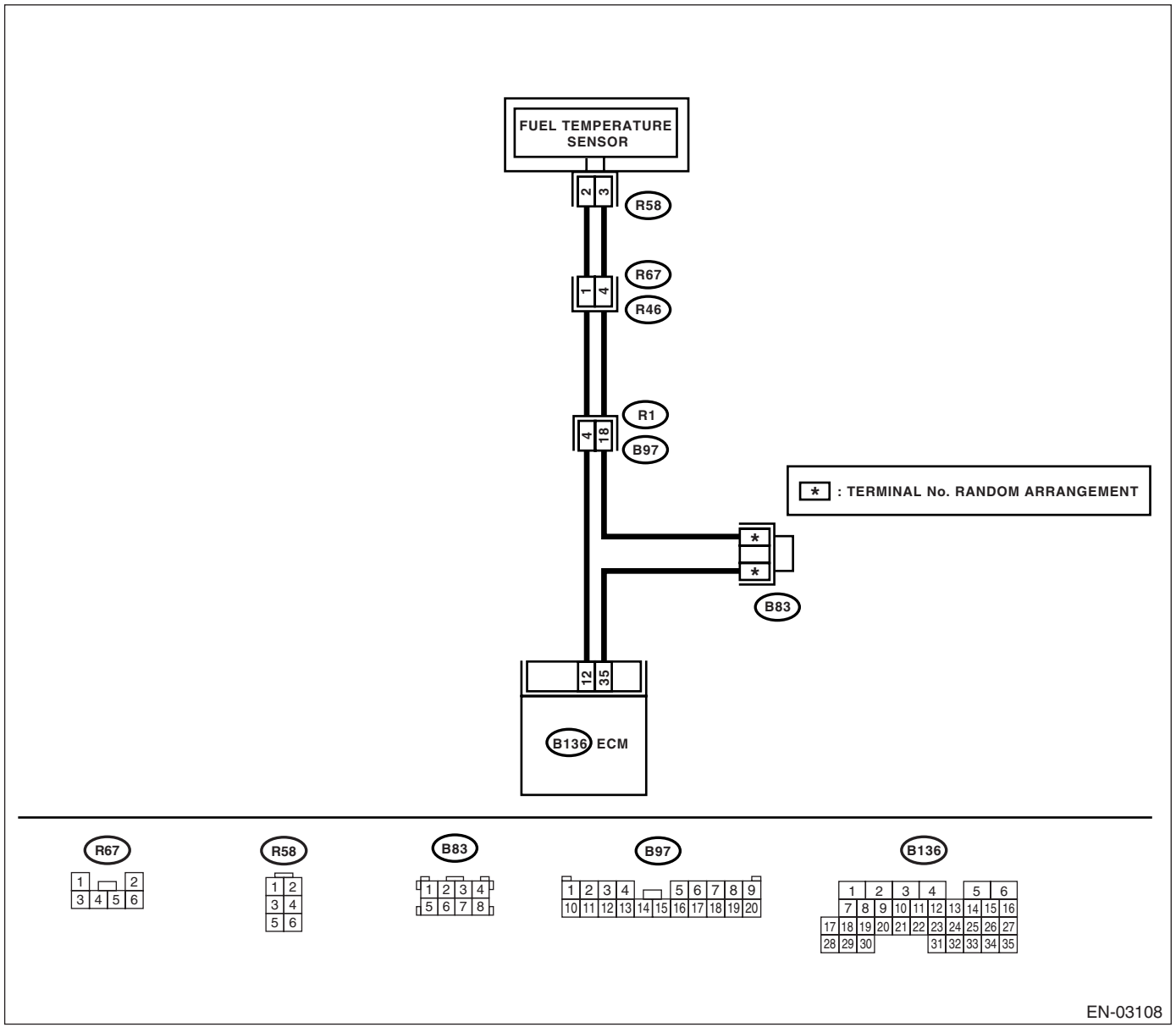

	Step	Check	Yes	No
1	**CHECK CURRENT DATA.** 1) Start the engine. 2) Read the data of fuel temperature sensor signal using Subaru Select Monitor. NOTE: Subaru Select Monitor For detailed operation procedure, refer to "READ CURRENT DATA FOR ENGINE". <Ref. to EN(H4SO U5)(diag)-28, Subaru Select Monitor.>	Is the fuel temperature 150°C (302°F)?	Go to step **2.**	The malfunction indicator light may light up, however, the circuit is returned to the normal status at the moment.
2	**CHECK CURRENT DATA.** 1) Turn ignition switch to OFF. 2) Remove the access hole lid. 3) Disconnect the connector from fuel pump. 4) Turn ignition switch to ON. 5) Read the data of fuel temperature sensor signal using Subaru Select Monitor. NOTE: Subaru Select Monitor For detailed operation procedure, refer to "READ CURRENT DATA FOR ENGINE". <Ref. to EN(H4SO U5)(diag)-28, Subaru Select Monitor.>	Is the fuel temperature −40°C (−40°F)?	Replace the fuel temperature sensor. <Ref. to EC(H4SO)-9, Fuel Temperature Sensor.>	Repair short circuit to ground in harness between fuel pump and ECM connector.

AY:DTC P0183 FUEL TEMPERATURE SENSOR “A” CIRCUIT HIGH INPUT

DTC DETECTING CONDITION:

- Detect as soon as malfunction occurs.
- GENERAL DESCRIPTION <Ref. to GD(H4SO U5)-89, DTC P0183 FUEL TEMPERATURE SENSOR “A” CIRCUIT HIGH INPUT, Diagnostic Trouble Code (DTC) Detecting Criteria.>

CAUTION:
After repair or replacement of faulty parts, conduct CLEAR MEMORY MODE <Ref. to EN(H4SO U5)(diag)-46, OPERATION, Clear Memory Mode.> and INSPECTION MODE <Ref. to EN(H4SO U5)(diag)-37, OPERATION, Inspection Mode.>.

WIRING DIAGRAM:

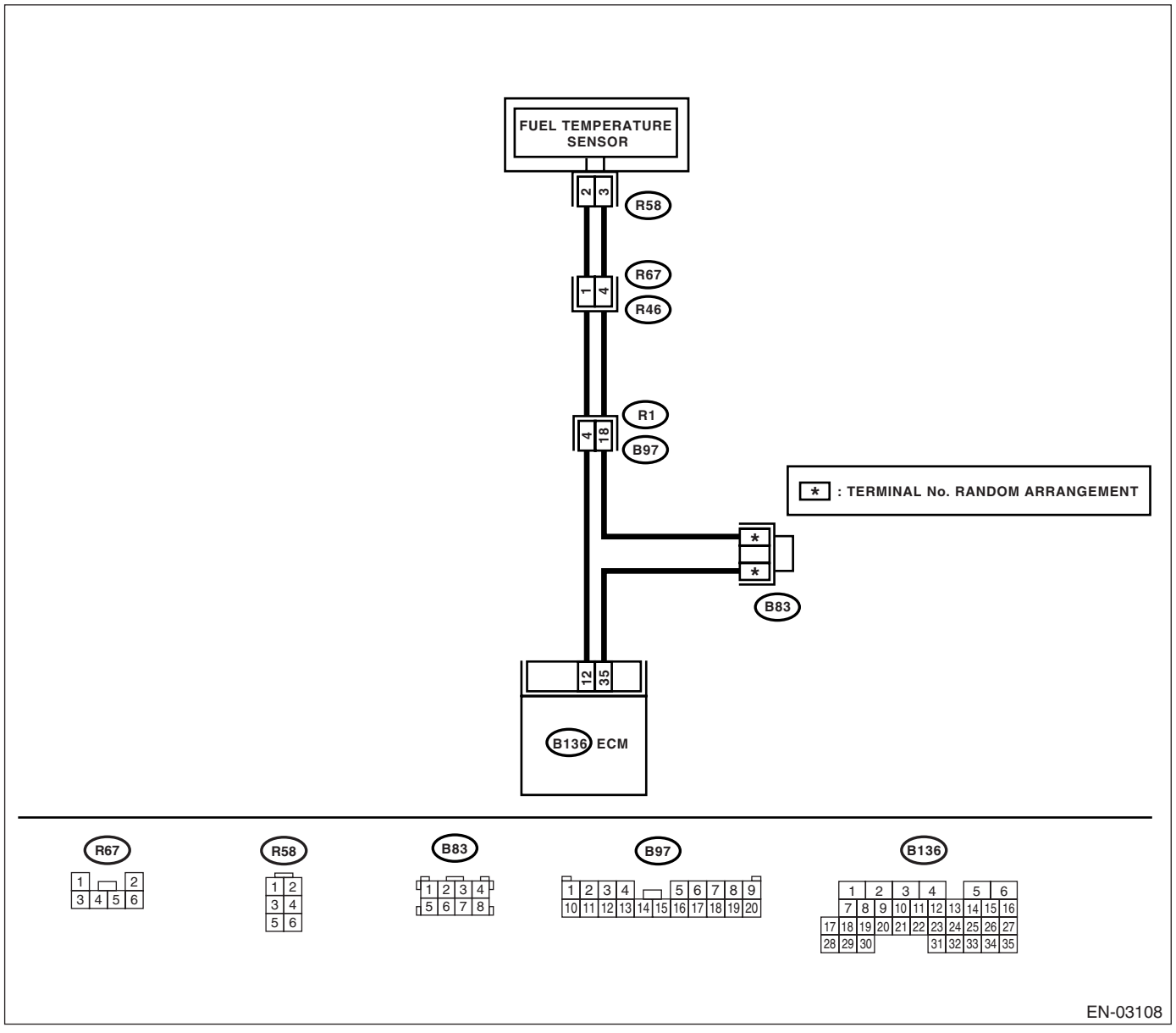

	Step	Check	Yes	No
1	**CHECK CURRENT DATA.** 1) Start the engine. 2) Read the data of fuel temperature sensor signal using Subaru Select Monitor. NOTE: Subaru Select Monitor For detailed operation procedure, refer to "READ CURRENT DATA FOR ENGINE". <Ref. to EN(H4SO U5)(diag)-28, Subaru Select Monitor.>	Is the fuel temperature –40°C (–40°F)?	Go to step **2.**	Repair poor contact. NOTE: In this case, repair the following: • Poor contact in fuel pump connector • Poor contact in ECM connector • Poor contact in coupling connector • Poor contact in joint connector
2	**CHECK HARNESS BETWEEN FUEL TEMPERATURE SENSOR AND ECM CONNECTOR.** 1) Turn ignition switch to OFF. 2) Remove the access hole lid. 3) Disconnect the connector from fuel pump. 4) Measure the voltage between fuel pump connector and chassis ground. ***Connector & terminal*** ***(R58) No. 2 (+) — Chassis ground (–):***	Is the voltage more than 10 V?	Repair short circuit to battery in harness between ECM and fuel pump connector.	Go to step **3.**
3	**CHECK HARNESS BETWEEN FUEL TEMPERATURE SENSOR AND ECM CONNECTOR.** 1) Turn ignition switch to ON. 2) Measure the voltage between fuel pump connector and chassis ground. ***Connector & terminal*** ***(R58) No. 2 (+) — Chassis ground (–):***	Is the voltage more than 10 V?	Repair short circuit to battery in harness between ECM and fuel pump connector.	Go to step **4.**
4	**CHECK HARNESS BETWEEN FUEL TEMPERATURE SENSOR AND ECM CONNECTOR.** Measure the voltage between fuel pump connector and chassis ground. ***Connector & terminal*** ***(R58) No. 2 (+) — Chassis ground (–):***	Is the voltage more than 4 V?	Go to step **5.**	Repair harness and connector. NOTE: In this case, repair the following: • Open circuit in harness between ECM and fuel pump connector • Poor contact in fuel pump connector • Poor contact in ECM connector • Poor contact in coupling connector

	Step	Check	Yes	No
5	**CHECK HARNESS BETWEEN FUEL TEMPERATURE SENSOR AND ECM CONNECTOR.** 1) Turn ignition switch to OFF. 2) Disconnect the connector from ECM. 3) Measure the resistance of harness between fuel pump connector and ECM. ***Connector & terminal*** ***(R58) No. 3 — (B136) No. 35:***	Is the resistance less than 1 Ω?	Replace the fuel temperature sensor. <Ref. to EC(H4SO)-9, Fuel Temperature Sensor.>	Repair harness and connector. NOTE: In this case, repair the following: • Open circuit in harness between ECM and fuel pump connector • Poor contact in fuel pump connector • Poor contact in ECM connector • Poor contact in coupling connector • Poor contact in joint connector

AZ:DTC P0222 THROTTLE/PEDAL POSITION SENSOR/SWITCH “B” CIRCUIT LOW INPUT

DTC DETECTING CONDITION:

- Detect as soon as malfunction occurs.
- GENERAL DESCRIPTION <Ref. to GD(H4SO U5)-91, DTC P0222 THROTTLE/PEDAL POSITION SENSOR/SWITCH “B” CIRCUIT LOW INPUT, Diagnostic Trouble Code (DTC) Detecting Criteria.>

TROUBLE SYMPTOM:

- Erroneous idling
- Poor driving performance
- Engine stalls.

WIRING DIAGRAM:

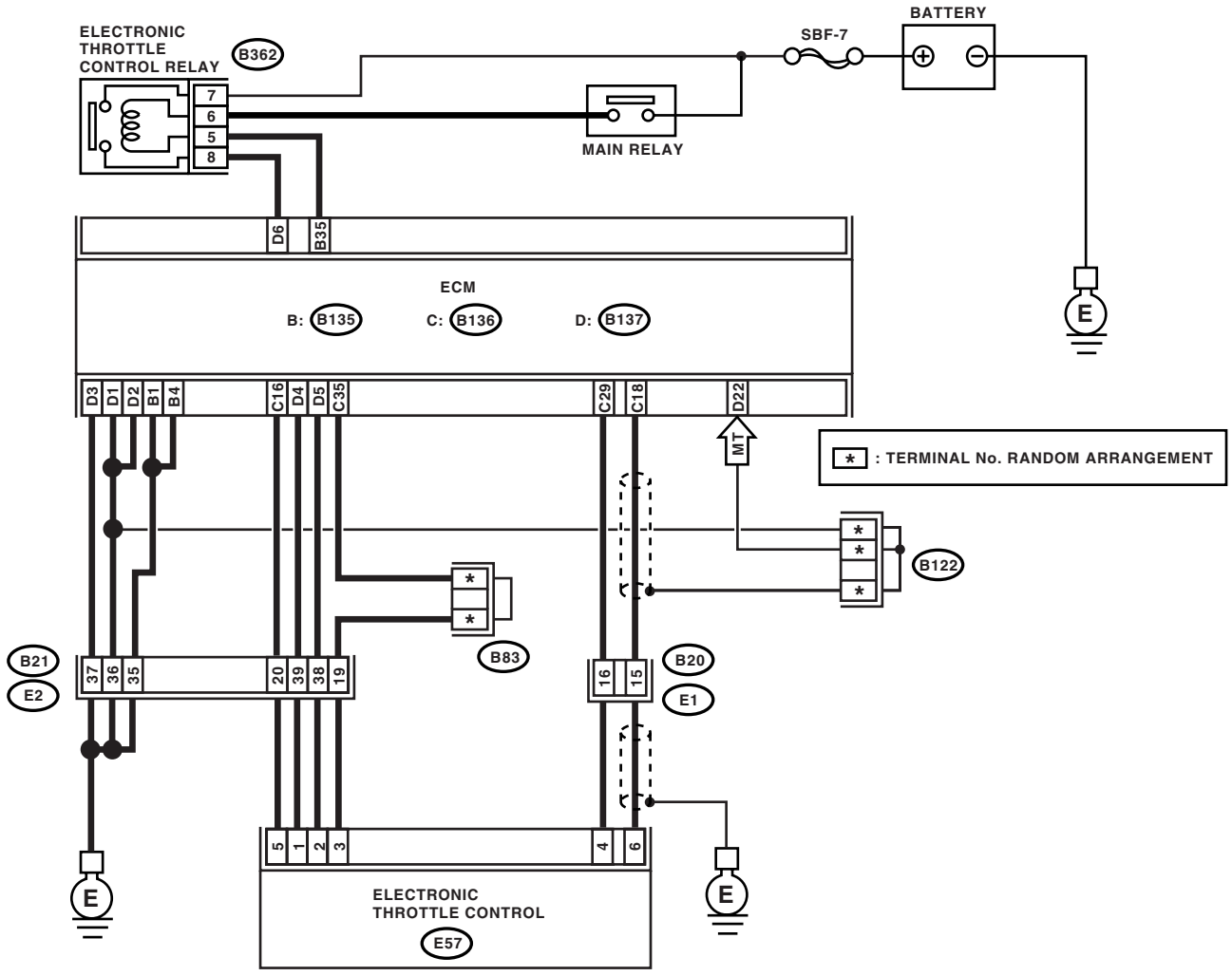

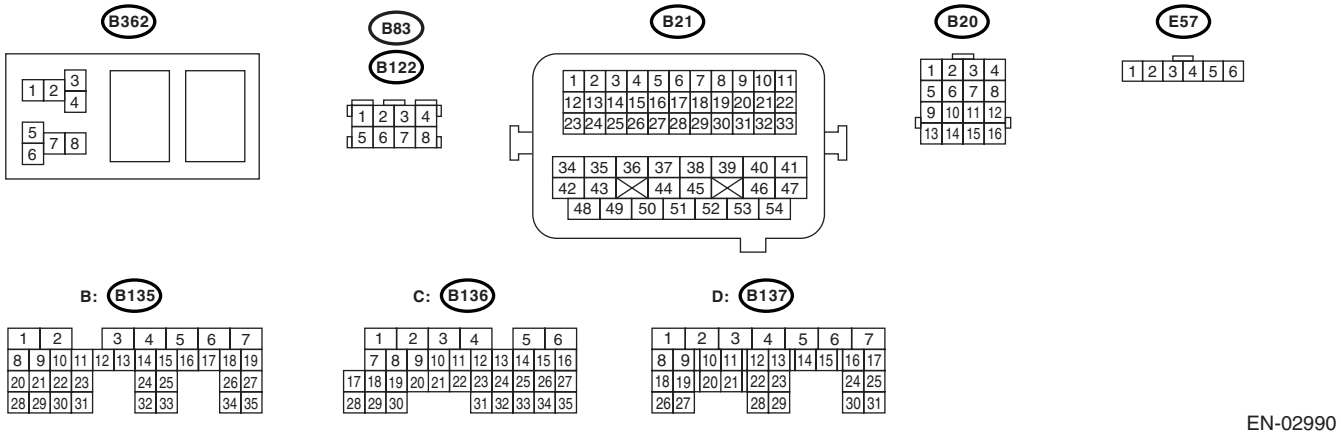

EN-02990

	Step	Check	Yes	No
1	**CHECK OUTPUT VOLTAGE OF SENSOR.** 1) Turn the ignition switch to ON. 2) Read data of sub throttle sensor signal using Subaru Select Monitor. NOTE: Subaru Select Monitor For detailed operation procedure, refer to "READ CURRENT DATA FOR ENGINE". <Ref. to EN(H4SO U5)(diag)-28, Subaru Select Monitor.>	Is the measured value more than 0.8 V?	Go to step **2.**	Go to step **3.**
2	**CHECK POOR CONTACT IN CONNECTORS.** Check poor contact in the connectors between the ECM and electronic throttle control.	Is there poor contact in the connectors between ECM and electronic throttle control?	Repair the poor contact in connectors.	Connector has returned to a normal condition at this time. A temporary poor contact of the connector may be the cause.
3	**CHECK HARNESS BETWEEN ECM AND ELECTRONIC THROTTLE CONTROL.** 1) Turn the ignition switch to OFF. 2) Disconnect the connector from ECM. 3) Disconnect the connector from electronic throttle control. 4) Measure the resistance between the ECM connector and electronic throttle control connector. ***Connector & terminal*** ***(B136) No. 29 — (E57) No. 4:*** ***(B136) No. 16 — (E57) No. 5:***	Is the measured value less than 1 Ω?	Go to step **4.**	Repair the open harness connector.
4	**CHECK HARNESS BETWEEN ECM AND ELECTRONIC THROTTLE CONTROL.** Check the resistance between the ECM connector and chassis ground. ***Connector & terminal*** ***(B136) No. 29 — Chassis ground:*** ***(B136) No. 16 — Chassis ground:***	Is the measured value more than 1 MΩ?	Go to step **5.**	Repair the chassis short of harness.
5	**CHECK POWER SUPPLY TO SENSOR.** 1) Connect the ECM connectors. 2) Turn the ignition switch to ON. 3) Measure the voltage between electronic throttle control connector and engine ground. ***Connector & terminal*** ***(E57) No. 5 (+) — Engine ground (−):***	Is the measured value within 4.5 to 5.5 V?	Go to step **6.**	Repair the poor contact in ECM connector. If problem persists, replace the ECM. <Ref. to FU(H4SO U5)-44, Engine Control Module (ECM).>
6	**CHECK SHORT OF ECM.** 1) Turn the ignition switch to OFF. 2) Measure the resistance between electronic throttle control connector and engine ground. ***Connector & terminal*** ***(E57) No. 4 — Engine ground:***	Is the measured value more than 10 Ω?	Repair the poor contact in electronic throttle control connector. If problem persists, replace the electronic throttle control.	Repair the poor contact in ECM connectors. If problem persists, replace the ECM. <Ref. to FU(H4SO U5)-44, Engine Control Module (ECM).>

BA:DTC P0223 THROTTLE/PEDAL POSITION SENSOR/SWITCH “B” CIRCUIT HIGH INPUT

DTC DETECTING CONDITION:

- Detect as soon as malfunction occurs.
- GENERAL DESCRIPTION <Ref. to GD(H4SO U5)-93, DTC P0223 THROTTLE/PEDAL POSITION SENSOR/SWITCH “B” CIRCUIT HIGH INPUT, Diagnostic Trouble Code (DTC) Detecting Criteria.>

TROUBLE SYMPTOM:

- Erroneous idling
- Poor driving performance
- Engine stalls.

WIRING DIAGRAM:

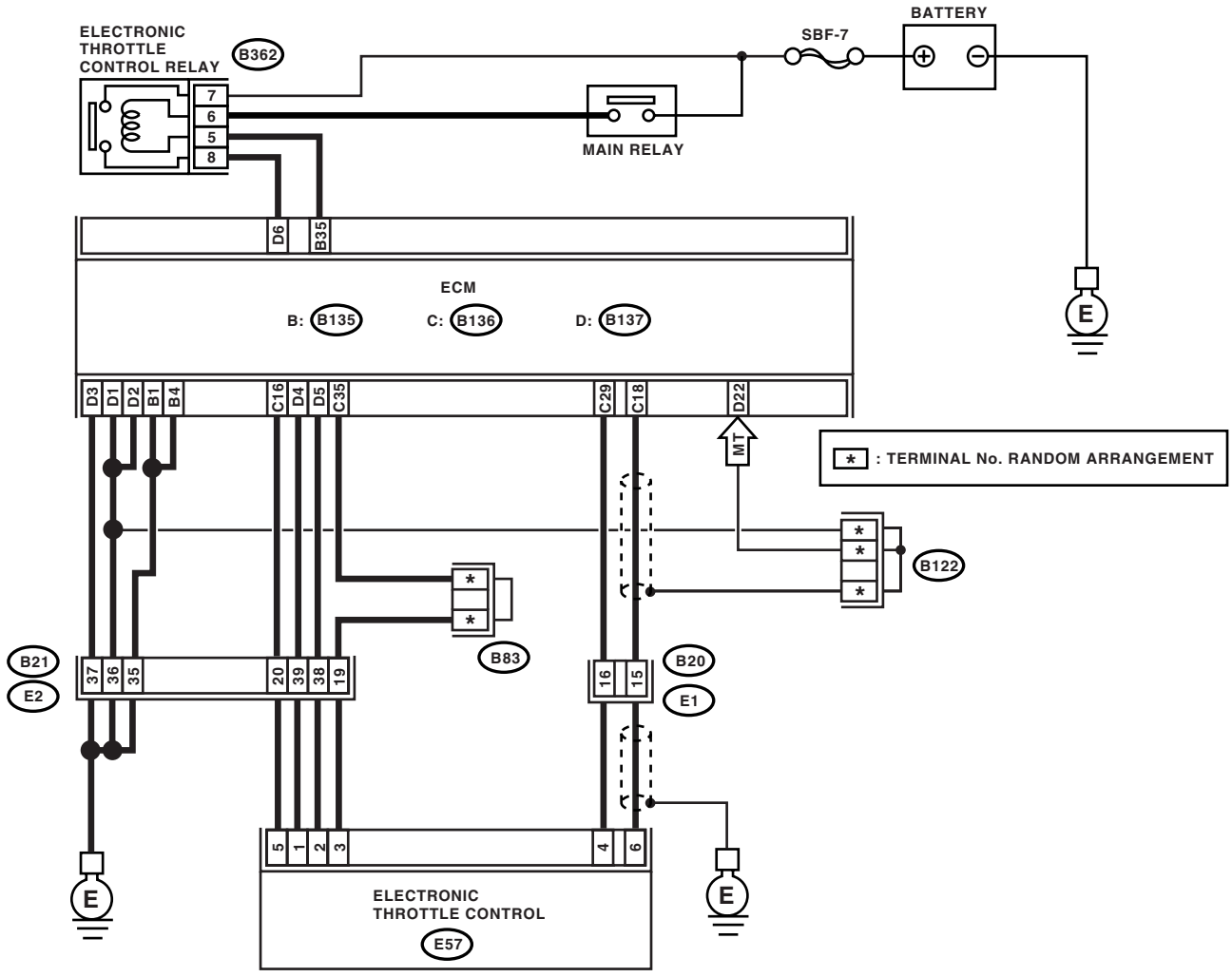

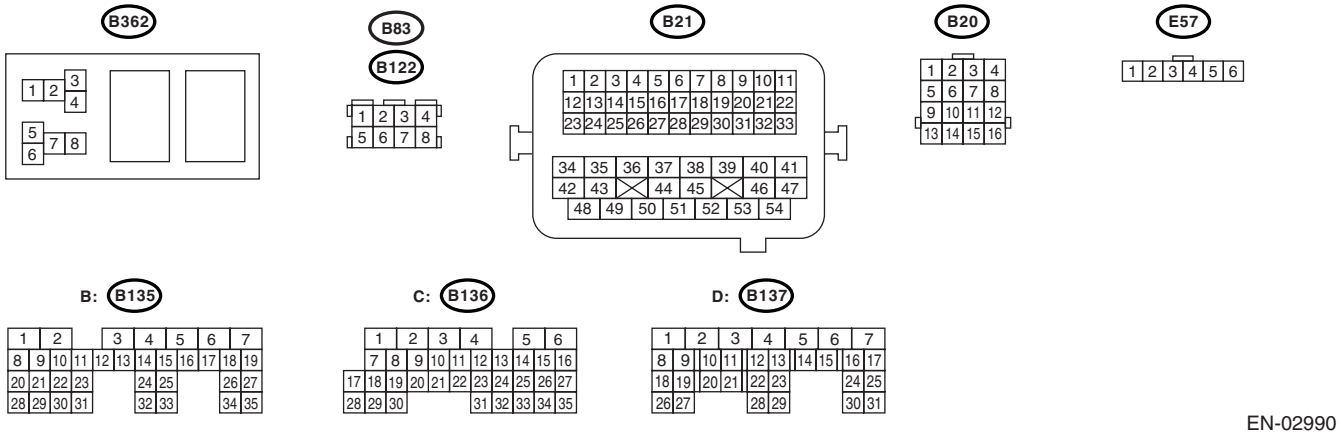

EN-02990

	Step	Check	Yes	No
1	**CHECK OUTPUT VOLTAGE OF SENSOR.** 1) Turn the ignition switch to ON. 2) Read the data of sub throttle sensor signals, using the Subaru Select Monitor. NOTE: Subaru Select Monitor For detailed operation procedure, refer to "READ CURRENT DATA FOR ENGINE". <Ref. to EN(H4SO U5)(diag)-28, Subaru Select Monitor.>	Is the measured value less than 4.73 V?	Go to step **2.**	Go to step **3.**
2	**CHECK POOR CONTACT IN CONNECTORS.** Check poor contact in connectors between ECM and electronic throttle control.	Is there poor contact in the connectors between ECM and electronic throttle control?	Repair the poor contact in connectors.	Connector has returned to a normal condition at this time. A temporary poor contact of the connector may be the cause.
3	**CHECK HARNESS BETWEEN ECM AND ELECTRONIC THROTTLE CONTROL.** 1) Turn the ignition switch to OFF. 2) Disconnect the connectors from ECM. 3) Disconnect the connectors from electronic throttle control. 4) Measure the resistance between ECM connector and electronic throttle control connector. ***Connector & terminal*** ***(B136) No. 35 — (E57) No. 3:*** ***(B136) No. 29 — (E57) No. 4:***	Is the measured value less than 1 Ω?	Go to step **4.**	Repair the open circuit of harness connector.
4	**CHECK HARNESS BETWEEN ECM AND ELECTRONIC THROTTLE CONTROL.** 1) Connect the ECM connector. 2) Measure the resistance between the electronic throttle control connector and engine ground. ***Connector & terminal*** ***(E57) No. 3 — Engine ground:***	Is the measured value less than 5 Ω?	Go to step **5.**	Repair the poor contact in ECM connector. If the problem persists, replace the ECM. <Ref. to FU(H4SO U5)-44, Engine Control Module (ECM).>
5	**CHECK HARNESS BETWEEN ECM AND ELECTRONIC THROTTLE CONTROL.** Measure the voltage between the electronic throttle control connector and engine ground. ***Connector & terminal*** ***(E57) No. 4 (+) — Engine ground (−):***	Is the measured value less than 10 V?	Go to step **6.**	Repair the short of harness between ECM connector and electronic throttle control connector.
6	**CHECK HARNESS BETWEEN ECM AND ELECTRONIC THROTTLE CONTROL.** 1) Turn the ignition switch to OFF. 2) Disconnect the connector from ECM. 3) Measure the voltage between connectors. ***Connector & terminal*** ***(B136) No. 29 — (B136) No. 16:***	Is the measured value more than 1 MΩ?	Repair the poor contact in electronic throttle control connector. If problem persists, replace the electronic throttle control.	Short circuit of sensor power supply may be the cause.

BB:DTC P0301 CYLINDER 1 MISFIRE DETECTED

NOTE:
For the diagnostic procedure, refer to DTC P0304. <Ref. to EN(H4SO U5)(diag)-192, DTC P0304 CYLINDER 4 MISFIRE DETECTED, Diagnostic Procedure with Diagnostic Trouble Code (DTC).>

BC:DTC P0302 CYLINDER 2 MISFIRE DETECTED

NOTE:
For the diagnostic procedure, refer to DTC P0304. <Ref. to EN(H4SO U5)(diag)-192, DTC P0304 CYLINDER 4 MISFIRE DETECTED, Diagnostic Procedure with Diagnostic Trouble Code (DTC).>

BD:DTC P0303 CYLINDER 3 MISFIRE DETECTED

NOTE:
For the diagnostic procedure, refer to DTC P0304. <Ref. to EN(H4SO U5)(diag)-192, DTC P0304 CYLINDER 4 MISFIRE DETECTED, Diagnostic Procedure with Diagnostic Trouble Code (DTC).>

BE:DTC P0304 CYLINDER 4 MISFIRE DETECTED

DTC DETECTING CONDITION:

- Two consecutive driving cycles with fault
- Detect as soon as malfunction occurs. (A misfire which could damage catalyst occurs.)
- GENERAL DESCRIPTION <Ref. to GD(H4SO U5)-100, DTC P0304 CYLINDER 4 MISFIRE DETECTED, Diagnostic Trouble Code (DTC) Detecting Criteria.>

TROUBLE SYMPTOM:

- Engine stalls.
- Erroneous idling
- Rough driving

CAUTION:
After repair or replacement of faulty parts, conduct Clear Memory Mode <Ref. to EN(H4SO U5)(diag)-46, OPERATION, Clear Memory Mode.> and Inspection Mode <Ref. to EN(H4SO U5)(diag)-37, OPERATION, Inspection Mode.>.

WIRING DIAGRAM:

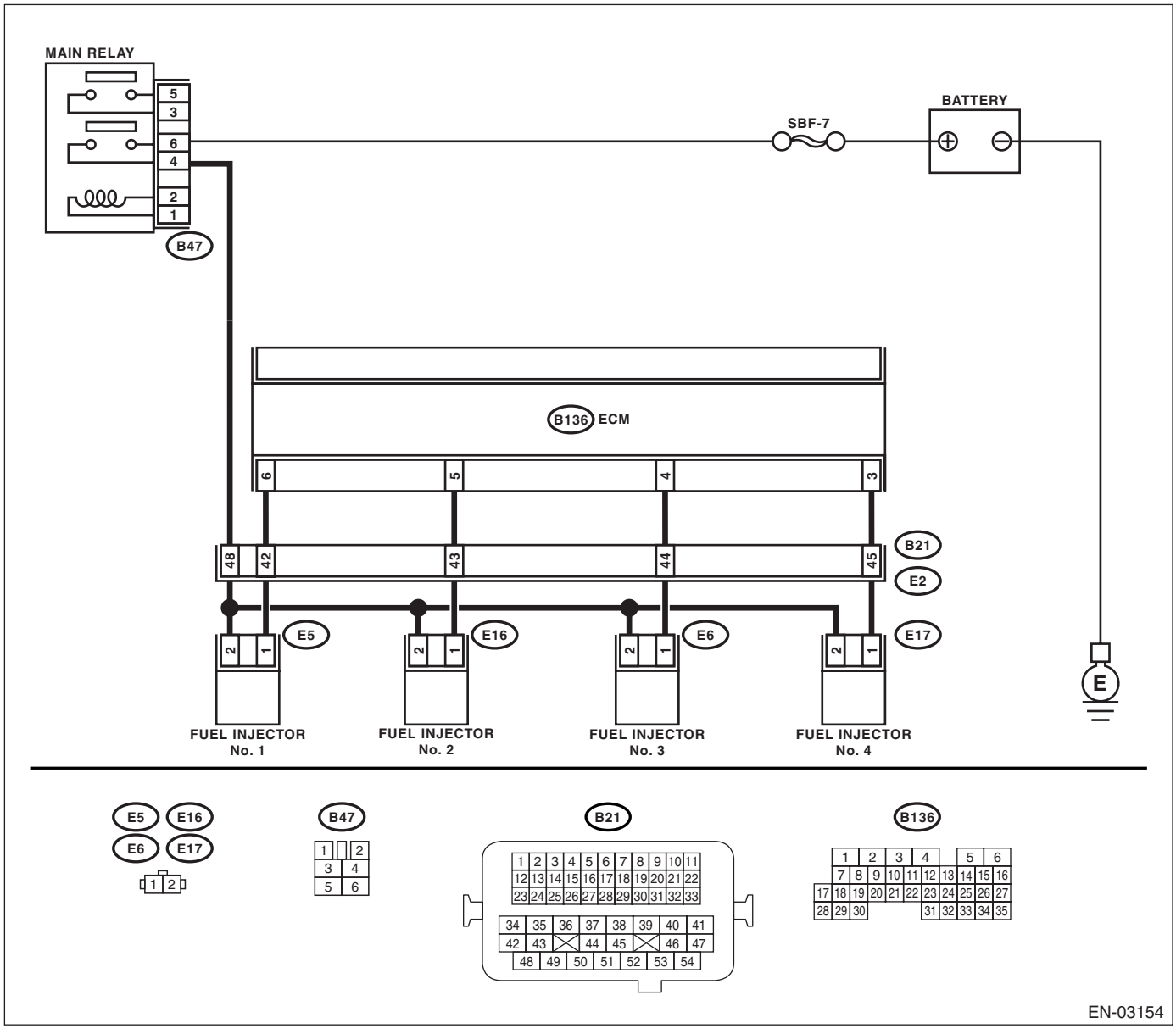

	Step	Check	Yes	No
1	**CHECK FOR ANY OTHER DTC ON DISPLAY.**	Is any other DTC displayed?	Check DTC using "List of Diagnostic Trouble Code (DTC)". <Ref. to EN(H4SO U5)(diag)-73, List of Diagnostic Trouble Code (DTC).> NOTE: In this case, it is not necessary to inspect DTC P0301, P0302, P0303 and P0304.	Go to step **2.**
2	**CHECK OUTPUT SIGNAL FROM ECM.** 1) Turn the ignition switch to ON. 2) Measure the voltage between ECM connector and chassis ground on faulty cylinders. ***Connector & terminal*** ***#1 (B136) No. 6 (+) — Chassis ground (−):*** ***#2 (B136) No. 5 (+) — Chassis ground (−):*** ***#3 (B136) No. 4 (+) — Chassis ground (−):*** ***#4 (B136) No. 3 (+) — Chassis ground (−):***	Is the voltage more than 10 V?	Go to step **7.**	Go to step **3.**
3	**CHECK HARNESS BETWEEN FUEL INJECTOR AND ECM CONNECTOR.** 1) Turn the ignition switch to OFF. 2) Disconnect the connector from fuel injector on faulty cylinders. 3) Measure the resistance between ECM connector and engine ground on faulty cylinders. ***Connector & terminal*** ***#1 (E5) No. 1 — Engine ground:*** ***#2 (E16) No. 1 — Engine ground:*** ***#3 (E6) No. 1 — Engine ground:*** ***#4 (E17) No. 1 — Engine ground:***	Is the resistance more than 1 MΩ?	Go to step **4.**	Repair ground short circuit in harness between fuel injector and ECM connector.
4	**CHECK HARNESS BETWEEN FUEL INJECTOR AND ECM CONNECTOR.** Measure the resistance of harness connector between ECM connector and fuel injector on faulty cylinders. ***Connector & terminal*** ***#1 (B136) No. 6 — (E5) No. 1:*** ***#2 (B136) No. 5 — (E16) No. 1:*** ***#3 (B136) No. 4 — (E6) No. 1:*** ***#4 (B136) No. 3 — (E17) No. 1:***	Is the resistance less than 1 Ω?	Go to step **5.**	Repair harness and connector. NOTE: In this case, repair the following: • Open circuit in harness between ECM and fuel injector connector • Poor contact in coupling connector
5	**CHECK FUEL INJECTOR.** Measure the resistance between fuel injector terminals on faulty cylinder. ***Terminals*** ***No. 1 — No. 2:***	Is the resistance 5 — 20 Ω?	Go to step **6.**	Replace the faulty fuel injector. <Ref. to FU(H4SO U5)-34, Fuel Injector.>

	Step	Check	Yes	No
6	**CHECK POWER SUPPLY LINE.** 1) Turn the ignition switch to ON. 2) Measure the voltage between fuel injector and engine ground on faulty cylinders. ***Connector & terminal*** ***#1 (E5) No. 2 (+) — Engine ground (−):*** ***#2 (E16) No. 2 (+) — Engine ground (−):*** ***#3 (E6) No. 2 (+) — Engine ground (−):*** ***#4 (E17) No. 2 (+) — Engine ground (−):***	Is the voltage more than 10 V?	Repair poor contact in all connectors in fuel injector circuit.	Repair harness and connector. NOTE: In this case, repair the following: • Open circuit in harness between main relay and fuel injector connector on faulty cylinders • Poor contact in coupling connector • Poor contact in main relay connector • Poor contact in fuel injector connector on faulty cylinders
7	**CHECK HARNESS BETWEEN FUEL INJECTOR AND ECM CONNECTOR.** 1) Turn the ignition switch to OFF. 2) Disconnect the connector from fuel injector on faulty cylinder. 3) Turn the ignition switch to ON. 4) Measure the voltage between ECM connector and chassis ground on faulty cylinders. ***Connector & terminal*** ***#1 (B136) No. 6 (+) — Chassis ground (−):*** ***#2 (B136) No. 5 (+) — Chassis ground (−):*** ***#3 (B136) No. 4 (+) — Chassis ground (−):*** ***#4 (B136) No. 3 (+) — Chassis ground (−):***	Is the voltage more than 10 V?	Repair battery short circuit in harness between ECM and fuel injector. After repair, replace the ECM. <Ref. to FU(H4SO U5)-44, Engine Control Module (ECM).>	Go to step **8.**
8	**CHECK FUEL INJECTOR.** 1) Turn the ignition switch to OFF. 2) Measure the resistance between fuel injector terminals on faulty cylinder. ***Terminals*** ***No. 1 — No. 2:***	Is the resistance less than 1 Ω?	Replace the faulty fuel injector <Ref. to FU(H4SO U5)-34, Fuel Injector.> and ECM <Ref. to FU(H4SO U5)-44, Engine Control Module (ECM).>	Go to step **9.**
9	**CHECK INSTALLATION OF CAMSHAFT POSITION SENSOR/CRANKSHAFT POSITION SENSOR.**	Is the camshaft position sensor or crankshaft position sensor loosely installed?	Tighten camshaft position sensor or crankshaft position sensor.	Go to step **10.**
10	**CHECK CRANK SPROCKET.** Remove the timing belt cover.	Is the crank sprocket rusted or does it have broken teeth?	Replace the crank sprocket. <Ref. to ME(H4SO)-47, Crank Sprocket.>	Go to step **11.**
11	**CHECK INSTALLATION CONDITION OF TIMING BELT.** Turn the crankshaft to align alignment mark on crank sprocket with alignment mark on cylinder block.	Is the timing belt dislocated from its proper position?	Repair installation condition of timing belt. <Ref. to ME(H4SO)-41, Timing Belt.>	Go to step **12.**
12	**CHECK FUEL LEVEL.**	Is the fuel meter indication higher than the “Lower” level?	Go to step **13.**	Replenish fuel so fuel meter indication is higher than the “Lower” level. After replenishing fuel, Go to step **13.**

	Step	Check	Yes	No
13	**CHECK STATUS OF MALFUNCTION INDICATOR LIGHT.** 1) Clear the memory using Subaru Select Monitor. <Ref. to EN(H4SO U5)(diag)-46, Clear Memory Mode.> 2) Start the engine, and drive the vehicle more than 10 minutes.	Does the malfunction indicator light illuminate or blink?	Go to step **16.**	Go to step **14.**
14	**CHECK CAUSE OF MISFIRE DIAGNOSED.**	Was the cause of misfire identified when the engine is running? Ex. Disconnection of spark plug cord.	Finish diagnostics operation, if the engine has no abnormality.	Go to step **15.**
15	**CHECK FOR POOR CONTACT.**	Is there poor contact in the ignition coil, fuel injector, ECM and coupling connector?	Repair poor contact.	Contact your SOA Service Center after checking followings. NOTE: In this case, check the following: • Condition of fuel • Fuel additive used or not • Visually check spark plug • Visually check spark plug cord • Condition of engine oil
16	**CHECK AIR INTAKE SYSTEM.**	Is there any fault in air intake system?	Repair air intake system. NOTE: Check the following items: • Are there air leaks or air suction caused by loose or dislocated nuts and bolts? • Are there cracks or any disconnection of hoses?	Go to step **17.**
17	**CHECK MISFIRE SYMPTOM.** 1) Turn the ignition switch to ON. 2) Read the DTC. NOTE: • Subaru Select Monitor For detailed operation procedure, refer to “Diagnostic Trouble Code (DTC)”. <Ref. to EN(H4SO U5)(diag)-36, Read Diagnostic Trouble Code (DTC).> • General scan tool For detailed operation procedure, refer to the general scan tool operation manual. NOTE: Perform diagnosis according to the items listed below.	Does the Subaru Select Monitor or general scan tool display only one DTC?	Go to step **22.**	Go to step **18.**
18	**CHECK DTC ON DISPLAY.** Is any other DTC displayed?	Does the Subaru Select Monitor or general scan tool indicate DTC P0301 and P0302?	Go to step **23.**	Go to step **19.**

	Step	Check	Yes	No
19	**CHECK DTC ON DISPLAY.** Is any other DTC displayed?	Does the Subaru Select Monitor or general scan tool indicate DTC P0303 and P0304?	Go to step **24.**	Go to step **20.**
20	**CHECK DTC ON DISPLAY.** Is any other DTC displayed?	Does the Subaru Select Monitor or general scan tool indicate DTC P0301 and P0303?	Go to step **25.**	Go to step **21.**
21	**CHECK DTC ON DISPLAY.** Is any other DTC displayed?	Does the Subaru Select Monitor or general scan tool indicate DTC P0302 and P0304?	Go to step **26.**	Go to step **27.**
22	**ONLY ONE CYLINDER**	Is there any fault in that cylinder?	Repair or replace faulty parts. NOTE: Check the following items. • Spark plug • Spark plug cord • Fuel injector • Compression ratio	Go to DTC P0171. <Ref. to EN(H4SO U5)(diag)-176, DTC P0171 SYSTEM TOO LEAN (BANK 1), Diagnostic Procedure with Diagnostic Trouble Code (DTC).>

23	**GROUP OF #1 AND #2 CYLINDERS**	Are there faults in #1 and #2 cylinders?	Repair or replace faulty parts.
			NOTE:
			• Check the following items.
			  • Spark plugs
			  • Fuel injectors
			  • Ignition coil
			  • Compression ratio
			• If no abnormal is discovered, check for “IGNITION CONTROL SYSTEM” of #1 and #2 cylinders side. <Ref. to EN(H4SO U5)(diag)-65, IGNITION CONTROL SYSTEM, Diagnostics for Engine Starting Failure.>
				Go to DTC P0171. <Ref. to EN(H4SO U5)(diag)-176, DTC P0171 SYSTEM TOO LEAN (BANK 1), Diagnostic Procedure with Diagnostic Trouble Code (DTC).>

Step		Check	Yes	No
24	GROUP OF #3 AND #4 CYLINDERS	Are there faults in #3 and #4 cylinders?	Repair or replace faulty parts. NOTE: • Check the following items. • Spark plugs • Fuel injectors • Ignition coil • If no abnormal is discovered, check for “IGNITION CONTROL SYSTEM” of #3 and #4 cylinders side. <Ref. to EN(H4SO U5)(diag)-65, IGNITION CONTROL SYSTEM, Diagnostics for Engine Starting Failure.>	Go to DTC P0171. <Ref. to EN(H4SO U5)(diag)-176, DTC P0171 SYSTEM TOO LEAN (BANK 1), Diagnostic Procedure with Diagnostic Trouble Code (DTC).>
25	GROUP OF #1 AND #3 CYLINDERS	Are there faults in #1 and #3 cylinders?	Repair or replace faulty parts. NOTE: Check the following items. • Spark plugs • Fuel injectors • Skipping timing belt teeth	Go to DTC P0171. <Ref. to EN(H4SO U5)(diag)-176, DTC P0171 SYSTEM TOO LEAN (BANK 1), Diagnostic Procedure with Diagnostic Trouble Code (DTC).>
26	GROUP OF #2 AND #4 CYLINDERS	Are there faults in #2 and #4 cylinders?	Repair or replace faulty parts. NOTE: Check the following items. • Spark plugs • Fuel injectors • Compression ratio • Skipping timing belt teeth	Go to DTC P0171. <Ref. to EN(H4SO U5)(diag)-176, DTC P0171 SYSTEM TOO LEAN (BANK 1), Diagnostic Procedure with Diagnostic Trouble Code (DTC).>
27	CYLINDER AT RANDOM	Is the engine idle rough?	Go to DTC P0171. <Ref. to EN(H4SO U5)(diag)-176, DTC P0171 SYSTEM TOO LEAN (BANK 1), Diagnostic Procedure with Diagnostic Trouble Code (DTC).>	Repair or replace faulty parts. NOTE: Check the following items. • Spark plugs • Fuel injectors • Compression ratio

BF:DTC P0327 KNOCK SENSOR 1 CIRCUIT LOW INPUT (BANK 1 OR SINGLE SENSOR)

DTC DETECTING CONDITION:

- Detect as soon as malfunction occurs.
- GENERAL DESCRIPTION <Ref. to GD(H4SO U5)-101, DTC P0327 KNOCK SENSOR 1 CIRCUIT LOW INPUT (BANK 1 OR SINGLE SENSOR), Diagnostic Trouble Code (DTC) Detecting Criteria.>

TROUBLE SYMPTOM:

- Poor driving performance
- Knocking occurs.

CAUTION:
After repair or replacement of faulty parts, conduct Clear Memory Mode <Ref. to EN(H4SO U5)(diag)-46, OPERATION, Clear Memory Mode.> and Inspection Mode <Ref. to EN(H4SO U5)(diag)-37, OPERATION, Inspection Mode.>.

WIRING DIAGRAM:

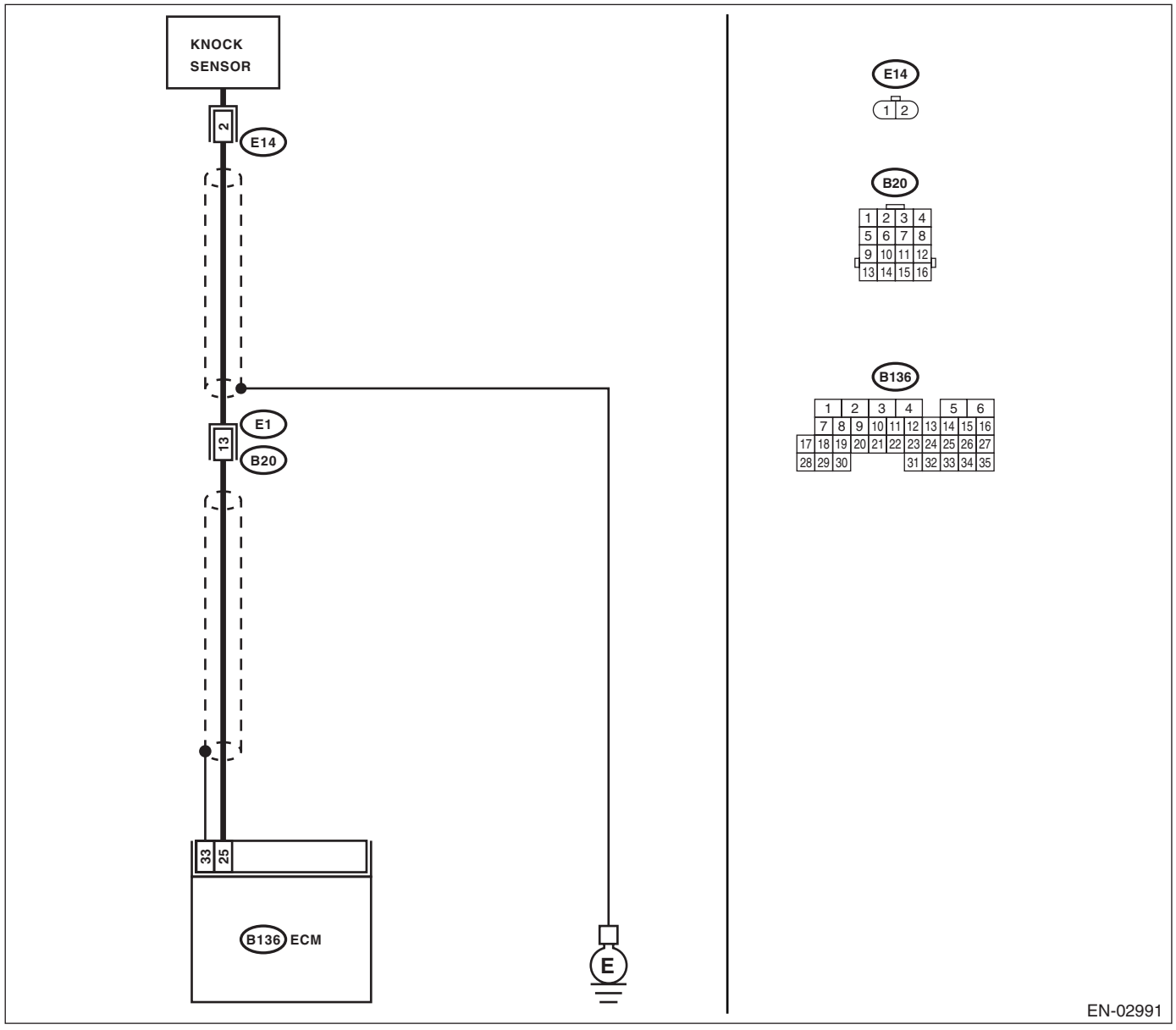

	Step	Check	Yes	No
1	**CHECK HARNESS BETWEEN KNOCK SENSOR AND ECM CONNECTOR.** 1) Turn the ignition switch to OFF. 2) Disconnect the connector from ECM. 3) Measure the resistance between ECM harness connector and chassis ground. ***Connector & terminal*** ***(B136) No. 25 — Chassis ground:***	Is the resistance more than 700 kΩ?	Go to step **2.**	Repair harness and connector. NOTE: In this case, repair the following: • Open circuit in harness between knock sensor and ECM connector • Poor contact in knock sensor connector • Poor contact in coupling connector
2	**CHECK KNOCK SENSOR.** 1) Disconnect the connector from knock sensor. 2) Measure the resistance between knock sensor connector terminal and engine ground. ***Terminals*** ***No. 2 — Engine ground:***	Is the resistance more than 700 kΩ?	Go to step **3.**	Repair harness and connector. NOTE: In this case, repair the following: • Poor contact in knock sensor connector
3	**CHECK CONDITION OF KNOCK SENSOR INSTALLATION.**	Is the knock sensor installation bolt tightened securely?	Replace the knock sensor. <Ref. to FU(H4SO U5)-26, Knock Sensor.>	Tighten knock sensor installation bolt securely.

BG:DTC P0328 KNOCK SENSOR 1 CIRCUIT HIGH INPUT (BANK 1 OR SINGLE SENSOR)

DTC DETECTING CONDITION:

- Detect as soon as malfunction occurs.
- GENERAL DESCRIPTION <Ref. to GD(H4SO U5)-103, DTC P0328 KNOCK SENSOR 1 CIRCUIT HIGH INPUT (BANK 1 OR SINGLE SENSOR), Diagnostic Trouble Code (DTC) Detecting Criteria.>

TROUBLE SYMPTOM:

- Poor driving performance
- Knocking occurs.

CAUTION:
After repair or replacement of faulty parts, conduct Clear Memory Mode <Ref. to EN(H4SO U5)(diag)-46, OPERATION, Clear Memory Mode.> and Inspection Mode <Ref. to EN(H4SO U5)(diag)-37, OPERATION, Inspection Mode.>.

WIRING DIAGRAM:

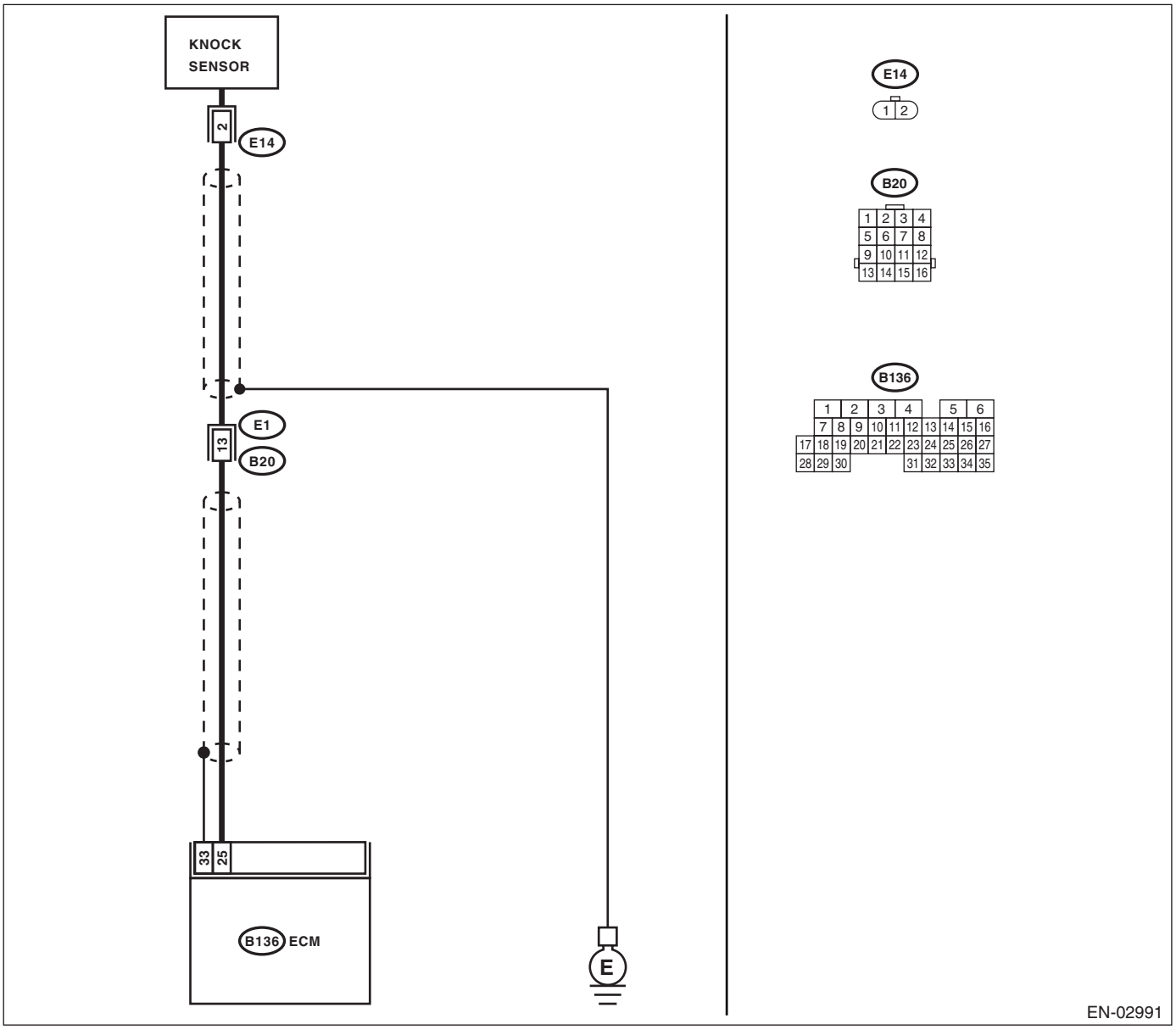

	Step	Check	Yes	No
1	**CHECK HARNESS BETWEEN KNOCK SENSOR AND ECM CONNECTOR.** Measure the resistance of harness between ECM connector and chassis ground. ***Connector & terminal*** ***(B136) No. 25 — Chassis ground:***	Is the resistance less than 400 kΩ?	Go to step **2.**	Go to step **3.**
2	**CHECK KNOCK SENSOR.** 1) Disconnect the connector from knock sensor. 2) Measure the resistance between knock sensor connector terminal and engine ground. ***Terminals*** ***No. 2 — Engine ground:***	Is the resistance less than 400 kΩ?	Replace the knock sensor. <Ref. to FU(H4SO U5)-26, Knock Sensor.>	Repair ground short circuit in harness between knock sensor connector and ECM connector. NOTE: The harness between both connectors is shielded. Repair short circuit of harness together with shield.
3	**CHECK INPUT SIGNAL FOR ECM.** 1) Connect the connectors to ECM and knock sensor. 2) Turn the ignition switch to ON. 3) Measure the voltage between ECM and chassis ground. ***Connector & terminal*** ***(B136) No. 25 (+) — Chassis ground (−):***	Is the voltage more than 2 V?	Even if malfunction indicator light lights up, the circuit has returned to a normal condition at this time. (However, the possibility of poor contact still remains.) NOTE: In this case, repair the following: • Poor contact in knock sensor connector • Poor contact in ECM connector • Poor contact in coupling connector	Repair poor contact in ECM connector.

BH:DTC P0335 CRANKSHAFT POSITION SENSOR “A” CIRCUIT

DTC DETECTING CONDITION:

- Detect as soon as malfunction occurs.
- GENERAL DESCRIPTION <Ref. to GD(H4SO U5)-105, DTC P0335 CRANKSHAFT POSITION SENSOR “A” CIRCUIT, Diagnostic Trouble Code (DTC) Detecting Criteria.>

TROUBLE SYMPTOM:

- Engine stalls.
- Failure of engine to start

CAUTION:

After repair or replacement of faulty parts, conduct Clear Memory Mode <Ref. to EN(H4SO U5)(diag)-46, OPERATION, Clear Memory Mode.> and Inspection Mode <Ref. to EN(H4SO U5)(diag)-37, OPERATION, Inspection Mode.>.

WIRING DIAGRAM:

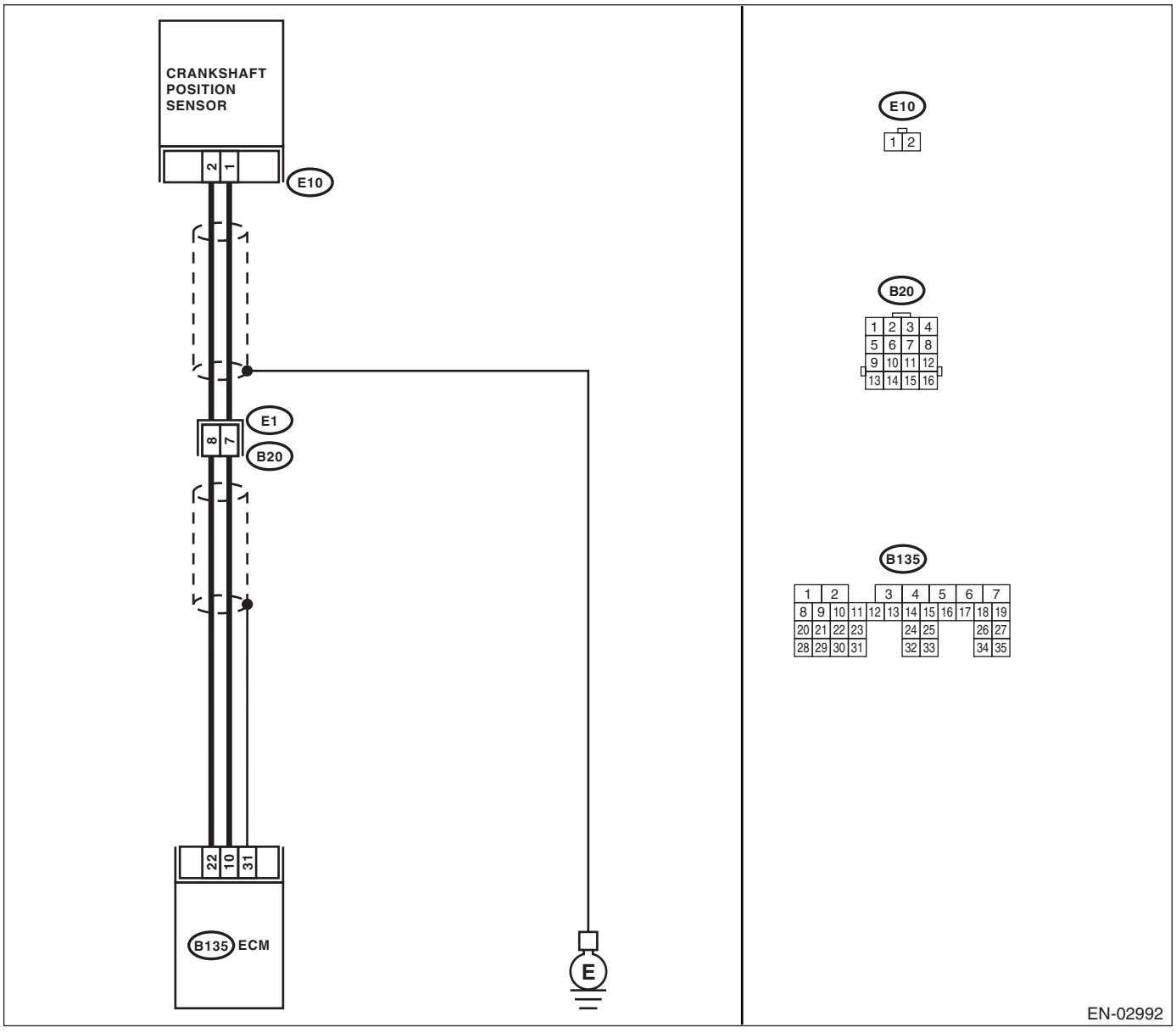

	Step	Check	Yes	No
1	**CHECK HARNESS BETWEEN CRANKSHAFT POSITION SENSOR AND ECM CONNECTOR.** 1) Turn the ignition switch to OFF. 2) Disconnect the connector from crankshaft position sensor. 3) Measure the resistance of harness between crankshaft position sensor connector and engine ground. ***Connector & terminal*** ***(E10) No. 1 — Engine ground:***	Is the resistance more than 100 kΩ?	Repair harness and connector. NOTE: In this case, repair the following: • Open circuit in harness between crankshaft position sensor and ECM connector • Poor contact in ECM connector • Poor contact in coupling connector	Go to step **2.**
2	**CHECK HARNESS BETWEEN CRANKSHAFT POSITION SENSOR AND ECM CONNECTOR.** Measure the resistance of harness between crankshaft position sensor connector and engine ground. ***Connector & terminal*** ***(E10) No. 1 — Engine ground:***	Is the resistance less than 10 Ω?	Repair ground short circuit in harness between crankshaft position sensor and ECM connector. NOTE: The harness between both connectors are shielded. Repair ground short circuit in harness together with shield.	Go to step **3.**
3	**CHECK HARNESS BETWEEN CRANKSHAFT POSITION SENSOR AND ECM CONNECTOR.** Measure the resistance of harness between crankshaft position sensor connector and engine ground. ***Connector & terminal*** ***(E10) No. 2 — Engine ground:***	Is the resistance less than 5 Ω?	Go to step **4.**	Repair harness and connector. NOTE: In this case, repair the following: • Open circuit in harness between crankshaft position sensor and ECM connector • Poor contact in ECM connector • Poor contact in coupling connector
4	**CHECK CONDITION OF CRANKSHAFT POSITION SENSOR.**	Is the crankshaft position sensor installation bolt tightened securely?	Go to step **5.**	Tighten crankshaft position sensor installation bolt securely.
5	**CHECK CRANKSHAFT POSITION SENSOR.** 1) Remove the crankshaft position sensor. 2) Measure the resistance between connector terminals of crankshaft position sensor. ***Terminals*** ***No. 1 — No. 2:***	Is the resistance 1 — 4 kΩ?	Repair poor contact in crankshaft position sensor connector.	Replace the crankshaft position sensor. <Ref. to FU(H4SO U5)-24, Crankshaft Position Sensor.>

BI: DTC P0336 CRANKSHAFT POSITION SENSOR “A” CIRCUIT RANGE/PERFORMANCE

DTC DETECTING CONDITION:

- Detect as soon as malfunction occurs.
- GENERAL DESCRIPTION <Ref. to GD(H4SO U5)-107, DTC P0336 CRANKSHAFT POSITION SENSOR “A” CIRCUIT RANGE/PERFORMANCE, Diagnostic Trouble Code (DTC) Detecting Criteria.>

TROUBLE SYMPTOM:

- Engine stalls.
- Failure of engine to start

CAUTION:
After repair or replacement of faulty parts, conduct Clear Memory Mode <Ref. to EN(H4SO U5)(diag)-46, OPERATION, Clear Memory Mode.> and Inspection Mode <Ref. to EN(H4SO U5)(diag)-37, OPERATION, Inspection Mode.>.

WIRING DIAGRAM:

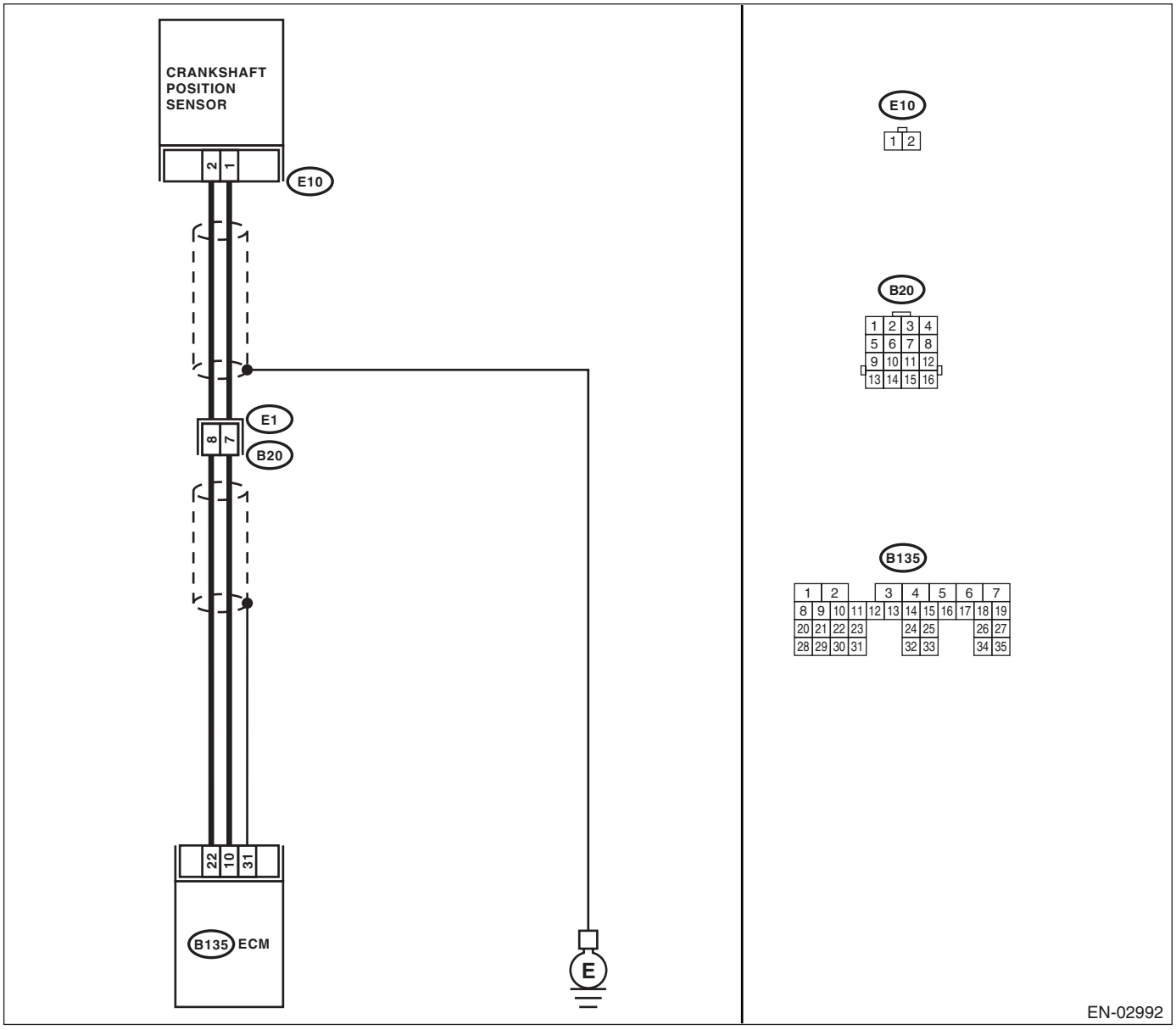

	Step	Check	Yes	No
1	**CHECK FOR ANY OTHER DTC ON DISPLAY.**	Is any other DTC displayed?	Inspect DTC using "List of Diagnostic Trouble Code (DTC)". <Ref. to EN(H4SO U5)(diag)-73, List of Diagnostic Trouble Code (DTC).>	Go to step **2.**
2	**CHECK CONDITION OF CRANKSHAFT POSITION SENSOR.** Turn the ignition switch to OFF.	Is the crankshaft position sensor installation bolt tightened securely?	Go to step **3.**	Tighten crankshaft position sensor installation bolt securely.
3	**CHECK CRANK SPROCKET.** Remove the timing belt cover.	Are crank sprocket teeth cracked or damaged?	Replace the crank sprocket. <Ref. to ME(H4SO)-47, Crank Sprocket.>	Go to step **4.**
4	**CHECK INSTALLATION CONDITION OF TIMING BELT.** Turn the crankshaft to align alignment mark on crank sprocket with alignment mark on cylinder block.	Is the timing belt dislocated from its proper position?	Repair installation condition of timing belt. <Ref. to ME(H4SO)-41, Timing Belt.>	Replace the crankshaft position sensor. <Ref. to FU(H4SO U5)-24, Crankshaft Position Sensor.>

BJ:DTC P0340 CAMSHAFT POSITION SENSOR “A” CIRCUIT (BANK 1 OR SINGLE SENSOR)

DTC DETECTING CONDITION:

- Detect as soon as malfunction occurs.
- GENERAL DESCRIPTION <Ref. to GD(H4SO U5)-109, DTC P0340 CAMSHAFT POSITION SENSOR “A” CIRCUIT (BANK 1 OR SINGLE SENSOR), Diagnostic Trouble Code (DTC) Detecting Criteria.>

TROUBLE SYMPTOM:

- Engine stalls.
- Failure of engine to start

CAUTION:
After repair or replacement of faulty parts, conduct Clear Memory Mode <Ref. to EN(H4SO U5)(diag)-46, OPERATION, Clear Memory Mode.> and Inspection Mode <Ref. to EN(H4SO U5)(diag)-37, OPERATION, Inspection Mode.>.

WIRING DIAGRAM:

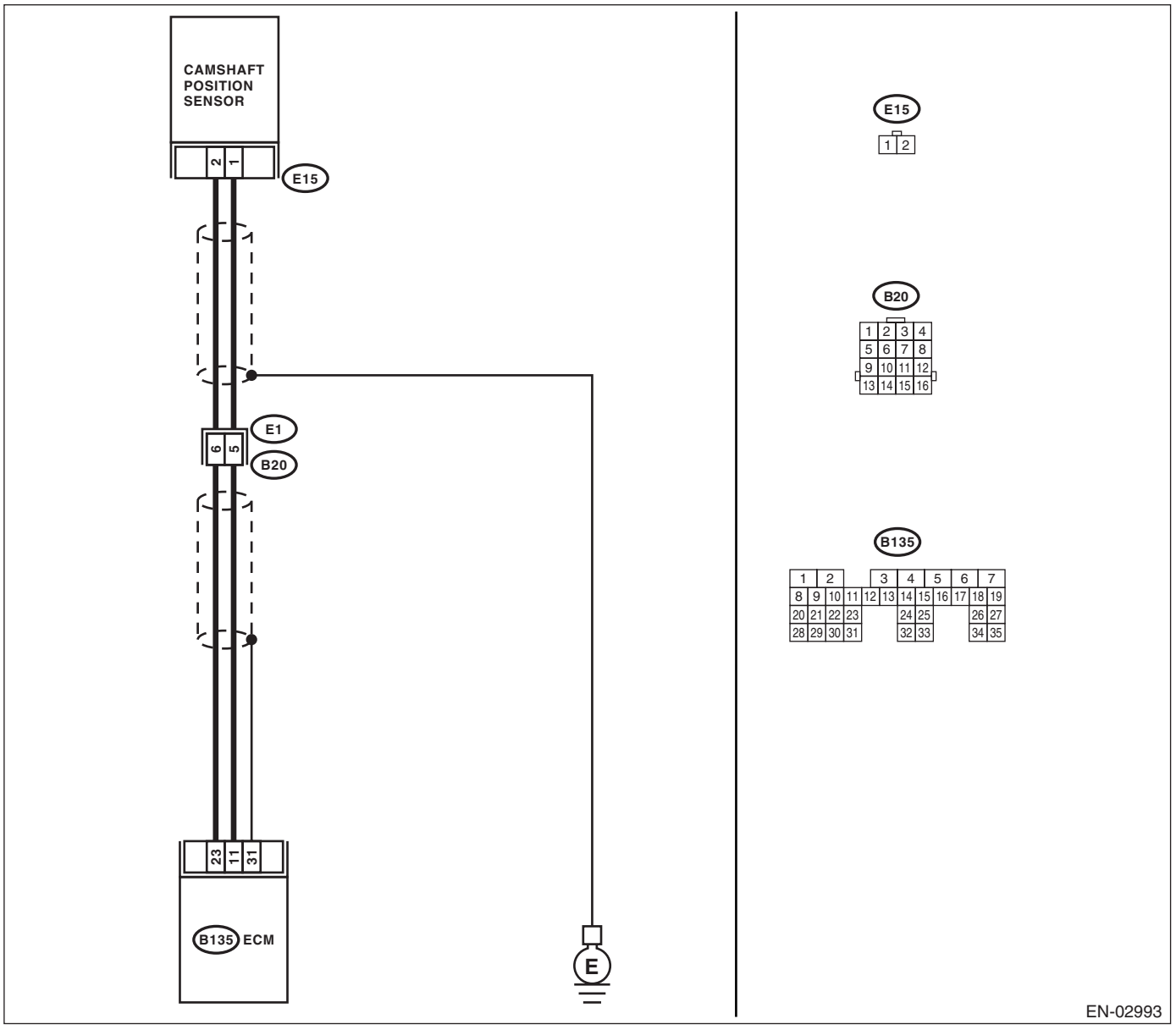

	Step	Check	Yes	No
1	**CHECK HARNESS BETWEEN CAMSHAFT POSITION SENSOR AND ECM CONNECTOR.** 1) Turn the ignition switch to OFF. 2) Disconnect the connector from camshaft position sensor. 3) Measure the resistance of harness between camshaft position sensor connector and engine ground. ***Connector & terminal*** ***(E15) No. 1 — Engine ground:***	Is the resistance more than 100 kΩ?	Repair harness and connector. NOTE: In this case, repair the following: • Open circuit in harness between camshaft position sensor and ECM connector • Poor contact in ECM connector • Poor contact in coupling connector	Go to step **2.**
2	**CHECK HARNESS BETWEEN CAMSHAFT POSITION SENSOR AND ECM CONNECTOR.** Measure the resistance of harness between camshaft position sensor connector and engine ground. ***Connector & terminal*** ***(E15) No. 1 — Engine ground:***	Is the resistance less than 10 Ω?	Repair ground short circuit in harness between camshaft position sensor and ECM connector. NOTE: The harness between both connectors are shielded. Repair ground short circuit in harness together with shield.	Go to step **3.**
3	**CHECK HARNESS BETWEEN CAMSHAFT POSITION SENSOR AND ECM CONNECTOR.** Measure the resistance of harness between camshaft position sensor connector and engine ground. ***Connector & terminal*** ***(E15) No. 2 — Engine ground:***	Is the resistance less than 5 Ω?	Go to step **4.**	Repair harness and connector. NOTE: In this case, repair the following: • Open circuit in harness between camshaft position sensor and ECM connector • Poor contact in ECM connector • Poor contact in coupling connector
4	**CHECK CONDITION OF CAMSHAFT POSITION SENSOR.**	Is the camshaft position sensor installation bolt tightened securely?	Go to step **5.**	Tighten camshaft position sensor installation bolt securely.
5	**CHECK CAMSHAFT POSITION SENSOR.** 1) Remove the camshaft position sensor. 2) Measure the resistance between connector terminals of camshaft position sensor. ***Terminals*** ***No. 1 — No. 2:***	Is the resistance 1 — 4 kΩ?	Repair poor contact in camshaft position sensor connector.	Replace the camshaft position sensor. <Ref. to FU(H4SO U5)-25, Camshaft Position Sensor.>

BK:DTC P0341 CAMSHAFT POSITION SENSOR “A” CIRCUIT RANGE/PERFORMANCE (BANK 1 OR SINGLE SENSOR)

DTC DETECTING CONDITION:

- Detect as soon as malfunction occurs.
- GENERAL DESCRIPTION <Ref. to GD(H4SO U5)-111, DTC P0341 CAMSHAFT POSITION SENSOR “A” CIRCUIT RANGE/PERFORMANCE (BANK 1 OR SINGLE SENSOR), Diagnostic Trouble Code (DTC) Detecting Criteria.>

TROUBLE SYMPTOM:

- Engine stalls.
- Failure of engine to start

CAUTION:
After repair or replacement of faulty parts, conduct Clear Memory Mode <Ref. to EN(H4SO U5)(diag)-46, OPERATION, Clear Memory Mode.> and Inspection Mode <Ref. to EN(H4SO U5)(diag)-37, OPERATION, Inspection Mode.>.

WIRING DIAGRAM:

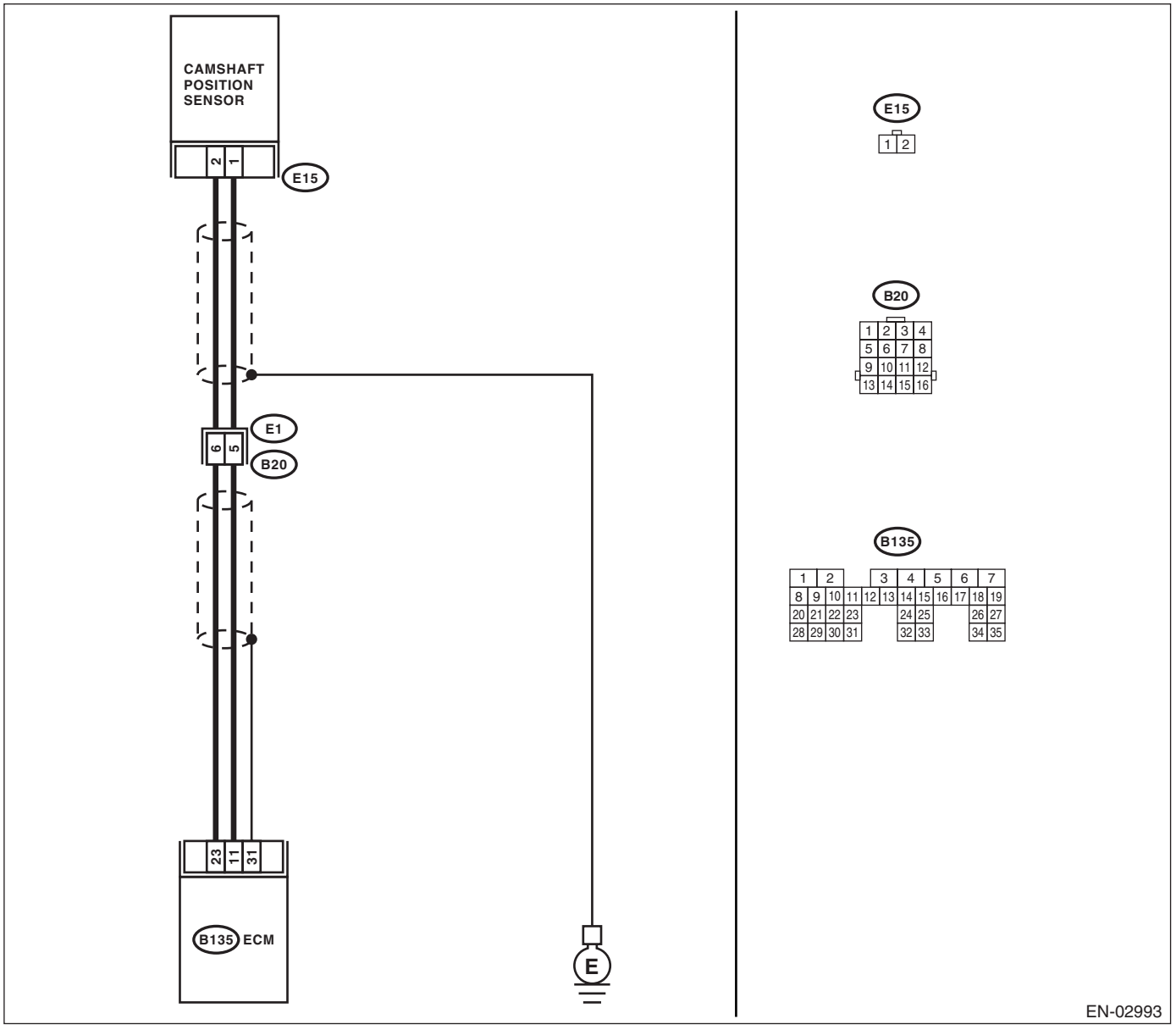

	Step	Check	Yes	No
1	**CHECK FOR ANY OTHER DTC ON DISPLAY.**	Is any other DTC displayed?	Inspect DTC using "List of Diagnostic Trouble Code (DTC)". <Ref. to EN(H4SO U5)(diag)-73, List of Diagnostic Trouble Code (DTC).>	Go to step **2.**
2	**CHECK HARNESS BETWEEN CAMSHAFT POSITION SENSOR AND ECM CONNECTOR.** 1) Turn the ignition switch to OFF. 2) Disconnect the connector from camshaft position sensor. 3) Measure the resistance of harness between camshaft position sensor connector and engine ground. ***Connector & terminal*** ***(E15) No. 1 — Engine ground:***	Is the resistance more than 100 kΩ?	Repair harness and connector. NOTE: In this case, repair the following: • Open circuit in harness between camshaft position sensor and ECM connector • Poor contact in ECM connector • Poor contact in coupling connector	Go to step **3.**
3	**CHECK HARNESS BETWEEN CAMSHAFT POSITION SENSOR AND ECM CONNECTOR.** Measure the resistance of harness between camshaft position sensor connector and engine ground. ***Connector & terminal*** ***(E15) No. 1 — Engine ground:***	Is the resistance less than 10 Ω?	Repair ground short circuit in harness between camshaft position sensor and ECM connector. NOTE: The harness between both connectors are shielded. Repair ground short circuit in harness together with shield.	Go to step **4.**
4	**CHECK HARNESS BETWEEN CAMSHAFT POSITION SENSOR AND ECM CONNECTOR.** Measure the resistance of harness between camshaft position sensor connector and engine ground. ***Connector & terminal*** ***(E15) No. 2 — Engine ground:***	Is the resistance less than 5 Ω?	Go to step **5.**	Repair harness and connector. NOTE: In this case, repair the following: • Open circuit in harness between camshaft position sensor and ECM connector • Poor contact in ECM connector • Poor contact in coupling connector
5	**CHECK CONDITION OF CAMSHAFT POSITION SENSOR.**	Is the camshaft position sensor installation bolt tightened securely?	Go to step **6.**	Tighten camshaft position sensor installation bolt securely.
6	**CHECK CAMSHAFT POSITION SENSOR.** 1) Remove the camshaft position sensor. 2) Measure the resistance between connector terminals of camshaft position sensor. ***Terminals*** ***No. 1 — No. 2:***	Is the resistance 1 — 4 kΩ?	Go to step **7.**	Replace the camshaft position sensor. <Ref. to FU(H4SO U5)-25, Camshaft Position Sensor.>

	Step	Check	Yes	No
7	**CHECK CONDITION OF CAMSHAFT POSITION SENSOR.** Turn the ignition switch to OFF.	Is the camshaft position sensor installation bolt tightened securely?	Go to step **8.**	Tighten camshaft position sensor installation bolt securely.
8	**CHECK CAM SPROCKET.** Remove the timing belt cover. <Ref. to ME(H4SO)-40, Timing Belt Cover.>	Are cam sprocket teeth cracked or damaged?	Replace the cam sprocket. <Ref. to ME(H4SO)-46, Cam Sprocket.>	Go to step **9.**
9	**CHECK INSTALLATION CONDITION OF TIMING BELT.** Turn the camshaft to align alignment mark on cam sprocket with alignment mark on timing belt cover LH.	Is the timing belt dislocated from its proper position?	Repair installation condition of timing belt. <Ref. to ME(H4SO)-41, Timing Belt.>	Replace the camshaft position sensor. <Ref. to FU(H4SO U5)-25, Camshaft Position Sensor.>

BL:DTC P0400 EXHAUST GAS RECIRCULATION FLOW

DTC DETECTING CONDITION:

- Two consecutive driving cycles with fault
- GENERAL DESCRIPTION <Ref. to GD(H4SO U5)-113, DTC P0400 EXHAUST GAS RECIRCULATION FLOW, Diagnostic Trouble Code (DTC) Detecting Criteria.>

TROUBLE SYMPTOM:

- Poor driving performance at low engine speed
- Faulty idling
- Poor driving performance

CAUTION:

After repair or replacement of faulty parts, conduct Clear Memory Mode <Ref. to EN(H4SO U5)(diag)-46, OPERATION, Clear Memory Mode.> and Inspection Mode <Ref. to EN(H4SO U5)(diag)-37, OPERATION, Inspection Mode.>.

WIRING DIAGRAM:

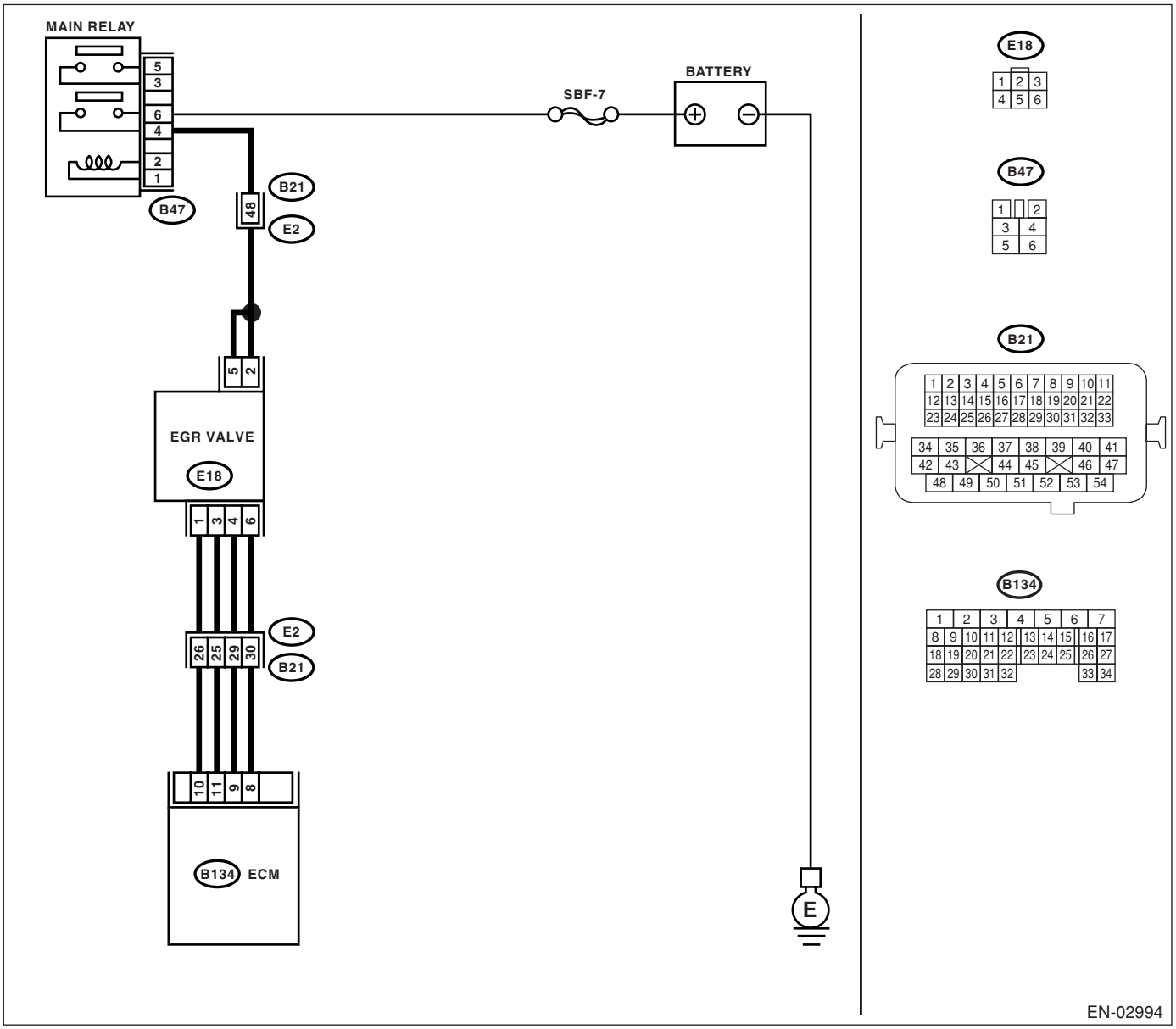

	Step	Check	Yes	No
1	**CHECK FOR ANY OTHER DTC ON DISPLAY.**	Is any other DTC displayed?	Inspect DTC using "List of Diagnostic Trouble Code (DTC)". <Ref. to EN(H4SO U5)(diag)-73, List of Diagnostic Trouble Code (DTC).>	Go to step **2.**
2	**CHECK CURRENT DATA.** 1) Start the engine. 2) Read data of intake manifold absolute pressure signal using Subaru Select Monitor or general scan tool. NOTE: • Subaru Select Monitor For detailed operation procedure, refer to "READ CURRENT DATA FOR ENGINE". <Ref. to EN(H4SO U5)(diag)-28, Subaru Select Monitor.> • General scan tool For detailed operation procedure, refer to the general scan tool instruction manual.	Is the measured value more than 53.3 kPa (400 mmHg, 15.75 inHg)?	Make sure that EGR valve, manifold pressure sensor and throttle body are securely installed.	Go to step **3.**
3	**CHECK POWER SUPPLY TO EGR SOLENOID VALVE.** 1) Disconnect connector from EGR solenoid valve. 2) Turn ignition switch ON. 3) Measure voltage between EGR solenoid valve and engine ground. ***Connector & terminal*** ***(E15) No. 2 — Engine ground:*** ***(E18) No. 5 — Engine ground:***	Is the measured value more than 10 V?	Go to step **4.**	Repair the open circuit in harness between main relay and EGR solenoid valve connector.
4	**CHECK EGR SOLENOID VALVE.** Measure resistance between EGR solenoid valve terminals. NOTE: Measure resistance between EGR solenoid valve terminals. ***Connector & terminal*** ***No. 1 — No. 2:*** ***No. 3 — No. 2:*** ***No. 4 — No. 5:*** ***No. 6 — No. 5:***	Is the measured value within 20 to 30 Ω?	Go to step **5.**	Replace EGR solenoid valve. <Ref. to FU(H4SO U5)-33, EGR Valve.>
5	**OUTPUT SIGNAL FROM ECM** 1) Turn ignition switch OFF. 2) Connect connectors to ECM and EGR solenoid valve. 3) Turn ignition switch ON. 4) Measure voltage between ECM and chassis ground. ***Connector & terminal*** ***(B134) No. 9 (+) — Chassis ground (−):*** ***(B134) No. 10 (+) — Chassis ground (−):*** ***(B134) No. 11 (+) — Chassis ground (−):*** ***(B134) No. 8 (+) — Chassis ground (−):***	Is the measured value within 0 to 10 V?	Repair poor contact in ECM connector.	Go to step **6.**

	Step	Check	Yes	No
6	**CHECK HARNESS BETWEEN EGR SOLENOID VALVE AND ECM CONNECTOR.** 1) Turn ignition switch OFF. 2) Disconnect connector from EGR solenoid valve and ECM. 3) Measure resistance of harness between EGR solenoid valve and ECM connector. ***Connector & terminal*** ***(B134) No. 9 — (E18) No. 4:*** ***(B134) No. 10 — (E18) No. 1:*** ***(B134) No. 11 — (E18) No. 3:*** ***(B134) No. 8 — (E18) No. 6:***	Is the measured value less than 1 Ω?	Go to step **7.**	Repair open circuit in harness between ECM and EGR solenoid valve connector. <Ref. to FU(H4SO U5)-33, EGR Valve.>
7	**CHECK HARNESS BETWEEN EGR SOLENOID VALVE AND ECM CONNECTOR.** Measure resistance of harness between EGR solenoid valve and chassis ground. ***Connector & terminal*** ***(B134) No. 9 — Chassis ground:*** ***(B134) No. 10 — Chassis ground:*** ***(B134) No. 11 — Chassis ground:*** ***(B134) No. 8 — Chassis ground:***	Is the measured value more than 1 MΩ?	Go to step **8.**	Repair short circuit in harness between main relay and EGR solenoid valve connector.
8	**CHECK POOR CONTACT.** Check poor contact in ECM and EGR solenoid valve connector.	Is there poor contact in ECM and EGR solenoid valve connector?	Repair poor contact in ECM and EGR solenoid valve connector.	Even if MIL lights up, the circuit has returned to a normal condition at this time.

BM:DTC P0420 CATALYST SYSTEM EFFICIENCY BELOW THRESHOLD (BANK 1)

DTC DETECTING CONDITION:

- Two consecutive driving cycles with fault
- GENERAL DESCRIPTION <Ref. to GD(H4SO U5)-117, DTC P0420 CATALYST SYSTEM EFFICIENCY BELOW THRESHOLD (BANK 1), Diagnostic Trouble Code (DTC) Detecting Criteria.>

TROUBLE SYMPTOM:

- Engine stalls.
- Idle mixture is out of specifications.

CAUTION:
After repair or replacement of faulty parts, conduct Clear Memory Mode <Ref. to EN(H4SO U5)(diag)-46, OPERATION, Clear Memory Mode.> and Inspection Mode <Ref. to EN(H4SO U5)(diag)-37, OPERATION, Inspection Mode.>.

WIRING DIAGRAM:

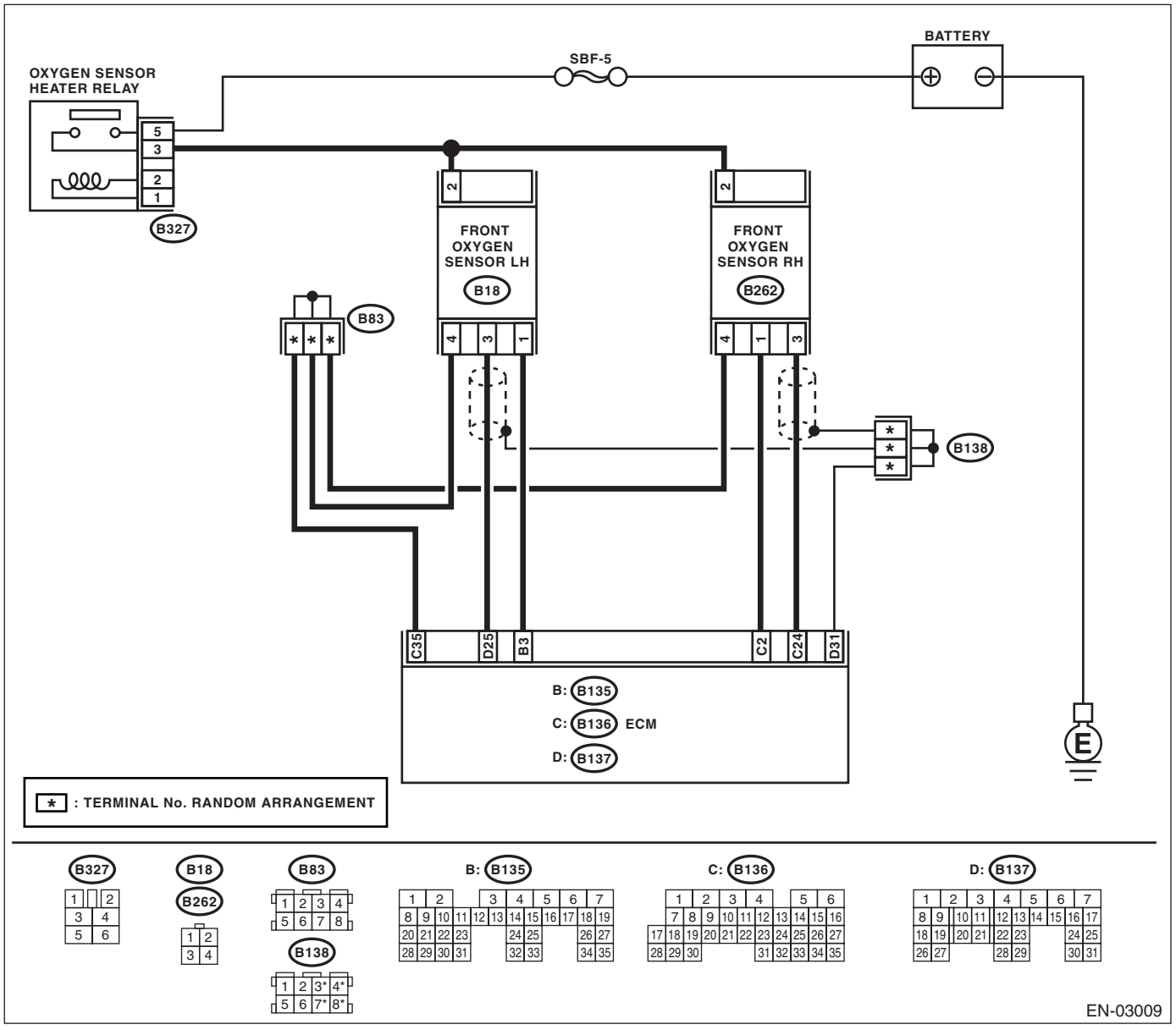

	Step	Check	Yes	No
1	**CHECK ANY OTHER DTC ON DISPLAY.**	Is any other DTC displayed?	Check the appropriate DTC using the “List of Diagnostic Trouble Code (DTC)”. <Ref. to EN(H4SO U5)(diag)-73, List of Diagnostic Trouble Code (DTC).> NOTE: In this case, it is not necessary to inspect DTC P0420.	Go to step **2.**
2	**CHECK EXHAUST SYSTEM.** Check for gas leaks or air suction caused by loose or dislocated nuts and bolts, and open hole at exhaust pipes. NOTE: Check the following positions. • Between cylinder head and front exhaust pipe • Between front exhaust pipe and front catalytic converter • Between front catalytic converter and rear catalytic converter • Loose part and improper installation of front oxygen (A/F) sensor or rear oxygen sensor	Is there any fault in exhaust system?	Repair or replace the exhaust system. <Ref. to EX(H4SO)-2, General Description.>	Go to step **3.**

Step		Check	Yes	No
3	**CHECK WAVEFORM DATA ON SUBARU SELECT MONITOR (WHILE DRIVING).** 1) Drive the vehicle at a constant speed of 80 — 112 km/h (50 — 70 MPH). 2) Keep the condition of step 1) for 5 minutes, then read the waveform data in a driving condition using Subaru Select Monitor. 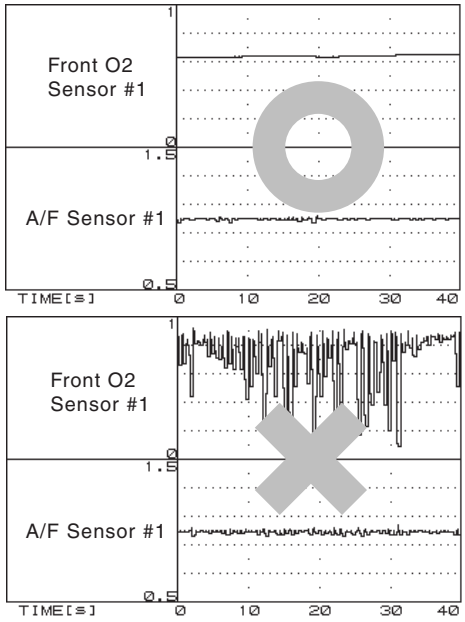 EN-04735 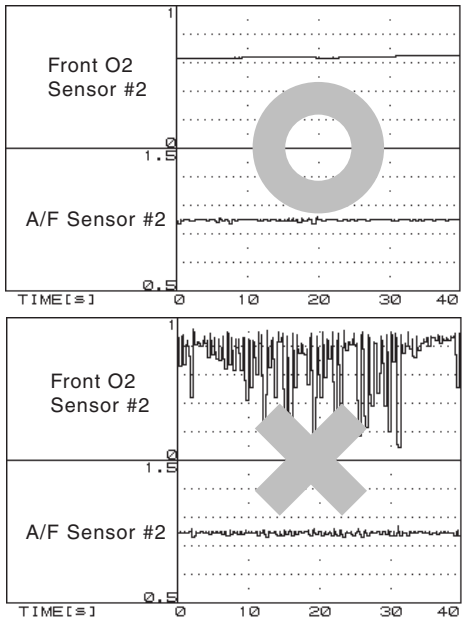 EN-04736	Is normal waveform pattern displayed?	Contact your SOA Service Center. NOTE: The probable cause is considered as the deterioration of multiple parts.	Go to step **4.**

	Step	Check	Yes	No
4	**CHECK WAVEFORM DATA ON SUBARU SELECT MONITOR (WHILE IDLING).** 1) Idle the engine. 2) Under the condition of step 1), read the waveform data using Subaru Select Monitor. 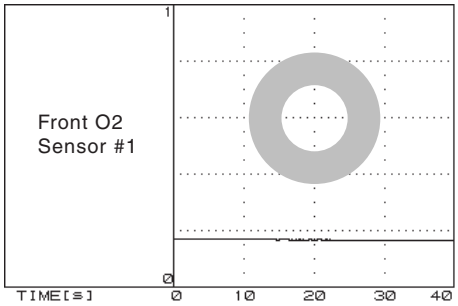 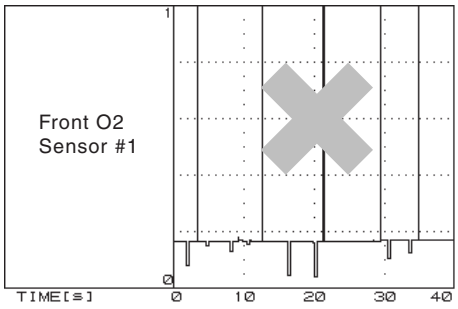 EN-04737 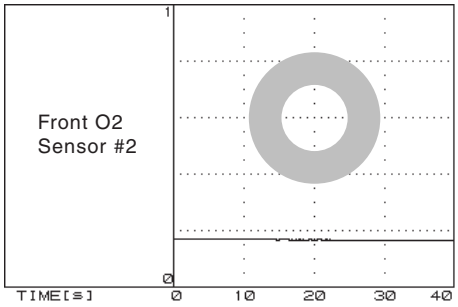 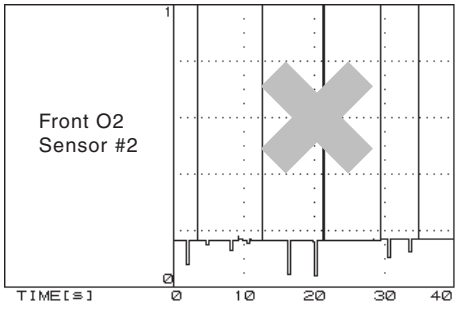 EN-04738	Is normal waveform pattern displayed?	Go to step **10.**	Go to step **5.**

	Step	Check	Yes	No
5	**CHECK FRONT OXYGEN SENSOR VOLTAGE.** 1) Warm-up the engine until engine coolant temperature is above 70°C (158°F), and keep the engine speed at 3,000 rpm. (Max. 2 minutes) 2) Read the voltage of front oxygen sensor using Subaru Select Monitor. NOTE: • For MT model, depress the clutch pedal. • Subaru Select Monitor For detailed operation procedure, refer to "READ CURRENT DATA FOR ENGINE". <Ref. to EN(H4SO U5)(diag)-28, Subaru Select Monitor.>	Is the voltage more than 490 mV?	Go to step **9.**	Go to step **6.**
6	**CHECK FRONT OXYGEN SENSOR CONNECTOR AND COUPLING CONNECTOR.**	Does water enter the connector?	Dry the water thoroughly.	Go to step **7.**
7	**CHECK HARNESS BETWEEN ECM AND FRONT OXYGEN SENSOR CONNECTOR.** 1) Turn the ignition switch to OFF. 2) Disconnect the connector from ECM and front oxygen sensor. 3) Measure the resistance of harness between ECM and front oxygen sensor connector. ***Connector & terminal*** ***(B136) No. 24 — (B262) No. 3:*** ***(B136) No. 35 — (B262) No. 4:*** ***(B137) No. 25 — (B18) No. 3:*** ***(B136) No. 35 — (B18) No. 4:***	Is the resistance more than 3 Ω?	Repair the open circuit of harness between ECM and front oxygen sensor connector.	Go to step **8.**
8	**CHECK HARNESS BETWEEN ECM AND FRONT OXYGEN SENSOR CONNECTOR.** 1) Turn the ignition switch to ON. 2) Measure the voltage between front oxygen sensor connector and chassis ground. ***Connector & terminal*** ***(B262) No. 3 (+) — Chassis ground (−):*** ***(B18) No. 3 (+) — Chassis ground (−):***	Is the voltage 0.2 — 0.5 V?	Go to step **11.**	Repair the harness and connector. NOTE: Repair the following. • Open circuit in harness between front oxygen sensor and ECM connector • Poor contact in front oxygen sensor and ECM connector • Poor contact in ECM connector

	Step	Check	Yes	No
9	**CHECK FRONT OXYGEN SENSOR VOLTAGE.** 1) Warm-up the engine until engine coolant temperature is above 70°C (158°F), and rapidly reduce the engine speed from 3,000 rpm. 2) Read the voltage of front oxygen sensor using Subaru Select Monitor. NOTE: • For MT model, depress the clutch pedal. • Subaru Select Monitor For detailed operation procedure, refer to "READ CURRENT DATA FOR ENGINE". <Ref. to EN(H4SO U5)(diag)-28, Subaru Select Monitor.>	Is the voltage 250 mV or less?	Contact your SOA Service Center. NOTE: The probable cause is considered as the deterioration of multiple parts.	Go to step **6.**
10	**CHECK CATALYTIC CONVERTER.**	Is the catalytic converter damaged?	Replace the catalytic converter. <Ref. to EC(H4SO)-3, Front Catalytic Converter.>	Contact your SOA Service Center. NOTE: The probable cause is considered as the deterioration of multiple parts.
11	**CHECK FRONT OXYGEN SENSOR SHIELD.** 1) Turn the ignition switch to OFF. 2) Bare the harness sensor shield on the body side of front oxygen sensor connector. 3) Measure the resistance between sensor shield and chassis ground.	Is resistance less than 1 Ω?	Replace the front oxygen sensor. <Ref. to FU(H4SO)-32, Front Oxygen (A/F) Sensor.>	Repair the open circuit of front oxygen sensor harness.

BN:DTC P0442 EVAPORATIVE EMISSION CONTROL SYSTEM LEAK DETECTED (SMALL LEAK)

DTC DETECTING CONDITION:

- Two consecutive driving cycles with fault
- GENERAL DESCRIPTION <Ref. to GD(H4SO U5)-120, DTC P0442 EVAPORATIVE EMISSION CONTROL SYSTEM LEAK DETECTED (SMALL LEAK), Diagnostic Trouble Code (DTC) Detecting Criteria.>

TROUBLE SYMPTOM:

- Fuel odor
- There is a hole of more than 1.0 mm (0.04 in) dia. in evaporation system or fuel tank.

CAUTION:
After repair or replacement of faulty parts, conduct CLEAR MEMORY MODE <Ref. to EN(H4SO U5)(diag)-46, OPERATION, Clear Memory Mode.> and INSPECTION MODE <Ref. to EN(H4SO U5)(diag)-37, OPERATION, Inspection Mode.>.

WIRING DIAGRAM:

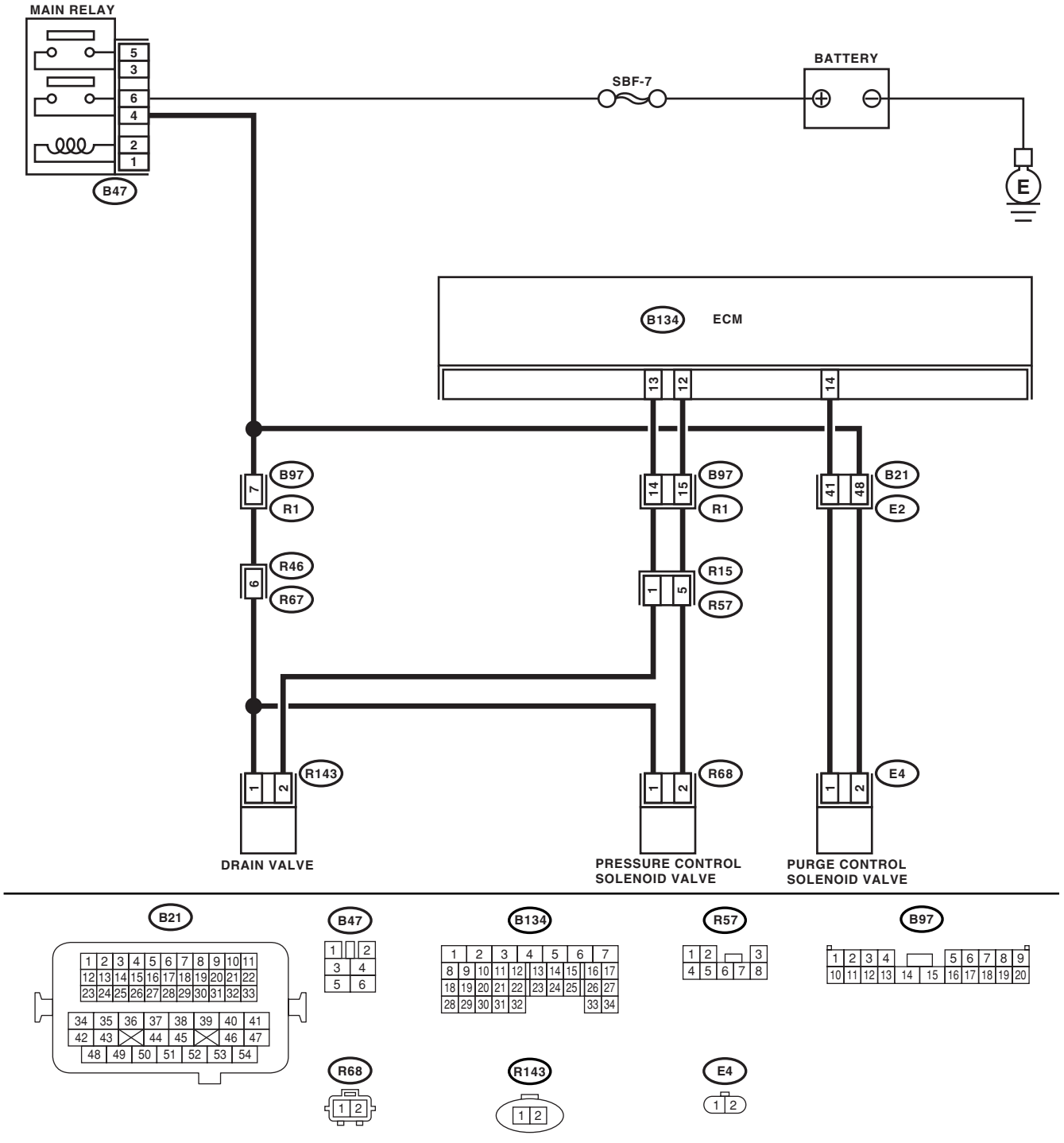

EN-02996

	Step	Check	Yes	No
1	**CHECK FOR ANY OTHER DTC ON DISPLAY.**	Is any other DTC displayed?	Inspect the relevant DTC using "List of Diagnostic Trouble Code (DTC)". <Ref. to EN(H4SO U5)(diag)-73, List of Diagnostic Trouble Code (DTC).>	Go to step **2.**
2	**CHECK FUEL FILLER CAP.** 1) Turn ignition switch to OFF. 2) Check the fuel filler cap. NOTE: The DTC is stored in memory if fuel filler cap is or was loose or if the cap chain was caught while tightening.	Is the fuel filler cap tightened securely?	Go to step **3.**	Tighten fuel filler cap securely.
3	**CHECK FUEL FILLER CAP.**	Is the fuel filler cap genuine?	Go to step **4.**	Replace with a genuine fuel filler cap.
4	**CHECK FUEL FILLER PIPE PACKING.**	Is there any damage to the seal between fuel filler cap and fuel filler pipe?	Repair or replace the fuel filler cap and fuel filler pipe. <Ref. to FU(H4SO U5)-55, Fuel Filler Pipe.>	Go to step **5.**
5	**CHECK DRAIN VALVE.** 1) Connect the test mode connector. 2) Turn ignition switch to ON. 3) Operate the drain valve. NOTE: Drain valve operation can also be executed using Subaru Select Monitor. For the procedure, refer to "Compulsory Valve Operation Check Mode". <Ref. to EN(H4SO U5)(diag)-47, Compulsory Valve Operation Check Mode.>	Does the drain valve operate?	Go to step **6.**	Replace the drain valve. <Ref. to EC(H4SO)-16, Drain Valve.>
6	**CHECK PURGE CONTROL SOLENOID VALVE.** Operate the purge control solenoid valve. NOTE: Purge control solenoid valve operation can also be executed using Subaru Select Monitor. For the procedure, refer to "Compulsory Valve Operation Check Mode". <Ref. to EN(H4SO U5)(diag)-47, Compulsory Valve Operation Check Mode.>	Does the purge control solenoid valve operate?	Go to step **7.**	Replace the purge control solenoid valve. <Ref. to EC(H4SO)-6, Purge Control Solenoid Valve.>
7	**CHECK PRESSURE CONTROL SOLENOID VALVE.** Operate the pressure control solenoid valve. NOTE: Pressure control solenoid valve operation can also be executed using Subaru Select Monitor. For the procedure, refer to "Compulsory Valve Operation Check Mode". <Ref. to EN(H4SO U5)(diag)-47, Compulsory Valve Operation Check Mode.>	Does the pressure control solenoid valve operate?	Go to step **8.**	Replace the pressure control solenoid valve. <Ref. to EC(H4SO)-13, Pressure Control Solenoid Valve.>

	Step	Check	Yes	No
8	**CHECK EVAPORATIVE EMISSION CONTROL SYSTEM LINE.** Turn ignition switch to OFF.	Is there a hole of more than 1.0 mm (0.04 in) dia. on evaporation line?	Repair or replace the evaporation line. <Ref. to FU(H4SO U5)-64, Fuel Delivery, Return and Evaporation Lines.>	Go to step **9.**
9	**CHECK CANISTER.**	Is the canister damaged or is there a hole of more than 1.0 mm (0.04 in) dia. in it?	Repair or replace the canister. <Ref. to EC(H4SO)-5, Canister.>	Go to step **10.**
10	**CHECK FUEL TANK.** Remove the fuel tank. <Ref. to FU(H4SO U5)-49, Fuel Tank.>	Is the fuel tank damaged or is there a hole of more than 1.0 mm (0.04 in) dia. in it?	Repair or replace the fuel tank. <Ref. to FU(H4SO U5)-49, Fuel Tank.>	Go to step **11.**
11	**CHECK ANY OTHER MECHANICAL TROUBLE IN EVAPORATIVE EMISSION CONTROL SYSTEM.**	Are there holes of more than 1.0 mm (0.04 in) dia., cracks, clogging, disconnections or bend of hoses or pipes in evaporative emission control system?	Repair or replace the hoses or pipes.	Contact SOA Service Center.

BO:DTC P0447 EVAPORATIVE EMISSION CONTROL SYSTEM VENT CONTROL CIRCUIT OPEN

DTC DETECTING CONDITION:

- Two consecutive driving cycles with fault
- GENERAL DESCRIPTION <Ref. to GD(H4SO U5)-139, DTC P0447 EVAPORATIVE EMISSION CONTROL SYSTEM VENT CONTROL CIRCUIT OPEN, Diagnostic Trouble Code (DTC) Detecting Criteria.>

CAUTION:

After repair or replacement of faulty parts, conduct CLEAR MEMORY MODE <Ref. to EN(H4SO U5)(diag)-46, OPERATION, Clear Memory Mode.> and INSPECTION MODE <Ref. to EN(H4SO U5)(diag)-37, OPERATION, Inspection Mode.>.

WIRING DIAGRAM:

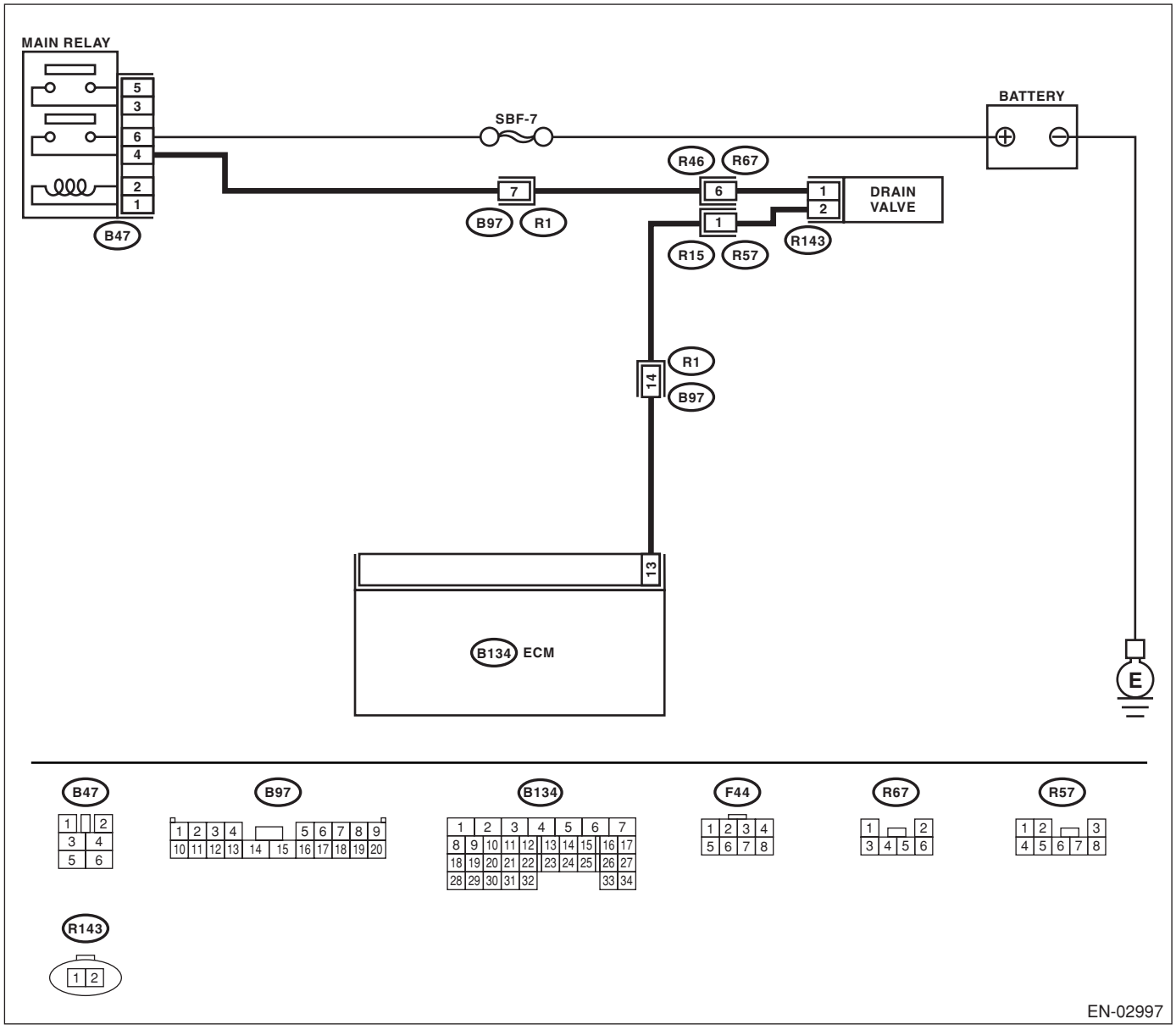

	Step	Check	Yes	No
1	**CHECK OUTPUT SIGNAL FROM ECM.** 1) Turn ignition switch to ON. 2) Measure the voltage between ECM and chassis ground. ***Connector & terminal*** ***(B134) No. 13 (+) — Chassis ground (−):***	Is the voltage more than 10 V?	Go to step **2.**	Go to step **3.**
2	**CHECK FOR POOR CONTACT.** Check for poor contact in ECM connector.	Is there poor contact in ECM connector?	Repair poor contact in ECM connector.	The malfunction indicator light may light up, however, the circuit is returned to the normal status at the moment. (However, the possibility of poor contact still remains.) NOTE: In this case, repair the following: • Poor contact in drain valve connector • Poor contact in ECM connector • Poor contact in coupling connector
3	**CHECK HARNESS BETWEEN DRAIN VALVE AND ECM CONNECTOR.** 1) Turn ignition switch to OFF. 2) Disconnect the connectors from drain valve and ECM. 3) Measure the resistance of harness between drain valve connector and chassis ground. ***Connector & terminal*** ***(R143) No. 2 — Chassis ground:***	Is the resistance more than 1 MΩ?	Go to step **4.**	Repair short circuit to ground in harness between ECM and drain valve connector.
4	**CHECK HARNESS BETWEEN DRAIN VALVE AND ECM CONNECTOR.** Measure the resistance of harness between ECM and drain valve connector. ***Connector & terminal*** ***(B134) No. 13 — (R143) No. 2:***	Is the resistance less than 1 Ω?	Go to step **5.**	Repair harness and connector. NOTE: In this case, repair the following: • Open circuit in harness between ECM and drain valve connector • Poor contact in coupling connector
5	**CHECK DRAIN VALVE.** Measure the resistance between drain valve terminals. ***Terminals*** ***No. 1 — No. 2:***	Is the resistance 10 — 100 Ω?	Go to step **6.**	Replace the drain valve. <Ref. to EC(H4SO)-16, Drain Valve.>

	Step	Check	Yes	No
6	**CHECK POWER SUPPLY TO DRAIN VALVE.** 1) Turn ignition switch to ON. 2) Measure the voltage between drain valve and chassis ground. ***Connector & terminal*** ***(R143) No. 1 (+) — Chassis ground (−):***	Is the voltage more than 10 V?	Go to step **7.**	Repair harness and connector. NOTE: In this case, repair the following: • Open circuit in harness between main relay and drain valve • Poor contact in coupling connector • Poor contact in main relay connector
7	**CHECK FOR POOR CONTACT.** Check for poor contact in drain valve connector.	Is there poor contact in drain valve connector?	Repair poor contact in drain valve connector.	Contact SOA Service Center.

BP:DTC P0448 EVAPORATIVE EMISSION CONTROL SYSTEM VENT CONTROL CIRCUIT SHORTED

DTC DETECTING CONDITION:

- Two consecutive driving cycles with fault
- GENERAL DESCRIPTION <Ref. to GD(H4SO U5)-141, DTC P0448 EVAPORATIVE EMISSION CONTROL SYSTEM VENT CONTROL CIRCUIT SHORTED, Diagnostic Trouble Code (DTC) Detecting Criteria.>

CAUTION:
After repair or replacement of faulty parts, conduct CLEAR MEMORY MODE <Ref. to EN(H4SO U5)(diag)-46, OPERATION, Clear Memory Mode.> and INSPECTION MODE <Ref. to EN(H4SO U5)(diag)-37, OPERATION, Inspection Mode.>.

WIRING DIAGRAM:

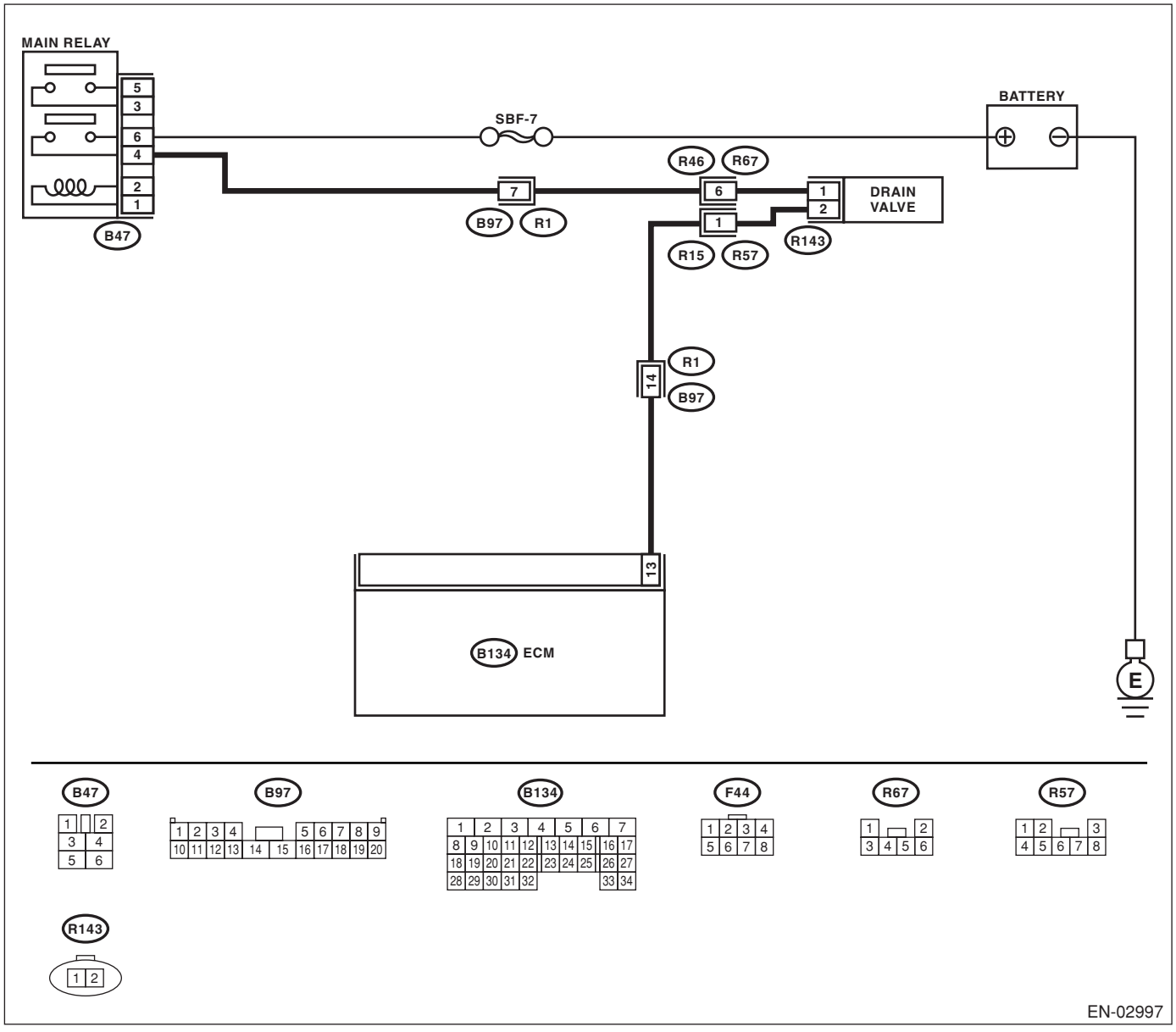

Step		Check	Yes	No
1	**CHECK INPUT SIGNAL FOR ECM.** 1) Turn ignition switch to OFF. 2) Connect the test mode connector at the lower portion of instrument panel (on the driver's side). 3) Turn ignition switch to ON. 4) While operating the drain valve, measure voltage between ECM and chassis ground. NOTE: Drain valve operation can be executed using Subaru Select Monitor. For the procedure, refer to "Compulsory Valve Operation Check Mode". <Ref. to EN(H4SO U5)(diag)-47, Compulsory Valve Operation Check Mode.> ***Connector & terminal*** ***(B134) No. 13 (+) — Chassis ground (–):***	Is the voltage 0 — 10 V?	Go to step **2.**	The malfunction indicator light may light up, however, the circuit is returned to the normal status at the moment. In this case, repair poor contact in ECM connector.
2	**CHECK INPUT SIGNAL FOR ECM.** 1) Turn ignition switch to ON. 2) Measure the voltage between ECM and chassis ground. ***Connector & terminal*** ***(B134) No. 13 (+) — Chassis ground (–):***	Is the voltage more than 10 V?	Go to step **4.**	Go to step **3.**
3	**CHECK FOR POOR CONTACT.** Check for poor contact in ECM connector.	Is there poor contact in ECM connector?	Repair poor contact in ECM connector.	Replace the ECM. <Ref. to FU(H4SO U5)-44, Engine Control Module (ECM).>
4	**CHECK HARNESS BETWEEN DRAIN VALVE AND ECM CONNECTOR.** 1) Turn ignition switch to OFF. 2) Disconnect the connector from drain valve. 3) Turn ignition switch to ON. 4) Measure the voltage between ECM and chassis ground. ***Connector & terminal*** ***(B134) No. 13 (+) — Chassis ground (–):***	Is the voltage more than 10 V?	Repair short circuit to battery in harness between ECM and drain valve connector. After repair, replace the ECM. <Ref. to FU(H4SO U5)-44, Engine Control Module (ECM).>	Go to step **5.**
5	**CHECK DRAIN VALVE.** 1) Turn ignition switch to OFF. 2) Measure the resistance between drain valve terminals. ***Terminals*** ***No. 1 — No. 2:***	Is the resistance less than 1 Ω?	Replace the drain valve <Ref. to EC(H4SO)-16, Drain Valve.> and ECM <Ref. to FU(H4SO U5)-44, Engine Control Module (ECM).>.	Go to step **6.**
6	**CHECK FOR POOR CONTACT.** Check for poor contact in ECM connector.	Is there poor contact in ECM connector?	Repair poor contact in ECM connector.	Replace the ECM. <Ref. to FU(H4SO U5)-44, Engine Control Module (ECM).>

BQ:DTC P0451 EVAPORATIVE EMISSION CONTROL SYSTEM PRESSURE SENSOR

DTC DETECTING CONDITION:

- Two consecutive driving cycles with fault
- GENERAL DESCRIPTION <Ref. to GD(H4SO U5)-143, DTC P0451 EVAPORATIVE EMISSION CONTROL SYSTEM PRESSURE SENSOR, Diagnostic Trouble Code (DTC) Detecting Criteria.>

CAUTION:

After repair or replacement of faulty parts, conduct CLEAR MEMORY MODE <Ref. to EN(H4SO U5)(diag)-46, OPERATION, Clear Memory Mode.> and INSPECTION MODE <Ref. to EN(H4SO U5)(diag)-37, OPERATION, Inspection Mode.>.

WIRING DIAGRAM:

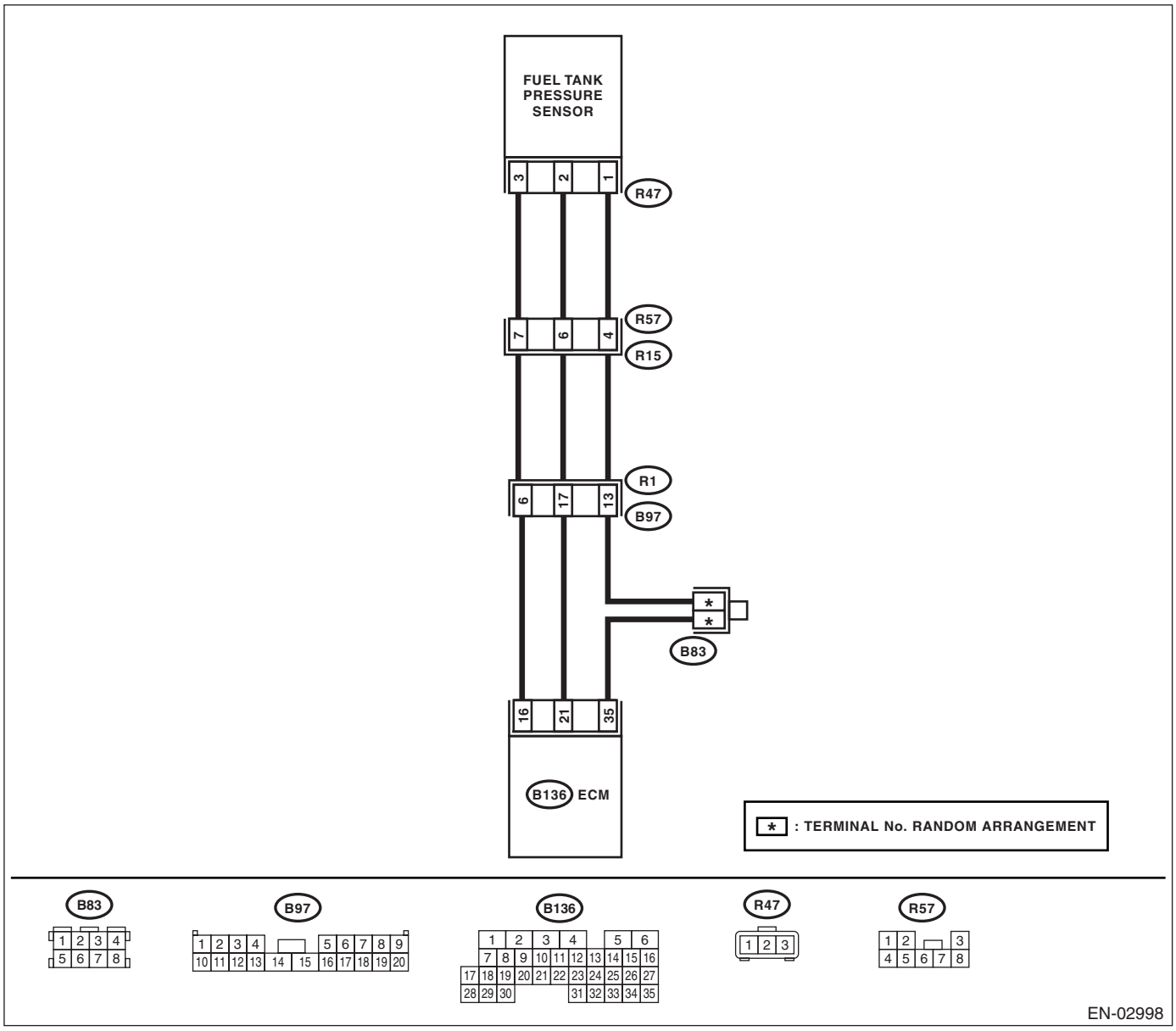

	Step	Check	Yes	No
1	**CHECK FOR ANY OTHER DTC ON DISPLAY.**	Is any other DTC displayed?	Inspect the relevant DTC using "List of Diagnostic Trouble Code (DTC)". <Ref. to EN(H4SO U5)(diag)-73, List of Diagnostic Trouble Code (DTC).>	Go to step **2.**
2	**CHECK FUEL FILLER CAP.** 1) Turn ignition switch to OFF. 2) Open the fuel flap.	Is the fuel filler cap tightened securely?	Go to step **3.**	Tighten fuel filler cap securely.
3	**CHECK PRESSURE/VACUUM LINE.** NOTE: Check the following items. • Disconnection, leakage and clogging of the vacuum hoses and pipes between fuel tank pressure sensor and fuel tank • Disconnection, leakage and clogging of air ventilation hoses and pipes between fuel filler pipe and fuel tank	Is there any fault in pressure/vacuum line?	Repair or replace the hoses and pipes.	Replace the fuel tank pressure sensor. <Ref. to EC(H4SO)-11, Fuel Tank Pressure Sensor.>

BR:DTC P0452 EVAPORATIVE EMISSION CONTROL SYSTEM PRESSURE SENSOR LOW INPUT

DTC DETECTING CONDITION:

- Two consecutive driving cycles with fault
- GENERAL DESCRIPTION <Ref. to GD(H4SO U5)-145, DTC P0452 EVAPORATIVE EMISSION CONTROL SYSTEM PRESSURE SENSOR LOW INPUT, Diagnostic Trouble Code (DTC) Detecting Criteria.>

CAUTION:

After repair or replacement of faulty parts, conduct CLEAR MEMORY MODE <Ref. to EN(H4SO U5)(diag)-46, OPERATION, Clear Memory Mode.> and INSPECTION MODE <Ref. to EN(H4SO U5)(diag)-37, OPERATION, Inspection Mode.>.

WIRING DIAGRAM:

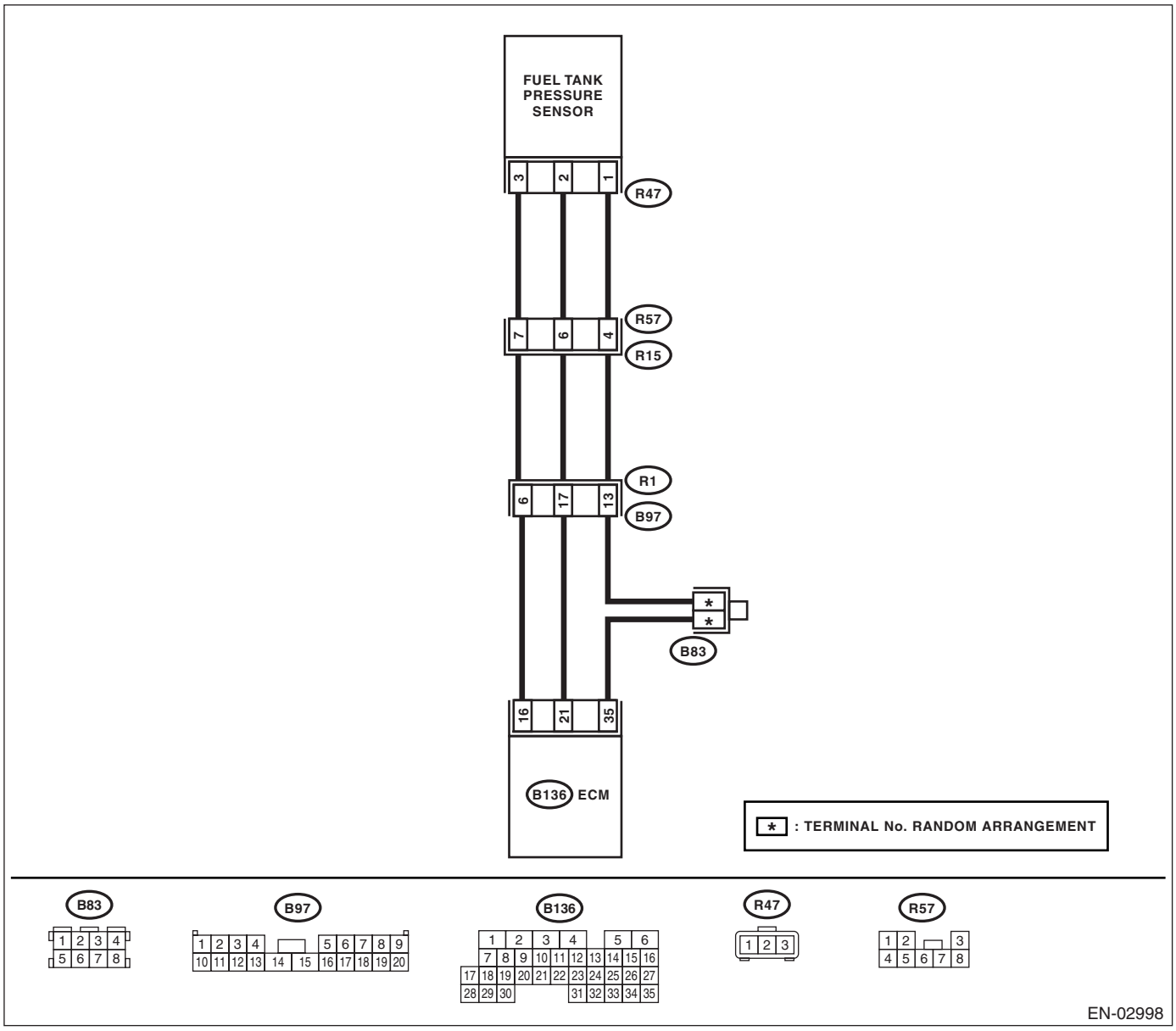

	Step	Check	Yes	No
1	**CHECK CURRENT DATA.** 1) Turn ignition switch to OFF. 2) Remove the fuel filler cap. 3) Install the fuel filler cap. 4) Turn ignition switch to ON. 5) Read the data of fuel tank pressure sensor signal using Subaru Select Monitor. NOTE: Subaru Select Monitor For detailed operation procedure, refer to "READ CURRENT DATA FOR ENGINE". <Ref. to EN(H4SO U5)(diag)-28, Subaru Select Monitor.>	Is the measured value less than –2.8 kPa (–21.0 mmHg, –0.827 inHg)?	Go to step **2.**	The malfunction indicator light may light up, however, the circuit is returned to the normal status at the moment.
2	**CHECK POWER SUPPLY TO FUEL TANK PRESSURE SENSOR.** Measure the voltage between ECM connector and chassis ground. ***Connector & terminal*** ***(B136) No. 16 (+) — Chassis ground (–):***	Is the voltage more than 4.5 V?	Go to step **4.**	Go to step **3.**
3	**CHECK POWER SUPPLY TO FUEL TANK PRESSURE SENSOR.** Measure the voltage between ECM connector and chassis ground. ***Connector & terminal*** ***(B136) No. 16 (+) — Chassis ground (–):***	Does the voltage change by shaking the ECM harness and connector?	Repair poor contact in ECM connector.	Contact SOA Service Center.
4	**CHECK INPUT SIGNAL FOR ECM.** Measure the voltage between ECM and chassis ground. ***Connector & terminal*** ***(B136) No. 21 (+) — Chassis ground (–):***	Is the voltage less than 0.2 V?	Go to step **6.**	Go to step **5.**
5	**CHECK INPUT SIGNAL FOR ECM. (USING SUBARU SELECT MONITOR.)** Read the data of fuel tank pressure sensor signal using Subaru Select Monitor. NOTE: • Subaru Select Monitor For detailed operation procedure, refer to "READ CURRENT DATA FOR ENGINE". <Ref. to EN(H4SO U5)(diag)-28, Subaru Select Monitor.>	Does the measured value change by shaking the ECM harness and connector?	Repair poor contact in ECM connector.	Go to step **6.**
6	**CHECK HARNESS BETWEEN ECM AND COUPLING CONNECTOR IN REAR WIRING HARNESS.** 1) Turn ignition switch to OFF. 2) Remove the rear seat cushion. 3) Separate rear wiring harness and fuel tank cord. 4) Turn ignition switch to ON. 5) Measure the voltage between rear wiring harness connector and chassis ground. ***Connector & terminal*** ***(R15) No. 7 (+) — Chassis ground (–):***	Is the voltage more than 4.5 V?	Go to step **7.**	Repair harness and connector. NOTE: In this case, repair the following: • Open circuit in harness between ECM and rear wiring harness connector • Poor contact in coupling connector

	Step	Check	Yes	No
7	**CHECK HARNESS BETWEEN ECM AND COUPLING CONNECTOR IN REAR WIRING HARNESS.** 1) Turn ignition switch to OFF. 2) Disconnect the connector from ECM. 3) Measure the resistance of harness between ECM and rear wiring harness connector. ***Connector & terminal*** ***(B136) No. 35 — (R15) No. 4:***	Is the resistance less than 1 Ω?	Go to step **8.**	Repair harness and connector. NOTE: In this case, repair the following: • Open circuit in harness between ECM and rear wiring harness connector • Poor contact in coupling connector • Poor contact in joint connector
8	**CHECK HARNESS BETWEEN ECM AND COUPLING CONNECTOR IN REAR WIRING HARNESS.** Measure the resistance of harness between rear wiring harness connector and chassis ground. ***Connector & terminal*** ***(R15) No. 4 (+) — Chassis ground:***	Is the resistance more than 1 MΩ?	Go to step **9.**	Repair short circuit to ground in harness between ECM and rear wiring harness connector.
9	**CHECK FUEL TANK CORD.** 1) Disconnect the connector from fuel tank pressure sensor. 2) Measure the resistance of fuel tank cord. ***Connector & terminal*** ***(R57) No. 7 — (R47) No. 3:***	Is the resistance less than 1 Ω?	Go to step **10.**	Repair open circuit in fuel tank cord.
10	**CHECK FUEL TANK CORD.** Measure the resistance of fuel tank cord. ***Connector & terminal*** ***(R57) No. 4 — (R47) No. 1:***	Is the resistance less than 1 Ω?	Go to step **11.**	Repair open circuit in fuel tank cord.
11	**CHECK FUEL TANK CORD.** Measure the resistance of harness between fuel tank pressure sensor connector and engine ground. ***Connector & terminal*** ***(R47) No. 2 — Chassis ground:***	Is the resistance more than 1 MΩ?	Go to step **12.**	Repair short circuit to ground in fuel tank cord.
12	**CHECK FOR POOR CONTACT.** Check for poor contact in fuel tank pressure sensor connector.	Is there poor contact in fuel tank pressure sensor connector?	Repair poor contact in fuel tank pressure sensor connector.	Replace the fuel tank pressure sensor. <Ref. to EC(H4SO)-11, Fuel Tank Pressure Sensor.>

BS:DTC P0453 EVAPORATIVE EMISSION CONTROL SYSTEM PRESSURE SENSOR HIGH INPUT

DTC DETECTING CONDITION:

- Two consecutive driving cycles with fault
- GENERAL DESCRIPTION <Ref. to GD(H4SO U5)-147, DTC P0453 EVAPORATIVE EMISSION CONTROL SYSTEM PRESSURE SENSOR HIGH INPUT, Diagnostic Trouble Code (DTC) Detecting Criteria.>

CAUTION:

After repair or replacement of faulty parts, conduct CLEAR MEMORY MODE <Ref. to EN(H4SO U5)(diag)-46, OPERATION, Clear Memory Mode.> and INSPECTION MODE <Ref. to EN(H4SO U5)(diag)-37, OPERATION, Inspection Mode.>.

WIRING DIAGRAM:

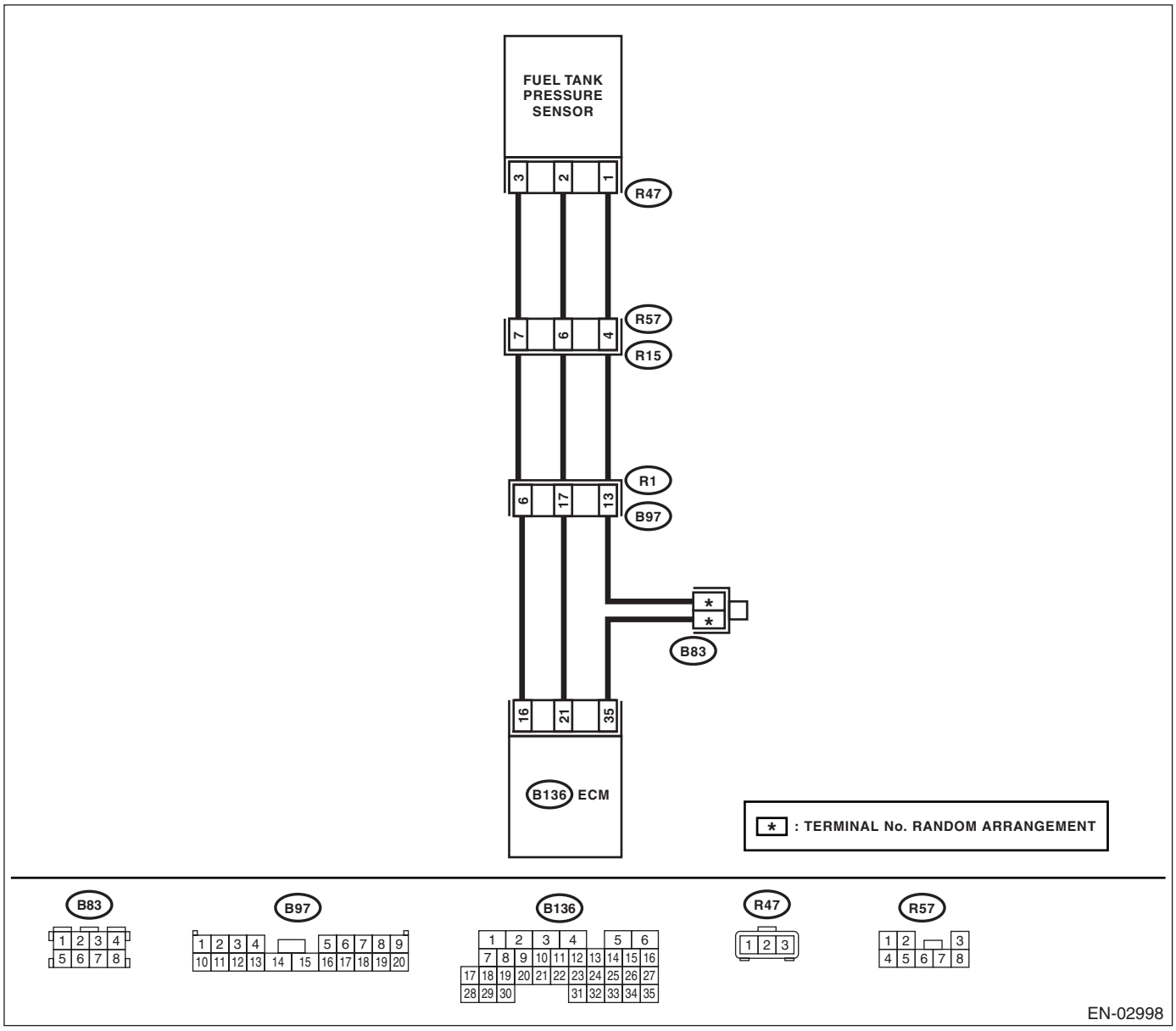

	Step	Check	Yes	No
1	**CHECK CURRENT DATA.** 1) Turn ignition switch to OFF. 2) Remove the fuel filler cap. 3) Install the fuel filler cap. 4) Turn ignition switch to ON. 5) Read the data of fuel tank pressure sensor signal using Subaru Select Monitor. NOTE: Subaru Select Monitor For detailed operation procedure, refer to "READ CURRENT DATA FOR ENGINE". <Ref. to EN(H4SO U5)(diag)-28, Subaru Select Monitor.>	Is the measured value more than 2.8 kPa (21.0 mmHg, 0.827 inHg)?	Go to step **11.**	Go to step **2.**
2	**CHECK POWER SUPPLY TO FUEL TANK PRESSURE SENSOR.** Measure the voltage between ECM connector and chassis ground. ***Connector & terminal*** ***(B136) No. 16 (+) — Chassis ground (–):***	Is the voltage more than 4.5 V?	Go to step **4.**	Go to step **3.**
3	**CHECK POWER SUPPLY TO FUEL TANK PRESSURE SENSOR.** Measure the voltage between ECM connector and chassis ground. ***Connector & terminal*** ***(B136) No. 16 (+) — Chassis ground (–):***	Does the voltage change by shaking the ECM harness and connector?	Repair poor contact in ECM connector.	Replace the ECM. <Ref. to FU(H4SO U5)-44, Engine Control Module (ECM).>
4	**CHECK INPUT SIGNAL FOR ECM.** Measure the voltage between ECM and chassis ground. ***Connector & terminal*** ***(B136) No. 21 (+) — Chassis ground (–):***	Is the voltage less than 0.2 V?	Go to step **6.**	Go to step **5.**
5	**CHECK INPUT SIGNAL FOR ECM. (USING SUBARU SELECT MONITOR.)** Read the data of fuel tank pressure sensor signal using Subaru Select Monitor. NOTE: Subaru Select Monitor For detailed operation procedure, refer to "READ CURRENT DATA FOR ENGINE". <Ref. to EN(H4SO U5)(diag)-28, Subaru Select Monitor.>	Does the measured value change by shaking the ECM harness and connector?	Repair poor contact in ECM connector.	Go to step **6.**
6	**CHECK HARNESS BETWEEN ECM AND COUPLING CONNECTOR IN REAR WIRING HARNESS.** 1) Turn ignition switch to OFF. 2) Remove the rear seat cushion. 3) Separate rear wiring harness and fuel tank cord. 4) Turn ignition switch to ON. 5) Measure the voltage between rear wiring harness connector and chassis ground. ***Connector & terminal*** ***(R15) No. 7 (+) — Chassis ground (–):***	Is the voltage more than 4.5 V?	Go to step **7.**	Repair harness and connector. NOTE: In this case, repair the following: • Open circuit in harness between ECM and rear wiring harness connector • Poor contact in coupling connector

	Step	Check	Yes	No
7	**CHECK HARNESS BETWEEN ECM AND COUPLING CONNECTOR IN REAR WIRING HARNESS.** 1) Turn ignition switch to OFF. 2) Disconnect the connector from ECM. 3) Measure the resistance of harness between ECM and rear wiring harness connector. ***Connector & terminal*** ***(B136) No. 21 — (R15) No. 6:*** ***(B136) No. 35 — (R15) No. 4:***	Is the resistance less than 1 Ω?	Go to step **8.**	Repair harness and connector. NOTE: In this case, repair the following: • Open circuit in harness between ECM and rear wiring harness connector • Poor contact in coupling connector
8	**CHECK FUEL TANK CORD.** 1) Disconnect the connector from fuel tank pressure sensor. 2) Measure the resistance of fuel tank cord. ***Connector & terminal*** ***(R57) No. 6 — (R47) No. 2:***	Is the resistance less than 1 Ω?	Go to step **9.**	Repair open circuit in fuel tank cord.
9	**CHECK FUEL TANK CORD.** Measure the resistance of fuel tank cord. ***Connector & terminal*** ***(R57) No. 4 — (R47) No. 1:***	Is the resistance less than 1 Ω?	Go to step **10.**	Repair open circuit in fuel tank cord.
10	**CHECK FOR POOR CONTACT.** Check for poor contact in fuel tank pressure sensor connector.	Is there poor contact in fuel tank pressure sensor connector?	Repair poor contact in fuel tank pressure sensor connector.	Replace the fuel tank pressure sensor. <Ref. to EC(H4SO)-11, Fuel Tank Pressure Sensor.>
11	**CHECK HARNESS BETWEEN ECM AND FUEL TANK PRESSURE SENSOR CONNECTOR.** 1) Turn ignition switch to OFF. 2) Disconnect the connector from fuel tank pressure sensor. 3) Turn ignition switch to ON. 4) Read the data of fuel tank pressure sensor signal using Subaru Select Monitor. NOTE: Subaru Select Monitor For detailed operation procedure, refer to “READ CURRENT DATA FOR ENGINE”. <Ref. to EN(H4SO U5)(diag)-28, Subaru Select Monitor.>	Is the measured value more than 2.8 kPa (21.0 mmHg, 0.827 inHg)?	Repair short circuit to battery in harness between ECM and fuel tank pressure sensor connector.	Replace the fuel tank pressure sensor. <Ref. to EC(H4SO)-11, Fuel Tank Pressure Sensor.>

BT:DTC P0456 EVAPORATIVE EMISSION CONTROL SYSTEM LEAK DETECTED (VERY SMALL LEAK)

DTC DETECTING CONDITION:

- Two consecutive driving cycles with fault
- GENERAL DESCRIPTION <Ref. to GD(H4SO U5)-148, DTC P0456 EVAPORATIVE EMISSION CONTROL SYSTEM LEAK DETECTED (VERY SMALL LEAK), Diagnostic Trouble Code (DTC) Detecting Criteria.>

TROUBLE SYMPTOM:

- Fuel odor
- There is a hole of more than 0.5 mm (0.020 in) dia. in evaporation system or fuel tank.

CAUTION:
After repair or replacement of faulty parts, conduct CLEAR MEMORY MODE <Ref. to EN(H4SO U5)(diag)-46, OPERATION, Clear Memory Mode.> and INSPECTION MODE <Ref. to EN(H4SO U5)(diag)-37, OPERATION, Inspection Mode.>.

WIRING DIAGRAM:

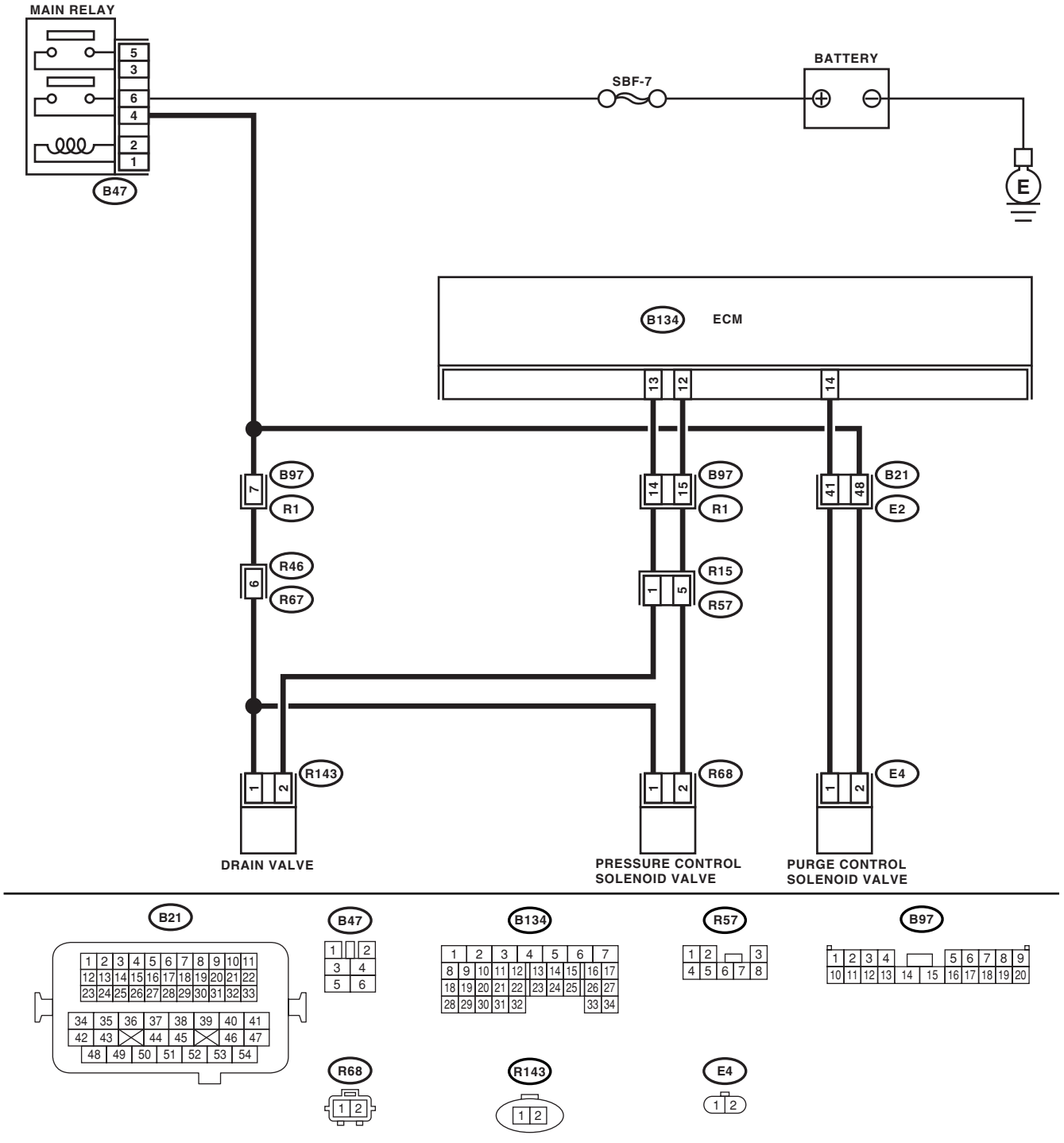

EN-02996

	Step	Check	Yes	No
1	**CHECK FOR ANY OTHER DTC ON DISPLAY.**	Is any other DTC displayed?	Inspect the relevant DTC using "List of Diagnostic Trouble Code (DTC)". <Ref. to EN(H4SO U5)(diag)-73, List of Diagnostic Trouble Code (DTC).>	Go to step **2.**
2	**CHECK FUEL FILLER CAP.** 1) Turn ignition switch to OFF. 2) Check the fuel filler cap. NOTE: The DTC is stored in memory if fuel filler cap is or was loose or if the cap chain was caught while tightening.	Is the fuel filler cap tightened securely?	Go to step **3.**	Tighten fuel filler cap securely.
3	**CHECK FUEL FILLER CAP.**	Is the fuel filler cap SUBARU genuine?	Go to step **4.**	Replace with a SUBARU genuine fuel filler cap.
4	**CHECK FUEL FILLER PIPE PACKING.**	Is there any damage to the seal between fuel filler cap and fuel filler pipe?	Repair or replace the fuel filler cap and fuel filler pipe. <Ref. to FU(H4SO U5)-55, Fuel Filler Pipe.>	Go to step **5.**
5	**CHECK DRAIN VALVE.** 1) Connect the test mode connector. 2) Turn ignition switch to ON. 3) Operate the drain valve. NOTE: Drain valve operation can also be executed using Subaru Select Monitor. For the procedure, refer to "Compulsory Valve Operation Check Mode". <Ref. to EN(H4SO U5)(diag)-47, Compulsory Valve Operation Check Mode.>	Does the drain valve operate?	Go to step **6.**	Replace the drain valve. <Ref. to EC(H4SO)-16, Drain Valve.>
6	**CHECK PURGE CONTROL SOLENOID VALVE.** Operate the purge control solenoid valve. NOTE: Purge control solenoid valve operation can also be executed using Subaru Select Monitor. For the procedure, refer to "Compulsory Valve Operation Check Mode". <Ref. to EN(H4SO U5)(diag)-47, Compulsory Valve Operation Check Mode.>	Does the purge control solenoid valve operate?	Go to step **7.**	Replace the purge control solenoid valve. <Ref. to EC(H4SO)-6, Purge Control Solenoid Valve.>
7	**CHECK PRESSURE CONTROL SOLENOID VALVE.** Operate the pressure control solenoid valve. NOTE: Pressure control solenoid valve operation can also be executed using Subaru Select Monitor. For the procedure, refer to "Compulsory Valve Operation Check Mode". <Ref. to EN(H4SO U5)(diag)-47, Compulsory Valve Operation Check Mode.>	Does the pressure control solenoid valve operate?	Go to step **8.**	Replace the pressure control solenoid valve. <Ref. to EC(H4SO)-6, Purge Control Solenoid Valve.>

	Step	Check	Yes	No
8	**CHECK EVAPORATIVE EMISSION CONTROL SYSTEM LINE.** Turn ignition switch to OFF.	Is there a hole of more than 0.5 mm (0.020 in) dia. on evaporation line?	Repair or replace the evaporation line. <Ref. to FU(H4SO U5)-64, Fuel Delivery, Return and Evaporation Lines.>	Go to step **9.**
9	**CHECK CANISTER.**	Is the canister damaged or is there a hole of more than 0.5 mm (0.020 in) dia. in it?	Repair or replace the canister. <Ref. to EC(H4SO)-5, Canister.>	Go to step **10.**
10	**CHECK FUEL TANK.** Remove the fuel tank. <Ref. to FU(H4SO U5)-49, Fuel Tank.>	Is the fuel tank damaged or is there a hole of more than 0.5 mm (0.020 in) dia. in it?	Repair or replace the fuel tank. <Ref. to FU(H4SO U5)-49, Fuel Tank.>	Go to step **11.**
11	**CHECK ANY OTHER MECHANICAL TROUBLE IN EVAPORATIVE EMISSION CONTROL SYSTEM.**	Are there holes of more than 0.5 mm (0.020 in) dia., cracks, clogging, disconnections or bend of hoses or pipes in evaporative emission control system?	Repair or replace the hoses or pipes.	Contact SOA Service Center.

BU:DTC P0457 EVAPORATIVE EMISSION CONTROL SYSTEM LEAK DETECTED (FUEL CAP LOOSE/OFF)

DTC DETECTING CONDITION:

- Two consecutive driving cycles with fault
- GENERAL DESCRIPTION <Ref. to GD(H4SO U5)-120, DTC P0442 EVAPORATIVE EMISSION CONTROL SYSTEM LEAK DETECTED (SMALL LEAK), Diagnostic Trouble Code (DTC) Detecting Criteria.>

TROUBLE SYMPTOM:

- Fuel odor
- Fuel filler cap is loose or not installed.

CAUTION:

After repair or replacement of faulty parts, conduct CLEAR MEMORY MODE <Ref. to EN(H4SO U5)(diag)-46, OPERATION, Clear Memory Mode.> and INSPECTION MODE <Ref. to EN(H4SO U5)(diag)-37, OPERATION, Inspection Mode.>.

WIRING DIAGRAM:

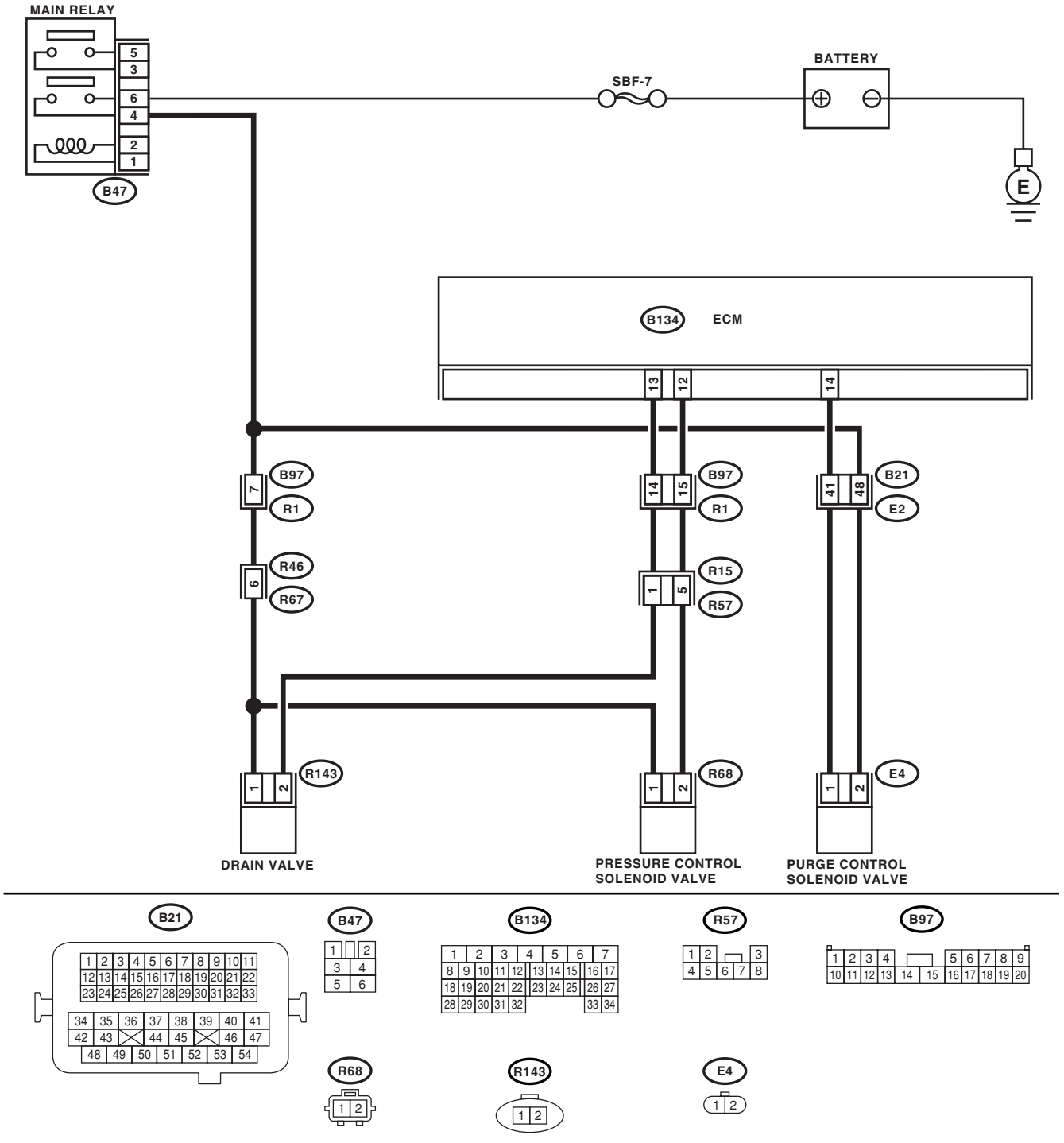

EN-02996

	Step	Check	Yes	No
1	**CHECK FOR ANY OTHER DTC ON DISPLAY.**	Is any other DTC displayed?	Inspect the relevant DTC using "List of Diagnostic Trouble Code (DTC)". <Ref. to EN(H4SO U5)(diag)-73, List of Diagnostic Trouble Code (DTC).>	Go to step **2.**
2	**CHECK FUEL FILLER CAP.** 1) Turn ignition switch to OFF. 2) Check the fuel filler cap. NOTE: The DTC is stored in memory if fuel filler cap is or was loose or if the cap chain was caught while tightening.	Is the fuel filler cap tightened securely?	Go to step **3.**	Tighten fuel filler cap securely.
3	**CHECK FUEL FILLER CAP.**	Is the fuel filler cap genuine?	Go to step **4.**	Replace with a genuine fuel filler cap.
4	**CHECK FUEL FILLER PIPE PACKING.**	Is there any damage to the seal between fuel filler cap and fuel filler pipe?	Repair or replace the fuel filler cap and fuel filler pipe. <Ref. to FU(H4SO U5)-55, Fuel Filler Pipe.>	Go to step **5.**
5	**CHECK DRAIN VALVE.** 1) Connect the test mode connector. 2) Turn ignition switch to ON. 3) Operate the drain valve. NOTE: Drain valve operation can also be executed using Subaru Select Monitor. For the procedure, refer to "Compulsory Valve Operation Check Mode". <Ref. to EN(H4SO U5)(diag)-47, Compulsory Valve Operation Check Mode.>	Does the drain valve operate?	Go to step **6.**	Replace the drain valve. <Ref. to EC(H4SO)-16, Drain Valve.>
6	**CHECK PURGE CONTROL SOLENOID VALVE.** Operate the purge control solenoid valve. NOTE: Purge control solenoid valve operation can also be executed using Subaru Select Monitor. For the procedure, refer to "Compulsory Valve Operation Check Mode". <Ref. to EN(H4SO U5)(diag)-47, Compulsory Valve Operation Check Mode.>	Does the purge control solenoid valve operate?	Go to step **7.**	Replace the purge control solenoid valve. <Ref. to EC(H4SO)-6, Purge Control Solenoid Valve.>
7	**CHECK PRESSURE CONTROL SOLENOID VALVE.** Operate the pressure control solenoid valve. NOTE: Pressure control solenoid valve operation can also be executed using Subaru Select Monitor. For the procedure, refer to "Compulsory Valve Operation Check Mode". <Ref. to EN(H4SO U5)(diag)-47, Compulsory Valve Operation Check Mode.>	Does the pressure control solenoid valve operate?	Go to step **8.**	Replace the pressure control solenoid valve. <Ref. to EC(H4SO)-6, Purge Control Solenoid Valve.>
8	**CHECK CANISTER.**	Is the canister damaged?	Repair or replace the canister. <Ref. to EC(H4SO)-5, Canister.>	Go to step **9.**

	Step	Check	Yes	No
9	**CHECK FUEL TANK.** Remove the fuel tank. <Ref. to FU(H4SO U5)-49, Fuel Tank.>	Is the fuel tank damaged?	Repair or replace the fuel tank. <Ref. to FU(H4SO U5)-49, Fuel Tank.>	Go to step **10.**
10	**CHECK ANY OTHER MECHANICAL TROUBLE IN EVAPORATIVE EMISSION CONTROL SYSTEM.**	Are there holes of more than 0.5 mm (0.020 in) dia., cracks, clogging or disconnections of hoses or pipes in evaporative emission control system?	Repair or replace the hoses or pipes.	Contact SOA Service Center.

BV:DTC P0458 EVAPORATIVE EMISSION CONTROL SYSTEM PURGE CONTROL VALVE CIRCUIT LOW

DTC DETECTING CONDITION:

- Two consecutive driving cycles with fault
- GENERAL DESCRIPTION <Ref. to GD(H4SO U5)-149, DTC P0458 EVAPORATIVE EMISSION CONTROL SYSTEM PURGE CONTROL VALVE CIRCUIT LOW, Diagnostic Trouble Code (DTC) Detecting Criteria.>

TROUBLE SYMPTOM:

Erroneous idling

CAUTION:

After repair or replacement of faulty parts, conduct Clear Memory Mode <Ref. to EN(H4SO U5)(diag)-46, OPERATION, Clear Memory Mode.> and Inspection Mode <Ref. to EN(H4SO U5)(diag)-37, OPERATION, Inspection Mode.>.

WIRING DIAGRAM:

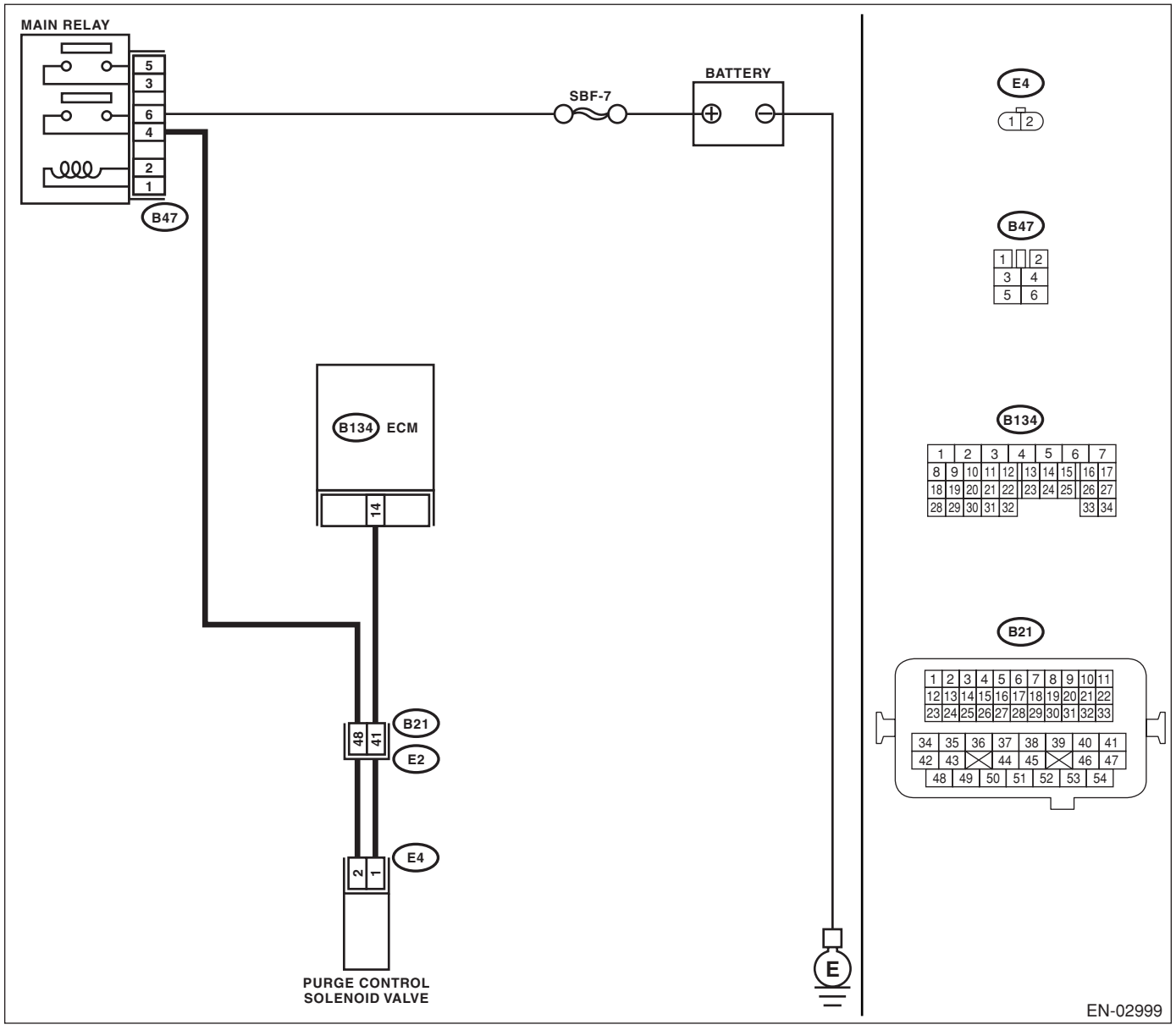

	Step	Check	Yes	No
1	**CHECK OUTPUT SIGNAL FROM ECM.** 1) Turn the ignition switch to ON. 2) Measure the voltage between ECM and chassis ground. ***Connector & terminal*** ***(B134) No. 14 (+) — Chassis ground (−):***	Is the voltage more than 10 V?	Even if malfunction indicator light lights up, the circuit has returned to a normal condition at this time. Contact SOA Service Center.	Go to step **2.**
2	**CHECK HARNESS BETWEEN PURGE CONTROL SOLENOID VALVE AND ECM CONNECTOR.** 1) Turn the ignition switch to OFF. 2) Disconnect the connectors from purge control solenoid valve and ECM. 3) Measure the resistance of harness between purge control solenoid valve connector and engine ground. ***Connector & terminal*** ***(E4) No. 1 — Engine ground:***	Is the resistance more than 1 MΩ?	Go to step **3.**	Repair ground short circuit in harness between ECM and purge control solenoid valve connector.
3	**CHECK HARNESS BETWEEN PURGE CONTROL SOLENOID VALVE AND ECM CONNECTOR.** Measure the resistance of harness between ECM and purge control solenoid valve of harness connector. ***Connector & terminal*** ***(B134) No. 14 — (E4) No. 1:***	Is the resistance less than 1 Ω?	Go to step **4.**	Repair open circuit in harness between ECM and purge control solenoid valve connector. NOTE: In this case, repair the following: • Open circuit in harness between ECM and purge control solenoid valve connector • Poor contact in coupling connector
4	**CHECK PURGE CONTROL SOLENOID VALVE.** 1) Remove the purge control solenoid valve. 2) Measure the resistance between purge control solenoid valve terminals. ***Terminals*** ***No. 1 — No. 2:***	Is the resistance 10 — 100 Ω?	Go to step **5.**	Replace the purge control solenoid valve. <Ref. to EC(H4SO)-6, Purge Control Solenoid Valve.>
5	**CHECK POWER SUPPLY TO PURGE CONTROL SOLENOID VALVE.** 1) Turn the ignition switch to ON. 2) Measure the voltage between purge control solenoid valve and engine ground. ***Connector & terminal*** ***(E4) No. 2 (+) — Engine ground (−):***	Is the voltage more than 10 V?	Go to step **6.**	Repair open circuit in harness between main relay and purge control solenoid valve connector.
6	**CHECK POOR CONTACT.** Check poor contact in purge control solenoid valve connector.	Is there poor contact in purge control solenoid valve connector?	Repair poor contact in purge control solenoid valve connector.	Contact SOA Service Center.

BW:DTC P0459 EVAPORATIVE EMISSION CONTROL SYSTEM PURGE CONTROL VALVE CIRCUIT HIGH

DTC DETECTING CONDITION:

- Two consecutive driving cycles with fault
- GENERAL DESCRIPTION <Ref. to GD(H4SO U5)-151, DTC P0459 EVAPORATIVE EMISSION CONTROL SYSTEM PURGE CONTROL VALVE CIRCUIT HIGH, Diagnostic Trouble Code (DTC) Detecting Criteria.>

TROUBLE SYMPTOM:

Erroneous idling

CAUTION:

After repair or replacement of faulty parts, conduct Clear Memory Mode <Ref. to EN(H4SO U5)(diag)-46, OPERATION, Clear Memory Mode.> and Inspection Mode <Ref. to EN(H4SO U5)(diag)-37, OPERATION, Inspection Mode.>.

WIRING DIAGRAM:

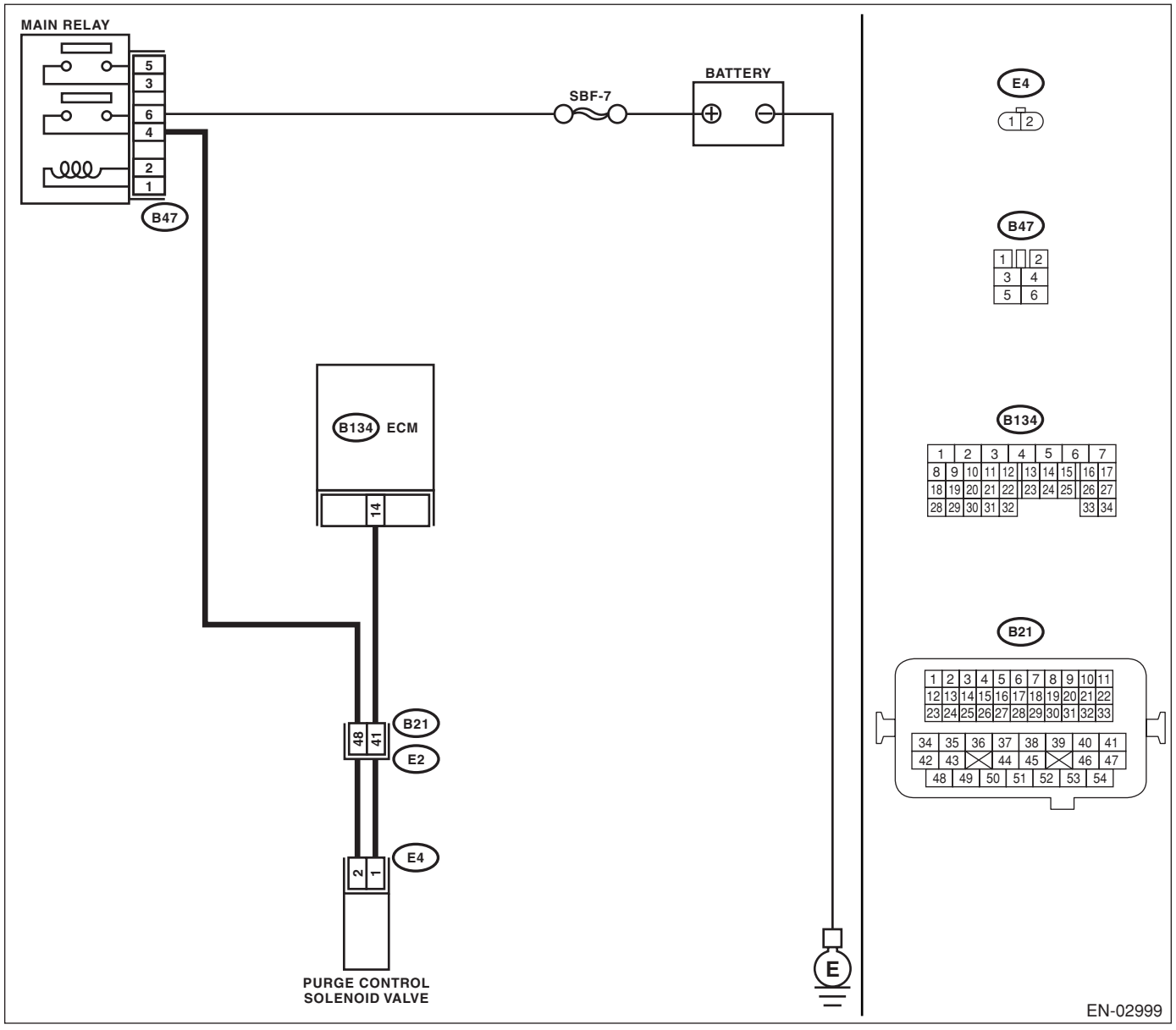

	Step	Check	Yes	No
1	**CHECK OUTPUT SIGNAL FROM ECM.** 1) Turn the ignition switch to OFF. 2) Connect the test mode connector at the lower portion of instrument panel (on the driver's side). 3) Turn the ignition switch to ON. 4) While operating the purge control solenoid valve, measure voltage between ECM and chassis ground. NOTE: Purge control solenoid valve operation can be executed using Subaru Select Monitor. For procedure, refer to "Compulsory Valve Operation Check Mode". <Ref. to EN(H4SO U5)(diag)-47, Compulsory Valve Operation Check Mode.> ***Connector & terminal*** ***(B134) No. 14 (+) — Chassis ground (–):***	Is the voltage 0 — 10 V?	Go to step **2.**	Even if malfunction indicator light light up, the circuit has returned to a normal condition at this time. In this case, repair poor contact in ECM connector.
2	**CHECK OUTPUT SIGNAL FROM ECM.** 1) Turn the ignition switch to ON. 2) Measure the voltage between ECM and chassis ground. ***Connector & terminal*** ***(B134) No. 14 (+) — Chassis ground (–):***	Is the voltage more than 10 V?	Go to step **4.**	Go to step **3.**
3	**CHECK POOR CONTACT.** Check poor contact in ECM connector.	Is there poor contact in ECM connector?	Repair poor contact in ECM connector.	Replace the ECM. <Ref. to FU(H4SO U5)-44, Engine Control Module (ECM).>
4	**CHECK HARNESS BETWEEN PURGE CONTROL SOLENOID VALVE AND ECM CONNECTOR.** 1) Turn the ignition switch to OFF. 2) Disconnect the connector from purge control solenoid valve. 3) Turn the ignition switch to ON. 4) Measure the voltage between ECM and chassis ground. ***Connector & terminal*** ***(B134) No. 14 (+) — Chassis ground (–):***	Is the voltage more than 10 V?	Repair battery short circuit in harness between ECM and purge control solenoid valve connector. After repair, replace the ECM. <Ref. to FU(H4SO U5)-44, Engine Control Module (ECM).>	Go to step **5.**
5	**CHECK PURGE CONTROL SOLENOID VALVE.** 1) Turn the ignition switch to OFF. 2) Measure the resistance between purge control solenoid valve terminals. ***Terminals*** ***No. 1 — No. 2:***	Is the resistance less than 1 Ω?	Replace the purge control solenoid valve <Ref. to EC(H4SO)-6, Purge Control Solenoid Valve.> and ECM <Ref. to FU(H4SO U5)-44, Engine Control Module (ECM).>	Go to step **6.**
6	**CHECK POOR CONTACT.** Check poor contact in ECM connector.	Is there poor contact in ECM connector?	Repair poor contact in ECM connector.	Replace the ECM. <Ref. to FU(H4SO U5)-44, Engine Control Module (ECM).>

BX:DTC P0461 FUEL LEVEL SENSOR CIRCUIT RANGE/PERFORMANCE

DTC DETECTING CONDITION:

- Two consecutive driving cycles with fault
- GENERAL DESCRIPTION <Ref. to GD(H4SO U5)-153, DTC P0461 FUEL LEVEL SENSOR CIRCUIT RANGE/PERFORMANCE, Diagnostic Trouble Code (DTC) Detecting Criteria.>

NOTE:
Refer to “DTC P0464” for diagnostic procedure. <Ref. to EN(H4SO U5)(diag)-248, DTC P0464 FUEL LEVEL SENSOR CIRCUIT INTERMITTENT, Diagnostic Procedure with Diagnostic Trouble Code (DTC).>

BY:DTC P0462 FUEL LEVEL SENSOR CIRCUIT LOW INPUT

DTC DETECTING CONDITION:

- Two consecutive driving cycles with fault
- GENERAL DESCRIPTION <Ref. to GD(H4SO U5)-155, DTC P0462 FUEL LEVEL SENSOR CIRCUIT LOW INPUT, Diagnostic Trouble Code (DTC) Detecting Criteria.>

NOTE:
Refer to “DTC P0464” for diagnostic procedure. <Ref. to EN(H4SO U5)(diag)-248, DTC P0464 FUEL LEVEL SENSOR CIRCUIT INTERMITTENT, Diagnostic Procedure with Diagnostic Trouble Code (DTC).>

BZ:DTC P0463 FUEL LEVEL SENSOR CIRCUIT HIGH INPUT

DTC DETECTING CONDITION:

- Two consecutive driving cycles with fault
- GENERAL DESCRIPTION <Ref. to GD(H4SO U5)-157, DTC P0463 FUEL LEVEL SENSOR CIRCUIT HIGH INPUT, Diagnostic Trouble Code (DTC) Detecting Criteria.>

NOTE:
Refer to “DTC P0464” for diagnostic procedure. <Ref. to EN(H4SO U5)(diag)-248, DTC P0464 FUEL LEVEL SENSOR CIRCUIT INTERMITTENT, Diagnostic Procedure with Diagnostic Trouble Code (DTC).>

CA:DTC P0464 FUEL LEVEL SENSOR CIRCUIT INTERMITTENT

DTC DETECTING CONDITION:

- Two consecutive driving cycles with fault
- GENERAL DESCRIPTION <Ref. to GD(H4SO U5)-159, DTC P0464 FUEL LEVEL SENSOR CIRCUIT INTERMITTENT, Diagnostic Trouble Code (DTC) Detecting Criteria.>

CAUTION:
After repair or replacement of faulty parts, conduct CLEAR MEMORY MODE <Ref. to EN(H4SO U5)(diag)-46, OPERATION, Clear Memory Mode.> and INSPECTION MODE <Ref. to EN(H4SO U5)(diag)-37, OPERATION, Inspection Mode.>.

	Step	Check	Yes	No
1	**CHECK FOR ANY OTHER DTC ON DISPLAY.**	Is DTC P0461, P0462, P0463 or P0464 displayed on the Subaru Select Monitor?	Check the combination meter. <Ref. to IDI-3, Combination Meter System.>	Temporary poor contact occurs.

CB:DTC P0483 COOLING FAN RATIONALITY CHECK

DTC DETECTING CONDITION:

- Two consecutive driving cycles with fault
- GENERAL DESCRIPTION <Ref. to GD(H4SO U5)-162, DTC P0483 COOLING FAN RATIONALITY CHECK, Diagnostic Trouble Code (DTC) Detecting Criteria.>

TROUBLE SYMPTOM:

- Occurrence of noise
- Overheating

CAUTION:
After repair or replacement of faulty parts, conduct Clear Memory Mode <Ref. to EN(H4SO U5)(diag)-46, OPERATION, Clear Memory Mode.> and Inspection Mode <Ref. to EN(H4SO U5)(diag)-37, OPERATION, Inspection Mode.>.

NOTE:
If the vehicle, with the engine idling, is placed very close to a wall or another vehicle, preventing normal cooling function, the OBD system may detect malfunction.

	Step	Check	Yes	No
1	**CHECK FOR ANY OTHER DTC ON DISPLAY.**	Is any other DTC displayed?	Inspect the relevant DTC using "List of Diagnostic Trouble Code (DTC)". <Ref. to EN(H4SO U5)(diag)-73, List of Diagnostic Trouble Code (DTC).>	Check radiator fan and fan motor. <Ref. to CO(H4SO)-23, Radiator Main Fan and Fan Motor.> and <Ref. to CO(H4SO)-25, Radiator Sub Fan and Fan Motor.>

CC:DTC P0500 VEHICLE SPEED SENSOR

DTC DETECTING CONDITION:

- Detect as soon as malfunction occurs.
- GENERAL DESCRIPTION <Ref. to GD(H4SO U5)-163, DTC P0500 VEHICLE SPEED SENSOR, Diagnostic Trouble Code (DTC) Detecting Criteria.>

CAUTION:
After repair or replacement of faulty parts, conduct Clear Memory Mode <Ref. to EN(H4SO U5)(diag)-46, OPERATION, Clear Memory Mode.> and Inspection Mode <Ref. to EN(H4SO U5)(diag)-37, OPERATION, Inspection Mode.>.

	Step	Check	Yes	No
1	**CHECK DTC OF ABS.** Check DTC of ABS.	Is DTC of ABS displayed?	Perform the diagnosis according to DTC. <Ref. to ABS(diag)-34, List of Diagnostic Trouble Code (DTC).>	Repair the poor contact in ECM.

CD:DTC P0506 IDLE CONTROL SYSTEM RPM LOWER THAN EXPECTED

DTC DETECTING CONDITION:

- Two consecutive driving cycles with fault
- GENERAL DESCRIPTION <Ref. to GD(H4SO U5)-164, DTC P0506 IDLE CONTROL SYSTEM RPM LOWER THAN EXPECTED, Diagnostic Trouble Code (DTC) Detecting Criteria.>

TROUBLE SYMPTOM:

- Engine is difficult to start.
- Engine does not start.
- Erroneous idling
- Engine stalls.

CAUTION:
After repair or replacement of faulty parts, conduct Clear Memory Mode <Ref. to EN(H4SO U5)(diag)-46, OPERATION, Clear Memory Mode.> and Inspection Mode <Ref. to EN(H4SO U5)(diag)-37, OPERATION, Inspection Mode.>.

WIRING DIAGRAM:

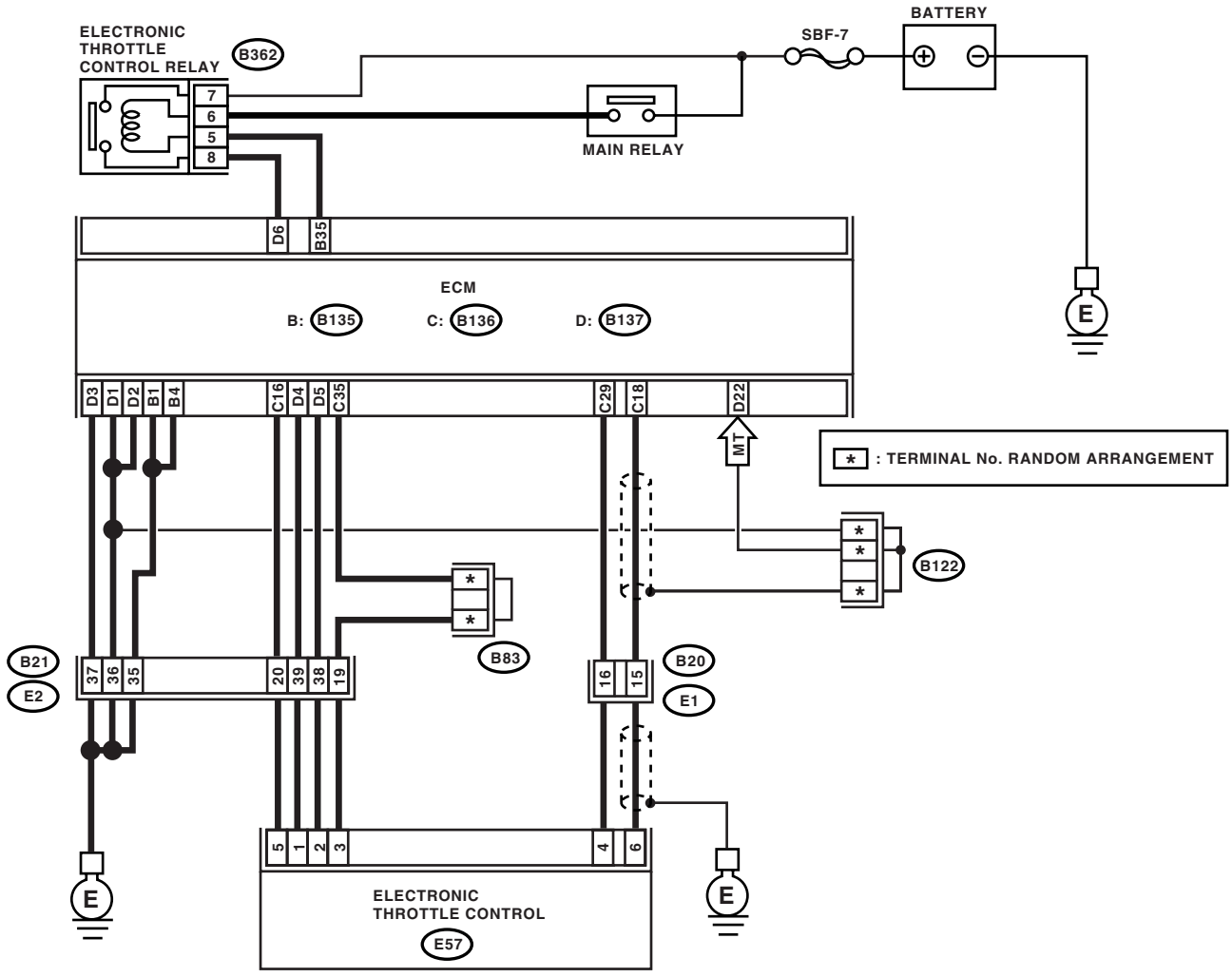

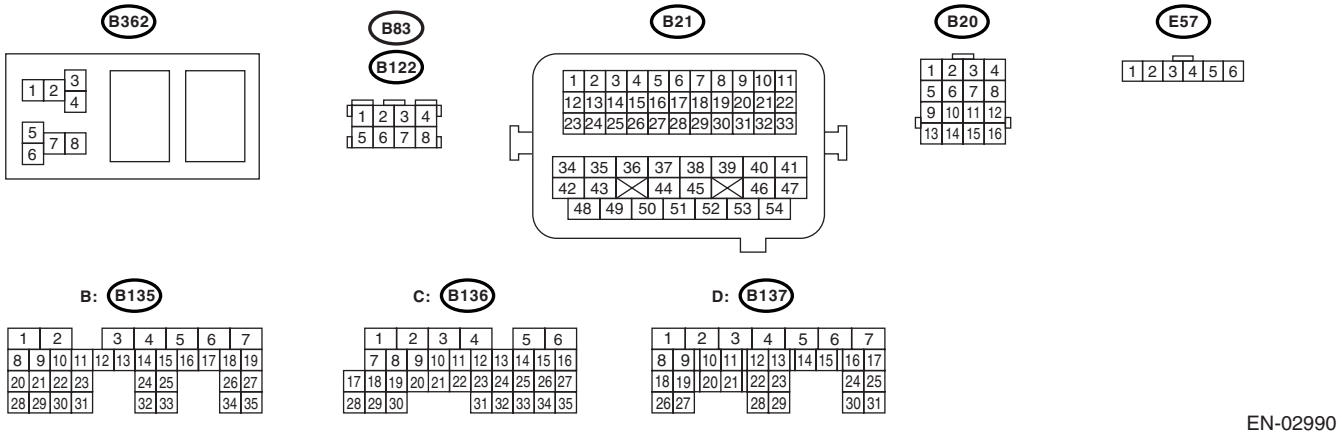

EN-02990

	Step	Check	Yes	No
1	**CHECK FOR ANY OTHER DTC ON DISPLAY.**	Is any other DTC displayed?	Inspect the relevant DTC using "List of Diagnostic Trouble Code (DTC)". <Ref. to EN(H4SO U5)(diag)-73, List of Diagnostic Trouble Code (DTC).> NOTE: In this case, it is not necessary to inspect DTC P0506.	Go to step **2.**
2	**CHECK AIR CLEANER ELEMENT.** 1) Turn the ignition switch to OFF. 2) Check air cleaner element.	Is there excessive clogging on air cleaner element.	Replace the air cleaner element. <Ref. to IN(H4SO)-6, Air Cleaner Element.>	Go to step **3.**
3	**CHECK ELECTRONIC THROTTLE CONTROL.** 1) Turn the ignition switch to OFF. 2) Remove the electronic throttle control. 3) Check the electronic throttle control.	Are there foreign particles in electronic throttle control?	Remove the foreign particles from electronic throttle control.	Perform the diagnosis of DTC P2101.

CE:DTC P0507 IDLE CONTROL SYSTEM RPM HIGHER THAN EXPECTED

DTC DETECTING CONDITION:

- Two consecutive driving cycles with fault
- GENERAL DESCRIPTION <Ref. to GD(H4SO U5)-165, DTC P0507 IDLE CONTROL SYSTEM RPM HIGHER THAN EXPECTED, Diagnostic Trouble Code (DTC) Detecting Criteria.>

TROUBLE SYMPTOM:

Engine keeps running at higher revolution than specified idling revolution.

CAUTION:

After repair or replacement of faulty parts, conduct Clear Memory Mode <Ref. to EN(H4SO U5)(diag)-46, OPERATION, Clear Memory Mode.> and Inspection Mode <Ref. to EN(H4SO U5)(diag)-37, OPERATION, Inspection Mode.>.

WIRING DIAGRAM:

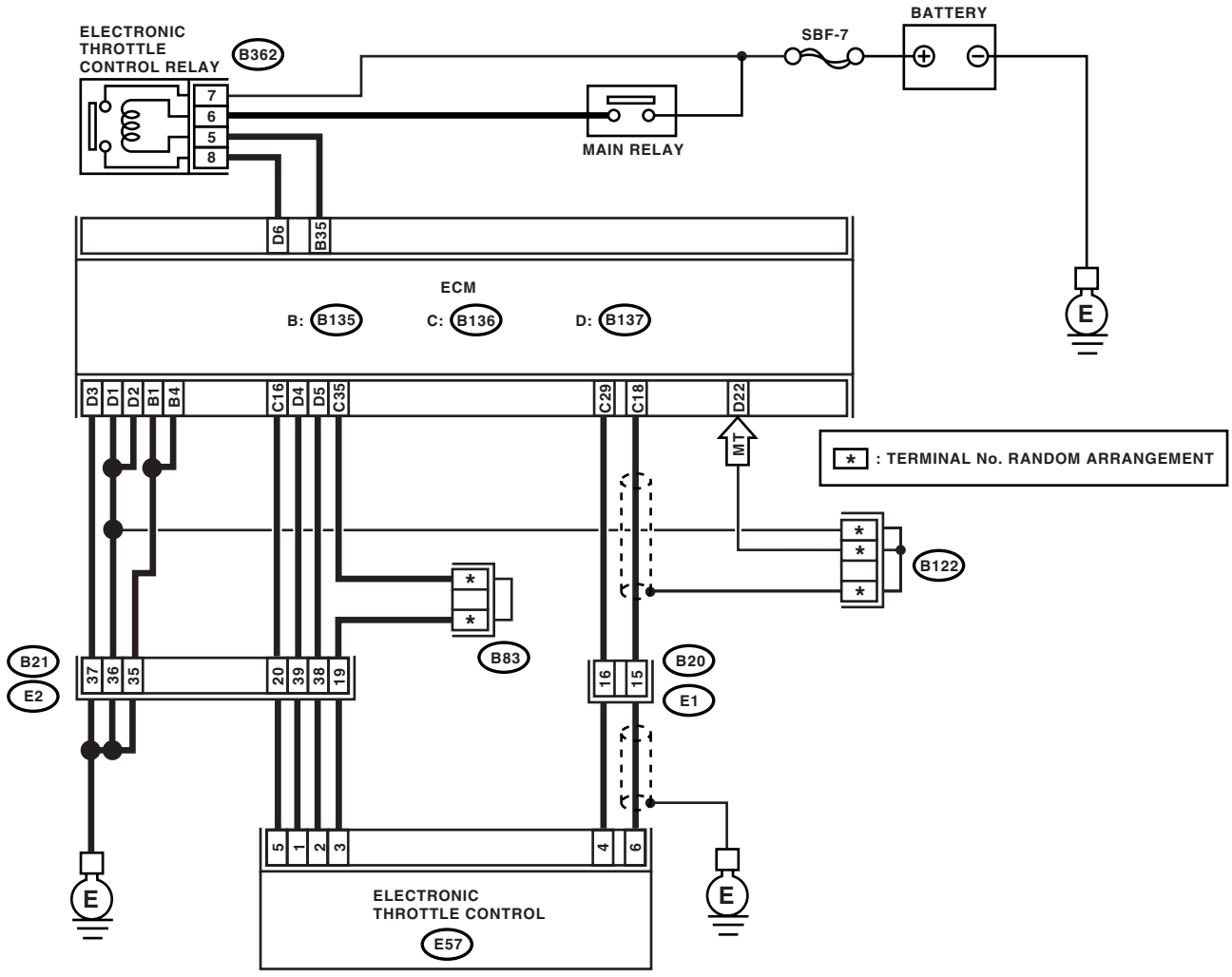

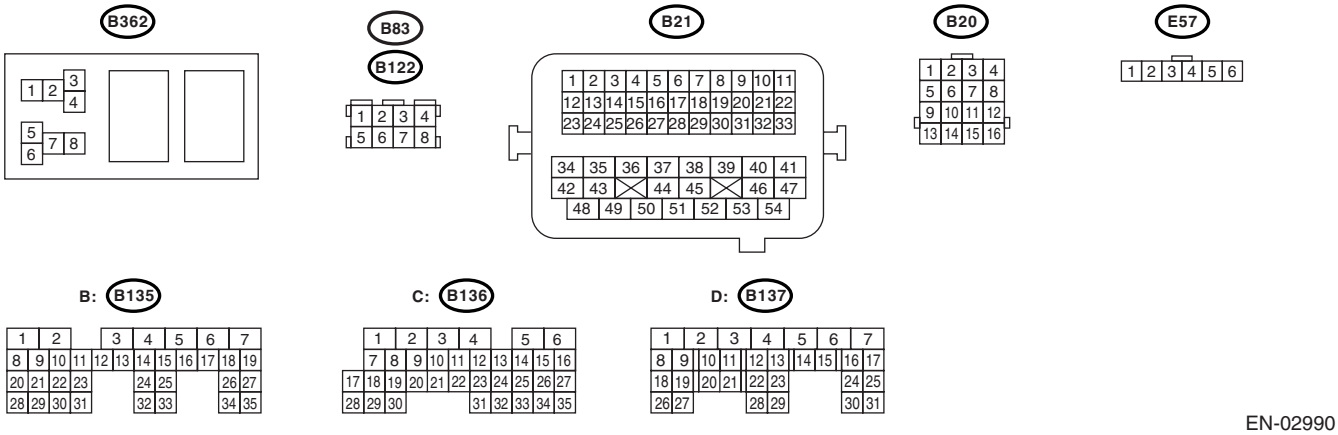

EN-02990

	Step	Check	Yes	No
1	**CHECK FOR ANY OTHER DTC ON DISPLAY.**	Is any other DTC displayed?	Inspect the relevant DTC using "List of Diagnostic Trouble Code (DTC)". <Ref. to EN(H4SO U5)(diag)-73, List of Diagnostic Trouble Code (DTC).> NOTE: In this case, it is not necessary to inspect DTC P0507.	Go to step **2.**
2	**CHECK AIR INTAKE SYSTEM.** 1) Turn the ignition switch to ON. 2) Start the engine, and idle it. 3) Check the following items. • Loose installation of intake manifold and throttle body • Cracks of intake manifold gasket and throttle body gasket • Disconnections of vacuum hoses	Is there any fault in air intake system?	Repair the air suction and leaks.	Go to step **3.**
3	**CHECK ELECTRONIC THROTTLE CONTROL.** 1) Turn the ignition switch to OFF. 2) Remove the electronic throttle control. 3) Check the electronic throttle control.	Are there foreign particles in electronic throttle control?	Remove the foreign particles from electronic throttle control.	Perform the diagnosis of DTC P2102.

CF:DTC P0512 STARTER REQUEST CIRCUIT

DTC DETECTING CONDITION:

- Two consecutive driving cycles with fault
- GENERAL DESCRIPTION <Ref. to GD(H4SO U5)-167, DTC P0512 STARTER REQUEST CIRCUIT, Diagnostic Trouble Code (DTC) Detecting Criteria.>

TROUBLE SYMPTOM:

Failure of engine to start

CAUTION:

After repair or replacement of faulty parts, conduct Clear Memory Mode <Ref. to EN(H4SO U5)(diag)-46, OPERATION, Clear Memory Mode.> and Inspection Mode <Ref. to EN(H4SO U5)(diag)-37, OPERATION, Inspection Mode.>.

WIRING DIAGRAM:

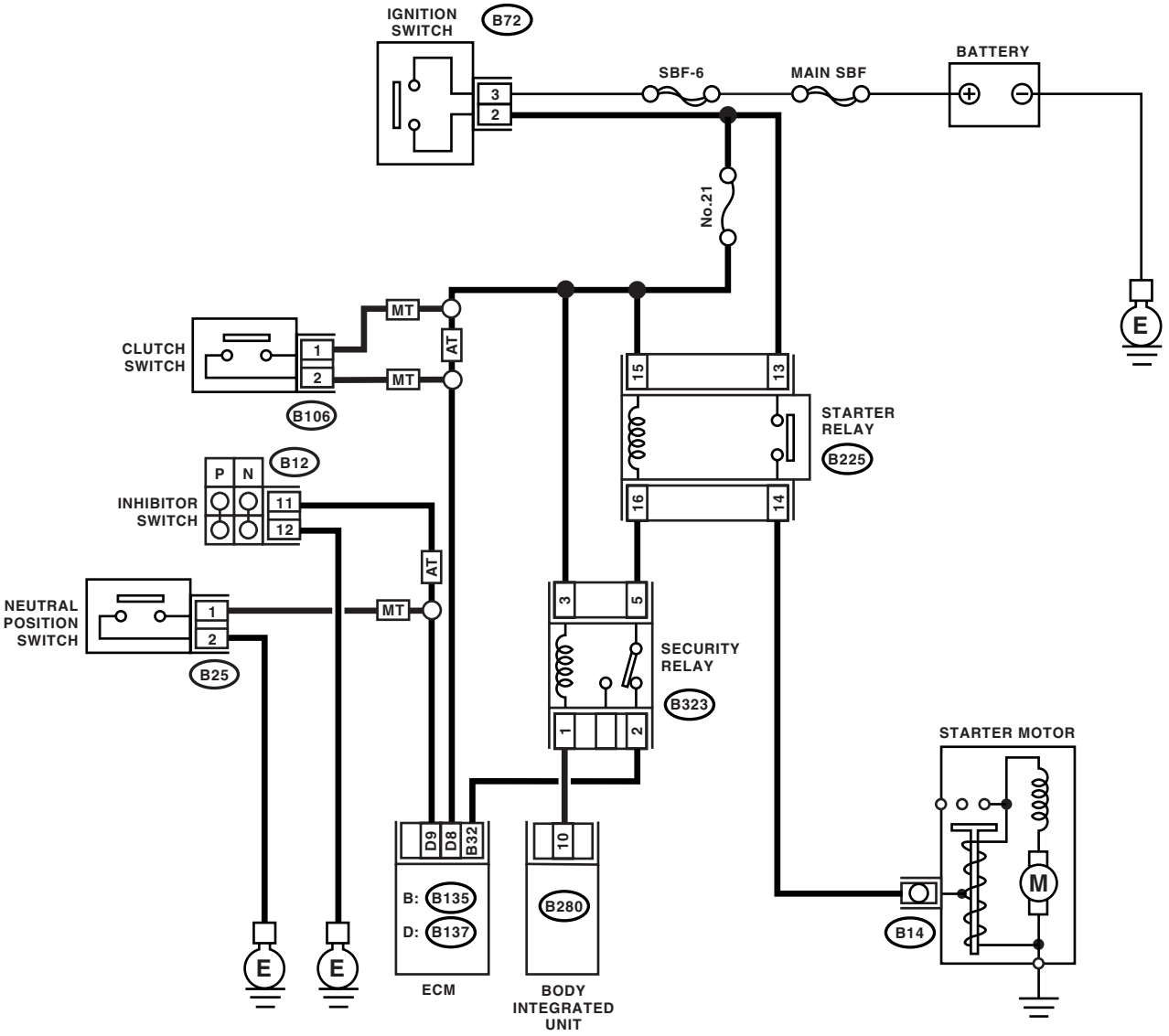

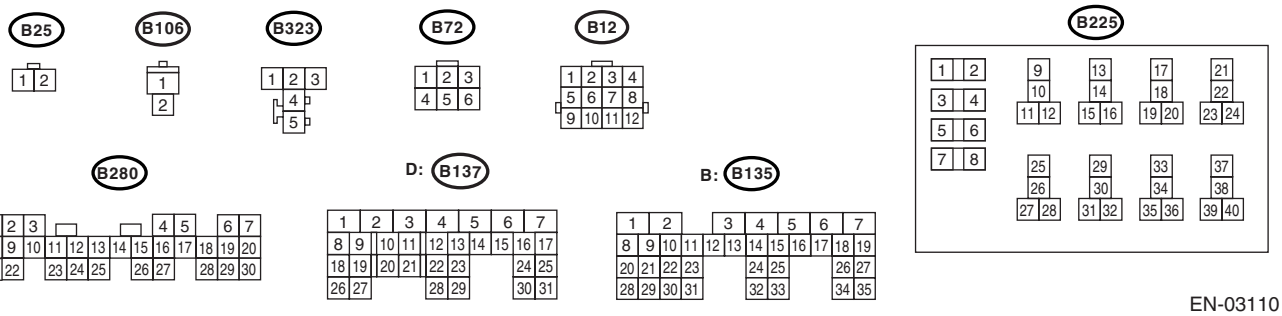

EN-03110

	Step	Check	Yes	No
1	**CHECK OPERATION OF STARTER MOTOR.** Turn the ignition switch to ON. NOTE: • Place the inhibitor switch in each position. (AT model) • Depress the clutch pedal. (MT model) • Check the security alarm is not sounding.	Dose the starter motor operate?	Repair battery short circuit in starter motor circuit.	Check starter motor circuit. <Ref. to EN(H4SO U5)(diag)-59, STARTER MOTOR CIRCUIT, Diagnostics for Engine Starting Failure.>

CG:DTC P0519 IDLE CONTROL SYSTEM MALFUNCTION (FAIL-SAFE)

DTC DETECTING CONDITION:

- Detect as soon as malfunction occurs.
- GENERAL DESCRIPTION <Ref. to GD(H4SO U5)-168, DTC P0519 IDLE CONTROL SYSTEM MALFUNCTION (FAIL-SAFE), Diagnostic Trouble Code (DTC) Detecting Criteria.>

TROUBLE SYMPTOM:

Engine keeps running at higher revolution than specified idling revolution.

CAUTION:

After repair or replacement of faulty parts, conduct Clear Memory Mode <Ref. to EN(H4SO U5)(diag)-46, OPERATION, Clear Memory Mode.> and Inspection Mode <Ref. to EN(H4SO U5)(diag)-37, OPERATION, Inspection Mode.>.

WIRING DIAGRAM:

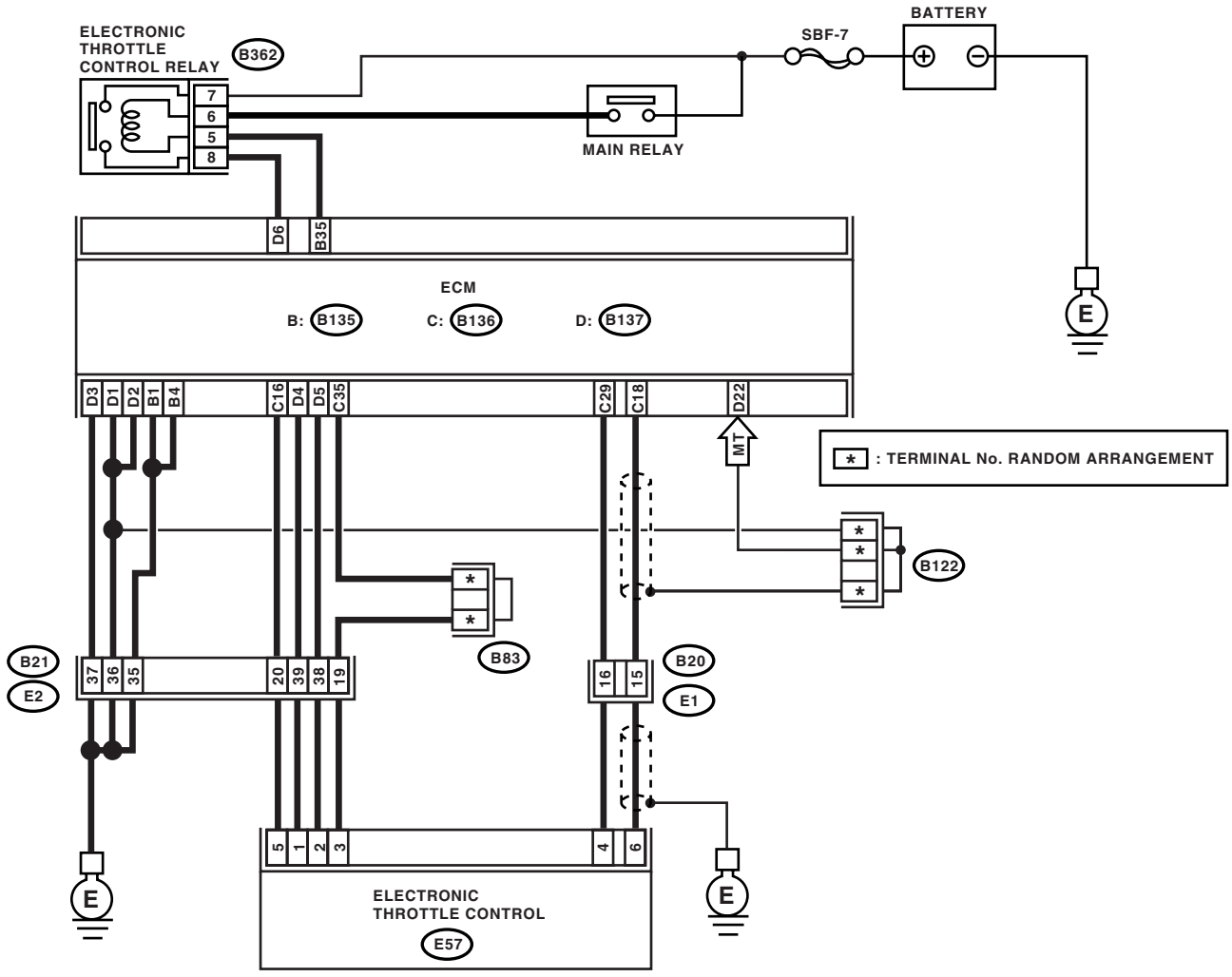

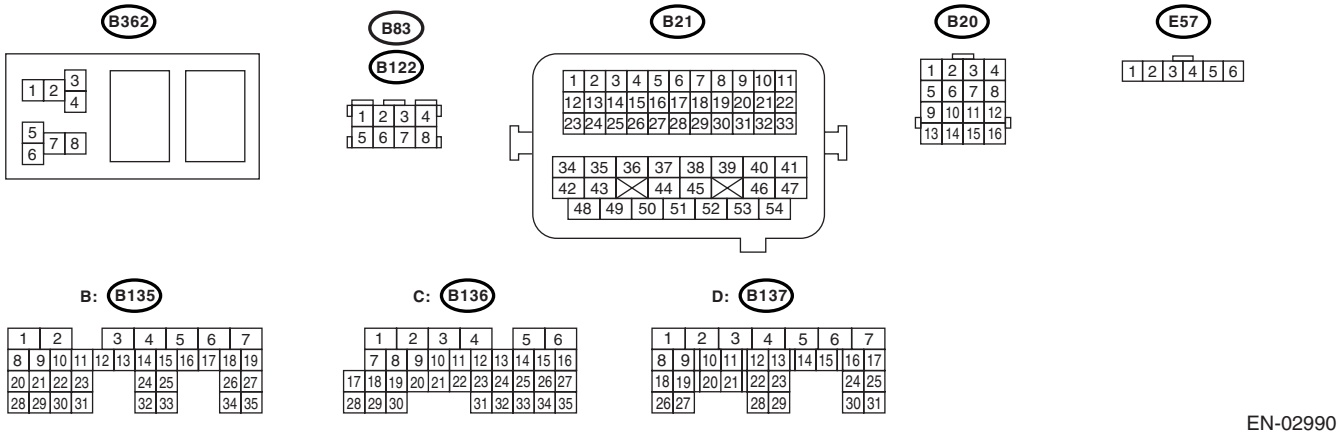

EN-02990

	Step	Check	Yes	No
1	**CHECK FOR ANY OTHER DTC ON DISPLAY.**	Is any other DTC displayed?	Inspect the relevant DTC using "List of Diagnostic Trouble Code (DTC)". <Ref. to EN(H4SO U5)(diag)-73, List of Diagnostic Trouble Code (DTC).> NOTE: In this case, it is not necessary to inspect DTC P0519.	Go to step **2.**
2	**CHECK AIR INTAKE SYSTEM.** 1) Turn the ignition switch to ON. 2) Start the engine, and idle it. 3) Check the following items. • Loose installation of intake manifold and throttle body • Cracks of intake manifold gasket and throttle body gasket • Disconnections of vacuum hoses	Is there any fault in air intake system?	Repair the air suction and leaks.	Go to step **3.**
3	**CHECK ELECTRONIC THROTTLE CONTROL.** 1) Turn the ignition switch to OFF. 2) Remove the electronic throttle control. 3) Check the electronic throttle control.	Are there foreign particles in electronic throttle control?	Remove the foreign particles from electronic throttle control.	Perform the diagnosis of DTC P2101.

CH:DTC P0600 SERIAL COMMUNICATION LINK

NOTE:
Refer to LAN section for diagnostic procedure. <Ref. to LAN(diag)-2, Basic Diagnostic Procedure.>

CI: DTC P0604 INTERNAL CONTROL MODULE RANDOM ACCESS MEMORY (RAM) ERROR

DTC DETECTING CONDITION:

- Detect as soon as malfunction occurs.
- GENERAL DESCRIPTION <Ref. to GD(H4SO U5)-170, DTC P0604 INTERNAL CONTROL MODULE RANDOM ACCESS MEMORY (RAM) ERROR, Diagnostic Trouble Code (DTC) Detecting Criteria.>

TROUBLE SYMPTOM:

- Engine does not start.
- Engine stalls.

CAUTION:

After repair or replacement of faulty parts, conduct Clear Memory Mode <Ref. to EN(H4SO U5)(diag)-46, OPERATION, Clear Memory Mode.> and Inspection Mode <Ref. to EN(H4SO U5)(diag)-37, OPERATION, Inspection Mode.>.

WIRING DIAGRAM:

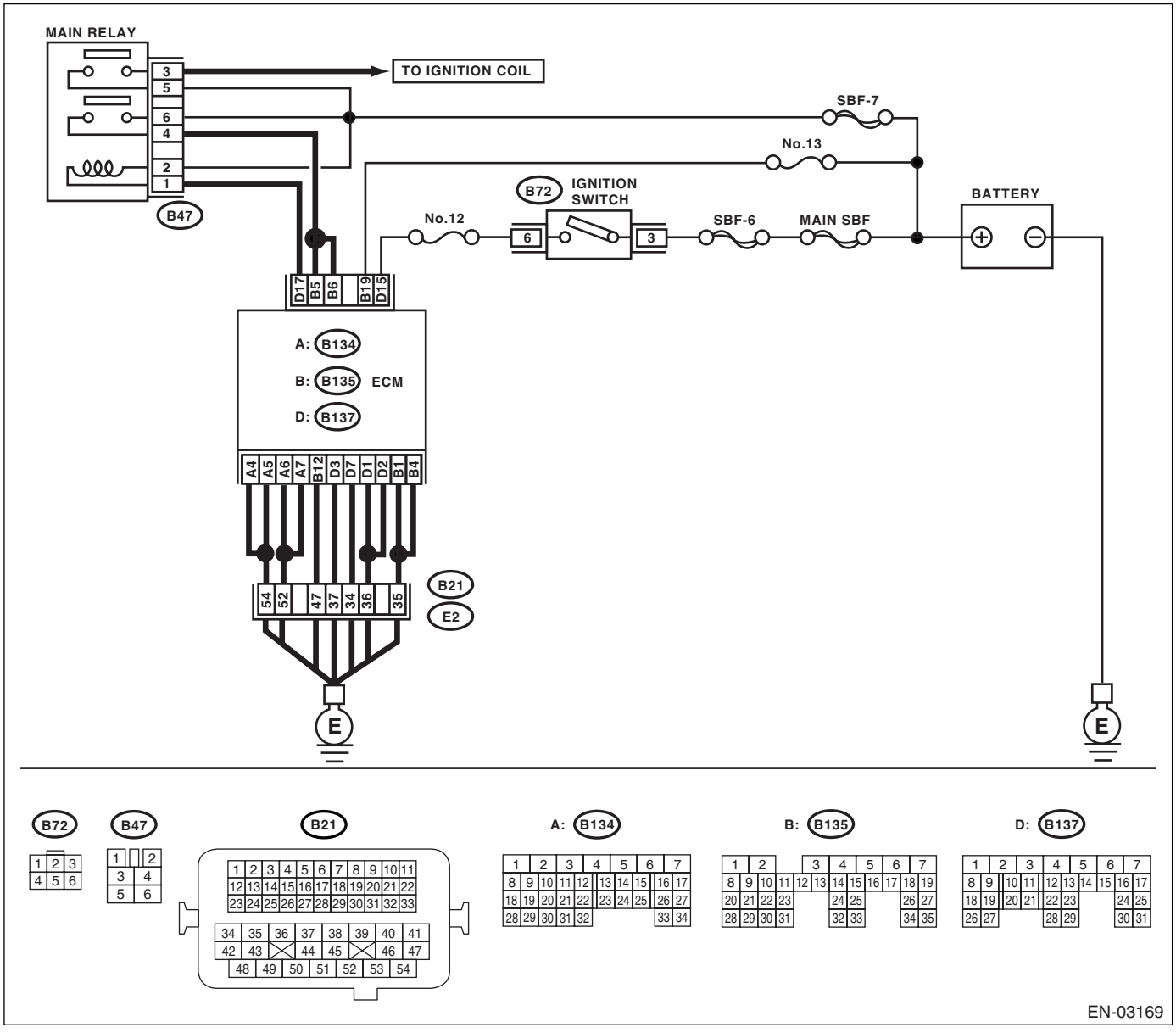

	Step	Check	Yes	No
1	**CHECK FOR ANY OTHER DTC ON DISPLAY.**	Is any other DTC displayed?	Check the relevant DTC using the List of Diagnostic Trouble Code (DTC). <Ref. to EN(H4SO U5)(diag)-73, List of Diagnostic Trouble Code (DTC).>	A temporary poor contact occurs.

CJ:DTC P0605 INTERNAL CONTROL MODULE READ ONLY MEMORY (ROM) ERROR

NOTE:
For the diagnostic procedure, refer to DTC P0607. <Ref. to EN(H4SO U5)(diag)-261, DTC P0607 CONTROL MODULE PERFORMANCE, Diagnostic Procedure with Diagnostic Trouble Code (DTC).>

CK:DTC P0607 CONTROL MODULE PERFORMANCE

DTC DETECTING CONDITION:

- Detect as soon as malfunction occurs.
- GENERAL DESCRIPTION <Ref. to GD(H4SO U5)-171, DTC P0605 INTERNAL CONTROL MODULE READ ONLY MEMORY (ROM) ERROR, Diagnostic Trouble Code (DTC) Detecting Criteria.> and <Ref. to GD(H4SO U5)-172, DTC P0607 CONTROL MODULE PERFORMANCE, Diagnostic Trouble Code (DTC) Detecting Criteria.>

TROUBLE SYMPTOM:

- Erroneous idling
- Poor driving performance

CAUTION:

After repair or replacement of faulty parts, conduct Clear Memory Mode <Ref. to EN(H4SO U5)(diag)-46, OPERATION, Clear Memory Mode.> and Inspection Mode <Ref. to EN(H4SO U5)(diag)-37, OPERATION, Inspection Mode.>.

WIRING DIAGRAM:

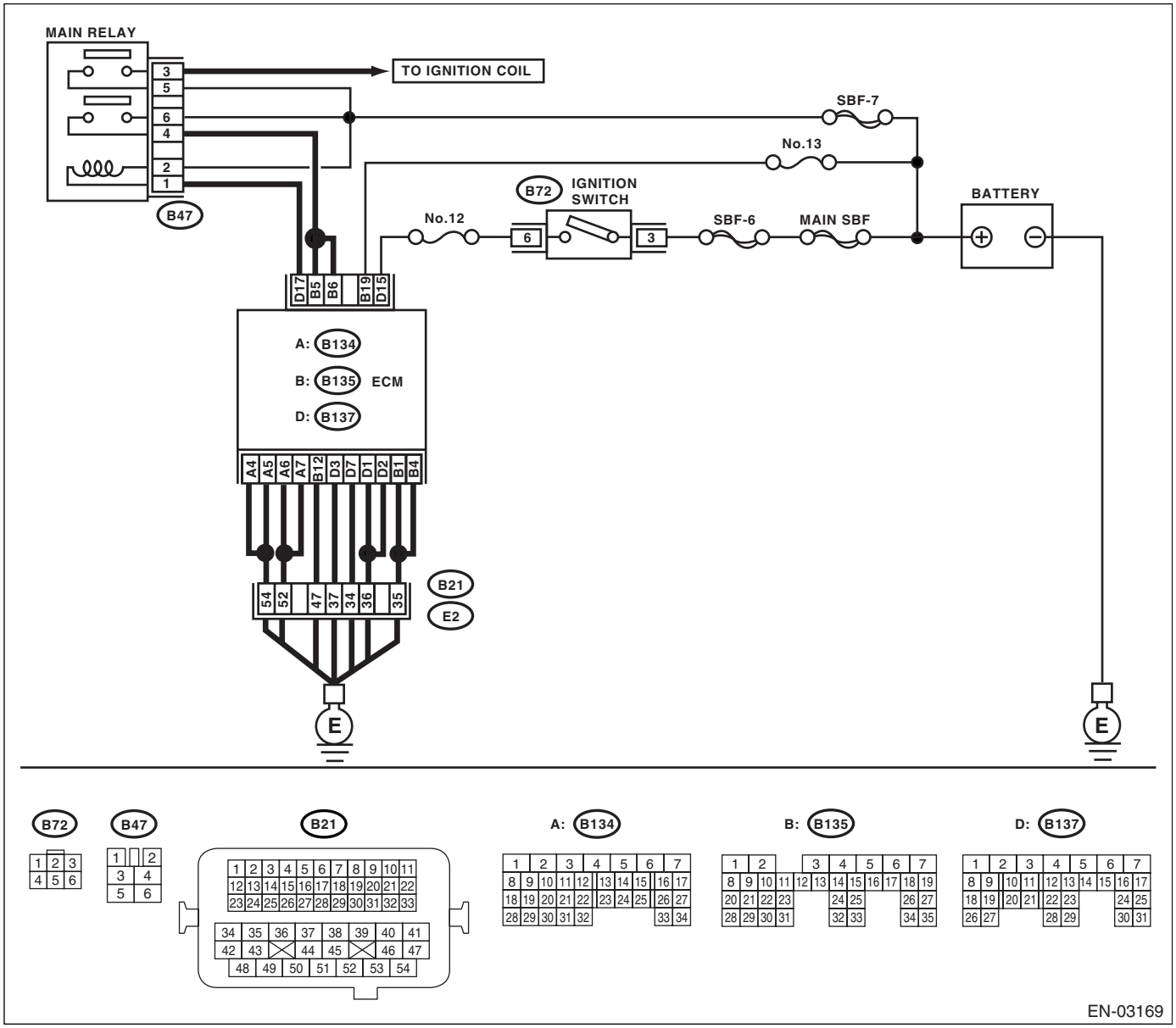

	Step	Check	Yes	No
1	**CHECK INPUT VOLTAGE OF ECM** 1) Turn the ignition switch to ON. 2) Measure the voltage between ECM connector and ground. ***Connector & terminal*** ***(B135) No. 5 (+) — Chassis ground (−):*** ***(B135) No. 6 (+) — Chassis ground (−):***	Is the measured value 10 — 13 V?	Go to step **2.**	Repair the open circuit or ground short of power supply circuit.
2	**CHECK INPUT VOLTAGE OF ECM** 1) Start the engine. 2) Measure the voltage between ECM connector and ground. ***Connector & terminal*** ***(B135) No. 5 (+) — Chassis ground (−):*** ***(B135) No. 6 (+) — Chassis ground (−):***	Is the measured value 13 — 15 V?	Go to step **3.**	Repair the open circuit or ground short of power supply circuit.
3	**CHECK GROUND HARNESS OF ECM** Measure the voltage between ECM connector and ground. ***Connector & terminal*** ***(B137) No. 1 (+) — Chassis ground (−):*** ***(B137) No. 2 (+) — Chassis ground (−):*** ***(B137) No. 3 (+) — Chassis ground (−):***	Is the measured value less than 1 V?	Repair poor contact of ECM connector. If poor contact occur, replace the ECM.	Retighten the engine ground terminal.

CL:DTC P0638 THROTTLE ACTUATOR CONTROL RANGE/PERFORMANCE (BANK 1)

NOTE:
For the diagnostic procedure, refer to DTC P2101. <Ref. to EN(H4SO U5)(diag)-339, DTC P2101 THROTTLE ACTUATOR CONTROL MOTOR CIRCUIT RANGE/PERFORMANCE, Diagnostic Procedure with Diagnostic Trouble Code (DTC).>

CM:DTC P0691 COOLING FAN 1 CONTROL CIRCUIT LOW

DTC DETECTING CONDITION:

- Two consecutive driving cycles with fault
- GENERAL DESCRIPTION <Ref. to GD(H4SO U5)-178, DTC P0691 COOLING FAN 1 CONTROL CIRCUIT LOW, Diagnostic Trouble Code (DTC) Detecting Criteria.>

TROUBLE SYMPTOM:

- Radiator fan does not operate properly.
- Overheating

CAUTION:
After repair or replacement of faulty parts, conduct Clear Memory Mode <Ref. to EN(H4SO U5)(diag)-46, OPERATION, Clear Memory Mode.> and Inspection Mode <Ref. to EN(H4SO U5)(diag)-37, OPERATION, Inspection Mode.>.

	Step	Check	Yes	No
1	**CHECK FOR ANY OTHER DTC ON DISPLAY.**	Does DTC P0691 appear on the Subaru Select Monitor?	Check the radiator fan system. <Ref. to CO(H4SO)-7, Radiator Fan System.>	Temporary poor contact occurs.

CN:DTC P0692 COOLING FAN 1 CONTROL CIRCUIT HIGH

DTC DETECTING CONDITION:

- Two consecutive driving cycles with fault
- GENERAL DESCRIPTION <Ref. to GD(H4SO U5)-179, DTC P0692 COOLING FAN 1 CONTROL CIRCUIT HIGH, Diagnostic Trouble Code (DTC) Detecting Criteria.>

TROUBLE SYMPTOM:

- Radiator fan does not operate properly.
- Overheating

CAUTION:
After repair or replacement of faulty parts, conduct Clear Memory Mode <Ref. to EN(H4SO U5)(diag)-46, OPERATION, Clear Memory Mode.> and Inspection Mode <Ref. to EN(H4SO U5)(diag)-37, OPERATION, Inspection Mode.>.

	Step	Check	Yes	No
1	**CHECK FOR ANY OTHER DTC ON DISPLAY.**	Does DTC P0692 appear on the Subaru Select Monitor?	Check the radiator fan system. <Ref. to CO(H4SO)-7, Radiator Fan System.>	Temporary poor contact occurs.

CO:DTC P0700 TRANSMISSION CONTROL SYSTEM (MIL REQUEST)

GENERAL DESCRIPTION <Ref. to GD(H4SO U5)-180, DTC P0700 TRANSMISSION CONTROL SYSTEM (MIL REQUEST), Diagnostic Trouble Code (DTC) Detecting Criteria.>

NOTE:
For the diagnostic procedure, refer to AT section. <Ref. to 4AT(D)(diag)-2, PROCEDURE, Basic Diagnostic Procedure.>

CP:DTC P0851 NEUTRAL SWITCH INPUT CIRCUIT LOW (AT MODEL)

DTC DETECTING CONDITION:

- Two consecutive driving cycles with fault
- GENERAL DESCRIPTION <Ref. to GD(H4SO U5)-181, DTC P0851 NEUTRAL SWITCH INPUT CIRCUIT LOW (AT MODEL), Diagnostic Trouble Code (DTC) Detecting Criteria.>

TROUBLE SYMPTOM:

Erroneous idling

CAUTION:

After repair or replacement of faulty parts, conduct Clear Memory Mode <Ref. to EN(H4SO U5)(diag)-46, OPERATION, Clear Memory Mode.> and Inspection Mode <Ref. to EN(H4SO U5)(diag)-37, OPERATION, Inspection Mode.>.

WIRING DIAGRAM:

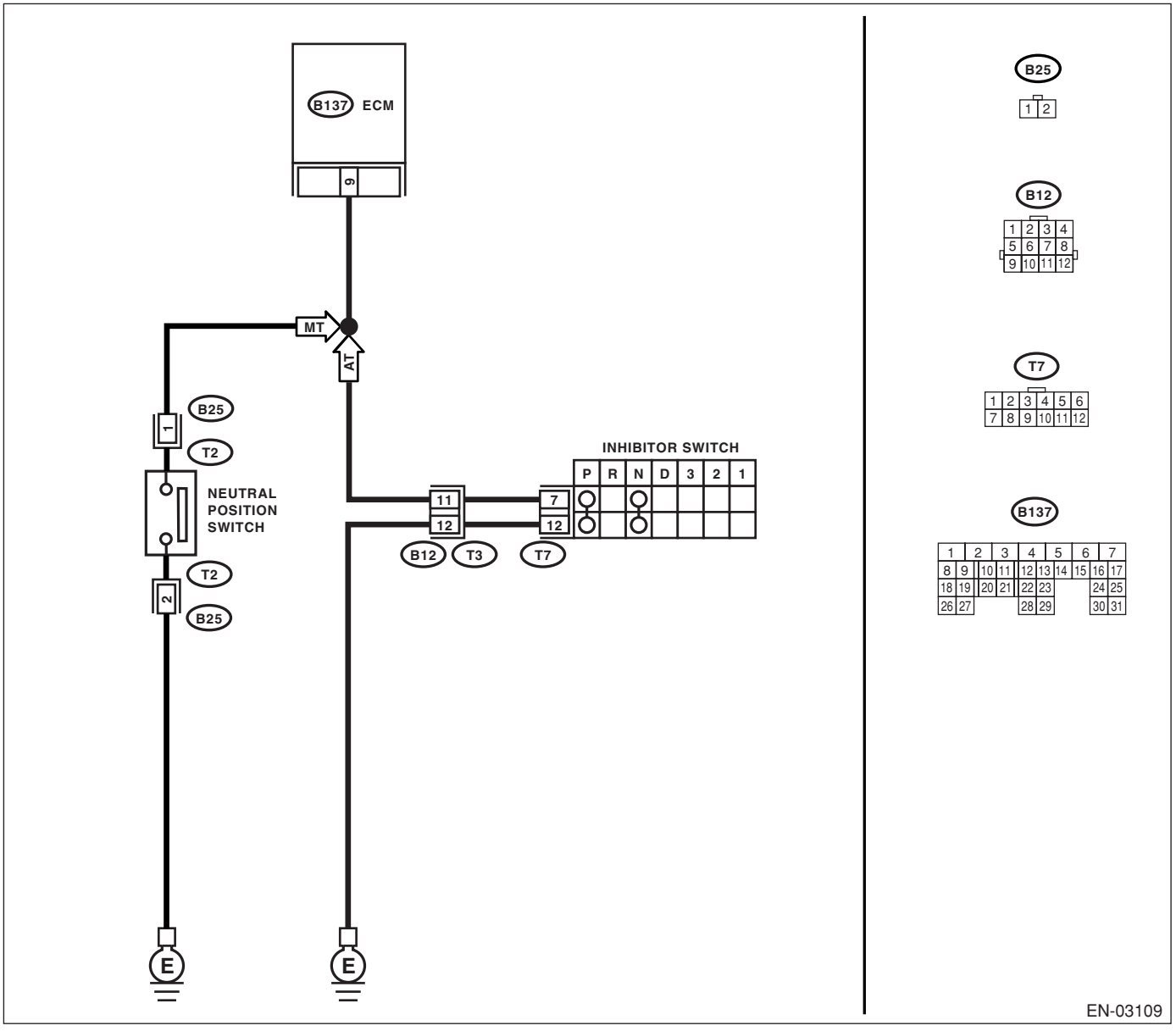

	Step	Check	Yes	No
1	**CHECK SELECTOR CABLE.**	Is there any fault in selector cable?	Repair or adjust selector cable. <Ref. to CS-26, INSPECTION, Select Cable.>	Go to step **2.**
2	**CHECK INPUT SIGNAL FOR ECM.** 1) Turn the ignition switch to ON. 2) Place the select lever except for "N" and "P" ranges. 3) Measure the voltage between ECM and chassis ground. ***Connector & terminal*** ***(B137) No. 9 (+) — Chassis ground (−):***	Is the voltage more than 10 V?	Even if malfunction indicator light lights up, the circuit has returned to a normal condition at this time.	Go to step **3.**
3	**CHECK HARNESS BETWEEN ECM AND TRANSMISSION HARNESS CONNECTOR.** 1) Turn the ignition switch to OFF. 2) Disconnect the connectors from ECM and transmission harness connector (T3). 3) Measure the resistance of harness between ECM connector and chassis ground. ***Connector & terminal*** ***(B137) No. 9 — Chassis ground:***	Is the resistance more than 1 MΩ?	Go to step **4.**	Repair ground short circuit in harness between ECM and transmission harness connector.
4	**CHECK TRANSMISSION HARNESS CONNECTOR.** 1) Disconnect the connector from inhibitor switch. 2) Measure the resistance of harness between transmission harness connector and engine ground. ***Connector & terminal*** ***(T3) No. 11 — Engine ground:***	Is the resistance more than 1 MΩ?	Go to step **5.**	Repair ground short circuit in harness between transmission harness and inhibitor switch connector.
5	**CHECK INHIBITOR SWITCH.** Measure the resistance between inhibitor switch connector the receptacle's terminals in select lever except for "N" and "P" range. ***Terminals*** ***No. 7 — No. 12:***	Is the resistance more than 1 MΩ?	Contact SOA Service Center.	Replace the inhibitor switch. <Ref. to 4AT-48, Inhibitor Switch.>

CQ:DTC P0851 NEUTRAL SWITCH INPUT CIRCUIT LOW (MT MODEL)

DTC DETECTING CONDITION:

- Two consecutive driving cycles with fault
- GENERAL DESCRIPTION <Ref. to GD(H4SO U5)-182, DTC P0851 NEUTRAL SWITCH INPUT CIRCUIT LOW (MT MODEL), Diagnostic Trouble Code (DTC) Detecting Criteria.>

TROUBLE SYMPTOM:

Erroneous idling

CAUTION:

After repair or replacement of faulty parts, conduct Clear Memory Mode <Ref. to EN(H4SO U5)(diag)-46, OPERATION, Clear Memory Mode.> and Inspection Mode <Ref. to EN(H4SO U5)(diag)-37, OPERATION, Inspection Mode.>.

WIRING DIAGRAM:

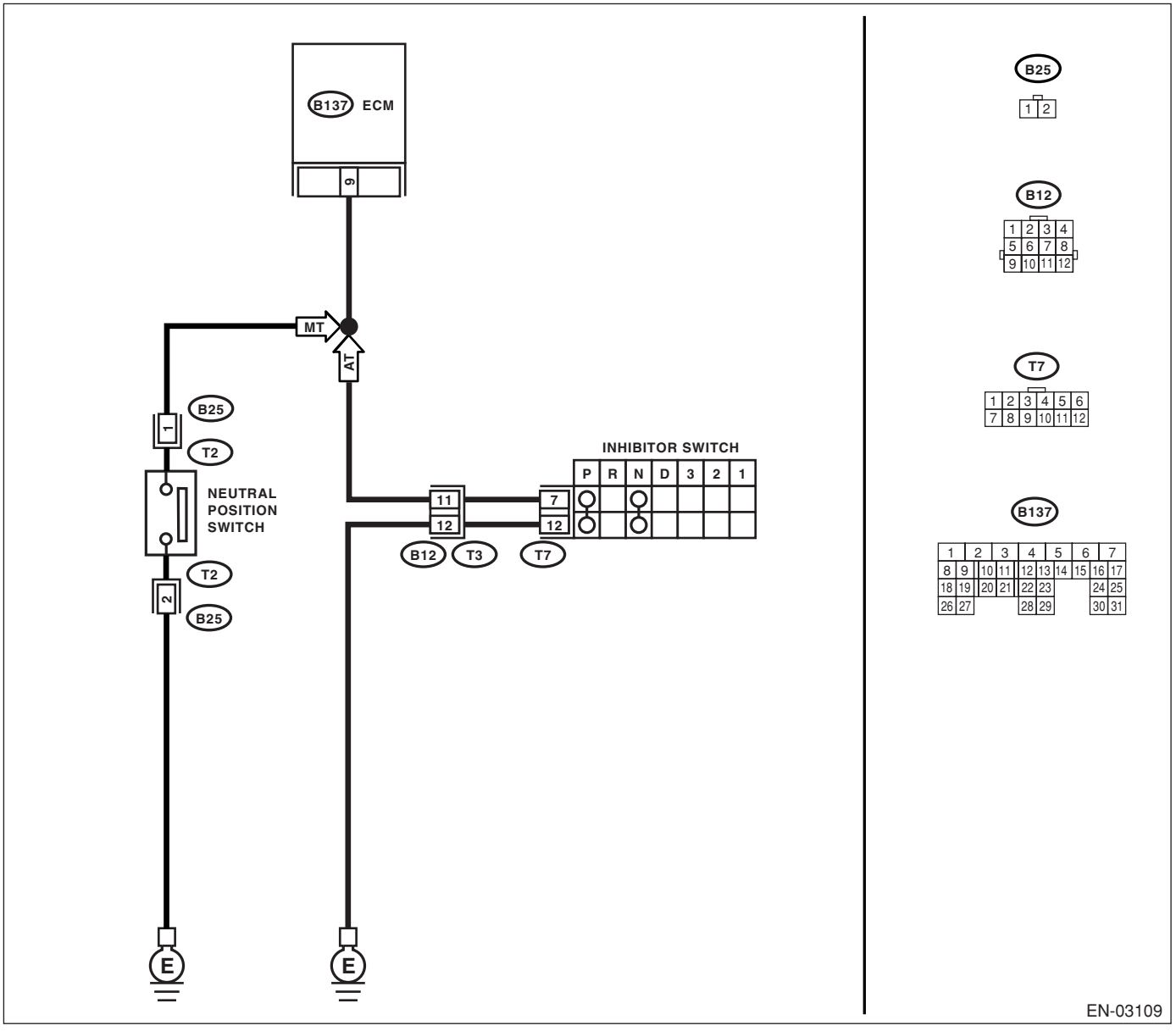

	Step	Check	Yes	No
1	**CHECK INPUT SIGNAL FOR ECM.** 1) Turn the ignition switch to ON. 2) Place the shift lever in neutral. 3) Measure the voltage between ECM and chassis ground. ***Connector & terminal*** ***(B137) No. 9 (+) — Chassis ground (−):***	Is the voltage more than 10 V?	Go to step **2.**	Go to step **4.**
2	**CHECK INPUT SIGNAL FOR ECM.** 1) Place the shift lever in a position except for neutral. 2) Measure the voltage between ECM and chassis ground. ***Connector & terminal*** ***(B137) No. 9 (+) — Chassis ground (−):***	Is the voltage less than 1 V?	Go to step **3.**	Go to step **4.**
3	**CHECK POOR CONTACT.** Check poor contact in ECM connector.	Is there poor contact in ECM connector?	Repair poor contact in ECM connector.	Contact SOA Service Center.
4	**CHECK NEUTRAL POSITION SWITCH.** 1) Turn the ignition switch to OFF. 2) Disconnect the connector from transmission harness. 3) Place the shift lever in neutral. 4) Measure the resistance between transmission harness and connector terminals. ***Connector & terminal*** ***(T2) No. 1 — No. 2:***	Is the resistance more than 1 MΩ?	Go to step **5.**	Repair short circuit in transmission harness or replace neutral position switch.
5	**CHECK NEUTRAL POSITION SWITCH.** 1) Place the shift lever in a position except for neutral. 2) Measure the resistance between transmission harness connector terminals. ***Connector & terminal*** ***(T2) No. 1 — No. 2:***	Is the resistance less than 1 Ω?	Go to step **6.**	Repair short circuit in transmission harness or replace neutral position switch.
6	**CHECK HARNESS BETWEEN ECM AND NEUTRAL POSITION SWITCH CONNECTOR.** Measure the resistance between ECM and chassis ground. ***Connector & terminal*** ***(B137) No. 9 — Chassis ground:***	Is the resistance more than 1 MΩ?	Go to step **7.**	Repair ground short circuit in harness between ECM and transmission harness connector.
7	**CHECK HARNESS BETWEEN ECM AND NEUTRAL POSITION SWITCH CONNECTOR.** 1) Disconnect the connector from ECM. 2) Measure the resistance of harness between ECM and transmission harness connector. ***Connector & terminal*** ***(B137) No. 9 — (B25) No. 1:***	Is the resistance less than 1 Ω?	Go to step **8.**	Repair open circuit in harness between ECM and transmission harness connector.
8	**CHECK HARNESS BETWEEN ECM AND NEUTRAL POSITION SWITCH CONNECTOR.** Measure the resistance of harness between transmission harness connector and engine ground. ***Connector & terminal*** ***(B25) No. 2 — Engine ground:***	Is the resistance less than 5 Ω?	Go to step **9.**	Repair open circuit between transmission harness connector and engine ground terminal.

	Step	Check	Yes	No
9	**CHECK POOR CONTACT.** Check poor contact in transmission harness connector.	Is there poor contact in transmission harness connector?	Repair poor contact in transmission harness connector.	Contact SOA Service Center.

CR:DTC P0852 NEUTRAL SWITCH INPUT CIRCUIT HIGH (AT MODEL)

DTC DETECTING CONDITION:

- Two consecutive driving cycles with fault
- GENERAL DESCRIPTION <Ref. to GD(H4SO U5)-183, DTC P0852 NEUTRAL SWITCH INPUT CIRCUIT HIGH (AT MODEL), Diagnostic Trouble Code (DTC) Detecting Criteria.>

TROUBLE SYMPTOM:

Erroneous idling

CAUTION:

After repair or replacement of faulty parts, conduct Clear Memory Mode <Ref. to EN(H4SO U5)(diag)-46, OPERATION, Clear Memory Mode.> and Inspection Mode <Ref. to EN(H4SO U5)(diag)-37, OPERATION, Inspection Mode.>.

WIRING DIAGRAM:

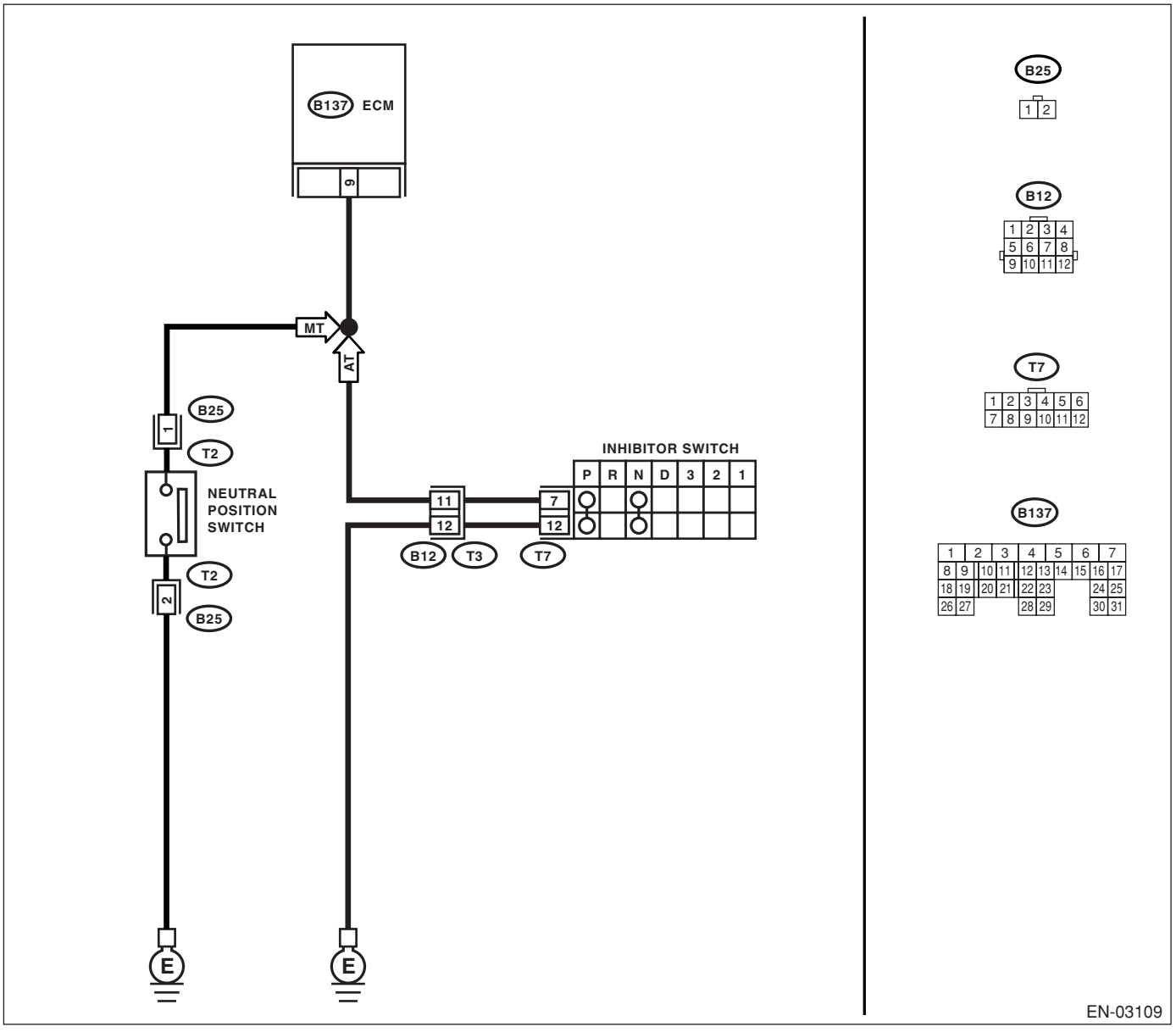

	Step	Check	Yes	No
1	**CHECK SELECTOR CABLE.**	Is there any fault in selector cable?	Repair or adjust selector cable. <Ref. to CS-26, INSPECTION, Select Cable.>	Go to step **2.**
2	**CHECK INPUT SIGNAL FOR ECM.** 1) Turn the ignition switch to ON. 2) Measure the voltage between ECM and chassis ground in select lever "N" and "P" ranges. ***Connector & terminal*** ***(B137) No. 9 (+) — Chassis ground (−):***	Is the voltage less than 1 V?	Go to step **3.**	Go to step **5.**
3	**CHECK INPUT SIGNAL FOR ECM.** Measure the voltage between ECM and chassis ground in select lever except for "N" and "P" ranges. ***Connector & terminal*** ***(B137) No. 9 (+) — Chassis ground (−):***	Is the voltage more than 10 V?	Go to step **4.**	Go to step **5.**
4	**CHECK POOR CONTACT.** Check poor contact in ECM connector.	Is there poor contact in ECM connector?	Repair poor contact in ECM connector.	Contact SOA Service Center.
5	**CHECK INPUT SIGNAL FOR ECM.** Measure the voltage between ECM and chassis ground. ***Connector & terminal*** ***(B137) No. 9 (+) — Chassis ground (−):***	Is the voltage more than 10 V?	Repair battery short circuit in harness between ECM and inhibitor switch connector.	Go to step **6.**
6	**CHECK HARNESS BETWEEN ECM AND INHIBITOR SWITCH CONNECTOR.** 1) Turn the ignition switch to OFF. 2) Disconnect the connectors from ECM and inhibitor switch. 3) Measure the resistance of harness between ECM and inhibitor switch connector. ***Connector & terminal*** ***(B137) No. 9 — (T7) No. 7:***	Is the resistance less than 1 Ω?	Go to step **7.**	Repair harness and connector. NOTE: In this case, repair the following: • Open circuit in harness between ECM and inhibitor switch connector • Poor contact in coupling connector • Poor contact in inhibitor switch connector • Poor contact in ECM connector

	Step	Check	Yes	No
7	**CHECK INHIBITOR SWITCH GROUND LINE.** Measure the resistance of harness between inhibitor switch connector and engine ground. ***Connector & terminal*** ***(T7) No. 12 — Engine ground:***	Is the resistance less than 5 Ω?	Go to step **8.**	Repair open circuit in harness between inhibitor switch connector and starter motor ground line. NOTE: In this case, repair the following: • Open circuit in harness between inhibitor switch connector and starter motor ground line • Poor contact in starter motor connector • Poor contact in starter motor ground • Starter motor
8	**CHECK INHIBITOR SWITCH.** Measure the resistance between inhibitor switch connector receptacle's terminals in select lever "N" and "P" ranges. ***Terminals*** ***No. 7 — No. 12:***	Is the resistance less than 1 Ω?	Contact SOA Service Center.	Replace the inhibitor switch. <Ref. to 4AT-48, Inhibitor Switch.>

CS:DTC P0852 NEUTRAL SWITCH INPUT CIRCUIT HIGH (MT MODEL)

DTC DETECTING CONDITION:

- Two consecutive driving cycles with fault
- GENERAL DESCRIPTION <Ref. to GD(H4SO U5)-184, DTC P0852 NEUTRAL SWITCH INPUT CIRCUIT HIGH (MT MODEL), Diagnostic Trouble Code (DTC) Detecting Criteria.>

TROUBLE SYMPTOM:

Erroneous idling

CAUTION:

After repair or replacement of faulty parts, conduct CLEAR MEMORY MODE <Ref. to EN(H4SO U5)(diag)-46, OPERATION, Clear Memory Mode.> and INSPECTION MODE <Ref. to EN(H4SO U5)(diag)-37, OPERATION, Inspection Mode.>.

WIRING DIAGRAM:

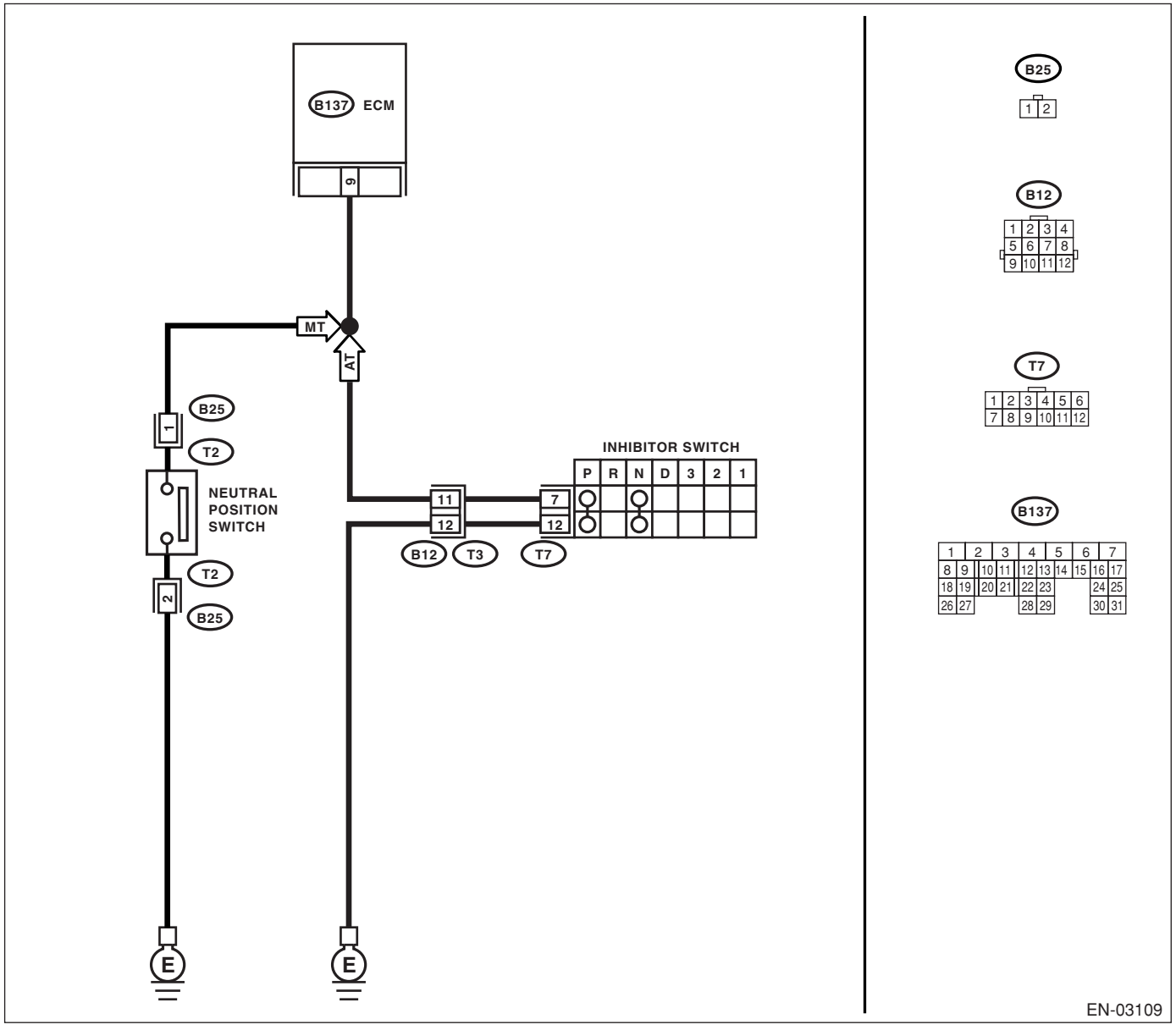

	Step	Check	Yes	No
1	**CHECK INPUT SIGNAL FOR ECM.** 1) Turn ignition switch to ON. 2) Place the shift lever in neutral. 3) Measure the voltage between ECM and chassis ground. ***Connector & terminal*** ***(B137) No. 9 (+) — Chassis ground (−):***	Is the voltage more than 10 V?	Go to step **2.**	Go to step **4.**
2	**CHECK INPUT SIGNAL FOR ECM.** 1) Place the shift lever in a position except for neutral. 2) Measure the voltage between ECM and chassis ground. ***Connector & terminal*** ***(B137) No. 9 (+) — Chassis ground (−):***	Is the voltage less than 1 V?	Go to step **3.**	Go to step **5.**
3	**CHECK FOR POOR CONTACT.** Check for poor contact in ECM connector.	Is there poor contact in ECM connector?	Repair poor contact in ECM connector.	Contact SOA Service Center.
4	**CHECK NEUTRAL SWITCH.** 1) Place the shift lever in a position except for neutral. 2) Measure the resistance between transmission harness connector terminals. ***Connector & terminal*** ***(T2) No. 1 — No. 2:***	Is the resistance less than 1 Ω?	Go to step **5.**	Repair open circuit in transmission harness or replace neutral switch.
5	**CHECK HARNESS BETWEEN ECM AND NEUTRAL SWITCH CONNECTOR.** 1) Disconnect the connector from ECM. 2) Measure the resistance of harness between ECM and transmission harness connector. ***Connector & terminal*** ***(B137) No. 9 — (B25) No. 1:***	Is the resistance less than 1 Ω?	Go to step **6.**	Repair open circuit in harness between ECM and transmission harness connector.
6	**CHECK HARNESS BETWEEN ECM AND NEUTRAL SWITCH CONNECTOR.** Measure the resistance of harness between transmission harness connector and engine ground. ***Connector & terminal*** ***(B25) No. 2 — Engine ground:***	Is the resistance less than 5 Ω?	Go to step **7.**	Repair harness and connector. NOTE: In this case, repair the following: • Open circuit in harness between transmission harness connector and engine ground • Poor contact in coupling connector
7	**CHECK FOR POOR CONTACT.** Check for poor contact in transmission harness connector.	Is there a poor contact in the transmission harness connector?	Repair poor contact in transmission harness connector.	Contact SOA Service Center.

CT:DTC P1152 O2 SENSOR CIRCUIT RANGE/PERFORMANCE (LOW) (BANK1 SENSOR1)

DTC DETECTING CONDITION:

- Two consecutive driving cycles with fault
- GENERAL DESCRIPTION <Ref. to GD(H4SO U5)-185, DTC P1152 O2 SENSOR CIRCUIT RANGE/ PERFORMANCE (LOW) (BANK1 SENSOR1), Diagnostic Trouble Code (DTC) Detecting Criteria.>

CAUTION:

After repair or replacement of faulty parts, conduct Clear Memory Mode <Ref. to EN(H4SO U5)(diag)-46, OPERATION, Clear Memory Mode.> and Inspection Mode <Ref. to EN(H4SO U5)(diag)-37, OPERATION, Inspection Mode.>.

WIRING DIAGRAM:

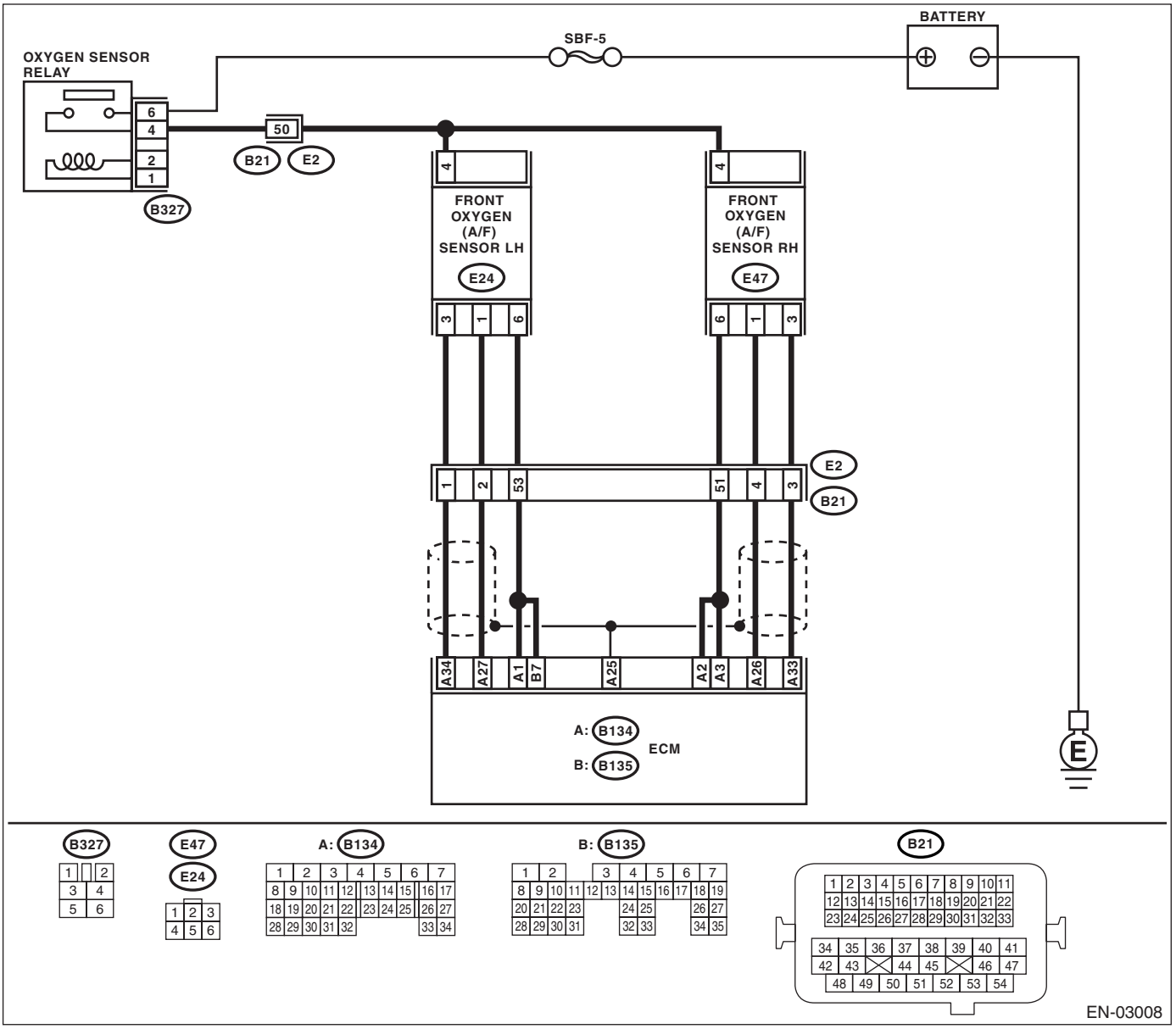

	Step	Check	Yes	No
1	**CHECK HARNESS BETWEEN ECM AND FRONT OXYGEN (A/F) SENSOR CONNECTOR.** 1) Turn the ignition switch to OFF. 2) Disconnect the connectors from ECM and front oxygen (A/F) sensor connector. 3) Measure the resistance of harness between ECM and front oxygen (A/F) sensor connector. ***Connector & terminal*** ***(B134) No. 26 — (E47) No. 1:*** ***(B134) No. 33 — (E47) No. 3:***	Is the measured value less than 1 Ω?	Go to step **2.**	Repair the harness and connector. NOTE: In this case, repair the following: • Open circuit in harness between ECM and front oxygen (A/F) sensor connector • Poor contact in front oxygen (A/F) sensor connector • Poor contact in ECM connector
2	**CHECK POOR CONTACT.** Check poor contact in front oxygen (A/F) sensor connector.	Is there poor contact in front oxygen (A/F) sensor connector?	Repair the poor contact in front oxygen (A/F) sensor connector.	Replace the front oxygen (A/F) sensor. <Ref. to FU(H4SO U5)-37, Front Oxygen (A/F) Sensor.>

CU:DTC P1153 O2 SENSOR CIRCUIT RANGE/PERFORMANCE (HIGH) (BANK1 SENSOR1)

DTC DETECTING CONDITION:

- Two consecutive driving cycles with fault
- GENERAL DESCRIPTION <Ref. to GD(H4SO U5)-187, DTC P1153 O2 SENSOR CIRCUIT RANGE/ PERFORMANCE (HIGH) (BANK1 SENSOR1), Diagnostic Trouble Code (DTC) Detecting Criteria.>

CAUTION:

After repair or replacement of faulty parts, conduct Clear Memory Mode <Ref. to EN(H4SO U5)(diag)-46, OPERATION, Clear Memory Mode.> and Inspection Mode <Ref. to EN(H4SO U5)(diag)-37, OPERATION, Inspection Mode.>.

WIRING DIAGRAM:

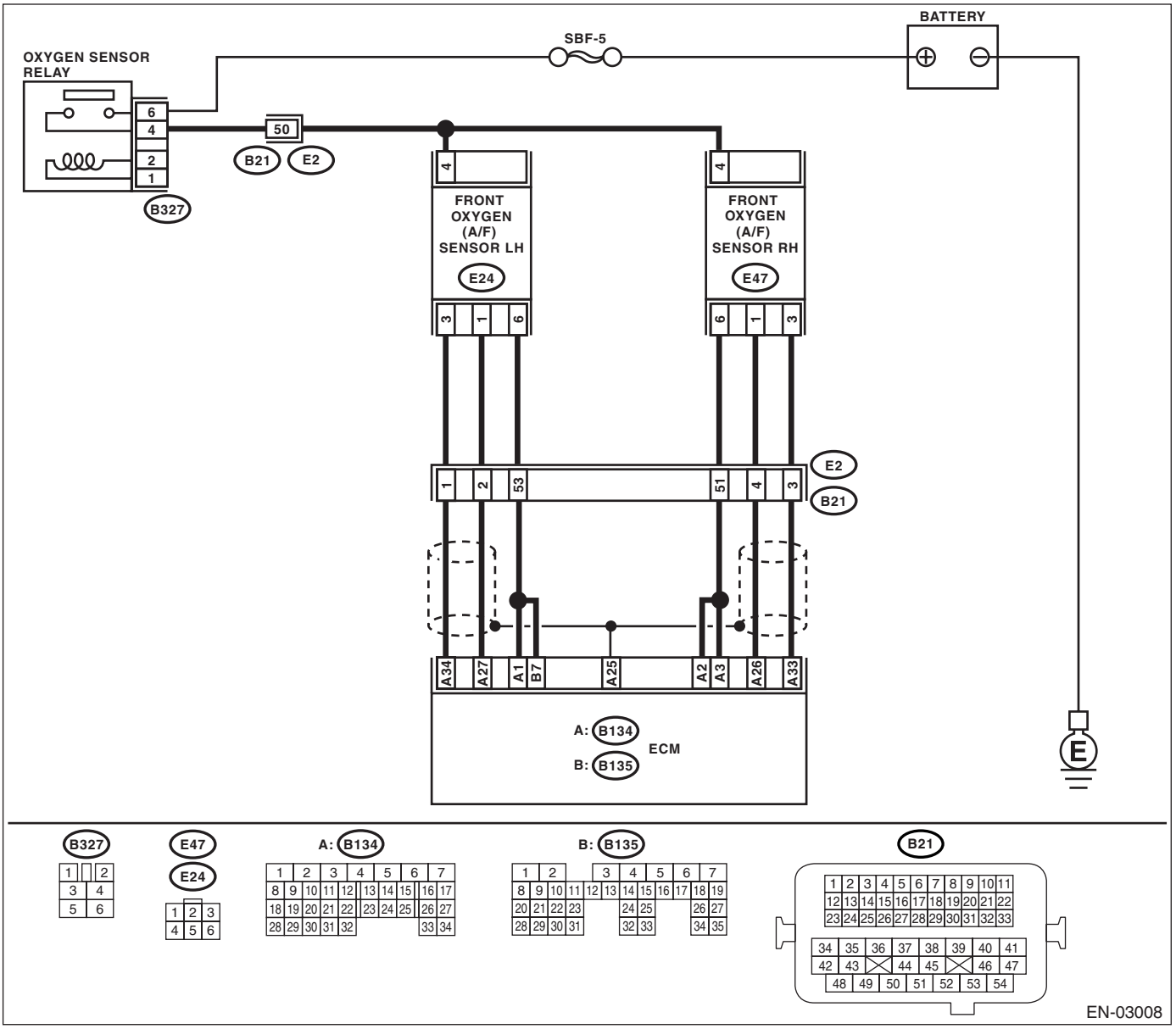

	Step	Check	Yes	No
1	**CHECK HARNESS BETWEEN ECM AND FRONT OXYGEN (A/F) SENSOR CONNECTOR.** 1) Turn the ignition switch to OFF. 2) Disconnect the connector from ECM. 3) Measure the resistance of harness between ECM connector and chassis ground. ***Connector & terminal*** ***(B134) No. 26 — Chassis ground:***	Is the measured value more than 1 MΩ?	Repair the ground short circuit in harness between ECM and front oxygen (A/F) sensor connector.	Go to step **2.**
2	**CHECK HARNESS BETWEEN ECM AND FRONT OXYGEN (A/F) SENSOR CONNECTOR.** Measure the resistance of harness between ECM connector and chassis ground. ***Connector & terminal*** ***(B134) No. 33 — Chassis ground:***	Is the measured value more than 1 MΩ?	Repair the ground short circuit in harness between ECM and front oxygen (A/F) sensor connector.	Go to step **3.**
3	**CHECK OUTPUT SIGNAL FOR ECM.** 1) Connect the connector to ECM. 2) Turn the ignition switch to ON. 3) Measure the voltage between ECM connector and chassis ground. ***Connector & terminal*** ***(B134) No. 26 (+) — Chassis ground (−):***	Is the measured value more than 4.5 V?	Go to step **4.**	Go to step **5.**
4	**CHECK OUTPUT SIGNAL FOR ECM.** Measure the voltage between ECM connector and chassis ground. ***Connector & terminal*** ***(B134) No. 26 (+) — Chassis ground (−):***	Is the measured value more than 10 V?	Repair the battery short circuit in harness between ECM and front oxygen (A/F) sensor connector. After repair, replace the ECM. <Ref. to FU(H4SO U5)-44, Engine Control Module (ECM).>	Repair the poor contact in ECM connector.
5	**CHECK OUTPUT SIGNAL FOR ECM.** Measure the voltage between ECM connector and chassis ground. ***Connector & terminal*** ***(B134) No. 33 (+) — Chassis ground (−):***	Is the measured value more than 4.95 V?	Go to step **6.**	Replace the front oxygen (A/F) sensor. <Ref. to FU(H4SO U5)-37, Front Oxygen (A/F) Sensor.>
6	**CHECK OUTPUT SIGNAL FOR ECM.** Measure the voltage between ECM connector and chassis ground. ***Connector & terminal*** ***(B134) No. 33 (+) — Chassis ground (−):***	Is the measured value more than 10 V?	Repair the battery short circuit in harness between ECM and front oxygen (A/F) sensor connector. After repair, replace the ECM. <Ref. to FU(H4SO U5)-44, Engine Control Module (ECM).>	Repair the poor contact in ECM connector.

CV:DTC P1154 O2 SENSOR CIRCUIT RANGE/PERFORMANCE (LOW) (BANK 2 SENSOR 1)

DTC DETECTING CONDITION:

- Two consecutive driving cycles with fault
- GENERAL DESCRIPTION <Ref. to GD(H4SO U5)-189, DTC P1154 O2 SENSOR CIRCUIT RANGE/ PERFORMANCE (LOW) (BANK 2 SENSOR 1), Diagnostic Trouble Code (DTC) Detecting Criteria.>

CAUTION:

After repair or replacement of faulty parts, conduct Clear Memory Mode <Ref. to EN(H4SO U5)(diag)-46, OPERATION, Clear Memory Mode.> and Inspection Mode <Ref. to EN(H4SO U5)(diag)-37, OPERATION, Inspection Mode.>.

WIRING DIAGRAM:

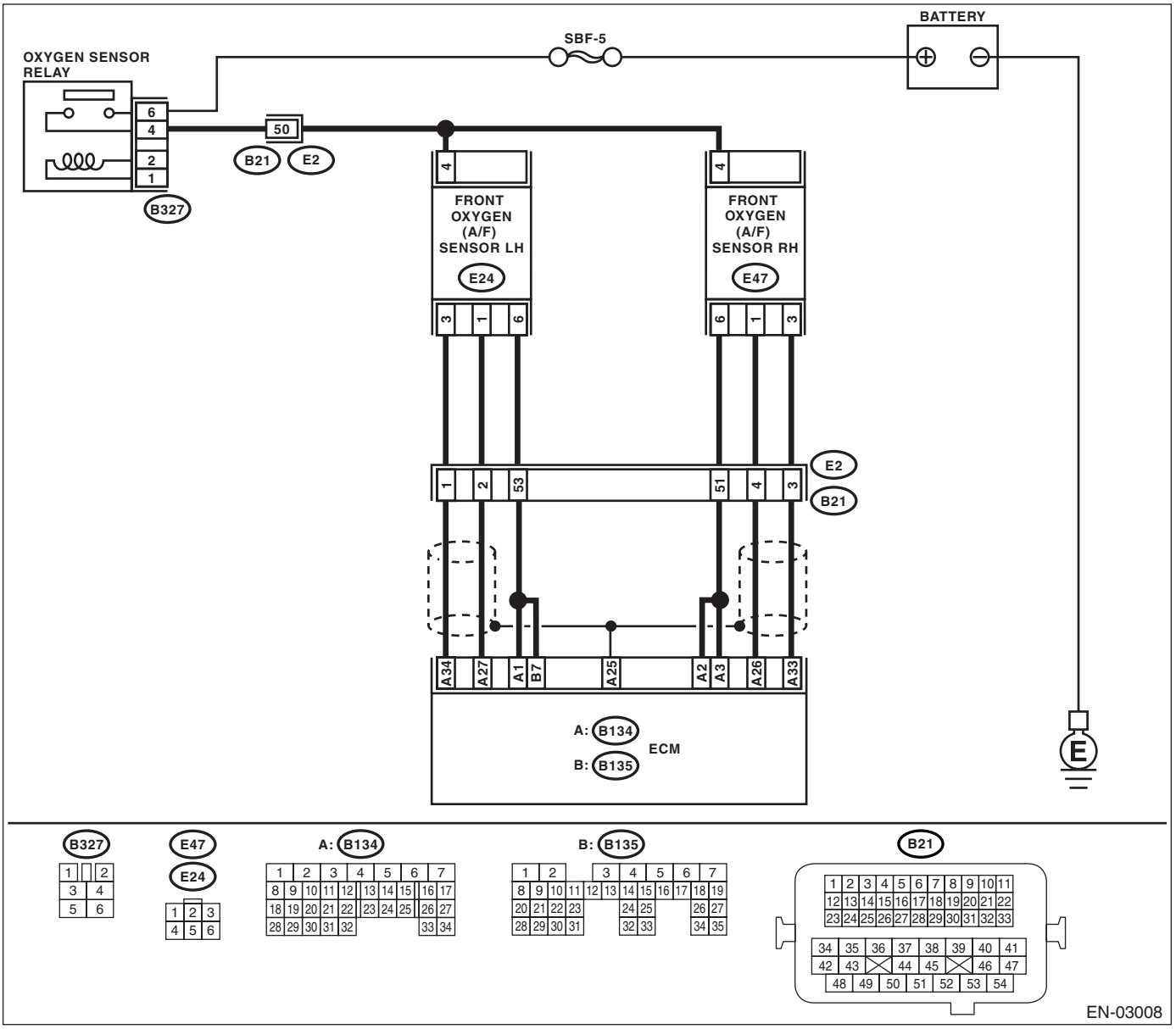

	Step	Check	Yes	No
1	**CHECK HARNESS BETWEEN ECM AND FRONT OXYGEN (A/F) SENSOR CONNECTOR.** 1) Turn the ignition switch to OFF. 2) Disconnect the connectors from ECM and front oxygen (A/F) sensor connector. 3) Measure the resistance of harness between ECM and front oxygen (A/F) sensor connector. ***Connector & terminal*** ***(B134) No. 27 — (E24) No. 1:*** ***(B134) No. 34 — (E24) No. 3:***	Is the measured value less than 1 Ω?	Go to step **2.**	Repair the harness and connector. NOTE: In this case, repair the following: • Open circuit in harness between ECM and front oxygen (A/F) sensor connector • Poor contact in front oxygen (A/F) sensor connector • Poor contact in ECM connector
2	**CHECK POOR CONTACT.** Check poor contact in front oxygen (A/F) sensor connector.	Is there poor contact in front oxygen (A/F) sensor connector?	Repair the poor contact in front oxygen (A/F) sensor connector.	Replace the front oxygen (A/F) sensor. <Ref. to FU(H4SO U5)-37, Front Oxygen (A/F) Sensor.>

CW:DTC P1155 O2 SENSOR CIRCUIT RANGE/PERFORMANCE (HIGH) (BANK 2 SENSOR 1)

DTC DETECTING CONDITION:

- Two consecutive driving cycles with fault
- GENERAL DESCRIPTION <Ref. to GD(H4SO U5)-189, DTC P1155 O2 SENSOR CIRCUIT RANGE/ PERFORMANCE (HIGH) (BANK 2 SENSOR 1), Diagnostic Trouble Code (DTC) Detecting Criteria.>

CAUTION:

After repair or replacement of faulty parts, conduct Clear Memory Mode <Ref. to EN(H4SO U5)(diag)-46, OPERATION, Clear Memory Mode.> and Inspection Mode <Ref. to EN(H4SO U5)(diag)-37, OPERATION, Inspection Mode.>.

WIRING DIAGRAM:

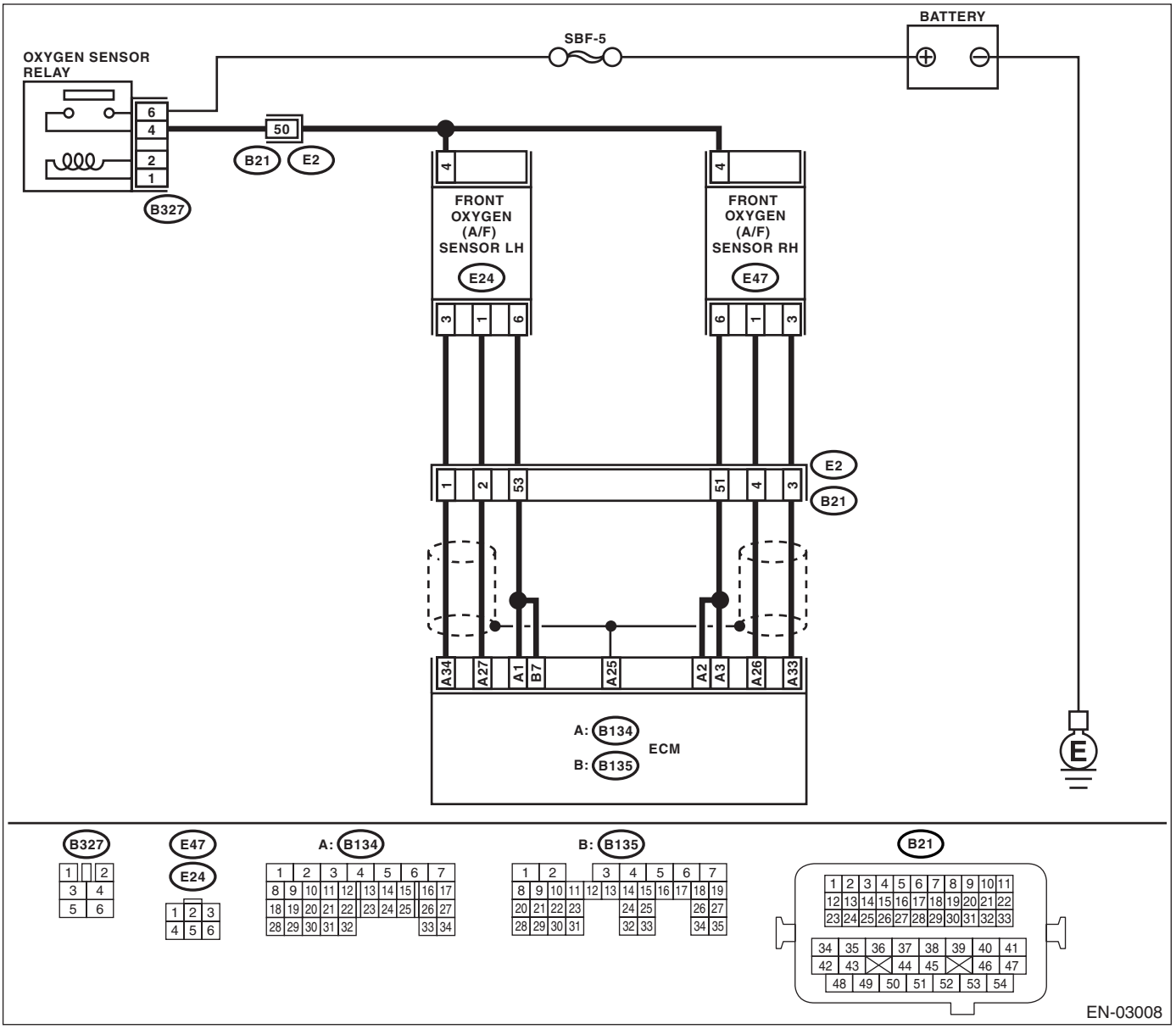

	Step	Check	Yes	No
1	**CHECK HARNESS BETWEEN ECM AND FRONT OXYGEN (A/F) SENSOR CONNECTOR.** 1) Turn the ignition switch to OFF. 2) Disconnect the connector from ECM. 3) Measure the resistance of harness between ECM connector and chassis ground. ***Connector & terminal*** ***(B134) No. 27 — Chassis ground:***	Is the measured value more than 1 MΩ?	Repair the ground short circuit in harness between ECM and front oxygen (A/F) sensor connector.	Go to step **2.**
2	**CHECK HARNESS BETWEEN ECM AND FRONT OXYGEN (A/F) SENSOR CONNECTOR.** Measure the resistance of harness between ECM connector and chassis ground. ***Connector & terminal*** ***(B134) No. 34 — Chassis ground:***	Is the measured value more than 1 MΩ?	Repair the ground short circuit in harness between ECM and front oxygen (A/F) sensor connector.	Go to step **3.**
3	**CHECK OUTPUT SIGNAL FOR ECM.** 1) Connect the connector to ECM. 2) Turn the ignition switch to ON. 3) Measure the voltage between ECM connector and chassis ground. ***Connector & terminal*** ***(B134) No. 27 (+) — Chassis ground (−):***	Is the measured value more than 4.5 V?	Go to step **4.**	Go to step **5.**
4	**CHECK OUTPUT SIGNAL FOR ECM.** Measure the voltage between ECM connector and chassis ground. ***Connector & terminal*** ***(B134) No. 27 (+) — Chassis ground (−):***	Is the measured value more than 10 V?	Repair the battery short circuit in harness between ECM and front oxygen (A/F) sensor connector. After repair, replace the ECM. <Ref. to FU(H4SO U5)-44, Engine Control Module (ECM).>	Repair the poor contact in ECM connector.
5	**CHECK OUTPUT SIGNAL FOR ECM.** Measure the voltage between ECM connector and chassis ground. ***Connector & terminal*** ***(B134) No. 34 (+) — Chassis ground (−):***	Is the measured value more than 4.95 V?	Go to step **6.**	Replace the front oxygen (A/F) sensor. <Ref. to FU(H4SO U5)-37, Front Oxygen (A/F) Sensor.>
6	**CHECK OUTPUT SIGNAL FOR ECM.** Measure the voltage between ECM connector and chassis ground. ***Connector & terminal*** ***(B134) No. 34 (+) — Chassis ground (−):***	Is the measured value more than 10 V?	Repair the battery short circuit in harness between ECM and front oxygen (A/F) sensor connector. After repair, replace the ECM. <Ref. to FU(H4SO U5)-44, Engine Control Module (ECM).>	Repair the poor contact in ECM connector.

CX:DTC P1160 RETURN SPRING FAILURE

NOTE:
For the diagnostic procedure, refer to DTC P2101. <Ref. to EN(H4SO U5)(diag)-339, DTC P2101 THROTTLE ACTUATOR CONTROL MOTOR CIRCUIT RANGE/PERFORMANCE, Diagnostic Procedure with Diagnostic Trouble Code (DTC).>

CY:DTC P1400 FUEL TANK PRESSURE CONTROL SOLENOID VALVE CIRCUIT LOW

DTC DETECTING CONDITION:

- Two consecutive driving cycles with fault
- GENERAL DESCRIPTION <Ref. to GD(H4SO U5)-192, DTC P1400 FUEL TANK PRESSURE CONTROL SOLENOID VALVE CIRCUIT LOW, Diagnostic Trouble Code (DTC) Detecting Criteria.>

CAUTION:

After repair or replacement of faulty parts, conduct CLEAR MEMORY MODE <Ref. to EN(H4SO U5)(diag)-46, OPERATION, Clear Memory Mode.> and INSPECTION MODE <Ref. to EN(H4SO U5)(diag)-37, OPERATION, Inspection Mode.>.

WIRING DIAGRAM:

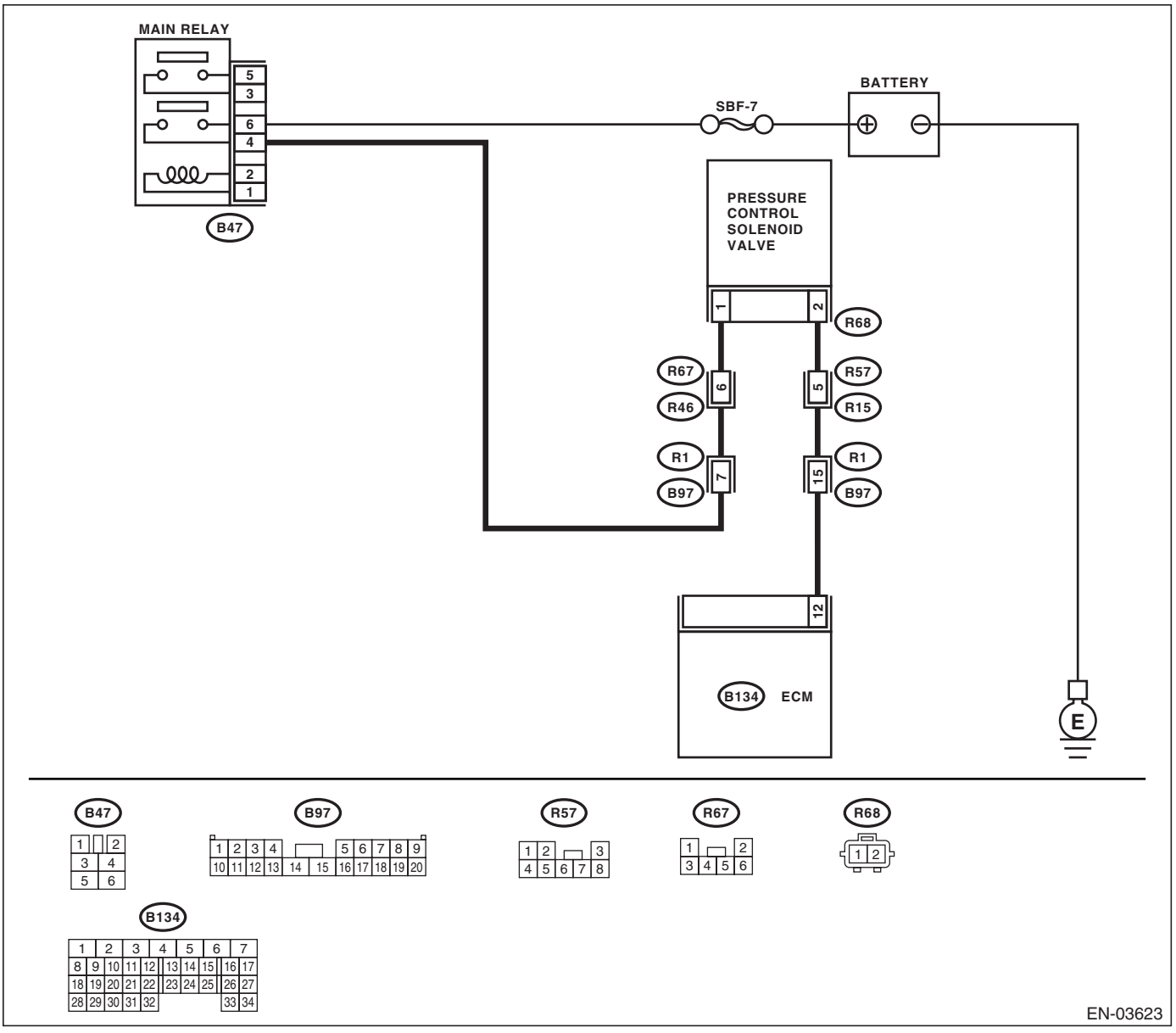

	Step	Check	Yes	No
1	**CHECK OUTPUT SIGNAL FROM ECM.** 1) Turn ignition switch to ON. 2) Measure the voltage between ECM and chassis ground. ***Connector & terminal*** ***(B134) No. 12 (+) — Chassis ground (−):***	Is the voltage more than 10 V?	Go to step **2.**	Go to step **3.**
2	**CHECK FOR POOR CONTACT.** Check for poor contact in ECM connector.	Is there poor contact in ECM connector?	Repair poor contact in ECM connector.	Contact SOA Service Center.
3	**CHECK HARNESS BETWEEN PRESSURE CONTROL SOLENOID VALVE AND ECM CONNECTOR.** 1) Turn ignition switch to OFF. 2) Disconnect the connectors from pressure control solenoid valve and ECM. 3) Measure the resistance of harness between pressure control solenoid valve connector and chassis ground. ***Connector & terminal*** ***(R68) No. 2 — Chassis ground:***	Is the resistance less than 10 Ω?	Repair short circuit to ground in harness between ECM and pressure control solenoid valve connector.	Go to step **4.**
4	**CHECK HARNESS BETWEEN PRESSURE CONTROL SOLENOID VALVE AND ECM CONNECTOR.** Measure the resistance of harness between ECM and pressure control solenoid valve connector. ***Connector & terminal*** ***(B134) No. 12 — (R68) No. 2:***	Is the resistance less than 1 Ω?	Go to step **5.**	Repair harness and connector. NOTE: In this case, repair the following: • Open circuit in harness between ECM and pressure control solenoid valve connector • Poor contact in coupling connector
5	**CHECK PRESSURE CONTROL SOLENOID VALVE.** Measure the resistance between pressure control solenoid valve terminals. ***Terminals*** ***No. 1 — No. 2:***	Is the resistance 10 — 100 Ω?	Go to step **6.**	Replace the pressure control solenoid valve. <Ref. to EC(H4SO)-13, Pressure Control Solenoid Valve.>
6	**CHECK POWER SUPPLY TO PRESSURE CONTROL SOLENOID VALVE.** 1) Turn ignition switch to ON. 2) Measure the voltage between pressure control solenoid valve and chassis ground. ***Connector & terminal*** ***(R68) No. 1 (+) — Chassis ground (−):***	Is the voltage more than 10 V?	Go to step **7.**	Repair harness and connector. NOTE: In this case, repair the following: • Open circuit in harness between main relay and pressure control solenoid valve connector • Poor contact in coupling connector • Poor contact in main relay connector
7	**CHECK FOR POOR CONTACT.** Check for poor contact in pressure control solenoid valve connector.	Is there poor contact in pressure control solenoid valve connector?	Repair poor contact in pressure control solenoid valve connector.	Contact SOA Service Center.

CZ:DTC P1420 FUEL TANK PRESSURE CONTROL SOL. VALVE CIRCUIT HIGH

DTC DETECTING CONDITION:

- Two consecutive driving cycles with fault
- GENERAL DESCRIPTION <Ref. to GD(H4SO U5)-194, DTC P1420 FUEL TANK PRESSURE CONTROL SOL. VALVE CIRCUIT HIGH, Diagnostic Trouble Code (DTC) Detecting Criteria.>

CAUTION:
After repair or replacement of faulty parts, conduct CLEAR MEMORY MODE <Ref. to EN(H4SO U5)(diag)-46, OPERATION, Clear Memory Mode.> and INSPECTION MODE <Ref. to EN(H4SO U5)(diag)-37, OPERATION, Inspection Mode.>.

WIRING DIAGRAM:

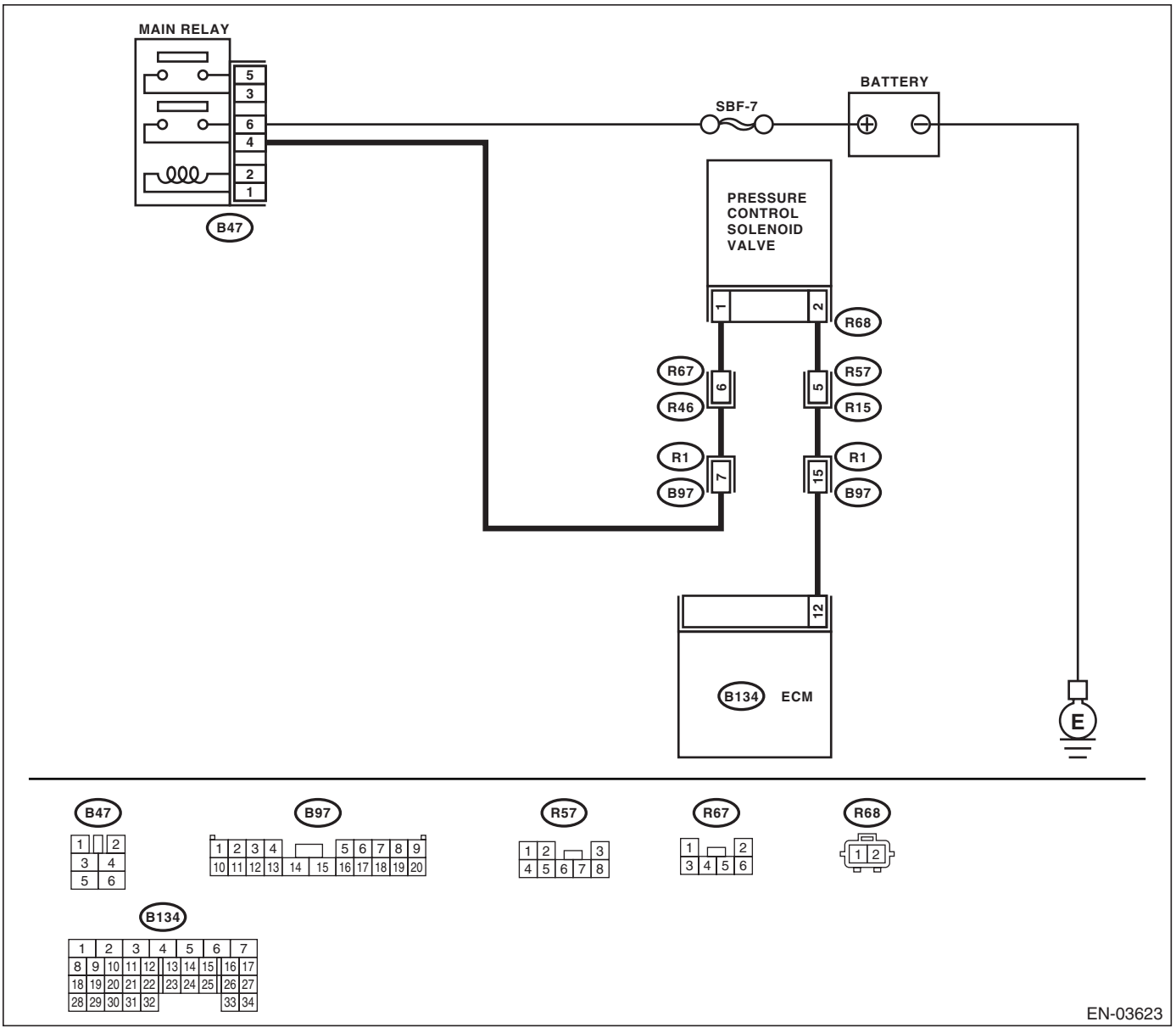

	Step	Check	Yes	No
1	**CHECK INPUT SIGNAL FOR ECM.** 1) Turn ignition switch to OFF. 2) Connect the test mode connector at the lower portion of instrument panel (on the driver's side). 3) Turn ignition switch to ON. 4) While operating the pressure control solenoid valve, measure voltage between ECM and chassis ground. NOTE: Pressure control solenoid valve operation can be executed using Subaru Select Monitor. For the procedure, refer to "Compulsory Valve Operation Check Mode". <Ref. to EN(H4SO U5)(diag)-47, Compulsory Valve Operation Check Mode.> ***Connector & terminal*** ***(B134) No. 12 (+) — Chassis ground (–):***	Is the voltage 0 — 10 V?	Go to step **2.**	The malfunction indicator light may light up, however, the circuit is returned to the normal status at the moment. In this case, repair poor contact in ECM connector.
2	**CHECK INPUT SIGNAL FOR ECM.** 1) Turn ignition switch to ON. 2) Measure the voltage between ECM and chassis ground. ***Connector & terminal*** ***(B134) No. 12 (+) — Chassis ground (–):***	Is the voltage more than 10 V?	Go to step **4.**	Go to step **3.**
3	**CHECK FOR POOR CONTACT.** Check for poor contact in ECM connector.	Is there poor contact in ECM connector?	Repair poor contact in ECM connector.	Replace the ECM. <Ref. to FU(H4SO U5)-44, Engine Control Module (ECM).>
4	**CHECK HARNESS BETWEEN PRESSURE CONTROL SOLENOID VALVE AND ECM CONNECTOR.** 1) Turn ignition switch to OFF. 2) Disconnect the connector from pressure control solenoid valve. 3) Turn ignition switch to ON. 4) Measure the voltage between ECM and chassis ground. ***Connector & terminal*** ***(B134) No. 12 (+) — Chassis ground (–):***	Is the voltage more than 10 V?	Repair short circuit to battery in harness between ECM and pressure control solenoid valve connector. After repair, replace the ECM. <Ref. to FU(H4SO U5)-44, Engine Control Module (ECM).>	Go to step **5.**
5	**CHECK PRESSURE CONTROL SOLENOID VALVE.** 1) Turn ignition switch to OFF. 2) Measure the resistance between pressure control solenoid valve terminals. ***Terminals*** ***No. 1 — No. 2:***	Is the resistance less than 1 Ω?	Replace the pressure control solenoid valve <Ref. to EC(H4SO)-13, Pressure Control Solenoid Valve.> and the ECM <Ref. to FU(H4SO U5)-44, Engine Control Module (ECM).>.	Go to step **6.**
6	**CHECK FOR POOR CONTACT.** Check for poor contact in ECM connector.	Is there poor contact in ECM connector?	Repair poor contact in ECM connector.	Replace the ECM. <Ref. to FU(H4SO U5)-44, Engine Control Module (ECM).>

DA:DTC P1443 VENT CONTROL SOLENOID VALVE FUNCTION PROBLEM

DTC DETECTING CONDITION:

- Detect as soon as malfunction occurs.
- GENERAL DESCRIPTION <Ref. to GD(H4SO U5)-196, DTC P1443 VENT CONTROL SOLENOID VALVE FUNCTION PROBLEM, Diagnostic Trouble Code (DTC) Detecting Criteria.>

TROUBLE SYMPTOM:

Improper fuel supply

CAUTION:

After repair or replacement of faulty parts, conduct CLEAR MEMORY MODE <Ref. to EN(H4SO U5)(diag)-46, OPERATION, Clear Memory Mode.> and INSPECTION MODE <Ref. to EN(H4SO U5)(diag)-37, OPERATION, Inspection Mode.>.

WIRING DIAGRAM:

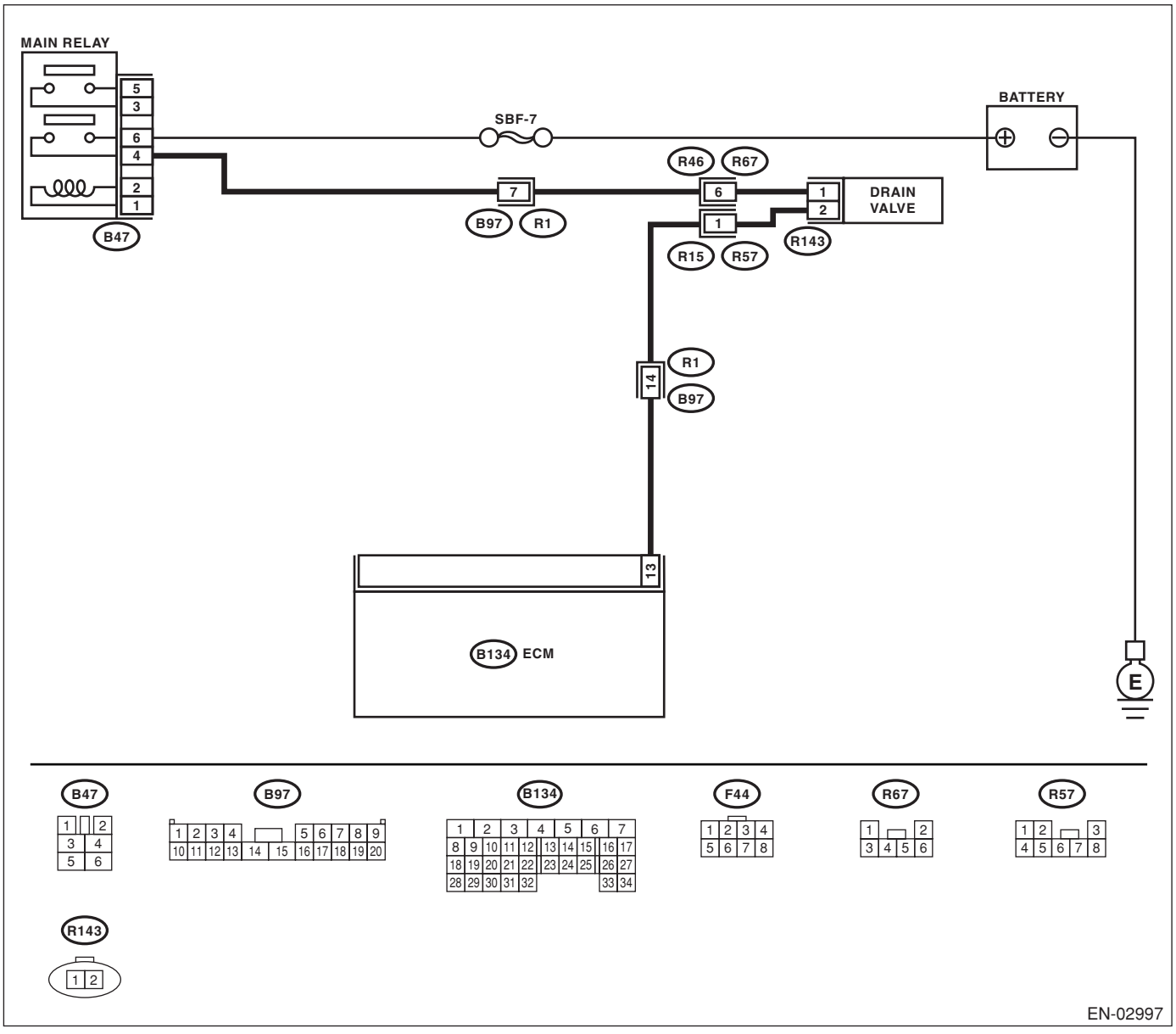

EN-02997

	Step	Check	Yes	No
1	**CHECK FOR ANY OTHER DTC ON DISPLAY.**	Is any other DTC displayed?	Inspect the relevant DTC using "List of Diagnostic Trouble Code (DTC)". <Ref. to EN(H4SO U5)(diag)-73, List of Diagnostic Trouble Code (DTC).>	Go to step **2.**
2	**CHECK DRAIN HOSE.** Check the drain hose for clogging.	Is there clogging in the drain hose?	Replace the drain hose.	Go to step **3.**
3	**CHECK DRAIN VALVE OPERATION.** 1) Turn ignition switch to OFF. 2) Connect the test mode connector at the lower portion of instrument panel (on the driver's side). 3) Turn ignition switch to ON. 4) Operate the drain valve. NOTE: Drain valve operation can also be executed using Subaru Select Monitor. For the procedure, refer to "Compulsory Valve Operation Check Mode". <Ref. to EN(H4SO U5)(diag)-47, Compulsory Valve Operation Check Mode.>	Does the drain valve operate?	Contact SOA Service Center.	Replace the drain valve. <Ref. to EC(H4SO)-16, Drain Valve.>

DB:DTC P1446 FUEL TANK SENSOR CONTROL VALVE CIRCUIT LOW

DTC DETECTING CONDITION:

- Two consecutive driving cycles with fault
- GENERAL DESCRIPTION <Ref. to GD(H4SO U5)-198, DTC P1446 FUEL TANK SENSOR CONTROL VALVE CIRCUIT LOW, Diagnostic Trouble Code (DTC) Detecting Criteria.>

CAUTION:
After repair or replacement of faulty parts, conduct CLEAR MEMORY MODE <Ref. to EN(H4SO U5)(diag)-46, OPERATION, Clear Memory Mode.> and INSPECTION MODE <Ref. to EN(H4SO U5)(diag)-37, OPERATION, Inspection Mode.>.

WIRING DIAGRAM:

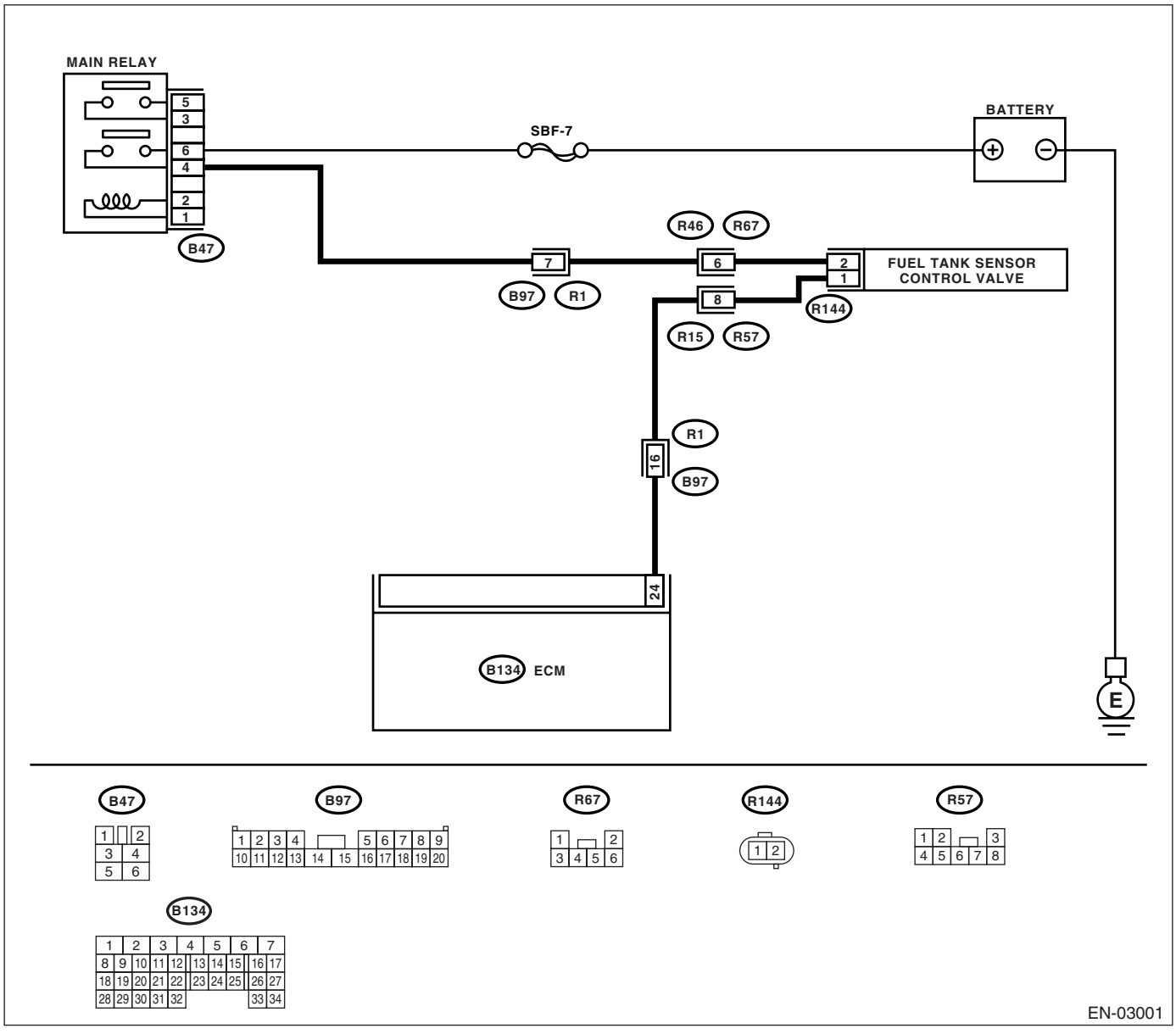

	Step	Check	Yes	No
1	**CHECK OUTPUT SIGNAL FROM ECM.** 1) Turn ignition switch to ON. 2) Measure the voltage between ECM and chassis ground. ***Connector & terminal*** ***(B134) No. 24 (+) — Chassis ground (−):***	Is the voltage more than 10 V?	Go to step **2.**	Go to step **3.**
2	**CHECK FOR POOR CONTACT.** Check for poor contact in ECM connector.	Is there poor contact in ECM connector?	Repair poor contact in ECM connector.	The malfunction indicator light may light up, however, the circuit is returned to the normal status at the moment. (However, the possibility of poor contact still remains.) NOTE: In this case, repair the following: • Poor contact in fuel tank sensor control valve connector • Poor contact in ECM connector • Poor contact in coupling connector
3	**CHECK HARNESS BETWEEN FUEL TANK SENSOR CONTROL VALVE AND ECM CONNECTOR.** 1) Turn ignition switch to OFF. 2) Disconnect the connectors from fuel tank sensor control valve and ECM. 3) Measure the resistance of harness between fuel tank sensor control valve connector and chassis ground. ***Connector & terminal*** ***(R144) No. 1 — Chassis ground:***	Is the resistance more than 1 MΩ?	Go to step **4.**	Repair short circuit to ground in harness between ECM and fuel tank sensor control valve connector.
4	**CHECK HARNESS BETWEEN FUEL TANK SENSOR CONTROL VALVE AND ECM CONNECTOR.** Measure the resistance of harness between ECM and fuel tank sensor control valve connector. ***Connector & terminal*** ***(B134) No. 24 — (R144) No. 1:***	Is the resistance less than 1 Ω?	Go to step **5.**	Repair harness and connector. NOTE: In this case, repair the following: • Open circuit in harness between ECM and fuel tank sensor control valve connector • Poor contact in coupling connector
5	**CHECK FUEL TANK SENSOR CONTROL VALVE.** Measure the resistance between fuel tank sensor control valve terminals. ***Terminals*** ***No. 1 — No. 2:***	Is the resistance 10 — 100 Ω?	Go to step **6.**	Replace the fuel tank sensor control valve. <Ref. to EC(H4SO)-16, Drain Valve.>

	Step	Check	Yes	No
6	**CHECK POWER SUPPLY TO FUEL TANK SENSOR CONTROL VALVE.** 1) Turn ignition switch to ON. 2) Measure the voltage between fuel tank sensor control valve and chassis ground. ***Connector & terminal*** ***(R144) No. 2 (+) — Chassis ground (−):***	Is the voltage more than 10 V?	Go to step **7.**	Repair harness and connector. NOTE: In this case, repair the following: • Open circuit in harness between main relay and fuel tank sensor control valve • Poor contact in coupling connector • Poor contact in main relay connector
7	**CHECK FOR POOR CONTACT.** Check for poor contact in fuel tank sensor control valve connector.	Is there poor contact in fuel tank sensor control valve connector?	Repair poor contact in fuel tank sensor control valve connector.	Contact SOA Service Center.

DC:DTC P1447 FUEL TANK SENSOR CONTROL VALVE CIRCUIT HIGH

DTC DETECTING CONDITION:

- Two consecutive driving cycles with fault
- GENERAL DESCRIPTION <Ref. to GD(H4SO U5)-200, DTC P1447 FUEL TANK SENSOR CONTROL VALVE CIRCUIT HIGH, Diagnostic Trouble Code (DTC) Detecting Criteria.>

CAUTION:
After repair or replacement of faulty parts, conduct CLEAR MEMORY MODE <Ref. to EN(H4SO U5)(diag)-46, OPERATION, Clear Memory Mode.> and INSPECTION MODE <Ref. to EN(H4SO U5)(diag)-37, OPERATION, Inspection Mode.>.

WIRING DIAGRAM:

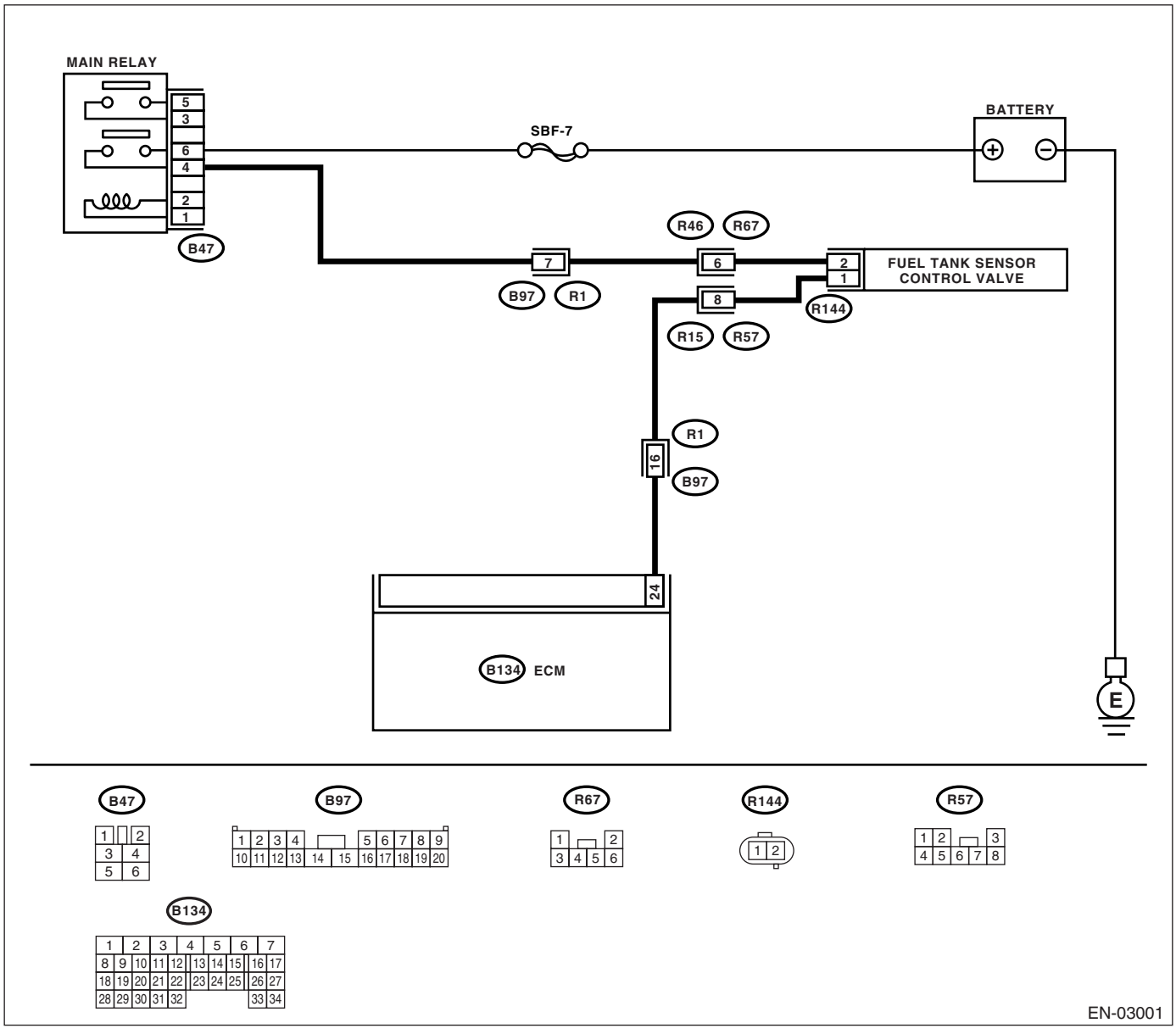

	Step	Check	Yes	No
1	**CHECK OUTPUT SIGNAL FROM ECM.** 1) Turn ignition switch to ON. 2) Measure the voltage between ECM and chassis ground. ***Connector & terminal*** ***(B134) No. 24 (+) — Chassis ground (−):***	Is the voltage more than 10 V?	Go to step **3.**	Go to step **2.**
2	**CHECK FOR POOR CONTACT.** Check for poor contact in ECM connector.	Is there poor contact in ECM connector?	Repair poor contact in ECM connector.	Replace the ECM. <Ref. to FU(H4SO U5)-44, Engine Control Module (ECM).>
3	**CHECK HARNESS BETWEEN FUEL TANK SENSOR CONTROL VALVE AND ECM CONNECTOR.** 1) Turn ignition switch to OFF. 2) Disconnect the connector from fuel tank sensor control valve. 3) Turn ignition switch to ON. 4) Measure the voltage between ECM and chassis ground. ***Connector & terminal*** ***(B134) No. 24 (+) — Chassis ground (−):***	Is the voltage more than 10 V?	Repair short circuit to battery in harness between ECM and fuel tank sensor control valve connector. After repair, replace the ECM. <Ref. to FU(H4SO U5)-44, Engine Control Module (ECM).>	Go to step **4.**
4	**CHECK FUEL TANK SENSOR CONTROL VALVE.** 1) Turn ignition switch to OFF. 2) Measure the resistance between fuel tank sensor control valve terminals. ***Terminals*** ***No. 1 — No. 2:***	Is the resistance less than 1 Ω?	Replace the fuel tank sensor control valve <Ref. to EC(H4SO)-16, Drain Valve.> and the ECM <Ref. to FU(H4SO U5)-44, Engine Control Module (ECM).>.	Go to step **5.**
5	**CHECK FOR POOR CONTACT.** Check for poor contact in ECM connector.	Is there poor contact in ECM connector?	Repair poor contact in ECM connector.	Replace the ECM. <Ref. to FU(H4SO U5)-44, Engine Control Module (ECM).>

DD:DTC P1492 EGR SOLENOID VALVE SIGNAL #1 CIRCUIT MALFUNCTION (LOW INPUT)

NOTE:
Refer to DTC P1498 for diagnostic procedure. <Ref. to EN(H4SO U5)(diag)-293, DTC P1498 EGR SOLENOID VALVE SIGNAL #4 CIRCUIT MALFUNCTION (LOW INPUT), Diagnostic Procedure with Diagnostic Trouble Code (DTC).>

DE:DTC P1493 EGR SOLENOID VALVE SIGNAL #1 CIRCUIT MALFUNCTION (HIGH INPUT)

NOTE:
Refer to DTC P1499 for diagnostic procedure. <Ref. to EN(H4SO U5)(diag)-295, DTC P1499 EGR SOLENOID VALVE SIGNAL #4 CIRCUIT MALFUNCTION (HIGH INPUT), Diagnostic Procedure with Diagnostic Trouble Code (DTC).>

DF:DTC P1494 EGR SOLENOID VALVE SIGNAL #2 CIRCUIT MALFUNCTION (LOW INPUT)

NOTE:
Refer to DTC P1498 for diagnostic procedure. <Ref. to EN(H4SO U5)(diag)-293, DTC P1498 EGR SOLENOID VALVE SIGNAL #4 CIRCUIT MALFUNCTION (LOW INPUT), Diagnostic Procedure with Diagnostic Trouble Code (DTC).>

DG:DTC P1495 EGR SOLENOID VALVE SIGNAL #2 CIRCUIT MALFUNCTION (HIGH INPUT)

NOTE:
Refer to DTC P1499 for diagnostic procedure. <Ref. to EN(H4SO U5)(diag)-295, DTC P1499 EGR SOLENOID VALVE SIGNAL #4 CIRCUIT MALFUNCTION (HIGH INPUT), Diagnostic Procedure with Diagnostic Trouble Code (DTC).>

DH:DTC P1496 EGR SOLENOID VALVE SIGNAL #3 CIRCUIT MALFUNCTION (LOW INPUT)

NOTE:
Refer to DTC P1498 for diagnostic procedure. <Ref. to EN(H4SO U5)(diag)-293, DTC P1498 EGR SOLENOID VALVE SIGNAL #4 CIRCUIT MALFUNCTION (LOW INPUT), Diagnostic Procedure with Diagnostic Trouble Code (DTC).>

DI: DTC P1497 EGR SOLENOID VALVE SIGNAL #3 CIRCUIT MALFUNCTION (HIGH INPUT)

NOTE:
Refer to DTC P1499 for diagnostic procedure. <Ref. to EN(H4SO U5)(diag)-295, DTC P1499 EGR SOLENOID VALVE SIGNAL #4 CIRCUIT MALFUNCTION (HIGH INPUT), Diagnostic Procedure with Diagnostic Trouble Code (DTC).>

DJ:DTC P1498 EGR SOLENOID VALVE SIGNAL #4 CIRCUIT MALFUNCTION (LOW INPUT)

DTC DETECTING CONDITION:

- Detect as soon as malfunction occurs.
- GENERAL DESCRIPTION <Ref. to GD(H4SO U5)-202, DTC P1492 EGR SOLENOID VALVE SIGNAL #1 CIRCUIT MALFUNCTION (LOW INPUT), Diagnostic Trouble Code (DTC) Detecting Criteria.>, <Ref. to GD(H4SO U5)-206, DTC P1494 EGR SOLENOID VALVE SIGNAL #2 CIRCUIT MALFUNCTION (LOW INPUT), Diagnostic Trouble Code (DTC) Detecting Criteria.>, <Ref. to GD(H4SO U5)-210, DTC P1496 EGR SOLENOID VALVE SIGNAL #3 CIRCUIT MALFUNCTION (LOW INPUT), Diagnostic Trouble Code (DTC) Detecting Criteria.> and <Ref. to GD(H4SO U5)-214, DTC P1498 EGR SOLENOID VALVE SIGNAL #4 CIRCUIT MALFUNCTION (LOW INPUT), Diagnostic Trouble Code (DTC) Detecting Criteria.>

TROUBLE SYMPTOM:

- Erroneous idling
- Poor driving performance
- Engine breathing

CAUTION:

After repair or replacement of faulty parts, conduct CLEAR MEMORY MODE <Ref. to EN(H4SO U5)(diag)-46, OPERATION, Clear Memory Mode.> and INSPECTION MODE <Ref. to EN(H4SO U5)(diag)-37, OPERATION, Inspection Mode.>.

WIRING DIAGRAM:

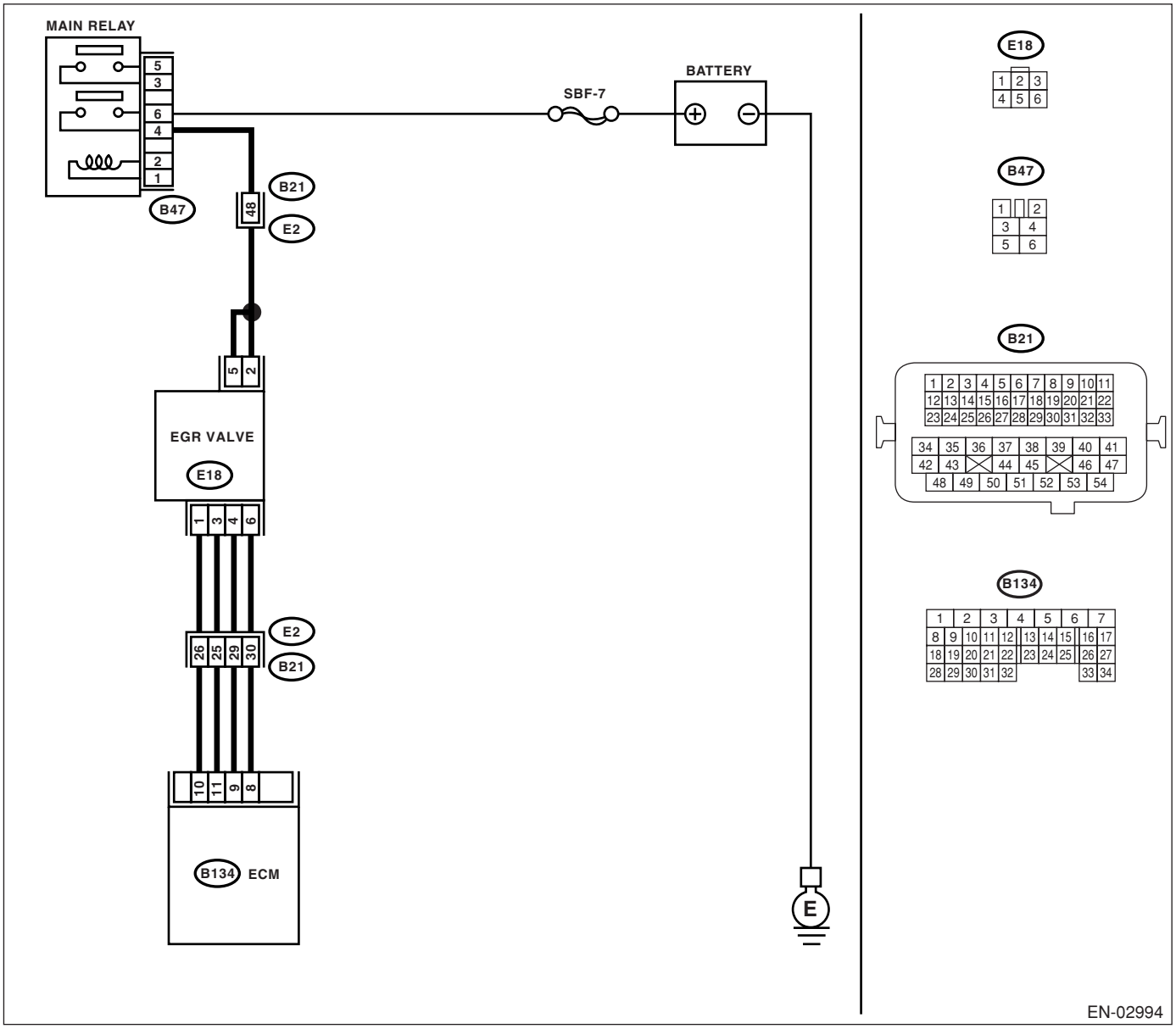

Step		Check	Yes	No
1	**CHECK POWER SUPPLY TO EGR SOLENOID VALVE.** 1) Turn ignition switch to OFF. 2) Disconnect connector from EGR solenoid valve. 3) Turn ignition switch to ON. 4) Measure the power supply voltage between EGR solenoid valve and engine ground. ***Connector & terminal*** ***(E18) No. 2 (+) — Engine ground (−):*** ***(E18) No. 5 (+) — Engine ground (−):***	Is the measured value more than 10 V?	Go to step **2.**	Repair harness and connector. NOTE: In this case, repair the following: • Open circuit in harness between EGR solenoid valve connector and main relay connector • Poor contact in coupling connector

	Step	Check	Yes	No
2	**CHECK HARNESS BETWEEN ECM AND EGR SOLENOID VALVE.** 1) Turn ignition switch to OFF. 2) Measure resistance between ECM and EGR solenoid valve connector. ***Connector & terminal*** ***DTC P1492; (B134) No. 11 — (E18) No. 3:*** ***DTC P1494; (B134) No. 10 — (E18) No. 1:*** ***DTC P1496; (B134) No. 9 — (E18) No. 4:*** ***DTC P1498; (B134) No. 8 — (E18) No. 6:***	Is the measured value less than 1 Ω?	Go to step **3.**	Repair harness and connector. NOTE: In this case, repair the following: • Open circuit in harness between EGR solenoid valve connector and main relay connector • Poor contact in coupling connector
3	**CHECK HARNESS BETWEEN ECM AND EGR SOLENOID VALVE.** 1) Disconnect connector from ECM. 2) Measure resistance between ECM connector and chassis ground. ***Connector & terminal*** ***DTC P1492; (B134) No. 11 — Chassis ground:*** ***DTC P1494; (B134) No. 10 — Chassis ground:*** ***DTC P1496; (B134) No. 9 — Chassis ground:*** ***DTC P1498; (B134) No. 8 — Chassis ground:***	Is the measured value more than 1 MΩ?	Go to step **4.**	Repair open or ground short circuit in harness between ECM and EGR solenoid valve connector.
4	**CHECK POOR CONTACT.** Check poor contact in ECM and EGR solenoid valve connector.	Is there poor contact in ECM or EGR solenoid valve connector?	Repair poor contact in ECM or EGR solenoid valve connector.	Replace EGR solenoid valve. <Ref. to FU(H4SO U5)-33, EGR Valve.>

DK:DTC P1499 EGR SOLENOID VALVE SIGNAL #4 CIRCUIT MALFUNCTION (HIGH INPUT)

DTC DETECTING CONDITION:

- Detect as soon as malfunction occurs.
- GENERAL DESCRIPTION <Ref. to GD(H4SO U5)-204, DTC P1493 EGR SOLENOID VALVE SIGNAL #1 CIRCUIT MALFUNCTION (HIGH INPUT), Diagnostic Trouble Code (DTC) Detecting Criteria.>, <Ref. to GD(H4SO U5)-208, DTC P1495 EGR SOLENOID VALVE SIGNAL #2 CIRCUIT MALFUNCTION (HIGH INPUT), Diagnostic Trouble Code (DTC) Detecting Criteria.>, <Ref. to GD(H4SO U5)-212, DTC P1497 EGR SOLENOID VALVE SIGNAL #3 CIRCUIT MALFUNCTION (HIGH INPUT), Diagnostic Trouble Code (DTC) Detecting Criteria.> and <Ref. to GD(H4SO U5)-216, DTC P1499 EGR SOLENOID VALVE SIGNAL #4 CIRCUIT MALFUNCTION (HIGH INPUT), Diagnostic Trouble Code (DTC) Detecting Criteria.>

TROUBLE SYMPTOM:

- Erroneous idling
- Poor driving performance
- Engine breathing

CAUTION:

After repair or replacement of faulty parts, conduct CLEAR MEMORY MODE <Ref. to EN(H4SO U5)(diag)-46, OPERATION, Clear Memory Mode.> and INSPECTION MODE <Ref. to EN(H4SO U5)(diag)-37, OPERATION, Inspection Mode.>.

WIRING DIAGRAM:

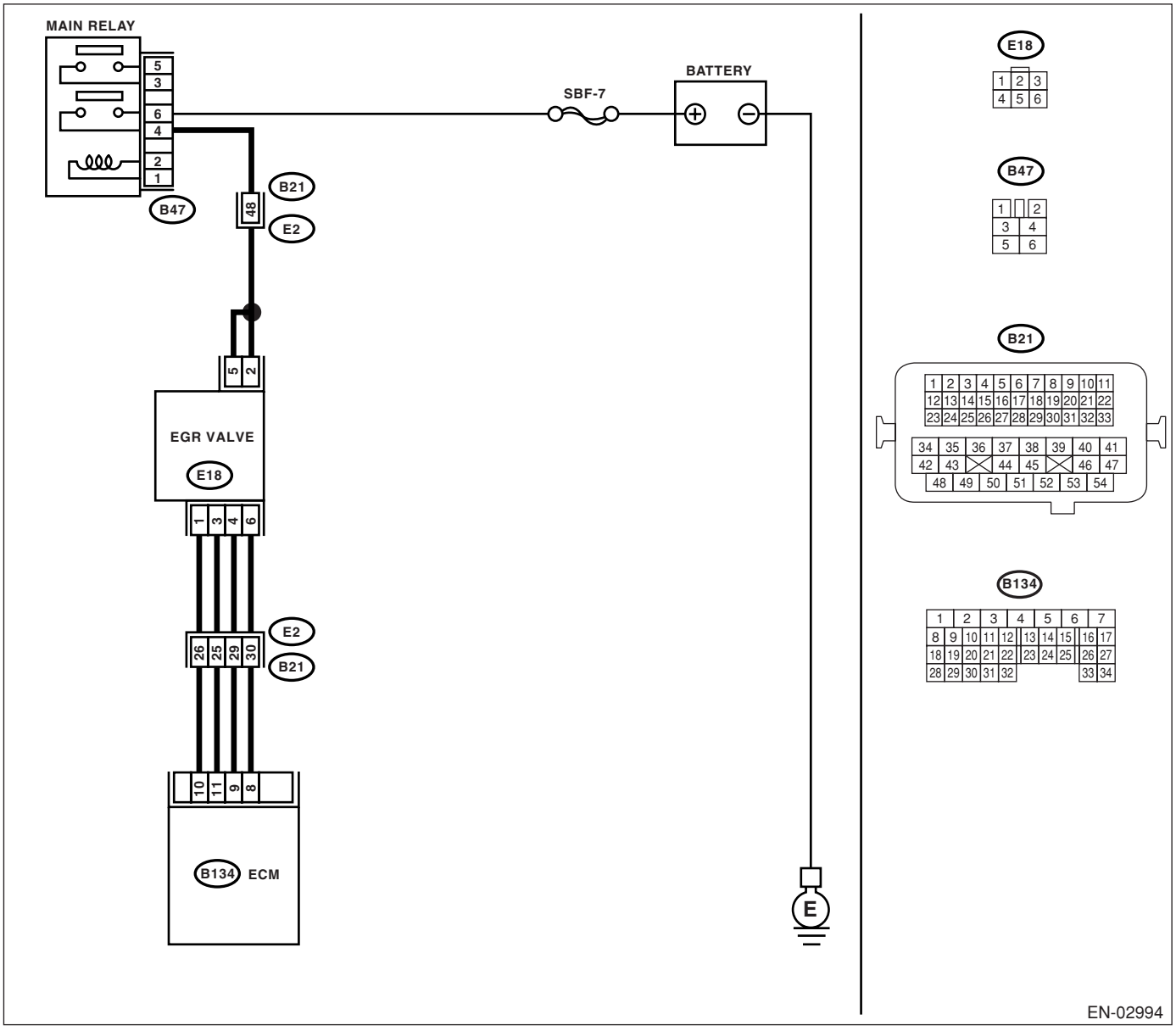

	Step	Check	Yes	No
1	**CHECK FOR ANY OTHER DTC ON DISPLAY.**	Is any other DTC displayed?	Inspect DTC using "List of Diagnostic Trouble Code (DTC)". <Ref. to EN(H4SO U5)(diag)-73, List of Diagnostic Trouble Code (DTC).>	Go to step **2.**
2	**CHECK HARNESS BETWEEN ECM AND EGR SOLENOID VALVE.** 1) Turn ignition switch to OFF. 2) Disconnect connector from EGR solenoid valve. 3) Turn ignition switch to OFF. 4) Measure voltage between EGR solenoid valve and engine ground. ***Connector & terminal*** ***DTC P1493; (B134) No. 11 (+) — Chassis ground (−):*** ***DTC P1495; (B134) No. 10 (+) — Chassis ground (−):*** ***DTC P1497; (B134) No. 9 (+) — Chassis ground (−):*** ***DTC P1499; (B134) No. 8 (+) — Chassis ground (−):***	Is the measured value more than 10 V?	Repair ground short circuit between ECM and EGR solenoid valve connector. After repair, replace ECM. <Ref. to FU(H4SO U5)-44, Engine Control Module (ECM).>	Replace ECM. <Ref. to FU(H4SO U5)-44, Engine Control Module (ECM).>

DL:DTC P1518 STARTER SWITCH CIRCUIT LOW INPUT

DTC DETECTING CONDITION:

- Two consecutive driving cycles with fault
- GENERAL DESCRIPTION <Ref. to GD(H4SO U5)-218, DTC P1518 STARTER SWITCH CIRCUIT LOW INPUT, Diagnostic Trouble Code (DTC) Detecting Criteria.>

TROUBLE SYMPTOM:

Failure of engine to start

CAUTION:

After repair or replacement of faulty parts, conduct Clear Memory Mode <Ref. to EN(H4SO U5)(diag)-46, OPERATION, Clear Memory Mode.> and Inspection Mode <Ref. to EN(H4SO U5)(diag)-37, OPERATION, Inspection Mode.>.

WIRING DIAGRAM:

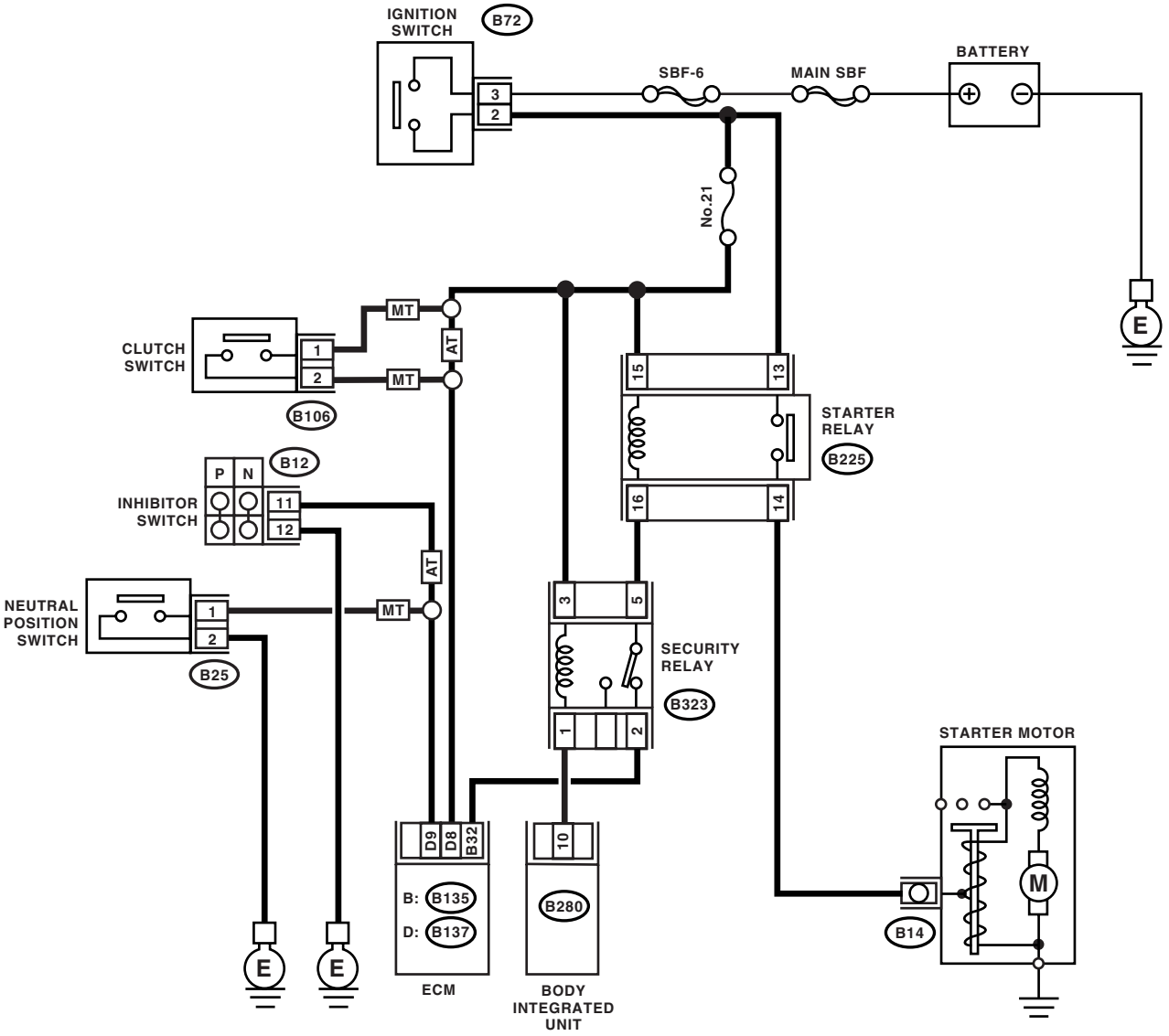

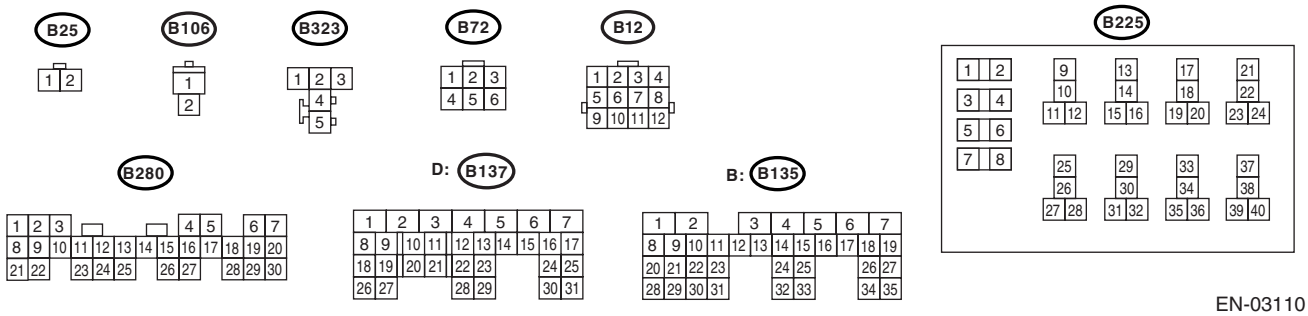

EN-03110

Step		Check	Yes	No
1	**CHECK OPERATION OF STARTER MOTOR.** • Place the inhibitor switch in the “P” or “N” range. (AT model) • Depress the clutch pedal. (MT model) • Check that security alarm does not beep.	Does the starter motor operate when ignition switch is turned to “ST”?	Repair harness and connector. NOTE: In this case, repair the following: • Open or ground short circuit in harness between ECM and starter motor connector • Poor contact in ECM connector	Check starter motor circuit. <Ref. to EN(H4SO U5)(diag)-59, STARTER MOTOR CIRCUIT, Diagnostics for Engine Starting Failure.>

DM:DTC P1560 BACK-UP VOLTAGE CIRCUIT MALFUNCTION

DTC DETECTING CONDITION:

- Detect as soon as malfunction occurs.
- GENERAL DESCRIPTION <Ref. to GD(H4SO U5)-219, DTC P1560 BACK-UP VOLTAGE CIRCUIT MALFUNCTION, Diagnostic Trouble Code (DTC) Detecting Criteria.>

CAUTION:
After repair or replacement of faulty parts, conduct Clear Memory Mode <Ref. to EN(H4SO U5)(diag)-46, OPERATION, Clear Memory Mode.> and Inspection Mode <Ref. to EN(H4SO U5)(diag)-37, OPERATION, Inspection Mode.>.

WIRING DIAGRAM:

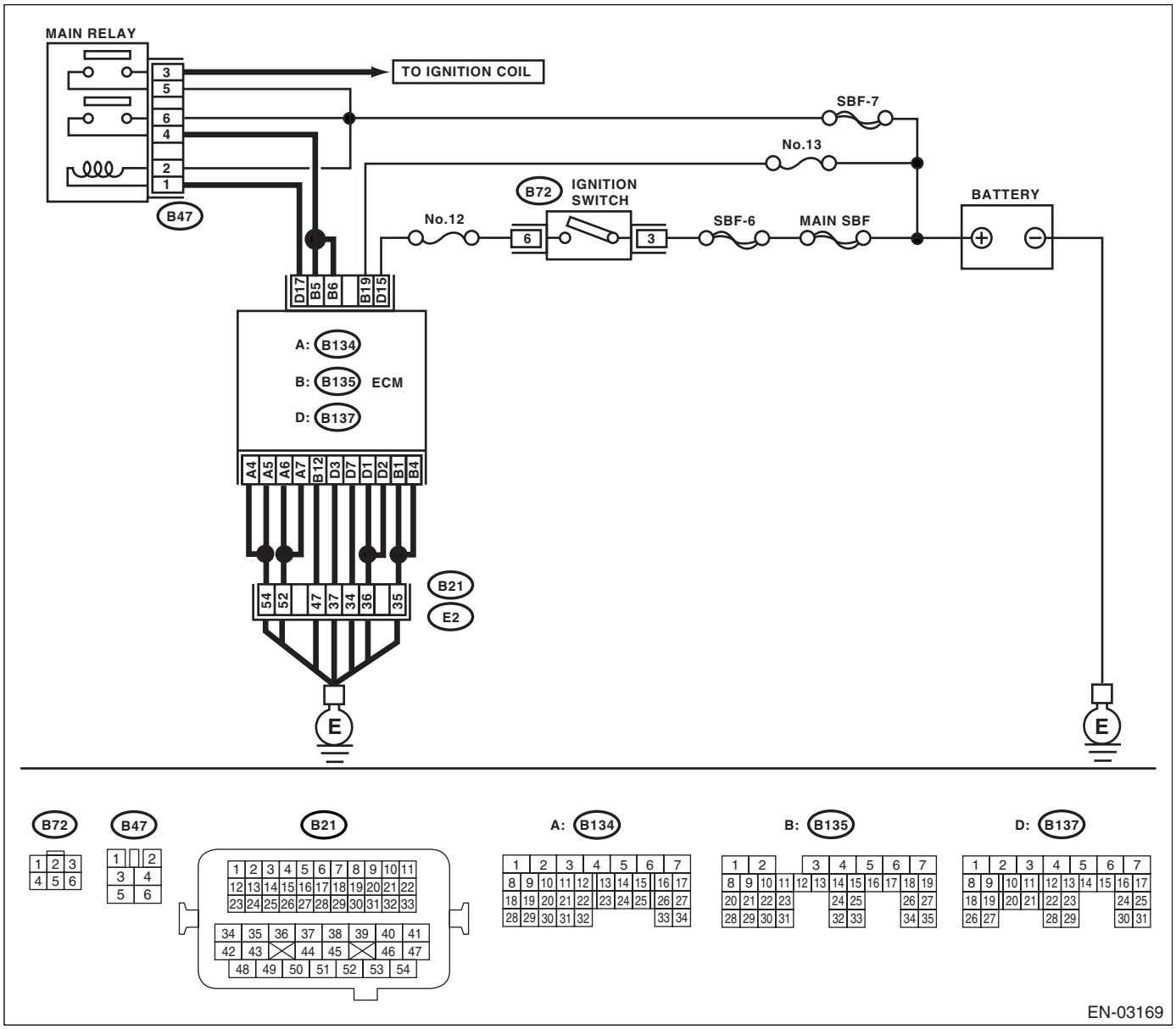

	Step	Check	Yes	No
1	**CHECK INPUT SIGNAL FOR ECM.** 1) Turn the ignition switch to OFF. 2) Measure the voltage between ECM and chassis ground. ***Connector & terminal*** ***(B135) No. 19 (+) — Chassis ground (−):***	Is the voltage more than 10 V?	Repair poor contact in ECM connector.	Go to step **2.**
2	**CHECK HARNESS BETWEEN ECM AND MAIN FUSE BOX CONNECTOR.** 1) Disconnect the connector from ECM. 2) Measure the resistance of harness between ECM and chassis ground. ***Connector & terminal*** ***(B135) No. 19 — Chassis ground:***	Is the resistance less than 10 Ω?	Repair ground short circuit in harness between ECM connector and battery terminal.	Go to step **3.**
3	**CHECK FUSE No. 13.**	Is the fuse blown out?	Replace the fuse.	Repair harness and connector. NOTE: In this case, repair the following: • Open circuit in harness between ECM and battery • Poor contact in ECM connector • Poor contact in battery terminal

DN:DTC P2004 INTAKE MANIFOLD RUNNER CONTROL STUCK OPEN (BANK 1)

DTC DETECTING CONDITION:

- Detect as soon as malfunction occurs.
- GENERAL DESCRIPTION <Ref. to GD(H4SO U5)-220, DTC P2004 INTAKE MANIFOLD RUNNER CONTROL STUCK OPEN (BANK 1), Diagnostic Trouble Code (DTC) Detecting Criteria.>

CAUTION:
After repair or replacement of faulty parts, conduct Clear Memory Mode <Ref. to EN(H4SO U5)(diag)-46, OPERATION, Clear Memory Mode.> and Inspection Mode <Ref. to EN(H4SO U5)(diag)-37, OPERATION, Inspection Mode.>.

	Step	Check	Yes	No
1	**CHECK FOR ANY OTHER DTC ON DISPLAY.**	Is any other DTC displayed?	Inspect the relevant DTC using "List of Diagnostic Trouble Code (DTC)". <Ref. to EN(H4SO U5)(diag)-73, List of Diagnostic Trouble Code (DTC).>	Go to step **2.**
2	**CHECK TUMBLE GENERATOR VALVE ASSEMBLY.** 1) Remove the tumble generator valve assembly. 2) Check the tumble generator valve body.	Does the tumble generator valve move smoothly? (No dirt or foreign materials clogged)	Replace the tumble generator valve assembly. <Ref. to FU(H4SO U5)-30, Tumble Generator Valve Assembly.>	Clean the tumble generator valve.

DO:DTC P2006 INTAKE MANIFOLD RUNNER CONTROL STUCK CLOSED (BANK 1)

DTC DETECTING CONDITION:

- Detect as soon as malfunction occurs.
- GENERAL DESCRIPTION <Ref. to GD(H4SO U5)-221, DTC P2006 INTAKE MANIFOLD RUNNER CONTROL STUCK CLOSED (BANK 1), Diagnostic Trouble Code (DTC) Detecting Criteria.>

CAUTION:
After repair or replacement of faulty parts, conduct Clear Memory Mode <Ref. to EN(H4SO U5)(diag)-46, OPERATION, Clear Memory Mode.> and Inspection Mode <Ref. to EN(H4SO U5)(diag)-37, OPERATION, Inspection Mode.>.

	Step	Check	Yes	No
1	**CHECK FOR ANY OTHER DTC ON DISPLAY.**	Is any other DTC displayed?	Inspect the relevant DTC using "List of Diagnostic Trouble Code (DTC)" <Ref. to EN(H4SO U5)(diag)-73, List of Diagnostic Trouble Code (DTC).>	Go to step **2.**
2	**CHECK TUMBLE GENERATOR VALVE ASSEMBLY.** 1) Remove the tumble generator valve assembly. 2) Check the tumble generator valve body.	Does the tumble generator valve move smoothly? (No dirt or foreign materials clogged)	Replace the tumble generator valve assembly. <Ref. to FU(H4SO U5)-30, Tumble Generator Valve Assembly.>	Clean the tumble generator valve.

DP:DTC P2008 INTAKE MANIFOLD RUNNER CONTROL CIRCUIT / OPEN (BANK 1)

DTC DETECTING CONDITION:

- Detect as soon as malfunction occurs.
- GENERAL DESCRIPTION <Ref. to GD(H4SO U5)-223, DTC P2008 INTAKE MANIFOLD RUNNER CONTROL CIRCUIT / OPEN (BANK 1), Diagnostic Trouble Code (DTC) Detecting Criteria.>

CAUTION:

After repair or replacement of faulty parts, conduct Clear Memory Mode <Ref. to EN(H4SO U5)(diag)-46, OPERATION, Clear Memory Mode.> and Inspection Mode <Ref. to EN(H4SO U5)(diag)-37, OPERATION, Inspection Mode.>.

WIRING DIAGRAM:

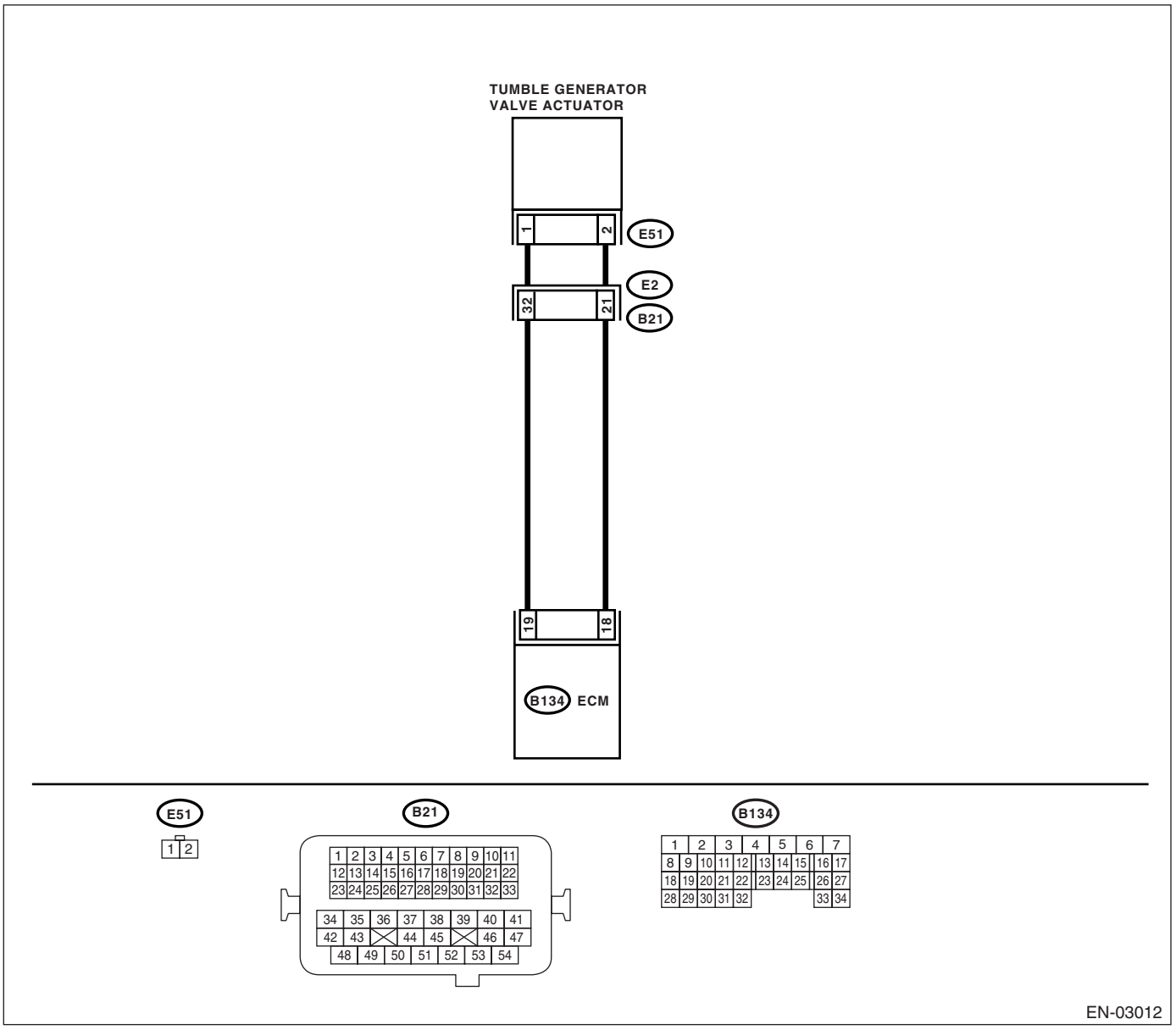

	Step	Check	Yes	No
1	**CHECK HARNESS BETWEEN ECM AND TUMBLE GENERATOR VALVE ACTUATOR CONNECTOR.** 1) Turn the ignition switch to OFF. 2) Disconnect the connector from tumble generator valve and ECM connector. 3) Measure the resistance between tumble generator valve actuator and ECM connector. ***Connector & terminal*** ***(E51) No. 1 — (B134) No. 19:*** ***(E51) No. 2 — (B134) No. 18:***	Is the measured value less than 1 Ω?	Go to step **2.**	Repair the open circuit between ECM and tumble generator valve connector. NOTE: In this case, repair the following: • Open circuit in harness between ECM and tumble generator valve actuator connector. • Poor contact in coupling connector.
2	**CHECK POOR CONTACT.** Check poor contact in tumble generator valve actuator connector.	Is there poor contact in tumble generator valve actuator connector?	Repair the poor contact in tumble generator valve actuator connector.	Replace the tumble generator valve actuator. <Ref. to FU(H4SO U5)-31, Tumble Generator Valve Actuator.>

DQ:DTC P2009 INTAKE MANIFOLD RUNNER CONTROL CIRCUIT LOW (BANK 1)

DTC DETECTING CONDITION:

- Detect as soon as malfunction occurs.
- GENERAL DESCRIPTION <Ref. to GD(H4SO U5)-225, DTC P2009 INTAKE MANIFOLD RUNNER CONTROL CIRCUIT LOW (BANK 1), Diagnostic Trouble Code (DTC) Detecting Criteria.>

CAUTION:

After repair or replacement of faulty parts, conduct Clear Memory Mode <Ref. to EN(H4SO U5)(diag)-46, OPERATION, Clear Memory Mode.> and Inspection Mode <Ref. to EN(H4SO U5)(diag)-37, OPERATION, Inspection Mode.>.

WIRING DIAGRAM:

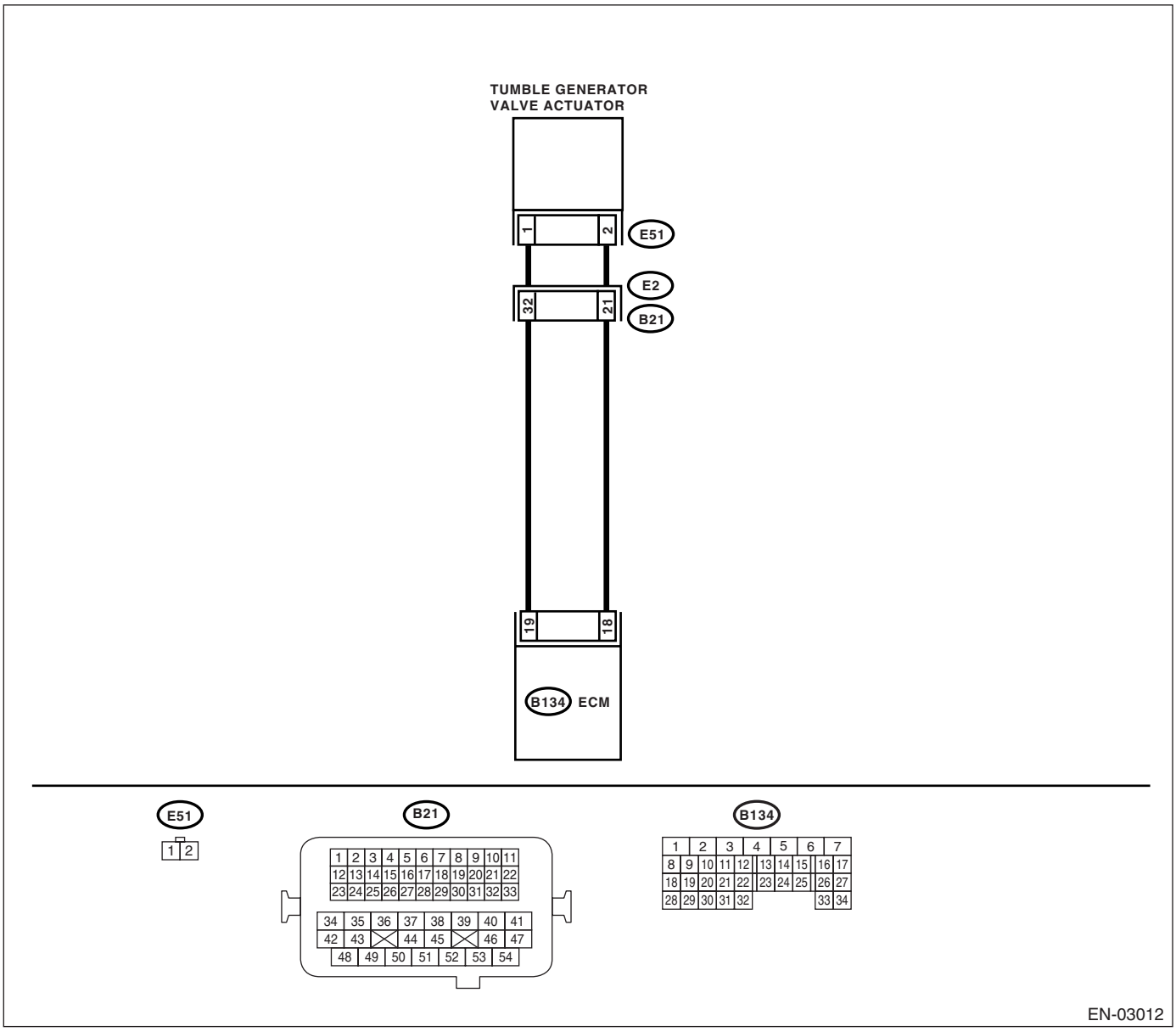

	Step	Check	Yes	No
1	**CHECK HARNESS BETWEEN ECM AND TUMBLE GENERATOR VALVE ACTUATOR CONNECTOR.** 1) Turn the ignition switch to OFF. 2) Disconnect the connector from tumble generator valve connector. 3) Measure the voltage between tumble generator valve actuator and chassis ground. ***Connector & terminal*** ***(E51) No. 1 (+) — Chassis ground (−):*** ***(E51) No. 2 (+) — Chassis ground (−):***	Is the measured value less than 5 V?	Replace the tumble generator valve actuator. <Ref. to FU(H4SO U5)-31, Tumble Generator Valve Actuator.>	Repair the battery short circuit between ECM and tumble generator valve actuator.

DR:DTC P2016 INTAKE MANIFOLD RUNNER POSITION SENSOR / SWITCH CIRCUIT LOW (BANK 1)

DTC DETECTING CONDITION:

- Detect as soon as malfunction occurs.
- GENERAL DESCRIPTION <Ref. to GD(H4SO U5)-227, DTC P2016 INTAKE MANIFOLD RUNNER POSITION SENSOR / SWITCH CIRCUIT LOW (BANK 1), Diagnostic Trouble Code (DTC) Detecting Criteria.>

TROUBLE SYMPTOM:

- Erroneous idling
- Engine stalls.
- Poor driving performance

CAUTION:

After repair or replacement of faulty parts, conduct Clear Memory Mode <Ref. to EN(H4SO U5)(diag)-46, OPERATION, Clear Memory Mode.> and Inspection Mode <Ref. to EN(H4SO U5)(diag)-37, OPERATION, Inspection Mode.>.

WIRING DIAGRAM:

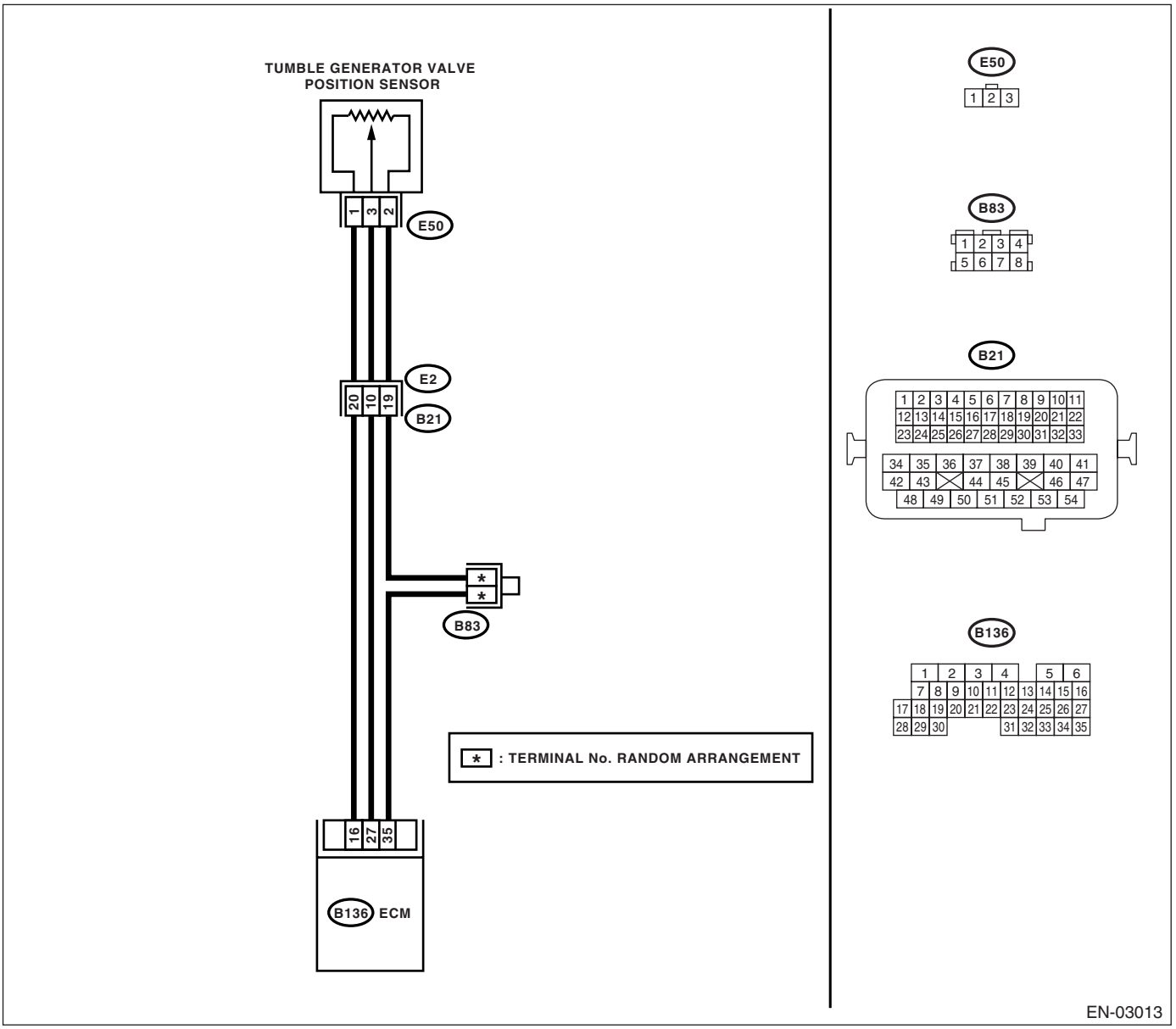

	Step	Check	Yes	No
1	**CHECK CURRENT DATA.** 1) Start the engine. 2) Read the data of tumble generator valve position sensor signal using Subaru Select Monitor or general scan tool. NOTE: • Subaru Select Monitor For detailed operation procedure, refer to the "READ CURRENT DATA FOR ENGINE". <Ref. to EN(H4SO U5)(diag)-28, Subaru Select Monitor.> • General scan tool For detailed operation procedure, refer to the general scan tool instruction manual.	Is the measured value less than 0.1 V?	Go to step **2.**	Even if malfunction indicator light lights up, the circuit has returned to a normal condition at this time. A temporary poor contact of the connector may be the cause. NOTE: In this case, repair the following: • Poor contact in tumble generator valve position sensor connector • Poor contact in ECM connector • Poor contact in coupling connector
2	**CHECK INPUT SIGNAL FOR ECM.** Measure the voltage between ECM connector and chassis ground. ***Connector & terminal*** ***(B136) No. 16 (+) — Chassis ground (−):***	Is the measured value more than 4.5 V?	Go to step **4.**	Go to step **3.**
3	**CHECK INPUT SIGNAL FOR ECM.** Measure the voltage between ECM connector and chassis ground. ***Connector & terminal*** ***(B136) No. 16 (+) — Chassis ground (−):***	Shake the ECM harness and connector, while monitoring value of voltage meter. Does the voltage change?	Repair the poor contact in ECM connector.	Contact your SOA Service Center.
4	**CHECK INPUT SIGNAL FOR ECM.** Measure the voltage between ECM connector and chassis ground. ***Connector & terminal*** ***(B136) No. 27 (+) — Chassis ground (−):***	Is the measured value less than 0.1 V?	Go to step **6.**	Go to step **5.**
5	**CHECK INPUT SIGNAL FOR ECM. (USING SUBARU SELECT MONITOR)** Measure the voltage between ECM connector and chassis ground.	Shake the ECM harness and connector, while monitoring value of Subaru Select Monitor. Does the voltage change?	Repair the poor contact in ECM connector.	Go to step **6.**

	Step	Check	Yes	No
6	**CHECK HARNESS BETWEEN ECM AND TUMBLE GENERATOR VALVE POSITION SENSOR CONNECTOR.** 1) Turn the ignition switch to OFF. 2) Disconnect the connectors from tumble generator valve position sensor. 3) Turn the ignition switch to ON. 4) Measure the voltage between tumble generator valve position sensor connector and engine ground. ***Connector & terminal*** ***(E50) No. 1 (+) — Engine ground (−):***	Is the measured value more than 4.5 V?	Go to step **7.**	Repair the harness and connector. NOTE: In this case, repair the following: • Open circuit in harness between tumble generator valve position sensor and ECM connector • Poor contact in tumble generator valve position sensor connector • Poor contact in ECM connector • Poor contact in coupling connector • Poor contact in joint connector
7	**CHECK HARNESS BETWEEN ECM AND TUMBLE GENERATOR VALVE POSITION SENSOR CONNECTOR.** 1) Turn the ignition switch to OFF. 2) Measure the resistance of harness between ECM connector and tumble generator valve position sensor connector. ***Connector & terminal*** ***(B136) No. 27 — (E50) No. 3:***	Is the measured value less than 1 Ω?	Go to step **8.**	Repair the harness and connector. NOTE: In this case, repair the following: • Open circuit in harness between tumble generator valve position sensor and ECM connector • Poor contact in ECM connector • Poor contact in tumble generator valve position sensor connector • Poor contact in coupling connector
8	**CHECK HARNESS BETWEEN ECM AND TUMBLE GENERATOR VALVE POSITION SENSOR CONNECTOR.** Measure the resistance of harness between tumble generator valve position sensor connector and engine ground. ***Connector & terminal*** ***(E50) No. 3 — Engine ground:***	Is the measured value more than 1 MΩ?	Go to step **9.**	Repair the ground short circuit in harness between tumble generator valve position sensor and ECM connector.
9	**CHECK POOR CONTACT.** Check poor contact in tumble generator valve position sensor connector.	Is there poor contact in tumble generator valve position sensor connector?	Repair the poor contact in tumble generator valve position sensor connector.	Replace the tumble generator valve position sensor. <Ref. to FU(H4SO U5)-32, Tumble Generator Valve Position Sensor.>

DS:DTC P2017 INTAKE MANIFOLD RUNNER POSITION SENSOR / SWITCH CIRCUIT HIGH (BANK 1)

DTC DETECTING CONDITION:

- Detect as soon as malfunction occurs.
- GENERAL DESCRIPTION <Ref. to GD(H4SO U5)-229, DTC P2017 INTAKE MANIFOLD RUNNER POSITION SENSOR / SWITCH CIRCUIT HIGH (BANK 1), Diagnostic Trouble Code (DTC) Detecting Criteria.>

TROUBLE SYMPTOM:

- Erroneous idling
- Engine stalls.
- Poor driving performance

CAUTION:

After repair or replacement of faulty parts, conduct Clear Memory Mode <Ref. to EN(H4SO U5)(diag)-46, OPERATION, Clear Memory Mode.> and Inspection Mode <Ref. to EN(H4SO U5)(diag)-37, OPERATION, Inspection Mode.>.

WIRING DIAGRAM:

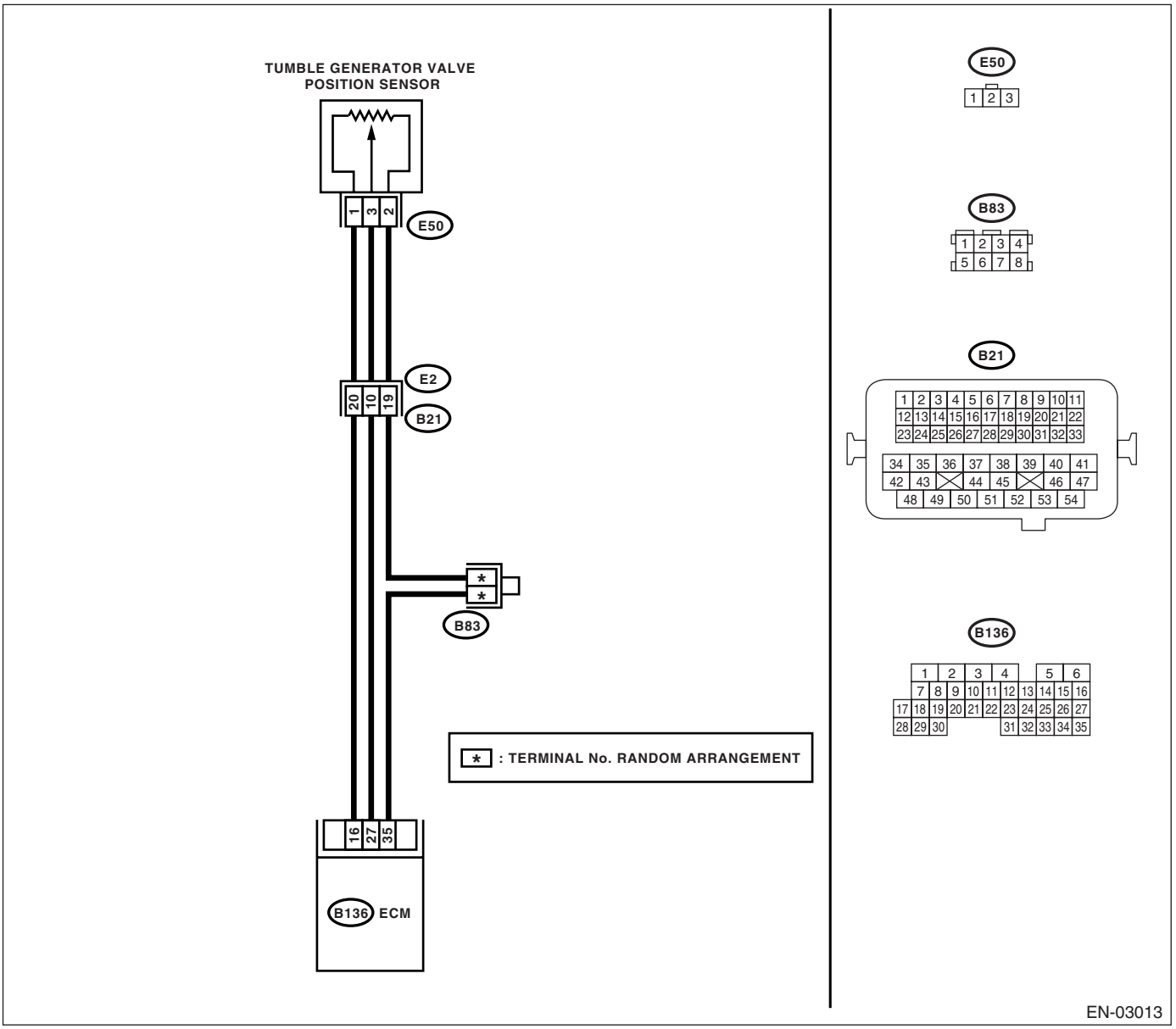

	Step	Check	Yes	No
1	**CHECK CURRENT DATA.** 1) Start the engine. 2) Read the data of tumble generator valve position sensor signal using Subaru Select Monitor or general scan tool. NOTE: • Subaru Select Monitor For detailed operation procedure, refer to the "READ CURRENT DATA FOR ENGINE". <Ref. to EN(H4SO U5)(diag)-28, Subaru Select Monitor.> • General scan tool For detailed operation procedure, refer to the general scan tool instruction manual.	Is the measured value more than 4.9 V?	Go to step **2.**	Even if malfunction indicator light lights up, the circuit has returned to a normal condition at this time. A temporary poor contact of the connector may be the cause. NOTE: In this case, repair the following: • Poor contact in tumble generator valve position sensor connector • Poor contact in ECM connector • Poor contact in coupling connector
2	**CHECK HARNESS BETWEEN TUMBLE GENERATOR VALVE POSITION SENSOR AND ECM CONNECTOR.** 1) Turn the ignition switch to OFF. 2) Disconnect the connector from tumble generator valve position sensor. 3) Measure the resistance of harness between tumble generator valve position sensor connector and engine ground. ***Connector & terminal*** ***(E50) No. 2 — Engine ground:***	Is the measured value less than 5 Ω?	Go to step **3.**	Repair the harness and connector. NOTE: In this case, repair the following: • Open circuit in harness between tumble generator valve position sensor and ECM connector • Poor contact in coupling connector • Poor contact in joint connector
3	**CHECK HARNESS BETWEEN TUMBLE GENERATOR VALVE POSITION SENSOR AND ECM CONNECTOR.** 1) Turn the ignition switch to ON. 2) Measure the voltage between tumble generator valve position sensor connector and engine ground. ***Connector & terminal*** ***(E50) No. 3 (+) — Engine ground (−):***	Is the measured value more than 4.9 V?	Repair the battery short circuit in harness between tumble generator valve position sensor and ECM connector. After repair, replace the ECM. <Ref. to FU(H4SO U5)-44, Engine Control Module (ECM).>	Replace the tumble generator valve position sensor. <Ref. to FU(H4SO U5)-32, Tumble Generator Valve Position Sensor.>

DT:DTC P2096 POST CATALYST FUEL TRIM SYSTEM TOO LEAN BANK 1

DTC DETECTING CONDITION:

- Two consecutive driving cycles with fault
- GENERAL DESCRIPTION <Ref. to GD(H4SO U5)-231, DTC P2096 POST CATALYST FUEL TRIM SYSTEM TOO LEAN BANK 1, Diagnostic Trouble Code (DTC) Detecting Criteria.>

CAUTION:
After repair or replacement of faulty parts, conduct Clear Memory Mode <Ref. to EN(H4SO U5)(diag)-46, OPERATION, Clear Memory Mode.> and Inspection Mode <Ref. to EN(H4SO U5)(diag)-37, OPERATION, Inspection Mode.>.

WIRING DIAGRAM:

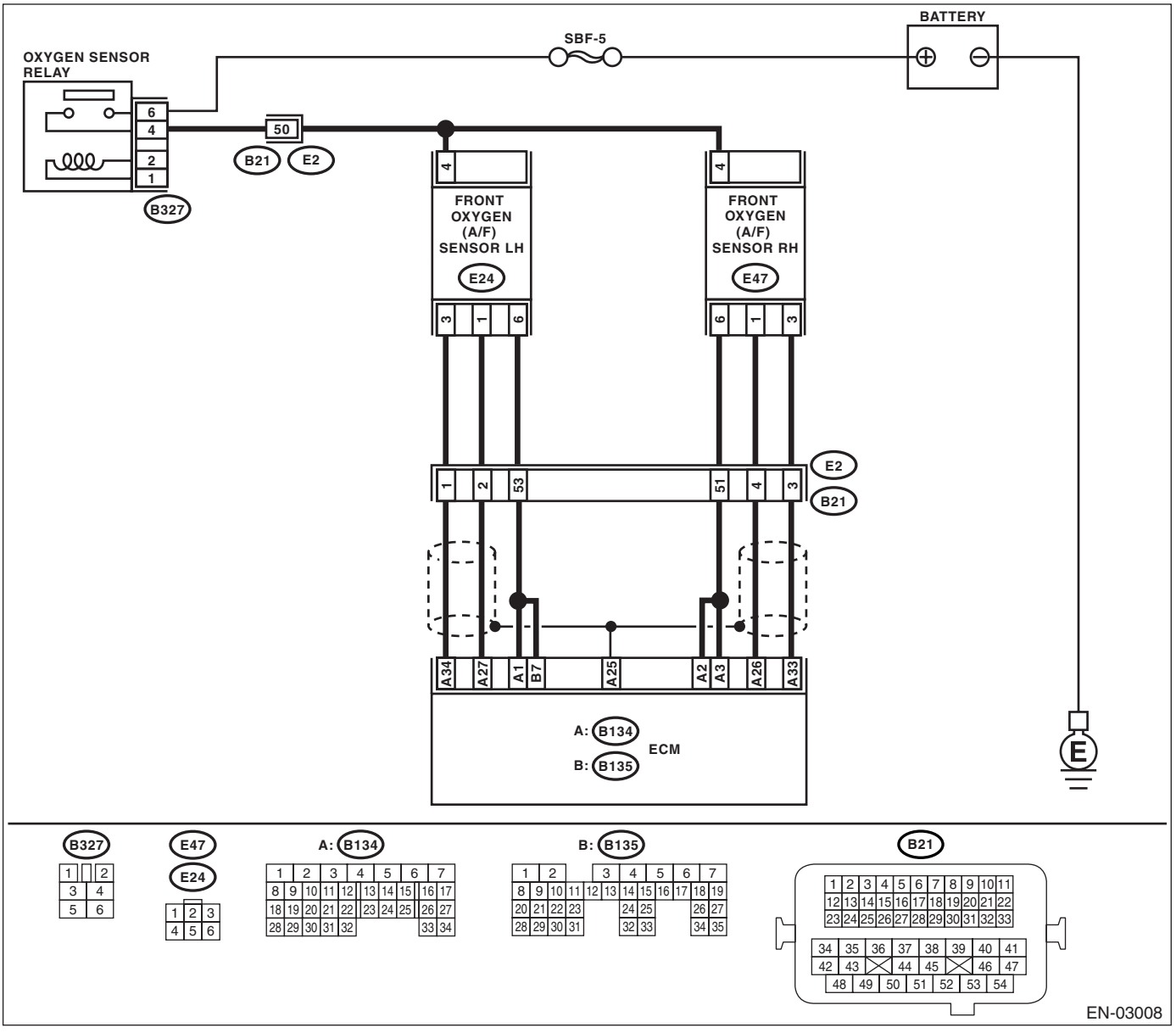

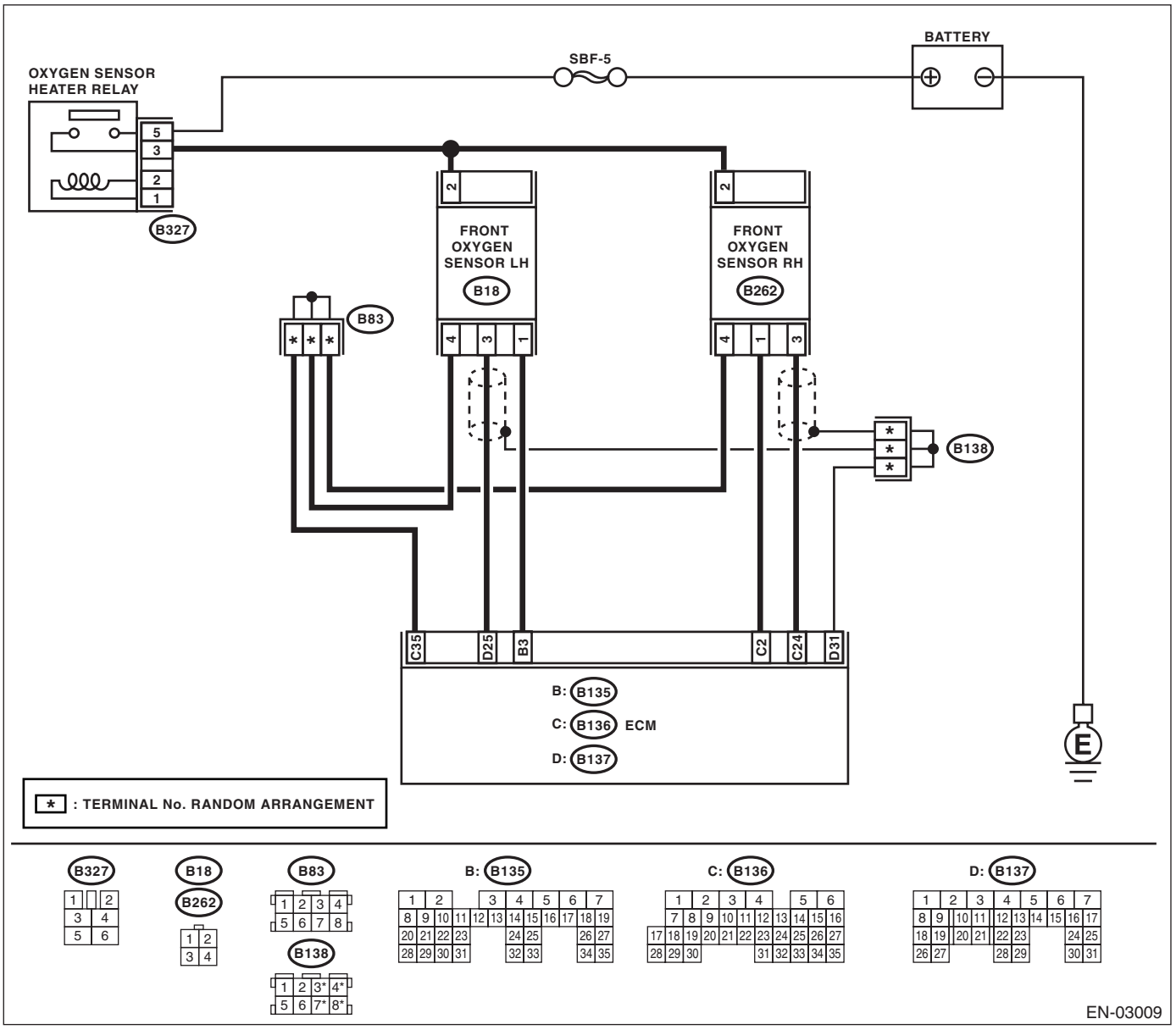
BATTERY
SBF-5
OXYGEN SENSOR HEATER RELAY
5
3
2
1
B327
FRONT OXYGEN SENSOR LH
B18
FRONT OXYGEN SENSOR RH
B262
B83
B138
C35
D25
B3
C2
C24
D31
B: B135
C: B136 ECM
D: B137
E
* : TERMINAL No. RANDOM ARRANGEMENT
B327
B18
B262
B83
B138
B: B135
C: B136
D: B137
EN-03009

	Step	Check	Yes	No
1	**CHECK FOR ANY OTHER DTC ON DISPLAY.**	Is any other DTC displayed?	Check DTC using "List of Diagnostic Trouble Code (DTC)". <Ref. to EN(H4SO U5)(diag)-73, List of Diagnostic Trouble Code (DTC).> NOTE: In this case, it is not necessary to inspect DTC P2096.	Go to step **2.**
2	**CHECK HARNESS BETWEEN ECM AND FRONT OXYGEN (A/F) SENSOR CONNECTOR.** 1) Turn the ignition switch to OFF. 2) Disconnect the connectors from ECM and front oxygen (A/F) sensor connector. 3) Measure the resistance of harness between ECM and front oxygen (A/F) sensor connector. ***Connector & terminal*** ***(B134) No. 26 — (E47) No. 1:*** ***(B134) No. 33 — (E47) No. 3:***	Is the measured value less than 1 Ω?	Go to step **3.**	Repair the harness and connector. NOTE: In this case, repair the following: • Open circuit in harness between ECM and front oxygen (A/F) sensor connector • Poor contact in front oxygen (A/F) sensor connector • Poor contact in ECM connector
3	**CHECK HARNESS BETWEEN ECM AND FRONT OXYGEN (A/F) SENSOR CONNECTOR.** Measure the resistance of harness between ECM connector and chassis ground. ***Connector & terminal*** ***(B134) No. 26 — Chassis ground:*** ***(B134) No. 33 — Chassis ground:***	Is the measured value more than 1 MΩ?	Go to step **4.**	Repair the ground short circuit in harness between ECM and front oxygen (A/F) sensor connector.
4	**CHECK OUTPUT SIGNAL FOR ECM.** 1) Connect the connector to ECM. 2) Turn the ignition switch to ON. 3) Measure the voltage between ECM connector and chassis ground. ***Connector & terminal*** ***(B134) No. 26 (+) — Chassis ground (−):***	Is the measured value more than 4.5 V?	Go to step **5.**	Go to step **6.**
5	**CHECK OUTPUT SIGNAL FOR ECM.** Measure the voltage between ECM connector and chassis ground. ***Connector & terminal*** ***(B134) No. 26 (+) — Chassis ground (−):***	Is the measured value more than 10 V?	Repair the battery short circuit in harness between ECM and front oxygen (A/F) sensor connector. After repair, replace the ECM. <Ref. to FU(H4SO U5)-44, Engine Control Module (ECM).>	Repair the poor contact in ECM connector.

	Step	Check	Yes	No
6	**CHECK OUTPUT SIGNAL FOR ECM.** Measure the voltage between ECM connector and chassis ground. ***Connector & terminal*** ***(B134) No. 33 (+) — Chassis ground (−):***	Is the measured value more than 4.95 V?	Go to step **7.**	Go to step **8.**
7	**CHECK OUTPUT SIGNAL FOR ECM.** Measure the voltage between ECM connector and chassis ground. ***Connector & terminal*** ***(B134) No. 33 (+) — Chassis ground (−):***	Is the measured value more than 10 V?	Repair the battery short circuit in harness between ECM and front oxygen (A/F) sensor connector. After repair, replace the ECM. <Ref. to FU(H4SO U5)-44, Engine Control Module (ECM).>	Repair the poor contact in ECM connector.
8	**CHECK EXHAUST SYSTEM.**	Are there holes or loose bolts on exhaust system?	Repair the exhaust system.	Go to step **9.**
9	**CHECK AIR INTAKE SYSTEM.**	Are there holes, loose bolts or disconnection of hose on air intake system?	Repair the air intake system.	Go to step **10.**
10	**CHECK FUEL PRESSURE.** **Warning:** **• Place "NO FIRE" signs near the working area.** **• Be careful not to spill fuel on the floor.** Measure the fuel pressure while disconnecting pressure regulator vacuum hose from intake manifold. <Ref. to ME(H4SO)-25, INSPECTION, Fuel Pressure.> **Warning:** **Before removing the fuel pressure gauge, release fuel pressure.** NOTE: If the fuel pressure does not increase, squeeze fuel return hose 2 to 3 times, then measure fuel pressure again.	Is the measured value 284 — 314 kPa (2.9 — 3.2 kg/cm^2, 41 — 46 psi)?	Go to step **11.**	Repair the following items. Fuel pressure too high: • Clogged fuel return line or bent hose Fuel pressure too low: • Improper fuel pump discharge • Clogged fuel supply line
11	**CHECK FUEL PRESSURE.** After connecting the pressure regulator vacuum hose, measure fuel pressure. <Ref. to ME(H4SO)-25, INSPECTION, Fuel Pressure.> **Warning:** **Before removing the fuel pressure gauge, release fuel pressure.** NOTE: • If the fuel pressure does not increase, squeeze fuel return hose 2 to 3 times, then measure fuel pressure again. • If out of specification as measured at this step, check or replace the pressure regulator and pressure regulator vacuum hose.	Is the measured value 206 — 235 kPa (2.1 — 2.4 kg/cm^2, 30 — 34 psi)?	Go to step **12.**	Repair the following items. Fuel pressure too high: • Faulty pressure regulator • Clogged fuel return line or bent hose Fuel pressure too low: • Faulty pressure regulator • Improper fuel pump discharge • Clogged fuel supply line

	Step	Check	Yes	No
12	**CHECK ENGINE COOLANT TEMPERATURE SENSOR.** 1) Start the engine and warm-up completely. 2) Read the data of engine coolant temperature sensor signal using Subaru Select Monitor or general scan tool. NOTE: • Subaru Select Monitor For detailed operation procedure, refer to the "READ CURRENT DATA FOR ENGINE". <Ref. to EN(H4SO U5)(diag)-28, Subaru Select Monitor.> • General scan tool For detailed operation procedure, refer to the general scan tool instruction manual.	Is the temperature more than 60°C (140°F)?	Go to step **13.**	Replace the engine coolant temperature sensor. <Ref. to FU(H4SO U5)-23, Engine Coolant Temperature Sensor.>
13	**CHECK MASS AIR FLOW AND INTAKE AIR TEMPERATURE SENSOR.** 1) Start the engine and warm-up engine until coolant temperature is greater than 60°C (140°F). 2) Place the shift lever in neutral position. 3) Turn the A/C switch to OFF. 4) Turn all accessory switches to OFF. 5) Read the data of mass air flow and intake air temperature sensor signal using Subaru Select Monitor or general scan tool. NOTE: • Subaru Select Monitor For detailed operation procedure, refer to the "READ CURRENT DATA FOR ENGINE". <Ref. to EN(H4SO U5)(diag)-28, Subaru Select Monitor.> • General scan tool For detailed operation procedure, refer to the general scan tool instruction manual.	Is the measured value 2.1 — 3.4 g/s (0.28 — 0.45 lb/m)?	Go to step **14.**	Replace the mass air flow and intake air temperature sensor. <Ref. to FU(H4SO U5)-29, Mass Air Flow and Intake Air Temperature Sensor.>
14	**CHECK MASS AIR FLOW AND INTAKE AIR TEMPERATURE SENSOR.** 1) Start the engine and warm-up engine until coolant temperature is greater than 60°C (140°F). 2) Place the shift lever in neutral position. 3) Turn the A/C switch to OFF. 4) Turn all accessory switches to OFF. 5) Open the front hood. 6) Measure the ambient temperature. 7) Read the data of mass air flow and intake air temperature sensor signal using Subaru Select Monitor or general scan tool. NOTE: • Subaru Select Monitor For detailed operation procedure, refer to the "READ CURRENT DATA FOR ENGINE". <Ref. to EN(H4SO U5)(diag)-28, Subaru Select Monitor.> • General scan tool For detailed operation procedure, refer to the general scan tool instruction manual.	Subtract ambient temperature from intake air temperature. Is the obtained value −10°C — 50°C (−18°F — 90°F)?	Go to step **15.**	Check the mass air flow and intake air temperature sensor. <Ref. to FU(H4SO U5)-29, Mass Air Flow and Intake Air Temperature Sensor.>

	Step	Check	Yes	No
15	**CHECK FRONT OXYGEN SENSOR DATA.** 1) Warm-up the engine until engine coolant temperature is above 70°C (158°F), and keep the engine speed at 5,000 rpm. 2) Read the data of front oxygen sensor signal using Subaru Select Monitor or general scan tool. NOTE: • Subaru Select Monitor For detailed operation procedure, refer to the "READ CURRENT DATA SHOWN ON DISPLAY FOR ENGINE". <Ref. to EN(H4SO U5)(diag)-28, Subaru Select Monitor.> • General scan tool For detailed operation procedure, refer to the general scan tool instruction manual.	Is the measured value more than 490 mV?	Go to step **18.**	Go to step **16.**
16	**CHECK HARNESS BETWEEN ECM AND FRONT OXYGEN SENSOR CONNECTOR.** 1) Turn the ignition switch to OFF. 2) Disconnect the connectors from ECM and front oxygen sensor. 3) Measure the resistance of harness between ECM and front oxygen sensor connector. ***Connector & terminal*** ***(B136) No. 24 — (B262) No. 3:*** ***(B136) No. 35 — (B262) No. 4:***	Is the measured value more than 3 Ω?	Repair open circuit in harness between ECM and front oxygen sensor connector.	Go to step **17.**
17	**CHECK HARNESS BETWEEN FRONT OXYGEN SENSOR AND ECM CONNECTOR.** 1) Turn the ignition switch to OFF. 2) Disconnect the connector from front oxygen sensor. 3) Turn the ignition switch to ON. 4) Measure the voltage between front oxygen sensor harness connector and engine ground or chassis ground. ***Connector & terminal*** ***(B262) No. 3 (+) — Engine ground (−):***	Is the measured value within 0.2 to 0.5 V?	Replace the front oxygen sensor. <Ref. to FU(H4SO U5)-40, Front Oxygen Sensor.>	Repair harness and connector. NOTE: In this case, repair the following: • Open circuit in harness between front oxygen sensor and ECM connector • Poor contact in front oxygen sensor connector • Poor contact in ECM connector
18	**CHECK FRONT OXYGEN SENSOR DATA.** 1) Warm-up the engine until engine coolant temperature is above 70°C (158°F), and immediately decrease the engine speed from 5,000 rpm. 2) Read the data of front oxygen sensor signal using Subaru Select Monitor or general scan tool. NOTE: • Subaru Select Monitor For detailed operation procedure, refer to the "READ CURRENT DATA SHOWN ON DISPLAY FOR ENGINE". <Ref. to EN(H4SO U5)(diag)-28, Subaru Select Monitor.> • General scan tool For detailed operation procedure, refer to the general scan tool instruction manual.	Is the measured value less than 250 mV?	Go to step **19.**	Go to step **20.**

	Step	Check	Yes	No
19	**CHECK FRONT OXYGEN (A/F) SENSOR AND REAR OXYGEN SENSOR DATA.** 1) Warm-up the engine until the engine coolant temperature exceeds 70°C (158°F), and leave it at idle for more than 5 minutes. 2) Read the data of rear oxygen sensor signal using Subaru Select Monitor or general scan tool. NOTE: • Subaru Select Monitor For detailed operation procedure, refer to the "READ CURRENT DATA SHOWN ON DISPLAY FOR ENGINE". <Ref. to EN(H4SO U5)(diag)-28, Subaru Select Monitor.> • General scan tool For detailed operation procedure, refer to the general scan tool instruction manual.	Does the voltage keep 0.8 V for more than 5 minutes?	Replace the front oxygen (A/F) sensor. <Ref. to FU(H4SO U5)-37, Front Oxygen (A/F) Sensor.>	Go to step **20.**
20	**CHECK HARNESS BETWEEN ECM AND FRONT OXYGEN SENSOR CONNECTOR.** 1) Turn the ignition switch to OFF. 2) Disconnect the connectors from ECM and front oxygen sensor. 3) Measure the resistance of harness between ECM and front oxygen sensor connector. ***Connector & terminal*** ***(B136) No. 24 — (B262) No. 3:*** ***(B136) No. 35 — (B262) No. 4:***	Is the measured value more than 3 Ω?	Repair open circuit in harness between ECM and front oxygen sensor connector.	Go to step **21.**
21	**CHECK HARNESS BETWEEN FRONT OXYGEN SENSOR AND ECM CONNECTOR.** 1) Turn the ignition switch to OFF. 2) Disconnect the connector from front oxygen sensor. 3) Turn the ignition switch to ON. 4) Measure the voltage between front oxygen sensor harness connector and engine ground or chassis ground. ***Connector & terminal*** ***(B262) No. 3 (+) — Engine ground (−):***	Is the measured value within 0.2 to 0.5 V?	Replace the front oxygen sensor. <Ref. to FU(H4SO U5)-40, Front Oxygen Sensor.>	Repair harness and connector. NOTE: In this case, repair the following: • Open circuit in harness between front oxygen sensor and ECM connector • Poor contact in front oxygen sensor connector • Poor contact in ECM connector

DU:DTC P2097 POST CATALYST FUEL TRIM SYSTEM TOO RICH BANK 1

DTC DETECTING CONDITION:

- Two consecutive driving cycles with fault
- GENERAL DESCRIPTION <Ref. to GD(H4SO U5)-233, DTC P2097 POST CATALYST FUEL TRIM SYSTEM TOO RICH BANK 1, Diagnostic Trouble Code (DTC) Detecting Criteria.>

CAUTION:

After repair or replacement of faulty parts, conduct Clear Memory Mode <Ref. to EN(H4SO U5)(diag)-46, OPERATION, Clear Memory Mode.> and Inspection Mode <Ref. to EN(H4SO U5)(diag)-37, OPERATION, Inspection Mode.>.

WIRING DIAGRAM:

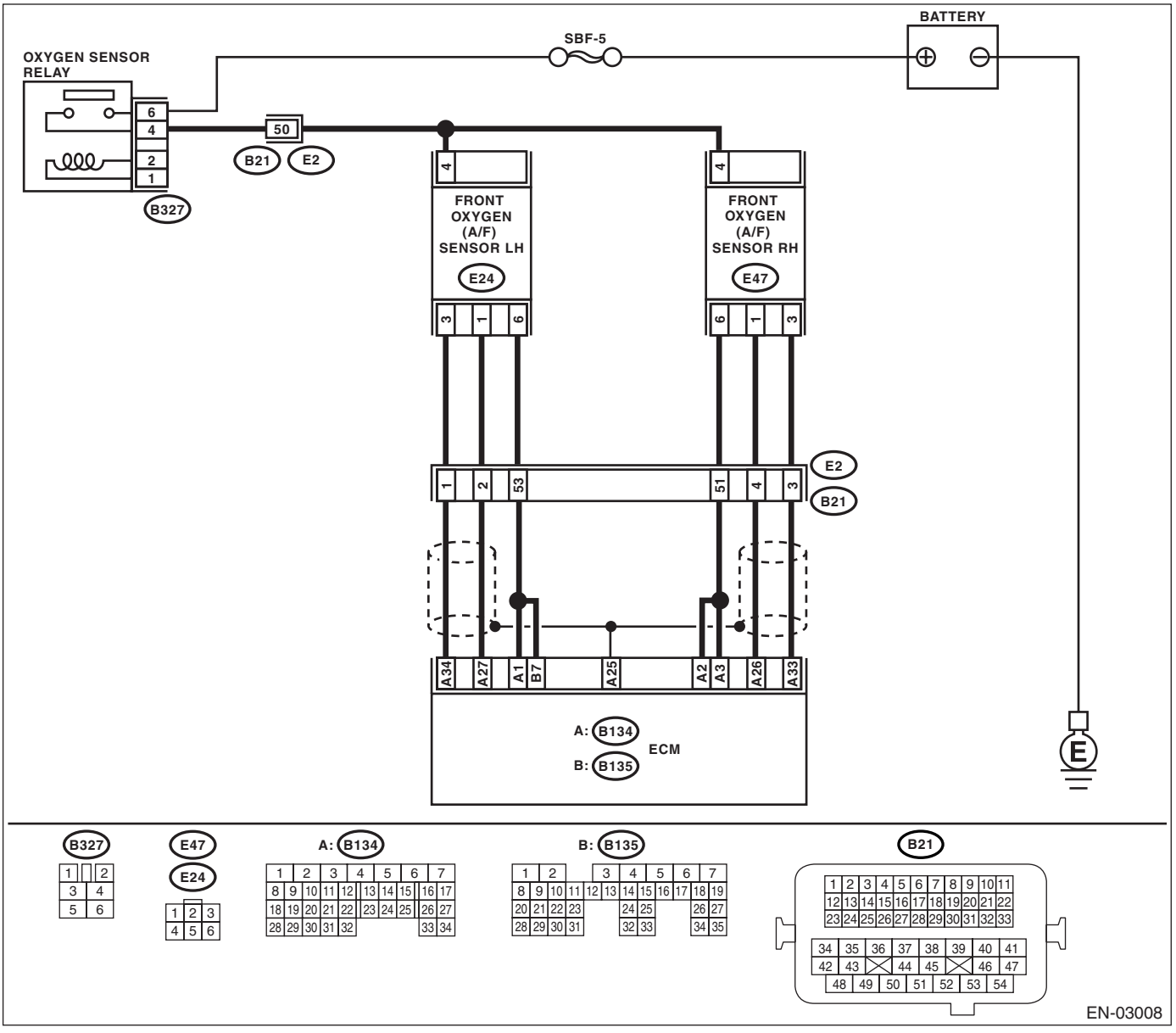

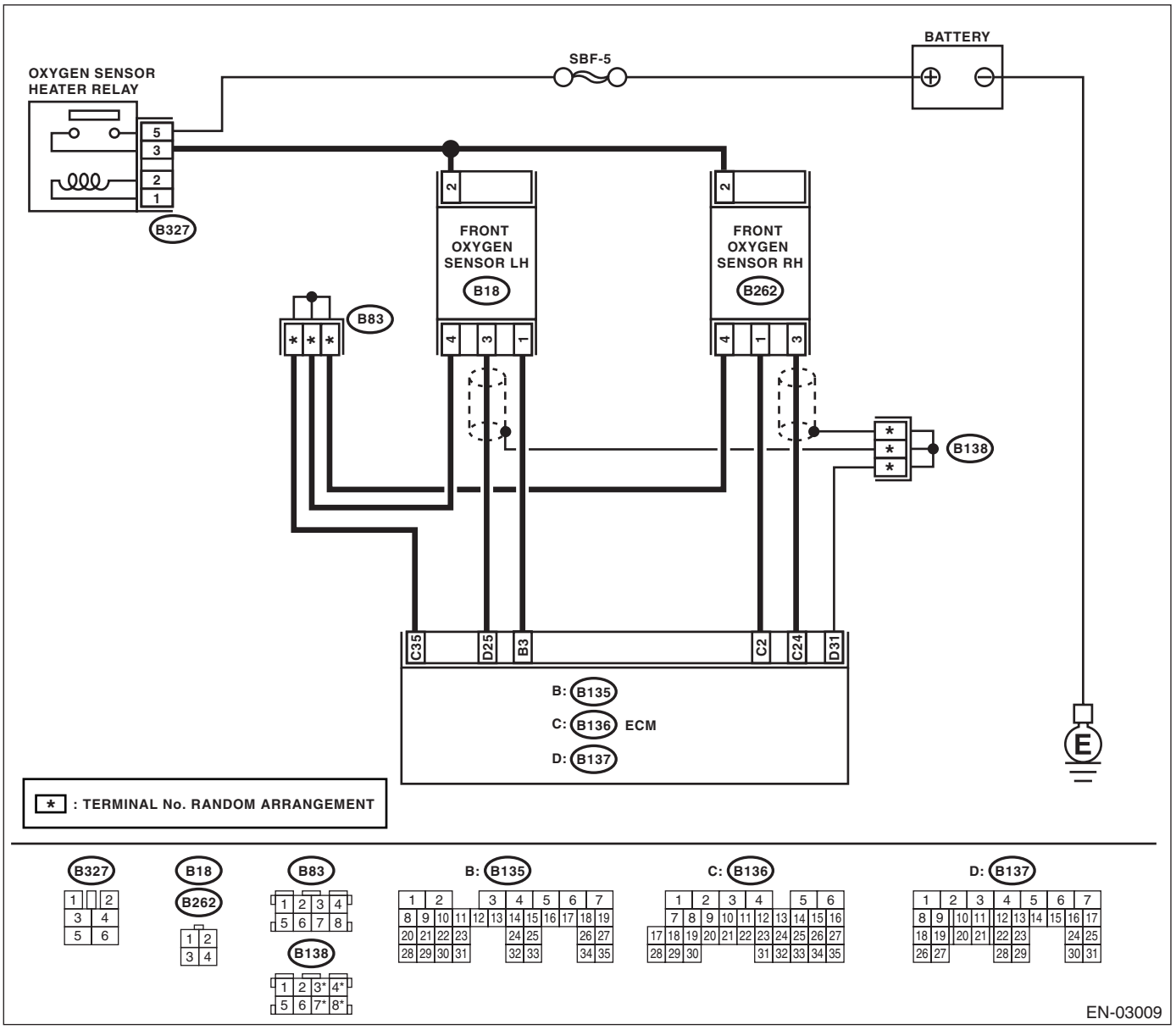
BATTERY
SBF-5
OXYGEN SENSOR HEATER RELAY
5
3
2
1
B327
FRONT OXYGEN SENSOR LH
B18
FRONT OXYGEN SENSOR RH
B262
B83
B138
C35
D25
B3
C2
C24
D31
B: B135
C: B136 ECM
D: B137
E
* : TERMINAL No. RANDOM ARRANGEMENT
B327
B18
B262
B83
B138
B: B135
C: B136
D: B137
EN-03009

	Step	Check	Yes	No
1	**CHECK FOR ANY OTHER DTC ON DISPLAY.**	Is any other DTC displayed?	Check DTC using "List of Diagnostic Trouble Code (DTC)". <Ref. to EN(H4SO U5)(diag)-73, List of Diagnostic Trouble Code (DTC).> NOTE: In this case, it is not necessary to inspect DTC P2096.	Go to step **2.**
2	**CHECK HARNESS BETWEEN ECM AND FRONT OXYGEN (A/F) SENSOR CONNECTOR.** 1) Turn the ignition switch to OFF. 2) Disconnect the connectors from ECM and front oxygen (A/F) sensor connector. 3) Measure the resistance of harness between ECM and front oxygen (A/F) sensor connector. ***Connector & terminal*** ***(B134) No. 26 — (E47) No. 1:*** ***(B134) No. 33 — (E47) No. 3:***	Is the measured value less than 1 Ω?	Go to step **3.**	Repair the harness and connector. NOTE: In this case, repair the following: • Open circuit in harness between ECM and front oxygen (A/F) sensor connector • Poor contact in front oxygen (A/F) sensor connector • Poor contact in ECM connector
3	**CHECK HARNESS BETWEEN ECM AND FRONT OXYGEN (A/F) SENSOR CONNECTOR.** Measure the resistance of harness between ECM connector and chassis ground. ***Connector & terminal*** ***(B134) No. 26 — Chassis ground:*** ***(B134) No. 33 — Chassis ground:***	Is the measured value more than 1 MΩ?	Go to step **4.**	Repair the ground short circuit in harness between ECM and front oxygen (A/F) sensor connector.
4	**CHECK OUTPUT SIGNAL FOR ECM.** 1) Connect the connector to ECM. 2) Turn the ignition switch to ON. 3) Measure the voltage between ECM connector and chassis ground. ***Connector & terminal*** ***(B134) No. 26 (+) — Chassis ground (−):***	Is the measured value more than 4.5 V?	Go to step **5.**	Go to step **6.**
5	**CHECK OUTPUT SIGNAL FOR ECM.** Measure the voltage between ECM connector and chassis ground. ***Connector & terminal*** ***(B134) No. 26 (+) — Chassis ground (−):***	Is the measured value more than 10 V?	Repair the battery short circuit in harness between ECM and front oxygen (A/F) sensor connector. After repair, replace the ECM. <Ref. to FU(H4SO U5)-44, Engine Control Module (ECM).>	Repair the poor contact in ECM connector.

	Step	Check	Yes	No
6	**CHECK OUTPUT SIGNAL FOR ECM.** Measure the voltage between ECM connector and chassis ground. ***Connector & terminal*** ***(B134) No. 33 (+) — Chassis ground (−):***	Is the measured value more than 4.95 V?	Go to step **7.**	Go to step **8.**
7	**CHECK OUTPUT SIGNAL FOR ECM.** Measure the voltage between ECM connector and chassis ground. ***Connector & terminal*** ***(B134) No. 33 (+) — Chassis ground (−):***	Is the measured value more than 10 V?	Repair the battery short circuit in harness between ECM and front oxygen (A/F) sensor connector. After repair, replace the ECM. <Ref. to FU(H4SO U5)-44, Engine Control Module (ECM).>	Repair the poor contact in ECM connector.
8	**CHECK EXHAUST SYSTEM.**	Are there holes or loose bolts on exhaust system?	Repair the exhaust system.	Go to step **9.**
9	**CHECK AIR INTAKE SYSTEM.**	Are there holes, loose bolts or disconnection of hose on air intake system?	Repair the air intake system.	Go to step **10.**
10	**CHECK FUEL PRESSURE.** **Warning:** **• Place "NO FIRE" signs near the working area.** **• Be careful not to spill fuel on the floor.** Measure the fuel pressure while disconnecting pressure regulator vacuum hose from intake manifold. <Ref. to ME(H4SO)-25, INSPECTION, Fuel Pressure.> **Warning:** **Before removing the fuel pressure gauge, release fuel pressure.** NOTE: If the fuel pressure does not increase, squeeze fuel return hose 2 to 3 times, then measure fuel pressure again.	Is the measured value 284 — 314 kPa (2.9 — 3.2 kg/cm^2, 41 — 46 psi)?	Go to step **11.**	Repair the following items. Fuel pressure too high: • Clogged fuel return line or bent hose Fuel pressure too low: • Improper fuel pump discharge • Clogged fuel supply line
11	**CHECK FUEL PRESSURE.** After connecting the pressure regulator vacuum hose, measure fuel pressure. <Ref. to ME(H4SO)-25, INSPECTION, Fuel Pressure.> **Warning:** **Before removing the fuel pressure gauge, release fuel pressure.** NOTE: • If the fuel pressure does not increase, squeeze fuel return hose 2 to 3 times, then measure fuel pressure again. • If out of specification as measured at this step, check or replace the pressure regulator and pressure regulator vacuum hose.	Is the measured value 206 — 235 kPa (2.1 — 2.4 kg/cm^2, 30 — 34 psi)?	Go to step **12.**	Repair the following items. Fuel pressure too high: • Faulty pressure regulator • Clogged fuel return line or bent hose Fuel pressure too low: • Faulty pressure regulator • Improper fuel pump discharge • Clogged fuel supply line

	Step	Check	Yes	No
12	**CHECK ENGINE COOLANT TEMPERATURE SENSOR.** 1) Start the engine and warm-up completely. 2) Read the data of engine coolant temperature sensor signal using Subaru Select Monitor or general scan tool. NOTE: • Subaru Select Monitor For detailed operation procedure, refer to the "READ CURRENT DATA FOR ENGINE". <Ref. to EN(H4SO U5)(diag)-28, Subaru Select Monitor.> • General scan tool For detailed operation procedure, refer to the general scan tool instruction manual.	Is the temperature more than 60°C (140°F)?	Go to step **13.**	Replace the engine coolant temperature sensor. <Ref. to FU(H4SO U5)-23, Engine Coolant Temperature Sensor.>
13	**CHECK MASS AIR FLOW AND INTAKE AIR TEMPERATURE SENSOR.** 1) Start the engine and warm-up engine until coolant temperature is greater than 60°C (140°F). 2) Place the shift lever in neutral position. 3) Turn the A/C switch to OFF. 4) Turn all accessory switches to OFF. 5) Read the data of mass air flow and intake air temperature sensor signal using Subaru Select Monitor or general scan tool. NOTE: • Subaru Select Monitor For detailed operation procedure, refer to the "READ CURRENT DATA FOR ENGINE". <Ref. to EN(H4SO U5)(diag)-28, Subaru Select Monitor.> • General scan tool For detailed operation procedure, refer to the general scan tool instruction manual.	Is the measured value 2.1 — 3.4 g/s (0.28 — 0.45 lb/m)?	Go to step **14.**	Replace the mass air flow and intake air temperature sensor. <Ref. to FU(H4SO U5)-29, Mass Air Flow and Intake Air Temperature Sensor.>
14	**CHECK MASS AIR FLOW AND INTAKE AIR TEMPERATURE SENSOR.** 1) Start the engine and warm-up engine until coolant temperature is greater than 60°C (140°F). 2) Place the shift lever in neutral position. 3) Turn the A/C switch to OFF. 4) Turn all accessory switches to OFF. 5) Open the front hood. 6) Measure the ambient temperature. 7) Read the data of mass air flow and intake air temperature sensor signal using Subaru Select Monitor or general scan tool. NOTE: • Subaru Select Monitor For detailed operation procedure, refer to the "READ CURRENT DATA FOR ENGINE". <Ref. to EN(H4SO U5)(diag)-28, Subaru Select Monitor.> • General scan tool For detailed operation procedure, refer to the general scan tool instruction manual.	Subtract ambient temperature from intake air temperature. Is the obtained value −10°C — 50°C (−18°F — 90°F)?	Go to step **15.**	Check the mass air flow and intake air temperature sensor. <Ref. to FU(H4SO U5)-29, Mass Air Flow and Intake Air Temperature Sensor.>

	Step	Check	Yes	No
15	**CHECK FRONT OXYGEN SENSOR DATA.** 1) Warm-up the engine until engine coolant temperature is above 70°C (158°F), and keep the engine speed at 5,000 rpm. 2) Read the data of front oxygen sensor signal using Subaru Select Monitor or general scan tool. NOTE: • Subaru Select Monitor For detailed operation procedure, refer to the "READ CURRENT DATA SHOWN ON DISPLAY FOR ENGINE". <Ref. to EN(H4SO U5)(diag)-28, Subaru Select Monitor.> • General scan tool For detailed operation procedure, refer to the general scan tool instruction manual.	Is the measured value more than 490 mV?	Go to step **18.**	Go to step **16.**
16	**CHECK HARNESS BETWEEN ECM AND FRONT OXYGEN SENSOR CONNECTOR.** 1) Turn the ignition switch to OFF. 2) Disconnect the connectors from ECM and front oxygen sensor. 3) Measure the resistance of harness between ECM and front oxygen sensor connector. ***Connector & terminal*** ***(B136) No. 24 — (B262) No. 3:*** ***(B136) No. 35 — (B262) No. 4:***	Is the measured value more than 3 Ω?	Repair open circuit in harness between ECM and front oxygen sensor connector.	Go to step **17.**
17	**CHECK HARNESS BETWEEN FRONT OXYGEN SENSOR AND ECM CONNECTOR.** 1) Turn the ignition switch to OFF. 2) Disconnect the connector from front oxygen sensor. 3) Turn the ignition switch to ON. 4) Measure the voltage between front oxygen sensor harness connector and engine ground or chassis ground. ***Connector & terminal*** ***(B262) No. 3 (+) — Engine ground (−):***	Is the measured value within 0.2 to 0.5 V?	Replace the front oxygen sensor. <Ref. to FU(H4SO U5)-40, Front Oxygen Sensor.>	Repair harness and connector. NOTE: In this case, repair the following: • Open circuit in harness between front oxygen sensor and ECM connector • Poor contact in front oxygen sensor connector • Poor contact in ECM connector
18	**CHECK FRONT OXYGEN SENSOR DATA.** 1) Warm-up the engine until engine coolant temperature is above 70°C (158°F), and immediately decrease the engine speed from 5,000 rpm. 2) Read the data of front oxygen sensor signal using Subaru Select Monitor or general scan tool. NOTE: • Subaru Select Monitor For detailed operation procedure, refer to the "READ CURRENT DATA SHOWN ON DISPLAY FOR ENGINE". <Ref. to EN(H4SO U5)(diag)-28, Subaru Select Monitor.> • General scan tool For detailed operation procedure, refer to the general scan tool instruction manual.	Is the measured value less than 250 mV?	Go to step **19.**	Go to step **20.**

	Step	Check	Yes	No
19	**CHECK FRONT OXYGEN (A/F) SENSOR AND REAR OXYGEN SENSOR DATA.** 1) Warm-up the engine until the engine coolant temperature exceeds 70°C (158°F), and leave it at idle for more than 5 minutes. 2) Read the data of rear oxygen sensor signal using Subaru Select Monitor or general scan tool. NOTE: • Subaru Select Monitor For detailed operation procedure, refer to the "READ CURRENT DATA SHOWN ON DISPLAY FOR ENGINE". <Ref. to EN(H4SO U5)(diag)-28, Subaru Select Monitor.> • General scan tool For detailed operation procedure, refer to the general scan tool instruction manual.	Does the voltage keep 0.8 V for more than 5 minutes?	Replace the front oxygen (A/F) sensor. <Ref. to FU(H4SO U5)-37, Front Oxygen (A/F) Sensor.>	Go to step **20.**
20	**CHECK HARNESS BETWEEN ECM AND FRONT OXYGEN SENSOR CONNECTOR.** 1) Turn the ignition switch to OFF. 2) Disconnect the connectors from ECM and front oxygen sensor. 3) Measure the resistance of harness between ECM and front oxygen sensor connector. ***Connector & terminal*** ***(B136) No. 24 — (B262) No. 3:*** ***(B136) No. 35 — (B262) No. 4:***	Is the measured value more than 3 Ω?	Repair open circuit in harness between ECM and front oxygen sensor connector.	Go to step **21.**
21	**CHECK HARNESS BETWEEN FRONT OXYGEN SENSOR AND ECM CONNECTOR.** 1) Turn the ignition switch to OFF. 2) Disconnect the connector from front oxygen sensor. 3) Turn the ignition switch to ON. 4) Measure the voltage between front oxygen sensor harness connector and engine ground or chassis ground. ***Connector & terminal*** ***(B262) No. 3 (+) — Engine ground (−):***	Is the measured value within 0.2 to 0.5 V?	Replace the front oxygen sensor. <Ref. to FU(H4SO U5)-40, Front Oxygen Sensor.>	Repair harness and connector. NOTE: In this case, repair the following: • Open circuit in harness between front oxygen sensor and ECM connector • Poor contact in front oxygen sensor connector • Poor contact in ECM connector

DV:DTC P2098 POST CATALYST FUEL TRIM SYSTEM TOO LEAN BANK 2

DTC DETECTING CONDITION:

- Two consecutive driving cycles with fault
- GENERAL DESCRIPTION <Ref. to GD(H4SO U5)-234, DTC P2098 POST CATALYST FUEL TRIM SYSTEM TOO LEAN BANK 2, Diagnostic Trouble Code (DTC) Detecting Criteria.>

CAUTION:
After repair or replacement of faulty parts, conduct Clear Memory Mode <Ref. to EN(H4SO U5)(diag)-46, OPERATION, Clear Memory Mode.> and Inspection Mode <Ref. to EN(H4SO U5)(diag)-37, OPERATION, Inspection Mode.>.

WIRING DIAGRAM:

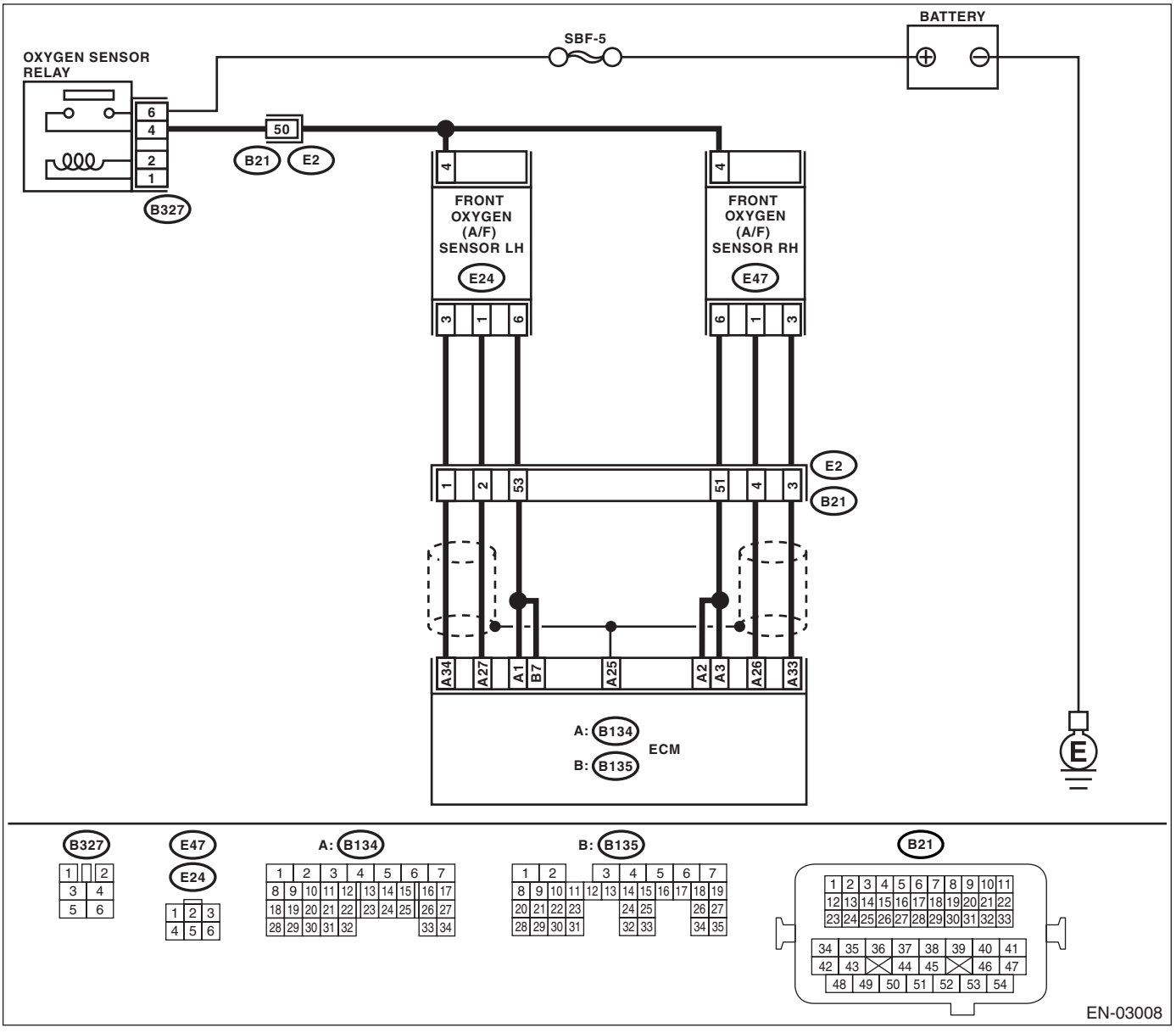

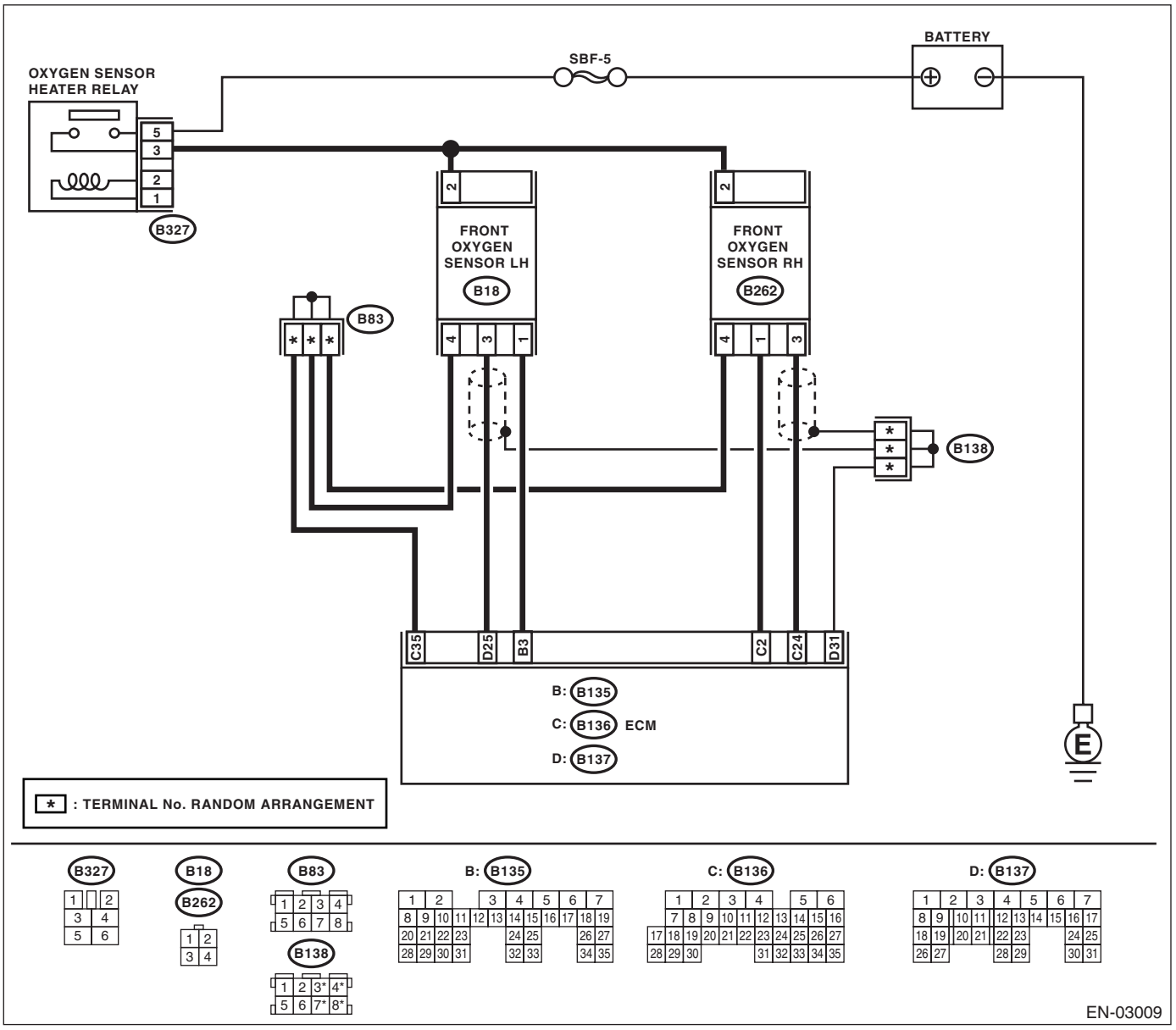
BATTERY
SBF-5
OXYGEN SENSOR HEATER RELAY
5
3
2
1
B327
FRONT OXYGEN SENSOR LH
B18
FRONT OXYGEN SENSOR RH
B262
B83
B138
C35
D25
B3
C2
C24
D31
B: B135
C: B136 ECM
D: B137
E
* : TERMINAL No. RANDOM ARRANGEMENT
B327
B18
B262
B83
B138
B: B135
C: B136
D: B137
EN-03009

	Step	Check	Yes	No
1	**CHECK FOR ANY OTHER DTC ON DISPLAY.**	Is any other DTC displayed?	Check DTC using "List of Diagnostic Trouble Code (DTC)". <Ref. to EN(H4SO U5)(diag)-73, List of Diagnostic Trouble Code (DTC).> NOTE: In this case, it is not necessary to inspect DTC P2096.	Go to step **2.**
2	**CHECK HARNESS BETWEEN ECM AND FRONT OXYGEN (A/F) SENSOR CONNECTOR.** 1) Turn the ignition switch to OFF. 2) Disconnect the connectors from ECM and front oxygen (A/F) sensor connector. 3) Measure the resistance of harness between ECM and front oxygen (A/F) sensor connector. ***Connector & terminal*** ***(B134) No. 27 — (E24) No. 1:*** ***(B134) No. 34 — (E24) No. 3:***	Is the measured value less than 1 Ω?	Go to step **3.**	Repair the harness and connector. NOTE: In this case, repair the following: • Open circuit in harness between ECM and front oxygen (A/F) sensor connector • Poor contact in front oxygen (A/F) sensor connector • Poor contact in ECM connector
3	**CHECK HARNESS BETWEEN ECM AND FRONT OXYGEN (A/F) SENSOR CONNECTOR.** Measure the resistance of harness between ECM connector and chassis ground. ***Connector & terminal*** ***(B134) No. 27 — Chassis ground:*** ***(B134) No. 34 — Chassis ground:***	Is the measured value more than 1 MΩ?	Go to step **4.**	Repair the ground short circuit in harness between ECM and front oxygen (A/F) sensor connector.
4	**CHECK OUTPUT SIGNAL FOR ECM.** 1) Connect the connector to ECM. 2) Turn the ignition switch to ON. 3) Measure the voltage between ECM connector and chassis ground. ***Connector & terminal*** ***(B134) No. 27 (+) — Chassis ground (−):***	Is the measured value more than 4.5 V?	Go to step **5.**	Go to step **6.**
5	**CHECK OUTPUT SIGNAL FOR ECM.** Measure the voltage between ECM connector and chassis ground. ***Connector & terminal*** ***(B134) No. 27 (+) — Chassis ground (−):***	Is the measured value more than 10 V?	Repair the battery short circuit in harness between ECM and front oxygen (A/F) sensor connector. After repair, replace the ECM. <Ref. to FU(H4SO U5)-44, Engine Control Module (ECM).>	Repair the poor contact in ECM connector.

	Step	Check	Yes	No
6	**CHECK OUTPUT SIGNAL FOR ECM.** Measure the voltage between ECM connector and chassis ground. ***Connector & terminal*** ***(B134) No. 34 (+) — Chassis ground (−):***	Is the measured value more than 4.95 V?	Go to step **7.**	Go to step **8.**
7	**CHECK OUTPUT SIGNAL FOR ECM.** Measure the voltage between ECM connector and chassis ground. ***Connector & terminal*** ***(B134) No. 34 (+) — Chassis ground (−):***	Is the measured value more than 10 V?	Repair the battery short circuit in harness between ECM and front oxygen (A/F) sensor connector. After repair, replace the ECM. <Ref. to FU(H4SO U5)-44, Engine Control Module (ECM).>	Repair the poor contact in ECM connector.
8	**CHECK EXHAUST SYSTEM.**	Are there holes or loose bolts on exhaust system?	Repair the exhaust system.	Go to step **9.**
9	**CHECK AIR INTAKE SYSTEM.**	Are there holes, loose bolts or disconnection of hose on air intake system?	Repair the air intake system.	Go to step **10.**
10	**CHECK FUEL PRESSURE.** **Warning:** **• Place "NO FIRE" signs near the working area.** **• Be careful not to spill fuel on the floor.** Measure the fuel pressure while disconnecting pressure regulator vacuum hose from intake manifold. <Ref. to ME(H4SO)-25, INSPECTION, Fuel Pressure.> **Warning:** **Before removing the fuel pressure gauge, release fuel pressure.** NOTE: If the fuel pressure does not increase, squeeze fuel return hose 2 to 3 times, then measure fuel pressure again.	Is the measured value 284 — 314 kPa (2.9 — 3.2 kg/cm^2, 41 — 46 psi)?	Go to step **11.**	Repair the following items. Fuel pressure too high: • Clogged fuel return line or bent hose Fuel pressure too low: • Improper fuel pump discharge • Clogged fuel supply line
11	**CHECK FUEL PRESSURE.** After connecting the pressure regulator vacuum hose, measure fuel pressure. <Ref. to ME(H4SO)-25, INSPECTION, Fuel Pressure.> **Warning:** **Before removing the fuel pressure gauge, release fuel pressure.** NOTE: • If the fuel pressure does not increase, squeeze fuel return hose 2 to 3 times, then measure fuel pressure again. • If out of specification as measured at this step, check or replace the pressure regulator and pressure regulator vacuum hose.	Is the measured value 206 — 235 kPa (2.1 — 2.4 kg/cm^2, 30 — 34 psi)?	Go to step **12.**	Repair the following items. Fuel pressure too high: • Faulty pressure regulator • Clogged fuel return line or bent hose Fuel pressure too low: • Faulty pressure regulator • Improper fuel pump discharge • Clogged fuel supply line

	Step	Check	Yes	No
12	**CHECK ENGINE COOLANT TEMPERATURE SENSOR.** 1) Start the engine and warm-up completely. 2) Read the data of engine coolant temperature sensor signal using Subaru Select Monitor or general scan tool. NOTE: • Subaru Select Monitor For detailed operation procedure, refer to the "READ CURRENT DATA FOR ENGINE". <Ref. to EN(H4SO U5)(diag)-28, Subaru Select Monitor.> • General scan tool For detailed operation procedure, refer to the general scan tool instruction manual.	Is the temperature more than 60°C (140°F)?	Go to step **13.**	Replace the engine coolant temperature sensor. <Ref. to FU(H4SO U5)-23, Engine Coolant Temperature Sensor.>
13	**CHECK MASS AIR FLOW AND INTAKE AIR TEMPERATURE SENSOR.** 1) Start the engine and warm-up engine until coolant temperature is greater than 60°C (140°F). 2) Place the shift lever in neutral position. 3) Turn the A/C switch to OFF. 4) Turn all accessory switches to OFF. 5) Read the data of mass air flow and intake air temperature sensor signal using Subaru Select Monitor or general scan tool. NOTE: • Subaru Select Monitor For detailed operation procedure, refer to the "READ CURRENT DATA FOR ENGINE". <Ref. to EN(H4SO U5)(diag)-28, Subaru Select Monitor.> • General scan tool For detailed operation procedure, refer to the general scan tool instruction manual.	Is the measured value 2.1 — 3.4 g/s (0.28 — 0.45 lb/m)?	Go to step **14.**	Replace the mass air flow and intake air temperature sensor. <Ref. to FU(H4SO U5)-29, Mass Air Flow and Intake Air Temperature Sensor.>
14	**CHECK MASS AIR FLOW AND INTAKE AIR TEMPERATURE SENSOR.** 1) Start the engine and warm-up engine until coolant temperature is greater than 60°C (140°F). 2) Place the shift lever in neutral position. 3) Turn the A/C switch to OFF. 4) Turn all accessory switches to OFF. 5) Open the front hood. 6) Measure the ambient temperature. 7) Read the data of mass air flow and intake air temperature sensor signal using Subaru Select Monitor or general scan tool. NOTE: • Subaru Select Monitor For detailed operation procedure, refer to the "READ CURRENT DATA FOR ENGINE". <Ref. to EN(H4SO U5)(diag)-28, Subaru Select Monitor.> • General scan tool For detailed operation procedure, refer to the general scan tool instruction manual.	Subtract ambient temperature from intake air temperature. Is the obtained value −10°C — 50°C (−18°F — 90°F)?	Go to step **15.**	Check the mass air flow and intake air temperature sensor. <Ref. to FU(H4SO U5)-29, Mass Air Flow and Intake Air Temperature Sensor.>

	Step	Check	Yes	No
15	**CHECK FRONT OXYGEN SENSOR DATA.** 1) Warm-up the engine until engine coolant temperature is above 70°C (158°F), and keep the engine speed at 5,000 rpm. 2) Read the data of front oxygen sensor signal using Subaru Select Monitor or general scan tool. NOTE: • Subaru Select Monitor For detailed operation procedure, refer to the "READ CURRENT DATA SHOWN ON DISPLAY FOR ENGINE". <Ref. to EN(H4SO U5)(diag)-28, Subaru Select Monitor.> • General scan tool For detailed operation procedure, refer to the general scan tool instruction manual.	Is the measured value more than 490 mV?	Go to step **18.**	Go to step **16.**
16	**CHECK HARNESS BETWEEN ECM AND FRONT OXYGEN SENSOR CONNECTOR.** 1) Turn the ignition switch to OFF. 2) Disconnect the connectors from ECM and front oxygen sensor. 3) Measure the resistance of harness between ECM and front oxygen sensor connector. ***Connector & terminal*** ***(B137) No. 25 — (B18) No. 3:*** ***(B136) No. 35 — (B18) No. 4:***	Is the measured value more than 3 Ω?	Repair open circuit in harness between ECM and front oxygen sensor connector.	Go to step **17.**
17	**CHECK HARNESS BETWEEN FRONT OXYGEN SENSOR AND ECM CONNECTOR.** 1) Turn the ignition switch to OFF. 2) Disconnect the connector from front oxygen sensor. 3) Turn the ignition switch to ON. 4) Measure the voltage between front oxygen sensor harness connector and engine ground or chassis ground. ***Connector & terminal*** ***(B18) No. 3 (+) — Engine ground (−):***	Is the measured value within 0.2 to 0.5 V?	Replace the front oxygen sensor. <Ref. to FU(H4SO U5)-40, Front Oxygen Sensor.>	Repair harness and connector. NOTE: In this case, repair the following: • Open circuit in harness between front oxygen sensor and ECM connector • Poor contact in front oxygen sensor connector • Poor contact in ECM connector
18	**CHECK FRONT OXYGEN SENSOR DATA.** 1) Warm-up the engine until engine coolant temperature is above 70°C (158°F), and immediately decrease the engine speed from 5,000 rpm. 2) Read the data of front oxygen sensor signal using Subaru Select Monitor or general scan tool. NOTE: • Subaru Select Monitor For detailed operation procedure, refer to the "READ CURRENT DATA SHOWN ON DISPLAY FOR ENGINE". <Ref. to EN(H4SO U5)(diag)-28, Subaru Select Monitor.> • General scan tool For detailed operation procedure, refer to the general scan tool instruction manual.	Is the measured value less than 250 mV?	Go to step **19.**	Go to step **20.**

	Step	Check	Yes	No
19	**CHECK FRONT OXYGEN (A/F) SENSOR AND REAR OXYGEN SENSOR DATA.** 1) Warm-up the engine until the engine coolant temperature exceeds 70°C (158°F), and leave it at idle for more than 5 minutes. 2) Read the data of rear oxygen sensor signal using Subaru Select Monitor or general scan tool. NOTE: • Subaru Select Monitor For detailed operation procedure, refer to the "READ CURRENT DATA SHOWN ON DISPLAY FOR ENGINE". <Ref. to EN(H4SO U5)(diag)-28, Subaru Select Monitor.> • General scan tool For detailed operation procedure, refer to the general scan tool instruction manual.	Does the voltage keep 0.8 V for more than 5 minutes?	Replace the front oxygen (A/F) sensor. <Ref. to FU(H4SO U5)-37, Front Oxygen (A/F) Sensor.>	Go to step **20.**
20	**CHECK HARNESS BETWEEN ECM AND FRONT OXYGEN SENSOR CONNECTOR.** 1) Turn the ignition switch to OFF. 2) Disconnect the connectors from ECM and front oxygen sensor. 3) Measure the resistance of harness between ECM and front oxygen sensor connector. ***Connector & terminal*** ***(B137) No. 25 — (B18) No. 3:*** ***(B136) No. 35 — (B18) No. 4:***	Is the measured value more than 3 Ω?	Repair open circuit in harness between ECM and front oxygen sensor connector.	Go to step **21.**
21	**CHECK HARNESS BETWEEN FRONT OXYGEN SENSOR AND ECM CONNECTOR.** 1) Turn the ignition switch to OFF. 2) Disconnect the connector from front oxygen sensor. 3) Turn the ignition switch to ON. 4) Measure the voltage between front oxygen sensor harness connector and engine ground or chassis ground. ***Connector & terminal*** ***(B18) No. 3 (+) — Engine ground (−):***	Is the measured value within 0.2 to 0.5 V?	Replace the front oxygen sensor. <Ref. to FU(H4SO U5)-40, Front Oxygen Sensor.>	Repair harness and connector. NOTE: In this case, repair the following: • Open circuit in harness between front oxygen sensor and ECM connector • Poor contact in front oxygen sensor connector • Poor contact in ECM connector

DW:DTC P2099 POST CATALYST FUEL TRIM SYSTEM TOO RICH BANK 2

DTC DETECTING CONDITION:

- Two consecutive driving cycles with fault
- GENERAL DESCRIPTION <Ref. to GD(H4SO U5)-234, DTC P2099 POST CATALYST FUEL TRIM SYSTEM TOO RICH BANK 2, Diagnostic Trouble Code (DTC) Detecting Criteria.>

CAUTION:

After repair or replacement of faulty parts, conduct Clear Memory Mode <Ref. to EN(H4SO U5)(diag)-46, OPERATION, Clear Memory Mode.> and Inspection Mode <Ref. to EN(H4SO U5)(diag)-37, OPERATION, Inspection Mode.>.

WIRING DIAGRAM:

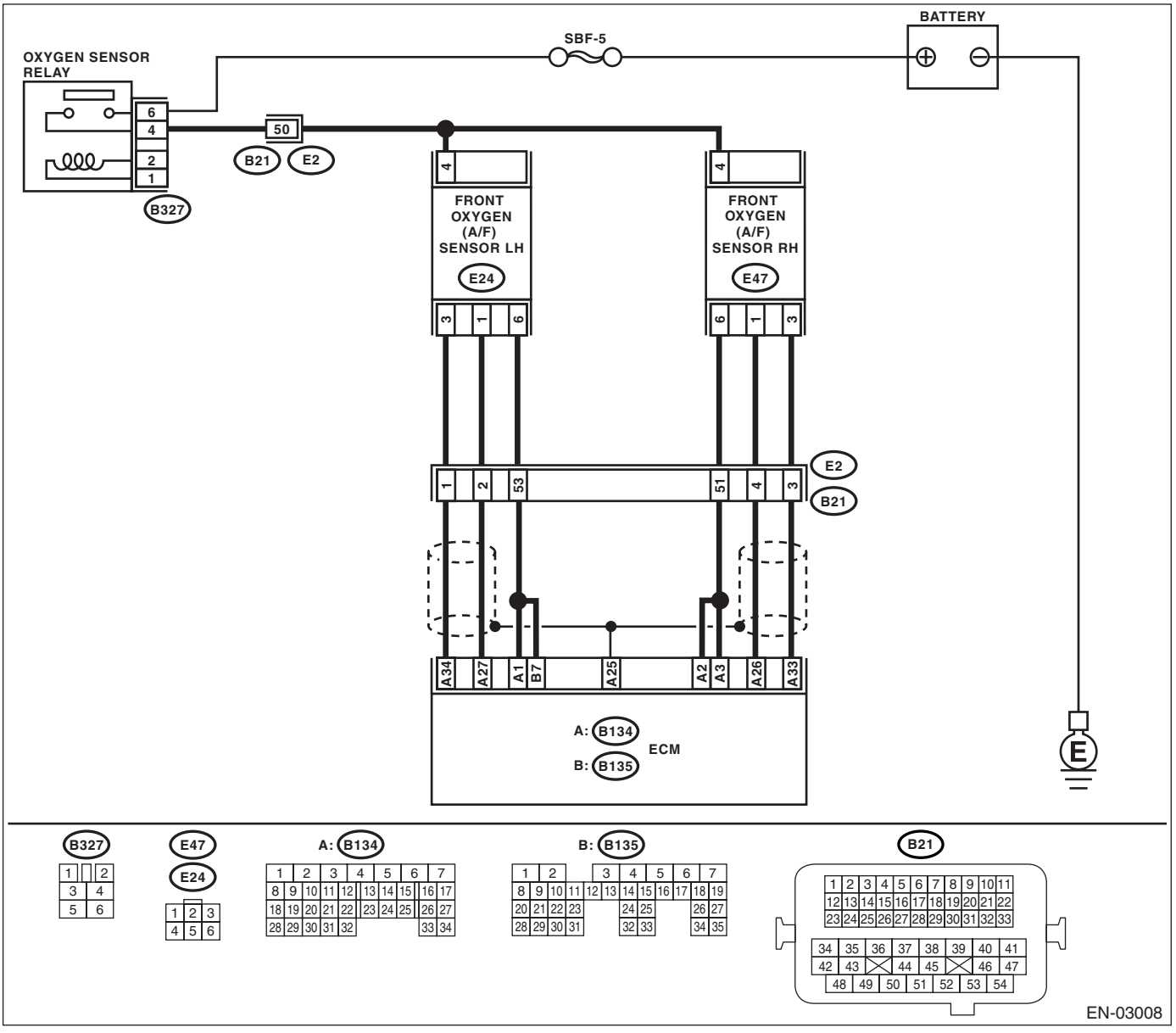

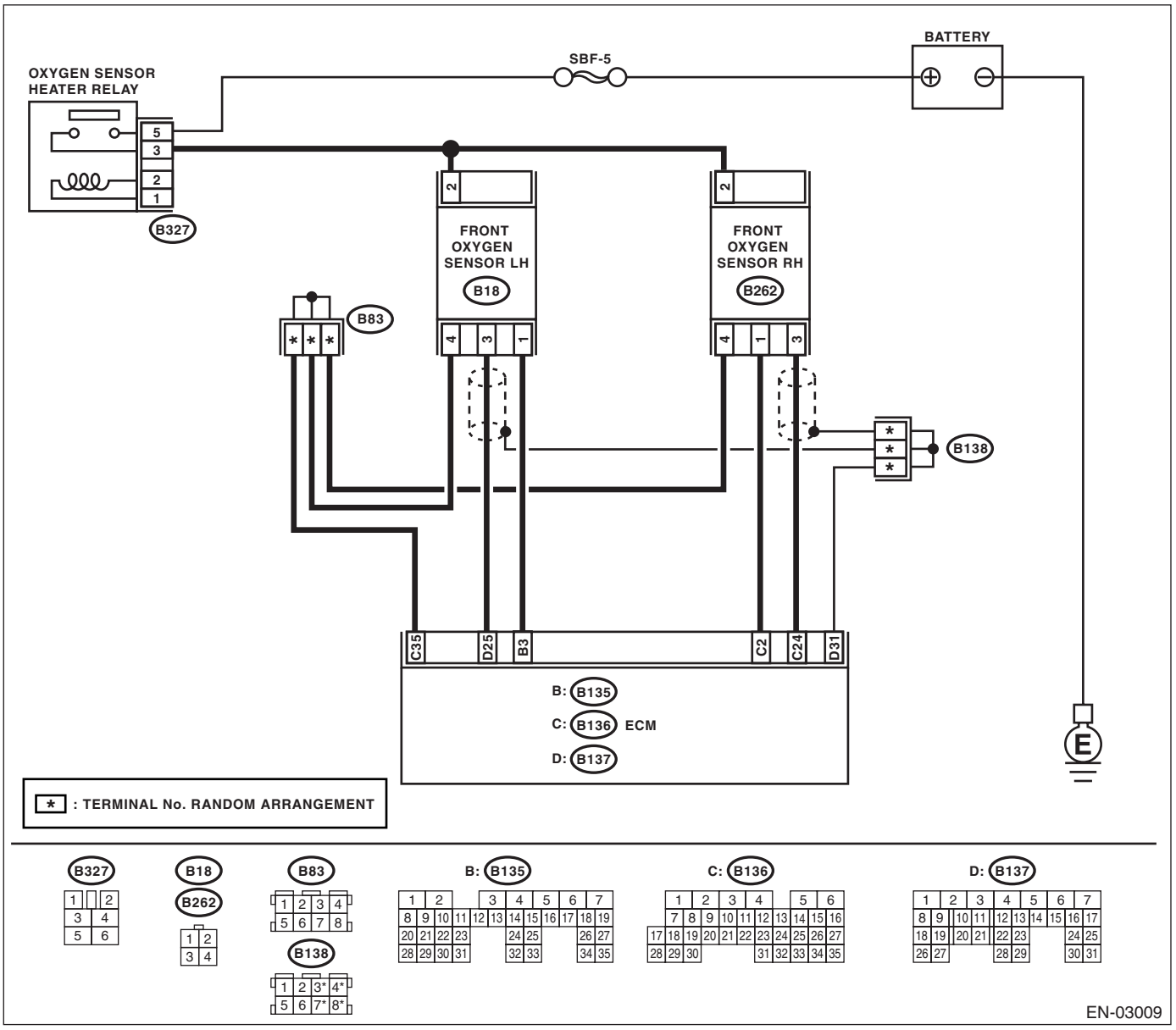
BATTERY
SBF-5
OXYGEN SENSOR HEATER RELAY
5
3
2
1
B327
FRONT OXYGEN SENSOR LH
B18
FRONT OXYGEN SENSOR RH
B262
B83
B138
C35
D25
B3
C2
C24
D31
B: B135
C: B136 ECM
D: B137
E
* : TERMINAL No. RANDOM ARRANGEMENT
B327
B18
B262
B83
B138
B: B135
C: B136
D: B137
EN-03009

	Step	Check	Yes	No
1	**CHECK FOR ANY OTHER DTC ON DISPLAY.**	Is any other DTC displayed?	Check DTC using "List of Diagnostic Trouble Code (DTC)". <Ref. to EN(H4SO U5)(diag)-73, List of Diagnostic Trouble Code (DTC).> NOTE: In this case, it is not necessary to inspect DTC P2096.	Go to step **2.**
2	**CHECK HARNESS BETWEEN ECM AND FRONT OXYGEN (A/F) SENSOR CONNECTOR.** 1) Turn the ignition switch to OFF. 2) Disconnect the connectors from ECM and front oxygen (A/F) sensor connector. 3) Measure the resistance of harness between ECM and front oxygen (A/F) sensor connector. ***Connector & terminal*** ***(B134) No. 27 — (E24) No. 1:*** ***(B134) No. 34 — (E24) No. 3:***	Is the measured value less than 1 Ω?	Go to step **3.**	Repair the harness and connector. NOTE: In this case, repair the following: • Open circuit in harness between ECM and front oxygen (A/F) sensor connector • Poor contact in front oxygen (A/F) sensor connector • Poor contact in ECM connector
3	**CHECK HARNESS BETWEEN ECM AND FRONT OXYGEN (A/F) SENSOR CONNECTOR.** Measure the resistance of harness between ECM connector and chassis ground. ***Connector & terminal*** ***(B134) No. 27 — Chassis ground:*** ***(B134) No. 34 — Chassis ground:***	Is the measured value more than 1 MΩ?	Go to step **4.**	Repair the ground short circuit in harness between ECM and front oxygen (A/F) sensor connector.
4	**CHECK OUTPUT SIGNAL FOR ECM.** 1) Connect the connector to ECM. 2) Turn the ignition switch to ON. 3) Measure the voltage between ECM connector and chassis ground. ***Connector & terminal*** ***(B134) No. 27 (+) — Chassis ground (−):***	Is the measured value more than 4.5 V?	Go to step **5.**	Go to step **6.**
5	**CHECK OUTPUT SIGNAL FOR ECM.** Measure the voltage between ECM connector and chassis ground. ***Connector & terminal*** ***(B134) No. 27 (+) — Chassis ground (−):***	Is the measured value more than 10 V?	Repair the battery short circuit in harness between ECM and front oxygen (A/F) sensor connector. After repair, replace the ECM. <Ref. to FU(H4SO U5)-44, Engine Control Module (ECM).>	Repair the poor contact in ECM connector.

	Step	Check	Yes	No
6	**CHECK OUTPUT SIGNAL FOR ECM.** Measure the voltage between ECM connector and chassis ground. ***Connector & terminal*** ***(B134) No. 34 (+) — Chassis ground (−):***	Is the measured value more than 4.95 V?	Go to step **7.**	Go to step **8.**
7	**CHECK OUTPUT SIGNAL FOR ECM.** Measure the voltage between ECM connector and chassis ground. ***Connector & terminal*** ***(B134) No. 34 (+) — Chassis ground (−):***	Is the measured value more than 10 V?	Repair the battery short circuit in harness between ECM and front oxygen (A/F) sensor connector. After repair, replace the ECM. <Ref. to FU(H4SO U5)-44, Engine Control Module (ECM).>	Repair the poor contact in ECM connector.
8	**CHECK EXHAUST SYSTEM.**	Are there holes or loose bolts on exhaust system?	Repair the exhaust system.	Go to step **9.**
9	**CHECK AIR INTAKE SYSTEM.**	Are there holes, loose bolts or disconnection of hose on air intake system?	Repair the air intake system.	Go to step **10.**
10	**CHECK FUEL PRESSURE.** **Warning:** **• Place "NO FIRE" signs near the working area.** **• Be careful not to spill fuel on the floor.** Measure the fuel pressure while disconnecting pressure regulator vacuum hose from intake manifold. <Ref. to ME(H4SO)-25, INSPECTION, Fuel Pressure.> **Warning:** **Before removing the fuel pressure gauge, release fuel pressure.** NOTE: If the fuel pressure does not increase, squeeze fuel return hose 2 to 3 times, then measure fuel pressure again.	Is the measured value 284 — 314 kPa (2.9 — 3.2 kg/cm^2, 41 — 46 psi)?	Go to step **11.**	Repair the following items. Fuel pressure too high: • Clogged fuel return line or bent hose Fuel pressure too low: • Improper fuel pump discharge • Clogged fuel supply line
11	**CHECK FUEL PRESSURE.** After connecting the pressure regulator vacuum hose, measure fuel pressure. <Ref. to ME(H4SO)-25, INSPECTION, Fuel Pressure.> **Warning:** **Before removing the fuel pressure gauge, release fuel pressure.** NOTE: • If the fuel pressure does not increase, squeeze fuel return hose 2 to 3 times, then measure fuel pressure again. • If out of specification as measured at this step, check or replace the pressure regulator and pressure regulator vacuum hose.	Is the measured value 206 — 235 kPa (2.1 — 2.4 kg/cm^2, 30 — 34 psi)?	Go to step **12.**	Repair the following items. Fuel pressure too high: • Faulty pressure regulator • Clogged fuel return line or bent hose Fuel pressure too low: • Faulty pressure regulator • Improper fuel pump discharge • Clogged fuel supply line

	Step	Check	Yes	No
12	**CHECK ENGINE COOLANT TEMPERATURE SENSOR.** 1) Start the engine and warm-up completely. 2) Read the data of engine coolant temperature sensor signal using Subaru Select Monitor or general scan tool. NOTE: • Subaru Select Monitor For detailed operation procedure, refer to the "READ CURRENT DATA FOR ENGINE". <Ref. to EN(H4SO U5)(diag)-28, Subaru Select Monitor.> • General scan tool For detailed operation procedure, refer to the general scan tool instruction manual.	Is the temperature more than 60°C (140°F)?	Go to step **13.**	Replace the engine coolant temperature sensor. <Ref. to FU(H4SO U5)-23, Engine Coolant Temperature Sensor.>
13	**CHECK MASS AIR FLOW AND INTAKE AIR TEMPERATURE SENSOR.** 1) Start the engine and warm-up engine until coolant temperature is greater than 60°C (140°F). 2) Place the shift lever in neutral position. 3) Turn the A/C switch to OFF. 4) Turn all accessory switches to OFF. 5) Read the data of mass air flow and intake air temperature sensor signal using Subaru Select Monitor or general scan tool. NOTE: • Subaru Select Monitor For detailed operation procedure, refer to the "READ CURRENT DATA FOR ENGINE". <Ref. to EN(H4SO U5)(diag)-28, Subaru Select Monitor.> • General scan tool For detailed operation procedure, refer to the general scan tool instruction manual.	Is the measured value 2.1 — 3.4 g/s (0.28 — 0.45 lb/m)?	Go to step **14.**	Replace the mass air flow and intake air temperature sensor. <Ref. to FU(H4SO U5)-29, Mass Air Flow and Intake Air Temperature Sensor.>
14	**CHECK MASS AIR FLOW AND INTAKE AIR TEMPERATURE SENSOR.** 1) Start the engine and warm-up engine until coolant temperature is greater than 60°C (140°F). 2) Place the shift lever in neutral position. 3) Turn the A/C switch to OFF. 4) Turn all accessory switches to OFF. 5) Open the front hood. 6) Measure the ambient temperature. 7) Read the data of mass air flow and intake air temperature sensor signal using Subaru Select Monitor or general scan tool. NOTE: • Subaru Select Monitor For detailed operation procedure, refer to the "READ CURRENT DATA FOR ENGINE". <Ref. to EN(H4SO U5)(diag)-28, Subaru Select Monitor.> • General scan tool For detailed operation procedure, refer to the general scan tool instruction manual.	Subtract ambient temperature from intake air temperature. Is the obtained value −10°C — 50°C (−18°F — 90°F)?	Go to step **15.**	Check the mass air flow and intake air temperature sensor. <Ref. to FU(H4SO U5)-29, Mass Air Flow and Intake Air Temperature Sensor.>

	Step	Check	Yes	No
15	**CHECK FRONT OXYGEN SENSOR DATA.** 1) Warm-up the engine until engine coolant temperature is above 70°C (158°F), and keep the engine speed at 5,000 rpm. 2) Read the data of front oxygen sensor signal using Subaru Select Monitor or general scan tool. NOTE: • Subaru Select Monitor For detailed operation procedure, refer to the "READ CURRENT DATA SHOWN ON DISPLAY FOR ENGINE". <Ref. to EN(H4SO U5)(diag)-28, Subaru Select Monitor.> • General scan tool For detailed operation procedure, refer to the general scan tool instruction manual.	Is the measured value more than 490 mV?	Go to step **18.**	Go to step **16.**
16	**CHECK HARNESS BETWEEN ECM AND FRONT OXYGEN SENSOR CONNECTOR.** 1) Turn the ignition switch to OFF. 2) Disconnect the connectors from ECM and front oxygen sensor. 3) Measure the resistance of harness between ECM and front oxygen sensor connector. ***Connector & terminal*** ***(B137) No. 25 — (B18) No. 3:*** ***(B136) No. 35 — (B18) No. 4:***	Is the measured value more than 3 Ω?	Repair open circuit in harness between ECM and front oxygen sensor connector.	Go to step **17.**
17	**CHECK HARNESS BETWEEN FRONT OXYGEN SENSOR AND ECM CONNECTOR.** 1) Turn the ignition switch to OFF. 2) Disconnect the connector from front oxygen sensor. 3) Turn the ignition switch to ON. 4) Measure the voltage between front oxygen sensor harness connector and engine ground or chassis ground. ***Connector & terminal*** ***(B18) No. 3 (+) — Engine ground (−):***	Is the measured value within 0.2 to 0.5 V?	Replace the front oxygen sensor. <Ref. to FU(H4SO U5)-40, Front Oxygen Sensor.>	Repair harness and connector. NOTE: In this case, repair the following: • Open circuit in harness between front oxygen sensor and ECM connector • Poor contact in front oxygen sensor connector • Poor contact in ECM connector
18	**CHECK FRONT OXYGEN SENSOR DATA.** 1) Warm-up the engine until engine coolant temperature is above 70°C (158°F), and immediately decrease the engine speed from 5,000 rpm. 2) Read the data of front oxygen sensor signal using Subaru Select Monitor or general scan tool. NOTE: • Subaru Select Monitor For detailed operation procedure, refer to the "READ CURRENT DATA SHOWN ON DISPLAY FOR ENGINE". <Ref. to EN(H4SO U5)(diag)-28, Subaru Select Monitor.> • General scan tool For detailed operation procedure, refer to the general scan tool instruction manual.	Is the measured value less than 250 mV?	Go to step **19.**	Go to step **20.**

	Step	Check	Yes	No
19	**CHECK FRONT OXYGEN (A/F) SENSOR AND REAR OXYGEN SENSOR DATA.** 1) Warm-up the engine until the engine coolant temperature exceeds 70°C (158°F), and leave it at idle for more than 5 minutes. 2) Read the data of rear oxygen sensor signal using Subaru Select Monitor or general scan tool. NOTE: • Subaru Select Monitor For detailed operation procedure, refer to the "READ CURRENT DATA SHOWN ON DISPLAY FOR ENGINE". <Ref. to EN(H4SO U5)(diag)-28, Subaru Select Monitor.> • General scan tool For detailed operation procedure, refer to the general scan tool instruction manual.	Does the voltage keep 0.8 V for more than 5 minutes?	Replace the front oxygen (A/F) sensor. <Ref. to FU(H4SO U5)-37, Front Oxygen (A/F) Sensor.>	Go to step **20.**
20	**CHECK HARNESS BETWEEN ECM AND FRONT OXYGEN SENSOR CONNECTOR.** 1) Turn the ignition switch to OFF. 2) Disconnect the connectors from ECM and front oxygen sensor. 3) Measure the resistance of harness between ECM and front oxygen sensor connector. ***Connector & terminal*** ***(B137) No. 25 — (B18) No. 3:*** ***(B136) No. 35 — (B18) No. 4:***	Is the measured value more than 3 Ω?	Repair open circuit in harness between ECM and front oxygen sensor connector.	Go to step **21.**
21	**CHECK HARNESS BETWEEN FRONT OXYGEN SENSOR AND ECM CONNECTOR.** 1) Turn the ignition switch to OFF. 2) Disconnect the connector from front oxygen sensor. 3) Turn the ignition switch to ON. 4) Measure the voltage between front oxygen sensor harness connector and engine ground or chassis ground. ***Connector & terminal*** ***(B18) No. 3 (+) — Engine ground (−):***	Is the measured value within 0.2 to 0.5 V?	Replace the front oxygen sensor. <Ref. to FU(H4SO U5)-40, Front Oxygen Sensor.>	Repair harness and connector. NOTE: In this case, repair the following: • Open circuit in harness between front oxygen sensor and ECM connector • Poor contact in front oxygen sensor connector • Poor contact in ECM connector

DX:DTC P2101 THROTTLE ACTUATOR CONTROL MOTOR CIRCUIT RANGE/PERFORMANCE

DTC DETECTING CONDITION:

- Detect as soon as malfunction occurs.
- GENERAL DESCRIPTION <Ref. to GD(H4SO U5)-175, DTC P0638 THROTTLE ACTUATOR CONTROL RANGE/PERFORMANCE (BANK 1), Diagnostic Trouble Code (DTC) Detecting Criteria.>, <Ref. to GD(H4SO U5)-190, DTC P1160 RETURN SPRING FAILURE, Diagnostic Trouble Code (DTC) Detecting Criteria.> and <Ref. to GD(H4SO U5)-241, DTC P2109 THROTTLE/PEDAL POSITION SENSOR A MINIMUM STOP PERFORMANCE, Diagnostic Trouble Code (DTC) Detecting Criteria.>

TROUBLE SYMPTOM:

- Erroneous idling
- Poor driving performance
- Engine stalls.

WIRING DIAGRAM:

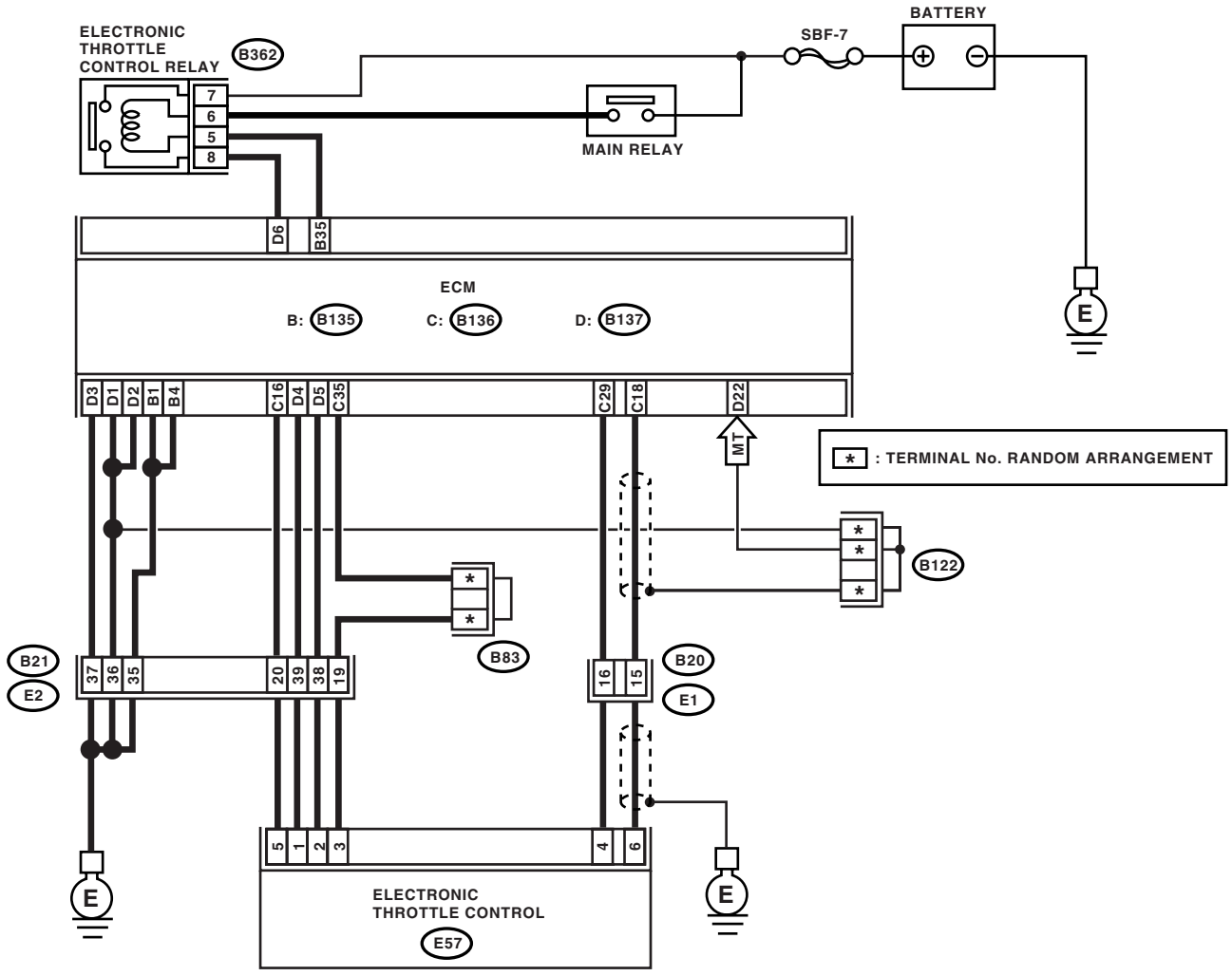

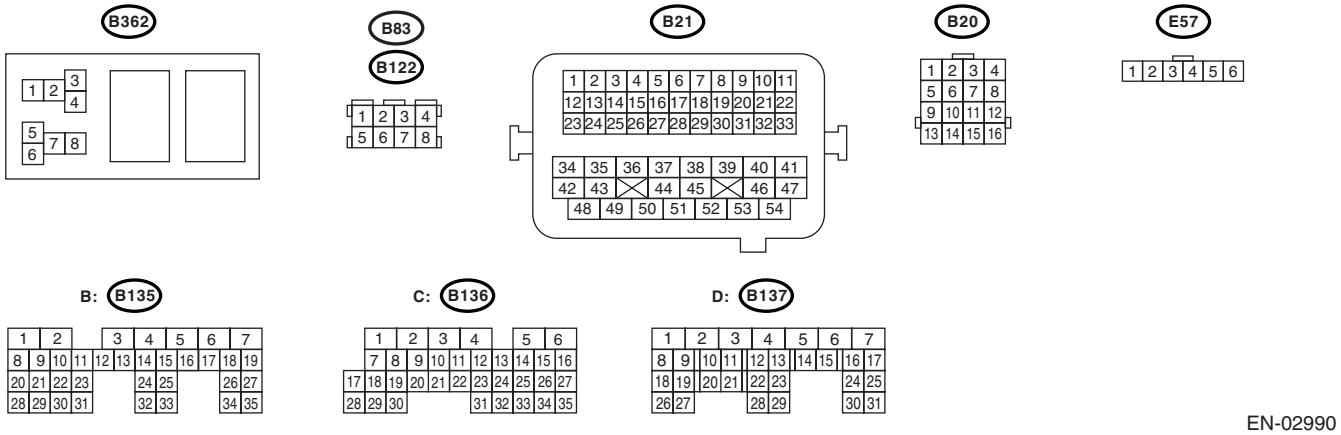

EN-02990

	Step	Check	Yes	No
1	**CHECK ELECTRONIC THROTTLE CONTROL RELAY.** 1) Turn the ignition switch to OFF. 2) Remove the electronic throttle control relay. 3) Connect the battery to electronic throttle control relay terminal No. 5 and No. 6. 4) Measure the resistance between electronic throttle control relay terminals. ***Terminals*** ***No. 7 — No. 8:***	Is the resistance less than 1 Ω?	Go to step **2.**	Replace the electronic throttle control relay.
2	**CHECK POWER SUPPLY TO ELECTRONIC THROTTLE CONTROL RELAY.** 1) Turn the ignition switch to ON. 2) Measure the voltage between electronic throttle control relay connector and chassis ground. ***Connector & terminal*** ***(B362) No. 7 (+) — Chassis ground (−):*** ***(B362) No. 6 (+) — Chassis ground (−):***	Is the voltage more than 10 V?	Go to step **3.**	Repair the open power supply circuit or ground short.
3	**CHECK HARNESS BETWEEN ECM AND ELECTRONIC THROTTLE CONTROL.** 1) Disconnect the connector from ECM. 2) Turn the ignition switch to ON. 3) Measure the voltage between electronic throttle control relay connector and chassis ground. ***Connector & terminal*** ***(B362) No. 5 (+) — Chassis ground (−):***	Is the voltage more than 10 V?	Repair short of the power supply circuit between ECM and electronic throttle control.	Go to step **4.**
4	**CHECK HARNESS BETWEEN ECM AND ELECTRONIC THROTTLE CONTROL.** 1) Turn the ignition switch to OFF. 2) Measure the resistance between electronic throttle control electronic throttle control relay connector and chassis ground. ***Connector & terminal*** ***(B362) No. 5 — Chassis ground:*** ***(B362) No. 8 — Chassis ground:***	Is the resistance more than 1 MΩ?	Go to step **5.**	Repair the ground short of harness between ECM and electronic throttle control relay.
5	**CHECK HARNESS BETWEEN ECM AND ELECTRONIC THROTTLE CONTROL RELAY.** 1) Turn the ignition switch to OFF. 2) Measure the resistance between electronic throttle control connector and electronic throttle control relay connector. ***Connector & terminal*** ***(B135) No. 35 — (B362) No. 5:*** ***(B137) No. 6 — (B362) No. 8:***	Is the resistance less than 1 Ω?	Go to step **6.**	Repair the open circuit of harness between ECM and electronic throttle control relay.
6	**CHECK OUTPUT VOLTAGE OF SENSOR.** 1) Connect all the connectors. 2) Turn the ignition switch to ON. 3) Read the data of main throttle sensor signal, using the Subaru Select Monitor. NOTE: Subaru Select Monitor For detailed operation procedure, refer to "READ CURRENT DATA FOR ENGINE". <Ref. to EN(H4SO U5)(diag)-28, Subaru Select Monitor.>	Is the voltage more than 0.4 V?	Go to step **7.**	Go to step **9.**

	Step	Check	Yes	No
7	**CHECK OUTPUT VOLTAGE OF SENSOR.** 1) Connect all the connectors. 2) Turn the ignition switch to ON. 3) Read the data of sub throttle sensor signal, using the Subaru Select Monitor. NOTE: Subaru Select Monitor For detailed operation procedure, refer to "READ CURRENT DATA FOR ENGINE". <Ref. to EN(H4SO U5)(diag)-28, Subaru Select Monitor.>	Is the voltage more than 0.8 V?	Go to step **8.**	Go to step **9.**
8	**CHECK POOR CONTACT.** Check poor contact between ECM connector and electronic throttle control connector.	Is there poor contact between ECM connector and electronic throttle control connector?	Repair the poor contact.	Go to step **13.**
9	**CHECK HARNESS BETWEEN ECM AND ELECTRONIC THROTTLE CONTROL.** 1) Turn the ignition switch to OFF. 2) Disconnect the connector from ECM. 3) Disconnect the connector from electronic throttle control. 4) Measure the resistance between ECM connector and electronic throttle control connector. ***Connector & terminal*** ***(B136) No. 18 — (E57) No. 6:*** ***(B136) No. 29 — (E57) No. 4:*** ***(B136) No. 16 — (E57) No. 5:***	Is the resistance less than 1 Ω?	Go to step **10.**	Repair the open harness connector.
10	**CHECK THE HARNESS BETWEEN ECM AND ELECTRONIC THROTTLE CONTROL.** Measure the resistance between ECM connector and chassis ground. ***Connector & terminal*** ***(B136) No. 16 — Chassis ground:*** ***(B136) No. 18 — Chassis ground:*** ***(B136) No. 29 — Chassis ground:***	Is the resistance more than 1 MΩ?	Go to step **11.**	Repair the ground short of harness.
11	**CHECK POWER SUPPLY TO SENSOR.** 1) Connect the ECM connector. 2) Turn the ignition switch to ON. 3) Measure the resistance between electronic throttle control connector and engine ground. ***Connector & terminal*** ***(E57) No. 5 (+) — Engine ground (−):***	Is the voltage 4.5 — 5.5 V?	Go to step **12.**	Repair the poor contact in ECM connector. If problem persists, replace the ECM. <Ref. to FU(H4SO U5)-44, Engine Control Module (ECM).>
12	**CHECK SHORT OF ECM.** 1) Turn the ignition switch to OFF. 2) Measure the resistance between electronic throttle control connector and engine ground. ***Connector & terminal*** ***(E57) No. 6 — Engine ground:*** ***(E57) No. 4 — Engine ground:***	Is the resistance more than 10 Ω?	Go to step **13.**	Repair the poor contact in ECM connector. If problem persists, replace the ECM.

	Step	Check	Yes	No
13	**CHECK OUTPUT VOLTAGE OF SENSOR.** 1) Connect all the connectors. 2) Turn the ignition switch to ON. 3) Read the data of main throttle sensor signal, using the Subaru Select Monitor. NOTE: Subaru Select Monitor For detailed operation procedure, refer to "READ CURRENT DATA FOR ENGINE". <Ref. to EN(H4SO U5)(diag)-28, Subaru Select Monitor.>	Is the voltage less than 4.63 V?	Go to step **14.**	Go to step **16.**
14	**CHECK OUTPUT VOLTAGE OF SENSOR.** Read the data of sub throttle sensor signal, using the Subaru Select Monitor. NOTE: Subaru Select Monitor For detailed operation procedure, refer to "READ CURRENT DATA FOR ENGINE". <Ref. to EN(H4SO U5)(diag)-28, Subaru Select Monitor.>	Is the voltage less than 4.73 V?	Go to step **15.**	Go to step **16.**
15	**CHECK POOR CONTACT IN CONNECTORS.** Check poor contact in connectors between ECM and electronic throttle control?	Is there poor contact in connectors between ECM and electronic throttle control?	Repair the poor contact in connectors.	Go to step **21.**
16	**CHECK HARNESS BETWEEN ECM AND ELECTRONIC THROTTLE CONTROL.** 1) Turn the ignition switch to OFF. 2) Disconnect the connector from ECM. 3) Disconnect the connector from electronic throttle control. 4) Measure the resistance between ECM connector and electronic throttle control connector. ***Connector & terminal*** ***(B136) No. 35 — (E57) No. 3:*** ***(B136) No. 18 — (E57) No. 6:*** ***(B136) No. 29 — (E57) No. 4:***	Is the resistance less than 1 Ω?	Go to step **17.**	Repair the open harness connector.
17	**CHECK HARNESS BETWEEN ECM AND ELECTRONIC THROTTLE CONTROL.** 1) Connect the ECM connector. 2) Measure the resistance between electronic throttle control connector and engine ground. ***Connector & terminal*** ***(E57) No. 3 — Engine ground:***	Is the resistance less than 5 Ω?	Go to step **18.**	Repair the poor contact in ECM connector. If problem persists, replace the ECM.
18	**CHECK HARNESS BETWEEN ECM AND ELECTRONIC THROTTLE CONTROL.** 1) Turn the ignition switch to ON. 2) Measure the voltage between electronic throttle control connector and engine ground. ***Connector & terminal*** ***(E57) No. 5 (+) — Engine ground (–):***	Is the voltage less than 10 V?	Go to step **19.**	Repair the battery short of harness between ECM connector and electronic throttle control connector.
19	**CHECK HARNESS BETWEEN ECM AND ELECTRONIC THROTTLE CONTROL.** Measure the voltage between electronic throttle control connector and engine ground. ***Connector & terminal*** ***(E57) No. 6 (+) — Engine ground (–):*** ***(E57) No. 4 (+) — Engine ground (–):***	Is the voltage less than 10 V?	Go to step **20.**	Repair the short of harness between ECM connector and electronic throttle control connector.

	Step	Check	Yes	No
20	**CHECK HARNESS BETWEEN ECM AND ELECTRONIC THROTTLE CONTROL.** 1) Turn the ignition switch to OFF. 2) Remove the ECM. 3) Measure the voltage between ECM connectors. ***Connector & terminal*** ***(B136) No. 18 — (B136) No. 16:*** ***(B136) No. 29 — (B136) No. 16:***	Is the resistance more than 1 MΩ?	Go to step **21.**	Repair the short of sensor power supply.
21	**CHECK OUTPUT VOLTAGE OF SENSOR.** 1) Turn the ignition switch to OFF. 2) Connect all the connectors except electronic throttle control replay. 3) Turn the ignition switch to ON. 4) Read the data of main throttle sensor signals, using Subaru Select Monitor. NOTE: Subaru Select Monitor For detailed operation procedure, refer to "READ CURRENT DATA FOR ENGINE". <Ref. to EN(H4SO U5)(diag)-28, Subaru Select Monitor.>	Is the voltage 0.81 — 0.87 V?	Go to step **22.**	Repair the poor contact in electronic throttle control connector. If problem persists, replace the electronic throttle control.
22	**CHECK OUTPUT VOLTAGE OF SENSOR.** Read the data of sub throttle sensor signals, using Subaru Select Monitor. NOTE: Subaru Select Monitor For detailed operation procedure, refer to "READ CURRENT DATA FOR ENGINE". <Ref. to EN(H4SO U5)(diag)-28, Subaru Select Monitor.>	Is the voltage 1.64 — 1.70 V?	Go to step **23.**	Repair the poor contact in electronic throttle control connector. If problem persists, replace the electronic throttle control.
23	**CHECK HARNESS BETWEEN ECM AND ELECTRONIC THROTTLE CONTROL MOTOR.** 1) Turn the ignition switch to OFF. 2) Disconnect the connector from ECM. 3) Disconnect the connectors from electronic throttle control. 4) Measure the resistance between ECM connector and electronic throttle control connector. ***Connector & terminal*** ***(B137) No. 5 — (E57) No. 2:*** ***(B137) No. 4 — (E57) No. 1:***	Is the resistance less than 1 Ω?	Go to step **24.**	Repair the open harness connector.
24	**CHECK HARNESS BETWEEN ECM AND ELECTRONIC THROTTLE CONTROL MOTOR.** 1) Connect the connectors to ECM. 2) Turn the ignition switch to ON. 3) Measure the voltage between electronic throttle control connector and engine ground. ***Connector & terminal*** ***(E57) No. 2 (+) — Engine ground (−):*** ***(E57) No. 1 (+) — Engine ground (−):***	Is the voltage less than 5 V?	Go to step **25.**	Repair the short of harness to power supply circuit between ECM and electronic throttle control.

	Step	Check	Yes	No
25	**CHECK HARNESS BETWEEN ECM AND ELECTRONIC THROTTLE CONTROL MOTOR.** 1) Turn the ignition switch to OFF. 2) Disconnect the connector from ECM. 3) Measure the resistance between electronic throttle control connector and engine ground. ***Connector & terminal*** ***(E57) No. 2 — Engine ground:*** ***(E57) No. 1 — Engine ground:***	Is the resistance more than 1 MΩ?	Go to step **26.**	Repair the short of harness.
26	**CHECK ELECTRONIC THROTTLE CONTROL MOTOR HARNESS.** Measure the resistance between electronic throttle control connector terminals. ***Connector & terminal*** ***(E57) No. 2 — (E57) No. 1:***	Is the resistance more than 1 MΩ?	Go to step **27.**	Repair the short of harness.
27	**CHECK ELECTRONIC THROTTLE CONTROL GROUND CIRCUIT.** Measure the resistance between ECM connector and chassis ground. ***Connector & terminal*** ***(B137) No. 3 — Chassis ground:***	Is the resistance less than 10 Ω?	Go to step **28.**	Repair the open circuit harness.
28	**CHECK ELECTRONIC THROTTLE CONTROL.** Measure the resistance between electronic throttle control terminals. ***Terminals*** ***No. 1 — No. 2:***	Is the resistance less than 5 Ω?	Go to step **29.**	Replace the electronic throttle control.
29	**CHECK ELECTRONIC THROTTLE CONTROL.** Open and close the throttle valve to its full width with finger.	Does it return to specified position (3 mm (0.12 in) open from fully closed position.) when finger is released?	Repair the poor contact in ECM connector. If problem persists, replace the ECM. <Ref. to FU(H4SO U5)-44, Engine Control Module (ECM).>	Replace the electronic throttle control.

DY:DTC P2102 THROTTLE ACTUATOR CONTROL MOTOR CIRCUIT LOW

DTC DETECTING CONDITION:

- Detect as soon as malfunction occurs.
- GENERAL DESCRIPTION <Ref. to GD(H4SO U5)-237, DTC P2102 THROTTLE ACTUATOR CONTROL MOTOR CIRCUIT LOW, Diagnostic Trouble Code (DTC) Detecting Criteria.>

TROUBLE SYMPTOM:

- Erroneous idling
- Poor driving performance
- Engine stalls.

WIRING DIAGRAM:

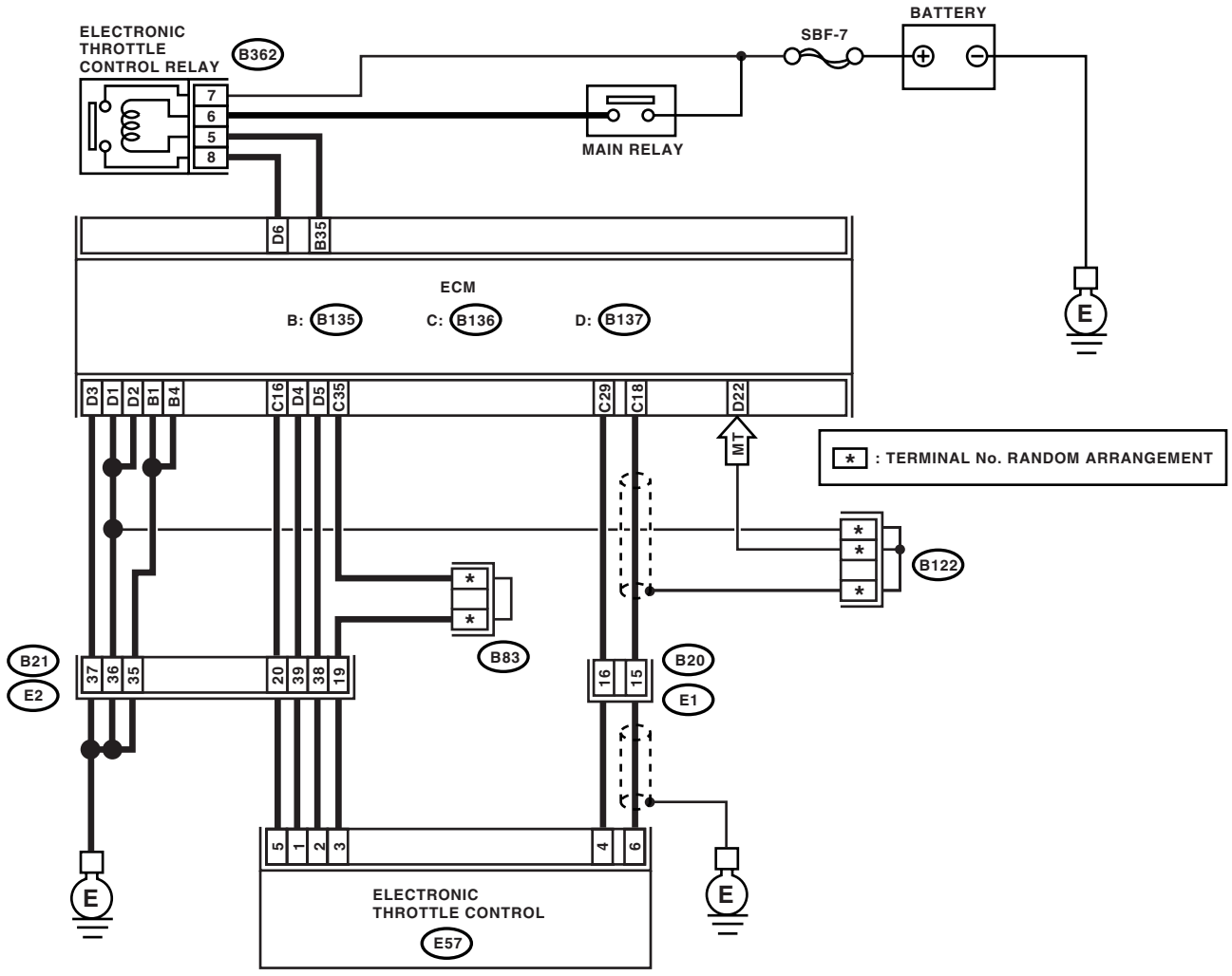

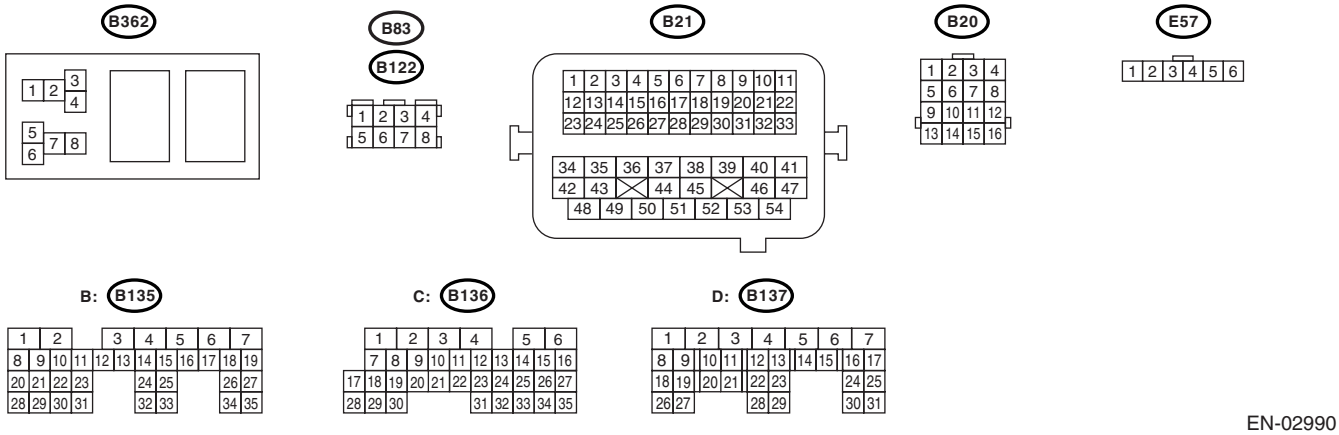

EN-02990

	Step	Check	Yes	No
1	**CHECK ELECTRONIC THROTTLE CONTROL RELAY.** 1) Turn the ignition switch to OFF. 2) Remove the electronic throttle control relay. 3) Connect the battery to electronic throttle control relay terminal No. 5 and No. 6. 4) Measure the resistance between electronic throttle control terminals. ***Connector & terminal*** ***No. 7 — No. 8:***	Is the resistance less than 1 Ω?	Go to step **2.**	Replace the electronic throttle control relay.
2	**CHECK POWER TO ELECTRONIC THROTTLE CONTROL RELAY.** 1) Turn the ignition switch to ON. 2) Measure the voltage between electronic throttle control relay connector and chassis ground. ***Connector & terminal*** ***(B362) No. 7 (+) — Chassis ground (−):*** ***(B362) No. 6 (+) — Chassis ground (−):***	Is the voltage more than 10 V?	Go to step **3.**	Repair the open power supply circuit or ground short.
3	**CHECK HARNESS BETWEEN ECM AND ELECTRONIC THROTTLE CONTROL.** 1) Disconnect the connector from ECM. 2) Turn the ignition switch to OFF. 3) Turn the ignition switch to ON. 4) Measure the voltage between electronic throttle control relay connector and chassis ground. ***Connector & terminal*** ***(B362) No. 5 (+) — Chassis ground (−):***	Is the voltage more than 10 V?	Repair the short of power supply circuit between ECM and electronic throttle control.	Go to step **4.**
4	**CHECK HARNESS BETWEEN ECM AND ELECTRONIC THROTTLE CONTROL RELAY.** 1) Turn the ignition switch to OFF. 2) Measure the resistance between electronic throttle control relay connector and chassis ground. ***Connector & terminal*** ***(B362) No. 5 — Chassis ground:*** ***(B362) No. 8 — Chassis ground:***	Is the resistance more than 1 MΩ?	Go to step **5.**	Repair the ground short of harness between ECM and electronic throttle control relay.
5	**CHECK HARNESS BETWEEN ECM AND ELECTRONIC THROTTLE CONTROL RELAY.** Measure the resistance between ECM connector and electronic throttle control relay connector. ***Connector & terminal*** ***(B135) No. 35 — (B362) No. 5:*** ***(B137) No. 6 — (B362) No. 8:***	Is the resistance less than 1 Ω?	Repair the poor contact in ECM connector. If problem persists, replace the ECM.	Repair the open harness between ECM and electronic throttle control relay.

DZ:DTC P2103 THROTTLE ACTUATOR CONTROL MOTOR CIRCUIT HIGH

DTC DETECTING CONDITION:

- Detect as soon as malfunction occurs.
- GENERAL DESCRIPTION <Ref. to GD(H4SO U5)-239, DTC P2103 THROTTLE ACTUATOR CONTROL MOTOR CIRCUIT HIGH, Diagnostic Trouble Code (DTC) Detecting Criteria.>

WIRING DIAGRAM:

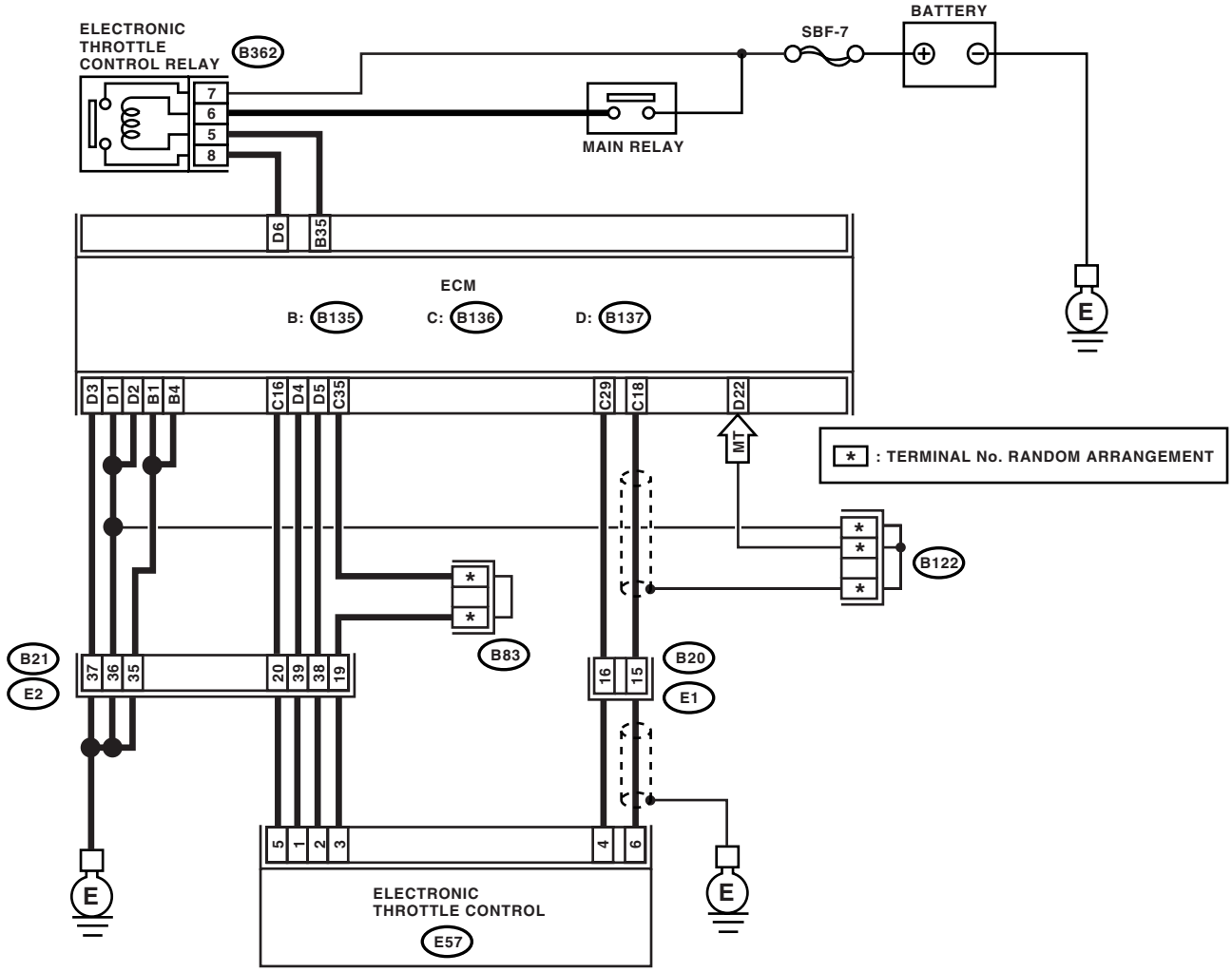

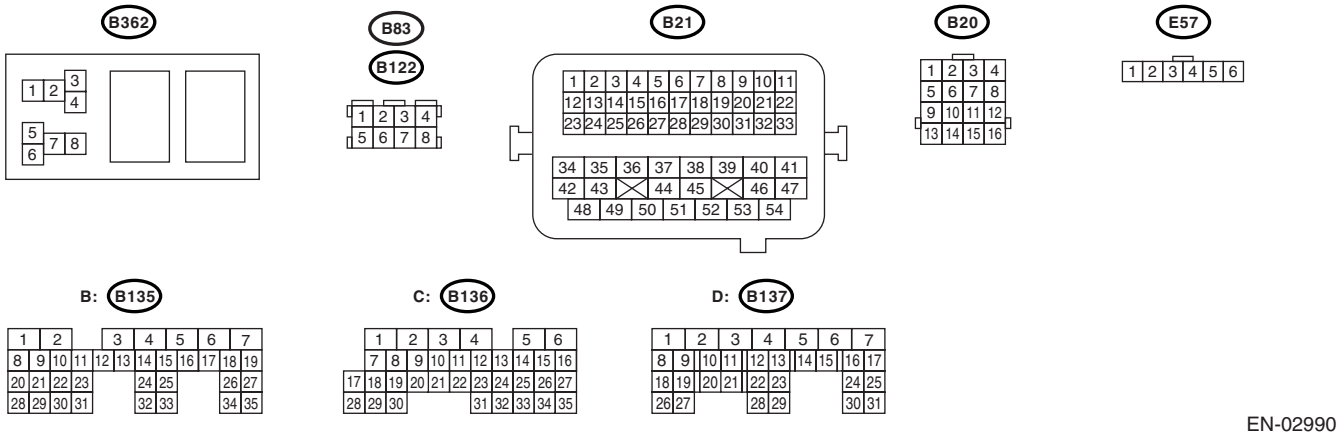

EN-02990

	Step	Check	Yes	No
1	**CHECK ELECTRONIC THROTTLE CONTROL RELAY.** 1) Turn the ignition switch to OFF. 2) Remove the electronic throttle control relay. 3) Measure the resistance between electronic throttle control relay terminals. ***Terminals*** ***No. 7 — No. 8:***	Is the resistance more than 1 MΩ?	Go to step **2.**	Replace the electronic throttle control relay.
2	**CHECK SHORT OF ELECTRONIC THROTTLE CONTROL RELAY POWER SUPPLY CIRCUIT.** 1) Turn the ignition switch to ON. 2) Measure the voltage between electronic throttle control relay connector and chassis ground. ***Connector & terminal*** ***(B362) No. 8 (+) — Chassis ground (−):***	Is the voltage more than 5 V?	Go to step **3.**	Repair the short of power supply to harness between ECM and electronic throttle control relay.
3	**CHECK HARNESS BETWEEN ECM AND ELECTRONIC THROTTLE CONTROL RELAY.** 1) Turn the ignition switch to OFF. 2) Disconnect the connectors from ECM. 3) Measure the resistance between ECM connector and engine ground. ***Connector & terminal*** ***(B135) No. 35 — Engine ground:***	Is the resistance more than 1 MΩ?	Repair the poor contact in ECM connector. If problem persists, replace the ECM.	Repair the ground short of harness between ECM and electronic throttle control relay.

EA:DTC P2109 THROTTLE/PEDAL POSITION SENSOR A MINIMUM STOP PERFORMANCE

NOTE:
For the diagnostic procedure, refer to DTC P2101. <Ref. to EN(H4SO U5)(diag)-339, DTC P2101 THROTTLE ACTUATOR CONTROL MOTOR CIRCUIT RANGE/PERFORMANCE, Diagnostic Procedure with Diagnostic Trouble Code (DTC).>

EB:DTC P2122 THROTTLE/PEDAL POSITION SENSOR/SWITCH “D” CIRCUIT LOW INPUT

DTC DETECTING CONDITION:

- Detect as soon as malfunction occurs.
- GENERAL DESCRIPTION <Ref. to GD(H4SO U5)-242, DTC P2122 THROTTLE/PEDAL POSITION SENSOR/SWITCH “D” CIRCUIT LOW INPUT, Diagnostic Trouble Code (DTC) Detecting Criteria.>

TROUBLE SYMPTOM:

- Erroneous idling
- Poor driving performance

WIRING DIAGRAM:

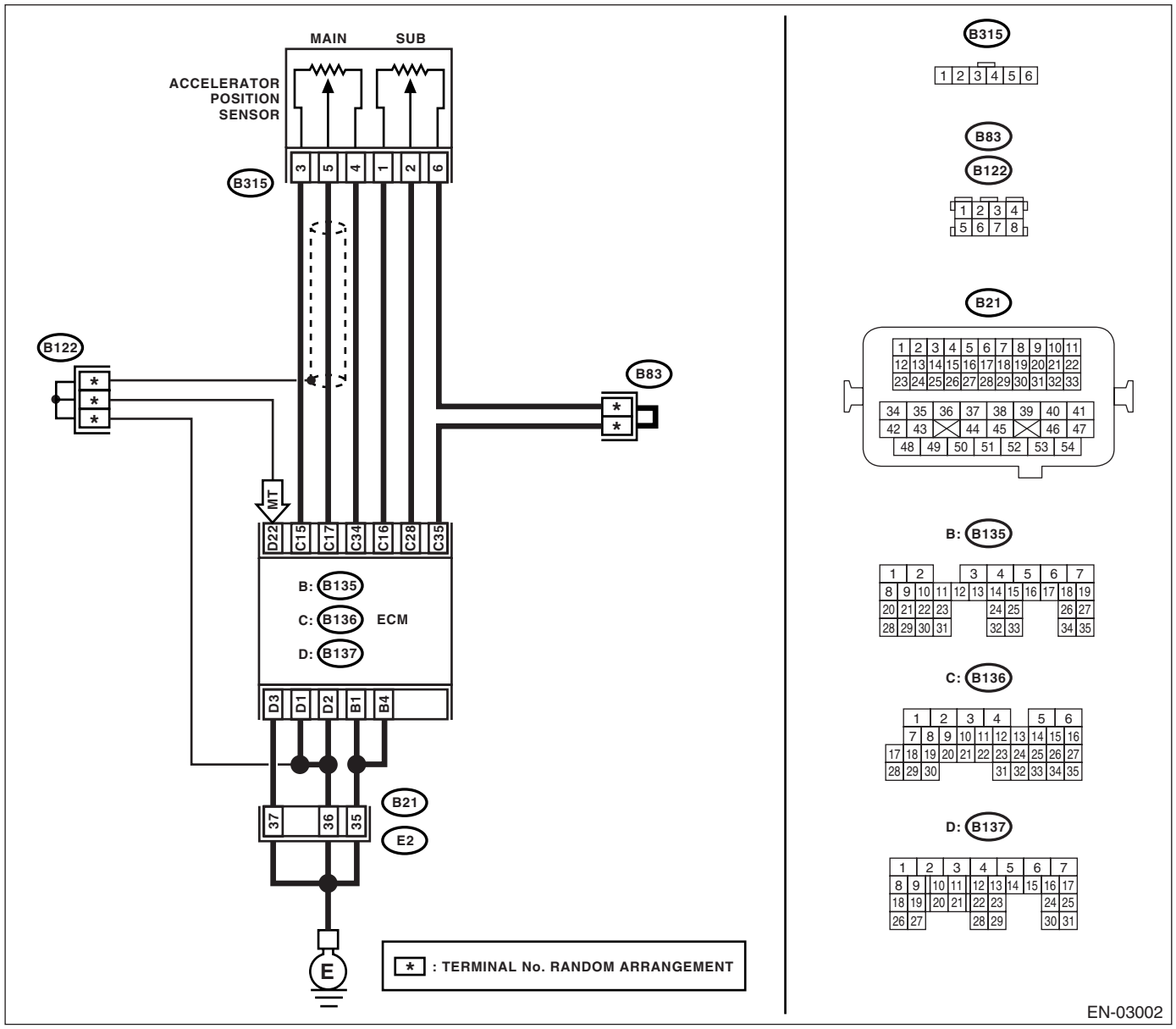

	Step	Check	Yes	No
1	**CHECK OUTPUT VOLTAGE OF ACCELERATOR POSITION SENSOR.** 1) Turn the ignition switch to ON. 2) Read the data of main accelerator position sensor signal using Subaru Select Monitor. NOTE: Subaru Select Monitor For detailed operation procedure, refer to "READ CURRENT DATA FOR ENGINE". <Ref. to EN(H4SO U5)(diag)-28, Subaru Select Monitor.>	Is the voltage more than 0.4 V?	Go to step **2.**	Go to step **3.**
2	**CHECK POOR CONTACT IN CONNECTORS.** Check poor contact in connectors between ECM and accelerator position sensor.	Is there poor contact in connectors between ECM and accelerator position sensor?	Repair the poor contact in connectors.	Connector has returned to its normal condition at this time. A temporary poor contact of the connector may be the cause.
3	**CHECK HARNESS BETWEEN ECM AND ACCELERATOR POSITION SENSOR.** 1) Turn the ignition switch to OFF. 2) Disconnect the connector from ECM. 3) Disconnect the connector from accelerator position sensor. 4) Measure the resistance between ECM connector and accelerator position sensor. ***Connector & terminal*** ***(B136) No. 17 — (B315) No. 5:*** ***(B136) No. 15 — (B315) No. 3:***	Is the resistance less than 1 Ω?	Go to step **4.**	Repair the open harness connector.
4	**CHECK HARNESS BETWEEN ECM AND ACCELERATOR POSITION SENSOR.** Measure the resistance between ECM connector and chassis ground. ***Connector & terminal*** ***(B136) No. 17 — Chassis ground:*** ***(B136) No. 15 — Chassis ground:***	Is the resistance more than 1 MΩ?	Go to step **5.**	Repair the open harness connector.
5	**CHECK ACCELERATOR POSITION SENSOR POWER SUPPLY** 1) Connect the ECM connector. 2) Turn the ignition switch to ON. 3) Measure the voltage between accelerator position sensor connector and chassis ground. ***Connector & terminal*** ***(B315) No. 3 (+) — Chassis ground (−):***	Is the voltage 4.5 — 5.5 V?	Go to step **6.**	Repair the poor contact in ECM connector. If problem persists, replace the ECM. <Ref. to FU(H4SO U5)-44, Engine Control Module (ECM).>
6	**CHECK ACCELERATOR POSITION SENSOR.** Measure the resistance of accelerator position sensor. ***Terminals*** ***No. 3 — No. 4:***	Is the resistance 1.2 — 4.8 kΩ?	Go to step **7.**	Replace the accelerator position sensor.
7	**CHECK ACCELERATOR POSITION SENSOR.** Measure the resistance of accelerator position sensor when accelerator pedal is released. ***Terminals*** ***No. 5 — No. 4:***	Is the resistance 0.2 — 1.0 kΩ?	Go to step **8.**	Replace the accelerator position sensor.

	Step	Check	Yes	No
8	**CHECK ACCELERATOR POSITION SENSOR.** Measure the resistance of accelerator position sensor when acceleration pedal is being depressed. ***Terminals*** ***No. 5 — No. 4:***	Is the resistance 0.5 — 2.5 kΩ?	Repair the poor contact in ECM connector. If problem persists, replace the ECM.	Replace the accelerator position sensor.

EC:DTC P2123 THROTTLE/PEDAL POSITION SENSOR/SWITCH “D” CIRCUIT HIGH INPUT

DTC DETECTING CONDITION:

- Detect as soon as malfunction occurs.
- GENERAL DESCRIPTION <Ref. to GD(H4SO U5)-243, DTC P2123 THROTTLE/PEDAL POSITION SENSOR/SWITCH “D” CIRCUIT HIGH INPUT, Diagnostic Trouble Code (DTC) Detecting Criteria.>

TROUBLE SYMPTOM:

- Erroneous idling
- Poor driving performance

WIRING DIAGRAM:

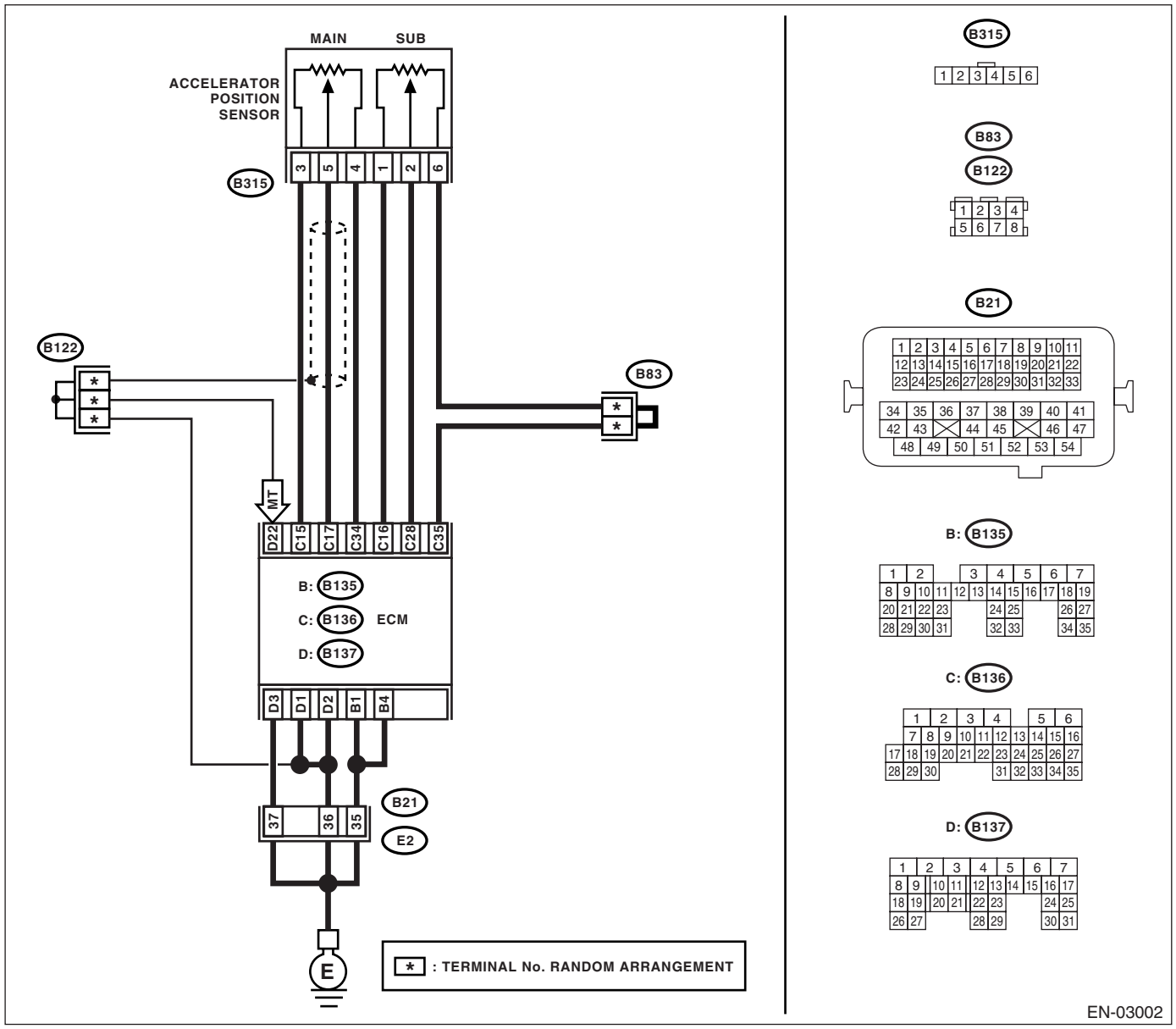

	Step	Check	Yes	No
1	**CHECK OUTPUT VOLTAGE OF ACCELERATOR POSITION SENSOR.** 1) Turn the ignition switch to ON. 2) Read the data of main accelerator position sensor signals, using Subaru Select Monitor. NOTE: Subaru Select Monitor For detailed operation procedure, refer to "READ CURRENT DATA FOR ENGINE". <Ref. to EN(H4SO U5)(diag)-28, Subaru Select Monitor.>	Is the voltage less than 4.8 V?	Go to step **2.**	Go to step **3.**
2	**CHECK POOR CONTACT IN CONNECTORS.** Check poor contact in connectors between ECM and accelerator position sensor.	Is there any poor contact in connectors between ECM and accelerator position sensor?	Repair the poor contact in connectors.	Connector has returned to its normal condition at this time. A temporary poor contact in the connector might have been the cause.
3	**CHECK HARNESS BETWEEN ECM AND ACCELERATOR POSITION SENSOR.** 1) Turn the ignition switch to OFF. 2) Disconnect the connector from ECM. 3) Disconnect the connector from accelerator position sensor. 4) Measure the resistance between ECM connector and accelerator position sensor. ***Connector & terminal*** ***(B136) No. 34 — (B315) No. 4:***	Is the resistance less than 1 Ω?	Go to step **4.**	Repair the open harness connector.
4	**CHECK HARNESS BETWEEN ECM AND ACCELERATOR POSITION SENSOR.** 1) Connect the ECM connector. 2) Measure the resistance between accelerator position sensor and chassis ground. ***Connector & terminal*** ***(B315) No. 4 — Chassis ground:***	Is the resistance less than 5 Ω?	Go to step **5.**	Repair the poor contact in ECM connector. If problem persists, replace the ECM. <Ref. to FU(H4SO U5)-44, Engine Control Module (ECM).>
5	**CHECK HARNESS BETWEEN ECM AND ACCELERATOR POSITION SENSOR.** 1) Connect the ECM connector. 2) Turn the ignition switch to ON. 3) Measure the voltage between accelerator position sensor connector and chassis ground. ***Connector & terminal*** ***(B315) No. 5 (+) — Chassis ground (−):***	Is the voltage less than 6 V?	Go to step **6.**	Repair the battery short of harness between ECM connector and accelerator position sensor.
6	**CHECK HARNESS BETWEEN ECM AND ACCELERATOR POSITION SENSOR.** 1) Turn the ignition switch to OFF. 2) Disconnect the connector from ECM. 3) Measure the resistance between ECM connectors. ***Connector & terminal*** ***(B136) No. 17 — (B136) No. 15:*** ***(B136) No. 17 — (B136) No. 16:***	Is the resistance more than 1 MΩ?	Repair the poor contact in electronic throttle control connector. If problem persists, replace the electronic throttle control.	Repair the short to sensor power supply.

ED:DTC P2127 THROTTLE/PEDAL POSITION SENSOR/SWITCH “E” CIRCUIT LOW INPUT

DTC DETECTING CONDITION:

- Detect as soon as malfunction occurs.
- GENERAL DESCRIPTION <Ref. to GD(H4SO U5)-245, DTC P2127 THROTTLE/PEDAL POSITION SENSOR/SWITCH “E” CIRCUIT LOW INPUT, Diagnostic Trouble Code (DTC) Detecting Criteria.>

TROUBLE SYMPTOM:

- Erroneous idling
- Poor driving performance

WIRING DIAGRAM:

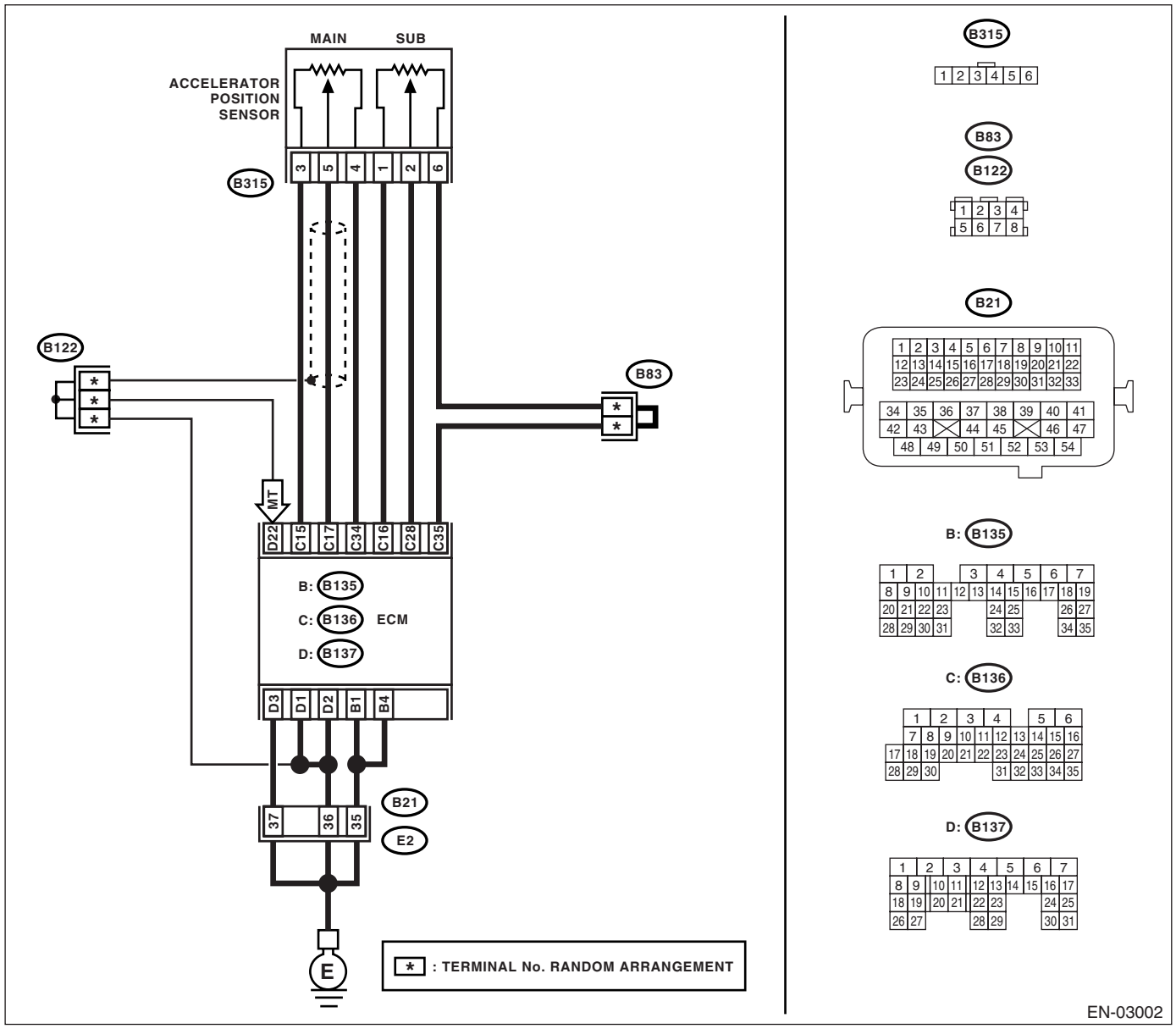

	Step	Check	Yes	No
1	**CHECK OUTPUT VOLTAGE OF ACCELERATOR POSITION SENSOR.** 1) Turn the ignition switch to ON. 2) Read the data of sub accelerator position sensor signal using Subaru Select Monitor. NOTE: Subaru Select Monitor For detailed operation procedure, refer to "READ CURRENT DATA FOR ENGINE". <Ref. to EN(H4SO U5)(diag)-28, Subaru Select Monitor.>	Is the voltage more than 0.4 V?	Go to step **2.**	Go to step **3.**
2	**CHECK POOR CONTACT IN CONNECTORS.** Check poor contact in connectors between ECM and accelerator position sensor.	Is there any poor contact in connectors between ECM and accelerator position sensor?	Repair the poor contact in connectors.	Connector has returned to its normal condition at this time. A temporary poor contact in the connector might have been the cause.
3	**CHECK HARNESS BETWEEN ECM AND ACCELERATOR POSITION SENSOR.** 1) Turn the ignition switch to OFF. 2) Disconnect the connector from ECM. 3) Disconnect the connector from accelerator position sensor. 4) Measure the resistance between ECM connector and accelerator position sensor. ***Connector & terminal*** ***(B136) No. 28 — (B315) No. 2:*** ***(B136) No. 16 — (B315) No. 1:***	Is the resistance less than 1 Ω?	Go to step **4.**	Repair the open harness connector.
4	**CHECK HARNESS BETWEEN ECM AND ACCELERATOR POSITION SENSOR.** Measure the resistance between ECM connector and chassis ground. ***Connector & terminal*** ***(B136) No. 28 — Chassis ground:*** ***(B136) No. 16 — Chassis ground:***	Is the resistance more than 1 MΩ?	Go to step **5.**	Repair the ground short of harness.
5	**CHECK POWER SUPPLY TO ACCELERATOR POSITION SENSOR.** 1) Connect the ECM connector. 2) Turn the ignition switch to ON. 3) Measure the voltage between accelerator position sensor connector and chassis ground. ***Connector & terminal*** ***(B315) No. 1 (+) — Chassis ground (−):***	Is the voltage 4.5 — 5.5 V?	Go to step **6.**	Repair the poor contact in ECM connector. If problem persists, replace the ECM. <Ref. to FU(H4SO U5)-44, Engine Control Module (ECM).>
6	**CHECK ACCELERATOR POSITION SENSOR.** Measure the resistance of accelerator position sensor. ***Terminals*** ***No. 1 — No. 6:***	Is the resistance 0.75 — 3.15 kΩ?	Go to step **7.**	Replace the accelerator position sensor.
7	**CHECK ACCELERATOR POSITION SENSOR.** Measure the resistance of accelerator position sensor when accelerator pedal is released. ***Terminals*** ***No. 2 — No. 6:***	Is the resistance 0.15 — 0.63 kΩ?	Go to step **8.**	Replace the accelerator position sensor.

	Step	Check	Yes	No
8	**CHECK ACCELERATOR POSITION SENSOR.** Measure the resistance of accelerator position sensor when acceleration pedal is being depressed. ***Terminals*** ***No. 2 — No. 6:***	Is the resistance 0.28 — 1.68 kΩ?	Repair the poor contact in ECM connector. If problem persists, replace the ECM.	Replace the accelerator position sensor.

EE:DTC P2128 THROTTLE/PEDAL POSITION SENSOR/SWITCH “E” CIRCUIT HIGH INPUT

DTC DETECTING CONDITION:

- Detect as soon as malfunction occurs.
- GENERAL DESCRIPTION <Ref. to GD(H4SO U5)-246, DTC P2128 THROTTLE/PEDAL POSITION SENSOR/SWITCH “E” CIRCUIT HIGH INPUT, Diagnostic Trouble Code (DTC) Detecting Criteria.>

TROUBLE SYMPTOM:

- Erroneous idling
- Poor driving performance

WIRING DIAGRAM:

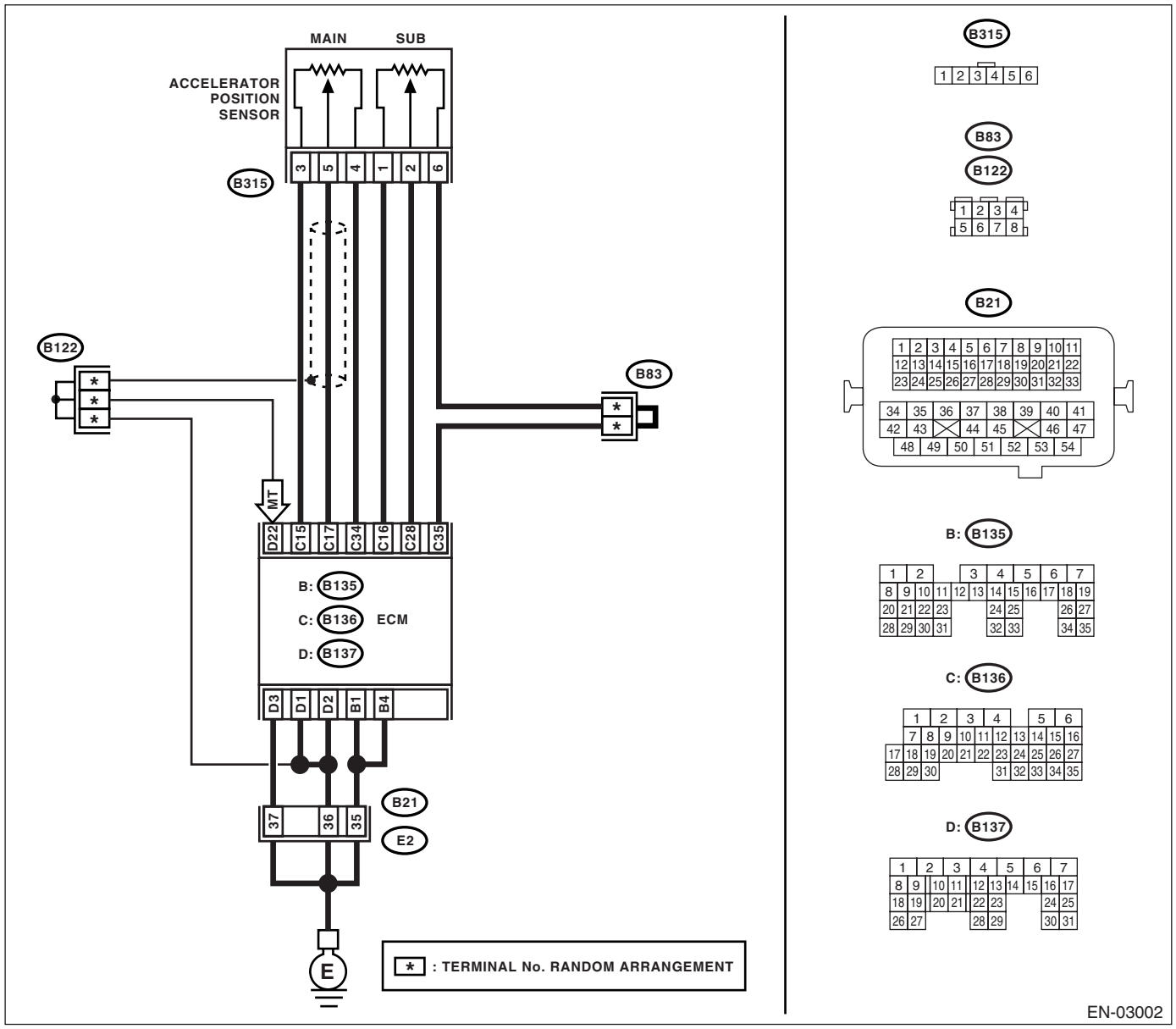

	Step	Check	Yes	No
1	**CHECK OUTPUT VOLTAGE OF ACCELERATOR POSITION SENSOR.** 1) Turn the ignition switch to ON. 2) Read the data of sub accelerator position sensor signals, using Subaru Select Monitor. NOTE: Subaru Select Monitor For detailed operation procedure, refer to "READ CURRENT DATA FOR ENGINE". <Ref. to EN(H4SO U5)(diag)-28, Subaru Select Monitor.>	Is the voltage less than 4.8 V?	Go to step **2.**	Go to step **3.**
2	**CHECK POOR CONTACT IN CONNECTORS.** Check poor contact in connectors between ECM and accelerator position sensor.	Is there any poor contact in connectors between ECM and accelerator position sensor?	Repair the poor contact in connectors.	Connector has returned to its normal condition at this time. A temporary poor contact in the connector might have been the cause.
3	**CHECK HARNESS BETWEEN ECM AND ACCELERATOR POSITION SENSOR.** 1) Turn the ignition switch to OFF. 2) Disconnect the connector from ECM. 3) Disconnect the connector from accelerator position sensor. 4) Measure the resistance between ECM connector and accelerator position sensor. ***Connector & terminal*** ***(B136) No. 35 — (B315) No. 6:***	Is the resistance less than 1 Ω?	Go to step **4.**	Repair the open harness connector.
4	**CHECK HARNESS BETWEEN ECM AND ACCELERATOR POSITION SENSOR.** 1) Connect the ECM connector. 2) Measure the resistance between accelerator position sensor connector and chassis ground. ***Connector & terminal*** ***(B315) No. 6 — Chassis ground:***	Is the resistance less than 5 Ω?	Go to step **5.**	Repair the poor contact in ECM connector. If problem persists, replace the ECM.
5	**CHECK HARNESS BETWEEN ECM AND ACCELERATOR POSITION SENSOR.** 1) Connect the ECM connector. 2) Turn the ignition switch to ON. 3) Measure the voltage between accelerator position sensor connector and chassis ground. ***Connector & terminal*** ***(B315) No. 2 (+) — Chassis ground (−):***	Is the voltage less than 6 V?	Go to step **6.**	Repair the battery short of harness between ECM connector and accelerator position sensor connector.
6	**CHECK HARNESS BETWEEN ECM AND ACCELERATOR POSITION SENSOR.** 1) Turn the ignition switch to OFF. 2) Disconnect the connector from ECM. 3) Measure the resistance between ECM connectors. ***Connector & terminal*** ***(B136) No. 28 (+) — (B136) No. 15 (−):*** ***(B136) No. 28 (+) — (B136) No. 16 (−):***	Is the voltage 4.8 V?	Repair the poor contact in electronic throttle control connector. If problem persists, replace the electronic throttle control.	Repair the short to sensor power supply.

EF:DTC P2135 THROTTLE/PEDAL POSITION SENSOR/SWITCH “A”/“B” VOLTAGE RATIONALITY

DTC DETECTING CONDITION:

- Detect as soon as malfunction occurs.
- GENERAL DESCRIPTION <Ref. to GD(H4SO U5)-248, DTC P2135 THROTTLE/PEDAL POSITION SENSOR/SWITCH “A”/“B” VOLTAGE RATIONALITY, Diagnostic Trouble Code (DTC) Detecting Criteria.>

TROUBLE SYMPTOM:

- Erroneous idling
- Poor driving performance

WIRING DIAGRAM:

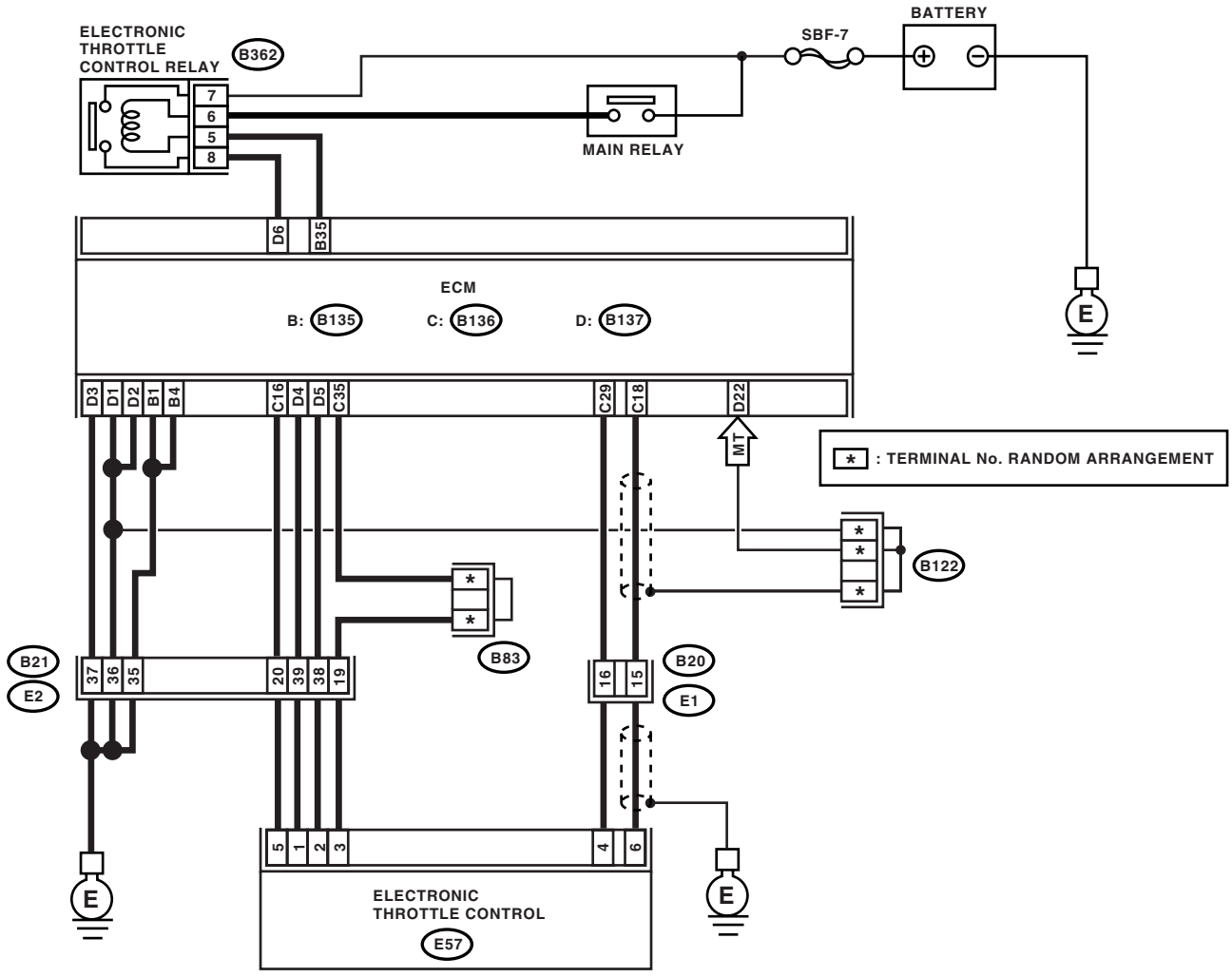

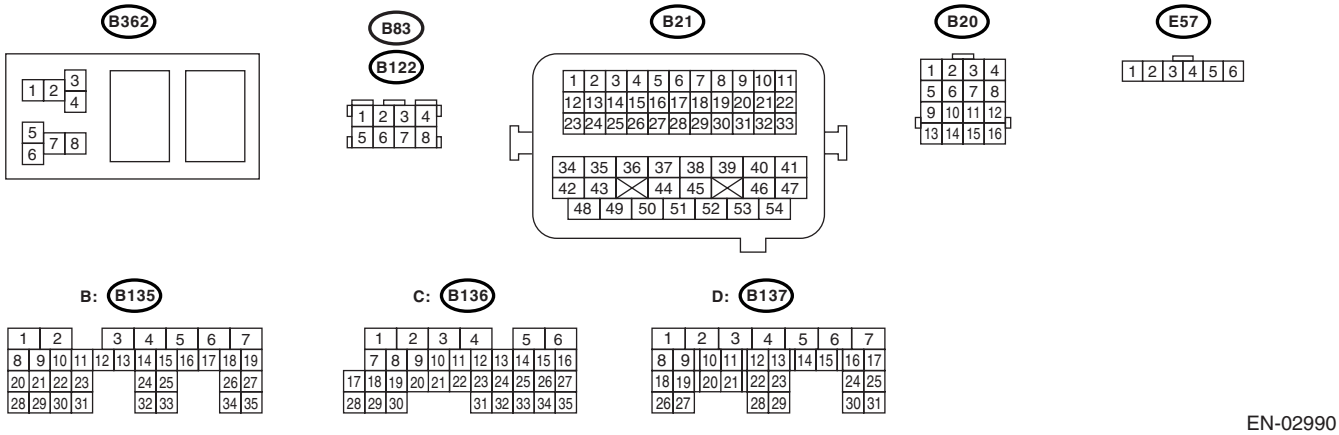

EN-02990

	Step	Check	Yes	No
1	**CHECK OUTPUT VOLTAGE OF ACCELERATOR POSITION SENSOR.** 1) Turn the ignition switch to ON. 2) Read the data of main throttle sensor signal, using Subaru Select Monitor. NOTE: Subaru Select Monitor For detailed operation procedure, refer to "READ CURRENT DATA FOR ENGINE". <Ref. to EN(H4SO U5)(diag)-28, Subaru Select Monitor.>	Is the measured value more than 0.4 V?	Go to step **2.**	Go to step **4.**
2	**CHECK OUTPUT VOLTAGE OF ACCELERATOR POSITION SENSOR.** Read the data of sub throttle sensor signal, using Subaru Select Monitor. NOTE: Subaru Select Monitor For detailed operation procedure, refer to "READ CURRENT DATA FOR ENGINE". <Ref. to EN(H4SO U5)(diag)-28, Subaru Select Monitor.>	Is the measured value more than 0.8 V?	Go to step **3.**	Go to step **4.**
3	**CHECK POOR CONTACT IN CONNECTORS.** Check poor contact in connectors between ECM and electronic throttle control.	Is there any poor contact in connectors between ECM and electronic throttle control?	Repair the poor contact in connectors.	Go to step **14.**
4	**CHECK HARNESS BETWEEN ECM AND ELECTRONIC THROTTLE CONTROL.** 1) Turn the ignition switch to OFF. 2) Disconnect the connector from ECM. 3) Disconnect the connector from electronic throttle control. 4) Measure the resistance between ECM connector and electronic throttle control connector. ***Connector & terminal*** ***(B136) No. 18 — (E57) No. 6:*** ***(B136) No. 29 — (E57) No. 4:*** ***(B136) No. 16 — (E57) No. 5:***	Is the measured value less than 1 Ω?	Go to step **5.**	Repair the open harness connector.
5	**CHECK HARNESS BETWEEN ECM AND ELECTRONIC THROTTLE CONTROL.** Measure the resistance between ECM connector and chassis ground. ***Connector & terminal*** ***(B136) No. 18 — Chassis ground:*** ***(B136) No. 29 — Chassis ground:*** ***(B136) No. 16 — Chassis ground:***	Is the resistance more than 1 MΩ?	Go to step **6.**	Repair the ground short of harness.
6	**CHECK POWER SUPPLY TO SENSOR.** 1) Connect the ECM connector. 2) Turn the ignition switch to ON. 3) Measure the voltage between electronic throttle control connector and engine ground. ***Connector & terminal*** ***(E57) No. 5 (+) — Engine ground (−):***	Is the measured value 4.5 — 5.5 V?	Go to step **7.**	Repair the poor contact in ECM connector. If problem persists, replace the ECM.
7	**CHECK SHORT OF ECM.** 1) Turn the ignition switch to OFF. 2) Measure the resistance between electronic throttle control connector and engine ground. ***Connector & terminal*** ***(E57) No. 6 — Engine ground:*** ***(E57) No. 4 — Engine ground:***	Is the measured value more than 10 Ω?	Go to step **8.**	Repair the poor contact in ECM connector. If problem persists, replace the ECM. <Ref. to FU(H4SO U5)-44, Engine Control Module (ECM).>

	Step	Check	Yes	No
8	**CHECK OUTPUT VOLTAGE OF ACCELERATOR POSITION SENSOR.** 1) Connect all the connectors. 2) Turn the ignition switch to ON. 3) Read the data of main throttle sensor signals, using Subaru Select Monitors. NOTE: Subaru Select Monitor For detailed operation procedure, refer to "READ CURRENT DATA FOR ENGINE". <Ref. to EN(H4SO U5)(diag)-28, Subaru Select Monitor.>	Is the measured value less than 4.63 V?	Go to step **9.**	Go to step **11.**
9	**CHECK OUTPUT VOLTAGE OF ACCELERATOR POSITION SENSOR.** Read the data of sub throttle sensor signals, using Subaru Select Monitors. NOTE: Subaru Select Monitor For detailed operation procedure, refer to "READ CURRENT DATA FOR ENGINE". <Ref. to EN(H4SO U5)(diag)-28, Subaru Select Monitor.>	Is the measured value less than 4.73 V?	Go to step **10.**	Go to step **11.**
10	**CHECK POOR CONTACT IN CONNECTORS.** Check poor contact in connectors between ECM and electronic throttle control.	Is there any poor contact in connectors between ECM and electronic throttle control?	Repair the poor contact in connectors.	Connector has returned to a normal condition at this time. A temporary poor contact in the connector might have been the cause.
11	**CHECK HARNESS BETWEEN ECM AND ELECTRONIC THROTTLE CONTROL.** 1) Turn the ignition switch to OFF. 2) Disconnect the connector from ECM. 3) Disconnect the connector from electronic throttle control. 4) Measure the resistance between ECM connector and electronic throttle control connector. ***Connector & terminal*** ***(B136) No. 35 — (E57) No. 3:*** ***(B136) No. 18 — (E57) No. 6:*** ***(B136) No. 29 — (E57) No. 4:***	Is the measured value less than 1 Ω?	Go to step **12.**	Repair the open harness connector.
12	**CHECK HARNESS BETWEEN ECM AND ELECTRONIC THROTTLE CONTROL.** 1) Connect the ECM connector. 2) Measure the resistance between electronic throttle control connector and engine ground. ***Connector & terminal*** ***(E57) No. 3 — Engine ground:***	Is the measured value less than 5 Ω?	Go to step **13.**	Repair the poor contact in ECM connector. If problem persists, replace the ECM.
13	**CHECK HARNESS BETWEEN ECM AND ELECTRONIC THROTTLE CONTROL.** 1) Connect the ECM connector. 2) Turn the ignition switch to ON. 3) Measure the voltage between electronic throttle control connector and engine ground. ***Connector & terminal*** ***(E57) No. 5 (+) — Engine ground (−):***	Is the measured value less than 10 V?	Go to step **14.**	Repair the battery short of harness between ECM connector and electronic throttle control connector.

	Step	Check	Yes	No
14	**CHECK HARNESS BETWEEN ECM AND ELECTRONIC THROTTLE CONTROL.** Measure the voltage between electronic throttle control connector and engine ground. ***Connector & terminal*** ***(E57) No. 6 (+) — Engine ground (−):*** ***(E57) No. 4 (+) — Engine ground (−):***	Is the measured value less than 10 V?	Go to step **15.**	Repair the short of harness between ECM connector and electronic throttle control connector.
15	**CHECK HARNESS BETWEEN ECM AND ELECTRONIC THROTTLE CONTROL.** 1) Turn the ignition switch to OFF. 2) Disconnect the electronic throttle control connector. 3) Measure the resistance between ECM connectors. ***Connector & terminal*** ***(B136) No. 18 — (B136) No. 16:*** ***(B136) No. 29 — (B136) No. 16:***	Is the measured value more than 1 MΩ?	Go to step **16.**	Repair the short of power supply sensor.
16	**CHECK ELECTRONIC THROTTLE CONTROL HARNESS.** 1) Disconnect the connector from ECM. 2) Disconnect the connector from electronic throttle control. 3) Measure the resistance between electronic throttle control connector terminals. ***Connector & terminal*** ***(E57) No. 6 — (E57) No. 4:***	Is the measured value more than 1 MΩ?	Repair the poor contact in ECM connector. If problem persists, replace the ECM.	Repair the short of harness.

EG:DTC P2138 THROTTLE/PEDAL POSITION SENSOR/SWITCH “D”/“E” VOLTAGE RATIONALITY

DTC DETECTING CONDITION:

- Detect as soon as malfunction occurs.
- GENERAL DESCRIPTION <Ref. to GD(H4SO U5)-250, DTC P2138 THROTTLE/PEDAL POSITION SENSOR/SWITCH “D”/“E” VOLTAGE RATIONALITY, Diagnostic Trouble Code (DTC) Detecting Criteria.>

TROUBLE SYMPTOM:

- Erroneous idling
- Poor driving performance

WIRING DIAGRAM:

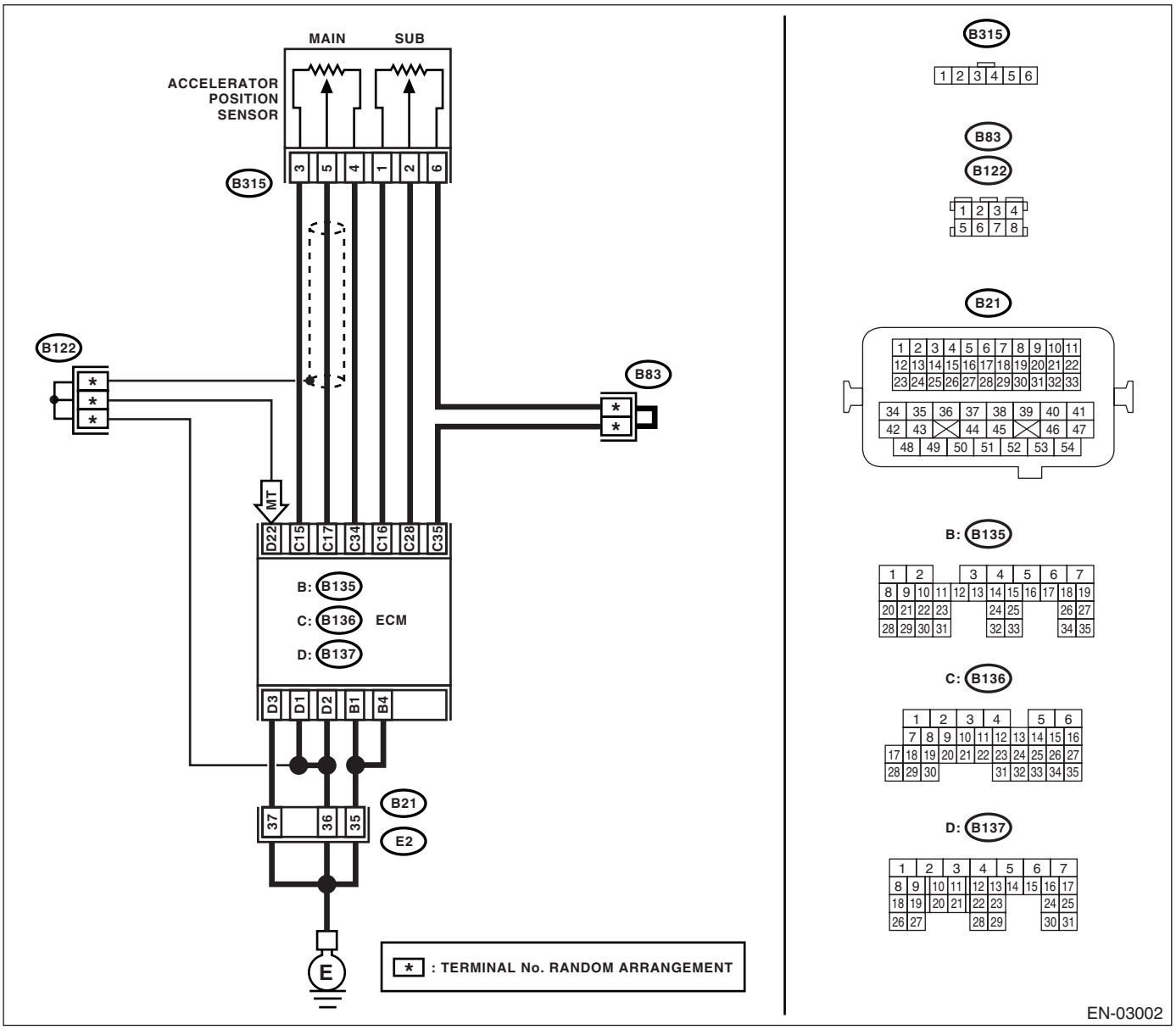

	Step	Check	Yes	No
1	**CHECK OUTPUT VOLTAGE OF ACCELERATOR POSITION SENSOR.** 1) Turn the ignition switch to ON. 2) Read the data of main and sub accelerator position sensor signals using Subaru Select Monitor. NOTE: Subaru Select Monitor For detailed operation procedure, refer to "READ CURRENT DATA FOR ENGINE". <Ref. to EN(H4SO U5)(diag)-28, Subaru Select Monitor.>	Is the measured value more than 0.4 V?	Go to step **2.**	Go to step **3.**
2	**CHECK POOR CONTACT IN CONNECTORS.** Check poor contact in connectors between ECM and electronic throttle control.	Is there any poor contact in connectors between ECM and electronic throttle control?	Repair the poor contact in connectors.	Go to step **9.**
3	**CHECK HARNESS BETWEEN ECM AND ACCELERATOR POSITION SENSOR.** 1) Turn the ignition switch to OFF. 2) Disconnect the connector from ECM. 3) Disconnect the connector from accelerator position sensor. 4) Measure the resistance between ECM connector and accelerator position sensor connector. ***Connector & terminal*** ***(B136) No. 17 — (B315) No. 5:*** ***(B136) No. 15 — (B315) No. 3:*** ***(B136) No. 28 — (B315) No. 2:*** ***(B136) No. 16 — (B315) No. 1:***	Is the measured value less than 1 Ω?	Go to step **4.**	Repair the open harness connector.
4	**CHECK HARNESS BETWEEN ECM AND ACCELERATOR POSITION SENSOR.** Measure the resistance between ECM connector and chassis ground. ***Connector & terminal*** ***(B136) No. 17 — Chassis ground:*** ***(B136) No. 15 — Chassis ground:*** ***(B136) No. 28 — Chassis ground:*** ***(B136) No. 16 — Chassis ground:***	Is the measured value more than 1 MΩ?	Go to step **5.**	Repair the ground short of harness.
5	**CHECK POWER SUPPLY TO ACCELERATOR POSITION SENSOR.** 1) Connect the ECM connector. 2) Turn the ignition switch to ON. 3) Measure the voltage between accelerator position sensor connector and engine ground. ***Connector & terminal*** ***(B315) No. 3 (+) — Engine ground (−):*** ***(B315) No. 1 (+) — Engine ground (−):***	Is the measured value 4.5 — 5.5 V?	Go to step **6.**	Repair the poor contact in ECM connector. If problem persists, replace the ECM.
6	**CHECK ACCELERATOR POSITION SENSOR.** Measure the resistance of accelerator position sensor. ***Terminals*** ***No. 3 — No. 4:***	Is the measured value 1.2 — 4.8 kΩ?	Go to step **7.**	Replace the accelerator position sensor.
7	**CHECK ACCELERATOR POSITION SENSOR.** Measure the resistance of accelerator position sensor. ***Terminals*** ***No. 1 — No. 6:***	Is the measured value 0.75 — 3.15 kΩ?	Go to step **8.**	Replace the accelerator position sensor.

	Step	Check	Yes	No
8	**CHECK ACCELERATOR POSITION SENSOR.** Measure the resistance of accelerator position sensor when the acceleration pedal is released. ***Terminals*** ***No. 5 — No. 4:***	Is the measured value 0.2 — 0.8 kΩ?	Go to step **9.**	Replace the accelerator position sensor.
9	**CHECK ACCELERATOR POSITION SENSOR.** Measure the resistance of accelerator position sensor when the acceleration pedal is released. ***Connector & terminal*** ***No. 2 — No. 6:***	Is the measured value 0.15 — 0.63 kΩ?	Go to step **10.**	Replace the accelerator position sensor.
10	**CHECK ACCELERATOR POSITION SENSOR.** Measure the resistance of accelerator position sensor when the acceleration pedal is being depressed. ***Terminals*** ***No. 5 — No. 4:***	Is the measured value 0.5 — 2.5 kΩ?	Go to step **11.**	Replace the accelerator position sensor.
11	**CHECK ACCELERATOR POSITION SENSOR.** Measure the resistance of accelerator position sensor when the acceleration pedal is being depressed. ***Terminals*** ***No. 2 — No. 6:***	Is the measured value 0.28 — 1.68 kΩ?	Go to step **12.**	Replace the accelerator position sensor.
12	**CHECK OUTPUT VOLTAGE OF ACCELERATOR POSITION SENSOR.** 1) Turn the ignition switch to OFF. 2) Connect all the connectors. 3) Turn the ignition switch to ON. 4) Read the data of main accelerator position sensor signals and sub accelerator position sensor signals, using Subaru Select Monitor. NOTE: Subaru Select Monitor For detailed operation procedure, refer to “READ CURRENT DATA FOR ENGINE”. <Ref. to EN(H4SO U5)(diag)-28, Subaru Select Monitor.>	Is the measured value less than 4.8 V?	Go to step **13.**	Go to step **14.**
13	**CHECK POOR CONTACT IN CONNECTORS.** Check poor contact in connectors between ECM and electronic throttle control.	Is there any poor contact in connectors between ECM and electronic throttle control?	Repair the poor contact in connectors.	Go to step **18.**
14	**CHECK HARNESS BETWEEN ECM AND ACCELERATOR POSITION SENSOR.** 1) Turn the ignition switch to OFF. 2) Disconnect the connector from ECM. 3) Disconnect the connector from accelerator position sensor. 4) Measure the resistance between ECM connector and accelerator position sensor connector. ***Connector & terminal*** ***(B136) No. 34 — (B315) No. 4:*** ***(B136) No. 35 — (B315) No. 6:***	Is the measured value less than 1 Ω?	Go to step **15.**	Repair the open harness connector.

	Step	Check	Yes	No
15	**CHECK HARNESS BETWEEN ECM AND ACCELERATOR POSITION SENSOR.** 1) Connect the ECM connector. 2) Measure the resistance between accelerator position sensor and chassis ground. ***Connector & terminal*** ***(B315) No. 4 — Chassis ground:*** ***(B315) No. 6 — Chassis ground:***	Is the measured value less than 5 Ω?	Go to step **16.**	Repair the poor contact in ECM connector. If problem persists, replace the ECM.
16	**CHECK HARNESS BETWEEN ECM AND ACCELERATOR POSITION SENSOR.** 1) Connect the ECM connector. 2) Turn the ignition switch to ON. 3) Measure the voltage between accelerator position sensor and chassis ground. ***Connector & terminal*** ***(B315) No. 5 (+) — Chassis ground (−):*** ***(B315) No. 2 (+) — Chassis ground (−):***	Is the measured value less than 6 V?	Go to step **17.**	Repair the battery short of harness between ECM connector and accelerator position sensor.
17	**CHECK HARNESS BETWEEN ECM AND ACCELERATOR POSITION SENSOR.** 1) Turn the ignition switch to OFF. 2) Disconnect the connector from ECM. 3) Measure the resistance between ECM connectors. ***Connector & terminal*** ***(B136) No. 17 — (B136) No. 15:*** ***(B136) No. 17 — (B136) No. 16:*** ***(B136) No. 28 — (B136) No. 15:*** ***(B136) No. 28 — (B136) No. 16:***	Is the measured value more than 1 MΩ?	Go to step **18.**	Repair the short to sensor power supply.
18	**CHECK HARNESS BETWEEN ECM AND ACCELERATOR POSITION SENSOR.** 1) Turn the ignition switch to OFF. 2) Disconnect the connector from ECM. 3) Disconnect the connector from accelerator position sensor. 4) Measure the resistance between terminals of accelerator position sensor connector. ***Connector & terminal*** ***(B315) No. 5 — (B315) No. 2:***	Is the measured value more than 1 MΩ?	Repair the poor contact in ECM connector. If problem persists, replace the ECM.	Repair the short of harness between accelerator position sensor connector and accelerator position sensor connector.

EH:DTC P2227 BAROMETRIC PRESSURE CIRCUIT RANGE/PERFORMANCE

DTC DETECTING CONDITION:

- Two consecutive driving cycles with fault
- GENERAL DESCRIPTION <Ref. to GD(H4SO U5)-252, DTC P2227 BAROMETRIC PRESSURE CIRCUIT RANGE/PERFORMANCE, Diagnostic Trouble Code (DTC) Detecting Criteria.>

CAUTION:
After repair or replacement of faulty parts, conduct Clear Memory Mode <Ref. to EN(H4SO U5)(diag)-46, OPERATION, Clear Memory Mode.> and Inspection Mode <Ref. to EN(H4SO U5)(diag)-37, OPERATION, Inspection Mode.>.

	Step	Check	Yes	No
1	**CHECK FOR ANY OTHER DTC ON DISPLAY.**	Is any other DTC displayed?	Check DTC using "List of Diagnostic Trouble Code (DTC)". <Ref. to EN(H4SO U5)(diag)-73, List of Diagnostic Trouble Code (DTC).> NOTE: It is not necessary to inspect DTC P0129.	Replace the ECM. <Ref. to FU(H4SO U5)-44, Engine Control Module (ECM).>

EI: DTC P2228 BAROMETRIC PRESSURE CIRCUIT LOW INPUT

DTC DETECTING CONDITION:

- Detect as soon as malfunction occurs.
- GENERAL DESCRIPTION <Ref. to GD(H4SO U5)-253, DTC P2228 BAROMETRIC PRESSURE CIRCUIT LOW INPUT, Diagnostic Trouble Code (DTC) Detecting Criteria.>

CAUTION:
After repair or replacement of faulty parts, conduct Clear Memory Mode <Ref. to EN(H4SO U5)(diag)-46, OPERATION, Clear Memory Mode.> and Inspection Mode <Ref. to EN(H4SO U5)(diag)-37, OPERATION, Inspection Mode.>.

	Step	Check	Yes	No
1	**CHECK FOR ANY OTHER DTC ON DISPLAY.**	Is any other DTC displayed?	Check DTC using the List of Diagnostic Trouble Code (DTC). <Ref. to EN(H4SO U5)(diag)-73, List of Diagnostic Trouble Code (DTC).> NOTE: It is not necessary to inspect DTC P1110.	Replace the ECM. <Ref. to FU(H4SO U5)-44, Engine Control Module (ECM).>

EJ: DTC P2229 BAROMETRIC PRESSURE CIRCUIT HIGH INPUT

DTC DETECTING CONDITION:

- Detect as soon as malfunction occurs.
- GENERAL DESCRIPTION <Ref. to GD(H4SO U5)-254, DTC P2229 BAROMETRIC PRESSURE CIRCUIT HIGH INPUT, Diagnostic Trouble Code (DTC) Detecting Criteria.>

CAUTION:
After repair or replacement of faulty parts, conduct Clear Memory Mode <Ref. to EN(H4SO U5)(diag)-46, OPERATION, Clear Memory Mode.> and Inspection Mode <Ref. to EN(H4SO U5)(diag)-37, OPERATION, Inspection Mode.>.

	Step	Check	Yes	No
1	**CHECK FOR ANY OTHER DTC ON DISPLAY.**	Is any other DTC displayed?	Check DTC using the List of Diagnostic Trouble Code (DTC). <Ref. to EN(H4SO U5)(diag)-73, List of Diagnostic Trouble Code (DTC).> NOTE: It is not necessary to inspect DTC P1111.	Replace the ECM. <Ref. to FU(H4SO U5)-44, Engine Control Module (ECM).>

19.General Diagnostic Table

A: INSPECTION

1. ENGINE

NOTE:
Malfunction of parts other than those listed is also possible. <Ref. to ME(H4SO)-85, Engine Trouble in General.>

Symptom	Problem parts
1. Engine stalls during idling.	1) Manifold absolute pressure sensor 2) Intake air temperature sensor 3) Air flow and ignition parts (*1) 4) Engine coolant temperature sensor (*2) 5) Crankshaft position sensor (*3) 6) Camshaft position sensor (*3) 7) Fuel injection parts (*4)
2. Rough idling	1) Manifold absolute pressure sensor 2) Intake air temperature sensor 3) Engine coolant temperature sensor (*2) 4) Air flow and ignition parts (*1) 5) Air intake system (*5) 6) Fuel injection parts (*4) 7) Electronic throttle control 8) Crankshaft position sensor (*3) 9) Camshaft position sensor (*3) 10) Oxygen sensor 11) Fuel pump and fuel pump relay 12) EGR valve
3. Engine does not return to idle.	1) Engine coolant temperature sensor 2) Throttle position sensor 3) Manifold absolute pressure sensor 4) Air flow and intake air temperature sensor 5) EGR valve
4. Poor acceleration	1) Manifold absolute pressure sensor 2) Air flow and intake air temperature sensor 3) Electronic throttle control 4) Fuel injection parts (*4) 5) Fuel pump and fuel pump relay 6) Engine coolant temperature sensor (*2) 7) Crankshaft position sensor (*3) 8) Camshaft position sensor (*3) 9) A/C switch and A/C cut relay 10) Engine torque control signal circuit 11) Ignition parts (*1) 12) EGR valve 13) Tumble generator valve
5. Engine stalls or engine sags or hesitates at acceleration.	1) Manifold absolute pressure sensor 2) Air flow and intake air temperature sensor 3) Engine coolant temperature sensor (*2) 4) Crankshaft position sensor (*3) 5) Camshaft position sensor (*3) 6) Purge control solenoid valve 7) Fuel injection parts (*4) 8) Electronic throttle control 9) Fuel pump and fuel pump relay 10) EGR valve 11) Tumble generator valve

Symptom	Problem parts
6. Surge	1) Air flow and intake air temperature sensor 2) Manifold absolute pressure sensor 3) Engine coolant temperature sensor (*2) 4) Crankshaft position sensor (*3) 5) Camshaft position sensor (*3) 6) Fuel injection parts (*4) 7) Electronic throttle control 8) Fuel pump and fuel pump relay 9) EGR valve 10) Tumble generator valve
7. Spark knock	1) Air flow and intake air temperature sensor 2) Manifold absolute pressure sensor 3) Engine coolant temperature sensor 4) Knock sensor 5) Fuel injection parts (*4) 6) Fuel pump and fuel pump relay 7) EGR valve 8) Tumble generator valve
8. After burning in exhaust system	1) Air flow and intake air temperature sensor 2) Manifold absolute pressure sensor 3) Engine coolant temperature sensor (*2) 4) Fuel injection parts (*4) 5) Fuel pump and fuel pump relay

*1: Check ignition coil and ignitor assembly and spark plug.
*2: Indicate the symptom occurring only in cold temperatures.
*3: Ensure the secure installation.
*4: Check fuel injector, fuel pressure regulator and fuel filter.
*5: Inspect air leak in air intake system.

2. AUTOMATIC TRANSMISSION

NOTE:
Check with the general diagnostics table with non-conformity symptom for automatic transmission. <Ref. to 4AT(D)(diag)-2, Basic Diagnostic Procedure.>

GENERAL DESCRIPTION

GD(H4SO U5)

Page

1. List of Diagnostic Trouble Code (DTC) 2
2. Diagnostic Trouble Code (DTC) Detecting Criteria 9

1. List of Diagnostic Trouble Code (DTC)

A: LIST

DTC	Item	Index
P0030	HO2S Heater Control Circuit (Bank 1 Sensor 1)	<Ref. to GD(H4SO U5)-9, DTC P0030 HO2S HEATER CONTROL CIRCUIT (BANK 1 SENSOR 1), Diagnostic Trouble Code (DTC) Detecting Criteria.>
P0031	HO2S Heater Control Circuit Low (Bank 1 Sensor 1)	<Ref. to GD(H4SO U5)-11, DTC P0031 HO2S HEATER CONTROL CIRCUIT LOW (BANK 1 SENSOR 1), Diagnostic Trouble Code (DTC) Detecting Criteria.>
P0032	HO2S Heater Control Circuit High (Bank 1 Sensor 1)	<Ref. to GD(H4SO U5)-13, DTC P0032 HO2S HEATER CONTROL CIRCUIT HIGH (BANK 1 SENSOR 1), Diagnostic Trouble Code (DTC) Detecting Criteria.>
P0037	HO2S Heater Control Circuit Low (Bank 1 Sensor 2)	<Ref. to GD(H4SO U5)-15, DTC P0037 HO2S HEATER CONTROL CIRCUIT LOW (BANK 1 SENSOR 2), Diagnostic Trouble Code (DTC) Detecting Criteria.>
P0038	HO2S Heater Control Circuit High (Bank 1 Sensor 2)	<Ref. to GD(H4SO U5)-17, DTC P0038 HO2S HEATER CONTROL CIRCUIT HIGH (BANK 1 SENSOR 2), Diagnostic Trouble Code (DTC) Detecting Criteria.>
P0043	HO2S Heater Control Circuit Low (Bank 1 Sensor 3)	<Ref. to GD(H4SO U5)-19, DTC P0043 HO2S HEATER CONTROL CIRCUIT LOW (BANK 1 SENSOR 3), Diagnostic Trouble Code (DTC) Detecting Criteria.>
P0044	HO2S Heater Control Circuit High (Bank 1 Sensor 3)	<Ref. to GD(H4SO U5)-21, DTC P0044 HO2S HEATER CONTROL CIRCUIT HIGH (BANK 1 SENSOR 3), Diagnostic Trouble Code (DTC) Detecting Criteria.>
P0050	HO2S Heater Control Circuit (Bank 2 Sensor 1)	<Ref. to GD(H4SO U5)-23, DTC P0050 HO2S HEATER CONTROL CIRCUIT (BANK 2 SENSOR 1), Diagnostic Trouble Code (DTC) Detecting Criteria.>
P0051	HO2S Heater Control Circuit Low (Bank 2 Sensor 1)	<Ref. to GD(H4SO U5)-23, DTC P0051 HO2S HEATER CONTROL CIRCUIT LOW (BANK 2 SENSOR 1), Diagnostic Trouble Code (DTC) Detecting Criteria.>
P0052	HO2S Heater Control Circuit High (Bank 2 Sensor 1)	<Ref. to GD(H4SO U5)-23, DTC P0052 HO2S HEATER CONTROL CIRCUIT HIGH (BANK 2 SENSOR 1), Diagnostic Trouble Code (DTC) Detecting Criteria.>
P0057	HO2S Heater Control Circuit Low (Bank 2 Sensor 2)	<Ref. to GD(H4SO U5)-23, DTC P0057 HO2S HEATER CONTROL CIRCUIT LOW (BANK 2 SENSOR 2), Diagnostic Trouble Code (DTC) Detecting Criteria.>
P0058	HO2S Heater Control Circuit High (Bank 2 Sensor 2)	<Ref. to GD(H4SO U5)-23, DTC P0058 HO2S HEATER CONTROL CIRCUIT HIGH (BANK 2 SENSOR 2), Diagnostic Trouble Code (DTC) Detecting Criteria.>
P0068	MAP/MAF - Throttle Position Correlation	<Ref. to GD(H4SO U5)-24, DTC P0068 MAP/MAF - THROTTLE POSITION CORRELATION, Diagnostic Trouble Code (DTC) Detecting Criteria.>
P0101	Mass or Volume Air Flow Circuit Range/Performance	<Ref. to GD(H4SO U5)-26, DTC P0101 MASS OR VOLUME AIR FLOW CIRCUIT RANGE/PERFORMANCE, Diagnostic Trouble Code (DTC) Detecting Criteria.>
P0102	Mass or Volume Air Flow Circuit Low Input	<Ref. to GD(H4SO U5)-29, DTC P0102 MASS OR VOLUME AIR FLOW CIRCUIT LOW INPUT, Diagnostic Trouble Code (DTC) Detecting Criteria.>
P0103	Mass or Volume Air Flow Circuit High Input	<Ref. to GD(H4SO U5)-31, DTC P0103 MASS OR VOLUME AIR FLOW CIRCUIT HIGH INPUT, Diagnostic Trouble Code (DTC) Detecting Criteria.>
P0107	Manifold Absolute Pressure/Barometric Pressure Circuit Low Input	<Ref. to GD(H4SO U5)-33, DTC P0107 MANIFOLD ABSOLUTE PRESSURE/BAROMETRIC PRESSURE CIRCUIT LOW INPUT, Diagnostic Trouble Code (DTC) Detecting Criteria.>
P0108	Manifold Absolute Pressure/Barometric Pressure Circuit High Input	<Ref. to GD(H4SO U5)-35, DTC P0108 MANIFOLD ABSOLUTE PRESSURE/BAROMETRIC PRESSURE CIRCUIT HIGH INPUT, Diagnostic Trouble Code (DTC) Detecting Criteria.>
P0111	Intake Air Temperature Circuit Range/Performance	<Ref. to GD(H4SO U5)-37, DTC P0111 INTAKE AIR TEMPERATURE CIRCUIT RANGE/PERFORMANCE, Diagnostic Trouble Code (DTC) Detecting Criteria.>

DTC	Item	Index
P0112	Intake Air Temperature Circuit Low Input	<Ref. to GD(H4SO U5)-39, DTC P0112 INTAKE AIR TEMPERATURE CIRCUIT LOW INPUT, Diagnostic Trouble Code (DTC) Detecting Criteria.>
P0113	Intake Air Temperature Circuit High Input	<Ref. to GD(H4SO U5)-41, DTC P0113 INTAKE AIR TEMPERATURE CIRCUIT HIGH INPUT, Diagnostic Trouble Code (DTC) Detecting Criteria.>
P0117	Engine Coolant Temperature Circuit Low Input	<Ref. to GD(H4SO U5)-43, DTC P0117 ENGINE COOLANT TEMPERATURE CIRCUIT LOW INPUT, Diagnostic Trouble Code (DTC) Detecting Criteria.>
P0118	Engine Coolant Temperature Circuit High Input	<Ref. to GD(H4SO U5)-45, DTC P0118 ENGINE COOLANT TEMPERATURE CIRCUIT HIGH INPUT, Diagnostic Trouble Code (DTC) Detecting Criteria.>
P0122	Throttle/Pedal Position Sensor/ Switch “A” Circuit Low Input	<Ref. to GD(H4SO U5)-47, DTC P0122 THROTTLE/PEDAL POSITION SENSOR/SWITCH “A” CIRCUIT LOW INPUT, Diagnostic Trouble Code (DTC) Detecting Criteria.>
P0123	Throttle/Pedal Position Sensor/ Switch “A” Circuit High Input	<Ref. to GD(H4SO U5)-49, DTC P0123 THROTTLE/PEDAL POSITION SENSOR/SWITCH “A” CIRCUIT HIGH INPUT, Diagnostic Trouble Code (DTC) Detecting Criteria.>
P0125	Insufficient Coolant Temperature for Closed Loop Fuel Control	<Ref. to GD(H4SO U5)-51, DTC P0125 INSUFFICIENT ENGINE COOLANT TEMPERATURE FOR CLOSED LOOP FUEL CONTROL, Diagnostic Trouble Code (DTC) Detecting Criteria.>
P0126	Insufficient Coolant Temperature for Stable Operation	<Ref. to GD(H4SO U5)-53, DTC P0126 INSUFFICIENT ENGINE COOLANT TEMPERATURE FOR STABLE OPERATION, Diagnostic Trouble Code (DTC) Detecting Criteria.>
P0128	Coolant Thermostat (Coolant Temperature Below Thermostat Regulating Temperature)	<Ref. to GD(H4SO U5)-55, DTC P0128 COOLANT THERMOSTAT (ENGINE COOLANT TEMPERATURE BELOW THERMOSTAT REGULATING TEMPERATURE), Diagnostic Trouble Code (DTC) Detecting Criteria.>
P0131	O2 Sensor Circuit Low Voltage (Bank 1 Sensor 1)	<Ref. to GD(H4SO U5)-57, DTC P0131 O2 SENSOR CIRCUIT LOW VOLTAGE (BANK 1 SENSOR 1), Diagnostic Trouble Code (DTC) Detecting Criteria.>
P0132	O2 Sensor Circuit High Voltage (Bank 1 Sensor 1)	<Ref. to GD(H4SO U5)-59, DTC P0132 O2 SENSOR CIRCUIT HIGH VOLTAGE (BANK 1 SENSOR 1), Diagnostic Trouble Code (DTC) Detecting Criteria.>
P0133	O2 Sensor Circuit Slow Response (Bank 1 Sensor 1)	<Ref. to GD(H4SO U5)-61, DTC P0133 O2 SENSOR CIRCUIT SLOW RESPONSE (BANK 1 SENSOR 1), Diagnostic Trouble Code (DTC) Detecting Criteria.>
P0134	O2 Sensor Circuit No Activity Detected (Bank 1 Sensor 1)	<Ref. to GD(H4SO U5)-64, DTC P0134 O2 SENSOR CIRCUIT NO ACTIVITY DETECTED (BANK 1 SENSOR 1), Diagnostic Trouble Code (DTC) Detecting Criteria.>
P0137	O2 Sensor Circuit Low Voltage (Bank 1 Sensor 2)	<Ref. to GD(H4SO U5)-66, DTC P0137 O2 SENSOR CIRCUIT LOW VOLTAGE (BANK 1 SENSOR 2), Diagnostic Trouble Code (DTC) Detecting Criteria.>
P0138	O2 Sensor Circuit High Voltage (Bank 1 Sensor 2)	<Ref. to GD(H4SO U5)-68, DTC P0138 O2 SENSOR CIRCUIT HIGH VOLTAGE (BANK 1 SENSOR 2), Diagnostic Trouble Code (DTC) Detecting Criteria.>
P0139	O2 Sensor Circuit Slow Response (Bank 1 Sensor 2)	<Ref. to GD(H4SO U5)-70, DTC P0139 O2 SENSOR CIRCUIT SLOW RESPONSE (BANK 1 SENSOR 2), Diagnostic Trouble Code (DTC) Detecting Criteria.>
P0143	O2 Sensor Circuit Low Voltage (Bank 1 Sensor 3)	<Ref. to GD(H4SO U5)-75, DTC P0143 O2 SENSOR CIRCUIT LOW VOLTAGE (BANK 1 SENSOR 3), Diagnostic Trouble Code (DTC) Detecting Criteria.>
P0144	O2 Sensor Circuit High Voltage (Bank 1 Sensor 3)	<Ref. to GD(H4SO U5)-77, DTC P0144 O2 SENSOR CIRCUIT HIGH VOLTAGE (BANK 1 SENSOR 3), Diagnostic Trouble Code (DTC) Detecting Criteria.>
P0151	O2 Sensor Circuit Low Voltage (Bank 2 Sensor 1)	<Ref. to GD(H4SO U5)-79, DTC P0151 O2 SENSOR CIRCUIT LOW VOLTAGE (BANK 2 SENSOR 1), Diagnostic Trouble Code (DTC) Detecting Criteria.>

DTC	Item	Index
P0152	O2 Sensor Circuit High Voltage (Bank 2 Sensor 1)	<Ref. to GD(H4SO U5)-79, DTC P0152 O2 SENSOR CIRCUIT HIGH VOLTAGE (BANK 2 SENSOR 1), Diagnostic Trouble Code (DTC) Detecting Criteria.>
P0153	O2 Sensor Circuit Slow Response (Bank 2 Sensor 1)	<Ref. to GD(H4SO U5)-79, DTC P0153 O2 SENSOR CIRCUIT SLOW RESPONSE (BANK 2 SENSOR 1), Diagnostic Trouble Code (DTC) Detecting Criteria.>
P0154	O2 Sensor Circuit No Activity Detected (Bank 2 Sensor 1)	<Ref. to GD(H4SO U5)-79, DTC P0154 O2 SENSOR CIRCUIT NO ACTIVITY DETECTED (BANK 2 SENSOR 1), Diagnostic Trouble Code (DTC) Detecting Criteria.>
P0157	O2 Sensor Circuit Low Voltage (Bank 2 Sensor 2)	<Ref. to GD(H4SO U5)-79, DTC P0157 O2 SENSOR CIRCUIT LOW VOLTAGE (BANK 2 SENSOR 2), Diagnostic Trouble Code (DTC) Detecting Criteria.>
P0158	O2 Sensor Circuit High Voltage (Bank 2 Sensor 2)	<Ref. to GD(H4SO U5)-79, DTC P0158 O2 SENSOR CIRCUIT HIGH VOLTAGE (BANK 2 SENSOR 2), Diagnostic Trouble Code (DTC) Detecting Criteria.>
P0159	O2 Sensor Circuit Slow Response (Bank 2 Sensor 2)	<Ref. to GD(H4SO U5)-79, DTC P0159 O2 SENSOR CIRCUIT SLOW RESPONSE (BANK 2 SENSOR 2), Diagnostic Trouble Code (DTC) Detecting Criteria.>
P0171	System Too Lean (Bank 1)	<Ref. to GD(H4SO U5)-80, DTC P0171 SYSTEM TOO LEAN (BANK 1), Diagnostic Trouble Code (DTC) Detecting Criteria.>
P0172	System Too Rich (Bank 1)	<Ref. to GD(H4SO U5)-82, DTC P0172 SYSTEM TOO RICH (BANK 1), Diagnostic Trouble Code (DTC) Detecting Criteria.>
P0174	System Too Lean (Bank 2)	<Ref. to GD(H4SO U5)-84, DTC P0174 SYSTEM TOO LEAN (BANK 2), Diagnostic Trouble Code (DTC) Detecting Criteria.>
P0175	System Too Rich (Bank 2)	<Ref. to GD(H4SO U5)-84, DTC P0175 SYSTEM TOO RICH (BANK 2), Diagnostic Trouble Code (DTC) Detecting Criteria.>
P0181	Fuel Temperature Sensor “A” Circuit Range/Performance	<Ref. to GD(H4SO U5)-84, DTC P0181 FUEL TEMPERATURE SENSOR “A” CIRCUIT RANGE/PERFORMANCE, Diagnostic Trouble Code (DTC) Detecting Criteria.>
P0182	Fuel Temperature Sensor “A” Circuit Low Input	<Ref. to GD(H4SO U5)-87, DTC P0182 FUEL TEMPERATURE SENSOR “A” CIRCUIT LOW INPUT, Diagnostic Trouble Code (DTC) Detecting Criteria.>
P0183	Fuel Temperature Sensor “A” Circuit High Input	<Ref. to GD(H4SO U5)-89, DTC P0183 FUEL TEMPERATURE SENSOR “A” CIRCUIT HIGH INPUT, Diagnostic Trouble Code (DTC) Detecting Criteria.>
P0222	Throttle/Pedal Position Sensor/ Switch “B” Circuit Low Input	<Ref. to GD(H4SO U5)-91, DTC P0222 THROTTLE/PEDAL POSITION SENSOR/SWITCH “B” CIRCUIT LOW INPUT, Diagnostic Trouble Code (DTC) Detecting Criteria.>
P0223	Throttle/Pedal Position Sensor/ Switch “B” Circuit High Input	<Ref. to GD(H4SO U5)-93, DTC P0223 THROTTLE/PEDAL POSITION SENSOR/SWITCH “B” CIRCUIT HIGH INPUT, Diagnostic Trouble Code (DTC) Detecting Criteria.>
P0301	Cylinder 1 Misfire Detected	<Ref. to GD(H4SO U5)-95, DTC P0301 CYLINDER 1 MISFIRE DETECTED, Diagnostic Trouble Code (DTC) Detecting Criteria.>
P0302	Cylinder 2 Misfire Detected	<Ref. to GD(H4SO U5)-100, DTC P0302 CYLINDER 2 MISFIRE DETECTED, Diagnostic Trouble Code (DTC) Detecting Criteria.>
P0303	Cylinder 3 Misfire Detected	<Ref. to GD(H4SO U5)-100, DTC P0303 CYLINDER 3 MISFIRE DETECTED, Diagnostic Trouble Code (DTC) Detecting Criteria.>
P0304	Cylinder 4 Misfire Detected	<Ref. to GD(H4SO U5)-100, DTC P0304 CYLINDER 4 MISFIRE DETECTED, Diagnostic Trouble Code (DTC) Detecting Criteria.>
P0327	Knock Sensor 1 Circuit Low Input (Bank 1 or Single Sensor)	<Ref. to GD(H4SO U5)-101, DTC P0327 KNOCK SENSOR 1 CIRCUIT LOW INPUT (BANK 1 OR SINGLE SENSOR), Diagnostic Trouble Code (DTC) Detecting Criteria.>
P0328	Knock Sensor 1 Circuit High Input (Bank 1 or Single Sensor)	<Ref. to GD(H4SO U5)-103, DTC P0328 KNOCK SENSOR 1 CIRCUIT HIGH INPUT (BANK 1 OR SINGLE SENSOR), Diagnostic Trouble Code (DTC) Detecting Criteria.>
P0335	Crankshaft Position Sensor “A” Circuit	<Ref. to GD(H4SO U5)-105, DTC P0335 CRANKSHAFT POSITION SENSOR “A” CIRCUIT, Diagnostic Trouble Code (DTC) Detecting Criteria.>

DTC	Item	Index
P0336	Crankshaft Position Sensor “A” Circuit Range/Performance	<Ref. to GD(H4SO U5)-107, DTC P0336 CRANKSHAFT POSITION SENSOR “A” CIRCUIT RANGE/PERFORMANCE, Diagnostic Trouble Code (DTC) Detecting Criteria.>
P0340	Camshaft Position Sensor “A” Circuit (Bank 1 or Single Sensor)	<Ref. to GD(H4SO U5)-109, DTC P0340 CAMSHAFT POSITION SENSOR “A” CIRCUIT (BANK 1 OR SINGLE SENSOR), Diagnostic Trouble Code (DTC) Detecting Criteria.>
P0341	Camshaft Position Sensor “A” Circuit Range/Performance (Bank 1 or Single Sensor)	<Ref. to GD(H4SO U5)-111, DTC P0341 CAMSHAFT POSITION SENSOR “A” CIRCUIT RANGE/PERFORMANCE (BANK 1 OR SINGLE SENSOR), Diagnostic Trouble Code (DTC) Detecting Criteria.>
P0400	Exhaust Gas Recirculation Flow	<Ref. to GD(H4SO U5)-113, DTC P0400 EXHAUST GAS RECIRCULATION FLOW, Diagnostic Trouble Code (DTC) Detecting Criteria.>
P0420	Catalyst System Efficiency Below Threshold (Bank 1)	<Ref. to GD(H4SO U5)-117, DTC P0420 CATALYST SYSTEM EFFICIENCY BELOW THRESHOLD (BANK 1), Diagnostic Trouble Code (DTC) Detecting Criteria.>
P0442	Evaporative Emission Control System Leak Detected (Small Leak)	<Ref. to GD(H4SO U5)-120, DTC P0442 EVAPORATIVE EMISSION CONTROL SYSTEM LEAK DETECTED (SMALL LEAK), Diagnostic Trouble Code (DTC) Detecting Criteria.>
P0447	Evaporative Emission Control System Vent Control Circuit Open	<Ref. to GD(H4SO U5)-139, DTC P0447 EVAPORATIVE EMISSION CONTROL SYSTEM VENT CONTROL CIRCUIT OPEN, Diagnostic Trouble Code (DTC) Detecting Criteria.>
P0448	Evaporative Emission Control System Vent Control Circuit Shorted	<Ref. to GD(H4SO U5)-141, DTC P0448 EVAPORATIVE EMISSION CONTROL SYSTEM VENT CONTROL CIRCUIT SHORTED, Diagnostic Trouble Code (DTC) Detecting Criteria.>
P0451	Evaporative Emission Control System Pressure Sensor	<Ref. to GD(H4SO U5)-143, DTC P0451 EVAPORATIVE EMISSION CONTROL SYSTEM PRESSURE SENSOR, Diagnostic Trouble Code (DTC) Detecting Criteria.>
P0452	Evaporative Emission Control System Pressure Sensor Low Input	<Ref. to GD(H4SO U5)-145, DTC P0452 EVAPORATIVE EMISSION CONTROL SYSTEM PRESSURE SENSOR LOW INPUT, Diagnostic Trouble Code (DTC) Detecting Criteria.>
P0453	Evaporative Emission Control System Pressure Sensor High Input	<Ref. to GD(H4SO U5)-147, DTC P0453 EVAPORATIVE EMISSION CONTROL SYSTEM PRESSURE SENSOR HIGH INPUT, Diagnostic Trouble Code (DTC) Detecting Criteria.>
P0456	Evaporative Emission Control System Leak Detected (Very Small Leak)	<Ref. to GD(H4SO U5)-148, DTC P0456 EVAPORATIVE EMISSION CONTROL SYSTEM LEAK DETECTED (VERY SMALL LEAK), Diagnostic Trouble Code (DTC) Detecting Criteria.>
P0457	Evaporative Emission Control System Leak Detected (Fuel Cap Loose/Off)	<Ref. to GD(H4SO U5)-148, DTC P0457 EVAPORATIVE EMISSION CONTROL SYSTEM LEAK DETECTED (FUEL CAP LOOSE/OFF), Diagnostic Trouble Code (DTC) Detecting Criteria.>
P0458	Evaporative Emission Control System Purge Control Valve Circuit Low	<Ref. to GD(H4SO U5)-149, DTC P0458 EVAPORATIVE EMISSION CONTROL SYSTEM PURGE CONTROL VALVE CIRCUIT LOW, Diagnostic Trouble Code (DTC) Detecting Criteria.>
P0459	Evaporative Emission Control System Purge Control Valve Circuit High	<Ref. to GD(H4SO U5)-151, DTC P0459 EVAPORATIVE EMISSION CONTROL SYSTEM PURGE CONTROL VALVE CIRCUIT HIGH, Diagnostic Trouble Code (DTC) Detecting Criteria.>
P0461	Fuel Level Sensor Circuit Range/Performance	<Ref. to GD(H4SO U5)-153, DTC P0461 FUEL LEVEL SENSOR CIRCUIT RANGE/PERFORMANCE, Diagnostic Trouble Code (DTC) Detecting Criteria.>
P0462	Fuel Level Sensor Circuit Low Input	<Ref. to GD(H4SO U5)-155, DTC P0462 FUEL LEVEL SENSOR CIRCUIT LOW INPUT, Diagnostic Trouble Code (DTC) Detecting Criteria.>
P0463	Fuel Level Sensor Circuit High Input	<Ref. to GD(H4SO U5)-157, DTC P0463 FUEL LEVEL SENSOR CIRCUIT HIGH INPUT, Diagnostic Trouble Code (DTC) Detecting Criteria.>
P0464	Fuel Level Sensor Circuit Intermittent	<Ref. to GD(H4SO U5)-159, DTC P0464 FUEL LEVEL SENSOR CIRCUIT INTERMITTENT, Diagnostic Trouble Code (DTC) Detecting Criteria.>
P0483	Cooling Fan Rationality Check	<Ref. to GD(H4SO U5)-162, DTC P0483 COOLING FAN RATIONALITY CHECK, Diagnostic Trouble Code (DTC) Detecting Criteria.>
P0500	Vehicle Speed Sensor	<Ref. to GD(H4SO U5)-163, DTC P0500 VEHICLE SPEED SENSOR, Diagnostic Trouble Code (DTC) Detecting Criteria.>

DTC	Item	Index
P0506	Idle Control System RPM Lower Than Expected	<Ref. to GD(H4SO U5)-164, DTC P0506 IDLE CONTROL SYSTEM RPM LOWER THAN EXPECTED, Diagnostic Trouble Code (DTC) Detecting Criteria.>
P0507	Idle Control System RPM Higher Than Expected	<Ref. to GD(H4SO U5)-165, DTC P0507 IDLE CONTROL SYSTEM RPM HIGHER THAN EXPECTED, Diagnostic Trouble Code (DTC) Detecting Criteria.>
P0512	Starter Request Circuit	<Ref. to GD(H4SO U5)-167, DTC P0512 STARTER REQUEST CIRCUIT, Diagnostic Trouble Code (DTC) Detecting Criteria.>
P0519	Idle Control System Malfunction (Fail-Safe)	<Ref. to GD(H4SO U5)-168, DTC P0519 IDLE CONTROL SYSTEM MALFUNCTION (FAIL-SAFE), Diagnostic Trouble Code (DTC) Detecting Criteria.>
P0600	Serial Communication Link	<Ref. to GD(H4SO U5)-169, DTC P0600 SERIAL COMMUNICATION LINK, Diagnostic Trouble Code (DTC) Detecting Criteria.>
P0604	Internal Control Module Random Access Memory (RAM) Error	<Ref. to GD(H4SO U5)-170, DTC P0604 INTERNAL CONTROL MODULE RANDOM ACCESS MEMORY (RAM) ERROR, Diagnostic Trouble Code (DTC) Detecting Criteria.>
P0605	Internal Control Module Read Only Memory (ROM) Error	<Ref. to GD(H4SO U5)-171, DTC P0605 INTERNAL CONTROL MODULE READ ONLY MEMORY (ROM) ERROR, Diagnostic Trouble Code (DTC) Detecting Criteria.>
P0607	Control Module Performance	<Ref. to GD(H4SO U5)-172, DTC P0607 CONTROL MODULE PERFORMANCE, Diagnostic Trouble Code (DTC) Detecting Criteria.>
P0638	Throttle Actuator Control Range/ Performance (Bank 1)	<Ref. to GD(H4SO U5)-175, DTC P0638 THROTTLE ACTUATOR CONTROL RANGE/PERFORMANCE (BANK 1), Diagnostic Trouble Code (DTC) Detecting Criteria.>
P0691	Cooling Fan 1 Control Circuit Low	<Ref. to GD(H4SO U5)-178, DTC P0691 COOLING FAN 1 CONTROL CIRCUIT LOW, Diagnostic Trouble Code (DTC) Detecting Criteria.>
P0692	Cooling Fan 1 Control Circuit High	<Ref. to GD(H4SO U5)-179, DTC P0692 COOLING FAN 1 CONTROL CIRCUIT HIGH, Diagnostic Trouble Code (DTC) Detecting Criteria.>
P0700	Transmission Control System (MIL Request)	<Ref. to GD(H4SO U5)-180, DTC P0700 TRANSMISSION CONTROL SYSTEM (MIL REQUEST), Diagnostic Trouble Code (DTC) Detecting Criteria.>
P0851	Neutral Switch Input Circuit Low	<Ref. to GD(H4SO U5)-181, DTC P0851 NEUTRAL SWITCH INPUT CIRCUIT LOW (AT MODEL), Diagnostic Trouble Code (DTC) Detecting Criteria.> <Ref. to GD(H4SO U5)-182, DTC P0851 NEUTRAL SWITCH INPUT CIRCUIT LOW (MT MODEL), Diagnostic Trouble Code (DTC) Detecting Criteria.>
P0852	Neutral Switch Input Circuit High	<Ref. to GD(H4SO U5)-183, DTC P0852 NEUTRAL SWITCH INPUT CIRCUIT HIGH (AT MODEL), Diagnostic Trouble Code (DTC) Detecting Criteria.> <Ref. to GD(H4SO U5)-184, DTC P0852 NEUTRAL SWITCH INPUT CIRCUIT HIGH (MT MODEL), Diagnostic Trouble Code (DTC) Detecting Criteria.>
P1152	O2 Sensor Circuit Range/Performance (Low) (Bank1 Sensor1)	<Ref. to GD(H4SO U5)-185, DTC P1152 O2 SENSOR CIRCUIT RANGE/ PERFORMANCE (LOW) (BANK1 SENSOR1), Diagnostic Trouble Code (DTC) Detecting Criteria.>
P1153	O2 Sensor Circuit Range/Performance (High) (Bank1 Sensor1)	<Ref. to GD(H4SO U5)-187, DTC P1153 O2 SENSOR CIRCUIT RANGE/ PERFORMANCE (HIGH) (BANK1 SENSOR1), Diagnostic Trouble Code (DTC) Detecting Criteria.>
P1154	O2 Sensor Circuit Range/Performance (Low) (Bank 2 Sensor 1)	<Ref. to GD(H4SO U5)-189, DTC P1154 O2 SENSOR CIRCUIT RANGE/ PERFORMANCE (LOW) (BANK 2 SENSOR 1), Diagnostic Trouble Code (DTC) Detecting Criteria.>
P1155	O2 Sensor Circuit Range/Performance (High) (Bank 2 Sensor 1)	<Ref. to GD(H4SO U5)-189, DTC P1155 O2 SENSOR CIRCUIT RANGE/ PERFORMANCE (HIGH) (BANK 2 SENSOR 1), Diagnostic Trouble Code (DTC) Detecting Criteria.>
P1160	Return Spring Failure	<Ref. to GD(H4SO U5)-190, DTC P1160 RETURN SPRING FAILURE, Diagnostic Trouble Code (DTC) Detecting Criteria.>
P1400	Fuel Tank Pressure Control Solenoid Valve Circuit Low	<Ref. to GD(H4SO U5)-192, DTC P1400 FUEL TANK PRESSURE CONTROL SOLENOID VALVE CIRCUIT LOW, Diagnostic Trouble Code (DTC) Detecting Criteria.>

DTC	Item	Index
P1420	Fuel Tank Pressure Control Solenoid Valve Circuit High	<Ref. to GD(H4SO U5)-194, DTC P1420 FUEL TANK PRESSURE CONTROL SOL. VALVE CIRCUIT HIGH, Diagnostic Trouble Code (DTC) Detecting Criteria.>
P1443	Vent Control Solenoid Valve Function Problem	<Ref. to GD(H4SO U5)-196, DTC P1443 VENT CONTROL SOLENOID VALVE FUNCTION PROBLEM, Diagnostic Trouble Code (DTC) Detecting Criteria.>
P1446	Fuel Tank Sensor Control Valve Circuit Low	<Ref. to GD(H4SO U5)-198, DTC P1446 FUEL TANK SENSOR CONTROL VALVE CIRCUIT LOW, Diagnostic Trouble Code (DTC) Detecting Criteria.>
P1447	Fuel Tank Sensor Control Valve Circuit High	<Ref. to GD(H4SO U5)-200, DTC P1447 FUEL TANK SENSOR CONTROL VALVE CIRCUIT HIGH, Diagnostic Trouble Code (DTC) Detecting Criteria.>
P1492	EGR Solenoid Valve Signal #1 Circuit Malfunction (Low Input)	<Ref. to GD(H4SO U5)-202, DTC P1492 EGR SOLENOID VALVE SIGNAL #1 CIRCUIT MALFUNCTION (LOW INPUT), Diagnostic Trouble Code (DTC) Detecting Criteria.>
P1493	EGR Solenoid Valve Signal #1 Circuit Malfunction (High Input)	<Ref. to GD(H4SO U5)-204, DTC P1493 EGR SOLENOID VALVE SIGNAL #1 CIRCUIT MALFUNCTION (HIGH INPUT), Diagnostic Trouble Code (DTC) Detecting Criteria.>
P1494	EGR Solenoid Valve Signal #2 Circuit Malfunction (Low Input)	<Ref. to GD(H4SO U5)-206, DTC P1494 EGR SOLENOID VALVE SIGNAL #2 CIRCUIT MALFUNCTION (LOW INPUT), Diagnostic Trouble Code (DTC) Detecting Criteria.>
P1495	EGR Solenoid Valve Signal #2 Circuit Malfunction (High Input)	<Ref. to GD(H4SO U5)-208, DTC P1495 EGR SOLENOID VALVE SIGNAL #2 CIRCUIT MALFUNCTION (HIGH INPUT), Diagnostic Trouble Code (DTC) Detecting Criteria.>
P1496	EGR Solenoid Valve Signal #3 Circuit Malfunction (Low Input)	<Ref. to GD(H4SO U5)-210, DTC P1496 EGR SOLENOID VALVE SIGNAL #3 CIRCUIT MALFUNCTION (LOW INPUT), Diagnostic Trouble Code (DTC) Detecting Criteria.>
P1497	EGR Solenoid Valve Signal #3 Circuit Malfunction (High Input)	<Ref. to GD(H4SO U5)-212, DTC P1497 EGR SOLENOID VALVE SIGNAL #3 CIRCUIT MALFUNCTION (HIGH INPUT), Diagnostic Trouble Code (DTC) Detecting Criteria.>
P1498	EGR Solenoid Valve Signal #4 Circuit Malfunction (Low Input)	<Ref. to GD(H4SO U5)-214, DTC P1498 EGR SOLENOID VALVE SIGNAL #4 CIRCUIT MALFUNCTION (LOW INPUT), Diagnostic Trouble Code (DTC) Detecting Criteria.>
P1499	EGR Solenoid Valve Signal #4 Circuit Malfunction (High Input)	<Ref. to GD(H4SO U5)-216, DTC P1499 EGR SOLENOID VALVE SIGNAL #4 CIRCUIT MALFUNCTION (HIGH INPUT), Diagnostic Trouble Code (DTC) Detecting Criteria.>
P1518	Starter Switch Circuit Low input	<Ref. to GD(H4SO U5)-218, DTC P1518 STARTER SWITCH CIRCUIT LOW INPUT, Diagnostic Trouble Code (DTC) Detecting Criteria.>
P1560	Back-up Voltage Circuit Malfunction	<Ref. to GD(H4SO U5)-219, DTC P1560 BACK-UP VOLTAGE CIRCUIT MALFUNCTION, Diagnostic Trouble Code (DTC) Detecting Criteria.>
P2004	Intake Manifold Runner Control Stuck Open (Bank 1)	<Ref. to GD(H4SO U5)-220, DTC P2004 INTAKE MANIFOLD RUNNER CONTROL STUCK OPEN (BANK 1), Diagnostic Trouble Code (DTC) Detecting Criteria.>
P2006	Intake Manifold Runner Control Stuck Closed (Bank 1)	<Ref. to GD(H4SO U5)-221, DTC P2006 INTAKE MANIFOLD RUNNER CONTROL STUCK CLOSED (BANK 1), Diagnostic Trouble Code (DTC) Detecting Criteria.>
P2008	Intake Manifold Runner Control Circuit/Open (Bank 1)	<Ref. to GD(H4SO U5)-223, DTC P2008 INTAKE MANIFOLD RUNNER CONTROL CIRCUIT / OPEN (BANK 1), Diagnostic Trouble Code (DTC) Detecting Criteria.>
P2009	Intake Manifold Runner Control Circuit Low (Bank 1)	<Ref. to GD(H4SO U5)-225, DTC P2009 INTAKE MANIFOLD RUNNER CONTROL CIRCUIT LOW (BANK 1), Diagnostic Trouble Code (DTC) Detecting Criteria.>
P2016	Intake Manifold Runner Position Sensor/Switch Circuit Low (Bank 1)	<Ref. to GD(H4SO U5)-227, DTC P2016 INTAKE MANIFOLD RUNNER POSITION SENSOR / SWITCH CIRCUIT LOW (BANK 1), Diagnostic Trouble Code (DTC) Detecting Criteria.>
P2017	Intake Manifold Runner Position Sensor/Switch Circuit High (Bank 1)	<Ref. to GD(H4SO U5)-229, DTC P2017 INTAKE MANIFOLD RUNNER POSITION SENSOR / SWITCH CIRCUIT HIGH (BANK 1), Diagnostic Trouble Code (DTC) Detecting Criteria.>

DTC	Item	Index
P2096	Post Catalyst Fuel Trim System Too Lean Bank 1	<Ref. to GD(H4SO U5)-231, DTC P2096 POST CATALYST FUEL TRIM SYSTEM TOO LEAN BANK 1, Diagnostic Trouble Code (DTC) Detecting Criteria.>
P2097	Post Catalyst Fuel Trim System Too Rich Bank 1	<Ref. to GD(H4SO U5)-233, DTC P2097 POST CATALYST FUEL TRIM SYSTEM TOO RICH BANK 1, Diagnostic Trouble Code (DTC) Detecting Criteria.>
P2098	Post Catalyst Fuel Trim System Too Lean Bank 2	<Ref. to GD(H4SO U5)-234, DTC P2098 POST CATALYST FUEL TRIM SYSTEM TOO LEAN BANK 2, Diagnostic Trouble Code (DTC) Detecting Criteria.>
P2099	Post Catalyst Fuel Trim System Too Rich Bank 2	<Ref. to GD(H4SO U5)-234, DTC P2099 POST CATALYST FUEL TRIM SYSTEM TOO RICH BANK 2, Diagnostic Trouble Code (DTC) Detecting Criteria.>
P2101	Throttle Actuator Control Motor Circuit Range/Performance	<Ref. to GD(H4SO U5)-235, DTC P2101 THROTTLE ACTUATOR CONTROL MOTOR CIRCUIT RANGE/PERFORMANCE, Diagnostic Trouble Code (DTC) Detecting Criteria.>
P2102	Throttle Actuator Control Motor Circuit Low	<Ref. to GD(H4SO U5)-237, DTC P2102 THROTTLE ACTUATOR CONTROL MOTOR CIRCUIT LOW, Diagnostic Trouble Code (DTC) Detecting Criteria.>
P2103	Throttle Actuator Control Motor Circuit High	<Ref. to GD(H4SO U5)-239, DTC P2103 THROTTLE ACTUATOR CONTROL MOTOR CIRCUIT HIGH, Diagnostic Trouble Code (DTC) Detecting Criteria.>
P2109	Throttle/Pedal Position Sensor A Minimum Stop Performance	<Ref. to GD(H4SO U5)-241, DTC P2109 THROTTLE/PEDAL POSITION SENSOR A MINIMUM STOP PERFORMANCE, Diagnostic Trouble Code (DTC) Detecting Criteria.>
P2122	Throttle/Pedal Position Sensor/ Switch “D” Circuit Low Input	<Ref. to GD(H4SO U5)-242, DTC P2122 THROTTLE/PEDAL POSITION SENSOR/SWITCH “D” CIRCUIT LOW INPUT, Diagnostic Trouble Code (DTC) Detecting Criteria.>
P2123	Throttle/Pedal Position Sensor/ Switch “D” Circuit High Input	<Ref. to GD(H4SO U5)-243, DTC P2123 THROTTLE/PEDAL POSITION SENSOR/SWITCH “D” CIRCUIT HIGH INPUT, Diagnostic Trouble Code (DTC) Detecting Criteria.>
P2127	Throttle/Pedal Position Sensor/ Switch “E” Circuit Low Input	<Ref. to GD(H4SO U5)-245, DTC P2127 THROTTLE/PEDAL POSITION SENSOR/SWITCH “E” CIRCUIT LOW INPUT, Diagnostic Trouble Code (DTC) Detecting Criteria.>
P2128	Throttle/Pedal Position Sensor/ Switch “E” Circuit High Input	<Ref. to GD(H4SO U5)-246, DTC P2128 THROTTLE/PEDAL POSITION SENSOR/SWITCH “E” CIRCUIT HIGH INPUT, Diagnostic Trouble Code (DTC) Detecting Criteria.>
P2135	Throttle/Pedal Position Sensor/ Switch “A”/“B” Voltage Rationality	<Ref. to GD(H4SO U5)-248, DTC P2135 THROTTLE/PEDAL POSITION SENSOR/SWITCH “A”/“B” VOLTAGE RATIONALITY, Diagnostic Trouble Code (DTC) Detecting Criteria.>
P2138	Throttle/Pedal Position Sensor/ Switch “D”/“E” Voltage Rationality	<Ref. to GD(H4SO U5)-250, DTC P2138 THROTTLE/PEDAL POSITION SENSOR/SWITCH “D”/“E” VOLTAGE RATIONALITY, Diagnostic Trouble Code (DTC) Detecting Criteria.>
P2227	Barometric Pressure Circuit Range/Performance	<Ref. to GD(H4SO U5)-252, DTC P2227 BAROMETRIC PRESSURE CIRCUIT RANGE/PERFORMANCE, Diagnostic Trouble Code (DTC) Detecting Criteria.>
P2228	Barometric Pressure Circuit Low Input	<Ref. to GD(H4SO U5)-253, DTC P2228 BAROMETRIC PRESSURE CIRCUIT LOW INPUT, Diagnostic Trouble Code (DTC) Detecting Criteria.>
P2229	Barometric Pressure Circuit High Input	<Ref. to GD(H4SO U5)-254, DTC P2229 BAROMETRIC PRESSURE CIRCUIT HIGH INPUT, Diagnostic Trouble Code (DTC) Detecting Criteria.>

2. Diagnostic Trouble Code (DTC) Detecting Criteria

A: DTC P0030 HO2S HEATER CONTROL CIRCUIT (BANK 1 SENSOR 1)

1. OUTLINE OF DIAGNOSIS

Detect the malfunction of front oxygen (A/F) sensor heater.
Judge NG when impedance of front oxygen (A/F) sensor is larger than the standard value by referring to the engine condition such as fuel shut-off in deceleration, etc.

2. COMPONENT DESCRIPTION

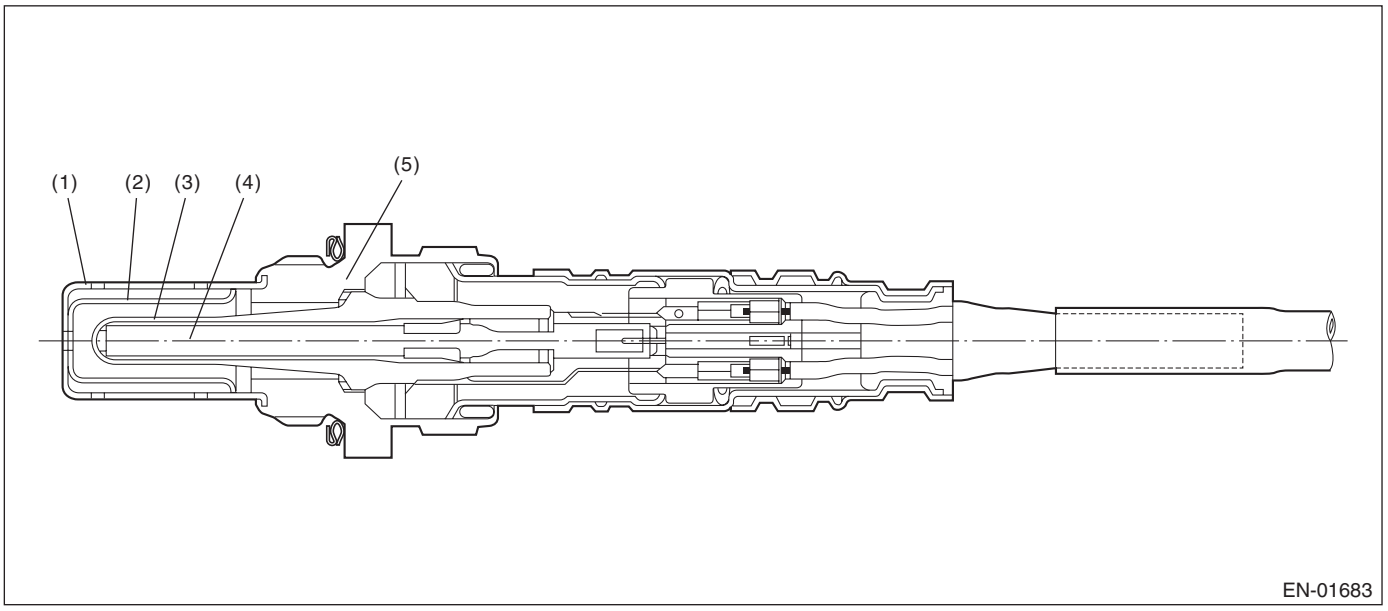

(1) Element cover (Outer)
(2) Element cover (Inner)
(3) Sensor element
(4) Ceramic heater
(5) Sensor housing

3. ENABLE CONDITION

Secondary Parameters	Enable Conditions
Continuous time which all the following conditions were filled.	30 seconds or more
Battery voltage	> 10.9 V
Heater continuity	Permitted
A/F sensor heater duty ratio	Experience of ≥ 35%
After fuel shut-off	20 seconds or more

4. GENERAL DRIVING CYCLE

Perform diagnosis continuously in 60 seconds after starting engine.

5. DIAGNOSTIC METHOD

Judge NG when the continuous time of completing the malfunction criteria below becomes more than 10 seconds. Judge OK and clear NG when the continuous time of not completing the malfunction criteria below becomes more than 10 seconds.

Judgment Value

Malfunction Criteria	Threshold Value
Impedance of front oxygen (A/F) sensor	> 50 Ω

Time Needed for Diagnosis: 10 seconds

Malfunction Indicator Light Illumination: Illuminates when malfunction occurs in 2 continuous driving cycles.

6. DTC CLEAR CONDITION

- When the OK idling cycle was completed 40 times in a row
- When “Clear Memory” was performed

7. MALFUNCTION INDICATOR LIGHT CLEAR CONDITION

- When the OK driving cycle was completed 3 times in a row
- When “Clear Memory” was performed

8. FAIL SAFE

- Front oxygen (A/F) sensor main learning correction: Not allowed to calculate
- Correction when re-starting at high temperature: Normally minimum value 0.06 → 0
- Purge control: Not allowed to purge

9. ECM OPERATION AT DTC SETTING

Memorize the freeze frame data. (For test mode $02)

B: DTC P0031 HO2S HEATER CONTROL CIRCUIT LOW (BANK 1 SENSOR 1)

1. OUTLINE OF DIAGNOSIS

Detect the open or short circuit of heater.
The heater conducts the duty control. The output terminal voltage at ON becomes 0 V, and the output terminal voltage at OFF becomes battery voltage.
Judge NG when the terminal voltage remains Low.

2. COMPONENT DESCRIPTION

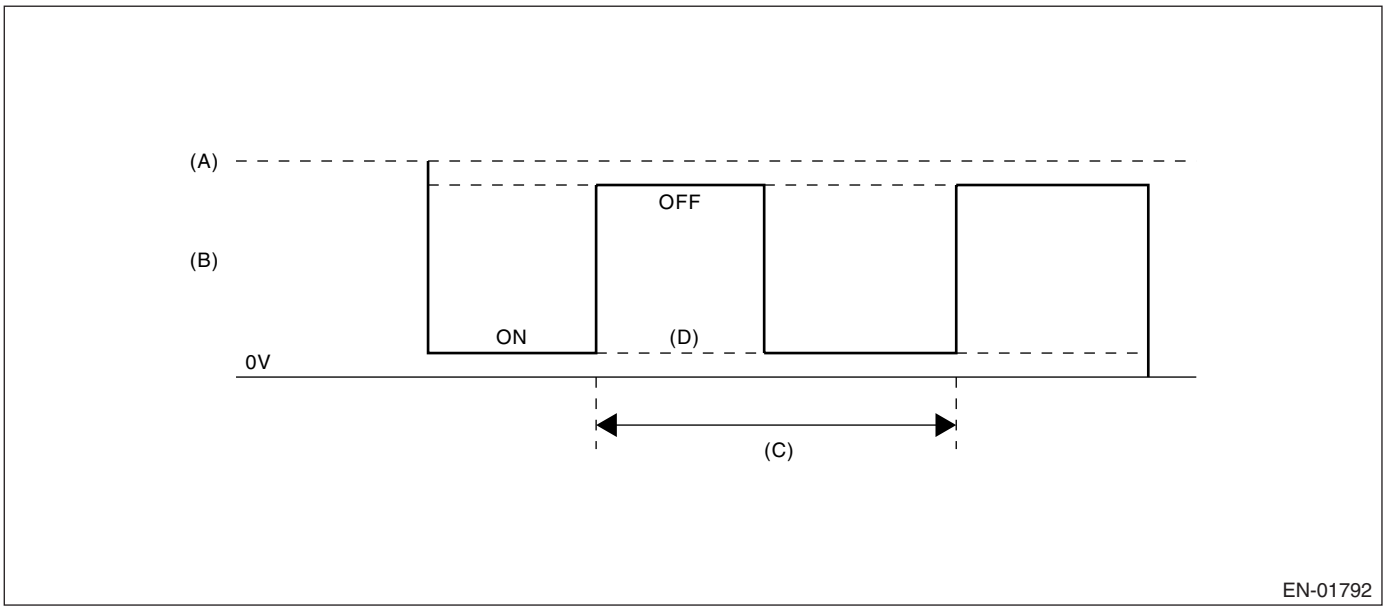

(A) Battery voltage
(B) Front oxygen (A/F) sensor heater output voltage
(C) 128 milliseconds
(D) Low abnormality

3. ENABLE CONDITION

Secondary Parameters	Enable Conditions
Battery voltage	≥ 10.9 V

4. GENERAL DRIVING CYCLE

Always perform diagnosis continuously.

5. DIAGNOSTIC METHOD

• Abnormality Judgment

Judge NG when the continuous time of completing the malfunction criteria below becomes more than 1 second (8 cycles).

Judgment Value

Malfunction Criteria	Threshold Value
Output voltage level	Low
Front oxygen (A/F) sensor heater control duty	< 87.5%

Time Needed for Diagnosis: 1 second
Malfunction Indicator Light Illumination: Illuminates as soon as malfunction occurs.

• Normality Judgment

Judge OK and clear the NG when all the malfunction criteria below are completed.
Judgment Value

Malfunction Criteria	Threshold Value
Output voltage level	High

6. DTC CLEAR CONDITION

- When the OK idling cycle was completed 40 times in a row
- When “Clear Memory” was performed

7. MALFUNCTION INDICATOR LIGHT CLEAR CONDITION

- When the OK driving cycle was completed 3 times in a row
- When “Clear Memory” was performed

8. FAIL SAFE

- Front oxygen (A/F) sensor heater control: Not allowed to turn on the heater.
- A/F main learning: Not allowed to calculate the A/F main learning compensation factor.
- A/F sub learning: Not allowed to calculate the A/F sub learning compensation factor.
- Compensation when starting the engine at high temperature: Make the MIN value to be 0 from 0.06 normally.
- Purge control: Not allowed to purge.

9. ECM OPERATION AT DTC SETTING

Memorize the freeze frame data. (For test mode $02)

C: DTC P0032 HO2S HEATER CONTROL CIRCUIT HIGH (BANK 1 SENSOR 1)

1. OUTLINE OF DIAGNOSIS

Detect the open or short circuit of heater.
The heater conducts the duty control. The output terminal voltage at ON becomes 0 V, and the output terminal voltage at OFF becomes battery voltage.
Judge NG when the terminal voltage remains High.

2. COMPONENT DESCRIPTION

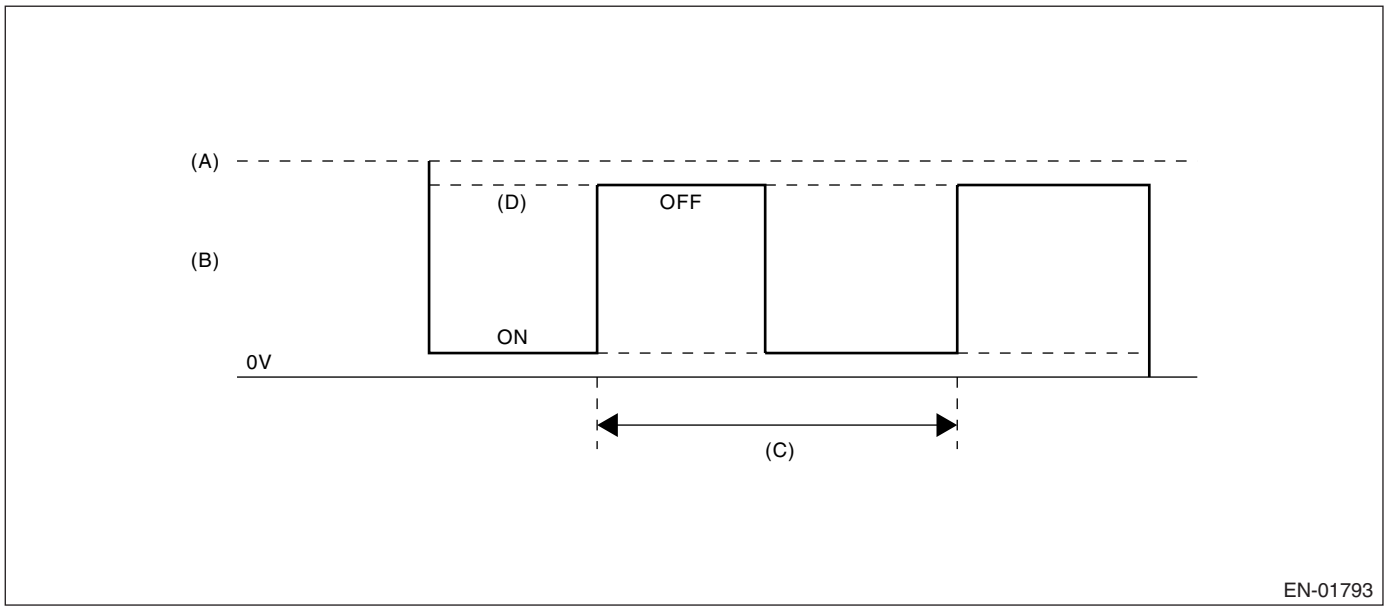

(A) Battery voltage
(B) Front oxygen (A/F) sensor heater output voltage
(C) 128 milliseconds
(D) High abnormality

3. ENABLE CONDITION

Secondary Parameters	Enable Conditions
Battery voltage	≥ 10.9 V

4. GENERAL DRIVING CYCLE

Always perform diagnosis continuously.

5. DIAGNOSTIC METHOD

• Abnormality Judgment

Judge NG when the continuous time of completing the malfunction criteria below becomes 1 second (8 cycles).

Judgment Value

Malfunction Criteria	Threshold Value
Output voltage level	High
Front oxygen (A/F) sensor heater control duty	≥ 12.5%

Time Needed for Diagnosis: 1 second
Malfunction Indicator Light Illumination: Illuminates as soon as malfunction occurs.

• Normality Judgment

Judge OK and clear the NG when all the malfunction criteria below are completed.

Judgment Value

Malfunction Criteria	Threshold Value
Output voltage level	Low

6. DTC CLEAR CONDITION

- When the OK idling cycle was completed 40 times in a row
- When “Clear Memory” was performed

7. MALFUNCTION INDICATOR LIGHT CLEAR CONDITION

- When the OK driving cycle was completed 3 times in a row
- When “Clear Memory” was performed

8. FAIL SAFE

- Front oxygen (A/F) sensor heater control: Not allowed to turn on the heater.
- A/F main learning: Not allowed to calculate the A/F main learning compensation factor.
- A/F sub learning: Not allowed to calculate the A/F sub learning compensation factor.
- Compensation when starting the engine at high temperature: Make the MIN value to be 0 from 0.06 normally.
- Purge control: Not allowed to purge.

9. ECM OPERATION AT DTC SETTING

Memorize the freeze frame data. (For test mode $02)

D: DTC P0037 HO2S HEATER CONTROL CIRCUIT LOW (BANK 1 SENSOR 2)

1. OUTLINE OF DIAGNOSIS

Detect open or short circuit of oxygen sensor heater.
Oxygen sensor heater conducted the duty control, and the output terminal voltage at ON is 0 V and the output terminal voltage at OFF is the battery voltage.
Judge NG when the terminal voltage remains Low.

2. COMPONENT DESCRIPTION

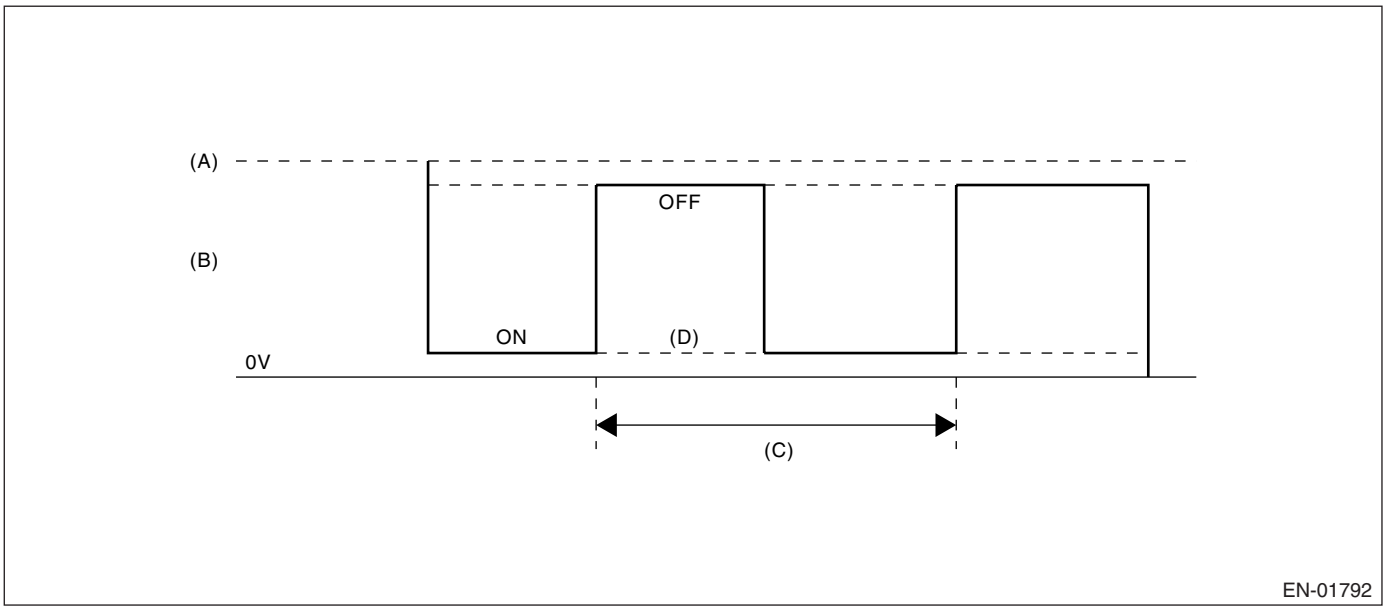

(A) Battery voltage
(B) Oxygen sensor heater output voltage
(C) 256 milliseconds (cycles)
(D) Low malfunction

3. ENABLE CONDITION

Secondary Parameters	Enable Conditions
Battery voltage	〉10.9 V
Elapsed time after engine starting	≥ 1 second
Heater output duty ratio	〈 75%

4. GENERAL DRIVING CYCLE

Perform the diagnosis continuously after engine starting.

5. DIAGNOSTIC METHOD

• Abnormality Judgment

Judge NG when the continuous time of completing all the malfunction criteria below becomes more than 2.56 second.

Judgment Value

Malfunction Criteria	Threshold Value
Output voltage level	Low

Time Needed for Diagnosis: 2.56 seconds
Malfunction Indicator Light Illumination: Illuminates when malfunction occurs in 2 continuous driving cycles.

• Normality Judgment

Judge OK and clear the NG when all the malfunction criteria below are completed.
Judgment Value

Malfunction Criteria	Threshold Value
Output voltage level	High

6. DTC CLEAR CONDITION

- When the OK idling cycle was completed 40 times in a row
- When “Clear Memory” was performed

7. MALFUNCTION INDICATOR LIGHT CLEAR CONDITION

- When the OK driving cycle was completed 3 times in a row
- When “Clear Memory” was performed

8. FAIL SAFE

Sub feedback control: Not allowed

9. ECM OPERATION AT DTC SETTING

Memorize the freeze frame data. (For test mode $02)

E: DTC P0038 HO2S HEATER CONTROL CIRCUIT HIGH (BANK 1 SENSOR 2)

1. OUTLINE OF DIAGNOSIS

Detect open or short circuit of oxygen heater.
Oxygen heater conducted the duty control, and the output terminal voltage at ON is 0 V and the output terminal voltage at OFF is the battery voltage.
Judge NG when the terminal voltage remains High.

2. COMPONENT DESCRIPTION

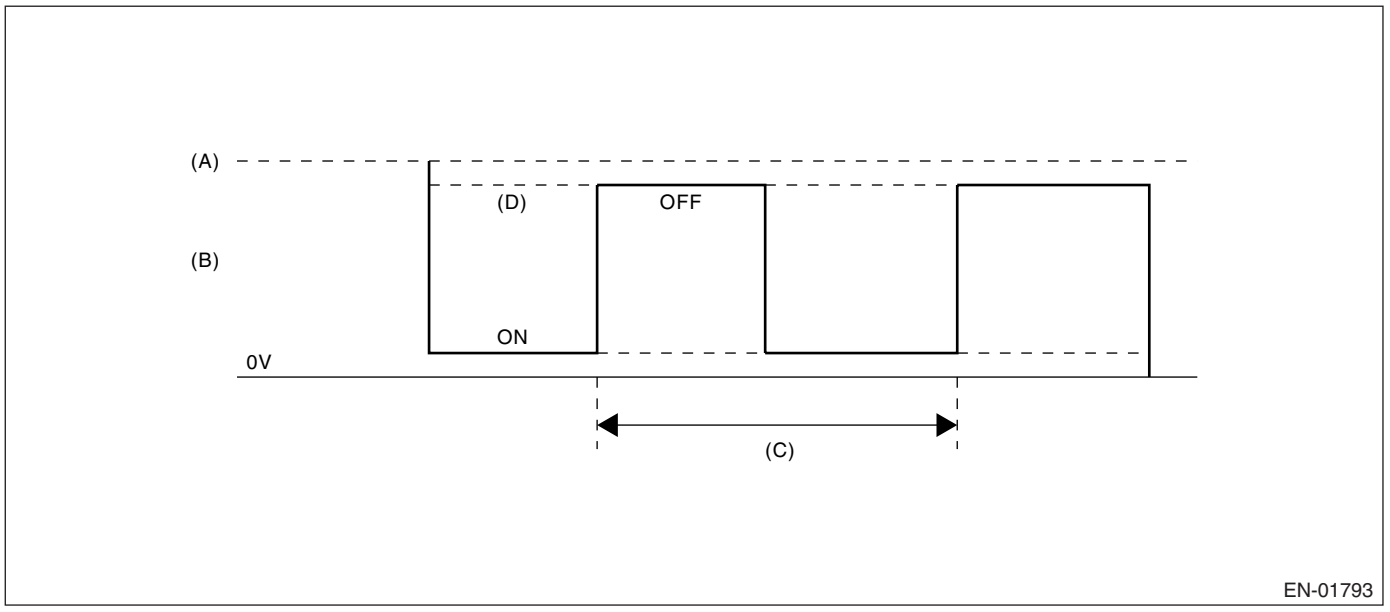

(A) Battery voltage
(B) Oxygen sensor heater output voltage
(C) 256 milliseconds (cycles)
(D) High malfunction

3. ENABLE CONDITION

Secondary Parameters	Enable Conditions
Battery voltage	〉10.9 V
Elapsed time after engine starting	≥ 1 second
Heater output duty ratio	≥ 20%

4. GENERAL DRIVING CYCLE

Perform the diagnosis continuously after engine starting.

5. DIAGNOSTIC METHOD

• Abnormality Judgment

Judge NG when the continuous time of completing all the malfunction criteria below becomes more than 5 seconds.

Judgment Value

Malfunction Criteria	Threshold Value
Output voltage level	High

Time Needed for Diagnosis: 5 seconds
Malfunction Indicator Light Illumination: Illuminates when malfunction occurs in 2 continuous driving cycles.

• Normality Judgment

Judge OK and clear the NG when all the malfunction criteria below are completed.
Judgment Value

Malfunction Criteria	Threshold Value
Output voltage level	Low

6. DTC CLEAR CONDITION

- When the OK idling cycle was completed 40 times in a row
- When “Clear Memory” was performed

7. MALFUNCTION INDICATOR LIGHT CLEAR CONDITION

- When the OK driving cycle was completed 3 times in a row
- When “Clear Memory” was performed

8. FAIL SAFE

Sub feedback control: Not allowed

9. ECM OPERATION AT DTC SETTING

Memorize the freeze frame data. (For test mode $02)

F: DTC P0043 HO2S HEATER CONTROL CIRCUIT LOW (BANK 1 SENSOR 3)

1. OUTLINE OF DIAGNOSIS

Detect open or short circuit of oxygen sensor heater.
Oxygen sensor heater conducted the duty control, and the output terminal voltage at ON is 0 V and the output terminal voltage at OFF is the battery voltage.
Judge NG when the terminal voltage remains Low.

2. COMPONENT DESCRIPTION

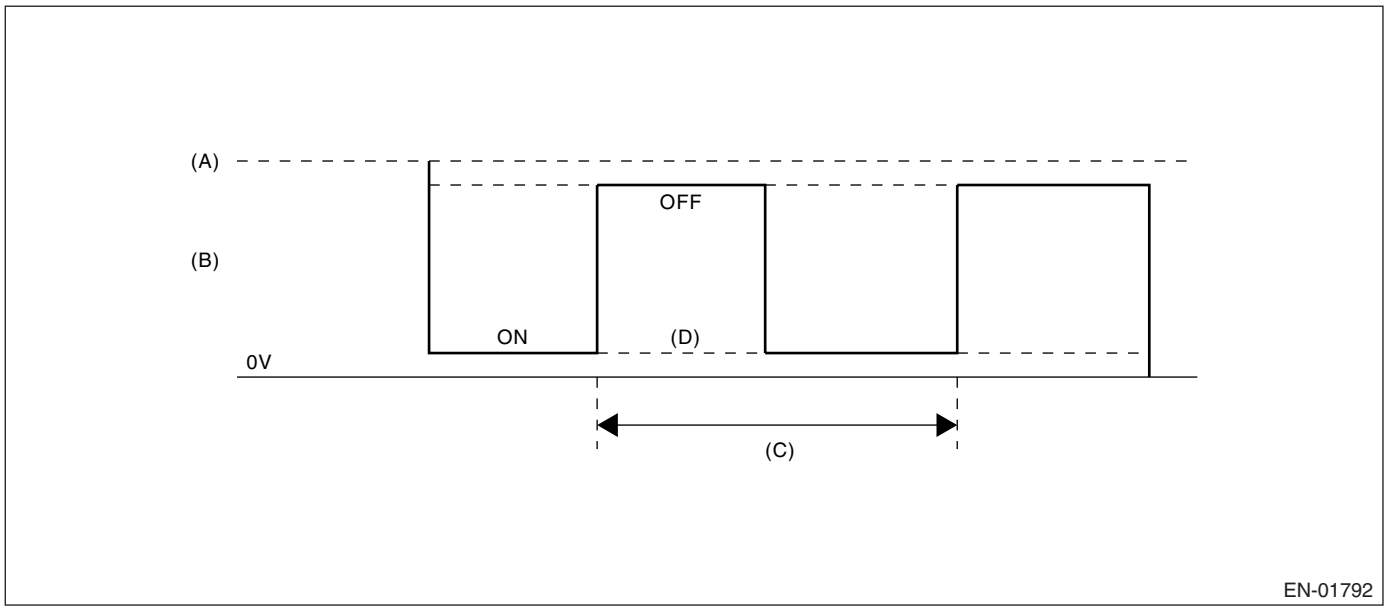

(A) Battery voltage
(B) Oxygen sensor heater output voltage
(C) 256 milliseconds (cycles)
(D) Low malfunction

3. ENABLE CONDITION

Secondary Parameters	Enable Conditions
Battery voltage	> 10.9 V
Elapsed time after engine starting	≥ 1 second
Heater output duty ratio	< 75%

4. GENERAL DRIVING CYCLE

Perform the diagnosis continuously after engine starting.

5. DIAGNOSTIC METHOD

• Abnormality Judgment

Judge NG when the continuous time of completing all the malfunction criteria below becomes more than 2.56 second.

Judgment Value

Malfunction Criteria	Threshold Value
Output voltage level	Low

Time Needed for Diagnosis: 2.56 seconds
Malfunction Indicator Light Illumination: Illuminates when malfunction occurs in 2 continuous driving cycles.

• Normality Judgment

Judge OK and clear the NG when all the malfunction criteria below are completed.
Judgment Value

Malfunction Criteria	Threshold Value
Output voltage level	High

6. DTC CLEAR CONDITION

- When the OK idling cycle was completed 40 times in a row
- When “Clear Memory” was performed

7. MALFUNCTION INDICATOR LIGHT CLEAR CONDITION

- When the OK driving cycle was completed 3 times in a row
- When “Clear Memory” was performed

8. FAIL SAFE

Sub feedback control: Not allowed

9. ECM OPERATION AT DTC SETTING

Memorize the freeze frame data. (For test mode $02)

G: DTC P0044 HO2S HEATER CONTROL CIRCUIT HIGH (BANK 1 SENSOR 3)

1. OUTLINE OF DIAGNOSIS

Detect open or short circuit of oxygen heater.
Oxygen heater conducted the duty control, and the output terminal voltage at ON is 0 V and the output terminal voltage at OFF is the battery voltage.
Judge NG when the terminal voltage remains High.

2. COMPONENT DESCRIPTION

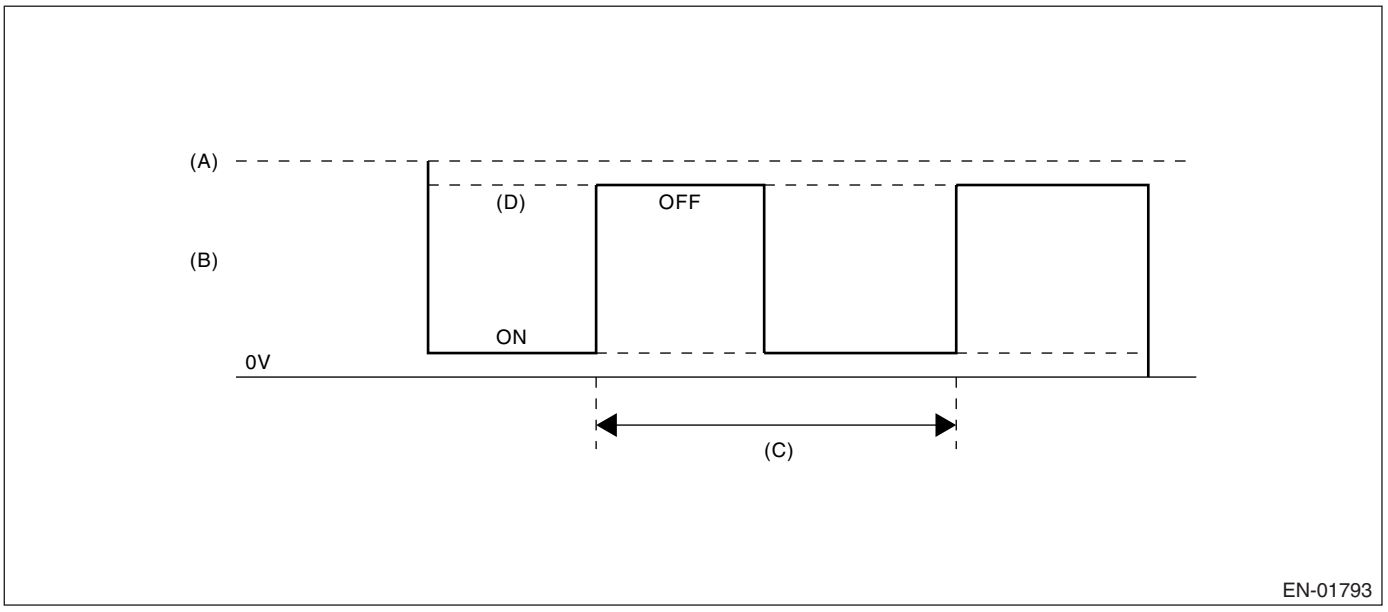

(A) Battery voltage
(B) Oxygen sensor heater output voltage
(C) 256 milliseconds (cycles)
(D) High malfunction

3. ENABLE CONDITION

Secondary Parameters	Enable Conditions
Battery voltage	〉10.9 V
Elapsed time after engine starting	≥ 1 second
Heater output duty ratio	≥ 20%

4. GENERAL DRIVING CYCLE

Perform the diagnosis continuously after engine starting.

5. DIAGNOSTIC METHOD

• Abnormality Judgment

Judge NG when the continuous time of completing all the malfunction criteria below becomes more than 5 seconds.

Judgment Value

Malfunction Criteria	Threshold Value
Output voltage level	High

Time Needed for Diagnosis: 5 seconds
Malfunction Indicator Light Illumination: Illuminates when malfunction occurs in 2 continuous driving cycles.

• Normality Judgment

Judge OK and clear the NG when all the malfunction criteria below are completed.
Judgment Value

Malfunction Criteria	Threshold Value
Output voltage level	Low

6. DTC CLEAR CONDITION

- When the OK idling cycle was completed 40 times in a row
- When “Clear Memory” was performed

7. MALFUNCTION INDICATOR LIGHT CLEAR CONDITION

- When the OK driving cycle was completed 3 times in a row
- When “Clear Memory” was performed

8. FAIL SAFE

Sub feedback control: Not allowed

9. ECM OPERATION AT DTC SETTING

Memorize the freeze frame data. (For test mode $02)

H: DTC P0050 HO2S HEATER CONTROL CIRCUIT (BANK 2 SENSOR 1)

1. OUTLINE OF DIAGNOSIS

For the detecting criteria, refer to P0030. <Ref. to GD(H4SO U5)-9, DTC P0030 HO2S HEATER CONTROL CIRCUIT (BANK 1 SENSOR 1), Diagnostic Trouble Code (DTC) Detecting Criteria.>

I: DTC P0051 HO2S HEATER CONTROL CIRCUIT LOW (BANK 2 SENSOR 1)

1. OUTLINE OF DIAGNOSIS

For the detecting criteria, refer to P0031. <Ref. to GD(H4SO U5)-11, DTC P0031 HO2S HEATER CONTROL CIRCUIT LOW (BANK 1 SENSOR 1), Diagnostic Trouble Code (DTC) Detecting Criteria.>

J: DTC P0052 HO2S HEATER CONTROL CIRCUIT HIGH (BANK 2 SENSOR 1)

1. OUTLINE OF DIAGNOSIS

For the detecting criteria, refer to P0032. <Ref. to GD(H4SO U5)-13, DTC P0032 HO2S HEATER CONTROL CIRCUIT HIGH (BANK 1 SENSOR 1), Diagnostic Trouble Code (DTC) Detecting Criteria.>

K: DTC P0057 HO2S HEATER CONTROL CIRCUIT LOW (BANK 2 SENSOR 2)

1. OUTLINE OF DIAGNOSIS

For the detecting criteria, refer to P0037. <Ref. to GD(H4SO U5)-15, DTC P0037 HO2S HEATER CONTROL CIRCUIT LOW (BANK 1 SENSOR 2), Diagnostic Trouble Code (DTC) Detecting Criteria.>

L: DTC P0058 HO2S HEATER CONTROL CIRCUIT HIGH (BANK 2 SENSOR 2)

1. OUTLINE OF DIAGNOSIS

For the detecting criteria, refer to P0038. <Ref. to GD(H4SO U5)-17, DTC P0038 HO2S HEATER CONTROL CIRCUIT HIGH (BANK 1 SENSOR 2), Diagnostic Trouble Code (DTC) Detecting Criteria.>

M: DTC P0068 MAP/MAF - THROTTLE POSITION CORRELATION

1. OUTLINE OF DIAGNOSIS

Detect the malfunction of intake manifold pressure sensor output property. Judge NG when the intake air pressure AD value is Low whereas it seemed to be High from the viewpoint of engine condition, or when it is High whereas it seemed to be Low from the engine condition.

2. COMPONENT DESCRIPTION

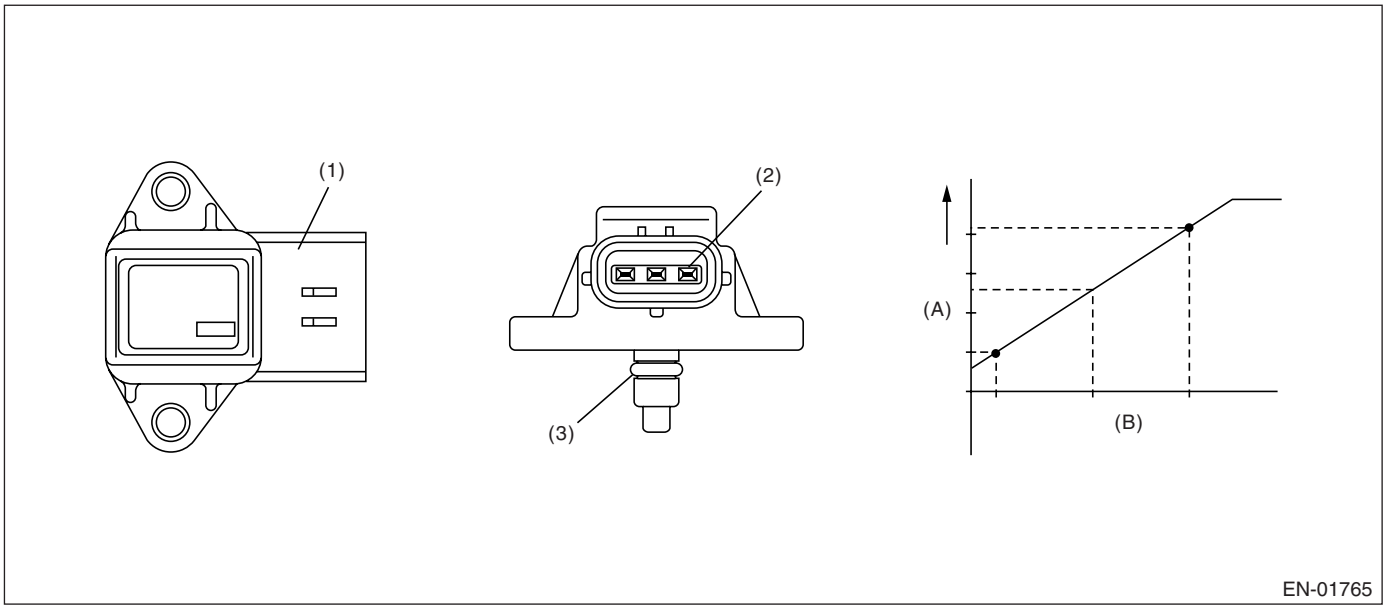

(1) Connector
(2) Terminal
(3) O-ring
(A) Output voltage
(B) Absolute pressure

3. ENABLE CONDITION

Secondary Parameters	Enable Conditions
Engine coolant temperature	≥ 70°C (158°F)

4. GENERAL DRIVING CYCLE

Perform the diagnosis continuously after idling.

5. DIAGNOSTIC METHOD

• Abnormality Judgment

Judge NG when either Low side or High side becomes NG. Judge NG when the continuous time of completing the malfunction criteria below becomes more than the predetermined time.

Judgment Value

Malfunction Criteria	Threshold Value
Low side	
Engine speed	< 2500 rpm
Throttle position	≥ 13°
Intake air amount per engine 0.5 rev.	≥ 0.55 g (0.019 oz)/rev
Output voltage	< 1.4 V
High side	
Engine speed	< 600 ←→ 900 rpm
Throttle position	≤ 2.44°
Intake air amount per engine 0.5 rev.	< 0.5 g (0.018 oz)/rev
Output voltage	≥ 3.4 V

Time Needed for Diagnosis: Low side 3 seconds, high side 7 seconds
Malfunction Indicator Light Illumination: Illuminates when malfunction occurs in 2 continuous driving cycles.

• Normality Judgment

Judge OK and clear the NG when both Low side and High side become OK. Judge OK when the malfunction criteria below are completed.

Judgment Value

Malfunction Criteria	Threshold Value
Low side	
Engine speed	< 2600 rpm
Throttle position	≥ 13°
Intake air amount per engine 0.5 rev.	≥ 0.55 g (0.019 oz)/rev
Output voltage	≥ 1.4 V
High side	
Engine speed	< 600 ←→ 900 rpm
Throttle position	≤ 2.44°
Intake air amount per engine 0.5 rev.	< 0.5 g (0.018 oz)/rev
Output voltage	< 3.4 V

6. DTC CLEAR CONDITION

- When the OK idling cycle was completed 40 times in a row
- When “Clear Memory” was performed

7. MALFUNCTION INDICATOR LIGHT CLEAR CONDITION

- When the OK driving cycle was completed 3 times in a row
- When “Clear Memory” was performed

8. FAIL SAFE

- Intake manifold pressure sensor process: Estimate the pressure from engine load.
- ISC feedback: Not allowed to calculate the amount of feedback.
- Heavy fuel judgment: Not allowed to carry out the heavy judgment.
- Fuel cut control: Perform fuel cut when intake manifold pressure sensor is NG. (When fuel injection is large.)

9. ECM OPERATION AT DTC SETTING

Memorize the freeze frame data. (For test mode $02)

N: DTC P0101 MASS OR VOLUME AIR FLOW CIRCUIT RANGE/PERFORMANCE

1. OUTLINE OF DIAGNOSIS

Detect the malfunction of air flow sensor output property. Judge Low side NG when the air flow voltage indicates low value in spite of the driving condition that the air flow voltage might be high; otherwise, judge High side NG when the air flow voltage indicates high value in spite of the driving condition that the air flow voltage might be low. Judge air flow sensor property NG when the Low side or High side becomes NG.

2. COMPONENT DESCRIPTION

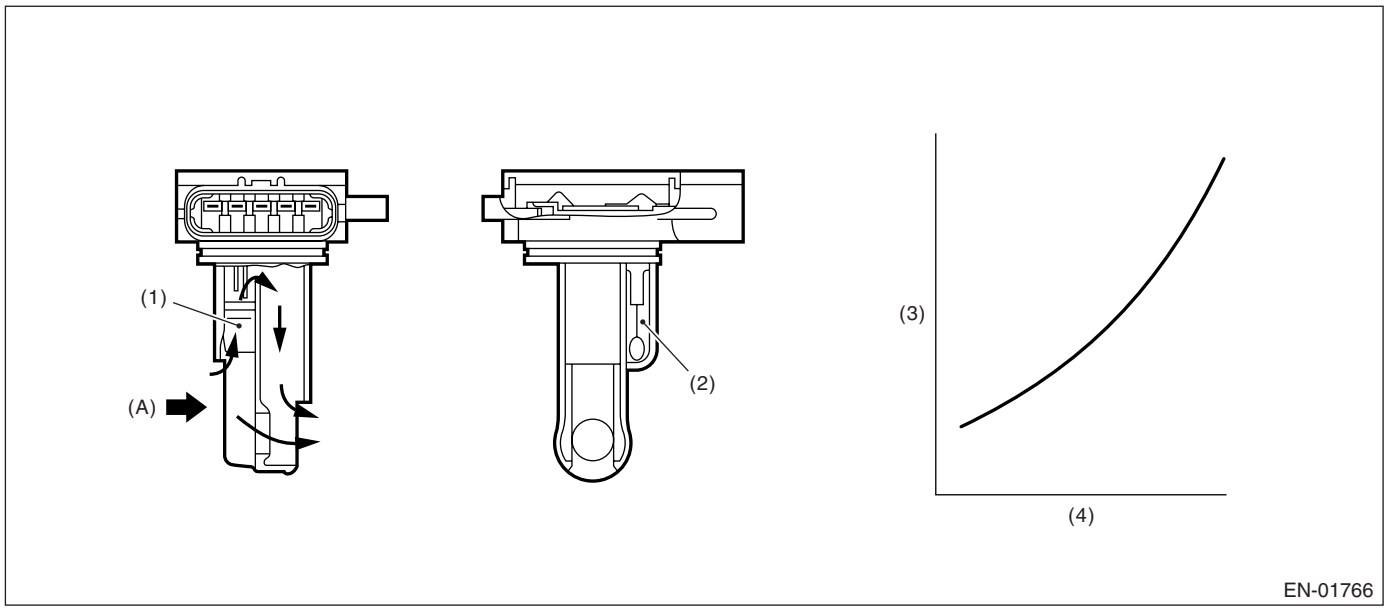

(1) Air flow sensor
(2) Intake air temperature sensor
(3) Voltage (V)
(4) Intake air volume (kg/s)
(A) Air

3. ENABLE CONDITION

Secondary Parameters	Enable Conditions
Engine coolant temperature	≥ 70°C (158°F)

4. GENERAL DRIVING CYCLE

Perform the diagnosis continuously after idling.

5. DIAGNOSTIC METHOD

• Abnormality Judgment

Judge NG when the continuous time of completing the malfunction criteria below becomes more than the time needed for diagnosis.

Judgment Value

Malfunction Criteria	Threshold Value
Low side NG	
Output voltage	< 1.2 V
Engine speed	≥ 2000 rpm
Throttle opening angle	≥ 13°
Intake manifold pressure	≥ 53.3 kPa (400 mmHg, 15.7 inHg)
High side NG 1	
Output voltage	≥ 2.66 V
Engine speed	600 ←→ 900 rpm
Throttle opening angle	< 2.44°
Intake manifold pressure	< 40.0 kPa (300 mmHg, 11.8 inHg)
High side NG 2	
Output voltage	≥ 1.45 V
Engine speed	600 ←→ 900 rpm
Throttle opening angle	< 2.44°
Intake manifold pressure	< 40.0 kPa (300 mmHg, 11.8 inHg)
Fuel system diagnosis	Rich side NG

Time Needed for Diagnosis:

Low side	3 seconds
High side	10 seconds

Malfunction Indicator Light Illumination: Illuminates when malfunction occurs in 2 continuous driving cycles.

• Normality Judgment

Judge OK the when the malfunction criteria below are completed.

Judgment Value

Malfunction Criteria	Threshold Value
Low side NG	
Output voltage	≥ 1.2 V
Engine speed	≥ 2000 rpm
Throttle opening angle	≥ 13°
Intake manifold pressure	≥ 53.3 kPa (400 mmHg, 15.7 inHg)
High side NG	
Output voltage	< 2.66 V
Engine speed	600 ←→ 900 rpm
Throttle opening angle	< 2.44°
Intake manifold pressure	< 40.0 kPa (300 mmHg, 11.8 inHg)
Fuel system diagnosis	Rich side OK

6. DTC CLEAR CONDITION

- When the OK idling cycle was completed 40 times in a row
- When “Clear Memory” was performed

7. MALFUNCTION INDICATOR LIGHT CLEAR CONDITION

- When the OK driving cycle was completed 3 times in a row
- When “Clear Memory” was performed

8. FAIL SAFE

- Air flow meter: Engine load is normally calculated by manifold pressure and engine speed; however, calculated only by manifold pressure.
- EVAP conc. learning (fuel): Not allowed to learn.
- Knock compensation:
  - At normal: learned ignition timing value = knock F/B timing value + whole learning timing value + partial learning timing
  - At trouble: learned ignition timing value = –3°CA (retard 3°CA)
    knock F/B timing value = 0°CA
  - Whole learning is not allowed.
  - Partial learning is not allowed.
- ISC control: Make the open loop compensation to be the given value (1 g (0.04 oz)/s). Stop calculating the throttle sensor temperature compensation. (Hold the previous value.)

9. ECM OPERATION AT DTC SETTING

Memorize the freeze frame data. (For test mode $02)

O: DTC P0102 MASS OR VOLUME AIR FLOW CIRCUIT LOW INPUT

1. OUTLINE OF DIAGNOSIS

Detect the open or short circuit of air flow sensor. Judge NG when out of the standard value.

2. COMPONENT DESCRIPTION

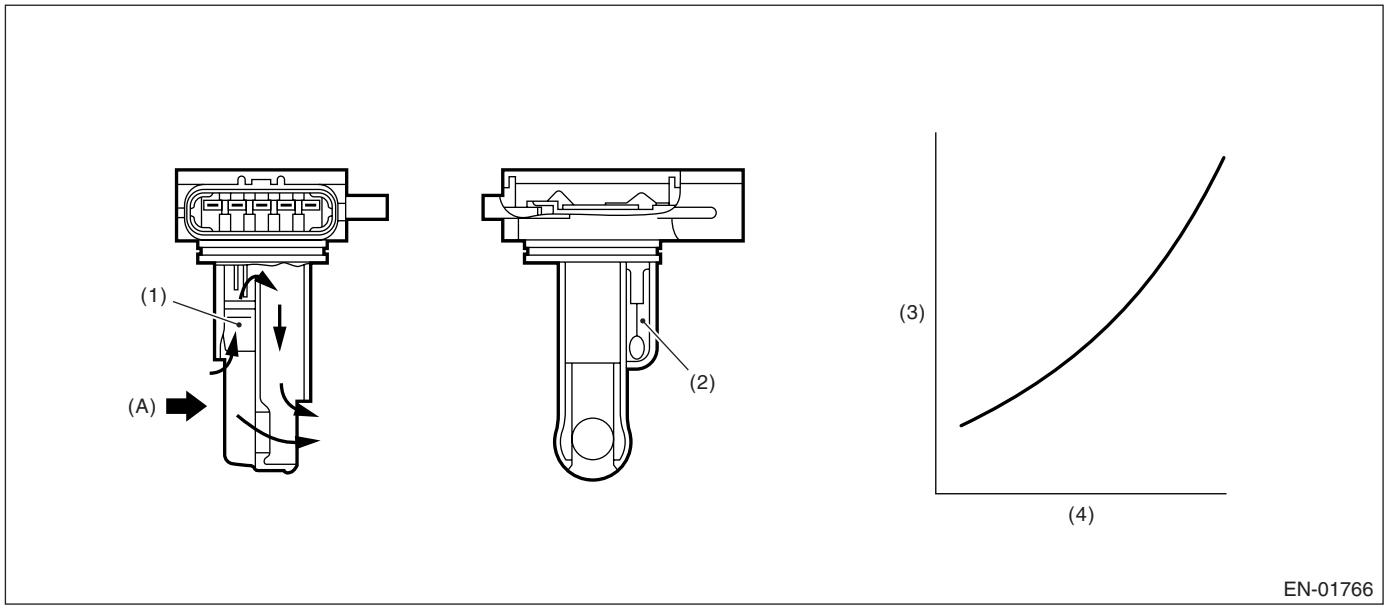

(1) Air flow sensor
(2) Intake air temperature sensor
(3) Voltage (V)
(4) Intake air volume (kg/s)
(A) Air

3. ENABLE CONDITION

Secondary Parameters	Enable Conditions
None	

4. GENERAL DRIVING CYCLE

Always perform the diagnosis continuously.

5. DIAGNOSTIC METHOD

Judge NG when the continuous time of completing the malfunction criteria below becomes more than 0.5 seconds. Judge OK and clear the NG when the malfunction criteria below are not completed.

Judgment Value

Malfunction Criteria	Threshold Value
Output voltage	≤ 0.2 V

Time Needed for Diagnosis: 0.5 seconds
Malfunction Indicator Light Illumination: Illuminates as soon as the malfunction occurs.

6. DTC CLEAR CONDITION

- When the OK idling cycle was completed 40 times in a row
- When “Clear Memory” was performed

7. MALFUNCTION INDICATOR LIGHT CLEAR CONDITION

- When the OK driving cycle was completed 3 times in a row
- When “Clear Memory” was performed

8. FAIL SAFE

- Air flow meter: Engine load is normally calculated by manifold pressure and engine speed; however, calculated only by manifold pressure.
- EVAP conc. learning (fuel): Not allowed to learn.
- Knock compensation:
  - At normal: learned ignition timing value = knock F/B timing value + whole learning timing value + partial learning timing value
  - At trouble: learned ignition timing value = −3°CA (retard 3°CA)
    knock F/B timing value = 0°CA
  - Whole learning is not allowed.
  - Partial learning is not allowed.
- ISC control: Make the open loop compensation to be the given value (1 g (0.04 oz)/s). Stop calculating the throttle sensor temperature compensation. (Hold the previous value.)

9. ECM OPERATION AT DTC SETTING

Memorize the freeze frame data. (For test mode $02)

P: DTC P0103 MASS OR VOLUME AIR FLOW CIRCUIT HIGH INPUT

1. OUTLINE OF DIAGNOSIS

Detect the open or short circuit of air flow sensor. Judge NG when out of the standard value.

2. COMPONENT DESCRIPTION

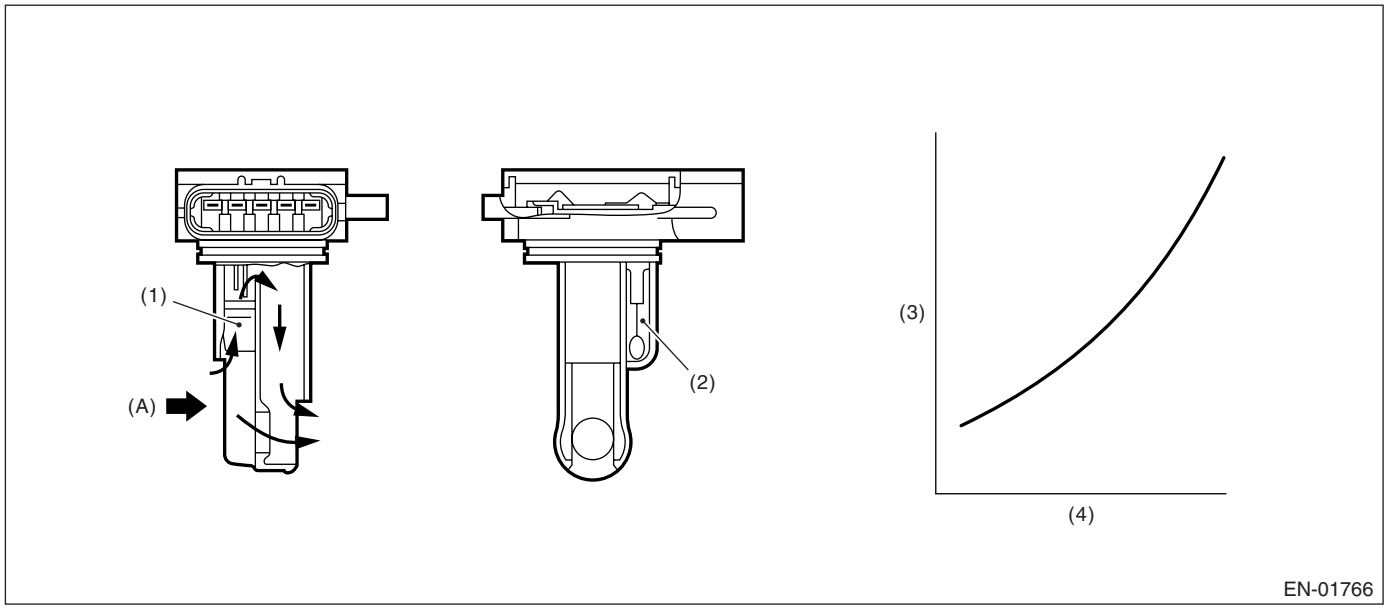

(1) Air flow sensor
(2) Intake air temperature sensor
(3) Voltage (V)
(4) Intake air volume (kg/s)
(A) Air

3. ENABLE CONDITION

Secondary Parameters	Enable Conditions
None	

4. GENERAL DRIVING CYCLE

Always perform the diagnosis continuously.

5. DIAGNOSTIC METHOD

Judge NG when the continuous time until completing the malfunction criteria below becomes more than 0.5 seconds. Judge OK and clear the NG when the malfunction criteria below are not completed.

Judgment Value

Malfunction Criteria	Threshold Value
Output voltage	≥ 4.985 V

Time Needed for Diagnosis: 0.5 seconds
Malfunction Indicator Light Illumination: Illuminates as soon as the malfunction occurs.

6. DTC CLEAR CONDITION

- When the OK idling cycle was completed 40 times in a row
- When “Clear Memory” was performed

7. MALFUNCTION INDICATOR LIGHT CLEAR CONDITION

- When the OK driving cycle was completed 3 times in a row
- When “Clear Memory” was performed

8. FAIL SAFE

- Air flow meter: Engine load is normally calculated by manifold pressure and engine speed; however, calculated only by manifold pressure.
- EVAP conc. learning (fuel): Not allowed to learn.
- Knock compensation:
  - At normal: learned ignition timing value = knock F/B timing value + whole learning timing value + partial learning timing value
  - At trouble: learned ignition timing value = −3°CA (retard 3°CA)
    knock F/B timing value = 0°CA
  - Whole learning is not allowed.
  - Partial learning is not allowed.
- ISC control: Make the open loop compensation to be the given value (1 g (0.04 oz)/s). Stop calculating the throttle sensor temperature compensation. (Hold the previous value.)

9. ECM OPERATION AT DTC SETTING

Memorize the freeze frame data. (For test mode $02)

Q: DTC P0107 MANIFOLD ABSOLUTE PRESSURE/BAROMETRIC PRESSURE CIRCUIT LOW INPUT

1. OUTLINE OF DIAGNOSIS

Detect the open or short circuit of intake manifold pressure sensor. Judge NG when out of the standard value.

2. COMPONENT DESCRIPTION

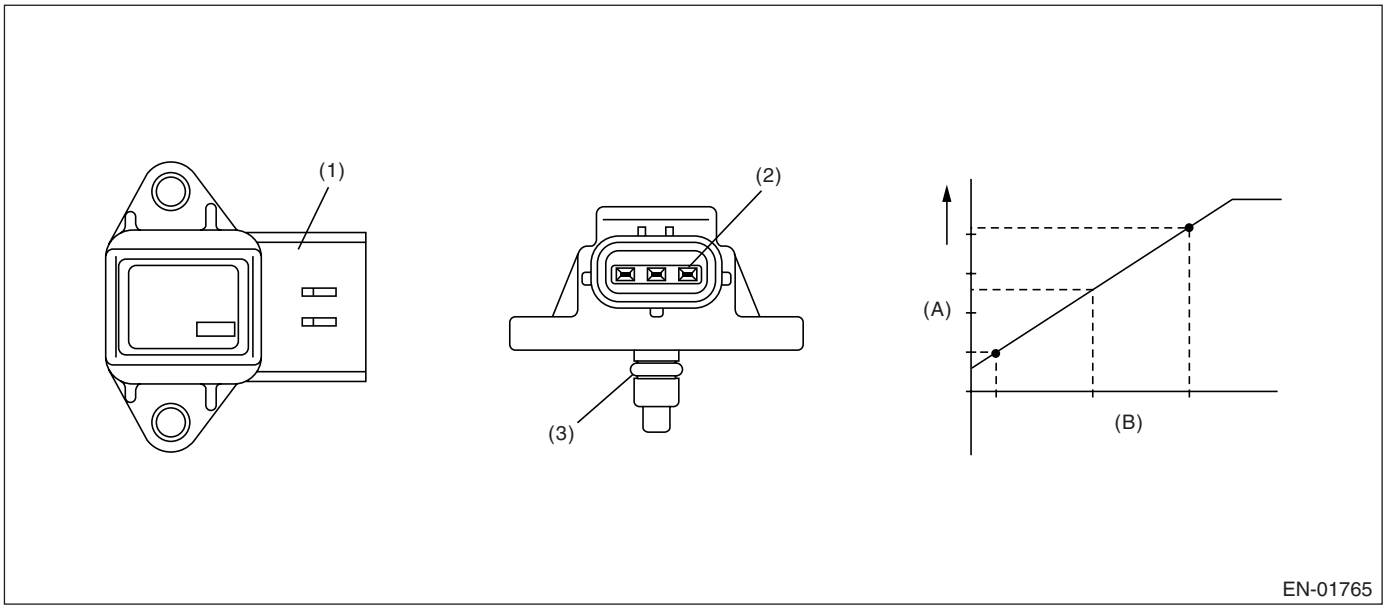

(1) Connector
(2) Terminal
(3) O-ring
(A) Output voltage
(B) Absolute pressure

3. ENABLE CONDITION

Secondary Parameters	Enable Conditions
None	

4. GENERAL DRIVING CYCLE

Always perform the diagnosis continuously.

5. DIAGNOSTIC METHOD

Judge NG when the continuous time of completing the malfunction criteria below becomes more than 0.5 seconds. Judge OK and clear the NG when the malfunction criteria below are not completed.

Judgment Value

Malfunction Criteria	Threshold Value
Output voltage	< 0.568 V

Time Needed for Diagnosis: 0.5 seconds
Malfunction Indicator Light Illumination: Illuminates as soon as the malfunction occurs.

6. DTC CLEAR CONDITION

- When the OK idling cycle was completed 40 times in a row
- When “Clear Memory” was performed

7. MALFUNCTION INDICATOR LIGHT CLEAR CONDITION

- When the OK driving cycle was completed 3 times in a row
- When “Clear Memory” was performed

8. FAIL SAFE

- Intake manifold pressure sensor process: Estimate the pressure from engine load.
- ISC feedback: Not allowed to calculate the amount of feedback.
- Heavy fuel judgment: Not allowed to carry out the heavy judgment.
- Fuel cut control: Perform fuel cut when intake manifold sensor is NG. (When amount of fuel injection is large)

9. ECM OPERATION AT DTC SETTING

Memorize the freeze frame data. (For test mode $02)

R: DTC P0108 MANIFOLD ABSOLUTE PRESSURE/BAROMETRIC PRESSURE CIRCUIT HIGH INPUT

1. OUTLINE OF DIAGNOSIS

Detect the open or short circuit of intake manifold pressure sensor. Judge NG when out of the standard value.

2. COMPONENT DESCRIPTION

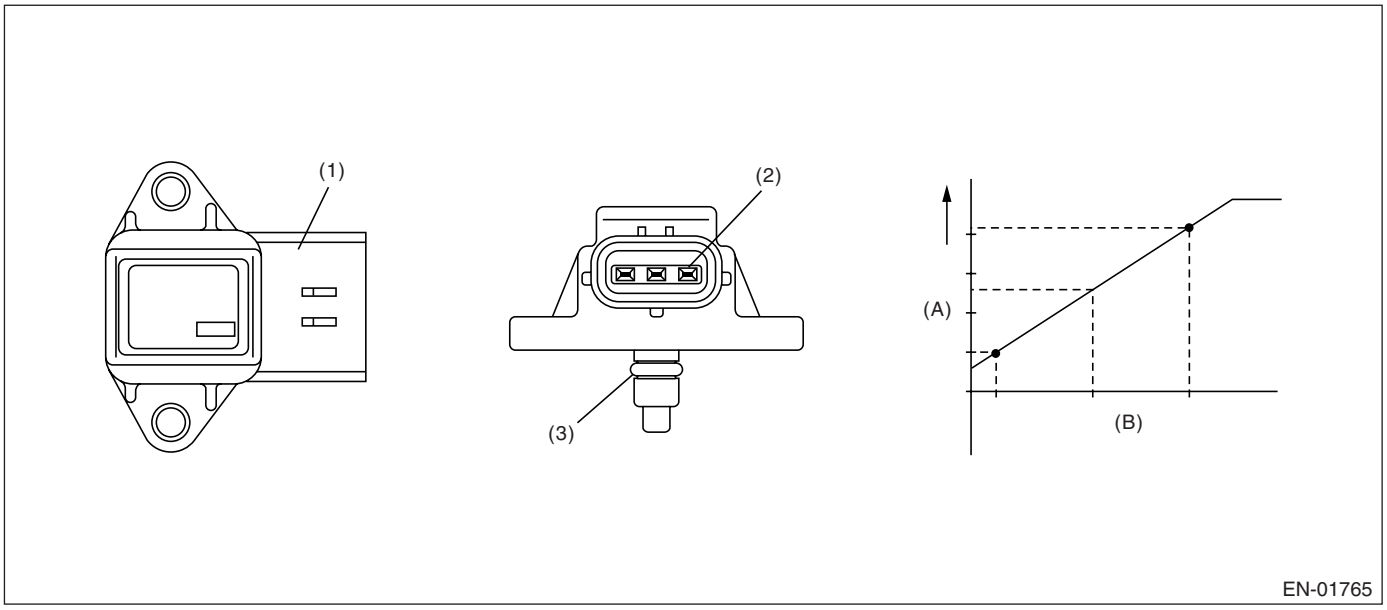

(1) Connector
(2) Terminal
(3) O-ring
(A) Output voltage
(B) Absolute pressure

3. ENABLE CONDITION

Secondary Parameters	Enable Conditions
None	

4. GENERAL DRIVING CYCLE

Always perform the diagnosis continuously.

5. DIAGNOSTIC METHOD

Judge NG when the continuous time of completing the malfunction criteria below becomes more than 0.5 seconds. Judge OK and clear the NG when the malfunction criteria below are not completed.

Judgment Value

Malfunction Criteria	Threshold Value
Output voltage	≥ 4.921 V

Time Needed for Diagnosis: 0.5 seconds
Malfunction Indicator Light Illumination: Illuminates as soon as the malfunction occurs.

6. DTC CLEAR CONDITION

- When the OK idling cycle was completed 40 times in a row
- When “Clear Memory” was performed

7. MALFUNCTION INDICATOR LIGHT CLEAR CONDITION

- When the OK driving cycle was completed 3 times in a row
- When “Clear Memory” was performed

8. FAIL SAFE

- Intake manifold pressure sensor process: Estimate the pressure from engine load.
- ISC feedback: Not allowed to calculate the amount of feedback.
- Heavy fuel judgment: Not allowed to carry out the heavy judgment.
- Fuel cut control: Perform fuel cut when intake manifold sensor is NG. (When amount of fuel injection is large)

9. ECM OPERATION AT DTC SETTING

Memorize the freeze frame data. (For test mode $02)

S: DTC P0111 INTAKE AIR TEMPERATURE CIRCUIT RANGE/PERFORMANCE

1. OUTLINE OF DIAGNOSIS

Detect the malfunction of intake air temperature sensor output property. Judge NG when the intake air temperature is not varied whereas it seemed to be varied from the viewpoint of engine condition.

2. COMPONENT DESCRIPTION

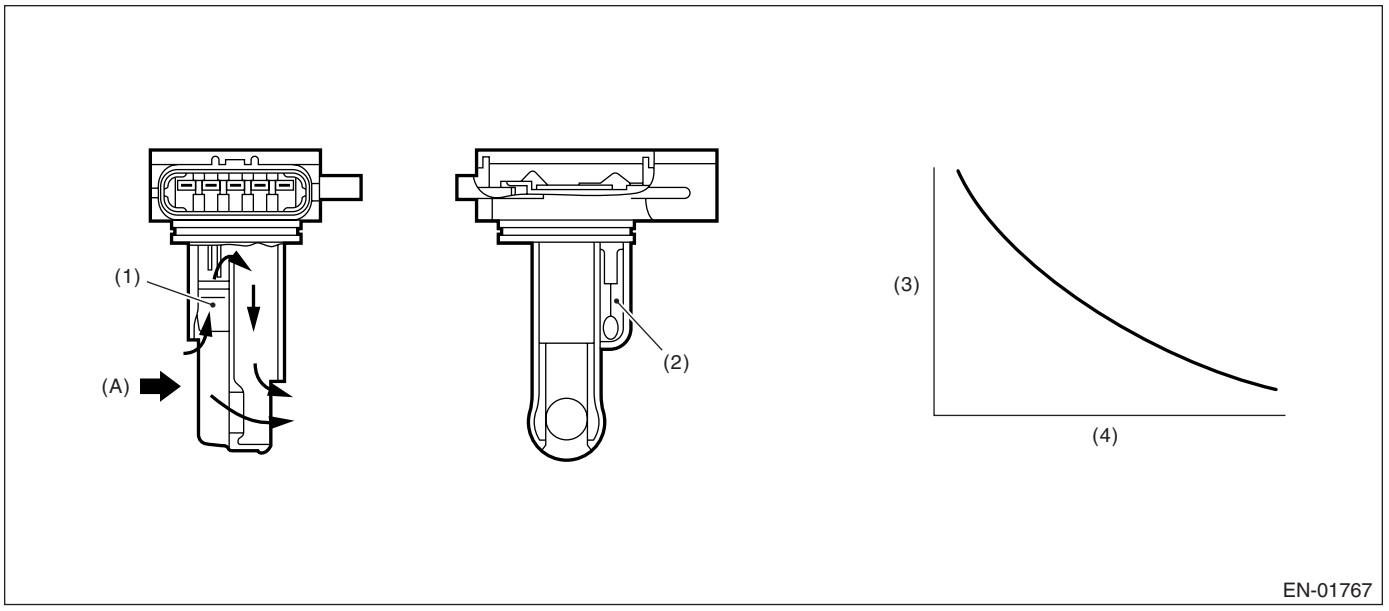

(1) Air flow sensor
(2) Intake air temperature sensor
(3) Resistance (Ω)
(4) Intake air temperature °C (°F)
(A) Air

3. ENABLE CONDITION

Secondary Parameters	Enable Conditions
Coolant temp. before engine start	< 30°C (86°F)
Coolant temperature	> 95°C (203°F)
Battery voltage	≥ 10.9 V
Continuous time when the vehicle speed is less than 60 km/h (37 MPH)	600 seconds or more

4. GENERAL DRIVING CYCLE

Perform the diagnosis when the vehicle speed condition is completed after idling from starting the cooled engine.

5. DIAGNOSTIC METHOD

• Abnormality Judgment

Judge NG when the continuous time of completing the malfunction criteria below becomes more than 1 second.

Judgment Value

Malfunction Criteria	Threshold Value
Output voltage difference between Max. and Min.	< 20 mV (Approx. 0.5°C (33°F) is equivalent to around 25°.)

Time Needed for Diagnosis: 1 second
Malfunction Indicator Light Illumination: Illuminates when malfunction occurs in 2 continuous driving cycles.

• Normality Judgment

Judge OK and clear the NG when the malfunction criteria below are completed.
Judgment Value

Malfunction Criteria	Threshold Value
Output voltage difference between Max. and Min.	≥ 20 mV

6. DTC CLEAR CONDITION

- When the OK idling cycle was completed 40 times in a row
- When “Clear Memory” was performed

7. MALFUNCTION INDICATOR LIGHT CLEAR CONDITION

- When the OK driving cycle was completed 3 times in a row
- When “Clear Memory” was performed

8. FAIL SAFE

Intake air temperature sensor process: Intake air temperature is fixed at 20°C (68°F).

9. ECM OPERATION AT DTC SETTING

Memorize the freeze frame data. (For test mode $02)

T: DTC P0112 INTAKE AIR TEMPERATURE CIRCUIT LOW INPUT

1. OUTLINE OF DIAGNOSIS

Detect the open or short circuit of intake air temperature sensor. Judge NG when out of the standard value.

2. COMPONENT DESCRIPTION

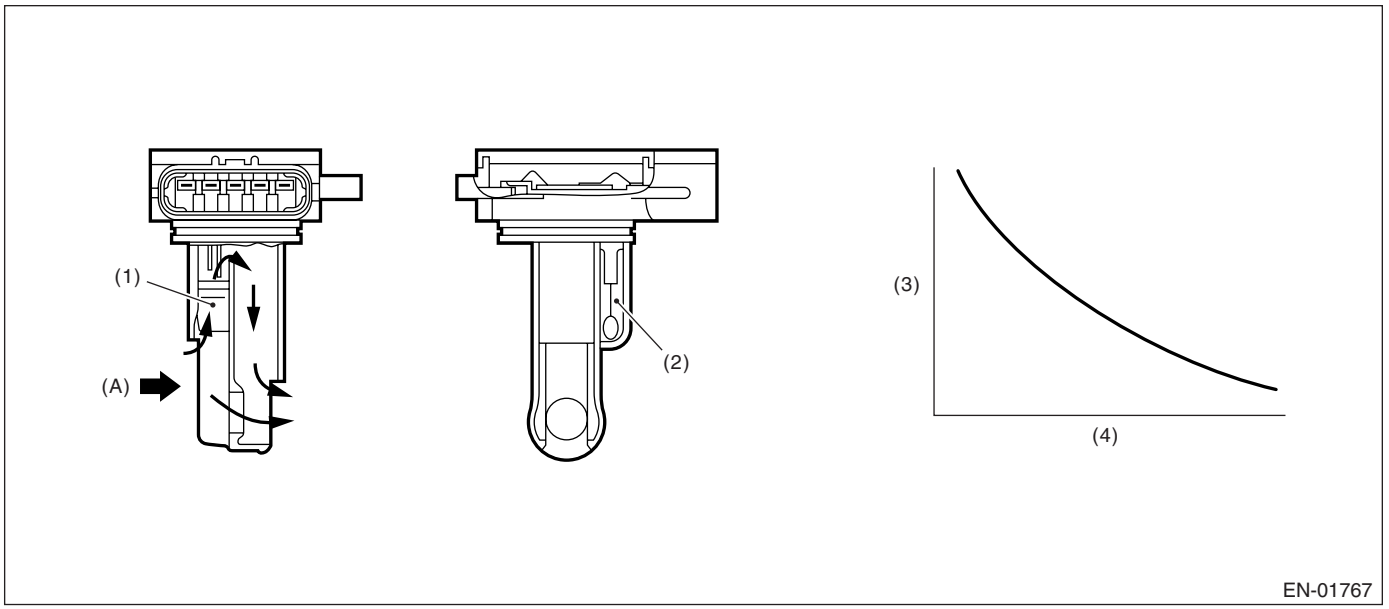

(1) Air flow sensor
(2) Intake air temperature sensor
(3) Resistance (Ω)
(4) Intake air temperature °C (°F)
(A) Air

3. ENABLE CONDITION

Secondary Parameters	Enable Conditions
None	

4. GENERAL DRIVING CYCLE

Always perform the diagnosis continuously.

5. DIAGNOSTIC METHOD

• Abnormality Judgment

Judge NG when the continuous time of completing the malfunction criteria below becomes more than 0.5 seconds.

Judgment Value

Malfunction Criteria	Threshold Value
Output voltage	〈 0.165 V
Ignition switch	ON

Time Needed for Diagnosis: 0.5 seconds
Malfunction Indicator Light Illumination: Illuminates as soon as the malfunction occurs.

• Normality Judgment

Judge OK and clear the NG when the malfunction criteria below are completed.

Judgment Value

Malfunction Criteria	Threshold Value
Output voltage	≥ 0.165 V
Ignition switch	ON

6. DTC CLEAR CONDITION

- When the OK idling cycle was completed 40 times in a row
- When “Clear Memory” was performed

7. MALFUNCTION INDICATOR LIGHT CLEAR CONDITION

- When the OK driving cycle was completed 3 times in a row
- When “Clear Memory” was performed

8. FAIL SAFE

Intake air temperature sensor process: Intake air temperature is fixed at 20°C (68°F).

9. ECM OPERATION AT DTC SETTING

Memorize the freeze frame data. (For test mode $02)

U: DTC P0113 INTAKE AIR TEMPERATURE CIRCUIT HIGH INPUT

1. OUTLINE OF DIAGNOSIS

Detect the open or short circuit of intake air temperature sensor. Judge NG when out of the standard value.

2. COMPONENT DESCRIPTION

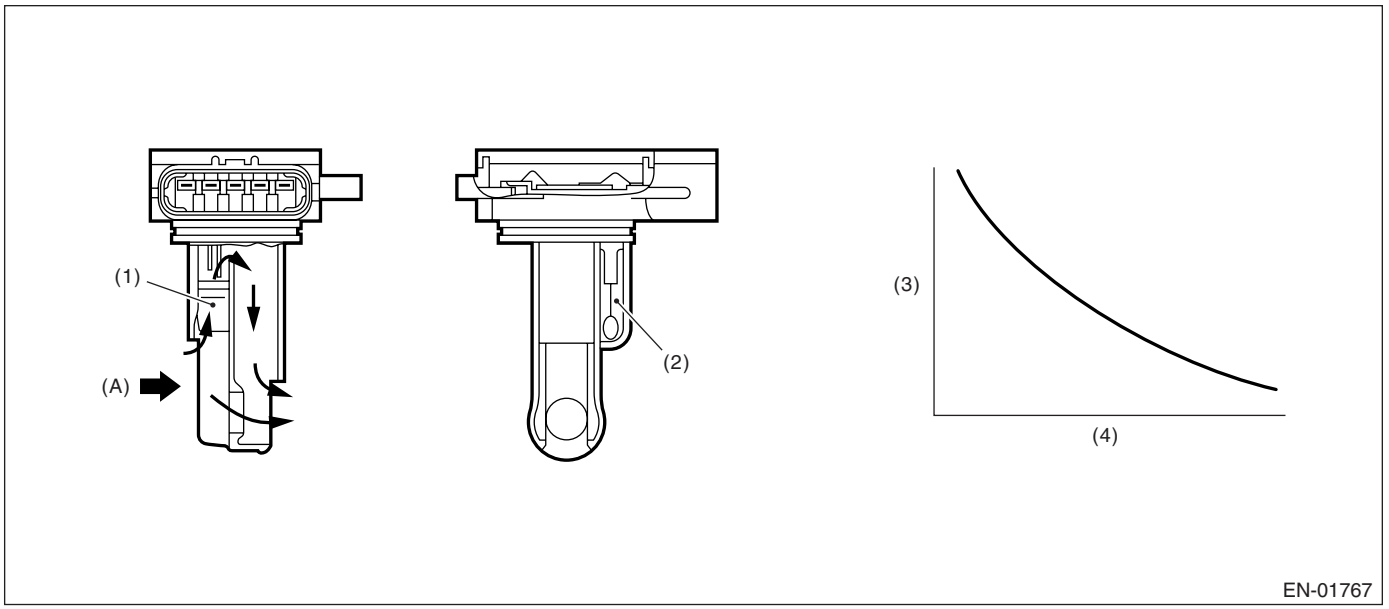

(1) Air flow sensor
(2) Intake air temperature sensor
(3) Resistance (Ω)
(4) Intake air temperature °C (°F)
(A) Air

3. ENABLE CONDITION

Secondary Parameters	Enable Conditions
None	

4. GENERAL DRIVING CYCLE

Always perform the diagnosis continuously.

5. DIAGNOSTIC METHOD

• Abnormality Judgment

Judge NG when the continuous time of completing the malfunction criteria below becomes more than 0.5 seconds.

Judgment Value

Malfunction Criteria	Threshold Value
Output voltage	≥ 4.716 V
Ignition switch	ON

Time Needed for Diagnosis: 0.5 seconds
Malfunction Indicator Light Illumination: Illuminates as soon as the malfunction occurs.

• Normality Judgment

Judge OK and clear the NG when the malfunction criteria below are completed.

Judgment Value

Malfunction Criteria	Threshold Value
Output voltage	< 4.716 V
Ignition switch	ON

6. DTC CLEAR CONDITION

- When the OK idling cycle was completed 40 times in a row
- When “Clear Memory” was performed

7. MALFUNCTION INDICATOR LIGHT CLEAR CONDITION

- When the OK driving cycle was completed 3 times in a row
- When “Clear Memory” was performed

8. FAIL SAFE

Intake air temperature sensor process: Intake air temperature is fixed at 20°C (68°F).

9. ECM OPERATION AT DTC SETTING

Memorize the freeze frame data. (For test mode $02)

V: DTC P0117 ENGINE COOLANT TEMPERATURE CIRCUIT LOW INPUT

1. OUTLINE OF DIAGNOSIS

Detect the open or short circuit of engine coolant temperature sensor. Judge NG when out of the standard value.

2. COMPONENT DESCRIPTION

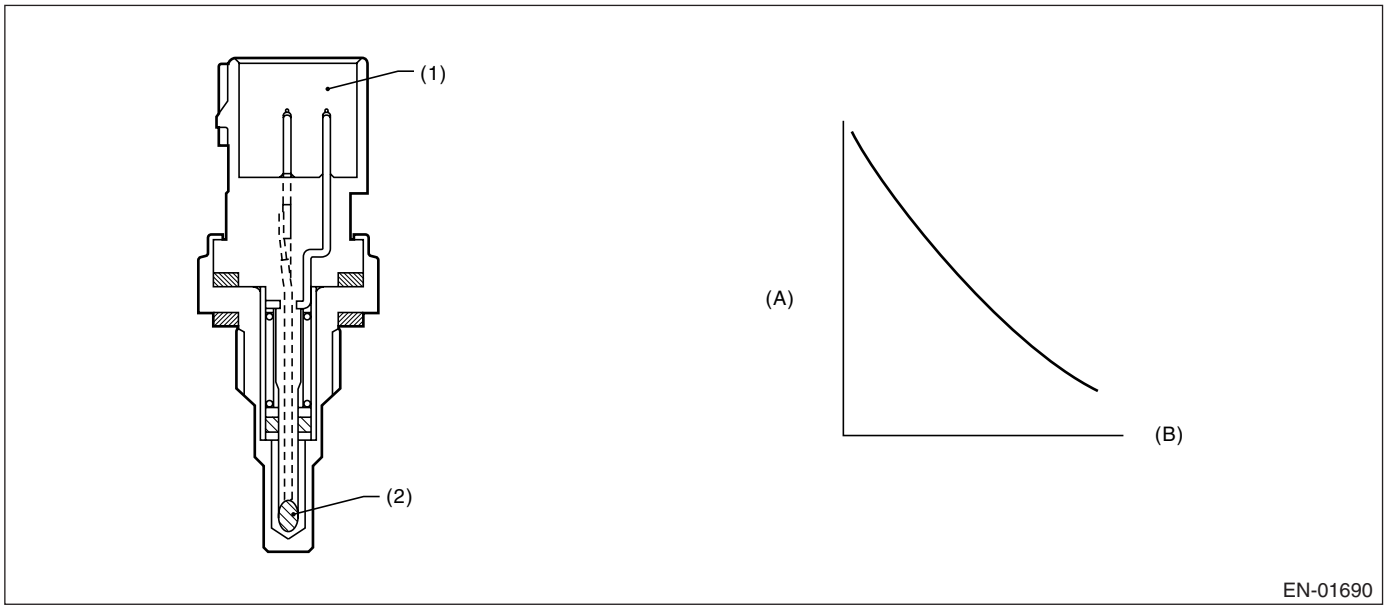

(1) Connector
(2) Thermistor element
(A) Resistance value (kΩ)
(B) Temperature °C (°F)

3. ENABLE CONDITION

Secondary Parameters	Enable Conditions
None	

4. GENERAL DRIVING CYCLE

Always perform the diagnosis continuously.

5. DIAGNOSTIC METHOD

Judge NG when the continuous time of completing the malfunction criteria below becomes more than 0.5 seconds. Judge OK and clear the NG when the malfunction criteria below are not completed.

Judgment Value

Malfunction Criteria	Threshold Value
Output voltage	〈 0.165 V

Time Needed for Diagnosis: 0.5 seconds
Malfunction Indicator Light Illumination: Illuminates as soon as the malfunction occurs.

6. DTC CLEAR CONDITION

- When the OK idling cycle was completed 40 times in a row
- When “Clear Memory” was performed

7. MALFUNCTION INDICATOR LIGHT CLEAR CONDITION

- When the OK driving cycle was completed 3 times in a row
- When “Clear Memory” was performed

8. FAIL SAFE

- Engine coolant temperature process: Fix the engine coolant temperature at 70°C (158°F).
- ISC feedback: Calculate the target engine speed setting the engine coolant temperature to 70°C (158°F).
- ISC learning: Not allowed to learn.
- Heavy fuel judgment control: Not allowed to carry out the heavy judgment.
- Air conditioner control: Not allowed to turn the air conditioner to ON.
- Radiator fan control: Both main and sub fan turn to ON.
- Increase compensation factor at high coolant temperature: Increase normally occurs with high temperature and other conditions; however, occurs with other conditions except coolant temperature condition.
- Tumble generator valve control: Open the tumble generator valve.

9. ECM OPERATION AT DTC SETTING

Memorize the freeze frame data. (For test mode $02)

W: DTC P0118 ENGINE COOLANT TEMPERATURE CIRCUIT HIGH INPUT

1. OUTLINE OF DIAGNOSIS

Detect the open or short circuit of engine coolant temperature sensor. Judge NG when out of the standard value.

2. COMPONENT DESCRIPTION

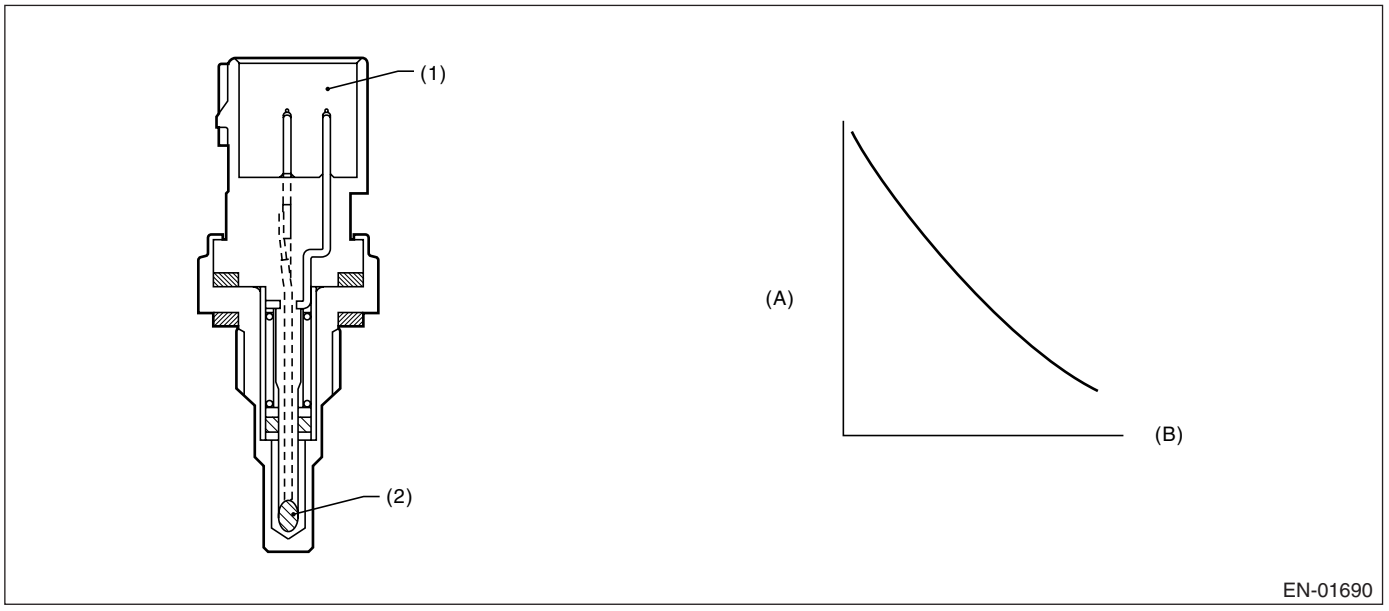

(1) Connector
(2) Thermistor element
(A) Resistance value (kΩ)
(B) Temperature °C (°F)

3. ENABLE CONDITION

Secondary Parameters	Enable Conditions
None	

4. GENERAL DRIVING CYCLE

Always perform the diagnosis continuously.

5. DIAGNOSTIC METHOD

Judge NG when the continuous time of completing the malfunction criteria below becomes more than 0.5 seconds. Judge OK and clear the NG when the malfunction criteria below are not completed.

Judgment Value

Malfunction Criteria	Threshold Value
Output voltage	≥ 4.716 V

Time Needed for Diagnosis: 0.5 seconds
Malfunction Indicator Light Illumination: Illuminates as soon as the malfunction occurs.

6. DTC CLEAR CONDITION

- When the OK idling cycle was completed 40 times in a row
- When “Clear Memory” was performed

7. MALFUNCTION INDICATOR LIGHT CLEAR CONDITION

- When the OK driving cycle was completed 3 times in a row
- When “Clear Memory” was performed

8. FAIL SAFE

- Engine coolant temperature process: Fix the engine coolant temperature at 70°C (158°F).
- ISC feedback: Calculate the target engine speed setting the engine coolant temperature to 70°C (158°F).
- ISC learning: Not allowed to learn.
- Heavy fuel judgment control: Not allowed to carry out the heavy judgment.
- Air conditioner control: Not allowed to turn the air conditioner to ON.
- Radiator fan control: Both main and sub fan turn to ON.
- Increase compensation factor at high coolant temperature: Increase normally occurs with high temperature and other conditions; however, occurs with other conditions except coolant temperature condition.
- Tumble generator valve control: Open the tumble generator valve.

9. ECM OPERATION AT DTC SETTING

Memorize the freeze frame data. (For test mode $02)

X: DTC P0122 THROTTLE/PEDAL POSITION SENSOR/SWITCH “A” CIRCUIT LOW INPUT

1. OUTLINE OF DIAGNOSIS

Detect the open or short circuit of throttle position sensor 1.
Judge NG when out of the standard value.

2. COMPONENT DESCRIPTION

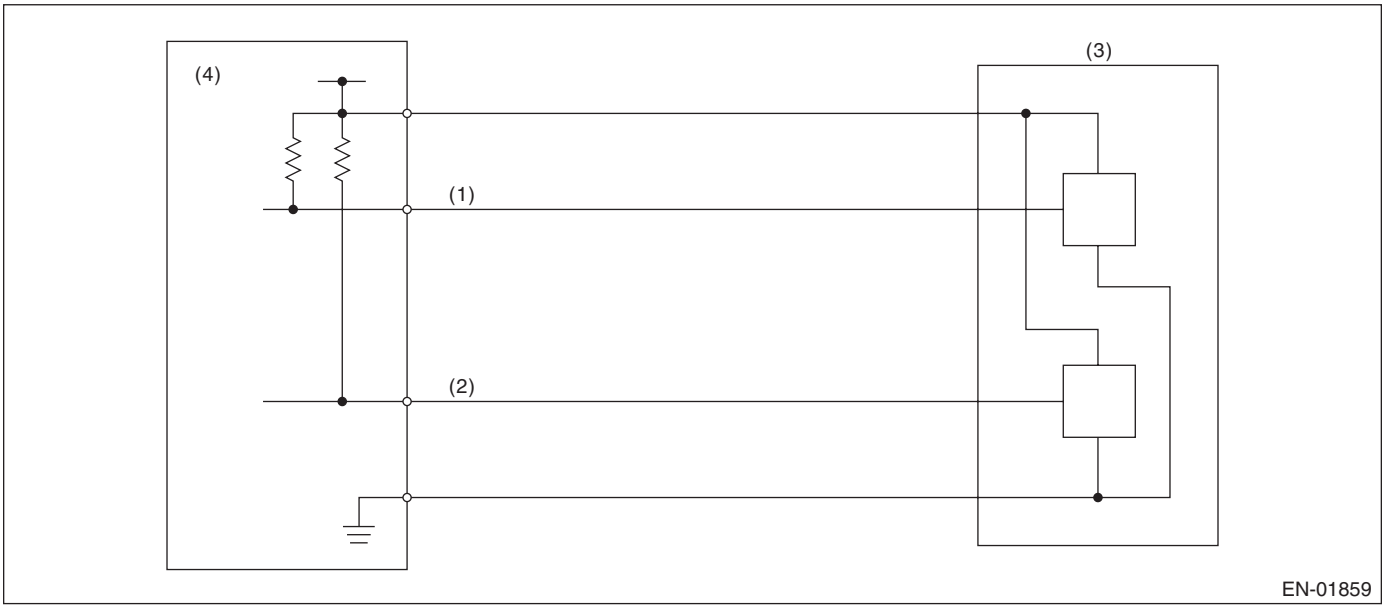

(1) Throttle position sensor 1 signal
(2) Throttle position sensor 2 signal
(3) Throttle position sensor
(4) Engine control module (ECM)

3. ENABLE CONDITION

Secondary Parameters	Enable Conditions
Ignition switch	ON

4. GENERAL DRIVING CYCLE

Always perform the diagnosis continuously.

5. DIAGNOSTIC METHOD

Judge OK and clear the NG when the malfunction criteria below are completed.
Judgment Value

Malfunction Criteria	Threshold Value
Sensor 1 input voltage	≥ 0.309 V

Time Needed for Diagnosis: 24 milliseconds
Malfunction Indicator Light Illumination: Illuminates as soon as malfunction occurs.

6. DTC CLEAR CONDITION

- When the OK idling cycle was completed 40 times in a row
- When “Clear Memory” was performed (Only with engine stopped)

7. MALFUNCTION INDICATOR LIGHT CLEAR CONDITION

- When the OK driving cycle was completed 3 times in a row
- When “Clear Memory” was performed (Only with engine stopped)

8. FAIL SAFE

Stop power distribution to electronic throttle control motor. (Throttle opening is fixed to 6°.)

9. ECM OPERATION AT DTC SETTING

Memorize the freeze frame data. (For test mode $02)

Y: DTC P0123 THROTTLE/PEDAL POSITION SENSOR/SWITCH "A" CIRCUIT HIGH INPUT

1. OUTLINE OF DIAGNOSIS

Detect the open or short circuit of throttle position sensor 1.
Judge NG when out of the standard value.

2. COMPONENT DESCRIPTION

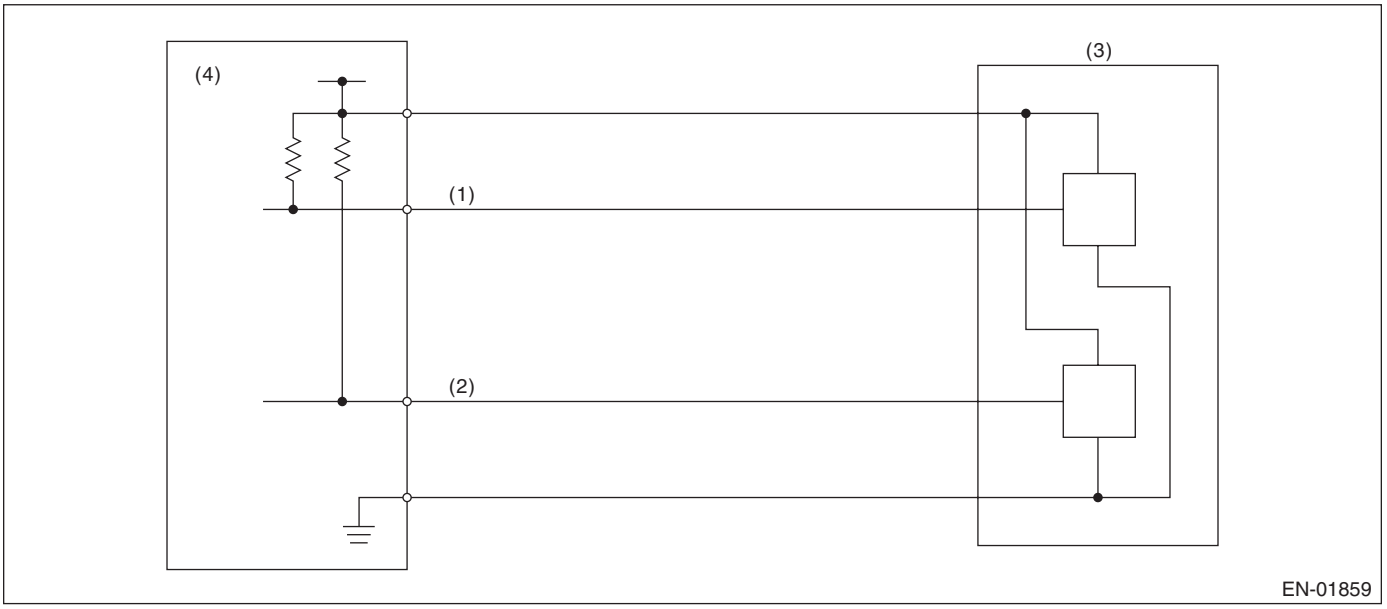

(1) Throttle position sensor 1 signal
(2) Throttle position sensor 2 signal
(3) Throttle position sensor
(4) Engine control module (ECM)

3. ENABLE CONDITION

Secondary Parameters	Enable Conditions
Ignition switch	ON

4. GENERAL DRIVING CYCLE

Always perform the diagnosis continuously.

5. DIAGNOSTIC METHOD

Judge OK and clear the NG when the malfunction criteria below are completed.
Judgment Value

Malfunction Criteria	Threshold Value
Sensor 1 input voltage	≤ 4.646 V

Time Needed for Diagnosis: 24 milliseconds
Malfunction Indicator Light Illumination: Illuminates as soon as malfunction occurs.

6. DTC CLEAR CONDITION

- When the OK idling cycle was completed 40 times in a row
- When "Clear Memory" was performed (Only with engine stopped)

7. MALFUNCTION INDICATOR LIGHT CLEAR CONDITION

- When the OK driving cycle was completed 3 times in a row
- When "Clear Memory" was performed (Only with engine stopped)

8. FAIL SAFE

Stop power distribution to electronic throttle control motor. (Throttle opening is fixed to 6°.)

9. ECM OPERATION AT DTC SETTING

Memorize the freeze frame data. (For test mode $02)

Z: DTC P0125 INSUFFICIENT ENGINE COOLANT TEMPERATURE FOR CLOSED LOOP FUEL CONTROL

1. OUTLINE OF DIAGNOSIS

Detect the malfunction of engine coolant temperature output property. Judge NG when the engine coolant temperature does not rise whereas it seemed to rise from the viewpoint of the engine condition.

2. COMPONENT DESCRIPTION

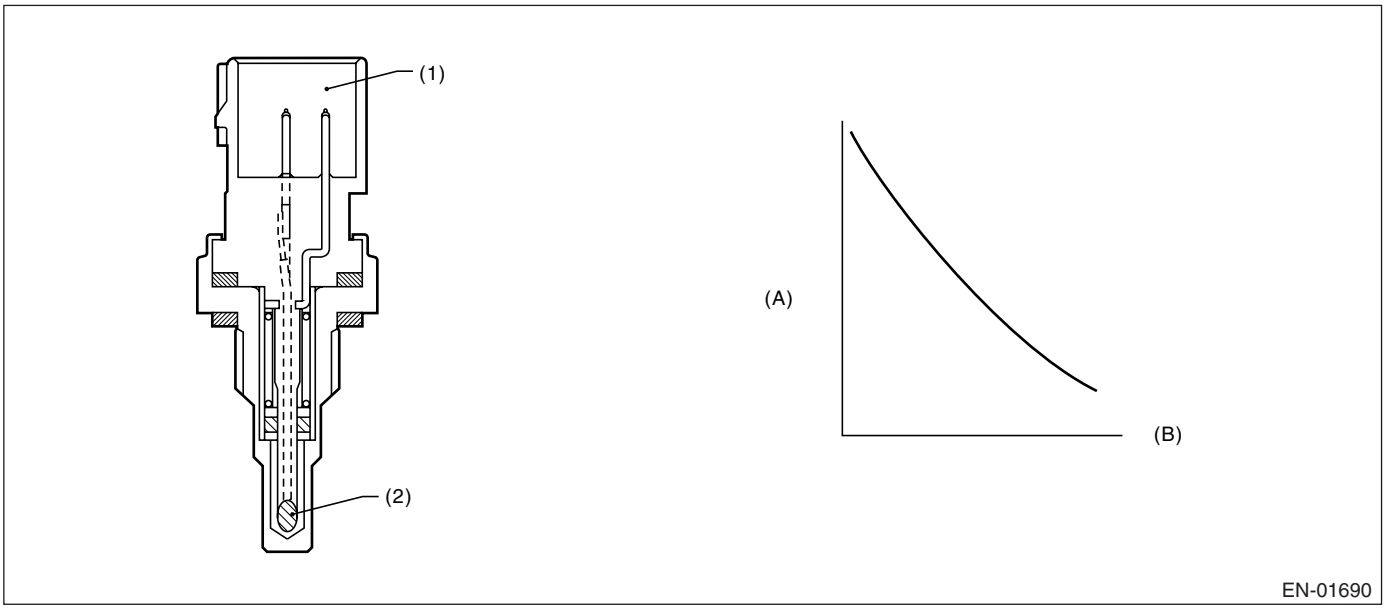

(1) Connector
(2) Thermistor element
(A) Resistance value (kΩ)
(B) Temperature °C (°F)

3. ENABLE CONDITION

Secondary Parameters	Enable Conditions
Engine speed	≥ 500 rpm
Battery voltage	〉10.9 V

4. GENERAL DRIVING CYCLE

Perform the diagnosis only once after engine starting.

5. DIAGNOSTIC METHOD

• Abnormality Judgment

Judge NG when the malfunction criteria below are completed.

Judgment Value

Malfunction Criteria	Threshold Value
Engine coolant temperature	〈 20°C (68°F)
Timer for diagnosis after engine starting	≥ Timer judgment value after engine starting

Timer for diagnosis after engine starting
a) Timer stop at fuel cut mode.
b) During the driving conditions (except a) above), timer count up by 64 milliseconds + TWCNT milliseconds at every 64 milliseconds.
Where, TWCNT is determined as follows,
TWCNT = 0 at idle switch ON,

Refer to the following table for TWCNT with idle switch OFF.

Temperature °C (°F)	Vehicle speed km/h (MPH)							
	0 (0)	8 (4.97)	16 (9.94)	24 (14.9)	32 (19.9)	40 (24.9)	48 (29.8)	56 (34.8)
−20 (−4)	0 ms	37.136 ms	74.272 ms	111.41 ms	126.66 ms	141.91 ms	163.59 ms	185.26 ms
−10 (14)	0 ms	27.391 ms	54.782 ms	82.173 ms	99.65 ms	117.13 ms	135.96 ms	154.80 ms
0 (32)	0 ms	17.646 ms	35.292 ms	52.938 ms	72.64 ms	92.341 ms	108.34 ms	124.33 ms
10 (50)	0 ms	7.9012 ms	15.802 ms	23.704 ms	45.63 ms	67.556 ms	80.711 ms	93.867 ms

Judgment value of timer after engine starting
$t = 455 - 27 \times Ti$
Ti is the lowest coolant temperature after starting the engine.
Time Needed for Diagnosis: To be determined. (It is varied by the Min. engine coolant temperature and engine conditions such as vehicle speed and engine coolant temperature.)
Malfunction Indicator Light Illumination: Illuminates when malfunction occurs in 2 continuous driving cycles.
• Normality Judgment

Judge OK and clear the NG when the malfunction criteria below are completed.
Judgment Value

Malfunction Criteria	Threshold Value
Engine coolant temperature	≥ 20°C (68°F)

6. DTC CLEAR CONDITION

- When the OK idling cycle was completed 40 times in a row
- When “Clear Memory” was performed

7. MALFUNCTION INDICATOR LIGHT CLEAR CONDITION

- When the OK driving cycle was completed 3 times in a row
- When “Clear Memory” was performed

8. FAIL SAFE

- Engine coolant temperature process: Fix the engine coolant temperature at 70°C (158°F).
- ISC feedback: Calculate the target engine speed setting the engine coolant temperature to 70°C (158°F).
- ISC learning: Not allowed to learn.
- Heavy fuel judgment control: Not allowed to carry out the heavy judgment.
- Air conditioner control: Not allowed to turn the air conditioner to ON.
- Radiator fan control: Both main and sub fan turn to ON.
- Increase compensation factor at high coolant temperature: Increase normally occurs with high temperature and other conditions; however, occurs with other conditions except coolant temperature condition.
- Tumble generator valve control: Open the tumble generator valve.

9. ECM OPERATION AT DTC SETTING

Memorize the freeze frame data. (For test mode $02)

AA:DTC P0126 INSUFFICIENT ENGINE COOLANT TEMPERATURE FOR STABLE OPERATION

1. OUTLINE OF DIAGNOSIS

Detect the malfunction of engine coolant temperature output property. Judge NG when the engine coolant temperature sensor output does not change whereas it seemed to change from the viewpoint of the engine condition.

2. COMPONENT DESCRIPTION

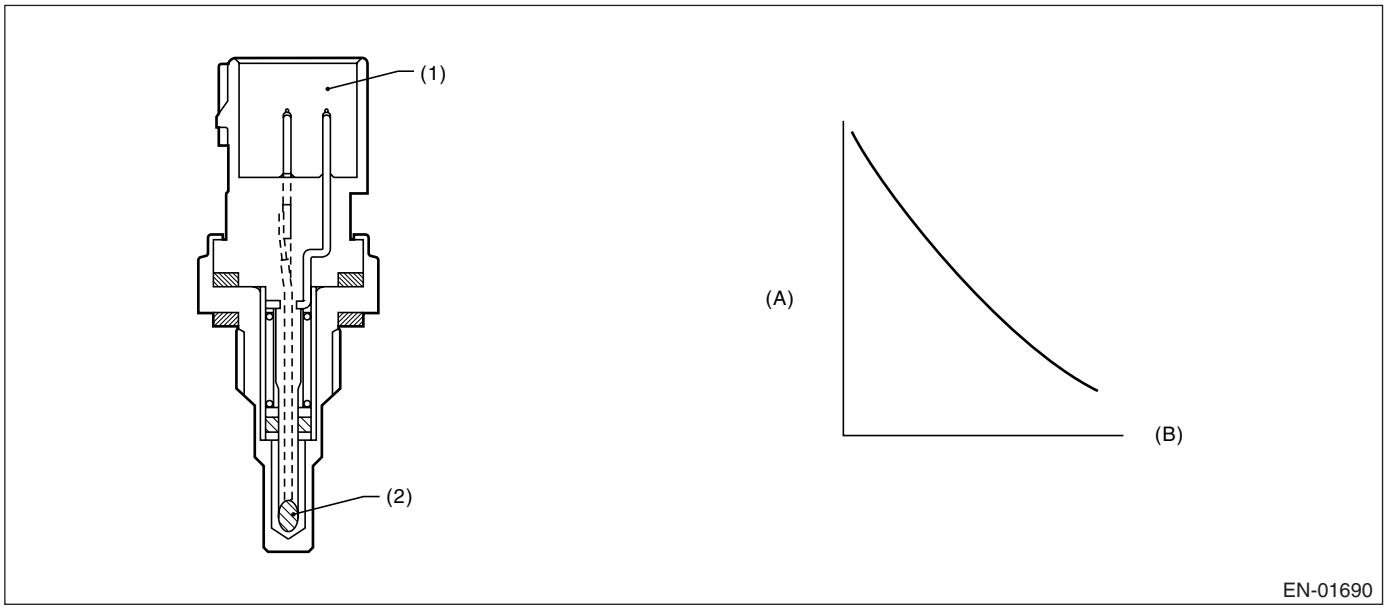

(1) Connector
(2) Thermistor element
(A) Resistance value (kΩ)
(B) Temperature °C (°F)

3. ENABLE CONDITION

Secondary Parameters	Enable Conditions
Battery voltage	〉10.9 V
More than 20 seconds after engine starting	Experienced 5 times
More than 20 seconds with vehicle running at 30 km/h (18.6 MPH) or more	Experienced 5 times

4. GENERAL DRIVING CYCLE

After idling and running for the specified time, perform the diagnosis only once for OK/NG judgment.

5. DIAGNOSTIC METHOD

Judge NG when the malfunction criteria below are completed and judge OK when not completed.
Judgment Value

Malfunction Criteria	Threshold Value
Engine coolant temperature sensor Max. voltage − Min. voltage	〈 0.015 V

Time Needed for Diagnosis: To be determined. (It is varied by the Min. engine coolant temperature and engine conditions such as vehicle speed and engine coolant temperature.)
Malfunction Indicator Light Illumination: Illuminates when malfunction occurs in 2 continuous driving cycles.

6. DTC CLEAR CONDITION

- When the OK idling cycle was completed 40 times in a row
- When “Clear Memory” was performed

7. MALFUNCTION INDICATOR LIGHT CLEAR CONDITION

- When the OK driving cycle was completed 3 times in a row
- When “Clear Memory” was performed

8. FAIL SAFE

None

9. ECM OPERATION AT DTC SETTING

Memorize the freeze frame data. (For test mode $02)

AB:DTC P0128 COOLANT THERMOSTAT (ENGINE COOLANT TEMPERATURE BELOW THERMOSTAT REGULATING TEMPERATURE)

1. OUTLINE OF DIAGNOSIS

Detect the malfunction of thermostat function. Judge NG when the engine coolant temperature is lower than the estimated engine coolant temperature and the difference between them is large. Judge OK when the engine coolant temperature becomes 70°C (158°F) and the difference is small before judging NG.

2. COMPONENT DESCRIPTION

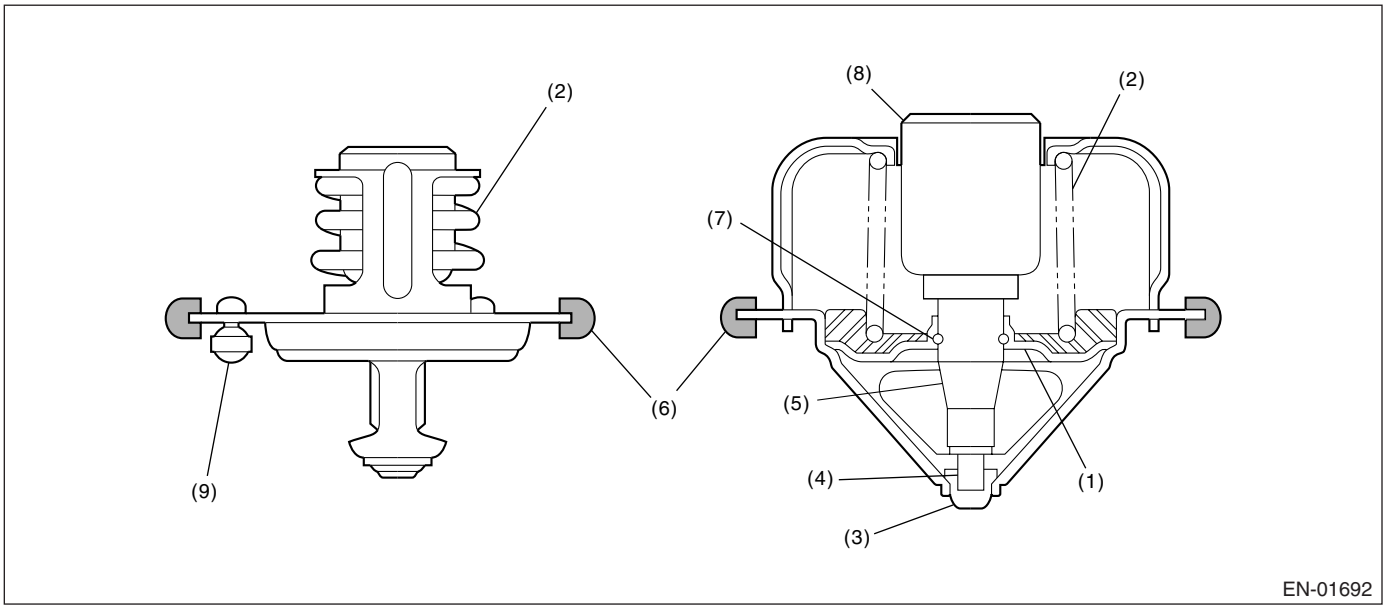

(1) Valve
(2) Spring
(3) Stopper
(4) Piston
(5) Guide
(6) Rubber packing
(7) Stop ring
(8) Wax element
(9) Jiggle valve

3. ENABLE CONDITION

Secondary Parameters	Enable Conditions
None	

4. GENERAL DRIVING CYCLE

Always perform the diagnosis continuously.

5. DIAGNOSTIC METHOD

• Abnormality Judgment

Judge NG when the continuous time of completing the malfunction criteria below becomes more than 30 seconds.

Judgment Value

Malfunction Criteria	Threshold Value
Battery voltage	≥ 10.9 V
Engine coolant temperature at engine starting	< 55°C (131°F)
Estimated engine coolant temperature	≥ 70°C (158°F)
Estimated ambient temperature	≥ –7°C (19°F)
Engine coolant temperature	< 70°C (158°F)
(Estimated – measured) coolant temperature	> 30°C (86°F)
Vehicle speed	≥ 30 km/h (19 MPH)

Time Needed for Diagnosis: Not fixed
Malfunction Indicator Light Illumination: Illuminates when malfunction occurs in 2 continuous driving cycles.

• Normality Judgment

Judge OK and clear the NG when the malfunction criteria below are completed.

Judgment Value

Malfunction Criteria	Threshold Value
Battery voltage	≥ 10.9 V
Engine coolant temperature at engine starting	< 55°C (131°F)
Engine coolant temperature	≥ 70°C (158°F)
(Estimated – measured) coolant temperature	≤ 30°C (86°F)

6. DTC CLEAR CONDITION

- When the OK idling cycle was completed 40 times in a row
- When “Clear Memory” was performed

7. MALFUNCTION INDICATOR LIGHT CLEAR CONDITION

- When the OK driving cycle was completed 3 times in a row
- When “Clear Memory” was performed

8. FAIL SAFE

None

9. ECM OPERATION AT DTC SETTING

Memorize the freeze frame data. (For test mode $02)

AC:DTC P0131 O2 SENSOR CIRCUIT LOW VOLTAGE (BANK 1 SENSOR 1)

1. OUTLINE OF DIAGNOSIS

Detect the open or short circuit of sensor.
Judge NG when the element impressed voltage is out of range, or the element current is out of range.

2. COMPONENT DESCRIPTION

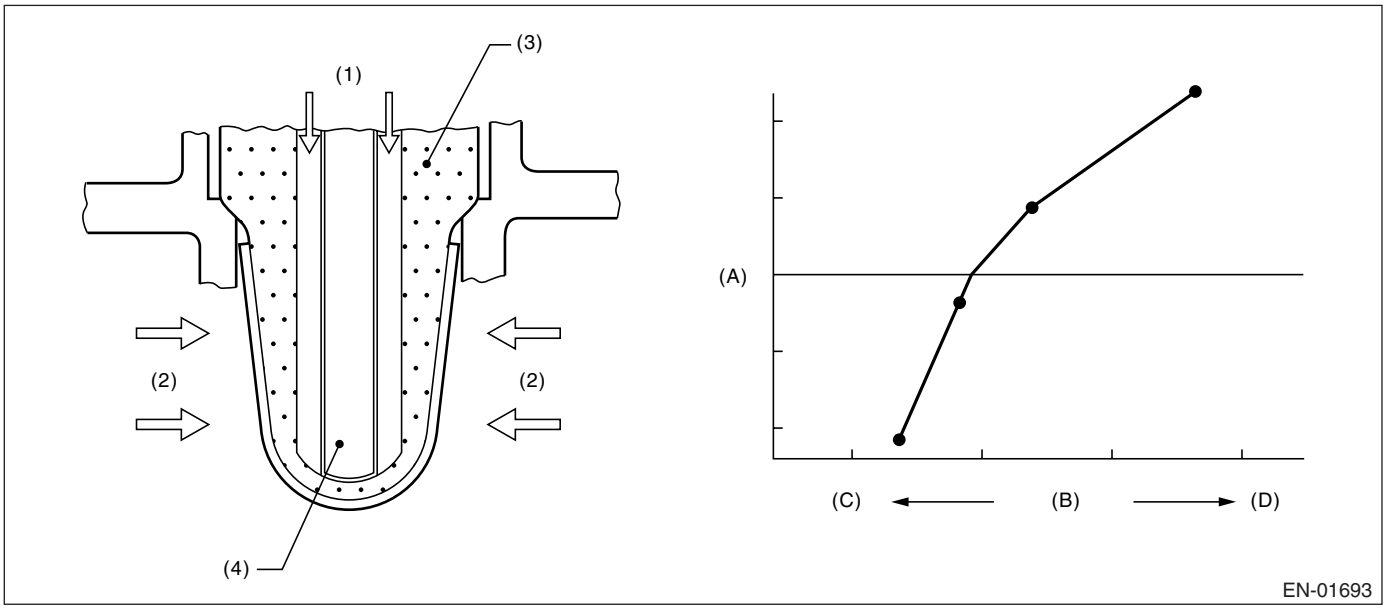

(1) Atmosphere
(2) Exhaust
(3) ZrO2
(4) Ceramic heater
(A) Electromotive force
(B) Air fuel ratio
(C) Lean
(D) Rich

3. ENABLE CONDITION

Secondary Parameters	Enable Conditions
Voltage	≥ 10.9 V

4. GENERAL DRIVING CYCLE

Always perform the diagnosis continuously.

5. DIAGNOSTIC METHOD

Judge NG when the continuous time of completing any malfunction criteria below becomes more than 1 second.

Judgment Value

Malfunction Criteria	Threshold Value
Input voltage	< 1.8 V
Input current	< −0.005 A

Time Needed for Diagnosis: 1 second
Malfunction Indicator Light Illumination: Illuminates as soon as the malfunction occurs.

6. DTC CLEAR CONDITION

- When the OK idling cycle was completed 40 times in a row
- When “Clear Memory” was performed

7. MALFUNCTION INDICATOR LIGHT CLEAR CONDITION

- When the OK driving cycle was completed 3 times in a row
- When “Clear Memory” was performed

8. FAIL SAFE

- Front oxygen (A/F) sensor heater control: Not allowed to turned on the heater.
- A/F main learning: Not allowed to calculate the A/F main learning compensation factor.
- A/F sub learning: Not allowed to calculate the A/F sub learning compensation factor.
- Compensation when starting the engine at high temperature: Make the MIN value to be 0 from 0.06 normally.
- Purge control: Not allowed to purge.

9. ECM OPERATION AT DTC SETTING

Memorize the freeze frame data. (For test mode $02)

AD:DTC P0132 O2 SENSOR CIRCUIT HIGH VOLTAGE (BANK 1 SENSOR 1)

1. OUTLINE OF DIAGNOSIS

Detect the open or short circuit of sensor.
Judge NG when the element impressed voltage is out of range, or the element current is out of range.

2. COMPONENT DESCRIPTION

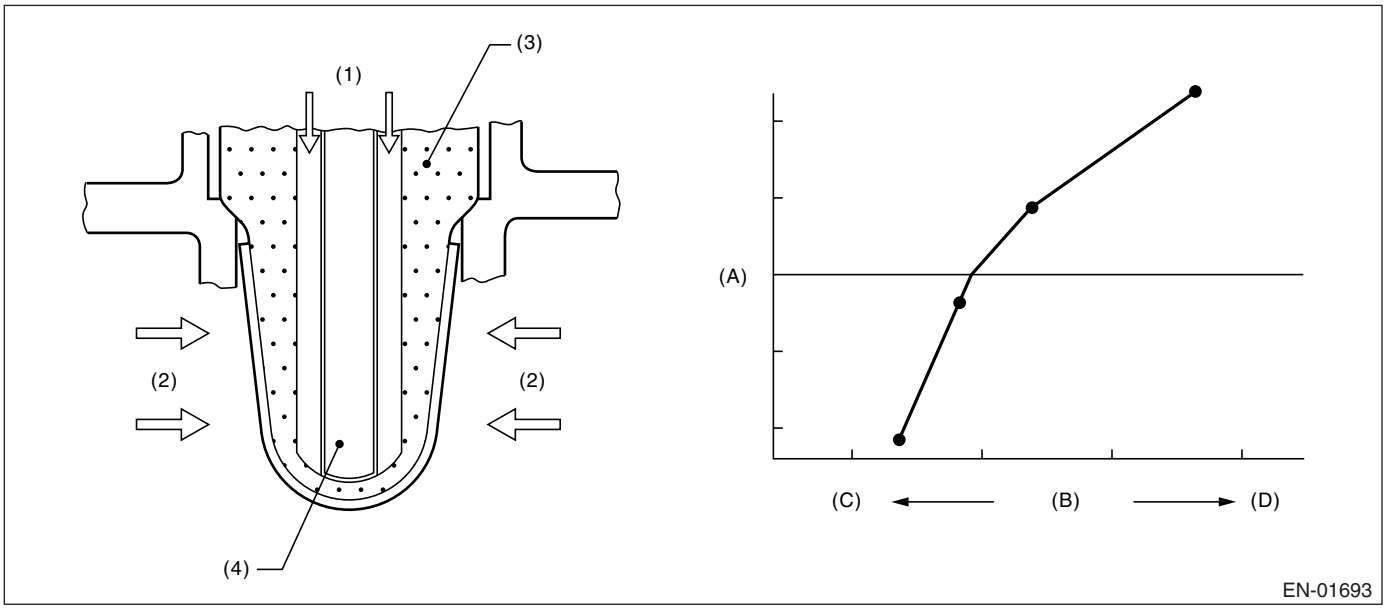

(1) Atmosphere
(2) Exhaust
(3) ZrO2
(4) Ceramic heater
(A) Electromotive force
(B) Air fuel ratio
(C) Lean
(D) Rich

3. ENABLE CONDITION

Secondary Parameters	Enable Conditions
Voltage	≥ 10.9 V

4. GENERAL DRIVING CYCLE

Always perform the diagnosis continuously.

5. DIAGNOSTIC METHOD

Judge NG when the continuous time of completing any malfunction criteria below becomes more than 1 second.

Judgment Value

Malfunction Criteria	Threshold Value
Input voltage	≥ 3.8 V
Input current	≥ 0.005 A

Time Needed for Diagnosis: 1 second
Malfunction Indicator Light Illumination: Illuminates as soon as the malfunction occurs.

6. DTC CLEAR CONDITION

- When the OK idling cycle was completed 40 times in a row
- When “Clear Memory” was performed

7. MALFUNCTION INDICATOR LIGHT CLEAR CONDITION

- When the OK driving cycle was completed 3 times in a row
- When “Clear Memory” was performed

8. FAIL SAFE

- Front oxygen (A/F) sensor heater control: Not allowed to turned on the heater.
- A/F main learning: Not allowed to calculate the A/F main learning compensation factor.
- A/F sub learning: Not allowed to calculate the A/F sub learning compensation factor.
- Compensation when starting the engine at high temperature: Make the MIN value to be 0 from 0.06 normally.
- Purge control: Not allowed to purge.

9. ECM OPERATION AT DTC SETTING

Memorize the freeze frame data. (For test mode $02)

AE:DTC P0133 O2 SENSOR CIRCUIT SLOW RESPONSE (BANK 1 SENSOR 1)

1. OUTLINE OF DIAGNOSIS

Detect time-lag of front oxygen (A/F) sensor response. Front oxygen (A/F) sensor cover has some ventilation holes for exhaust gas. Clogged ventilation holes are diagnosed. When the holes are clogged, the A/F output variation becomes slow comparing with the actual A/F variation because oxygen which reaches the zirconia layer is insufficient. Therefore, if the cover has clogged holes, the rich to lean judgment in ECM is delayed when the change from rich to lean is caused. Judge NG when the actual A/F variation is slow comparing with the ECM control amount.

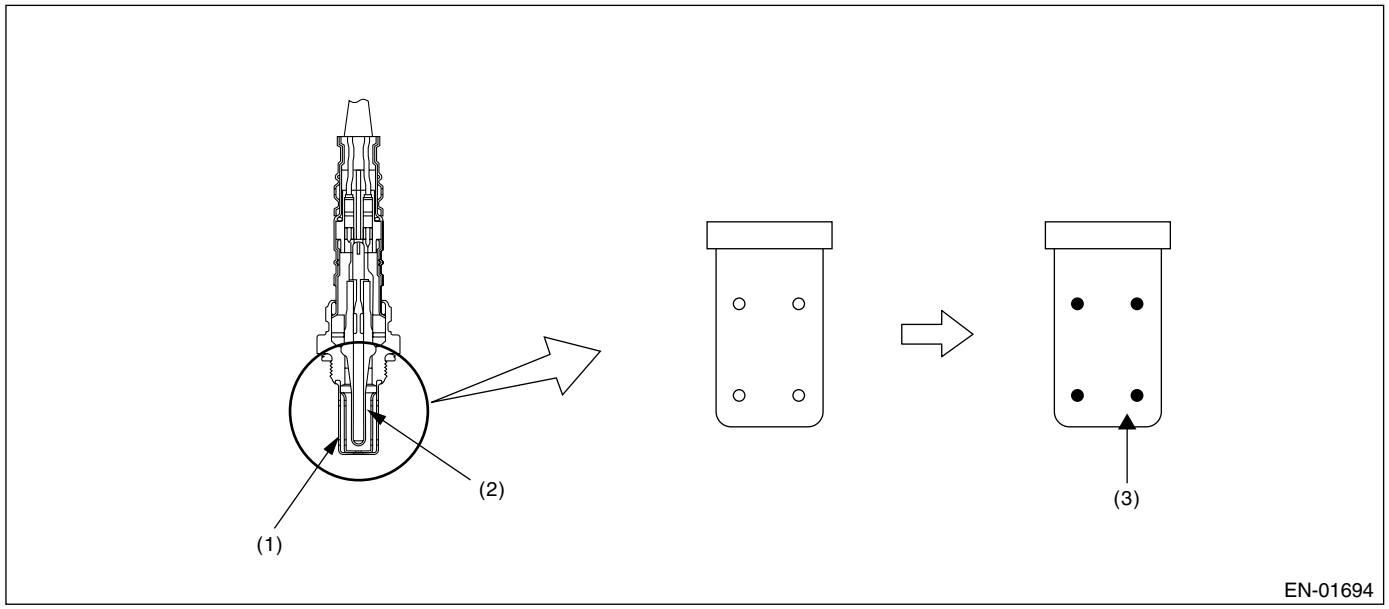

(1) Cover
(2) Zirconia
(3) Clogging

2. COMPONENT DESCRIPTION

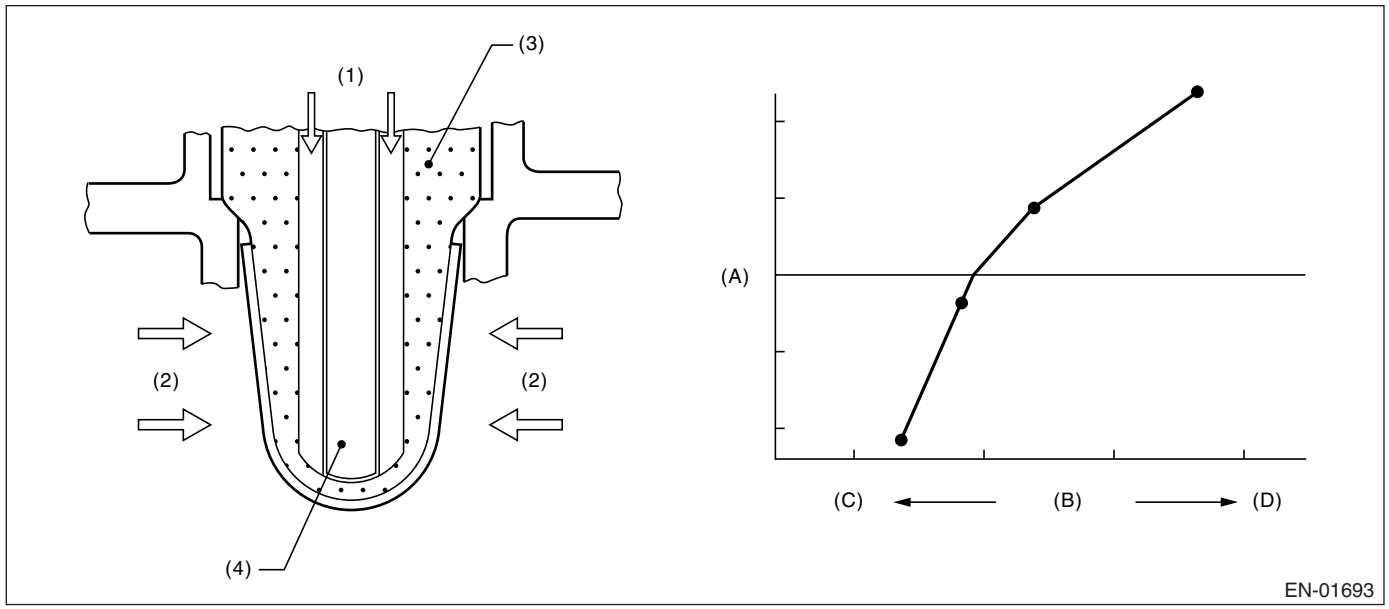

(1) Atmosphere
(2) Exhaust
(3) ZrO2
(4) Ceramic heater
(A) Electromotive force
(B) Air fuel ratio
(C) Lean
(D) Rich

3. ENABLE CONDITION

Secondary Parameters	Enable Conditions
All secondary parameter enable conditions	more than 1 second
Battery voltage	〉10.9 V
Atmospheric pressure	〉75.1 kPa (563 mmHg, 22.2 inHg)
Closed loop control with main feedback	operating
Impedance of front oxygen (A/F) sensor	0 ←→ 50 Ω
After engine starting	120 seconds or more
Engine coolant temperature	≥ 70°C (158°F)
Engine speed	1000 ←→ 3200 rpm
Vehicle speed	10 ←→ 120 km/h (6.21 ←→ 74.6 MPH)
Amount of intake air	10 ←→ 40 g (0.35 ←→ 1.41 oz)/s
Engine load change during 0.5 engine rev.	≤ 0.02 g (0.001 oz)/rev
Learning value of EVAP conc. during purge	≤ 0.2
Accumulated time of operating canister purge	20 seconds or more

4. GENERAL DRIVING CYCLE

Perform diagnosis only once at a constant speed of 10 to 120 km/h (6.21 to 74.6 MPH) in 120 seconds after starting the engine.

5. DIAGNOSTIC METHOD

Integrate the difference of faf in every 128 milliseconds and difference of λ value.
After integrate 210 seconds, calculate the diagnosis value.
Judge NG when the malfunction criteria below are completed. Judge OK and clear NG when the malfunction criteria below are not completed.

Judgment Value

Malfunction Criteria	Threshold Value
parafca = td2faf/td2lmd where, td2faf (N) = td2faf (n−1) + |d2faf (n)| td2lmd (N) = td2lmd (n−1) + |d2lmd (n)| add up for a total of 210 seconds d2faf (n) = (faf (n) − faf (n−1)) − (faf (n−1) − faf (n−2)) d2lmd (n) = (lmd (n) − lmd (n−1)) − (lmd (n−1) − lmd (n−2)) faf = main feedback compensation coefficient every 128 milliseconds lmd = output lambda every 128 milliseconds	≥ 0.12

Time Needed for Diagnosis: 210 seconds
Malfunction Indicator Light Illumination: Illuminates when malfunction occurs in 2 continuous driving cycles.

6. DTC CLEAR CONDITION

- When the OK idling cycle was completed 40 times in a row
- When “Clear Memory” was performed

7. MALFUNCTION INDICATOR LIGHT CLEAR CONDITION

- When the OK driving cycle was completed 3 times in a row
- When “Clear Memory” was performed

8. FAIL SAFE

- Front oxygen (A/F) sensor main learning correction: Not allowed to calculate.
- A/F sub learning correction: Not allowed to calculate.
- Correction when re-starting at high temperature: Normally minimum value 0.3 → 0.
- Purge control: Not allowed to purge.

9. ECM OPERATION AT DTC SETTING

- Memorize the freeze frame data. (For test mode $02)
- Memorize the diagnostic value and trouble standard value. (For test mode $06)

AF:DTC P0134 O2 SENSOR CIRCUIT NO ACTIVITY DETECTED (BANK 1 SENSOR 1)

1. OUTLINE OF DIAGNOSIS

Detect the open circuit of sensor.
Judge NG when the element impedance is large.

2. COMPONENT DESCRIPTION

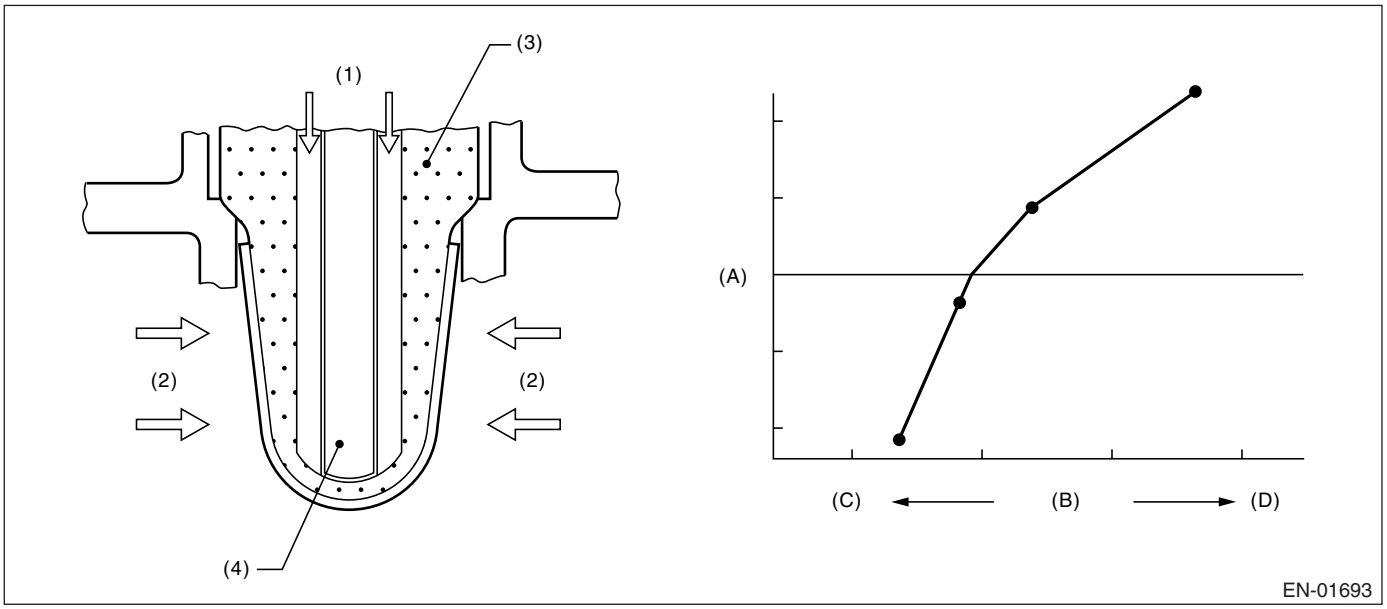

(1) Atmosphere
(2) Exhaust
(3) ZrO2
(4) Ceramic heater
(A) Electromotive force
(B) Air fuel ratio
(C) Lean
(D) Rich

3. ENABLE CONDITION

Secondary Parameters	Enable Conditions
None	

4. GENERAL DRIVING CYCLE

Always perform the diagnosis continuously.

5. DIAGNOSTIC METHOD

Judge NG when the continuous time of completing the malfunction criteria below becomes more than 5 seconds.

Judgment Value

Malfunction Criteria	Threshold Value
Voltage	≥ 10.9 V
Time after heater duty ≥ 70%	≥ 30 seconds
Front lambda sensor impedance	≥ 500 Ω

Time Needed for Diagnosis: 5 seconds
Malfunction Indicator Light Illumination: Illuminates as soon as the malfunction occurs.

6. DTC CLEAR CONDITION

- When the OK idling cycle was completed 40 times in a row
- When “Clear Memory” was performed

7. MALFUNCTION INDICATOR LIGHT CLEAR CONDITION

- When the OK driving cycle was completed 3 times in a row
- When “Clear Memory” was performed

8. FAIL SAFE

- Front oxygen (A/F) sensor heater control: Not allowed to turned on the heater.
- A/F main learning: Not allowed to calculate the A/F main learning compensation factor.
- A/F sub learning: Not allowed to calculate the A/F sub learning compensation factor.
- Compensation when starting the engine at high temperature: Make the MIN value to be 0 from 0.06 normally.
- Purge control: Not allowed to purge.

9. ECM OPERATION AT DTC SETTING

Memorize the freeze frame data. (For test mode $02)

AG:DTC P0137 O2 SENSOR CIRCUIT LOW VOLTAGE (BANK 1 SENSOR 2)

1. OUTLINE OF DIAGNOSIS

Detect the malfunction of oxygen sensor open or short circuit. Judge NG when the oxygen sensor voltage may be abnormal from oxygen sensor voltage value with considering the conditions such as intake air amount, engine coolant temperature, main feedback control.

2. COMPONENT DESCRIPTION

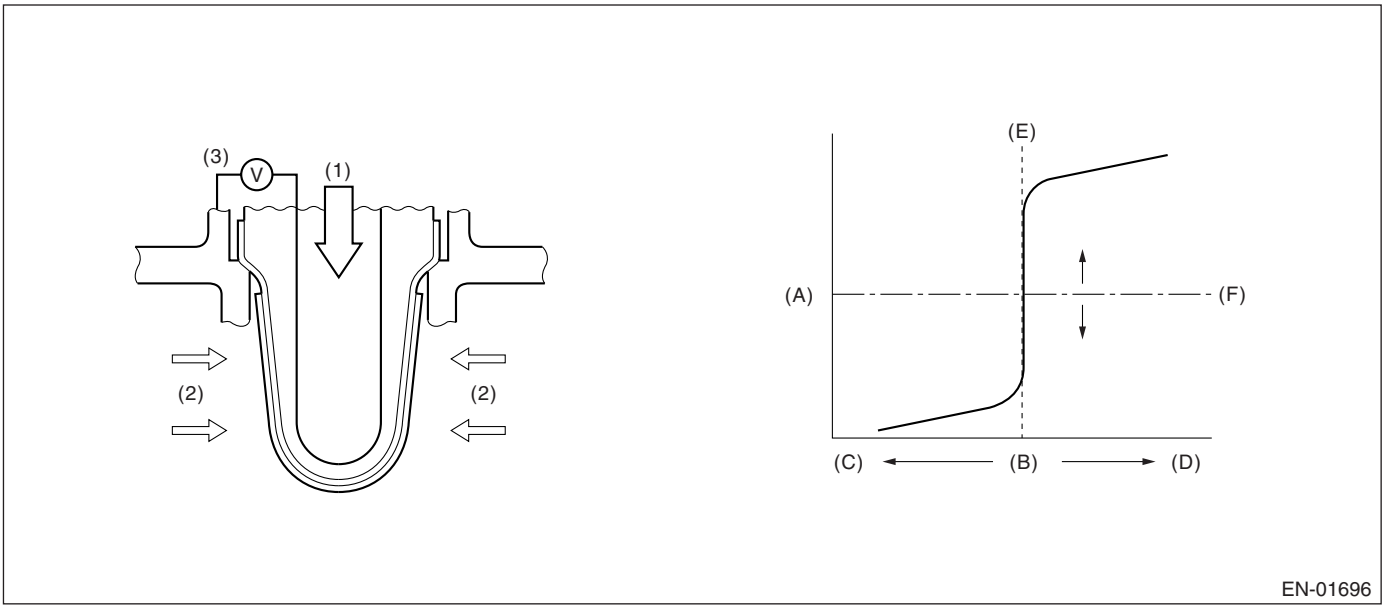

(1) Atmosphere
(2) Exhaust
(3) Electromotive force
(A) Electromotive force
(B) Air fuel ratio
(C) Rich
(D) Lean
(E) Theoretical air fuel ratio
(F) Comparative voltage

3. ENABLE CONDITION (USED ONLY FOR MALFUNCTION JUDGMENT)

Secondary Parameters	Enable Conditions
Closed loop control of oxygen sensor	In operation
Target output voltage of oxygen sensor	≥ 0.6 V
Amount of intake air	≥ 10 g/s
Engine coolant temperature	≥ 70°C (158°F)
Misfire detection during 200 engine revs.	< 5 times
Compensation factor for front oxygen (A/F) sensor	Not in limit value
Battery voltage	> 10.9 V
6 seconds or more fuel shut-off in decel. from engine speed of 1700 rpm or more	Experienced

4. GENERAL DRIVING CYCLE

Perform the diagnosis once after starting the engine.

5. DIAGNOSTIC METHOD

• Abnormality Judgment

Judge NG when the malfunction criteria below are completed.

Judgment Value

Malfunction Criteria	Threshold Value
Max. output voltage	< 550 mV

Time Needed for Diagnosis: 200 seconds
Malfunction Indicator Light Illumination: Illuminates when malfunction occurs in 2 continuous driving cycles.
• Normality Judgment

Judge OK when the malfunction criteria below are completed.
Judgment Value

Malfunction Criteria	Threshold Value
Low side diagnosis of oxygen sensor voltage	Incomplete
Max. output voltage	≥ 550 mV

6. DTC CLEAR CONDITION

- When the OK idling cycle was completed 40 times in a row
- When “Clear Memory” was performed

7. MALFUNCTION INDICATOR LIGHT CLEAR CONDITION

- When the OK driving cycle was completed 3 times in a row
- When “Clear Memory” was performed

8. FAIL SAFE

Sub feedback control: Not allowed

9. ECM OPERATION AT DTC SETTING

- Memorize the freeze frame data. (For test mode $02)
- Memorize the diagnostic value and malfunction standard value. (For test mode $06)

AH:DTC P0138 O2 SENSOR CIRCUIT HIGH VOLTAGE (BANK 1 SENSOR 2)

1. OUTLINE OF DIAGNOSIS

Detect the malfunction of oxygen sensor open or short circuit. Judge NG when the oxygen sensor voltage may be abnormal with considering the conditions such as intake air amount, engine coolant temperature, main feedback control.

2. COMPONENT DESCRIPTION

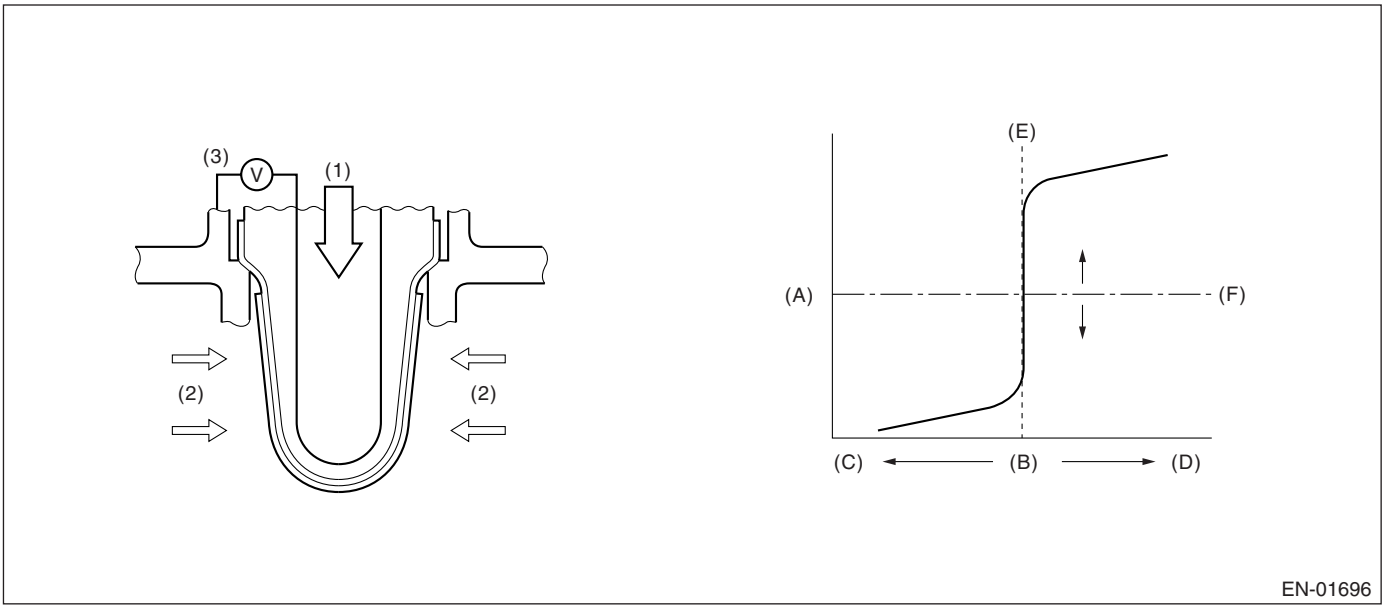

(1) Atmosphere
(2) Exhaust
(3) Electromotive force
(A) Electromotive force
(B) Air fuel ratio
(C) Rich
(D) Lean
(E) Theoretical air fuel ratio
(F) Comparative voltage

3. ENABLE CONDITION (USED ONLY FOR MALFUNCTION JUDGMENT)

Secondary Parameters	Enable Conditions
Closed loop control of oxygen sensor	In operation
Target output voltage of oxygen sensor	≥ 0.6 V
Amount of intake air	≥ 10 g/s
Engine coolant temperature	≥ 70°C (158°F)
Misfire detection during 200 engine revs.	< 5 times
Compensation factor for front oxygen (A/F) sensor	Not in limit value
Battery voltage	> 10.9 V
6 seconds or more fuel shut-off in decel. from engine speed of 1700 rpm or more	Experienced

4. GENERAL DRIVING CYCLE

Perform the diagnosis once after starting the engine.

5. DIAGNOSTIC METHOD

• Abnormality Judgment

Judge NG when the malfunction criteria below are completed.

Judgment Value

Malfunction Criteria	Threshold Value
Min. output voltage	> 250 mV

Time Needed for Diagnosis: 200 seconds
Malfunction Indicator Light Illumination: Detect when malfunction occurs in 2 continuous driving cycles.
• Normality Judgment

Judge OK when the malfunction criteria below are completed.
Judgment Value

Malfunction Criteria	Threshold Value
High side diagnosis of oxygen sensor voltage	Incomplete
Min. output voltage	≤ 250 mV

6. DTC CLEAR CONDITION

- When the OK idling cycle was completed 40 times in a row
- When “Clear Memory” was performed

7. MALFUNCTION INDICATOR LIGHT CLEAR CONDITION

- When the OK driving cycle was completed 3 times in a row
- When “Clear Memory” was performed

8. FAIL SAFE

Sub feedback control: Not allowed

9. ECM OPERATION AT DTC SETTING

- Memorize the freeze frame data. (For test mode $02)
- Memorize the diagnostic value and malfunction fiducial value. (For test mode $06)

AI: DTC P0139 O2 SENSOR CIRCUIT SLOW RESPONSE (BANK 1 SENSOR 2)

1. OUTLINE OF DIAGNOSIS

Detect the slow response of rear oxygen sensor.
Judge NG when the Rich → Lean response diagnosis or Lean → Rich response diagnosis is NG and judge OK when both response diagnoses are OK.
[Rich → Lean diagnosis response]
(1) When the measured response time is larger than a threshold, since the A/F ratio is rich, the response time of the output change of O2 sensor when changing from Rich to Lean is measured, and it judges with NG, and when small, it judges with OK.
(2) When O2 sensor voltage at the time of a fuel shut-off in deceleration return is large (rich), it judges with NG.
[Lean → Rich diagnosis response]
(1) The response time of output change of O2 sensor when an A/F ratio changes from Lean to Rich is measured, and it is referred to as NG when the measured response time is larger than a threshold.
(2) It is referred to as NG when O2 sensor voltage after recovery of fuel shut-off in deceleration is small and still small.

• Diagnostic Method

Measure the response time of the output change of the oxygen sensor when the A/F ratio changes from rich to lean. And Judge NG when the measured response time is larger than the threshold value.

2. COMPONENT DESCRIPTION

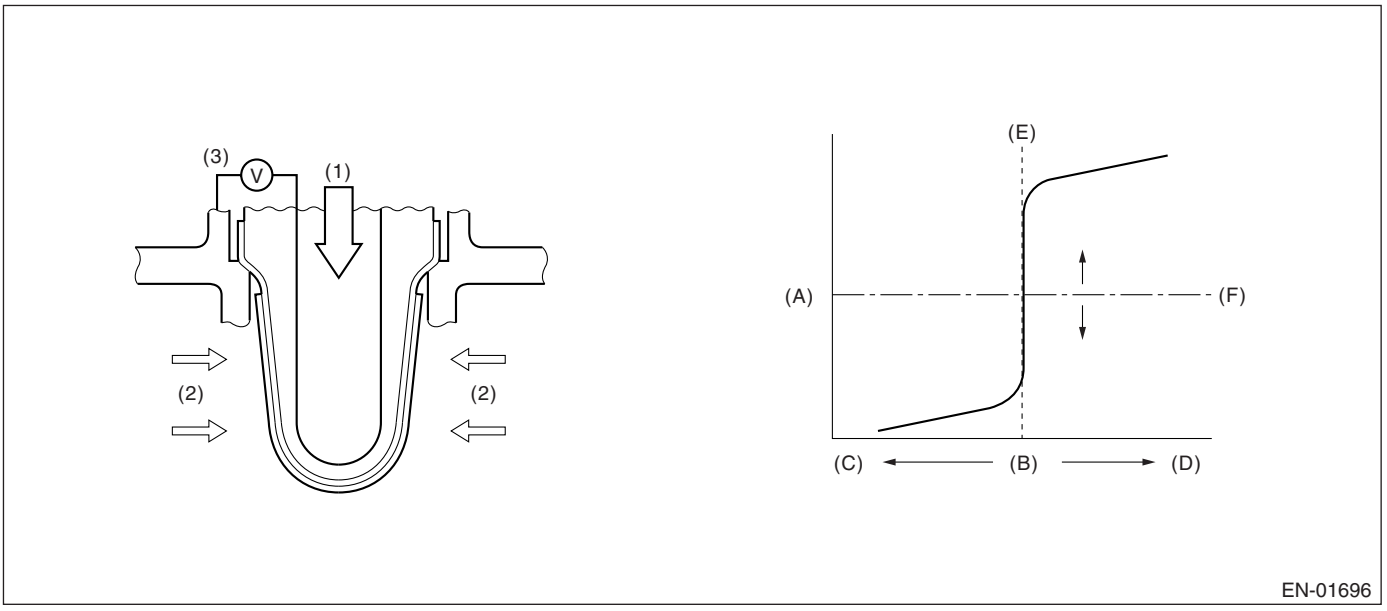

(1) Atmosphere
(2) Exhaust
(3) Electromotive force
(A) Electromotive force
(B) Air fuel ratio
(C) Rich
(D) Lean
(E) Theoretical air fuel ratio
(F) Comparative voltage

3. ENABLE CONDITION

• Rich → Lean response diagnosis

Secondary Parameters	Enable Conditions
Battery voltage	〉10.9 V
A/F sub feedback control condition	Completed
6 seconds or more fuel shut-off indecel.	Experienced
After fuel cut	≥ 2 seconds
Accumulated time with rear oxygen sensor heater ON	≥ 60 seconds
Continuous time with rear oxygen sensor heater ON	≥ 30 seconds
Catalyst couture warm up	≥ 11000 times

4. GENERAL DRIVING CYCLE

Perform the diagnosis only once when fuel shut-off in deceleration after rapid acceleration. (Pay attention to oxygen sensor voltage for the timing of deceleration.)

5. DIAGNOSTIC METHOD

When the oxygen sensor output voltage changes from 0.55 V (rich) to 0.25 V (lean), calculate the Min. value of response time regarded as judgment value while the output varies from 0.5 V to 0.3 V.

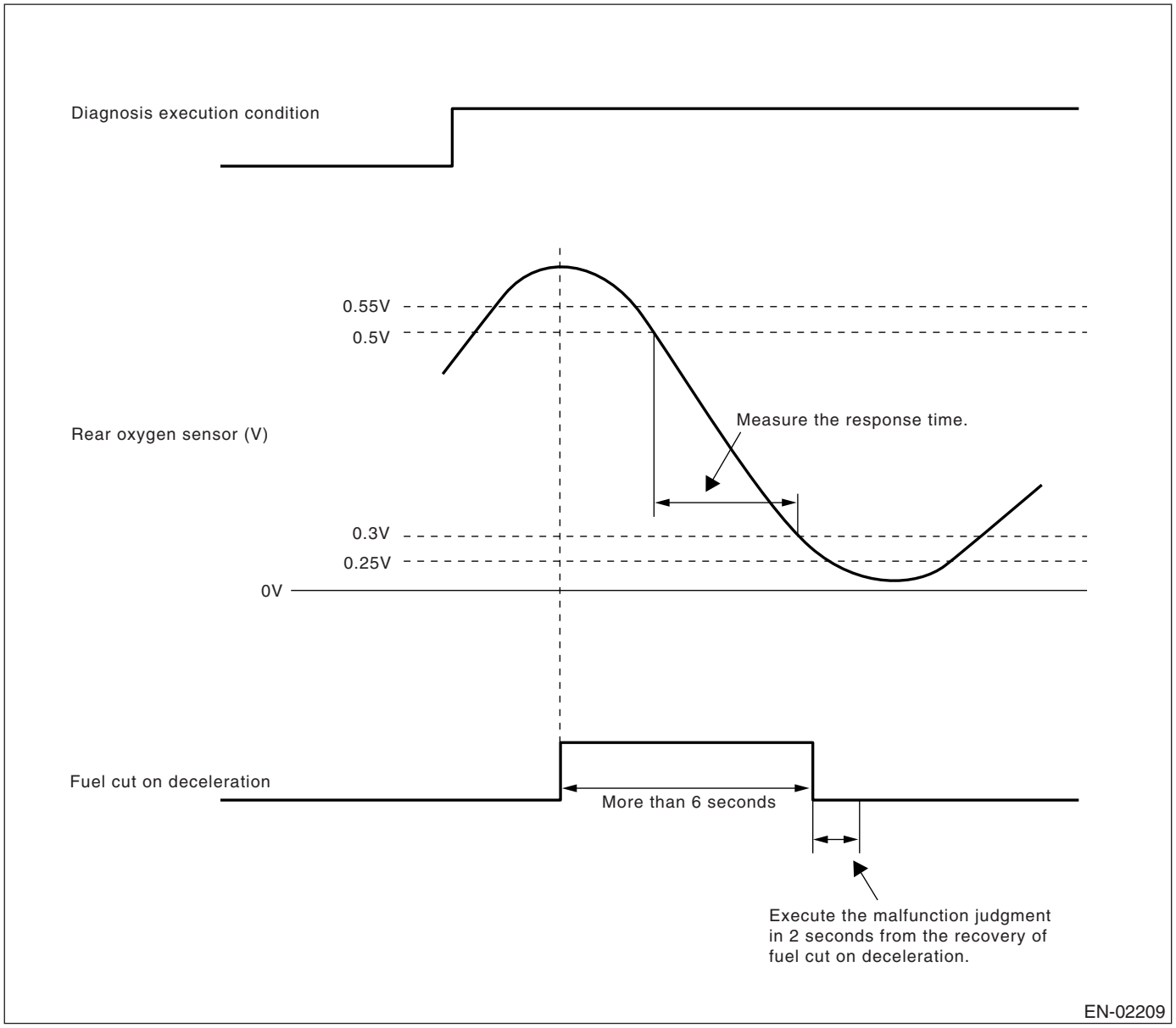

• Abnormality Judgment

(1) Judge NG when the judgment value is larger than the threshold value after fuel shut-off in deceleration.
Response time (Diagnosis value) > Threshold value → Abnormal

NOTE:
Variation time of rear oxygen sensor output voltage is short during fuel shut-off in deceleration. Carry out the NG judgment only after the fuel shut-off in deceleration. As for OK judgment, without the condition of fuel shut-off in deceleration, judge OK if the value is below the threshold value.

Judge NG when the malfunction criteria below are completed in 2 seconds after the recovery of fuel shut-off in deceleration which requires 6 seconds or more.

(2) Judge NG when the O2 sensor voltage after recovery of fuel shut-off in deceleration is large. Judge NG when fuel shut-off in deceleration is also long (6s or more), and although carried out the fuel shut-off in deceleration cut return, when O2 sensor voltage is large (more than 0.55 V).

Judgment Value

Malfunction Criteria	Threshold Value
Shortest time change from rich (500 mV O2 output) to lean (300 mV) if voltage reduces from 550 mV to 250 mV.	> 0.698 milliseconds
Or time when more than 550 mV	> 2 seconds

Time Needed for Diagnosis: Once
Malfunction Indicator Light Illumination: Illuminates when malfunction occurs in 2 continuous driving cycles.

• Normality Judgment

(1) Judge Normal when the response time (diagnostic value) is smaller than threshold (judgment value) when changing to lean since O2 sensor voltage.
(2) A normal judging is not carried out.

Judgment Value

Judge OK when the following standards value are completed.

Malfunction Criteria	Threshold Value
Change of the shortest time from rich (500 mV O2 output), when voltage decreases from 550 mV to 250 mV to lean (300 mV).	≤ 0.698 seconds

6. DTC CLEAR CONDITION

- When the OK idling cycle was completed 40 times in a row
- When “Clear Memory” was performed

7. MALFUNCTION INDICATOR LIGHT CLEAR CONDITION

- When the OK driving cycle was completed 3 times in a row
- When “Clear Memory” was performed

8. FAIL SAFE

Sub feedback control: Not allowed

9. ECM OPERATION AT DTC SETTING

- Memorize the freeze frame data. (For test mode $02)
- Memorize the diagnostic value and trouble standard value. (For test mode $06)

10.ENABLE CONDITION

- Lean → Rich response diagnosis

Secondary Parameters	Enable Conditions
Battery voltage	〉10.9 V
A/F main feedback control condition	Completed
Fuel cut on deceleration ≥ 6 seconds	Experienced
After fuel cut	≥ 2 seconds

11.GENERAL DRIVING CYCLE

Perform the diagnosis only once when fuel shut-off in deceleration after rapid acceleration. (Pay attention to oxygen sensor voltage for the timing of deceleration.)

12.DIAGNOSTIC METHOD

When the oxygen sensor output voltage changes from 0.25 V (lean) to 0.55 V (rich), calculate the Min. value of response time regarded as judgment value while the output varies from 0.3 V to 0.5 V.

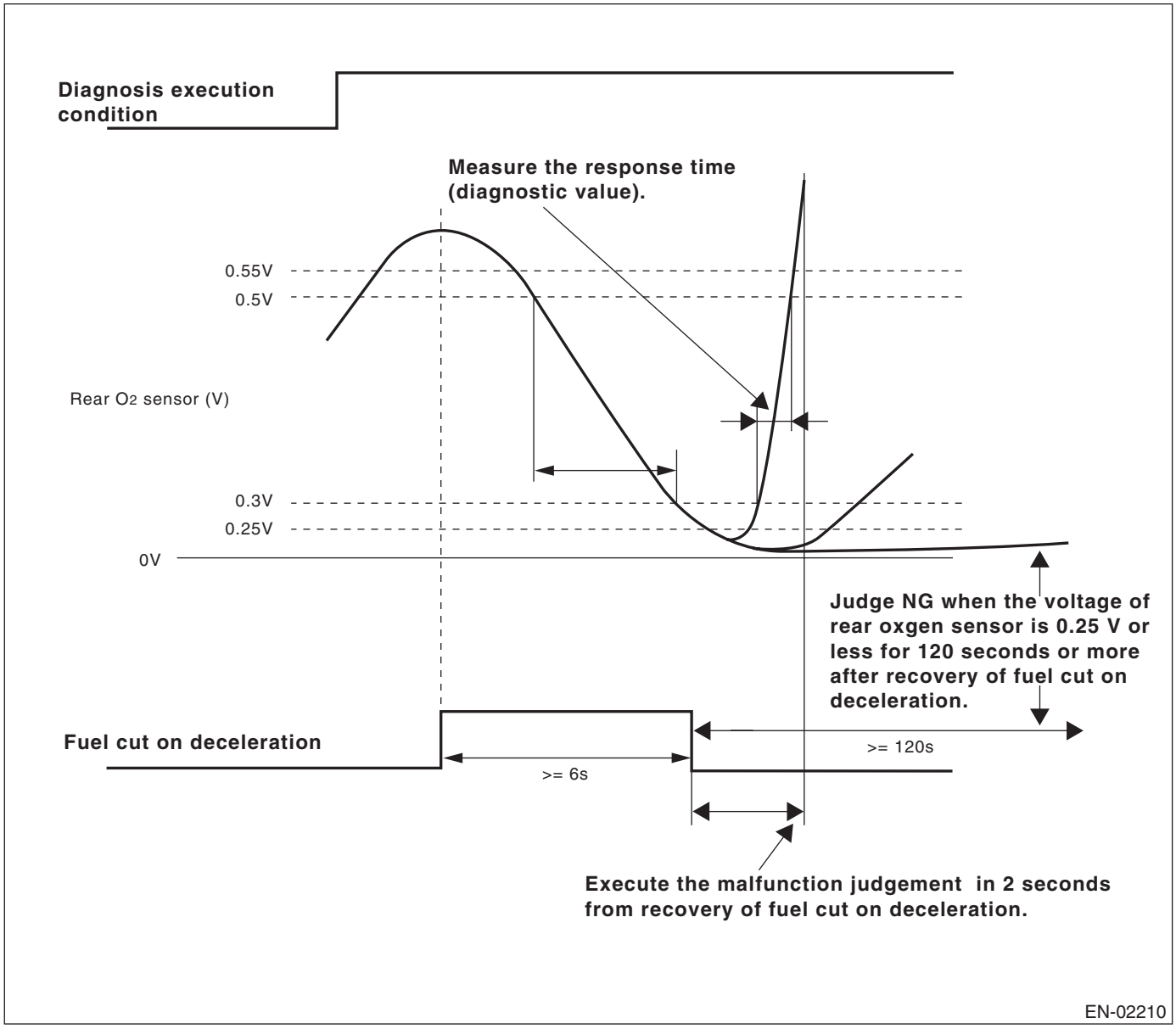

• Abnormality Judgment

(1) Judge NG when the judgment value is larger than the threshold value after recovery of fuel shut-off in deceleration.
Response time (Diagnosis value) > Threshold value → Abnormal
(2) Judge NG when the O2 sensor voltage after recovery of fuel shut-off in deceleration is small.
Judgment Value

Malfunction Criteria	Threshold Value
Shortest time change from lean (300 mV O2 output) to rich (500 mV) if voltage reduces from 500 mV to 250 mV.	> 2 seconds
Or longest time to change to 250 mV	> 120 seconds

Time Needed for Diagnosis: Once
Malfunction Indicator Light Illumination: Illuminates when malfunction occurs in 2 continuous driving cycles.

• Normality Judgment

(1) Judge Normal when the response time (diagnostic value) is smaller than threshold (judgment value) when changing to lean since O2 sensor voltage.
Response Time (diagnosis value) ≤ Threshold value → Normal
(2) A normal judging is not carried out.
Judgment Value
Judge OK when the following standards value are completed.

Malfunction Criteria	Threshold Value
Change of the shortest time from rich (300 mV O2 output), when voltage decreases from 550 mV to 250 mV to lean (500 mV).	≤ 2 seconds

13.DTC CLEAR CONDITION

- When the OK idling cycle was completed 40 times in a row
- When “Clear Memory” was performed

14.MALFUNCTION INDICATOR LIGHT CLEAR CONDITION

- When the OK driving cycle was completed 3 times in a row
- When “Clear Memory” was performed

15.FAIL SAFE

Sub feedback control: Not allowed

16.ECM OPERATION AT DTC SETTING

- Memorize the freeze frame data. (For test mode $02)
- Memorize the diagnostic value and trouble standard value. (For test mode $06)

AJ:DTC P0143 O2 SENSOR CIRCUIT LOW VOLTAGE (BANK 1 SENSOR 3)

1. OUTLINE OF DIAGNOSIS

Detect the malfunction of oxygen sensor open or short circuit. Judge NG when the oxygen sensor voltage may be abnormal from oxygen sensor voltage value with considering the conditions such as intake air amount, engine coolant temperature, main feedback control.

2. COMPONENT DESCRIPTION

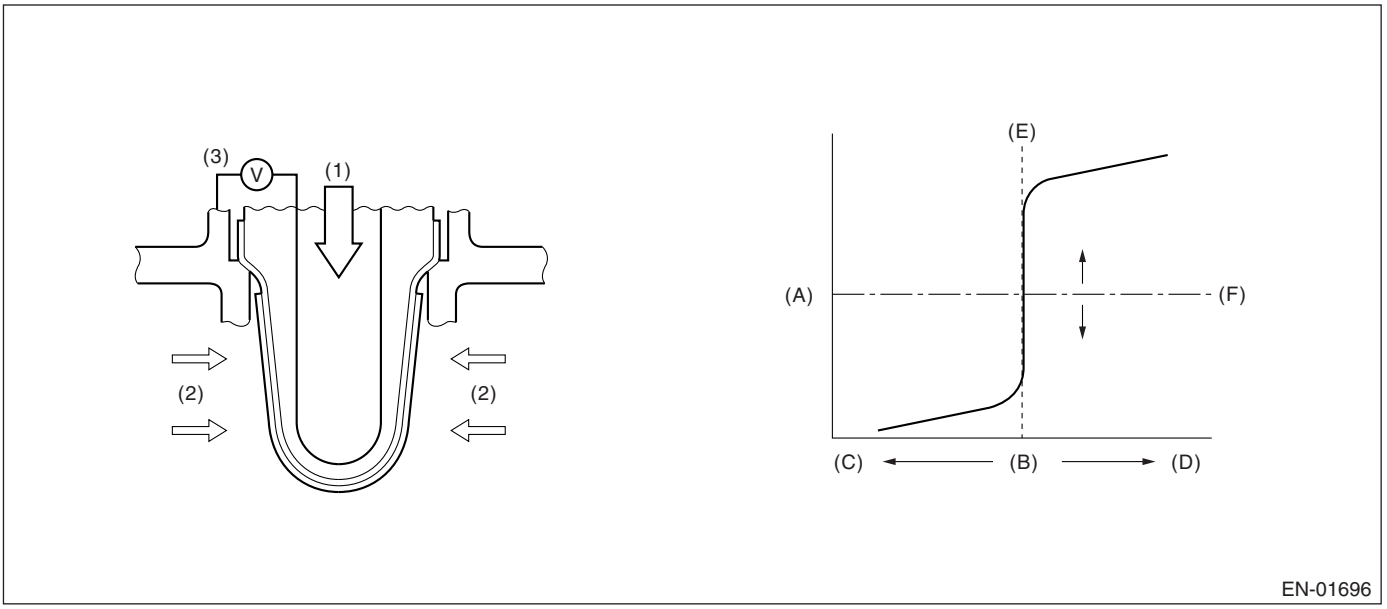

(1) Atmosphere
(2) Exhaust
(3) Electromotive force
(A) Electromotive force
(B) Air fuel ratio
(C) Rich
(D) Lean
(E) Theoretical air fuel ratio
(F) Comparative voltage

3. ENABLE CONDITION (USED ONLY FOR MALFUNCTION JUDGMENT)

Secondary Parameters	Enable Conditions
Closed loop control of oxygen sensor	In operation (Both banks)
Target output voltage of oxygen sensor	≥ 0.6 V
Amount of intake air	≥ 30 g (1.06 oz)/s
Engine coolant temperature	≥ 70°C (158°F)
Misfire detection during 200 engine revs.	< 5 times
Compensation factor for front oxygen (A/F) sensor	Not in limit value (Both banks)
Battery voltage	> 10.9 V
6 seconds or more fuel shut-off in decel.	Experienced

4. GENERAL DRIVING CYCLE

Perform the diagnosis once after starting the engine.

5. DIAGNOSTIC METHOD

• Abnormality Judgment

Judge NG when the malfunction criteria below are completed.

Judgment Value

Malfunction Criteria	Threshold Value
Max. output voltage	< 400 mV

Time Needed for Diagnosis: 320 seconds
Malfunction Indicator Light Illumination: Illuminates when malfunction occurs in 2 continuous driving cycles.
• Normality Judgment

Judge OK when the malfunction criteria below are completed.
Judgment Value

Malfunction Criteria	Threshold Value
Low side diagnosis of rear oxygen sensor voltage	Incomplete
Max. output voltage	≥ 400 mV

6. DTC CLEAR CONDITION

- When the OK idling cycle was completed 40 times in a row
- When “Clear Memory” was performed

7. MALFUNCTION INDICATOR LIGHT CLEAR CONDITION

- When the OK driving cycle was completed 3 times in a row
- When “Clear Memory” was performed

8. FAIL SAFE

Sub feedback control: Not allowed

9. ECM OPERATION AT DTC SETTING

- Memorize the freeze frame data. (For test mode $02)
- Memorize the diagnostic value and trouble standard value. (For test mode $06)

AK:DTC P0144 O2 SENSOR CIRCUIT HIGH VOLTAGE (BANK 1 SENSOR 3)

1. OUTLINE OF DIAGNOSIS

Detect the malfunction of oxygen sensor open or short circuit. Judge NG when the oxygen sensor voltage may be abnormal with considering the conditions such as intake air amount, engine coolant temperature, main feedback control.

2. COMPONENT DESCRIPTION

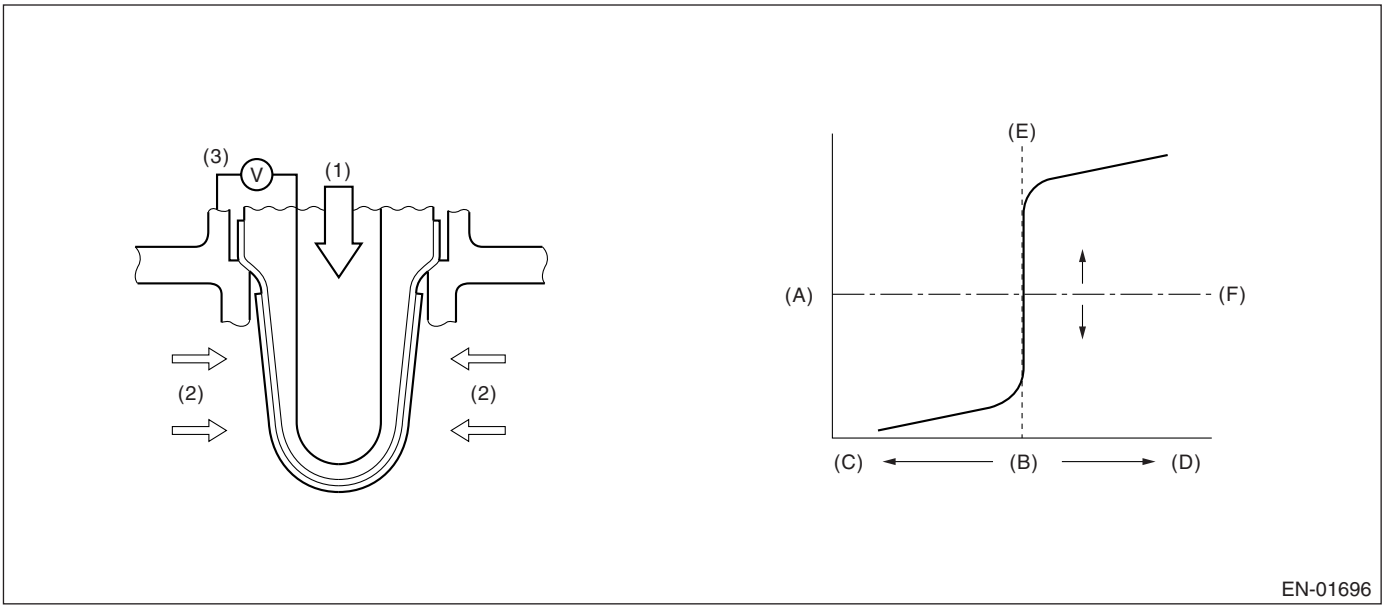

(1) Atmosphere
(2) Exhaust
(3) Electromotive force
(A) Electromotive force
(B) Air fuel ratio
(C) Rich
(D) Lean
(E) Theoretical air fuel ratio
(F) Comparative voltage

3. ENABLE CONDITION (USED ONLY FOR MALFUNCTION JUDGMENT)

Secondary Parameters	Enable Conditions
Closed loop control of oxygen sensor	In operation (Both banks)
Target output voltage of oxygen sensor	≥ 0.6 V
Amount of intake air	≥ 30 g (1.06 oz)/s
Engine coolant temperature	≥ 70°C (158°F)
Misfire detection during 200 engine revs.	< 5 times
Compensation factor for front oxygen (A/F) sensor	Not in limit value (Both banks)
Battery voltage	> 10.9 V
6 seconds or more fuel shut-off in decel. from engine speed of 1700 rpm or more	Experienced

4. GENERAL DRIVING CYCLE

Perform the diagnosis once after starting the engine.

5. DIAGNOSTIC METHOD

• Abnormality Judgment

Judge NG when the malfunction criteria below are completed.
Judgment Value

Malfunction Criteria	Threshold Value
Min. output voltage	〉150 mV

Time Needed for Diagnosis: 320 seconds
Malfunction Indicator Light Illumination: Detect when malfunction occurs in 2 continuous driving cycles.
• Normality Judgment

Judge OK when the malfunction criteria below are completed.
Judgment Value

Malfunction Criteria	Threshold Value
High side diagnosis of rear oxygen sensor voltage	Incomplete
Min. output voltage	≤ 150 mV

6. DTC CLEAR CONDITION

- When the OK idling cycle was completed 40 times in a row
- When “Clear Memory” was performed

7. MALFUNCTION INDICATOR LIGHT CLEAR CONDITION

- When the OK driving cycle was completed 3 times in a row
- When “Clear Memory” was performed

8. FAIL SAFE

Sub feedback control: Not allowed

9. ECM OPERATION AT DTC SETTING

- Memorize the freeze frame data. (For test mode $02)
- Memorize the diagnostic value and trouble standard value. (For test mode $06)

AL:DTC P0151 O2 SENSOR CIRCUIT LOW VOLTAGE (BANK 2 SENSOR 1)

1. OUTLINE OF DIAGNOSIS

For the detecting criteria, refer to P0131. <Ref. to GD(H4SO U5)-57, DTC P0131 O2 SENSOR CIRCUIT LOW VOLTAGE (BANK 1 SENSOR 1), Diagnostic Trouble Code (DTC) Detecting Criteria.>

AM:DTC P0152 O2 SENSOR CIRCUIT HIGH VOLTAGE (BANK 2 SENSOR 1)

1. OUTLINE OF DIAGNOSIS

For the detecting criteria, refer to P0132. <Ref. to GD(H4SO U5)-59, DTC P0132 O2 SENSOR CIRCUIT HIGH VOLTAGE (BANK 1 SENSOR 1), Diagnostic Trouble Code (DTC) Detecting Criteria.>

AN:DTC P0153 O2 SENSOR CIRCUIT SLOW RESPONSE (BANK 2 SENSOR 1)

1. OUTLINE OF DIAGNOSIS

For the detecting criteria, refer to P0133. <Ref. to GD(H4SO U5)-61, DTC P0133 O2 SENSOR CIRCUIT SLOW RESPONSE (BANK 1 SENSOR 1), Diagnostic Trouble Code (DTC) Detecting Criteria.>

AO:DTC P0154 O2 SENSOR CIRCUIT NO ACTIVITY DETECTED (BANK 2 SENSOR 1)

1. OUTLINE OF DIAGNOSIS

For the detecting criteria, refer to P0134. <Ref. to GD(H4SO U5)-64, DTC P0134 O2 SENSOR CIRCUIT NO ACTIVITY DETECTED (BANK 1 SENSOR 1), Diagnostic Trouble Code (DTC) Detecting Criteria.>

AP:DTC P0157 O2 SENSOR CIRCUIT LOW VOLTAGE (BANK 2 SENSOR 2)

1. OUTLINE OF DIAGNOSIS

For the detecting criteria, refer to P0137. <Ref. to GD(H4SO U5)-66, DTC P0137 O2 SENSOR CIRCUIT LOW VOLTAGE (BANK 1 SENSOR 2), Diagnostic Trouble Code (DTC) Detecting Criteria.>

AQ:DTC P0158 O2 SENSOR CIRCUIT HIGH VOLTAGE (BANK 2 SENSOR 2)

1. OUTLINE OF DIAGNOSIS

For the detecting criteria, refer to P0138. <Ref. to GD(H4SO U5)-68, DTC P0138 O2 SENSOR CIRCUIT HIGH VOLTAGE (BANK 1 SENSOR 2), Diagnostic Trouble Code (DTC) Detecting Criteria.>

AR:DTC P0159 O2 SENSOR CIRCUIT SLOW RESPONSE (BANK 2 SENSOR 2)

1. OUTLINE OF DIAGNOSIS

For the detecting criteria, refer to P0139. <Ref. to GD(H4SO U5)-70, DTC P0139 O2 SENSOR CIRCUIT SLOW RESPONSE (BANK 1 SENSOR 2), Diagnostic Trouble Code (DTC) Detecting Criteria.>

AS:DTC P0171 SYSTEM TOO LEAN (BANK 1)

1. OUTLINE OF DIAGNOSIS

Detect the fuel system malfunction by the amount of main feedback control.

• Fuel System Diagnosis

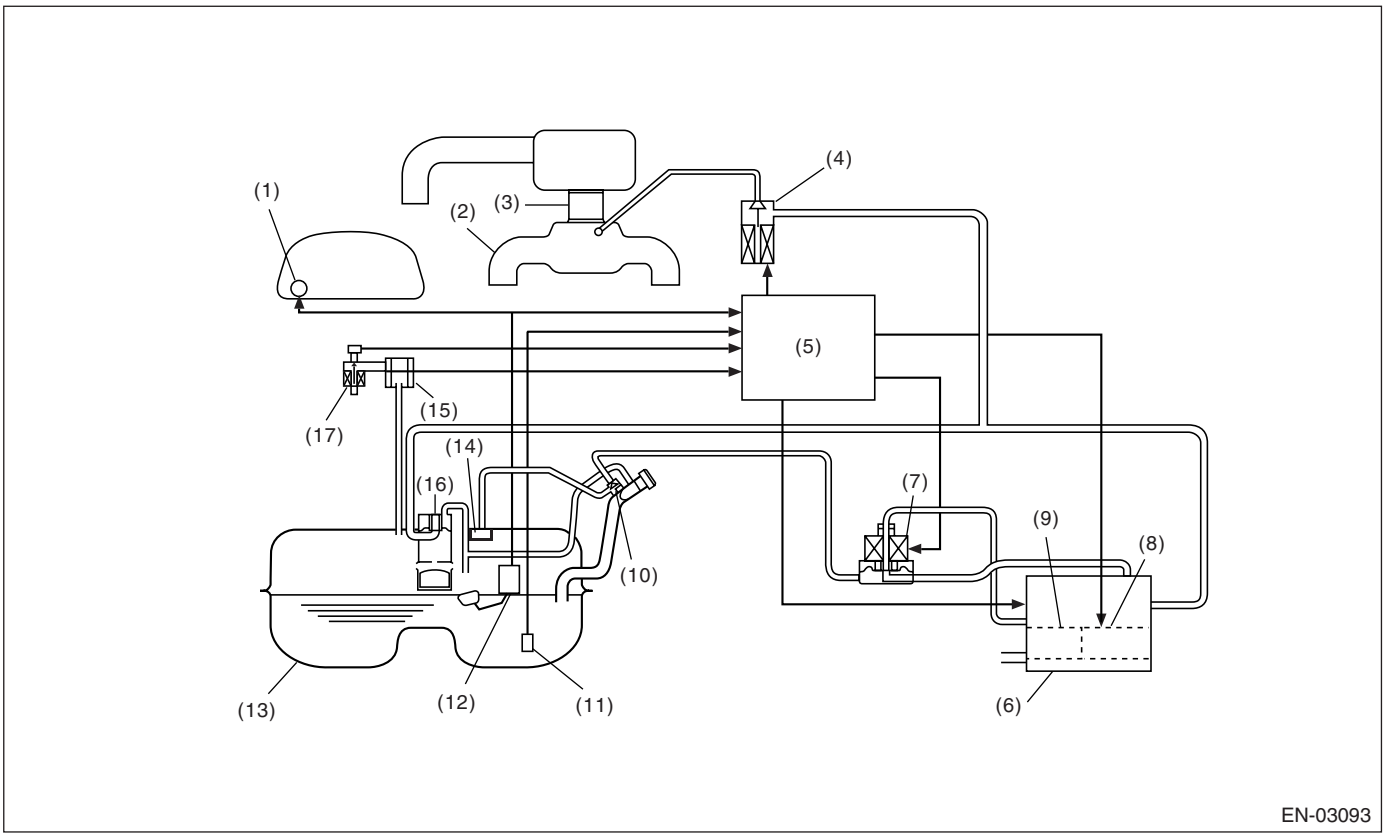

(1)	Fuel meter	(7)	Pressure control solenoid valve	(13)	Fuel tank
(2)	Intake manifold	(8)	Drain valve	(14)	Fuel cut valve
(3)	Throttle body	(9)	Drain filter	(15)	Fuel tank pressure sensor
(4)	Purge control solenoid valve	(10)	Shut-off valve	(16)	Vent valve
(5)	Engine control module (ECM)	(11)	Fuel temperature sensor	(17)	Fuel tank sensor control valve
(6)	Canister	(12)	Fuel level sensor		

• Diagnostic Method

Fuel system is diagnosed by comparing the target air fuel ratio calculated by ECM with the actual air fuel ratio measured by sensor.

2. ENABLE CONDITION

• Lean side

Secondary Parameters	Enable Conditions
A/F main learning system	In operation
Engine coolant temperature	≥ 70°C (158°F)
Intake air amount	≥ Map 5
Intake air change during 0.5 engine rev.	≤ 0.02 g (0.001 oz)/rev

Map 5

Engine speed (rpm)	idle	650	1000	1500	2000	2500	3000	3500	4000	4500
Measured value (g (oz)/ rev)	NA	0.201 (0.007)	0.150 (0.005)	0.150 (0.005)	0.156 (0.006)	0.161 (0.006)	0.157 (0.006)	0.167 (0.006)	0.184 (0.006)	0.198 (0.007)

3. GENERAL DRIVING CYCLE

Perform the diagnosis continuously at engine idling after warm-up or a constant speed.

4. DIAGNOSTIC METHOD

• Abnormality Judgment

Judge that the fuel system malfunction occurs when the time during completing the malfunction criteria below continues 50 seconds or more by comparing the diagnosed value (fsobd) with threshold value.

Judgment Value

Malfunction Criteria	Threshold Value
fsobd = (sglmd − tglmda) + faf + flaf where, sglmd = measured lambda tglmda = target lambda faf = main feedback compensation coefficient every 64 milliseconds flaf = main feedback learning compensation coefficient	≥ fsobdL1 See Map 4 fsobdL1 = lean side threshold value of fsobd

Map 4 Threshold value for fuel system malfunction criteria

Amount of air [g (oz)/s]	0 (0)	3.2 (0.113)	6.4 (0.226)	9.6 (0.339)	12.8 (0.451)	16 (0.564)	19.2 (0.677)
fsobdL1 (%)	40	40	33.2	26.5	26.5	26.5	26.5

Time Needed for Diagnosis: 10 seconds × 5 times
Malfunction Indicator Light Illumination: Illuminates when malfunction occurs in 2 continuous driving cycles.

• Normality Judgment

Judge OK when the malfunction criteria below are continued for 10 seconds.

Judgment Value

Malfunction Criteria	Threshold Value
fsobd = (sglmd − tglmda) + faf + flaf	< 19%

5. DTC CLEAR CONDITION

- When the OK idling cycle was completed 40 times in a row
- When “Clear Memory” was performed

6. MALFUNCTION INDICATOR LIGHT CLEAR CONDITION

- When OK with similar drive in 3 driving cycles.
- When “Clear Memory” was performed

7. FAIL SAFE

None

8. ECM OPERATION AT DTC SETTING

Memorize the freeze frame data. (For test mode $02)

AT:DTC P0172 SYSTEM TOO RICH (BANK 1)

1. OUTLINE OF DIAGNOSIS

Detect the fuel system malfunction by the amount of main feedback control.

• Fuel System Diagnosis

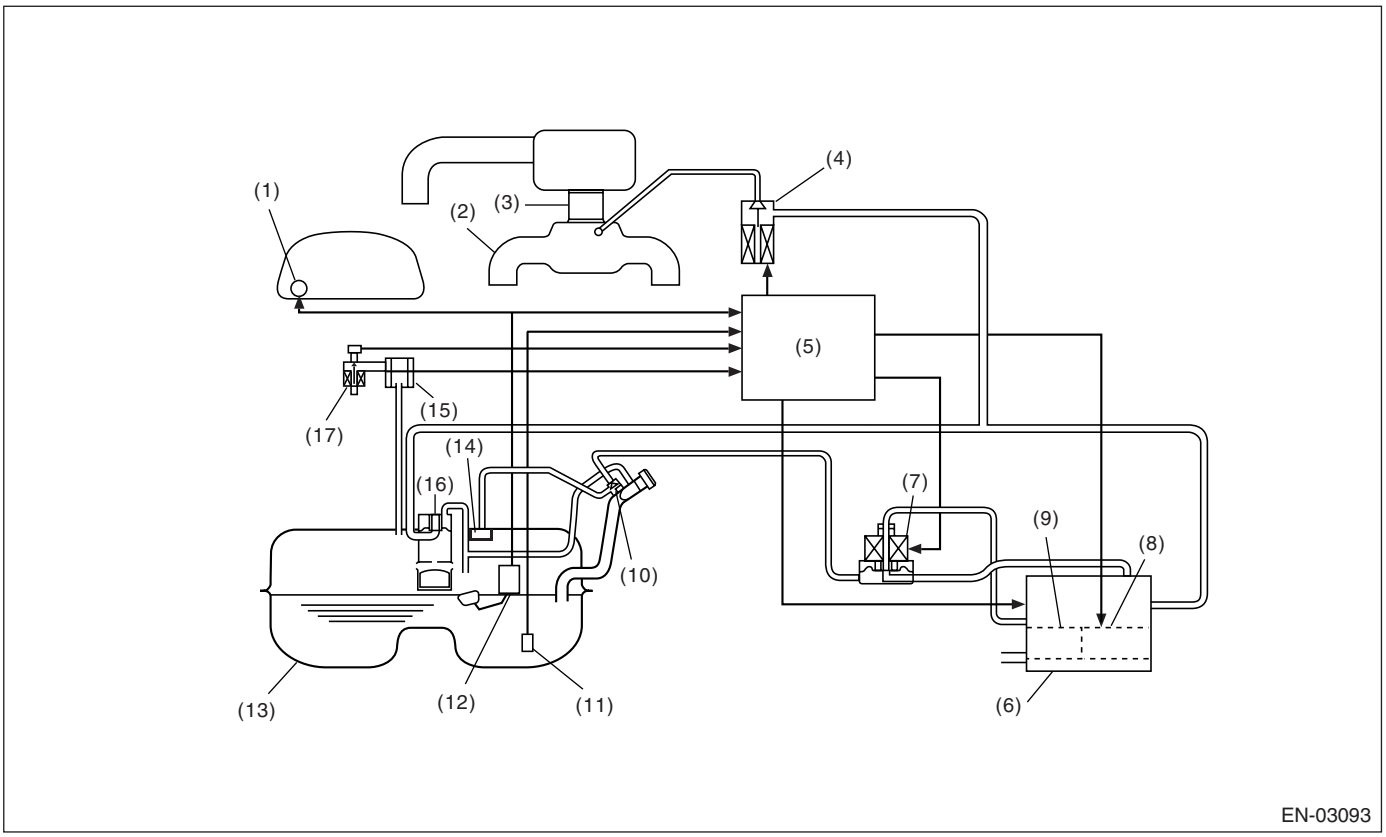

(1)	Fuel meter	(7)	Pressure control solenoid valve	(13)	Fuel tank
(2)	Intake manifold	(8)	Drain valve	(14)	Fuel cut valve
(3)	Throttle body	(9)	Drain filter	(15)	Fuel tank pressure sensor
(4)	Purge control solenoid valve	(10)	Shut-off valve	(16)	Vent valve
(5)	Engine control module (ECM)	(11)	Fuel temperature sensor	(17)	Fuel tank sensor control valve
(6)	Canister	(12)	Fuel level sensor		

• Diagnostic Method

Fuel system is diagnosed by comparing the target air fuel ratio calculated by ECM with the actual air fuel ratio measured by sensor.

2. ENABLE CONDITION

Secondary Parameters	Enable Conditions
A/F main learning system	In operation
Engine coolant temperature	≥ 70°C (158°F)
Intake air amount	≥ Map 5
Intake air change during 0.5 engine rev.	≤ 0.02 g (0.001 oz)/rev
Learning value of EVAP conc. during purge	< 0.1
Cumulative time of canister purge after engine start	20 seconds or more
Continuous period after canister purge starting	30 seconds or more

Map 5

Engine speed (rpm)	idle	650	1000	1500	2000	2500	3000	3500	4000	4500
Measured value (g (oz)/ rev)	NA	0.201 (0.007)	0.150 (0.005)	0.150 (0.005)	0.156 (0.006)	0.161 (0.006)	0.157 (0.006)	0.167 (0.006)	0.184 (0.006)	0.198 (0.007)

3. GENERAL DRIVING CYCLE

Perform the diagnosis continuously at engine idling after warm-up or a constant speed.

4. DIAGNOSTIC METHOD

• Abnormality Judgment

Judge that the fuel system malfunction occurs when the time during completing the malfunction criteria below continues 50 seconds or more by comparing the diagnosed value (fsobd) with threshold value.

Judgment Value

Malfunction Criteria	Threshold Value
fsobd = (sglmd − tglmda) + faf + flaf where, sglmd = measured lambda tglmda = target lambda faf = main feedback compensation coefficient every 64 milliseconds flaf = main feedback learning compensation coefficient	≤ fsobdR1 See Map 4 fsobdR1 = rich side threshold value of fsobd

Map 4 Threshold value for fuel system malfunction criteria

Amount of air [g (oz)/s]	0 (0)	3.2 (0.113)	6.4 (0.226)	9.6 (0.339)	12.8 (0.451)	11.7 (0.413)	19.2 (0.677)
fsobdR1 (%)	−40	−40	−33.2	−26.5	−26.5	−26.5	−26.5

Time Needed for Diagnosis: 10 seconds × 5 times
Malfunction Indicator Light Illumination: Illuminates when malfunction occurs in 2 continuous driving cycles.

• Normality Judgment

Judge OK when the malfunction criteria below are continued for 10 seconds.

Judgment Value

Malfunction Criteria	Threshold Value
fsobd = (sglmd − tglmda) + faf + flaf	≥ −20%

5. DTC CLEAR CONDITION

- When the OK idling cycle was completed 40 times in a row
- When “Clear Memory” was performed

6. MALFUNCTION INDICATOR LIGHT CLEAR CONDITION

- When OK with similar drive in 3 drive cycles.
- When “Clear Memory” was performed

7. FAIL SAFE

- Purge control solenoid valve control: Not allowed to purge.
- Heavy fuel judgment control: Not allowed to carry out the heavy judgment.

8. ECM OPERATION AT DTC SETTING

Memorize the freeze frame data. (For test mode $02)

AU:DTC P0174 SYSTEM TOO LEAN (BANK 2)

1. OUTLINE OF DIAGNOSIS

For the detecting criteria, refer to P0171. <Ref. to GD(H4SO U5)-80, DTC P0171 SYSTEM TOO LEAN (BANK 1), Diagnostic Trouble Code (DTC) Detecting Criteria.>

AV:DTC P0175 SYSTEM TOO RICH (BANK 2)

1. OUTLINE OF DIAGNOSIS

For the detecting criteria, refer to P0172. <Ref. to GD(H4SO U5)-82, DTC P0172 SYSTEM TOO RICH (BANK 1), Diagnostic Trouble Code (DTC) Detecting Criteria.>

AW:DTC P0181 FUEL TEMPERATURE SENSOR "A" CIRCUIT RANGE/PERFORMANCE

1. OUTLINE OF DIAGNOSIS

Detect the malfunction of fuel temperature sensor output property. Perform the diagnosis in two methods; namely, drift diagnosis and stuck diagnosis. Judge NG when either of them results in NG, and judge OK when both of them result in OK.

• Drift Diagnosis

Normally fuel temperature is lower than engine coolant temperature. When the fuel temperature becomes higher than the engine coolant temperature, the range is considered to be shifted, and make an NG judgment.

2. COMPONENT DESCRIPTION

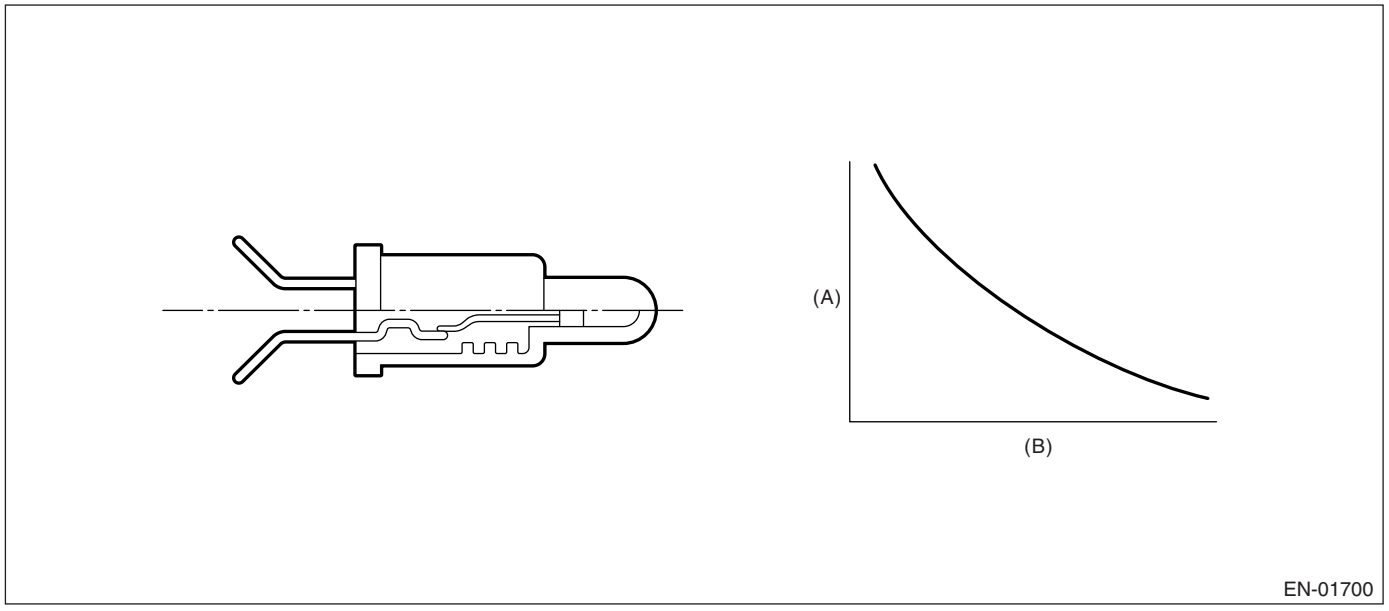

(A) Resistance (Ω) (B) Fuel temperature °C (°F)

3. ENABLE CONDITION

Secondary Parameters	Enable Conditions
None	

4. GENERAL DRIVING CYCLE

Always perform the diagnosis continuously.

5. DIAGNOSTIC METHOD

• Abnormality Judgment

Judge NG when the continuous time of completing the malfunction criteria below becomes more than 120 seconds.

Judgment Value

Malfunction Criteria	Threshold Value
Fuel level	≥ 9.6 ℓ (2.54 US gal, 2.11 Imp gal)
After engine starting	20 seconds or more
Engine coolant temperature – engine coolant temperature at engine starting	≥ 10°C (50°F)
Fuel temperature – engine coolant temperature	≥ 10°C (50°F)
Battery voltage	〉10.9 V

Time Needed for Diagnosis: 120 seconds

Malfunction Indicator Light Illumination: Illuminates when malfunction occurs in 2 continuous driving cycles.

• Normality Judgment

Judge OK when the malfunction criteria below are completed.

Judgment Value

Malfunction Criteria	Threshold Value
Fuel level	≥ 9.6 ℓ (2.54 US gal, 2.11 Imp gal)
After engine starting	20 seconds or more
Engine coolant temperature – engine coolant temperature at engine starting	≥ 10°C (50°F)
Fuel temperature – engine coolant temperature	〈 10°C (50°F)
Battery voltage	〉10.9 V
Engine coolant temperature	〈 75°C (167°F)

• Stuck Diagnosis

If the fuel temperature which might rise along with the engine idling (the cumulative amount of intake air after engine starting is large) does not increase, the engine is considered to be stuck and make an NG judgment.

6. ENABLE CONDITION

Secondary Parameters	Enable Conditions
After engine starting	20 seconds or more
Battery voltage	〉10.9 V

7. GENERAL DRIVING CYCLE

Perform the diagnosis continuously in 20 seconds or more after starting the engine.

8. DIAGNOSTIC METHOD

• Abnormality Judgment

Judge NG when the malfunction criteria below are completed.

Judgment Value

Malfunction Criteria	Threshold Value
Accumulated amount of intake air	≥ 551 kg (1215 lb)
Fuel temperature difference between Max. and Min.	〈 2°C (36°F)

Time Needed for Diagnosis: To be determined.
Malfunction Indicator Light Illumination: Illuminates when malfunction occurs in 2 continuous driving cycles.
• Normality Judgment

Judge OK when the malfunction criteria below are completed.
Judgment Value

Malfunction Criteria	Threshold Value
Accumulated amount of intake air	≥ 551 kg (1215 lb)
Fuel temperature difference between Max. and Min.	≥ 2°C (36°F)

9. DTC CLEAR CONDITION

- When the OK idling cycle was completed 40 times in a row
- When “Clear Memory” was performed

10.MALFUNCTION INDICATOR LIGHT CLEAR CONDITION

- When the OK driving cycle was completed 3 times in a row
- When “Clear Memory” was performed

11.FAIL SAFE

None

12.ECM OPERATION AT DTC SETTING

Memorize the freeze frame data. (For test mode $02)

AX:DTC P0182 FUEL TEMPERATURE SENSOR “A” CIRCUIT LOW INPUT

1. OUTLINE OF DIAGNOSIS

Detect the open or short circuit of fuel temperature sensor. Judge NG when out of the standard value.

2. COMPONENT DESCRIPTION

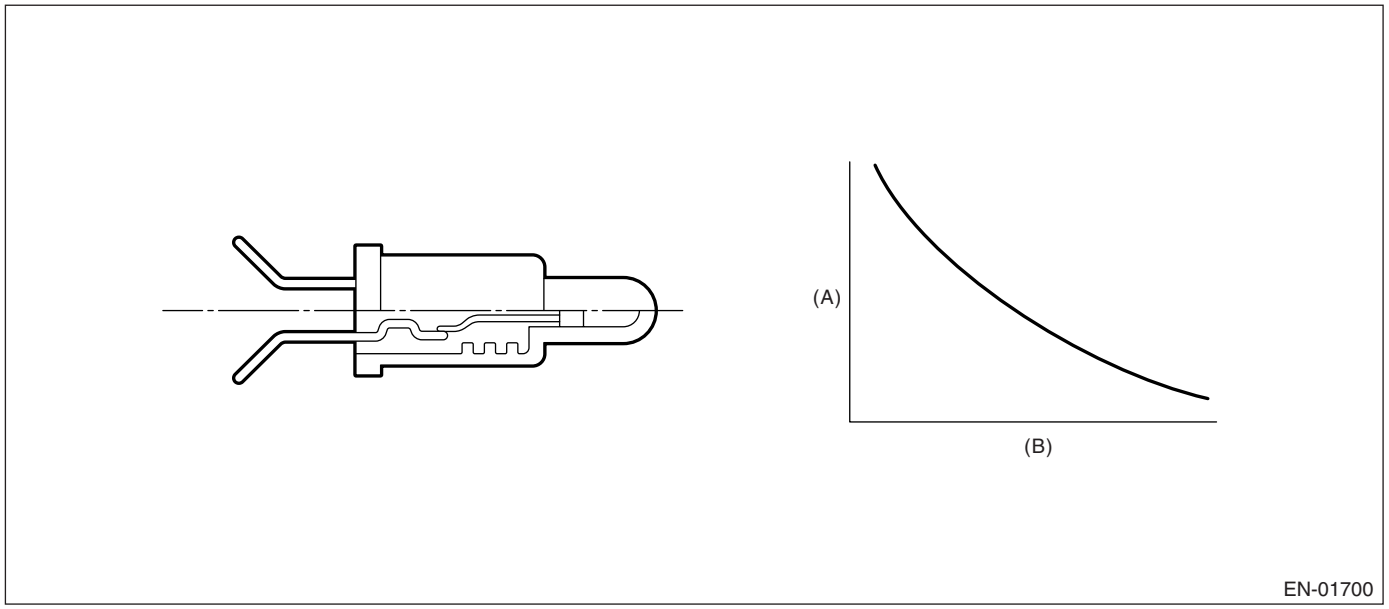

(A) Resistance (Ω) (B) Fuel temperature °C (°F)

3. ENABLE CONDITION

Secondary Parameters	Enable Conditions
None	

4. GENERAL DRIVING CYCLE

Always perform the diagnosis continuously.

5. DIAGNOSTIC METHOD

• Abnormality Judgment

Judge NG when the continuous time of completing the malfunction criteria below becomes more than 2.5 seconds.

Judgment Value

Malfunction Criteria	Threshold Value
Output voltage	〈 0.164 V
Battery voltage	≥ 10.9 V

Time Needed for Diagnosis: 2.5 seconds

Malfunction Indicator Light Illumination: Illuminates as soon as the malfunction occurs.

• Normality Judgment

Judge OK and clear NG when the malfunction criteria below are completed.

Judgment Value

Malfunction Criteria	Threshold Value
Output voltage	≥ 0.164 V
Battery voltage	≥ 10.9 V

6. DTC CLEAR CONDITION

- When the OK idling cycle was completed 40 times in a row
- When “Clear Memory” was performed

7. MALFUNCTION INDICATOR LIGHT CLEAR CONDITION

- When the OK driving cycle was completed 3 times in a row
- When “Clear Memory” was performed

8. FAIL SAFE

None

9. ECM OPERATION AT DTC SETTING

Memorize the freeze frame data. (For test mode $02)

AY:DTC P0183 FUEL TEMPERATURE SENSOR “A” CIRCUIT HIGH INPUT

1. OUTLINE OF DIAGNOSIS

Detect the open or short circuit of fuel temperature sensor. Judge NG when out of the standard value.

2. COMPONENT DESCRIPTION

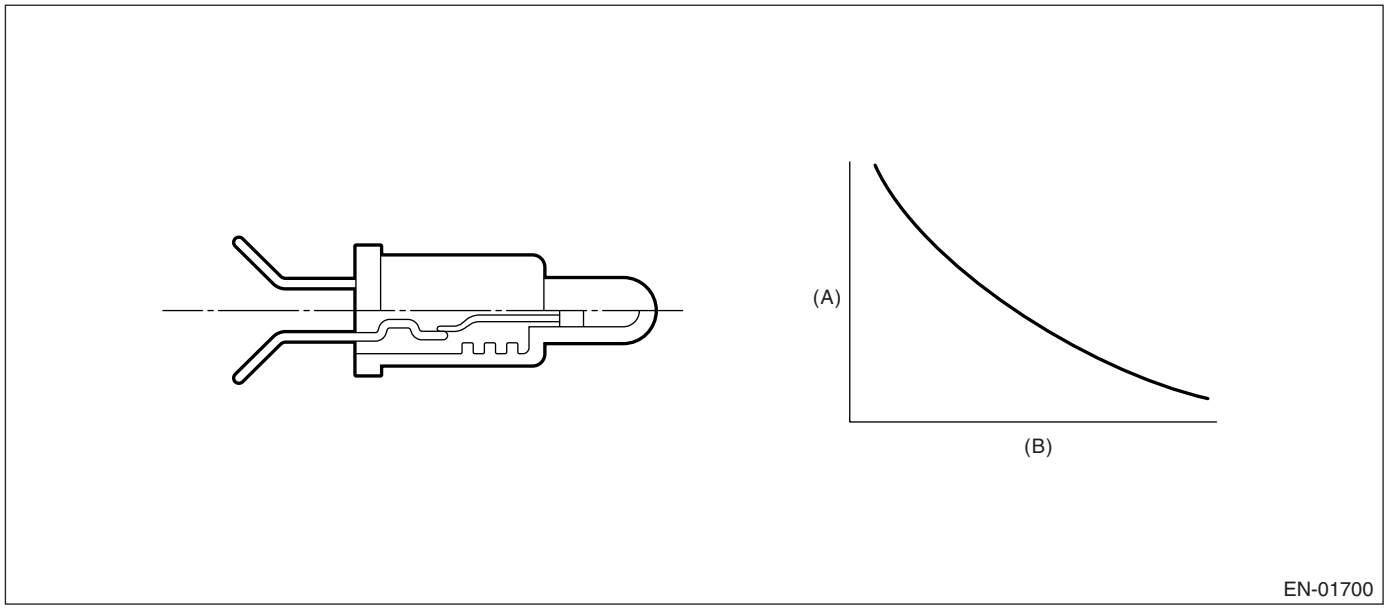

(A) Resistance (Ω) (B) Fuel temperature °C (°F)

3. ENABLE CONDITION

Secondary Parameters	Enable Conditions
None	

4. GENERAL DRIVING CYCLE

Always perform the diagnosis continuously.

5. DIAGNOSTIC METHOD

• Abnormality Judgment

Judge NG when the continuous time of completing the malfunction criteria below becomes more than 2.5 seconds.

Judgment Value

Malfunction Criteria	Threshold Value
Output voltage	≥ 4.716 V
Battery voltage	≥ 10.9 V

Time Needed for Diagnosis: 2.5 seconds

Malfunction Indicator Light Illumination: Illuminates as soon as the malfunction occurs.

• Normality Judgment

Judge OK and clear NG when the malfunction criteria below are completed.

Judgment Value

Malfunction Criteria	Threshold Value
Output voltage	< 4.716 V
Battery voltage	≥ 10.9 V

6. DTC CLEAR CONDITION

- When the OK idling cycle was completed 40 times in a row
- When “Clear Memory” was performed

7. MALFUNCTION INDICATOR LIGHT CLEAR CONDITION

- When the OK driving cycle was completed 3 times in a row
- When “Clear Memory” was performed

8. FAIL SAFE

None

9. ECM OPERATION AT DTC SETTING

Memorize the freeze frame data. (For test mode $02)

AZ:DTC P0222 THROTTLE/PEDAL POSITION SENSOR/SWITCH “B” CIRCUIT LOW INPUT

1. OUTLINE OF DIAGNOSIS

Detect the open or short circuit of throttle position sensor 2.
Judge NG when out of the standard value.

2. COMPONENT DESCRIPTION

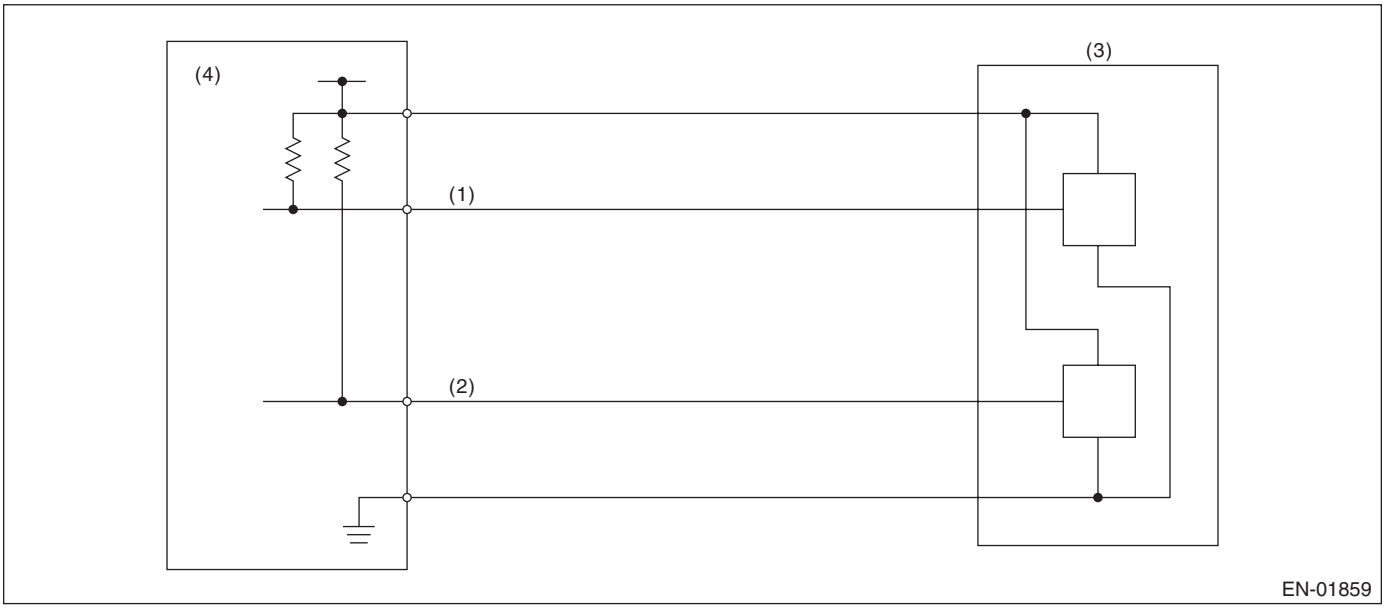

(1) Throttle position sensor 1 signal
(2) Throttle position sensor 2 signal
(3) Throttle position sensor
(4) Engine control module (ECM)

3. ENABLE CONDITION

Secondary Parameters	Enable Conditions
Ignition switch	ON

4. GENERAL DRIVING CYCLE

Always perform the diagnosis continuously.

5. DIAGNOSTIC METHOD

Judge OK and clear the NG when the malfunction criteria below are completed.
Judgment Value

Malfunction Criteria	Threshold Value
Sensor 1 input voltage	≥ 0.749 V

Time Needed for Diagnosis: 24 milliseconds
Malfunction Indicator Light Illumination: Illuminates as soon as malfunction occurs.

6. DTC CLEAR CONDITION

- When the OK idling cycle was completed 40 times in a row
- When “Clear Memory” was performed (Only with engine stopped)

7. MALFUNCTION INDICATOR LIGHT CLEAR CONDITION

- When the OK driving cycle was completed 3 times in a row
- When “Clear Memory” was performed (Only with engine stopped)

8. FAIL SAFE

Stop power distribution to electronic throttle control motor. (Throttle opening is fixed to 6°.)

9. ECM OPERATION AT DTC SETTING

Memorize the freeze frame data. (For test mode $02)

BA:DTC P0223 THROTTLE/PEDAL POSITION SENSOR/SWITCH “B” CIRCUIT HIGH INPUT

1. OUTLINE OF DIAGNOSIS

Detect the open or short circuit of throttle position sensor 2.
Judge NG when out of the standard value.

2. COMPONENT DESCRIPTION

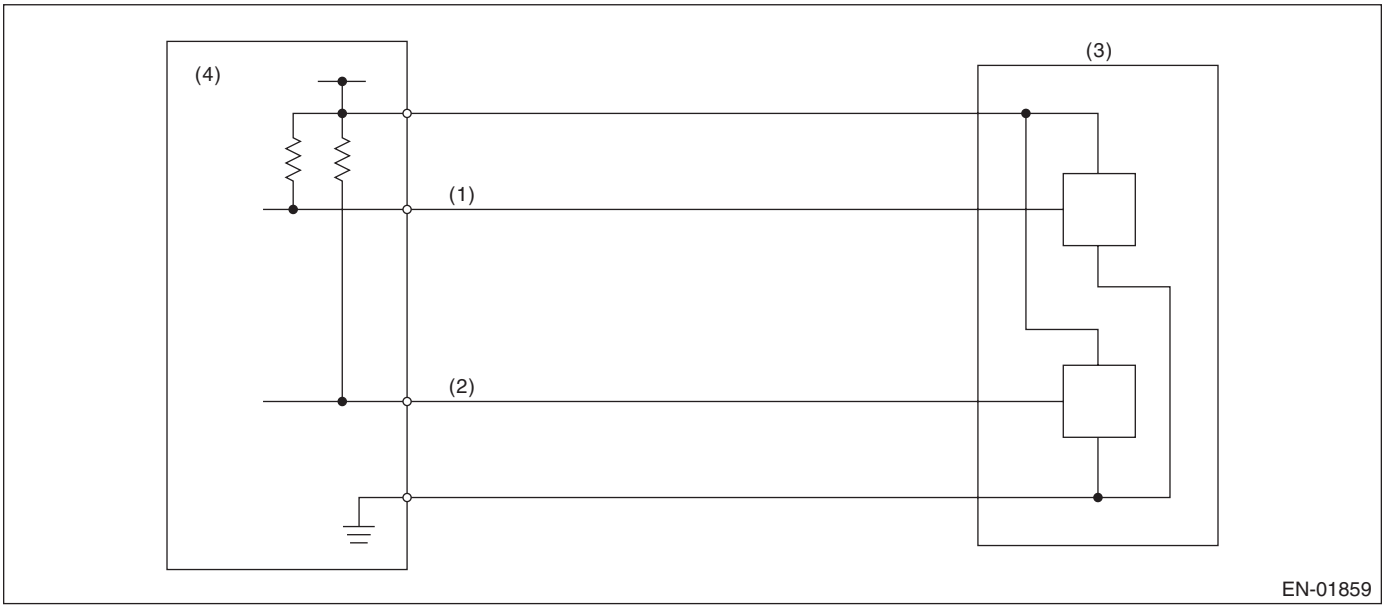

(1) Throttle position sensor 1 signal
(2) Throttle position sensor 2 signal
(3) Throttle position sensor
(4) Engine control module (ECM)

3. ENABLE CONDITION

Secondary Parameters	Enable Conditions
Ignition switch	ON

4. GENERAL DRIVING CYCLE

Always perform the diagnosis continuously.

5. DIAGNOSTIC METHOD

Judge OK and clear the NG when the malfunction criteria below are completed.
Judgment Value

Malfunction Criteria	Threshold Value
Sensor 2 input voltage	≤ 4.747 V

Time Needed for Diagnosis: 24 milliseconds
Malfunction Indicator Light Illumination: Illuminates as soon as malfunction occurs.

6. DTC CLEAR CONDITION

- When the OK idling cycle was completed 40 times in a row
- When “Clear Memory” was performed (Only with engine stopped)

7. MALFUNCTION INDICATOR LIGHT CLEAR CONDITION

- When the OK driving cycle was completed 3 times in a row
- When “Clear Memory” was performed (Only with engine stopped)

8. FAIL SAFE

Stop power distribution to electronic throttle control motor. (Throttle opening is fixed to 6°.)

9. ECM OPERATION AT DTC SETTING

Memorize the freeze frame data. (For test mode $02)

BB:DTC P0301 CYLINDER 1 MISFIRE DETECTED

1. OUTLINE OF DIAGNOSIS

Detect whether the misfire occurred or not. (Revolution fluctuation method) Monitoring the misfire which influences exhaust deterioration (1.5 times of FTP) and catalyst damage is made obligatory by the law. Misfire affecting these two has three patterns below.

- Intermittent misfire (The same cylinder misfires in random, or different cylinders misfire in random.): FTP 1.5 times misfire
- Every time misfire (The same cylinder misfires every time.): FTP 1.5 times misfire, Catalyst damage misfire

The following detecting methods are adopted for these detection.

1) Intermittent misfire: FTP 1.5 times misfire
- 180° Interval Difference Method (MT: 1,800 rpm or less; AT: None)
- 360° Interval Difference Method (whole range)
- 720° Interval Difference Method (3,000 rpm or less)

2) Every time misfire: FTP 1.5 times misfire, Catalyst damage misfire
- 360° Interval Difference Method

2. ENABLE CONDITION

Secondary Parameters	Enable Conditions
All secondary parameter enable conditions	More than 1 second
Atmospheric pressure	〉75.1 kPa (563 mmHg, 22.2 inHg)
Conclusion of fuel parameter	Not super volatile
Intake manifold pressure change during 0.5 engine rev.	〈 13.3 kPa (100 mmHg, 3.94 inHg)
Engine speed change	〈 700 rpm/32 milliseconds
Throttle position change during 16 milliseconds	〈 21°
Fuel shut-off function	Not operating
Fuel level	≥ 9.6 ℓ (2.54 US gal, 2.11 Imp gal)
AT torque control	Not in operation
Evaporative system leak check	Not in operation
Engine speed	460 — 6300 rpm
Intake manifold pressure	〉Map 3
Battery voltage	≥ 8 V

Map3
MT
Vehicle Speed 〈 64.4 km/h (40 MPH)

rpm	650	1,000	1,500	2,000	2,500	3,000	3,500	4,000	4,500	5,000	5,500	6,000	6,500
kPa (mmHg, inHg)	24.8 (186, 7.32)	21.3 (160, 6.30)	20.5 (154, 6.06)	21.0 (157, 6.19)	20.5 (154, 6.06)	21.9 (164, 6.46)	24.3 (182, 7.17)	24.8 (186, 7.32)	28.7 (215, 8.46)	30.8 (231, 9.09)	34.7 (260, 10.24)	38.4 (289, 11.33)	40.1 (301, 11.9)

MT
Vehicle Speed ≥ 64.4 km/h (40 MPH)

rpm	650	1,000	1,500	2,000	2,500	3,000	3,500	4,000	4,500	5,000	5,500	6,000	6,500
kPa (mmHg, inHg)	40.0 (300, 11.81)	40.0 (300, 11.81)	33.6 (252, 9.92)	34.3 (257, 10.12)	33.5 (251, 9.88)	35.6 (267, 10.51)	34.7 (260, 10.24)	27.7 (208, 8.19)	28.7 (215, 8.46)	30.8 (231, 9.09)	34.7 (260, 10.24)	38.5 (289, 11.38)	40.1 (301, 11.85)

AT

rpm	700	1,000	1,500	2,000	2,500	3,000	3,500	4,000	4,500	5,000	5,500	6,000	6,500
kPa (mmHg, inHg)	26.0 (195, 7.68)	23.3 (175, 6.89)	22.3 (167, 6.57)	22.8 (171, 6.73)	22.7 (170, 6.69)	24.0 (180, 7.09)	27.8 (209, 8.23)	30.0 (225, 8.86)	31.7 (238, 9.37)	35.2 (264, 10.4)	40.0 (300, 11.81)	44.4 (333, 13.11)	45.73 (343, 13.50)

3. GENERAL DRIVING CYCLE

- Detecting misfire between idling and high revolution.
- Perform the diagnosis continuously.

4. DIAGNOSTIC METHOD

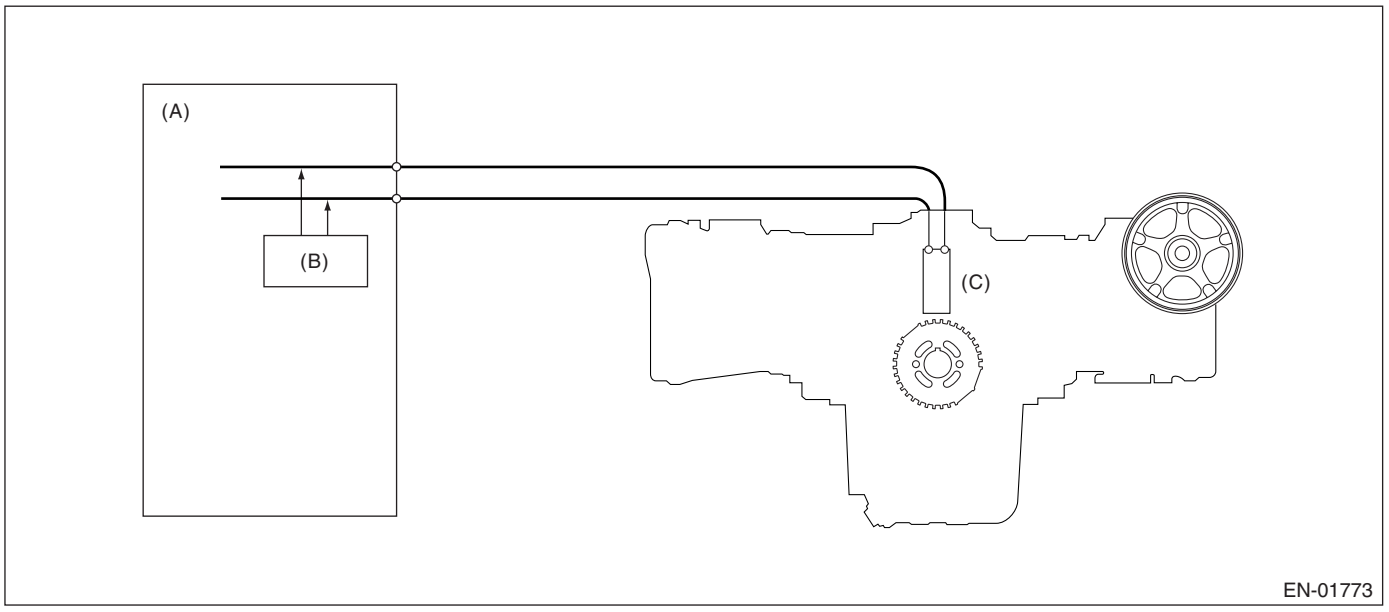

(A) Engine control module (ECM) (B) Diagnosis circuit (C) Crankshaft position sensor

When the misfire occurred, the engine speed is decreased and the crankshaft position speed will change. Calculate the interval difference value (diagnostic value) from crankshaft position speed by the following formula, and judge whether the misfire occurs or not comparing the calculated result with judgment value. Counting the number of misfire up, and if the misfire ratio is higher during 1000 rev. or 200 rev., judge NG for the corresponding cylinder.

Calculate the diagnostic value (from crankshaft position speed) → Misfire detection every single ignition (Compare diagnostic value with judgment value)
- 180° Interval Difference Method
- 360° Interval Difference Method
- 720° Interval Difference Method

→ NG judgment (Judge misfire occurrence required by the law) (Compare number of misfire with judgment)
- FTP1.5 times misfire NG judgment
- Catalyst damage misfire NG judgment

As the following figure, pick out a random cylinder as the standard and name it omg 0. And the former crankshaft position speed is named omg 1, the second former crankshaft position speed is named omg 2, the third is named omg 3, and the following is the same.

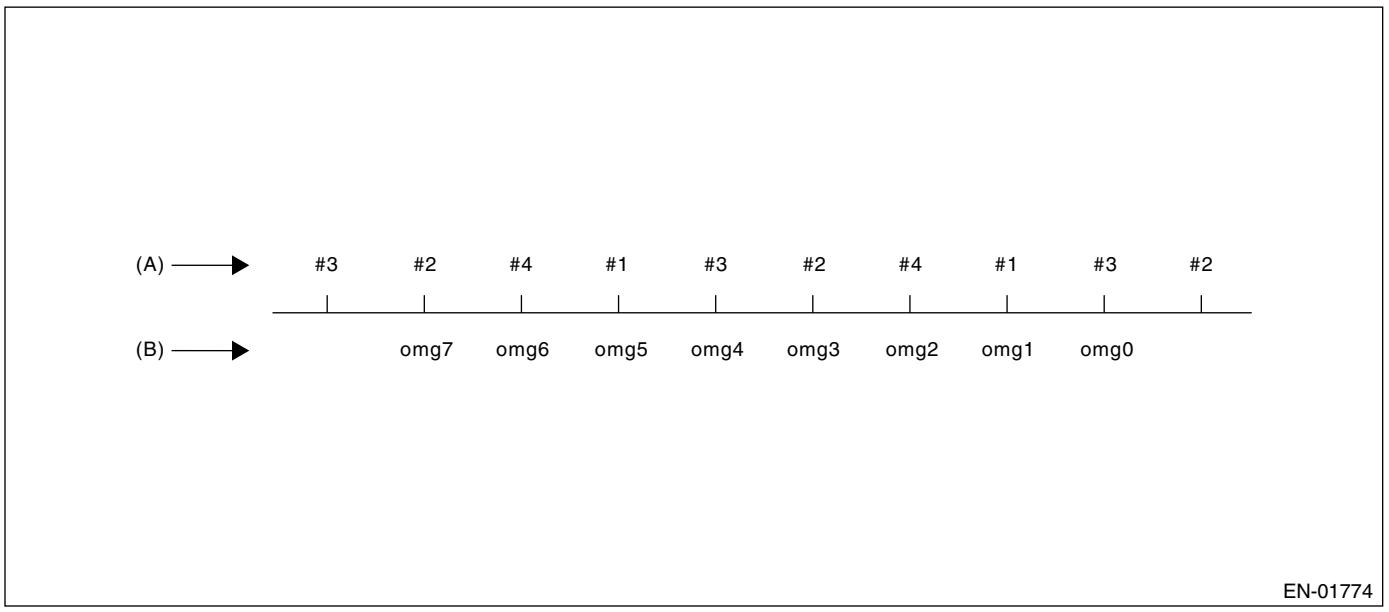

(A) Ignition order (B) Crankshaft position speed

• 180° Interval Difference Method

Diagnosis value domg 180 = (omg –1 omg 0) – (omg 7 – omg 1)/6

Judge misfire occurs in the following cases.

- domg 180 > judgment value of positive side
- domg 180 ≤ judgment value of negative side

(judgment value before 180°CA)

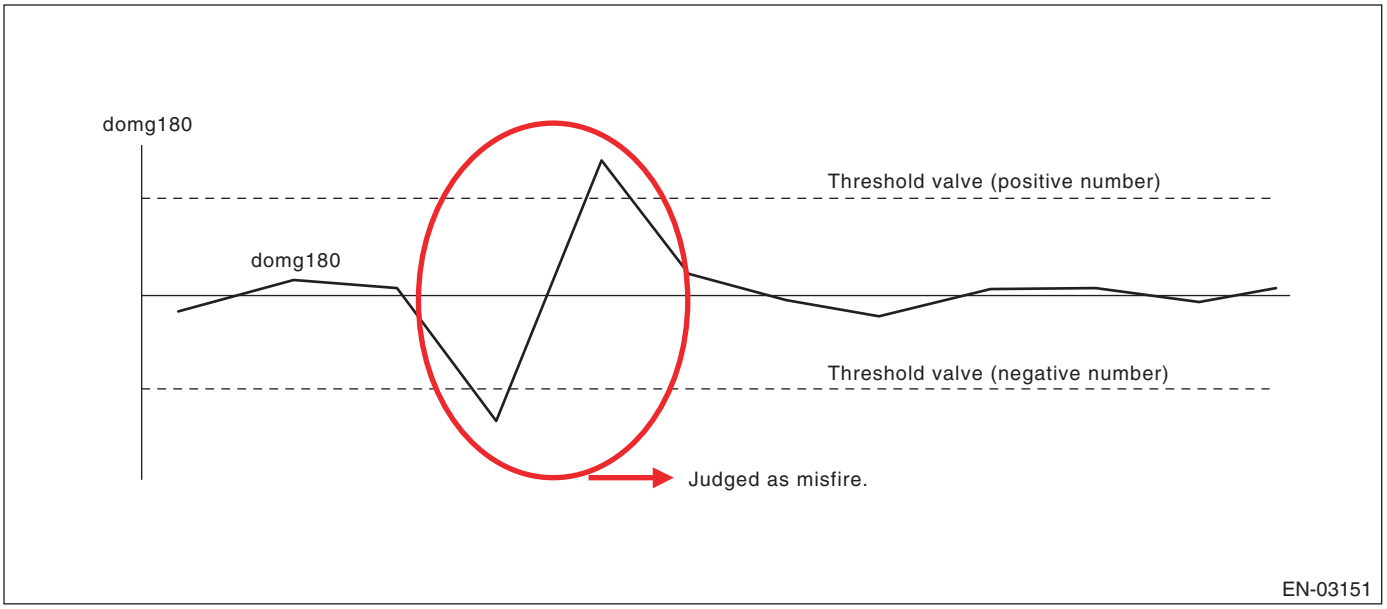

• 360° Interval Difference Method

Diagnosis value	domg 360 = (omg 1 – omg 0) – (omg 4 – omg 3)		
Misfire judgment	domg 360 > judgment value	→	Misfire occurs

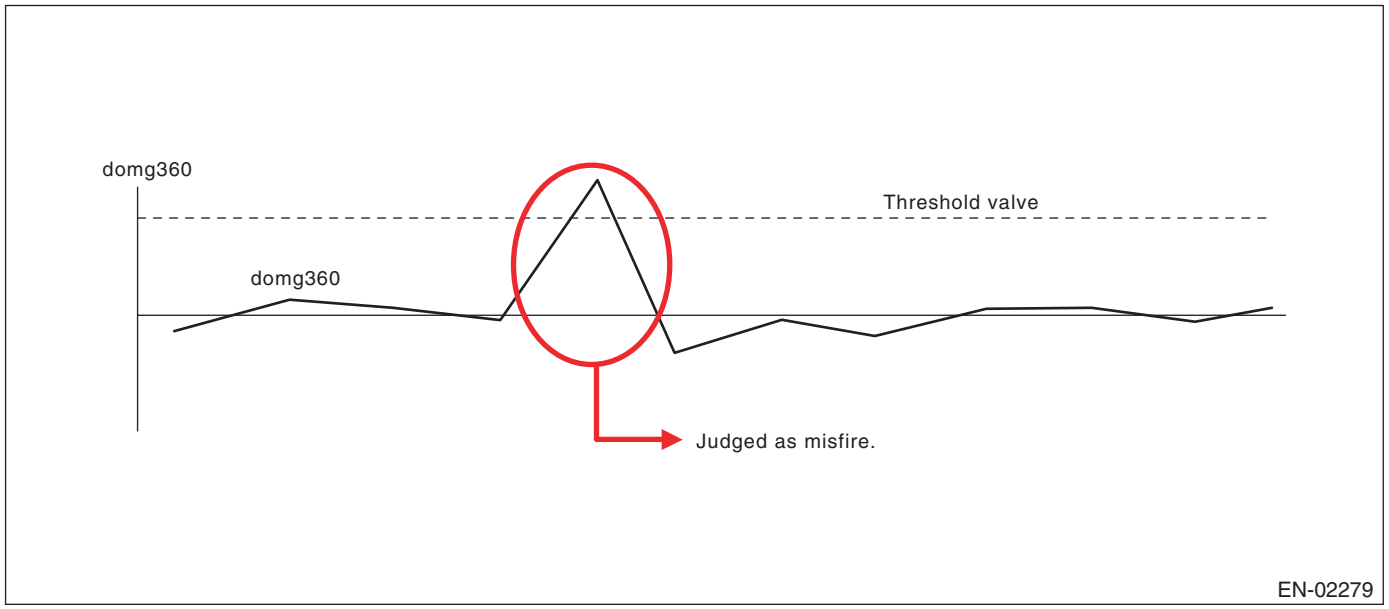

• 720° Interval Difference Method

Diagnosis value	domg 720 = (omg 1 – omg 0) – (omg 7 – omg 6)		
Misfire judgment	domg 720 > judgment value	→	Misfire occurs

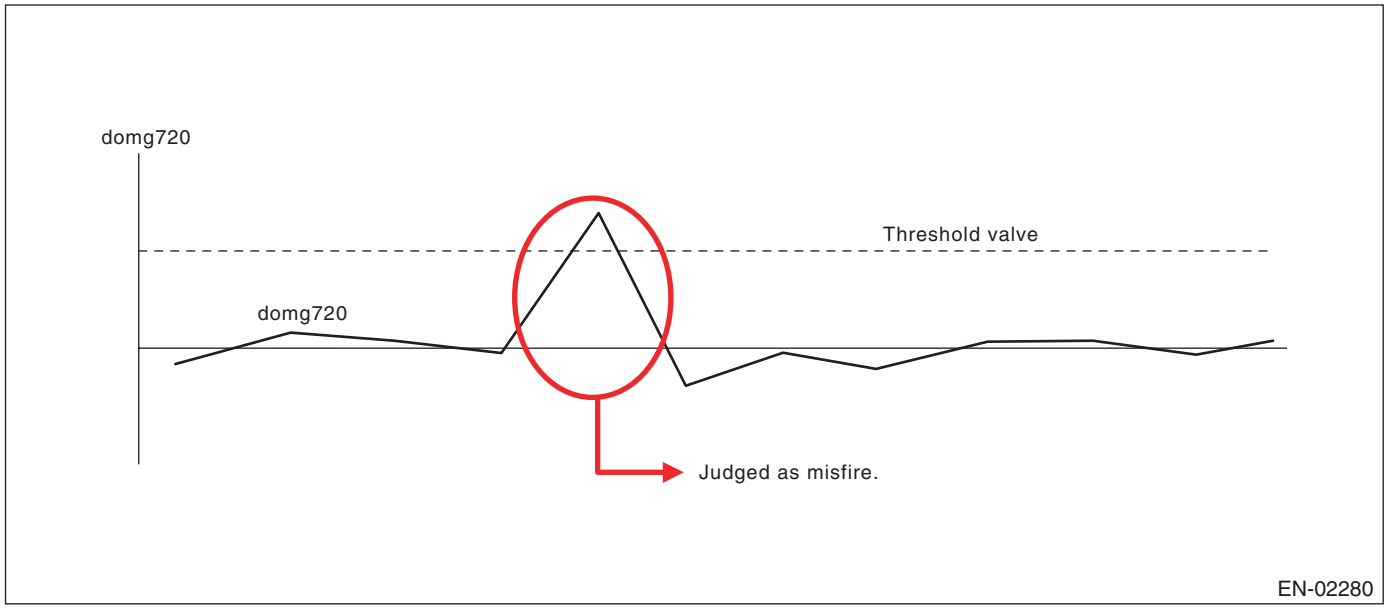

• FTP 1.5 times misfire (Misfire occurrence level affecting exhaust gas)

Judgment Value (Judge that malfunction occurs when the misfire ratio is high in 1000 engine revs.)

Malfunction Criteria	Threshold Value
FTP emission judgment value	> 1.0% in 1000 revs.

Time Needed for Diagnosis: 1000 engine revs.
Malfunction Indicator Light Illumination: Illuminates when malfunction occurs in 2 continuous driving cycles.

• Catalyst damage misfire (Misfire occurrence level damaging catalyst)

Judgment Value (Judge that malfunction occurs when the misfire ratio is high in 200 engine revs. (400 ignitions))

Malfunction Criteria	Threshold Value
Catalyst damage misfire judgment value	See Map 1

Map 1 Fault criteria threshold for misfire which would result in catalyst damage

Percentage		Intake air (g (oz)/rev.)							
		0.16 (0.006)	0.28 (0.010)	0.4 (0.014)	0.52 (0.018)	0.64 (0.023)	0.76 (0.027)	0.92 (0.032)	1.1 (0.039)
Engine speed (rpm)	700	22.5	22.5	22.5	22.5	22.5	12.5	12.5	12.5
	1,000	22.5	22.5	22.5	12.5	12.5	12.5	8.3	8.3
	1,500	18.3	22.5	22.5	12.5	8.3	8.3	8.3	8.3
	2,000	12.5	12.5	8.3	8.3	8.3	6.3	8.3	8.3
	2,500	8.3	8.3	6.3	6.3	5.0	5.0	5.0	5.0
	3,000	8.3	6.3	6.3	5.0	5.0	5.0	5.0	5.0
	3,500	6.3	6.3	5.0	5.0	5.0	5.0	5.0	5.0
	4,000	6.3	6.3	5.0	5.0	5.0	5.0	5.0	5.0
	4,500	6.3	6.3	5.0	5.0	5.0	5.0	5.0	5.0
	5,000	6.3	6.3	5.0	5.0	5.0	5.0	5.0	5.0
	5,500	6.3	6.3	5.0	5.0	5.0	5.0	5.0	5.0
	6,000	6.3	6.3	5.0	5.0	5.0	5.0	5.0	5.0
	6,200	6.3	6.3	5.0	5.0	5.0	5.0	5.0	5.0

These figures mean the misfire ratio (%) in 400 ignitions; for example, 22.5 (%) means 400 (ignition) × 22.5 (%) = 90 (ignition) or more, so this case is judged misfire.
Time Needed for Diagnosis: 200 engine revs.
Malfunction Indicator Light Illumination: Illuminates as soon as the malfunction occurs.

5. DTC CLEAR CONDITION

- When the OK idling cycle was completed 40 times in a row
- When “Clear Memory” was performed

6. MALFUNCTION INDICATOR LIGHT CLEAR CONDITION

- When the OK driving cycle was completed 3 times in a row
- When “Clear Memory” was performed

7. FAIL SAFE

None

8. ECM OPERATION AT DTC SETTING

Memorize the freeze frame data. (For test mode $02)

BC:DTC P0302 CYLINDER 2 MISFIRE DETECTED

1. OUTLINE OF DIAGNOSIS

For the detecting criteria, refer to DTC P0301. <Ref. to GD(H4SO U5)-95, DTC P0301 CYLINDER 1 MISFIRE DETECTED, Diagnostic Trouble Code (DTC) Detecting Criteria.>

BD:DTC P0303 CYLINDER 3 MISFIRE DETECTED

1. OUTLINE OF DIAGNOSIS

For the detecting criteria, refer to DTC P0301. <Ref. to GD(H4SO U5)-95, DTC P0301 CYLINDER 1 MISFIRE DETECTED, Diagnostic Trouble Code (DTC) Detecting Criteria.>

BE:DTC P0304 CYLINDER 4 MISFIRE DETECTED

1. OUTLINE OF DIAGNOSIS

For the detecting criteria, refer to DTC P0301. <Ref. to GD(H4SO U5)-95, DTC P0301 CYLINDER 1 MISFIRE DETECTED, Diagnostic Trouble Code (DTC) Detecting Criteria.>

BF:DTC P0327 KNOCK SENSOR 1 CIRCUIT LOW INPUT (BANK 1 OR SINGLE SENSOR)

1. OUTLINE OF DIAGNOSIS

Detect the open or short circuit of the knock sensor. Judge NG when out of the standard value.

2. COMPONENT DESCRIPTION

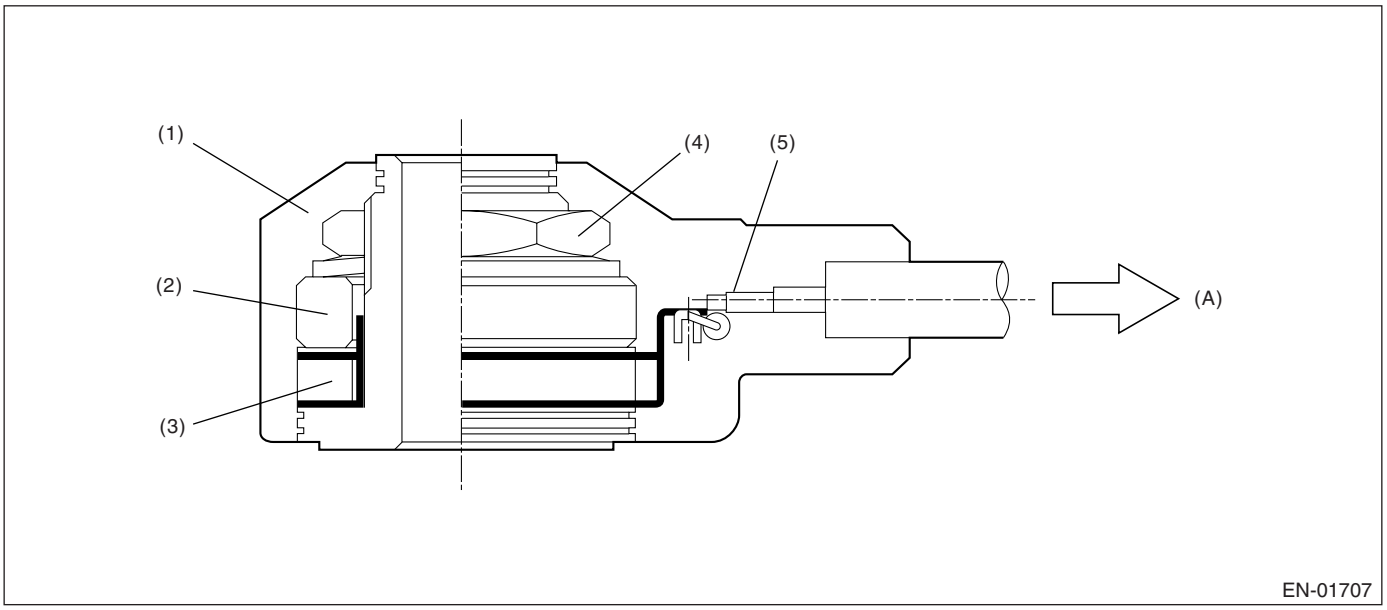

(1) Case
(2) Weight
(3) Piezoelectric element
(4) Nut
(5) Resistance
(A) To knock sensor harness

3. ENABLE CONDITION

Secondary Parameters	Enable Conditions
None	

4. GENERAL DRIVING CYCLE

Always perform the diagnosis continuously.

5. DIAGNOSTIC METHOD

• Abnormality Judgment

Judge NG when the continuous time of completing the malfunction criteria below becomes more than 1 second.

Judgment Value

Malfunction Criteria	Threshold Value
Output voltage	< 0.238 V
Ignition switch	ON

Time Needed for Diagnosis: 1 second
Malfunction Indicator Light Illumination: Illuminates as soon as the malfunction occurs.

• Normality Judgment

Judge OK and clear NG when the malfunction criteria below are completed.

Judgment Value

Malfunction Criteria	Threshold Value
Output voltage	≥ 0.238 V
Ignition switch	ON

6. DTC CLEAR CONDITION

- When the OK idling cycle was completed 40 times in a row
- When “Clear Memory” was performed

7. MALFUNCTION INDICATOR LIGHT CLEAR CONDITION

- When the OK driving cycle was completed 3 times in a row
- When “Clear Memory” was performed

8. FAIL SAFE

Knock compensation:
- At normal: Learned ignition timing value = knock F/B timing value + whole learning timing value + partial learning timing value.
- At trouble: Learned ignition timing = –3°CA (Retard 3°CA)

Knock F/B timing value = 0°CA
Whole learning is not allowed.
Partial learning is not allowed.

9. ECM OPERATION AT DTC SETTING

Memorize the freeze frame data. (For test mode $02)

BG:DTC P0328 KNOCK SENSOR 1 CIRCUIT HIGH INPUT (BANK 1 OR SINGLE SENSOR)

1. OUTLINE OF DIAGNOSIS

Detect the open or short circuit of the knock sensor. Judge NG when out of the standard value.

2. COMPONENT DESCRIPTION

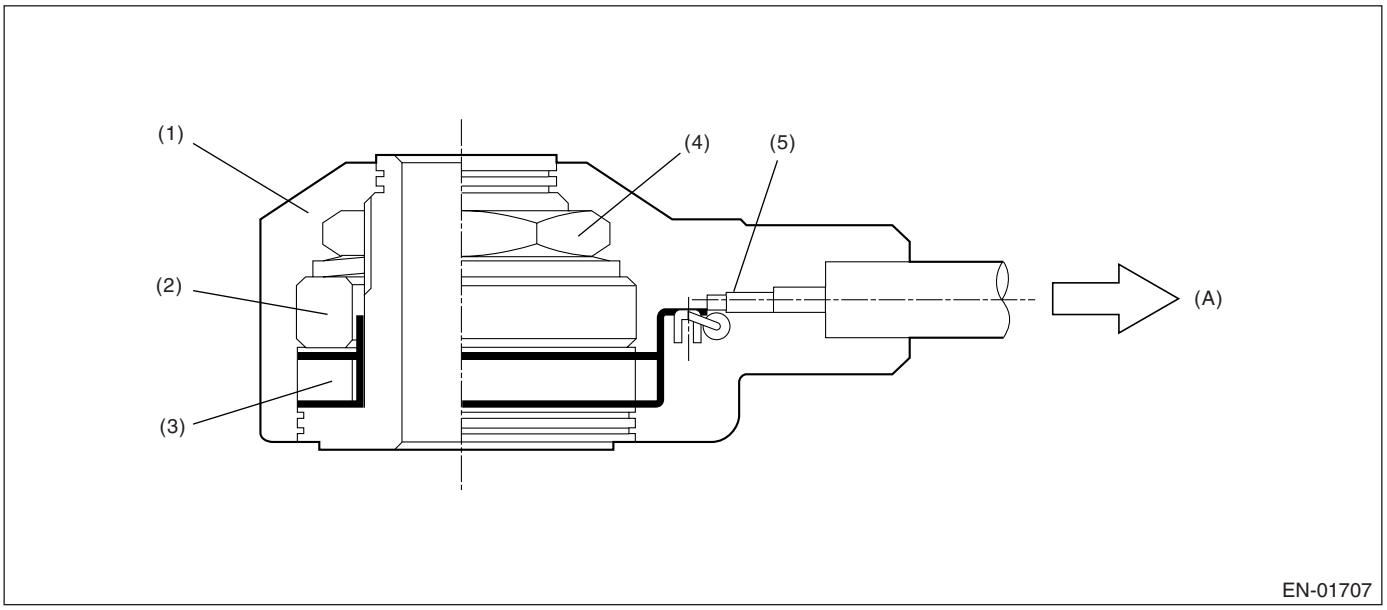

(1) Case
(2) Weight
(3) Piezoelectric element
(4) Nut
(5) Resistance
(A) To knock sensor harness

3. ENABLE CONDITION

Secondary Parameters	Enable Conditions
None	

4. GENERAL DRIVING CYCLE

Always perform diagnosis continuously.

5. DIAGNOSTIC METHOD

• Abnormality Judgment

Judge NG when the continuous time of completing the malfunction criteria below becomes more than 1 second.

Judgment Value

Malfunction Criteria	Threshold Value
Output voltage	≥ 4.714 V
Ignition switch	ON

Time Needed for Diagnosis: 1 second
Malfunction Indicator Light Illumination: Illuminates as soon as the malfunction occurs.
• Normality Judgment

Judge OK and clear NG when the malfunction criteria below are completed.

Judgment Value

Malfunction Criteria	Threshold Value
Output voltage	〈 4.714 V
Ignition switch	ON

6. DTC CLEAR CONDITION

- When the OK idling cycle was completed 40 times in a row
- When “Clear Memory” was performed

7. MALFUNCTION INDICATOR LIGHT CLEAR CONDITION

- When the OK driving cycle was completed 3 times in a row
- When “Clear Memory” was performed

8. FAIL SAFE

Knock compensation:
- At normal: Learned ignition timing value = knock F/B timing value + whole learning timing value + partial learning timing value.
- At trouble: Learned ignition timing = −3°CA (Retard 3°CA)

Knock F/B timing value = 0°CA
Whole learning is not allowed.
Partial learning is not allowed.

9. ECM OPERATION AT DTC SETTING

Memorize the freeze frame data. (For test mode $02)

BH:DTC P0335 CRANKSHAFT POSITION SENSOR “A” CIRCUIT

1. OUTLINE OF DIAGNOSIS

Detect the open or short circuit of crankshaft position sensor. Judge NG when the crankshaft signal does not input regardless of turning the starter.

2. COMPONENT DESCRIPTION

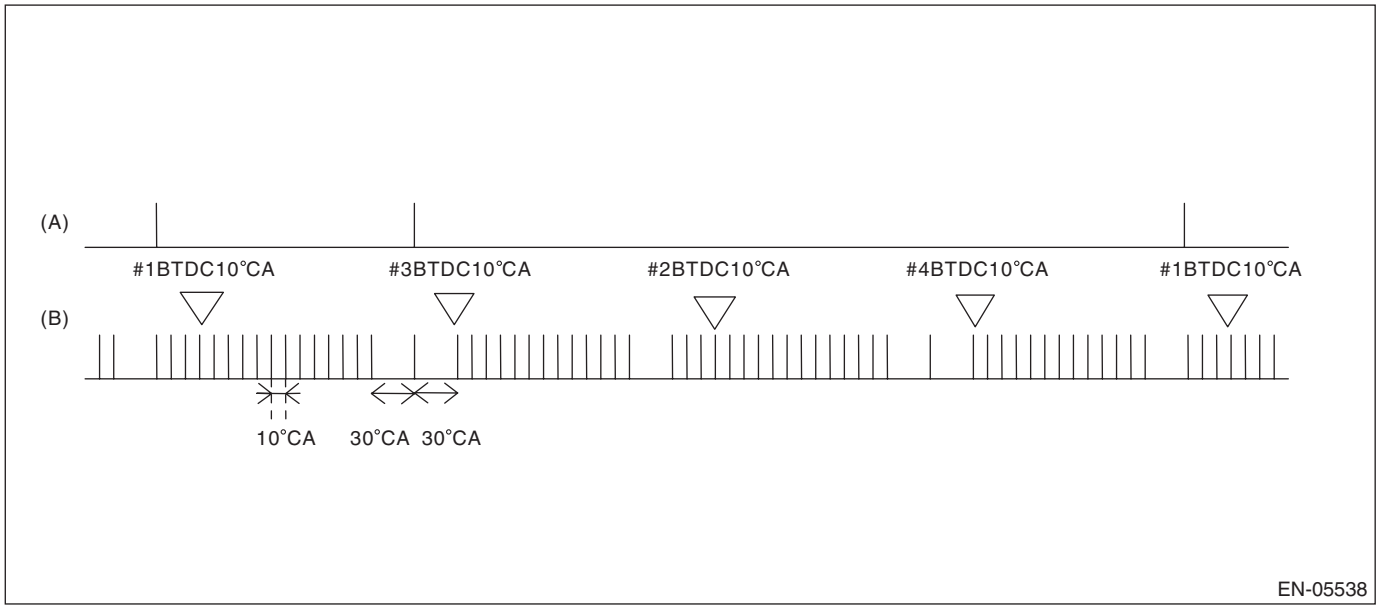

(A) Camshaft signal (B) Crankshaft signal

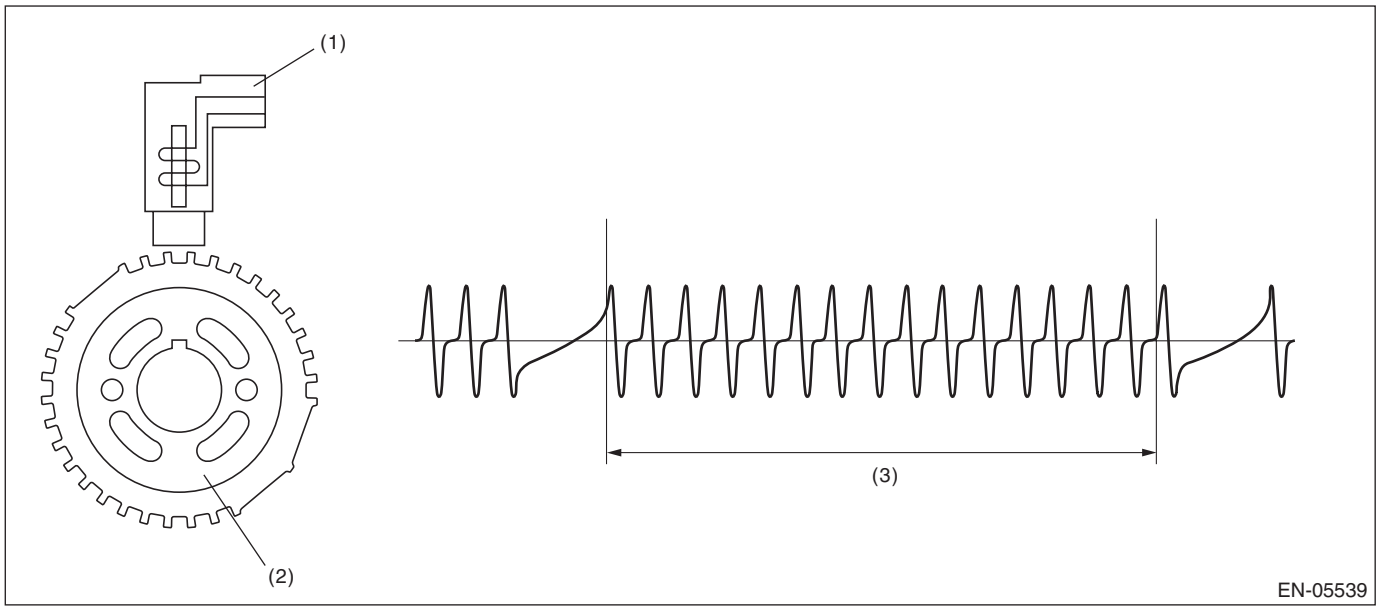

(1) Crankshaft position sensor (2) Crank sprocket (3) Crankshaft half-turn

3. ENABLE CONDITION

Secondary Parameters	Enable Conditions
None	

4. GENERAL DRIVING CYCLE

Always perform the diagnosis continuously.

5. DIAGNOSTIC METHOD

• Abnormality Judgment

Judge NG when the continuous time of completing the malfunction criteria below becomes more than 3 seconds.

Judgment Value

Malfunction Criteria	Threshold Value
Starter switch	ON
Crankshaft position sensor signal	Not detected
Battery voltage	≥ 8 V

Time Needed for Diagnosis: 3 seconds
Malfunction Indicator Light Illumination: Illuminates as soon as the malfunction occurs.

• Normality Judgment

Judge OK when the malfunction criteria below are completed.

Judgment Value

Malfunction Criteria	Threshold Value
Crankshaft position sensor signal	Input exists
Battery voltage	≥ 8 V

6. DTC CLEAR CONDITION

- When the OK idling cycle was completed 40 times in a row
- When “Clear Memory” was performed

7. MALFUNCTION INDICATOR LIGHT CLEAR CONDITION

- When the OK driving cycle was completed 3 times in a row
- When “Clear Memory” was performed

8. FAIL SAFE

None

9. ECM OPERATION AT DTC SETTING

Memorize the freeze frame data. (For test mode $02)

BI: DTC P0336 CRANKSHAFT POSITION SENSOR “A” CIRCUIT RANGE/PERFORMANCE

1. OUTLINE OF DIAGNOSIS

Detect the malfunction of crankshaft position sensor output property. Judge NG when the number of crankshaft signal every 1 revolution becomes abnormal.

2. COMPONENT DESCRIPTION

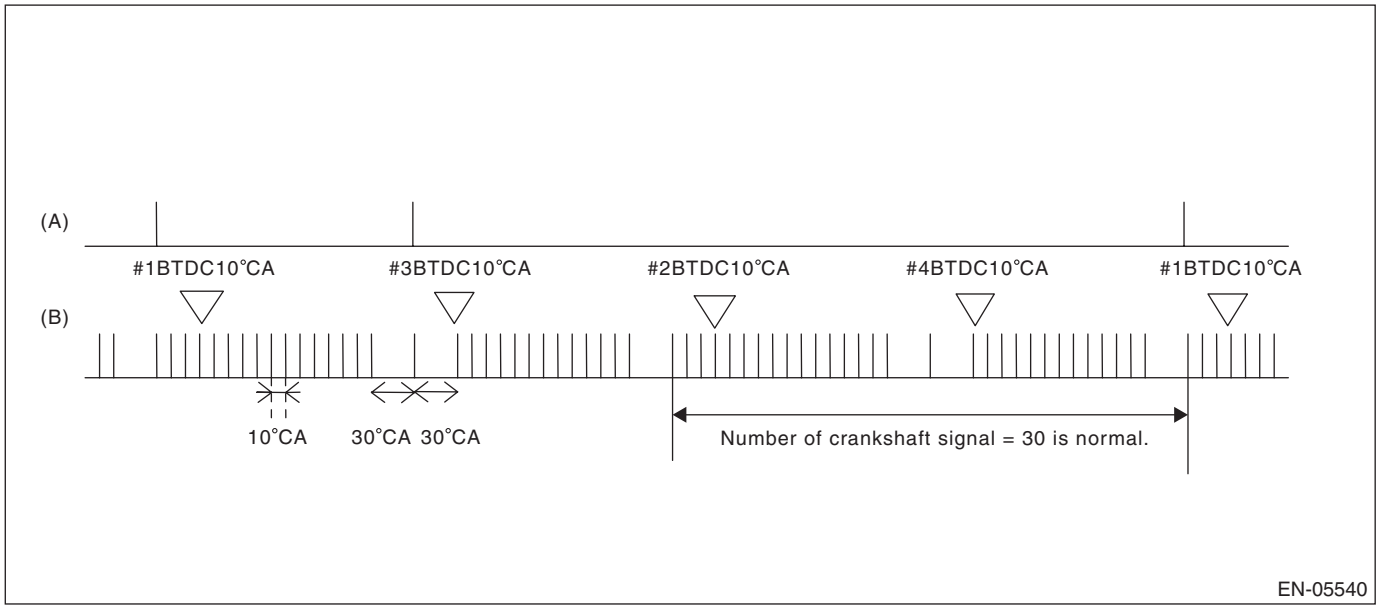

(A) Camshaft signal (B) Crankshaft signal

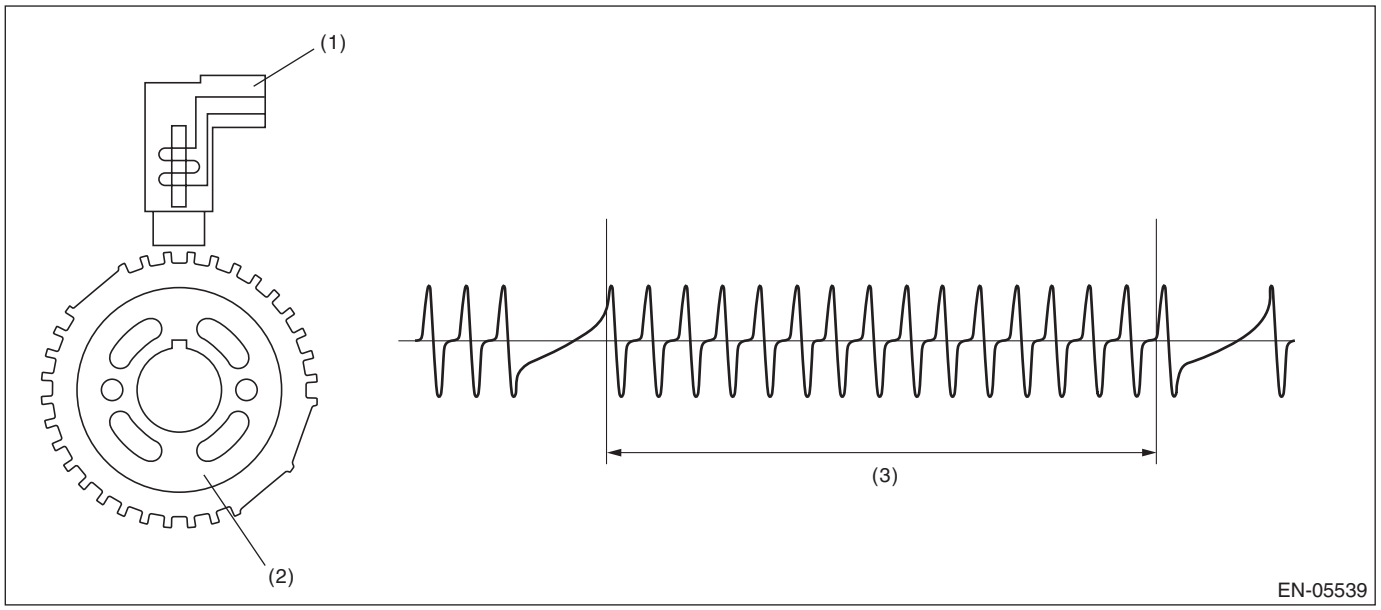

(1) Crankshaft position sensor (2) Crank sprocket (3) Crankshaft half-turn

3. ENABLE CONDITION

Secondary Parameters	Enable Conditions
Battery voltage	≥ 8 V
Engine speed	< 4000 rpm

4. GENERAL DRIVING CYCLE

Perform the diagnosis continuously under 4000 rpm engine speed.

5. DIAGNOSTIC METHOD

• Abnormality Judgment

Judge NG when all the malfunction criteria below are completed more than 10 times in a row.
Judgment Value

Malfunction Criteria	Threshold Value
Cylinder number distinction	Completed
Amount of crank sensor signal during 1 rev.	Not = 30

Time Needed for Diagnosis: 10 engine revs.
Malfunction Indicator Light Illumination: Illuminates when malfunction occurs in 2 continuous driving cycles.

• Normality Judgment

Judge OK and clear the NG when the malfunction criteria below are completed.
Judgment Value

Malfunction Criteria	Threshold Value
Cylinder number distinction	Completed
Amount of crank sensor signal during 1 rev.	= 30

6. DTC CLEAR CONDITION

- When the OK idling cycle was completed 40 times in a row
- When “Clear Memory” was performed

7. MALFUNCTION INDICATOR LIGHT CLEAR CONDITION

- When the OK driving cycle was completed 3 times in a row
- When “Clear Memory” was performed

8. FAIL SAFE

None

9. ECM OPERATION AT DTC SETTING

Memorize the freeze frame data. (For test mode $02)

BJ:DTC P0340 CAMSHAFT POSITION SENSOR “A” CIRCUIT (BANK 1 OR SINGLE SENSOR)

1. OUTLINE OF DIAGNOSIS

Detect the open or short circuit of camshaft position sensor. Judge NG when the number of camshaft signal remains to be abnormal.

2. COMPONENT DESCRIPTION

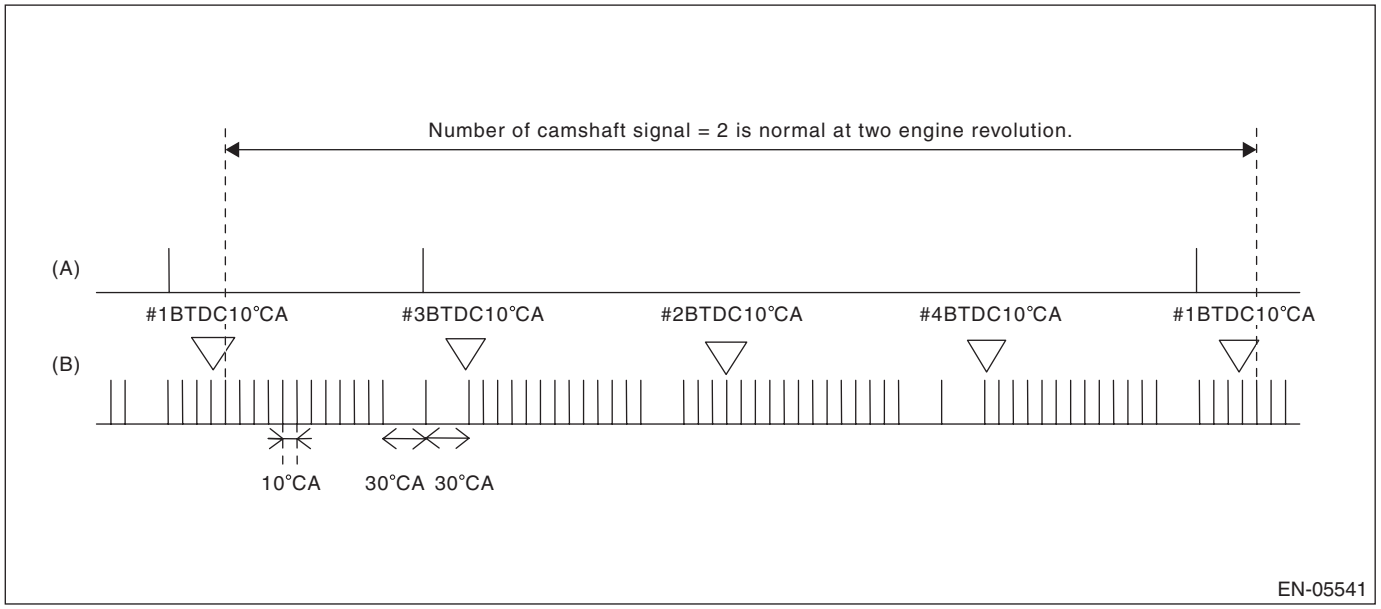

(A) Camshaft signal
(B) Crankshaft signal

3. ENABLE CONDITION

Secondary Parameters	Enable Conditions
None	

4. GENERAL DRIVING CYCLE

Always perform the diagnosis continuously.

5. DIAGNOSTIC METHOD

• Abnormality Judgment

Judge NG when the engine speed continues 8 revolutions or more for the malfunction criteria below.
Judgment Value

Malfunction Criteria	Threshold Value
Voltage	≥ 8 V
Number of camshaft position sensor signal during 2 rev.	Except 2

Time Needed for Diagnosis: 8 rev.
Malfunction Indicator Light Illumination: Illuminates as soon as the malfunction occurs.
• Normality Judgment

Judge OK and clear the NG when the malfunction criteria below are completed.

Judgment Value

Malfunction Criteria	Threshold Value
Voltage	≥ 8 V
Number of camshaft position sensor signal during 2 rev.	2

6. DTC CLEAR CONDITION

- When the OK idling cycle was completed 40 times in a row
- When “Clear Memory” was performed

7. MALFUNCTION INDICATOR LIGHT CLEAR CONDITION

- When the OK driving cycle was completed 3 times in a row
- When “Clear Memory” was performed

8. FAIL SAFE

None

9. ECM OPERATION AT DTC SETTING

Memorize the freeze frame data. (For test mode $02)

BK:DTC P0341 CAMSHAFT POSITION SENSOR "A" CIRCUIT RANGE/PERFORMANCE (BANK 1 OR SINGLE SENSOR)

1. OUTLINE OF DIAGNOSIS

Detect the malfunction of camshaft position sensor output property. Judge NG when the camshaft line signal input timing is shifted from the crankshaft signal because of timing belt tooth chip, etc.

2. COMPONENT DESCRIPTION

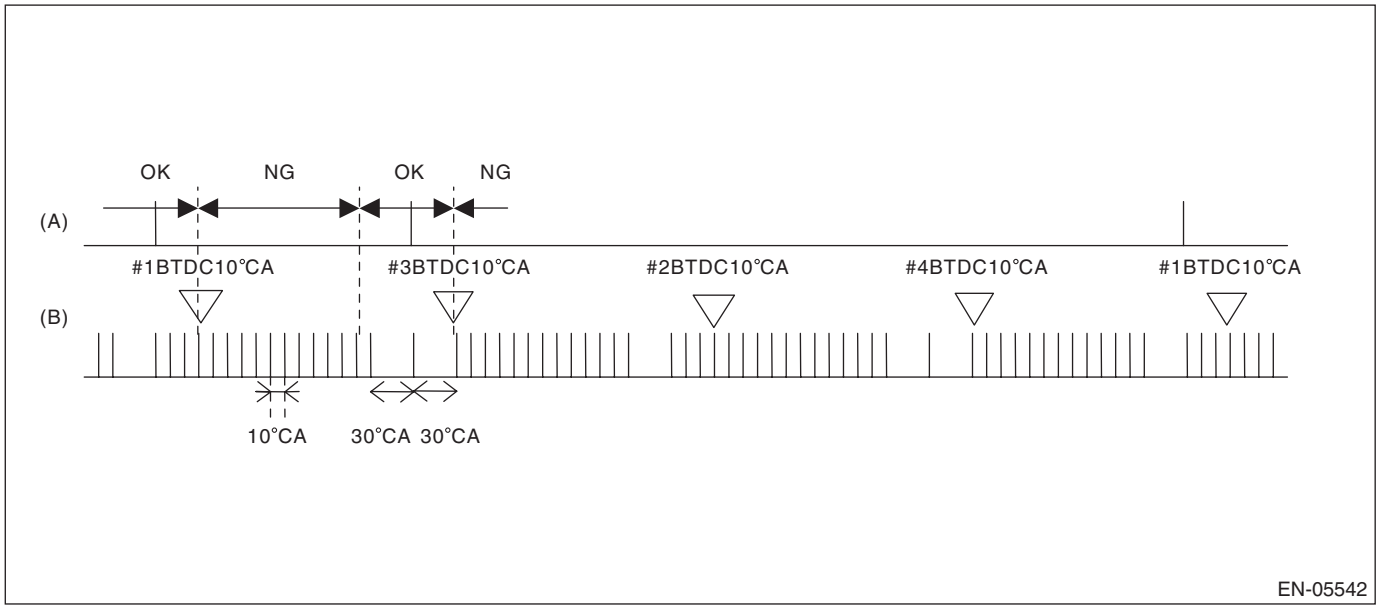

(A) Camshaft signal
(B) Crankshaft signal

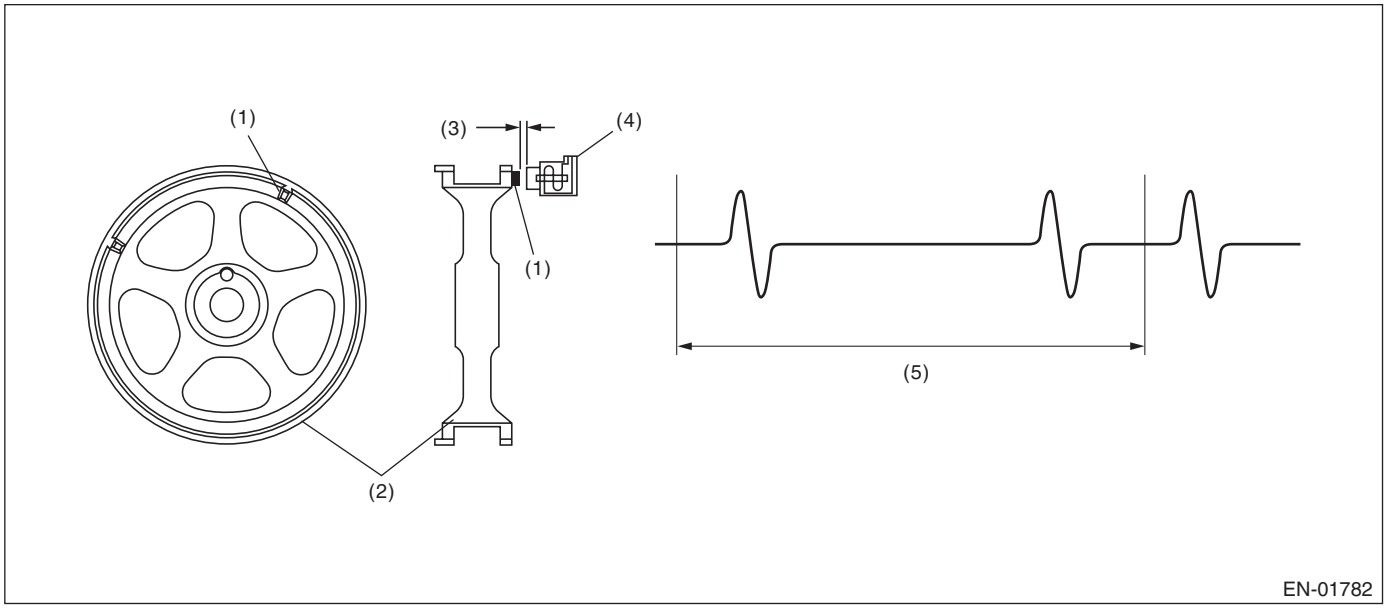

(1) Boss
(2) Cam sprocket
(3) Air gap
(4) Camshaft position sensor
(5) Camshaft one revolution (Engine two revolutions)

3. ENABLE CONDITION

Secondary Parameters	Enable Conditions
Cylinder number distinction	Completed
Battery voltage	≥ 8 V
Engine speed	550 ←→ 1000 rpm
Engine operation	In idle
Misfire	Not detect

4. GENERAL DRIVING CYCLE

Perform the diagnosis at idling continuously.

5. DIAGNOSTIC METHOD

Judge NG when the engine speed continues 4 revolutions for the malfunction criteria below. Judge OK and clear the NG when the malfunction criteria below are not completed.

Judgment Value

Malfunction Criteria	Threshold Value
Position of camshaft position sensor signal	Not between BTDC 10°CA and BTDC 80°CA

Time Needed for Diagnosis: 4 revs.

Malfunction Indicator Light Illumination: Illuminates when malfunction occurs in 2 continuous driving cycles.

6. DTC CLEAR CONDITION

- When the OK idling cycle was completed 40 times in a row
- When “Clear Memory” was performed

7. MALFUNCTION INDICATOR LIGHT CLEAR CONDITION

- When the OK driving cycle was completed 3 times in a row
- When “Clear Memory” was performed

8. FAIL SAFE

None

9. ECM OPERATION AT DTC SETTING

Memorize the freeze frame data. (For test mode $02)

BL:DTC P0400 EXHAUST GAS RECIRCULATION FLOW

1. OUTLINE OF DIAGNOSIS

Detect the malfunction of EGR system.
Intake manifold pressure (negative pressure) is stable because the throttle valve is fully closed during the fuel shut-off in deceleration. In this case, the intake manifold pressure changes when EGR valve is opened or closed. Judge EGR system is OK or NG according to intake manifold pressure change amount.

2. COMPONENT DESCRIPTION

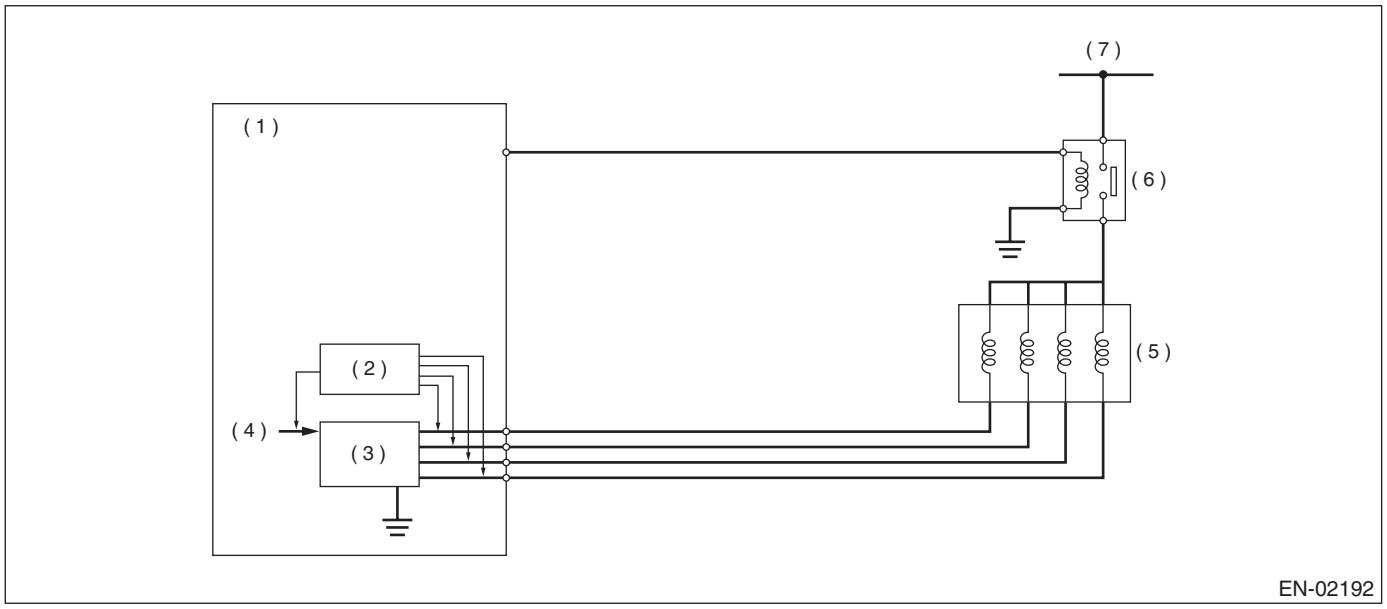

(1) ECM
(2) Detecting circuit
(3) Switching circuit
(4) CPU
(5) EGR valve
(6) Main relay
(7) Battery voltage

3. ENABLE CONDITION

Secondary Parameters	Enable Conditions
After engine starting	40 secs. or more
Engine coolant temperature	≥ 70°C (158°F)
Engine speed	1200 ←→ 2950 rpm
Intake manifold pressure (absolute pressure)	< 38.7 kPa (290 mmHg, 11.42 inHg)
Estimated ambient temperature	≥ 5°C (41°F)
Throttle position	〈 0.25°
Battery voltage	〉 10.9 V
Atmospheric pressure	≥ 75.0 kPa (563 mmHg, 22.17 inHg)
Vehicle speed	≥ 53 km/h (33 MPH)
Fuel shut-off function	Operation
Neutral switch	OFF and 1 second after changing from “ON” to “OFF”
Load (air conditioner, power steering, lights, rear defroster, heater fun and radiator fan)	5 secs. or more no change

4. GENERAL DRIVING CYCLE

Perform the diagnosis only once at the fuel shut-off in deceleration in vehicle speed more than 53 km/h (approx. 33 MPH). Pay attention to vehicle speed and engine speed. (The diagnosis is not completed if vehicle speed and engine speed are out of condition due to deceleration.)

5. DIAGNOSTIC METHOD

Measure the pressure in the following procedures when the enable conditions are completed, and then diagnosis by calculating the result.
(1) PMOF1 is equal to the intake manifold pressure at enable condition completed, and EGR target step is set to 50 steps (almost fully opened).
(2) PMON is equal to the intake manifold pressure in 1 second after EGR target step is set 50 steps (when enable conditions are completed), and EGR target step is set to 0 step.
(3) PMOF2 is equal to the intake manifold pressure in 1 second after EGR target step is set to 0 step (in 2 seconds after enable conditions are completed).
4) Calculate the judged value using the following formula.
Judged value = [PMON − (PMOF1 + PMOF2)/2]
Judged value $<$ 2.48 kPa (18.63 mmHg, 0.733 inHg) $\rightarrow$ NG
Judged value $\geq$ 2.48 kPa (18.63 mmHg, 0.733 inHg) $\rightarrow$ OK
Time Needed for Diagnosis: Once

Malfunction Indicator Light Illumination: Illuminates when malfunction occurs in 2 continuous driving cycles.

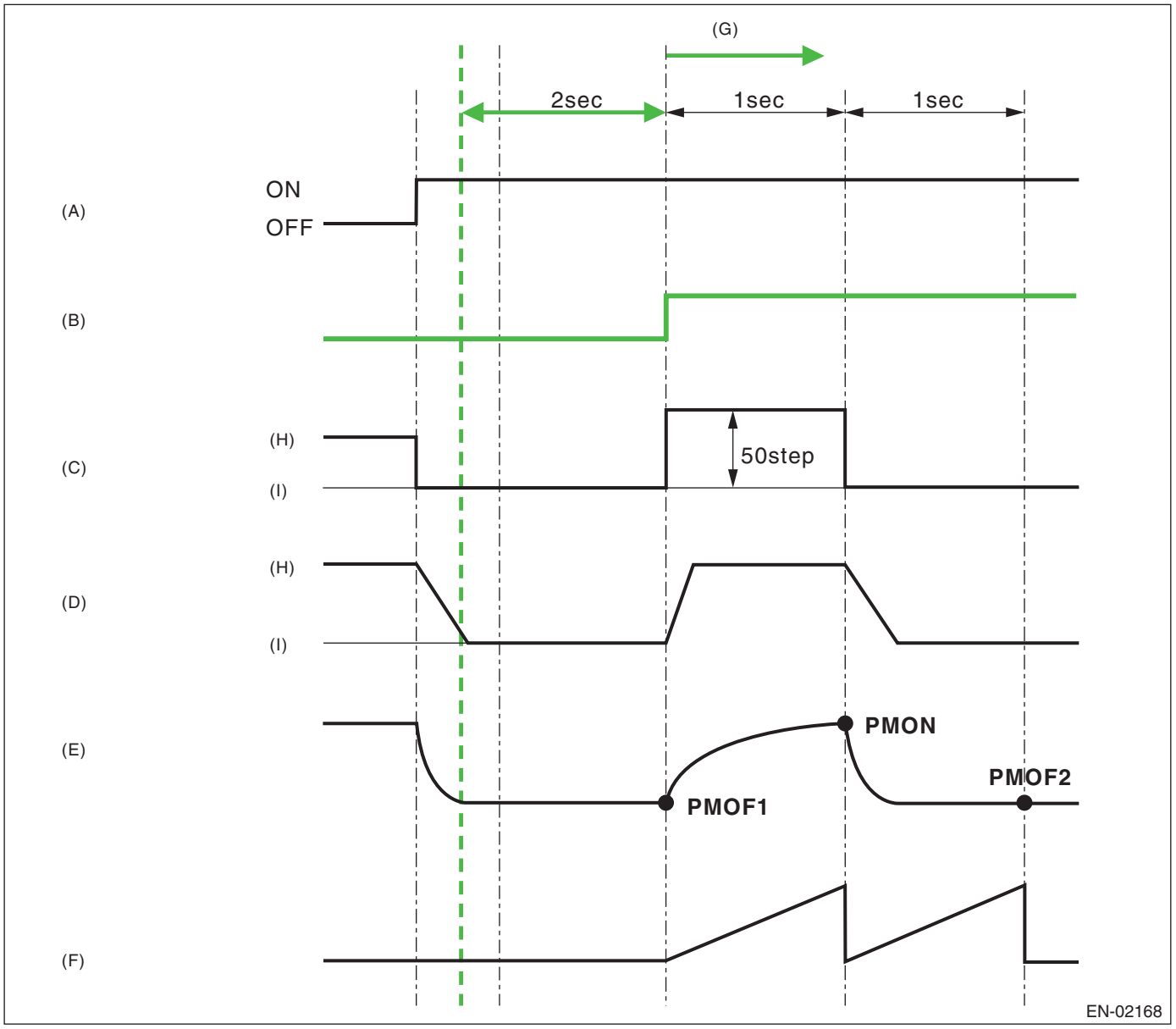

(A) Fuel shut-off in deceleration
(B) Diagnosis enable condition
(C) EGR target step
(D) EGR actual step
(E) Intake manifold pressure (At normal condition)
(F) Diagnosis mode timer
(G) Diagnosis starts.
(H) Open
(I) Close

6. DTC CLEAR CONDITION

- When the OK idling cycle was completed 40 times in a row
- When “Clear Memory” was performed

7. MALFUNCTION INDICATOR LIGHT CLEAR CONDITION

- When the OK driving cycle was completed 3 times in a row
- When “Clear Memory” was performed

8. FAIL SAFE

A/F main learning: Not allowed
Knock learning: Not allowed
EGR control: Not allowed to operate

9. ECM OPERATION AT DTC SETTING

- Memorize the freeze frame data. (For test mode $02)
- Memorize the diagnosis value and trouble standard value. (For test mode $06)

BM:DTC P0420 CATALYST SYSTEM EFFICIENCY BELOW THRESHOLD (BANK 1)

1. OUTLINE OF DIAGNOSIS

Detect the deterioration of catalyst function.
Though the front oxygen sensor output would change slowly with a new catalyst, the sensor output with a deteriorated catalyst becomes high and the inversion time is shortened. For this reason, the catalyst diagnosis is carried out by monitoring the front oxygen sensor output and comparing it with the front A/F sensor output.

2. COMPONENT DESCRIPTION

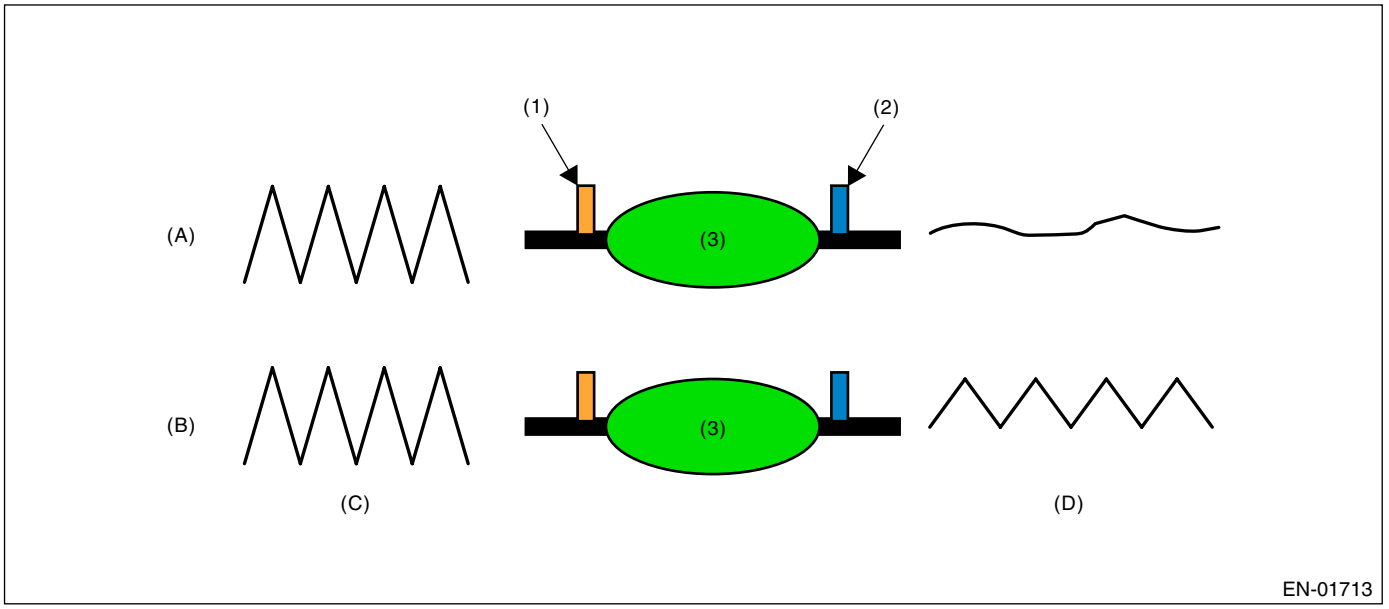

(1) Front oxygen (A/F) sensor
(2) Front oxygen sensor
(3) Catalyst
(A) Normal
(B) Deterioration
(C) Front oxygen (A/F) sensor waveform
(D) Front oxygen sensor waveform

3. ENABLE CONDITION

Secondary Parameters	Enable Conditions
Battery voltage	> 10.9 V
Atmospheric pressure	> 75.1 kPa (563 mmHg, 22.2 inHg)
Engine coolant temperature	≥ 70°C (158°F)
Catalyst warm-up counter on Map 2	≥ 8000
Misfire detection during 200 engine revs.	< 5 times
Learning value of evaporation gas density	≤ 0.20
Sub feedback	Operating
Evaporative system diagnostic	Not in operation
Difference between actual and target time lambda < 0.10	1000 milliseconds or more
Vehicle speed	> 70 km/h (43.5 MPH)
Amount of intake air	10 ←→ 40 g (0.35 ←→ 1.41 oz)/s
Engine load change every 0.5 engine revs.	< 0.02 g/rev
Rear O2 output change from below 660 mV to over	Experienced after fuel cut
After engine starting	≥ 210 seconds
Purge execution cumulative time	5 seconds or more

• Map 2

Add the following value every 512 milliseconds.

Amount of intake air (g (oz)/s)	0 (0)	3.2 (0.113)	6.4 (0.226)	9.6 (0.339)	12.8 (0.451)	16 (0.564)	19.2 (0.677)	22.4 (0.790)	25.6 (0.903)	28.8 (1.016)	32 (1.129)	35.2 (1.242)
Integrated value for warm-up counter	−8	−8	20	32	52	82	113	143	173	204	234	264

4. GENERAL DRIVING CYCLE

Perform the diagnosis once at the constant vehicle speed 70 km/h (43 MPH).

5. DIAGNOSTIC METHOD

After the malfunction criteria are completed, calculate cumulative value of front oxygen (A/F) sensor lambda deviation (Σ |(sglmd$_n$ − sglmd$_{n-1}$)|) every 128 milliseconds and cumulative value of rear oxygen sensor output voltage deviation (Σ |(ro2sad$_n$ − ro2sad$_{n-1}$)|).
Calculate the diagnosis value when the front oxygen (A/F) sensor output fluctuation value more than specified value.
Judge NG when the malfunction criteria below are completed, and judge OK when they are not completed.
Judgment Value

Malfunction Criteria	Threshold Value
Σ |(ro2sad$_n$ − ro2sad$_{n-1}$)| / Σ |(sglmd$_n$ − sglmd$_{n-1}$)|	> 11.16

Time Needed for Diagnosis: 30 — 55 seconds
Malfunction Indicator Light Illumination: Illuminates when malfunction occurs in 2 continuous driving cycles.

6. DTC CLEAR CONDITION

- When the OK idling cycle was completed 40 times in a row
- When “Clear Memory” was performed

7. MALFUNCTION INDICATOR LIGHT CLEAR CONDITION

- When the OK driving cycle was completed 3 times in a row
- When “Clear Memory” was performed

8. FAIL SAFE

None

9. ECM OPERATION AT DTC SETTING

- Memorize the freeze frame data. (For test mode $02)
- Memorize the diagnostic value and trouble standard value. (For test mode $06)

BN:DTC P0442 EVAPORATIVE EMISSION CONTROL SYSTEM LEAK DETECTED (SMALL LEAK)

1. OUTLINE OF DIAGNOSIS

Perform the diagnosis of leakage of fuels system and valve functions.

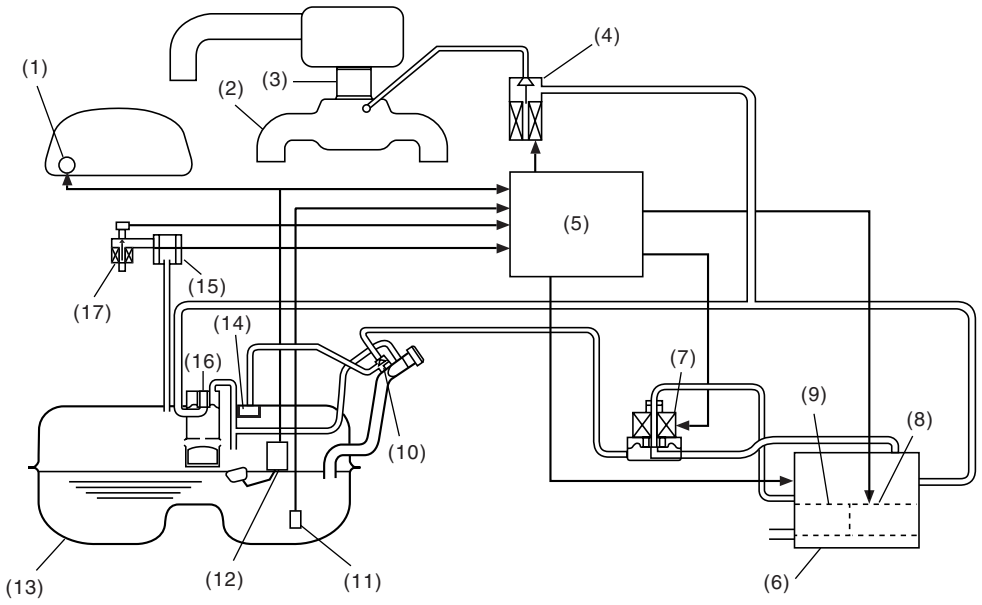

EN-03093

(1)	Fuel meter	(7)	Pressure control solenoid valve	(13)	Fuel tank
(2)	Intake manifold	(8)	Drain valve	(14)	Fuel cut valve
(3)	Throttle body	(9)	Drain filter	(15)	Fuel tank pressure sensor
(4)	Purge control solenoid valve	(10)	Shut-off valve	(16)	Vent valve
(5)	Engine control module (ECM)	(11)	Fuel temperature sensor	(17)	Fuel tank sensor control valve
(6)	Canister	(12)	Fuel level sensor		

In this system diagnosis, checking for leakage and valve operation is conducted by changing the fuel tank pressure, and monitoring the pressure change using the fuel tank pressure sensor. 0.04-inch diagnosis is performed in the order of mode Z, mode A, mode B, mode C and mode D, and 0.02-inch diagnosis is performed in the order of mode A, mode B, mode C, mode D and mode E.

• 0.04-inch Diagnosis

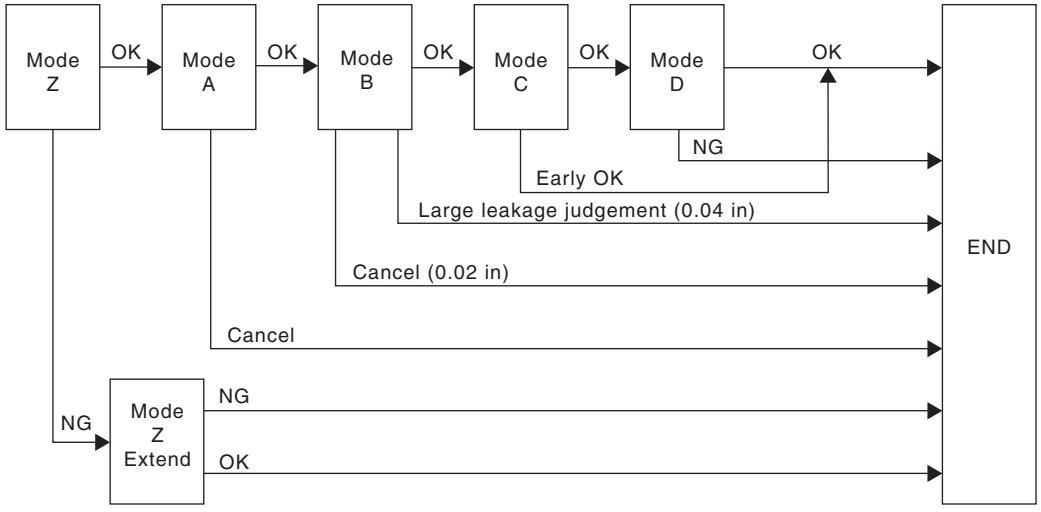

EN-02193

Mode	Mode Description	Diagnosis Period
Mode Z (CPC open fail diagnosis)	Perform the diagnosis of CPC open fail depending on the amount of the tank pressure change after the diagnosis has started.	3 — 16 seconds
Mode A (Estimated evaporation amount)	Calculate the tank pressure change amount (P1).	10 seconds
Mode B (Sealed negative pressure, large leakage judgment)	Introduce the intake manifold pressure to the fuel tank and reduce the tank pressure to the desired value. If the tank pressure cannot be reduced, it is diagnosed as large leak.	5 — 25 seconds
Mode C (Pressure increase check advanced OK judgment)	Wait until the tank pressure becomes the desired value (detection starting pressure of P2). If the tank pressure does not become the value, make advanced OK judgment.	1 — 15 seconds
Mode D (Negative pressure variation measurement evaporation leakage diagnosis)	Calculate the tank pressure variation (P2), and obtain the diagnostic value using P1 of Mode A. Perform the evaporation leakage diagnosis using the diagnostic value.	10 seconds

• 0.02-inch Diagnosis

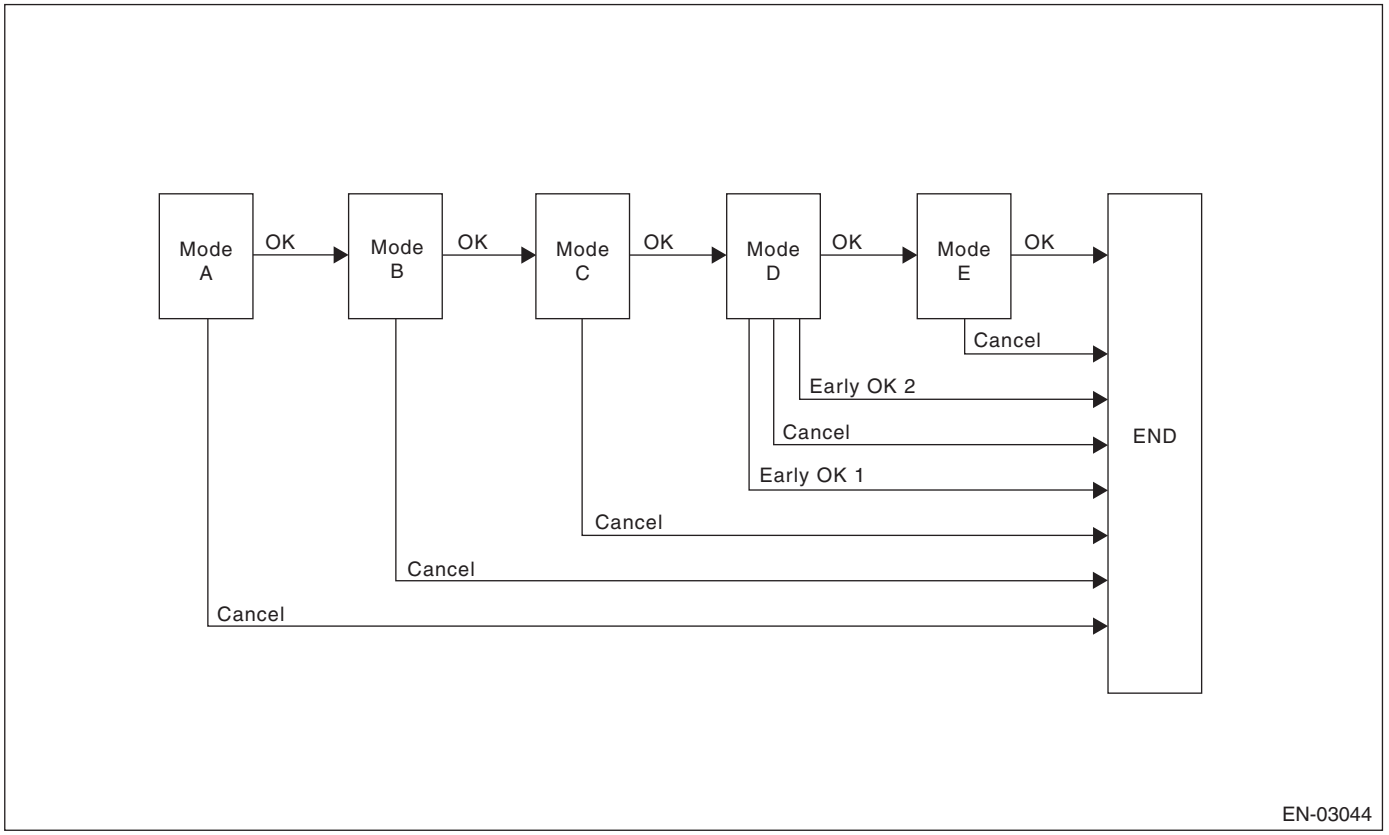

Mode	Mode Description	Diagnosis Period
Mode A (0 point correction)	Wait until the tank pressure returns to 0 point 0 kPa (0 mmHg, 0 inHg) when tank pressure is high.	0 — 12 seconds
Mode B (Introduce negative pressure)	Introduce the intake manifold pressure to the fuel tank and reduce the tank pressure to the desired value.	0 — 27 seconds
Mode C (Hold negative pressure)	Wait until the tank pressure returns to the start pressure of P2 calculation.	0 — 20 seconds
Mode D (Negative pressure variation calculation)	Calculate the time until the tank pressure becomes the end pressure of P2 calculation. Make advanced OK judgment when the tank pressure does not become the end pressure of P2 calculation.	0 — 200 seconds
Mode E (Evaporative gas amount calculation)	Calculate the amount of evaporative gas yield (P1).	0 — 280 seconds

• Mode Table for Evaporative Emission Control System Diagnosis

Mode	Behavior of tank pressure under normal conditions	Diagnostic item	DTC
Mode Z	Nearly same as atmospheric pressure (equivalent pressure of 0 kPa (0 mmHg, 0 inHg))	CPC is judged to be stuck open.	P0457
Mode A	Pressure is in proportion to amount of evaporative emission.		
Mode B	Negative pressure is formed due to intake manifold negative pressure	Large leakage	P0457
Mode C	Target pressure is reached.		None
Mode D	Pressure change is small.	EVAP system is judged to have large leak [1.0 mm (0.04 in)].	P0442

2. COMPONENT DESCRIPTION

• Pressure Control Solenoid Valve

PCV controls the fuel tank pressure to be equal to the atmospheric air pressure.
Normally, the solenoid is set to OFF. And the valve opens and closes mechanically in accordance with the pressure difference between tank and atmospheric air, or tank and canister.
During the diagnosis, the valve is forcibly opened by setting the solenoid to ON.

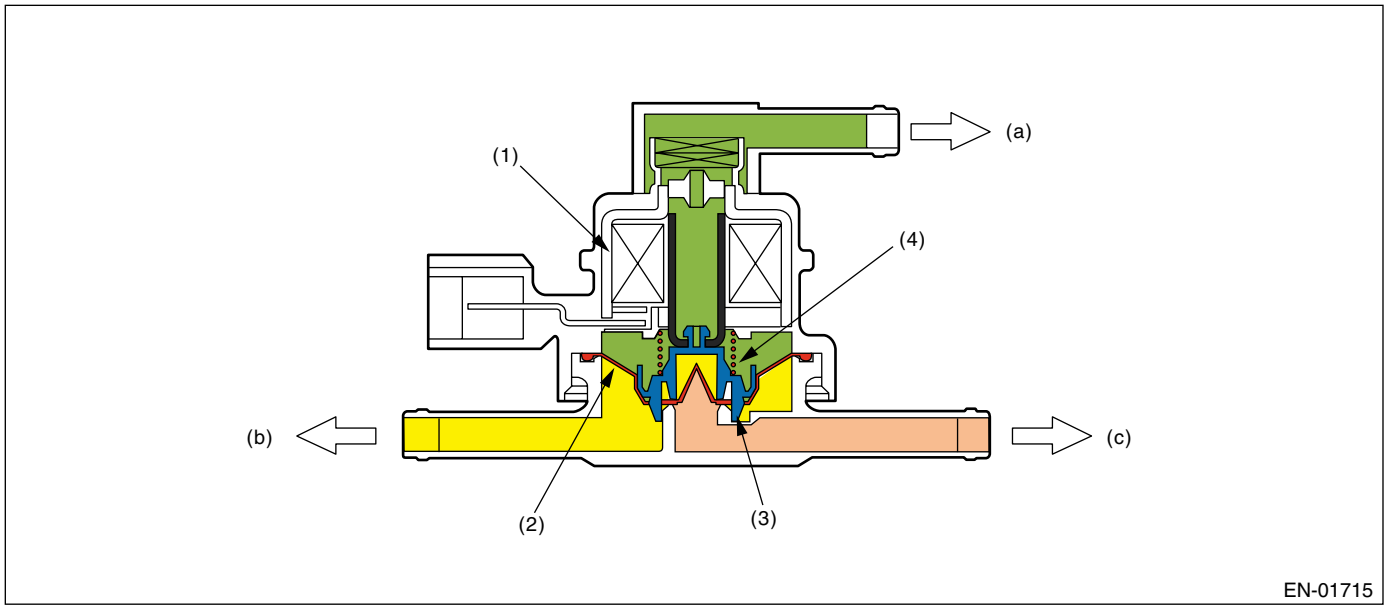

(1) Solenoid
(2) Diaphragm
(3) Valve
(4) Spring
(a) Atmospheric pressure
(b) Fuel tank
(c) Canister

• Valve Operation and Air Flow

In the figure below, divided by the diaphragm, the part above X is charged with atmospheric air pressure, and the part below X is charged with tank pressure. Also, the part above Y is charged with tank pressure, and the part below Y is charged with canister pressure.

If the atmospheric air pressure port is A, tank pressure port is B, and canister pressure port is C, the air flows according to pressure difference from each port as shown in the table below.

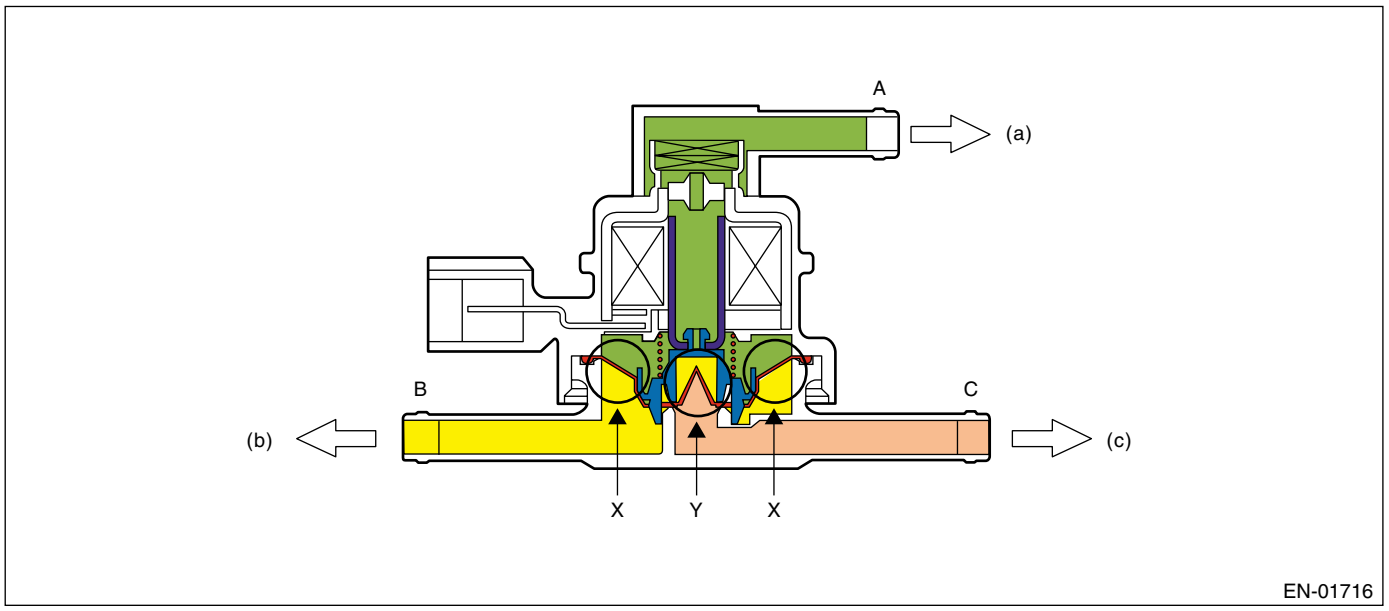

(a) Atmospheric pressure (b) Fuel tank (c) Canister

Condition of pressure	Flow
A < B (solenoid OFF)	B → C
B < C (solenoid OFF)	C → B
Solenoid ON	B ←→ C

• When A < B (Solenoid OFF)

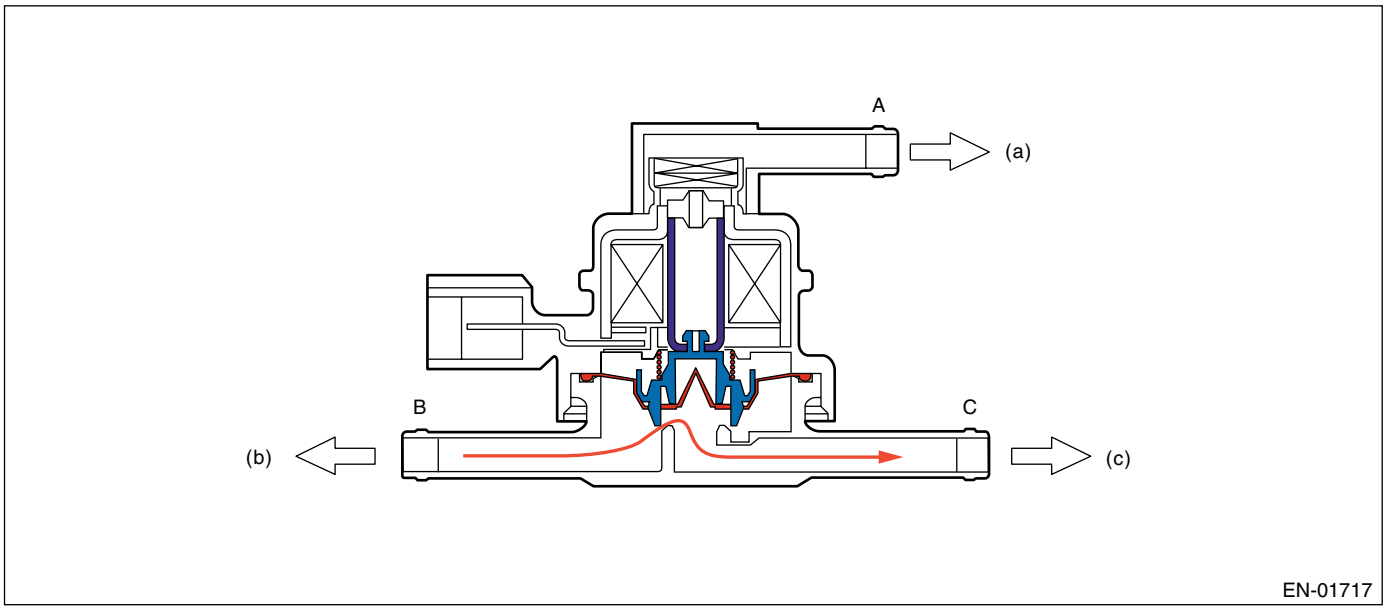

(a) Atmospheric pressure (b) Fuel tank (c) Canister

• When B < C (Solenoid OFF)

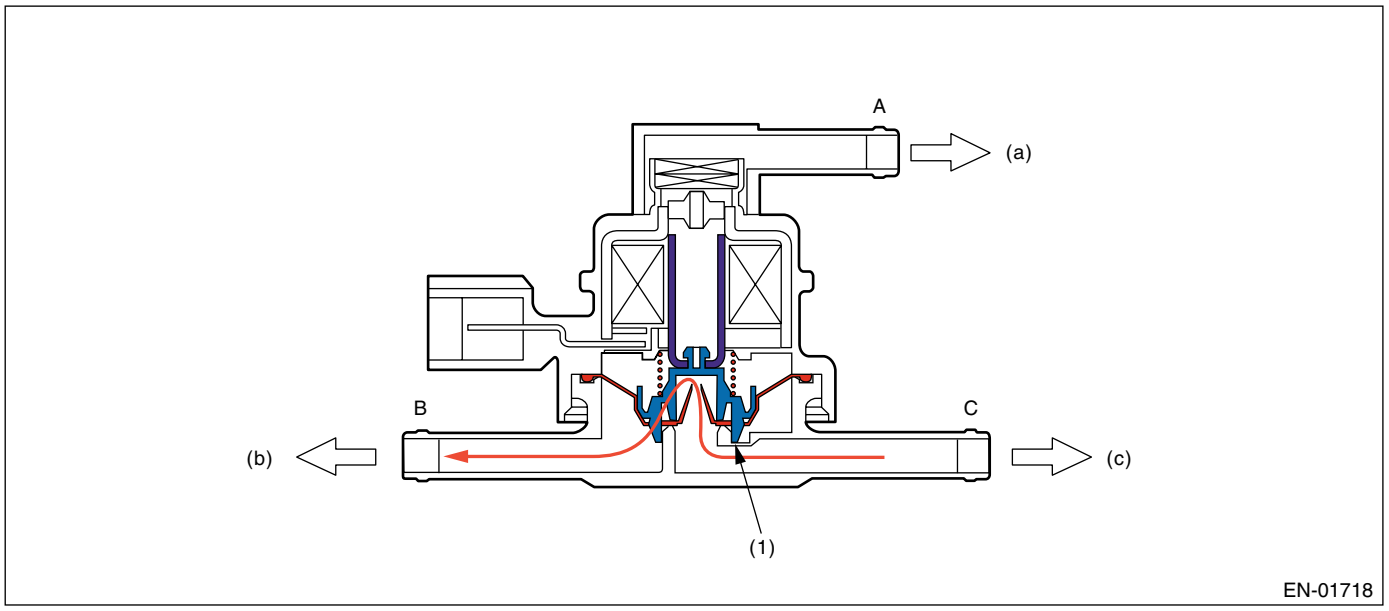

(1) Valve

(a) Atmospheric pressure
(b) Fuel tank
(c) Canister

• When Solenoid is ON

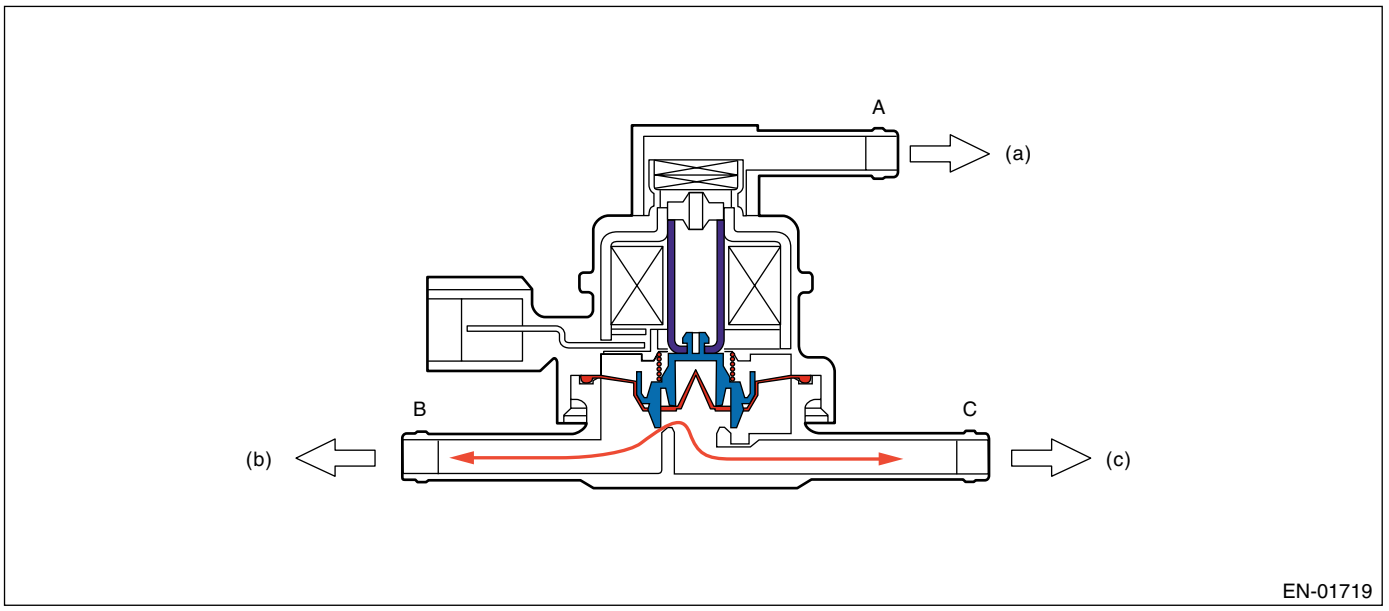

(a) Atmospheric pressure

(b) Fuel tank

(c) Canister

• Drain Valve

Drain valve controls the ambient air to be introduced to the canister.

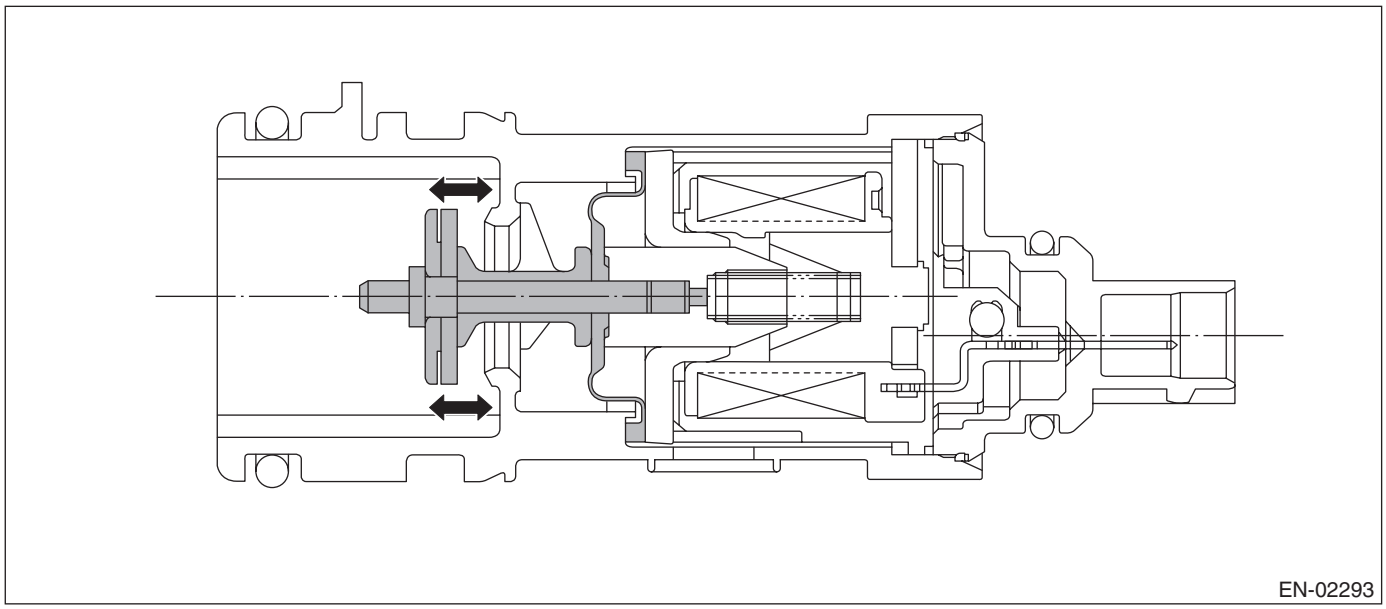

• Fuel Tank Sensor Control Valve

One of the fuel tank sensor control valve is connected to fuel tank pressure sensor and the other is released to atmosphere. The passage to fuel tank pressure sensor is usually released to atmosphere because the so-

lenoid is set to OFF, but the solenoid is set to ON at diagnosis and the passage open to atmosphere can be closed.

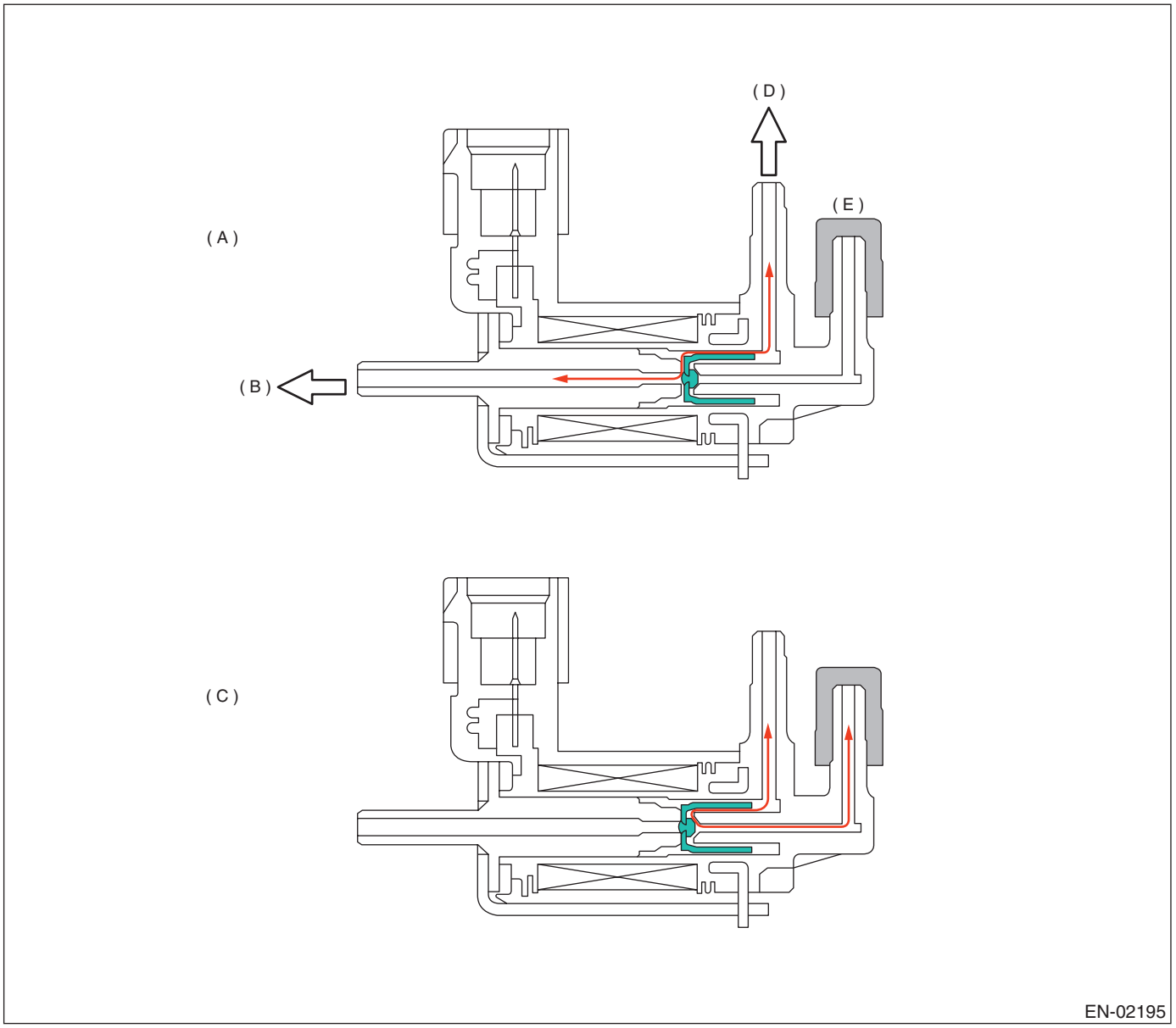

(A) Released to atmosphere (Solenoid OFF)
(B) Ambient air
(C) During diagnostics (Solenoid ON)
(D) To pressure sensor
(E) Plug

• Purpose of this solenoid

Fuel tank pressure sensor detects the difference between the atmospheric air pressure and the tank pressure and the ECM monitors the pressure difference.

Even if the tank pressure is constant, the atmospheric air pressure varies depending on the vehicle altitude, and the pressure signal transmitted to ECM will change.

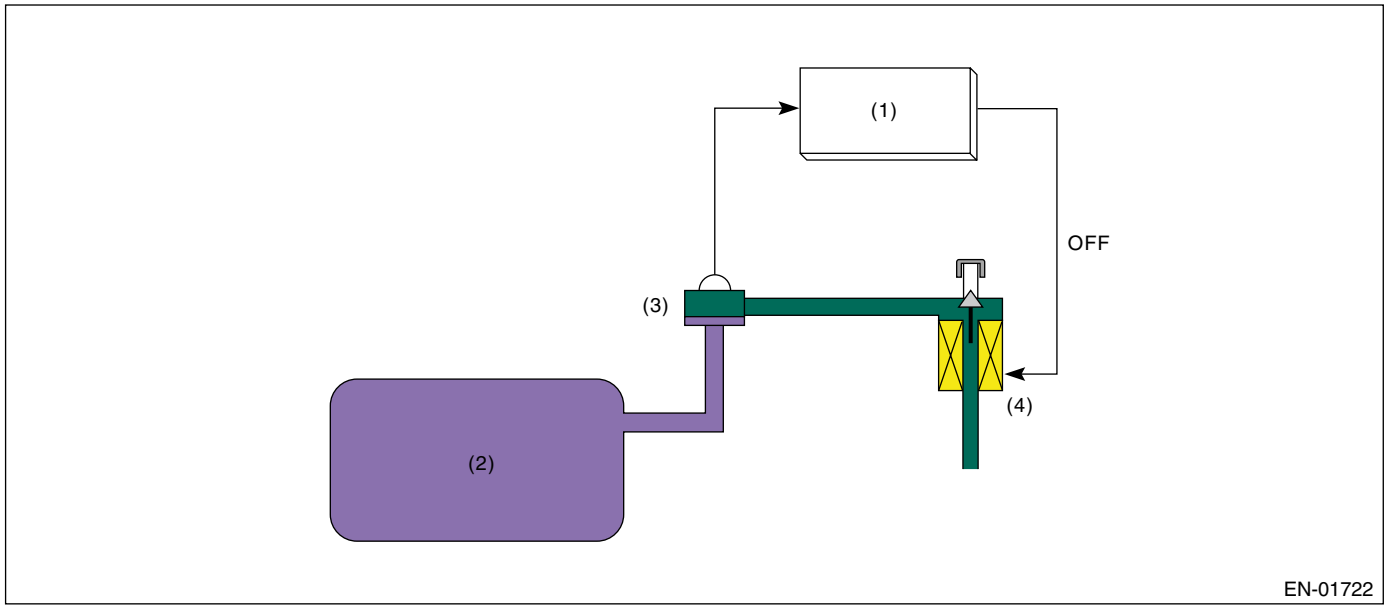

(1) Engine control module (ECM)
(2) Fuel tank
(3) Fuel tank pressure sensor
(4) Atmospheric pressure switching solenoid

Especially, in the small leakage [0.5 mm (0.02 in)], minute change in the tank pressure has to be detected. This diagnosis period is long (approx. 29 seconds). And the vehicle altitude change during the diagnosis will lead the atmospheric air pressure change. In this case, it becomes difficult to precisely detect the tank pressure variation, resulting erroneous diagnosis. Therefore, using the fuel tank sensor control valve, atmospheric air is sealed between the fuel tank pressure sensor and fuel tank sensor control valve, maintaining the air pressure constant and enabling the detection of minute variation of tank pressure.

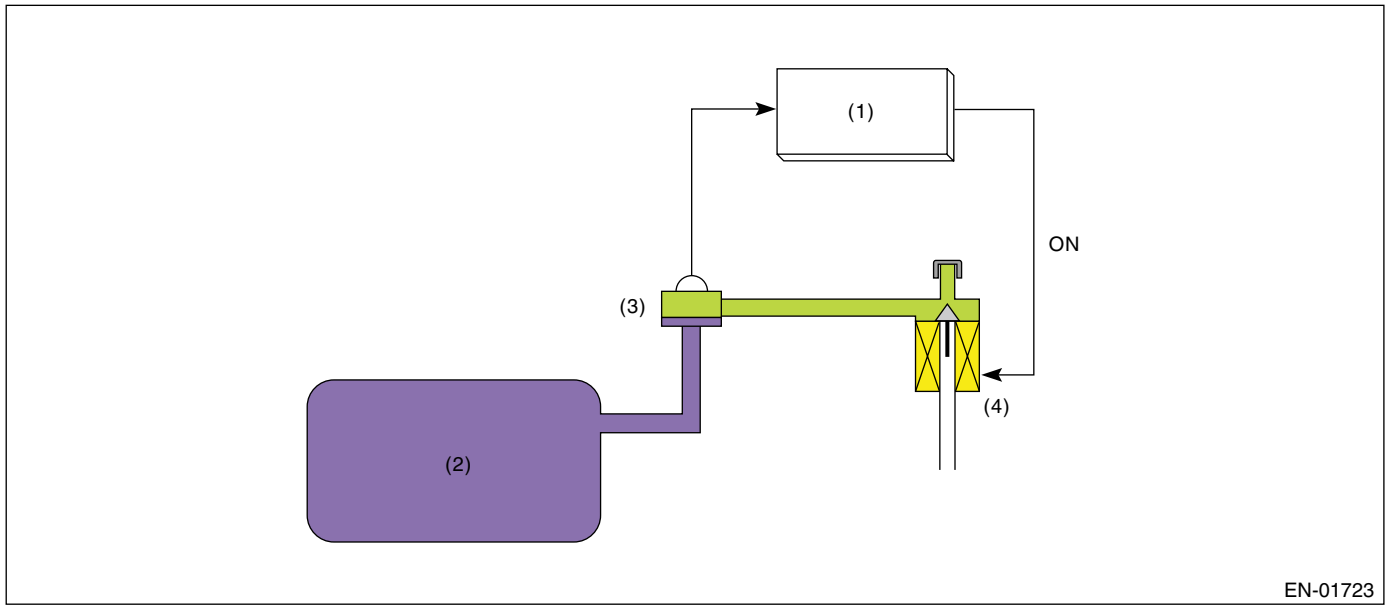

(1) Engine control module (ECM)
(2) Fuel tank
(3) Fuel tank pressure sensor
(4) Fuel tank sensor control valve

NOTE:
ECM also has the atmospheric air pressure sensor, and always monitors atmospheric air. However, as the monitoring range is large, that is, 53 to 107 kPa (400 to 800 mmHg, 16 to 32 inHg) it is not suitable for detection of minute pressure variation.
In the case of small leakage diagnosis, the tank pressure variation is very small, that is, 0.13 to 0.27 kPa (1 to 2 mmHg, 0.04 to 0.08 inHg) and the fuel tank pressure sensor is equipped.

3. ENABLE CONDITION

0.04-inch Diagnosis

Secondary Parameters	Enable Conditions
Battery voltage	≥ 10.9 V
Barometric pressure	≥ 75.1 kPa (563 mmHg, 22.2 inHg)
Accumulated time of canister purge	120 seconds or more
After engine starting	856 seconds or more
Learning value of evaporation gas density	≤ 0.08
Engine speed	1050 ←→ 6000 rpm
Fuel tank pressure	≥ –4.00 kPa (–30 mmHg, –1.18 inHg)
Intake manifold vacuum (relative pressure)	< –26.7 kPa (–200 mmHg, –7.87 inHg)
Vehicle speed	≥ 32 km/h (20 MPH)
Fuel level	9.6 ←→ 54.4 ℓ (2.54 ←→ 14.37 US gal, 2.11 ←→ 11.97 Imp gal)
Closed air/fuel ratio control	In operation
Fuel temperature	–10 ←→ 45°C (14 ←→ 113°F)
Intake air temperature	≥ –10°C (14°F)
Pressure change per second	< 0.13 kPa (0.95 mmHg, 0.04 inHg)
Min. pressure change per second – Max. pressure change per second	< 0.23 kPa (1.7 mmHg, 0.023 inHg)
Fuel level change	< 3.0 ℓ (2.1 US qt, 1.8 Imp gal)/128 milliseconds
Air fuel ratio	0.76 — 1.25

0.02-inch Diagnosis

Secondary Parameters	Enable Conditions
(At starting a diagnosis)	
Evap. diagnosis	Not finished
Battery voltage	≥ 10.9 V
Atmospheric pressure	≥ 75.1 kPa (563 mmHg, 22.2 inHg)
Since last incomplete diagnosis event of 0.02-inch leakage	> 600 seconds
Accumulated time of canister purge	≥ 120 seconds
After engine starting	770 second or more
Fuel temperature	−10 ←→ 55°C (14 ←→ 131°F)
Or engine coolant temperature at engine start	〈 40°C (104°F)
And time after engine start	〈 2400 seconds
Fuel level	9.6 ←→ 54.4 ℓ (2.54 ←→ 14.37 US gal, 2.11 ←→ 12.00 Imp gal)
Intake manifold vacuum (relative pressure)	〈 −8.0 kPa (−60 mmHg, −2.36 inHg)
Fuel tank pressure	−0.43 — 1.43 kPa (−3.2 — 10.7 mmHg, −0.13 — 0.42 inHg)
Vehicle speed	≥ 68 km/h (42 MPH)
Closed air/fuel ratio control	In operation
Engine speed	550 ←→ 6000 rpm
(During diagnosis)	
Fuel level change	≤ 5 ℓ (1.3 US qt, 1.1 Imp qt)
Pressure change per second	〈 0.06 kPa (0.44 mmHg, 0.02 inHg)
Min. tank pressure change per second − Max. tank pressure change per second	〈 0.07 kPa (0.51 mmHg, 0.02 inHg)
|Tank pressure change per second|	≤ 0.1 kPa (0.75 mmHg, 0.03 inHg)
Pressure change (Mode D)	−0.47 ←→ 0.32 kPa (−3.5 ←→ 2.4 mmHg, −0.14 ←→ 0.09 inHg)
Pressure change (Mode E)	−0.32 ←→ 0.32 kPa (−2.4 ←→ 2.4 mmHg, −0.09 ←→ 0.09 inHg)

4. GENERAL DRIVING CYCLE

• 0.04-inch Diagnosis

• Perform the diagnosis only once in more than 856 seconds after the engine start at the constant driving speed of 32 km/h (20 MPH) or more.
• Pay attention to the fuel temperature and fuel level.

• 0.02-inch Diagnosis

• Perform diagnosis in more than 770 seconds after engine start at the constant speed of 68 km/h (42 MPH) or more, and judged OK or NG.
• If not judged OK or NG, repeat the diagnosis.
• Pay attention to the fuel temperature and fuel level.

5. DIAGNOSTIC METHOD

• MODE Z (Purge control solenoid valve open malfunction diagnosis, CPC close malfunction diagnosis)

DTC P0457

• Purpose of Mode Z

When performing the leakage diagnosis of EVAP system, CPC has to operate normally. Therefore, mode Z is used to diagnose the CPC open fixation.
If the CPC open fixation trouble is detected, the EVAP system leakage diagnosis is cancelled.

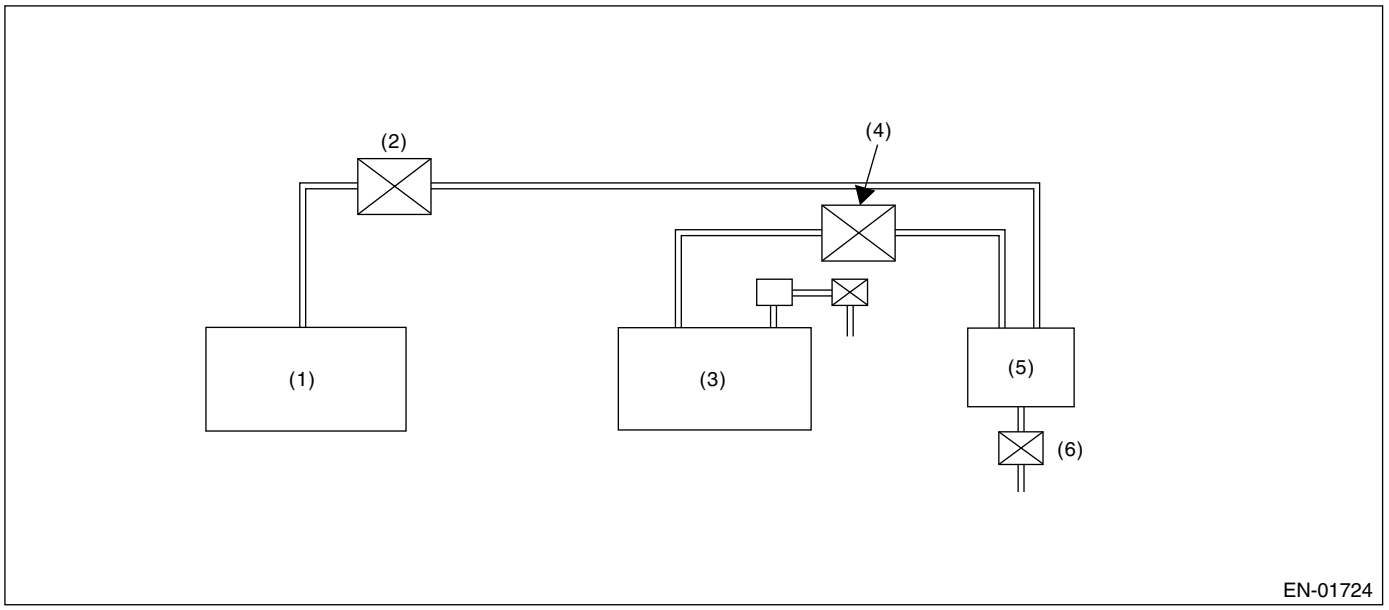

(1) Engine
(2) Purge control solenoid valve open
(3) Fuel tank
(4) Pressure control solenoid valve close
(5) Canister
(6) Drain valve stuck close

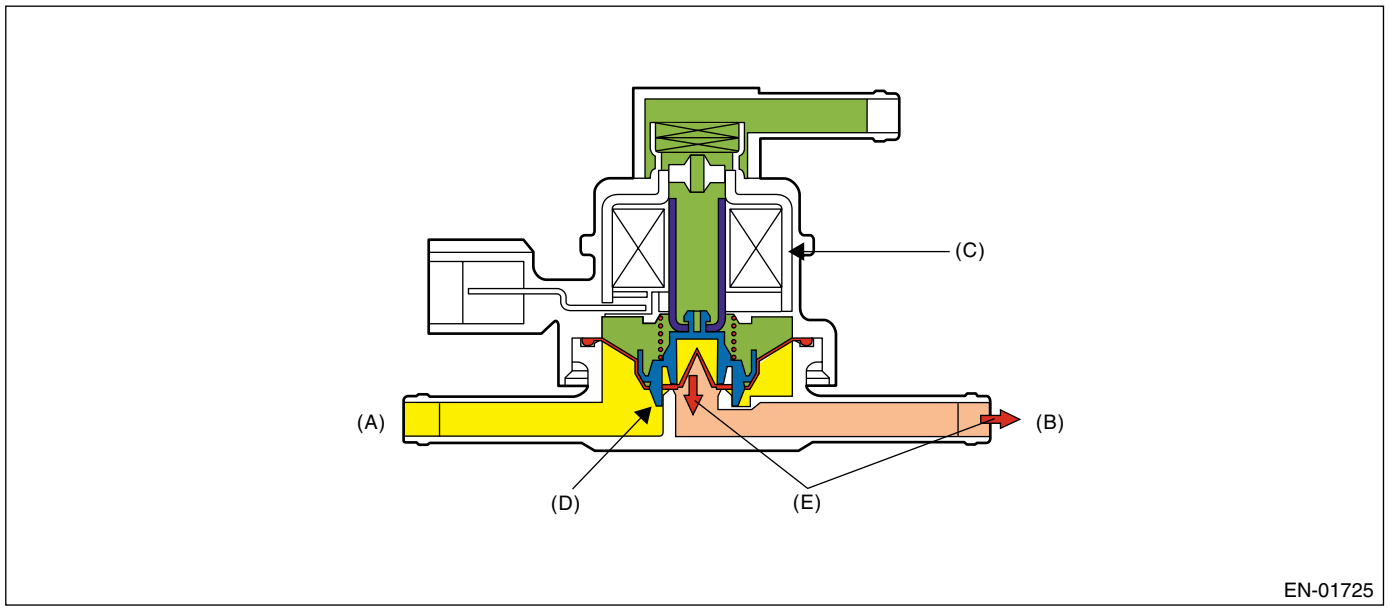

(A) To fuel tank
(B) To canister (Negative pressure)
(C) Solenoid ON
(D) Valve cannot be open.
(E) Negative pressure

• Diagnostic method

CPC open fixation diagnosis are performed in mode Z as shown in the figure below.

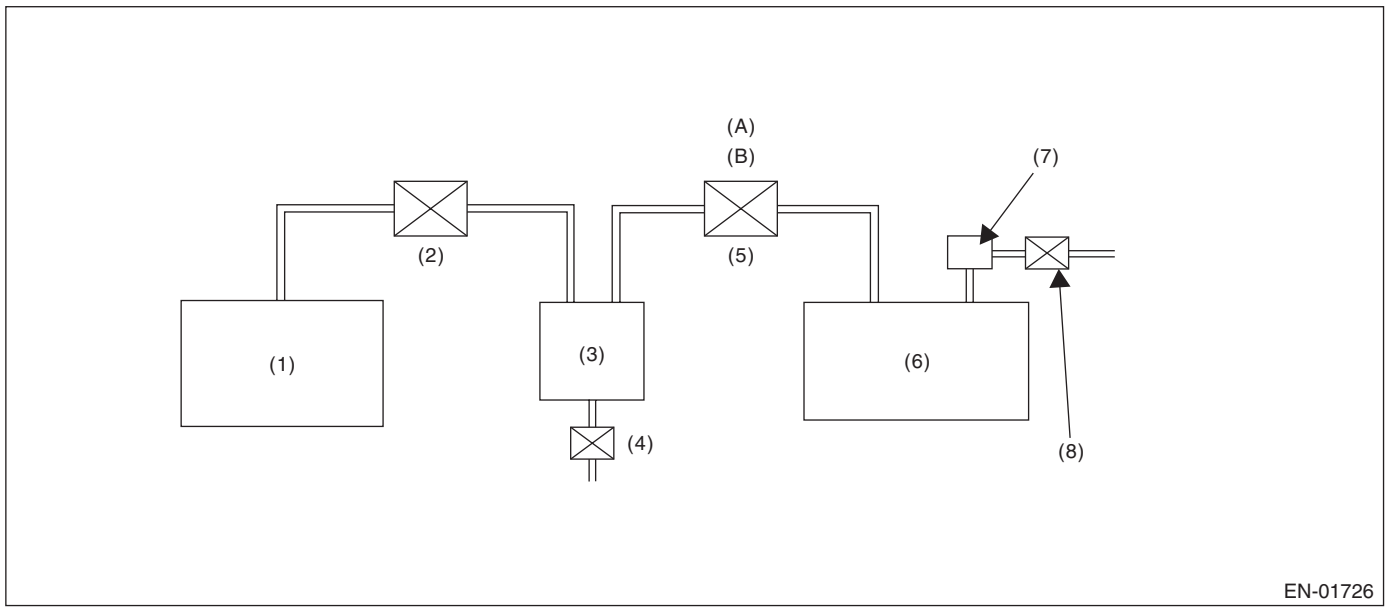

(1) Engine
(2) Purge control solenoid valve
(3) Canister
(4) Drain valve
(5) Pressure control solenoid valve
(6) Fuel tank
(7) Fuel tank pressure sensor
(8) Fuel tank sensor control valve

(A) Normal condition: mechanical control
(B) During diagnosis: electronic control

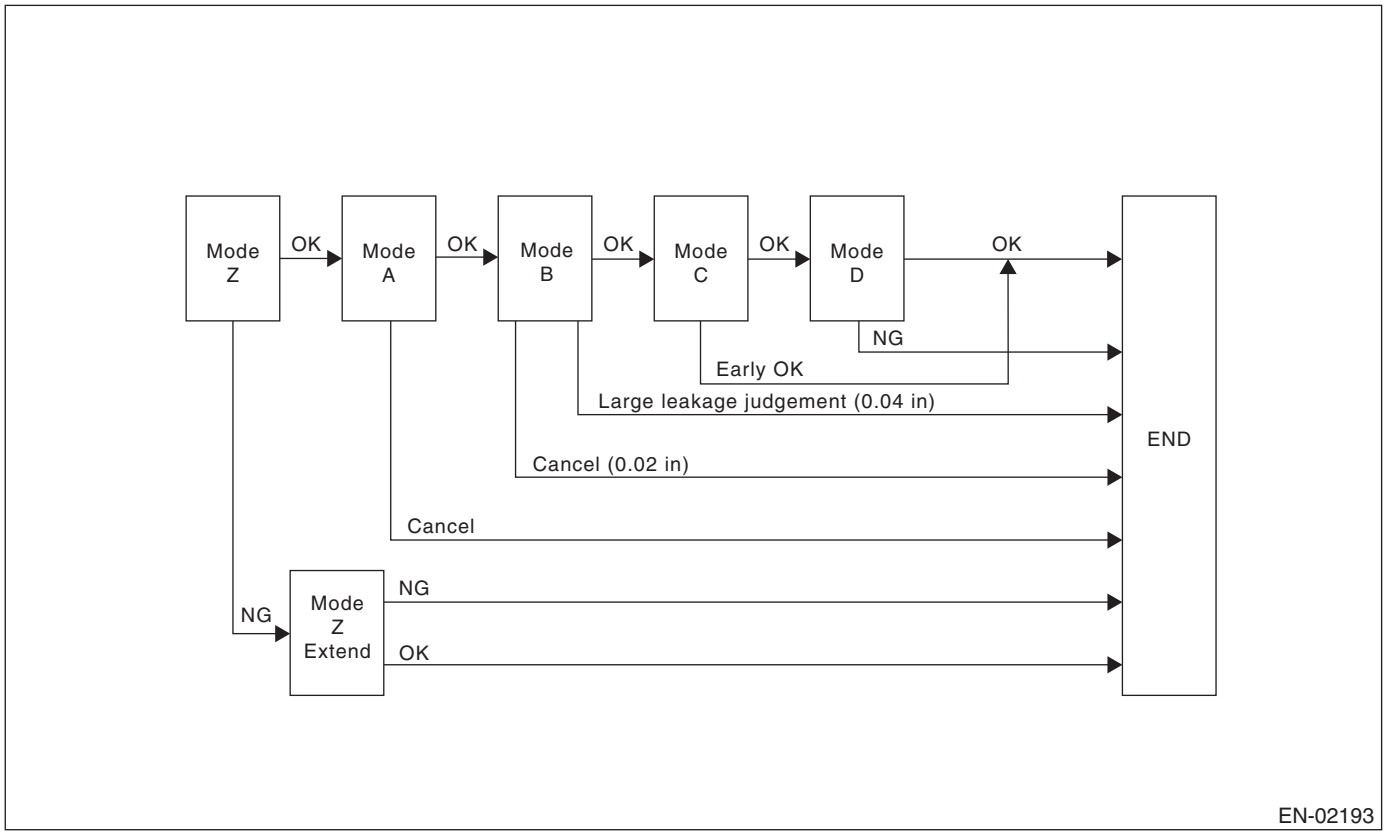

• Diagnosing function of CPC [P0457]

CPC functional diagnosis is performed by monitoring the tank pressure in Mode Z.

Normality Judgment

Make OK judgment in 3 seconds after Mode Z started, and change to Mode A if OK.

Judgment Value

Malfunction Criteria	Threshold Value	DTC
(Tank pressure when Mode Z started) — (Tank pressure when Mode Z finished)	≤ 0.4 kPa (3 mmHg, 0.12 inHg)	P0457

• Normal Operation

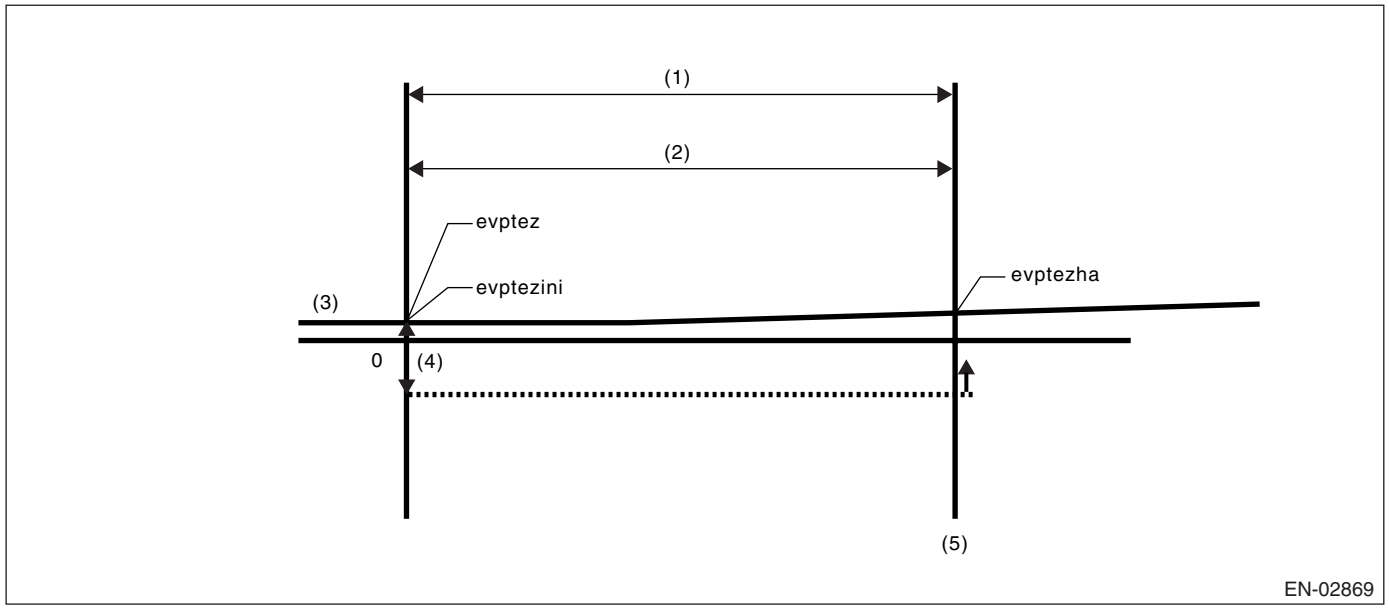

(1) Mode Z
(2) 3 seconds
(3) Fuel tank pressure
(4) 0.4 kPa (3.0 mmHg, 0.12 inHg)
(5) OK judgment

- evptez − evptezha ≤ 0.4 kPa (3.0 mmHg, 0.12 inHg)
- evptezini − evptezha ≤ 0.4 kPa (3.0 mmHg, 0.12 inHg)

Judge normal when both calculation is completed.

Abnormality Judgment

If OK judgment cannot be made, extend Mode Z 16 seconds more, and judge NG when all the criteria below are completed in 16 seconds.

Judgment Value

Malfunction Criteria	Threshold Value	DTC
(Tank pressure when Mode Z started) − (Tank pressure when Mode Z finished)	> 0.6 kPa (4.5 mmHg, 0.18 inHg)	P0457
Tank pressure when Mode Z started	≤ 1.43 kPa (10.7 mmHg, 0.42 inHg)	
Time for no fuel rolling of 2 ℓ or more	≥ 40 seconds	

Time Needed for Diagnosis: 16 seconds

Malfunction Indicator Light Illumination: Illuminates when malfunction occurs in 2 continuous driving cycles.

Finish the Evap. diagnosis when making NG judgment for purge control solenoid valve open fixation.

Cancel the Evap. diagnosis when the OK/NG judgment for drain valve close fixation and purge control solenoid valve open fixation cannot be made in Mode Z.

• Purge Control Solenoid Valve Open Fixation

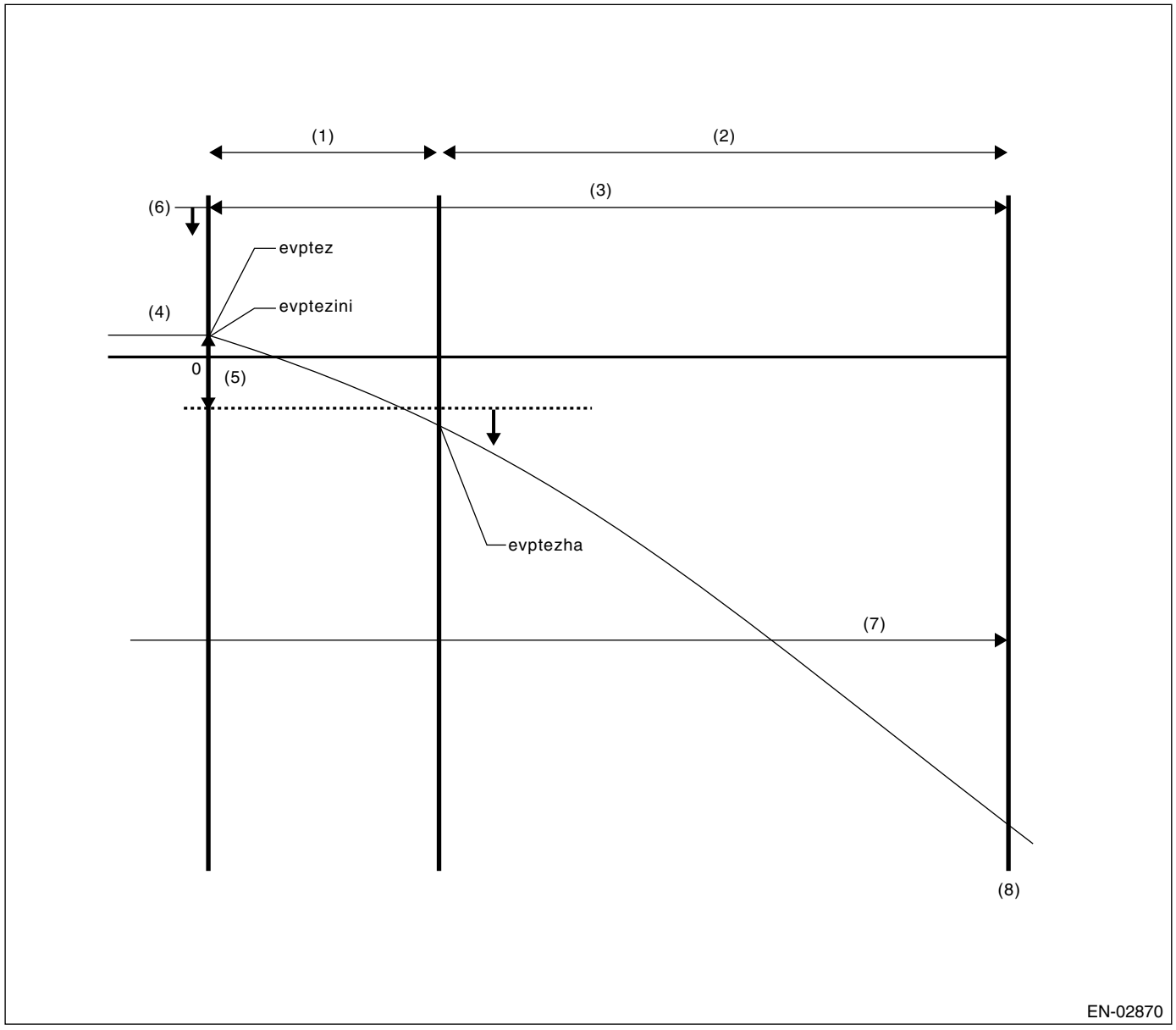

(1)	Mode Z	(4)	Fuel tank pressure	(7)	No fuel rolling for more than 40 seconds
(2)	Mode Z extension	(5)	0.87 kPa (6.5 mmHg, 0.26 inHg)		
(3)	16 seconds	(6)	1.43 kPa (10.7 mmHg, 0.42 inHg)	(8)	NG judgment

- evptezini, evptez ≤ 1.43 kPa (10.7 mmHg, 0.42 inHg)
- evptez − evptezha ≤ 0.87 kPa (6.5 mmHg, 0.26 inHg)
- evptezini − evptezha ≤ 0.87 kPa (6.5 mmHg, 0.26 inHg)
- No fuel rolling of above 2 ℓ (0.79 US gal, 0.67 Imp gal) for more than 40 seconds.

Judge normal when all calculations are completed.

• Leak Diagnosis

DTC P0442
DTC P0456
DTC P0457

• Diagnostic method

• The diagnostic method consists of creating a sealed vacuum in the fuel tank and then determining the presence of leakage from the speed at which the tank internal pressure returns to atmospheric pressure.

- The diagnosis is divided into the following five phases.

• 0.04 inch Diagnosis

Mode A: (Estimation of evaporation gas yield)
The amount of change of tank pressure (P1) in Mode A is calculated. After calculating P1, change to Mode B.
Mode B: (Seal negative pressure)
Introduce the negative pressure in the intake manifold to the tank.
Approx. 0 → −1.4 kPa (0 → −10.5 mmHg, 0 → −0.41 inHg)
When the pressure above (desired negative pressure) is reached, Mode C is entered.
In this case, if the tank pressure does not become the desired negative pressure, judge that there is a large leakage in the system and judge as large leak (10 or 25 seconds).
Abnormality Judgment
Judge NG (large leak) when the criteria below are completed in the specified time.
Judgment Value

Malfunction Criteria	Threshold Value	DTC
Time before reaching desired negative pressure	≥ 25 seconds	P0457
Or time for Mode B	≥ 10 seconds	
(Min. value of tank pressure during Mode B) − (Tank pressure when Mode B started)	< −0.3 kPa (−2 mmHg, −0.08 inHg)	

Mode C: (Check increasing pressure)
Stop the introduction of negative pressure. (Wait until the tank pressure returns to the start level of P2 calculation.)
Change to Mode D when the tank pressure returns to the start level of P2 calculation.
Judge immediate OK and change to Mode E when it does not return in spite of spending the specified time.

Tank pressure when P2 calculation started	Time for immediate OK judgment
−1.3 kPa (−9.75 mmHg, −0.38 inHg)	15 seconds

Mode D: (Measurement of negative pressure changes)
Monitor the pressure variation in the tank in Mode Z. In this case, the tank pressure increases, that is, the pressure becomes as high as the atmospheric air pressure, because evaporator is generated. However, if any leakage exists, the pressure increases additionally in proportion to this leakage. The pressure variation of this tank is P2.
After calculating P2, perform following small leak diagnosis.

• After Mode D

Assigning P1 and P2, which are tank variations measured in Mode A and Mode B, to the formula below, judge the small leakage of the system. If the measured judgment value exceeds the threshold value, it is judged to be malfunction.
Judge NG when the criteria below are completed and judge OK when not completed.
Judgment Value

Malfunction Criteria	Threshold Value	DTC
P2 − 1.5 × P1 P2: Change of tank pressure within 10 seconds on Mode D P1: Change of tank pressure within 10 seconds on Mode A	> Value on Map 7. * Threshold value: Figure (Fuel level vs Tank temperature)	P0442

***1.5:** Compensation value of the amount of evaporator occurrence. (Because evaporator increases more when becoming negative pressure.)

Map 7 Limit of malfunction criteria for 0.04-inch leak as Evap. diagnosis.

Fuel temperature & Fuel level	25°C (77°F)	30°C (86°F)	35°C (95°F)	40°C (104°F)	45°C (113°F)
10 L (2.6 US gal, 2.2 Imp gal)	0.28 kPa (2.1 mmHg, 0.083 inHg)	0.29 kPa (2.2 mmHg, 0.087 inHg)	0.31 kPa (2.3 mmHg, 0.090 inHg)	0.31 kPa (2.35 mmHg, 0.092 inHg)	0.32 kPa (2.4 mmHg, 0.094 inHg)
20 L (5.3 US gal, 4.4 Imp gal)	0.28 kPa (2.1 mmHg, 0.083 inHg)	0.32 kPa (2.4 mmHg, 0.094 inHg)	0.33 kPa (2.5 mmHg, 0.098 inHg)	0.35 kPa (2.6 mmHg, 0.102 inHg)	0.36 kPa (2.7 mmHg, 0.106 inHg)
30 L (7.9 US gal, 6.6 Imp gal)	0.39 kPa (2.9 mmHg, 0.114 inHg)	0.41 kPa (3.05 mmHg, 0.120 inHg)	0.42 kPa (3.15 mmHg, 0.124 inHg)	0.43 kPa (3.25 mmHg, 0.128 inHg)	0.45 kPa (3.35 mmHg, 0.134 inHg)
40 L (10.6 US gal, 8.8 Imp gal)	0.39 kPa (2.9 mmHg, 0.114 inHg)	0.42 kPa (3.15 mmHg, 0.124 inHg)	0.44 kPa (3.3 mmHg, 0.130 inHg)	0.45 kPa (3.4 mmHg, 0.134 inHg)	0.47 kPa (3.5 mmHg, 0.138 inHg)
50 L (13.2 US gal, 11.0 Imp gal)	0.43 kPa (3.2 mmHg, 0.126 inHg)	0.44 kPa (3.3 mmHg, 0.130 inHg)	0.47 kPa (3.5 mmHg, 0.138 inHg)	0.48 kPa (3.6 mmHg, 0.142 inHg)	0.49 kPa (3.7 mmHg, 0.146 inHg)

Time Needed for Diagnosis: 30 — 100 seconds

• 0.02-inch Diagnosis

Mode A: (0 point correction)

Wait until the tank pressure returns to 0 point (0 kPa (0 mmHg, 0 inHg)) when the tank pressure is high. Change to Mode B when the tank pressure becomes 0. Cancel the diagnosis when the tank pressure does not return to 0 point in spite of spending the specified time.

Mode B: (Introduce negative pressure)

Introduce the intake manifold negative pressure to fuel tank.

About 0 → –2.0 kPa (0 mmHg → –15 mmHg, 0 → –0.59 inHg)

Change to Mode C when the tank pressure becomes the pressure (desired negative pressure) above. Cancel the diagnosis when the tank pressure does not become the value above.

Mode C: (Hold negative pressure)

Stop introducing the negative pressure and wait the tank pressure returns to the start level of P2 calculation. Change to Mode D when the tank pressure returns to the start level of P2 calculation or when spending the specified time.

Mode D: (Calculation of negative pressure variation)

Monitor the tank pressure on Mode D, and calculate the tank pressure variation (P2) and time until it returns to the end level of P2 (evpdset). When it returns, change to Mode E. Make advanced OK judgment or cancel depending on the P2 level, when it doesn't return in spite of spending the specified time.

Judge OK when the criteria below are completed.

Judgment Value

Malfunction Criteria	Threshold Value
Advanced OK judgment #1	
Mode D time	≥ 30 s
Tank pressure	≤ –1.8 kPa (–13.4 mmHg, –0.53 inHg)
Advanced OK judgment #2	
Mode D time	≥ 200 s
P2	≥ 0.9 — 1.3 kPa (7 — 9.6 mmHg, 0.28 — 0.38 inHg)

Mode E: (Calculation of evaporation gas yield)

Calculate the tank pressure variation P1 in time evpdset, judge NG/OK from P1 value. (Gray judgment possible)

Abnormal judgment

Judge NG when the criteria below are completed.

Judgment Value

Malfunction Criteria	Threshold Value
P1	〈 Map 7 value * Threshold value: map (fuel level vs evp-dset)

Map 7 Limit of malfunction criteria for 0.02-inch leak as Evap. diagnosis

Time evpdset & Fuel level	0 second	30 seconds	50 seconds	100 seconds	160 seconds	200 seconds
10 L (2.6 US gal, 2.2 Imp gal)	0 kPa (0 mmHg, 0 inHg)	0.07 kPa (0.5 mmHg, 0.020 inHg)	0.23 kPa (1.7 mmHg, 0.067 inHg)	0.36 kPa (2.7 mmHg, 0.106 inHg)	0.36 kPa (2.7 mmHg, 0.106 inHg)	0.36 kPa (2.7 mmHg, 0.106 inHg)
20 L (5.3 US gal, 4.4 Imp gal)	0 kPa (0 mmHg, 0 inHg)	0.07 kPa (0.5 mmHg, 0.020 inHg)	0.23 kPa (1.7 mmHg, 0.067 inHg)	0.36 kPa (2.7 mmHg, 0.106 inHg)	0.36 kPa (2.7 mmHg, 0.106 inHg)	0.36 kPa (2.7 mmHg, 0.106 inHg)
30 L (7.9 US gal, 6.6 Imp gal)	0 kPa (0 mmHg, 0 inHg)	0.07 kPa (0.5 mmHg, 0.020 inHg)	0.23 kPa (1.7 mmHg, 0.067 inHg)	0.36 kPa (2.7 mmHg, 0.106 inHg)	0.36 kPa (2.7 mmHg, 0.106 inHg)	0.36 kPa (2.7 mmHg, 0.106 inHg)
40 L (10.6 US gal, 8.8 Imp gal)	0 kPa (0 mmHg, 0 inHg)	0.07 kPa (0.5 mmHg, 0.020 inHg)	0.25 kPa (1.85 mmHg, 0.073 inHg)	0.33 kPa (2.5 mmHg, 0.098 inHg)	0.33 kPa (2.5 mmHg, 0.098 inHg)	0.33 kPa (2.5 mmHg, 0.098 inHg)
50 L (13.2 US gal, 11.0 Imp gal)	0 kPa (0 mmHg, 0 inHg)	0.07 kPa (0.5 mmHg, 0.020 inHg)	0.27 kPa (2.0 mmHg, 0.079 inHg)	0.31 kPa (2.3 mmHg, 0.091 inHg)	0.31 kPa (2.3 mmHg, 0.091 inHg)	0 kPa (0 mmHg, 0 inHg)

• Normality Judgment

Judge OK when all the malfunction criteria below are completed.

Judgment Value

Malfunction Criteria	Threshold Value
P1	〉Value of Map 8 * Threshold value: Map (Fuel level vs evp-dset)

Map 8

Time evpdset & Fuel level	0 second	30 seconds	50 seconds	100 seconds	160 seconds	200 seconds
10 L (2.6 US gal, 2.2 Imp gal)	0.13 kPa (1.0 mmHg, 0.039 inHg)	0.47 kPa (3.5 mmHg, 0.138 inHg)	0.56 kPa (4.2 mmHg, 0.165 inHg)	0.56 kPa (4.2 mmHg, 0.165 inHg)	0.56 kPa (4.2 mmHg, 0.165 inHg)	0.56 kPa (4.2 mmHg, 0.165 inHg)
20 L (5.3 US gal, 4.4 Imp gal)	0.13 kPa (1.0 mmHg, 0.039 inHg)	0.43 kPa (3.25 mmHg, 0.128 inHg)	0.55 kPa (4.1 mmHg, 0.161 inHg)	0.55 kPa (4.1 mmHg, 0.161 inHg)	0.55 kPa (4.1 mmHg, 0.161 inHg)	0.55 kPa (4.1 mmHg, 0.161 inHg)
30 L (7.9 US gal, 6.6 Imp gal)	0.13 kPa (1.0 mmHg, 0.039 inHg)	0.4 kPa (3 mmHg, 0.118 inHg)	0.52 kPa (3.9 mmHg, 0.154 inHg)	0.52 kPa (3.9 mmHg, 0.154 inHg)	0.52 kPa (3.9 mmHg, 0.154 inHg)	0.52 kPa (3.9 mmHg, 0.154 inHg)
40 L (10.6 US gal, 8.8 Imp gal)	0.13 kPa (1.0 mmHg, 0.039 inHg)	0.43 kPa (3.25 mmHg, 0.128 inHg)	0.45 kPa (3.4 mmHg, 0.134 inHg)	0.45 kPa (3.4 mmHg, 0.134 inHg)	0.45 kPa (3.4 mmHg, 0.134 inHg)	0.45 kPa (3.4 mmHg, 0.134 inHg)
50 L (13.2 US gal, 11.0 Imp gal)	0.13 kPa (1.0 mmHg, 0.039 inHg)	0.20 kPa (1.5 mmHg, 0.059 inHg)	0.39 kPa (2.9 mmHg, 0.114 inHg)	0.39 kPa (2.9 mmHg, 0.114 inHg)	0.39 kPa (2.9 mmHg, 0.114 inHg)	0.39 kPa (2.9 mmHg, 0.114 inHg)

Time Needed for Diagnosis: 65 — 514 seconds

Malfunction Indicator Light Illumination: Illuminates when malfunction occurs in 2 continuous drive cycles.

6. DTC CLEAR CONDITION

- When the OK idling cycle was completed 40 times in a row

- When “Clear Memory” was performed

7. MALFUNCTION INDICATOR LIGHT CLEAR CONDITION

- When the OK driving cycle was completed 3 times in a row
- When “Clear Memory” was performed

8. FAIL SAFE

None

9. ECM OPERATION AT DTC SETTING

- Memorize the freeze frame data. (For test mode $02)
- Memorize the diagnostic value and trouble standard value. (For test mode $06)

BO:DTC P0447 EVAPORATIVE EMISSION CONTROL SYSTEM VENT CONTROL CIRCUIT OPEN

1. OUTLINE OF DIAGNOSIS

Detect the open or short circuit of drain valve.
Judge NG when the ECM output level is different from the actual terminal level.

2. COMPONENT DESCRIPTION

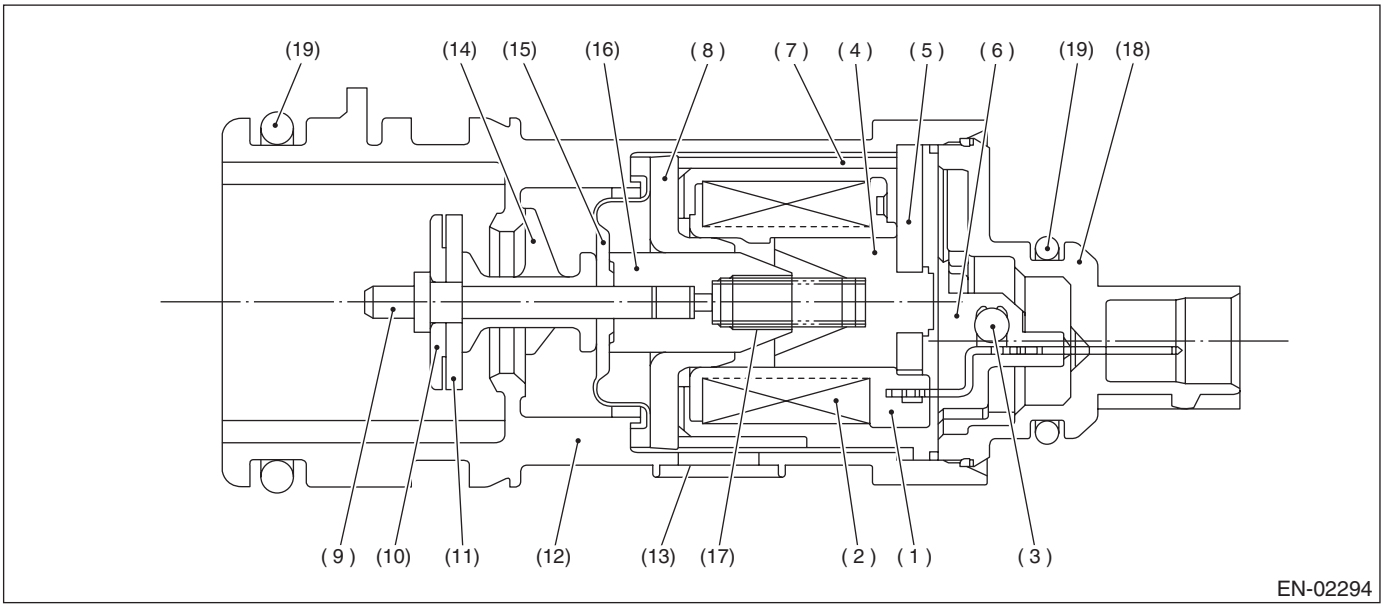

(1) Bobbin
(2) Coil
(3) Diode
(4) Stator core
(5) End plate
(6) Body
(7) Yoke
(8) Magnetic plate
(9) Shaft
(10) Plate
(11) Valve
(12) Housing
(13) Filter
(14) Retainer
(15) Diaphragm
(16) Moving core
(17) Spring
(18) Cover
(19) O-ring

3. ENABLE CONDITION

Secondary Parameters	Enable Conditions
None	

4. GENERAL DRIVING CYCLE

Always perform the diagnosis continuously.

5. DIAGNOSTIC METHOD

• Abnormality Judgment

Judge NG when the continuous time of completing the malfunction criteria below becomes more than 2.5 seconds.

Judgment Value

Malfunction Criteria	Threshold Value
Ignition switch	ON
Battery voltage	≥ 10.9 V
After engine starting	1 second or more
Terminal output voltage when ECM sends OFF signal	Low

Time Needed for Diagnosis: 2.5 seconds
Malfunction Indicator Light Illumination: Illuminates as soon as the malfunction occurs.
• Normality Judgment

Judge OK and clear the NG when the malfunction criteria below are completed.
Judgment Value

Malfunction Criteria	Threshold Value
Ignition switch	ON
Battery voltage	≥ 10.9 V
After engine starting	1 second or more
Terminal output voltage when ECM sends OFF signal	High

6. DTC CLEAR CONDITION

- When the OK idling cycle was completed 40 times in a row
- When “Clear Memory” was performed

7. MALFUNCTION INDICATOR LIGHT CLEAR CONDITION

- When the OK driving cycle was completed 3 times in a row
- When “Clear Memory” was performed

8. FAIL SAFE

PCV control: Open the PCV solenoid.

9. ECM OPERATION AT DTC SETTING

Memorize the freeze frame data. (For test mode $02)

BP:DTC P0448 EVAPORATIVE EMISSION CONTROL SYSTEM VENT CONTROL CIRCUIT SHORTED

1. OUTLINE OF DIAGNOSIS

Detect the open or short circuit of drain valve.
Judge NG when the ECM output level is different from the actual terminal level.

2. COMPONENT DESCRIPTION

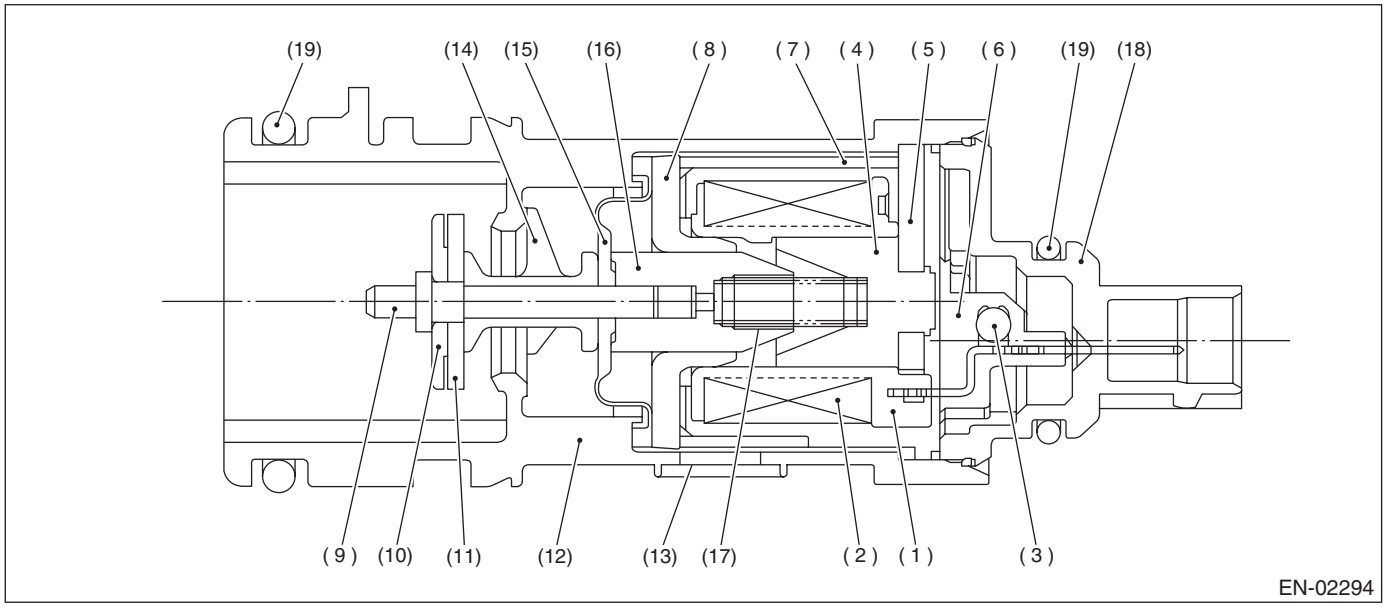

(1) Bobbin
(2) Coil
(3) Diode
(4) Stator core
(5) End plate
(6) Body
(7) Yoke
(8) Magnetic plate
(9) Shaft
(10) Plate
(11) Valve
(12) Housing
(13) Filter
(14) Retainer
(15) Diaphragm
(16) Moving core
(17) Spring
(18) Cover
(19) O-ring

3. ENABLE CONDITION

Secondary Parameters	Enable Conditions
None	

4. GENERAL DRIVING CYCLE

Always perform the diagnosis continuously.

5. DIAGNOSTIC METHOD

• Abnormality Judgment

Judge NG when the continuous time of completing the malfunction criteria below becomes more than 2.5 seconds.

Judgment Value

Malfunction Criteria	Threshold Value
Ignition switch	ON
Battery voltage	≥ 10.9 V
After engine starting	1 second or more
Terminal output voltage when ECM sends ON signal	High

Time Needed for Diagnosis: 2.5 seconds
Malfunction Indicator Light Illumination: Illuminates as soon as the malfunction occurs.
• Normality Judgment

Judge OK and clear the NG when the malfunction criteria below are completed.
Judgment Value

Malfunction Criteria	Threshold Value
Ignition switch	ON
Battery voltage	≥ 10.9 V
After engine starting	1 second or more
Terminal output voltage when ECM sends ON signal	Low

6. DTC CLEAR CONDITION

- When the OK idling cycle was completed 40 times in a row
- When “Clear Memory” was performed

7. MALFUNCTION INDICATOR LIGHT CLEAR CONDITION

- When the OK driving cycle was completed 3 times in a row
- When “Clear Memory” was performed

8. FAIL SAFE

PCV control: Open the PCV solenoid.

9. ECM OPERATION AT DTC SETTING

Memorize the freeze frame data. (For test mode $02)

BQ:DTC P0451 EVAPORATIVE EMISSION CONTROL SYSTEM PRESSURE SENSOR

1. OUTLINE OF DIAGNOSIS

Detect the tank pressure sensor output property abnormality.
Judge NG when there is no pressure variation, which should exist in the tank, considering the engine status.

2. COMPONENT DESCRIPTION

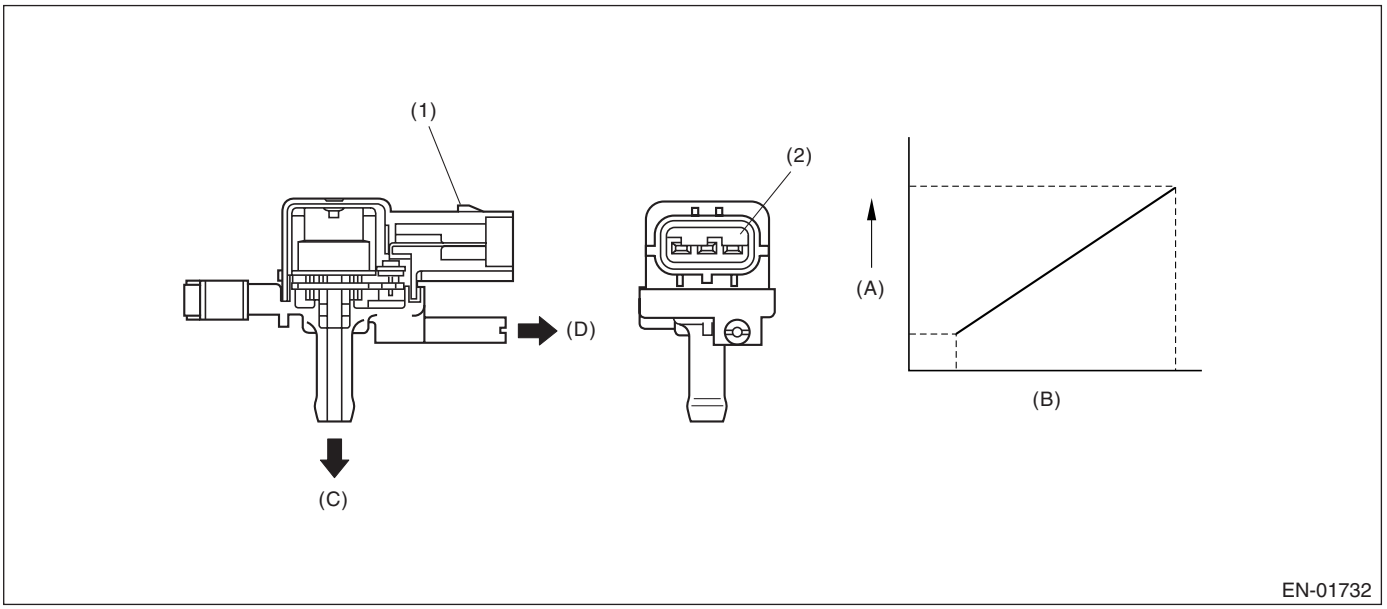

(1) Connector
(2) Terminal
(A) Output voltage
(B) Input voltage
(C) To fuel tank
(D) To fuel tank sensor control valve

3. ENABLE CONDITION

Secondary Parameters	Enable Conditions
After starting the engine	60 second or more
Fuel level	≥ 9.6 ℓ (2.54 US gal, 2.1 Imp gal)
Fuel temperature	〈 35°C (95°F)
Battery voltage	≥ 10.9 V
Atmospheric pressure	〉 75.1 kPa (563 mmHg, 22.2 inHg)

4. GENERAL DRIVING CYCLE

- Perform the diagnosis continuously in 60 seconds or more after starting the engine.
- Be sure to check the fuel level and fuel temperature.

5. DIAGNOSTIC METHOD

• Abnormality Judgment

Judge NG when the malfunction criteria below is completed.

Judgment Value

Malfunction Criteria	Threshold Value
Number of times when the difference between the Max. fuel level and the Min., fuel level every 60 seconds is 2 ℓ (0.53 US gal, 0.44Imp gal) or more (with enable condition completed)	≥ 16 times
Max. − Min. tank pressure (with enable condition completed)	< 0.05 kPa (0.375 mmHg, 0.02 inHg)
Max. − Min. fuel temperature (with enable condition completed)	≥ 7°C (45°F)

If the fuel level (Max. − Min.) in every 60 seconds is less than 2 ℓ , extend 60 seconds more and make judgment with the Max. and Min. fuel level in 120 seconds.
If the difference did not appear though the time extended, extend the time (180, 240, 300 seconds) and continue the judgment.
Diagnosis counter will count up when the difference of fuel level (Max. − Min.) is more than 2 ℓ .
Time Needed for Diagnosis: 1 minute × 16 times or more
Malfunction Indicator Light Illumination: Illuminates when malfunction occurs in two continuous drive cycles.

• Normality Judgment

Judge OK when the malfunction criteria below is completed.
Judgment Value

Malfunction Criteria	Threshold Value
Max. − Min. tank pressure	≥ 0.05 kPa (0.375 mmHg, 0.02 inHg)

6. DTC CLEAR CONDITION

- When the OK idling cycle was completed 40 times in a row
- When “Clear Memory” was performed

7. MALFUNCTION INDICATOR LIGHT CLEAR CONDITION

- When the OK driving cycle was completed 3 times in a row
- When “Clear Memory” was performed

8. FAIL SAFE

Purge control solenoid valve control: Purge fixation mode is prohibited.

9. ECM OPERATION AT DTC SETTING

Memorize the freeze frame data. (For test mode $02)

BR:DTC P0452 EVAPORATIVE EMISSION CONTROL SYSTEM PRESSURE SENSOR LOW INPUT

1. OUTLINE OF DIAGNOSIS

Detect the open or short circuit of the fuel tank pressure sensor.
Judge NG when out of the standard value.

2. COMPONENT DESCRIPTION

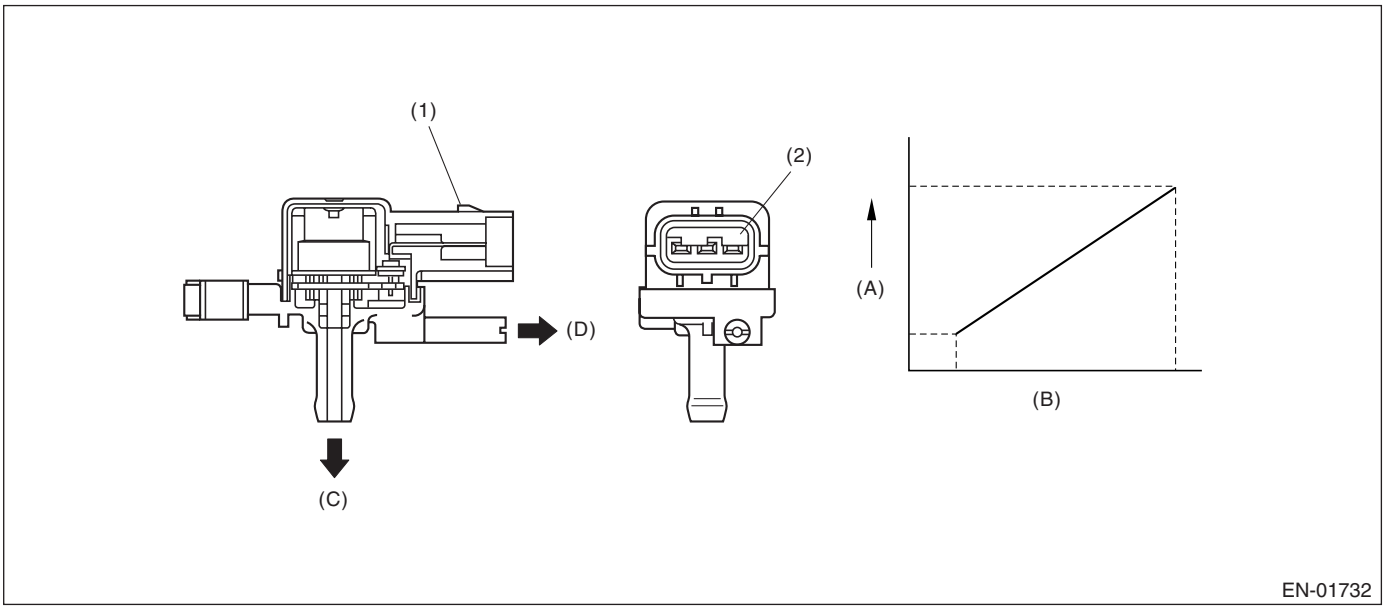

(1) Connector
(2) Terminal
(A) Output voltage
(B) Input voltage
(C) To fuel tank
(D) To fuel tank sensor control valve

3. ENABLE CONDITION

Secondary Parameters	Enable Conditions
Battery voltage	≥ 10.9 V

4. GENERAL DRIVING CYCLE

Always perform the diagnosis continuously.

5. DIAGNOSTIC METHOD

• Abnormality Judgment

Judge NG when the continuous time of completing the malfunction criteria below becomes more than 15 seconds.

Judgment Value

Malfunction Criteria	Threshold Value
Fuel tank pressure	≤ –7.44 kPa (–55.86 mmHg, –2.20 inHg)

Time Needed for Diagnosis: 15 seconds
Malfunction Indicator Light Illumination: Illuminates as soon as malfunction occurs.

• Normality Judgment

Judge OK when the malfunction criteria below is completed.

Judgment Value

Malfunction Criteria	Threshold Value
Fuel tank pressure	> –7.44 kPa (–55.86 mmHg, –2.20 inHg)

6. DTC CLEAR CONDITION

- When the OK idling cycle was completed 40 times in a row
- When “Clear Memory” was performed

7. MALFUNCTION INDICATOR LIGHT CLEAR CONDITION

- When the OK driving cycle was completed 3 times in a row
- When “Clear Memory” was performed

8. FAIL SAFE

Purge control solenoid valve control: Purge fixation mode is prohibited.

9. ECM OPERATION AT DTC SETTING

Memorize the freeze frame data. (For test mode $02)

BS:DTC P0453 EVAPORATIVE EMISSION CONTROL SYSTEM PRESSURE SENSOR HIGH INPUT

1. OUTLINE OF DIAGNOSIS

Detect the breaking/shortage of the fuel tank pressure sensor.
Judge NG when out of the standard value.

2. COMPONENT DESCRIPTION

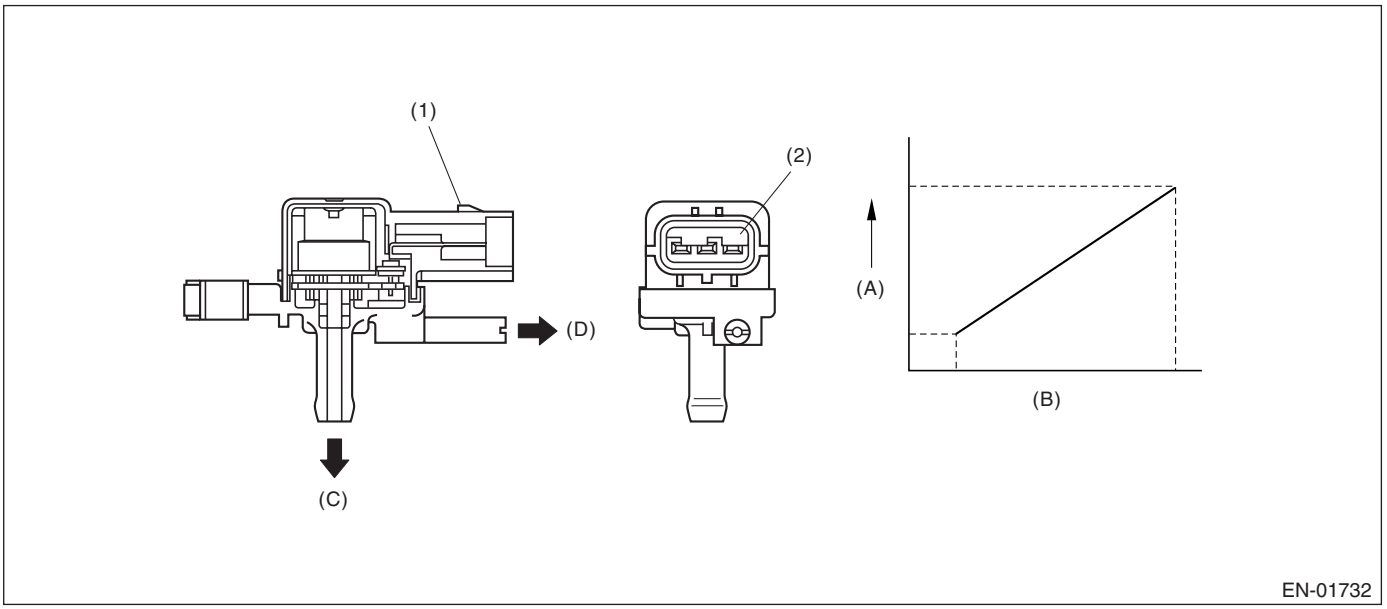

(1) Connector
(2) Terminal
(A) Output voltage
(B) Input voltage
(C) To fuel tank
(D) To fuel tank sensor control valve

3. ENABLE CONDITION

Secondary Parameters	Enable Conditions
Vehicle speed	≥ 2 km/h (1.24 MPH)
All conditions of EVAP canister purge	Complete
Evaporation gas density learning value	≤ 0.08
Main feedback compensation coefficient	≥ 0.9
Battery voltage	≥ 10.9 V

4. GENERAL DRIVING CYCLE

Perform the diagnosis continuously when purging.

5. DIAGNOSTIC METHOD

• Abnormality Judgment

Judge NG when the continuous time until completing the malfunction criteria below becomes more than 15 seconds.

Judgment Value

Malfunction Criteria	Threshold Value
Fuel tank pressure	〉7.98 kPa (59.86 mmHg, 2.36 inHg)
Fuel temperature	〈 35°C (95°F)
Atmospheric pressure	≥ 75.1 kPa (563 mmHg, 22.2 inHg)

Time Needed for Diagnosis: 15 seconds
Malfunction Indicator Light Illumination: Illuminates as soon as malfunction occurs.
• Normality Judgment

Judge OK when the malfunction criteria below is completed.
Judgment Value

Malfunction Criteria	Threshold Value
Fuel tank pressure	≤ 7.98 kPa (59.86 mmHg, 2.36 inHg)

6. DTC CLEAR CONDITION

- When the OK idling cycle was completed 40 times in a row
- When “Clear Memory” was performed

7. MALFUNCTION INDICATOR LIGHT CLEAR CONDITION

- When the OK driving cycle was completed 3 times in a row
- When “Clear Memory” was performed

8. FAIL SAFE

Purge control solenoid valve control: Purge fixation mode is prohibited.

9. ECM OPERATION AT DTC SETTING

Memorize the freeze frame data. (For test mode $02)

BT:DTC P0456 EVAPORATIVE EMISSION CONTROL SYSTEM LEAK DETECTED (VERY SMALL LEAK)

1. OUTLINE OF DIAGNOSIS

For the detecting criteria, refer to DTC P0442 EVAPORATIVE EMISSION CONTROL SYSTEM LEAK DETECTED (SMALL LEAK). <Ref. to GD(H4SO U5)-120, DTC P0442 EVAPORATIVE EMISSION CONTROL SYSTEM LEAK DETECTED (SMALL LEAK), Diagnostic Trouble Code (DTC) Detecting Criteria.>

BU:DTC P0457 EVAPORATIVE EMISSION CONTROL SYSTEM LEAK DETECTED (FUEL CAP LOOSE/OFF)

1. OUTLINE OF DIAGNOSIS

For the detecting criteria, refer to DTC P0442 EVAPORATIVE EMISSION CONTROL SYSTEM LEAK DETECTED (SMALL LEAK). <Ref. to GD(H4SO U5)-120, DTC P0442 EVAPORATIVE EMISSION CONTROL SYSTEM LEAK DETECTED (SMALL LEAK), Diagnostic Trouble Code (DTC) Detecting Criteria.>

BV:DTC P0458 EVAPORATIVE EMISSION CONTROL SYSTEM PURGE CONTROL VALVE CIRCUIT LOW

1. OUTLINE OF DIAGNOSIS

Detect open or short circuit of purge control solenoid valve.
Judge NG when ECM output level is different from actual terminal level.

2. COMPONENT DESCRIPTION

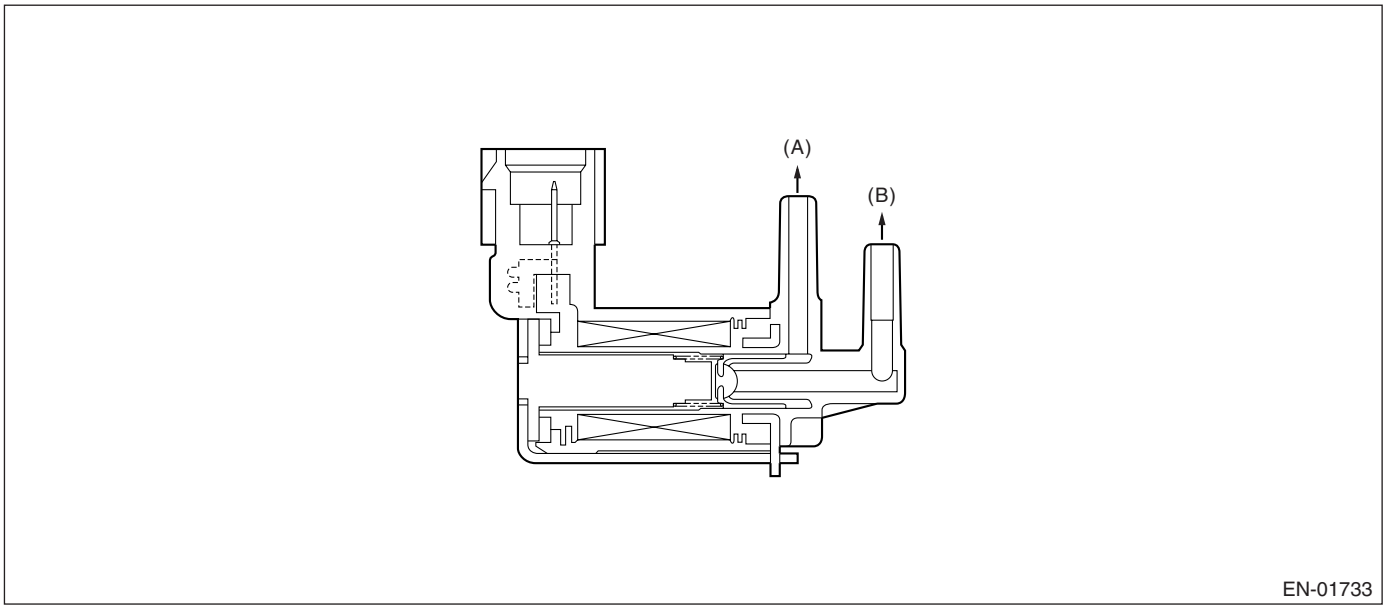

(A) To canister (B) To intake manifold

3. ENABLE CONDITION

Secondary Parameters	Enable Conditions
Ignition switch	ON
Battery voltage	≥ 10.9 V
After engine starting	1 second or more

4. GENERAL DRIVING CYCLE

Always perform the diagnosis after starting the engine.

5. DIAGNOSTIC METHOD

• Abnormality Judgment

Judge NG when the malfunction criteria below are completed.
Judgment Value

Malfunction Criteria	Threshold Value
Continuous time of completing criteria below.	≥ 2.5 seconds
Duty ratio of 'ON'	< 75%
Terminal output voltage	Low

Time Needed for Diagnosis: 2.5 seconds
Malfunction Indicator Light Illumination: Illuminates as soon as malfunction occurs in 2 continuous driving cycles.

• Normality Judgment

Judge OK and clear NG when the malfunction criterion below is completed.
Judgment Value

Malfunction Criteria	Threshold Value
Terminal output voltage	High

6. DTC CLEAR CONDITION

- When the OK idling cycle was completed 40 times in a row
- When “Clear Memory” was performed

7. MALFUNCTION INDICATOR LIGHT CLEAR CONDITION

- When the OK driving cycle was completed 3 times in a row
- When “Clear Memory” was performed

8. FAIL SAFE

None

9. ECM OPERATION AT DTC SETTING

Memorize the freeze frame data. (For test mode $02)

BW:DTC P0459 EVAPORATIVE EMISSION CONTROL SYSTEM PURGE CONTROL VALVE CIRCUIT HIGH

1. OUTLINE OF DIAGNOSIS

Detect open or short circuit of purge control solenoid valve.
Judge NG when ECM output level is different from actual terminal level.

2. COMPONENT DESCRIPTION

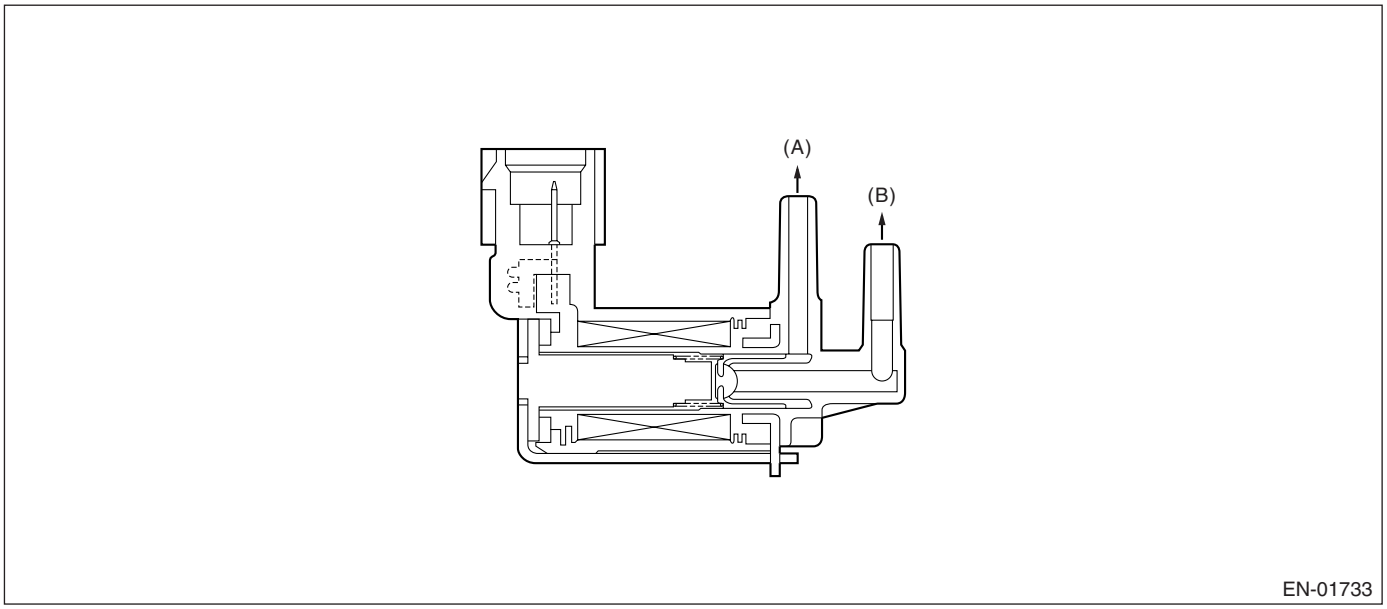

(A) To canister (B) To intake manifold

3. ENABLE CONDITION

Secondary Parameters	Enable Conditions
Ignition switch	ON
Battery voltage	≥ 10.9 V
After engine starting	1 second or more

4. GENERAL DRIVING CYCLE

Always perform the diagnosis after starting the engine.

5. DIAGNOSTIC METHOD

• Abnormality Judgment

Judge NG when the malfunction criteria below are completed.
Judgment Value

Malfunction Criteria	Threshold Value
Continuous time of completing criteria below.	≥ 2.5 seconds
Duty ratio of 'ON'	≥ 25%
Terminal output voltage	High

Time Needed for Diagnosis: 2.5 seconds
Malfunction Indicator Light Illumination: Illuminates when malfunction occurs in 2 continuous driving cycles.

• Normality Judgment

Judge OK and clear NG when the malfunction criterion below is completed.
Judgment Value

Malfunction Criteria	Threshold Value
Terminal output voltage	Low

6. DTC CLEAR CONDITION

- When the OK idling cycle was completed 40 times in a row
- When “Clear Memory” was performed

7. MALFUNCTION INDICATOR LIGHT CLEAR CONDITION

- When the OK driving cycle was completed 3 times in a row
- When “Clear Memory” was performed

8. FAIL SAFE

None

9. ECM OPERATION AT DTC SETTING

Memorize the freeze frame data. (For test mode $02)

BX:DTC P0461 FUEL LEVEL SENSOR CIRCUIT RANGE/PERFORMANCE

1. OUTLINE OF DIAGNOSIS

Detect the malfunction of fuel level sensor output property.
Judge NG when the fuel level does not vary whereas it seemed to vary be in a usual driving speed.

2. COMPONENT DESCRIPTION

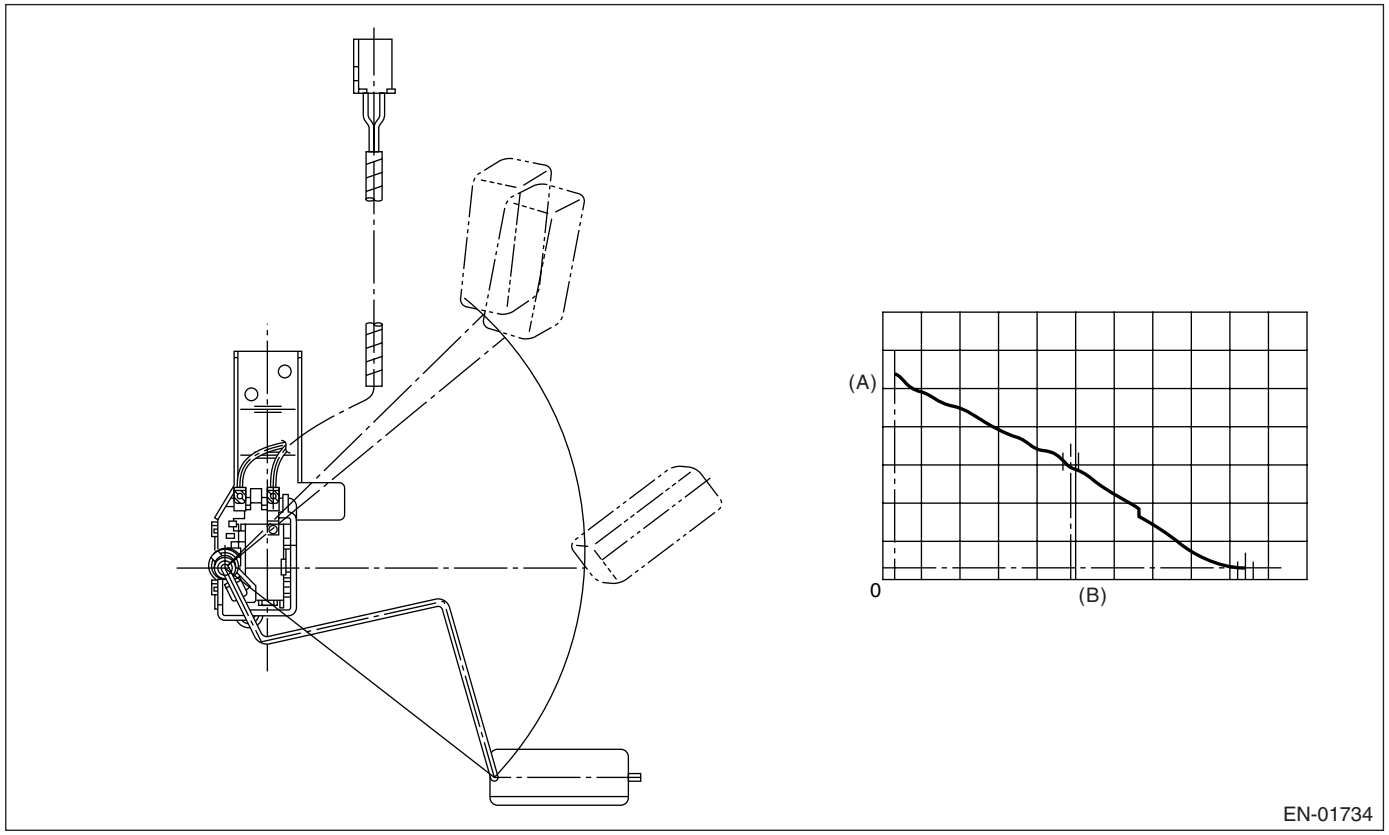

(A) Fuel level (B) Resistance

3. ENABLE CONDITION

Secondary Parameters	Enable Conditions
None	

4. GENERAL DRIVING CYCLE

Always perform the diagnosis continuously.

5. DIAGNOSTIC METHOD

• Abnormality Judgment

Judge NG when the malfunction criteria below are completed.
Judgment Value

Malfunction Criteria	Threshold Value
Accumulated amount of intake air	〉331 kg (729.7 lb)
Max.– Min. fuel level output	〈 2.6 ℓ (0.69 US gal, 0.57 Imp gal)
Battery voltage	≥ 10.9 V
After engine start	More than 5 seconds

Time Needed for Diagnosis: To be determined.

Malfunction Indicator Light Illumination: Illuminates when malfunction occurs in 2 continuous driving cycles.

• Normality Judgment

Judge OK and clear the NG when the malfunction criteria below are completed.

Judgment Value

Malfunction Criteria	Threshold Value
Accumulated amount of intake air	> 331 kg (729.7 lb)
Max.– Min. fuel level output	≥ 2.6 ℓ (0.69 US gal, 0.57 Imp gal)
Battery voltage	≥ 10.9 V
After engine start	More than 5 seconds

6. DTC CLEAR CONDITION

- When the OK idling cycle was completed 40 times in a row
- When “Clear Memory” was performed

7. MALFUNCTION INDICATOR LIGHT CLEAR CONDITION

- When the OK driving cycle was completed 3 times in a row
- When “Clear Memory” was performed

8. FAIL SAFE

None

9. ECM OPERATION AT DTC SETTING

Memorize the freeze frame data. (For test mode $02)

BY:DTC P0462 FUEL LEVEL SENSOR CIRCUIT LOW INPUT

1. OUTLINE OF DIAGNOSIS

Detect the open or short circuit of fuel level sensor. Judge NG when out of the standard value.

2. COMPONENT DESCRIPTION

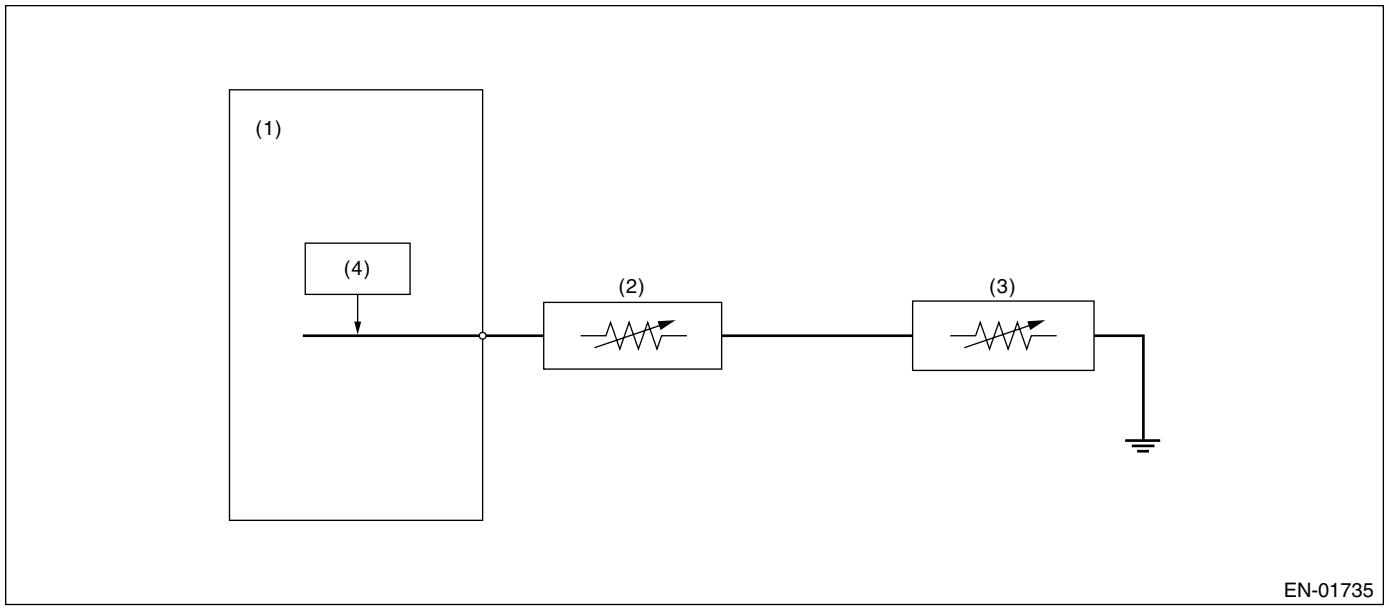

(1) Engine control module (ECM)
(2) Fuel level sensor
(3) Fuel sub level sensor
(4) Detecting circuit

3. ENABLE CONDITION

Secondary Parameters	Enable Conditions
None	

4. GENERAL DRIVING CYCLE

Always perform the diagnosis continuously

5. DIAGNOSTIC METHOD

• Abnormality Judgment

Judge NG when the continuous time of completing the malfunction criteria below becomes more than the time needed for diagnosis (2.5 seconds).

Judgment Value

Malfunction Criteria	Threshold Value
Ignition switch	ON
Battery voltage	≥ 10.9 V
After engine starting	3 seconds or more
Output voltage	< 0.173 V

Time Needed for Diagnosis: 2.5 seconds

Malfunction Indicator Light Illumination: Illuminates when malfunction occurs in 2 continuous driving cycles.

• Normality Judgment

Judge OK and clear the NG when the malfunction criteria below are completed.

Judgment Value

Malfunction Criteria	Threshold Value
Ignition switch	ON
Battery voltage	≥ 10.9 V
After engine starting	3 seconds or more
Output voltage	≥ 0.173 V

6. DTC CLEAR CONDITION

- When the OK idling cycle was completed 40 times in a row
- When “Clear Memory” was performed

7. MALFUNCTION INDICATOR LIGHT CLEAR CONDITION

- When the OK driving cycle was completed 3 times in a row
- When “Clear Memory” was performed

8. FAIL SAFE

None

9. ECM OPERATION AT DTC SETTING

Memorize the freeze frame data. (For test mode $02)

BZ:DTC P0463 FUEL LEVEL SENSOR CIRCUIT HIGH INPUT

1. OUTLINE OF DIAGNOSIS

Detect the open or short circuit of fuel level sensor. Judge NG when out of the standard value.

2. COMPONENT DESCRIPTION

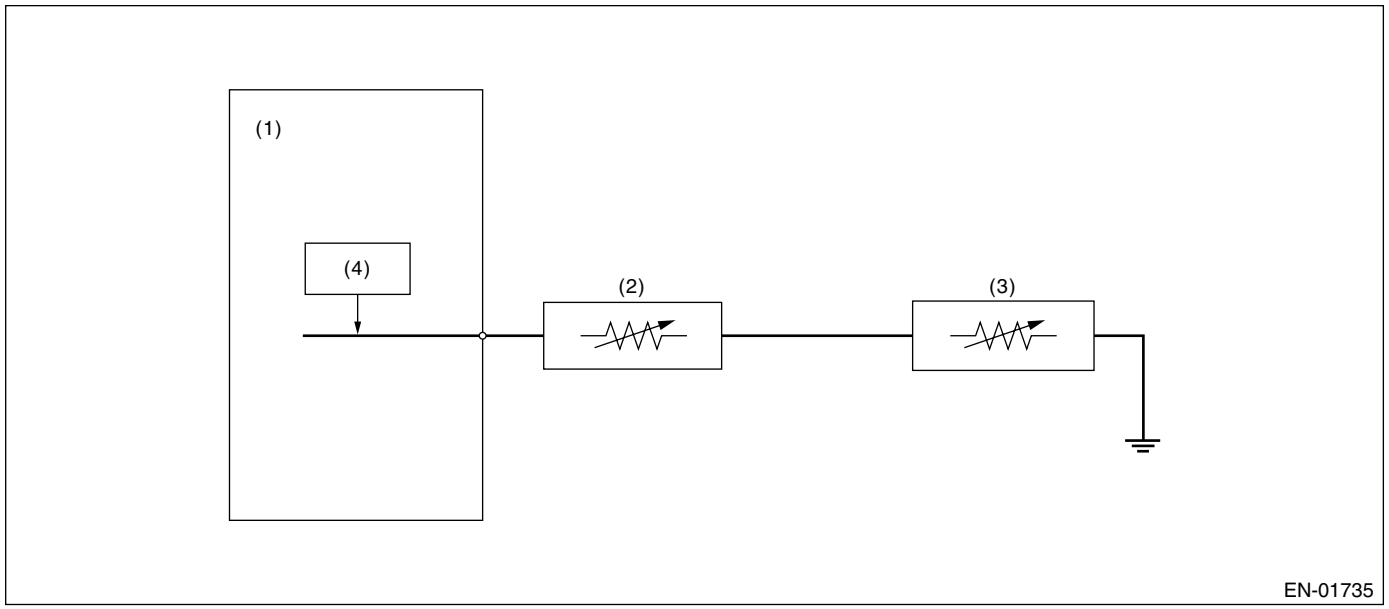

(1) Engine control module (ECM)
(2) Fuel level sensor
(3) Fuel sub level sensor
(4) Detecting circuit

3. ENABLE CONDITION

Secondary Parameters	Enable Conditions
None	

4. GENERAL DRIVING CYCLE

Always perform the diagnosis continuously.

5. DIAGNOSTIC METHOD

• Abnormality Judgment

Judge NG when the continuous time of completing the malfunction criteria below becomes more than the time needed for diagnosis (2.5 seconds).

Judgment Value

Malfunction Criteria	Threshold Value
Ignition switch	ON
Battery voltage	≥ 10.9 V
After engine starting	3 seconds or more
Output voltage	≥ 7.212 V

Time Needed for Diagnosis: 2.5 seconds

Malfunction Indicator Light Illumination: Illuminates when malfunction occurs in 2 continuous driving cycles.

• Normality Judgment

Judge OK and clear the NG when the malfunction criteria below are completed.

Judgment Value

Malfunction Criteria	Threshold Value
Ignition switch	ON
Battery voltage	≥ 10.9 V
After engine starting	3 seconds or more
Output voltage	< 7.212 V

6. DTC CLEAR CONDITION

- When the OK idling cycle was completed 40 times in a row
- When “Clear Memory” was performed

7. MALFUNCTION INDICATOR LIGHT CLEAR CONDITION

- When the OK driving cycle was completed 3 times in a row
- When “Clear Memory” was performed

8. FAIL SAFE

None

9. ECM OPERATION AT DTC SETTING

Memorize the freeze frame data. (For test mode $02)

CA:DTC P0464 FUEL LEVEL SENSOR CIRCUIT INTERMITTENT

1. OUTLINE OF DIAGNOSIS

Detect the malfunction of unstable output from fuel level sensor caused by noise.
Judge NG when the max. value and cumulative value of output voltage variation of fuel level sensor is larger than the threshold value.

2. ENABLE CONDITION

Secondary Parameters	Enable Conditions
Engine speed	≥ 500 rpm
After engine starting	1 second or more
Ignition switch	ON
Battery voltage	〉10.9 V
Idle switch	ON
Fuel level	9.6 ←→ 54.4 ℓ (2.5 ←→ 14.4 US gal, 2.1 ←→ 12.0 Imp gal)
Vehicle speed = 0 km/h (0 MPH)	10 seconds or more

3. GENERAL DRIVING CYCLE

- Perform the diagnosis continuously in idling condition.
- Pay attention to the fuel level.

4. DIAGNOSTIC METHOD

Calculate the Max. value (delflmax) and cumulative value (sumfl) of output voltage variation of fuel level sensor during 12.2 seconds. Judge it normal when both max. and cumulative values are not over the threshold

value. Otherwise, when either of them is over the threshold value, count the diagnosis counter up. And judge NG if the counter indicated 4 counts.

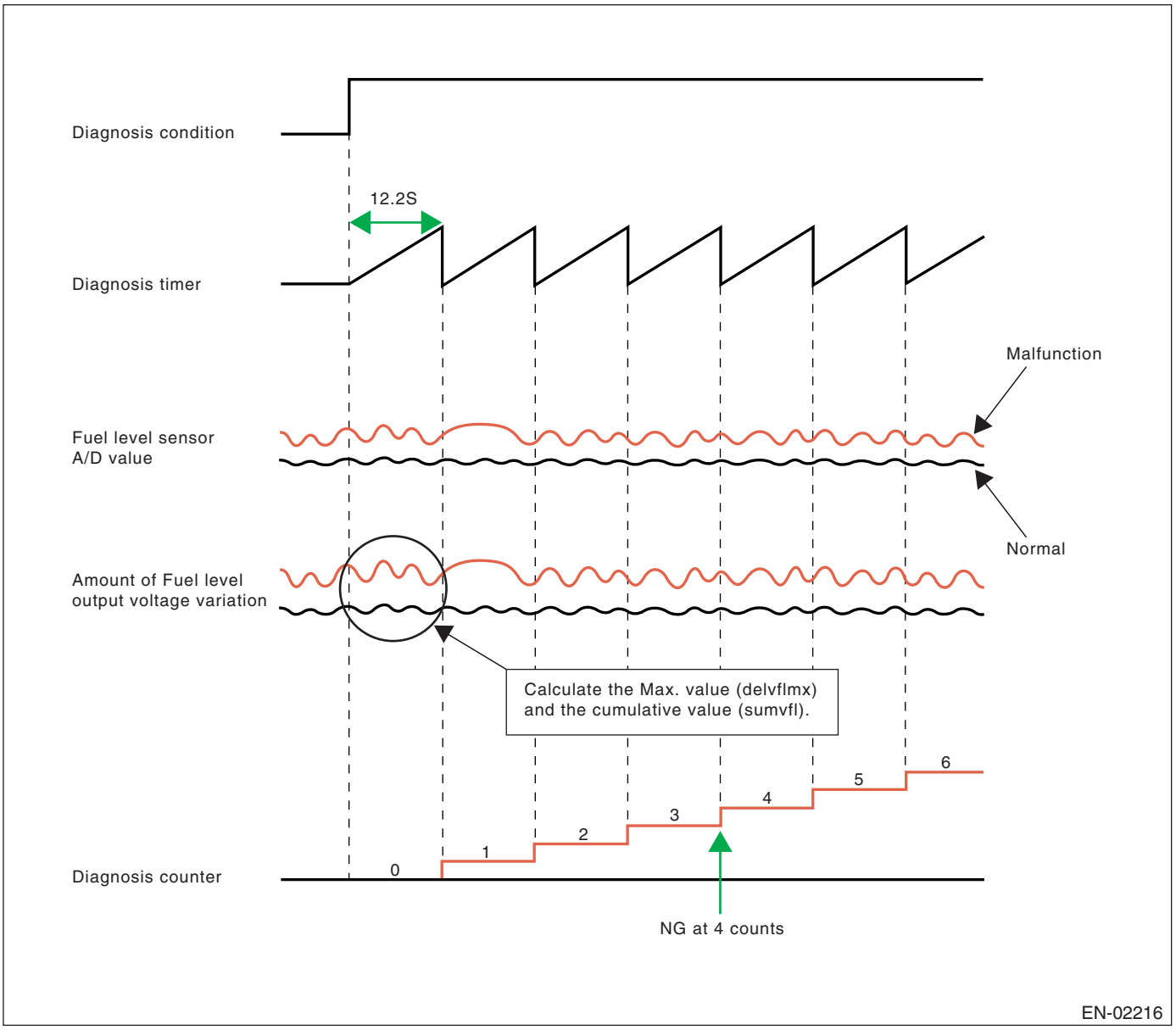

• Abnormality Judgment

Judge NG when the malfunction criteria below are completed.

Judgment Value

Malfunction Criteria	Threshold Value
Integrated times of the condition reaching follows, DELFLMAX ≥ 0.2 ←→ 0.26 V or SUMFL ≥ 16 V where, DELFLMAX is Max. deviation of sensor output during 12.2 seconds. SUMFL is integrated value of sensor output deviation during 12.2 seconds.	≥ 4 times

Do not count the diagnosis counter up when the following conditions are completed during 12.2 seconds.

Max − Min of tank pressure during 12.2 seconds	≥ 0.05 kPa (0.375 mmHg, 0.02 inHg)
Max − Min of battery voltage during 12.2 seconds	≥ 0.609 V

Time Needed for Diagnosis: 12.2 seconds × 4 times
Malfunction Indicator Light Illumination: Illuminates when malfunction occurs in 2 continuous driving cycles.

• Normality Judgment

Judge OK and clear the NG when the malfunction criteria below are completed.
Judgment Value

Malfunction Criteria	Threshold Value
DELFLMAX	〈 0.2 ←→ 0.26 V
SUMFL Where, DELFLMAX is Max. deviation of sensor output during 12.2 seconds. SUMFL is integrated value of sensor output deviation during 12.2 seconds.	〈 16 V

5. DTC CLEAR CONDITION

- When the OK idling cycle was completed 40 times in a row
- When “Clear Memory” was performed

6. MALFUNCTION INDICATOR LIGHT CLEAR CONDITION

- When the OK driving cycle was completed 3 times in a row
- When “Clear Memory” was performed

7. FAIL SAFE

None

8. ECM OPERATION AT DTC SETTING

Memorize the freeze frame data. (For test mode $02)

CB:DTC P0483 COOLING FAN RATIONALITY CHECK

1. OUTLINE OF DIAGNOSIS

Detect the function abnormality of the radiator fan.
Judge NG when the engine coolant temperature slowly decreases even when the radiator fan is rotating.

2. ENABLE CONDITION

Diagnostic enable condition is completed if the radiator fan changes from OFF to ON when all of the conditions below are completed. When one of the conditions below is not completed, the diagnostic enable condition is not completed.

Secondary Parameters	Enable Conditions
Engine Speed	560 — 900 rpm
Idle switch	ON
Vehicle speed	< 2 km/h (1.2 MPH)
Battery voltage	≥ 10.9 V

3. GENERAL DRIVING CYCLE

Perform the diagnosis continuously when the radiator fan changes from OFF to ON when idling.

4. DIAGNOSTIC METHOD

• Abnormality Judgment

Judge NG when the continuous time of completing the malfunction criteria below becomes more than 5 minutes.

Judgment Value

Malfunction Criteria	Threshold Value
Engine coolant temperature	≥ 100°C (212°F)
Radiator fan signal changes	OFF to ON
Engine coolant temperature	Not reducing

Time Needed for Diagnosis: 5 minutes
Malfunction Indicator Light Illumination: Illuminates when malfunction occurs in 2 continuous driving cycles.

• Normality Judgment

Judge OK and clear NG when the malfunction criteria below are completed.

Judgment Value

Malfunction Criteria	Threshold Value
Radiator fan signal changes	OFF to ON
Engine coolant temperature	Reducing

5. DTC CLEAR CONDITION

- When the OK idling cycle was completed 40 times in a row
- When “Clear Memory” was performed

6. MALFUNCTION INDICATOR LIGHT CLEAR CONDITION

- When the OK driving cycle was completed 3 times in a row
- When “Clear Memory” was performed

7. FAIL SAFE

None

8. ECM OPERATION AT DTC SETTING

Memorize the freeze frame data. (For test mode $02)

CC:DTC P0500 VEHICLE SPEED SENSOR

1. OUTLINE OF DIAGNOSIS

Judge NG when out of standard value. Judge NG when the received data from ABSCM&H/U is abnormal, and the vehicle speed data is impossible.

2. COMPONENT DESCRIPTION

The vehicle speed signal is transmitted ABSCM&H/U. Then the OK/NG data of ABS wheel speed sensor is transmitted from ABSCM&H/U through CAN communication.

3. ENABLE CONDITION

Secondary Parameters	Enable Conditions
After engine starting	≥ 2 seconds
Battery voltage	≥ 10.9 V

4. GENERAL DRIVING CYCLE

Perform the diagnosis continuously in 2 seconds or more after starting the engine.

5. DIAGNOSTIC METHOD

• Abnormality Judgment

Judge NG when the continuous time of completing the malfunction criteria below becomes more than 2.5 seconds.

Judgment Value

Malfunction Criteria	Threshold Value
Front ABS wheel speed sensor	Abnormal
When either of the following is completed	
Front left wheel speed	≥ 300 km/h (186 MPH)
Front right wheel speed	≥ 300 km/h (186 MPH)

Time Needed for Diagnosis: 2.5 seconds
Malfunction Indicator Light Illumination: Illuminates as soon as the malfunction occurs.

• Normality Judgment

Judge OK and clear the NG when all malfunction criteria below are completed.

Judgment Value

Malfunction Criteria	Threshold Value
Front left wheel speed	> 0 km/h (0 MPH) and < 300 km/h (186 MPH)
Front right wheel speed	> 0 km/h (0 MPH) and < 300 km/h (186 MPH)

6. DTC CLEAR CONDITION

- When the OK idling cycle was completed 40 times in a row
- When “Clear Memory” was performed

7. MALFUNCTION INDICATOR LIGHT CLEAR CONDITION

- When the OK driving cycle was completed 3 times in a row
- When “Clear Memory” was performed

8. FAIL SAFE

- Accelerator sensor signal process: Not allowed all closed points learning.
- Vehicle speed sensor signal process: Vehicle speed = 10 km/h (6 MPH)
- Fuel cut control: Not allowed vehicle speed 0 km/h (0 MPH) fuel cut. Normally the high vehicle speed fuel cut performs on vehicle speed condition and engine speed, but perform the fuel cut only on engine speed condition (4,400 rpm or more).

• ISC control: Set the open loop compensation to specified value (1 g (0.04 oz)/s). Not allowed ISC feedback volume calculation.
• Air conditioner control: Not allowed air conditioner cut at accelerating.
• Radiator fan control: ON both main/sub.
• Judge gear ratio: Control as gear fixed on 6th.
• Tumble generator valve control: Open the tumble generator valve.

9. ECM OPERATION AT DTC SETTING

Memorize the freeze frame data. (For test mode $02)

CD:DTC P0506 IDLE CONTROL SYSTEM RPM LOWER THAN EXPECTED

1. OUTLINE OF DIAGNOSIS

Detect the malfunction that actual engine speed is not close to target engine speed during idling.
Judge NG when actual engine speed is not close to target engine speed during idling.

2. ENABLE CONDITION

Secondary Parameters	Enable Conditions
Engine coolant temperature	≥ 70°C (158°F)
Battery voltage	≥ 10.9 V
Atmospheric pressure	〉75.1 kPa (563 mmHg, 22.2 inHg)
Fuel level	≥ 9.6 ℓ (2.54 US gal, 2.11 Imp gal)
After engine starting	10.5 seconds or more
Feedback in ISC	In operation
Measured lambda (left and right)	0.81 ←→ 1.1
After air condition switching ON-OFF, OFF-ON	5.1 seconds or more
After in-manifold pressure change more than 4 kPa (30 mmHg, 1.2 inHg)	〉5.1 seconds
After neutral switch ON-OFF event	〉5.1 seconds
Vehicle speed	0 km/h (0 MPH)

3. GENERAL DRIVING CYCLE

Always perform diagnosis during idling after engine warmed.

4. DIAGNOSTIC METHOD

• Abnormality Judgment

Judge NG when the cumulative time of completing the malfunction criterion below becomes more than the time needed for diagnosis (10 seconds × 3 times).

Judgment Value

Malfunction Criteria	Threshold Value
Actual − target engine speed	〈 −100 rpm
Feedback correction for idle air control solenoid valve	Max.

Time Needed for Diagnosis: 10 seconds × 3 times
Malfunction Indicator Light Illumination: Illuminates when malfunction occurs in 2 continuous driving cycles.

• Normality Judgment

Judge OK and clear NG when the continuous time of completing the malfunction criterion below becomes more than the time needed for diagnosis (10 seconds).

Judgment Value

Malfunction Criteria	Threshold Value
Actual – target engine speed	≥ –100 rpm

5. DTC CLEAR CONDITION

- When the OK idling cycle was completed 40 times in a row
- When “Clear Memory” was performed

6. MALFUNCTION INDICATOR LIGHT CLEAR CONDITION

- When the OK driving cycle was completed 3 times in a row
- When “Clear Memory” was performed

7. FAIL SAFE

None

8. ECM OPERATION AT DTC SETTING

Memorize the freeze frame data. (For test mode $02)

CE:DTC P0507 IDLE CONTROL SYSTEM RPM HIGHER THAN EXPECTED

1. OUTLINE OF DIAGNOSIS

Detect the malfunction that actual engine speed is not close to target engine speed during idling.
Judge NG when actual engine speed is not close to target engine speed during idling.

2. ENABLE CONDITION

Secondary Parameters	Enable Conditions
Engine coolant temperature	≥ 70°C (158°F)
Battery voltage	≥ 10.9 V
Atmospheric pressure	> 75.1 kPa (563 mmHg, 22.2 inHg)
Fuel level	≥ 9.6 ℓ (2.54 US gal, 2.11 Imp gal)
After engine starting	10.5 seconds or more
Feedback in ISC	In operation
Lambda (left and right)	0.81 ←→ 1.1
After A/C switch ON-OFF event	5.1 seconds or more
After in-manifold pressure change more than 4 kPa (30 mmHg, 1.2 inHg)	> 5.1 seconds
After neutral switch ON-OFF event	> 5.1 seconds
Vehicle speed	0 km/h (0 MPH)

3. GENERAL DRIVING CYCLE

Always perform diagnosis during idling after engine warmed.

4. DIAGNOSTIC METHOD

• Abnormality Judgment

Judge NG when the continuous time of completing the malfunction criterion below becomes more than the time needed for diagnosis (10 seconds × 3 times).

Judgment Value

Malfunction Criteria	Threshold Value
Actual – target eng. speed	≥ 200 rpm
Feedback correction for idle air control solenoid valve	Min.

Time Needed for Diagnosis: 10 seconds × 3 times

Malfunction Indicator Light Illumination: Illuminates when malfunction occurs in 2 continuous driving cycles.

• Normality Judgment

Judge OK and clear NG when the continuous time of completing the malfunction criterion below becomes more than the time needed for diagnosis (10 seconds).

Judgment Value

Malfunction Criteria	Threshold Value
Actual – target eng. speed	< 200 rpm

5. DTC CLEAR CONDITION

- When the OK idling cycle was completed 40 times in a row
- When “Clear Memory” was performed

6. MALFUNCTION INDICATOR LIGHT CLEAR CONDITION

- When the OK driving cycle was completed 3 times in a row
- When “Clear Memory” was performed

7. FAIL SAFE

None

8. ECM OPERATION AT DTC SETTING

Memorize the freeze frame data. (For test mode $02)

CF:DTC P0512 STARTER REQUEST CIRCUIT

1. OUTLINE OF DIAGNOSIS

Detect the open or short circuit of starter SW.
Judge ON NG when the starter SW signal remains on.

2. ENABLE CONDITION

Secondary Parameters	Enable Conditions
None	

3. GENERAL DRIVING CYCLE

Always perform the diagnosis continuously.

4. DIAGNOSTIC METHOD

• Abnormality Judgment

Judge NG when the continuous time of completing the malfunction criteria below becomes more than 3 minutes.

Judgment Value

Malfunction Criteria	Threshold Value
Engine speed	〉500 rpm
Starter OFF signal	Not detect
Battery voltage	〉8 V

Time Needed for Diagnosis: 180 seconds
Malfunction Indicator Light Illumination: Illuminates when malfunction occurs in 2 continuous driving cycles.

• Normality Judgment

Judge ON OK and clear the NG when the malfunction criteria below are completed.

Judgment Value

Malfunction Criteria	Threshold Value
Starter OFF signal	Detect
Battery voltage	〉8 V

5. DTC CLEAR CONDITION

- When the OK idling cycle was completed 40 times in a row
- When “Clear Memory” was performed

6. MALFUNCTION INDICATOR LIGHT CLEAR CONDITION

- When the OK driving cycle was completed 3 times in a row
- When “Clear Memory” was performed

7. FAIL SAFE

None

8. ECM OPERATION AT DTC SETTING

Memorize the freeze frame data. (For test mode $02)

CG:DTC P0519 IDLE CONTROL SYSTEM MALFUNCTION (FAIL-SAFE)

1. OUTLINE OF DIAGNOSIS

Detect the malfunction that engine speed increases more than that in normal condition during idling.

2. ENABLE CONDITION

Secondary Parameters	Enable Conditions
Battery voltage	≥ 10.9 V
Feedback in ISC	In operation
Vehicle speed	< 4 km/h (2.49 MPH)
After engine starting	1 seconds or more

3. GENERAL DRIVING CYCLE

Always perform diagnosis at less than 4 km/h (2.49 MPH) of vehicle speed.

4. DIAGNOSTIC METHOD

• Abnormality Judgment

Judge NG when the continuous time until completing the all malfunction criteria below becomes more than the time needed for diagnosis (2 seconds).

Judgment Value

Malfunction Criteria	Threshold Value
Engine speed – target eng. speed	> 2000 rpm
Feedback value for ISC	≤ 0
Engine speed change every 180 degree engine rev.	≥ –5 rpm

Time Needed for Diagnosis: 2 seconds
Malfunction Indicator Light Illumination: Illuminates as soon as malfunction occurs.

• Normality Judgment

Judge OK and clear NG when the continuous time until completing the malfunction criteria below becomes more than the time needed for diagnosis (5 seconds).

Judgment Value

Malfunction Criteria	Threshold Value
Engine speed – target eng. speed	< 200 rpm

5. DTC CLEAR CONDITION

- When the OK idling cycle was completed 40 times in a row
- When “Clear Memory” was performed

6. MALFUNCTION INDICATOR LIGHT CLEAR CONDITION

- When the OK driving cycle was completed 3 times in a row
- When “Clear Memory” was performed

7. FAIL SAFE

Fuel shut-off: Shut-off fuel for only #1 and #2 cylinder, or for all cylinder in accordance with vehicle speed, engine speed, throttle position

8. ECM OPERATION AT DTC SETTING

Memorize the freeze frame data. (For test mode $02)

CH:DTC P0600 SERIAL COMMUNICATION LINK

1. OUTLINE OF DIAGNOSIS

Detect the malfunction of CAN communication.
It judges as NG when CAN communication becomes impossible, the CAN communication with AT becomes impossible, and the data from AT is not normal.

2. COMPONENT DESCRIPTION

CAN connects between ECM and TCM with high speed.

(Common Specification)
CAN PROTCOL 2.0B (active)
Frame format: 11 bit ID Frame (Standard frame)
(High Speed CAN)
ISO 11898 compliance
Communication Speed: 500 kbps

3. ENABLE CONDITION

Secondary Parameters	Enable Conditions
Battery Voltages	≥ 10.9 V
Starter switch	OFF
Engine	run

4. GENERAL DRIVING CYCLE

Perform the diagnosis continuously after starting the engine.

5. DIAGNOSTIC METHOD

• JUDGMENT OF MALFUNCTION

It judges as NG if any of the following conditions are judged as NG. It judges as OK if all of the following conditions are judged as OK within 1s, and the NG memory is cleared.
Judgment Value

Malfunction Criteria	Threshold Value
Buss off flag or warning flag	Set
ID cannot be received from Body integrated unit	= 500 m/s
DATA cannot be updated from Body integrated unit	= 500 m/s

Time needed for Diagnosis: 1 time
Malfunction Indicator Light Illumination: Illuminates simultaneously when malfunction is detected.

6. DTC CLEAR CONDITION

When the OK driving cycle was completed 40 consecutive times.
When “Clear Memory” was performed.

7. MALFUNCTION INDICATOR LIGHT CLEAR CONDITION

- When the OK driving cycle was completed 3 consecutive times.
- When “Clear Memory” was performed.

8. FAIL-SAFE

None

9. ECM OPERATION AT DTC SETTING

Store the freeze frame data. (For test mode $02)

CI: DTC P0604 INTERNAL CONTROL MODULE RANDOM ACCESS MEMORY (RAM) ERROR

1. OUTLINE OF DIAGNOSIS

Detect the function abnormality of the micro-computer (RAM).
Judge NG when either the main CPU normal RAM or sub CPU normal RAM is abnormal. Judge OK when both of them are normal.
At initial routine, write the data to all area of RAM. Judge OK when same data can be read out, and judge NG when same data cannot be read out.

2. ENABLE CONDITION

Secondary Parameters	Enable Conditions
None	

Perform the diagnosis in the initial routine.

3. GENERAL DRIVING CYCLE

Perform the diagnosis immediately after IG key SW is turned ON.

4. DIAGNOSTIC METHOD

• Abnormality Judgment

Judge NG when the malfunction criteria below are completed.
Judgment Value

Malfunction Criteria	Threshold Value
Main CPU normal RAM abnormality	
Write 5AA5A55A, and read out. (All area of RAM)	Cannot be read out 5AA5A55A.
Or write A55A5AA5, and read out. (All area of RAM)	Cannot be read out A55A5AA5.
Sub CPU normal RAM abnormality.	
Write 5AA5, and read out. (All area of RAM)	Cannot be read out 5AA5.
Or write A55A, and read out. (All area of RAM)	Cannot be read out A55A.

Time Needed for Diagnosis: To be determined.
Malfunction Indicator Light Illumination: Illuminates as soon as malfunction occurs.
• Normality Judgment

Judge NG when the malfunction criteria below are completed.
Judgment Value

Malfunction Criteria	Threshold Value
Main CPU normal RAM abnormality	
Write 5AA5A55A, and read out. (All area of RAM)	Cannot be read out 5AA5A55A.
Or write A55A5AA5, and read out. (All area of RAM)	Cannot be read out A55A5AA5.
Sub CPU normal RAM abnormality.	
Write 5AA5, and read out. (All area of RAM)	Cannot be read out 5AA5.
Or write A55A, and read out. (All area of RAM)	Cannot be read out A55A.

5. DTC CLEAR CONDITION

- When the OK idling cycle was completed 40 times in a row
- When “Clear Memory” was performed

6. MALFUNCTION INDICATOR LIGHT CLEAR CONDITION

- When the OK driving cycle was completed 3 times in a row
- When “Clear Memory” was performed

7. FAIL SAFE

None

8. ECM OPERATION AT DTC SETTING

Memorize the freeze frame data. (For test mode $02)

CJ:DTC P0605 INTERNAL CONTROL MODULE READ ONLY MEMORY (ROM) ERROR

1. OUTLINE OF DIAGNOSIS

Judge NG when SUM value of ROM is out of the standard value.

2. ENABLE CONDITION

Secondary Parameters	Enable Conditions
Ignition switch	ON

3. GENERAL DRIVING CYCLE

Always perform the diagnosis continuously.

4. DIAGNOSTIC METHOD

• Abnormality Judgment

Judge NG when the continuous time of completing the malfunction criteria below becomes more than 0.5 seconds.

Judgment Value

Malfunction Criteria	Threshold Value
SUM value of ROM	Standard value

Time Needed for Diagnosis: To be determined.
Malfunction Indicator Light Illumination: Illuminates as soon as malfunction occurs.

5. DTC CLEAR CONDITION

- When the OK idling cycle was completed 40 times in a row
- When “Clear Memory” was performed (Only at engine stop)

6. MALFUNCTION INDICATOR LIGHT CLEAR CONDITION

- When the OK driving cycle was completed 3 times in a row
- When “Clear Memory” was performed

7. FAIL SAFE

Stop the current to electronic throttle control motor. (Fix the throttle opening angle to 6°.)

8. ECM OPERATION AT DTC SETTING

Memorize the freeze frame data. (For test mode $02)

CK:DTC P0607 CONTROL MODULE PERFORMANCE

1. OUTLINE OF DIAGNOSIS

Judge NG when either the following is completed.
- When the read value of throttle position sensor 1 signal is mismatched between main CPU and sub CPU.
- When the read value of accelerator position sensor 1 signal is mismatched between main CPU and sub CPU.
- When the sub CPU operates abnormally.
- When the communication between main CPU and sub CPU is abnormal.
- When the input amplifier circuit of throttle position sensor 1 is abnormal.
- When the cruise control cannot be canceled correctly.
- When the signal of brake SW1 and 2 is mismatched.
- When the directed angle from main CPU is abnormal.

2. COMPONENT DESCRIPTION

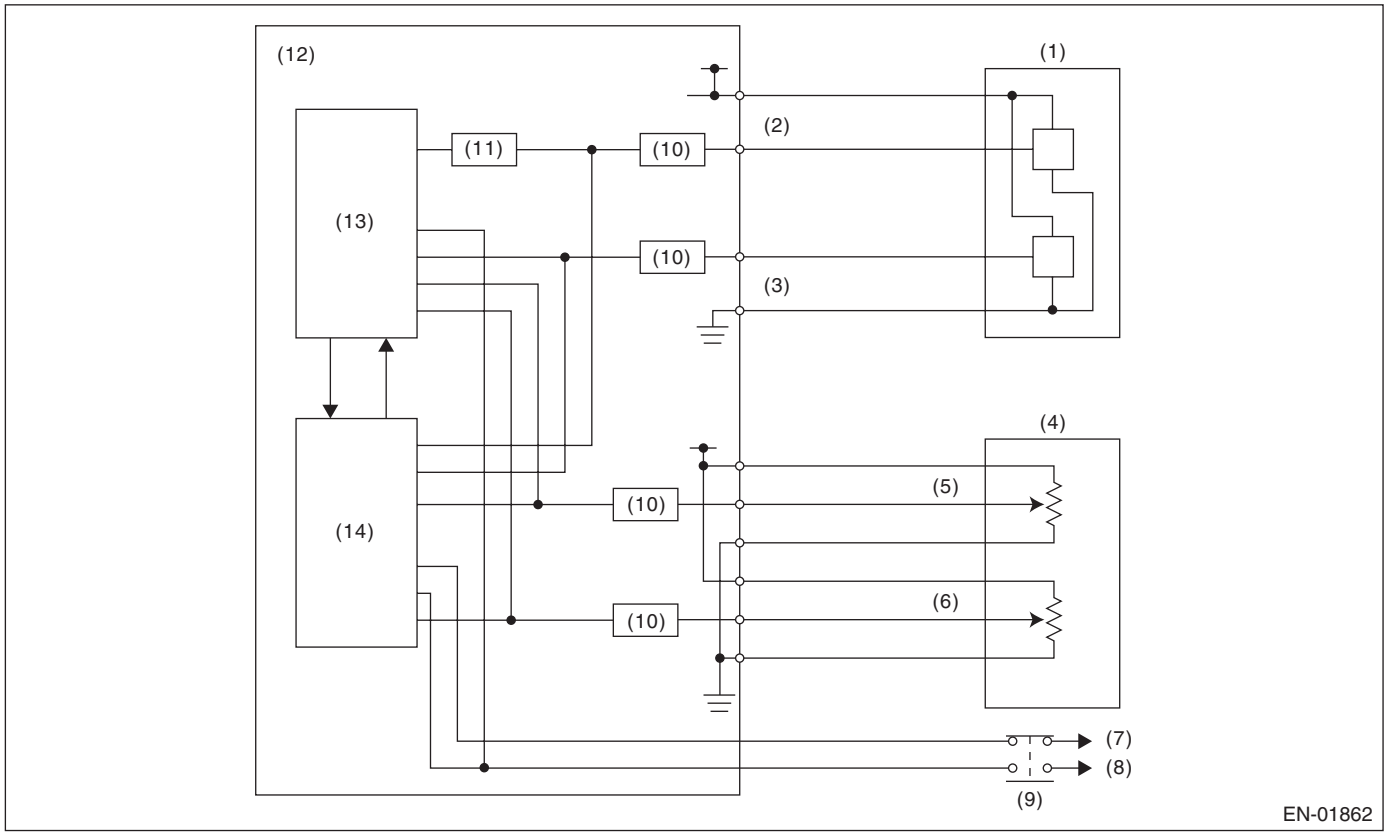

(1) Throttle position sensor
(2) Throttle position sensor 1
(3) Throttle position sensor 2
(4) Accelerator pedal position sensor
(5) Accelerator pedal position sensor 1
(6) Accelerator pedal position sensor 2
(7) Battery
(8) Stop light
(9) Brake switch
(10) I/F circuit
(11) Amplifier circuit
(12) Engine control module (ECM)
(13) Sub CPU
(14) Main CPU

3. ENABLE CONDITION

Secondary Parameters	Enable Conditions
(1) Ignition switch	ON
(2) Ignition switch	ON
(3) None	—
(4) None	—
(5) Throttle opening angle	
(6) Brake SW (with cruise control)	ON
(7) None	—
(8) Cruise control	OFF

4. GENERAL DRIVING CYCLE

(1) — (4): Always perform the diagnosis continuously.
(5): Always perform the diagnosis continuously on idling.
(6): Perform the diagnosis when the brake pedal is depressed.
(7): Always perform the diagnosis continuously.
(8): Always perform the diagnosis continuously when the cruise control pedal is not operating.

5. DIAGNOSTIC METHOD

Judge OK and clear NG when the malfunction criteria below are completed.

Judgment Value

Malfunction Criteria	Threshold Value
(1) Difference of CPU on reading value of throttle position sensor signal	Within 0.116 V
(2) Difference of CPU on reading value of accelerator position sensor signal	Within 0.615 V
(3) WD pulse from sub CPU	WD pulse occur
(4) Communication between CPU	Possible to communicate
(5) Difference of signal on connection of amplifier	Within × 4±0.56 V
(6) Cruise control cancel signal at brake ON	Cruise control cancel signal ON
(7) Brake switch 1, 2 signal	SW 1 and 2 are matched
(8) Throttle opening angle directing value	Within the opening angle +3.4° which calculated from accelerator opening angle coefficient

Time Needed for Diagnosis:
(1) 200 milliseconds
(2) 250 milliseconds
(3) 200 milliseconds
(4) 200 milliseconds
(5) 24 milliseconds
(6) 250 milliseconds
(7) 200 milliseconds
(8) 250 milliseconds

Malfunction Indicator Light Illumination: Illuminates as soon as malfunction occurs.

6. DTC CLEAR CONDITION

- When the OK idling cycle was completed 40 times in a row
- When “Clear Memory” was performed

7. MALFUNCTION INDICATOR LIGHT CLEAR CONDITION

- When the OK driving cycle was completed 3 times in a row
- When “Clear Memory” was performed

8. FAIL SAFE

Stop the current to electronic throttle control motor. (Fix the throttle opening angle to 6°.)

9. ECM OPERATION AT DTC SETTING

Memorize the freeze frame data. (For test mode $02)

CL:DTC P0638 THROTTLE ACTUATOR CONTROL RANGE/PERFORMANCE (BANK 1)

1. OUTLINE OF DIAGNOSIS

Judge NG when the target opening angle and actual opening angle is mismatched or the current to motor is more than specified duty for specified time continuously.

2. COMPONENT DESCRIPTION

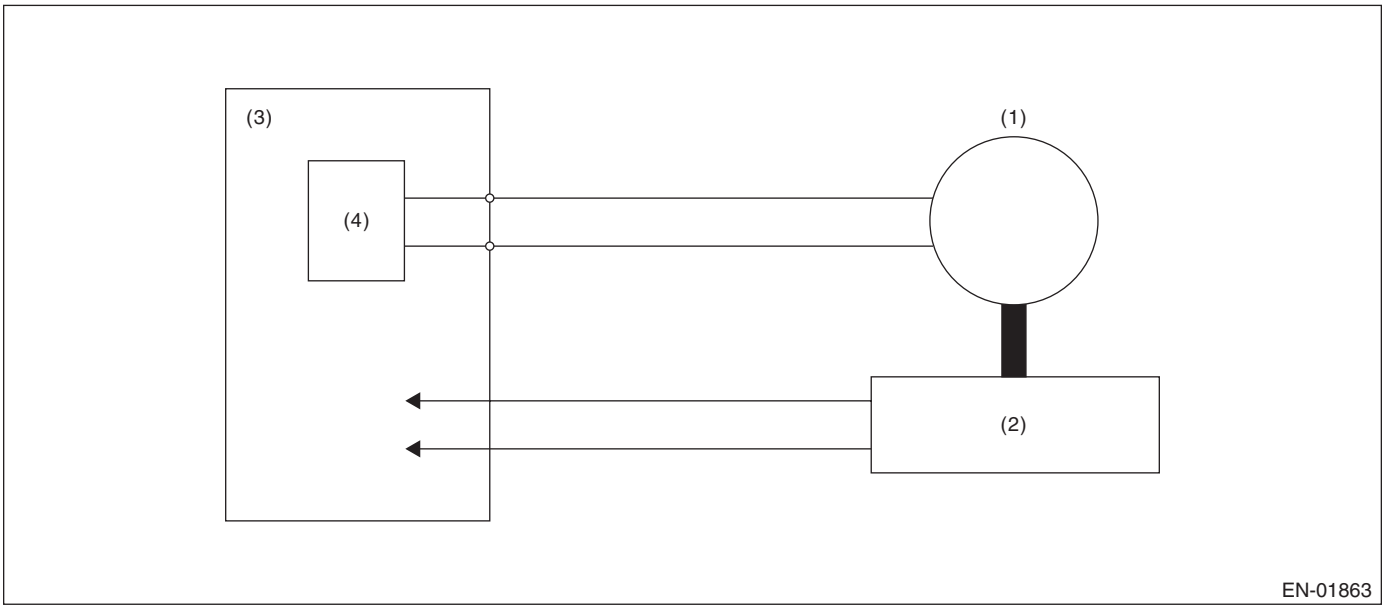

(1) Motor
(2) Throttle position sensor
(3) Engine control module (ECM)
(4) Drive circuit

3. ENABLE CONDITION

Secondary Parameters	Enable Conditions
Ignition switch	ON
Normal operation of electronic throttle control	ON

4. GENERAL DRIVING CYCLE

Always perform the diagnosis continuously when the electronic throttle control is operating.

5. DIAGNOSTIC METHOD

Judge OK and clear NG when the malfunction criteria below are completed.

Judgment Value

Malfunction Criteria	Threshold Value
Difference between target opening angle and actual opening angle	Less than 3.5°
Output duty to drive circuit	Less than 95%

Time Needed for Diagnosis:

Target opening angle and actual opening angle: 250 milliseconds (For NG) 2000 milliseconds (For OK)
Output duty to drive circuit: 2000 milliseconds

Details of Judgment

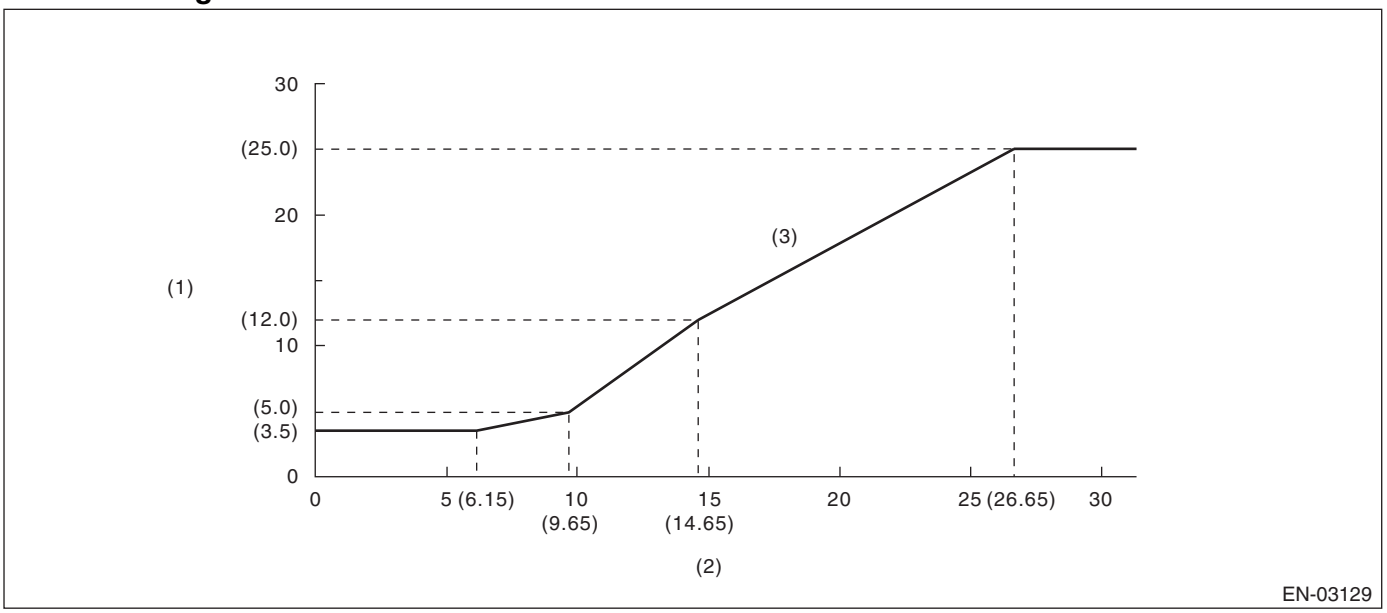

(1) Difference between target opening angle and actual opening angle (°)
(2) Target throttle opening angle (°)
(3) NG area

Details of Judgment (Always 1000 milliseconds when the actual opening angle ≤ target opening angle)

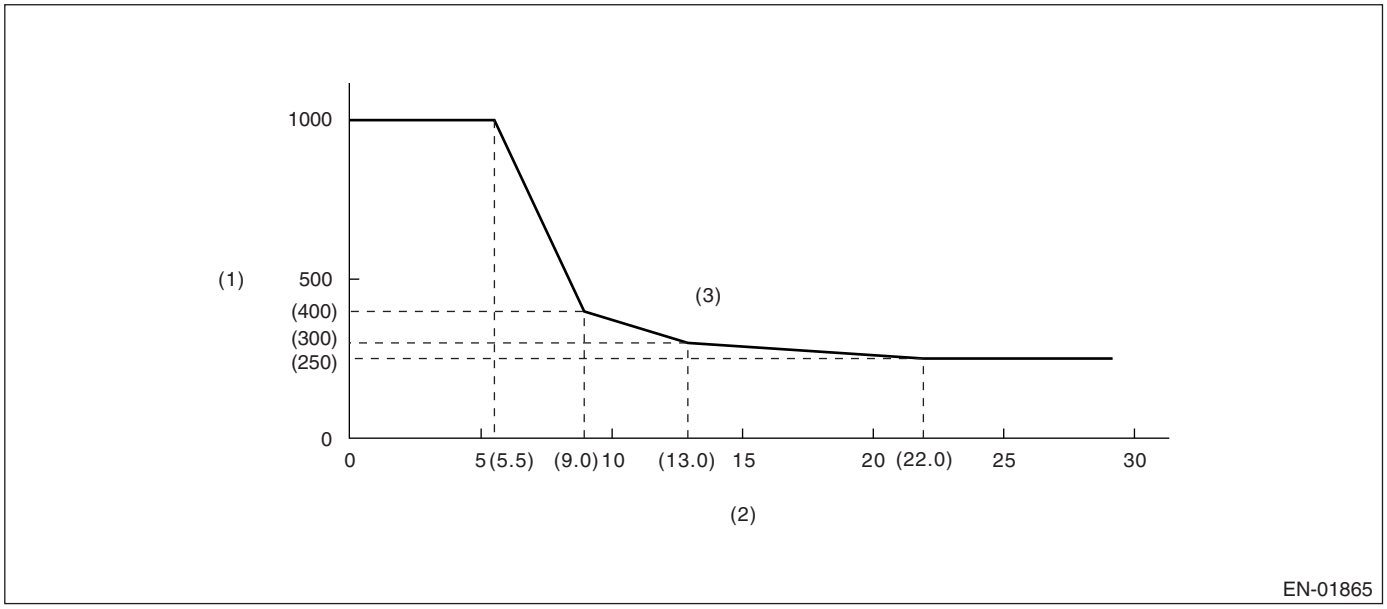

(1) Judgment time (milliseconds)
(2) Throttle position sensor 1 opening angle
(3) NG area

Malfunction Indicator Light Illumination: Illuminates as soon as malfunction occurs.

6. DTC CLEAR CONDITION

- When the OK idling cycle was completed 40 times in a row
- When “Clear Memory” was performed (Only with engine stoppedped)

7. MALFUNCTION INDICATOR LIGHT CLEAR CONDITION

- When the OK driving cycle was completed 3 times in a row
- When “Clear Memory” was performed (Only with engine stoppedped)

8. FAIL SAFE

Stop the current to electronic throttle control motor. (Fix the throttle opening angle to 6°.)

9. ECM OPERATION AT DTC SETTING

Memorize the freeze frame data. (For test mode $02)

CM:DTC P0691 COOLING FAN 1 CONTROL CIRCUIT LOW

1. OUTLINE OF DIAGNOSIS

Detect the open or short circuit of the radiator fan circuit.
Judge NG when the ECM output level differs from the actual terminal level.

2. ENABLE CONDITION

Secondary Parameters	Enable Conditions
None	

3. GENERAL DRIVING CYCLE

Always perform the diagnosis continuously.

4. DIAGNOSTIC METHOD

• Abnormality Judgment

Judge NG when the cumulative time of completing the malfunction criteria below becomes more than 2.5 seconds.

Judgment Value

Malfunction Criteria	Threshold Value
After starting the engine	1 seconds or more
Engine speed	≥ 500 rpm
Ignition switch	ON
Battery voltage	≥ 10.9 V
Terminal voltage level when ECM transmits OFF signal	Low level

Time Needed for Diagnosis: 2.5 seconds
Malfunction Indicator Light Illumination: Illuminates when malfunction occurs in 2 continuous driving cycles.

• Normality Judgment

Judge OK and clear NG when the malfunction criteria below are completed.

Judgment Value

Malfunction Criteria	Threshold Value
After starting the engine	1 seconds or more
Engine speed	≥ 500 rpm
Ignition switch	ON
Battery voltage	≥ 10.9 V
Terminal voltage level when ECM transmits OFF signal	High level

5. DTC CLEAR CONDITION

- When the OK idling cycle was completed 40 times in a row
- When “Clear Memory” was performed

6. MALFUNCTION INDICATOR LIGHT CLEAR CONDITION

- When the OK driving cycle was completed 3 times in a row
- When “Clear Memory” was performed

7. FAIL SAFE

None

8. ECM OPERATION AT DTC SETTING

Memorize the freeze frame data. (For test mode $02)

CN:DTC P0692 COOLING FAN 1 CONTROL CIRCUIT HIGH

1. OUTLINE OF DIAGNOSIS

Detect the open or short circuit of the radiator fan circuit.
Judge NG when the ECM output level differs from the actual terminal level.

2. ENABLE CONDITION

Secondary Parameters	Enable Conditions
None	

3. GENERAL DRIVING CYCLE

Always perform the diagnosis continuously.

4. DIAGNOSTIC METHOD

• Abnormality Judgment

Judge NG when the cumulative time of completing the malfunction criteria below becomes more than 2.5 seconds.

Judgment Value

Malfunction Criteria	Threshold Value
After starting the engine	1 seconds or more
Engine speed	≥ 500 rpm
Ignition switch	ON
Battery voltage	≥ 10.9 V
Terminal voltage level when ECM transmits ON signal	High level

Time Needed for Diagnosis: 2.5 seconds
Malfunction Indicator Light Illumination: Illuminates when malfunction occurs in 2 continuous driving cycles.

• Normality Judgment

Judge OK and clear NG when the malfunction criteria below are completed.

Judgment Value

Malfunction Criteria	Threshold Value
After starting the engine	1 seconds or more
Engine speed	≥ 500 rpm
Ignition switch	ON
Battery voltage	≥ 10.9 V
Terminal voltage level when ECM transmits ON signal	Low level

5. DTC CLEAR CONDITION

- When the OK idling cycle was completed 40 times in a row
- When “Clear Memory” was performed

6. MALFUNCTION INDICATOR LIGHT CLEAR CONDITION

- When the OK driving cycle was completed 3 times in a row
- When “Clear Memory” was performed

7. FAIL SAFE

None

8. ECM OPERATION AT DTC SETTING

Memorize the freeze frame data. (For test mode $02)

CO:DTC P0700 TRANSMISSION CONTROL SYSTEM (MIL REQUEST)

1. OUTLINE OF DIAGNOSIS

AT C/U performs CAN communication. It judges as NG if malfunction is detected.

2. ENABLE CONDITION

Secondary Parameters	Enable Conditions
Batery Voltage	≥ 10.9 V

3. GENERAL DRIVING CYCLE

Always perform diagnosis continously.

4. DIAGNOSTIC METHOD

It judges as NG if the following condition malfunctions more than the predetermined time (2.5 s). It judges as OK if the following condition does not malfunction, and the NG memory is cleared.

Judgment Value

Malfunction Criteria	Threshold Value
MIL light up request from TCM	set

Time needed for diagnosis: 2.5 seconds
Malfunction Indicator Light Illumination: Illuminates simultaneously when malfunction is detected.

5. DTC CLEAR CONDITION

- When the OK driving cycle was completed 40 consecutive times.
- When “Clear Memory” was performed.

6. MALFUNCTION INDICATOR LIGHT CLEAR CONDITION

- When the OK driving cycle was completed 3 consecutive times.
- When “Clear Memory” was performed.

7. FAIL-SAFE

None

8. ECM OPERATION AT DTC SETTING

Store the freeze frame data. (For test mode $02)

CP:DTC P0851 NEUTRAL SWITCH INPUT CIRCUIT LOW (AT MODEL)

1. OUTLINE OF DIAGNOSIS

Detect the open or short circuit of the neutral SW.
Judge NG when the ECM neutral terminal input differs from the reception data from TCM.

2. ENABLE CONDITION

Secondary Parameters	Enable Conditions
Ignition switch	ON
Battery voltage	≥ 10.9 V
After starting the engine	2 seconds or more
Starter switch	OFF

3. GENERAL DRIVING CYCLE

Perform the diagnosis continuously in 2 seconds or more after starting the engine.

4. DIAGNOSTIC METHOD

Judge NG when the continuous time of completing the malfunction criteria below becomes more than 2.56 seconds. Judge OK and clear NG when the malfunction criteria below are not completed.
Judgment Value

Malfunction Criteria	Threshold Value
Neutral switch signal when park/neutral = “OFF” & other switches = “ON” on AT	Low (ON)

Time Needed for Diagnosis: 2.56 seconds
Malfunction Indicator Light Illumination: Illuminates when malfunction occurs in 2 continuous driving cycles.

5. DTC CLEAR CONDITION

- When the OK idling cycle was completed 40 times in a row
- When “Clear Memory” was performed

6. MALFUNCTION INDICATOR LIGHT CLEAR CONDITION

- When the OK driving cycle was completed 3 times in a row
- When “Clear Memory” was performed

7. FAIL SAFE

Cruise control: Not allowed to command cruise control.

8. ECM OPERATION AT DTC SETTING

Memorize the freeze frame data. (For test mode $02)

CQ:DTC P0851 NEUTRAL SWITCH INPUT CIRCUIT LOW (MT MODEL)

1. OUTLINE OF DIAGNOSIS

Judge the open or short circuit of the neutral SW.
Judge NG when there is no change in the neutral SW even if the driving shift was applied. (There is neutral SW ON/OFF inversion from the vehicle speed and engine speed.)

2. ENABLE CONDITION

Secondary Parameters	Enable Conditions
Ignition switch	ON
Battery voltage	≥ 10.9 V
After starting the engine	2 seconds or more
Starter switch	OFF

3. GENERAL DRIVING CYCLE

Perform the diagnosis continuously in 2 seconds or more after starting the engine.

4. DIAGNOSTIC METHOD

Judge NG when the malfunction criteria below are completed 3 time or more after the neutral SW change.
Judge OK and clear NG if there is change in the neutral SW.

Judgment Value

Malfunction Criteria	Threshold Value
Neutral switch signal (while changing from a to b below)	Low
Driving condition change	a) to b)
a) Vehicle speed = 0 km/h (0 MPH) & engine speed 600 — 900 rpm	
b) Vehicle speed ≥ 64 km/h (40 MPH) & engine speed 1600 — 2550 rpm	

Time Needed for Diagnosis: 3 monitoring
Malfunction Indicator Light Illumination: Illuminates when malfunction occurs in 2 continuous driving cycles.

5. DTC CLEAR CONDITION

- When the OK idling cycle was completed 40 times in a row
- When “Clear Memory” was performed

6. MALFUNCTION INDICATOR LIGHT CLEAR CONDITION

- When the OK driving cycle was completed 3 times in a row
- When “Clear Memory” was performed

7. FAIL SAFE

Cruise control: Not allowed to command cruise control.

8. ECM OPERATION AT DTC SETTING

Memorize the freeze frame data. (For test mode $02)

CR:DTC P0852 NEUTRAL SWITCH INPUT CIRCUIT HIGH (AT MODEL)

1. OUTLINE OF DIAGNOSIS

Detect the open or short circuit of the neutral SW.
Judge NG when the ECM neutral terminal input differs from the reception data from TCM.

2. ENABLE CONDITION

Secondary Parameters	Enable Conditions
Ignition switch	ON
Battery voltage	≥ 10.9 V
After starting the engine	2 seconds or more
Starter switch	OFF

3. GENERAL DRIVING CYCLE

Perform the diagnosis continuously in 2 seconds or more after starting the engine.

4. DIAGNOSTIC METHOD

Judge NG when the continuous time until completing the malfunction criteria below becomes more than 2.56 seconds. Judge OK and clear NG when the malfunction criteria below are not completed.
Judgment Value

Malfunction Criteria	Threshold Value
Neutral switch signal when park/neutral = “ON” & other switches = “OFF” on AT	High (OFF)

Time Needed for Diagnosis: 2.56 seconds
Malfunction Indicator Light Illumination: Illuminates when malfunction occurs in 2 continuous driving cycles.

5. DTC CLEAR CONDITION

- When the OK idling cycle was completed 40 times in a row
- When “Clear Memory” was performed

6. MALFUNCTION INDICATOR LIGHT CLEAR CONDITION

- When the OK driving cycle was completed 3 times in a row
- When “Clear Memory” was performed

7. FAIL SAFE

Cruise control: Not allowed to command cruise control.

8. ECM OPERATION AT DTC SETTING

Memorize the freeze frame data. (For test mode $02)

CS:DTC P0852 NEUTRAL SWITCH INPUT CIRCUIT HIGH (MT MODEL)

1. OUTLINE OF DIAGNOSIS

Judge the open or short circuit of the neutral SW.
Judge NG when there is no change in the neutral SW even if the driving shift was applied. (There is neutral SW ON/OFF inversion from the vehicle speed and engine speed.)

2. ENABLE CONDITION

Secondary Parameters	Enable Conditions
Ignition switch	ON
Battery voltage	≥ 10.9 V
After starting the engine	2 seconds or more
Starter switch	OFF

3. GENERAL DRIVING CYCLE

Perform the diagnosis continuously in 2 seconds or more after starting the engine.

4. DIAGNOSTIC METHOD

Judge NG when the malfunction criteria below are completed 3 time or more after the neutral SW change.
Judge OK and clear NG if there is change in the neutral SW.

Judgment Value

Malfunction Criteria	Threshold Value
Neutral switch signal (while changing from a to b below)	High
Driving condition change	a) to b)
a) Vehicle speed = 0 km/h (0 MPH) & engine speed 600 — 900 rpm	
b) Vehicle speed ≥ 64 km/h (40 MPH) & engine speed 1600 — 2550 rpm	

Time Needed for Diagnosis: 3 monitoring
Malfunction Indicator Light Illumination: Illuminates when malfunction occurs in 2 continuous driving cycles.

5. DTC CLEAR CONDITION

- When the OK idling cycle was completed 40 times in a row
- When “Clear Memory” was performed

6. MALFUNCTION INDICATOR LIGHT CLEAR CONDITION

- When the OK driving cycle was completed 3 times in a row
- When “Clear Memory” was performed

7. FAIL SAFE

Cruise control: Not allowed to command cruise control.

8. ECM OPERATION AT DTC SETTING

Memorize the freeze frame data. (For test mode $02)

CT:DTC P1152 O2 SENSOR CIRCUIT RANGE/PERFORMANCE (LOW) (BANK1 SENSOR1)

1. OUTLINE OF DIAGNOSIS

Detect that lambda value remains Low.
Judge NG when lambda value is abnormal in accordance with lambda value of front oxygen (A/F) sensor and running condition that is vehicle speed, amount of intake air engine coolant temperature, sub feedback control, etc.
Lambda value = Actual air fuel ratio/Theoretical air fuel ratio
Lambda > 1: Lean
Lambda < 1: Rich

2. COMPONENT DESCRIPTION

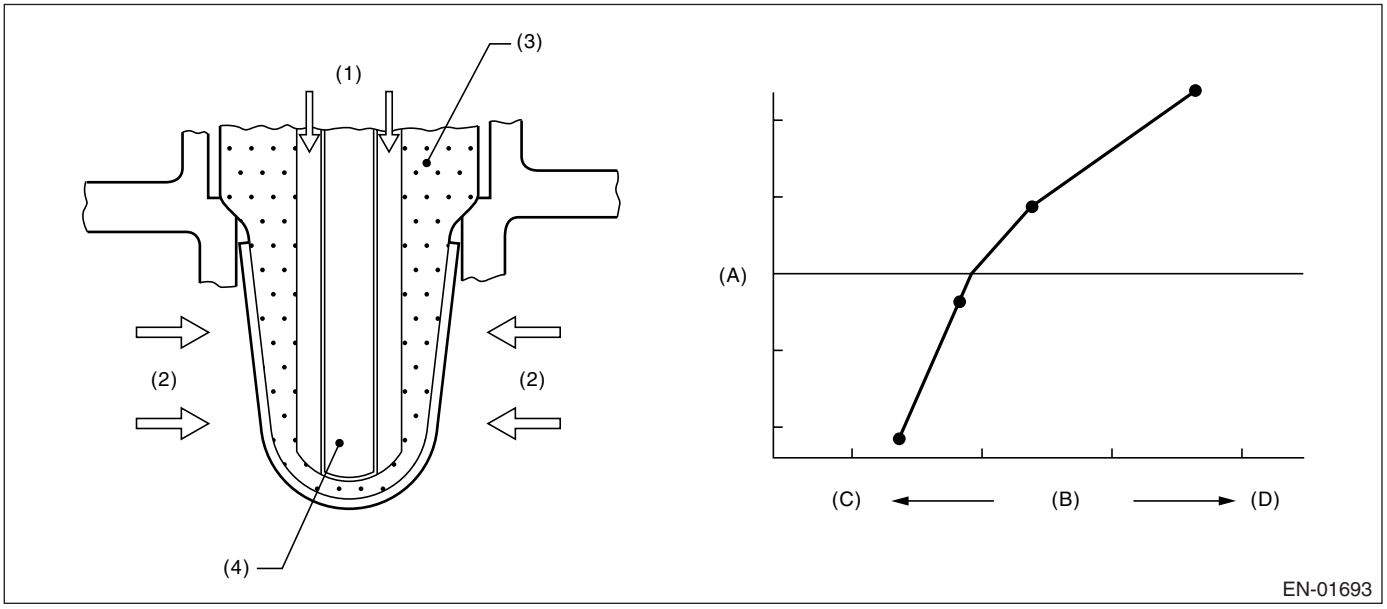

(1) Atmosphere
(2) Exhaust
(3) ZrO2
(4) Ceramic heater
(A) Electromotive force
(B) Air fuel ratio
(C) Lean
(D) Rich

3. ENABLE CONDITION

Secondary Parameters	Enable Conditions
All secondary parameters to be in enable conditions	4 seconds or more
Battery voltage	> 10.9 V
Atmospheric pressure	> 75.1 kPa (563 mmHg, 22.2 inHg)
Rear oxygen sensor sub feedback	Operating
Rear oxygen sensor output voltage – feedback target voltage	–0.2 V ←→ 0.1 V
Or rear oxygen sensor sub feedback compensation coefficient	On Min.
Or rear oxygen sensor sub feedback compensation coefficient	On Max.
After engine starting	60 seconds or more
Engine coolant temperature	≥ 70°C (158°F)
Vehicle speed	≥ 20 km/h (12 MPH)
Amount of intake air	≥ 6 g (0.21 oz)/s
Load change during 0.5 engine rev.	≤ 0.02 g (0.001 oz)/rev
Impedance of front oxygen (A/F) sensor	0 ←→ 50 Ω
Learning value of evaporation gas density	≤ 0.2
Accumulated time of operating canister purge	20 seconds or more
Target lambda load compensation coefficient	–0.03 ←→ 0

4. GENERAL DRIVING CYCLE

Perform diagnosis continuously at a constant speed of 20 km/h (12 MPH) or more since 60 seconds after starting the engine.

5. DIAGNOSTIC METHOD

Judge NG when the continuous time of completing the malfunction criteria below becomes more than the time needed for diagnosis (10 seconds). Judge OK and clear NG when the malfunction criteria below are not completed.

Judgment Value

Malfunction Criteria	Threshold Value
Output lambda when rear oxygen sensor sub feedback compensation coefficient being at not high limit	≤ 0.85

Time Needed for Diagnosis: 10 seconds
Malfunction Indicator Light Illumination: Illuminates when malfunction occurs in 2 continuous driving cycles.

6. DTC CLEAR CONDITION

- When the OK idling cycle was completed 40 times in a row
- When “Clear Memory” was performed

7. MALFUNCTION INDICATOR LIGHT CLEAR CONDITION

- When the OK driving cycle was completed 3 times in a row
- When “Clear Memory” was performed

8. FAIL SAFE

- Front oxygen (A/F) sensor main learning compensation: Not allowed to calculate
- Front oxygen (A/F) sensor sub learning compensation: Not allowed to calculate
- Correction when re-starting at high temperature: Normally minimum value 0.06 → 0
- Purge control: Not allowed to purge

9. ECM OPERATION AT DTC SETTING

Memorize the freeze frame data. (For test mode $02)

CU:DTC P1153 O2 SENSOR CIRCUIT RANGE/PERFORMANCE (HIGH) (BANK1 SENSOR1)

1. OUTLINE OF DIAGNOSIS

Detect that lambda value remains High.
Judge NG when lambda value is abnormal in accordance with lambda value of front oxygen (A/F) sensor and running condition that is vehicle speed, amount of intake air engine coolant temperature, sub feedback control, etc.
Lambda value = Actual air fuel ratio/Theoretical air fuel ratio
Lambda > 1: Lean
Lambda < 1: Rich

2. COMPONENT DESCRIPTION

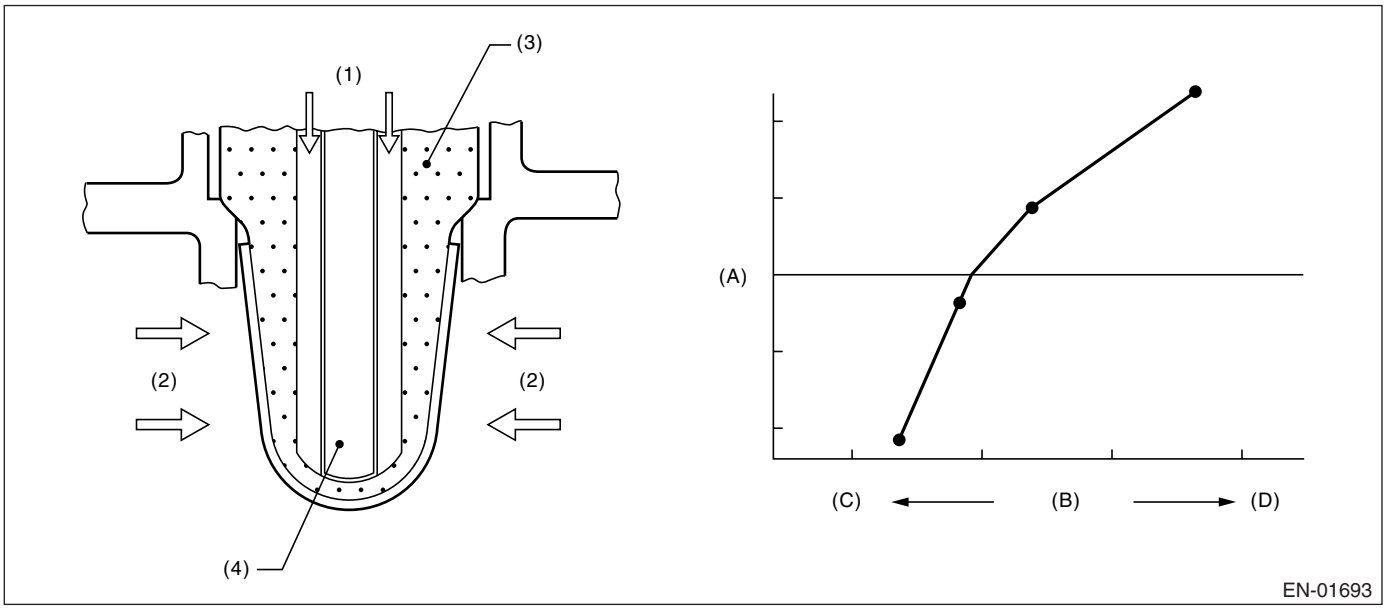

(1) Atmosphere
(2) Exhaust
(3) ZrO2
(4) Ceramic heater
(A) Electromotive force
(B) Air fuel ratio
(C) Lean
(D) Rich

3. ENABLE CONDITION

Secondary Parameters	Enable Conditions
All secondary parameters to be in enable conditions	4 seconds or more
Battery voltage	〉10.9 V
Atmospheric pressure	〉75.1 kPa (563 mmHg, 22.2 inHg)
Rear oxygen sensor sub feedback	Operating
Rear oxygen sensor output voltage – feedback target voltage	–0.2 V ←→ 0.1 V
Or rear oxygen sensor sub feedback compensation coefficient	On Min.
Or rear oxygen sensor sub feedback compensation coefficient	On Max.
After engine starting	60 seconds or more
Engine coolant temperature	≥ 70°C (158°F)
Vehicle speed	≥ 20 km/h (12 MPH)
Amount of intake air	≥ 6 g (0.21 oz)/s
Load change during 0.5 engine rev.	≤ 0.02 g (0.001 oz)/rev
Impedance of front oxygen (A/F) sensor	0 ←→ 50 Ω
Learning value of evaporation gas density	≤ 0.2
Accumulated time of operating canister purge	20 seconds or more
Target lambda load compensation coefficient	–0.03 ←→ 0

4. GENERAL DRIVING CYCLE

Perform diagnosis continuously at a constant speed of 20 km/h (12 MPH) or more since 60 seconds after starting the engine.

5. DIAGNOSTIC METHOD

Judge NG when the continuous time of completing the malfunction criteria below becomes more than the time needed for diagnosis (10 seconds). Judge OK and clear NG when the malfunction criteria below are not completed.

Judgment Value

Malfunction Criteria	Threshold Value
Output lambda when rear oxygen sensor sub feedback compensation coefficient value being at not low limit	≥ 1.15

Time Needed for Diagnosis: 10 seconds
Malfunction Indicator Light Illumination: Illuminates when malfunction occurs in 2 continuous driving cycles.

6. DTC CLEAR CONDITION

- When the OK idling cycle was completed 40 times in a row
- When “Clear Memory” was performed

7. MALFUNCTION INDICATOR LIGHT CLEAR CONDITION

- When the OK driving cycle was completed 3 times in a row
- When “Clear Memory” was performed

8. FAIL SAFE

- Front oxygen (A/F) sensor main learning compensation: Not allowed to calculate
- Front oxygen (A/F) sensor sub learning compensation: Not allowed to calculate.
- Correction when re-starting at high temperature: Normally minimum value 0.06 → 0
- Purge control: Not allowed to purge

9. ECM OPERATION AT DTC SETTING

Memorize the freeze frame data. (For test mode $02)

CV:DTC P1154 O2 SENSOR CIRCUIT RANGE/PERFORMANCE (LOW) (BANK 2 SENSOR 1)

1. OUTLINE OF DIAGNOSIS

For the detecting criteria, refer to P1152. <Ref. to GD(H4SO U5)-185, DTC P1152 O2 SENSOR CIRCUIT RANGE/PERFORMANCE (LOW) (BANK1 SENSOR1), Diagnostic Trouble Code (DTC) Detecting Criteria.>

CW:DTC P1155 O2 SENSOR CIRCUIT RANGE/PERFORMANCE (HIGH) (BANK 2 SENSOR 1)

1. OUTLINE OF DIAGNOSIS

For the detecting criteria, refer to P1153. <Ref. to GD(H4SO U5)-187, DTC P1153 O2 SENSOR CIRCUIT RANGE/PERFORMANCE (HIGH) (BANK1 SENSOR1), Diagnostic Trouble Code (DTC) Detecting Criteria.>

CX:DTC P1160 RETURN SPRING FAILURE

1. OUTLINE OF DIAGNOSIS

Judge NG when the valve does not move to the close direction with the motor power stopped and the valve open more than the default opening.

2. COMPONENT DESCRIPTION

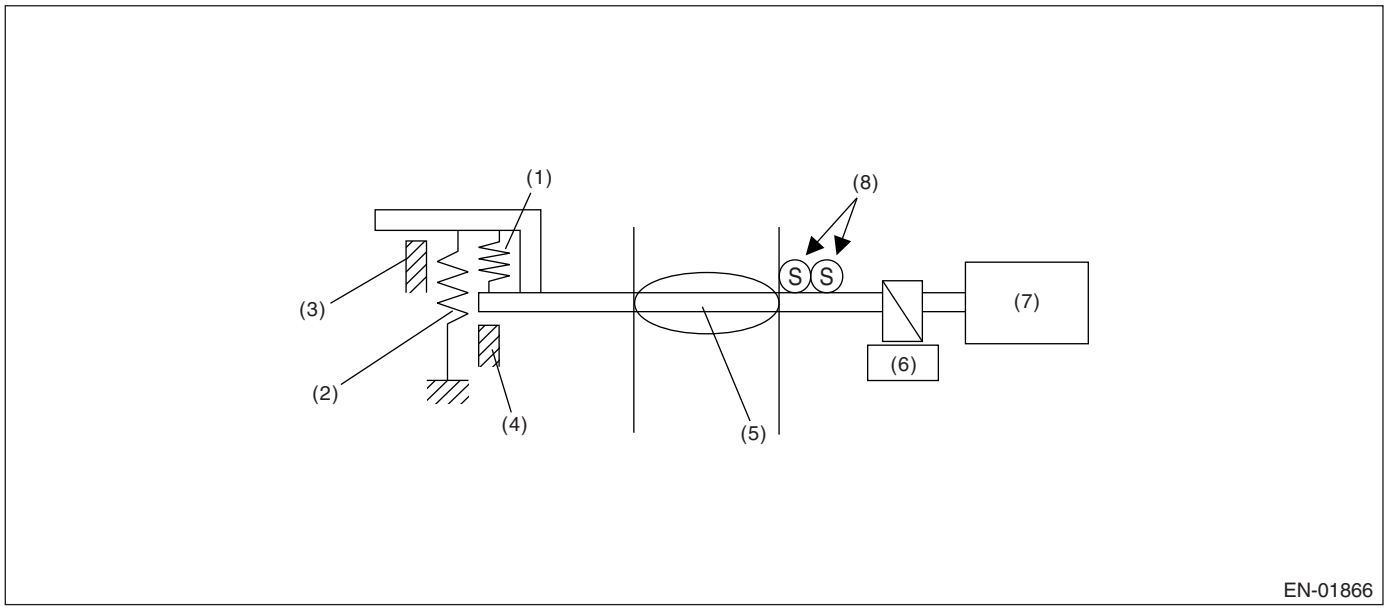

(1) Opener spring
(2) Return spring
(3) Intermediate stopper
(4) Full closed stopper
(5) Throttle valve
(6) Gear
(7) DC motor
(8) Main and sub throttle sensor

3. ENABLE CONDITION

Secondary Parameters	Enable Conditions
Throttle opening	OFF
Motor continuity	OFF

4. GENERAL DRIVING CYCLE

- Ignition switch ON → OFF
- Ignition switch OFF → ON (After clear memory only)

5. DIAGNOSTIC METHOD

Judge OK and clear the NG when the malfunction criteria below are completed.
Judgment Value

Malfunction Criteria	Threshold Value
Opening variation after continuity is set to OFF	≥ 2°

Time Needed for Diagnosis: 600 milliseconds
Malfunction Indicator Light Illumination: Illuminates as soon as malfunction occurs.

6. DTC CLEAR CONDITION

- When the OK idling cycle was completed 40 times in a row
- When “Clear Memory” was performed (Only with engine stopped)

7. MALFUNCTION INDICATOR LIGHT CLEAR CONDITION

- When the OK driving cycle was completed 3 times in a row
- When “Clear Memory” was performed (Only with engine stopped)

8. FAIL SAFE

Fix the throttle opening to 6°.

9. ECM OPERATION AT DTC SETTING

Memorize the freeze frame data. (For test mode $02)

CY:DTC P1400 FUEL TANK PRESSURE CONTROL SOLENOID VALVE CIRCUIT LOW

1. OUTLINE OF DIAGNOSIS

Detect open or short circuit of pressure control solenoid valve. Judge NG when ECM output level is different from actual terminal level.

2. COMPONENT DESCRIPTION

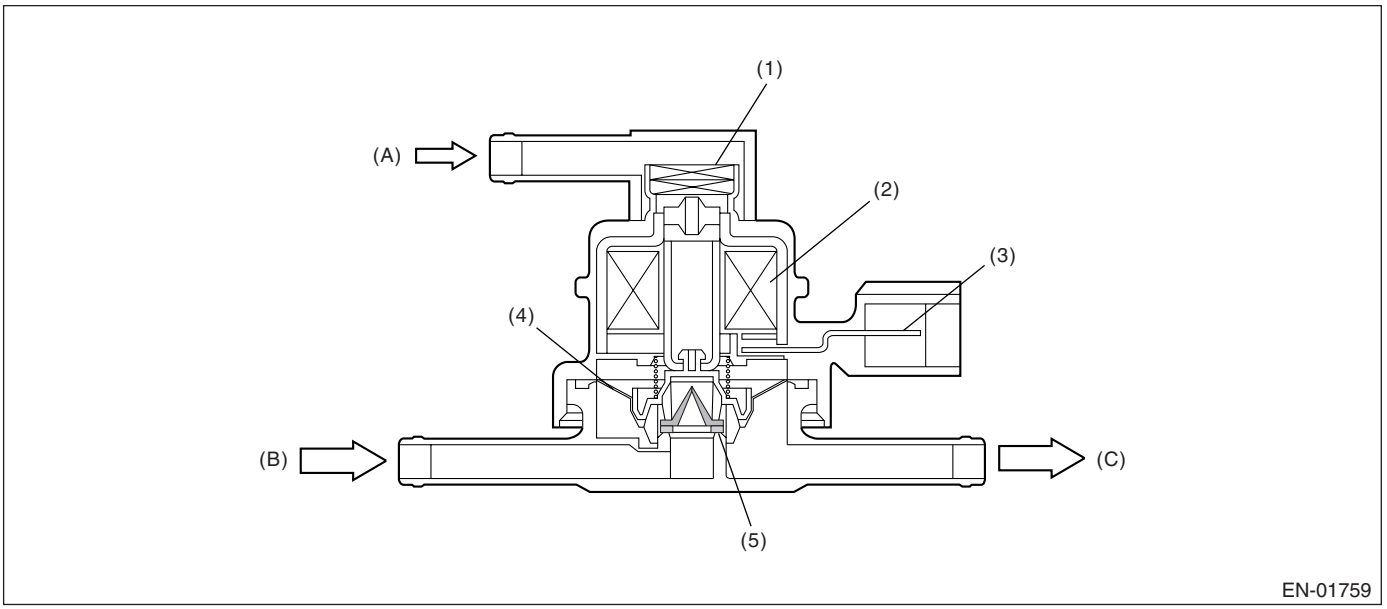

(1) Filter
(2) Coil
(3) Connector terminal
(4) Diaphragm
(5) Valve
(A) Atmospheric pressure
(B) Shut off valve
(C) To fuel tank

3. ENABLE CONDITION

Secondary Parameters	Enable Conditions
Ignition switch	ON
Battery voltage	≥ 10.9 V
After engine starting	1 second or more

4. GENERAL DRIVING CYCLE

Always perform the diagnosis after starting the engine.

5. DIAGNOSTIC METHOD

Judge NG when the continuous time of completing the malfunction criteria below becomes more than time needed for diagnosis (2.5 seconds). Judge OK and clear the NG when the malfunction criteria below are not completed.

Judgment Value

Malfunction Criteria	Threshold Value
Terminal voltage when ECM outputs OFF signal	Low

Time Needed for Diagnosis: 2.5 seconds
Malfunction Indicator Light Illumination: Illuminates when malfunction occurs in two continuous drive cycles.

6. DTC CLEAR CONDITION

- When the OK idling cycle was completed 40 times in a row
- When “Clear Memory” was performed

7. MALFUNCTION INDICATOR LIGHT CLEAR CONDITION

- When the OK driving cycle was completed 3 times in a row
- When “Clear Memory” was performed

8. FAIL SAFE

None

9. ECM OPERATION AT DTC SETTING

Memorize the freeze frame data. (For test mode $02)

CZ:DTC P1420 FUEL TANK PRESSURE CONTROL SOL. VALVE CIRCUIT HIGH

1. OUTLINE OF DIAGNOSIS

Detect open or short circuit of pressure control solenoid valve.
Judge NG when ECM output level is different from actual terminal level.

2. COMPONENT DESCRIPTION

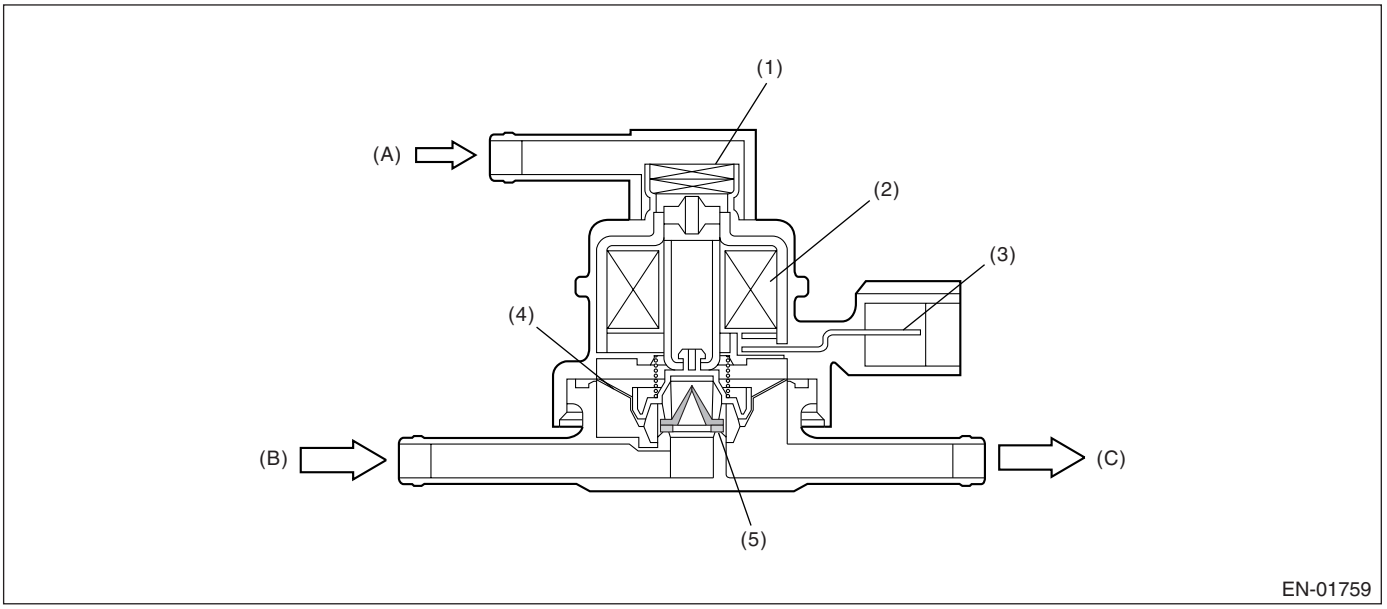

(1) Filter
(2) Coil
(3) Connector terminal
(4) Diaphragm
(5) Valve
(A) Atmospheric pressure
(B) Shut off valve
(C) To fuel tank

3. ENABLE CONDITION

Secondary Parameters	Enable Conditions
Ignition switch	ON
Battery voltage	≥ 10.9 V
After engine starting	1 second or more

4. GENERAL DRIVING CYCLE

Always perform the diagnosis after starting the engine.

5. DIAGNOSTIC METHOD

Judge NG when the continuous time of completing the malfunction criteria below becomes more than time needed for diagnosis (2.5 seconds). Judge OK and clear the NG when the malfunction criteria below are not completed.

Judgment Value

Malfunction Criteria	Threshold Value
Terminal voltage when ECM outputs ON signal	High

Time Needed for Diagnosis: 2.5 seconds
Malfunction Indicator Light Illumination: Illuminates when malfunction occurs in two continuous drive cycles.

6. DTC CLEAR CONDITION

- When the OK idling cycle was completed 40 times in a row
- When “Clear Memory” was performed

7. MALFUNCTION INDICATOR LIGHT CLEAR CONDITION

- When the OK driving cycle was completed 3 times in a row
- When “Clear Memory” was performed

8. FAIL SAFE

None

9. ECM OPERATION AT DTC SETTING

Memorize the freeze frame data. (For test mode $02)

DA:DTC P1443 VENT CONTROL SOLENOID VALVE FUNCTION PROBLEM

1. OUTLINE OF DIAGNOSIS

Detect malfunction of drain valve (close fixing).
Judge NG when the fuel tank pressure is small.

2. COMPONENT DESCRIPTION

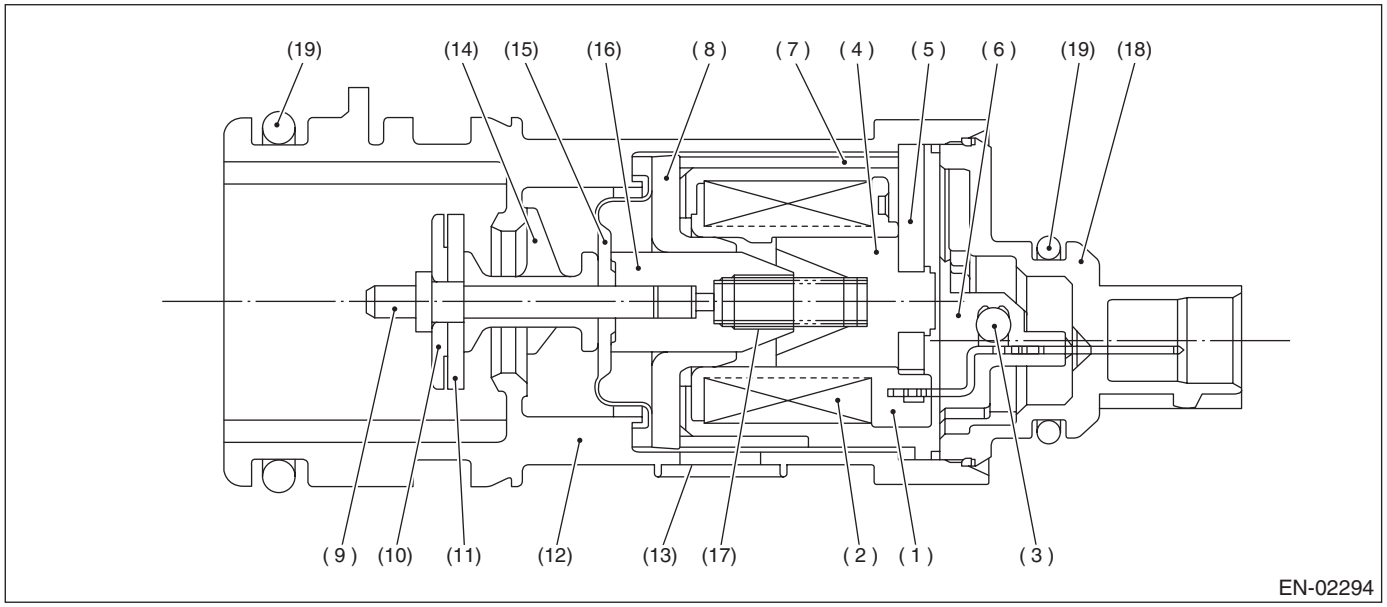

(1) Bobbin
(2) Coil
(3) Diode
(4) Stator core
(5) End plate
(6) Body
(7) Yoke
(8) Magnetic plate
(9) Shaft
(10) Plate
(11) Valve
(12) Housing
(13) Filter
(14) Retainer
(15) Diaphragm
(16) Movable core
(17) Spring
(18) Cover
(19) O-ring

3. ENABLE CONDITION

Secondary Parameter	Enable Condition
Drain valve	Open
Battery voltage	≥ 10.9 V
Atmospheric pressure	≥ 75.0 kPa (563 mmHg, 22.17 inHg)
Tank pressure when starter ON → OFF	−0.43 ←→ 1.43 kPa (−3.2 ←→ 10.7 mmHg, −0.13 ←→ 0.42 inHg)

4. GENERAL DRIVING CYCLE

Always perform the diagnosis continuously.

5. DIAGNOSTIC METHOD

• Abnormality Judgment

Judge NG when the continuous time of completing the malfunction criteria below becomes more than 3 seconds.

Judgment Value

Malfunction Criteria	Threshold Value
Tank pressure	≤ –4.0 kPa (–30 mmHg, –1.18 inHg)

Time Needed for Diagnosis: 3 seconds
Malfunction Indicator Light Illumination: Illuminates as soon as the malfunction occurs.
• Normality Judgment

Judge OK and clear the NG when the malfunction criteria below are completed.
Judgment Value

Malfunction Criteria	Threshold Value
Tank pressure	> –4.0 kPa (–30 mmHg, –1.18 inHg)
Cumulative time for completing the malfunction criteria below	≥ 30 seconds
Purge control solenoid valve duty ratio	Except 0
Fuel temperature	–10 ←→ 45°C (14 ←→ 113°F)
Intake manifold relative pressure	≤ –26.7 kPa (–200 mmHg, –7.87 inHg)

6. DTC CLEAR CONDITION

- When the OK idling cycle was completed 40 times in a row
- When “Clear Memory” was performed

7. MALFUNCTION INDICATOR LIGHT CLEAR CONDITION

- When the OK driving cycle was completed 3 times in a row
- When “Clear Memory” was performed

8. FAIL SAFE

PCV control: Open the PCV solenoid.

9. ECM OPERATION AT DTC SETTING

Memorize the freeze frame data. (For test mode $02)

DB:DTC P1446 FUEL TANK SENSOR CONTROL VALVE CIRCUIT LOW

1. OUTLINE OF DIAGNOSIS

Detect the open or short circuit of fuel tank sensor control valve.
Judge NG when the ECM output level is different from actual terminal level.

2. COMPONENT DESCRIPTION

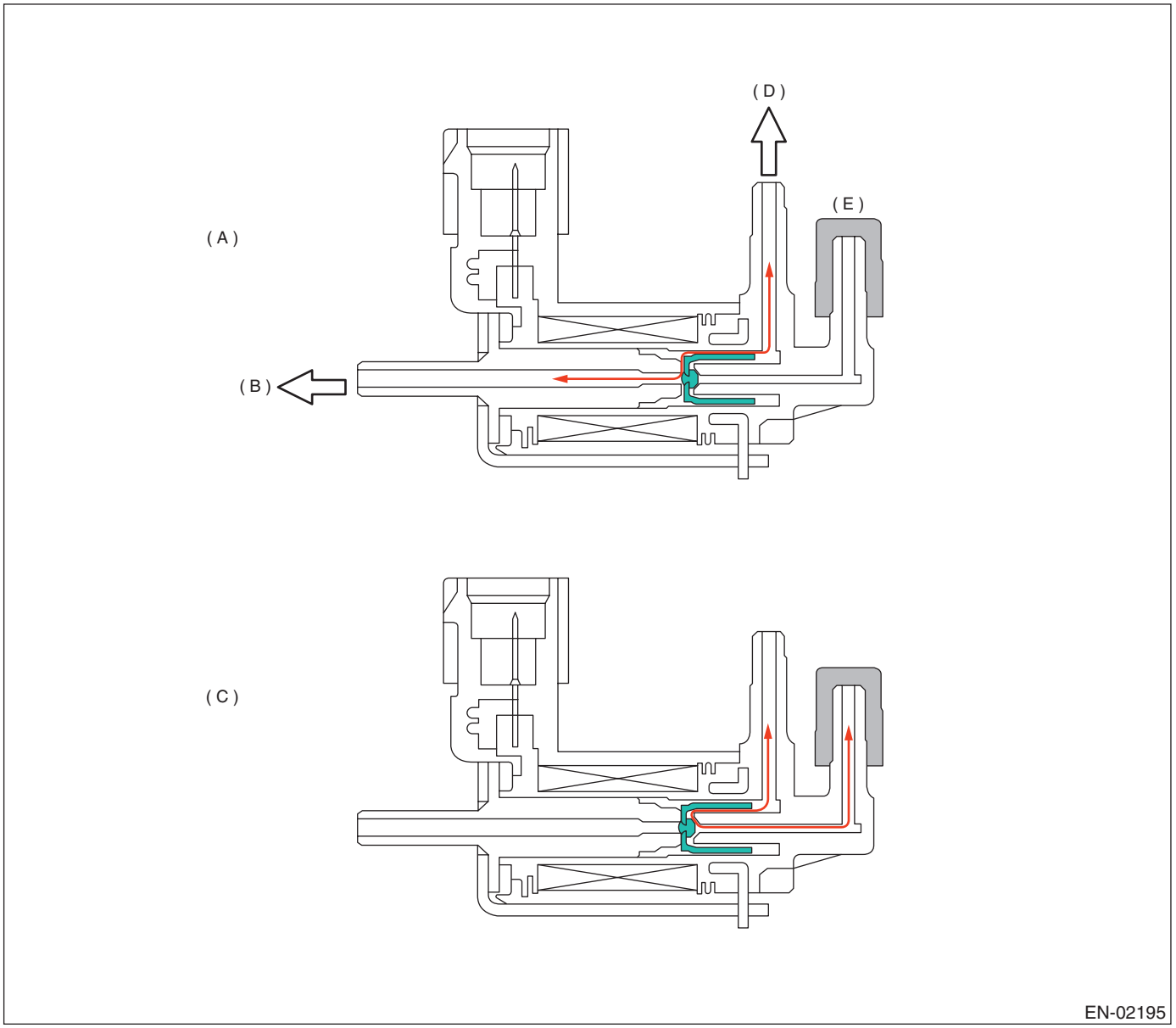

(A) Open atmosphere (solenoid OFF)
(B) Ambient air
(C) During diagnosis (solenoid ON)
(D) To pressure sensor
(E) Plug

3. ENABLE CONDITION

Secondary Parameters	Enable Conditions
None	

4. GENERAL DRIVING CYCLE

Always perform the diagnosis continuously.

5. DIAGNOSTIC METHOD

• Abnormality Judgment

Judge NG when the continuous time of completing the malfunction criteria below becomes more than 2.5 seconds.

Judgment Value

Malfunction Criteria	Threshold Value
Battery voltage	≥ 10.9 V
After engine starting	1 second or more
Terminal output voltage when ECM output OFF signals	Low
Ignition switch	ON

Time Needed for Diagnosis: 2.5 seconds
Malfunction Indicator Light Illumination: Illuminates when malfunction occurs in 2 continuous driving cycles.

• Normality Judgment

Judge OK when the malfunction criteria below are completed.

Judgment Value

Malfunction Criteria	Threshold Value
Battery voltage	≥ 10.9 V
After engine starting	1 second or more
Terminal output voltage when ECM output OFF signals	High
Ignition switch	ON

6. DTC CLEAR CONDITION

- When the OK idling cycle is completed 40 times in a row
- When “Clear Memory” was performed

7. MALFUNCTION INDICATOR LIGHT CLEAR CONDITION

- When the OK driving cycle is completed 3 times in a row
- When “Clear Memory” was performed

8. FAIL SAFE

None

9. ECM OPERATION AT DTC SETTING

Memorize the freeze frame data. (For test mode $02)

DC:DTC P1447 FUEL TANK SENSOR CONTROL VALVE CIRCUIT HIGH

1. OUTLINE OF DIAGNOSIS

Detect the open or short circuit of fuel tank sensor control valve.
Judge NG when the ECM output level is different from actual terminal level.

2. COMPONENT DESCRIPTION

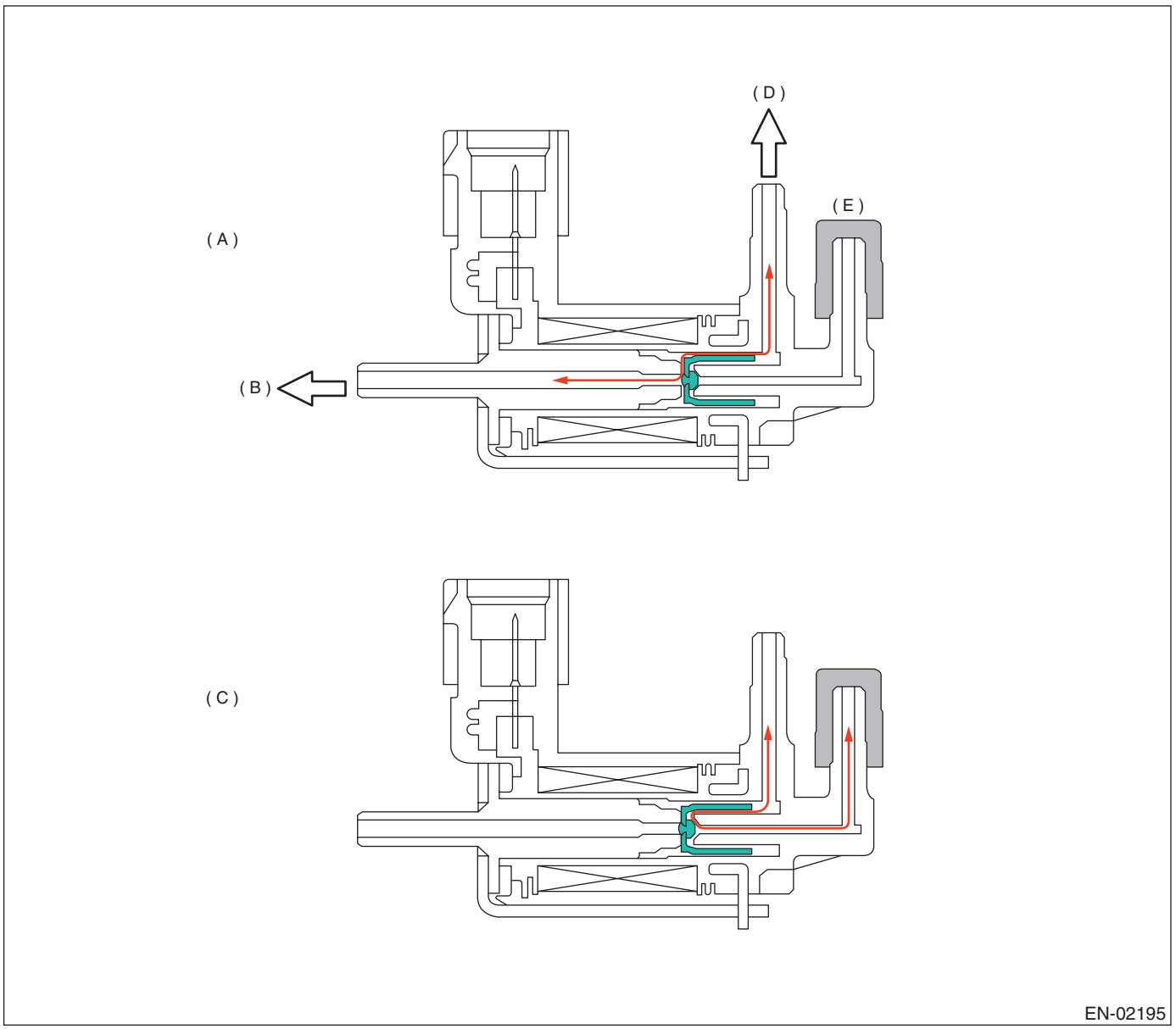

(A) Open atmosphere (solenoid OFF)
(B) Ambient air
(C) During diagnosis (solenoid ON)
(D) To pressure sensor
(E) Plug

3. ENABLE CONDITION

Secondary Parameters	Enable Conditions
None	

4. GENERAL DRIVING CYCLE

Always perform the diagnosis continuously.

5. DIAGNOSTIC METHOD

• Abnormality Judgment

Judge NG when the cumulative time of completing the malfunction criteria below becomes more than 2.5 seconds.

Judgment Value

Malfunction Criteria	Threshold Value
Battery voltage	≥ 10.9 V
After engine starting	1 second or more
Terminal output voltage when ECM output ON signals	High
Ignition switch	ON

Time Needed for Diagnosis: 2.5 seconds
Malfunction Indicator Light Illumination: Illuminates when malfunction occurs in two continuous drive cycles.

• Normality Judgment

Judge OK when the malfunction criteria below are completed.

Judgment Value

Malfunction Criteria	Threshold Value
Battery voltage	≥ 10.9 V
After engine starting	1 second or more
Terminal output voltage when ECM output OFF signals	Low
Ignition switch	ON

6. DTC CLEAR CONDITION

- When the OK idling cycle is completed 40 times in a row
- When “Clear Memory” was performed

7. MALFUNCTION INDICATOR LIGHT CLEAR CONDITION

- When the OK driving cycle is completed 3 times in a row
- When “Clear Memory” was performed

8. FAIL SAFE

None

9. ECM OPERATION AT DTC SETTING

Memorize the freeze frame data. (For test mode $02)

DD:DTC P1492 EGR SOLENOID VALVE SIGNAL #1 CIRCUIT MALFUNCTION (LOW INPUT)

1. OUTLINE OF DIAGNOSIS

- Detect the open/short circuit of EGR.
- Judge NG when ECM output level is different from actual terminal level.

2. COMPONENT DESCRIPTION

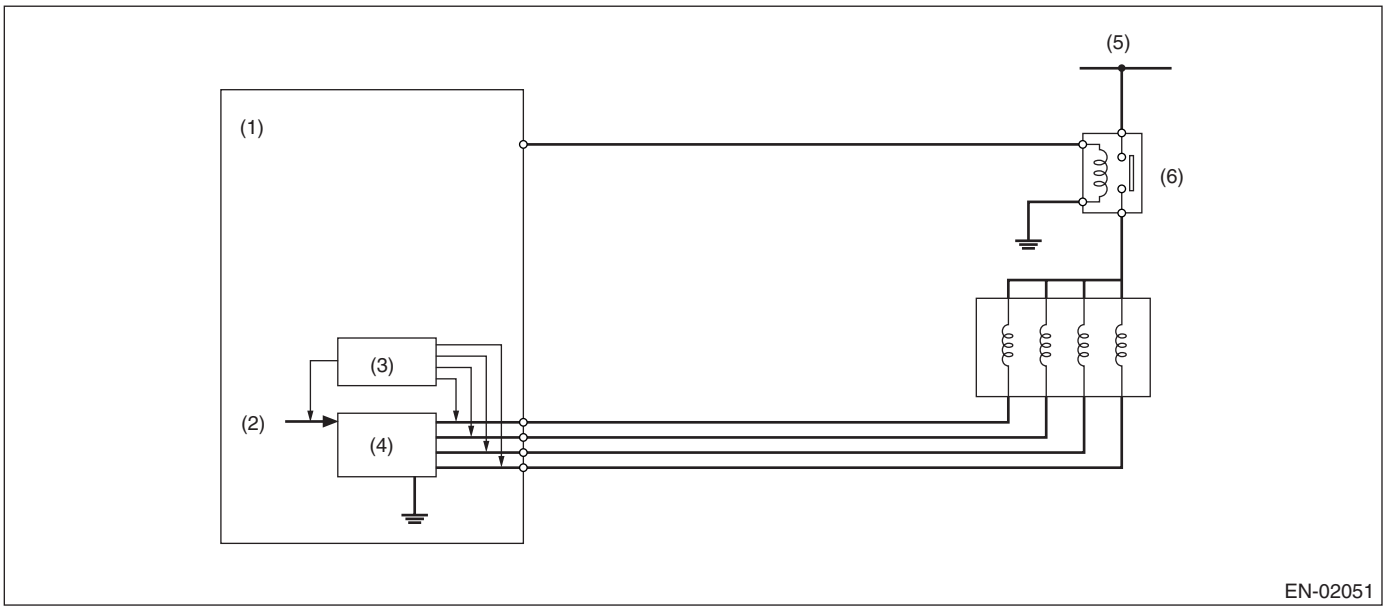

(1) Engine Control Module (ECM)
(2) CPU
(3) Detecting circuit
(4) Switching circuit
(5) Battery voltage
(6) Main relay

3. ENABLE CONDITION

Secondary Parameters	Enable Conditions
Target position of EGR valve	〉0 step
Battery voltage	〉10.9 V

4. GENERAL DRIVING CYCLE

Perform the diagnosis continuously when EGR operating.

5. DIAGNOSTIC METHOD

• Abnormality Judgment

Judge NG when the continuous time until completing the malfunction criteria below becomes more than time needed for diagnosis.

Judgment Value

Malfunction Criteria	Threshold Value
Terminal voltage level when ECM outputs OFF signal	Low level

Time Needed for Diagnosis: 2.5 seconds
Malfunction Indicator Light Illumination: Illuminates as soon as malfunction occurs.

• Normality Judgment

Judge OK and clear the NG when the malfunction criteria below are not completed.

Judgment Value

Malfunction Criteria	Threshold Value
Terminal voltage level when ECM outputs OFF signal	High level

6. DTC CLEAR CONDITION

- When the OK idling cycle was completed 40 times in a row
- When “Clear Memory” was performed

7. MALFUNCTION INDICATOR LIGHT CLEAR CONDITION

- When the OK driving cycle was completed 3 times in a row
- When “Clear Memory” was performed

8. FAIL SAFE

- Front oxygen (A/F) sensor main learning compensation: Not allowed to calculate
- Knock sensor learning compensation: Not allowed to calculate
- EGR control: Not allowed to operate

9. ECM OPERATION AT DTC SETTING

Memorize the freeze frame data. (For test mode $02)

DE:DTC P1493 EGR SOLENOID VALVE SIGNAL #1 CIRCUIT MALFUNCTION (HIGH INPUT)

1. OUTLINE OF DIAGNOSIS

- Detect the open/short circuit of EGR.
- Judge NG when ECM output level is different from actual terminal level.

2. COMPONENT DESCRIPTION

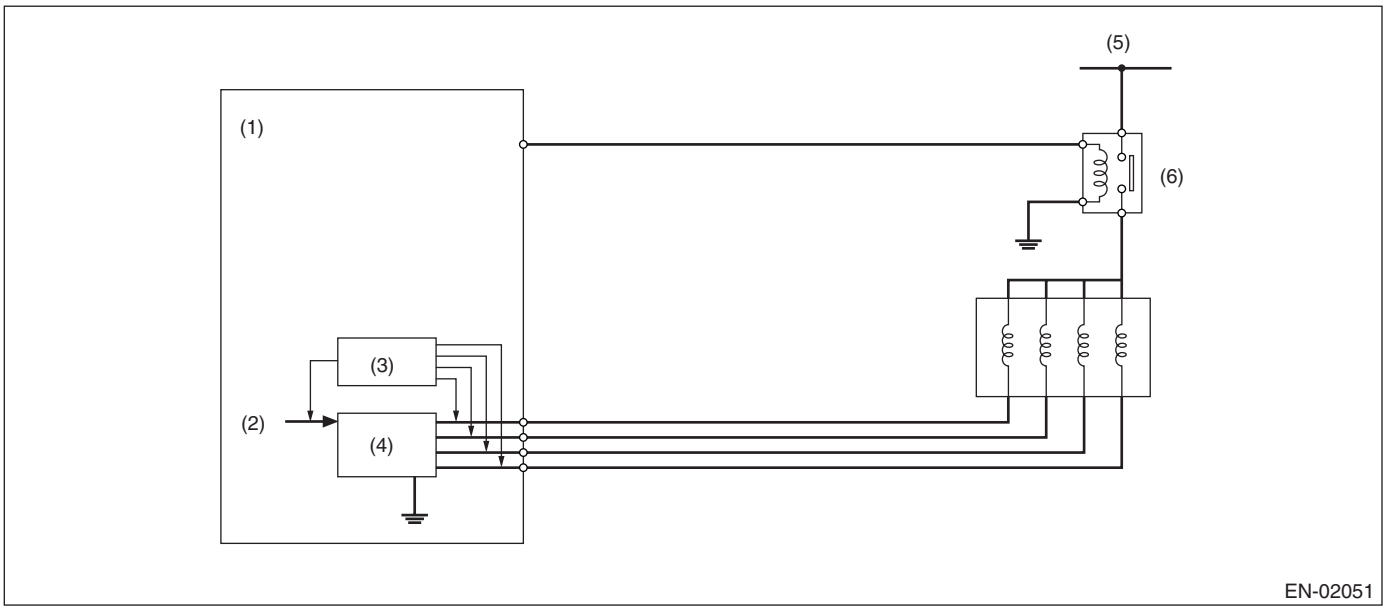

(1) Engine Control Module (ECM)
(2) CPU
(3) Detecting circuit
(4) Switching circuit
(5) Battery voltage
(6) Main relay

3. ENABLE CONDITION

Secondary Parameters	Enable Conditions
Battery voltage	〉10.9 V
Target position of EGR valve	〉0 step

4. GENERAL DRIVING CYCLE

Always perform the diagnosis continuously.

5. DIAGNOSTIC METHOD

• Abnormality Judgment

Judge NG when the continuous time until completing the malfunction criteria below becomes more than time needed for diagnosis.

Judgment Value

Malfunction Criteria	Threshold Value
Terminal voltage level when ECM outputs ON signal	High level

Time Needed for Diagnosis: 2.5 seconds
Malfunction Indicator Light Illumination: Illuminates as soon as malfunction occurs.

• Normality Judgment

Judge OK and clear the NG when the malfunction criteria below are not completed.

Judgment Value

Malfunction Criteria	Threshold Value
Terminal voltage level when ECM outputs ON signal	Low level

6. DTC CLEAR CONDITION

- When the OK idling cycle is completed 40 times in a row
- When “Clear Memory” was performed

7. MALFUNCTION INDICATOR LIGHT CLEAR CONDITION

- When the OK driving cycle was completed 3 times in a row
- When “Clear Memory” was performed

8. FAIL SAFE

- Front oxygen (A/F) sensor main learning compensation: Not allowed to calculate
- Knock sensor learning compensation: Not allowed to calculate
- EGR control: Not allowed to operate

9. ECM OPERATION AT DTC SETTING

Memorize the freeze frame data. (For test mode $02)

DF:DTC P1494 EGR SOLENOID VALVE SIGNAL #2 CIRCUIT MALFUNCTION (LOW INPUT)

1. OUTLINE OF DIAGNOSIS

- Detect the open/short circuit of EGR.
- Judge NG when ECM output level is different from actual terminal level.

2. COMPONENT DESCRIPTION

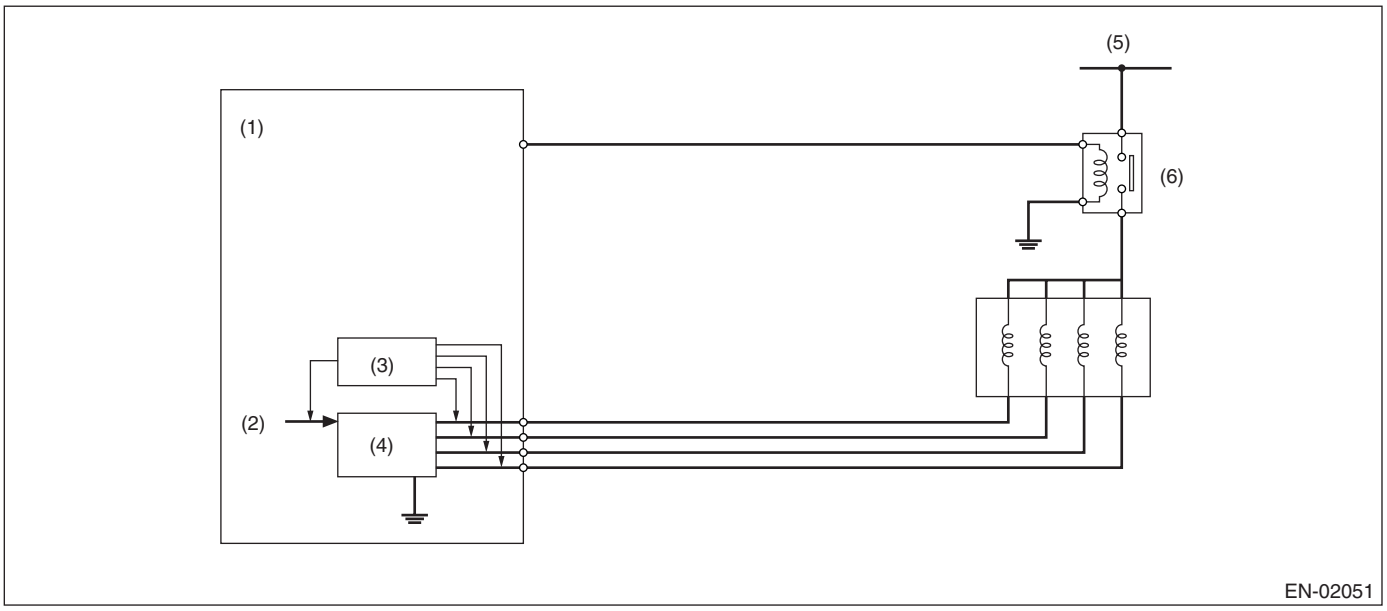

(1) Engine Control Module (ECM)
(2) CPU
(3) Detecting circuit
(4) Switching circuit
(5) Battery voltage
(6) Main relay

3. ENABLE CONDITION

Secondary Parameters	Enable Conditions
Target position of EGR valve	〉0 step
Battery voltage	〉10.9 V

4. GENERAL DRIVING CYCLE

Perform the diagnosis continuously when EGR operating.

5. DIAGNOSTIC METHOD

• Abnormality Judgment

Judge NG when the continuous time until completing the malfunction criteria below becomes more than time needed for diagnosis.

Judgment Value

Malfunction Criteria	Threshold Value
Terminal voltage level when ECM outputs OFF signal	Low level

Time Needed for Diagnosis: 2.5 seconds
Malfunction Indicator Light Illumination: Illuminates as soon as malfunction occurs.

• Normality Judgment

Judge OK and clear the NG when the malfunction criteria below are not completed.
Judgment Value

Malfunction Criteria	Threshold Value
Terminal voltage level when ECM outputs OFF signal	High level

6. DTC CLEAR CONDITION

- When the OK idling cycle is completed 40 times in a row
- When “Clear Memory” was performed

7. MALFUNCTION INDICATOR LIGHT CLEAR CONDITION

- When the OK driving cycle was completed 3 times in a row
- When “Clear Memory” was performed

8. FAIL SAFE

- Front oxygen (A/F) sensor main learning compensation: Not allowed to calculate
- Knock sensor learning compensation: Not allowed to calculate
- EGR control: Not allowed to operate

9. ECM OPERATION AT DTC SETTING

Memorize the freeze frame data. (For test mode $02)

DG:DTC P1495 EGR SOLENOID VALVE SIGNAL #2 CIRCUIT MALFUNCTION (HIGH INPUT)

1. OUTLINE OF DIAGNOSIS

- Detect the open/short circuit of EGR.
- Judge NG when ECM output level is different from actual terminal level.

2. COMPONENT DESCRIPTION

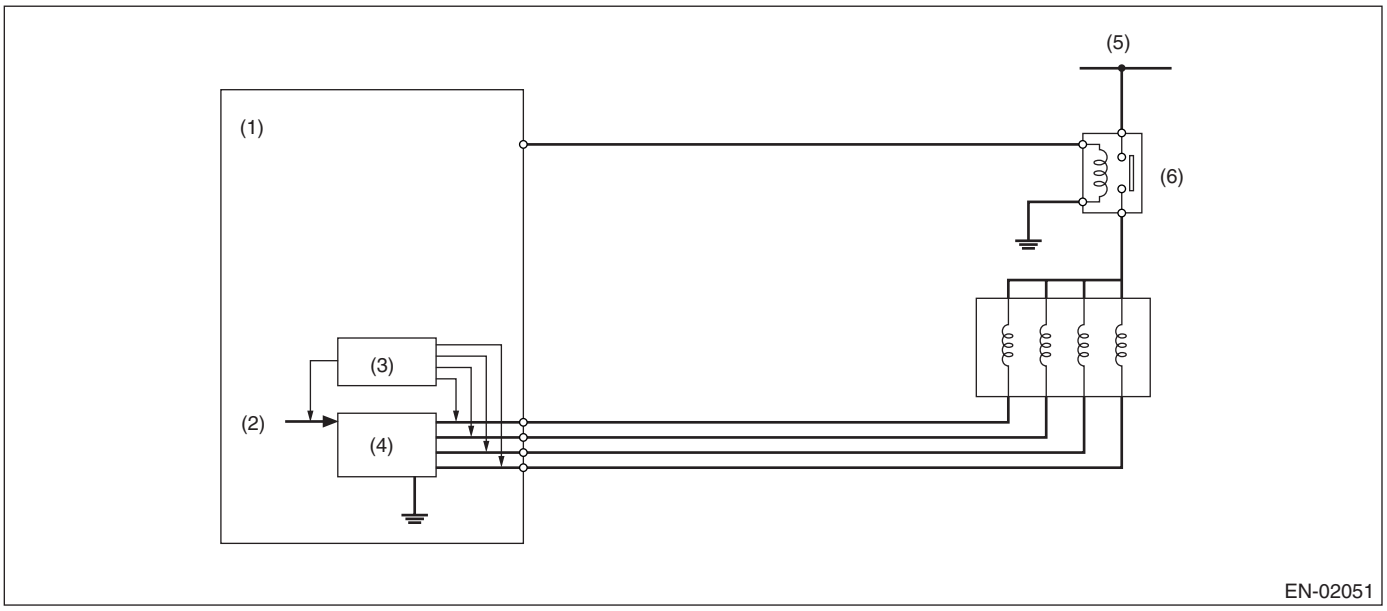

(1) Engine Control Module (ECM)
(2) CPU
(3) Detecting circuit
(4) Switching circuit
(5) Battery voltage
(6) Main relay

3. ENABLE CONDITION

Secondary Parameters	Enable Conditions
Battery voltage	〉10.9 V
Target position of EGR valve	〉0 step

4. GENERAL DRIVING CYCLE

Always perform the diagnosis continuously.

5. DIAGNOSTIC METHOD

• Abnormality Judgment

Judge NG when the continuous time until completing the malfunction criteria below becomes more than time needed for diagnosis.

Judgment Value

Malfunction Criteria	Threshold Value
Terminal voltage level when ECM outputs OFF signal	High level

Time Needed for Diagnosis: 2.5 seconds
Malfunction Indicator Light Illumination: Illuminates as soon as malfunction occurs.

• Normality Judgment

Judge OK and clear the NG when the malfunction criteria below are not completed.

Judgment Value

Malfunction Criteria	Threshold Value
Terminal voltage level when ECM outputs OFF signal	Low level

6. DTC CLEAR CONDITION

- When the OK idling cycle is completed 40 times in a row
- When “Clear Memory” was performed

7. MALFUNCTION INDICATOR LIGHT CLEAR CONDITION

- When the OK driving cycle was completed 3 times in a row
- When “Clear Memory” was performed

8. FAIL SAFE

- Front oxygen (A/F) sensor main learning compensation: Not allowed to calculate
- Knock sensor learning compensation: Not allowed to calculate
- EGR control: Not allowed to operate

9. ECM OPERATION AT DTC SETTING

Memorize the freeze frame data. (For test mode $02)

DH:DTC P1496 EGR SOLENOID VALVE SIGNAL #3 CIRCUIT MALFUNCTION (LOW INPUT)

1. OUTLINE OF DIAGNOSIS

- Detect the open/short circuit of EGR.
- Judge NG when ECM output level is different from actual terminal level.

2. COMPONENT DESCRIPTION

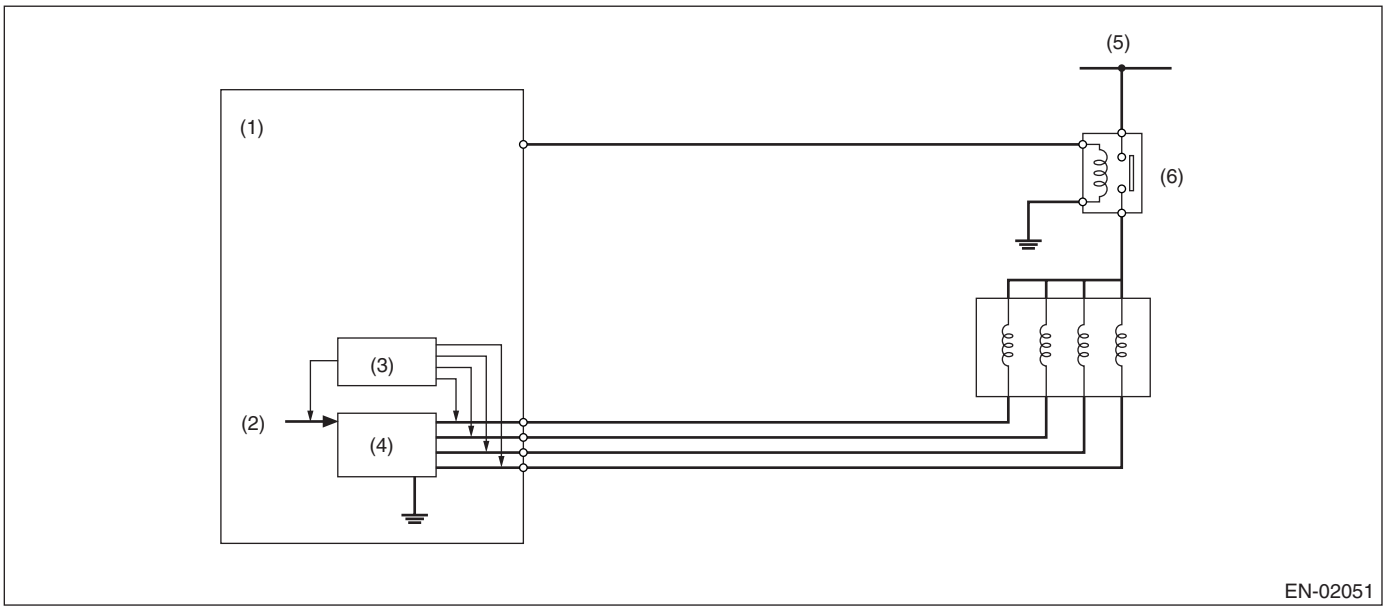

(1) Engine Control Module (ECM)
(2) CPU
(3) Detecting circuit
(4) Switching circuit
(5) Battery voltage
(6) Main relay

3. ENABLE CONDITION

Secondary Parameters	Enable Conditions
Target position of EGR valve	〉0 step
Battery voltage	〉10.9 V

4. GENERAL DRIVING CYCLE

Perform the diagnosis continuously when EGR operating.

5. DIAGNOSTIC METHOD

• Abnormality Judgment

Judge NG when the continuous time until completing the malfunction criteria below becomes more than time needed for diagnosis.

Judgment Value

Malfunction Criteria	Threshold Value
Terminal voltage level when ECM outputs OFF signal	Low level

Time Needed for Diagnosis: 2.5 seconds
Malfunction Indicator Light Illumination: Illuminates as soon as malfunction occurs.

• Normality Judgment

Judge OK and clear the NG when the malfunction criteria below are not completed.

Judgment Value

Malfunction Criteria	Threshold Value
Terminal voltage level when ECM outputs OFF signal	High level

6. DTC CLEAR CONDITION

- When the OK idling cycle is completed 40 times in a row
- When “Clear Memory” was performed

7. MALFUNCTION INDICATOR LIGHT CLEAR CONDITION

- When the OK driving cycle was completed 3 times in a row
- When “Clear Memory” was performed

8. FAIL SAFE

- Front oxygen (A/F) sensor main learning compensation: Not allowed to calculate
- Knock sensor learning compensation: Not allowed to calculate
- EGR control: Not allowed to operate

9. ECM OPERATION AT DTC SETTING

Memorize the freeze frame data. (For test mode $02)

DI: DTC P1497 EGR SOLENOID VALVE SIGNAL #3 CIRCUIT MALFUNCTION (HIGH INPUT)

1. OUTLINE OF DIAGNOSIS

- Detect the open/short circuit of EGR.
- Judge NG when ECM output level is different from actual terminal level.

2. COMPONENT DESCRIPTION

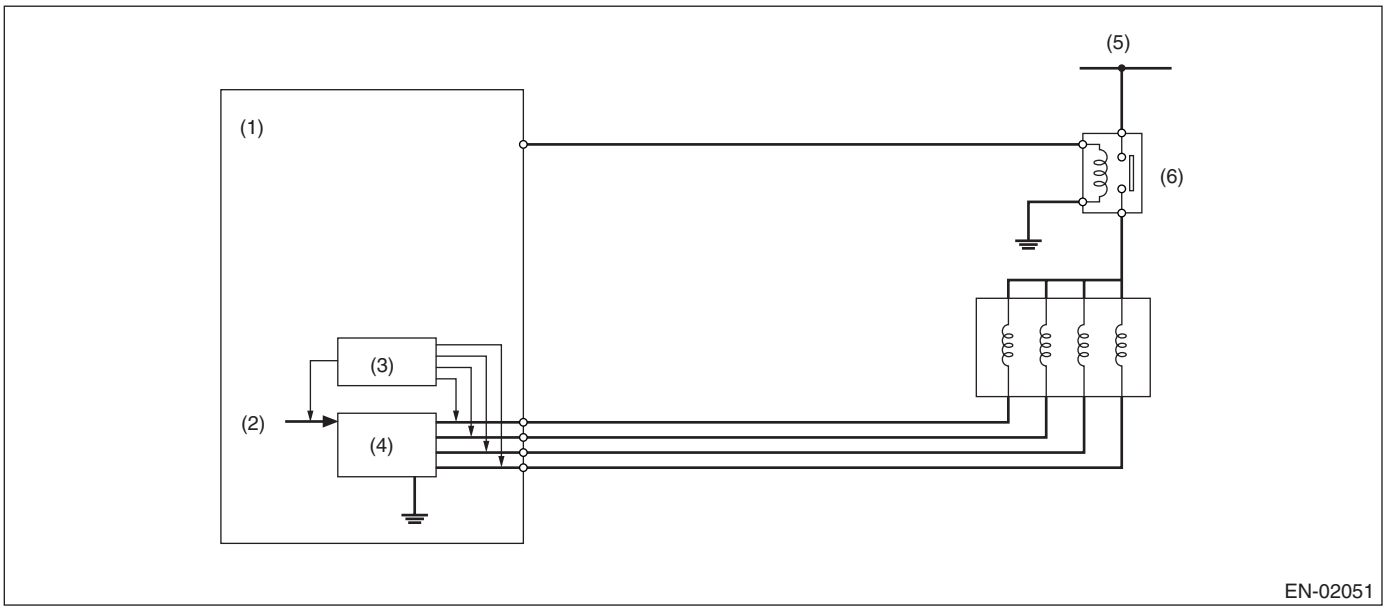

(1) Engine Control Module (ECM)
(2) CPU
(3) Detecting circuit
(4) Switching circuit
(5) Battery voltage
(6) Main relay

3. ENABLE CONDITION

Secondary Parameters	Enable Conditions
Battery voltage	〉10.9 V
Target position of EGR valve	〉0 step

4. GENERAL DRIVING CYCLE

Always perform the diagnosis continuously.

5. DIAGNOSTIC METHOD

• Abnormality Judgment

Judge NG when the continuous time until completing the malfunction criteria below becomes more than time needed for diagnosis.

Judgment Value

Malfunction Criteria	Threshold Value
Terminal voltage level when ECM outputs ON signal	High level

Time Needed for Diagnosis: 2.5 seconds
Malfunction Indicator Light Illumination: Illuminates as soon as malfunction occurs.

• Normality Judgment

Judge OK and clear the NG when the malfunction criteria below are not completed.

Judgment Value

Malfunction Criteria	Threshold Value
Terminal voltage level when ECM outputs ON signal	Low level

6. DTC CLEAR CONDITION

- When the OK idling cycle is completed 40 times in a row
- When “Clear Memory” was performed

7. MALFUNCTION INDICATOR LIGHT CLEAR CONDITION

- When the OK driving cycle was completed 3 times in a row
- When “Clear Memory” was performed

8. FAIL SAFE

- Front oxygen (A/F) sensor main learning compensation: Not allowed to calculate
- Knock sensor learning compensation: Not allowed to calculate
- EGR control: Not allowed to operate

9. ECM OPERATION AT DTC SETTING

Memorize the freeze frame data. (For test mode $02)

DJ:DTC P1498 EGR SOLENOID VALVE SIGNAL #4 CIRCUIT MALFUNCTION (LOW INPUT)

1. OUTLINE OF DIAGNOSIS

- Detect the open/short circuit of EGR.
- Judge NG when ECM output level is different from actual terminal level.

2. COMPONENT DESCRIPTION

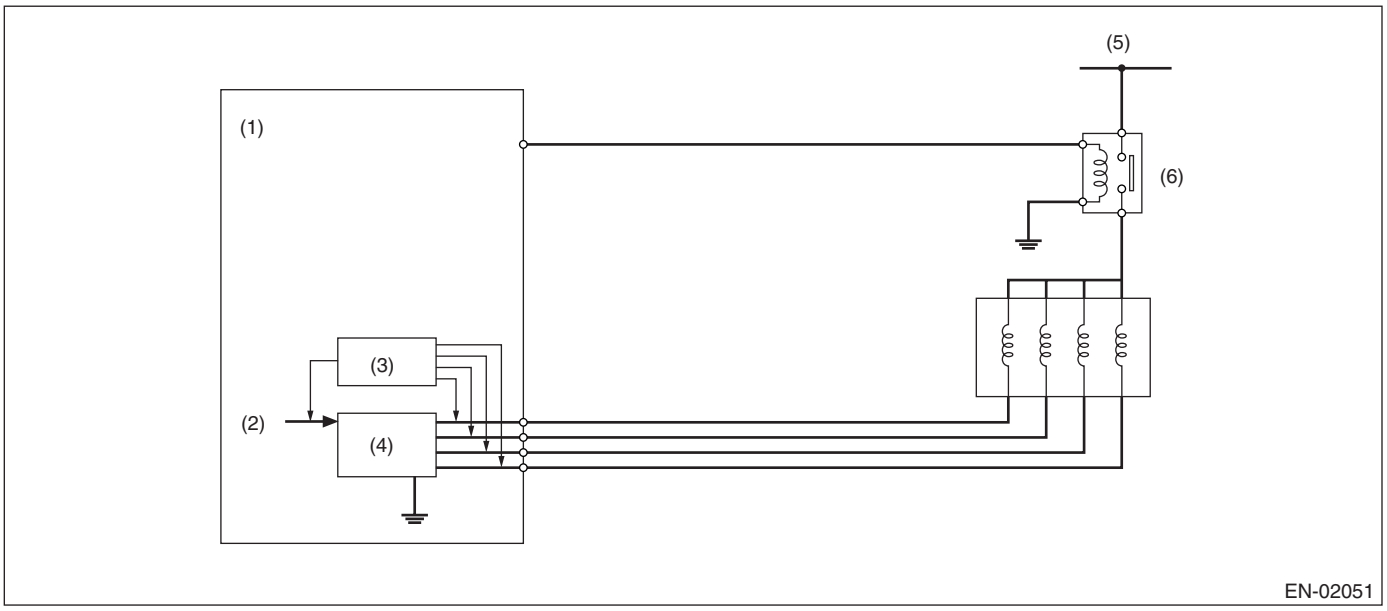

(1) Engine Control Module (ECM)
(2) CPU
(3) Detecting circuit
(4) Switching circuit
(5) Battery voltage
(6) Main relay

3. ENABLE CONDITION

Secondary Parameters	Enable Conditions
Target position of EGR valve	〉0 step
Battery voltage	〉10.9 V

4. GENERAL DRIVING CYCLE

Perform the diagnosis continuously when EGR operating.

5. DIAGNOSTIC METHOD

• Abnormality Judgment

Judge NG when the continuous time until completing the malfunction criteria below becomes more than time needed for diagnosis.

Judgment Value

Malfunction Criteria	Threshold Value
Terminal voltage level when ECM outputs OFF signal	Low level

Time Needed for Diagnosis: 2.5 seconds
Malfunction Indicator Light Illumination: Illuminates as soon as malfunction occurs.

• Normality Judgment

Judge OK and clear the NG when the malfunction criteria below are not completed.

Judgment Value

Malfunction Criteria	Threshold Value
Terminal voltage level when ECM outputs OFF signal	High level

6. DTC CLEAR CONDITION

- When the OK idling cycle is completed 40 times in a row
- When “Clear Memory” was performed

7. MALFUNCTION INDICATOR LIGHT CLEAR CONDITION

- When the OK driving cycle was completed 3 times in a row
- When “Clear Memory” was performed

8. FAIL SAFE

- Front oxygen (A/F) sensor main learning compensation: Not allowed to calculate
- Knock sensor learning compensation: Not allowed to calculate
- EGR control: Not allowed to operate

9. ECM OPERATION AT DTC SETTING

Memorize the freeze frame data. (For test mode $02)

DK:DTC P1499 EGR SOLENOID VALVE SIGNAL #4 CIRCUIT MALFUNCTION (HIGH INPUT)

1. OUTLINE OF DIAGNOSIS

- Detect the open/short circuit of EGR.
- Judge NG when ECM output level is different from actual terminal level.

2. COMPONENT DESCRIPTION

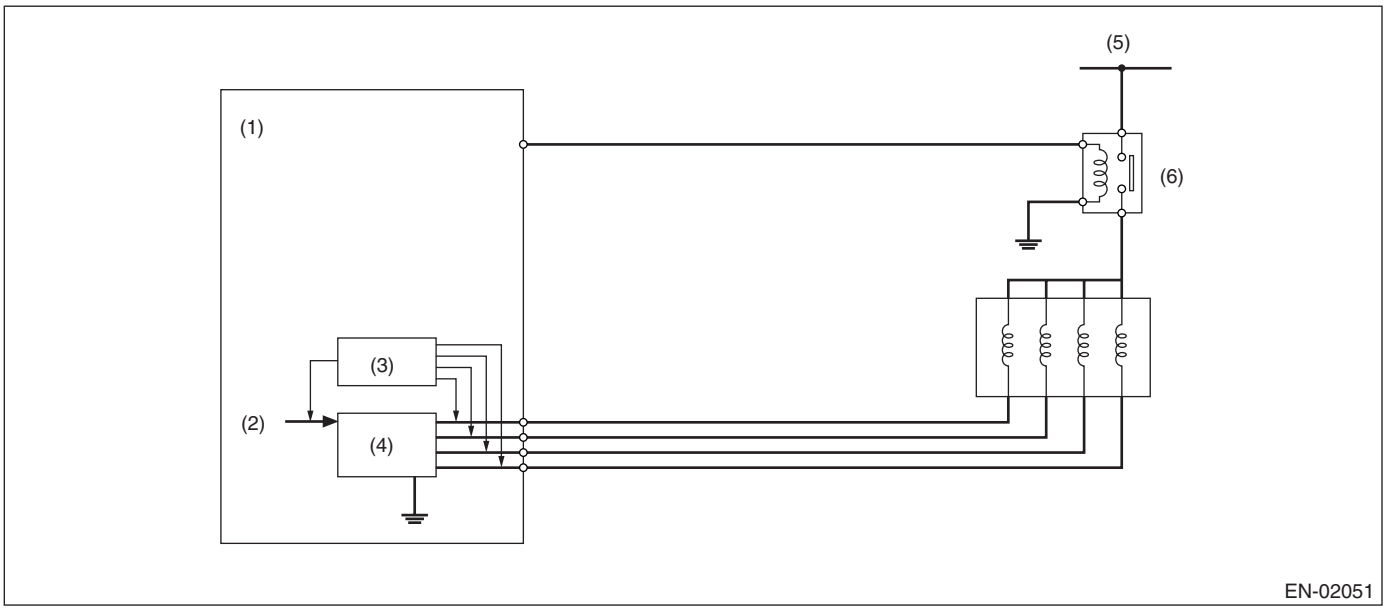

(1) Engine Control Module (ECM)
(2) CPU
(3) Detecting circuit
(4) Switching circuit
(5) Battery voltage
(6) Main relay

3. ENABLE CONDITION

Secondary Parameters	Enable Conditions
Battery voltage	〉10.9 V
Target position of EGR valve	〉0 step

4. GENERAL DRIVING CYCLE

Always perform the diagnosis continuously.

5. DIAGNOSTIC METHOD

• Abnormality Judgment

Judge NG when the continuous time until completing the malfunction criteria below becomes more than time needed for diagnosis.

Judgment Value

Malfunction Criteria	Threshold Value
Terminal voltage level when ECM outputs ON signal	High level

Time Needed for Diagnosis: 2.5 seconds
Malfunction Indicator Light Illumination: Illuminates as soon as malfunction occurs.

• Normality Judgment

Judge OK and clear the NG when the malfunction criteria below are not completed.

Judgment Value

Malfunction Criteria	Threshold Value
Terminal voltage level when ECM outputs ON signal	Low level

6. DTC CLEAR CONDITION

- When the OK idling cycle is completed 40 times in a row
- When “Clear Memory” was performed

7. MALFUNCTION INDICATOR LIGHT CLEAR CONDITION

- When the OK driving cycle was completed 3 times in a row
- When “Clear Memory” was performed

8. FAIL SAFE

- Front oxygen (A/F) sensor main learning compensation: Not allowed to calculate
- Knock sensor learning compensation: Not allowed to calculate
- EGR control: Not allowed to operate

9. ECM OPERATION AT DTC SETTING

Memorize the freeze frame data. (For test mode $02)

DL:DTC P1518 STARTER SWITCH CIRCUIT LOW INPUT

1. OUTLINE OF DIAGNOSIS

Detect the open or short circuit of starter SW.
Judge OFF NG when the engine starts without starter ON experience.

2. ENABLE CONDITION

Secondary Parameters	Enable Conditions
None	

3. GENERAL DRIVING CYCLE

Always perform the diagnosis continuously.

4. DIAGNOSTIC METHOD

• Abnormality Judgment

Judge OFF NG when the malfunction criteria below are completed.
Judgment Value

Malfunction Criteria	Threshold Value
Vehicle speed	< 1 km/h (0.62 MPH)
Starter ON signal	Not detected
Engine speed after the engine speed of less than 500 rpm continues 0.8 seconds or more	≥ 500 rpm

Time Needed for Diagnosis: 1 second
Malfunction Indicator Light Illumination: Illuminates when malfunction occurs in 2 continuous driving cycles.

• Normality Judgment

Judge OFF OK and clear the NG when the malfunction criteria below are completed.
Judgment Value

Malfunction Criteria	Threshold Value
Starter ON	Experienced
Battery voltage	> 8 V

5. DTC CLEAR CONDITION

- When the OK idling cycle was completed 40 times in a row
- When “Clear Memory” was performed

6. MALFUNCTION INDICATOR LIGHT CLEAR CONDITION

- When the OK driving cycle was completed 3 times in a row
- When “Clear Memory” was performed

7. FAIL SAFE

None

8. ECM OPERATION AT DTC SETTING

Memorize the freeze frame data. (For test mode $02)

DM:DTC P1560 BACK-UP VOLTAGE CIRCUIT MALFUNCTION

1. OUTLINE OF DIAGNOSIS

Detect open or short circuit of the back-up voltage circuit.
Judge NG when the back-up voltage becomes smaller than the battery voltage.

2. ENABLE CONDITION

Secondary Parameter	Enable Condition
None	

3. GENERAL DRIVING CYCLE

Always perform the diagnosis continuously.

4. DIAGNOSTIC METHOD

• Abnormality Judgment

Judge NG when the continuous time of completing the malfunction criteria below becomes more than 2.5 seconds.

Judgment Value

Malfunction Criteria	Threshold Value
Voltage of back-up power	Low
Battery voltage	≥ 10.9 V
Engine speed	≥ 500 rpm

Time Needed for Diagnosis: 2.5 seconds
Malfunction Indicator Light Illumination: Illuminates as soon as malfunction occurs.

• Normality Judgment

Judge OK and clear NG when the malfunction criteria below is completed.

Judgment Value

Malfunction Criteria	Threshold Value
Voltage of back-up power supply	High
Battery voltage	≥ 10.9 V
Engine speed	≥ 500 rpm

5. DTC CLEAR CONDITION

- When the OK idling cycle was completed 40 times in a row
- When “Clear Memory” was performed

6. MALFUNCTION INDICATOR LIGHT CLEAR CONDITION

- When the OK driving cycle was completed 3 times in a row
- When “Clear Memory” was performed

7. FAIL SAFE

None

8. ECM OPERATION AT DTC SETTING

Memorize the freeze frame data. (For test mode $02)

DN:DTC P2004 INTAKE MANIFOLD RUNNER CONTROL STUCK OPEN (BANK 1)

1. OUTLINE OF DIAGNOSIS

Detect the malfunction of tumble generator valve motor function.
Judge open fixing malfunction when the opening degree is large even after finishing the tumble generator valve open driving.

2. ENABLE CONDITION

Secondary Parameters	Enable Conditions
Battery voltage	≥ 10.9 V
Engine coolant temperature	≥ 0°C (32°F)
Ambient temperature	≥ 0°C (32°F)

3. GENERAL DRIVING CYCLE

Always perform the diagnosis continuously.

4. DIAGNOSTIC METHOD

• Abnormality Judgment

Judge NG when the continuous time of completing the malfunction criteria below becomes more than 2.5 seconds.

Judgment Value

Malfunction Criteria	Threshold Value
Tumble generator valve angle	≥ 52.5°
Tumble generator valve “close” signal output	2.5 seconds or more

Time Needed for Diagnosis: 2.5 seconds
Malfunction Indicator Light Illumination: Illuminates as soon as malfunction occurs.

• Normality Judgment

Judge OK and clear the NG when the malfunction criteria below are completed.

Judgment Value

Malfunction Criteria	Threshold Value
Tumble generator valve angle	< 52.5°
Tumble generator valve “close” signal output	2.5 seconds or more

5. DTC CLEAR CONDITION

- When the OK idling cycle was completed 40 times in a row
- When “Clear Memory” was performed

6. MALFUNCTION INDICATOR LIGHT CLEAR CONDITION

- When the OK driving cycle was completed 3 times in a row
- When “Clear Memory” was performed

7. FAIL SAFE

Tumble generator valve opening
- For tumble generator valve all closing points learning, not allowed to update to the closing side.
- For tumble generator valve all opening points learning, not allowed to update to the opening side.

Tumble generator valve control
- Output the open signal.

8. ECM OPERATION AT DTC SETTING

Memorize the freeze frame data. (For test mode $02)

DO:DTC P2006 INTAKE MANIFOLD RUNNER CONTROL STUCK CLOSED (BANK 1)

1. OUTLINE OF DIAGNOSIS

Detect the malfunction of tumble generator valve motor function.
Judge close fixing malfunction when the opening degree is small even after finishing the tumble generator valve open driving.

2. ENABLE CONDITION

Secondary Parameters	Enable Conditions
Battery voltage	≥ 10.9 V
Engine coolant temperature	≥ 0°C (32°F)
Ambient temperature estimated value	≥ 0°C (32°F)

3. GENERAL DRIVING CYCLE

Always perform the diagnosis continuously.

4. DIAGNOSTIC METHOD

• Abnormality Judgment

Judge NG when the continuous time of completing the malfunction criteria below becomes more than 2.5 seconds.

Judgment Value

Malfunction Criteria	Threshold Value
Tumble generator valve angle	< 52.5°
Tumble generator valve “open” signal output	2.5 seconds or more

Time Needed for Diagnosis: 2.5 seconds
Malfunction Indicator Light Illumination: Illuminates as soon as malfunction occurs.

• Normality Judgment

Judge OK and clear the NG when the malfunction criteria below are completed.

Judgment Value

Malfunction Criteria	Threshold Value
Tumble generator valve angle	≥ 52.5°
Tumble generator valve “open” signal output	2.5 seconds or more

5. DTC CLEAR CONDITION

- When the OK idling cycle was completed 40 times in a row
- When “Clear Memory” was performed

6. MALFUNCTION INDICATOR LIGHT CLEAR CONDITION

- When the OK driving cycle was completed 3 times in a row
- When “Clear Memory” was performed

7. FAIL SAFE

Tumble generator valve opening
- For tumble generator valve all closing points learning, not allowed to update to the closing side.
- For tumble generator valve all opening points learning, not allowed to update to the opening side.

Tumble generator valve control
- Output the close signal.

Basic advance angle
- Change the map for calculating to the map for malfunction of the tumble generator valve.

Electronic throttle control

• Change the angle operation of accelerator position sensor demand target throttle opening calculation to the map for malfunction of the tumble generator valve.

8. ECM OPERATION AT DTC SETTING

Memorize the freeze frame data. (For test mode $02)

DP:DTC P2008 INTAKE MANIFOLD RUNNER CONTROL CIRCUIT / OPEN (BANK 1)

1. OUTLINE OF DIAGNOSIS

Detect the open or short circuit of tumble generator valve motor.
Judge NG when the open signal is sent from IC after tumble generator valve driving IC diagnosis.

2. COMPONENT DESCRIPTION

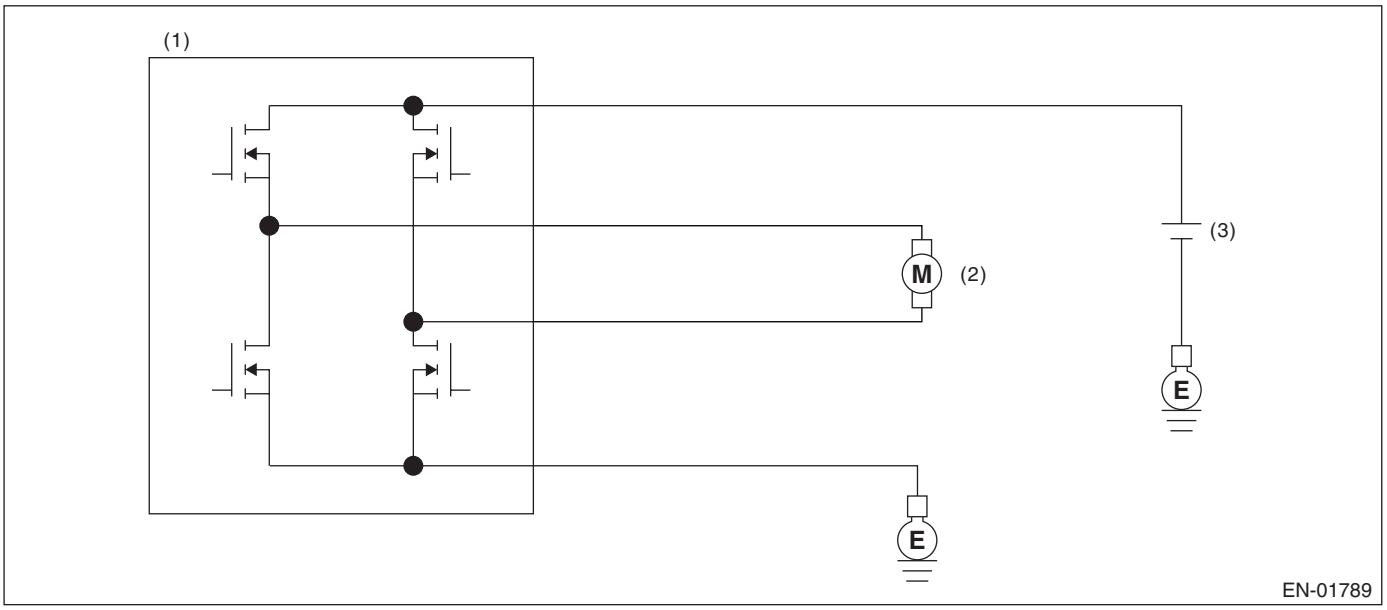

(1) Engine control module (ECM) (2) Tumble generator valve (3) Battery

3. ENABLE CONDITION

Secondary Parameters	Enable Conditions
Battery voltage	≥ 10.9 V
Output signal from ECM	Before changing from ON to OFF
Output ON signal from ECM	20 milli-seconds or more

4. GENERAL DRIVING CYCLE

Always perform the diagnosis continuously.

5. DIAGNOSTIC METHOD

Judge NG when the malfunction criteria below are completed by tumble generator valve driving IC, and then NG signal is sent to main IC. At the main IC, judge NG when the NG signal is sent continuously during 3.5 seconds. Judge OK and clear the NG when the OK signal is sent.

Judgment Value

Malfunction Criteria	Threshold Value
(Open NG)	
Diagnosis input — Open	Low
Diagnosis input — Short	High

Time Needed for Diagnosis: 3.5 seconds
Malfunction Indicator Light Illumination: Illuminates as soon as malfunction occurs.

6. DTC CLEAR CONDITION

- When the OK idling cycle was completed 40 times in a row
- When “Clear Memory” was performed

7. MALFUNCTION INDICATOR LIGHT CLEAR CONDITION

- When the OK driving cycle was completed 3 times in a row
- When “Clear Memory” was performed

8. FAIL SAFE

Tumble generator valve control: Not allowed to move tumble generator valve.
Basic advance angle

- Change the map for calculating to the map for malfunction of the tumble generator valve.

Electronic throttle control

- Change the angle operation of accelerator position sensor demand target throttle opening calculation to the map for malfunction of the tumble generator valve.

9. ECM OPERATION AT DTC SETTING

Memorize the freeze frame data. (For test mode $02)

DQ:DTC P2009 INTAKE MANIFOLD RUNNER CONTROL CIRCUIT LOW (BANK 1)

1. OUTLINE OF DIAGNOSIS

Detect the open or short circuit of tumble generator valve motor.
Judge NG when the overcurrent signal is sent from IC after tumble generator valve driving IC diagnosis.

2. COMPONENT DESCRIPTION

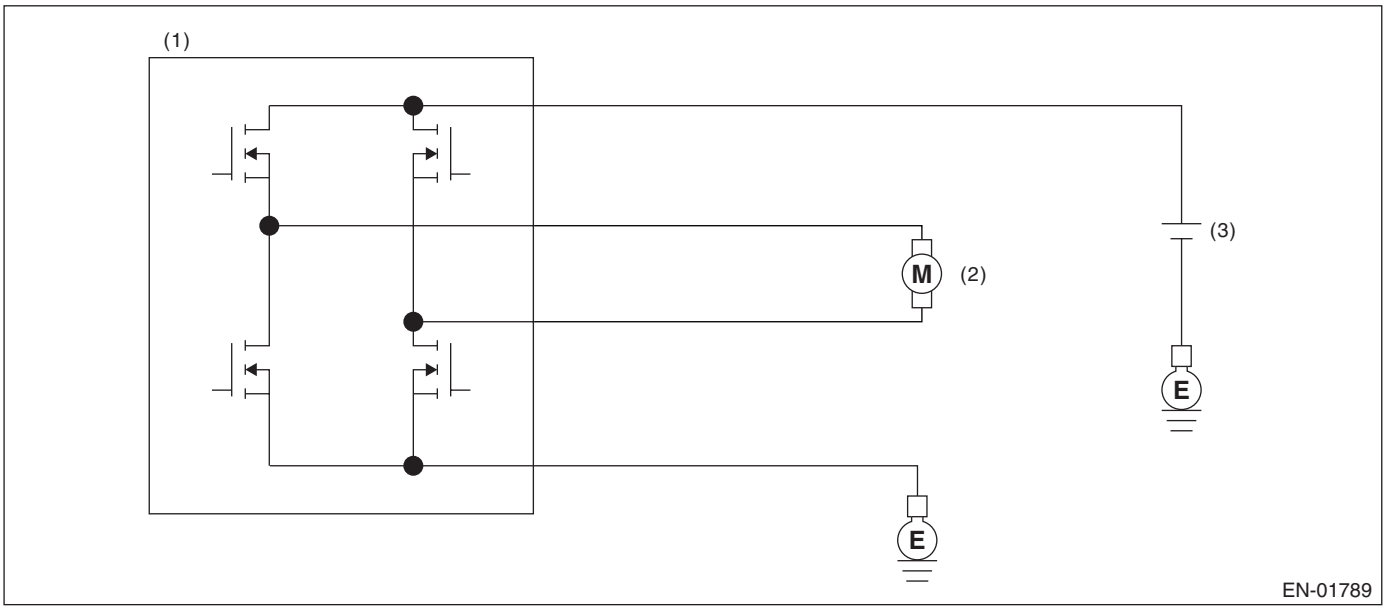

(1) Engine control module (ECM) (2) Tumble generator valve (3) Battery

3. ENABLE CONDITION

Secondary Parameters	Enable Conditions
Battery voltage	≥ 10.9 V
Output signal from ECM	Before changing from ON to OFF
Output ON signal from ECM	20 milli-seconds or more

4. GENERAL DRIVING CYCLE

Always perform the diagnosis continuously.

5. DIAGNOSTIC METHOD

Judge NG when the malfunction criteria below are completed by tumble generator valve driving IC, and then NG signal is sent to main IC. At the main IC, judge NG when the NG signal is sent continuously during 3.5 seconds. Judge OK and clear the NG when the OK signal is sent.

Judgment Value

Malfunction Criteria	Threshold Value
Diagnosis input — Open	High
Diagnosis input — Short	Low

Time Needed for Diagnosis: 3.5 seconds
Malfunction Indicator Light Illumination: Illuminates as soon as malfunction occurs.

6. DTC CLEAR CONDITION

- When the OK idling cycle was completed 40 times in a row

- When “Clear Memory” was performed

7. MALFUNCTION INDICATOR LIGHT CLEAR CONDITION

- When the OK driving cycle was completed 3 times in a row
- When “Clear Memory” was performed

8. FAIL SAFE

Tumble generator valve control: Not allowed to move tumble generator valve.
Basic advance angle
- Change the map for calculating to the map for malfunction of the tumble generator valve.

Electronic throttle control
- Change the angle operation of accelerator position sensor demand target throttle opening calculation to the map for malfunction of the tumble generator valve.

9. ECM OPERATION AT DTC SETTING

Memorize the freeze frame data. (For test mode $02)

DR:DTC P2016 INTAKE MANIFOLD RUNNER POSITION SENSOR / SWITCH CIRCUIT LOW (BANK 1)

1. OUTLINE OF DIAGNOSIS

Detect open or short circuit of tumble generator valve position sensor.
Judge NG when the value is out of standard range.

2. COMPONENT DESCRIPTION

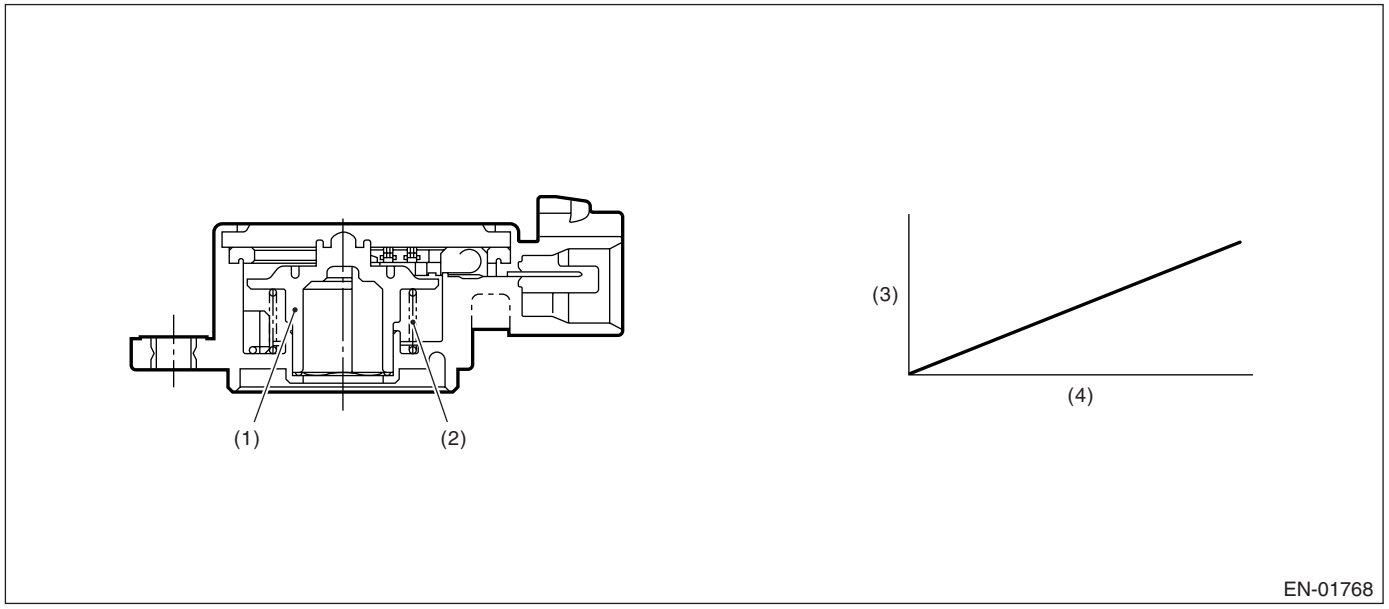

(1) Rotor
(2) Return spring
(3) Voltage (V)
(4) Tumble generator valve angle (°)

3. ENABLE CONDITION

Secondary Parameters	Enable Conditions
None	

4. GENERAL DRIVING CYCLE

Always perform diagnosis.

5. DIAGNOSTIC METHOD

Judge NG when the continuous time of completing the malfunction criteria below becomes more than the time needed for diagnosis (0.5 seconds). Judge OK and clear NG when the malfunction criteria below are not completed.

Judgment Value

Malfunction Criteria	Threshold Value
Output voltage	< 0.181 V

Time Needed for Diagnosis: 0.5 seconds
Malfunction Indicator Light Illumination: Illuminates as soon as malfunction occurs.

6. DTC CLEAR CONDITION

- When the OK idling cycle was completed 40 times in a row
- When “Clear Memory” was performed

7. MALFUNCTION INDICATOR LIGHT CLEAR CONDITION

- When the OK driving cycle was completed 3 times in a row

- When “Clear Memory” was performed

8. FAIL SAFE

Tumble generator valve position
- Learning of tumble generator valve position fully closed and date renewed to close side.
- Learning of tumble generator valve position fully opened and date renewed to open side.

Basic advance angle
- Change the map for calculating to the map for malfunction of the tumble generator valve.

Electronic throttle control
- Change the angle operation of accelerator position sensor demand target throttle opening calculation to the map for malfunction of the tumble generator valve.

9. ECM OPERATION AT DTC SETTING

Memorize the freeze frame data. (For test mode $02)

DS:DTC P2017 INTAKE MANIFOLD RUNNER POSITION SENSOR / SWITCH CIRCUIT HIGH (BANK 1)

1. OUTLINE OF DIAGNOSIS

Detect open or short circuit of tumble generator valve position sensor.
Judge NG when the value is out of standard range.

2. COMPONENT DESCRIPTION

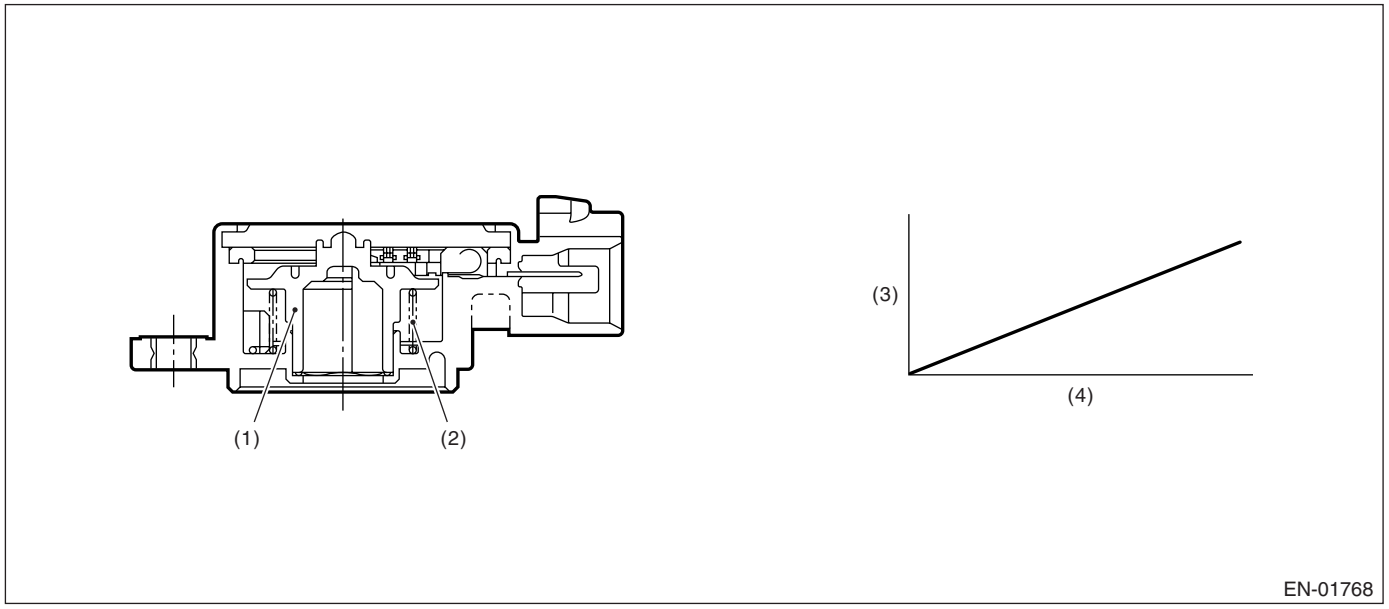

(1) Rotor
(2) Return spring
(3) Voltage (V)
(4) Tumble generator valve angle (°)

3. ENABLE CONDITION

Secondary Parameters	Enable Conditions
None	

4. GENERAL DRIVING CYCLE

Always perform diagnosis.

5. DIAGNOSTIC METHOD

Judge NG when the continuous time of completing the malfunction criteria below becomes more than the time needed for diagnosis (0.5 seconds). Judge OK and clear NG when the malfunction criteria below are not completed.

Judgment Value

Malfunction Criteria	Threshold Value
Output voltage	≥ 4.843 V

Time Needed for Diagnosis: 0.5 seconds
Malfunction Indicator Light Illumination: Illuminates as soon as malfunction occurs.

6. DTC CLEAR CONDITION

- When the OK idling cycle was completed 40 times in a row
- When “Clear Memory” was performed

7. MALFUNCTION INDICATOR LIGHT CLEAR CONDITION

- When the OK driving cycle was completed 3 times in a row

- When “Clear Memory” was performed

8. FAIL SAFE

Tumble generator valve position
- Learning of tumble generator valve position fully closed and date renewed to close side.
- Learning of tumble generator valve position fully opened and date renewed to open side.

Basic advance angle
- Change the map for calculating to the map for malfunction of the tumble generator valve.

Electronic throttle control
- Change the angle operation of accelerator position sensor demand target throttle opening calculation to the map for malfunction of the tumble generator valve.

9. ECM OPERATION AT DTC SETTING

Memorize the freeze frame data. (For test mode $02)

DT:DTC P2096 POST CATALYST FUEL TRIM SYSTEM TOO LEAN BANK 1

1. OUTLINE OF DIAGNOSIS

Detect the malfunction of fuel system from the amount of sub feedback learning value.
Judge NG when the sub feedback learning value sticks to lean sides during sub feedback learning control.

2. COMPONENT DESCRIPTION

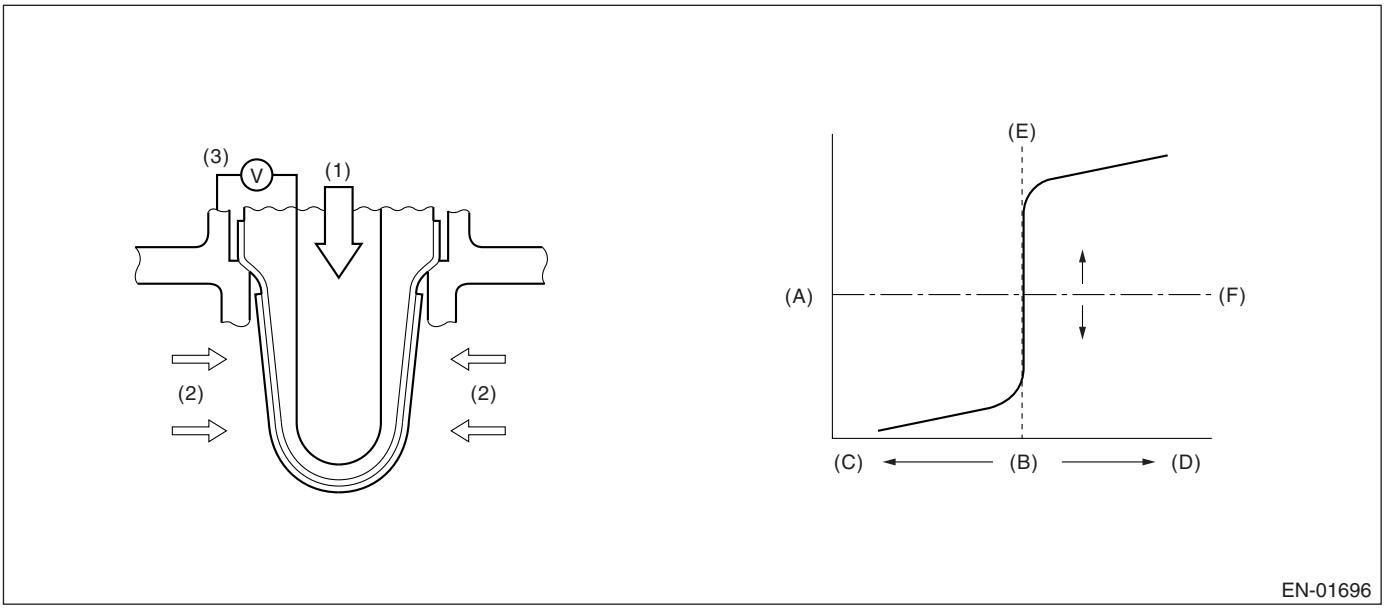

(1) Atmosphere
(2) Exhaust gas
(3) Electromotive force
(A) Electromotive force
(B) Air fuel ratio
(C) Rich
(D) Lean
(E) Theoretical air fuel ratio
(F) Comparative voltage

3. ENABLE CONDITION

Secondary Parameters	Enable Conditions
Continuous time of completing all conditions	1 second or more
Sub feedback learning enable condition	Completed

4. GENERAL DRIVING CYCLE

Perform the diagnosis continuously at an idling or a constant 80 km/h (50 MPH).

5. DIAGNOSTIC METHOD

Judge NG when the continuous time of completing the malfunction criteria below becomes more than 5 seconds. Judge OK when continuous time of not completing the malfunction criteria becomes more than 5 seconds.

Judgment Value

Malfunction Criteria	Threshold Value
Sub feedback learning value	< -0.018 V

Time Needed for Diagnosis: 5 seconds ×1 time
Malfunction Indicator Light Illumination: Illuminates when malfunction occurs in 2 continuous driving cycles.

6. DTC CLEAR CONDITION

- When the OK idling cycle was completed 40 times in a row
- When “Clear Memory” was performed

7. MALFUNCTION INDICATOR LIGHT CLEAR CONDITION

- When OK with similar drive in 3 drive cycles
- When “Clear Memory” was performed

8. FAIL SAFE

None

9. ECM OPERATION AT DTC SETTING

Memorize the freeze frame data. (For test mode $02)

DU:DTC P2097 POST CATALYST FUEL TRIM SYSTEM TOO RICH BANK 1

1. OUTLINE OF DIAGNOSIS

Detect the malfunction of fuel system from the amount of sub feedback learning value.
Judge NG when the sub feedback learning value sticks to rich sides during sub feedback learning control.

2. COMPONENT DESCRIPTION

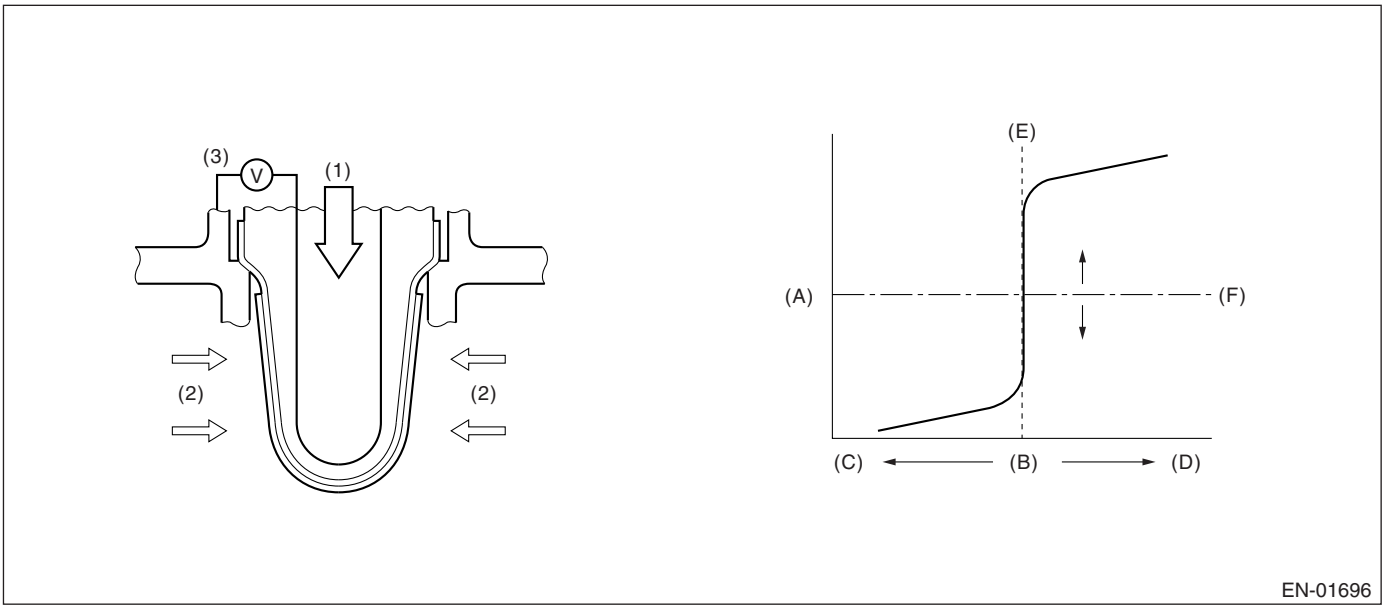

(1) Atmosphere
(2) Exhaust gas
(3) Electromotive force
(A) Electromotive force
(B) Air fuel ratio
(C) Rich
(D) Lean
(E) Theoretical air fuel ratio
(F) Comparative voltage

3. ENABLE CONDITION

Secondary Parameters	Enable Conditions
Continuous time of completing all conditions	1 second or more
Sub feedback learning enable condition	Completed

4. GENERAL DRIVING CYCLE

Perform the diagnosis continuously at an idling or a constant 80 km/h (50 MPH).

5. DIAGNOSTIC METHOD

Judge NG when the continuous time of completing the malfunction criteria below becomes more than 5 seconds. Judge OK when it becomes less than 5 seconds.
Judgment Value

Malfunction Criteria	Threshold Value
Sub feedback learning value	≥ 0.018 V

Time Needed for Diagnosis: 5 seconds ×1 time
Malfunction Indicator Light Illumination: Illuminates when malfunction occurs in 2 continuous drive cycles.

6. DTC CLEAR CONDITION

- When the OK idling cycle was completed 40 times in a row
- When “Clear Memory” was performed

7. MALFUNCTION INDICATOR LIGHT CLEAR CONDITION

- When OK with similar drive in 3 drive cycles.
- When “Clear Memory” was performed

8. FAIL SAFE

None

9. ECM OPERATION AT DTC SETTING

Memorize the freeze frame data. (For test mode $02)

DV:DTC P2098 POST CATALYST FUEL TRIM SYSTEM TOO LEAN BANK 2

1. OUTLINE OF DIAGNOSIS

For the detecting criteria, refer to P2096. <Ref. to GD(H4SO U5)-231, DTC P2096 POST CATALYST FUEL TRIM SYSTEM TOO LEAN BANK 1, Diagnostic Trouble Code (DTC) Detecting Criteria.>

DW:DTC P2099 POST CATALYST FUEL TRIM SYSTEM TOO RICH BANK 2

1. OUTLINE OF DIAGNOSIS

For the detecting criteria, refer to P2097. <Ref. to GD(H4SO U5)-233, DTC P2097 POST CATALYST FUEL TRIM SYSTEM TOO RICH BANK 1, Diagnostic Trouble Code (DTC) Detecting Criteria.>

DX:DTC P2101 THROTTLE ACTUATOR CONTROL MOTOR CIRCUIT RANGE/ PERFORMANCE

1. OUTLINE OF DIAGNOSIS

Judge NG when the motor current becomes large or drive circuit is heated.

2. COMPONENT DESCRIPTION

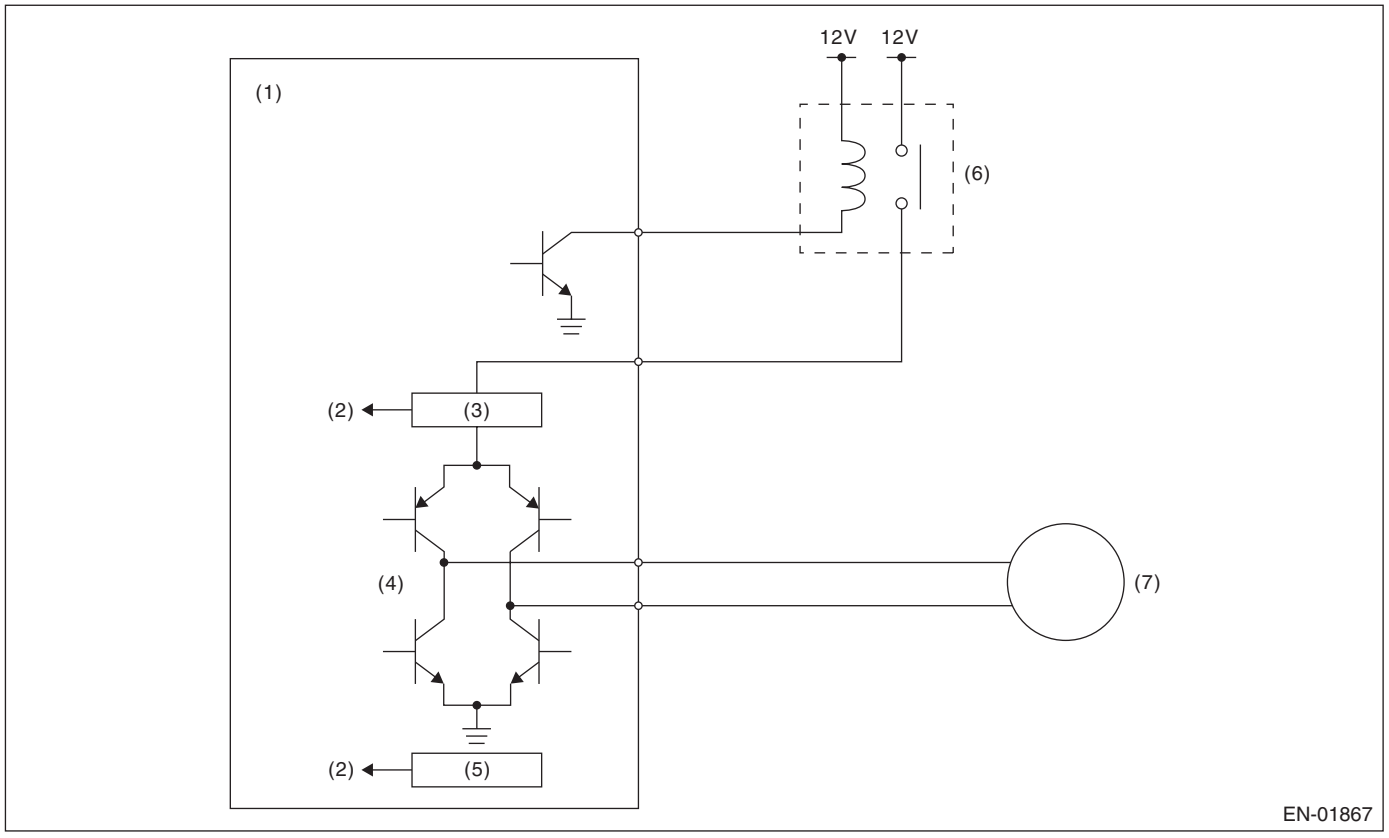

(1) Engine control module (ECM)
(2) Detection circuit
(3) Overcurrent detection circuit
(4) Drive circuit
(5) Temperature detection circuit
(6) Electronic throttle control relay
(7) Motor

3. ENABLE CONDITION

Secondary Parameters	Enable Conditions
Under control of electronic throttle control	ON

4. GENERAL DRIVING CYCLE

Always perform the diagnosis continuously.

5. DIAGNOSTIC METHOD

Judge OK and clear the NG when the malfunction criteria below are completed.

Judgment Value

Malfunction Criteria	Threshold Value
Motor current	≤ 8 A
Drive circuit inner temperature	≤ 175°C (347°F)

Time Needed for Diagnosis:

- 500 milliseconds (NG judgment)

- 2000 milliseconds (OK judgment)

Malfunction Indicator Light Illumination: Illuminates as soon as malfunction occurs.

6. DTC CLEAR CONDITION

- When the OK idling cycle was completed 40 times in a row
- When “Clear Memory” was performed (Only with engine stopped)

7. MALFUNCTION INDICATOR LIGHT CLEAR CONDITION

- When the OK driving cycle was completed 3 times in a row
- When “Clear Memory” was performed (Only with engine stopped)

8. FAIL SAFE

Stop the continuity to the electronic throttle control motor. (Fix the throttle opening angle to 6°.)

9. ECM OPERATION AT DTC SETTING

Memorize the freeze frame data. (For test mode $02)

DY:DTC P2102 THROTTLE ACTUATOR CONTROL MOTOR CIRCUIT LOW

1. OUTLINE OF DIAGNOSIS

Judge NG when the electronic throttle control power is not supplied even when ECM sets the electronic throttle control relay to ON.

2. COMPONENT DESCRIPTION

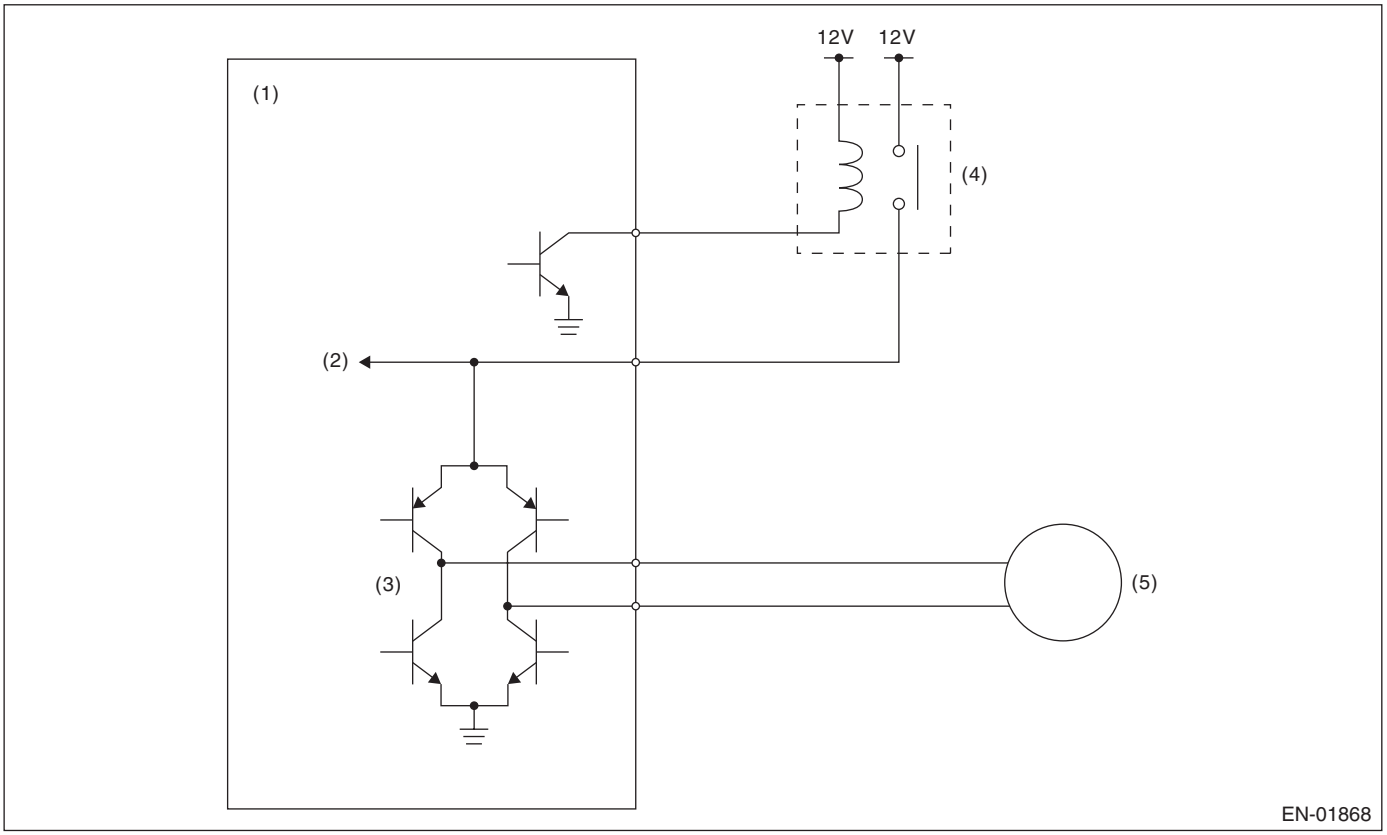

(1) Engine control module (ECM)
(2) Voltage detection circuit
(3) Drive circuit
(4) Electronic throttle control relay
(5) Motor

3. ENABLE CONDITION

Secondary Parameters	Enable Conditions
Electronic throttle control relay output	ON

4. GENERAL DRIVING CYCLE

Always perform the diagnosis continuously.

5. DIAGNOSTIC METHOD

Judge OK and clear the NG when the malfunction criteria below are cmpleted.

Judgment Value

Malfunction Criteria	Threshold Value
Motor power voltage	≥ 5 V

Time Needed for Diagnosis:

- 400 milliseconds (For NG)
- 2000 milliseconds (For OK)

Malfunction Indicator Light Illumination: Illuminates as soon as malfunction occurs.

6. DTC CLEAR CONDITION

- When the OK idling cycle was completed 40 times in a row
- When “Clear Memory” was performed (Only with engine stopped)

7. MALFUNCTION INDICATOR LIGHT CLEAR CONDITION

- When the OK driving cycle was completed 3 times in a row
- When “Clear Memory” was performed (Only with engine stopped)

8. FAIL SAFE

Stop the continuity to the electronic throttle control motor. (Fix the throttle opening angle to 6°.)

9. ECM OPERATION AT DTC SETTING

Memorize the freeze frame data. (For test mode $02)

DZ:DTC P2103 THROTTLE ACTUATOR CONTROL MOTOR CIRCUIT HIGH

1. OUTLINE OF DIAGNOSIS

Judge NG when the electronic throttle control power is not supplied even when ECM sets the electronic throttle control relay to OFF.

2. COMPONENT DESCRIPTION

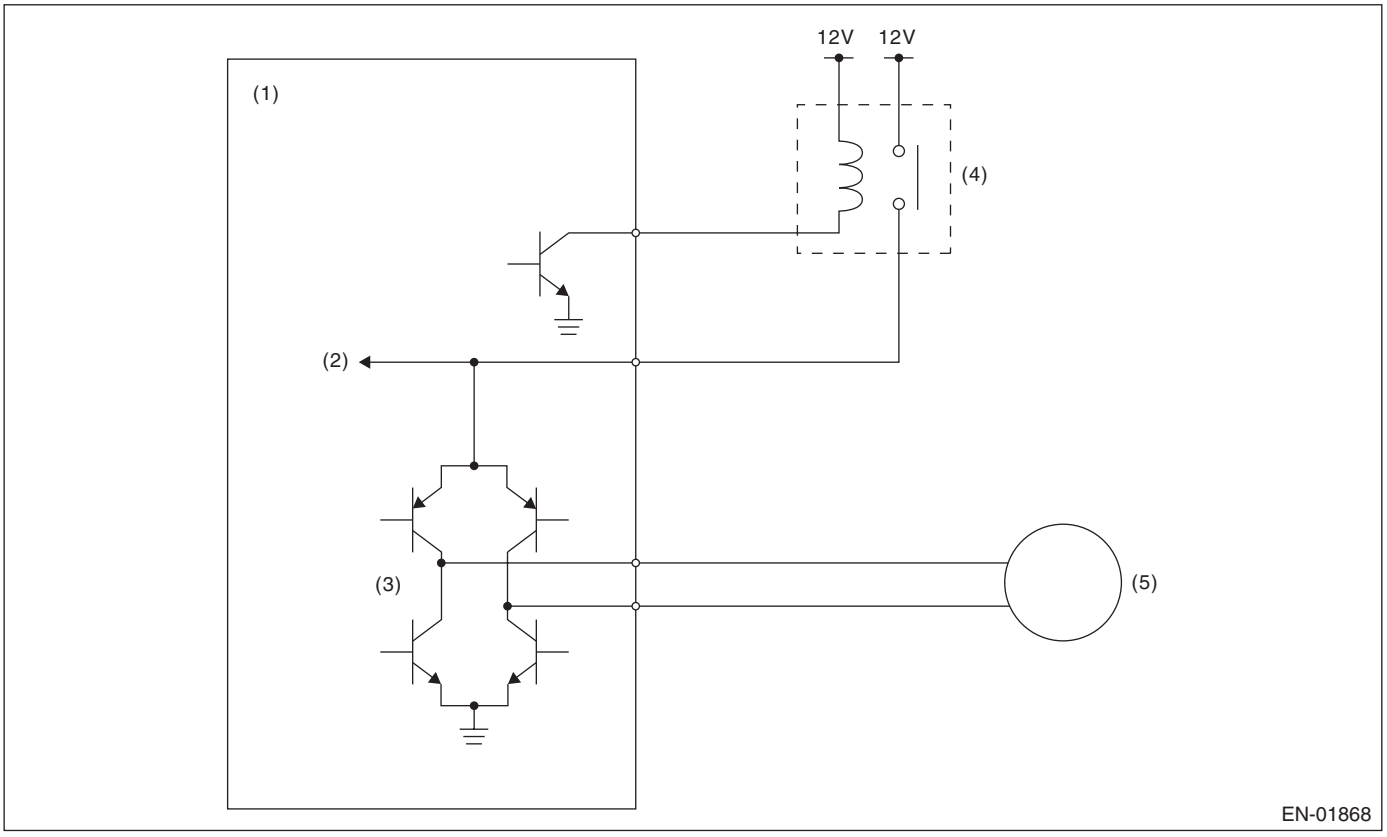

(1) Engine control module (ECM)
(2) Voltage detection circuit
(3) Drive circuit
(4) Electronic throttle control relay
(5) Motor

3. ENABLE CONDITION

Secondary Parameters	Enable Conditions
Electronic throttle control relay output	OFF

4. GENERAL DRIVING CYCLE

- Ignition switch ON → OFF
- Ignition switch OFF → ON (After clear memory only)

5. DIAGNOSTIC METHOD

Judge OK and clear the NG when the malfunction criteria below are completed.

Judgment Value

Malfunction Criteria	Threshold Value
Motor power voltage	≤ 5 V

Time Needed for Diagnosis:

- 600 milliseconds (For NG)
- 400 milliseconds (For OK)

Malfunction Indicator Light Illumination: Illuminates as soon as malfunction occurs.

6. DTC CLEAR CONDITION

- When the OK idling cycle was completed 40 times in a row
- When “Clear Memory” was performed (Only with engine stopped)

7. MALFUNCTION INDICATOR LIGHT CLEAR CONDITION

- When the OK driving cycle was completed 3 times in a row
- When “Clear Memory” was performed (Only with engine stopped)

8. FAIL SAFE

Stop the continuity to the electronic throttle control motor. (Fix the throttle opening angle to 6°.)

9. ECM OPERATION AT DTC SETTING

Memorize the freeze frame data. (For test mode $02)

EA:DTC P2109 THROTTLE/PEDAL POSITION SENSOR A MINIMUM STOP PERFORMANCE

1. OUTLINE OF DIAGNOSIS

Judge NG when all close point learning cannot conducted or abnormal value is detected.

2. COMPONENT DESCRIPTION

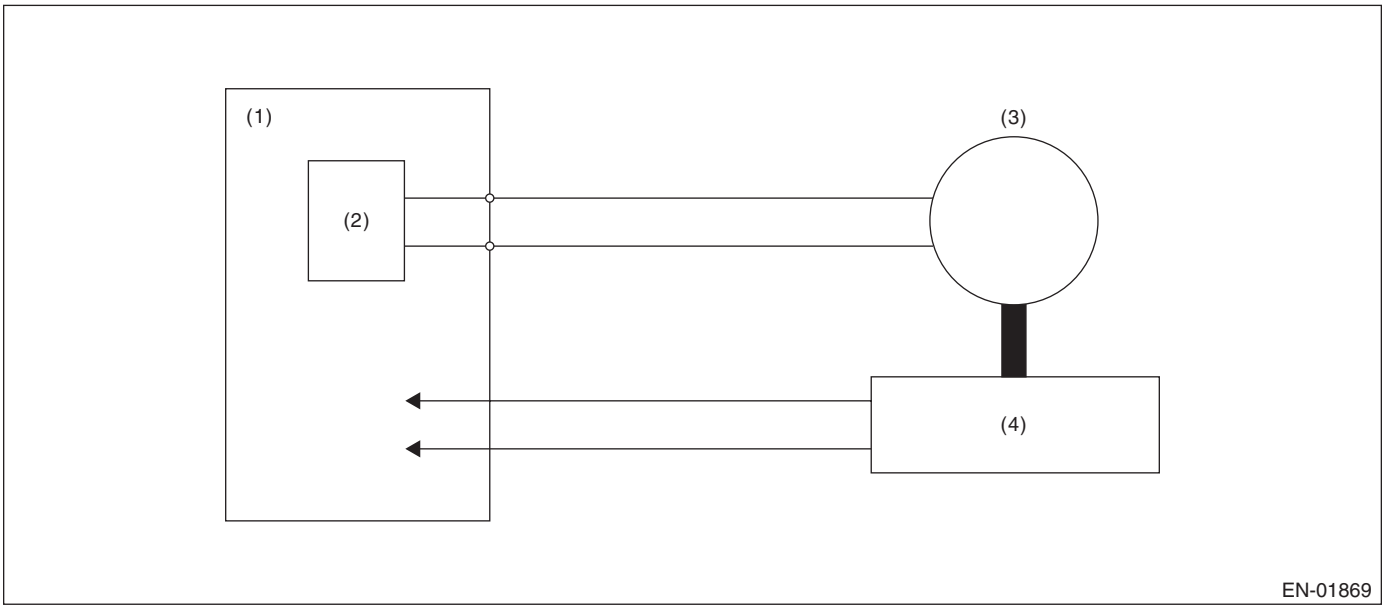

(1) Engine control module (ECM)
(2) Drive circuit
(3) Motor
(4) Throttle position sensor

3. ENABLE CONDITION

Secondary Parameters	Enable Conditions
Ignition switch	ON → OFF
Ignition switch (after clear memory only)	OFF → ON

4. GENERAL DRIVING CYCLE

Perform the diagnosis at all close point learning.

5. DIAGNOSTIC METHOD

Judge OK and clear the NG when the malfunction criteria below are completed.

Judgment Value

Malfunction Criteria	Threshold Value
Throttle sensor voltage at all close point learning	0.41 — 0.79 V
Time for all close point learning completion	Within 80 milliseconds

Time Needed for Diagnosis: None
Malfunction Indicator Light Illumination: Illuminates as soon as malfunction occurs.

6. DTC CLEAR CONDITION

- When the OK idling cycle was completed 40 times in a row
- When “Clear Memory” was performed (Only with engine stopped)

7. MALFUNCTION INDICATOR LIGHT CLEAR CONDITION

- When the OK driving cycle was completed 3 times in a row
- When “Clear Memory” was performed (Only with engine stopped)

8. FAIL SAFE

Stop the continuity to the electronic throttle control motor. (Fix the throttle opening angle to 6°.)

9. ECM OPERATION AT DTC SETTING

Memorize the freeze frame data. (For test mode $02)

EB:DTC P2122 THROTTLE/PEDAL POSITION SENSOR/SWITCH “D” CIRCUIT LOW INPUT

1. OUTLINE OF DIAGNOSIS

Detect the open or short circuit of accelerator pedal position sensor 1.
Judge NG when out of the standard value.

2. COMPONENT DESCRIPTION

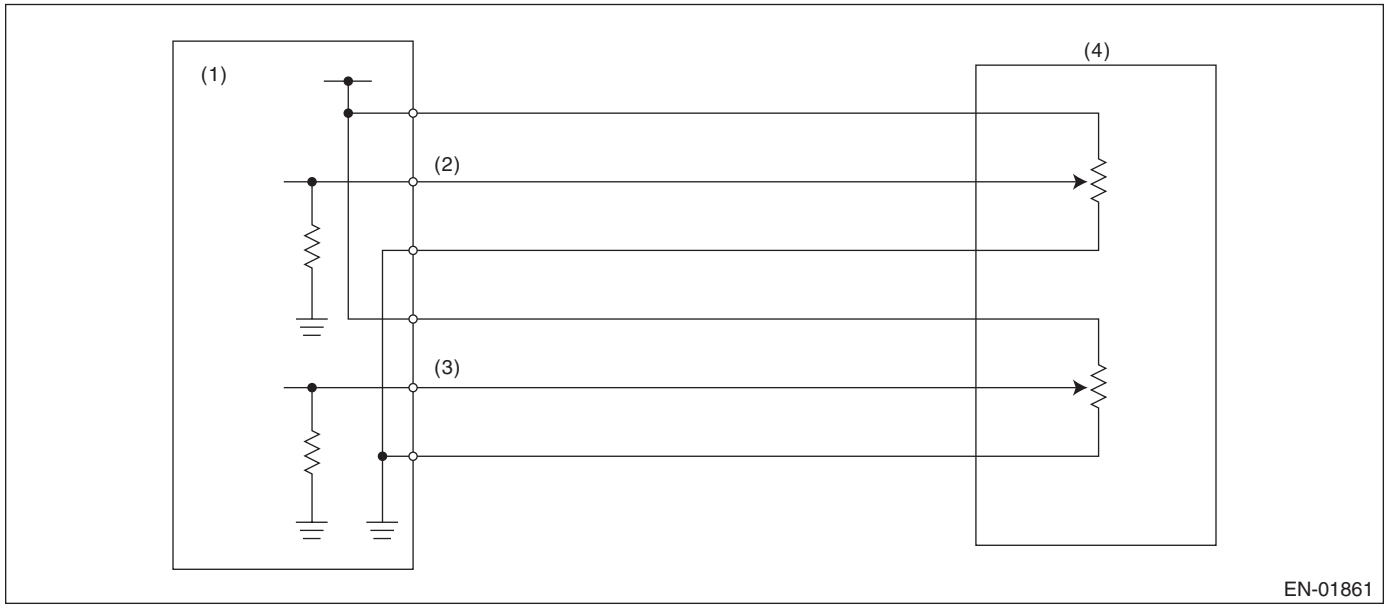

(1) Engine control module (ECM)
(2) Accelerator pedal position sensor 1 signal
(3) Accelerator pedal position sensor 2 signal
(4) Accelerator pedal position sensor

3. ENABLE CONDITION

Secondary Parameters	Enable Conditions
Ignition switch	ON

4. GENERAL DRIVING CYCLE

Always perform the diagnosis continuously.

5. DIAGNOSTIC METHOD

Judge OK and clear the NG when the malfunction criteria below are completed.
Judgment Value

Malfunction Criteria	Threshold Value
Sensor 1 input voltage	≥ 0.308 V

Time Needed for Diagnosis: 100 milliseconds
Malfunction Indicator Light Illumination: Illuminates as soon as malfunction occurs.

6. DTC CLEAR CONDITION

- When the OK idling cycle was completed 40 times in a row
- When “Clear Memory” was performed (Only with engine stopped)

7. MALFUNCTION INDICATOR LIGHT CLEAR CONDITION

- When the OK driving cycle was completed 3 times in a row
- When “Clear Memory” was performed (Only with engine stopped)

8. FAIL SAFE

- Single malfunction: Control with normal sensor
- Multi malfunction: Fix the throttle opening angle to 6°.

9. ECM OPERATION AT DTC SETTING

Memorize the freeze frame data. (For test mode $02)

EC:DTC P2123 THROTTLE/PEDAL POSITION SENSOR/SWITCH “D” CIRCUIT HIGH INPUT

1. OUTLINE OF DIAGNOSIS

Detect the open or short circuit of accelerator pedal position sensor 1.
Judge NG when out of the standard value.

2. COMPONENT DESCRIPTION

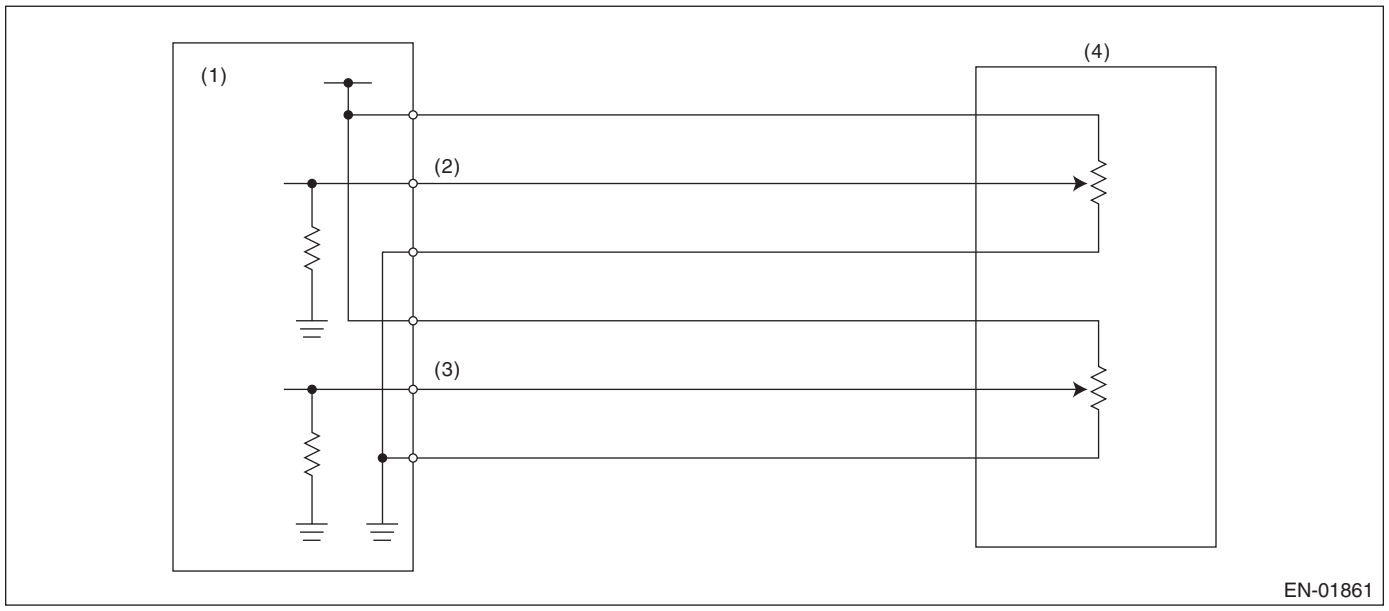

(1) Engine control module (ECM)
(2) Accelerator pedal position sensor 1 signal
(3) Accelerator pedal position sensor 2 signal
(4) Accelerator pedal position sensor

3. ENABLE CONDITION

Secondary Parameters	Enable Conditions
Ignition switch	ON

4. GENERAL DRIVING CYCLE

Always perform the diagnosis continuously.

5. DIAGNOSTIC METHOD

Judge OK and clear the NG when the malfunction criteria below are completed.
Judgment Value

Malfunction Criteria	Threshold Value
Sensor 1 input voltage	≤ 4.865 V

Time Needed for Diagnosis: 100 milliseconds
Malfunction Indicator Light Illumination: Illuminates as soon as malfunction occurs.

6. DTC CLEAR CONDITION

- When the OK idling cycle was completed 40 times in a row
- When “Clear Memory” was performed (Only with engine stopped)

7. MALFUNCTION INDICATOR LIGHT CLEAR CONDITION

- When the OK driving cycle was completed 3 times in a row
- When “Clear Memory” was performed (Only with engine stopped)

8. FAIL SAFE

- Single malfunction: Control with normal sensor
- Multi malfunction: Fix the throttle opening angle to 6°.

9. ECM OPERATION AT DTC SETTING

Memorize the freeze frame data. (For test mode $02)

ED:DTC P2127 THROTTLE/PEDAL POSITION SENSOR/SWITCH “E” CIRCUIT LOW INPUT

1. OUTLINE OF DIAGNOSIS

Detect the open or short circuit of accelerator pedal position sensor 2.
Judge NG when out of the standard value.

2. COMPONENT DESCRIPTION

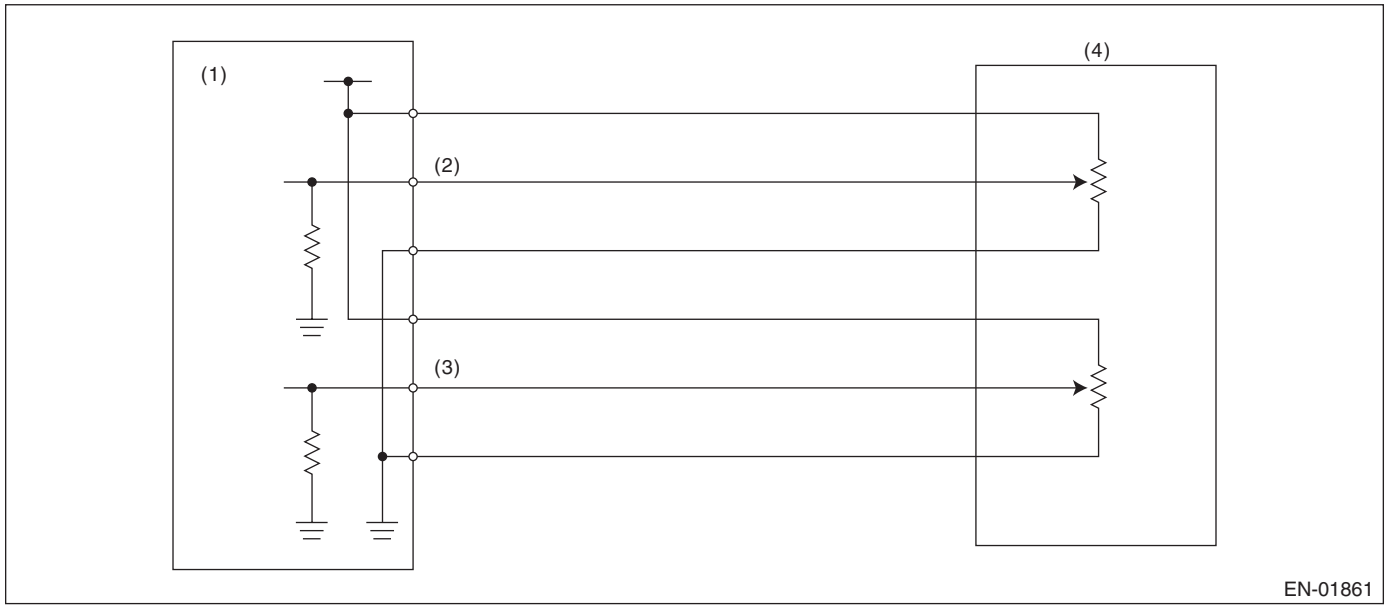

(1) Engine control module (ECM)
(2) Accelerator pedal position sensor 1 signal
(3) Accelerator pedal position sensor 2 signal
(4) Accelerator pedal position sensor

3. ENABLE CONDITION

Secondary Parameters	Enable Conditions
Ignition switch	ON

4. GENERAL DRIVING CYCLE

Always perform the diagnosis continuously.

5. DIAGNOSTIC METHOD

Judge OK and clear the NG when the malfunction criteria below are completed.
Judgment Value

Malfunction Criteria	Threshold Value
Sensor 2 input voltage	≥ 0.308 V

Time Needed for Diagnosis: 100 milliseconds
Malfunction Indicator Light Illumination: Illuminates as soon as malfunction occurs.

6. DTC CLEAR CONDITION

- When the OK idling cycle was completed 40 times in a row
- When “Clear Memory” was performed (Only with engine stopped)

7. MALFUNCTION INDICATOR LIGHT CLEAR CONDITION

- When the OK driving cycle was completed 3 times in a row
- When “Clear Memory” was performed (Only with engine stopped)

8. FAIL SAFE

- Single malfunction: Control with normal sensor
- Multi malfunction: Fix the throttle opening angle to 6°.

9. ECM OPERATION AT DTC SETTING

Memorize the freeze frame data. (For test mode $02)

EE:DTC P2128 THROTTLE/PEDAL POSITION SENSOR/SWITCH “E” CIRCUIT HIGH INPUT

1. OUTLINE OF DIAGNOSIS

Detect the open or short circuit of accelerator pedal position sensor 2.
Judge NG when out of the standard value.

2. COMPONENT DESCRIPTION

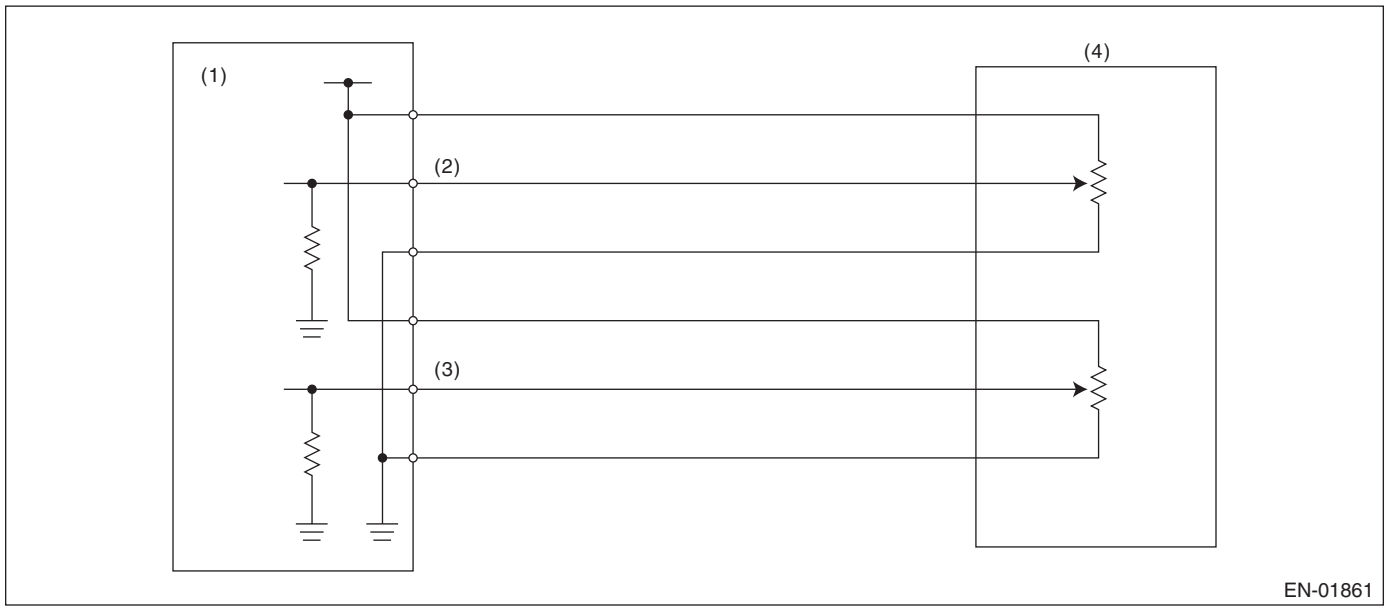

(1) Engine control module (ECM)
(2) Accelerator pedal position sensor 1 signal
(3) Accelerator pedal position sensor 2 signal
(4) Accelerator pedal position sensor

3. ENABLE CONDITION

Secondary Parameters	Enable Conditions
Ignition switch	ON

4. GENERAL DRIVING CYCLE

Always perform the diagnosis continuously.

5. DIAGNOSTIC METHOD

Judge OK and clear the NG when the malfunction criteria below are completed.
Judgment Value

Malfunction Criteria	Threshold Value
Sensor 2 input voltage	≤ 4.865 V

Time Needed for Diagnosis: 100 milliseconds
Malfunction Indicator Light Illumination: Illuminates as soon as malfunction occurs.

6. DTC CLEAR CONDITION

- When the OK idling cycle was completed 40 times in a row
- When “Clear Memory” was performed (Only with engine stopped)

7. MALFUNCTION INDICATOR LIGHT CLEAR CONDITION

- When the OK driving cycle was completed 3 times in a row
- When “Clear Memory” was performed (Only with engine stopped)

8. FAIL SAFE

- Single malfunction: Control with normal sensor
- Multi malfunction: Fix the throttle opening angle to 6°.

9. ECM OPERATION AT DTC SETTING

Memorize the freeze frame data. (For test mode $02)

EF:DTC P2135 THROTTLE/PEDAL POSITION SENSOR/SWITCH “A”/“B” VOLTAGE RATIONALITY

1. OUTLINE OF DIAGNOSIS

Judge NG when the signal level of throttle position sensor 1 is different from the throttle position sensor 2.

2. COMPONENT DESCRIPTION

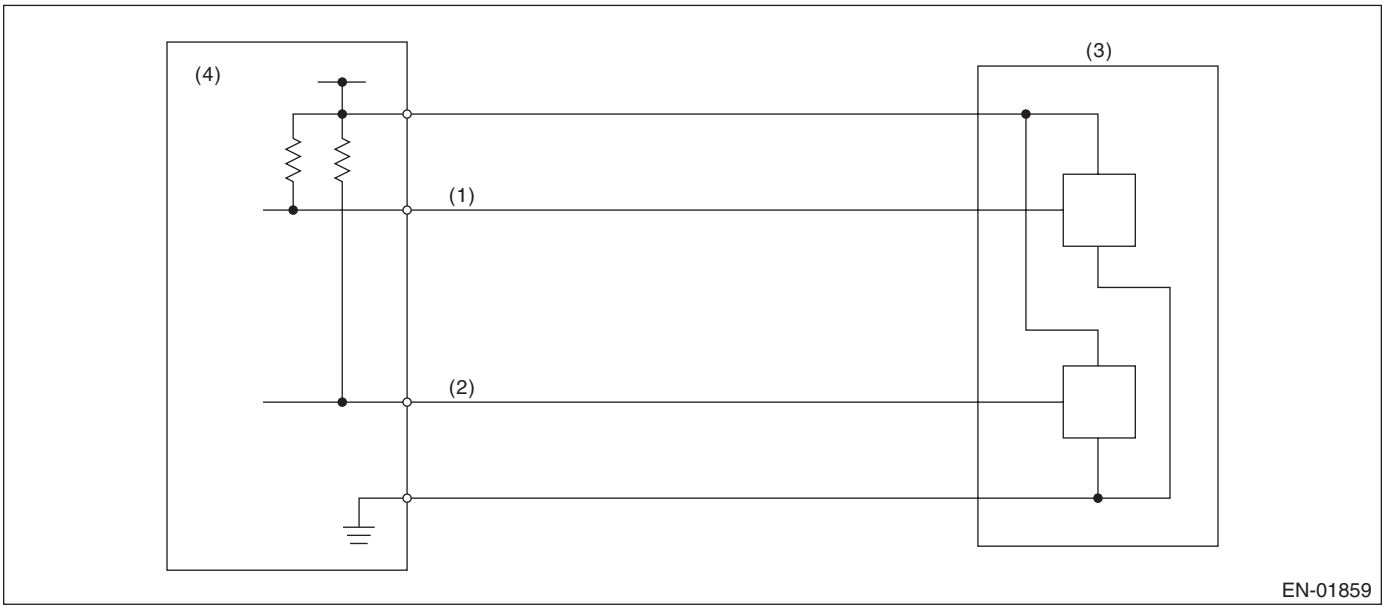

(1) Throttle position sensor 1 signal
(2) Throttle position sensor 2 signal
(3) Throttle position sensor
(4) Engine control module (ECM)

3. ENABLE CONDITION

Secondary Parameters	Enable Conditions
Ignition switch	ON

4. GENERAL DRIVING CYCLE

Always perform the diagnosis continuously.

5. DIAGNOSTIC METHOD

Judge OK and clear the NG when the malfunction criteria below are completed.

Judgment Value

Malfunction Criteria	Threshold Value
Signal difference between two sensors	≤ 4.25 °

Details of Judgment Value

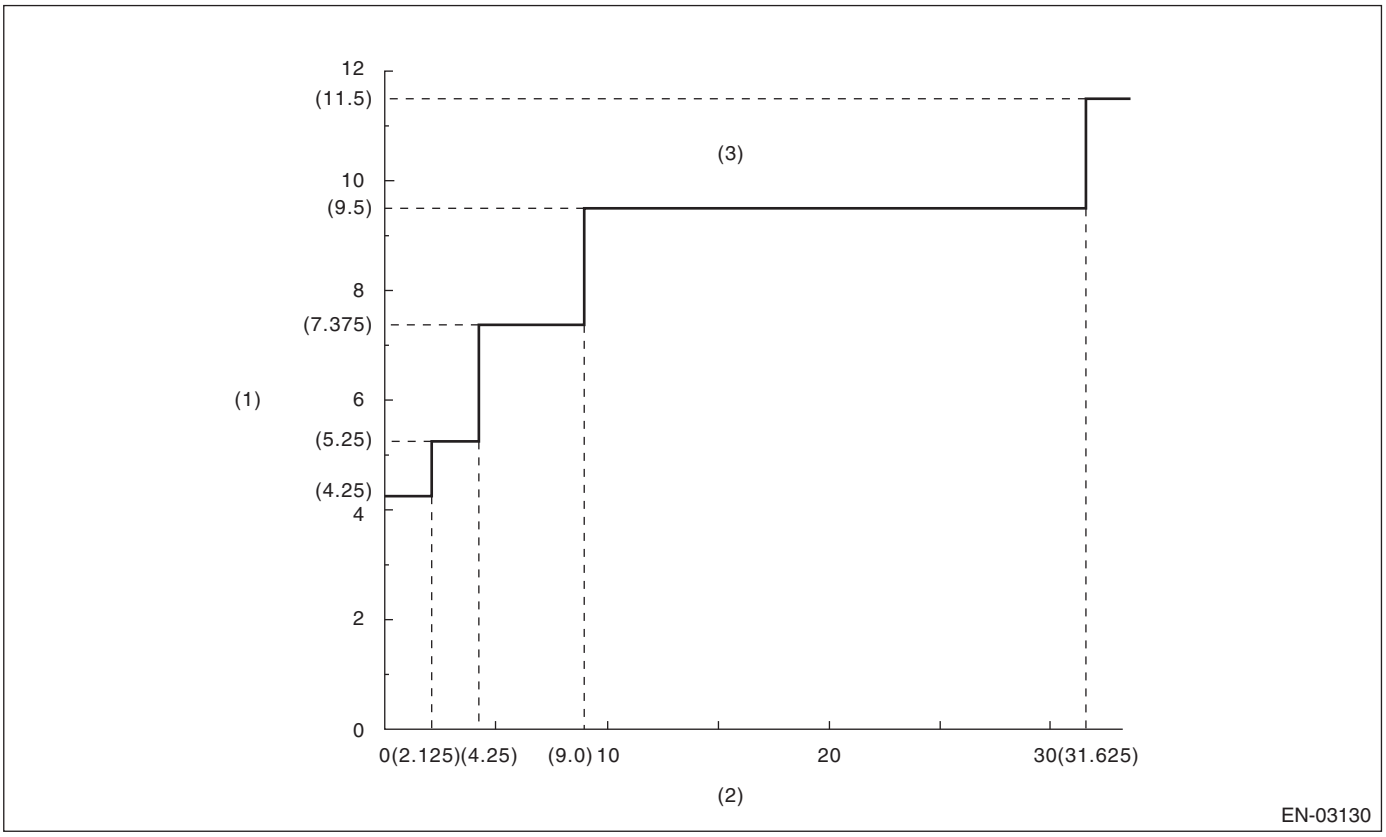

(1) Sensor output difference (°)
(2) Throttle position sensor 1 opening angle (°)
(3) NG area

Time Needed for Diagnosis: 212 milliseconds(NG judgment) 24 milliseconds (OK judgment)
Malfunction Indicator Light Illumination: Illuminates as soon as malfunction occurs.

6. DTC CLEAR CONDITION

- When the OK idling cycle was completed 40 times in a row
- When “Clear Memory” was performed (Only with engine stopped)

7. MALFUNCTION INDICATOR LIGHT CLEAR CONDITION

- When the OK driving cycle was completed 3 times in a row
- When “Clear Memory” was performed (Only with engine stopped)

8. FAIL SAFE

Stop the continuity to electronic throttle control motor. (Fix the throttle opening angle to 6°.)

9. ECM OPERATION AT DTC SETTING

Memorize the freeze frame data. (For test mode $02)

EG:DTC P2138 THROTTLE/PEDAL POSITION SENSOR/SWITCH “D”/“E” VOLTAGE RATIONALITY

1. OUTLINE OF DIAGNOSIS

Judge NG when the signal level of throttle position sensor 1 is different from the throttle position sensor 2.

2. COMPONENT DESCRIPTION

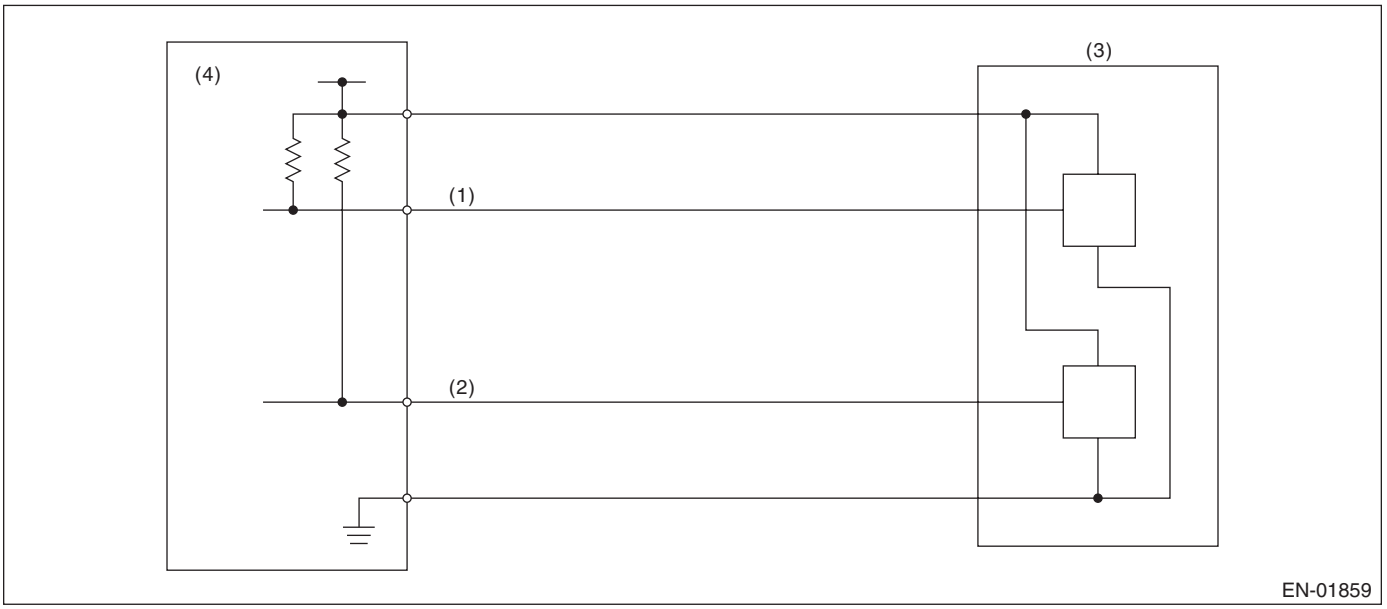

(1) Engine control module (ECM)
(2) Accelerator pedal position sensor 1 signal
(3) Accelerator pedal position sensor 2 signal
(4) Accelerator pedal position sensor

3. ENABLE CONDITION

Secondary Parameters	Enable Conditions
Ignition switch	ON

4. GENERAL DRIVING CYCLE

Always perform the diagnosis continuously.

5. DIAGNOSTIC METHOD

Judge OK and clear the NG when the malfunction criteria below are completed.

Judgment Value

Malfunction Criteria	Threshold Value
Signal difference between two sensors	≤ 0.8°

Details of Judgment Value

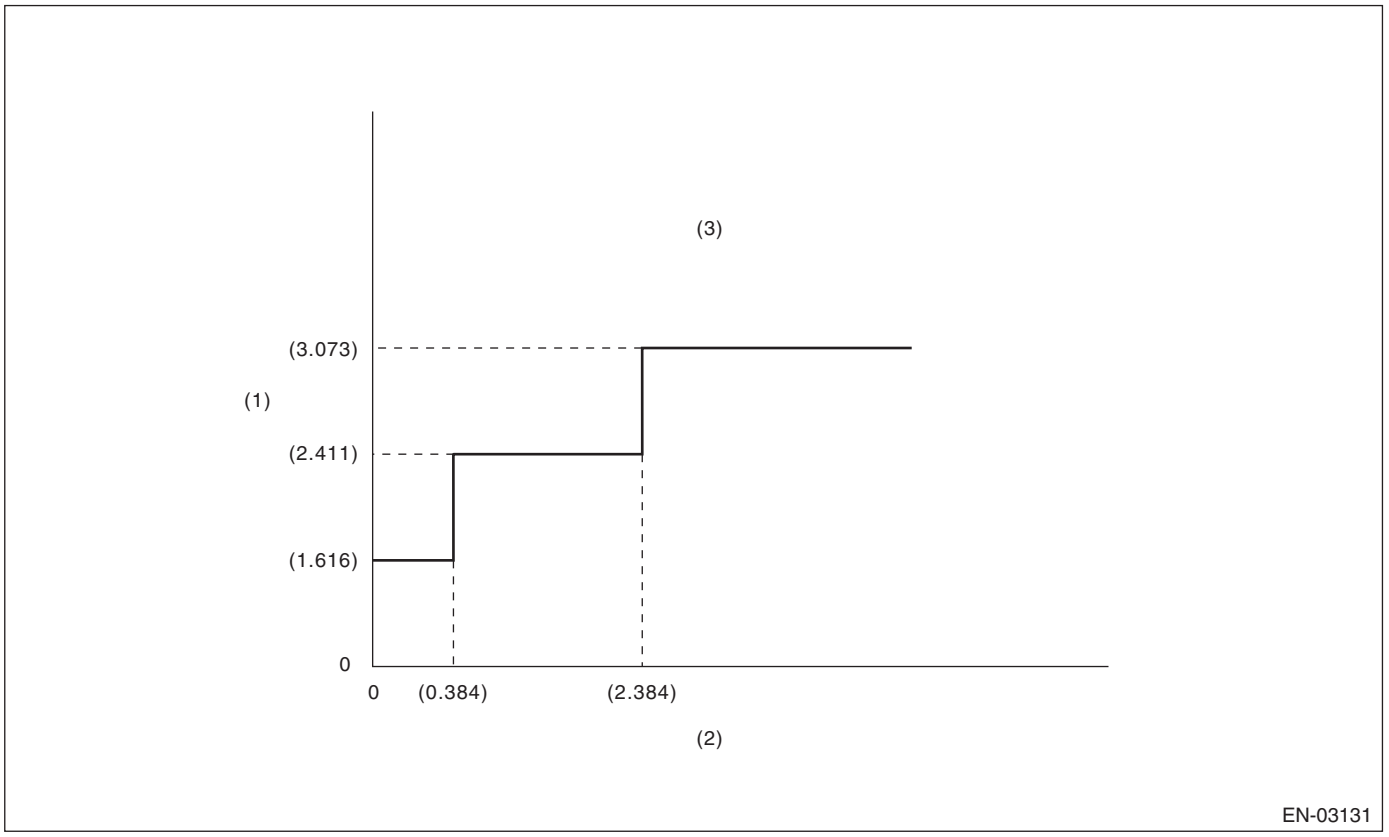

(1) Sensor output difference (°)
(2) Accelerator pedal position sensor 2 opening angle (°)
(3) NG area

Time Needed for Diagnosis:
- 116 milliseconds (For NG)
- 1000 milliseconds (For OK)

Malfunction Indicator Light Illumination: Illuminates as soon as malfunction occurs.

6. DTC CLEAR CONDITION

- When the OK idling cycle was completed 40 times in a row
- When “Clear Memory” was performed

7. MALFUNCTION INDICATOR LIGHT CLEAR CONDITION

- When the OK driving cycle was completed 3 times in a row
- When “Clear Memory” was performed

8. FAIL SAFE

Fix the throttle opening angle to 6°.

9. ECM OPERATION AT DTC SETTING

Memorize the freeze frame data. (For test mode $02)

EH:DTC P2227 BAROMETRIC PRESSURE CIRCUIT RANGE/PERFORMANCE

1. OUTLINE OF DIAGNOSIS

Detect the malfunction of atmospheric pressure sensor output property. Judge NG when the atmospheric pressure sensor output is largely different from the intake manifold pressure at engine starting.

2. COMPONENT DESCRIPTION

Atmospheric pressure sensor is built in ECM.

3. ENABLE CONDITION

Secondary Parameters	Enable Conditions
Engine speed	< 300 rpm
Vehicle speed	< 1 km/h (0.62 MPH)

4. GENERAL DRIVING CYCLE

Perform the diagnosis before engine starting with the ignition switch ON.

5. DIAGNOSTIC METHOD

• Abnormality Judgment

Judge NG when the continuous time of completing the malfunction criteria below becomes more than 0.3 seconds.

Judgment Value

Malfunction Criteria	Threshold Value
|Atmospheric – manifold absolute pressure|	≥ 26.7 kPa (200 mmHg, 7.88 inHg)
|Intake manifold pressure at engine starting – manifold absolute pressure|	< 1.33 kPa (10 mmHg, 0.39 inHg)

Time Needed for Diagnosis: 0.3 seconds
Malfunction Indicator Light Illumination: Detect when malfunction occurs in 2 continuous driving cycles.

• Normality Judgment

Judge OK and clear the NG when the continuous time of completing the malfunction criteria below becomes more than 0.3 seconds.

Judgment Value

Malfunction Criteria	Threshold Value
Atmospheric – manifold absolute pressure	< 26.7 kPa (200 mmHg, 7.88 inHg)

6. DTC CLEAR CONDITION

- When the OK idling cycle was completed 40 times in a row
- When “Clear Memory” was performed

7. MALFUNCTION INDICATOR LIGHT CLEAR CONDITION

- When the OK driving cycle was completed 3 times in a row
- When “Clear Memory” was performed

8. FAIL SAFE

Atmospheric pressure sensor process: Fix the atmospheric pressure to 101 kPa (760 mmHg, 29.8 inHg).

9. ECM OPERATION AT DTC SETTING

Memorize the freeze frame data. (For test mode $02)

EI: DTC P2228 BAROMETRIC PRESSURE CIRCUIT LOW INPUT

1. OUTLINE OF DIAGNOSIS

Detect the open or short circuit of atmospheric pressure sensor.
Judge NG when out of the standard value.

2. COMPONENT DESCRIPTION

Atmospheric pressure sensor is built in ECM.

3. ENABLE CONDITION

Secondary Parameters	Enable Conditions
None	

4. GENERAL DRIVING CYCLE

Always perform the diagnosis continuously.

5. DIAGNOSTIC METHOD

• Abnormality Judgment

Judge NG when the continuous time of completing the malfunction criteria below becomes more than 0.5 seconds.

Judgment Value

Malfunction Criteria	Threshold Value
Ignition switch	ON
Output voltage	$<$ 0.118 V

Time Needed for Diagnosis: 0.5 seconds
Malfunction Indicator Light Illumination: Illuminates as soon as malfunction occurs.

• Normality Judgment

Judge OK and clear the NG when the malfunction criteria below are completed.

Judgment Value

Malfunction Criteria	Threshold Value
Ignition switch	ON
Output voltage	$\geq$ 0.118 V

6. DTC CLEAR CONDITION

- When the OK idling cycle was completed 40 times in a row
- When “Clear Memory” was performed

7. MALFUNCTION INDICATOR LIGHT CLEAR CONDITION

- When the OK driving cycle was completed 3 times in a row
- When “Clear Memory” was performed

8. FAIL SAFE

Atmospheric pressure sensor process: Fix the atmospheric pressure to 101.3 kPa (760 mmHg, 29.9 inHg).

9. ECM OPERATION AT DTC SETTING

Memorize the freeze frame data. (For test mode $02)

EJ:DTC P2229 BAROMETRIC PRESSURE CIRCUIT HIGH INPUT

1. OUTLINE OF DIAGNOSIS

Detect the open or short circuit of atmospheric pressure sensor.
Judge NG when out of the standard value.

2. COMPONENT DESCRIPTION

Atmospheric pressure sensor is built in ECM.

3. ENABLE CONDITION

Secondary Parameters	Enable Conditions
None	

4. GENERAL DRIVING CYCLE

Always perform the diagnosis continuously.

5. DIAGNOSTIC METHOD

• Abnormality Judgment

Judge NG when the continuous time of completing the malfunction criteria below becomes more than 0.5 seconds.

Judgment Value

Malfunction Criteria	Threshold Value
Ignition switch	ON
Output voltage	≥ 4.936 V

Time Needed for Diagnosis: 0.5 seconds
Malfunction Indicator Light Illumination: Illuminates as soon as malfunction occurs.

• Normality Judgment

Judge OK and clear the NG when the malfunction criteria below are completed.

Judgment Value

Malfunction Criteria	Threshold Value
Ignition switch	ON
Output voltage	< 4.936 V

6. DTC CLEAR CONDITION

- When the OK idling cycle was completed 40 times in a row
- When “Clear Memory” was performed

7. MALFUNCTION INDICATOR LIGHT CLEAR CONDITION

- When the OK driving cycle was completed 3 times in a row
- When “Clear Memory” was performed

8. FAIL SAFE

Atmospheric pressure sensor process: Fix the atmospheric pressure to 101.3 kPa (760 mmHg, 29.9 inHg).

9. ECM OPERATION AT DTC SETTING

Memorize the freeze frame data. (For test mode $02)

ENGINE SECTION 2

This service manual has been prepared to provide SUBARU service personnel with the necessary information and data for the correct maintenance and repair of SUBARU vehicles.
This manual includes the procedures for maintenance, disassembling, reassembling, inspection and adjustment of components and diagnostics for guidance of experienced mechanics.
Please peruse and utilize this manual fully to ensure complete repair work for satisfying our customers by keeping their vehicle in optimum condition. When replacement of parts during repair work is needed, be sure to use SUBARU genuine parts.

All information, illustration and specifications contained in this manual are based on the latest product information available at the time of publication approval.

FUEL INJECTION (FUEL SYSTEMS)	FU(H4DOTC)
EMISSION CONTROL (AUX. EMISSION CONTROL DEVICES)	EC(H4DOTC)
INTAKE (INDUCTION)	IN(H4DOTC)
MECHANICAL	ME(H4DOTC)
EXHAUST	EX(H4DOTC)
COOLING	CO(H4DOTC)
LUBRICATION	LU(H4DOTC)
SPEED CONTROL SYSTEMS	SP(H4DOTC)
IGNITION	IG(H4DOTC)
STARTING/CHARGING SYSTEMS	SC(H4DOTC)
ENGINE (DIAGNOSTICS)	EN(H4DOTC)(diag)
GENERAL DESCRIPTION	GD(H4DOTC)
FUEL INJECTION (FUEL SYSTEMS)	FU(H6DO)
EMISSION CONTROL (AUX. EMISSION CONTROL DEVICES)	EC(H6DO)
INTAKE (INDUCTION)	IN(H6DO)
MECHANICAL	ME(H6DO)
EXHAUST	EX(H6DO)

ENGINE SECTION 2

COOLING	CO(H6DO)
LUBRICATION	LU(H6DO)
SPEED CONTROL SYSTEMS	SP(H6DO)
IGNITION	IG(H6DO)
STARTING/CHARGING SYSTEMS	SC(H6DO)
ENGINE (DIAGNOSTICS)	EN(H6DO)(diag)
GENERAL DESCRIPTION	GD(H6DO)

FUEL INJECTION (FUEL SYSTEMS)

FU(H4DOTC)

		Page
1.	General Description	2
2.	Throttle Body	11
3.	Intake Manifold	12
4.	Engine Coolant Temperature Sensor	22
5.	Crankshaft Position Sensor	23
6.	Camshaft Position Sensor	24
7.	Knock Sensor	25
8.	Throttle Position Sensor	26
9.	Mass Air Flow and Intake Air Temperature Sensor	27
10.	Manifold Absolute Pressure Sensor	28
11.	Fuel Injector	29
12.	Tumble Generator Valve Assembly	30
13.	Tumble Generator Valve Actuator	31
14.	Tumble Generator Valve Position Sensor	32
15.	Oil Flow Control Solenoid Valve	33
16.	Wastegate Control Solenoid Valve	34
17.	Front Oxygen (A/F) Sensor	35
18.	Rear Oxygen Sensor	37
19.	Exhaust Temperature Sensor	38
20.	Engine Control Module (ECM)	39
21.	Main Relay	40
22.	Fuel Pump Relay	41
23.	Electronic Throttle Control Relay	42
24.	Fuel Pump Control Unit	43
25.	Fuel	44
26.	Fuel Tank	45
27.	Fuel Filler Pipe	51
28.	Fuel Pump	54
29.	Fuel Level Sensor	56
30.	Fuel Sub Level Sensor	57
31.	Fuel Filter	58
32.	Fuel Bypass Valve	59
33.	Fuel Delivery, Return and Evaporation Lines	60
34.	Fuel System Trouble in General	63

1. General Description

A: SPECIFICATION

Fuel tank	Capacity	64 ℓ (16.9 US gal, 14.1 Imp gal)
	Location	Under rear seat
Fuel pump	Type	Impeller
	Shutoff discharge pressure	550 — 850 kPa (5.61 — 8.67 kg/cm^2, 79.8 — 123.3 psi)
	Discharge	155 ℓ (40.9 US gal, 34.1 Imp gal)/h or more. [12 V at 300 kPa (3.06 kg/cm^2, 43.5 psi)]
Fuel filter		In-tank type

B: COMPONENT

1. INTAKE MANIFOLD

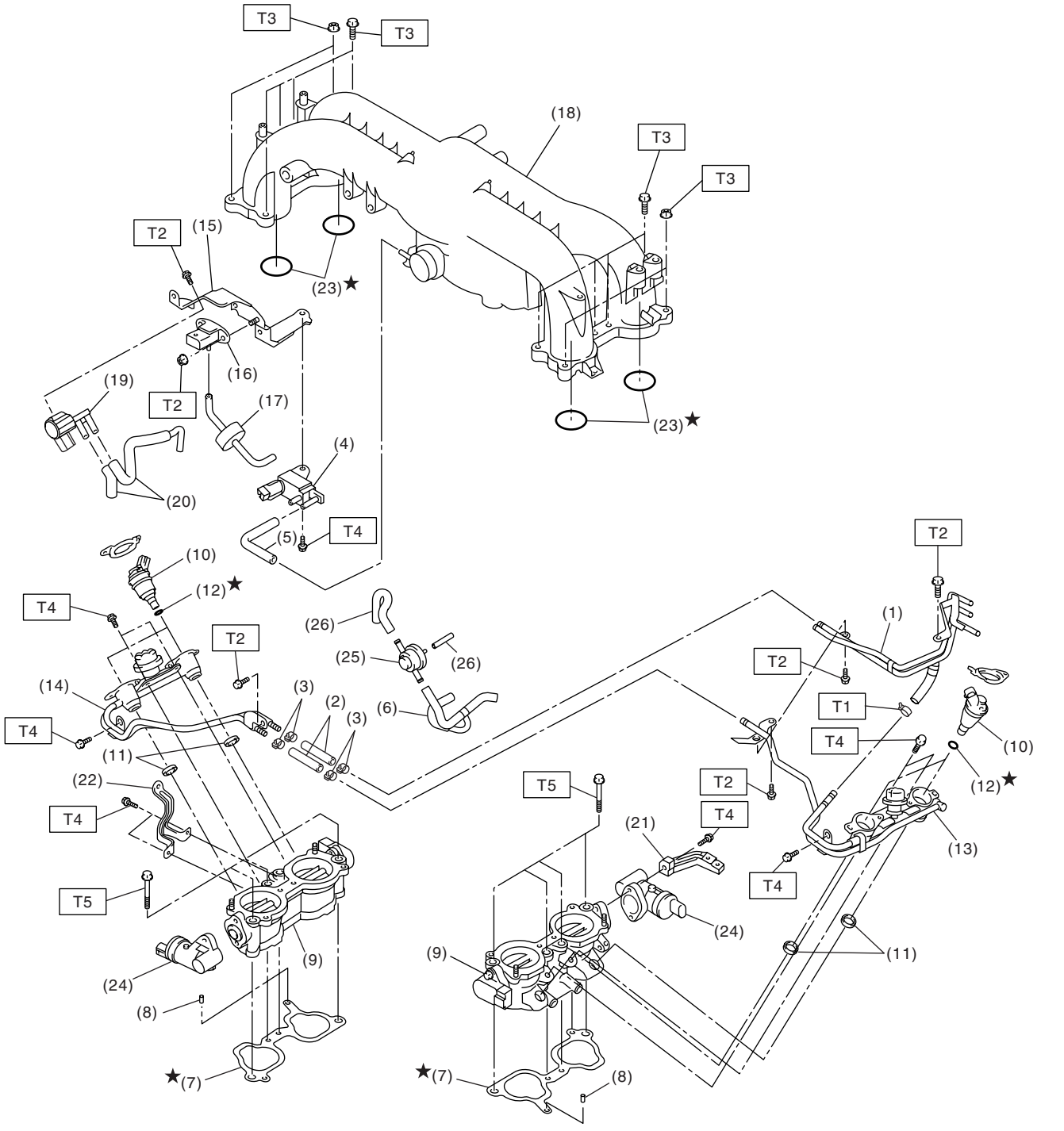

FU-02338

(1) Fuel pipe ASSY
(2) Fuel hose
(3) Clip
(4) Purge control solenoid valve
(5) Vacuum hose
(6) Vacuum control hose
(7) Intake manifold gasket
(8) Guide pin
(9) Intake manifold (lower)
(10) Fuel injector
(11) Seal ring
(12) O-ring
(13) Fuel injector pipe LH
(14) Fuel injector pipe RH
(15) Solenoid valve bracket
(16) Manifold absolute pressure sensor
(17) Filter
(18) Intake manifold
(19) Wastegate control solenoid valve ASSY
(20) Vacuum hose
(21) Ground stay
(22) Coolant filler tank stay
(23) O-ring
(24) Tumble generator valve actuator
(25) Purge valve
(26) Purge hose

Tightening torque: N·m (kgf-m, ft-lb)
T1: 1.5 (0.15, 1.1)
T2: 6.5 (0.66, 4.8)
T3: 8.3 (0.85, 6.1)
T4: 19 (1.94, 14)
T5: 25 (2.5, 18)

2. AIR INTAKE SYSTEM

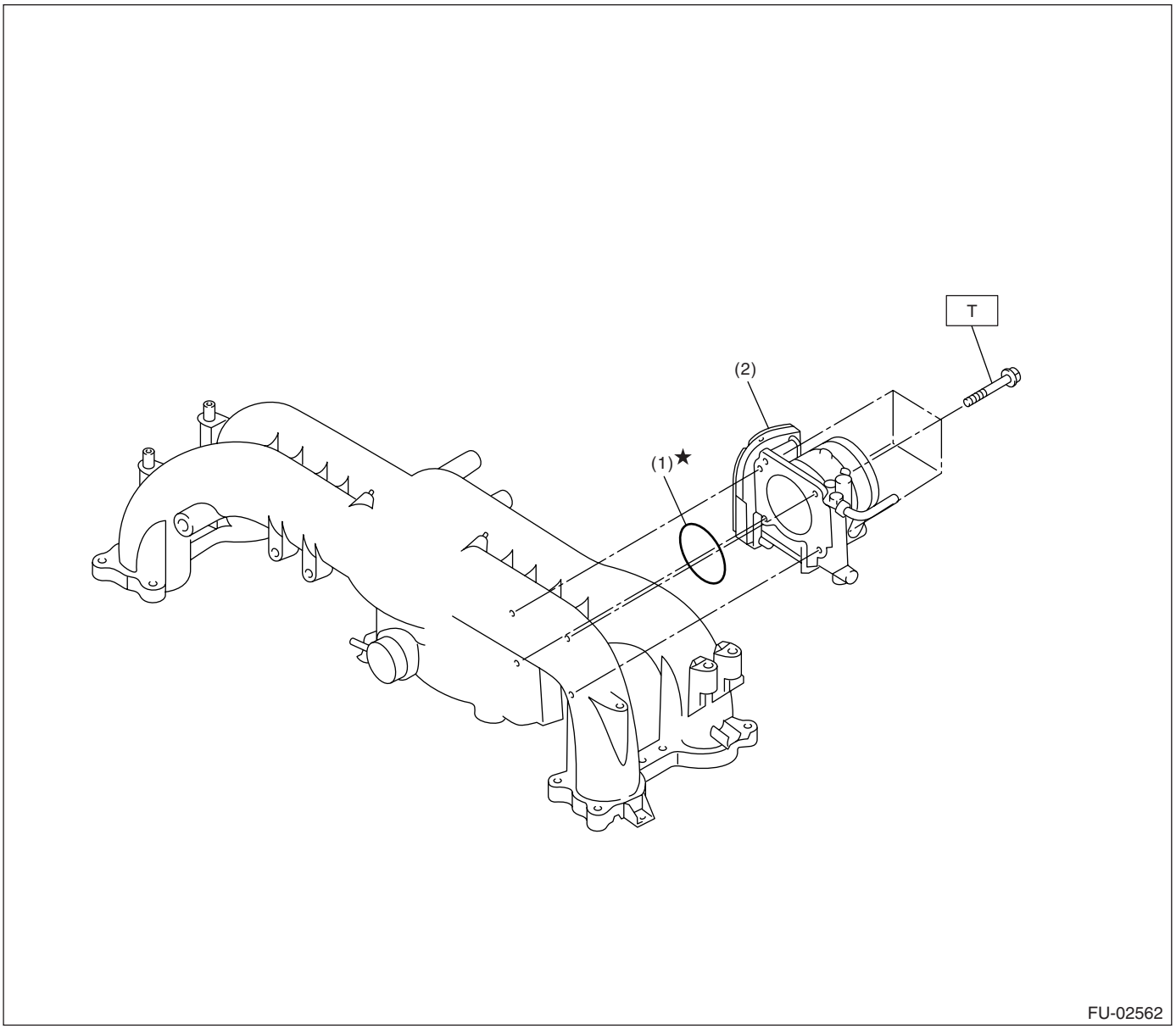

(1) O-ring
(2) Throttle body

Tightening torque: N·m (kgf-m, ft-lb)
T: 8 (0.8, 5.9)

3. CRANKSHAFT POSITION, CAMSHAFT POSITION AND KNOCK SENSORS

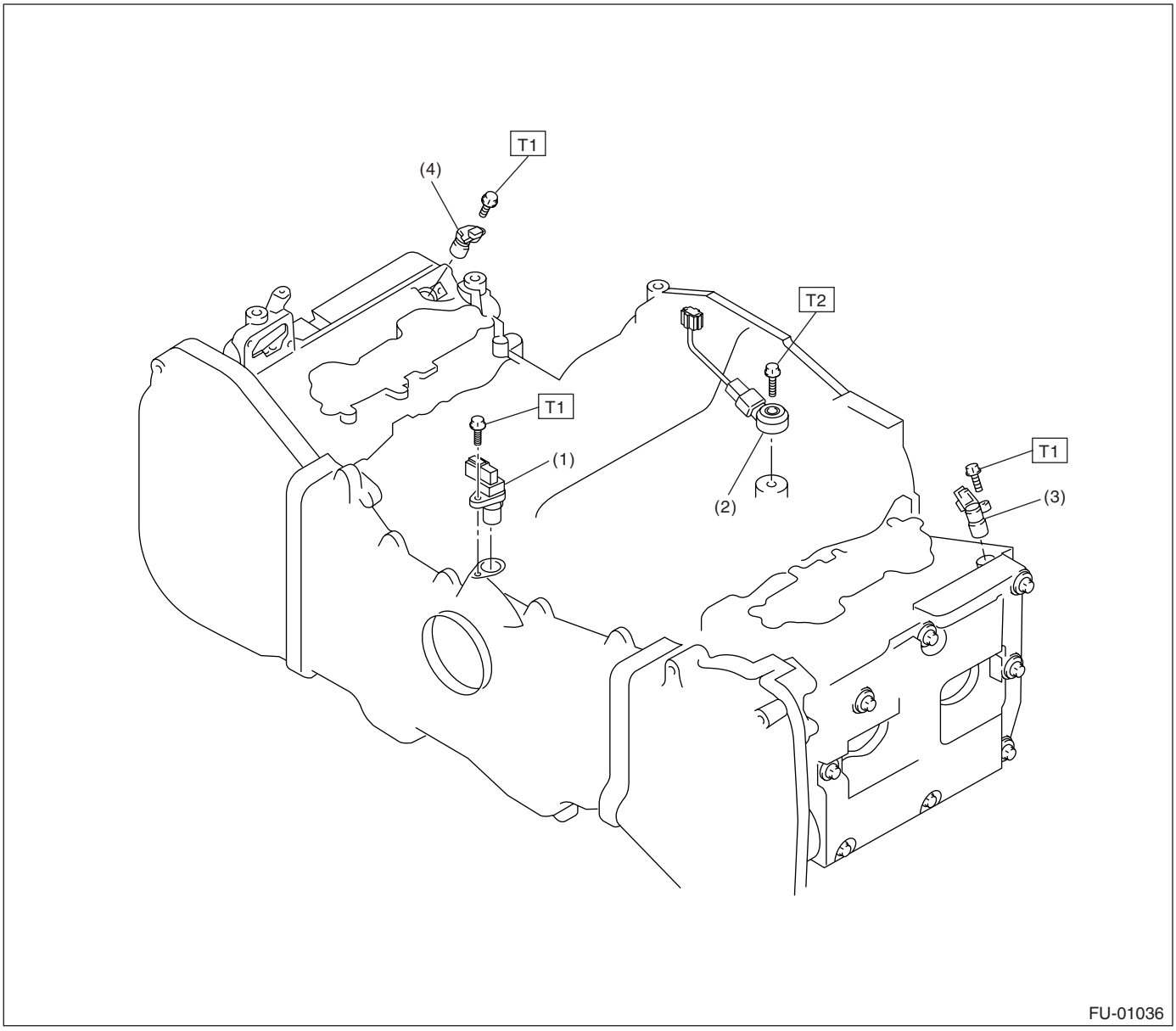

(1) Crankshaft position sensor
(2) Knock sensor
(3) Camshaft position sensor LH
(4) Camshaft position sensor RH

Tightening torque: N·m (kgf-m, ft-lb)
T1: 6.4 (0.65, 4.7)
T2: 24 (2.4, 17.4)

4. FUEL TANK

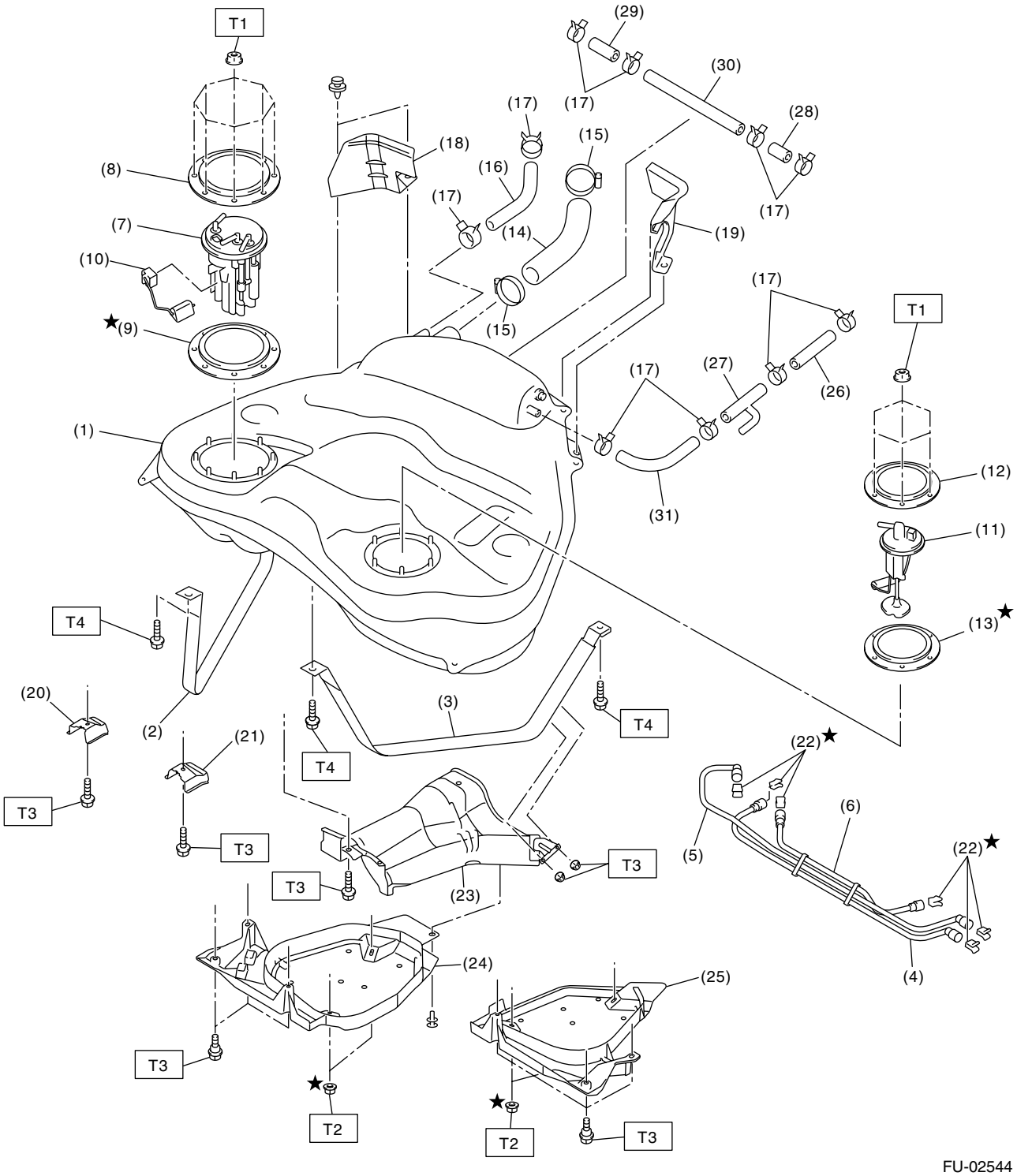

FU-02544

(1) Fuel tank
(2) Fuel tank band RH
(3) Fuel tank band LH
(4) Delivery tube
(5) Return tube
(6) Jet pump tube
(7) Fuel pump ASSY
(8) Fuel pump upper plate
(9) Fuel pump gasket
(10) Fuel level sensor
(11) Fuel sub level sensor
(12) Fuel sub level sensor upper plate
(13) Fuel sub level sensor gasket
(14) Fuel filler hose
(15) Clamp
(16) Evaporation hose A
(17) Clip
(18) Fuel tank protector RH (Rear)
(19) Fuel tank protector LH (Rear)
(20) Stopper RH
(21) Stopper LH
(22) Retainer
(23) Heat shield cover
(24) Fuel tank protector RH (Front)
(25) Fuel tank protector LH (Front)
(26) Evaporation hose B
(27) Connector
(28) Evaporation hose C
(29) Evaporation hose D
(30) Evaporation pipe
(31) Evaporation hose E

Tightening torque: N·m (kgf-m, ft-lb)
T1: 4.4 (0.45, 3.2)
T2: 9 (0.9, 6.6)
T3: 17.5 (1.78, 12.9)
T4: 33 (3.4, 25)

5. FUEL LINE

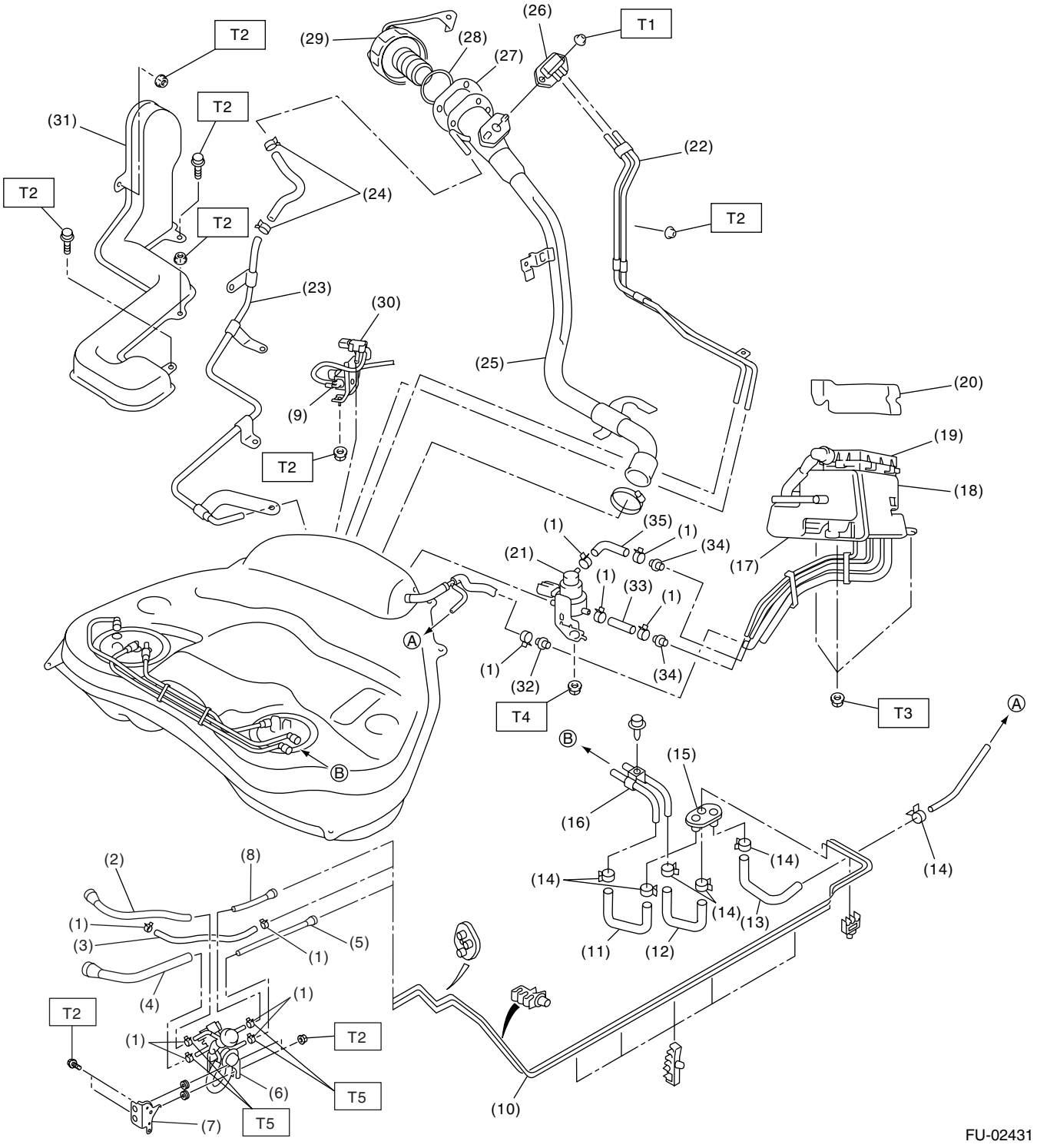

FU-02431

(1) Clamp
(2) Fuel delivery hose A
(3) Evaporation hose
(4) Fuel return hose A
(5) Fuel return hose B
(6) Fuel bypass valve
(7) Fuel bypass valve bracket
(8) Fuel delivery hose B
(9) Fuel tank sensor control valve
(10) Fuel pipe ASSY
(11) Fuel delivery hose C
(12) Fuel return hose C
(13) Evaporation hose B
(14) Clamp
(15) Grommet
(16) Fuel pipe ASSY
(17) Canister
(18) Drain valve
(19) Drain filter
(20) Canister protector
(21) Pressure control solenoid valve
(22) Evaporation pipe (A)
(23) Evaporation pipe (B)
(24) Clip
(25) Fuel filler pipe
(26) Shut valve
(27) Packing
(28) Ring
(29) Fuel filler cap
(30) Fuel tank pressure sensor
(31) Evaporation pipe protector
(32) Connector A
(33) Canister hose A
(34) Connector B
(35) Canister hose B

Tightening torque: N·m (kgf-m, ft-lb)
T1: 4.4 (0.45, 3.2)
T2: 7.5 (0.76, 5.5)
T3: 8 (0.8, 5.9)
T4: 17.6 (1.8, 13)
T5: 1.25 (0.13, 0.94)

C: CAUTION

- Wear work clothing, including a cap, protective goggles and protective shoes during operation.
- Remove contamination including dirt and corrosion before removal, installation or disassembly.
- Keep the disassembled parts in order and protect them from dust and dirt.
- Before removal, installation or disassembly, be sure to clarify the failure. Avoid unnecessary removal, installation, disassembly and replacement.
- Be careful not to burn yourself, because each part on the vehicle is hot after running.
- Be sure to tighten fasteners including bolts and nuts to the specified torque.
- Place shop jacks or rigid racks at the specified points.
- Before disconnecting electrical connectors of sensors or units, be sure to disconnect the ground cable from battery.
- Place “NO FIRE” signs near the working area.
- Be careful not to spill fuel on the floor.

D: PREPARATION TOOL

ILLUSTRATION	TOOL NUMBER	DESCRIPTION	REMARKS
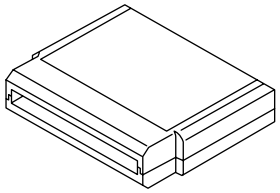 ST24082AA260	24082AA260	CARTRIDGE	Troubleshooting for electrical system.
ST22771AA030	22771AA030	SUBARU SELECT MONITOR KIT	Troubleshooting for electrical system.
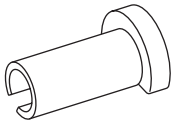 ST42099AE000	42099AE000	CONNECTOR REMOVER	Used for disconnecting quick connector.

2. Throttle Body

A: REMOVAL

1) Remove the collector cover.
2) Disconnect the ground cable from battery.

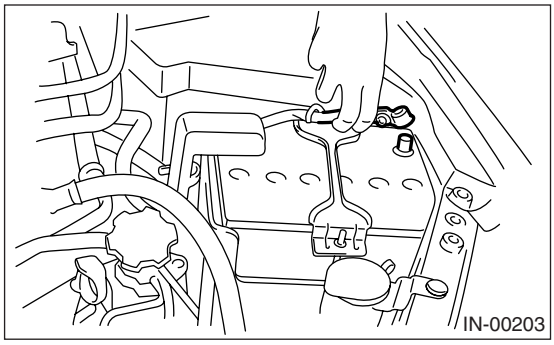

3) Remove the intercooler. <Ref. to IN(H4DOTC)-12, REMOVAL, Intercooler.>
4) Disconnect the connectors from throttle position sensor.

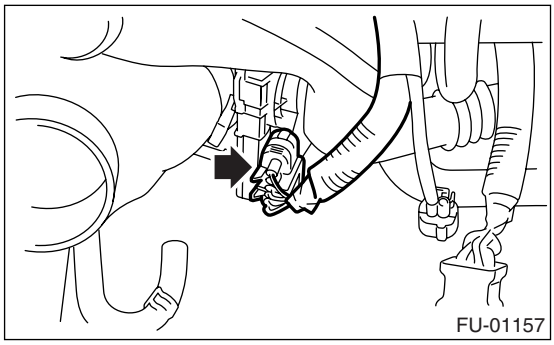

5) Disconnect the engine coolant hose from throttle body.

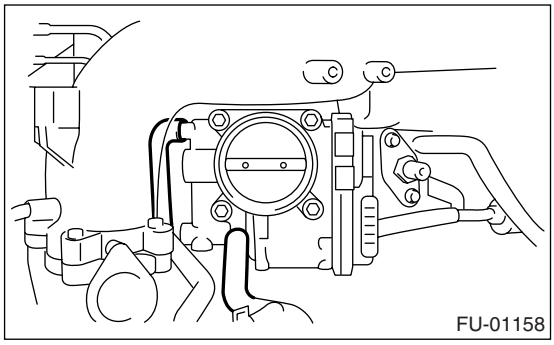

6) Remove the bolts which secure throttle body to intake manifold.

B: INSTALLATION

Install in the reverse order of removal.

NOTE:
Always use new O-rings.

Tightening torque:
8 N·m (0.8 kgf-m, 5.9 ft-lb)

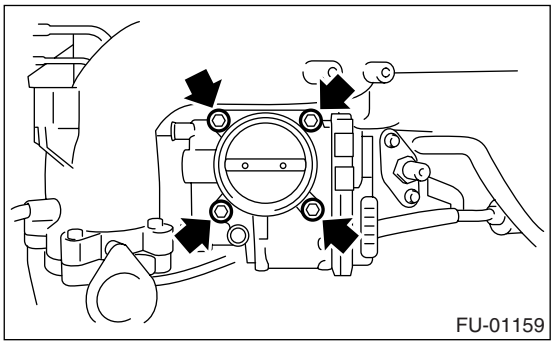

3. Intake Manifold

A: REMOVAL

1) Release the fuel pressure.
<Ref. to FU(H4DOTC)-44, RELEASING OF FUEL PRESSURE, PROCEDURE, Fuel.>
2) Open the fuel filler flap lid, and remove the fuel filler cap.
3) Remove the collector cover.
4) Disconnect the ground cable from battery.

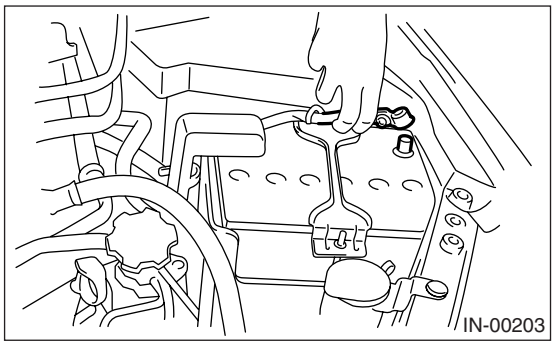

5) Lift-up the vehicle.
6) Remove the under cover.
7) Drain the coolant about 3.0 ℓ (3.2 US qt, 2.6 Imp qt).
8) Remove the intake duct from air cleaner case.
9) Remove the intercooler. <Ref. to IN(H4DOTC)-12, REMOVAL, Intercooler.>
10) Remove the generator. <Ref. to SC(H4SO)-20, REMOVAL, Generator.>
11) Remove the coolant filler tank. <Ref. to CO(H4DOTC)-31, REMOVAL, Coolant Filler Tank.>
12) Disconnect the emission hose (A) and connector (B) from PCV hose assembly.

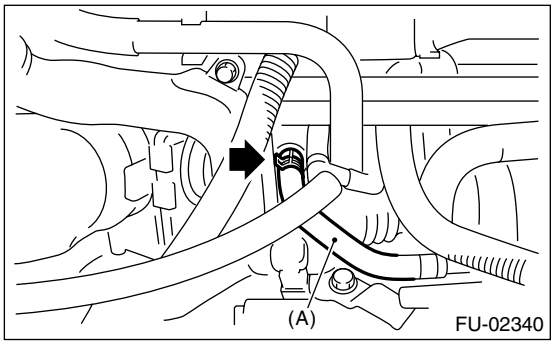

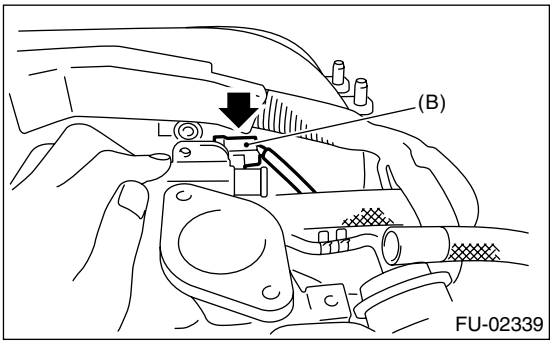

13) Disconnect the engine coolant hose from throttle body.

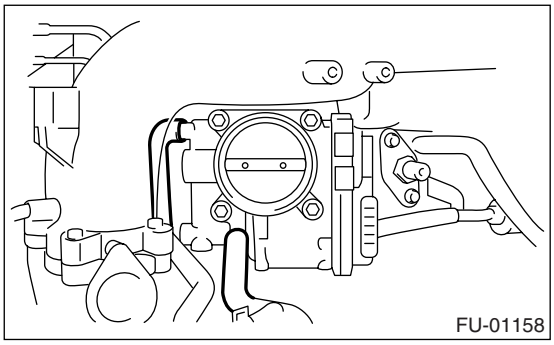

14) Disconnect the brake booster hose.

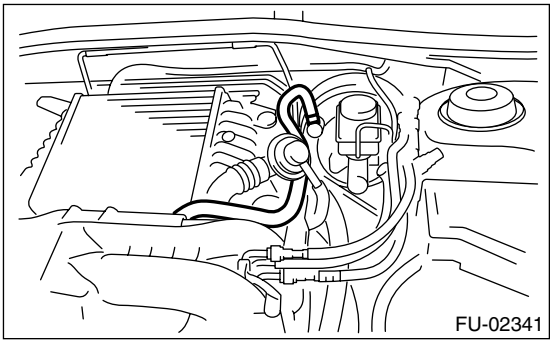

15) Disconnect the engine harness connectors from bulkhead harness connectors.

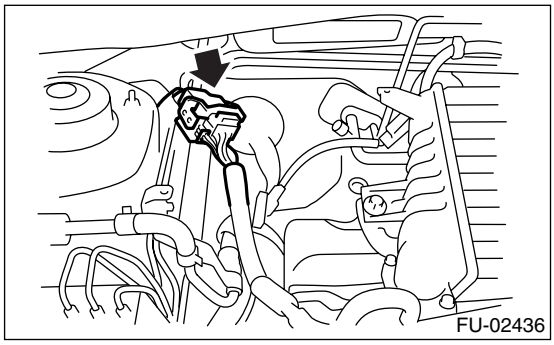

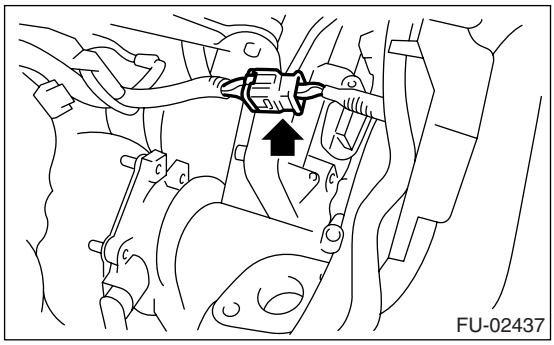

16) Disconnect the connectors from the engine coolant temperature sensor (A), oil pressure switch (B) and crankshaft position sensor (C).

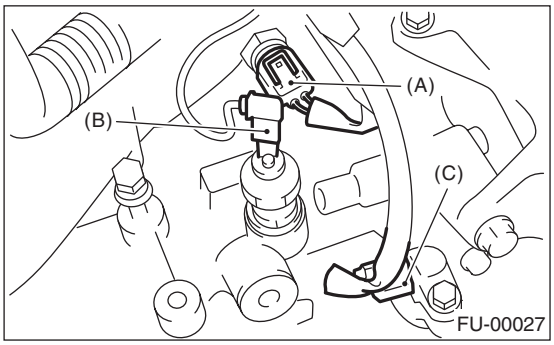

17) Disconnect the knock sensor connector.

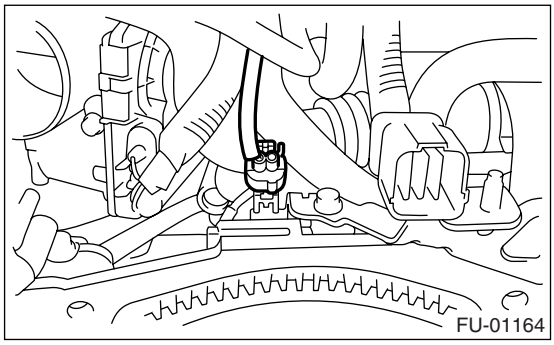

18) Disconnect the connector from camshaft position sensor.

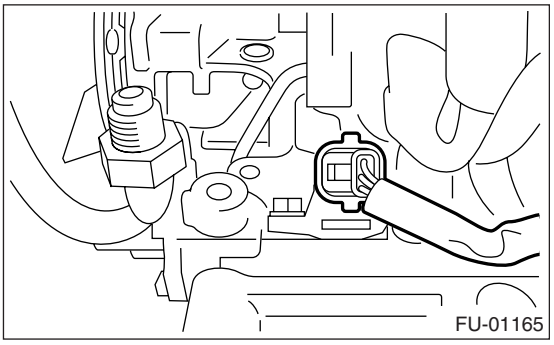

19) Disconnect the connector from the oil flow control solenoid valve.

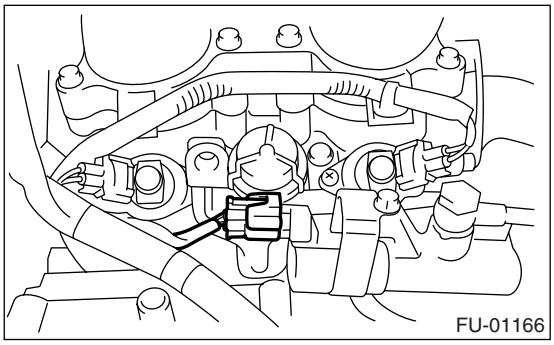

20) Disconnect the connector from ignition coil.

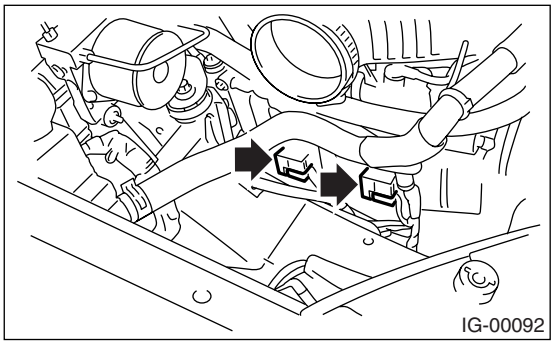

21) Disconnect the fuel delivery hose, return hose and evaporation hose.

(1) Disconnect the connectors of fuel delivery line and return line by pushing the ST in the direction of arrow.

ST 42099AE000 CONNECTOR REMOVER

(2) Remove the clip and disconnect the evaporation hose from pipe.

CAUTION:

- **Be careful not to spill fuel.**

• Catch the fuel from hoses using a container or cloth.

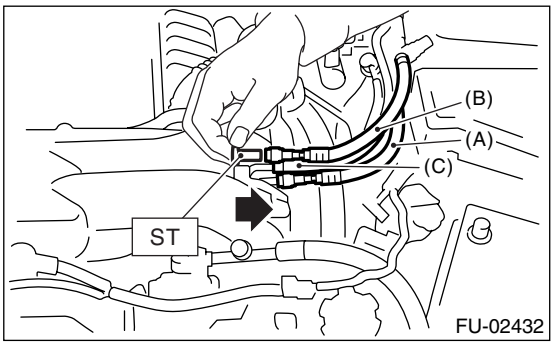

(A) Fuel delivery hose
(B) Fuel return hose
(C) Evaporation hose

22) Remove the bolts which hold intake manifold onto the cylinder heads.

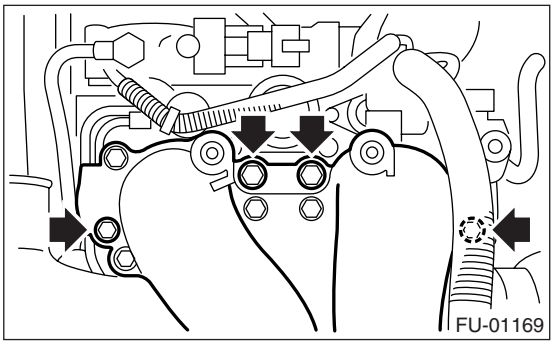

23) Remove the intake manifold.

B: INSTALLATION

1) Install the intake manifold onto cylinder heads.

NOTE:
Use a new gasket.

Tightening torque:
25 N·m (2.5 kgf-m, 18 ft-lb)

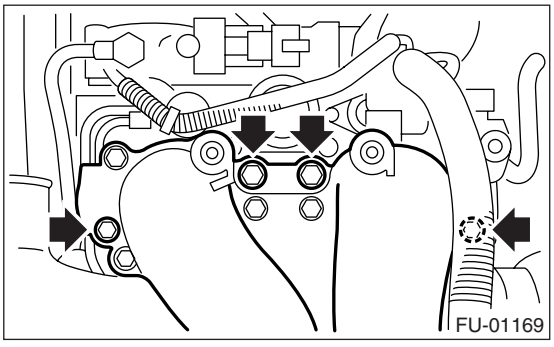

2) Connect the fuel delivery hose, return hose and evaporation hose. <Ref. to FU(H4DOTC)-61, INSTALLATION, Fuel Delivery, Return and Evaporation Lines.>

NOTE:
If fuel hoses or clamps are damaged, replace them with new ones.

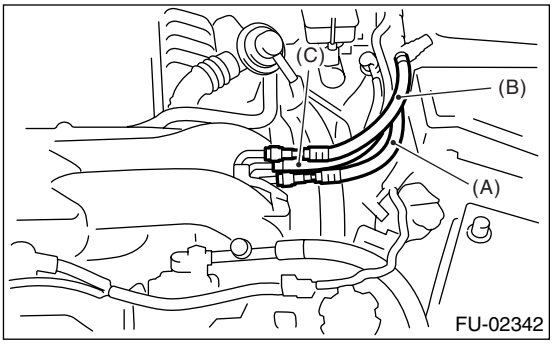

(A) Fuel delivery hose
(B) Fuel return hose
(C) Evaporation hose

3) Tighten the hose clamp screws.

Tightening torque:
1.25 N·m (0.13 kgf-m, 0.94 ft-lb)

4) Connect the connector to oil flow control solenoid valve.

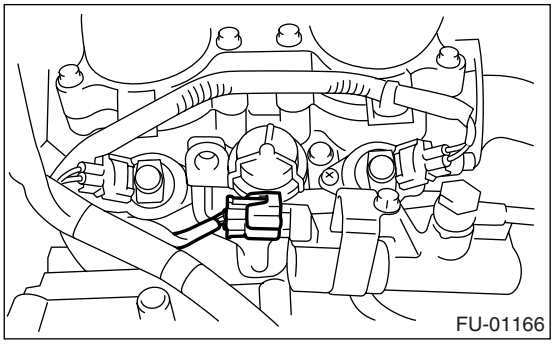

5) Connect the connector to the engine coolant temperature sensor (A), oil pressure switch (B) and crankshaft position sensor (C).

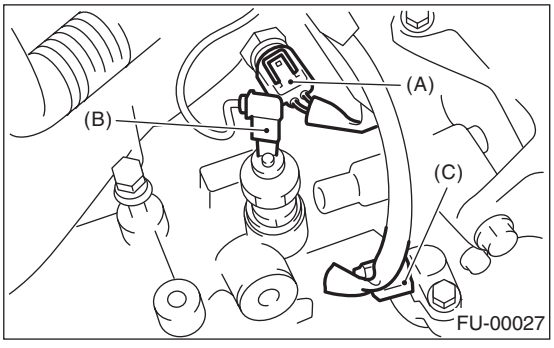

6) Connect the connector to knock sensor.

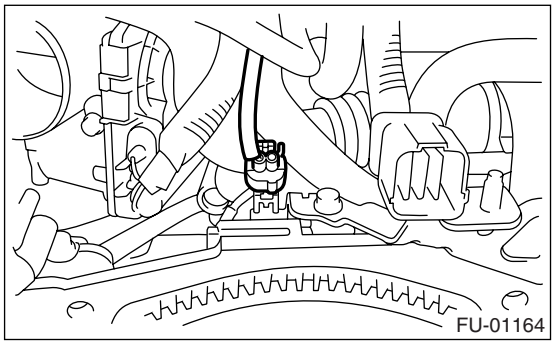

7) Connect the connector to camshaft position sensor.

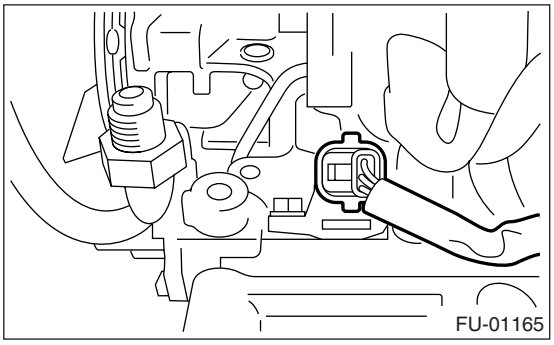

8) Connect the connector to ignition coil.

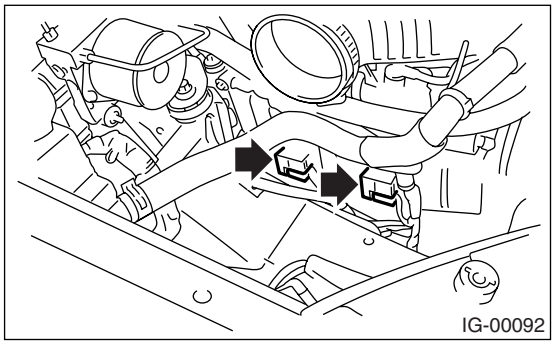

9) Connect the engine harness connector to bulkhead harness connector.

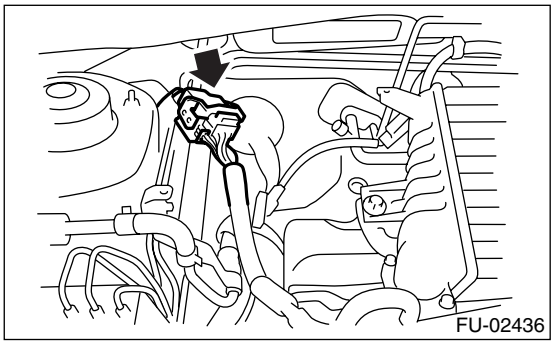

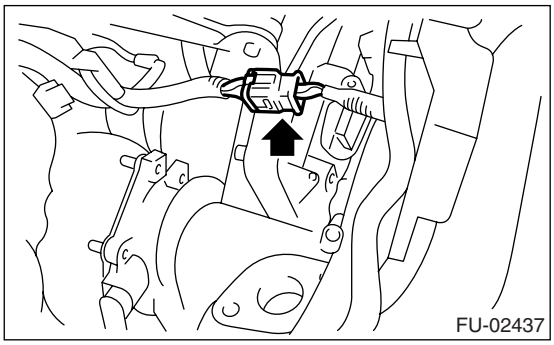

10) Connect the brake booster hose.

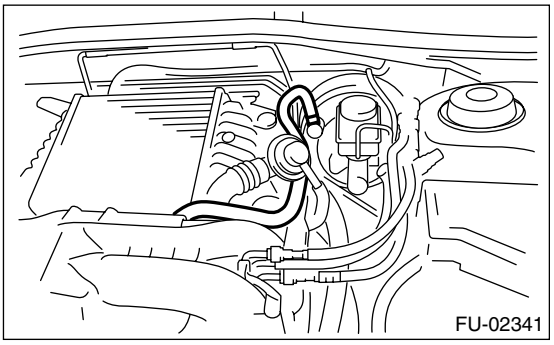

11) Connect the engine coolant hose to throttle body.

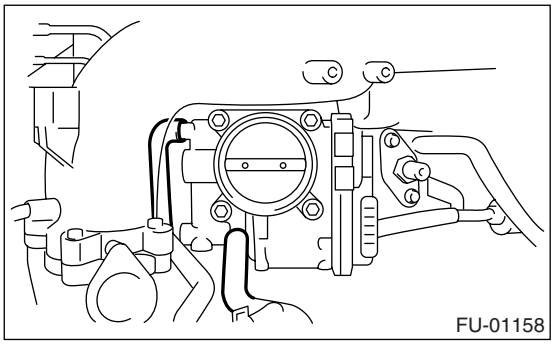

12) Connect the emission hose (A) and connector (B) to PCV hose assembly.

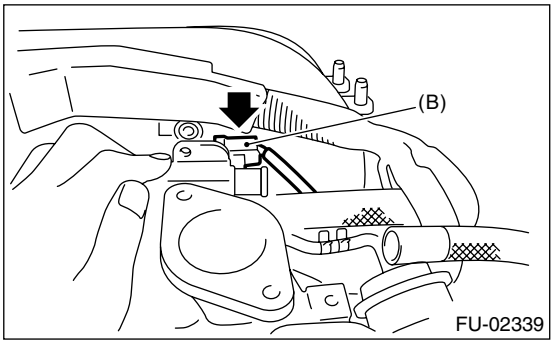

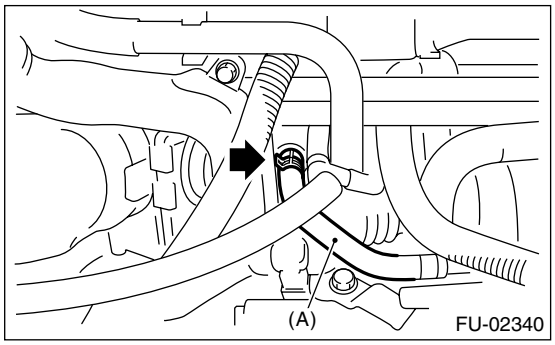

13) Install the coolant filler tank.
<Ref. to CO(H4DOTC)-31, INSTALLATION, Coolant Filler Tank.>
14) Install the intercooler. <Ref. to IN(H4DOTC)-12, INSTALLATION, Intercooler.>
15) Install the intake duct to air cleaner case.
16) Install the fuse of fuel pump to main fuse box.
17) Connect the battery ground cable to battery.
18) Lift-up the vehicle.
19) Install the under cover.
20) Fill with engine coolant. <Ref. to CO(H4DOTC)-13, FILLING OF ENGINE COOLANT, REPLACEMENT, Engine Coolant.>
21) Install the collector cover.

C: DISASSEMBLY

1) Disconnect the engine ground terminal from ground stay.

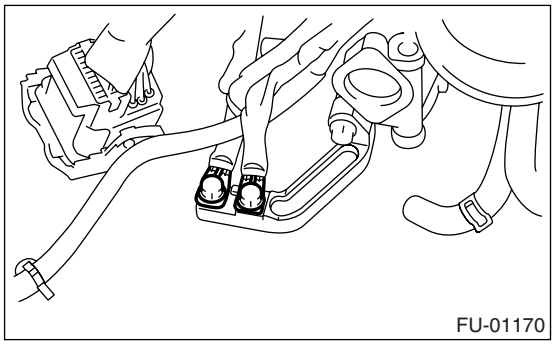

2) Remove the solenoid valve bracket assembly from intake manifold, and disconnect the connector from the wastegate control solenoid valve, manifold absolute pressure sensor and purge control solenoid valve.

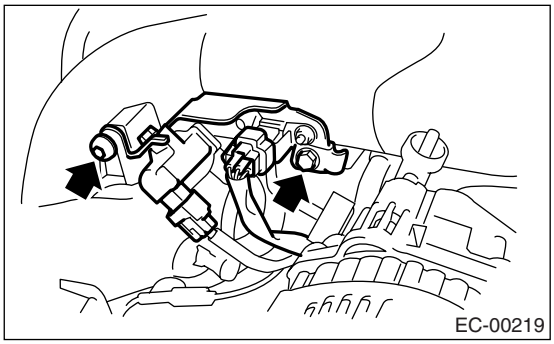

3) Disconnect the evaporation hoses (A) and filter assembly (B).

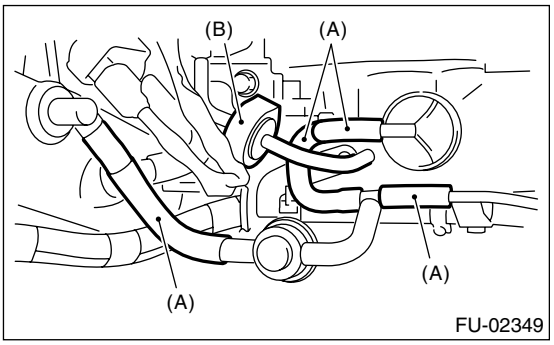

4) Disconnect the connector from throttle position sensor.

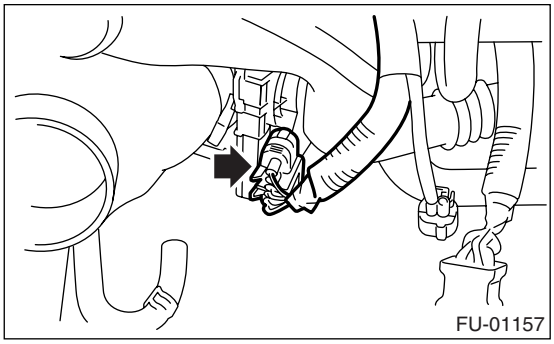

5) Remove the throttle body from intake manifold.

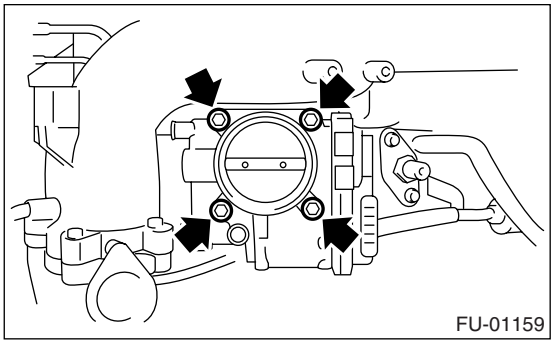

6) Disconnect the connectors from fuel injector (A), tumble generator valve position sensor (B) and tumble generator valve actuator (C).

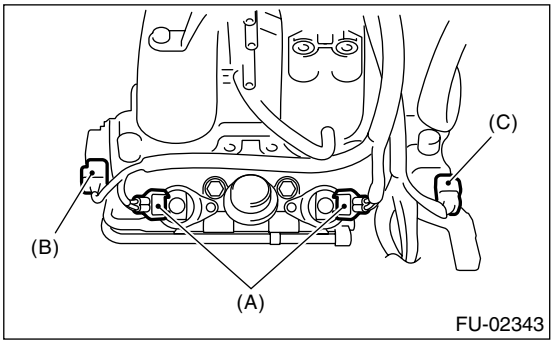

7) Remove the bolt which secures the air bypass pipe to intake manifold.

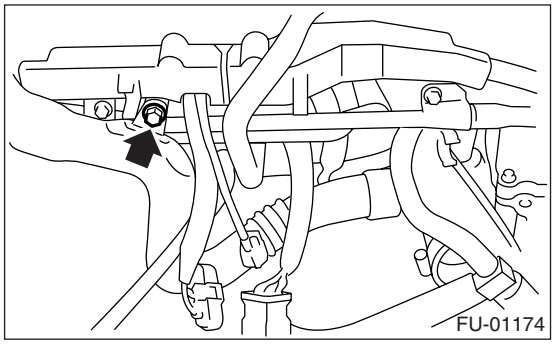

8) Disconnect the PCV pipe (A), harness assembly (B) and intake duct (C) from intake manifold.

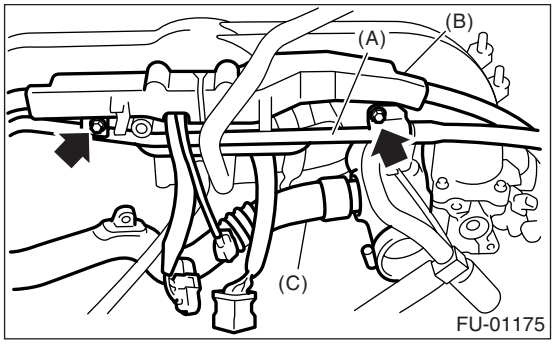

9) Remove the bolt which holds fuel injector pipe LH onto the front side of intake manifold.

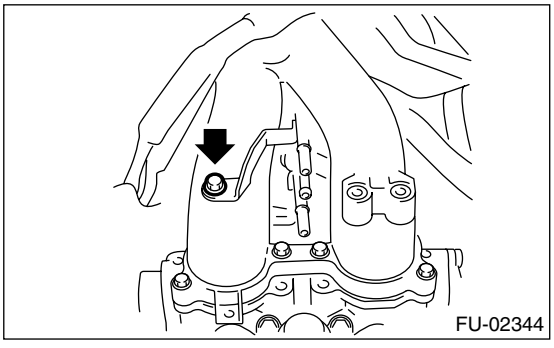

10) Remove the coolant filler tank stay from intake manifold.

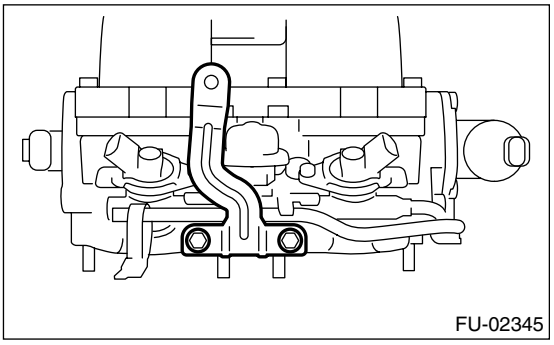

11) Remove the bolts which hold fuel injector pipe onto intake manifold.

- RH side

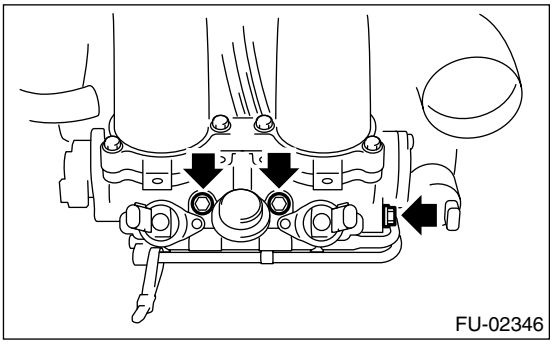

- LH side

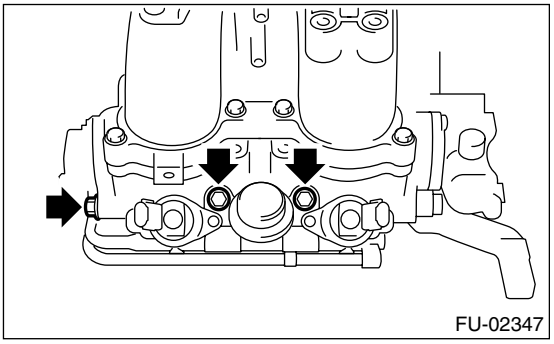

12) Remove the bolt which holds the fuel pipe to intake manifold.

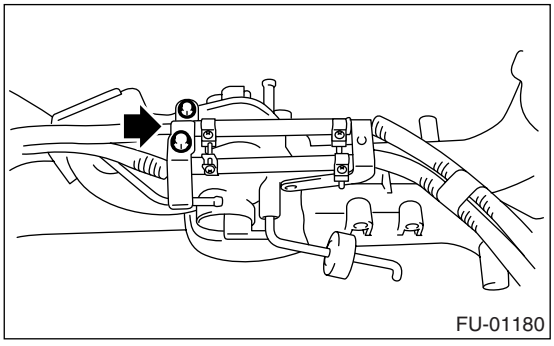

13) Remove the bolts which hold the fuel injector pipe RH onto the lower side of intake manifold.

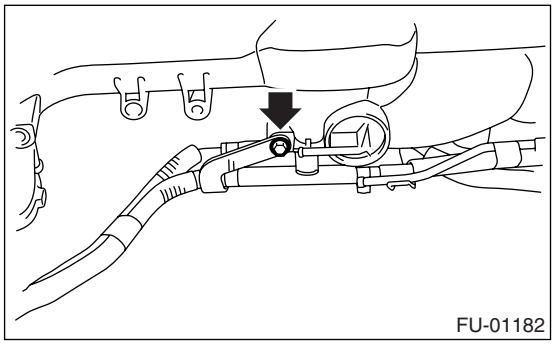

14) Loosen the clamp which holds fuel hose to injector pipe, and then disconnect the pipe from fuel hose.

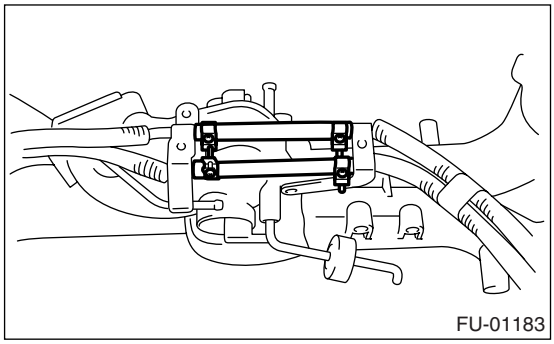

15) Remove the fuel injector pipe.
16) Remove the intake manifold (upper) from intake manifold (lower).

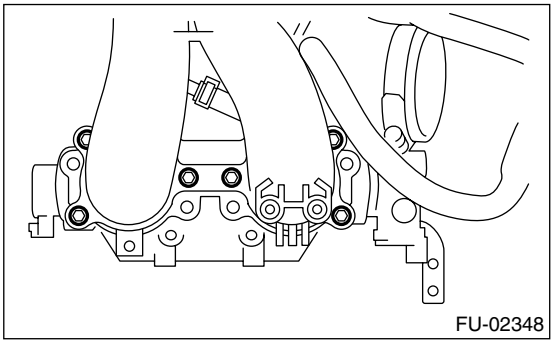

D: ASSEMBLY

1) Install the intake manifold (lower) to intake manifold (upper).

NOTE:
Use new O-rings.

Tightening torque:
8.3 N·m (0.85 kgf-m, 6.1 ft-lb)

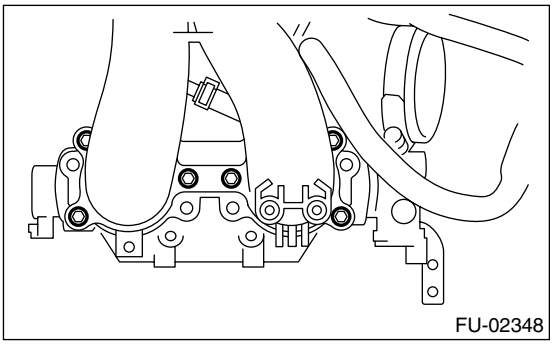

2) Install the fuel injector pipe.
3) Connect the both fuel injector pipes with a fuel hose and secure them with clamps.

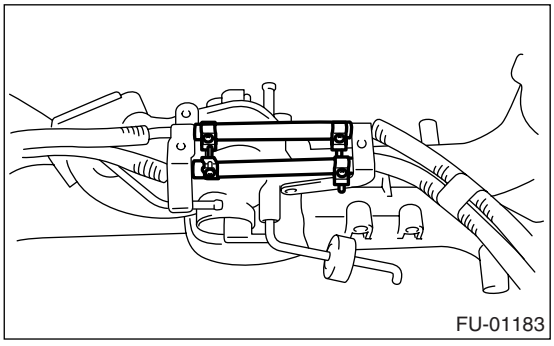

4) Tighten the bolt which secures the fuel injector pipe RH onto the lower side of intake manifold.

Tightening torque:
6.5 N·m (0.66 kgf-m, 4.8 ft-lb)

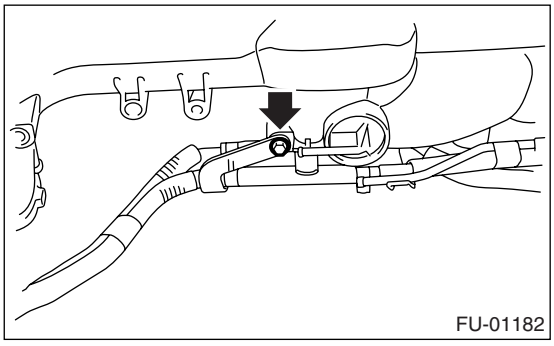

5) Tighten the bolt which secures fuel pipe onto intake manifold.

Tightening torque:
6.5 N·m (0.66 kgf-m, 4.8 ft-lb)

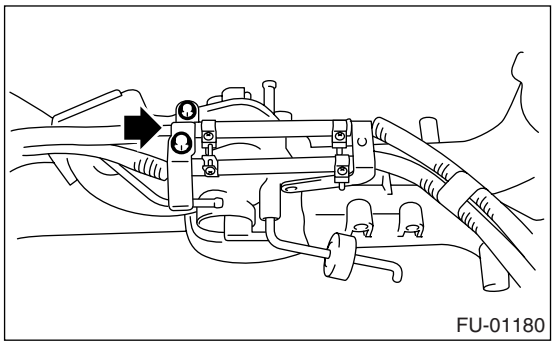

6) Tighten the bolts which secure fuel injector pipe onto intake manifold.

Tightening torque:
19 N·m (1.9 kgf-m, 14 ft-lb)

- LH side

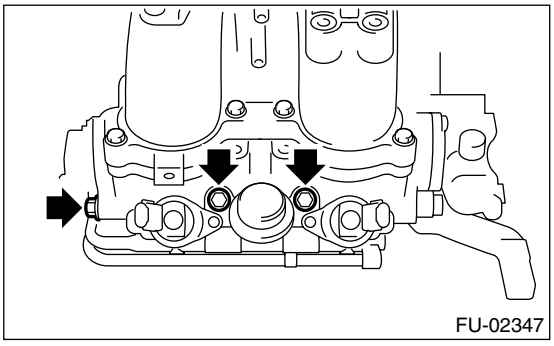

- RH side

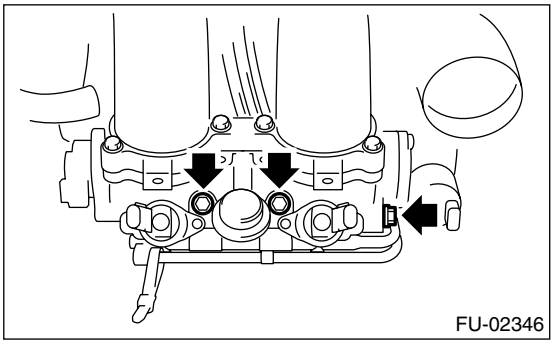

7) Install the coolant filler tank stay to intake manifold.

Tightening torque:
19 N·m (1.9 kgf-m, 14 ft-lb)

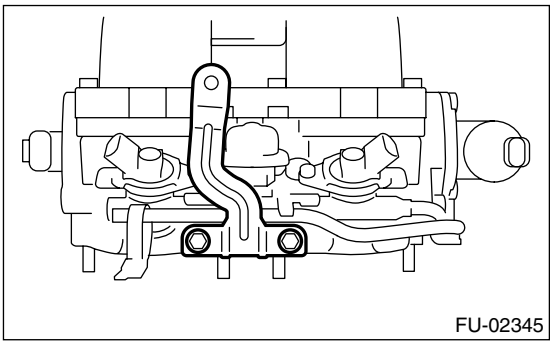

8) Tighten the bolt which installs fuel injector pipe LH on the front side of intake manifold.

Tightening torque:
6.5 N·m (0.66 kgf-m, 4.8 ft-lb)

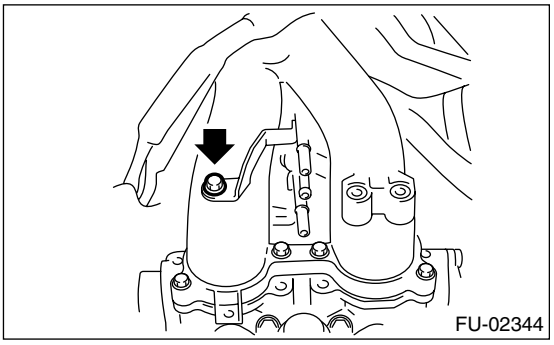

9) Install the PCV pipe (A), harness assembly (B) and intake duct (C) to intake manifold.

Tightening torque:
6.5 N·m (0.66 kgf-m, 4.8 ft-lb)

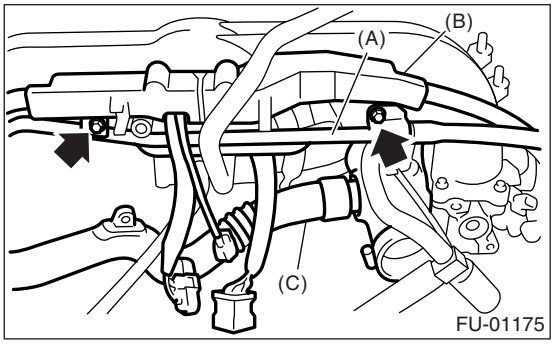

10) Tighten the bolt which secures air bypass pipe onto intake manifold.

Tightening torque:
6.5 N·m (0.66 kgf-m, 4.8 ft-lb)

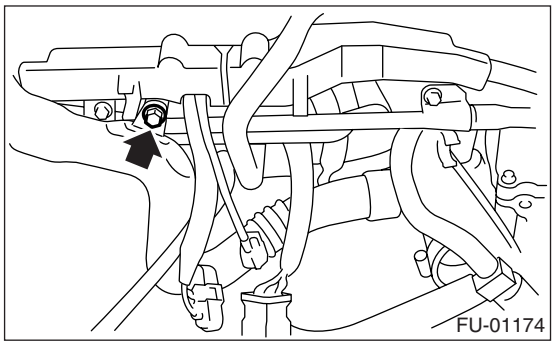

11) Install the connectors to fuel injector (A), tumble generator valve position sensor (B) and tumble generator valve actuator (C).

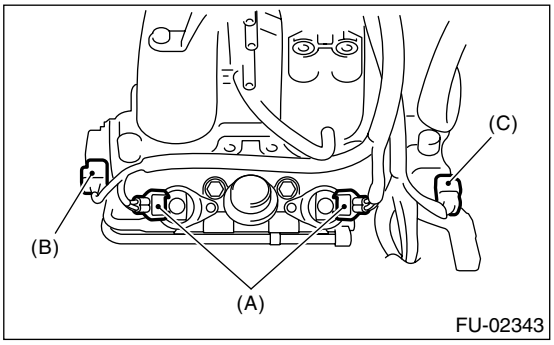

12) Install the throttle body to intake manifold.

NOTE:
Use new O-rings.

Tightening torque:
8 N·m (0.8 kgf-m, 5.9 ft-lb)

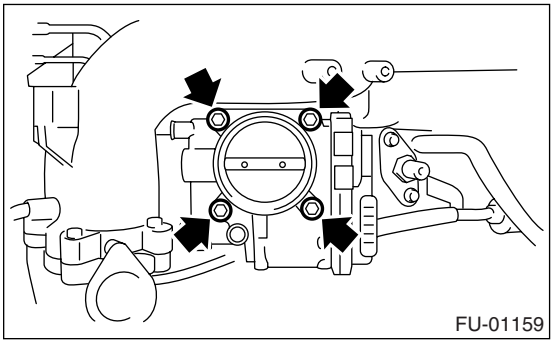

13) Connect the connector to throttle position sensor.

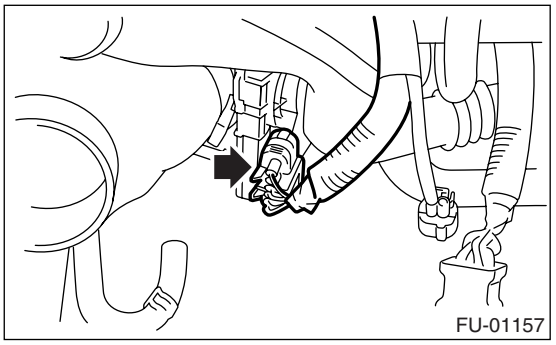

14) Connect the evaporation hoses (A) and filter assembly (B).

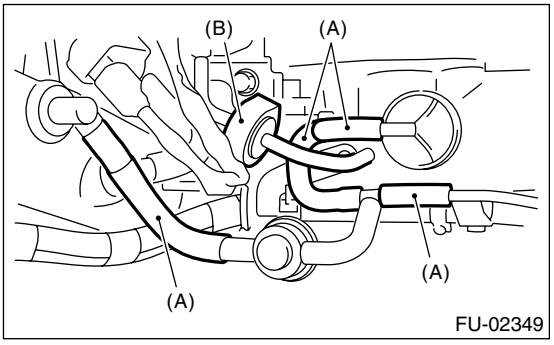

NOTE:
Connect the evaporation hose as shown in the figure.

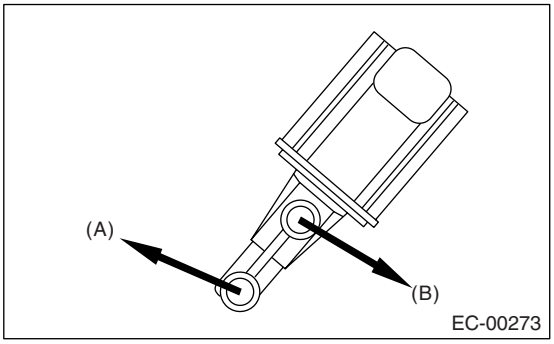

(A) To intake manifold
(B) To evaporation pipe

15) Connect the connector to the wastegate control solenoid valve, manifold absolute pressure sensor and purge control solenoid valve, and install the solenoid valve bracket assembly to intake manifold.

Tightening torque:
19 N·m (1.9 kgf-m, 14 ft-lb)

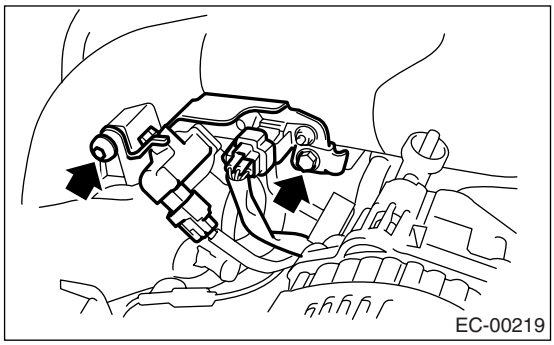

16) Install the engine ground terminal to ground stay.

Tightening torque:
19 N·m (1.9 kgf-m, 14 ft-lb)

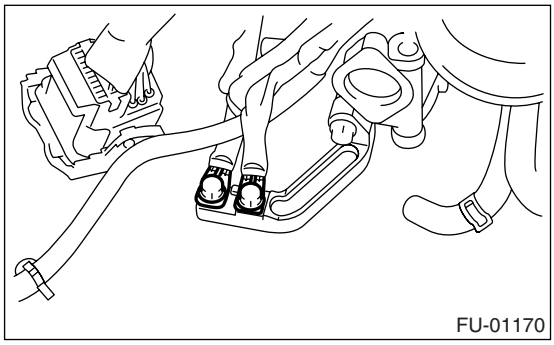

E: INSPECTION

Make sure that the fuel hoses and fuel pipes are not cracked and that connections are tight.

4. Engine Coolant Temperature Sensor

A: REMOVAL

1) Remove the collector cover.
2) Disconnect the ground cable from battery.

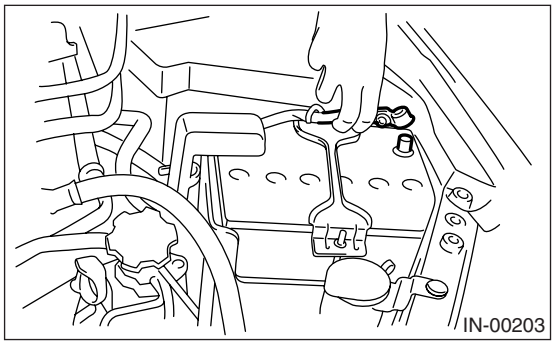

3) Remove the generator. <Ref. to SC(H4SO)-20, REMOVAL, Generator.>
4) Drain coolant. <Ref. to CO(H4DOTC)-13, DRAINING OF ENGINE COOLANT, REPLACEMENT, Engine Coolant.>
5) Disconnect the connectors from engine coolant temperature sensor.

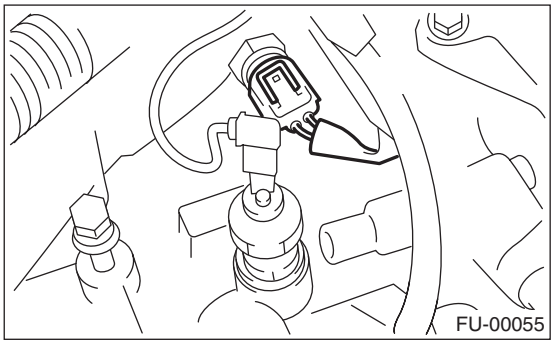

6) Remove the engine coolant temperature sensor.

B: INSTALLATION

Install in the reverse order of removal.

Tightening torque:
18 N·m (1.8 kgf-m, 13.3 ft-lb)

5. Crankshaft Position Sensor

A: REMOVAL

1) Remove the collector cover.
2) Disconnect the ground cable from battery.

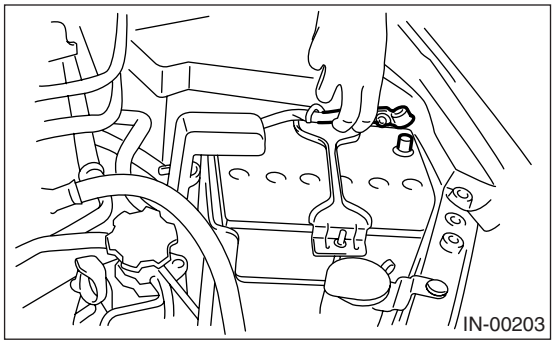

3) Remove the generator. <Ref. to SC(H4SO)-20, REMOVAL, Generator.>
4) Remove the bolt which installs crankshaft position sensor to cylinder block.

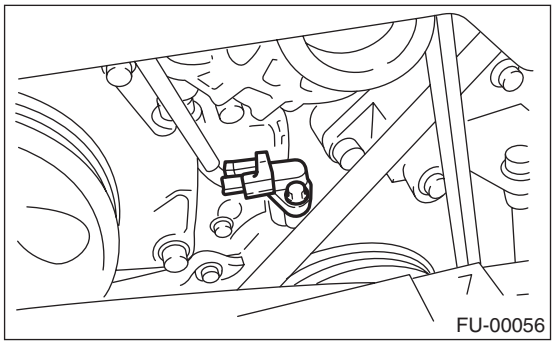

5) Remove the crankshaft position sensor, and disconnect the connector from it.

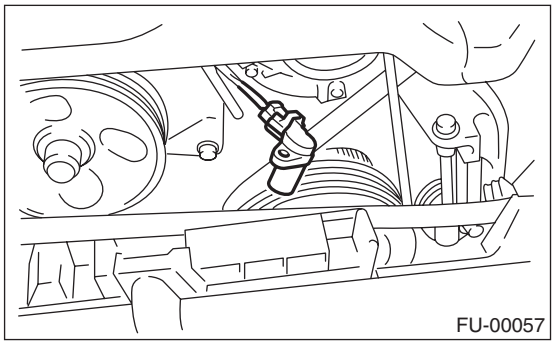

B: INSTALLATION

Install in the reverse order of removal.

Tightening torque:
T: 6.4 N·m (0.65 kgf-m, 4.7 ft-lb)

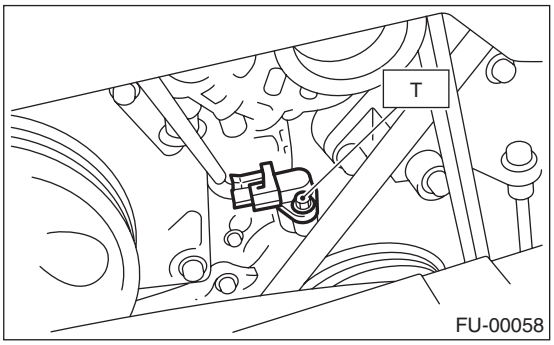

6. Camshaft Position Sensor

A: REMOVAL

1) Remove the collector cover.
2) Disconnect the ground cable from battery.

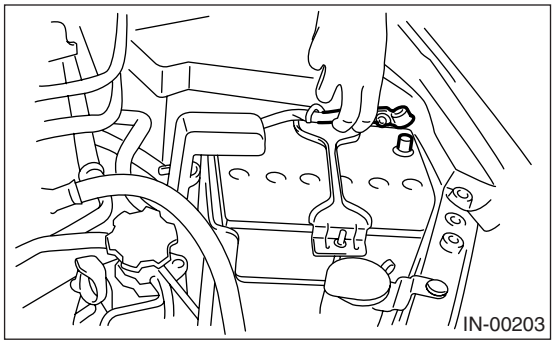

3) Disconnect the connector from camshaft position sensor RH.
4) Remove the camshaft position sensor RH from the rear side of cylinder head.

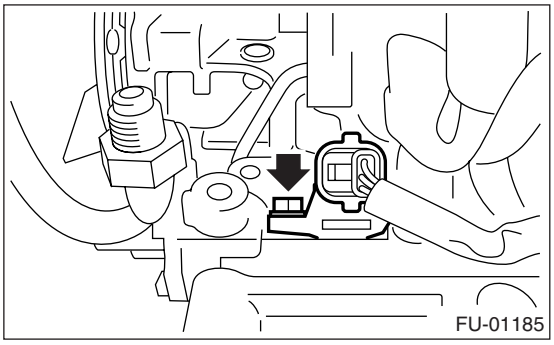

5) Remove the camshaft position sensor LH in the same procedure as RH.

B: INSTALLATION

Install in the reverse order of removal.

Tightening torque:
6.4 N·m (0.65 kgf-m, 4.7 ft-lb)

7. Knock Sensor

A: REMOVAL

1) Remove the collector cover.
2) Disconnect the ground cable from battery.

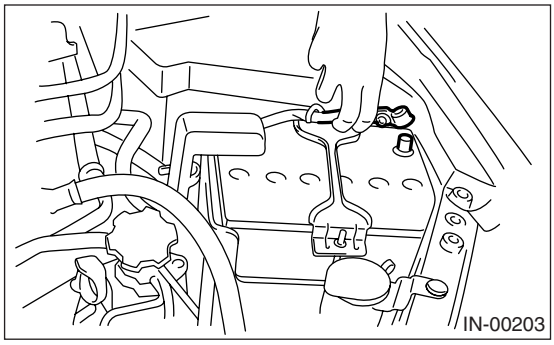

3) Remove the intercooler. <Ref. to IN(H4DOTC)-12, REMOVAL, Intercooler.>
4) Disconnect the knock sensor connector.

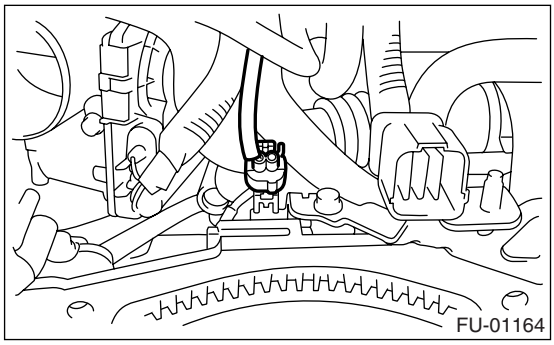

5) Remove the knock sensor from cylinder block.

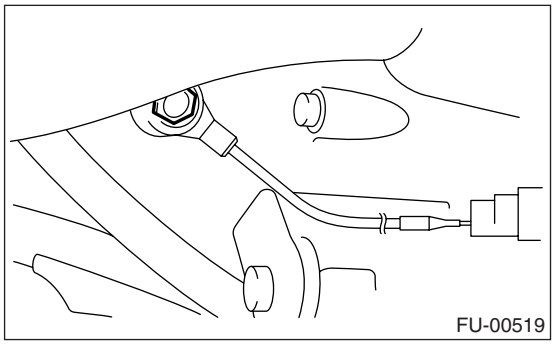

B: INSTALLATION

1) Install the knock sensor to cylinder block.

NOTE:
Extraction area of knock sensor cord must be positioned at a 60° angle relative to the engine rear.

Tightening torque:
24 N·m (2.4 kgf-m, 17.4 ft-lb)

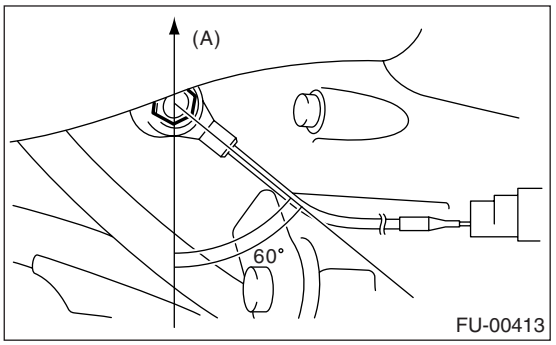

(A) Front side

2) Connect the knock sensor connector.

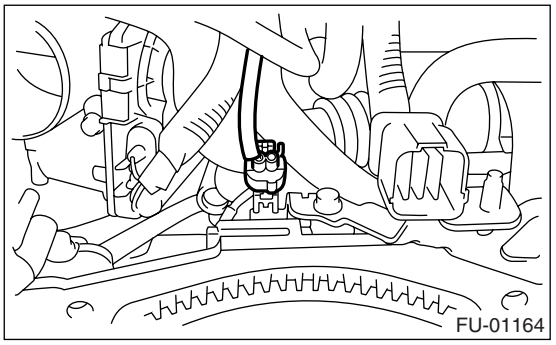

3) Install the intercooler.
<Ref. to IN(H4DOTC)-12, INSTALLATION, Intercooler.>
4) Connect the battery ground cable to battery.

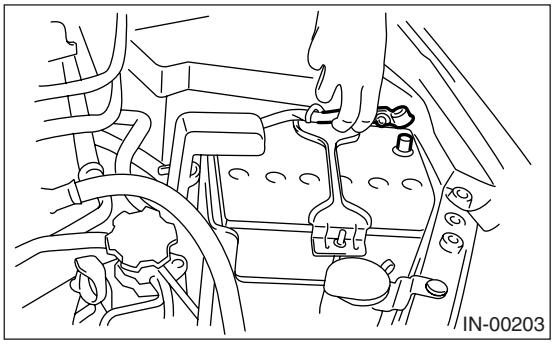

5) Install the collector cover.

8. Throttle Position Sensor

A: SPECIFICATION

Throttle body is a non-disassembled part, so do not remove the throttle position sensor from throttle body.

Refer to “Throttle Body” for removal and installation. <Ref. to FU(H4DOTC)-11, REMOVAL, Throttle Body.> <Ref. to FU(H4DOTC)-11, INSTALLATION, Throttle Body.>

9. Mass Air Flow and Intake Air Temperature Sensor

A: REMOVAL

1) Disconnect the ground cable from battery.

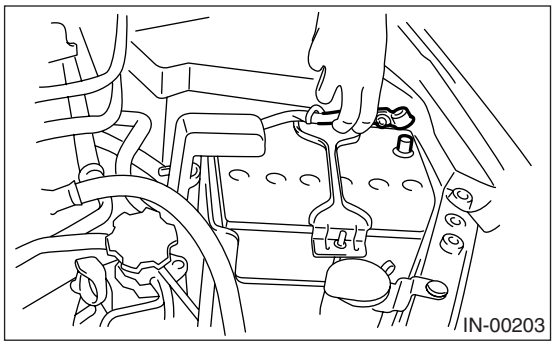

2) Disconnect the connector from mass air flow and intake air temperature sensor.
3) Remove the mass air flow and intake air temperature sensor.

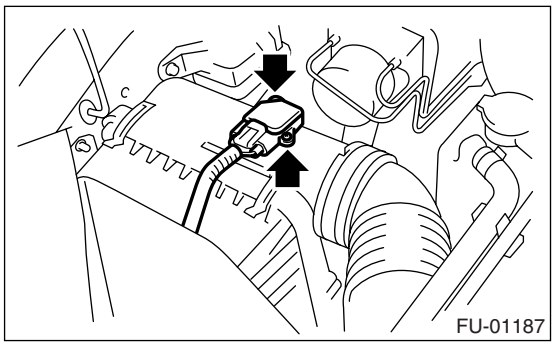

B: INSTALLATION

Install in the reverse order of removal.

Tightening torque:
1 N·m (0.1 kgf-m, 0.7 ft-lb)

10.Manifold Absolute Pressure Sensor

A: REMOVAL

1) Remove the collector cover.
2) Disconnect the ground cable from battery.

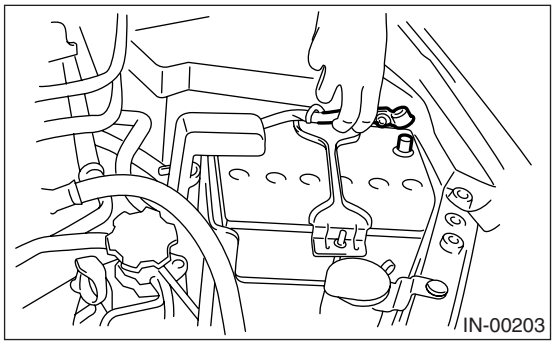

3) Disconnect the connector from manifold absolute pressure sensor (A), and remove the filter assembly (B) from intake manifold.
4) Remove the manifold absolute pressure sensor from solenoid valve bracket.

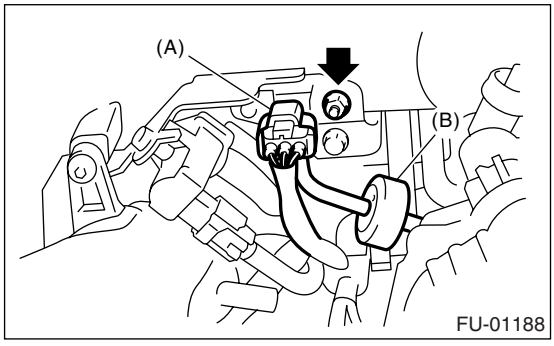

B: INSTALLATION

Install in the reverse order of removal.

Tightening torque:
6.5 N·m (0.66 kgf-m, 4.8 ft-lb)

11.Fuel Injector

A: REMOVAL

1. RH SIDE

1) Release the fuel pressure.
<Ref. to FU(H4DOTC)-44, RELEASING OF FUEL PRESSURE, PROCEDURE, Fuel.>
2) Open the fuel filler flap lid, and remove the fuel filler cap.
3) Remove the collector cover.
4) Disconnect the ground cable from battery.

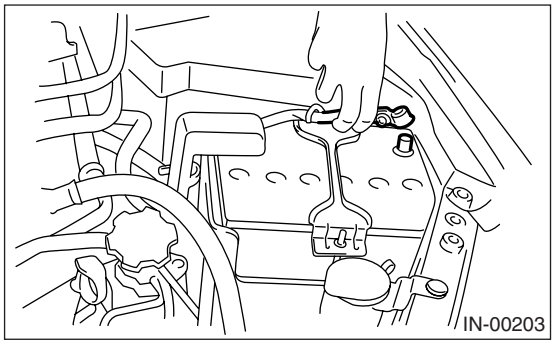

5) Remove the coolant filler tank. <Ref. to CO(H4DOTC)-31, REMOVAL, Coolant Filler Tank.>
6) Disconnect the connector from fuel injector.
7) Remove the screw and remove the fuel injector.

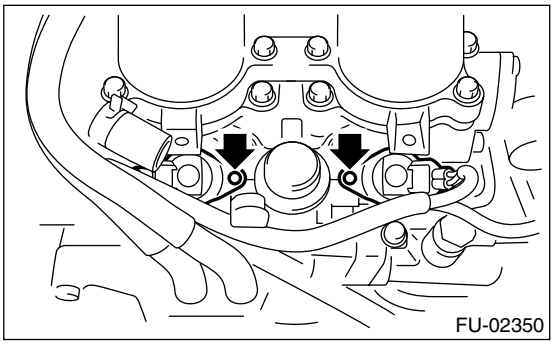

2. LH SIDE

1) Release the fuel pressure.
<Ref. to FU(H4DOTC)-44, RELEASING OF FUEL PRESSURE, PROCEDURE, Fuel.>
2) Open the fuel filler flap lid, and remove the fuel filler cap.
3) Remove the collector cover.
4) Disconnect the ground cable from battery.

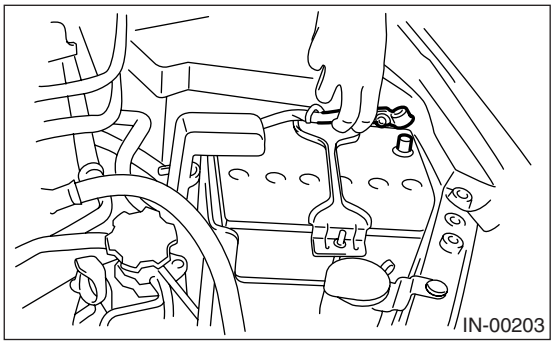

5) Disconnect the connector from fuel injector.
6) Remove the screw and remove the fuel injector.

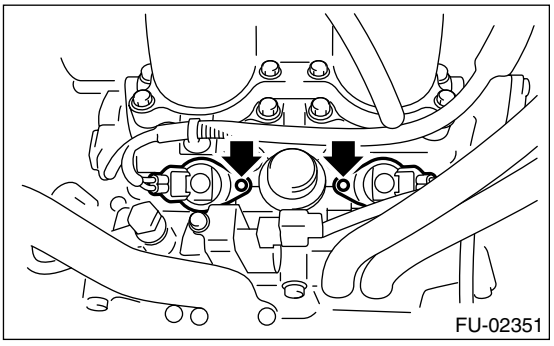

B: INSTALLATION

1. RH SIDE

Install in the reverse order of removal.

NOTE:
Use new O-rings.

Tightening torque:
3.5 N·m (0.36 kgf-m, 2.6 ft-lb)

2. LH SIDE

Install in the reverse order of removal.

NOTE:
Use new O-rings.

Tightening torque:
3.5 N·m (0.36 kgf-m, 2.6 ft-lb)

12.Tumble Generator Valve Assembly

A: REMOVAL

1) Release the fuel pressure. <Ref. to FU(H4DOTC)-44, RELEASING OF FUEL PRESSURE, PROCEDURE, Fuel.>
2) Open the fuel filler lid and remove the fuel filler cap.
3) Disconnect the ground cable from battery.

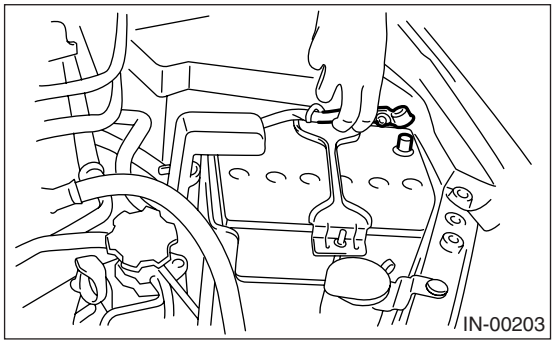

4) Remove the intake manifold. <Ref. to FU(H4DOTC)-12, REMOVAL, Intake Manifold.>
5) Disconnect the connectors from the tumble generator (A) and tumble generator valve actuator (B).

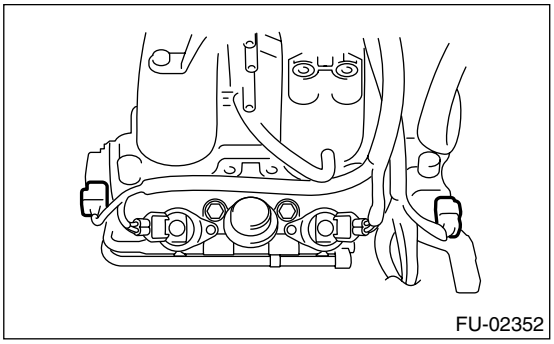

6) Remove the fuel injector. <Ref. to FU(H4DOTC)-29, REMOVAL, Fuel Injector.>
7) Remove the tumble generator valve body from the intake manifold.

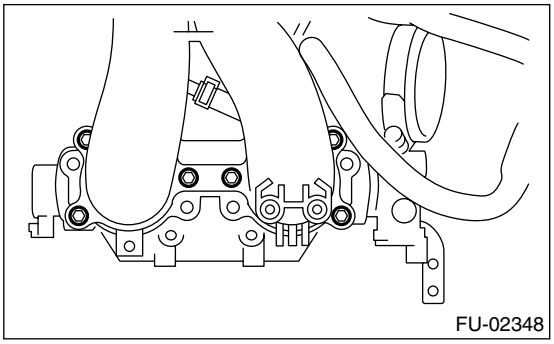

B: INSTALLATION

Install in the reverse order of removal.

NOTE:
Always use new gaskets.

Tightening torque:
8.3 N·m (0.85 kgf-m, 6.1 ft-lb)

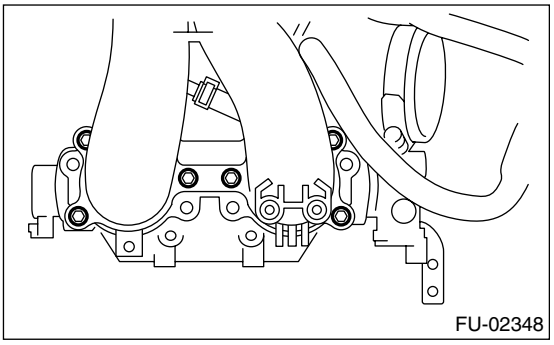

13.Tumble Generator Valve Actuator

A: REMOVAL

1. RH SIDE

1) Disconnect the ground cable from battery.

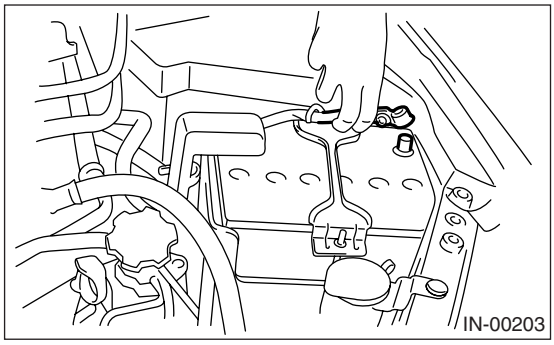

2) Disconnect the connector from tumble generator valve actuator RH.
3) Remove the tumble generator valve actuator RH.

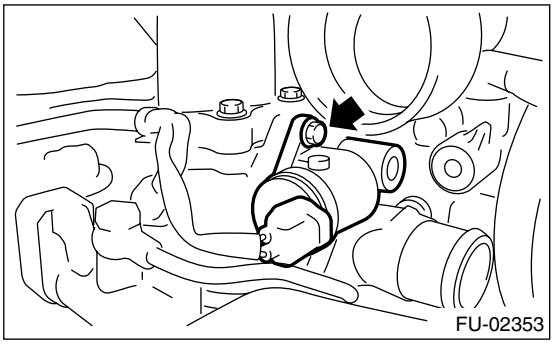

2. LH SIDE

1) Disconnect the ground cable from battery.

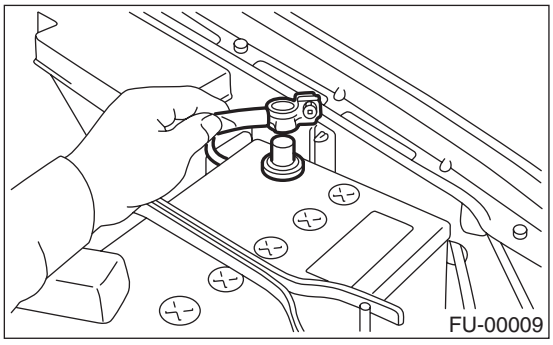

2) Remove the intercooler. <Ref. to IN(H4DOTC)-12, REMOVAL, Intercooler.>
3) Disconnect the connector from tumble generator valve actuator LH.
4) Remove the tumble generator valve actuator LH.

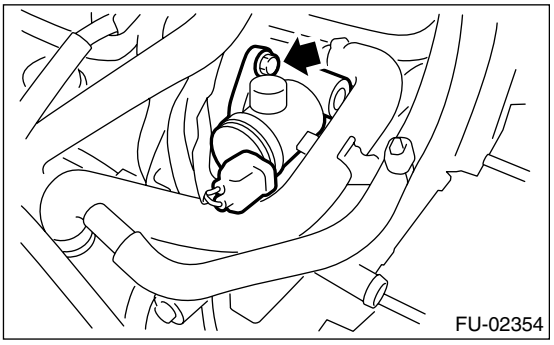

B: INSTALLATION

1. RH SIDE

Install in the reverse order of removal.

2. LH SIDE

Install in the reverse order of removal.

14. Tumble Generator Valve Position Sensor

A: SPECIFICATION

Do not remove the tumble generator valve position sensor from tumble generator valve assembly, since it cannot be adjusted during installation.

Refer to “Tumble Generator Valve Assembly” for removal and installation procedures. <Ref. to FU(H4DOTC)-30, REMOVAL, Tumble Generator Valve Assembly.> <Ref. to FU(H4DOTC)-30, INSTALLATION, Tumble Generator Valve Assembly.>

15.Oil Flow Control Solenoid Valve

A: REMOVAL

Oil flow control solenoid valve forms a unit with camshaft cap.

Refer to “Camshaft” for removal. <Ref. to ME(H4DOTC)-52, REMOVAL, Camshaft.>

B: INSTALLATION

Install in the reverse order of removal.

16. Wastegate Control Solenoid Valve

A: REMOVAL

1) Remove the collector cover.
2) Disconnect the ground cable from battery.

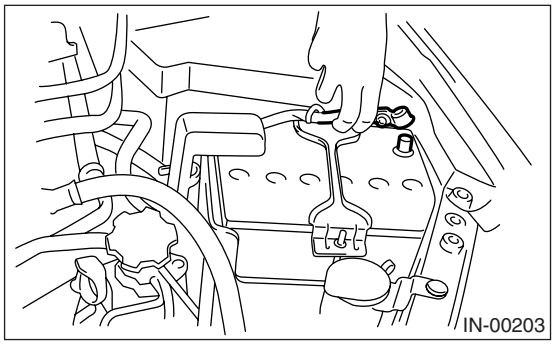

3) Disconnect the connector from wastegate control solenoid valve (A).
4) Disconnect the pressure hose (B) from wastegate control solenoid valve.
5) Remove the wastegate control solenoid valve from bracket.

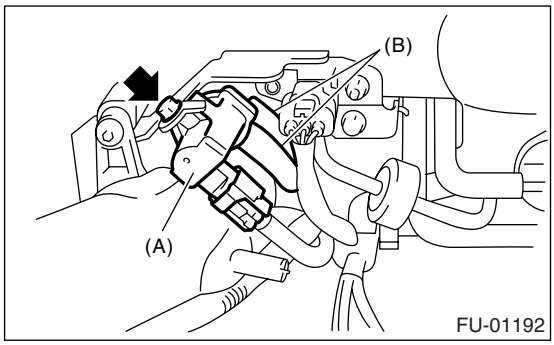

B: INSTALLATION

Install in the reverse order of removal.

Tightening torque:
6.5 N·m (0.66 kgf-m, 4.8 ft-lb)

17.Front Oxygen (A/F) Sensor

A: REMOVAL

1) Disconnect the ground cable from battery.

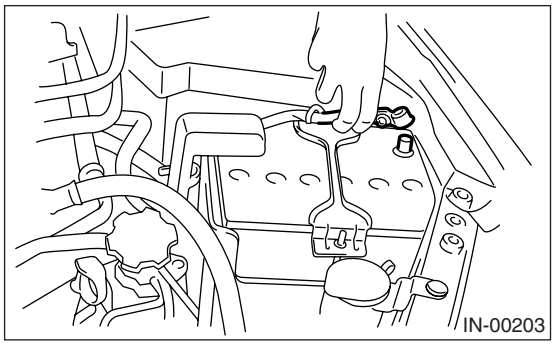

2) Disconnect the connector from the front oxygen (A/F) sensor.
3) Disconnect the engine harness fixed by clip from the bracket.

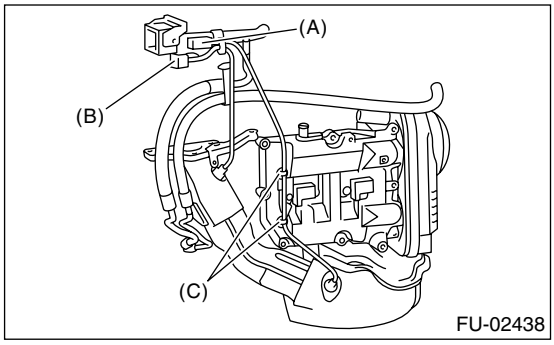

(A) Front oxygen (A/F) sensor connector
(B) Exhaust temperature sensor connector
(C) Clip

4) Remove the front right side wheel.
5) Lift-up the vehicle.
6) Remove the service hole cover.

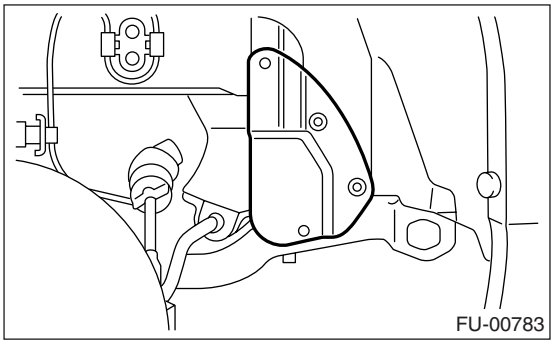

7) Apply spray type lubricant to the threaded portion of front oxygen (A/F) sensor, and leave it for one minute or more.
8) Remove the front oxygen (A/F) sensor.

CAUTION:
When removing the oxygen (A/F) sensor, wait until exhaust pipe cools; otherwise, it will damage exhaust pipe.

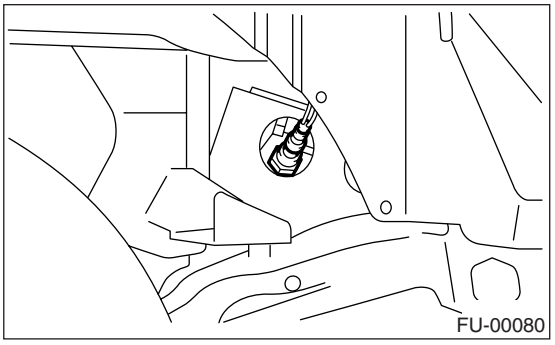

B: INSTALLATION

1) Before installing front oxygen (A/F) sensor, apply anti-seize compound only to the threaded portion of front oxygen (A/F) sensor to make the next removal easier.

Anti-seize compound:
SS-30 JET LUBE

CAUTION:
Never apply anti-seize compound to protector of front oxygen (A/F) sensor.

2) Install the front oxygen (A/F) sensor.

Tightening torque:
30 N·m (3.1 kgf-m, 22.1 ft-lb)

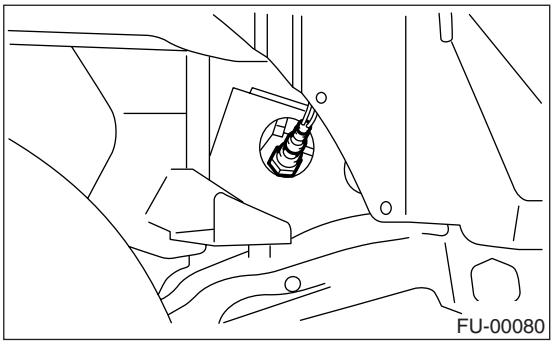

3) Install the service hole cover.

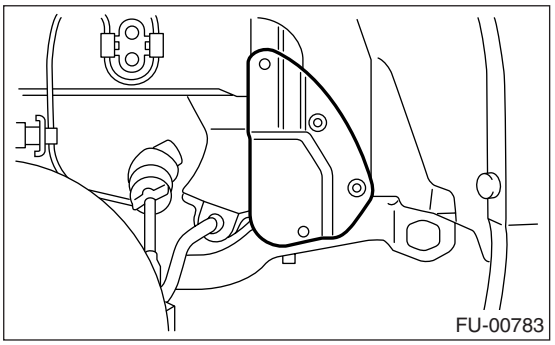

4) Lower the vehicle.
5) Install the front right side wheel.

6) Connect the engine harness to the bracket using clips.
7) Connect the connector of front oxygen (A/F) sensor.

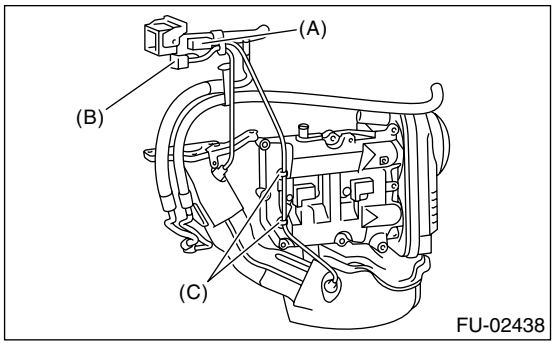

(A) Front oxygen (A/F) sensor connector
(B) Exhaust temperature sensor connector
(C) Clip

8) Connect the battery ground cable to battery.

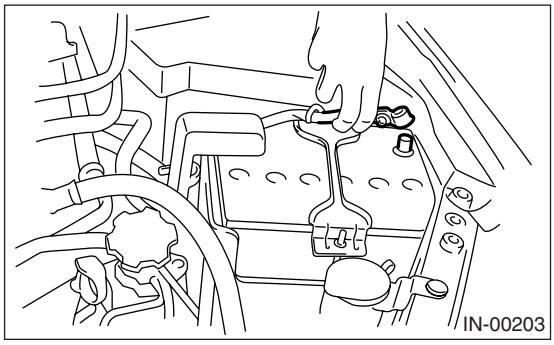

18.Rear Oxygen Sensor

A: REMOVAL

1) Disconnect the ground cable from battery.

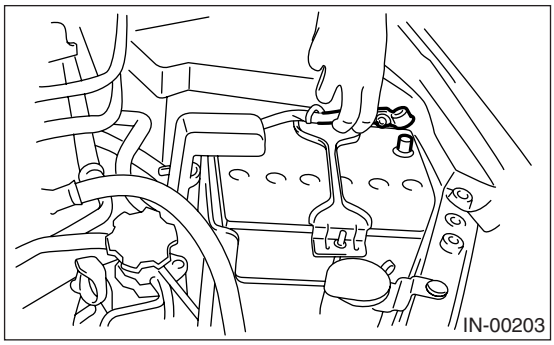

2) Lift-up the vehicle.
3) Disconnect the connector from rear oxygen sensor.
4) Apply spray-type lubricant to the threaded portion of rear oxygen sensor, and leave it for one minute or more.
5) Remove the rear oxygen sensor.

CAUTION:
When removing the rear oxygen sensor, wait until exhaust pipe cools, otherwise it will damage exhaust pipe.

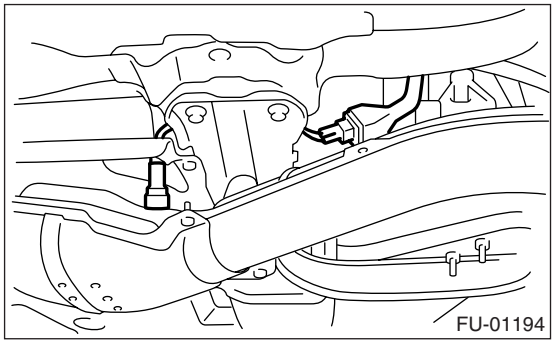

B: INSTALLATION

1) Before installing rear oxygen (A/F) sensor, apply anti-seize compound only to the threaded portion of rear oxygen (A/F) sensor to make the next removal easier.

Anti-seize compound:
SS-30 JET LUBE

CAUTION:
Never apply anti-seize compound to protector of rear oxygen sensor.

2) Install the rear oxygen sensor.

Tightening torque:
21 N·m (2.1 kgf-m, 15.2 ft-lb)

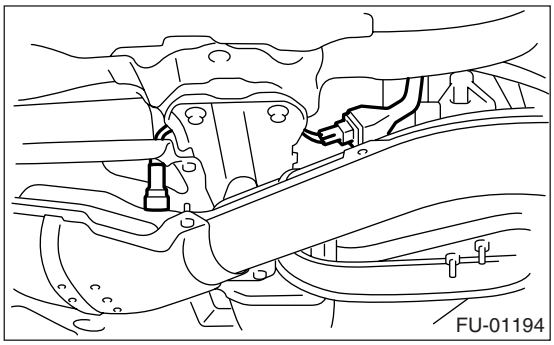

3) Connect the connector to rear oxygen sensor.
4) Lower the vehicle.
5) Connect the battery ground cable to battery.

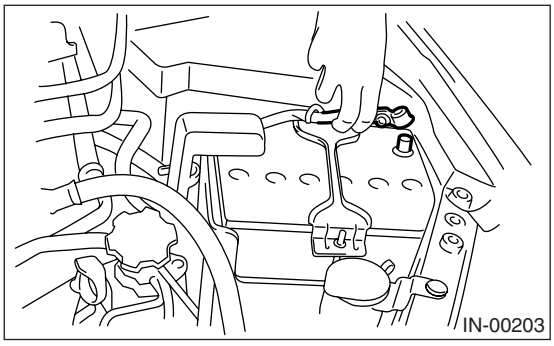

19.Exhaust Temperature Sensor

A: REMOVAL

1) Disconnect the ground cable from battery.

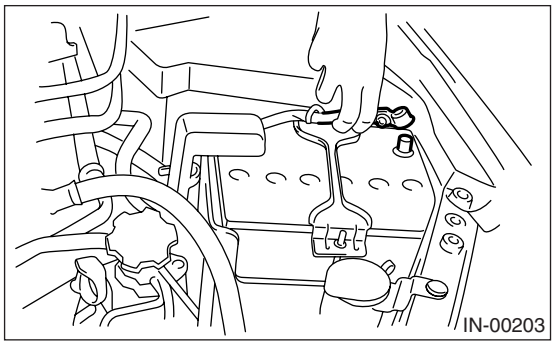

2) Remove the joint pipe. <Ref. to EX(H4DOTC)-11, REMOVAL, Joint Pipe.>

3) Apply spray type lubricant or its equivalent to the threaded portion of exhaust temperature sensor, and leave it for one minute or more.

4) Remove the exhaust temperature sensor.

CAUTION:
When removing the exhaust temperature sensor, wait until exhaust pipe cools, otherwise it will damage exhaust pipe.

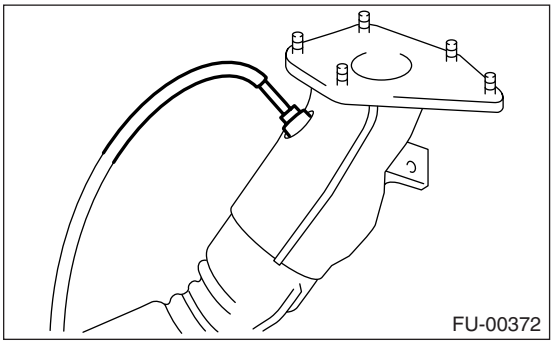

B: INSTALLATION

1) Before installing exhaust temperature sensor, apply anti-seize compound only to the threaded portion of exhaust temperature sensor to make the next removal easier.

CAUTION:
Never apply anti-seize compound to protector of exhaust temperature sensor.

Anti-seize compound:
SS-30 JET LUBE

2) Install the exhaust temperature sensor.

NOTE:
Align the harness (A) of exhaust temperature sensor to the marking (B) of joint pipe, and tighten the screws.

Tightening torque:
21 N·m (2.1 kgf-m, 15.2 ft-lb)

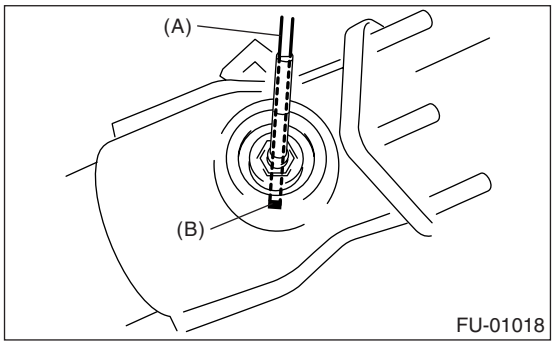

3) Install the joint pipe. <Ref. to EX(H4DOTC)-11, INSTALLATION, Joint Pipe.>

4) Connect the battery ground cable to battery.

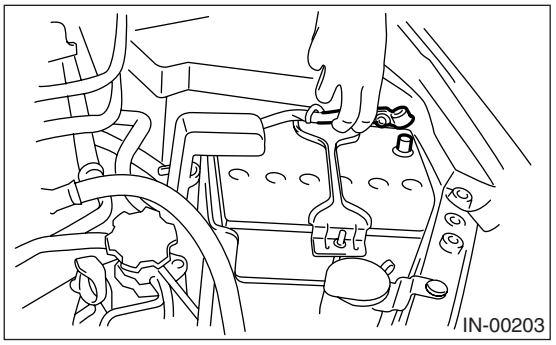

20.Engine Control Module (ECM)

A: REMOVAL

1) Disconnect the ground cable from battery.

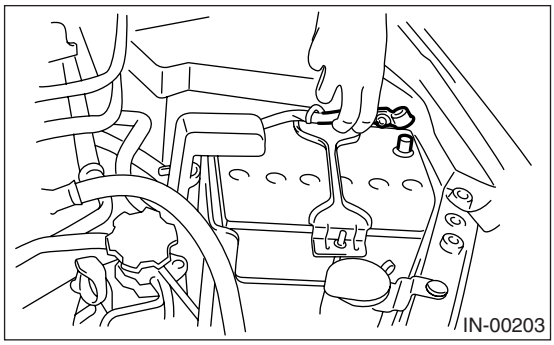

2) Remove the lower inner trim of passenger side. <Ref. to EI-60, REMOVAL, Lower Inner Trim.>
3) Detach the floor mat of front passenger's seat.
4) Remove the protect cover.

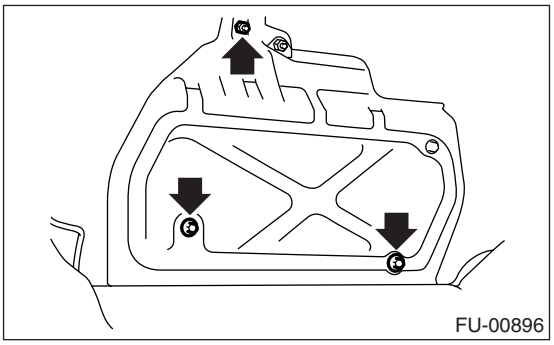

5) Remove the nut and bolt which hold the ECM to bracket.
6) Remove the clip (A) from bracket.

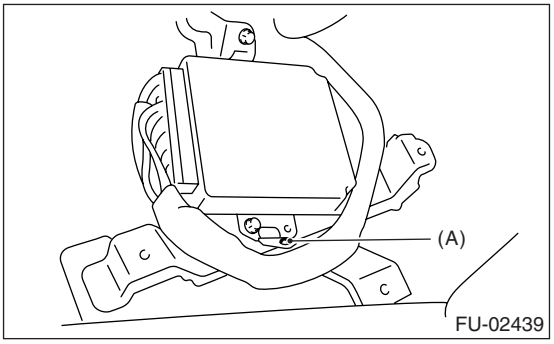

7) Disconnect the ECM connectors and take out the ECM.

B: INSTALLATION

Install in the reverse order of removal.

Tightening torque:
5 N·m (0.5 kgf-m, 3.6 ft-lb)

CAUTION:
• When replacing the ECM, be careful not to use the wrong spec. ECM to avoid any damage to the fuel injection system.
• When replacing the ECM, be careful not to damage the harnesses and connectors.

21.Main Relay

A: REMOVAL

1) Disconnect the ground cable from battery.

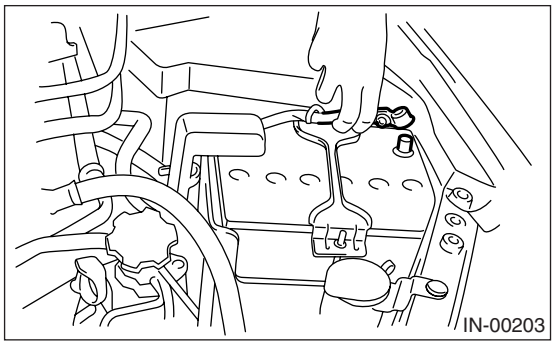

2) Remove the glove box. <Ref. to EI-51, REMOVAL, Glove Box.>
3) Remove the harness cover (A).

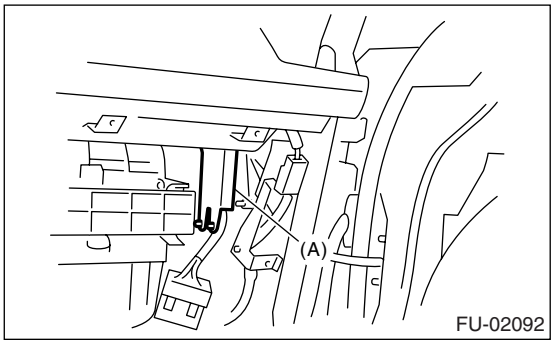

4) Disconnect the connector from main relay.

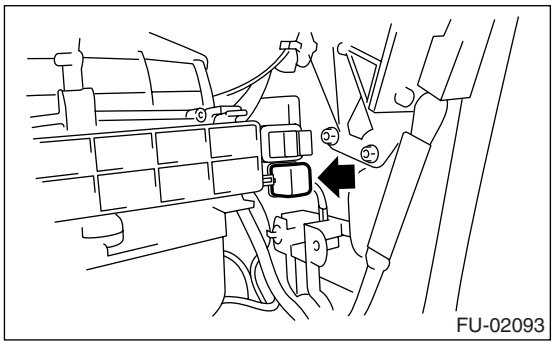

B: INSTALLATION

Install in the reverse order of removal.

22.Fuel Pump Relay

A: REMOVAL

1) Disconnect the ground cable from battery.

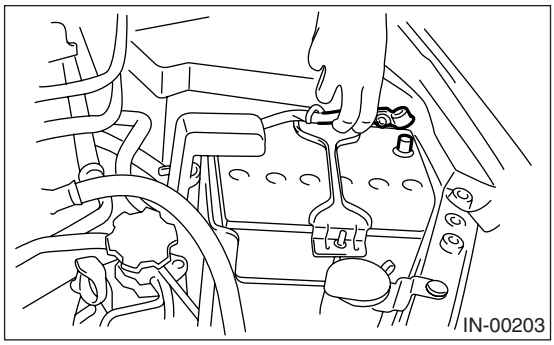

2) Remove the glove box. <Ref. to EI-51, REMOVAL, Glove Box.>
3) Remove the harness cover (A).

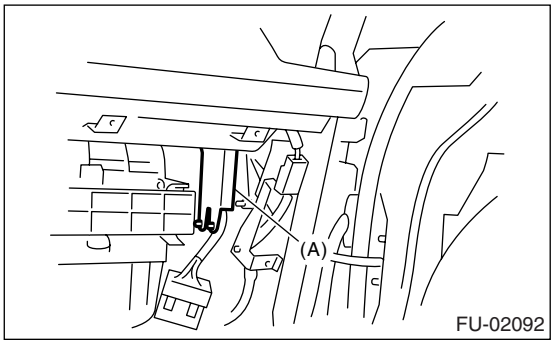

4) Disconnect the connector from fuel pump relay.

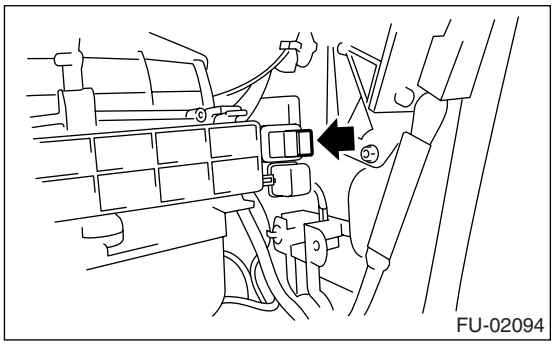

B: INSTALLATION

Install in the reverse order of removal.

23. Electronic Throttle Control Relay

A: REMOVAL

1) Disconnect the ground cable from battery.

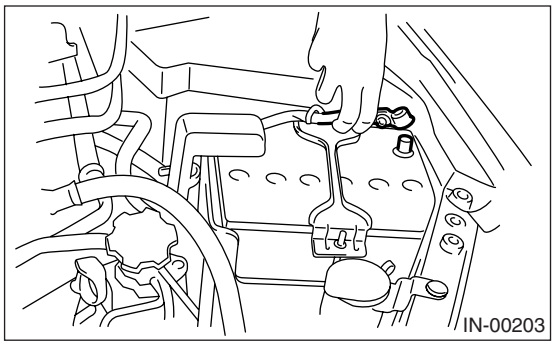

2) Remove the glove box. <Ref. to EI-51, REMOVAL, Glove Box.>

3) Remove the harness cover (A).

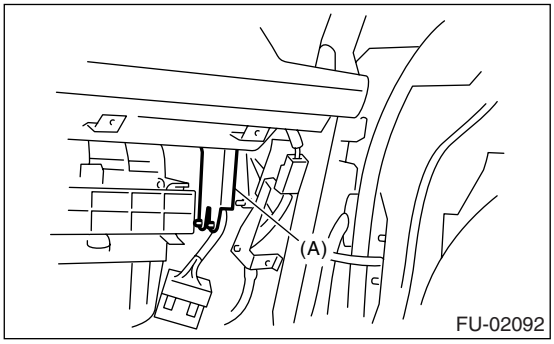

4) Disconnect the connector from electronic throttle control relay.

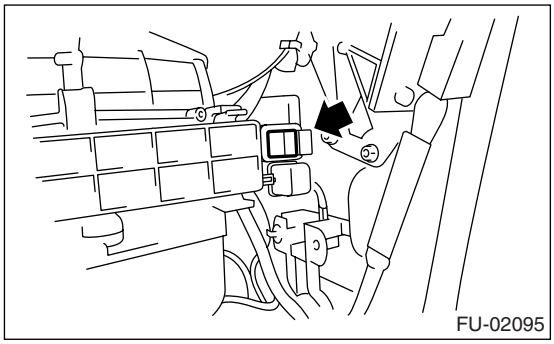

B: INSTALLATION

Install in the reverse order of removal.

24.Fuel Pump Control Unit

A: REMOVAL

1) Disconnect the ground cable from battery.

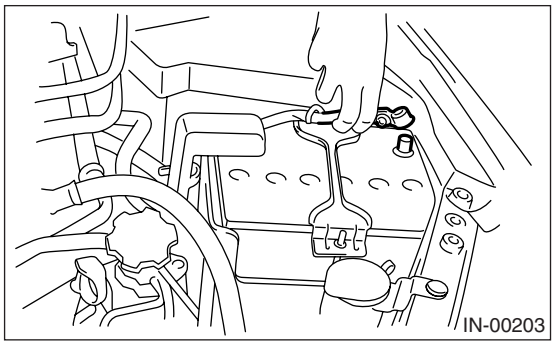

2) Remove the rear quarter trim. <Ref. to EI-62, REMOVAL, Rear Quarter Trim.>
3) Remove the fuel pump control unit.

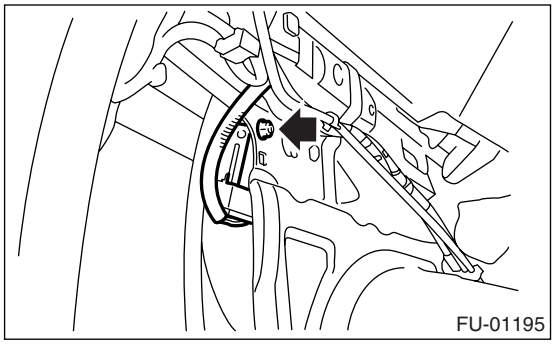

4) Disconnect the connector from fuel pump control unit.

B: INSTALLATION

Install in the reverse order of removal.

25.Fuel

A: PROCEDURE

1. RELEASING OF FUEL PRESSURE

WARNING:
- **Place "NO FIRE" signs near the working area.**
- **Be careful not to spill fuel on the floor.**

1) Remove the fuse of fuel pump from main fuse box.

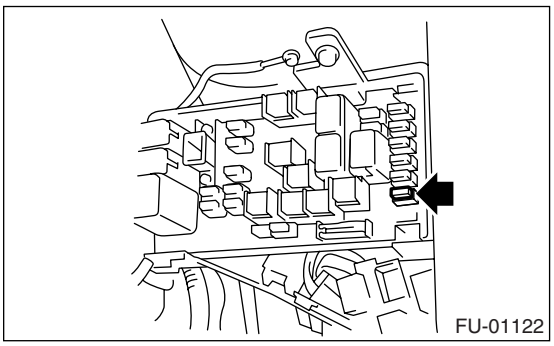

2) Start the engine and run it until it stalls.
3) After the engine stalls, crank it for five more seconds.
4) Turn the ignition switch to OFF.

2. DRAINING FUEL

WARNING:
- **Place "NO FIRE" signs near the working area.**
- **Be careful not to spill fuel on the floor.**

1) Set the vehicle on a lift.
2) Disconnect the ground cable from battery.

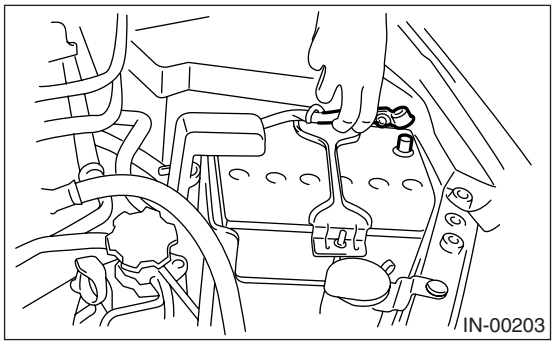

3) Open the fuel filler flap lid and remove the fuel filler cap.
4) Lift-up the vehicle.
5) Remove the fuel tank protector.
6) Set a container under the vehicle and remove drain plug from fuel tank to drain fuel from the fuel tank.

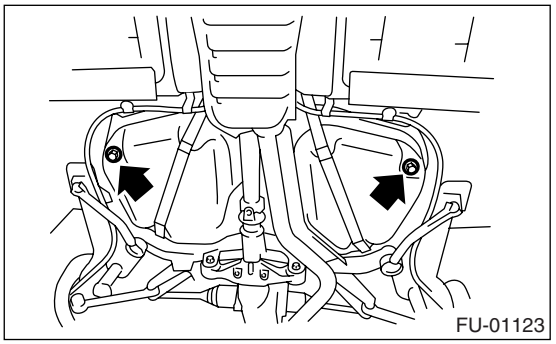

7) Tighten the fuel drain plug.

NOTE:
Use a new gasket.

Tightening torque:
26 N·m (2.65 kgf-m, 19.2 ft-lb)

8) Install the fuel tank protector.

NOTE:
Use a new gasket.

Tightening torque:
Nut
9 N·m (0.9 kgf-m, 6.6 ft-lb)
Bolt
17.5 N·m (1.78 kgf-m, 12.9 ft-lb)

26.Fuel Tank

A: REMOVAL

WARNING:
- **Place "NO FIRE" signs near the working area.**
- **Be careful not to spill fuel on the floor.**

1) Set the vehicle on a lift.
2) Release the fuel pressure.
<Ref. to FU(H4DOTC)-44, RELEASING OF FUEL PRESSURE, PROCEDURE, Fuel.>
3) Drain fuel from the fuel tank.
<Ref. to FU(H4DOTC)-44, DRAINING FUEL, PROCEDURE, Fuel.>
4) Remove the rear seat.
5) Remove the service hole cover from fuel pump.

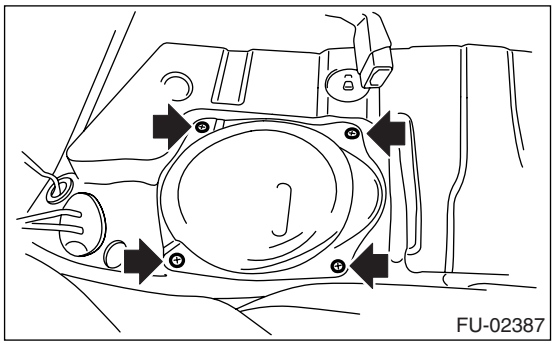
FU-02387

6) Disconnect the connector from fuel pump.

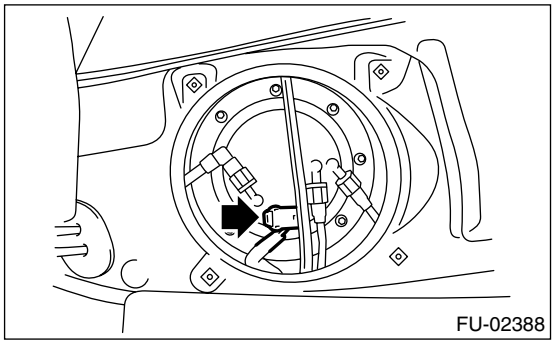
FU-02388

7) Remove the connector (A) and clips (B).

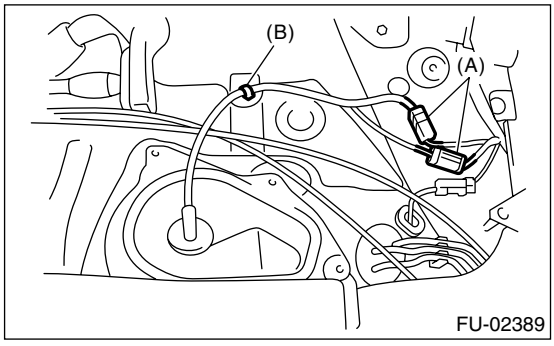

FU-02389

8) Remove the service hole cover from fuel sub level sensor.
(1) Remove the bolts (A).
(2) Push the grommet (B) down under the body and remove service hole cover.

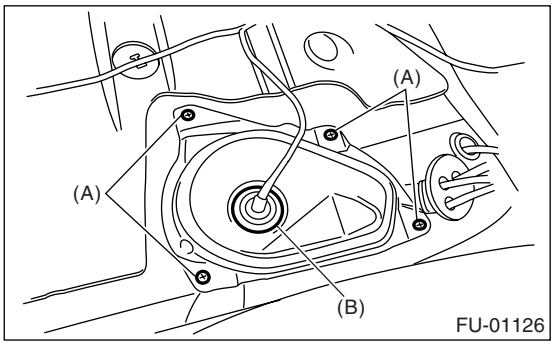

FU-01126

9) Disconnect the connector (A) from fuel sub level sensor.
10) Disconnect the quick connector from the fuel delivery (B) and return hose (C). <Ref. to FU(H4DOTC)-60, REMOVAL, Fuel Delivery, Return and Evaporation Lines.>

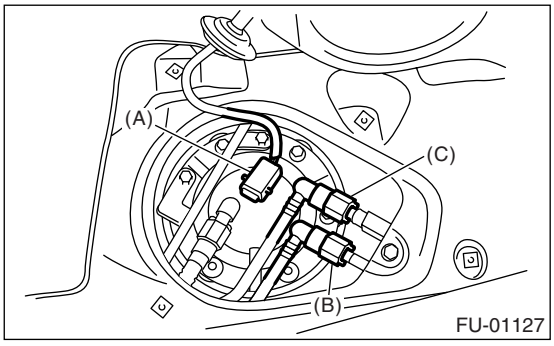

FU-01127

11) Remove trunk room trim. (Sedan model)
<Ref. to EI-70, REMOVAL, Trunk Room Trim.>
12) Remove rear quarter trim. (Wagon model)
<Ref. to EI-62, WAGON MODEL, REMOVAL, Rear Quarter Trim.>
13) Remove pipe protector.

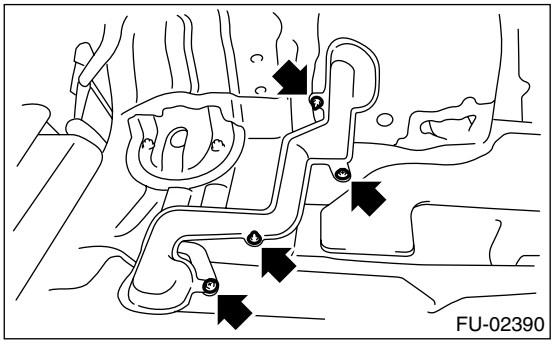
FU-02390

14) Remove the grommet, and then disconnect the quick connector of evaporation pipes. <Ref. to FU(H4DOTC)-60, REMOVAL, Fuel Delivery, Return and Evaporation Lines.>

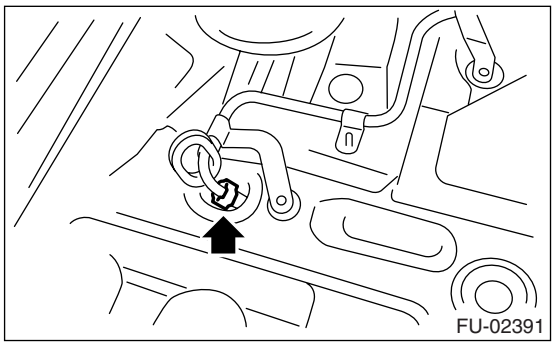
FU-02391

15) Remove the rear wheels.
16) Remove the bolts which secure the rear brake hose installation bracket.

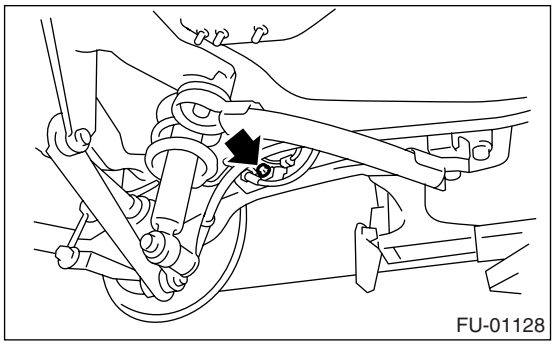
FU-01128

17) Remove the rear brake caliper and tie it to the vehicle body side.

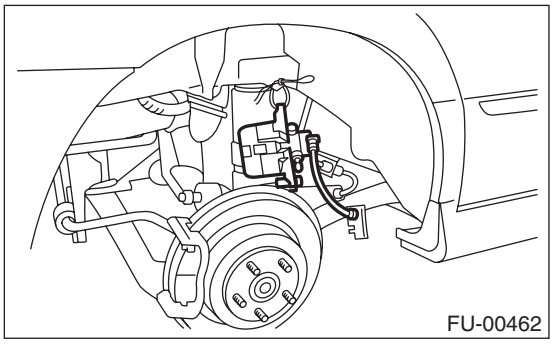
FU-00462

18) Remove the parking brake cable from parking brake assembly. <Ref. to PB-6, REMOVAL, Parking Brake Assembly (Rear Disc Brake).>
19) Lift-up the vehicle.
20) Remove the rear exhaust pipe.
<Ref. to EX(H4DOTC)-12, REMOVAL, Rear Exhaust Pipe.>
21) Remove the propeller shaft. <Ref. to DS-10, REMOVAL, Propeller Shaft.>
22) Remove the heat shield cover.

23) Disconnect the connector from rear ABS wheel speed sensor.

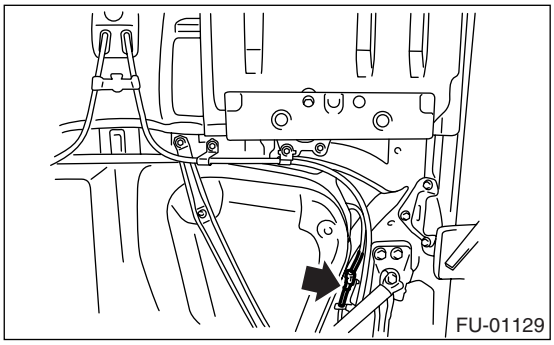
FU-01129

24) Remove the bolts which install the parking brake cable clamp.

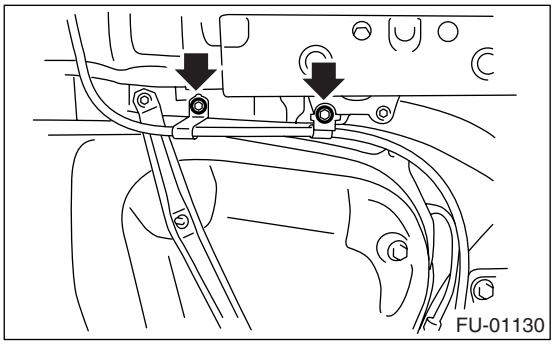
FU-01130

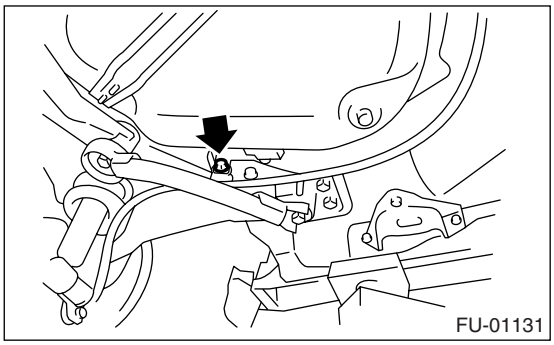
FU-01131

25) Remove the rear suspension assembly.

CAUTION:
A helper is required to perform this work.

(1) Support the rear differential with transmission jack.
(2) Remove the bolt which installs the rear shock absorber to rear suspension arm.

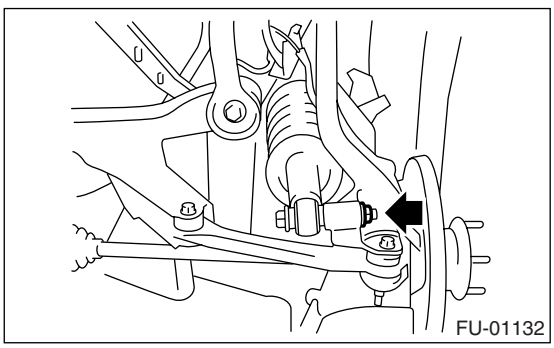
FU-01132

(3) Remove the bolts which secure the rear suspension assembly to body.

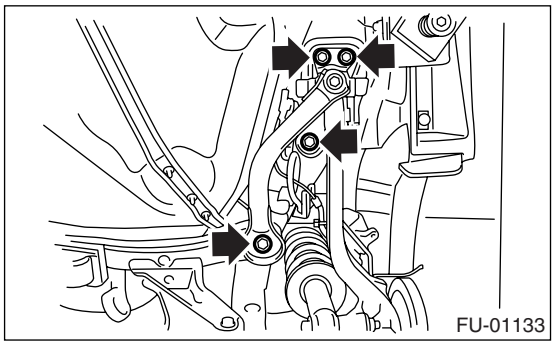

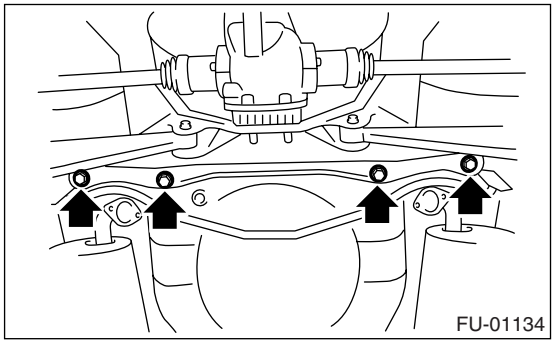

(4) Remove the rear suspension assembly.

26) Disconnect the connector.

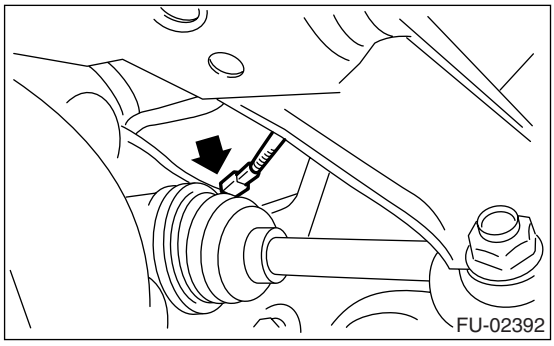

27) Disconnect the evaporation hoses.

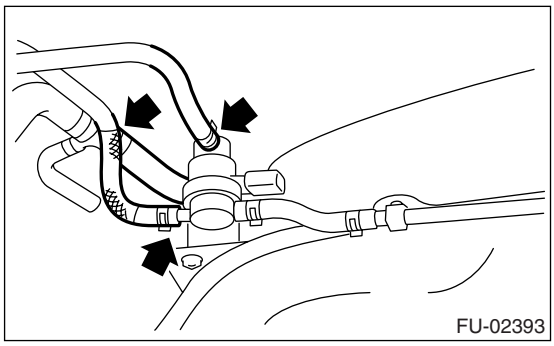

28) Disconnect the fuel filler hoses (A) and evaporation hoses (B).

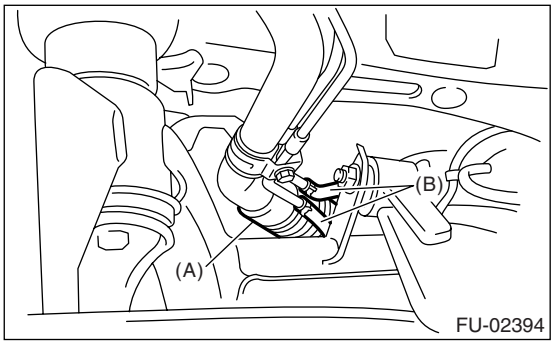

29) Support the fuel tank with transmission jack, remove the bolts from fuel tank bands, and dismount the fuel tank from vehicle.

WARNING:
A helper is required to perform this work.

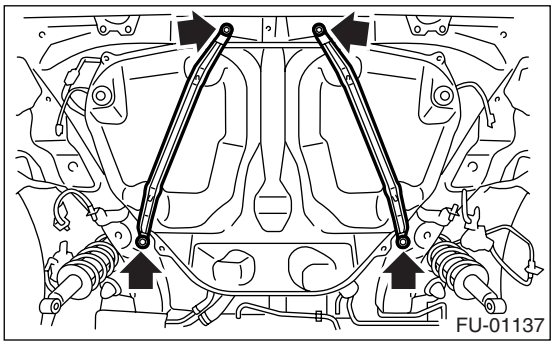

B: INSTALLATION

1) Support the fuel tank with transmission jack, set the fuel tank, and then temporarily tighten the bolts of fuel tank band.

WARNING:
A helper is required to perform this work.

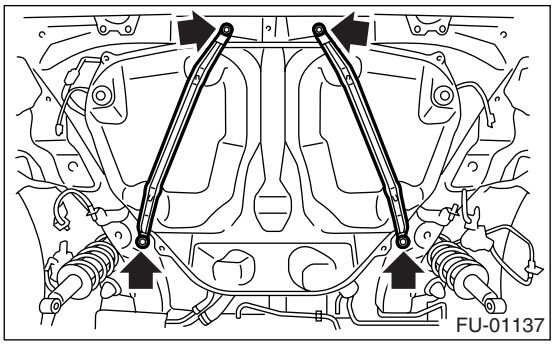

2) Correctly insert the fuel filler hose (A) and evaporation hose (B) to specified position, and then tighten the clamp.

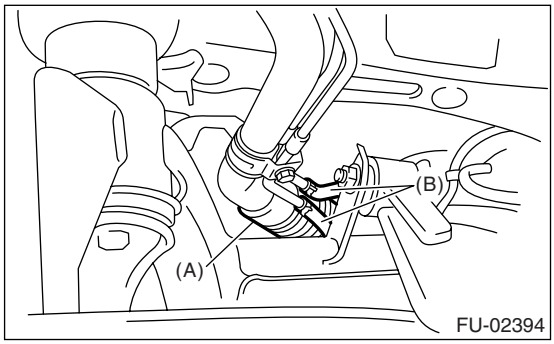

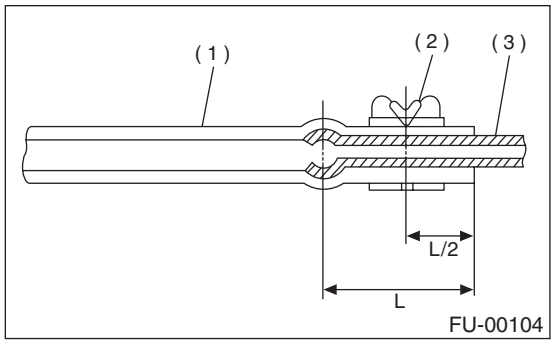

(1) Hose
(2) Clip or clamp
(3) Pipe

3) Connect the evaporation hose.

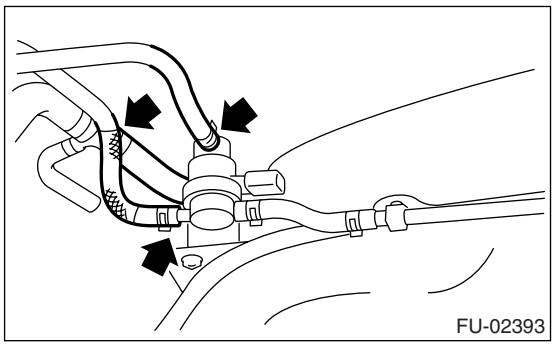

4) Tighten the bolts of fuel tank band.

Tightening torque:
33 N·m (3.4 kgf-m, 25 ft-lb)

5) Connect the connector.

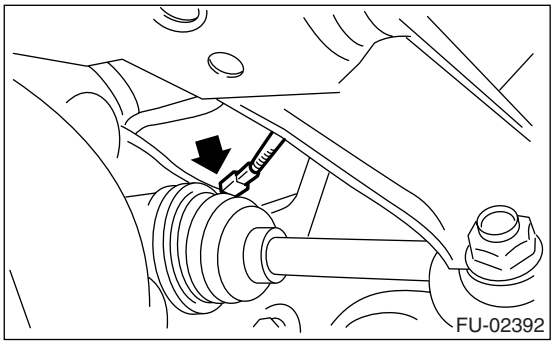

6) Install the rear suspension assembly.

CAUTION:
A helper is required to perform this work.

(1) Support the rear differential with transmission jack.
(2) Support the rear suspension assembly, and then tighten the bolts which secure the rear suspension assembly to body.

Tightening torque:
T1: 125 N·m (12.7 kgf-m, 92.2 ft-lb)
T2: 65 N·m (6.2 kgf-m, 48 ft-lb)
T3: 175 N·m (17.8 kgf-m, 129 ft-lb)

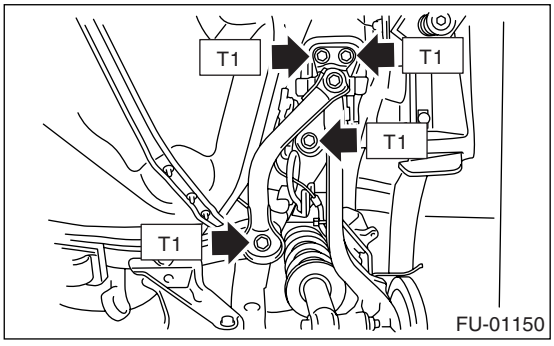

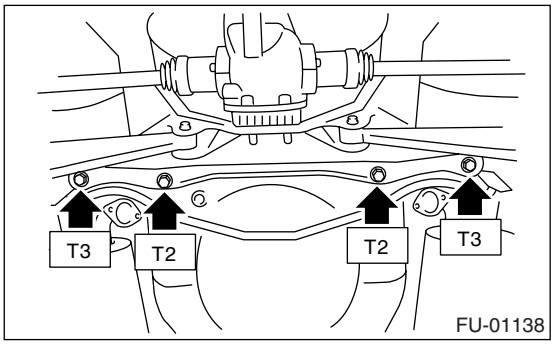

(3) Tighten the bolts which install the rear shock absorber to rear suspension arm. <Ref. to RS-11, INSTALLATION, Rear Arm.>

Tightening torque:
62 N·m (6.3 kgf-m, 46 ft-lb)

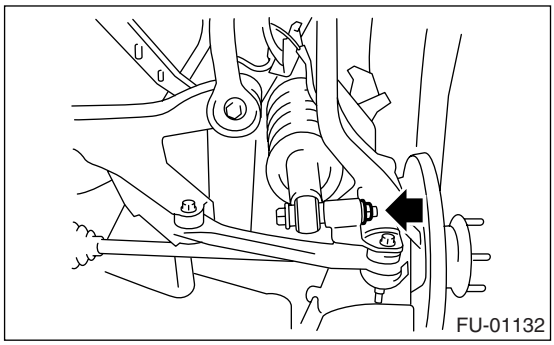

7) Tighten the bolts which install the parking brake cable clamp.

Tightening torque:
18 N·m (1.8 kgf-m, 13.3 ft-lb)

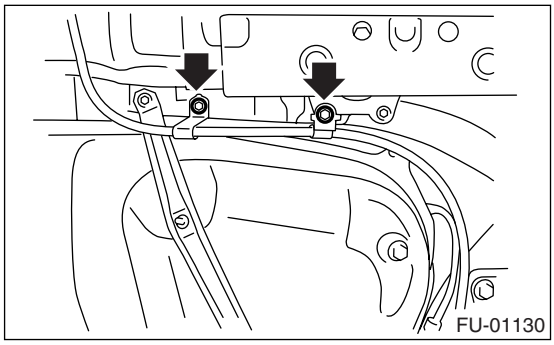

Tightening torque:
32 N·m (3.3 kgf-m, 23.9 ft-lb)

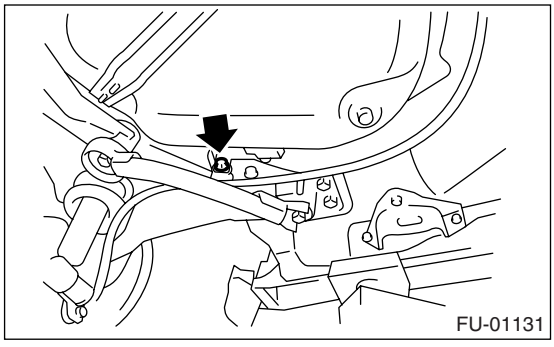

8) Connect the connector to rear ABS wheel speed sensor.

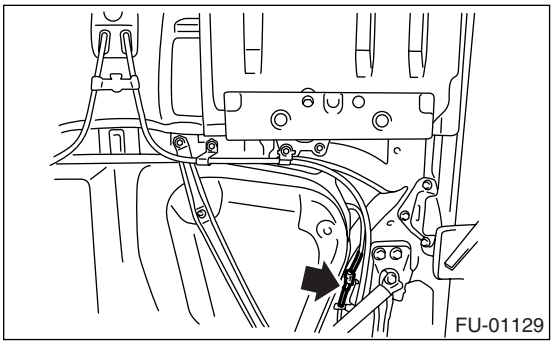

9) Install the heat shield cover.

10) Install the propeller shaft. <Ref. to DS-11, INSTALLATION, Propeller Shaft.>
11) Install the rear exhaust pipe. <Ref. to EX(H4DOTC)-12, INSTALLATION, Rear Exhaust Pipe.>
12) Lower the vehicle.
13) Connect the parking brake cable to parking brake assembly. <Ref. to PB-7, INSTALLATION, Parking Brake Assembly (Rear Disc Brake).>
14) Install the rear brake caliper.
15) Tighten the bolt which secures rear brake hose installation bracket.

Tightening torque:
33 N·m (3.4 kgf-m, 25 ft-lb)

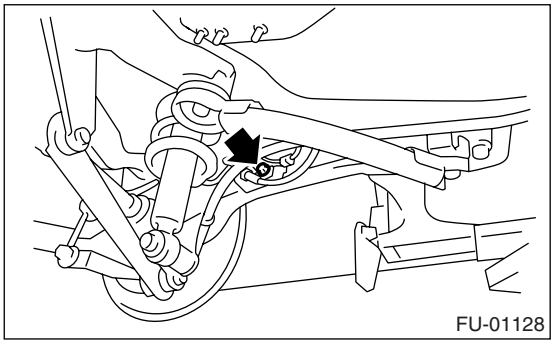

16) Install the rear wheels.
17) Lower the vehicle.
18) Connect the quick connector of evaporation pipe. <Ref. to FU(H4DOTC)-61, INSTALLATION, Fuel Delivery, Return and Evaporation Lines.>

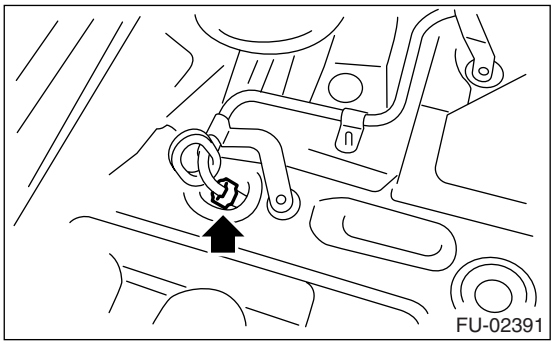

19) Install pipe protector.

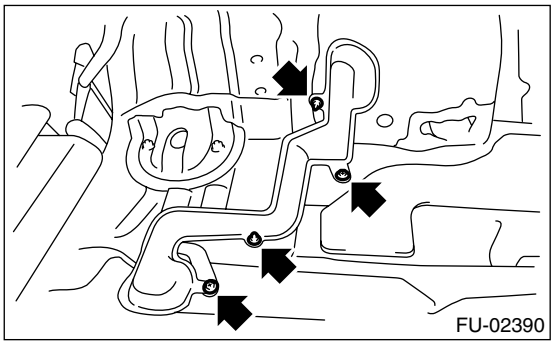

20) Install trunk room trim. (Sedan model) <Ref. to EI-46, INSTALLATION, Rear Quarter Protector.>

21) Install rear quarter trim. (Wagon model) <Ref. to EI-63, WAGON MODEL, INSTALLATION, Rear Quarter Trim.>
22) Connect the connector (A) to fuel sub level sensor.
23) Connect the quick connector to the fuel delivery (B) and return hose (C). <Ref. to FU(H4DOTC)-61, INSTALLATION, Fuel Delivery, Return and Evaporation Lines.>

NOTE:
Be careful not to misconnect the delivery side and return side.

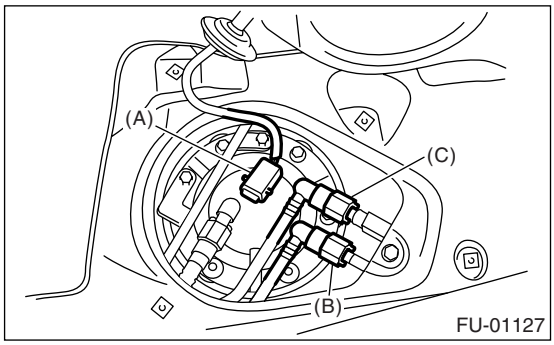

24) Install the service hole cover of fuel sub level sensor.

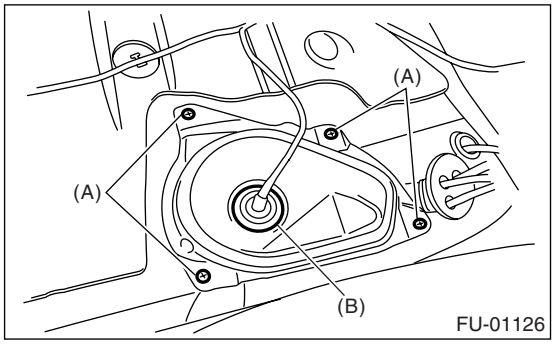

(A) Bolt
(B) Grommet

25) Connect the connector (A), and then install the clips (B).

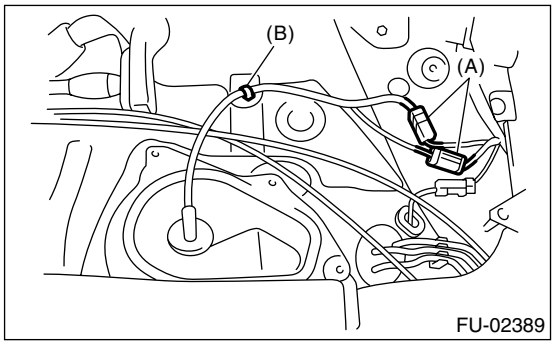

26) Connect the connector to fuel pump.

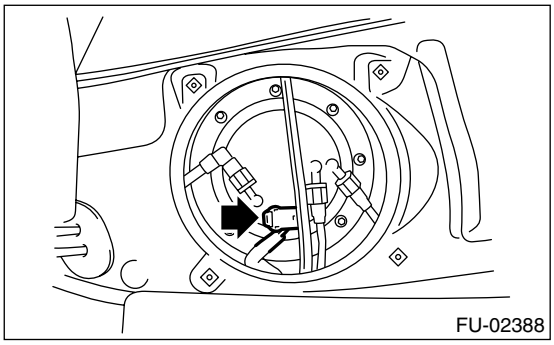

27) Install the service hole cover of fuel pump.

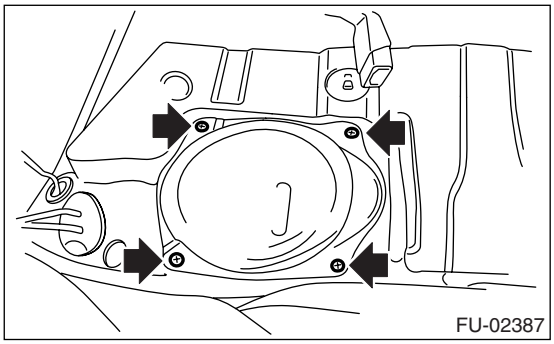

28) Install the rear seat.
29) Install the fuse of fuel pump to main fuse box.

C: INSPECTION

1) Check that the fuel tank is not holed, cracked or otherwise damaged.
2) Make sure that the fuel hoses and fuel pipes are not cracked and those connections are tight.

27.Fuel Filler Pipe

A: REMOVAL

WARNING:
- **Place "NO FIRE" signs near the working area.**
- **Be careful not to spill fuel on the floor.**

1) Disconnect the ground cable from battery.

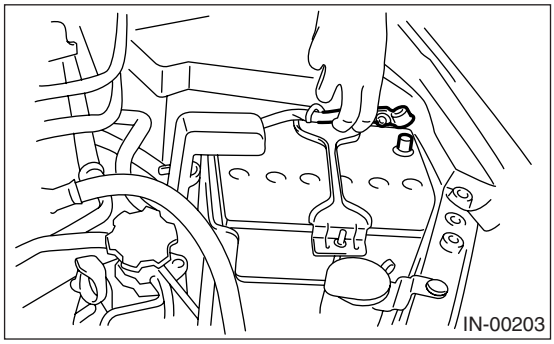

2) Open the fuel filler flap lid, and remove the filler cap.
3) Remove the screws which secure the packing.

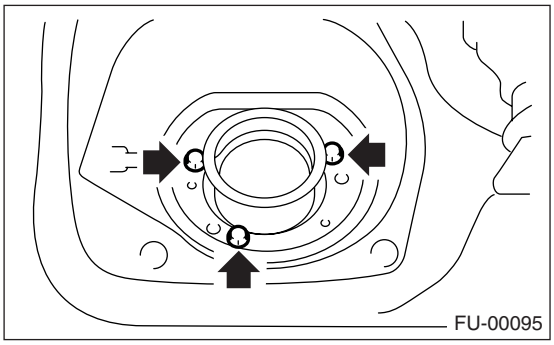

4) Lift-up the vehicle.
5) Remove the rear wheel RH.

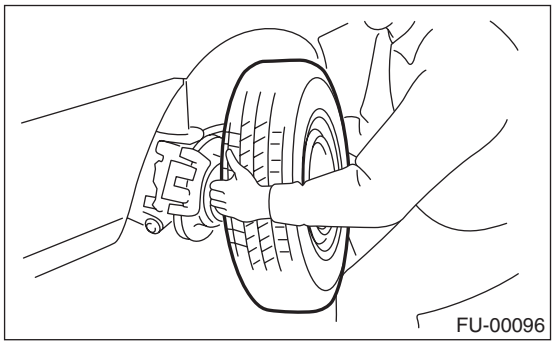

6) Drain fuel from fuel tank. <Ref. to FU(H4DOTC)-44, DRAINING FUEL, PROCEDURE, Fuel.>
7) Remove the mud guard. <Ref. to EI-29, REMOVAL, Mud Guard.>
8) Remove the rear sub frame. <Ref. to RS-23, REMOVAL, Rear Sub Frame.>
9) Remove the bolts which hold the fuel filler pipe bracket on the body.

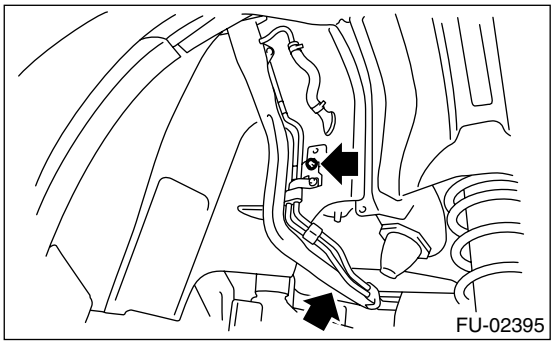

10) Loosen the clamp and disconnect the fuel filler hose (A) and evaporation hose (B).

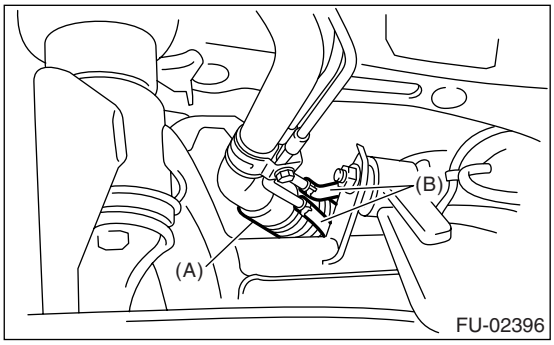

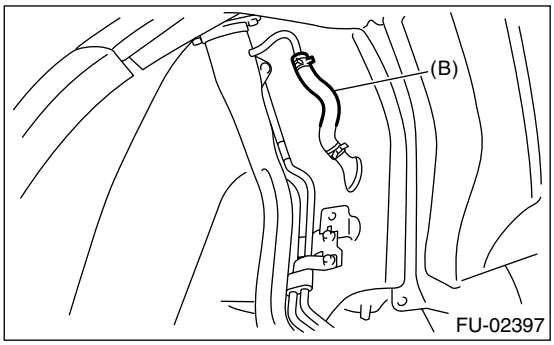

11) Remove the fuel filler pipe to under side of the vehicle.

B: INSTALLATION

1) Open the fuel filler flap lid.
2) Set the fuel saucer (A) with rubber packing (C) and insert the fuel filler pipe into hole from the inner side of apron.
3) Align the holes in fuel filler pipe neck and set the cup (B), and tighten the screws.

NOTE:
If the edges of rubber packing are folded toward the inside, straighten it with a flat tip screwdriver.

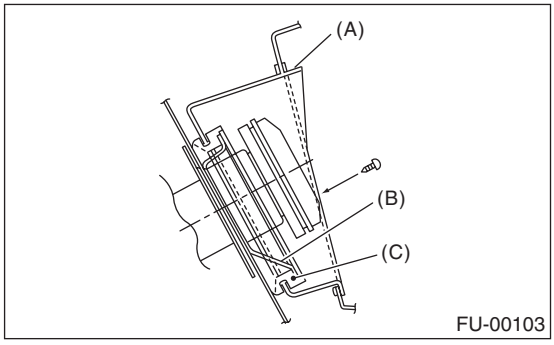

4) Correctly insert the fuel filler hose (A) and evaporation hose (B) to specified position, and then tighten the clamp.

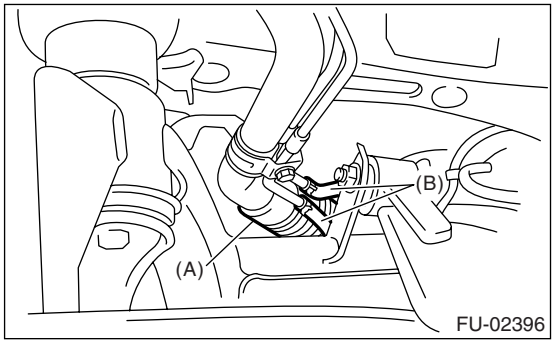

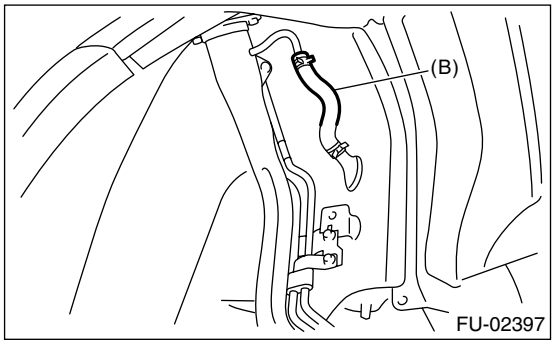

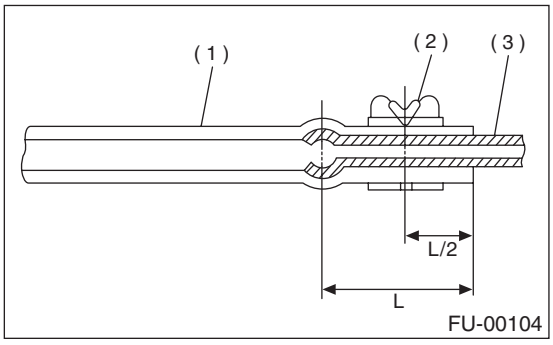

(1) Hose
(2) Clip or clamp
(3) Pipe

5) Tighten the bolts which hold the fuel filler pipe bracket on the body.

Tightening torque:
7.5 N·m (0.76 kgf-m, 5.5 ft-lb)

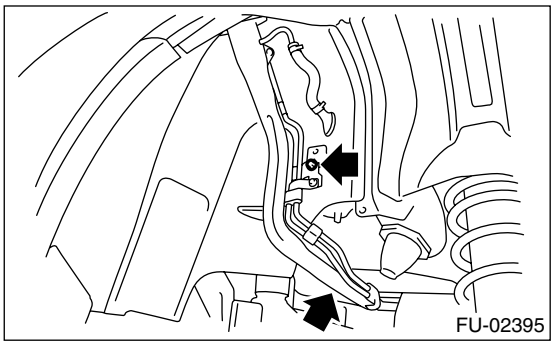

6) Install the rear sub frame. <Ref. to RS-23, INSTALLATION, Rear Sub Frame.>
7) Install the mud guard. <Ref. to EI-29, INSTALLATION, Mud Guard.>
8) Install the rear wheel RH.

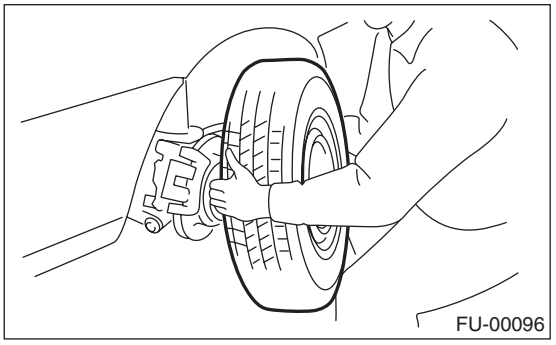

9) Lower the vehicle.
10) Connect the battery ground cable to battery.

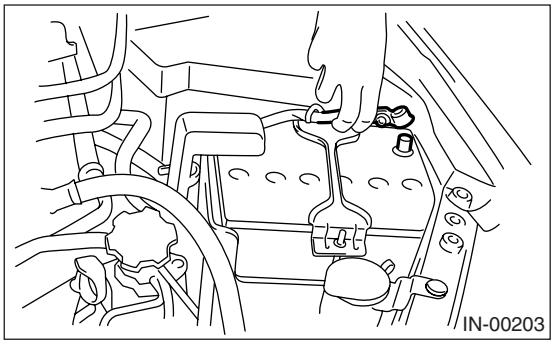

C: DISASSEMBLY

1) Move the clamp, and disconnect the evaporation hose from shut valve.

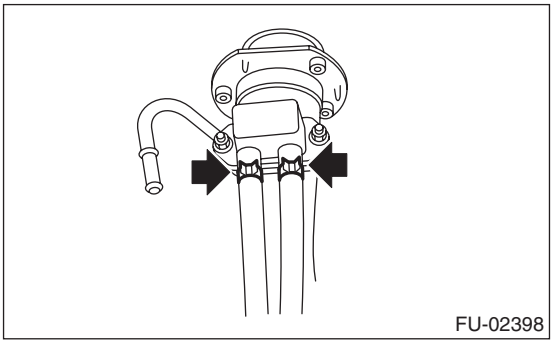

2) Remove the nut which holds the evaporation pipe assembly to fuel filler pipe.

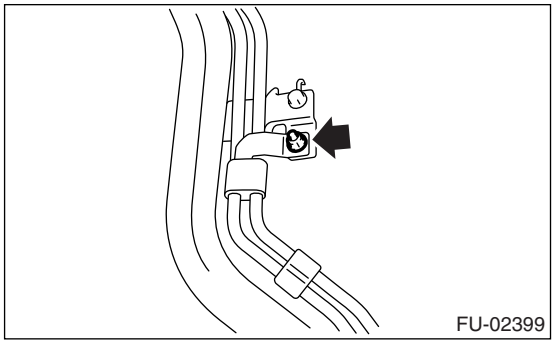

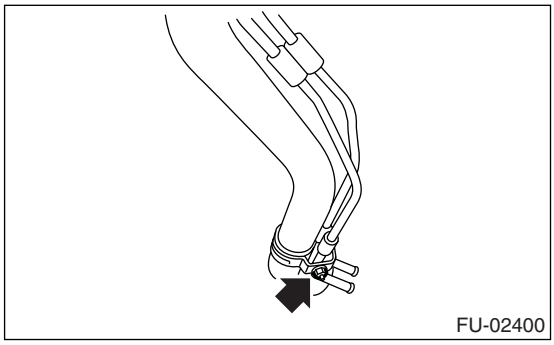

3) Remove the shut valve from fuel filler pipe. <Ref. to EC(H4DOTC)-15, REMOVAL, Shut Valve.>

D: ASSEMBLY

1) Install the shut valve to fuel filler pipe. <Ref. to EC(H4DOTC)-15, INSTALLATION, Shut Valve.>
2) Tighten the nut which holds the evaporation pipe assembly on the fuel filler pipe.

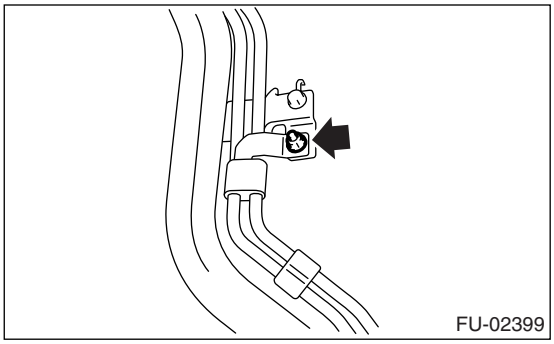

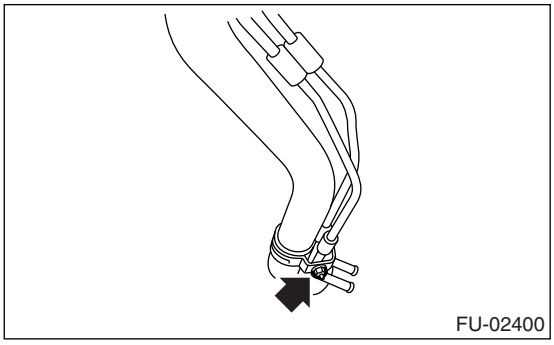

3) Connect the evaporation hose to shut valve.

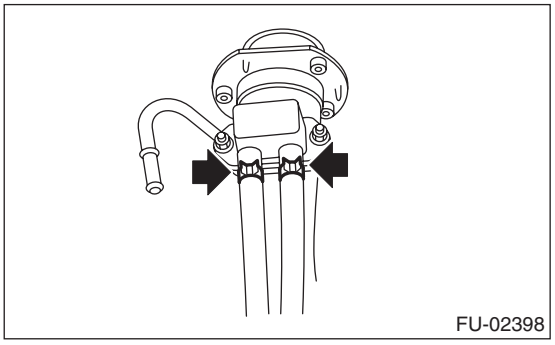

28.Fuel Pump

A: REMOVAL

WARNING:
- **Place "NO FIRE" signs near the working area.**
- **Be careful not to spill fuel on the floor.**

NOTE:
Fuel pump assembly consists of fuel pump and fuel level sensor.

1) Release the fuel pressure.
<Ref. to FU(H4DOTC)-44, RELEASING OF FUEL PRESSURE, PROCEDURE, Fuel.>
2) Drain the fuel. <Ref. to FU(H4DOTC)-44, DRAINING FUEL, PROCEDURE, Fuel.>
3) Remove the rear seat.
4) Remove the service hole cover.

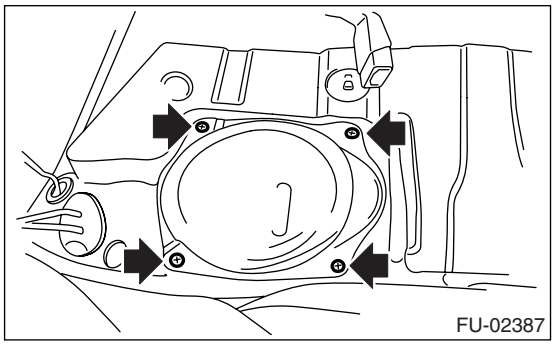
FU-02387

5) Disconnect the connector from fuel pump.

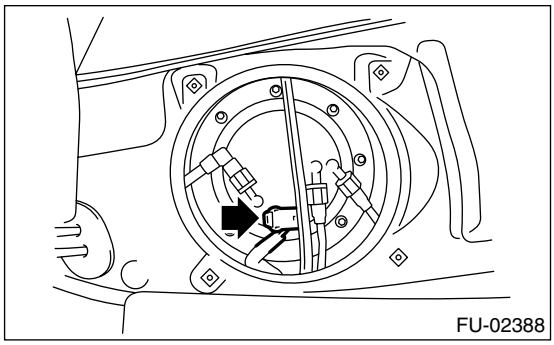
FU-02388

6) Disconnect the quick connector and then disconnect the fuel delivery hose, return hose and jet pump hose. <Ref. to FU(H4DOTC)-60, REMOVAL, Fuel Delivery, Return and Evaporation Lines.>

7) Remove the nuts which install the fuel pump assembly onto fuel tank.

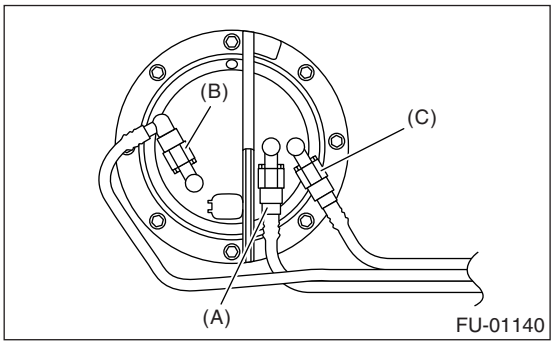

FU-01140

(A) Delivery hose
(B) Return hose
(C) Jet pump hose

8) Take off the fuel pump assembly from fuel tank.

B: INSTALLATION

Install in the reverse order of removal.

NOTE:
Use a new gasket.
(1) Ensure the sealing portion is free from fuel or foreign particles before installation.
(2) Tighten the nuts to specified torque in the order as shown in the figure.

Tightening torque:
4.4 N·m (0.45 kgf-m, 3.2 ft-lb)

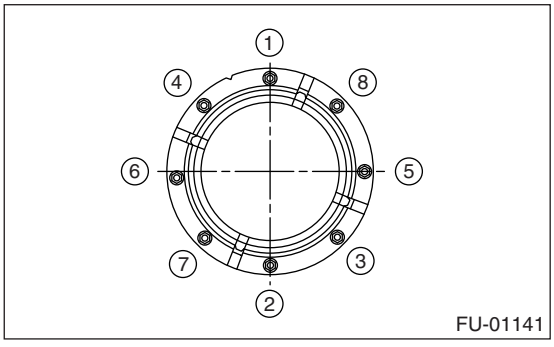

FU-01141

C: INSPECTION

Connect the lead harness to the connector terminal of fuel pump and apply the battery power supply to check whether the pump operates.

WARNING:
- **Wipe off the fuel completely.**
- **Keep battery as far apart from fuel pump as possible.**
- **Be sure to turn the battery supply to ON and OFF on the battery side.**

• Do not run fuel pump for a long time under non-load condition.

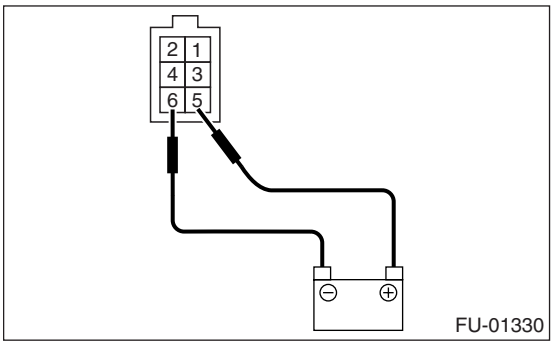

29.Fuel Level Sensor

A: REMOVAL

WARNING:
- **Place “NO FIRE” signs near the working area.**
- **Be careful not to spill fuel on the floor.**

NOTE:
Fuel level sensor is built in fuel pump assembly.

1) Remove the fuel pump assembly. <Ref. to FU(H4DOTC)-54, REMOVAL, Fuel Pump.>
2) Disconnect the connector from fuel pump bracket.
3) Remove the fuel temperature sensor.
4) Remove the fuel level sensor.

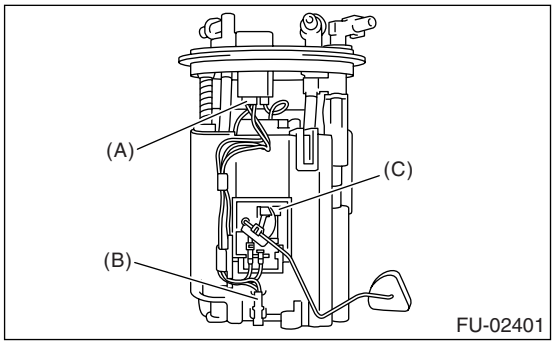

(A) Connector
(B) Fuel temperature sensor
(C) Fuel level sensor

B: INSTALLATION

Install in the reverse order of removal.

30.Fuel Sub Level Sensor

A: REMOVAL

WARNING:
- **Place "NO FIRE" signs near the working area.**
- **Be careful not to spill fuel on the floor.**

1) Drain fuel. <Ref. to FU(H4DOTC)-44, DRAINING FUEL, PROCEDURE, Fuel.>
2) Remove the rear seat.
3) Remove the service hole cover.
   (1) Remove the bolts (A).
   (2) Push the grommet (B) down under the body and remove the service hole cover.

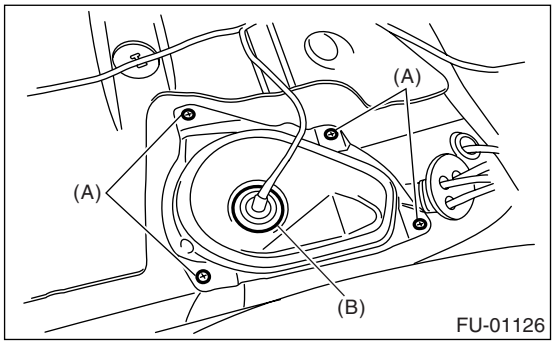

4) Disconnect the connector from fuel sub level sensor.

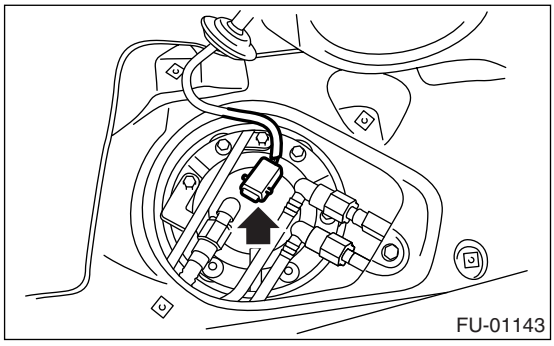

5) Disconnect the quick connector and then disconnect the fuel delivery hose, return hose and jet pump hose. <Ref. to FU(H4DOTC)-60, REMOVAL, Fuel Delivery, Return and Evaporation Lines.>

6) Remove the nuts and bolts which install the fuel sub level sensor on fuel tank.

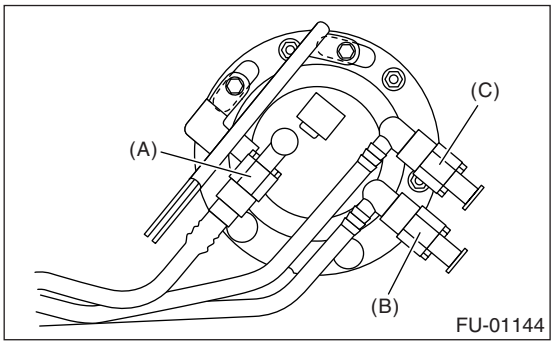

(A) Jet pump hose
(B) Delivery hose
(C) Return hose

7) Remove the fuel sub level sensor.

B: INSTALLATION

Install in the reverse order of removal.

NOTE:
Use a new gasket.
(1) Ensure the sealing portion is free from fuel or foreign particles before installation.
(2) Tighten the nuts and bolts to specified torque in the order as shown in the figure.

Tightening torque:
4.4 N·m (0.45 kgf-m, 3.2 ft-lb)

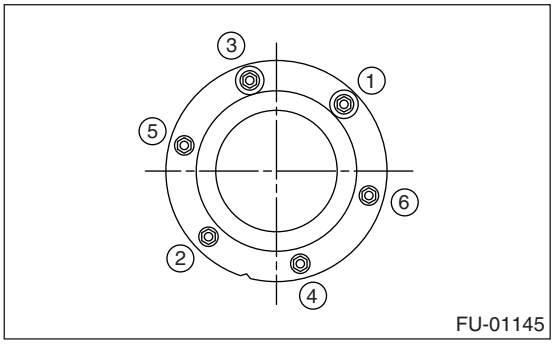

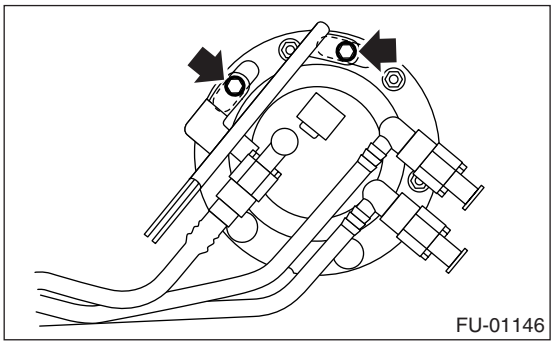

31.Fuel Filter

A: SPECIFICATION

Fuel filter forms a unit with fuel pump.
Refer to Fuel Pump for removal and installation procedures.
<Ref. to FU(H4DOTC)-54, REMOVAL, Fuel Pump.>
<Ref. to FU(H4DOTC)-54, INSTALLATION, Fuel Pump.>

32.Fuel Bypass Valve

A: REMOVAL

1) Release the fuel pressure.
<Ref. to FU(H4DOTC)-44, RELEASING OF FUEL PRESSURE, PROCEDURE, Fuel.>
2) In the engine compartment, disconnect the fuel delivery hoses, return hoses, and evaporation hose.
(1) Disconnect the quick connector of fuel delivery line and return line by pushing the ST in the direction of the arrow.
ST 42099AE000 CONNECTOR REMOVER
(2) Remove the clip, and disconnect the evaporation hose from pipe.

WARNING:
• Be careful not to spill fuel.
• Catch the fuel from hoses using a container or cloth.

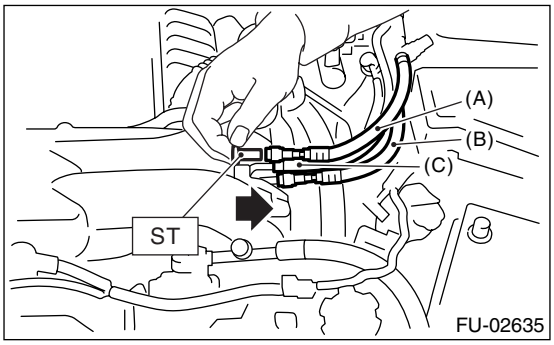

(A) Fuel delivery hose
(B) Fuel return hose
(C) Evaporation hose

3) Remove the fuel bypass valve from vehicle.

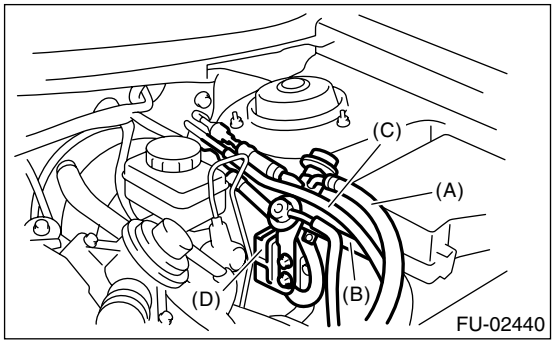

(A) Fuel delivery line
(B) Fuel return line
(C) Evaporation line
(D) Fuel bypass valve

4) Remove the fuel delivery hose and fuel return hose from fuel bypass valve.

B: INSTALLATION

Install in the reverse order of removal.

Tightening torque:
Fuel bypass valve bracket
7.5 N·m (0.76 kgf-m, 5.5 ft-lb)
Clamp
1.25 N·m (0.13 kgf-m, 5.5 ft-lb)

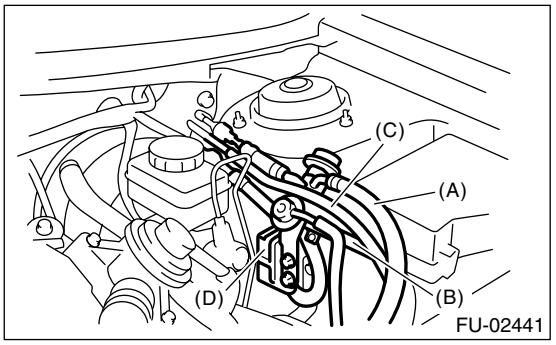

(A) Fuel delivery line
(B) Fuel return line
(C) Evaporation line
(D) Fuel bypass valve

33.Fuel Delivery, Return and Evaporation Lines

A: REMOVAL

1) Set the vehicle on a lift.
2) Release the fuel pressure. <Ref. to FU(H4DOTC)-44, RELEASING OF FUEL PRESSURE, PROCEDURE, Fuel.>
3) Open the fuel filler flap lid, and remove the fuel filler cap.
4) Remove the floor mat. <Ref. to EI-72, REMOVAL, Floor Mat.>
5) Disconnect the fuel delivery pipes and hoses, and then disconnect the fuel return pipes and hoses, evaporation pipes and hoses.

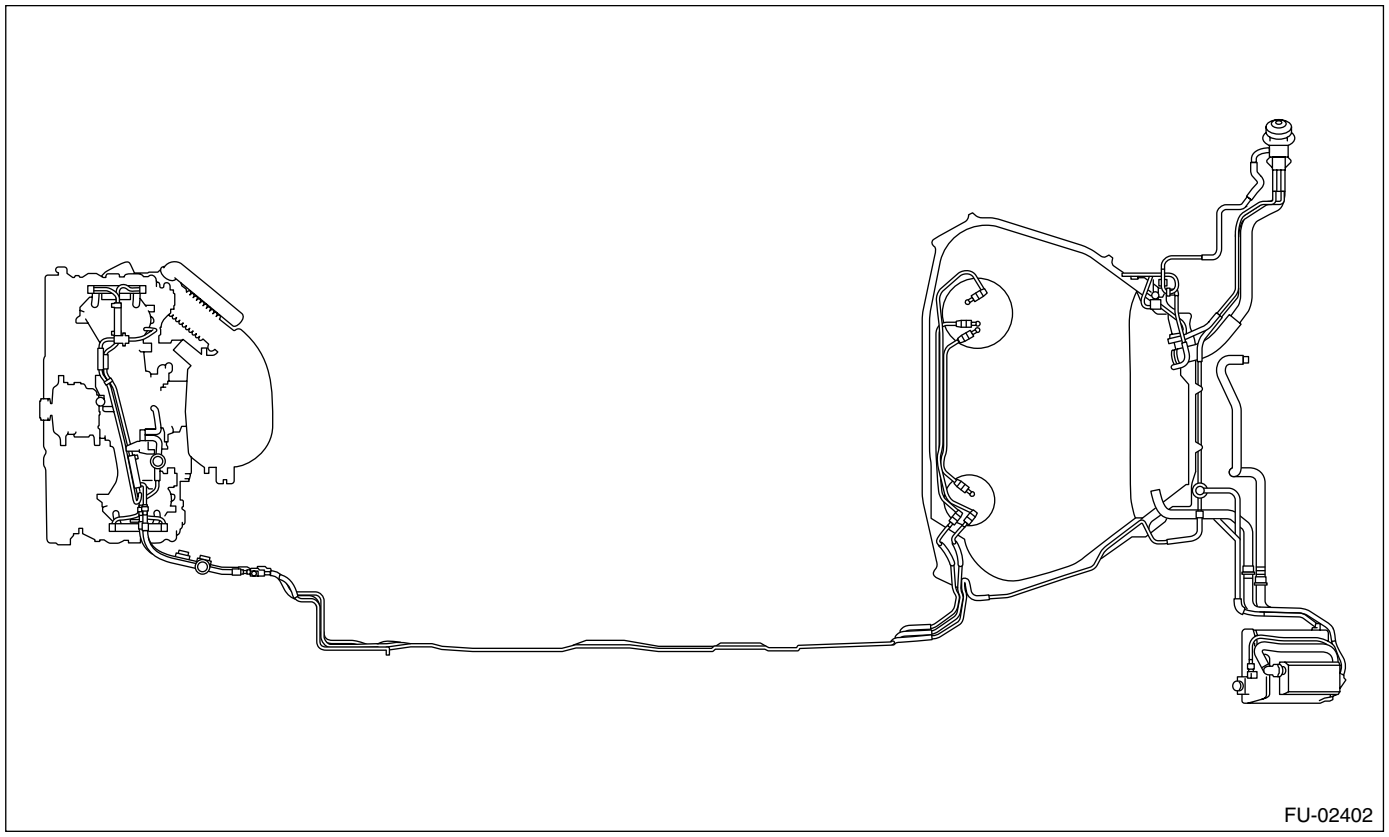
FU-02402

6) In the engine compartment, disconnect the fuel delivery hoses, return hoses, and evaporation hose.
   (1) Disconnect the quick connector of fuel delivery line and return line by pushing the ST in the direction of arrow.

ST 42099AE000 CONNECTOR REMOVER

   (2) Remove the clip, and disconnect the evaporation hose from pipe.

WARNING:
- **Be careful not to spill fuel.**
- **Catch the fuel from hoses using a container or cloth.**

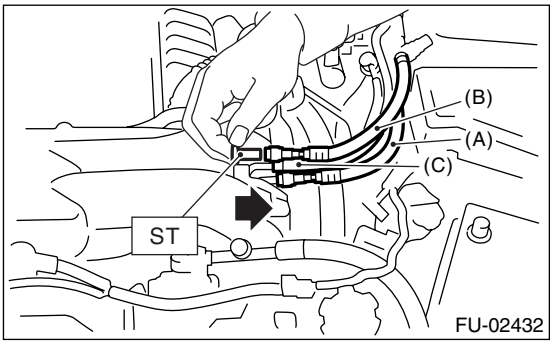

FU-02432

(A) Fuel delivery hose
(B) Return hose
(C) Evaporation hose

7) Lift-up the vehicle.

8) Remove the fuel tank. <Ref. to FU(H4DOTC)-45, REMOVAL, Fuel Tank.>
9) Separate the quick connector on fuel line.
(1) Clean the pipe and connector, if they are covered with dust.
(2) To prevent from damaging or entering foreign matter, wrap the pipes and connectors with plastic bag, etc.

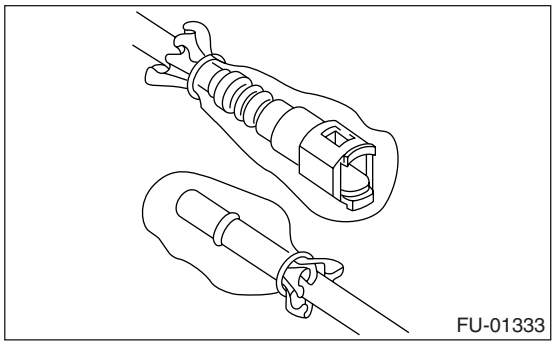

(3) Hold the connector (A) and push retainer (B) down.
(4) Pull out the connector (A) from retainer (B).

CAUTION:
Always use a new retainer except in use of engine compartment.

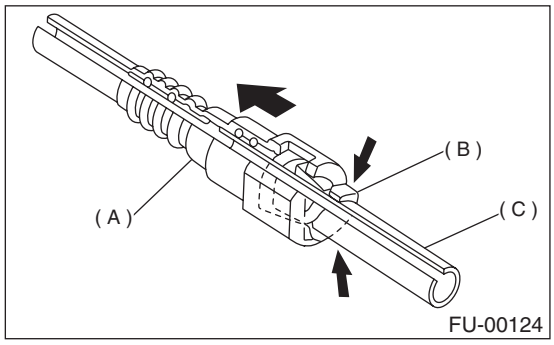

(A) Connector
(B) Retainer
(C) Pipe

B: INSTALLATION

1) Connect the quick connector on fuel line.

CAUTION:
• Always use a new retainer except in use of engine compartment.
• Make sure that the connected portion is not damaged or dust-covered. If necessary, clean the seal surface of pipe.

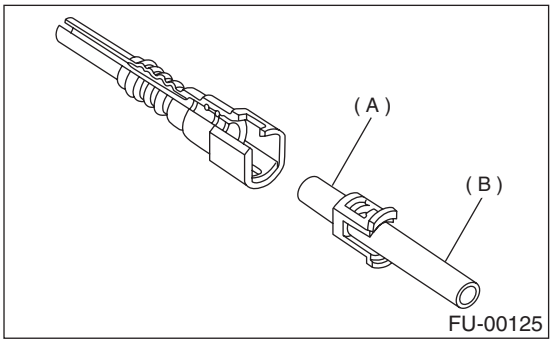

(A) Seal surface
(B) Pipe

(1) Set the new retainer (B) to connector (A).
(2) Push the pipe into the connector completely.

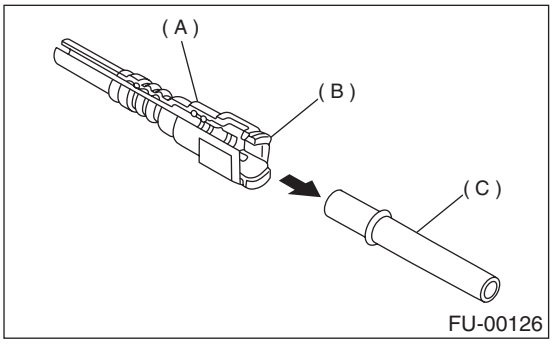

(A) Connector
(B) Retainer
(C) Pipe

CAUTION:
• Pull the connector to ensure it is connected securely.
• Ensure the two retainer pawls are engaged in their mating positions in the connector.

• Be sure to inspect the hoses and their connections for fuel leakage.

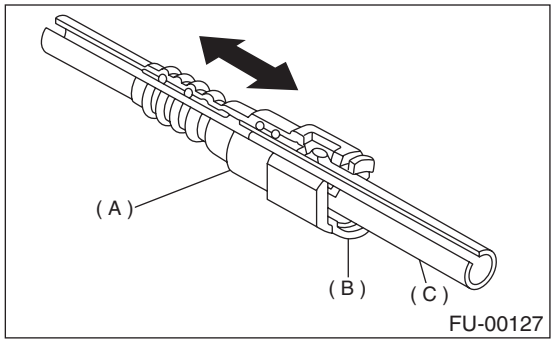

(A) Connector
(B) Retainer
(C) Pipe

2) Connect the fuel delivery hose to the pipe with an overlap of 20 to 25 mm (0.79 to 0.98 in).
Type A: When the amount to be inserted is specified.
Type B: When the amount to be inserted is not specified.

ℓ : 2.5±1.5 mm (0.098±0.059 in)

L: 22.5±2.5 mm (0.886±0.098 in)

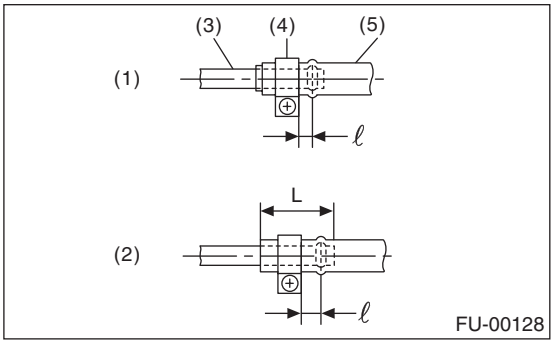

(1) Type A
(2) Type B
(3) Pipe
(4) Clamp
(5) Hose

3) Connect the return hose and evaporation hose to the pipe by approx. 15 mm (0.59 in) from hose end.

Fuel return hose:
L = 22.5±2.5 mm (0.886±0.098 in)
Fuel evaporation hose:
L = 17.5±2.5 mm (0.689±0.098 in)

CAUTION:
Be sure to inspect the hoses and their connections for fuel leakage.

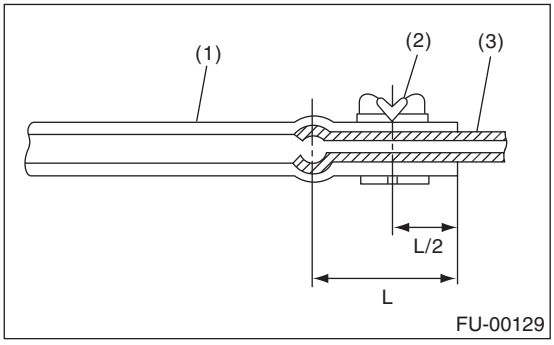

(1) Hose
(2) Clip
(3) Pipe

C: INSPECTION

1) Make sure that there are no cracks on the fuel pipes and fuel hoses.
2) Make sure the fuel pipe and fuel hose connections are tightened firmly.

34.Fuel System Trouble in General

A: INSPECTION

Trouble and possible cause		Corrective action
1. Insufficient fuel supply to injector		
1)	Fuel pump does not operate.	
	❍ Defective terminal contact	Inspect contact, especially ground, and tighten it securely.
	❍ Trouble in electromagnetic or electronic circuit parts	Replace the faulty parts.
2)	Decline of fuel pump function	Replace the fuel pump.
3)	Clogged dust or water in the fuel filter	Replace fuel filter, clean or replace fuel tank.
4)	Clogged or bent fuel pipe or hose	Clean, correct or replace the fuel pipe or hose.
5)	Air mixed in the fuel system	Inspect or retighten each connection part.
6)	Clogged or bent air breather tube or pipe	Clean, correct or replace air breather tube or pipe.
7)	Damaged diaphragm of pressure regulator	Replace.
2. Leakage or blow out of fuel		
1)	Loosened joints of the fuel pipe	Retighten.
2)	Cracked fuel pipe, hose, and fuel tank	Replace.
3)	Defective welding part on the fuel tank	Replace.
4)	Defective drain packing of the fuel tank	Replace.
5)	Clogged or bent air breather tube or air vent tube	Clean, correct or replace air breather tube or air vent tube.
3. Gasoline smell inside of compartment		
1)	Loose joints at air breather tube, air vent tube, and fuel filler pipe	Retighten.
2)	Defective packing air tightness on the fuel saucer	Correct or replace the packing.
3)	Inoperative fuel pump modulator or circuit	Replace.
4. Defective fuel meter indicator		
1)	Defective operation of fuel level sensor	Replace.
2)	Defective operation of fuel meter	Replace.
5. Noise		
1)	Large operation noise or vibration of fuel pump	Replace.

NOTE:
• When the vehicle is left unused for an extended period of time, water may accumulate in the fuel tank. Fill fuel fully to prevent those problem. And also drain the water condensation from fuel filter.
• In snow-covered areas, mountainous areas, skiing areas, etc. where ambient temperatures drop below 0°C (32°F) throughout the winter season, use water removing agent in the fuel system to prevent freezing fuel system and accumulating water. Fill the water removing agent each time the fuel is reduced to half to maintain the advantage.
• When water condensation is noticed in the fuel filter, drain the water from both the fuel filter and fuel tank or use water removing agent in the fuel tank.
• Before using water removing agent, follow the cautions noted on the bottle.

EMISSION CONTROL
(AUX. EMISSION CONTROL DEVICES)
EC(H4DOTC)

		Page
1.	General Description	2
2.	Front Catalytic Converter	3
3.	Rear Catalytic Converter	4
4.	Precatalytic Converter	5
5.	Canister	6
6.	Purge Control Solenoid Valve	7
7.	Fuel Level Sensor	8
8.	Fuel Temperature Sensor	9
9.	Fuel Sub Level Sensor	10
10.	Fuel Tank Pressure Sensor	11
11.	Fuel Tank Sensor Control Valve	12
12.	Pressure Control Solenoid Valve	13
13.	Drain Filter	14
14.	Shut Valve	15
15.	Drain Valve	16
16.	PCV Hose Assembly	17

1. General Description

A: CAUTION

• Wear work clothing, including a cap, protective goggles and protective shoes during operation.
• Remove contamination including dirt and corrosion before removal, installation or disassembly.
• Keep the disassembled parts in order and protect them from dust and dirt.
• Before removal, installation or disassembly, be sure to clarify the failure. Avoid unnecessary removal, installation, disassembly and replacement.
• Be careful not to burn yourself, because each part on the vehicle is hot after running.
• Be sure to tighten fasteners including bolts and nuts to the specified torque.
• Place shop jacks or rigid racks at the specified points.
• Before disconnecting electrical connectors of sensors or units, be sure to disconnect the ground cable from battery.

B: PREPARATION TOOL

1. SPECIAL TOOL

ILLUSTRATION	TOOL NUMBER	DESCRIPTION	REMARKS
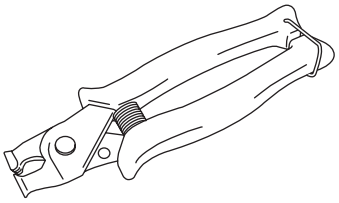 ST18353AA000	18353AA000	CLAMP PLIERS	• Used for removing and installing PCV hose. • This tool is the general purpose tool from CAILLAU in France. (code) 54.0.000.205 For the same availability as Subaru genuine part, tool No. is established.

2. Front Catalytic Converter

A: REMOVAL

1) Remove the center exhaust pipe.
<Ref. to EX(H4DOTC)-8, REMOVAL, Center Exhaust Pipe.>
2) Separate the front catalytic converter (A) from rear catalytic converter (B).

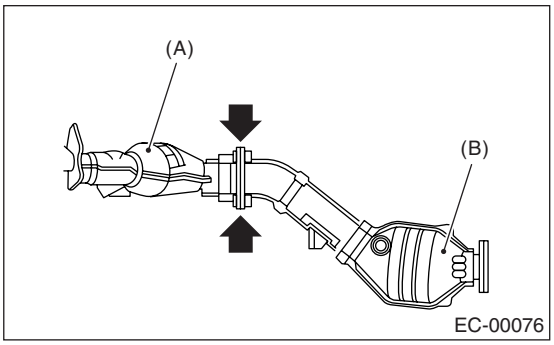

B: INSTALLATION

Install in the reverse order of removal.

NOTE:
Always use new gasket.

C: INSPECTION

1) Make sure there are no exhaust leaks from connections and welds.
2) Make sure there are no holes or rusting.

3. Rear Catalytic Converter

A: REMOVAL

1) Remove the center exhaust pipe.
<Ref. to EX(H4DOTC)-8, REMOVAL, Center Exhaust Pipe.>
2) Separate the rear catalytic converter (B) from front catalytic converter (A).

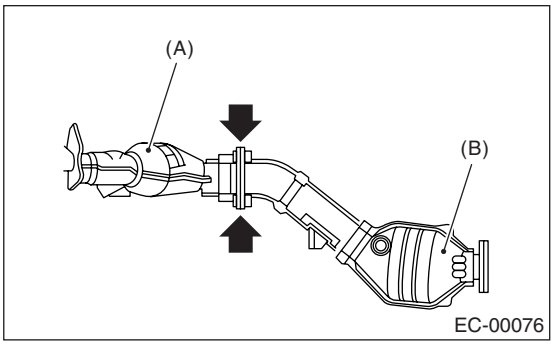

B: INSTALLATION

Install in the reverse order of removal.

NOTE:
Always use new gasket.

C: INSPECTION

1) Make sure there are no exhaust leaks from connections and welds.
2) Make sure there are no holes or rusting.

4. Precatalytic Converter

A: REMOVAL

Precatalytic converter (A) is built in the joint pipe. Refer to the removal of joint pipe for removal procedure. <Ref. to EX(H4DOTC)-11, REMOVAL, Joint Pipe.>

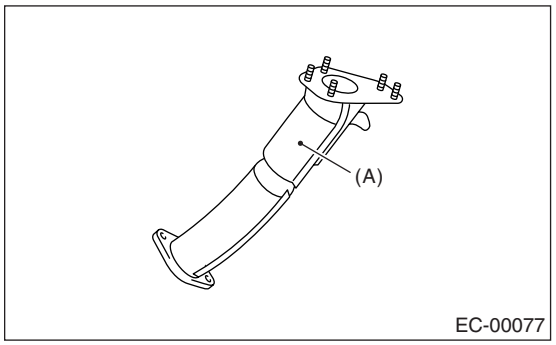

B: INSTALLATION

Install in the reverse order of removal.

C: INSPECTION

1) Make sure there are no exhaust leaks from connections and welds.
2) Make sure there are no holes or rusting.

5. Canister

A: REMOVAL

1) Disconnect the ground cable from battery.

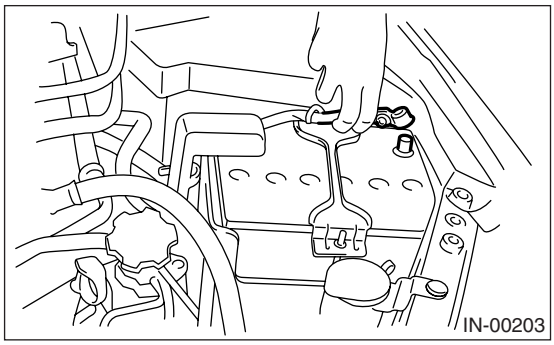

2) Lift-up the vehicle.
3) Remove the rear wheel LH.
4) Remove the mud guard LH.
5) Disconnect the quick connector (A).
6) Disconnect the drain valve connector (B).
7) Remove the clamp (C).

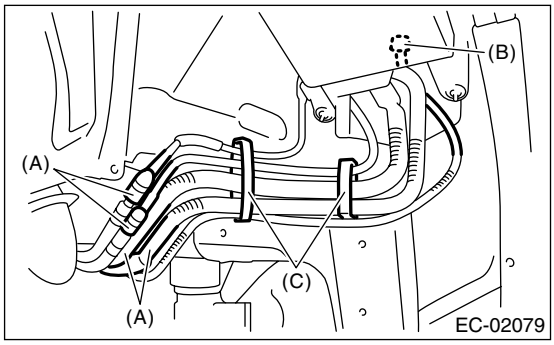

8) Remove the canister from body.

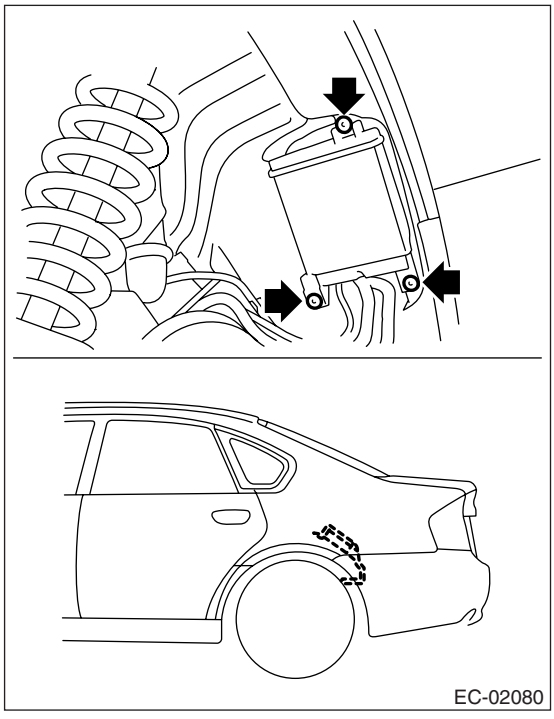

B: INSTALLATION

Install in the reverse order of removal.

NOTE:
Make sure there are no damage or dust on the connection of quick connector. If necessary, clean the seal surface of pipe.

Tightening torque:
8 N·m (0.8 kgf-m, 5.9 ft-lb)

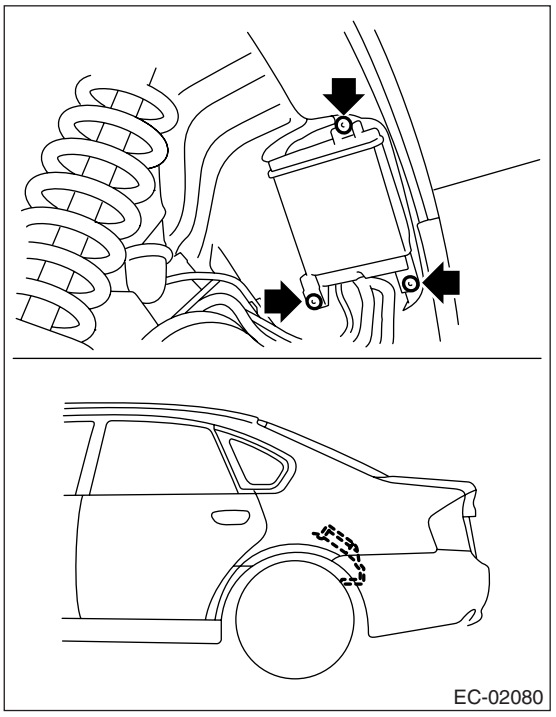

C: INSPECTION

Make sure the canister and canister hoses are not cracked or loose.

6. Purge Control Solenoid Valve

A: REMOVAL

1) Remove the collector cover.
2) Disconnect the ground cable from battery.

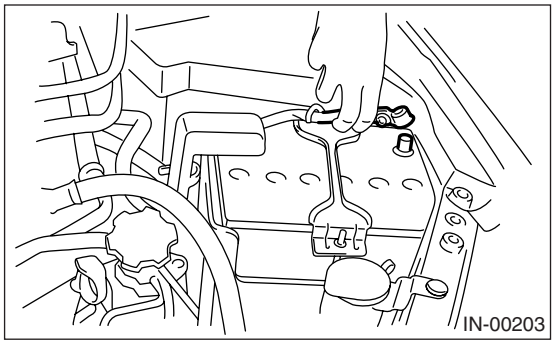

3) Remove the solenoid valve bracket assembly from intake manifold.

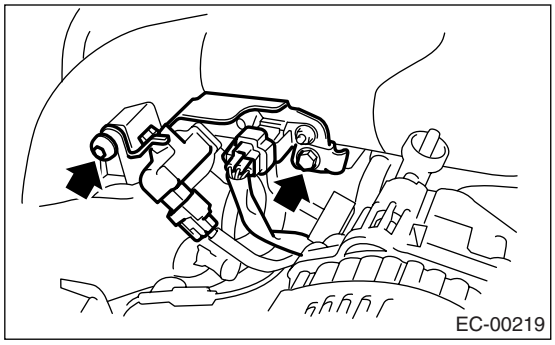

4) Disconnect the connector from purge control solenoid valve.
5) Disconnect the evaporation hose from the intake manifold and fuel pipe assembly.
6) Remove the purge control solenoid valve from solenoid valve bracket assembly.

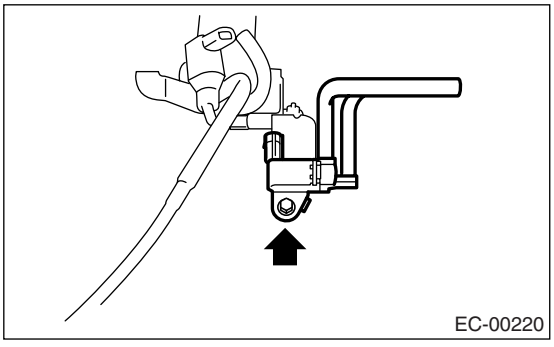

B: INSTALLATION

Install in the reverse order of removal.

Tightening torque:
19 N·m (1.9 kgf-m, 14 ft-lb)

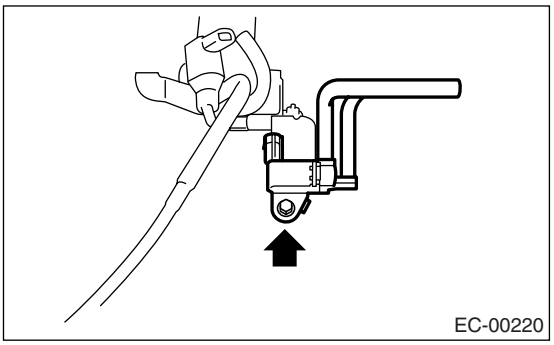

NOTE:
Connect the evaporation hose as shown in the figure.

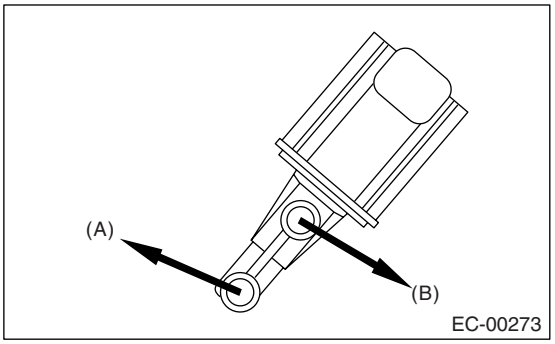

(A) To intake manifold
(B) To fuel pipe ASSY

Tightening torque:
19 N·m (1.9 kgf-m, 14 ft-lb)

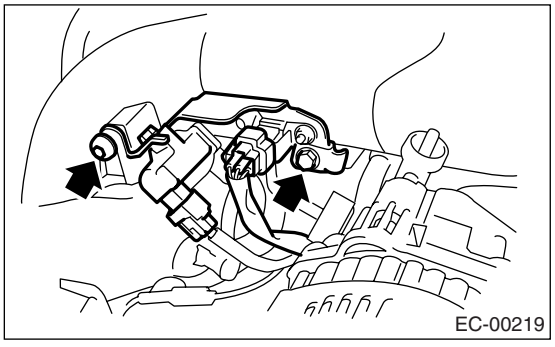

C: INSPECTION

Make sure the hoses are not cracked or loose.

7. Fuel Level Sensor

A: REMOVAL

For removal procedure, refer to “FU(H4DOTC)” section. <Ref. to FU(H4DOTC)-56, REMOVAL, Fuel Level Sensor.>

B: INSTALLATION

For installation procedure, refer to “FU(H4DOTC)” section. <Ref. to FU(H4DOTC)-56, INSTALLATION, Fuel Level Sensor.>

8. Fuel Temperature Sensor

A: REMOVAL

Fuel temperature sensor and fuel level sensor are integrated into one unit; therefore, the removal procedure is the same as that for fuel level sensor. <Ref. to FU(H4DOTC)-56, REMOVAL, Fuel Level Sensor.>

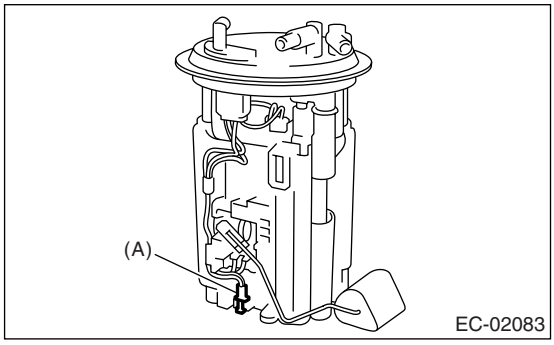

(A) Fuel temperature sensor

B: INSTALLATION

Fuel temperature sensor and fuel level sensor are integrated into one unit; therefore, the installation procedure is the same as that for fuel level sensor. <Ref. to FU(H4DOTC)-56, INSTALLATION, Fuel Level Sensor.>

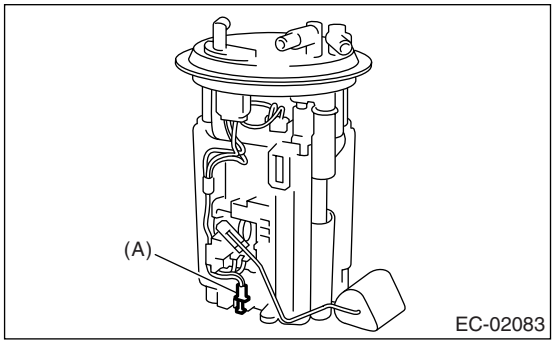

(A) Fuel temperature sensor

9. Fuel Sub Level Sensor

A: REMOVAL

For removal procedure, refer to “FU(H4DOTC)” section. <Ref. to FU(H4DOTC)-57, REMOVAL, Fuel Sub Level Sensor.>

B: INSTALLATION

For installation procedure, refer to “FU(H4DOTC)” section. <Ref. to FU(H4DOTC)-57, INSTALLATION, Fuel Sub Level Sensor.>

10.Fuel Tank Pressure Sensor

A: REMOVAL

1) Set the vehicle on the lift.
2) Open fuel filler flap lid, and remove fuel filler cap.
3) Disconnect the battery ground cable.

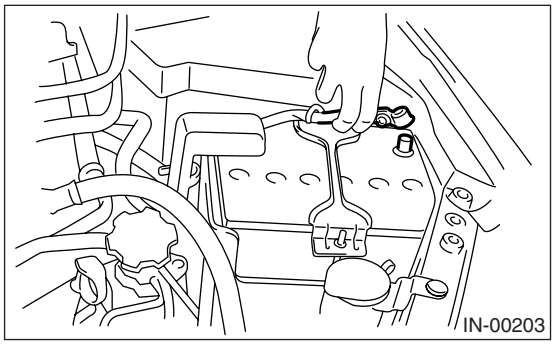

4) Lift-up the vehicle.
5) Disconnect the connector from fuel tank pressure sensor and fuel tank sensor control valve.
6) Disconnect the pressure hose from fuel tank pressure sensor.
7) Remove fuel tank pressure sensor and fuel tank sensor control valve with bracket.

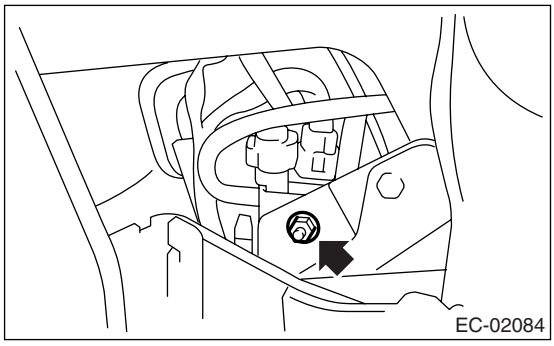

NOTE:
Replace the fuel tank pressure sensor and fuel tank sensor control valve as a unit.

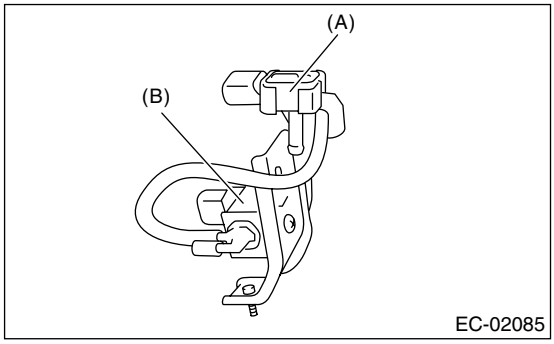

(A) Fuel tank pressure sensor
(B) Fuel tank sensor control valve

B: INSTALLATION

Install in the reverse order of removal.

Tightening torque:
7.4 N·m (0.75 kgf-m, 5.4 ft-lb)

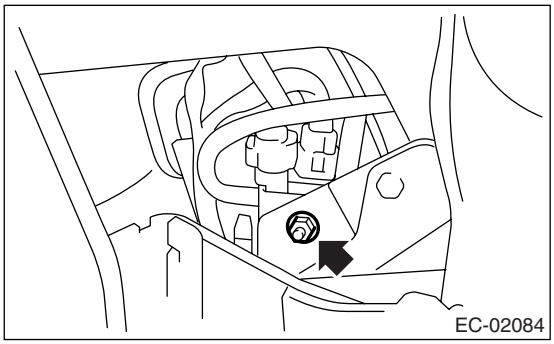

C: INSPECTION

Make sure that hoses are not cracked or loose.

11.Fuel Tank Sensor Control Valve

A: REMOVAL

Fuel tank sensor control valve and fuel tank pressure sensor are integrated into one unit; therefore, the removal procedure is the same as that for fuel tank pressure sensor. <Ref. to EC(H4DOTC)-11, REMOVAL, Fuel Tank Pressure Sensor.>

B: INSTALLATION

Fuel tank sensor control valve and fuel tank pressure sensor are integrated into one unit; therefore, the installation procedure is the same as that for fuel tank pressure sensor. <Ref. to EC(H4DOTC)-11, INSTALLATION, Fuel Tank Pressure Sensor.>

C: INSPECTION

Make sure the hoses are not cracked or loose.

12.Pressure Control Solenoid Valve

A: REMOVAL

1) Set the vehicle on the lift.
2) Disconnect the battery ground cable.

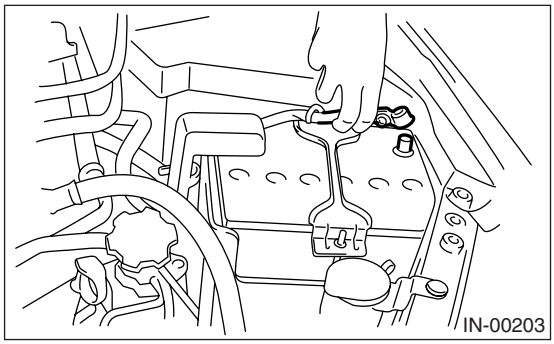

3) Lift-up the vehicle.
4) Disconnect the connector from pressure control solenoid valve.
5) Disconnect the evaporation hose (B) from pressure control solenoid valve.
6) Remove the bolt (C) which holds the bracket to fuel tank.

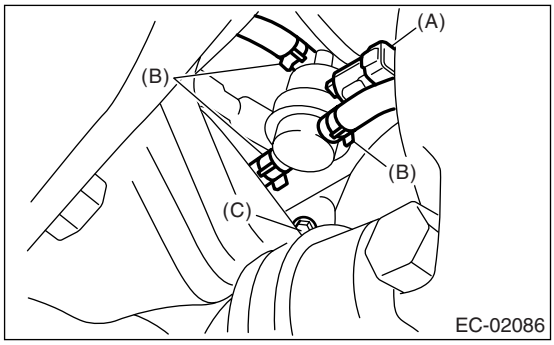

7) Remove the pressure control solenoid valve from bracket.

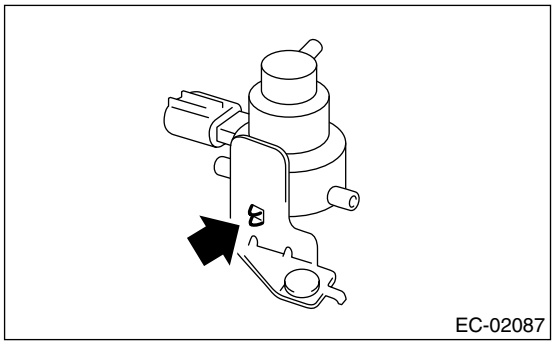

B: INSTALLATION

Install in the reverse order of removal.

Tightening torque:
17.6 N·m (1.8 kgf-m, 13.0 ft-lb)

C: INSPECTION

Make sure the hoses are not cracked or loose.

13.Drain Filter

A: SPECIFICATION

Canister is a non-disassembled part, so do not remove the drain filter from canister.
Refer to “Canister” for removal and installation procedures. <Ref. to EC(H4DOTC)-6, REMOVAL, Canister.> <Ref. to EC(H4DOTC)-6, INSTALLATION, Canister.>

14.Shut Valve

A: REMOVAL

1) Remove the fuel filler pipe.
<Ref. to FU(H4DOTC)-51, REMOVAL, Fuel Filler Pipe.>
2) Disconnect the evaporation hoses from shut valve.

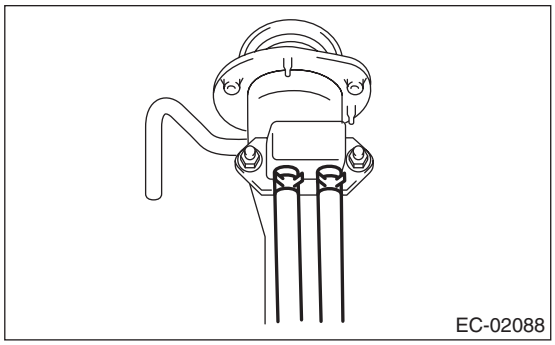

3) Remove the shut valve from fuel filler pipe.

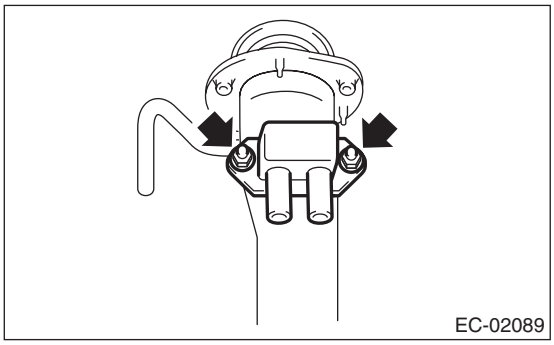

B: INSTALLATION

Install in the reverse order of removal.

Tightening torque:
4.5 N·m (0.46 kgf-m, 3.3 ft-lb)

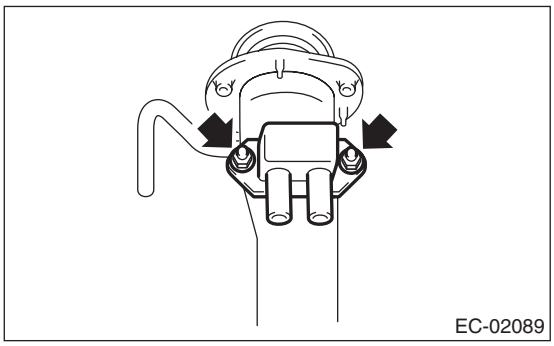

C: INSPECTION

Make sure the hoses are not cracked or loose.

15.Drain Valve

A: SPECIFICATION

Canister is a non-disassembled part, so do not remove the drain valve from canister.
Refer to “Canister” for removal and installation procedures. <Ref. to EC(H4DOTC)-6, REMOVAL, Canister.> <Ref. to EC(H4DOTC)-6, INSTALLATION, Canister.>

16.PCV Hose Assembly

A: REMOVAL

CAUTION:
Do not remove the PCV hose assembly except when the PCV hose, diagnosis connector or PCV valve is damaged.

1) Remove the intake manifold.
<Ref. to FU(H4DOTC)-12, REMOVAL, Intake Manifold.>
2) Clip the protrusion of clamp by aligning it with the concave portion of ST to unlock.
3) Remove the PCV hose assembly.
ST 18353AA000 CLAMP PLIERS

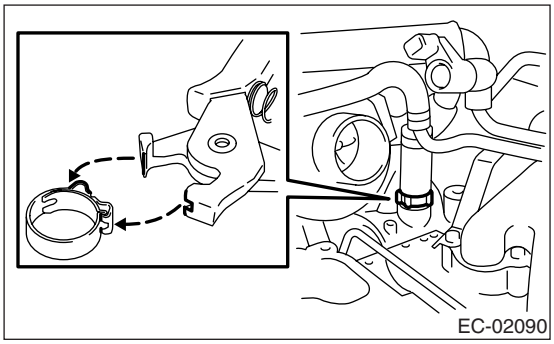

B: INSTALLATION

NOTE:
Replace the clamp with a new one.

1) Install the PCV hose assembly, and then lock the clamp by clipping the protrusion of clamp using ST.
ST 18353AA000 CLAMP PLIERS

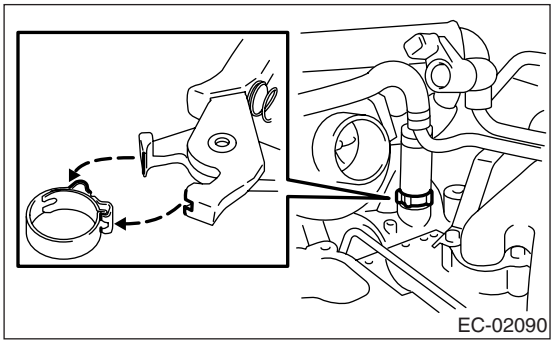

2) Install the intake manifold.
<Ref. to FU(H4DOTC)-14, INSTALLATION, Intake Manifold.>

INTAKE (INDUCTION)

IN(H4DOTC)

Page

1. General Description 2
2. Air Cleaner Element 7
3. Air Cleaner Case 8
4. Air Intake Duct 9
5. Resonator Chamber 10
6. Intake Duct 11
7. Intercooler 12
8. Turbocharger 13
9. Air By-pass Valve 16

1. General Description

A: COMPONENT

1. AIR CLEANER

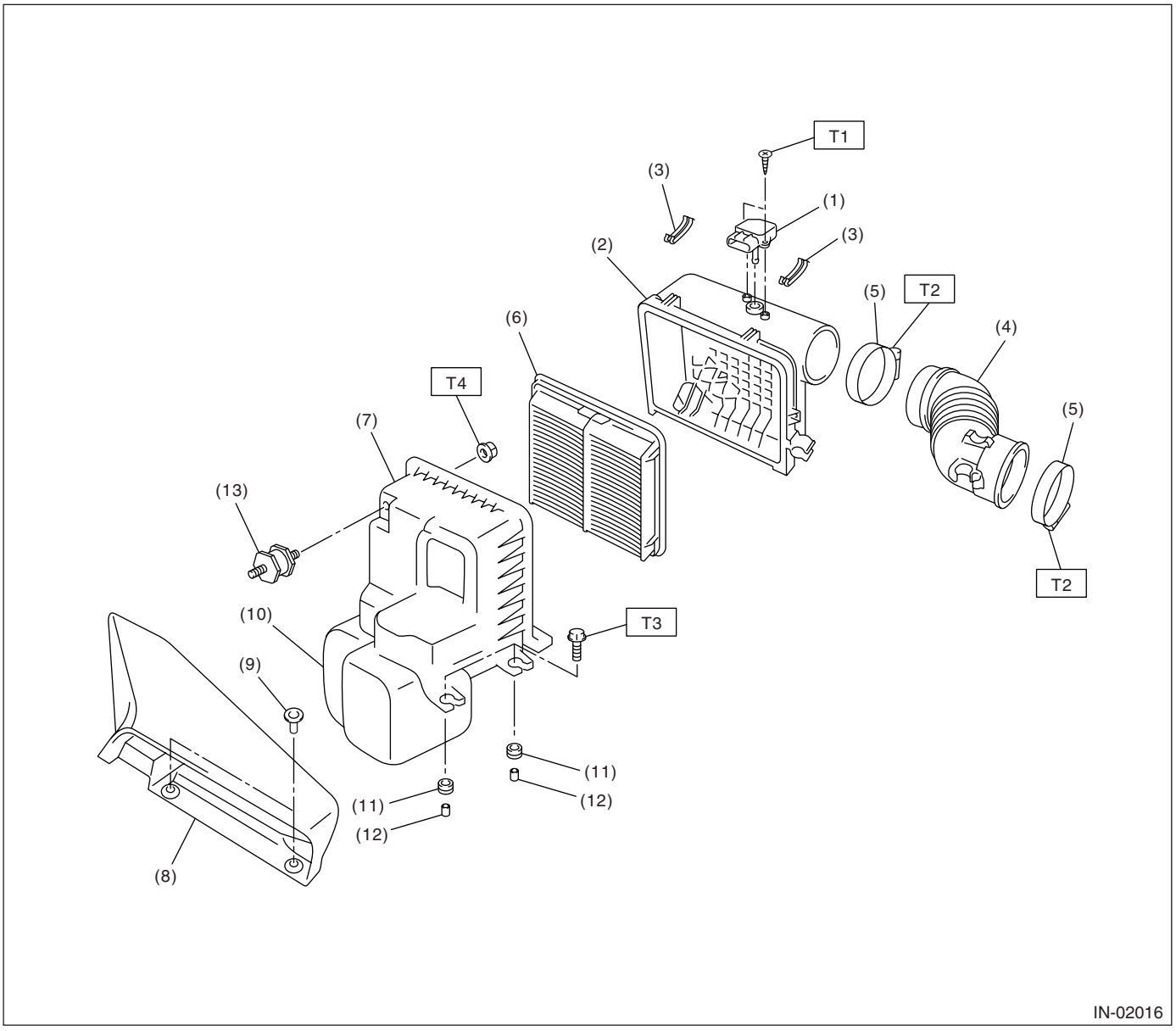

(1)	Mass air flow and intake air temperature sensor	(7)	Air cleaner case (front)
(2)	Air cleaner case (rear)	(8)	Air intake duct
(3)	Clip	(9)	Clip
(4)	Air intake boot	(10)	Resonator chamber
(5)	Clamp	(11)	Cushion
(6)	Air cleaner element	(12)	Spacer
		(13)	Cushion

Tightening torque: N·m (kgf-m, ft-lb)
T1: 1.0 (0.10, 0.74)
T2: 2.5 (0.25, 1.8)
T3: 6.0 (0.61, 4.4)
T4: 7.5 (0.76, 5.5)

2. INTAKE DUCT

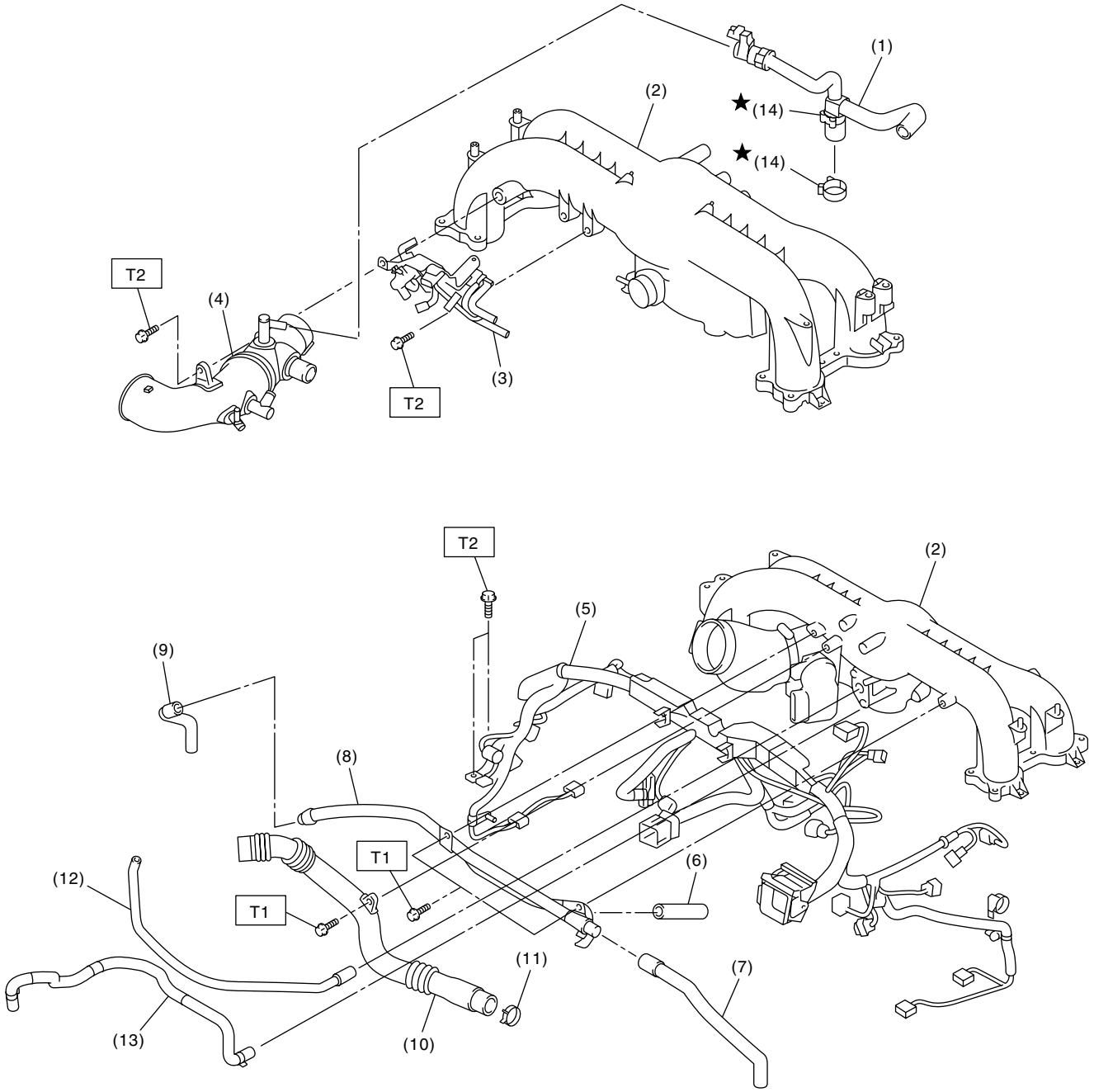

IN-02092

(1) PCV hose ASSY
(2) Intake manifold
(3) Solenoid valve bracket ASSY
(4) Intake duct
(5) Engine harness ASSY
(6) Vacuum hose
(7) Vacuum hose
(8) PCV pipe
(9) Vacuum hose
(10) Air by-pass pipe
(11) Clamp
(12) Vacuum hose
(13) Brake booster hose
(14) Clamp

Tightening torque: N·m (kgf-m, ft-lb)
T1: 6.5 (0.66, 4.8)
T2: 19 (1.9, 13.7)

3. INTERCOOLER

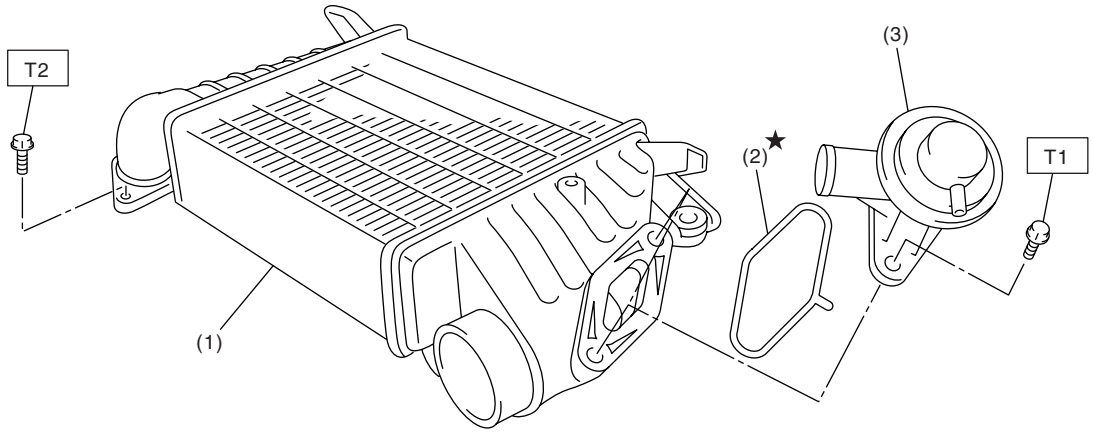

IN-02075

(1) Intercooler
(2) Gasket
(3) Air by-pass valve

Tightening torque: N·m (kgf-m, ft-lb)
T1: 6.5 (0.66, 4.8)
T2: 16 (1.6, 11.6)

4. TURBOCHARGER

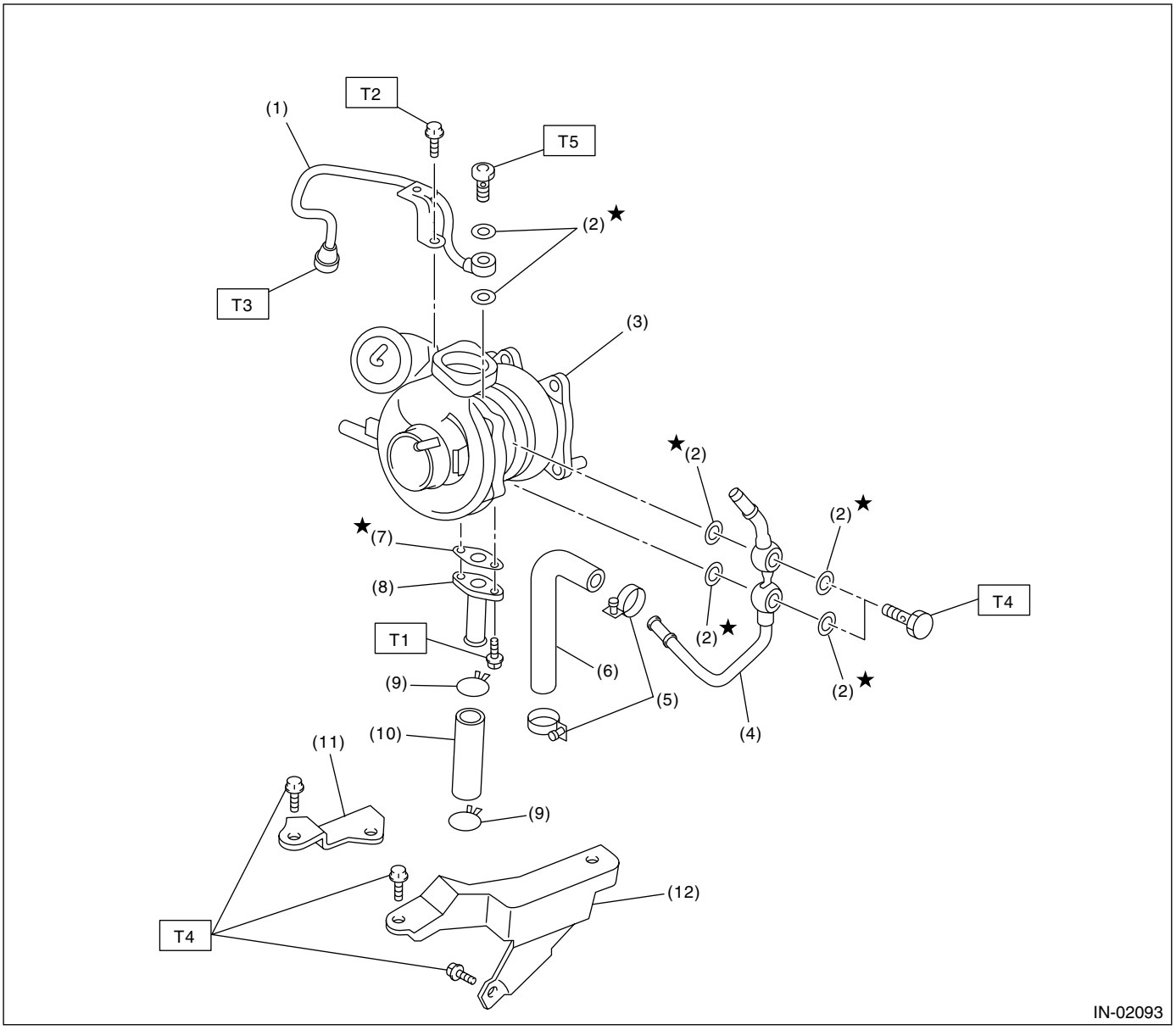

(1)	Oil inlet pipe	(7)	Gasket
(2)	Metal gasket	(8)	Oil outlet pipe
(3)	Turbocharger	(9)	Clip
(4)	Water pipe	(10)	Oil outlet hose
(5)	Clamp	(11)	Turbocharger bracket RH
(6)	Engine coolant hose	(12)	Turbocharger bracket LH

Tightening torque: N·m (kgf-m, ft-lb)
T1: 4.4 (0.45, 3.3)
T2: 4.9 (0.50, 3.6)
T3: 20 (2.0, 14.8)
T4: 33 (3.4, 24.6)
T5: 16 (1.6, 11.6)

B: CAUTION

- Wear work clothing, including a cap, protective goggles, and protective shoes during operation.
- Remove contamination including dirt and corrosion before removal, installation or disassembly.
- Keep the disassembled parts in order and protect them from dust and dirt.
- Before removal, installation or disassembly, be sure to clarify the failure. Avoid unnecessary removal, installation, disassembly and replacement.
- Be careful not to burn yourself, because each part on the vehicle is hot after running.
- Be sure to tighten fasteners including bolts and nuts to the specified torque.
- Place shop jacks or rigid racks at the specified points.
- Before disconnecting electrical connectors of sensors or units, be sure to disconnect the ground cable from battery.

2. Air Cleaner Element

A: REMOVAL

1) Disconnect the ground cable from battery.

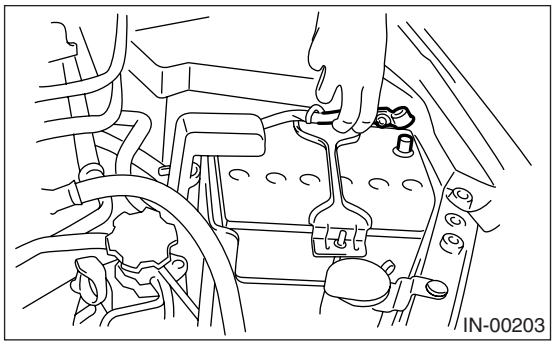

2) Disconnect the connector (A) from mass air flow sensor.
3) Loosen the clamps (B) which connect air intake boot to intake duct.
4) Remove the clips (C) from air cleaner case.

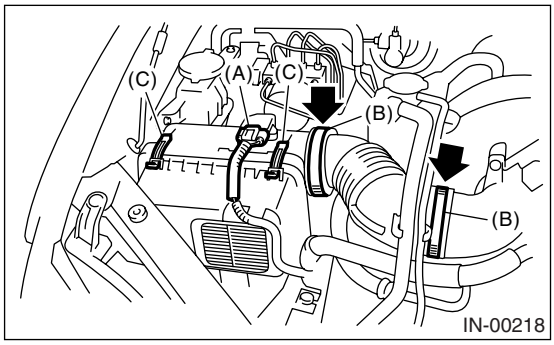

5) Remove the air cleaner case (rear) and air intake boot.
6) Remove the air cleaner element.

B: INSTALLATION

Install in the reverse order of removal.

NOTE:
When installing the air cleaner case (rear), align the protrusion part of air cleaner case (rear) to the hole of air cleaner case (front).

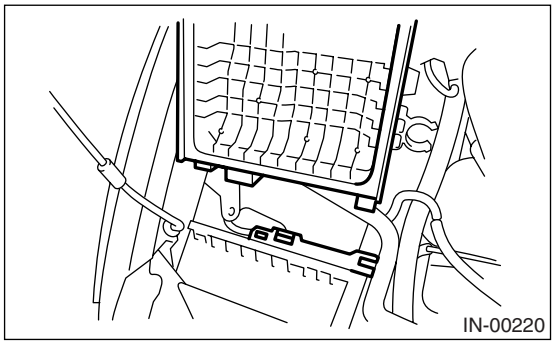

C: INSPECTION

Replace if excessively damaged or dirty.

3. Air Cleaner Case

A: REMOVAL

1) Remove the air intake duct. <Ref. to IN(H4DOTC)-9, REMOVAL, Air Intake Duct.>
2) Remove the air cleaner element.
<Ref. to IN(H4DOTC)-7, REMOVAL, Air Cleaner Element.>
3) Remove the bolts (A) and nut (B) which install air cleaner case (front) on the body.

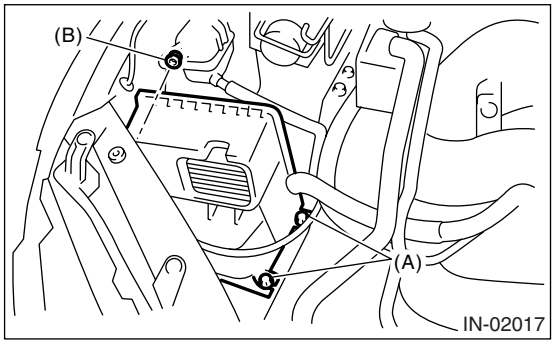

4) Remove the air cleaner case (front).

B: INSTALLATION

Install in the reverse order of removal.

Tightening torque:
Bolt: 6.0 N·m (0.61 kgf-m, 4.4 ft-lb)
Nut: 7.5 N·m (0.76 kgf-m, 5.5 ft-lb)

C: INSPECTION

Check for cracks or loose connections.

4. Air Intake Duct

A: REMOVAL

Remove the clips which install the air intake duct on the front side of body.

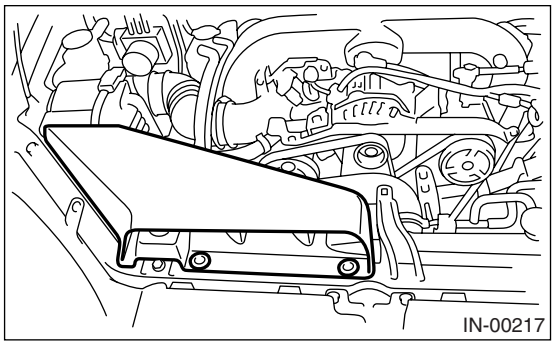

B: INSTALLATION

Install in the reverse order of removal.

C: INSPECTION

1) Check for cracks or loose connection.
2) Inspect that no foreign objects in the air intake duct.

5. Resonator Chamber

A: REMOVAL

Refer to “Air Cleaner Case” for removal procedure because the resonator chamber forms a single unit with air cleaner case. <Ref. to IN(H4DOTC)-8, REMOVAL, Air Cleaner Case.>

B: INSTALLATION

Refer to “Air Cleaner Case” for installation procedure because the resonator chamber forms a single unit with air cleaner case. <Ref. to IN(H4DOTC)-8, INSTALLATION, Air Cleaner Case.>

C: INSPECTION

Check for cracks or loose connections.

6. Intake Duct

A: REMOVAL

1) Remove the collector cover.
2) Disconnect the ground cable from battery.

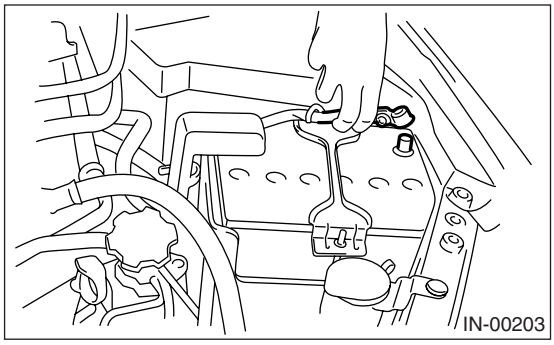

3) Remove the intake manifold. <Ref. to FU(H4DOTC)-12, REMOVAL, Intake Manifold.>
4) Remove the sensor, engine harness and fuel pipe attached to the intake manifold. <Ref. to FU(H4DOTC)-16, DISASSEMBLY, Intake Manifold.>
5) Remove the intake duct from intake manifold.

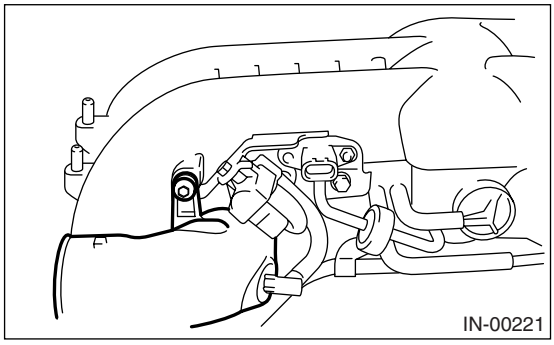

B: INSTALLATION

Install in the reverse order of removal.

Tightening torque:
19 N·m (1.9 kgf-m, 13.7 ft-lb)

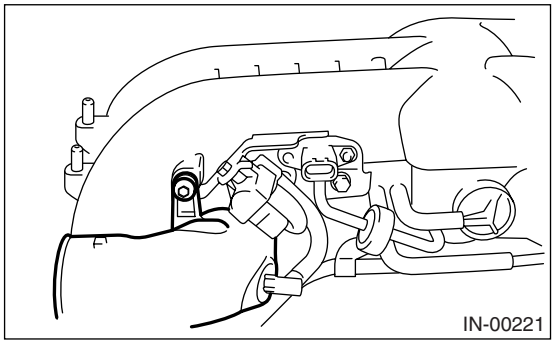

7. Intercooler

A: REMOVAL

1) Remove the collector cover.
2) Loosen the clamp, and then remove the air by-pass pipe (A) from air by-pass valve.
3) Loosen the clamp, and then remove the intake duct (B) from intercooler.

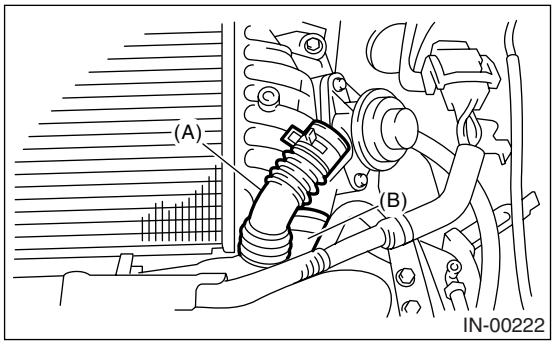

4) Remove the bolts which secure intake duct to turbocharger.
5) Remove the bolts which secure intercooler to bracket, and then remove the intercooler.

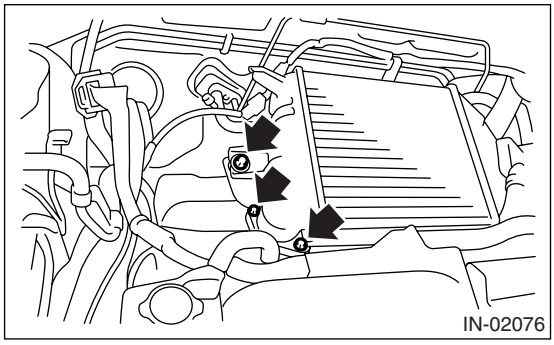

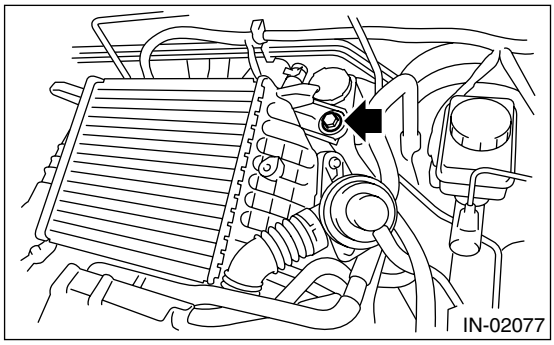

B: INSTALLATION

Install in the reverse order of removal.

Tightening torque:
16 N·m (1.6 kgf-m, 11.6 ft-lb)

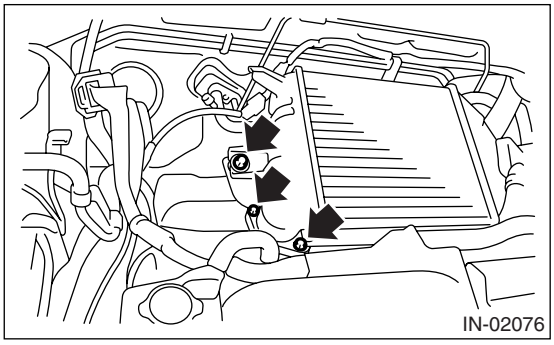

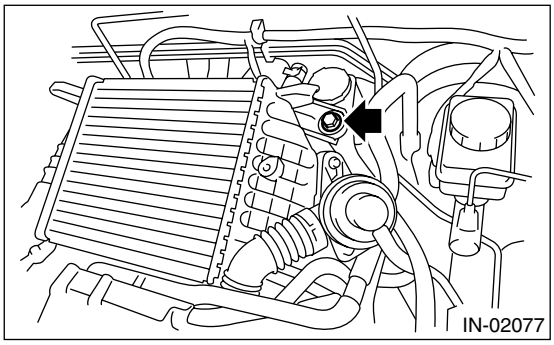

C: DISASSEMBLY

1) Remove the intake duct from intercooler.
2) Remove the air by-pass valve from intercooler.

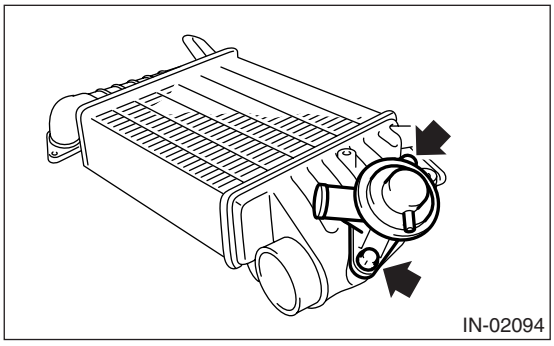

D: ASSEMBLY

Assemble in the reverse order of disassembly.

Tightening torque:
6.5 N·m (0.66 kgf-m, 4.8 ft-lb)

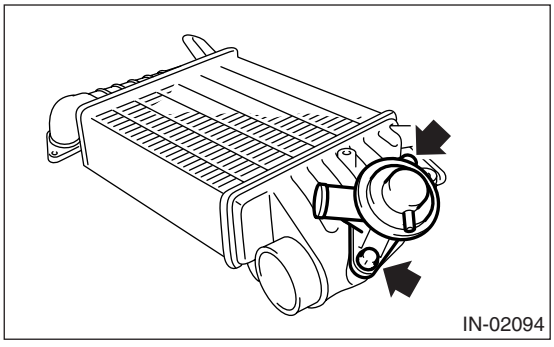

8. Turbocharger

A: REMOVAL

1) Set the vehicle on a lift.
2) Remove the collector cover.
3) Disconnect the ground cable from battery.

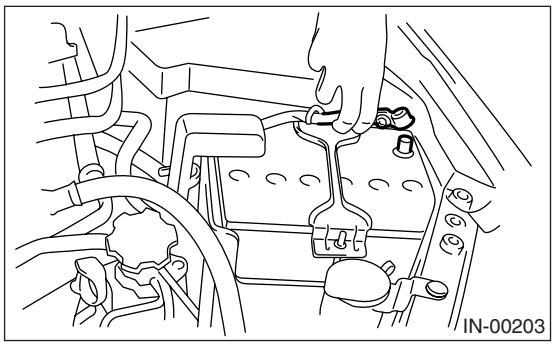

4) Remove the intercooler. <Ref. to IN(H4DOTC)-12, REMOVAL, Intercooler.>
5) Remove the intercooler bracket RH.
6) Remove the center exhaust pipe. <Ref. to EX(H4DOTC)-8, REMOVAL, Center Exhaust Pipe.>
7) Lower the vehicle.
8) Separate the turbocharger joint pipe from turbocharger.

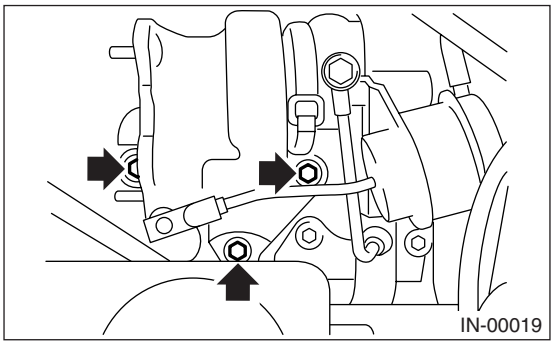

9) Disconnect the engine coolant hose which is connected to coolant filler tank.
10) Loosen the clamp which secures turbocharger to intake duct.

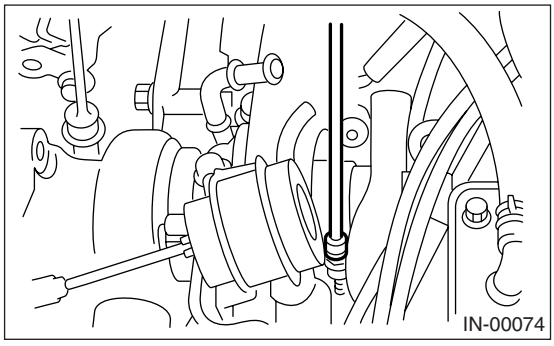

11) Remove the bolt which secures bracket of oil pipe to turbocharger.
12) Remove the oil inlet pipe from turbocharger.

CAUTION:
In order to prevent damaging the oil pipe on the cylinder head side, fix the section (a) shown in the figure when loosing the oil inlet pipe flare nut, and avoid the part from rotating together while loosening the nut.

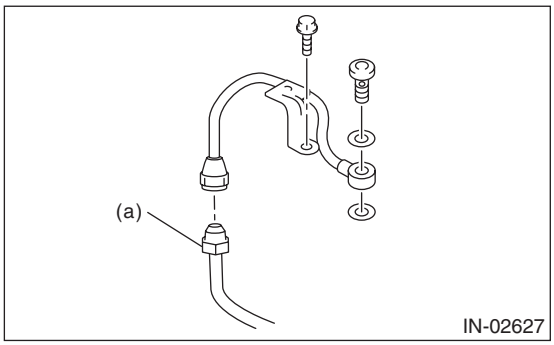

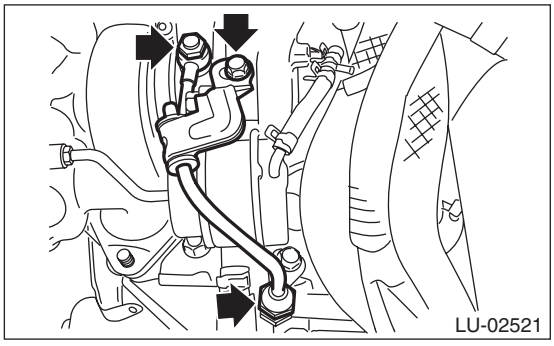

13) Remove the turbocharger bracket.

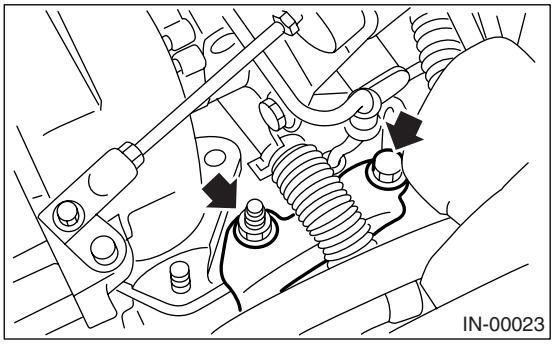

14) Disconnect the oil outlet hose from pipe.

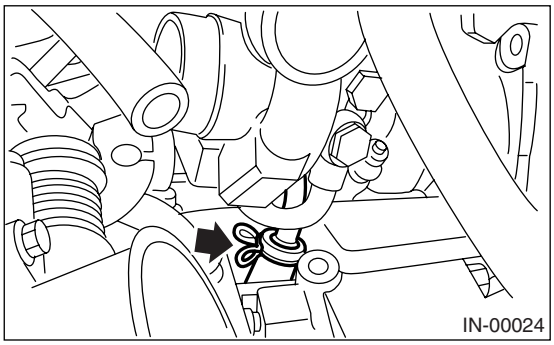

15) Take out the turbocharger from engine compartment.

B: INSTALLATION

CAUTION:
When replacing the turbocharger, check the filter part of union screw for clogging. <Ref. to LU(H4DOTC)-22, INSPECTING UNION SCREW WITH FILTER, INSPECTION, Oil Pipe.>

1) Connect the oil outlet hose to outlet pipe.

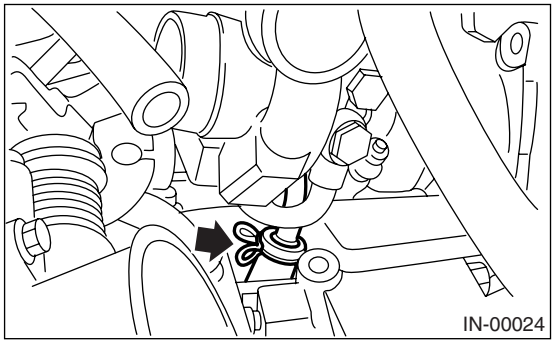

2) Install the turbocharger to intake duct.

Tightening torque:
3 N·m (0.3 kgf-m, 2.2 ft-lb)

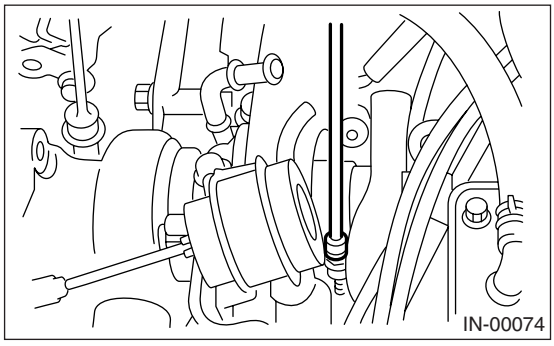

3) Temporarily tighten the bolts and flare nuts which secure the oil inlet pipe to the turbocharger.

NOTE:
Use a new gasket.

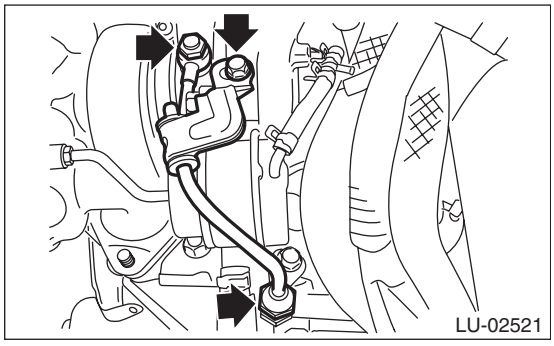

4) Tighten the union screws and flare nuts which secure the oil inlet pipe to the turbocharger.

CAUTION:
In order to prevent damaging the oil pipe on the cylinder head side, fix the section (a) shown in the figure when tightening the oil inlet pipe flare nut, and avoid the part from rotating together while tightening the nut.

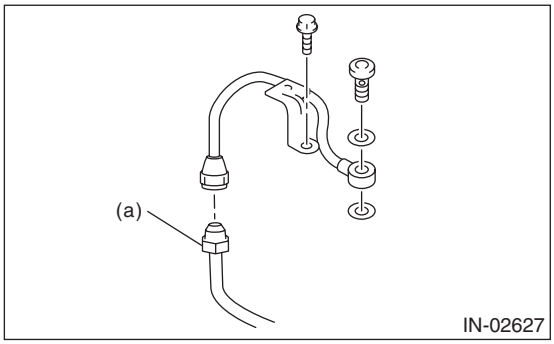

Tightening torque:
T1: 16 N·m (1.6 kgf-m, 11.8 ft-lb)
T2: 20 N·m (2.0 kgf-m, 14.8 ft-lb)

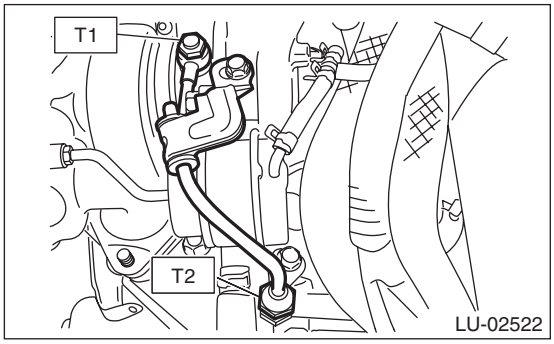

5) Tighten the bolts which hold the oil inlet pipe stay to the turbocharger.

Tightening torque:
5 N·m (0.5 kgf-m, 3.7 ft-lb)

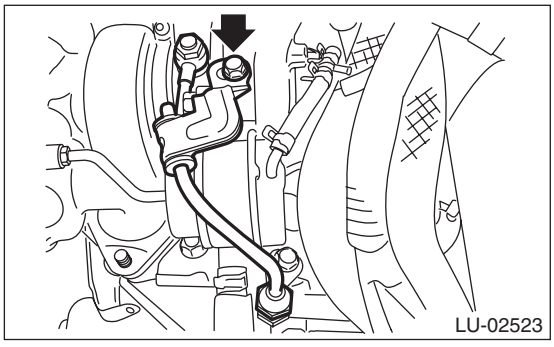

6) Install the joint pipe to turbocharger.

NOTE:
Replace the gasket with a new one.

Tightening torque:
30 N·m (3.1 kgf-m, 22.4 ft-lb)

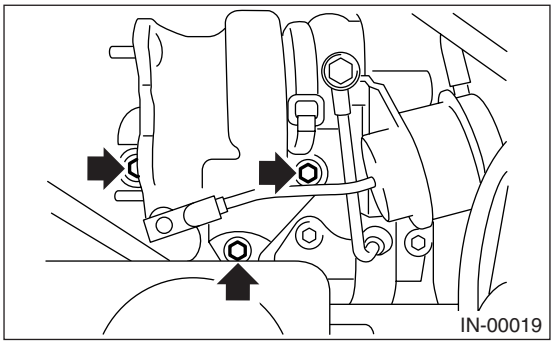

7) Install the turbocharger bracket.

Tightening torque:
33 N·m (3.4 kgf-m, 24.6 ft-lb)

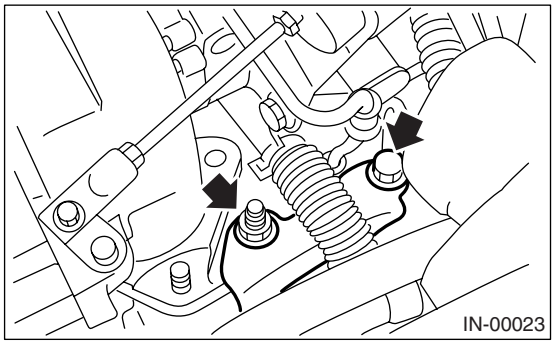

8) Connect the engine coolant hose which is connected to coolant filler tank.
9) Lift-up the vehicle.
10) Install the center exhaust pipe. <Ref. to EX(H4DOTC)-9, INSTALLATION, Center Exhaust Pipe.>
11) Install the intercooler bracket RH.
12) Install the intercooler. <Ref. to IN(H4DOTC)-12, INSTALLATION, Intercooler.>
13) Install the collector cover.

9. Air By-pass Valve

A: REMOVAL

1) Remove the collector cover.
2) Disconnect the air by-pass hose (A) from air by-pass valve.
3) Remove the air by-pass valve (B) from intercooler.

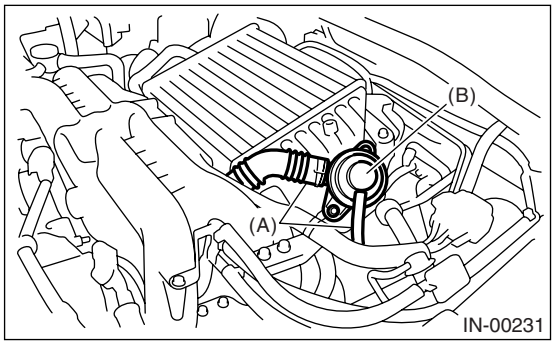

B: INSTALLATION

Install in the reverse order of removal.

Tightening torque:
6.5 N·m (0.66 kgf-m, 4.8 ft-lb)

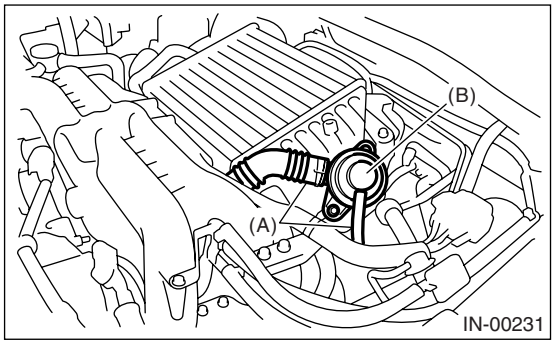

(A) Air by-pass hose
(B) Air by-pass valve

MECHANICAL

ME(H4DOTC)

		Page
1.	General Description	2
2.	Compression	20
3.	Idle Speed	21
4.	Ignition Timing	22
5.	Intake Manifold Vacuum	23
6.	Engine Oil Pressure	24
7.	Fuel Pressure	25
8.	Valve Clearance	26
9.	Engine Assembly	29
10.	Engine Mounting	35
11.	Preparation for Overhaul	36
12.	V-belt	37
13.	Crank Pulley	39
14.	Timing Belt Cover	41
15.	Timing Belt	42
16.	Cam Sprocket	50
17.	Crank Sprocket	51
18.	Camshaft	52
19.	Cylinder Head	57
20.	Cylinder Block	64
21.	Intake and Exhaust Valve	83
22.	Piston	84
23.	Connecting Rod	85
24.	Crankshaft	86
25.	Engine Trouble in General	87
26.	Engine Noise	92

1. General Description

A: SPECIFICATION

Engine	Cylinder arrangement			Horizontally opposed, liquid cooled, 4-cylinder, 4-stroke gasoline engine
	Valve system mechanism			Belt driven, double overhead camshaft, 4 valves/cylinder
	Bore × Stroke mm (in)			99.5 × 79.0 (3.92 × 3.11)
	Displacement cm^3 (cu in)			2,457 (149.94)
	Compression ratio			8.2
	Compression pressure (at 400 rpm) kPa (kg/cm^2, psi)			981 — 1,177 (10 — 12, 142 — 171)
	Number of piston rings			Pressure ring: 2, Oil ring: 1
	Intake valve timing	Open	Max.retard	ATDC 5°
			Min.advance	BTDC 15°
		Close	Max.retard	ABDC 65°
			Min.advance	ABDC 45°
	Exhaust valve timing	Open		BBDC 55°
		Close		BTDC 5°
	Valve clearance mm (in)	Intake		$0.20\ ^{+0.04}_{-0.06}$ ($0.0079\ ^{+0.0016}_{-0.0024}$)
		Exhaust		0.35±0.05 (0.0138±0.0020)
	Idle speed [“P”/“N” range] rpm		No-load	750±100
			A/C ON	875±100
	Ignition order			1 → 3 → 2 → 4
	Ignition timing BTDC/rpm	MT model		12°±10°/750
		AT model		17°±10°/750

NOTE:
OS: Oversize US: Undersize

Belt tension adjuster	Protrusion of adjuster rod mm (in)			5.2 — 6.2 (0.205 — 0.244)
Belt tensioner	Spacer O.D. mm (in)			17.955 — 17.975 (0.7069 — 0.7077)
	Tensioner bush I.D. mm (in)			18.0 — 18.08 (0.7087 — 0.7118)
	Clearance between spacer and bush mm (in)		Standard	0.025 — 0.125 (0.0010 — 0.0049)
	Side clearance of spacer mm (in)		Standard	0.2 — 0.55 (0.0079 — 0.0217)
Camshaft	Bend limit mm (in)			0.020 (0.00079)
	Side clearance mm (in)		Standard	0.068 — 0.116 (0.0027 — 0.0047)
	Cam lobe height mm (in)	Intake	Standard	46.55 — 46.65 (1.833 — 1.837)
		Exhaust	Standard	46.75 — 46.85 (1.841 — 1.844)
	Journal O.D. mm (in)	Standard	Front	37.946 — 37.963 (1.4939 — 1.4946)
			Center rear	29.946 — 29.963 (1.1790 — 1.1796)
	Clearance at journal mm (in)		Standard	0.037 — 0.072 (0.0015 — 0.0028)
Cylinder Head	Surface warpage limit mm (in)			0.035 (0.0014)
	Grinding limit mm (in)			0.3 (0.012)
	Standard height mm (in)			127.5 (5.02)
Valve seat	Refacing angle			90°
	Contacting width mm (in)	Intake	Standard	0.6 — 1.4 (0.024 — 0.055)
		Exhaust	Standard	1.2 — 1.8 (0.047 — 0.071)
Valve guide	Inside diameter mm (in)			6.000 — 6.012 (0.2362 — 0.2367)
	Protrusion above head mm (in)			15.8 — 16.2 (0.622 — 0.638)

Valve	Head edge thickness mm (in)	Intake	Standard	1.0 — 1.4 (0.039 — 0.055)
		Exhaust	Standard	1.3 — 1.7 (0.051 — 0.067)
	Stem outer diameters mm (in)	Intake		5.955 — 5.970 (0.2344 — 0.2350)
		Exhaust		5.945 — 5.960 (0.2341 — 0.2346)
	Valve stem gap mm (in)	Standard	Intake	0.030 — 0.057 (0.0012 — 0.0022)
			Exhaust	0.040 — 0.067 (0.0016 — 0.0026)
	Overall length mm (in)	Intake		104.4 (4.110)
		Exhaust		104.65 (4.1201)
Valve springs	Free length mm (in)			47.32 (1.863)
	Squareness			2.5°, 2.1 mm (0.083 in)
	Tension/spring height N (kgf, lb) /mm (in)		Set	205 — 235 (20.9 — 24.0, 46.1 — 52.8)/36.0 (1.417)
			Lift	426 — 490 (43.4 — 50.0, 95.8 — 110)/26.50 (1.043)
Cylinder block	Surface warpage limit (mating with cylinder head) mm (in)			0.025 (0.0098)
	Grinding limit mm (in)			0.1 (0.004)
	Standard height mm (in)			201.0 (7.91)
	Cylinder inner diameter mm (in)	Standard	A	99.505 — 99.515 (3.9175 — 3.9179)
			B	99.495 — 99.505 (3.9171 — 3.9175)
	Taper mm (in)		Standard	0.015 (0.0006)
	Out-of-roundness mm (in)		Standard	0.010 (0.0004)
	Piston clearance mm (in)		Standard	−0.010 — 0.010 (−0.00039 — 0.00039)
Piston	Outer diameter mm (in)	Standard	A	99.505 — 99.515 (3.9175 — 3.9179)
			B	99.495 — 99.505 (3.9171 — 3.9175)
		0.25 (0.0098) OS		99.745 — 99.765 (3.9270 — 3.9278)
		0.50 (0.0197) OS		99.995 — 100.015 (3.9368 — 3.9376)
Piston pin	Standard clearance between piston and piston pin mm (in)		Standard	0.004 — 0.008 (0.0002 — 0.0003)
	Degree of fit			Piston pin must be fitted into position with thumb at 20°C (68°F).
Piston ring	Ring closed gap mm (in)	Top ring	Standard	0.20 — 0.25 (0.0079 — 0.0098)
		Second ring	Standard	0.37 — 0.52 (0.015 — 0.0203)
		Oil ring	Standard	0.20 — 0.50 (0.0079 — 0.0197)
	Ring groove gap mm (in)	Top ring	Standard	0.040 — 0.080 (0.0016 — 1.0031)
		Second ring	Standard	0.030 — 0.070 (0.0012 — 0.0028)
Connecting rod	Bend or twist per 100 mm (3.94 in) in length mm (in)		Limit	0.10 (0.0039)
	Side clearance of large end mm (in)		Standard	0.070 — 0.330 (0.0028 — 0.0130)
Bearing of large end	Oil clearance mm (in)		Standard	0.017 — 0.045 (0.0007 — 0.0018)
	Bearing size (Thickness at center) mm (in)	Standard		1.490 — 1.502 (0.0587 — 0.0591)
		0.03 (0.0012) US		1.504 — 1.512 (0.0592 — 0.0595)
		0.05 (0.0020) US		1.514 — 1.522 (0.0596 — 0.0599)
		0.25 (0.0098) US		1.614 — 1.622 (0.0635 — 0.0639)
Bushing of small end	Clearance between piston pin and bushing mm (in)		Standard	0 — 0.022 (0 — 0.0009)

Crankshaft	Bend limit		mm (in)	0.035 (0.0014)
	Crank pin	Out-of-roundness	mm (in)	0.003 (0.0001)
		Cylindricality	mm (in)	0.004 (0.0002)
		Grinding limit (dia.)	mm (in)	To 51.750 (2.0374)
	Crank journal	Out-of-roundness	mm (in)	0.005 (0.0002)
		Cylindricality	mm (in)	0.006 (0.0002)
		Grinding limit (dia.)	mm (in)	To 59.750 (2.3524)
	Crank pin outer diameter		Standard	51.984 — 52.000 (2.0466 — 2.0472)
			0.03 (0.0012) US	51.954 — 51.970 (2.0454 — 2.0461)
		mm (in)	0.05 (0.0020) US	51.934 — 51.950 (2.0447 — 2.0453)
			0.25 (0.0098) US	51.734 — 51.750 (2.0368 — 2.0374)
	Crank journal outer diameter		Standard	59.992 — 60.008 (2.3619 — 2.3625)
			0.03 (0.0012) US	59.962 — 59.978 (2.3607 — 2.3613)
		mm (in)	0.05 (0.0020) US	59.942 — 59.958 (2.3599 — 2.3605)
			0.25 (0.0098) US	59.742 — 59.758 (2.3520 — 2.3527)
	Side clearance	mm (in)	Standard	0.030 — 0.115 (0.0012 — 0.0045)
	Oil clearance		mm (in)	0.010 — 0.030 (0.0004 — 0.0012)
Main bearing	Bearing size (Thickness at center) mm (in)	#1, #3	Standard	1.998 — 2.011 (0.0787 — 0.0792)
			0.03 (0.0012) US	2.017 — 2.020 (0.0794 — 0.0795)
			0.05 (0.0020) US	2.027 — 2.030 (0.0798 — 0.0799)
			0.25 (0.0098) US	2.127 — 2.130 (0.0837 — 0.0839)
		#2, #4, #5	Standard	2.000 — 2.013 (0.0787 — 0.0793)
			0.03 (0.0012) US	2.019 — 2.022 (0.0795 — 0.0796)
			0.05 (0.0020) US	2.029 — 2.032 (0.0799 — 0.0800)
			0.25 (0.0098) US	2.129 — 2.132 (0.0838 — 0.0839)

B: COMPONENT

1. TIMING BELT

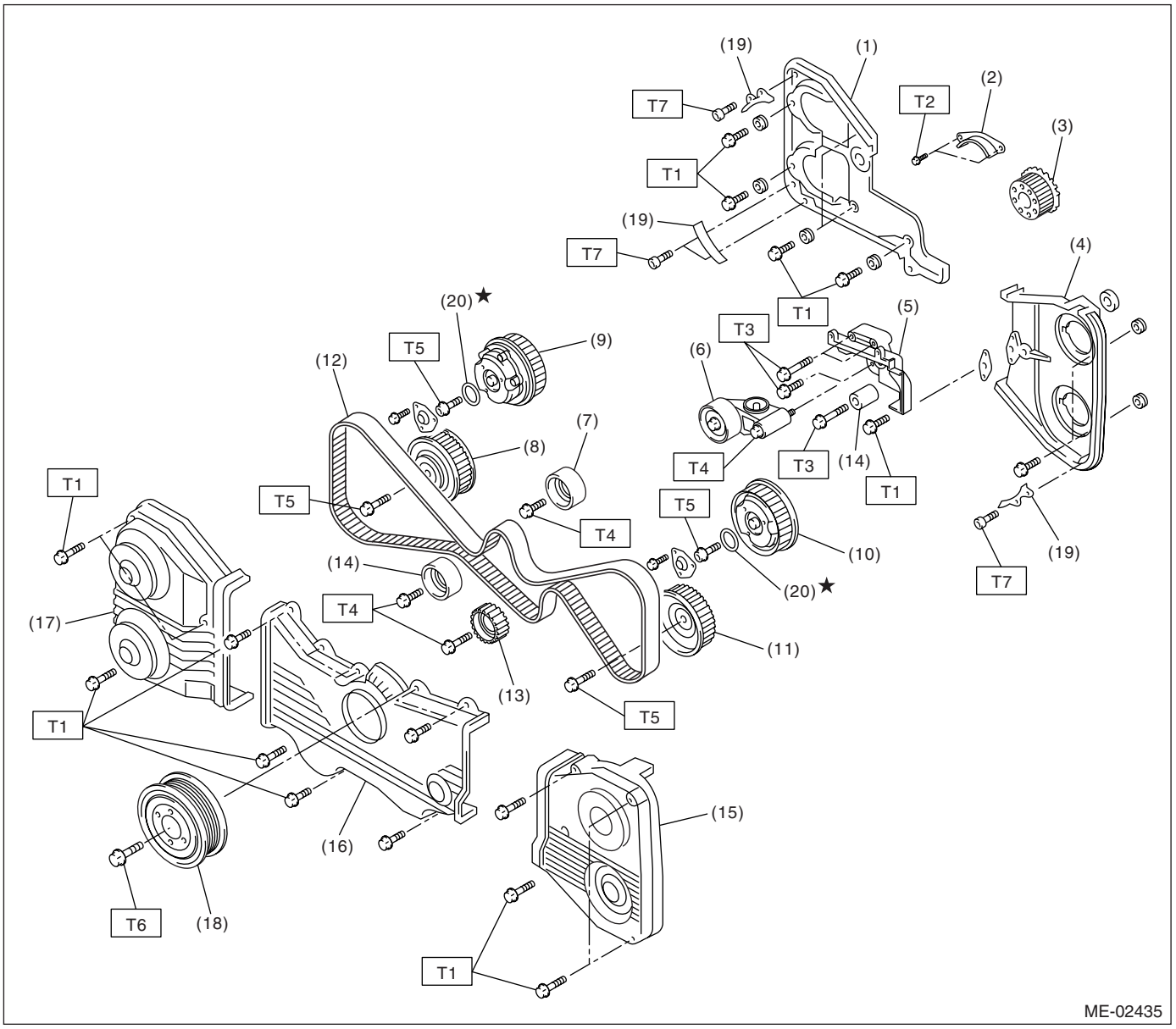

(1) Timing belt cover No. 2 (RH)
(2) Timing belt guide
(3) Crank sprocket
(4) Timing belt cover No. 2 (LH)
(5) Tensioner bracket
(6) Automatic belt tension adjuster ASSY
(7) Belt idler
(8) Exhaust cam sprocket (RH)
(9) Intake cam sprocket (RH)
(10) Intake cam sprocket (LH)
(11) Exhaust cam sprocket (LH)
(12) Timing Belt
(13) Belt idler No. 2
(14) Belt idler
(15) Timing belt cover (LH)
(16) Front belt cover
(17) Timing belt cover (RH)
(18) Crank pulley
(19) Timing belt guide (MT model)
(20) O-ring

Tightening torque: N·m (kgf-m, ft-lb)

T1: 5 (0.5, 3.6)
T2: 10 (1.0, 7.2)
T3: 25 (2.5, 18.1)
T4: 39 (4.0, 28.9)
T5: <Ref. to ME(H4DOTC)-50, INSTALLATION, Cam Sprocket.>
T6: <Ref. to ME(H4DOTC)-39, INSTALLATION, Crank Pulley.>
T7: 6.4 (0.65, 4.7)

2. CYLINDER HEAD AND CAMSHAFT

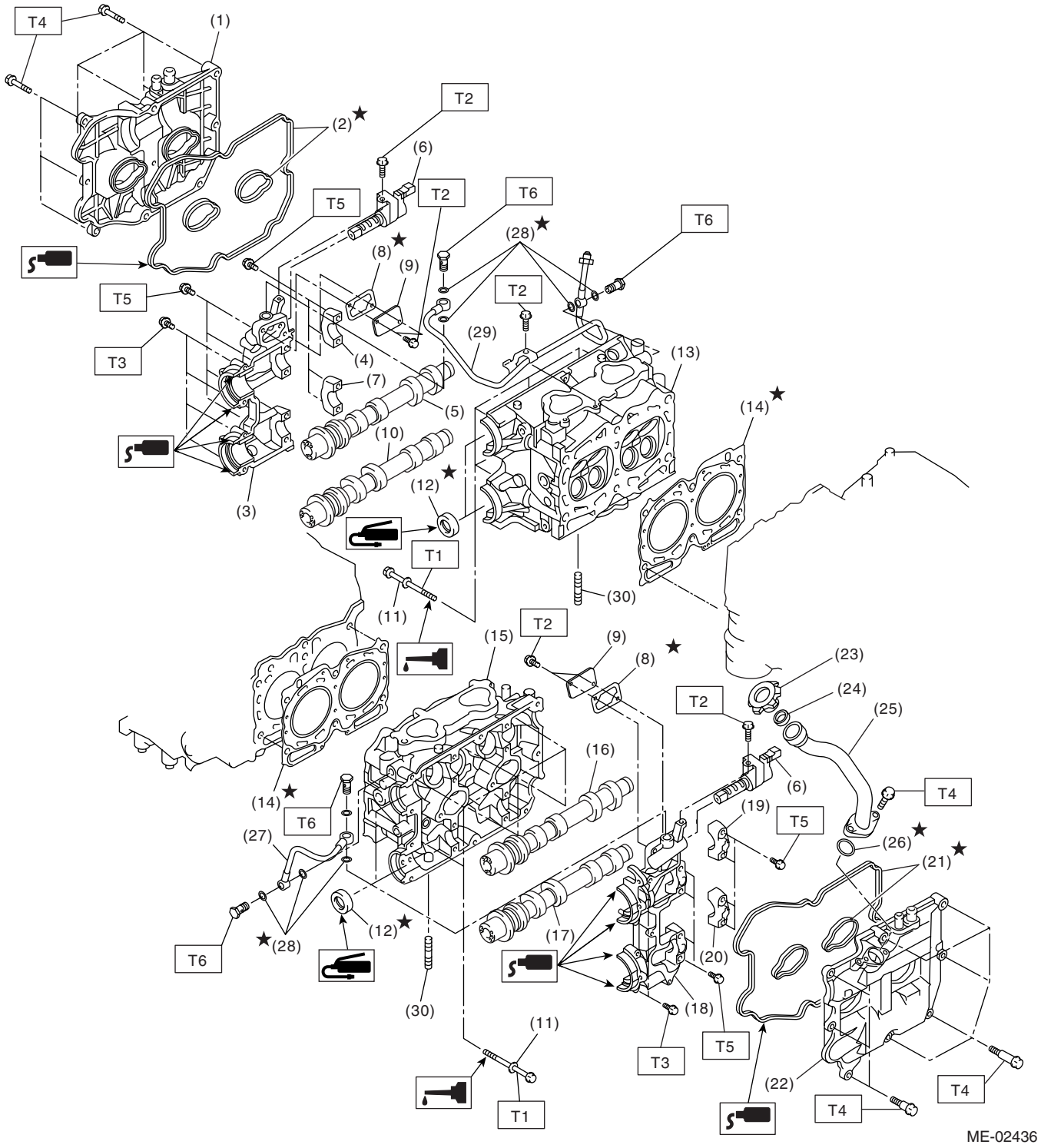

(1) Rocker cover (RH)
(2) Rocker cover gasket (RH)
(3) Camshaft cap (Front RH)
(4) Intake camshaft cap (Rear RH)
(5) Intake camshaft (RH)
(6) Oil flow control solenoid valve
(7) Exhaust camshaft cap (Rear RH)
(8) Gasket
(9) Oil return cover
(10) Exhaust camshaft (RH)
(11) Cylinder head bolt
(12) Oil seal
(13) Cylinder head (RH)
(14) Cylinder head gasket
(15) Cylinder head (LH)
(16) Intake camshaft (LH)
(17) Exhaust camshaft (LH)
(18) Camshaft cap (Front LH)
(19) Intake camshaft cap (Rear LH)
(20) Exhaust camshaft cap (Rear LH)
(21) Rocker cover gasket (LH)
(22) Rocker cover (LH)
(23) Oil filler cap
(24) Gasket
(25) Oil filler duct
(26) O-ring
(27) Oil pipe (LH)
(28) Gasket
(29) Oil pipe (RH)
(30) Stud bolt

Tightening torque: N·m (kgf-m, ft-lb)

T1:	***<Ref. to ME(H4DOTC)-57, INSTALLATION, Cylinder Head.>***
T2:	***8 (0.8, 5.9)***
T3:	***<Ref. to ME(H4DOTC)-53, INSTALLATION, Camshaft.>***
T4:	***6.4 (0.65, 4.7)***
T5:	***<Ref. to ME(H4DOTC)-53, INSTALLATION, Camshaft.>***
T6:	***29 (3.0, 21.4)***

3. CYLINDER HEAD AND VALVE ASSEMBLY

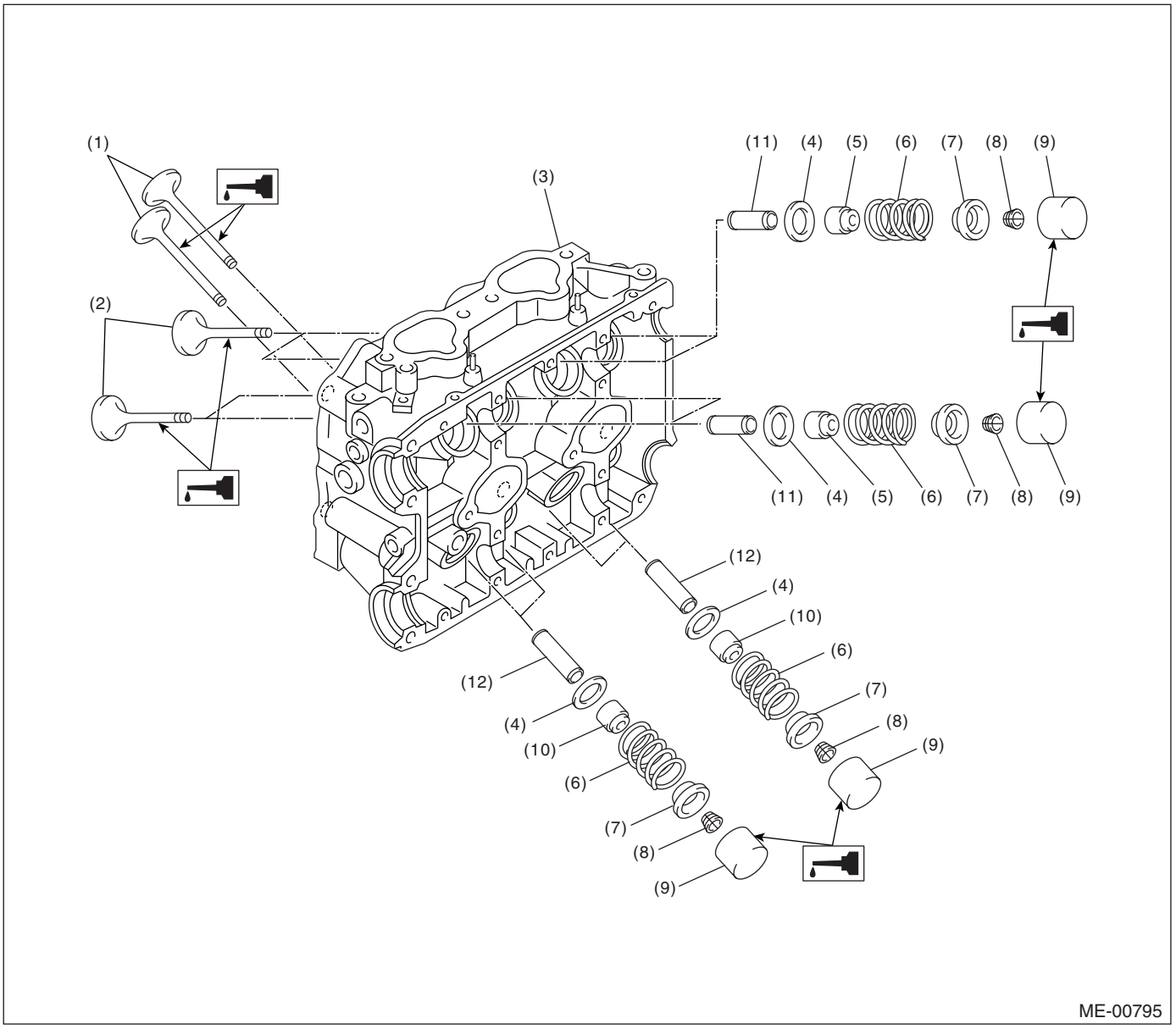

(1) Exhaust valve
(2) Intake valve
(3) Cylinder head
(4) Valve spring seat
(5) Intake valve oil seal
(6) Valve springs
(7) Retainer
(8) Retainer key
(9) Valve lifter
(10) Exhaust valve oil seal
(11) Intake valve guide
(12) Exhaust valve guide

4. CYLINDER BLOCK

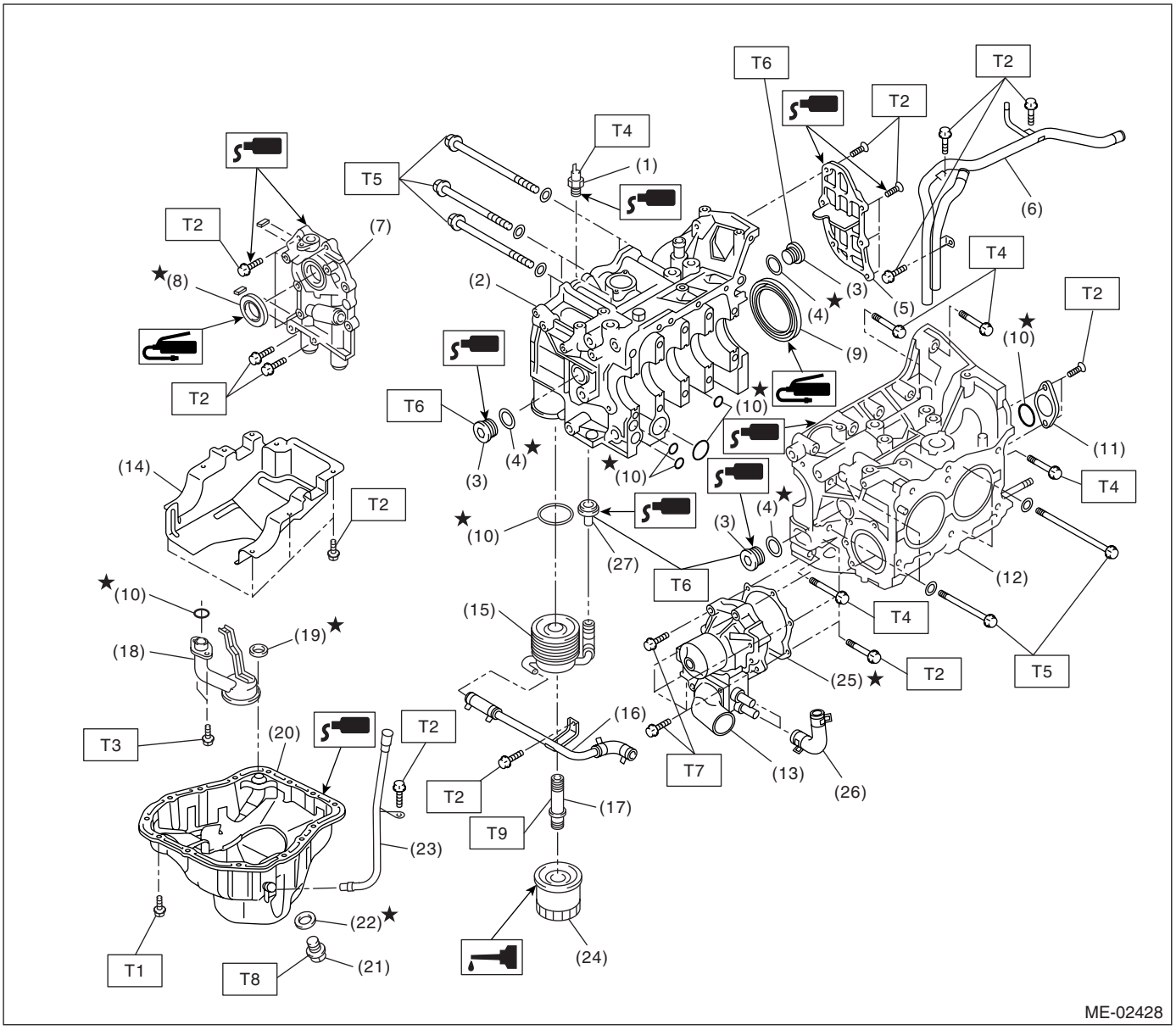

(1) Oil pressure switch
(2) Cylinder block (RH)
(3) Service hole plug
(4) Gasket
(5) Oil separator cover
(6) Water by-pass pipe
(7) Oil pump
(8) Front oil seal
(9) Rear oil seal
(10) O-ring
(11) Service hole cover
(12) Cylinder block (LH)
(13) Water pump
(14) Baffle plate
(15) Oil cooler
(16) Water by-pass pipe
(17) Connector
(18) Oil strainer
(19) Gasket
(20) Oil pan
(21) Drain plug
(22) Metal gasket
(23) Oil level gauge guide
(24) Oil filter
(25) Gasket
(26) Water pump hose
(27) Plug

Tightening torque: N·m (kgf-m, ft-lb)

T1: 5 (0.5, 3.6)
T2: 6.4 (0.65, 4.7)
T3: 10 (1.0, 7.2)
T4: 25 (2.5, 18.1)
T5: <Ref. to ME(H4DOTC)-67, INSTALLATION, Cylinder Block.>
T6: 70 (7.1, 50.6)
T7: First 12 (1.2, 8.9)
Second 12 (1.2, 8.9)
T8: 44 (4.5, 33)
T9: 54 (5.5, 40)

5. CRANKSHAFT AND PISTON

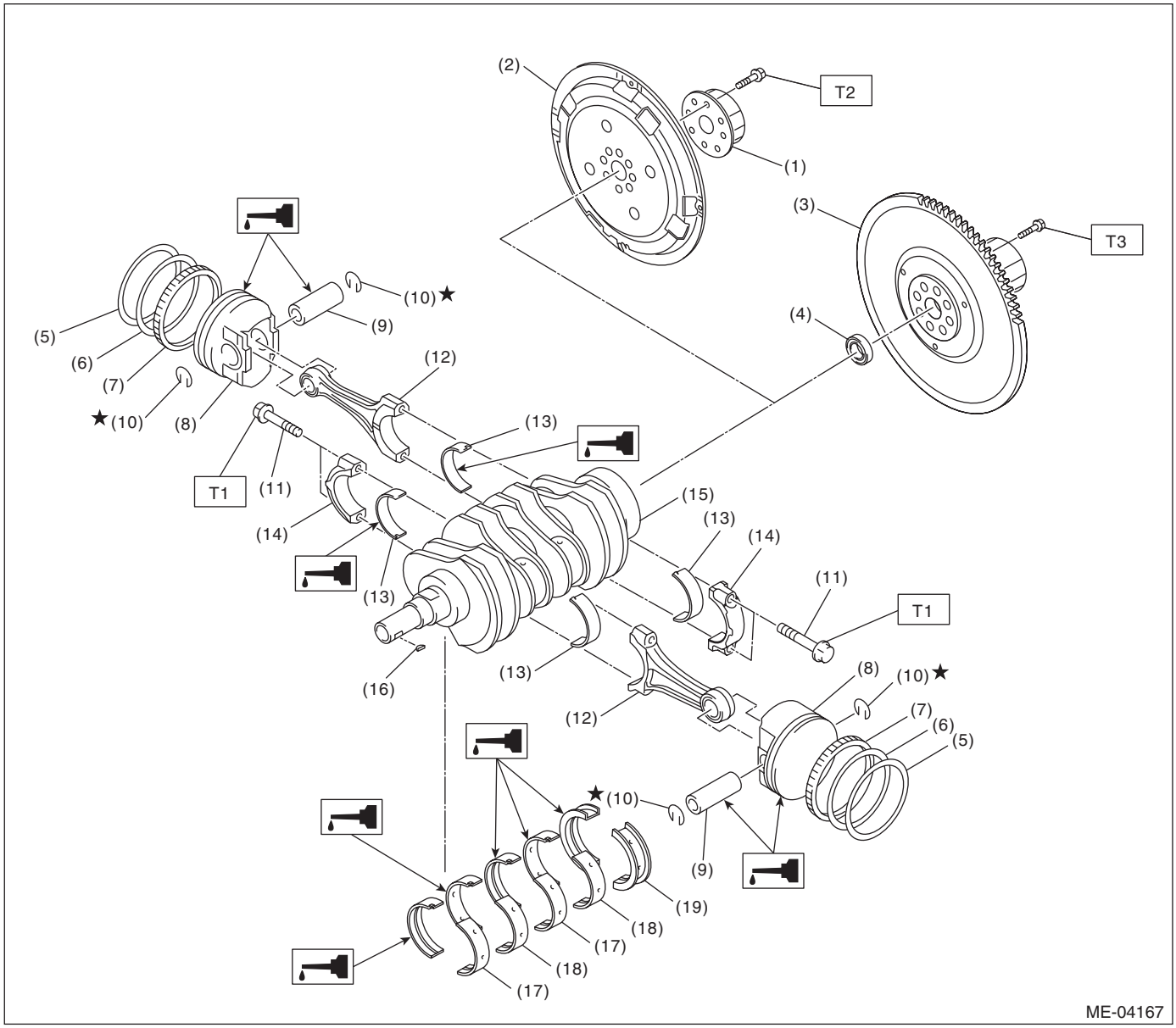

(1) Reinforcement (AT model)
(2) Drive plate (AT model)
(3) Flywheel (MT model)
(4) Ball bearing (MT model)
(5) Top ring
(6) Second ring
(7) Oil ring
(8) Piston
(9) Piston pin
(10) Snap ring
(11) Connecting rod bolt
(12) Connecting rod
(13) Connecting rod bearing
(14) Connecting rod cap
(15) Crankshaft
(16) Woodruff key
(17) Crankshaft bearing #1, #3
(18) Crankshaft bearing #2, #4
(19) Crankshaft bearing #5

Tightening torque: N·m (kgf-m, ft-lb)

T1: 52 (5.3, 38.4)

T2: <Ref. to 5AT-68, INSTALLATION, Drive Plate.>

T3: <Ref. to CL-12, INSTALLATION, Flywheel.>

6. ENGINE MOUNTING

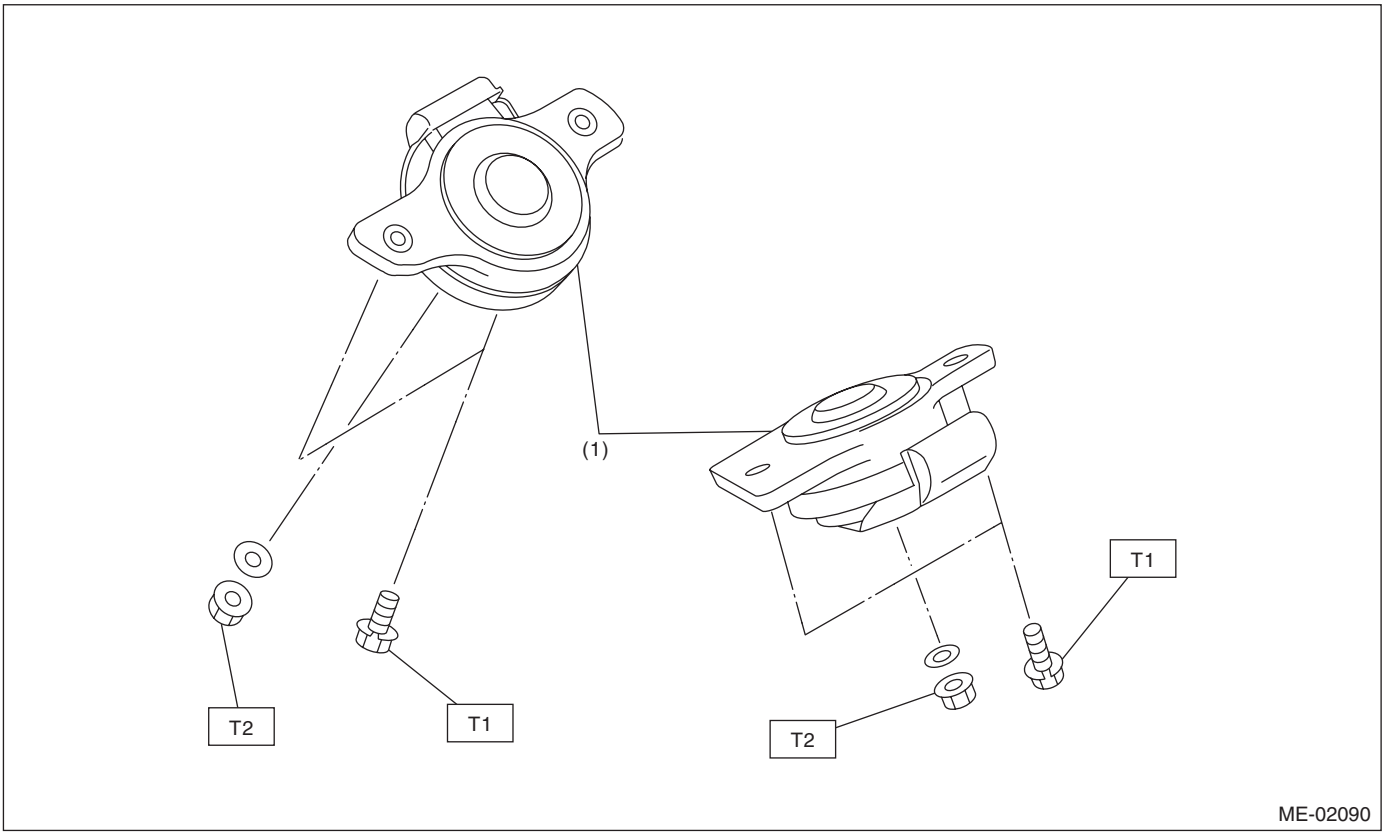

(1) Front cushion rubber

Tightening torque: N·m (kgf-m, ft-lb)
T1: 35 (3.6, 25.8)
T2: 75 (7.6, 55.3)

C: CAUTION

• Wear work clothing, including a cap, protective goggles, and protective shoes during operation.
• Remove contamination including dirt and corrosion before removal, installation or disassembly.
• Keep the disassembled parts in order and protect them from dust and dirt.
• Before removal, installation or disassembly, be sure to clarify the failure. Avoid unnecessary removal, installation, disassembly and replacement.
• Be careful not to burn yourself, because each part on the vehicle is hot after running.
• Be sure to tighten fasteners including bolts and nuts to the specified torque.
• Place shop jacks or rigid racks at the specified points.
• Before disconnecting electrical connectors of sensors or units, be sure to disconnect the ground cable from battery.
• All parts should be thoroughly cleaned, paying special attention to the engine oil passages, pistons and bearings.
• Rotating parts and sliding parts such as piston, bearing and gear should be coated with oil prior to assembly.
• Be careful not to let oil, grease or coolant contact the timing belt, clutch disc and flywheel.
• All removed parts, if to be reused, should be reinstalled in the original positions and directions.
• Bolts, nuts and washers should be replaced with new ones as required.
• Even if necessary inspections have been made in advance, proceed with assembly work while making rechecks.
• Remove or install the engine in an area where chain hoists, lifting devices, etc. are available for ready use.
• Be sure not to damage coated surfaces of body panels with tools, or not to stain seats and windows with coolant or oil. Place a cover over fender, as required, for protection.
• Prior to starting work, prepare the following:
Service tools, clean cloth, containers to catch coolant and oil, wire ropes, chain hoist, transmission jacks, etc.
• Lift-up or lower the vehicle when necessary. Make sure to support the correct positions.

D: PREPARATION TOOL

1. SPECIAL TOOL

ILLUSTRATION	TOOL NUMBER	DESCRIPTION	REMARKS
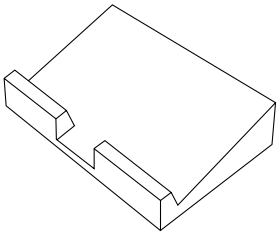 ST-498267600	498267600	CYLINDER HEAD TABLE	• Used for replacing valve guides. • Used for removing and installing valve spring.
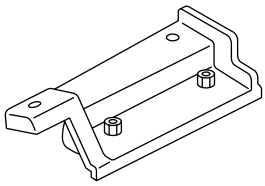 ST-498457000	498457000	ENGINE STAND ADAPTER RH	Used with ENGINE STAND (499817000).
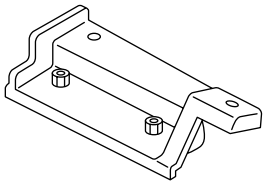 ST-498457100	498457100	ENGINE STAND ADAPTER LH	Used with ENGINE STAND (499817000).
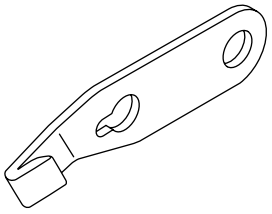 ST-498497100	498497100	CRANKSHAFT STOPPER	Used for stopping rotation of drive plate when loosening/tightening crank pulley bolt.

ILLUSTRATION	TOOL NUMBER	DESCRIPTION	REMARKS
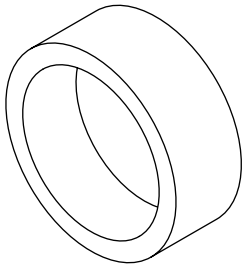 ST-498747300	498747300	PISTON GUIDE	Used for installing piston in cylinder. (2.5 L model)
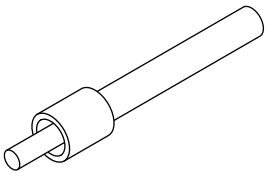 ST-498857100	498857100	VALVE OIL SEAL GUIDE	Used for press-fitting of intake and exhaust valve guide oil seals.
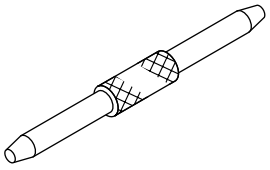 ST-499017100	499017100	PISTON PIN GUIDE	Used for installing piston pin, piston and connecting rod.
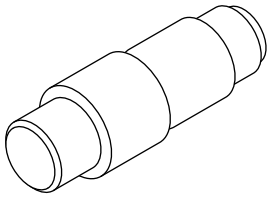 ST-499037100	499037100	CONNECTING ROD BUSHING REMOVER AND INSTALLER	Used for removing and installing connecting rod bushing.

ILLUSTRATION	TOOL NUMBER	DESCRIPTION	REMARKS
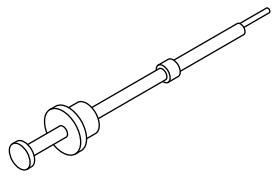 ST-499097700	499097700	PISTON PIN REMOVER ASSY	Used for removing piston pin.
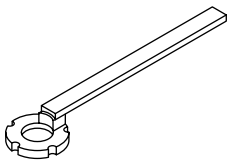 ST-499207400	499207400	CAMSHAFT SPROCKET WRENCH	Used for removing and installing exhaust cam sprocket.
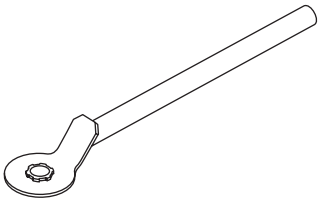 ST-499977500	499977500	CAM SPROCKET WRENCH	Used for removing and installing the intake cam sprocket.
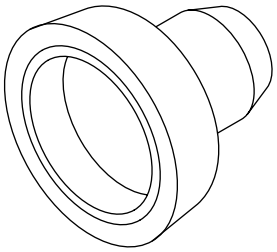 ST-499587200	499587200	CRANKSHAFT OIL SEAL INSTALLER	• Used for installing crankshaft oil seal. • Used with CRANKSHAFT OIL SEAL GUIDE (499597100).

ILLUSTRATION	TOOL NUMBER	DESCRIPTION	REMARKS
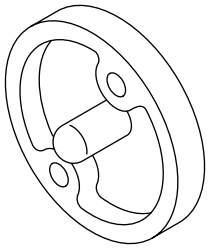 ST-499597100	499597100	CRANKSHAFT OIL SEAL GUIDE	• Used for installing crankshaft oil seal. • Used with CRANKSHAFT OIL SEAL INSTALLER (499587200).
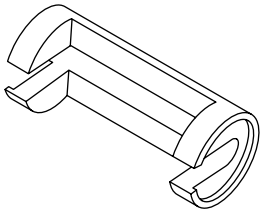 ST-499718000	499718000	VALVE SPRING REMOVER	Used for removing and installing valve spring.
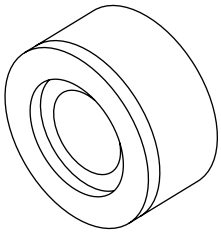 ST18251AA020	18251AA020	VALVE GUIDE ADJUSTER	Used for installing intake and exhaust valve guides.
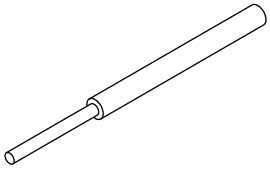 ST-499767200	499767200	VALVE GUIDE REMOVER	Used for removing valve guides.

ILLUSTRATION	TOOL NUMBER	DESCRIPTION	REMARKS
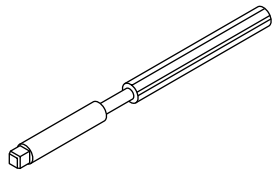 ST-499767400	499767400	VALVE GUIDE REAMER	Used for reaming valve guides.
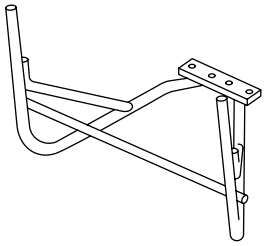 ST-499817000	499817000	ENGINE STAND	• Stand used for engine disassembly and assembly. • Used with ENGINE STAND ADAPTER RH (498457000) & LH (498457100).
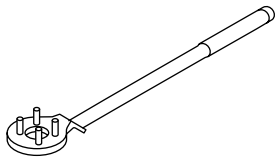 ST-499977100	499977100	CRANK PULLEY WRENCH	Used for stopping rotation of crank pulley when loosening/tightening crank pulley bolt.
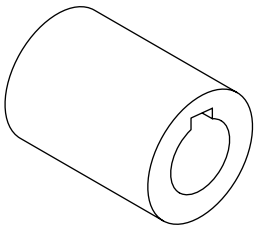 ST-499987500	499987500	CRANKSHAFT SOCKET	Used for rotating crankshaft.

ILLUSTRATION	TOOL NUMBER	DESCRIPTION	REMARKS
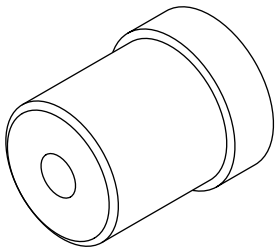 ST-499587100	499587100	OIL SEAL INSTALLER	Used for installing oil pump oil seal.
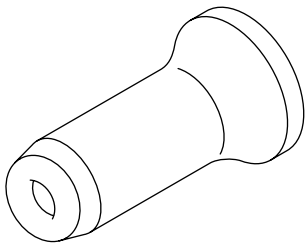 ST-499587600	499587600	OIL SEAL INSTALLER	Used for installing camshaft oil seal for DOHC engine.
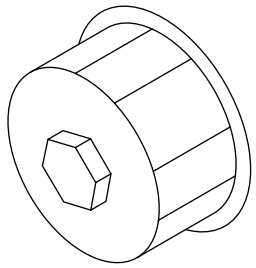 ST18332AA000	18332AA000	OIL FILTER WRENCH	Used for removing and installing oil filter. (Outer diameter: 68 mm (2.68 in))
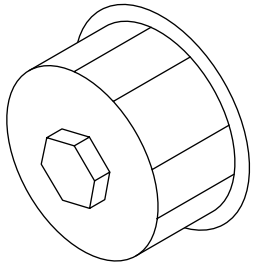 ST18332AA010	18332AA010	OIL FILTER WRENCH	Used for removing and installing oil filter. (Outer diameter: 65 mm (2.56 in))

ILLUSTRATION	TOOL NUMBER	DESCRIPTION	REMARKS
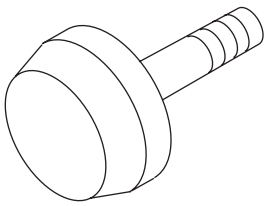 ST-499597200	499597200	OIL SEAL GUIDE	• Used for installing camshaft oil seal for DOHC engine. • Used with OIL SEAL INSTALLER (499587600)
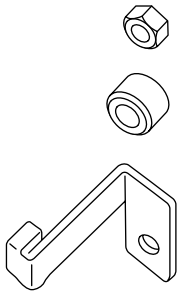 ST-498277200	498277200	STOPPER SET	Used for installing automatic transmission assembly to engine.
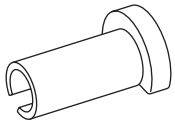 ST42099AE000	42099AE000	CONNECTOR REMOVER	Used for removing quick connector in engine room.
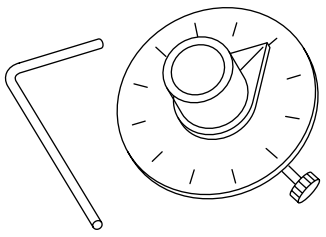 ST18854AA000	18854AA000	ANGLE GAUGE	Used for installing the crank pulley.

ILLUSTRATION	TOOL NUMBER	DESCRIPTION	REMARKS
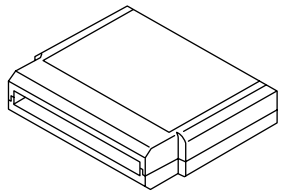 ST24082AA260	24082AA260	CARTRIDGE	Troubleshooting for electrical system.
ST22771AA030	22771AA030	SUBARU SELECT MONITOR KIT	Troubleshooting for electrical system.

2. GENERAL TOOL

TOOL NAME	REMARKS
Compression gauge	Used for measuring compression.

E: PROCEDURE

It is possible to conduct the following service procedures with engine on the vehicle, however, the procedures described in this section are based on the condition that the engine is removed from vehicle.

- V-belt
- Timing belt
- Camshaft
- Cylinder head

2. Compression

A: INSPECTION

CAUTION:
After warming-up, engine becomes very hot. Be careful not to burn yourself during measurement.

1) Remove the collector cover.
2) After warming-up the engine, turn the ignition switch to OFF.
3) Make sure that the battery is fully charged.
4) Release the fuel pressure. <Ref. to FU(H4DOTC)-44, RELEASING OF FUEL PRESSURE, PROCEDURE, Fuel.>
5) Remove all the spark plugs.
<Ref. to IG(H4DOTC)-4, REMOVAL, Spark Plug.>
6) Fully open the throttle valve.
7) Check the starter motor for satisfactory performance and operation.
8) Hold the compression gauge tight against the spark plug hole.

NOTE:
When using a screw-in type compression gauge, the screw (put into cylinder head spark plug hole) should be less than 18 mm (0.71 in) long.

9) Crank the engine by means of the starter motor, and read the maximum value on the gauge when the pointer is steady.

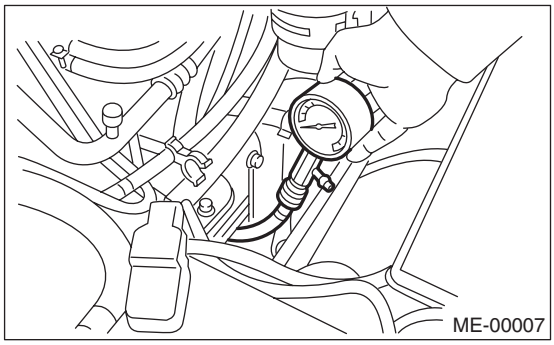

10) Perform at least two measurements per cylinder, and make sure that the values are correct.

Compression pressure (350 rpm and Throttle fully open):
Standard:
981 — 1,177 kPa (10 — 12 kg/cm^2, 142 — 171 psi)
Difference between cylinders:
49 kPa (0.5 kgf/cm^2, 7 psi) or less

3. Idle Speed

A: INSPECTION

1) Before checking the idle speed, check the following:
   (1) Ensure the air cleaner element is free from clogging, ignition timing is correct, spark plugs are in good condition, and hoses are connected properly.
   (2) Ensure the malfunction indicator light does not illuminate.
2) Idle the engine.
3) Stop the engine, and turn the ignition switch to OFF.
4) Insert the cartridge to Subaru Select Monitor.
5) Connect the Subaru Select Monitor to data link connector.
6) Turn the ignition switch to ON and Subaru Select Monitor switch to ON.
7) Select {Each System Check} in Main Menu.
8) Select {Engine} in Selection Menu.
9) Select {Current Data Display & Save} in Engine Control System Diagnosis.
10) Select {Data Display} in Data Display Menu.
11) Start the engine, and read the engine idle speed.
12) Check the idle speed when unloaded. (With headlights, heater fan, rear defroster, radiator fan, air conditioning, etc. OFF)

Idle speed [No load and gears in neutral]: 750±100 rpm

13) Check the idle speed when loaded. (Turn the air conditioning switch to “ON” and operate the compressor for at least one minute before measurement.)

Idle speed [A/C “ON”, and gears in neutral]: 875±100 rpm

NOTE:
Idle speed cannot be adjusted manually, because the idle speed is automatically adjusted. If the idle speed is out of specifications, refer to General Diagnosis Table under “Engine Control System”. <Ref. to EN(H4DOTC)(diag)-2, Basic Diagnostic Procedure.>

4. Ignition Timing

A: INSPECTION

1) Before checking the ignition timing, check the following:
   (1) Ensure the air cleaner element is free from clogging, spark plugs are in good condition, and hoses are connected properly.
   (2) Ensure the malfunction indicator light does not illuminate.
2) Idle the engine.
3) Stop the engine, and turn the ignition switch to OFF.
4) Insert the cartridge to Subaru Select Monitor.
5) Connect the Subaru Select Monitor to data link connector.
6) Turn the ignition switch to ON and Subaru Select Monitor switch to ON.
7) Select {Each System Check} in Main Menu.
8) Select {Engine} in Selection Menu.
9) Select {Current Data Display & Save} in Engine Control System Diagnosis.
10) Select {Data Display} in Data Display Menu.
11) Start the engine and check the ignition timing at idle speed.

Ignition timing [BTDC/rpm]:
MT model
12°±10°/750
AT model
17°±10°/750

If the timing is not correct, check the ignition control system. Refer to “Engine Control System”. <Ref. to EN(H4DOTC)(diag)-2, Basic Diagnostic Procedure.>

5. Intake Manifold Vacuum

A: INSPECTION

1) Remove the collector cover.
2) Idle the engine.
3) Disconnect the brake vacuum hose from intake manifold, and then install the vacuum gauge.
4) Keep the engine at idle speed and read the vacuum gauge indication.

By observing the gauge needle movement, internal condition of the engine can be diagnosed as described below.

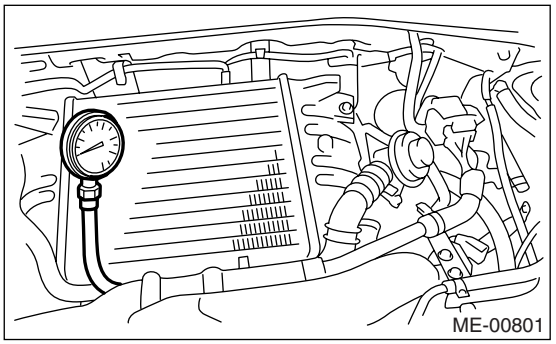

Vacuum pressure (at idling, A/C "OFF"):
–60.0 kPa (–450 mmHg, –17.72 inHg) or less

Diagnosis of engine condition by measurement of intake manifold vacuum	
Vacuum gauge indication	Possible engine condition
1. Needle motion is steady but lower than normal position. This tendency becomes more evident as engine temperature rises.	Leakage around intake manifold gasket, or disconnected or damaged vacuum hose
2. Needle intermittently drops to the lower position than normal.	Leakage around cylinder
3. Needle drops suddenly and intermittently from normal position.	Sticky valve
4. When engine speed is gradually increased, needle begins to vibrate rapidly at certain speed, and then vibration increases as engine speed increases.	Weak or broken valve springs
5. Needle vibrates above and below normal position in narrow range.	Defective ignition system or throttle chamber idle adjustment

6. Engine Oil Pressure

A: INSPECTION

1) Remove the collector cover.
2) Remove the oil pressure switch from engine cylinder block. <Ref. to LU(H4DOTC)-18, REMOVAL, Oil Pressure Switch.>
3) Connect the oil pressure gauge hose to cylinder block.
4) Connect the battery ground cable to battery.

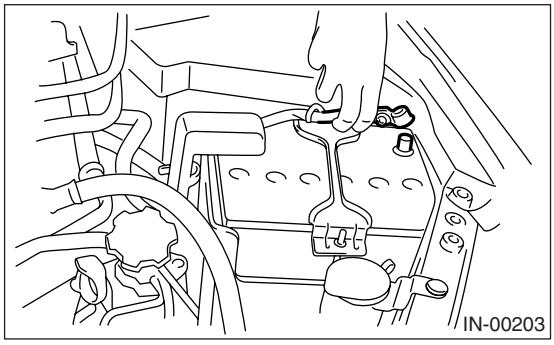

5) Start the engine, and measure the oil pressure.

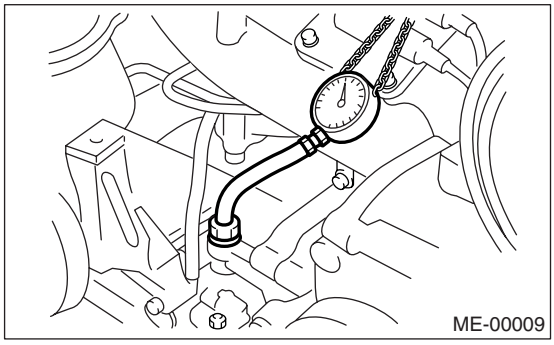

Oil pressure (Standard):
At 800 rpm
98 kPa (1.0 kgf/cm^2, 14 psi) or more
At 5,000 rpm
294 kPa (3.0 kgf/cm^2, 43 psi) or more

CAUTION:
• If the oil pressure is out of specification, check oil pump, oil filter and lubrication line. <Ref. to LU(H4DOTC)-25, INSPECTION, Engine Lubrication System Trouble in General.>
• If the oil pressure warning light is turned to ON and oil pressure is within specification, replace the oil pressure switch. <Ref. to LU(H4DOTC)-25, INSPECTION, Engine Lubrication System Trouble in General.>

NOTE:
The specified value is based on an engine oil temperature of 80°C (176°F).

6) After measuring the oil pressure, install the oil pressure switch. <Ref. to LU(H4DOTC)-18, INSTALLATION, Oil Pressure Switch.>

Tightening torque:
25 N·m (2.5 kgf-m, 18.1 ft-lb)

7. Fuel Pressure

A: INSPECTION

WARNING:
Before removing the fuel pressure gauge, release the fuel pressure.

NOTE:
When the fuel pressure is out of specification, check or replace the pressure regulator and pressure regulator vacuum hose.

1) Remove the collector cover.
2) Release the fuel pressure. <Ref. to FU(H4DOTC)-44, RELEASING OF FUEL PRESSURE, PROCEDURE, Fuel.>
3) Open the fuel filler flap lid, and remove the fuel filler cap.
4) Disconnect the fuel delivery hose and connect fuel pressure gauge.
5) Install the fuse of fuel pump to main fuse box.

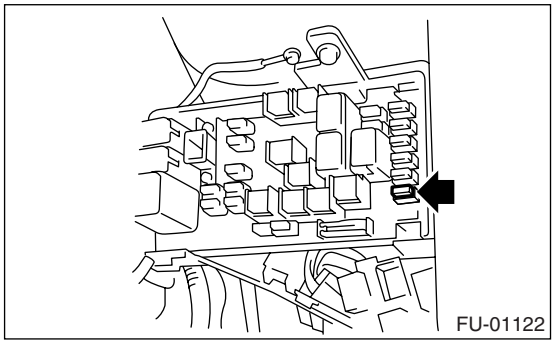
FU-01122

6) Start the engine.
7) Measure the fuel pressure while disconnecting pressure regulator vacuum hose from intake manifold.

Fuel pressure:
Standard: 284 — 314 kPa (2.9 — 3.2 kgf/cm^2, 41 — 46 psi)

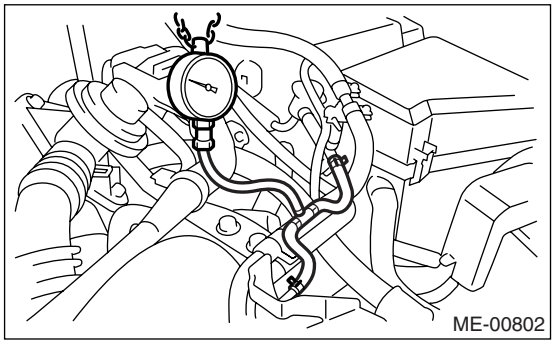
ME-00802

8) After connecting the pressure regulator vacuum hose, measure the fuel pressure.

Fuel pressure:
Standard: 230 — 260 kPa (2.35 — 2.65 kgf/cm^2, 33 — 38 psi)

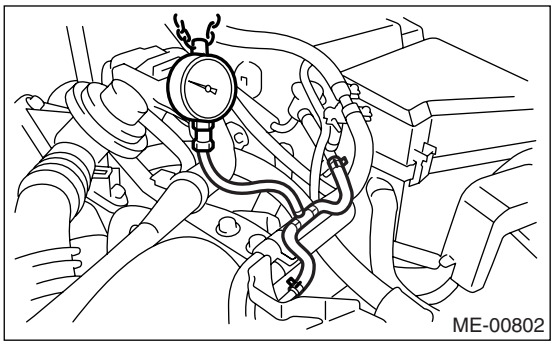
ME-00802

NOTE:
The fuel pressure gauge registers 10 to 20 kPa (0.1 to 0.2 kgf/cm^2, 1 to 3 psi) higher than standard values during high-altitude operations.

8. Valve Clearance

A: INSPECTION

Inspection and adjustment of valve clearance should be performed while engine is cold.

1) Lift-up the vehicle.
2) Remove the under cover.
3) Lower the vehicle.
4) Remove the collector cover.
5) Disconnect the ground cable from battery.

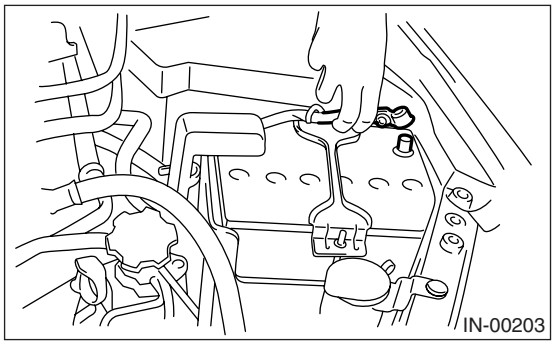

6) Remove the air intake duct. <Ref. to IN(H4DOTC)-9, REMOVAL, Air Intake Duct.>
7) Remove a bolt which secures timing belt cover (RH).
8) Loosen the remaining bolts which secure timing belt cover (RH), then remove the timing belt cover.
9) When inspecting #1 and #3 cylinders:
   (1) Remove the air cleaner case.<Ref. to IN(H4DOTC)-8, REMOVAL, Air Cleaner Case.>
   (2) Disconnect the connector from ignition coil.
   (3) Remove the ignition coil.
   (4) Place a suitable container under the vehicle.
   (5) Disconnect the PCV hose from rocker cover (RH).
   (6) Remove the bolts, then remove the rocker cover (RH).
10) When inspecting #2 and #4 cylinders:
   (1) Disconnect the battery cable, and then remove the battery and battery carrier.
   (2) Disconnect the connector from ignition coil.
   (3) Remove the ignition coil.
   (4) Place a suitable container under the vehicle.
   (5) Disconnect the PCV hose from rocker cover (LH).
   (6) Remove the bolts, then remove the rocker cover (LH).
11) Turn the crank pulley clockwise until arrow mark on the cam sprocket is set to position shown in the figure.

NOTE:
Turn the crankshaft using a socket wrench.

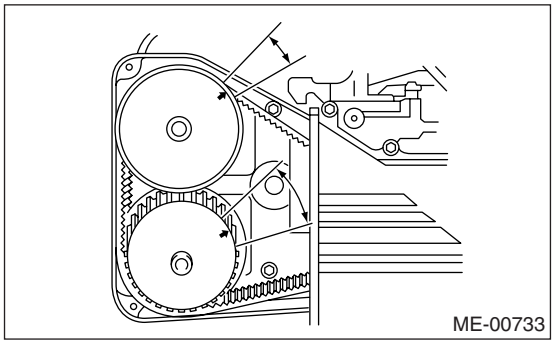

12) Measure the #1 cylinder intake valve and #3 cylinder exhaust valve clearance by using thickness gauge (A).

NOTE:
- Insert the thickness gauge in as horizontal a direction as possible with respect to the valve lifter.
- Measure the exhaust valve clearances while lifting-up the vehicle.

Valve clearance
Intake:
$0.20^{+0.04}_{-0.06}$ mm ($0.0079^{+0.0016}_{-0.0024}$ in)
Exhaust:
0.35±0.05 mm (0.0138±0.0020 in)

- If the measured value is not within specification, take notes of the value in order to adjust the valve clearance later on.

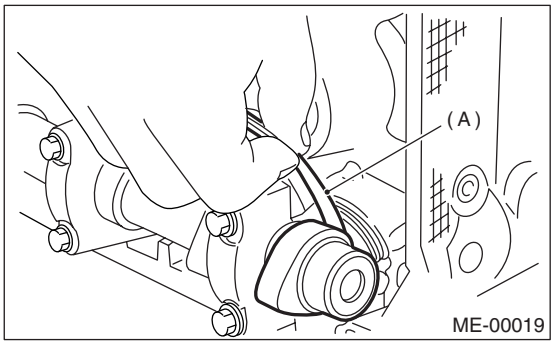

13) If necessary, adjust the valve clearance. <Ref. to ME(H4DOTC)-27, ADJUSTMENT, Valve Clearance.>
14) Further turn the crank pulley clockwise and then measure the valve clearances again.

(1) Set the arrow mark on cam sprocket to the position shown in the figure, and measure the #2 cylinder exhaust valve and #3 cylinder intake valve clearances.

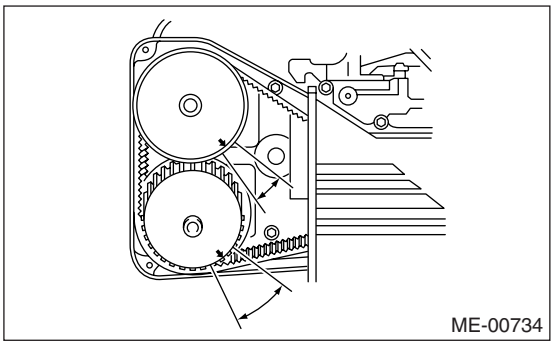
ME-00734

(2) Set the arrow mark on cam sprocket to the position shown in the figure, and measure the #2 cylinder intake valve and #4 cylinder exhaust valve clearances.

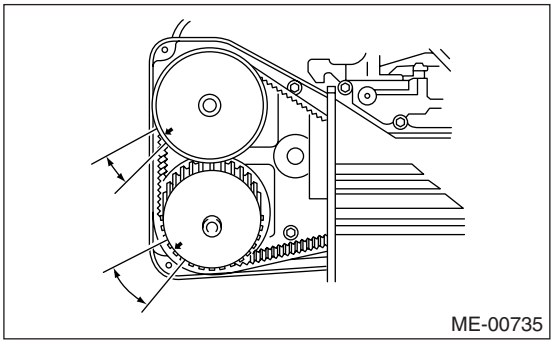
ME-00735

(3) Set the arrow mark on cam sprocket to the position shown in the figure, and measure the #1 cylinder exhaust valve and #4 cylinder intake valve clearances.

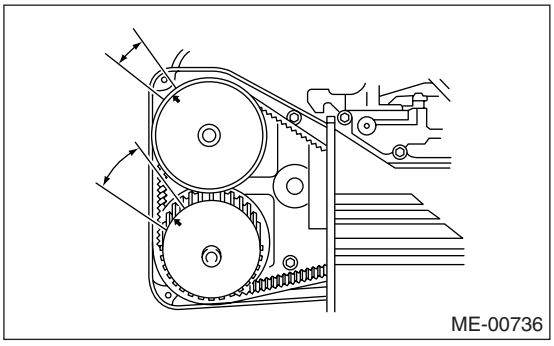
ME-00736

15) After inspection, install the related parts in the reverse order of removal.

B: ADJUSTMENT

CAUTION:
Adjustment of valve clearance should be performed while engine is cold.

1) Measure all valve clearances. <Ref. to ME(H4DOTC)-26, INSPECTION, Valve Clearance.>

NOTE:
Record each valve clearance after it has been measured.

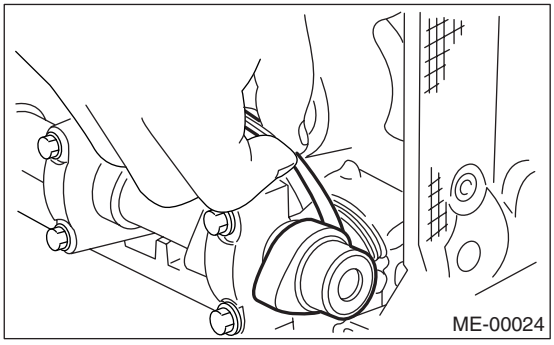
ME-00024

2) Remove the camshaft. <Ref. to ME(H4DOTC)-52, REMOVAL, Camshaft.>
3) Remove the valve lifter.
4) Measure the thickness of valve lifter with a micrometer.

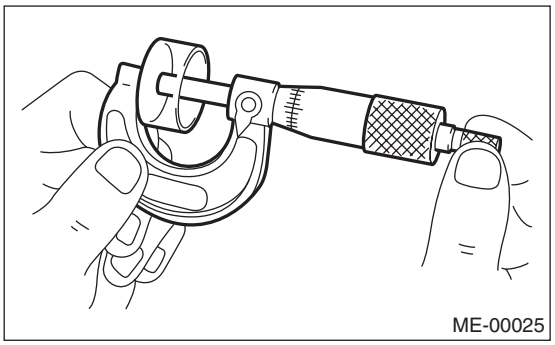
ME-00025

5) Select a valve lifter of suitable thickness based on the measured valve clearance and valve lifter thickness, by referring to the following table.

Unit: (mm)
Intake valve: S = (V + T) − 0.20 Exhaust valve: S = (V + T) − 0.35
S: Valve lifter thickness required V: Measured valve clearance T: Valve lifter thickness to be used

Valve Clearance

Part number	Thickness mm (in)
13228 AB101	4.68 (0.1843)
13228 AB111	4.69 (0.1846)
13228 AB121	4.70 (0.1850)
13228 AB131	4.71 (0.1854)
13228 AB141	4.72 (0.1858)
13228 AB151	4.73 (0.1862)
13228 AB161	4.74 (0.1866)
13228 AB171	4.75 (0.1870)
13228 AB181	4.76 (0.1874)
13228 AB191	4.77 (0.1878)
13228 AB201	4.78 (0.1882)
13228 AB211	4.79 (0.1886)
13228 AB221	4.80 (0.1890)
13228 AB231	4.81 (0.1894)
13228 AB241	4.82 (0.1898)
13228 AB251	4.83 (0.1902)
13228 AB261	4.84 (0.1906)
13228 AB271	4.85 (0.1909)
13228 AB281	4.86 (0.1913)
13228 AB291	4.87 (0.1917)
13228 AB301	4.88 (0.1921)
13228 AB311	4.89 (0.1925)
13228 AB321	4.90 (0.1929)
13228 AB331	4.91 (0.1933)
13228 AB341	4.92 (0.1937)
13228 AB351	4.93 (0.1941)
13228 AB361	4.94 (0.1945)
13228 AB371	4.95 (0.1949)
13228 AB381	4.96 (0.1953)
13228 AB391	4.97 (0.1957)
13228 AB401	4.98 (0.1961)
13228 AB411	4.99 (0.1965)
13228 AB421	5.00 (0.1969)
13228 AB431	5.01 (0.1972)
13228 AB441	5.02 (0.1976)
13228 AB451	5.03 (0.1980)
13228 AB461	5.04 (0.1984)
13228 AB471	5.05 (0.1988)
13228 AB481	5.06 (0.1992)
13228 AB491	5.07 (0.1996)
13228 AB501	5.08 (0.2000)
13228 AB511	5.09 (0.2004)
13228 AB521	5.10 (0.2008)
13228 AB531	5.11 (0.2012)
13228 AB541	5.12 (0.2016)
13228 AB551	5.13 (0.2020)
13228 AB561	5.14 (0.2024)
13228 AB571	5.15 (0.2028)
13228 AB581	5.16 (0.2031)
13228 AB591	5.17 (0.2035)
13228 AB601	5.18 (0.2039)

Part number	Thickness mm (in)
13228 AB611	5.19 (0.2043)
13228 AB621	5.20 (0.2047)
13228 AB631	5.21 (0.2051)
13228 AB641	5.22 (0.2055)
13228 AB651	5.23 (0.2059)
13228 AB661	5.24 (0.2063)
13228 AB671	5.25 (0.2067)
13228 AB681	5.26 (0.2071)
13228 AB691	5.27 (0.2075)
13228 AB701	4.38 (0.1724)
13228 AB711	4.40 (0.1732)
13228 AB721	4.42 (0.1740)
13228 AB731	4.44 (0.1748)
13228 AB741	4.46 (0.1756)
13228 AB751	4.48 (0.1764)
13228 AB761	4.50 (0.1771)
13228 AB771	4.52 (0.1780)
13228 AB781	4.54 (0.1787)
13228 AB791	4.56 (0.1795)
13228 AB801	4.58 (0.1803)
13228 AB811	4.60 (0.1811)
13228 AB821	4.62 (0.1819)
13228 AB831	4.64 (0.1827)
13228 AB841	4.66 (0.1835)
13228 AB851	5.29 (0.2083)
13228 AB861	5.31 (0.2091)
13228 AB871	5.33 (0.2098)
13228 AB881	5.35 (0.2106)
13228 AB891	5.37 (0.2114)
13228 AB901	5.39 (0.2122)
13228 AB911	5.41 (0.2123)
13228 AB921	5.43 (0.2138)
13228 AB931	5.45 (0.2146)
13228 AB941	5.47 (0.2154)
13228 AB951	5.49 (0.2161)
13228 AB961	5.51 (0.2169)
13228 AB971	5.53 (0.2177)
13228 AB981	5.55 (0.2185)
13228 AB991	5.57 (0.2193)
13228 AC001	5.59 (0.2201)
13228 AC011	5.61 (0.2209)
13228 AC021	5.63 (0.2217)
13228 AC031	5.65 (0.2224)

6) Inspect all valves for clearance again at this stage. If the valve clearance is not correct, repeat the procedure over again from the first step.
7) After inspection, install the related parts in the reverse order of removal.

9. Engine Assembly

A: REMOVAL

1) Set the vehicle on a lift.
2) Open the front hood fully and support with a front food stay.
3) Collect the refrigerant from A/C system. <Ref. to AC-20, Refrigerant Recovery Procedure.>
4) Release the fuel pressure.
   (1) Remove the fuse of fuel pump from main fuse box.

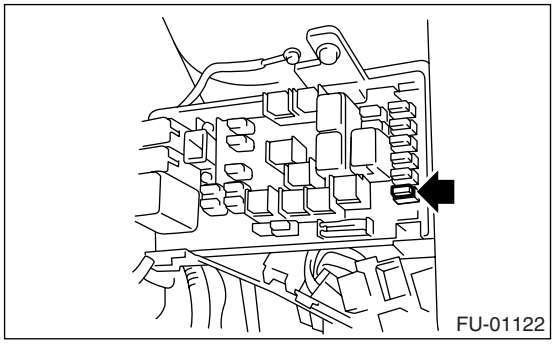

   (2) Start the engine, and run until stalls.
   (3) After the engine stalls, crank it for 5 seconds more.
   (4) Turn the ignition switch to OFF.
5) Remove the fuel filler cap.
6) Remove the collector cover.
7) Disconnect the ground cable from battery.

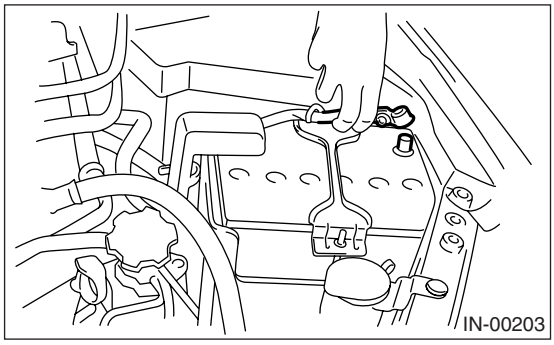

8) Remove the radiator from vehicle. <Ref. to CO(H4DOTC)-19, REMOVAL, Radiator.>
9) Remove the coolant filler tank.
<Ref. to CO(H4DOTC)-31, REMOVAL, Coolant Filler Tank.>
10) Disconnect the A/C pressure hoses from A/C compressor.

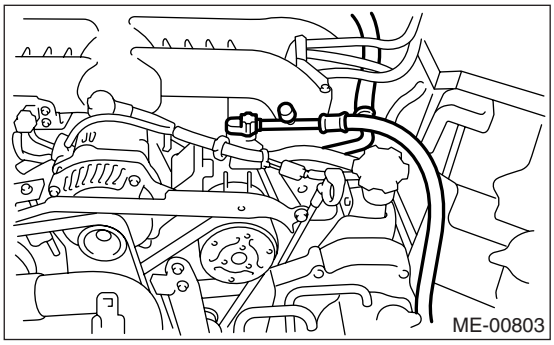

11) Repair the air intake system.
   (1) Remove the intercooler. <Ref. to IN(H4DOTC)-12, REMOVAL, Intercooler.>
   (2) Remove the air cleaner element and air cleaner case. <Ref. to IN(H4DOTC)-8, REMOVAL, Air Cleaner Case.>
12) Disconnect the following connectors and cables.
   (1) Engine harness connectors

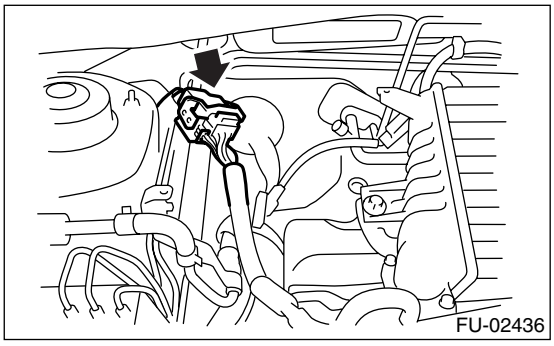

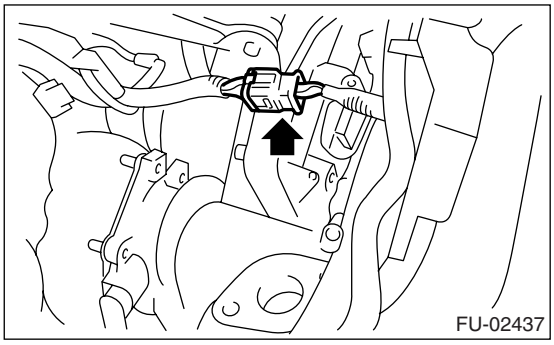

   (2) Engine ground terminals

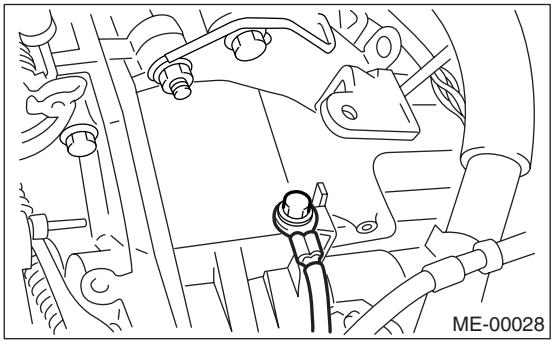

(3) Generator connector, terminal and A/C compressor connector

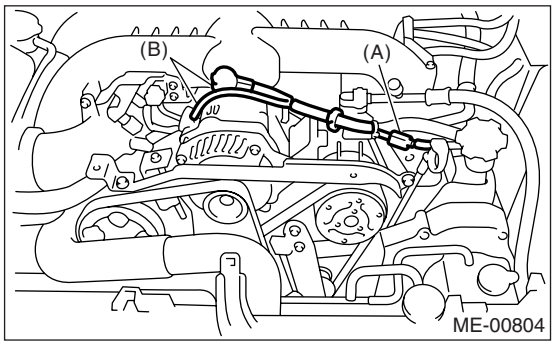

(A) A/C compressor connector
(B) Generator connector and terminal

13) Disconnect the following hoses.
(1) Brake booster vacuum hose

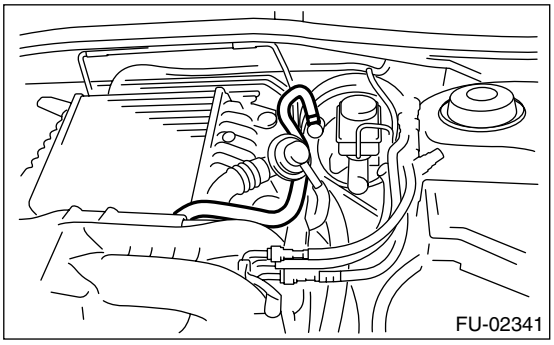

(2) Heater inlet and outlet hoses
(3) Remove the hose between intake manifold (A) and pressure regulator (B).

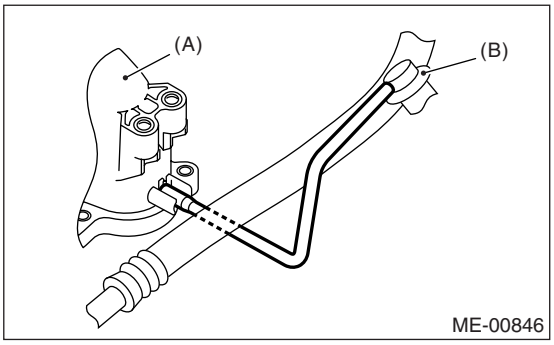

14) Remove the power steering pump from bracket.
(1) Loosen the lock bolt and slider bolt, and remove the front side belt. <Ref. to ME(H4DOTC)-37, FRONT SIDE BELT, REMOVAL, V-belt.>

(2) Disconnect the power steering switch connector.

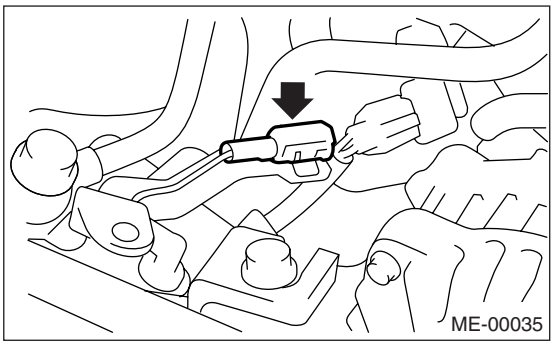

(3) Remove the power steering pump from engine.

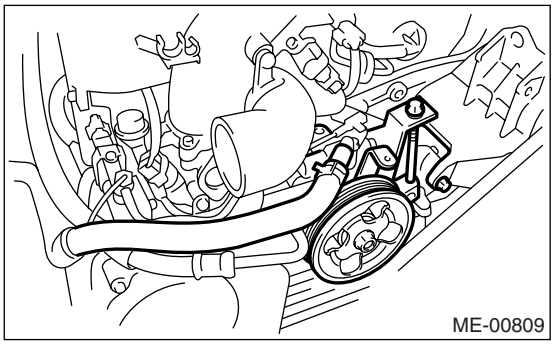

(4) Place the power steering pump on the right side wheel apron.
15) Lift-up the vehicle.
16) Remove the center exhaust pipe.
<Ref. to EX(H4DOTC)-8, REMOVAL, Center Exhaust Pipe.>
17) Remove the nuts which hold lower side of the transmission to engine.

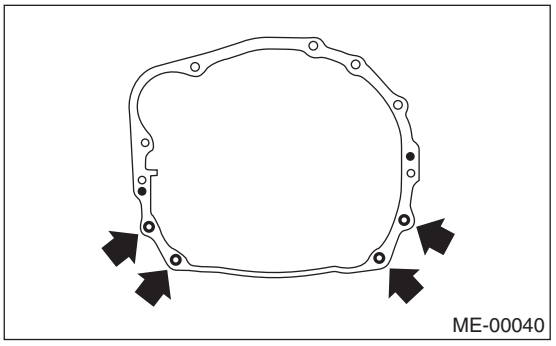

18) Remove the nuts which install front cushion rubber onto front crossmember.

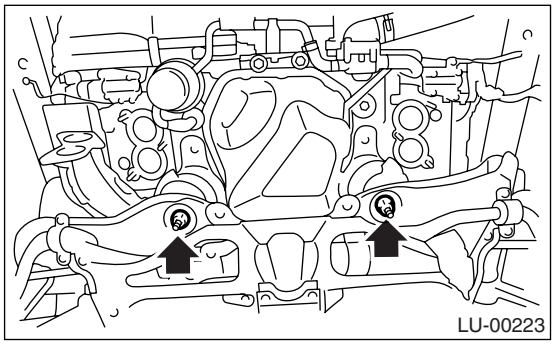

19) Separate the torque converter clutch from drive plate. (AT model)
(1) Lower the vehicle.
(2) Remove the service hole plug.
(3) Remove the bolts which hold torque converter clutch to drive plate.
(4) Remove other bolts while rotating the engine using a socket wrench.

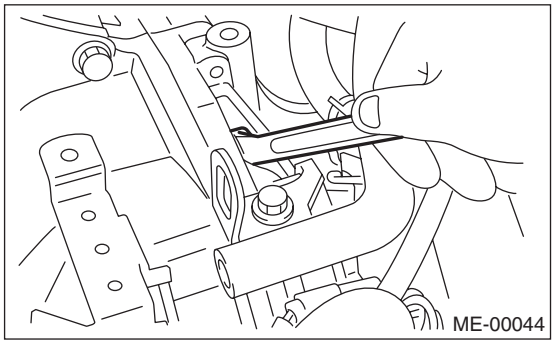

20) Remove the pitching stopper.

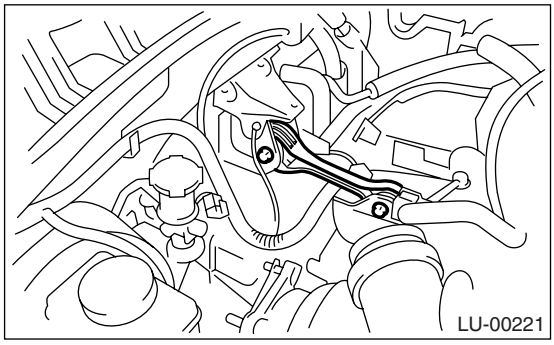

21) Disconnect the fuel hose from fuel pipe.
(1) Disconnect the connector of fuel pipe by pushing the ST in the direction of arrow.

ST 42099AE000 CONNECTOR REMOVER

(2) Remove the clip, and then disconnect the evaporation hose from pipe.

CAUTION:
• Collect fuel from the hose into container.
• Disconnect the hose with its end wrapped with cloth to prevent fuel from splashing.

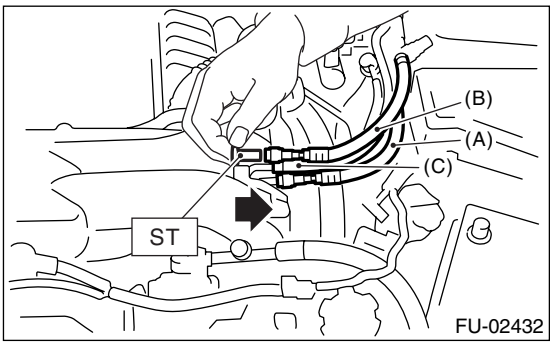

(A) Fuel delivery hose
(B) Fuel return hose
(C) Evaporation hose

22) Support the engine with a lifting device and wire ropes.

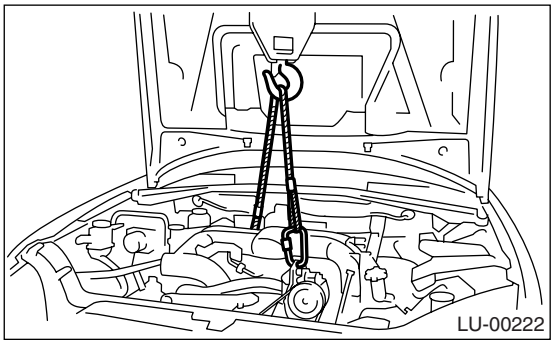

23) Support the transmission with a garage jack.

CAUTION:
Doing this is very important because the transmission lowers for its own weight. This work is also of great importance for facilitating reinstallation.

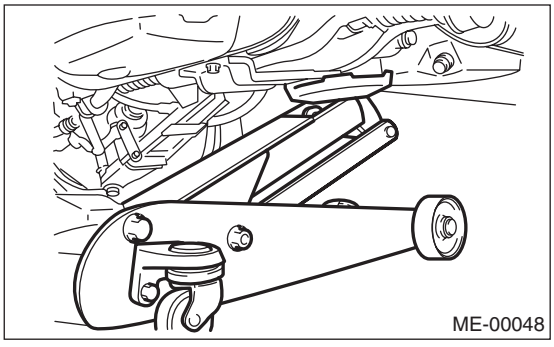

CAUTION:
Before moving the engine away from transmission, check to be sure no work has been overlooked.

24) Separation of engine and transmission.
(1) Remove the starter. <Ref. to SC(H4SO)-6, REMOVAL, Starter.>
(2) Install the ST to converter case. (AT model)

ST 498277200 STOPPER SET

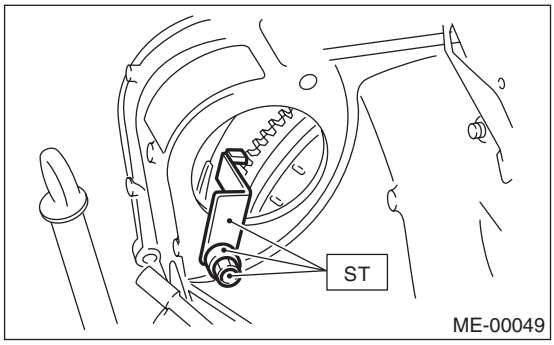

(3) Remove the bolts which hold upper side of the transmission to engine.

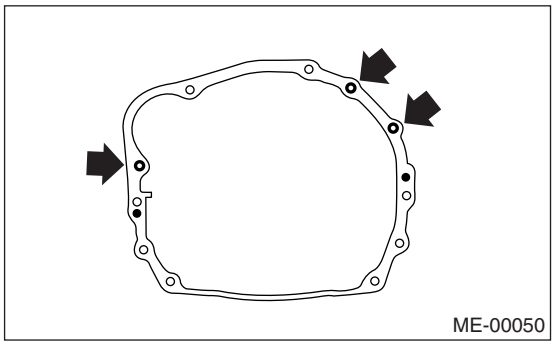

25) Remove the engine from vehicle.
(1) Slightly raise the engine.
(2) Raise the transmission with garage jack.
(3) Move the engine horizontally until main shaft is withdrawn from clutch cover.
(4) Slowly move the engine away from engine compartment.

NOTE:
Be careful not to damage adjacent parts or body panels with crank pulley, oil level gauge, etc.

26) Remove the front cushion rubbers.

B: INSTALLATION

1) Install the front cushion rubbers to engine.

Tightening torque:
35 N·m (3.6 kgf-m, 25.8 ft-lb)

2) Install the engine onto transmission.
(1) Position the engine in engine compartment and align it with transmission.

NOTE:
Be careful not to damage adjacent parts or body panels with crank pulley, oil pressure gauge, etc.

(2) Apply a small amount of grease to the splines of mainshaft. (MT model)

3) Tighten the bolts which hold upper side of transmission to engine.

Tightening torque:
50 N·m (5.1 kgf-m, 36.9 ft-lb)

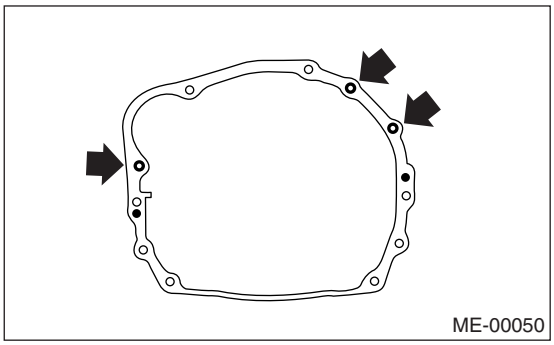

4) Remove the lifting device and wire ropes.

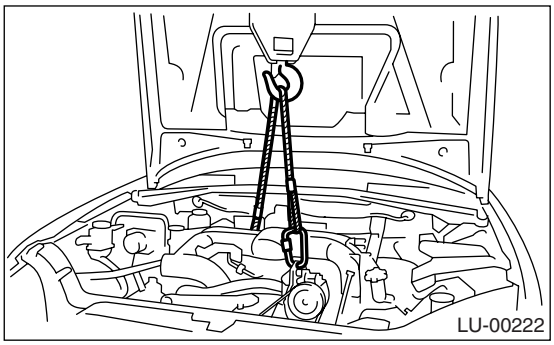

5) Remove the garage jack.
6) Install the pitching stopper.

Tightening torque:
T1: 50 N·m (5.1 kgf-m, 36.9 ft-lb)
T2: 58 N·m (5.9 kgf-m, 43 ft-lb)

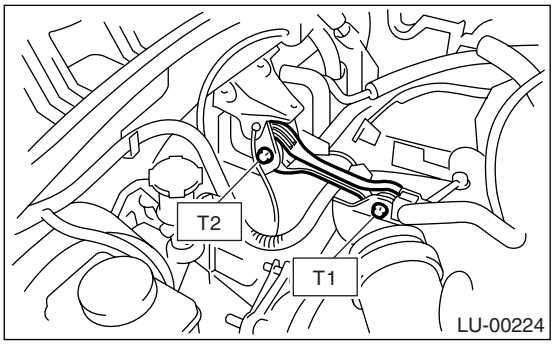

7) Remove the ST from converter case. (AT model)

NOTE:
Be careful not to drop the ST into the converter case when removing the ST.
ST 498277200 STOPPER SET

8) Install the starter. <Ref. to SC(H4SO)-6, INSTALLATION, Starter.>
9) Install the torque converter clutch to drive plate. (AT model)
(1) Tighten the bolts which hold torque converter clutch to drive plate.
(2) Tighten other bolts while rotating the engine by using ST.

CAUTION:
Be careful not to drop bolts into the torque converter clutch housing.

ST 499977400 CRANK PULLEY WRENCH

Tightening torque:
25 N·m (2.5 kgf-m, 18.1 ft-lb)

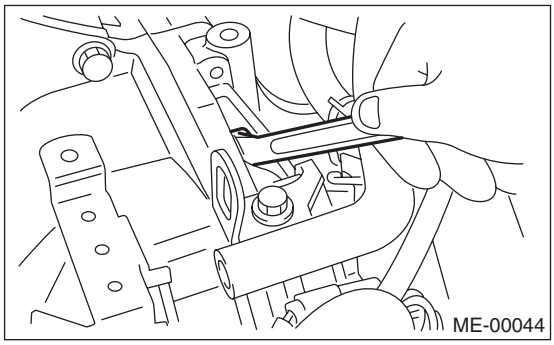

10) Install the power steering pump on bracket.
(1) Install the power steering pump.

Tightening torque:
20.1 N·m (2.05 kgf-m, 14.8 ft-lb)

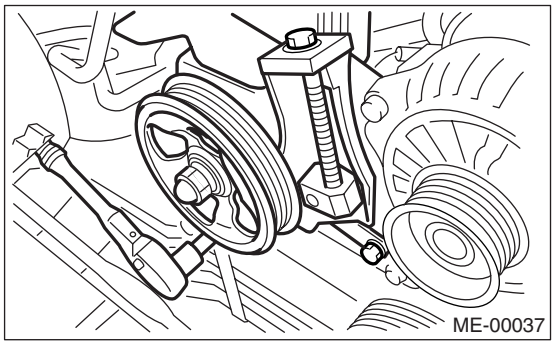

(2) Connect the power steering switch connector.

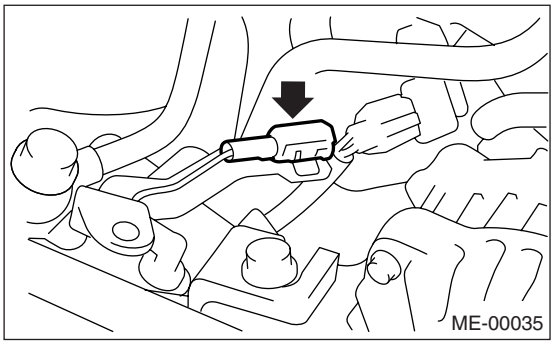

(3) Install the front side belt and adjust it. <Ref. to ME(H4DOTC)-37, FRONT SIDE BELT, INSTALLATION, V-belt.>

11) Lift-up the vehicle.

12) Tighten the nuts which hold lower side of the transmission to engine.

Tightening torque:
50 N·m (5.1 kgf-m, 36.9 ft-lb)

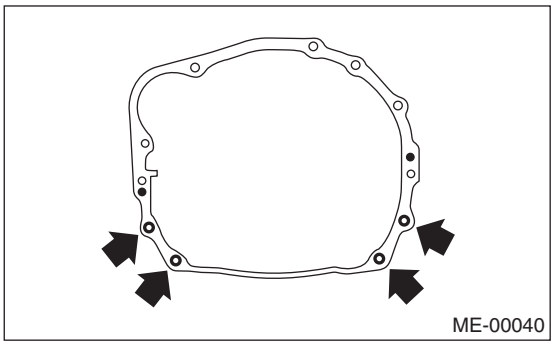

13) Tighten the nuts which install the front cushion rubber onto crossmember.

Tightening torque:
75 N·m (7.6 kgf-m, 55.3 ft-lb)

NOTE:
Make sure the front cushion rubber mounting bolts and locator are securely installed.

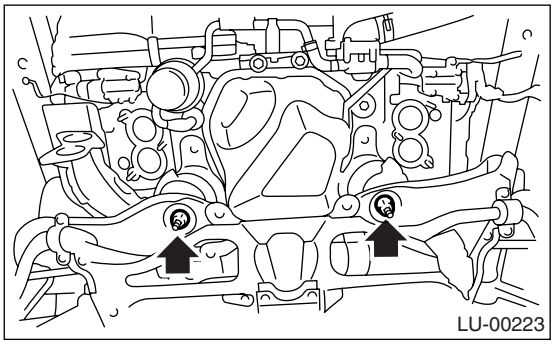

14) Install the center exhaust pipe.
<Ref. to EX(H4DOTC)-9, INSTALLATION, Center Exhaust Pipe.>

15) Lower the vehicle.

16) Connect the following hoses.
(1) Fuel delivery hose, return hose and evaporation hose
(2) Heater inlet and outlet hoses
(3) Brake booster vacuum hose
(4) Pressure regulator hose

17) Connect the following connectors and terminals.
(1) Engine ground terminals
(2) Engine harness connectors
(3) Generator connector and terminal
(4) A/C compressor connector

18) Install the air intake system.
(1) Install the intercooler. <Ref. to IN(H4DOTC)-12, INSTALLATION, Intercooler.>
(2) Install the air cleaner element and air cleaner case. <Ref. to IN(H4DOTC)-8, INSTALLATION, Air Cleaner Case.>

19) Install the A/C pressure hoses.

NOTE:
Use new O-rings.

Tightening torque:
25 N·m (2.5 kgf-m, 18.1 ft-lb)

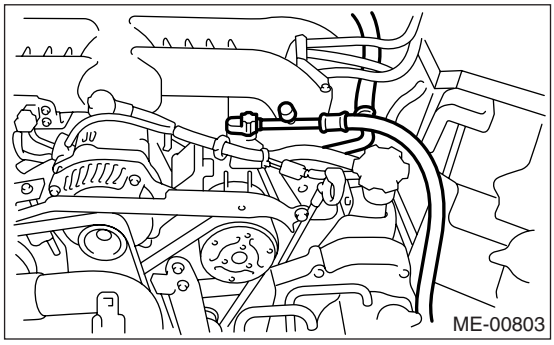

20) Install the radiator. <Ref. to CO(H4DOTC)-20, INSTALLATION, Radiator.>
21) Install the coolant filler tank. <Ref. to CO(H4DOTC)-31, INSTALLATION, Coolant Filler Tank.>
22) Install the window washer tank.
23) Install the battery to vehicle, and connect the battery ground terminal.
24) Fill engine coolant.
<Ref. to CO(H4DOTC)-13, FILLING OF ENGINE COOLANT, REPLACEMENT, Engine Coolant.>
25) Charge the A/C system with refrigerant.
<Ref. to AC-21, PROCEDURE, Refrigerant Charging Procedure.>
26) Install the collector cover.
27) Remove the front hood stay, and close the front hood.
28) Take off the vehicle from a lift.

C: INSPECTION

1) Check pipes and hoses are connected firmly.
2) Check the engine coolant and ATF are at specified levels.

10.Engine Mounting

A: REMOVAL

1) Remove the engine assembly. <Ref. to ME(H4DOTC)-29, REMOVAL, Engine Assembly.>
2) Remove the engine mounting from engine assembly.

B: INSTALLATION

Install in the reverse order of removal.

NOTE:
Make sure the engine mounting cover of RH side is securely installed.

Tightening torque:
Engine mounting;
35 N·m (3.6 kgf-m, 25.8 ft-lb)

C: INSPECTION

Make sure that cracks or other damages do not exist.

11.Preparation for Overhaul

A: PROCEDURE

1) After removing the engine from body, secure it in the STs shown below.

ST1	498457000	ENGINE STAND ADAPTER RH
ST2	498457100	ENGINE STAND ADAPTER LH
ST3	499817000	ENGINE STAND

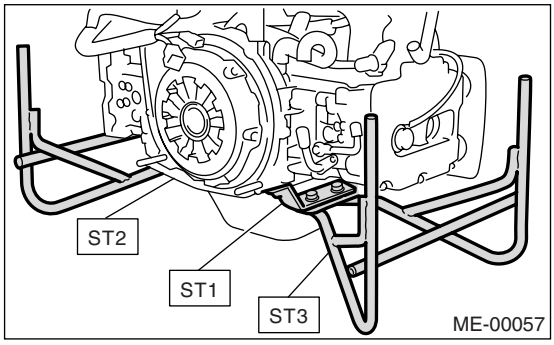

2) In this section the procedures described under each index are all connected and stated in order. It will be the complete procedure for overhauling of the engine itself when you go through all steps in the process.
Therefore, in this section, to conduct the particular procedure within the flow of a section, you need to go back and conduct the procedure described previously in order to do that particular procedure.

12.V-belt

A: REMOVAL

NOTE:
Perform the following procedures with the engine installed to the body.

1. FRONT SIDE BELT

1) Remove the collector cover.
2) Remove the V-belt covers.

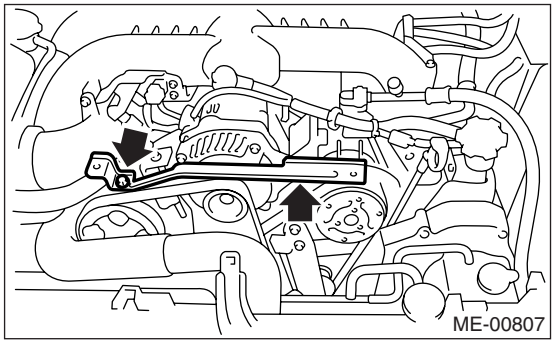

3) Loosen the lock bolt (A).
4) Loosen the slider bolt (B).
5) Remove the front side belt (C).

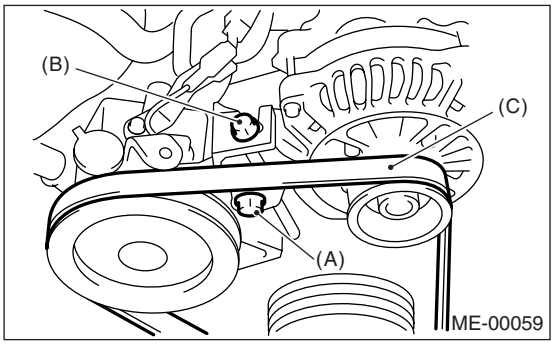

2. REAR SIDE BELT

1) Loosen the lock nut (A).
2) Loosen the slider bolt (B).

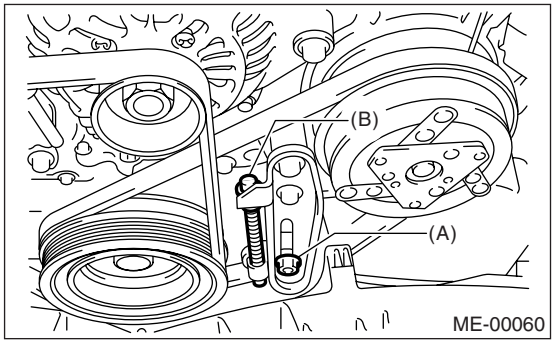

3) Remove the A/C belt.
4) Remove the A/C belt tensioner.

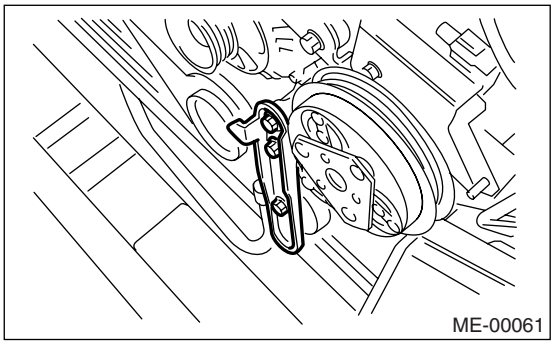

B: INSTALLATION

NOTE:
Wipe off any oil or water on the belt and pulley.

1. FRONT SIDE BELT

1) Install a V-belt (C), and tighten the slider bolt so as to obtain the specified belt tension. <Ref. to ME(H4DOTC)-38, INSPECTION, V-belt.>
2) Tighten the lock bolt (A).
3) Tighten the slider bolt (B).

Tightening torque:
Lock bolt (A):
25 N·m (2.5 kgf-m, 18.1 ft-lb)
Slider bolt (B):
8 N·m (0.8 kgf-m, 5.9 ft-lb)

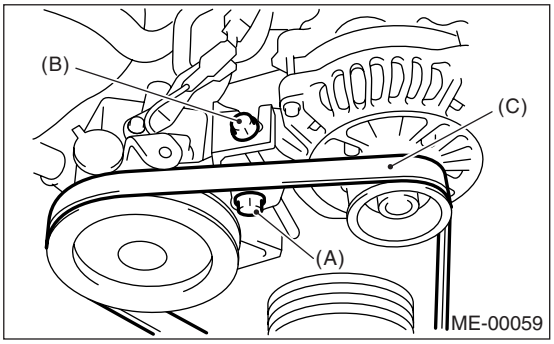

2. REAR SIDE BELT

1) Remove the A/C belt tensioner.
2) Install a V-belt, and tighten the slider bolt (B) so as to obtain the specified belt tension.
<Ref. to ME(H4DOTC)-38, INSPECTION, V-belt.>
3) Tighten the lock nut (A).

Tightening torque:
Lock nut (A):
22.6 N·m (2.3 kgf-m, 16.6 ft-lb)

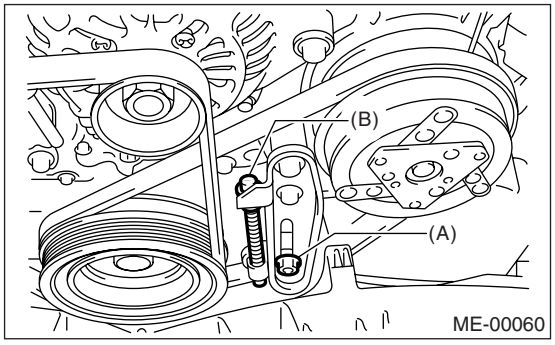

C: INSPECTION

1) Replace the belts, if crack, fraying or wear is found.
2) Check the V-belt tension and adjust it if necessary by changing the generator installing position and idler pulley installing position.

Belt tension (with belt tension gauge)

(A)
When installing new parts:
618 — 755 N (63 — 77 kgf, 139 — 170 lb)
At inspection:
490 — 640 N (50 — 65 kgf, 110 — 144 lb)

(B)
When installing new parts:
740 — 880 N (75 — 90 kgf, 166 — 198 lb)
At inspection:
350 — 450 N (36 — 46 kgf, 78 — 101 lb)

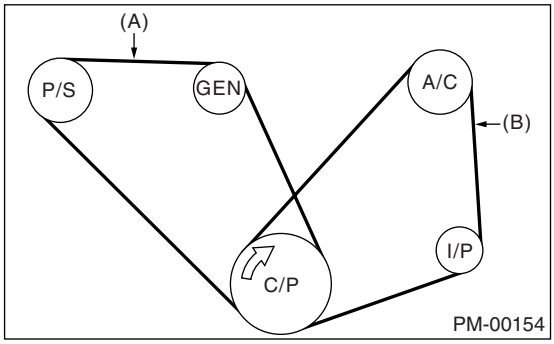

(A) Front side belt
(B) Rear side belt
C/P Crank pulley
GEN Generator
P/S Power steering oil pump pulley
A/C A/C compressor pulley
I/P Idler pulley

Belt tension (without belt tension gauge)

(A)
When installing new parts:
7 — 9 mm (0.276 — 0.354 in)
At inspection:
9 — 11 mm (0.354 — 0.433 in)

(B)
When installing new parts:
7.5 — 8.5 mm (0.295 — 0.335 in)
At inspection:
9.0 — 10.0 mm (0.354 — 0.394 in)

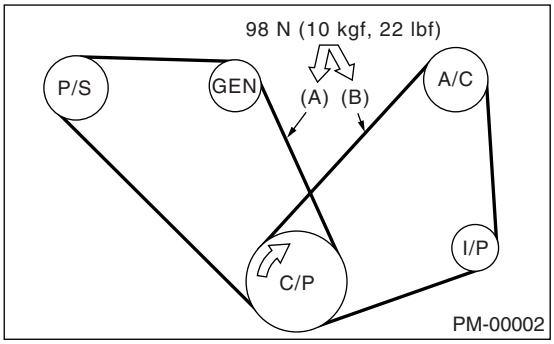

(A) Front side belt
(B) Rear side belt
C/P Crank pulley
GEN Generator
P/S Power steering oil pump pulley
A/C A/C compressor pulley
I/P Idler pulley

13.Crank Pulley

A: REMOVAL

NOTE:
When replacing the single part, perform the work with the engine installed to vehicle body.

1) Remove the V-belts. <Ref. to ME(H4DOTC)-37, REMOVAL, V-belt.>
2) Use the ST to lock the crank pulley, and remove the crank pulley bolt.
ST 499977100 CRANK PULLEY WRENCH

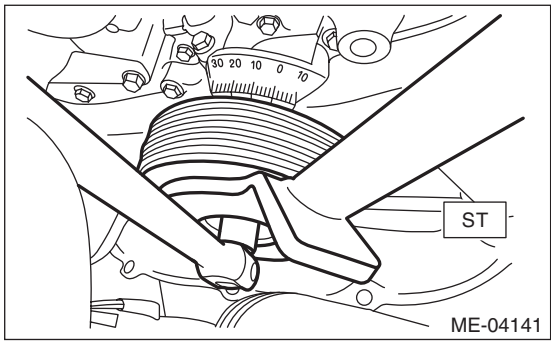

3) Remove the crank pulley.

B: INSTALLATION

1. METHOD WITHOUT ANGLE GAUGE

1) Clean the crankshaft thread using compressed air.
2) Install the crank pulley.
3) Apply engine oil to the crank pulley bolt seat and thread.
4) Tighten the crank pulley bolts.
(1) Use the ST to lock the crank pulley, and temporarily tighten the crank pulley bolt.
ST 499977100 CRANK PULLEY WRENCH

Tightening torque:
47 N·m (4.8 kgf-m, 34.7 ft-lb)

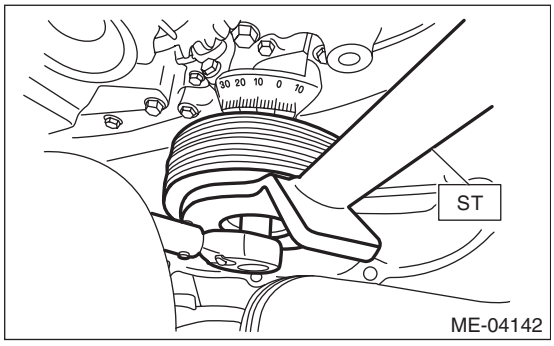

(2) Draw reference lines (A) and (B) using a marker to set the socket to the crank pulley bolt as shown in the figure.
ST 499977100 CRANK PULLEY WRENCH

NOTE:
Set the socket onto the crank pulley bolt so that reference lines (A) and (B) is visible.

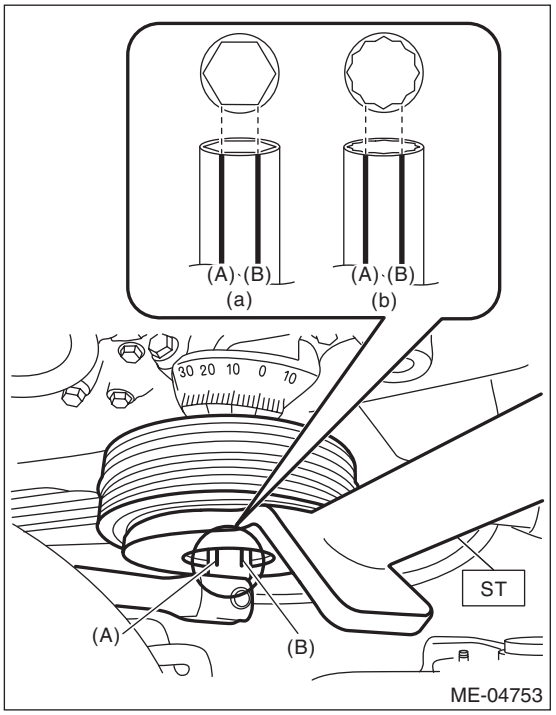

(a) When using 6-point socket
(b) When using 12-point socket

(3) Draw end line (C) on ST using a marker at the same position as reference line (B) was drawn on the socket in step (2).
ST 499977100 CRANK PULLEY WRENCH

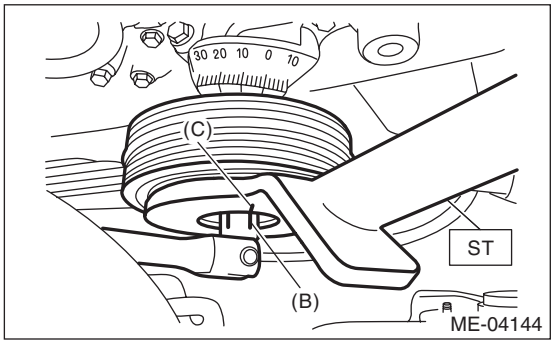

(4) Use the ST to lock the crank pulley, and tighten the crank pulley bolt to the angle where reference line (A) and end line (C) are aligned.
ST 499977100 CRANK PULLEY WRENCH

NOTE:
It should be approx. 60° when reference line (A) and end line (C) are aligned.

Tightening angle:
60°±5°

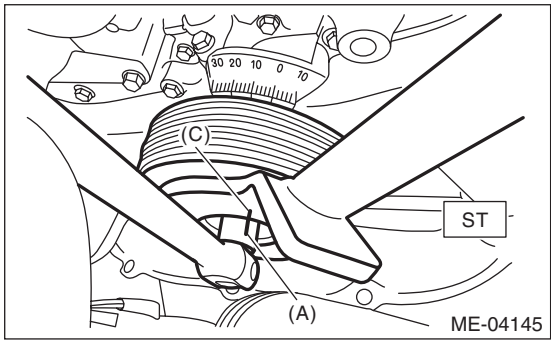

5) Install the V-belts.<Ref. to ME(H4DOTC)-37, INSTALLATION, V-belt.>

2. METHOD WITH ANGLE GAUGE

1) Clean the crankshaft thread using compressed air.
2) Install the crank pulley.
3) Apply engine oil to the crank pulley bolt seat and thread.
4) Tighten the crank pulley bolts.
(1) Remove the radiator main fan motor assembly and radiator sub motor assembly. <Ref. to CO(H4DOTC)-24, REMOVAL, Radiator Main Fan and Fan Motor.> <Ref. to CO(H4DOTC)-27, REMOVAL, Radiator Sub Fan and Fan Motor.>
(2) Use the ST1 to lock the crank pulley, and temporarily tighten the crank pulley bolt.

ST1 499977100 CRANK PULLEY WRENCH

Tightening torque:
47 N·m (4.8 kgf-m, 34.7 ft-lb)

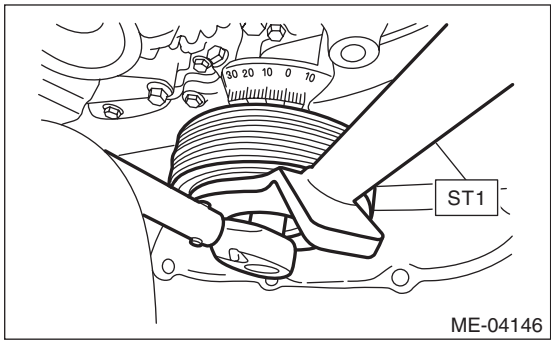

(3) Set the ST2, use the ST1 to lock the crank pulley, and tighten the crank pulley bolt to the specified angle.

ST1 499977100 CRANK PULLEY WRENCH
ST2 18854AA000 ANGLE GAUGE

NOTE:
Attach the magnet used for securing the ST2 (ANGLE GAUGE) to ST1.

Tightening angle:
60°±5°

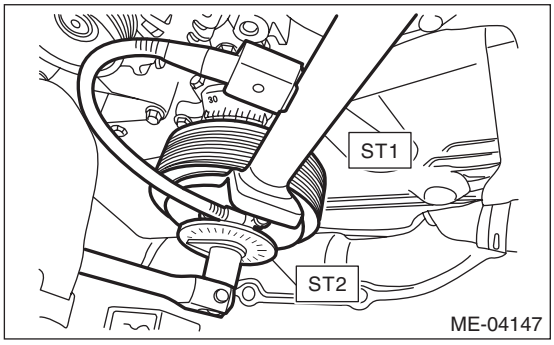

(4) Install the radiator main fan motor assembly and radiator sub motor assembly. <Ref. to CO(H4DOTC)-24, INSTALLATION, Radiator Main Fan and Fan Motor.> <Ref. to CO(H4DOTC)-27, INSTALLATION, Radiator Sub Fan and Fan Motor.>

5) Install the V-belts. <Ref. to ME(H4DOTC)-37, INSTALLATION, V-belt.>

C: INSPECTION

1) Make sure the V-belt is not worn or damaged.
2) Check the tension of the front side belt. <Ref. to ME(H4DOTC)-38, INSPECTION, V-belt.>

14.Timing Belt Cover

A: REMOVAL

1) Remove the V-belts. <Ref. to ME(H4DOTC)-37, REMOVAL, V-belt.>
2) Remove the crank pulley.
<Ref. to ME(H4DOTC)-39, REMOVAL, Crank Pulley.>
3) Remove the timing belt cover (LH) (A).
4) Remove the timing belt cover (RH) (B).
5) Remove the front timing belt cover (C).

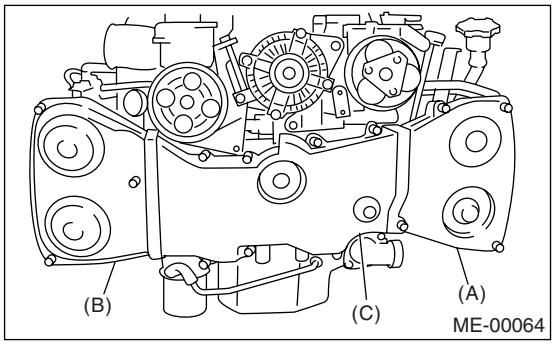

B: INSTALLATION

1) Install the front timing belt cover (C).

Tightening torque:
5 N·m (0.5 kgf-m, 3.6 ft-lb)

2) Install the timing belt cover (RH) (B).

Tightening torque:
5 N·m (0.5 kgf-m, 3.6 ft-lb)

3) Install the timing belt cover (LH) (A).

Tightening torque:
5 N·m (0.5 kgf-m, 3.6 ft-lb)

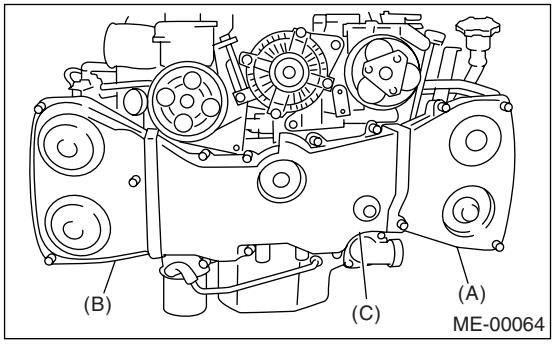

4) Install the crank pulley. <Ref. to ME(H4DOTC)-39, INSTALLATION, Crank Pulley.>
5) Install the V-belts. <Ref. to ME(H4DOTC)-37, INSTALLATION, V-belt.>

C: INSPECTION

Check the cover for damage.

15.Timing Belt

A: REMOVAL

1. TIMING BELT

1) Remove the V-belts. <Ref. to ME(H4DOTC)-37, REMOVAL, V-belt.>
2) Remove the crank pulley. <Ref. to ME(H4DOTC)-39, REMOVAL, Crank Pulley.>
3) Remove the timing belt cover.
<Ref. to ME(H4DOTC)-41, REMOVAL, Timing Belt Cover.>
4) Remove the timing belt guide. (With timing belt guide model)

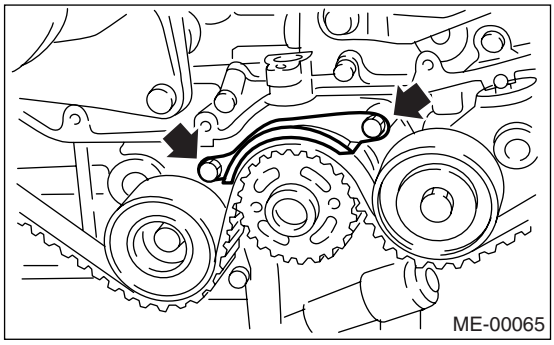

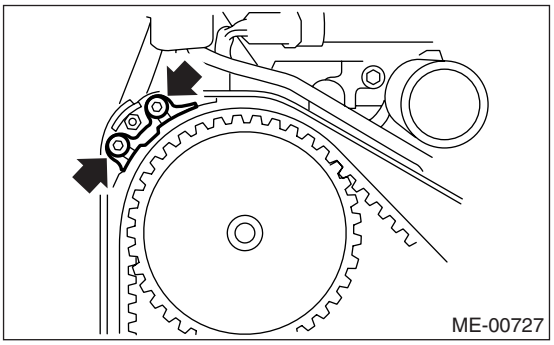

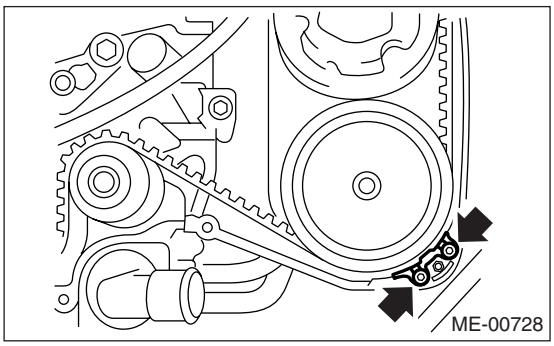

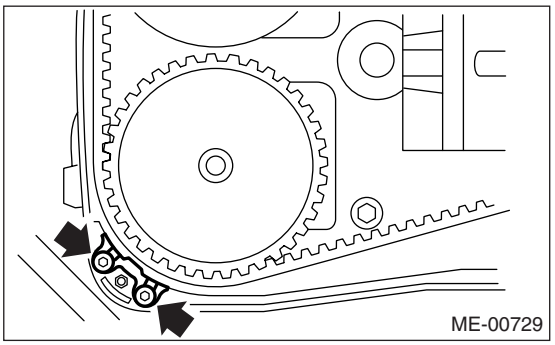

5) If the alignment mark or arrow mark (which indicates rotation direction) on timing belt fade away, put new marks before removing the timing belt as shown in procedures below.
(1) Turn the crankshaft using ST, and align the alignment marks on crank sprocket, intake cam sprocket (LH), exhaust cam sprocket (LH), intake cam sprocket (RH) and exhaust cam sprocket (RH) with notches of timing belt cover and cylinder block.

ST 499987500 CRANKSHAFT SOCKET

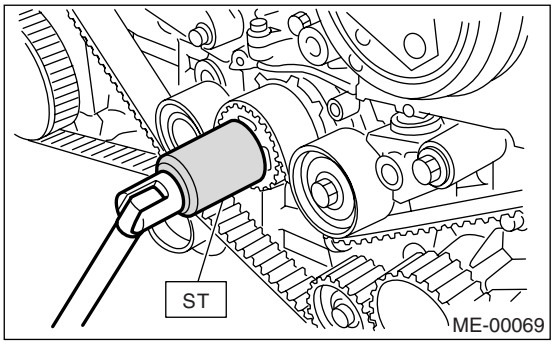

(2) Using white paint, put alignment and/or arrow marks on the timing belts in relation to the cam sprockets.

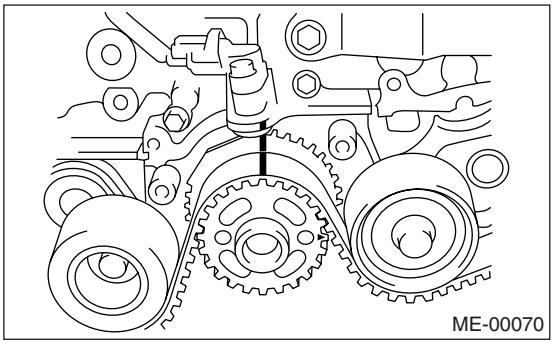
ME-00070

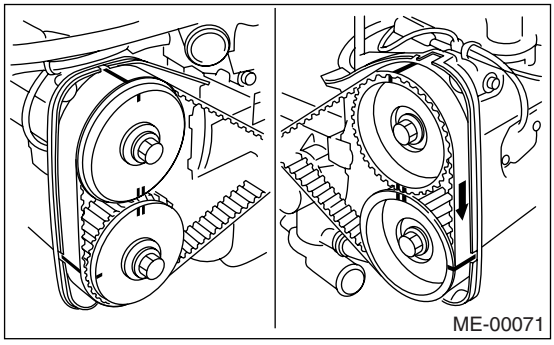
ME-00071

Z_1: 54.5 tooth length
Z_2: 51 tooth length
Z_3: 28 tooth length

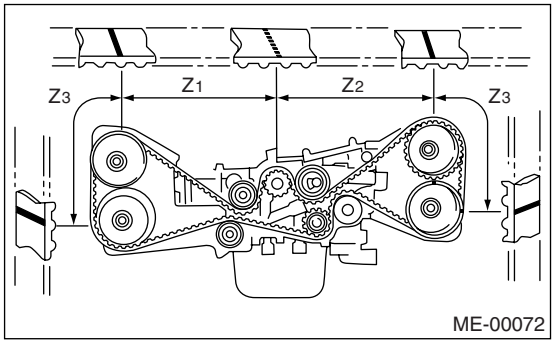

ME-00072

6) Remove the belt idler (A).

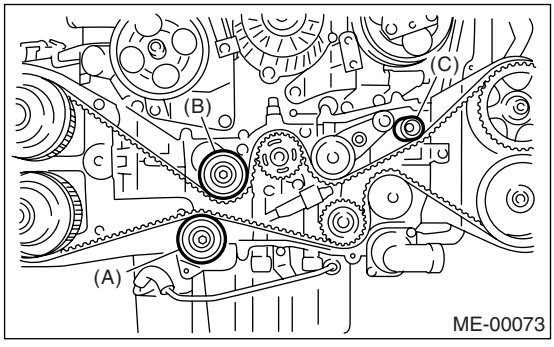

ME-00073

7) Remove the timing belt.

CAUTION:
After the timing belt has been removed, never rotate the intake and exhaust cam sprocket. If the cam sprocket is rotated, the intake and exhaust valve heads strike together and valve stems are bent.

2. BELT IDLER AND AUTOMATIC BELT TENSION ADJUSTER ASSEMBLY

1) Remove the belt idler (B) and (C).

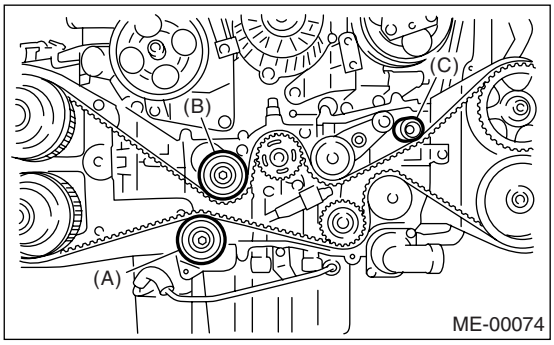

ME-00074

2) Remove the belt idler No. 2.

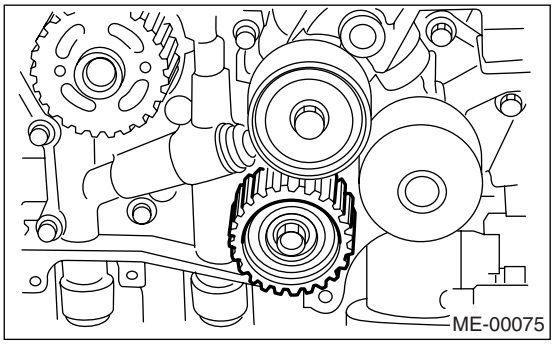
ME-00075

3) Remove the automatic belt tension adjuster assembly.

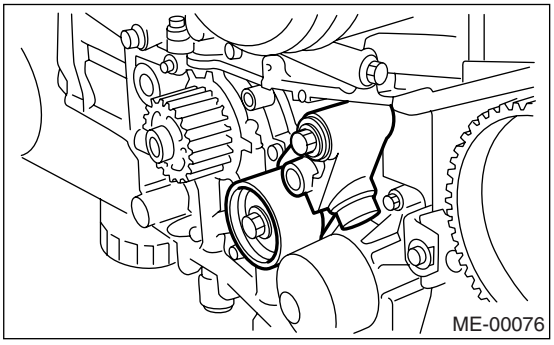
ME-00076

B: INSTALLATION

1. AUTOMATIC BELT TENSION ADJUSTER ASSEMBLY AND BELT IDLER

1) Preparation for installation of automatic belt tension adjuster assembly.

CAUTION:
• Always use a vertical type pressing tool to move the adjuster rod down.

• Do not use a lateral type vise.
• Push the adjuster rod vertically.
• Press-in the push adjuster rod gradually taking more than three minutes.
• Do not allow press pressure to exceed 9,807 N (1,000 kgf, 2,205 lb).
• Press the adjuster rod as far as the end surface of the cylinder. Do not press the adjuster rod into cylinder. Doing so may damage the cylinder.
• Do not release the press pressure until stopper pin is completely inserted.

(1) Attach the automatic belt tension adjuster assembly to the vertical pressing tool.
(2) Slowly move the adjuster rod down with a pressure of more than 165 N (16.8 kgf, 37.1 lb) until the adjuster rod is aligned with the stopper pin hole in the cylinder.

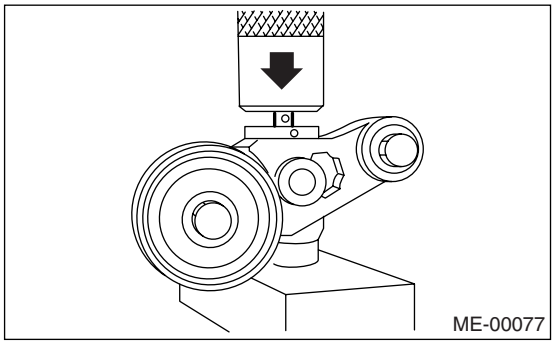
ME-00077

(3) With a 2 mm (0.08 in) dia. stopper pin or a 2 mm (0.08 in) (nominal) dia. hex wrench inserted into the stopper pin hole in cylinder, secure the adjuster rod.

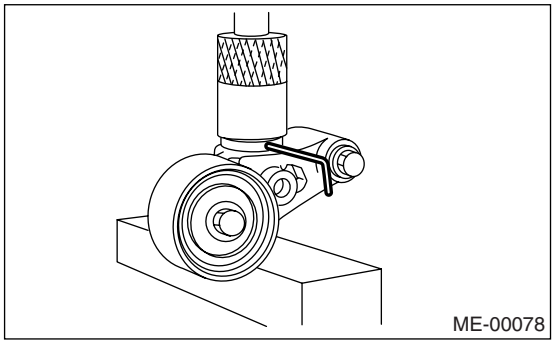
ME-00078

2) Install the automatic belt tension adjuster assembly.

Tightening torque:
39 N·m (4.0 kgf-m, 28.9 ft-lb)

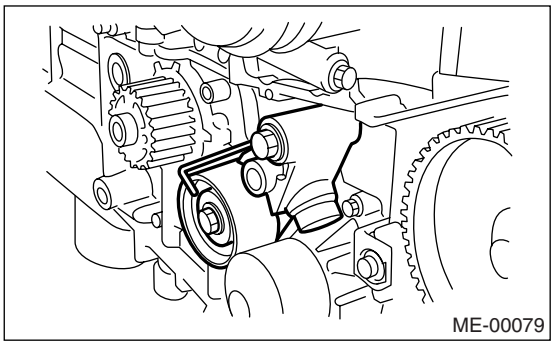
ME-00079

3) Install the belt idler No. 2.

Tightening torque:
39 N·m (4.0 kgf-m, 28.9 ft-lb)

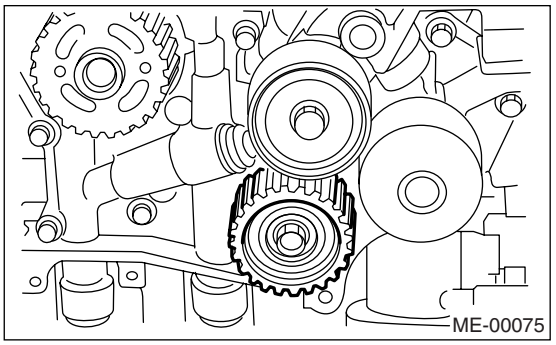
ME-00075

4) Install the belt idlers.

Tightening torque:
39 N·m (4.0 kgf-m, 28.9 ft-lb)

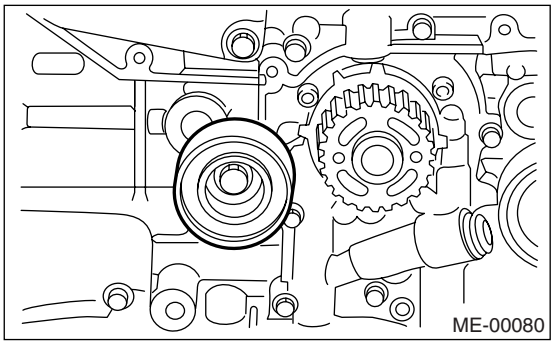
ME-00080

2. TIMING BELT

1) Preparation for installation of automatic belt tension adjuster assembly. <Ref. to ME(H4DOTC)-43, AUTOMATIC BELT TENSION ADJUSTER ASSEMBLY AND BELT IDLER, INSTALLATION, Timing Belt.>
2) Crankshaft and cam sprocket alignment

(1) Align the mark (A) on crank sprocket with the mark on oil pump cover at cylinder block.

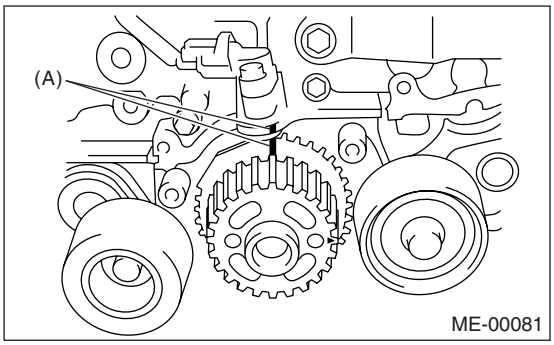

(2) Align single line mark (A) on the exhaust cam sprocket (RH) with notch (B) on timing belt cover.

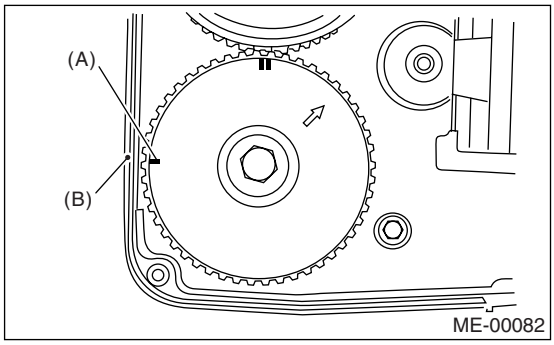

(3) Align single line mark (A) on the intake cam sprocket (RH) with notch (B) on timing belt cover. (Ensure double lines (C) on intake and exhaust cam sprockets are aligned.)

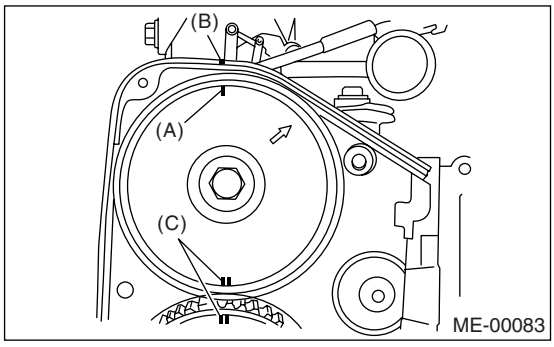

(4) Align single line mark (A) on exhaust cam sprocket (LH) with notch (B) on timing belt cover by turning the sprocket counterclockwise (as viewed from front of engine).

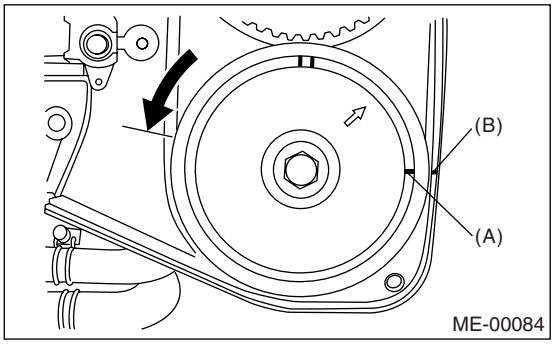

(5) Align single line mark (A) on intake cam sprocket (LH) with notch (B) on timing belt cover by turning the sprocket clockwise (as viewed from front of engine). Ensure double lines (C) on intake and exhaust cam sprockets are aligned.

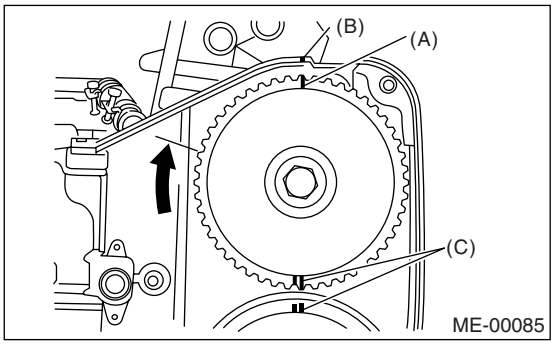

(6) Ensure that the cam and crank sprockets are positioned properly.

CAUTION:
• Intake and exhaust camshafts for this DOHC engine can be independently rotated with the timing belts removed. As can be seen from the figure, if the intake and exhaust valves are lifted simultaneously, their heads will interfere with each other, resulting in bent valves.

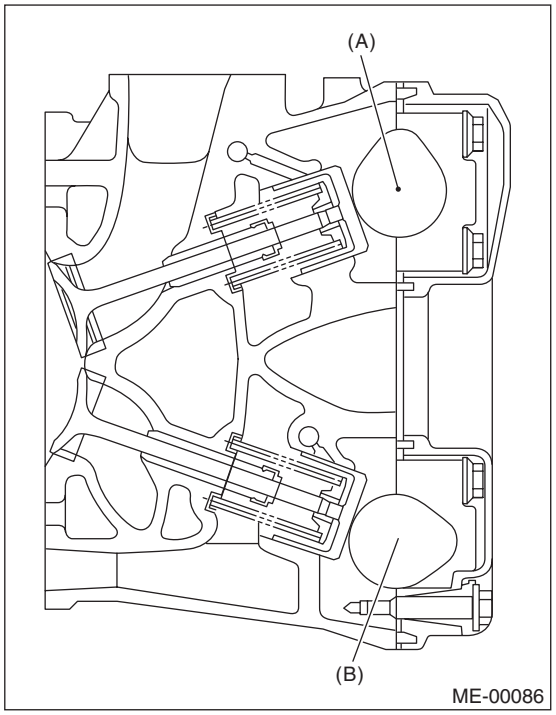

(A) Intake camshaft
(B) Exhaust camshaft

• When the timing belts are not installed, four camshafts are held at the "zero-lift" position, where all cams on camshafts do not push the intake and exhaust valves down. (Under this condition, all valves remain unlifted.)
• When the camshafts are rotated to install the timing belts, #2 intake and #4 exhaust cam of camshafts (LH) are held to push their corresponding valves down. (Under this condition, these valves are held lifted.) Camshafts (RH) are held so that their cams do not push valves down.
• Camshafts (LH) must be rotated from the "zero-lift" position to the position where the timing belt is to be installed with the smallest possible angle, in order to prevent mutual interference of intake and exhaust valve heads.

• Do not allow the camshafts to rotate in the direction shown in the figure as this causes both intake and exhaust valves to lift simultaneously, resulting in interference with their heads.

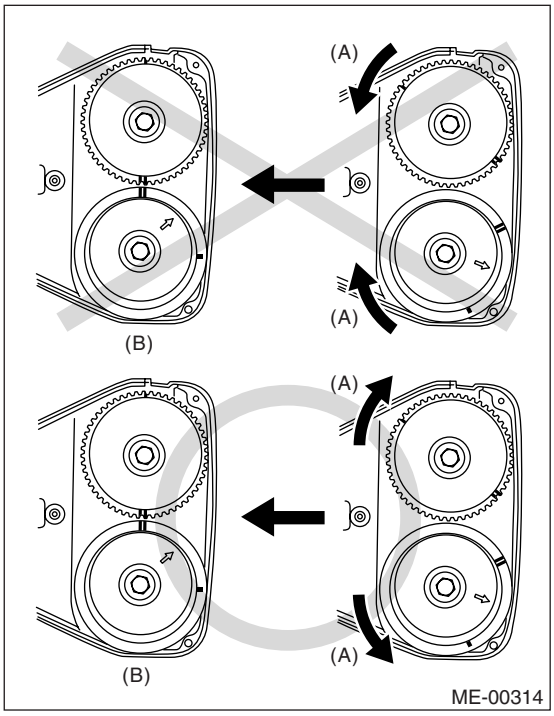

(A) Revolving direction
(B) Timing belt installation position

3) Installation of timing belt:
Align the alignment mark on the timing belt with marks on the sprockets in the alphabetical order shown in the figure. While aligning marks, position the timing belt properly.

CAUTION:
• Disengagement of more than three timing belt teeth may result in interference between valve and piston.
• Ensure the belt's rotating direction is correct.

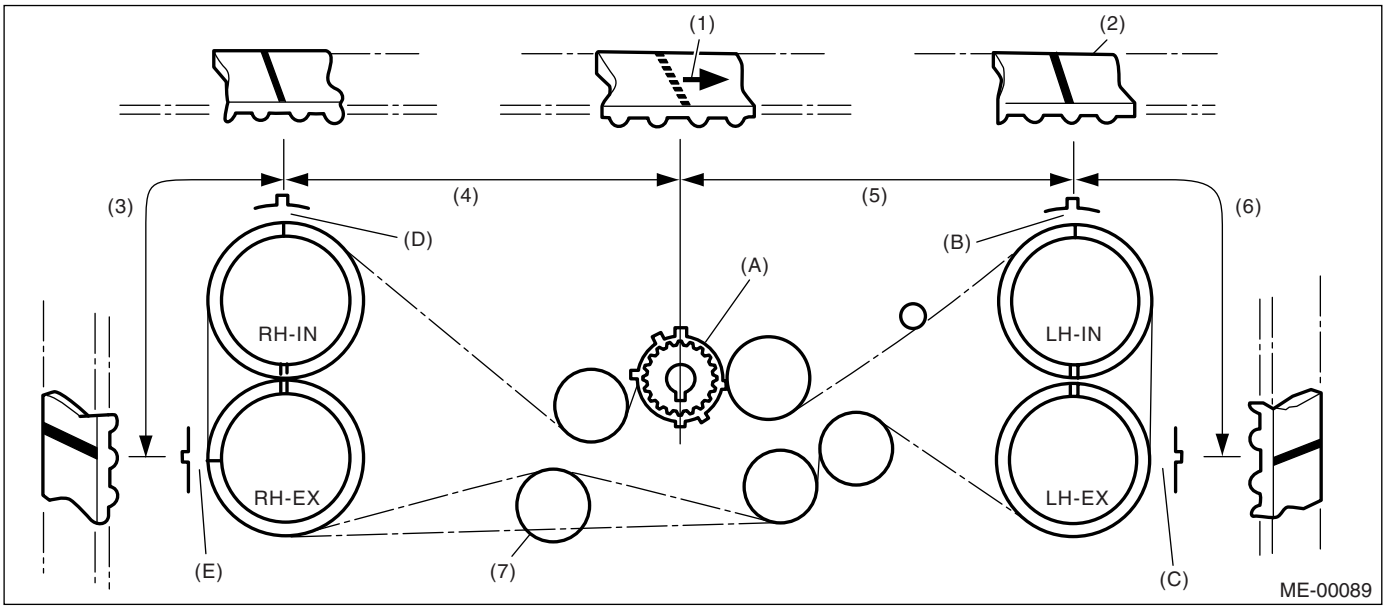

(1) Arrow mark
(2) Timing belt
(3) 28 tooth length
(4) 54.5 tooth length
(5) 51 tooth length
(6) 28 tooth length
(7) Install it in the end

4) Install the belt idlers.

Tightening torque:
39 N·m (4.0 kgf-m, 28.9 ft-lb)

NOTE:
Make sure that the marks on the timing belt and sprockets are aligned.

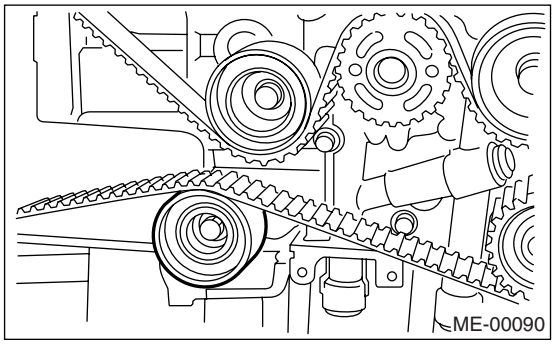

5) After ensuring that the marks on the timing belt and sprockets are aligned, remove the stopper pin from tensioner adjuster.
6) Install the timing belt guide. (Model with timing belt guide)
(1) Temporarily tighten the bolts.
(2) Check and adjust the clearance between timing belt and timing belt guide.

Clearance:
1.0±0.5 mm (0.039±0.020 in)

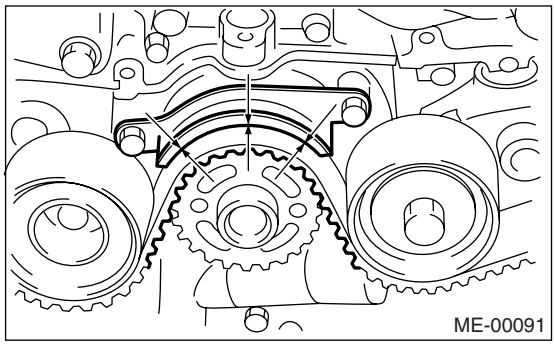
ME-00091

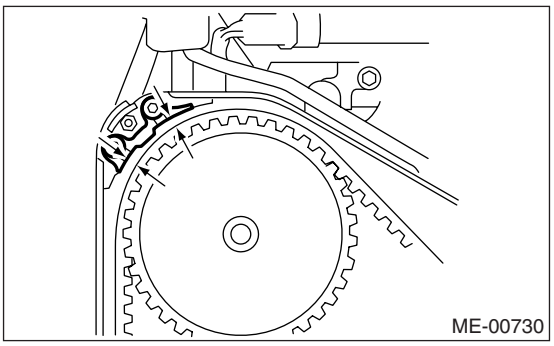
ME-00730

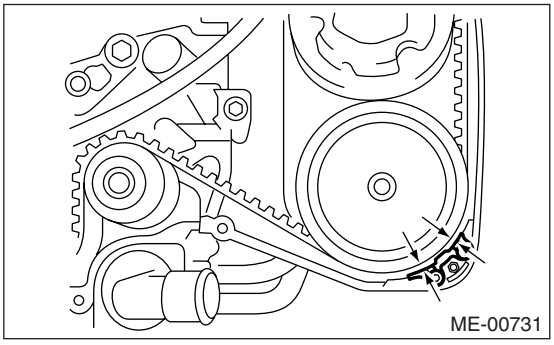
ME-00731

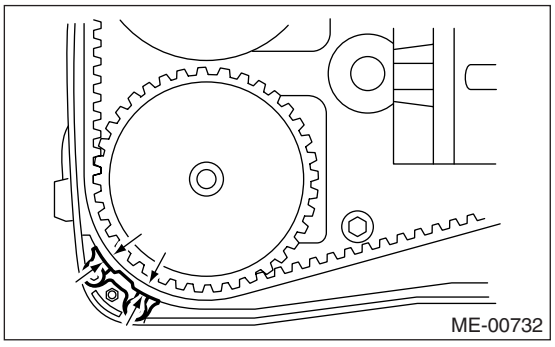
ME-00732

(3) Tighten the bolt.

Tightening torque:
10 N·m (1.0 kgf-m, 7.2 ft-lb)

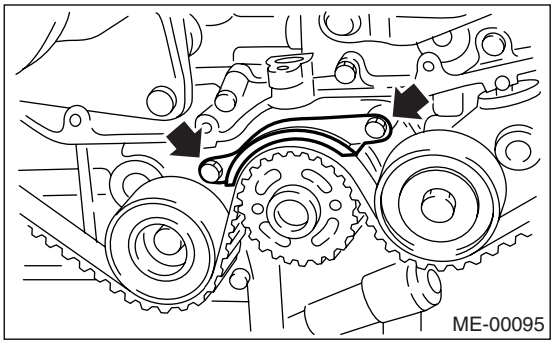
ME-00095

Tightening torque:
6.4 N·m (0.65 kgf-m, 4.7 ft-lb)

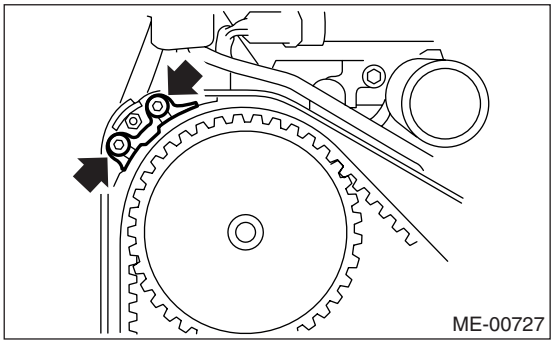
ME-00727

Tightening torque:
6.4 N·m (0.65 kgf-m, 4.7 ft-lb)

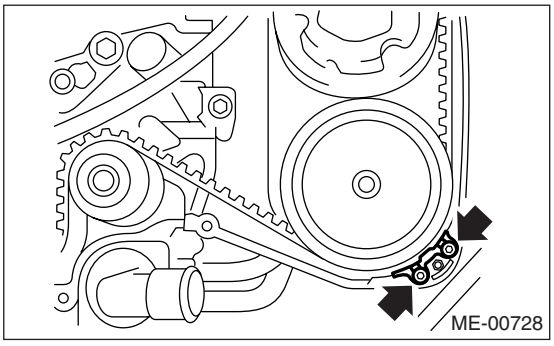
ME-00728

Tightening torque:
6.4 N·m (0.65 kgf-m, 4.7 ft-lb)

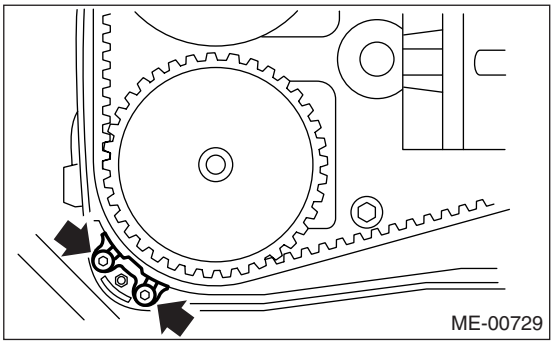
ME-00729

7) Install the timing belt cover.
<Ref. to ME(H4DOTC)-41, INSTALLATION, Timing Belt Cover.>
8) Install the crank pulley.
<Ref. to ME(H4DOTC)-39, INSTALLATION, Crank Pulley.>
9) Install the V-belts. <Ref. to ME(H4DOTC)-37, INSTALLATION, V-belt.>

C: INSPECTION

1. TIMING BELT

1) Check the timing belt teeth for breaks, cracks and wear. If any fault is found, replace the timing belt.
2) Check the condition of the backside of timing belt. If cracks are found, replace the timing belt.

CAUTION:
• Be careful not to let oil, grease or engine coolant contact the belt. Remove quickly and thoroughly if this happens.
• Do not bend the timing belt sharply.

In radial diameter h:
60 mm (2.36 in) or more

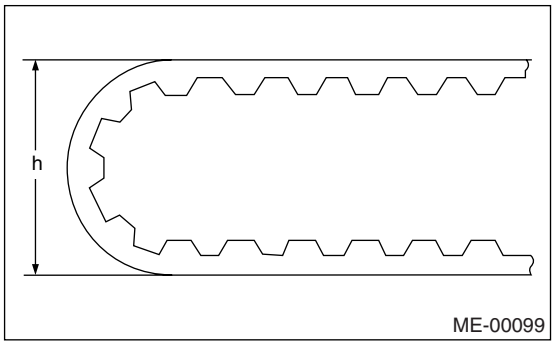

2. AUTOMATIC BELT TENSION ADJUSTER

1) Visually check the oil seals for leaks, and rod ends for abnormal wear and scratches. If necessary, replace the automatic belt tension adjuster assembly.

NOTE:
Slight trace of oil at rod's oil seal does not indicate a problem.

2) Check that the adjuster rod does not move when a pressure of 165 N (16.8 kgf, 37.1 lb) is applied to it. This is to check adjuster rod stiffness.
3) If the adjuster rod is not stiff and moves freely when applying 165 N (16.8 kgf, 37.1 lb), check it using the following procedures:
(1) Slowly press the adjuster rod down to the end surface of the cylinder. Repeat this operation two to three times.
(2) With the adjuster rod moved all the way up, apply a pressure of 165 N (16.8 kgf, 37.1 lb) to it. Check the adjuster rod stiffness.
(3) If the adjuster rod is not stiff and moves down, replace the automatic belt tension adjuster assembly with a new one.

CAUTION:
• Always use a vertical type pressing tool to move the adjuster rod down.
• Do not use a lateral type vise.
• Push the adjuster rod vertically.
• Press-in the push adjuster rod gradually taking more than three minutes.
• Do not allow press pressure to exceed 9,807 N (1,000 kgf, 2,205 lb).
• Press the adjuster rod as far as the end surface of the cylinder. Do not press the adjuster rod into cylinder. Doing so may damage the cylinder.

4) Measure the amount of rod protrusion beyond the body. If it is not within specifications, replace with a new one.

Amount of rod protrusion H:
5.7±0.5 mm (0.224±0.020 in)

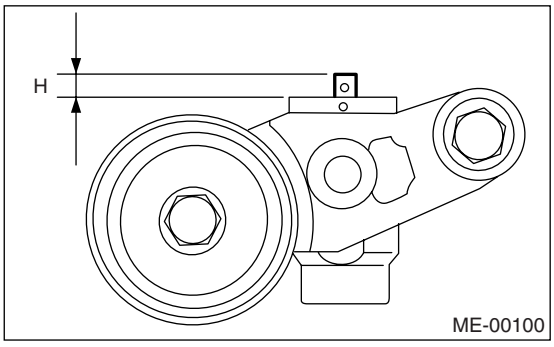

3. BELT TENSION PULLEY

1) Check the mating surfaces of timing belt and contact point of adjuster rod for abnormal wear or scratches. Replace the belt tension pulley if faulty.
2) Check the belt tension pulley for smooth rotation. Replace if noise or excessive play occurs.
3) Check the belt tension pulley for grease leakage.

4. BELT IDLER

1) Check the belt idler for smooth rotation. Replace if noise or excessive play occurs.
2) Check the outer contacting surfaces of idler pulley for abnormal wear and scratches.
3) Check the belt idler for grease leakage.

16.Cam Sprocket

A: REMOVAL

1) Remove the V-belts. <Ref. to ME(H4DOTC)-37, REMOVAL, V-belt.>
2) Remove the crank pulley.
<Ref. to ME(H4DOTC)-39, REMOVAL, Crank Pulley.>
3) Remove the timing belt cover.
<Ref. to ME(H4DOTC)-41, REMOVAL, Timing Belt Cover.>
4) Remove the timing belt.
<Ref. to ME(H4DOTC)-42, REMOVAL, Timing Belt.>
5) Remove the cam sprocket. To lock the camshaft, use ST.

ST 499207400 CAMSHAFT SPROCKET WRENCH

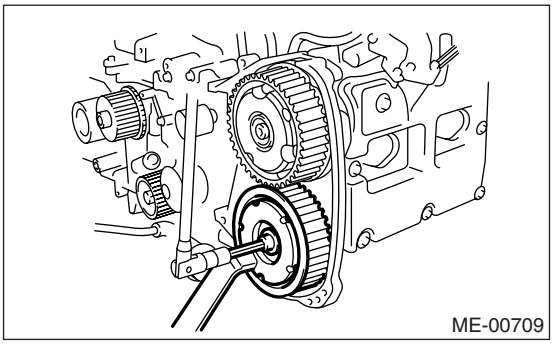

ST 499977500 CAMSHAFT SPROCKET WRENCH

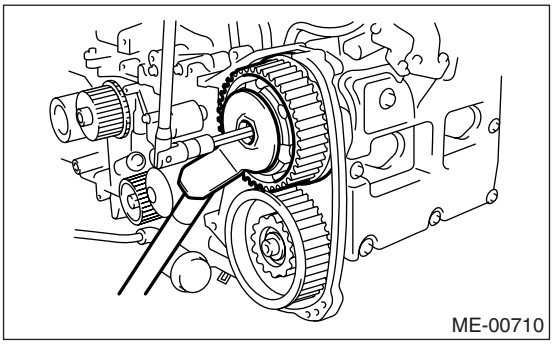

B: INSTALLATION

1) Install the cam sprocket. To lock the camshaft, use ST.

NOTE:
Do not confuse the cam sprockets (LH) and (RH) during installation.

ST 499207400 CAMSHAFT SPROCKET WRENCH

Tightening torque:
Tighten to 30 N·m (3.1 kgf-m, 22.1 ft-lb) of torque, and then tighten further by 45°

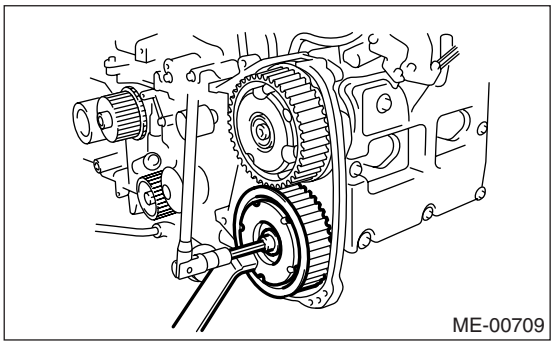

ST 499977500 CAMSHAFT SPROCKET WRENCH

Tightening torque:
Tighten to 30 N·m (3.1 kgf-m, 22.1 ft-lb) of torque, and then tighten further by 45°

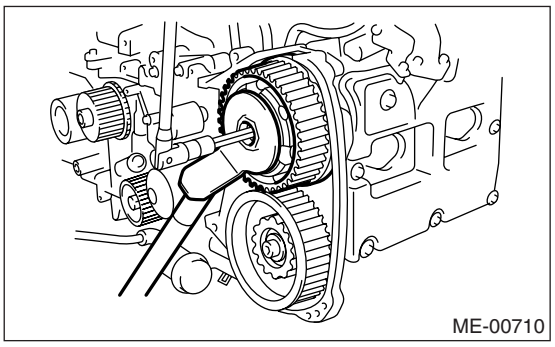

2) Install the timing belt. <Ref. to ME(H4DOTC)-43, INSTALLATION, Timing Belt.>
3) Install the timing belt cover.
<Ref. to ME(H4DOTC)-41, INSTALLATION, Timing Belt Cover.>
4) Install the crank pulley.
<Ref. to ME(H4DOTC)-39, INSTALLATION, Crank Pulley.>
5) Install the V-belts. <Ref. to ME(H4DOTC)-37, INSTALLATION, V-belt.>

C: INSPECTION

1) Check the cam sprocket teeth for abnormal wear and scratches.
2) Make sure there is no free play between cam sprocket and key.
3) Check the cam sprocket protrusion used for sensor for damage and contamination of foreign matter.

17.Crank Sprocket

A: REMOVAL

1) Remove the V-belts. <Ref. to ME(H4DOTC)-37, REMOVAL, V-belt.>
2) Remove the crank pulley.
<Ref. to ME(H4DOTC)-39, REMOVAL, Crank Pulley.>
3) Remove the timing belt cover.
<Ref. to ME(H4DOTC)-41, REMOVAL, Timing Belt Cover.>
4) Remove the timing belt.
<Ref. to ME(H4DOTC)-42, REMOVAL, Timing Belt.>
5) Remove the cam sprocket.
<Ref. to ME(H4DOTC)-50, REMOVAL, Cam Sprocket.>
6) Remove the crank sprocket.

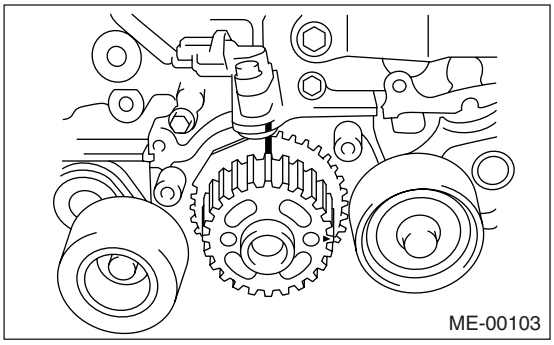

B: INSTALLATION

1) Install the crank sprocket.

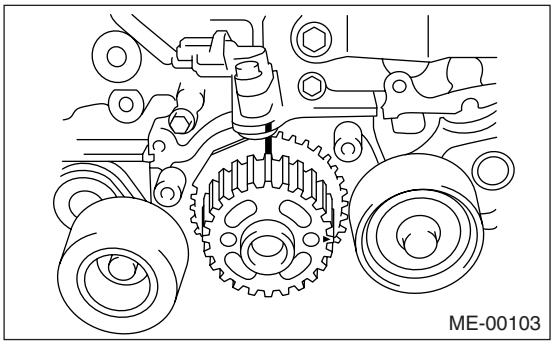

2) Install the cam sprocket.
<Ref. to ME(H4DOTC)-50, INSTALLATION, Cam Sprocket.>
3) Install the timing belt.
<Ref. to ME(H4DOTC)-43, INSTALLATION, Timing Belt.>
4) Install the timing belt cover.
<Ref. to ME(H4DOTC)-41, INSTALLATION, Timing Belt Cover.>
5) Install the crank pulley. <Ref. to ME(H4DOTC)-39, INSTALLATION, Crank Pulley.>
6) Install the V-belts. <Ref. to ME(H4DOTC)-37, INSTALLATION, V-belt.>

C: INSPECTION

1) Check the crank sprocket teeth for abnormal wear and scratches.
2) Make sure there is no free play between crank sprocket and key.
3) Check the crank sprocket protrusion used for sensor for damage and contamination of foreign matter.

18.Camshaft

A: REMOVAL

1) Remove the V-belts. <Ref. to ME(H4DOTC)-37, REMOVAL, V-belt.>
2) Remove the crank pulley. <Ref. to ME(H4DOTC)-39, REMOVAL, Crank Pulley.>
3) Remove the timing belt cover.
<Ref. to ME(H4DOTC)-41, REMOVAL, Timing Belt Cover.>
4) Remove the timing belt. <Ref. to ME(H4DOTC)-42, REMOVAL, Timing Belt.>
5) Remove the cam sprocket. <Ref. to ME(H4DOTC)-50, REMOVAL, Cam Sprocket.>
6) Remove the crank sprocket. <Ref. to ME(H4DOTC)-51, REMOVAL, Crank Sprocket.>
7) Disconnect the oil flow control solenoid valve assembly connector.

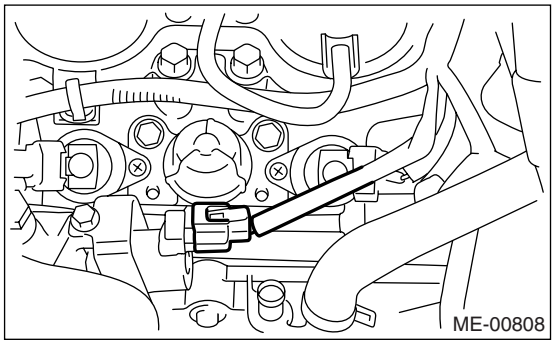
ME-00808

8) Remove the tensioner bracket.

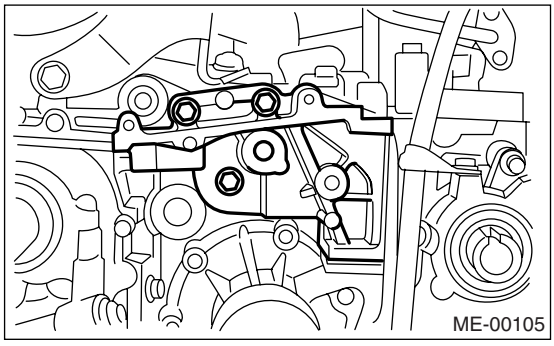
ME-00105

9) Remove the timing belt cover No. 2 (LH).

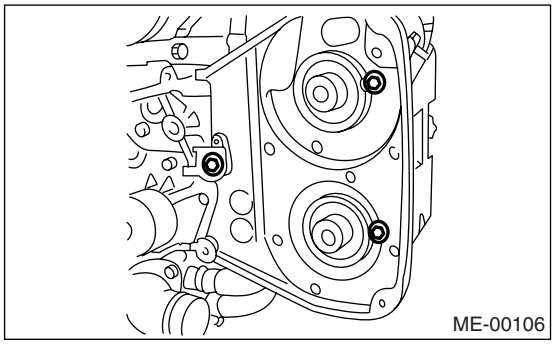
ME-00106

10) Remove the timing belt cover No. 2 (RH).

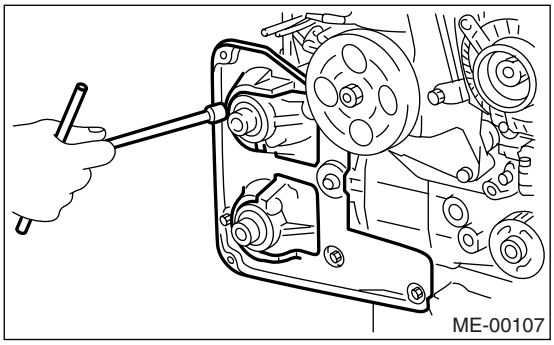
ME-00107

11) Remove the spark plug cords.
12) Remove the oil level gauge guide. (LH side)
13) Remove the rocker cover and gasket.
14) Remove the oil pipe.

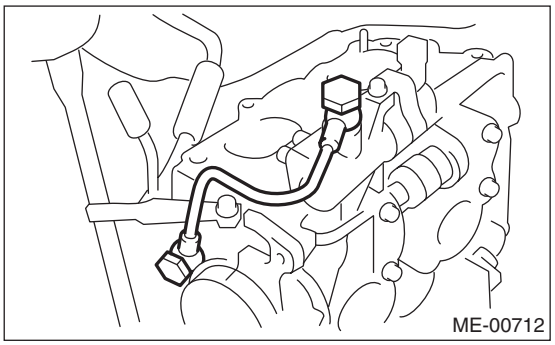
ME-00712

15) Loosen the oil flow control solenoid valve assembly and intake camshaft cap bolts equally, a little at a time in alphabetical sequence shown in the figure.

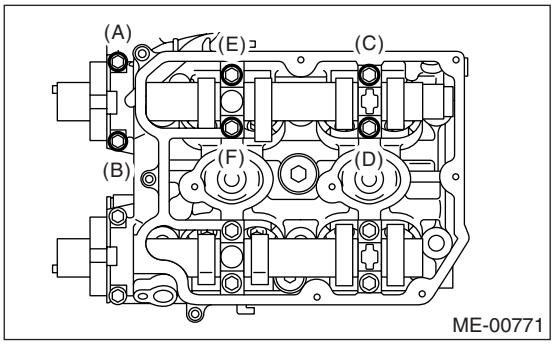

ME-00771

16) Loosen the exhaust camshaft cap bolts equally, a little at a time in alphabetical sequence shown in the figure.

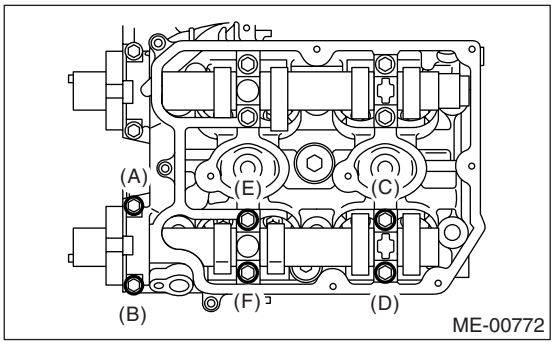

ME-00772

17) Remove the oil flow control solenoid valve assembly, intake camshaft cap and camshaft.
18) Remove the exhaust camshaft caps and camshaft.

NOTE:
Arrange camshaft caps in order so that they can be installed in their original positions.

19) Similarly, remove the camshafts (RH) and related parts.

B: INSTALLATION

1) Camshaft installation:
Apply engine oil to the cylinder head at camshaft bearing location before installing the camshaft. Install the camshaft so that each valve is close to or in contact with “base circle” of cam lobe.

NOTE:
• Position the camshafts as shown in the figure. Camshaft (LH) need to be rotated at a minimum when installing the timing belt.
• Camshaft (RH) need not be rotated when set at the position shown in the figure.
Intake camshaft (LH):
Rotate 80° clockwise.
Exhaust camshaft (LH):
Rotate 45° counterclockwise.

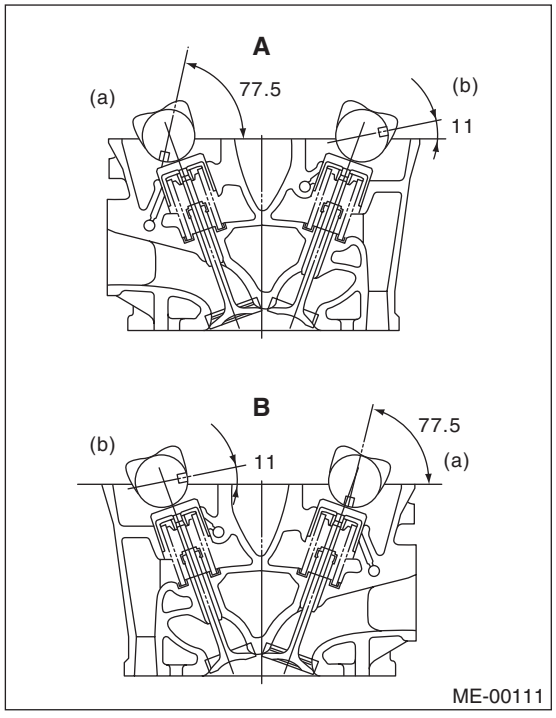

A Cylinder head (LH)
B Cylinder head (RH)
(a) Intake camshaft
(b) Exhaust camshaft

2) Camshaft cap and oil flow control solenoid valve assembly installation:
(1) Apply small amount of liquid gasket to the cap mating surface.

NOTE:
Do not apply liquid gasket excessively. Otherwise, the excessive liquid gasket may come out and flow toward oil seal, resulting in oil leaks.

Liquid gasket:
THREE BOND 1215 (Part No. 004403007) or equivalent

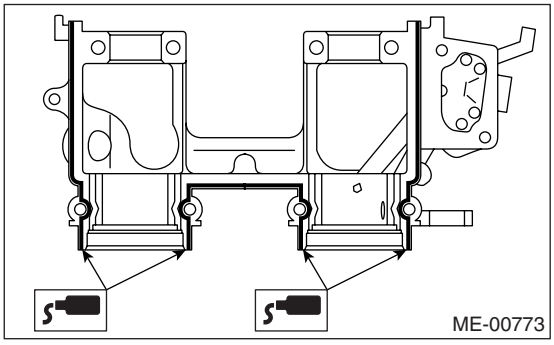

(2) Apply engine oil to the cap bearing surface, and install the cap on camshaft as shown by identification mark.
(3) Gradually tighten the camshaft cap and oil control valve assembly in at least two stages in alphabetical sequence shown in the figure, and then tighten to the specified torque.

Tightening torque:
T1: 10 N·m (1.0 kgf-m, 7.2 ft-lb)
T2: 20 N·m (2.0 kgf-m, 14.5 ft-lb)

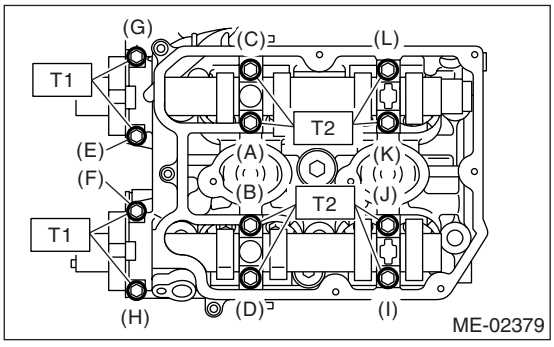

(4) After tightening the camshaft cap, ensure the camshaft rotates only slightly while holding it at “base circle”.

3) Camshaft oil seal installation:
Apply grease to the new oil seal lips and press onto the front end of camshaft by using ST1 and ST2.

NOTE:
Use a new oil seal.

ST1 499587600 OIL SEAL INSTALLER

ST2 499597200 OIL SEAL GUIDE

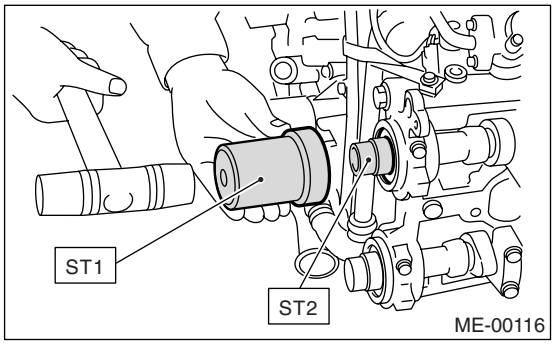

4) Rocker cover installation:
(1) Install the gasket on rocker cover. Install the peripheral gasket and ignition coil gasket.
(2) Apply liquid gasket to the designated point of cylinder head.

Liquid gasket:
THREE BOND 1215 (Part No. 004403007) or equivalent

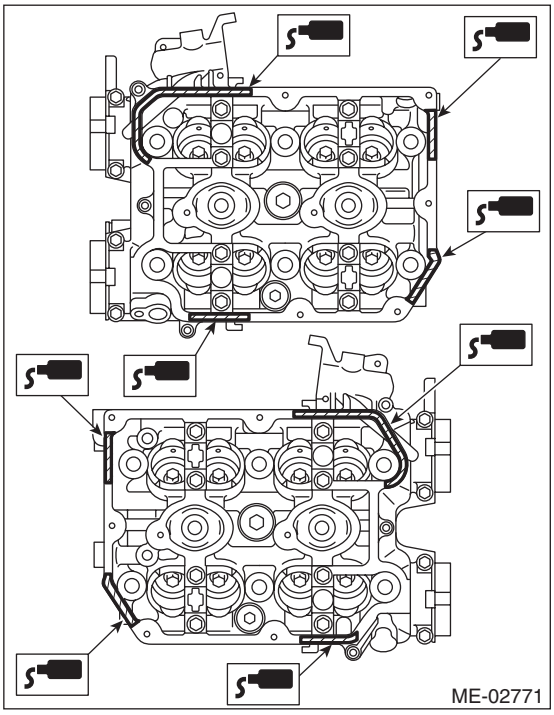

(3) Install the rocker cover on cylinder head. Ensure the gasket is properly positioned during installation.
(4) Tighten the rocker cover tightening bolt in alphabetical sequence shown in the figure, and then tighten to the specified torque.

Tightening torque:
6.4 N·m (0.65 kgf-m, 4.7 ft-lb)

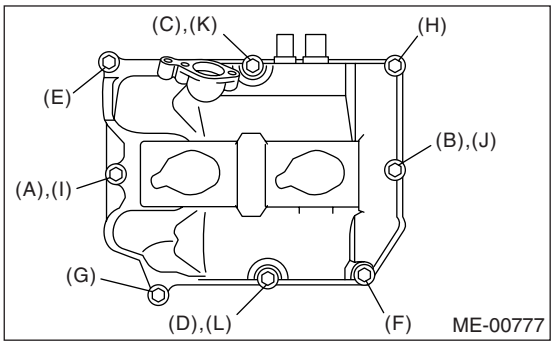

5) Install the oil pipe.

Tightening torque:
29 N·m (3.0 kgf-m, 21.4 ft-lb)

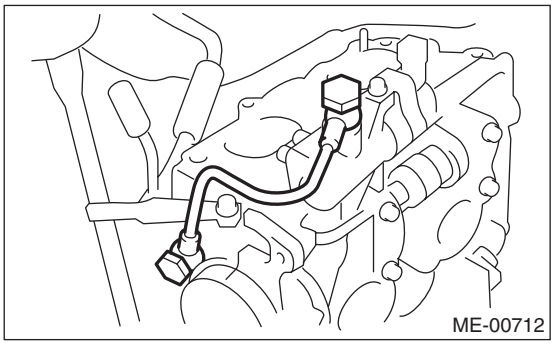

6) Connect the oil flow control solenoid valve connector.

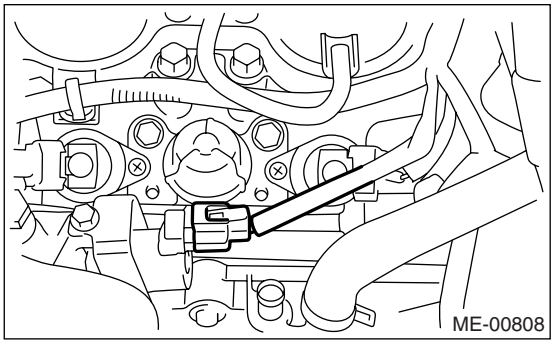

7) Install the spark plug cord.
8) Similarly, install the parts on right-hand side.
9) Install the timing belt cover No. 2 (RH).

Tightening torque:
5 N·m (0.5 kgf-m, 3.6 ft-lb)

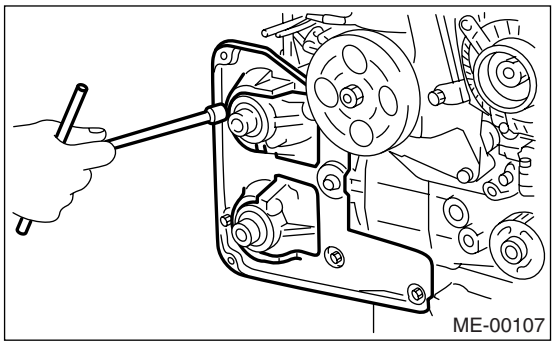

10) Install the timing belt cover No. 2 (LH).

Tightening torque:
5 N·m (0.5 kgf-m, 3.6 ft-lb)

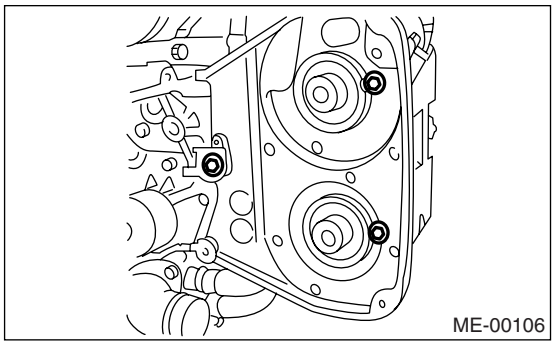

11) Install the tensioner bracket.

Tightening torque:
25 N·m (2.5 kgf-m, 18.1 ft-lb)

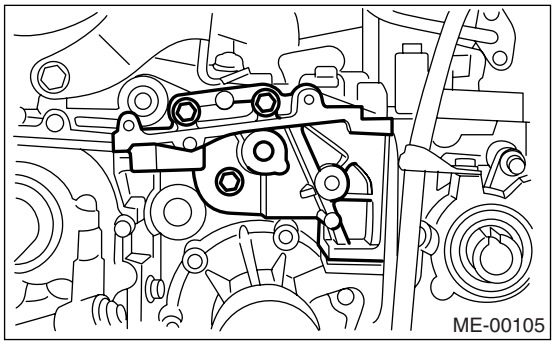

12) Install the crank sprocket.
<Ref. to ME(H4DOTC)-51, INSTALLATION, Crank Sprocket.>
13) Install the cam sprocket.
<Ref. to ME(H4DOTC)-50, INSTALLATION, Cam Sprocket.>
14) Install the timing belt. <Ref. to ME(H4DOTC)-43, INSTALLATION, Timing Belt.>
15) Install the timing belt cover.
<Ref. to ME(H4DOTC)-41, INSTALLATION, Timing Belt Cover.>
16) Install the crank pulley.
<Ref. to ME(H4DOTC)-39, INSTALLATION, Crank Pulley.>
17) Install the V-belts. <Ref. to ME(H4DOTC)-37, INSTALLATION, V-belt.>

C: INSPECTION

1) Measure the bend, and repair or replace if necessary.

Service limit:
0.020 mm (0.00079 in)

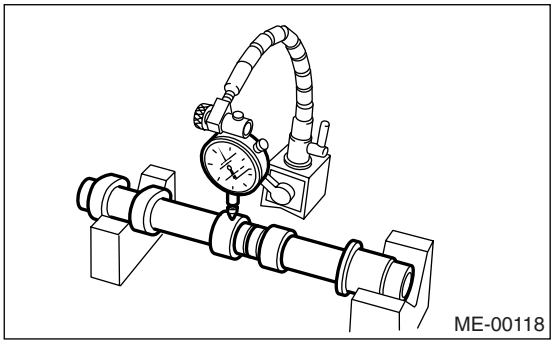

2) Check the journal for damage and wear. Replace if faulty.
3) Measure the outside diameter of camshaft journal. If the journal diameter is not within specification, check the oil clearance.

	Camshaft journal	
	Front	Center, rear
Standard value mm (in)	37.946 — 37.963 (1.4939 — 1.4946)	29.946 — 29.963 (1.1790 — 1.1796)

4) Measurement of the camshaft journal oil clearance:
(1) Clean the bearing caps and camshaft journals.
(2) Place the camshafts on cylinder head.
(3) Place a plastigauge across each of the camshaft journals.
(4) Gradually tighten the cap in at least two stages in alphabetical sequence shown in the figure, and then tighten to the specified torque. Do not turn the camshaft.

Tightening torque:
T1: 10 N·m (1.0 kgf-m, 7.2 ft-lb)
T2: 20 N·m (2.0 kgf-m, 14.5 ft-lb)

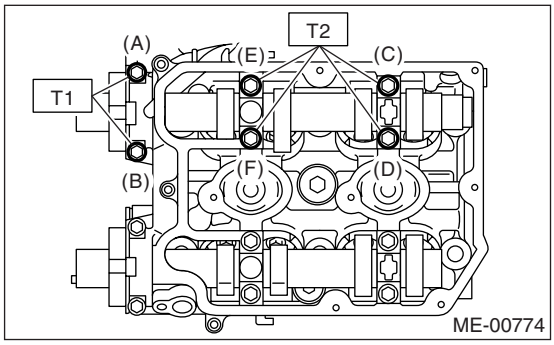

(5) Remove the bearing caps.
(6) Measure the widest point of the plastigauge on each journal. If oil clearance exceeds the limit, replace the camshaft. If necessary, replace the camshaft caps and cylinder head as a set.

Standard:
0.037 — 0.072 mm (0.0015 — 0.0028 in)

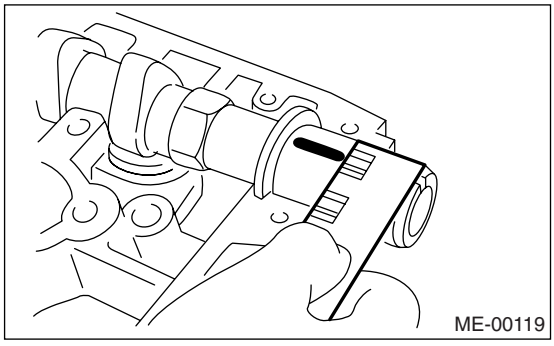

(7) Completely remove the plastigauge.

5) Check the cam face condition, and remove the minor faults by grinding with oil stone. Measure the cam height H. If it exceeds the limit or has partial wear, replace it.

Cam height H:

Standard
Intake
46.55 — 46.65 mm (1.833 — 1.837 in)
Exhaust
46.75 — 46.85 mm (1.841 — 1.844 in)

Cam base circle diameter A:
37.0 mm (1.457 in)

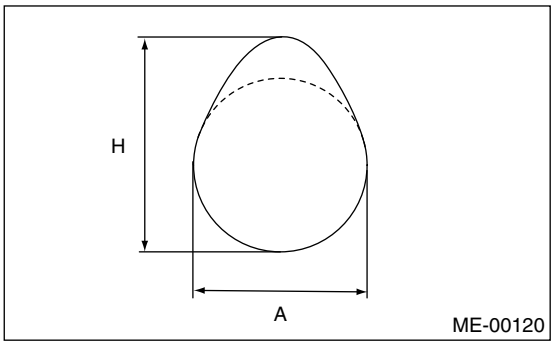

6) Measure the side clearance of camshaft with dial gauge. If the clearance exceeds the limit or has partial wear, replace the caps and cylinder head as a set. If necessary, replace the camshaft.

Standard:
0.068 — 0.116 mm (0.0027 — 0.0047 in)

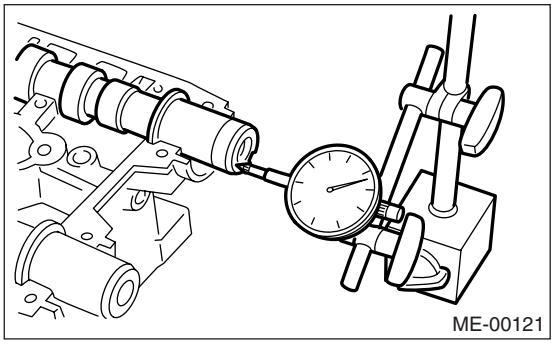

19.Cylinder Head

A: REMOVAL

1) Remove the V-belts. <Ref. to ME(H4DOTC)-37, REMOVAL, V-belt.>
2) Remove the crank pulley.
<Ref. to ME(H4DOTC)-39, REMOVAL, Crank Pulley.>
3) Remove the timing belt cover.
<Ref. to ME(H4DOTC)-41, REMOVAL, Timing Belt Cover.>
4) Remove the timing belt.
<Ref. to ME(H4DOTC)-42, REMOVAL, Timing Belt.>
5) Remove the cam sprocket.
<Ref. to ME(H4DOTC)-50, REMOVAL, Cam Sprocket.>
6) Remove the intake manifold.
<Ref. to FU(H4DOTC)-12, REMOVAL, Intake Manifold.>
7) Remove the bolt which installs the A/C compressor bracket on cylinder head.
8) Remove the camshaft. <Ref. to ME(H4DOTC)-52, REMOVAL, Camshaft.>
9) Remove the cylinder head bolts in alphabetical sequence shown in the figure.
Leave the bolts (A) and (D) engaged by three or four threads to prevent the cylinder head from falling.

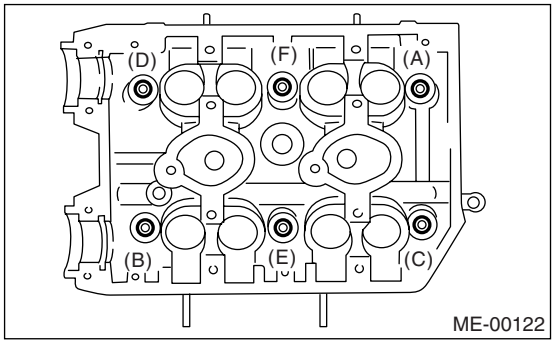

10) While tapping the cylinder head with a plastic hammer, separate it from cylinder block.
Remove the bolts (A) and (D) to remove cylinder head.

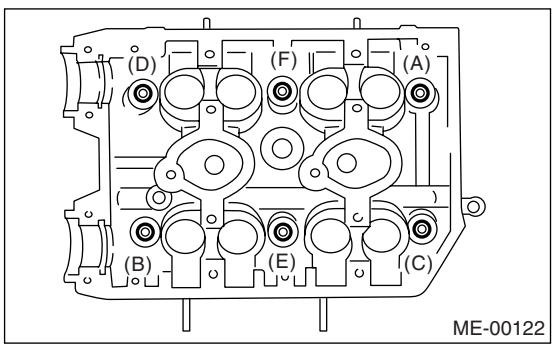

11) Remove the cylinder head gasket.

CAUTION:
Be careful not to scratch the mating surface of cylinder head and cylinder block.

12) Similarly, remove the cylinder head (RH).

B: INSTALLATION

1) Install the cylinder head to the cylinder block.

CAUTION:
Be careful not to scratch the mating surface of cylinder head and cylinder block.

NOTE:
Use a new cylinder head gasket.

(1) Clean the bolt threads and the bolt holes in the cylinder block.

CAUTION:
To avoid erroneous tightening of the bolts, clean out the bolt holes sufficiently by blowing with compressed air to eliminate engine coolant etc.

(2) Apply a sufficient coat of engine oil to the washer and bolt thread.
(3) Tighten all bolts to 40 N·m (4.1 kgf-m, 29.5 ft-lb) in alphabetical order.
(4) Retighten all bolts to 95 N·m (9.7 kgf-m, 70.1 ft-lb) in alphabetical order.

CAUTION:
If the bolt makes stick-slip sound during tightening, repeat the procedure from step (1). In this case, the cylinder head gasket can be reused.

(5) Loosen all the bolts by 180° in the reverse order of installing, and loosen them further by 180°.
(6) Tighten all bolts to 10 N·m (1.0 kgf-m, 7.4 ft-lb) in alphabetical order.
(7) Retighten all bolts to 30 N·m (3.1 kgf-m, 22.1 ft-lb) in alphabetical order.
(8) Retighten all bolts to 70 N·m (7.1 kgf-m, 51.6 ft-lb) in alphabetical order.
(9) Retighten all bolts by 80 — 90° in alphabetical order.
(10) Retighten all bolts by 40 — 45° in alphabetical order.

CAUTION:
The tightening angle of the bolt should not exceed 45°.

(11) Retighten bolts (A) and (B) by 40 — 45°.

CAUTION:
Make sure the total "tightening angle" of steps (10) and (11) does not exceed 90°.

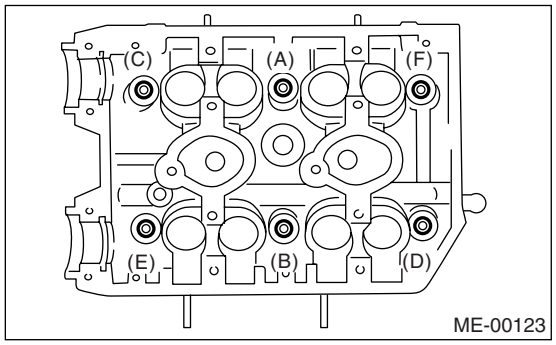

2) Install the camshaft. <Ref. to ME(H4DOTC)-53, INSTALLATION, Camshaft.>
3) Install the A/C compressor bracket on cylinder head.
4) Install the intake manifold.
<Ref. to FU(H4DOTC)-14, INSTALLATION, Intake Manifold.>
5) Install the cam sprocket.
<Ref. to ME(H4DOTC)-50, INSTALLATION, Cam Sprocket.>
6) Install the timing belt.
<Ref. to ME(H4DOTC)-43, INSTALLATION, Timing Belt.>
7) Install the timing belt cover.
<Ref. to ME(H4DOTC)-41, INSTALLATION, Timing Belt Cover.>
8) Install the crank pulley.
<Ref. to ME(H4DOTC)-39, INSTALLATION, Crank Pulley.>
9) Install the V-belts. <Ref. to ME(H4DOTC)-37, INSTALLATION, V-belt.>

C: DISASSEMBLY

1) Remove the valve lifter.
2) Compress the valve spring and remove the valve spring retainer key. Remove each valve and valve spring.

ST1 498267600 CYLINDER HEAD TABLE
ST2 499718000 VALVE SPRING REMOVER

NOTE:
Keep all the removed parts in order for re-installing in their original positions.

CAUTION:
- **Mark each valve to prevent confusion.**
- **Use extreme care not to damage the lips of the intake valve oil seals and exhaust valve oil seals.**

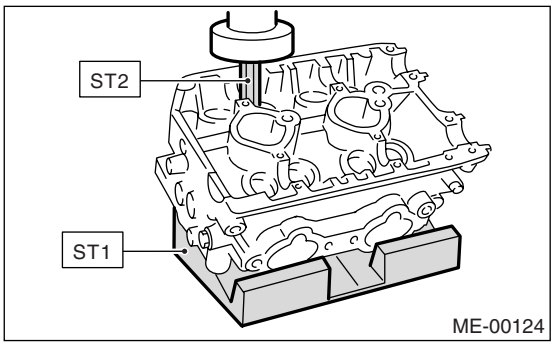

D: ASSEMBLY

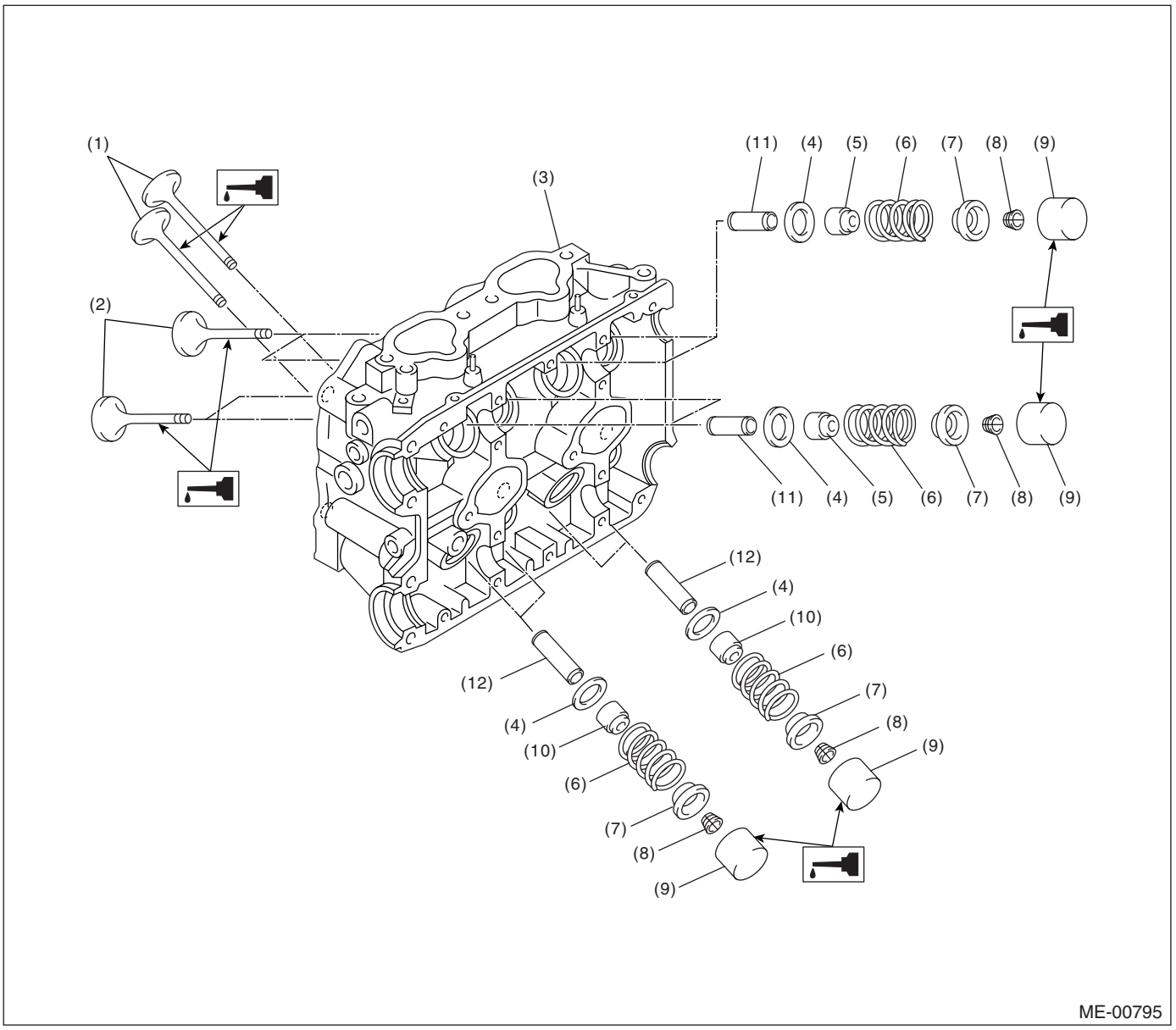

(1)	Exhaust valve	(5)	Intake valve oil seal	(9)	Valve lifter
(2)	Intake valve	(6)	Valve spring	(10)	Exhaust valve oil seal
(3)	Cylinder head	(7)	Retainer	(11)	Intake valve guide
(4)	Valve spring seat	(8)	Retainer key	(12)	Exhaust valve guide

1) Installation of valve spring and valve:
   (1) Coat the stem of each valve with engine oil and insert the valve into valve guide.

NOTE:
When inserting the valve into valve guide, use special care not to damage the oil seal lip.

   (2) Set the cylinder head on ST1.
   (3) Install the valve spring and retainer using ST2.

ST1 498267600 CYLINDER HEAD TABLE
ST2 499718000 VALVE SPRING REMOVER

NOTE:
Be sure to install the valve spring with their close-coiled end facing the seat on the cylinder head.

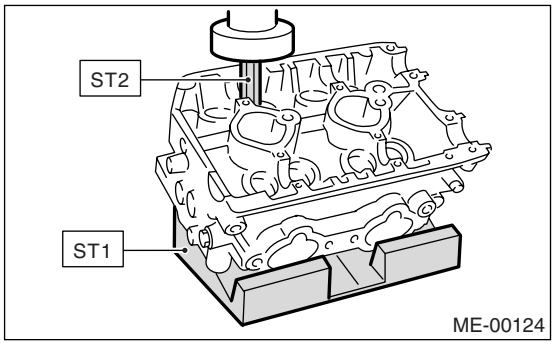

(4) Compress the valve spring and fit the valve spring retainer key.
(5) After installing, tap the valve spring retainers lightly with a wooden hammer for better seating.

2) Apply oil to the surfaces of the valve lifter.
3) Install the valve lifter.

E: INSPECTION

1. CYLINDER HEAD

1) Make sure that cracks or other damages do not exist. In addition to visual inspection, inspect important areas using liquid penetrant tester.
2) Measure the warping of the cylinder head surface that mates with crankcase using a straight edge (A) and thickness gauge (B).
If the warping exceeds the limit, regrind the surface with a surface grinder.

Warping limit:
0.035 mm (0.0014 in)

Grinding limit:
0.3 mm (0.012 in)

Standard height of cylinder head:
127.5 mm (5.02 in)

NOTE:
Uneven torque for the cylinder head nuts can cause warping. When reinstalling, pay special attention to the torque so as to tighten evenly.

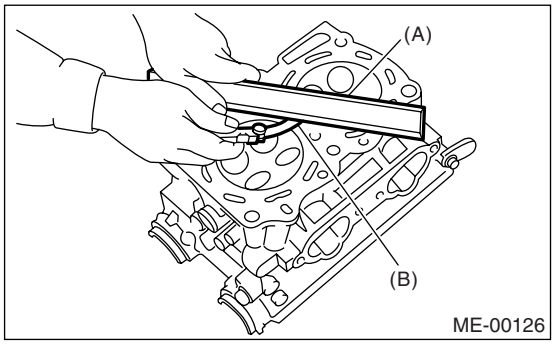

2. VALVE SEAT

Inspect the intake and exhaust valve seats, and correct the contact surfaces with a valve seat cutter if they are defective or when valve guides are replaced.

Valve seat width W:

Intake
Standard
0.6 — 1.4 mm (0.024 — 0.055 in)

Exhaust
Standard
1.2 — 1.8 mm (0.047 — 0.071 in)

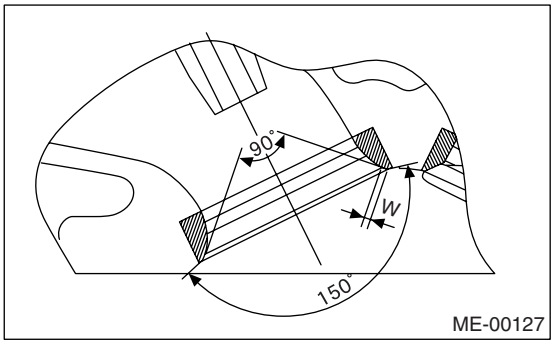

3. VALVE GUIDE

1) Check the clearance between valve guide and stem. The clearance can be checked by measuring the outer diameter of valve stem and inner diameter of valve guide respectively with a micrometer.

Clearance between the valve guide and valve stem:

Standard
Intake
0.030 — 0.057 mm (0.0012 — 0.0022 in)
Exhaust
0.040 — 0.067 mm (0.0016 — 0.0026 in)

2) If the clearance between valve guide and stem exceeds the standard value, replace the valve guide or valve itself whichever shows greater amount of wear or has abnormality such as scratch. See the following procedure for valve guide replacement.

Valve guide inner diameter:
6.000 — 6.012 mm (0.2362 — 0.2367 in)

Valve stem outer diameters:
Intake
5.955 — 5.970 mm (0.2344 — 0.2350 in)
Exhaust
5.945 — 5.960 mm (0.2341 — 0.2346 in)

(1) Place the cylinder head on ST1 with the combustion chamber upward so that valve guides fit the holes in ST1.

(2) Insert the ST2 into valve guide and press it down to remove the valve guide.

ST1 498267600 CYLINDER HEAD TABLE
ST2 499767200 VALVE GUIDE REMOVER

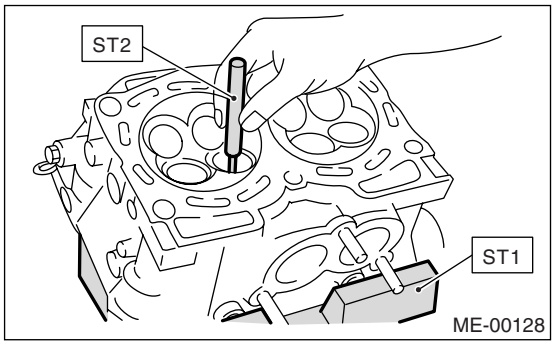

(3) Turn the cylinder head upside down and place the ST as shown in the figure.

ST 18251AA020 VALVE GUIDE ADJUSTER

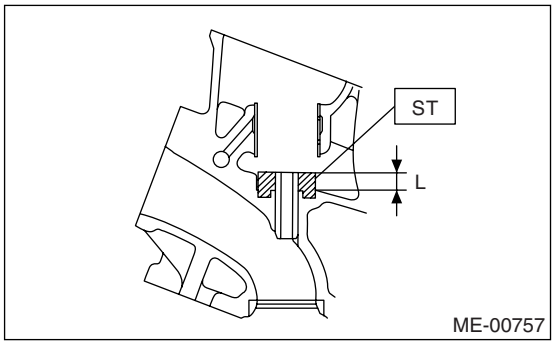

(4) Before installing a new valve guide, make sure that neither scratches nor damages exist on the inside surface of the valve guide holes in cylinder head.

(5) Put a new valve guide, coated with sufficient oil, in cylinder, and insert the ST1 into valve guide. Press-in until the valve guide upper end is flush with the upper surface of ST2.

ST1 499767200 VALVE GUIDE REMOVER
ST2 18251AA020 VALVE GUIDE ADJUSTER

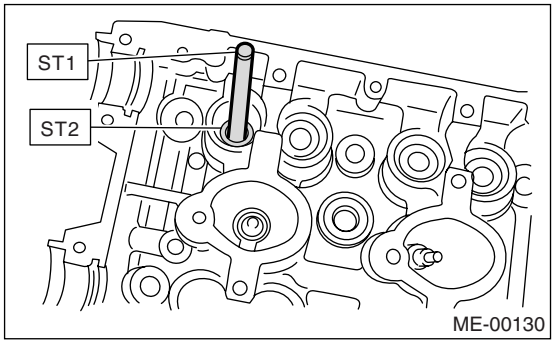

(6) Check the valve guide protrusion.

Valve guide protrusion L:
15.8 — 16.2 mm (0.622 — 0.638 in)

(7) Ream the inside of valve guide using ST. Put the reamer in valve guide, and rotate the reamer slowly clockwise pushing it lightly. Bring the reamer back while rotating it clockwise. After reaming, clean the valve guide to remove chips.

ST 499767400 VALVE GUIDE REAMER

NOTE:
- Apply engine oil to the reamer when reaming.
- If the inner surface of the valve guide is torn, the edge of the reamer should be slightly ground with an oil stone.
- If the inner surface of the valve guide becomes lustrous and the reamer does not chip, use a new reamer or remedy the reamer.

(8) Recheck the contact condition between valve and valve seat after replacing the valve guide.

4. INTAKE AND EXHAUST VALVE

1) Inspect the flange and stem of valve, and replace them if damaged, worn, deformed or if “H” is exceed the standard value or if they have partial wear.

H:
Standard (Intake)
1.0 — 1.4 mm (0.039 — 0.055 in)
Standard (Exhaust)
1.3 — 1.7 mm (0.051 — 0.067 in)

Valve overall length:
Intake
104.4 mm (4.110 in)
Exhaust
104.65 mm (4.1201 in)

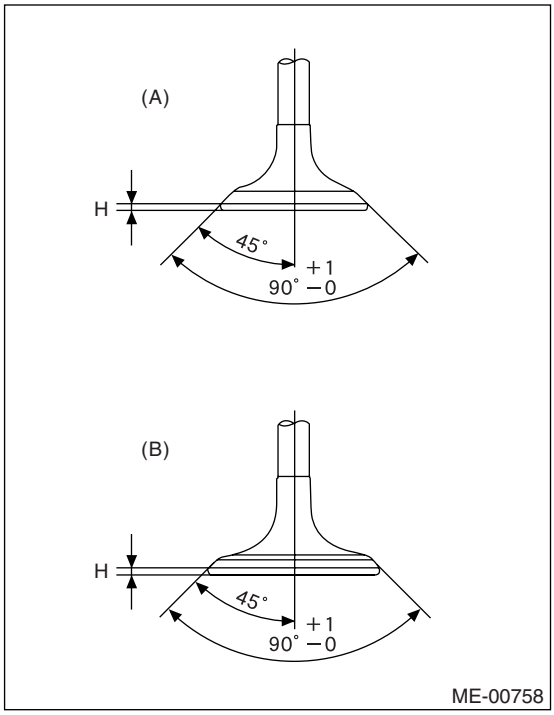

(A) Intake
(B) Exhaust

2) Put a small amount of grinding compound on the seat surface, and lap the valve and seat surface. Install a new intake valve oil seal after lapping.

5. VALVE SPRINGS

1) Check the valve springs for damage, free length, and tension. Replace the valve spring if it is not within the standard value presented in the table.
2) To measure the squareness of the valve spring, stand the spring on a surface plate and measure its deflection at the top of spring using a try square.

Free length mm (in)		47.32 (1.863)
Tension/spring height N (kgf, lb)/mm (in)	Set	205 — 235 (20.9 — 24.0, 46.1 — 52.8)/36.0 (1.417)
	Lift	426 — 490 (43.4 — 50.0, 95.8 — 110)/26.50 (1.041)
Squareness		2.5°, 2.1 mm (0.083 in)

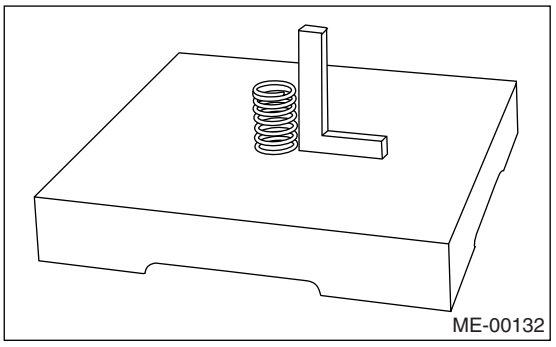

6. INTAKE AND EXHAUST VALVE OIL SEAL

In the following case, pinch and remove the oil seal from valve using pliers, and then replace it with a new one.
- When the lip is damaged.
- When the spring is out of the specified position.
- When readjusting the surfaces of valve and valve sheet.
- When replacing the valve guide.

1) Place the cylinder head on ST1.
2) Using ST2, press-fit the oil seal.

NOTE:
- Apply engine oil to oil seal before press-fitting.
- When press-fitting the oil seal, do not use a hammer or strike in.

ST1 498267600 CYLINDER HEAD TABLE
ST2 498857100 VALVE OIL SEAL GUIDE

CAUTION:
Differentiate between the intake valve oil seal and exhaust valve oil seal by noting their difference in color.

Color of rubber part:
Intake [Gray]
Exhaust [Green]

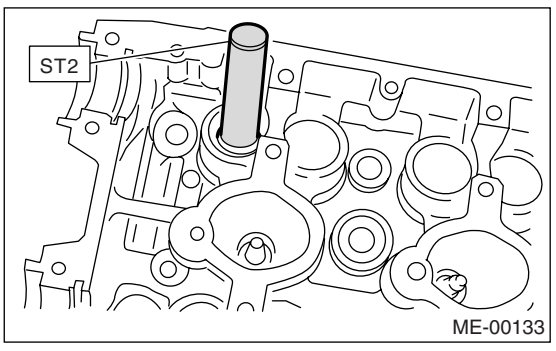

7. VALVE LIFTER

1) Check the valve lifter visually.
2) Measure the outer diameter of valve lifter.

Outer diameter:
34.959 — 34.975 mm (1.3763 — 1.3770 in)

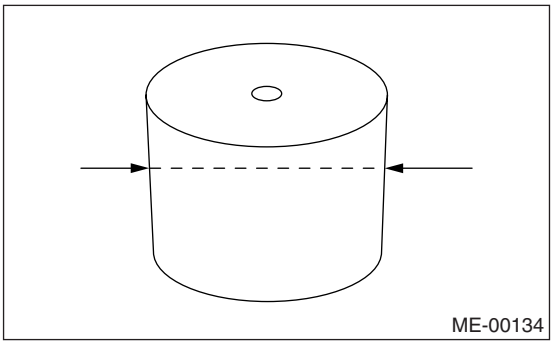

3) Measure the inner diameter of valve lifter mating part on cylinder head.

Inner diameter:
34.994 — 35.016 mm (1.3777 — 1.3786 in)

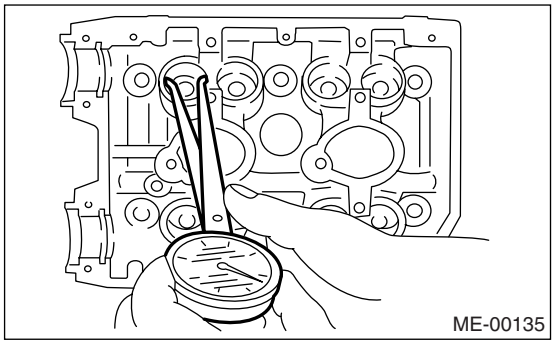

NOTE:
If difference between outer diameter of valve lifter and inner diameter of valve lifter mating part is over the standard or has partial wear in inner surface, replace the cylinder head.

Standard:
0.019 — 0.057 mm (0.0007 — 0.0022 in)

F: DISPOSAL

CAUTION:
• Metallic sodium is enclosed in the exhaust valve. Metallic sodium is extremely alkaline and may produce severe chemical reactions. Full consideration must therefore be given to the following points when handling or disposing of the valve.
• Since metallic sodium may cause blindness if contacted with the eyes, burns if contacted with the skin, and fire, do not deliberately take the valve apart.

1) If the valve is damaged, remove the valve and neutralize it by immersing it in water, and dispose of it in the same way that general steel materials are disposed of. The disposal method is described in the following.
(1) Wearing rubber gloves, remove the damaged valve from the cylinder head.
(2) Prepare a large receptacle (bucket or other container) in a well ventilated location, and fill the receptacle with water (at least 10 liters).
(3) Immerse the damaged valve in the receptacle.

CAUTION:
A severe reaction may occur, so stand at least 2 — 3 m from the receptacle. Because the reaction will produce hydrogen gas, moreover, keep the receptacle away from sparks or flames.

(4) Once the reaction is completed (about 4 — 5 hours have elapsed), carefully remove the valve using large pincers so that the reaction liquid does not contact your skin, and dispose of it with other parts that are being disposed of.
(5) The reaction liquid is a strong alkaline solution, so it must be disposed of in accordance with local regulations.

CAUTION:
Make sure the reaction liquid does not contact your skin. If contact with skin occurs, immediately wash the affected area with large quantities of water.

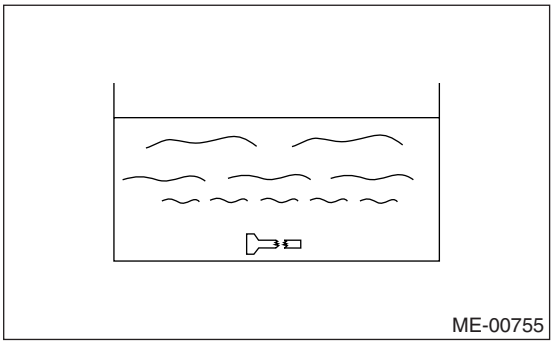

20.Cylinder Block

A: REMOVAL

NOTE:
Before conducting this procedure, drain engine oil completely.

1) Remove the intake manifold.
<Ref. to FU(H4DOTC)-12, REMOVAL, Intake Manifold.>
2) Remove the V-belts. <Ref. to ME(H4DOTC)-37, REMOVAL, V-belt.>
3) Remove the crank pulley.
<Ref. to ME(H4DOTC)-39, REMOVAL, Crank Pulley.>
4) Remove the timing belt cover.
<Ref. to ME(H4DOTC)-41, REMOVAL, Timing Belt Cover.>
5) Remove the timing belt.
<Ref. to ME(H4DOTC)-42, REMOVAL, Timing Belt.>
6) Remove the cam sprocket.
<Ref. to ME(H4DOTC)-50, REMOVAL, Cam Sprocket.>
7) Remove the crank sprocket.
<Ref. to ME(H4DOTC)-51, REMOVAL, Crank Sprocket.>
8) Remove the generator and A/C compressor with their brackets.
9) Remove the cylinder head.
<Ref. to ME(H4DOTC)-57, REMOVAL, Cylinder Head.>
10) Remove the clutch disc and cover. <Ref. to CL-9, REMOVAL, Clutch Disc and Cover.>
11) Remove the flywheel. (MT model) <Ref. to CL-12, REMOVAL, Flywheel.>
12) Remove the drive plate. (AT model) <Ref. to 5AT-68, REMOVAL, Drive Plate.>
13) Remove the oil separator cover.
14) Remove the water by-pass pipe for heater.
15) Remove the water pump.
16) Remove the oil filter. <Ref. to LU(H4DOTC)-24, REMOVAL, Engine Oil Filter.>
17) Remove the oil cooler.

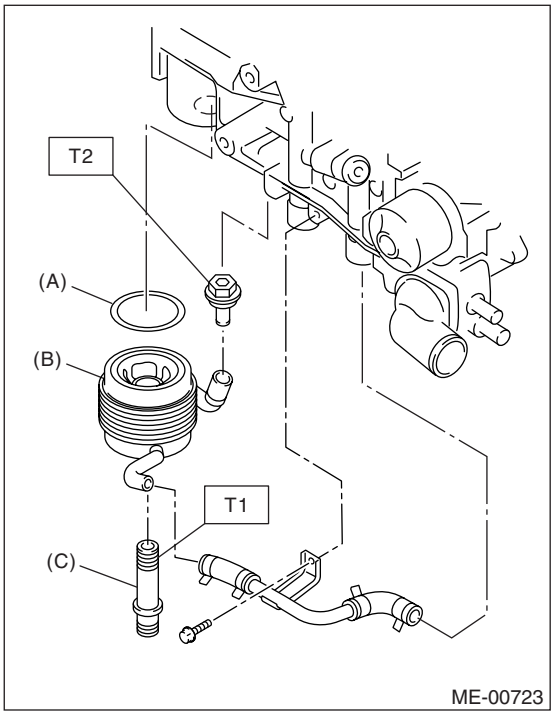

(A) O-ring
(B) Oil cooler
(C) Oil cooler connector

18) Remove the bolts which secure oil pump to cylinder block.
19) Remove the oil pump by using flat tip screwdriver.

CAUTION:
Be careful not to scratch the mating surface of cylinder block and oil pump.

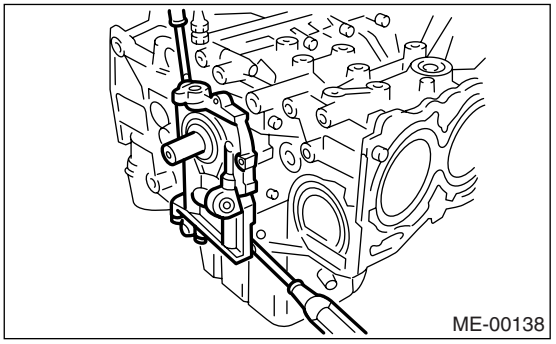

20) Removal of oil pan:
(1) Place the cylinder block to face the #2 and #4 cylinder side upward.
(2) Remove the bolts which secure oil pan to cylinder block.
(3) Insert a oil pan cutter blade between cylinder block-to-oil pan clearance and remove the oil pan. Do not use a screwdriver or similar tools in place of oil pan cutter.
21) Remove the oil strainer stay.

22) Remove the oil strainer.
23) Remove the baffle plate.
24) Remove the water pipe.

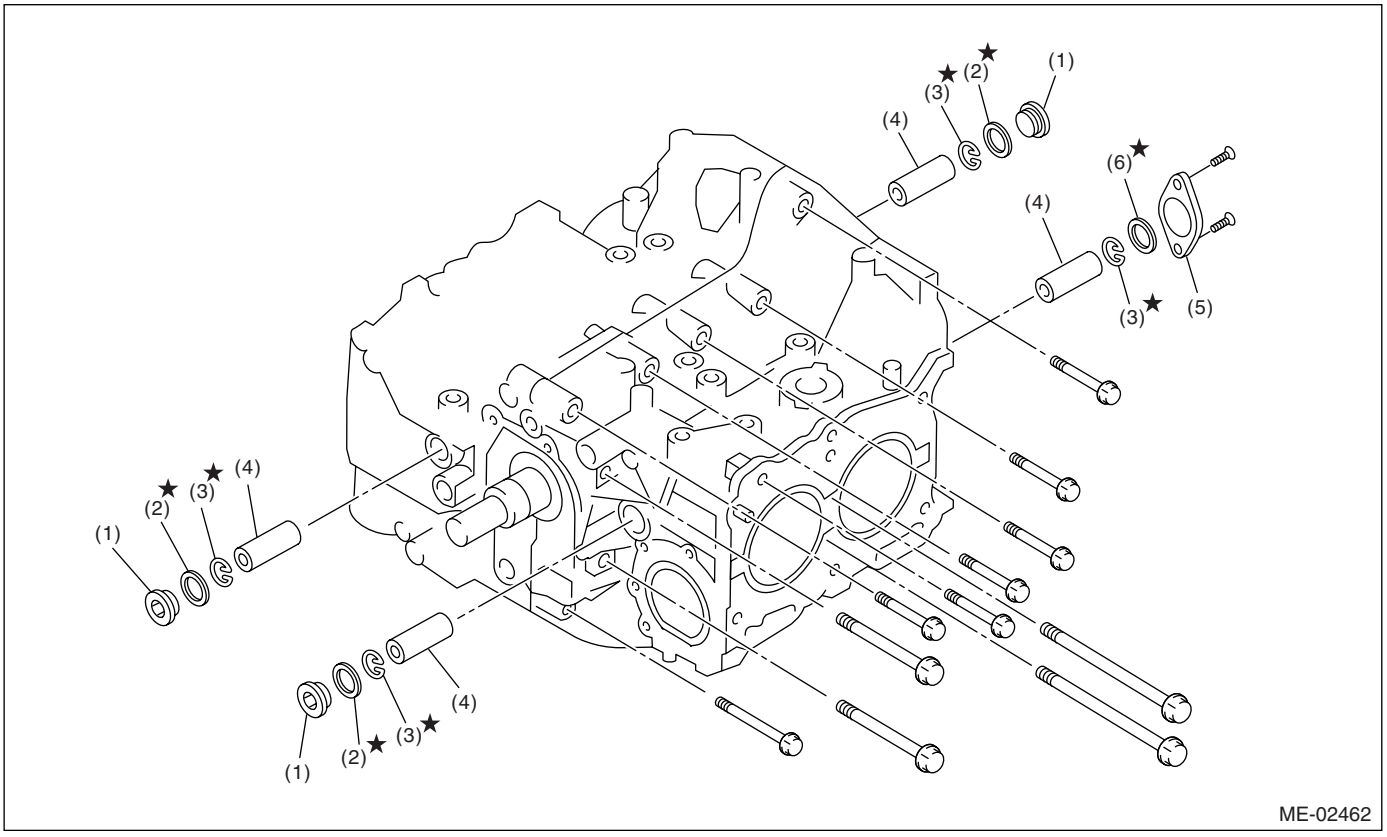

(1) Service hole plug
(2) Gasket
(3) Snap ring
(4) Piston pin
(5) Service hole cover
(6) O-ring

25) Remove the service hole cover and service hole plugs using a hexagon wrench [14 mm].

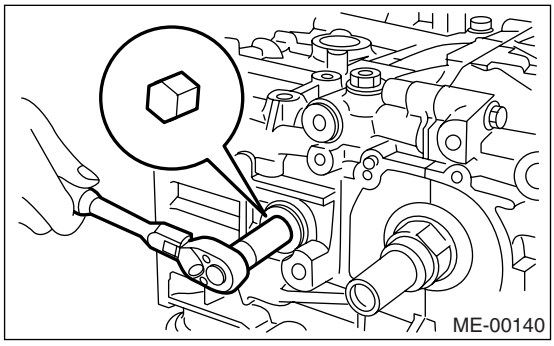

26) Rotate the crankshaft to bring #1 and #2 pistons to bottom dead center position, then remove the piston snap ring through service hole of #1 and #2 cylinders.

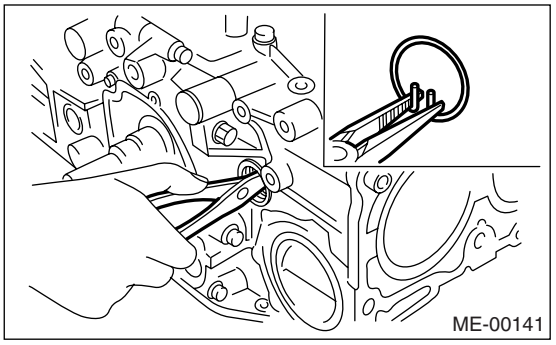

27) Draw out the piston pins from #1 and #2 pistons using ST.
ST 499097700 PISTON PIN REMOVER

NOTE:
Be careful not to confuse the original combination of piston, piston pin and cylinder.

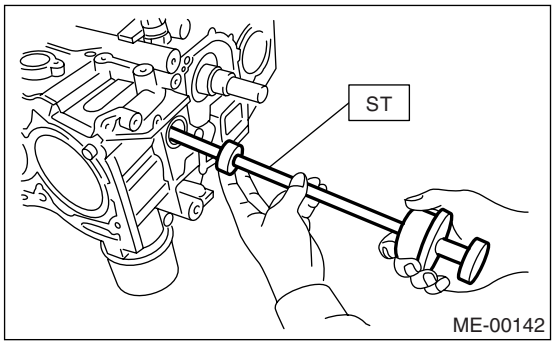

28) Similarly remove the piston pins from #3 and #4 pistons.
29) Remove the bolts which connect cylinder block on the side of #2 and #4 cylinders.
30) Back off the bolts which connect cylinder block on the side of #1 and #3 cylinders two or three turns.
31) Place the cylinder block to face the #1 and #3 cylinder side upward, and remove cylinder block connecting bolts.
32) Separate the cylinder block (LH) and (RH).

NOTE:
When separating the cylinder block, do not allow the connecting rod to fall and damage the cylinder block.

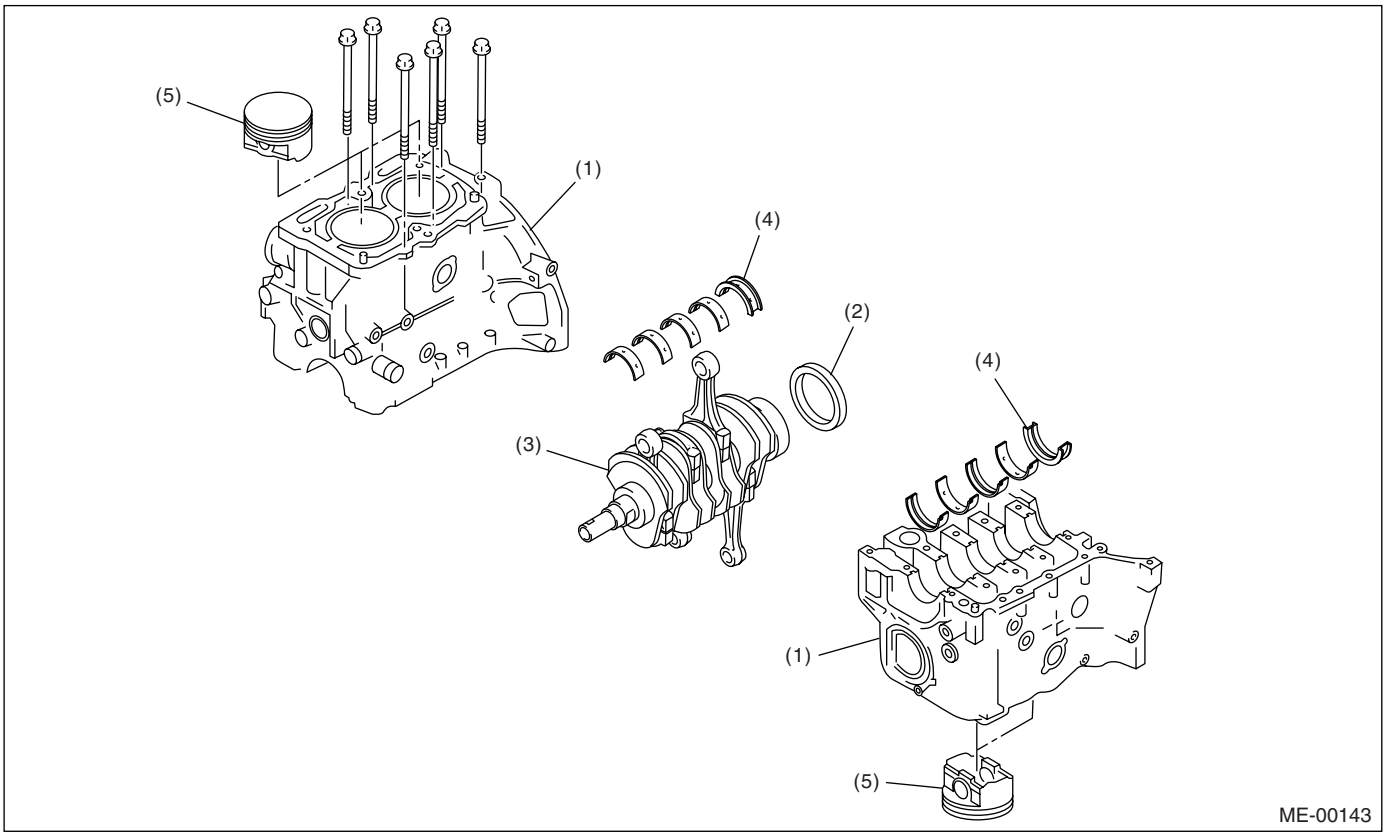

(1) Cylinder block
(2) Rear oil seal
(3) Crankshaft
(4) Crankshaft bearing
(5) Piston

33) Remove the rear oil seal.
34) Remove the crankshaft together with connecting rod.
35) Remove the crankshaft bearings from cylinder block using a hammer handle.

NOTE:
Do not confuse the combination of crankshaft bearings. Press the bearing at the end opposite to locking lip.

36) Draw out each piston from cylinder block using a wooden bar or hammer handle.

NOTE:
Be careful not to confuse the original combination of piston and cylinder.

B: INSTALLATION

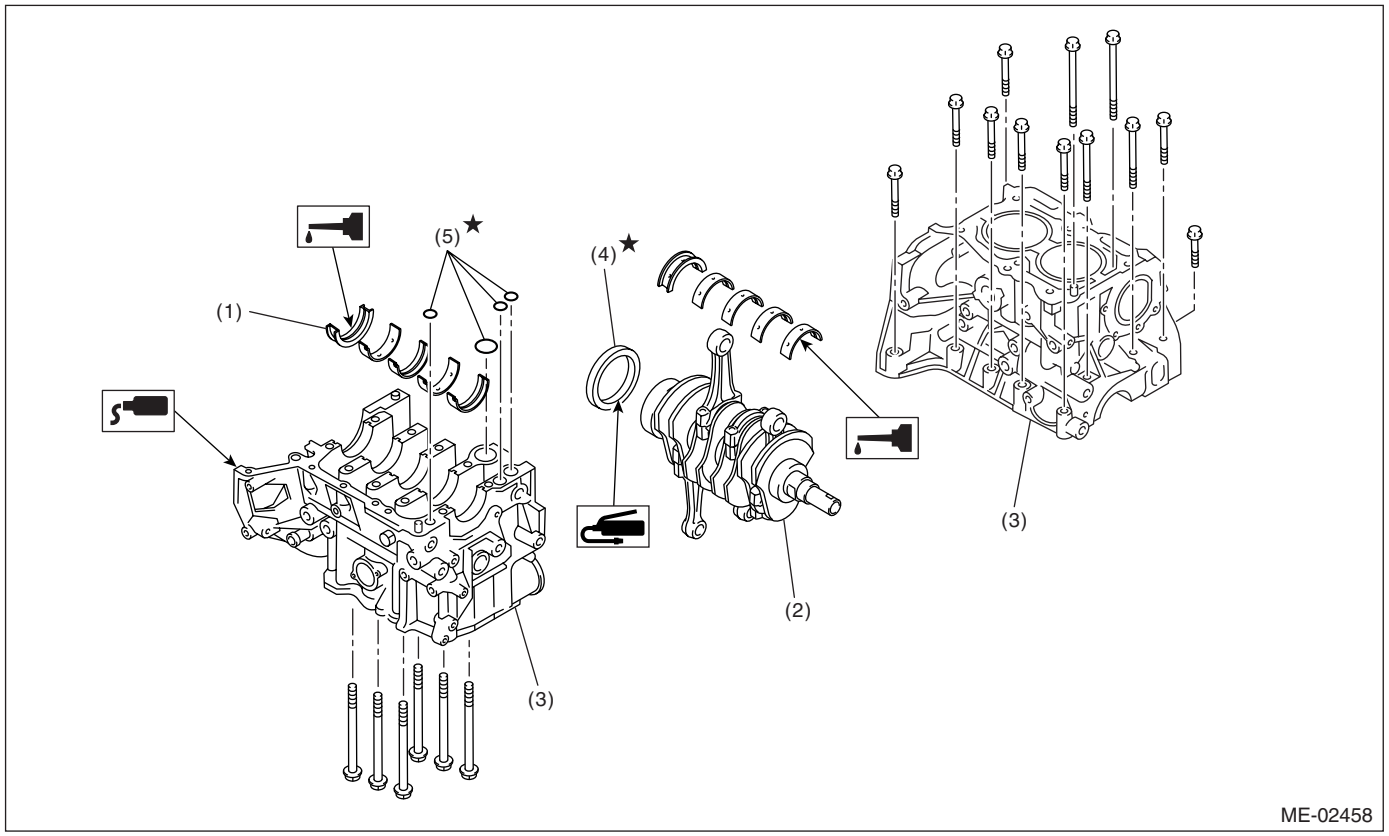

(1) Crankshaft bearing
(2) Crankshaft
(3) Cylinder block
(4) Rear oil seal
(5) O-ring

1) Remove oil on the mating surface of bearing and cylinder block before installation. Apply a coat of engine oil to crankshaft pins.
2) Position the crankshaft on the #2 and #4 cylinder block.
3) Apply liquid gasket to the mating surface of #1 and #3 cylinder block, and position it on #2 and #4 cylinder block.

Liquid gasket:
THREE BOND 1215 (Part No. 004403007) or equivalent

NOTE:
Do not allow liquid gasket to run over to O-ring grooves, oil passages, bearing grooves, etc.

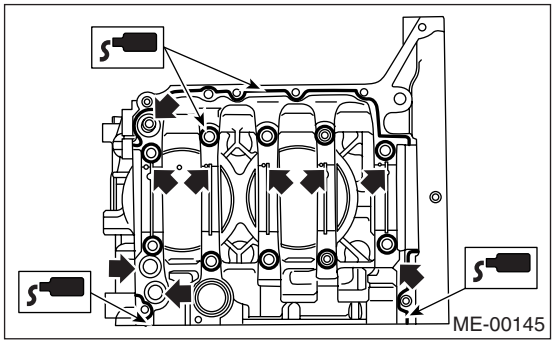

4) Apply a coat of engine oil to washers and bolt threads.
5) Tighten the 10 mm cylinder block connecting bolts on LH side (A — D) in alphabetical sequence.

Tightening torque:
10 N·m (1.0 kgf-m, 7.2 ft-lb)

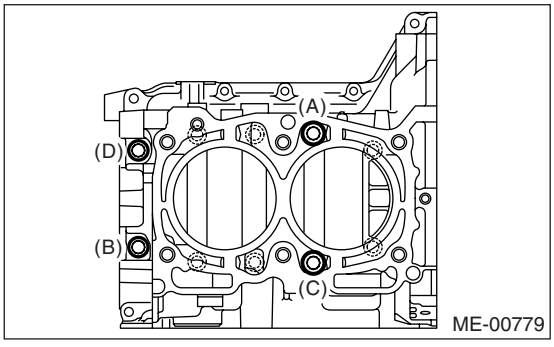

6) Tighten the 10 mm cylinder block connecting bolts on RH side (E — J) in alphabetical sequence.

Tightening torque:
10 N·m (1.0 kgf-m, 7.2 ft-lb)

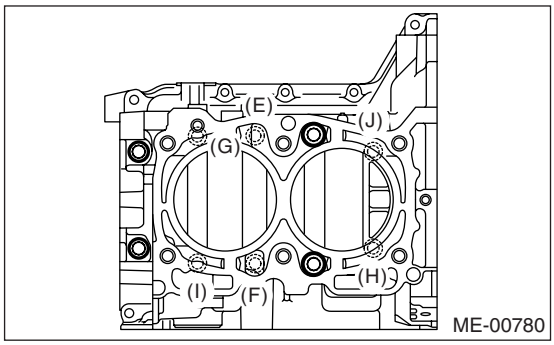

7) Further tighten the LH side bolts (A — D) in alphabetical sequence.

Tightening torque:
18 N·m (1.8 kgf-m, 13.0 ft-lb)

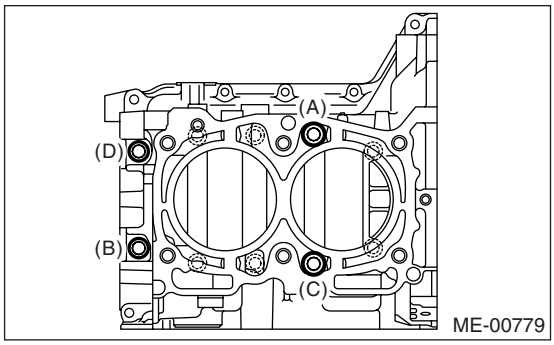

8) Further tighten the RH side bolts (E — J) in alphabetical sequence.

Tightening torque:
18 N·m (1.8 kgf-m, 13.0 ft-lb)

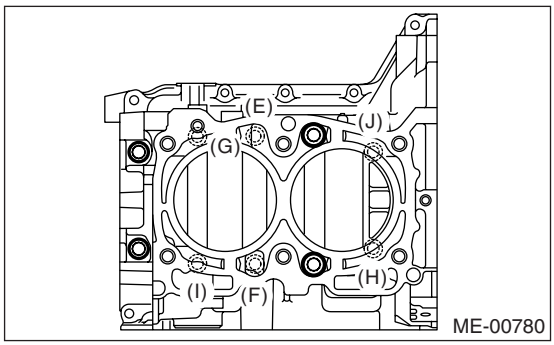

ST2 499587200 CRANKSHAFT OIL SEAL INSTALLER

9) Further tighten the LH side bolts (A — D) in alphabetical sequence.

(A), (C): 90°
(B), (D): 40 N·m (4.1 kgf-m, 29.5 ft-lb)

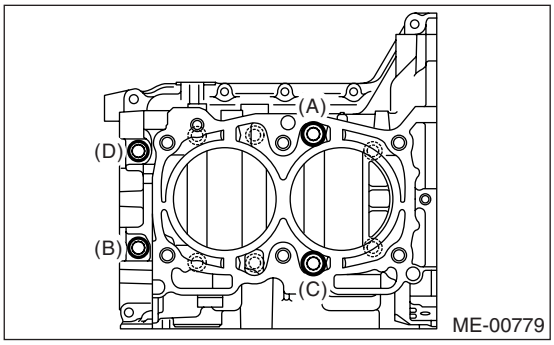

10) Further tighten the RH side bolts (E — J) to 90° in alphabetical sequence.

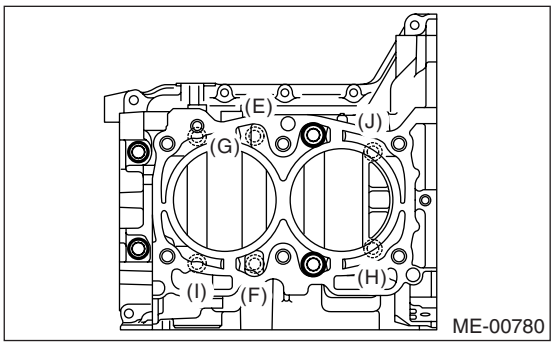

11) Tighten the 8 mm and 6 mm cylinder block connecting bolts on LH side (A — H) in alphabetical sequence.

Tightening torque:
(A) — (G): 25 N·m (2.5 kgf-m, 18.1 ft-lb)
(H): 6.4 N·m (0.65 kgf-m, 4.7 ft-lb)

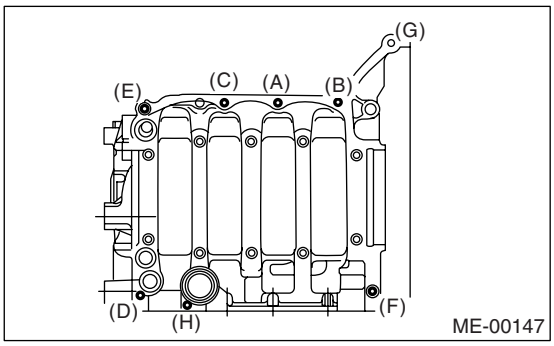

12) Install the rear oil seal using ST1 and ST2.
ST1 499597100 CRANKSHAFT OIL SEAL GUIDE

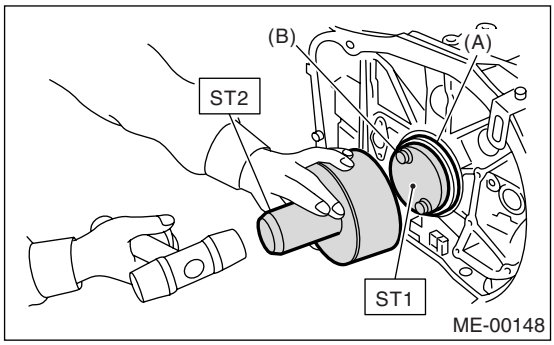

(A) Rear oil seal
(B) Flywheel attaching bolt

13) Position the top ring gap at (A) or (B) in the figure.
14) Position the second ring gap at 180° on the reverse side of the top ring gap.

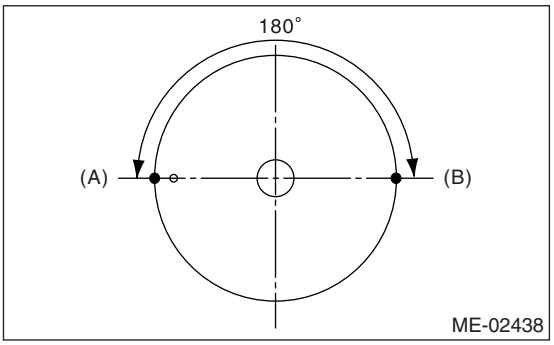

15) Position the upper rail gap at (C) in the figure.

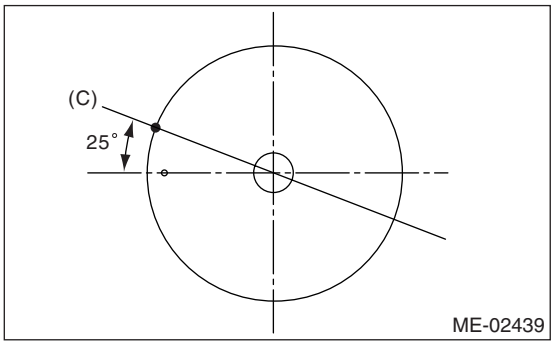

16) Align the upper rail spin stopper (D) to the side hole (E) on the piston.

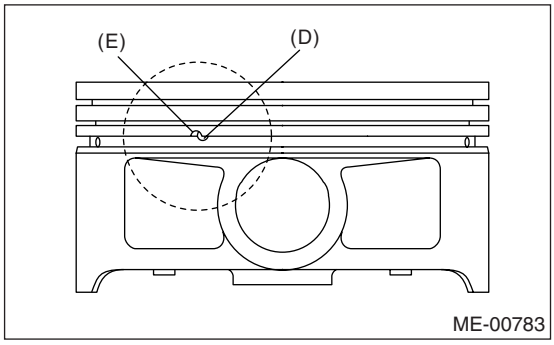

17) Position the expander gap at 180° on the reverse side of (C) that shown (F) in the figure.

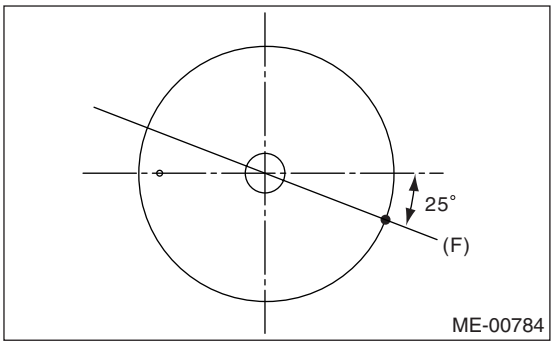

18) Position the lower rail gap at (G) in the figure.

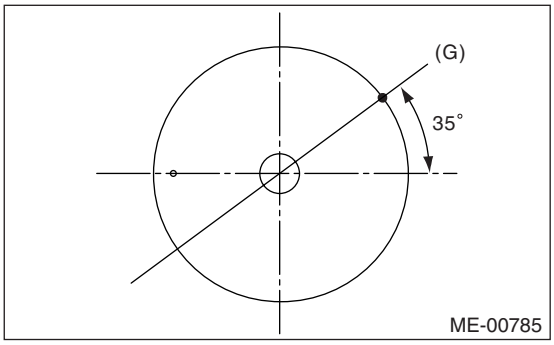

CAUTION:
• Ensure ring gaps do not face the same direction.
• Ensure ring gaps are not within the piston skirt area.

19) Install the snap ring.
Install snap rings in the piston holes located opposite to the service holes in cylinder block, when positioning all pistons in the corresponding cylinders.

NOTE:
Use new snap rings.

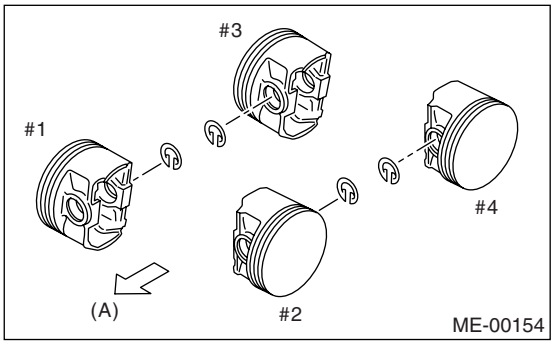

(A) Front side

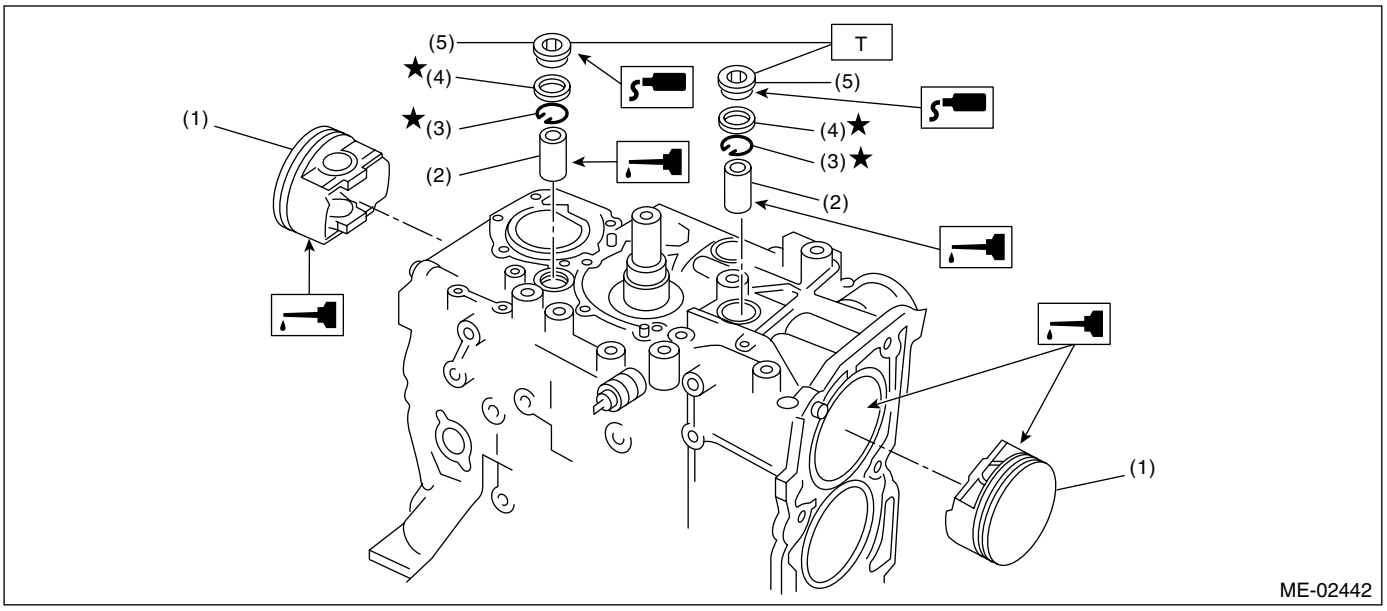

(1) Piston
(2) Piston pin
(3) Snap ring
(4) Gasket
(5) Service hole plug

Tightening torque: N·m (kgf-m, ft-lb)
T: 70 (7.1, 50.6)

20) Installation of piston:
(1) Place the cylinder block to face the #1 and #2 cylinder side upward.
(2) Using the ST1, turn the crankshaft so that #1 and #2 connecting rods are set at bottom dead center.

ST1 499987500 CRANKSHAFT SOCKET

(3) Apply a coat of engine oil to the pistons and cylinders and insert pistons in their cylinders using ST2.

ST2 498747300 PISTON GUIDE

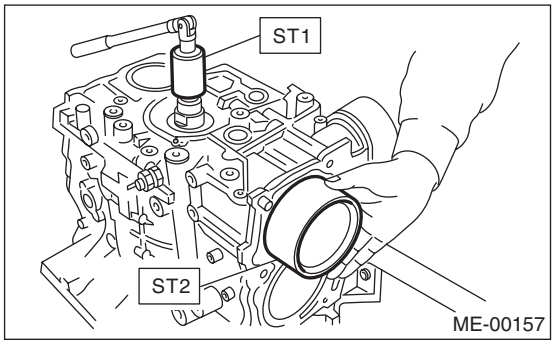

NOTE:
Piston front mark faces towards the front of engine.

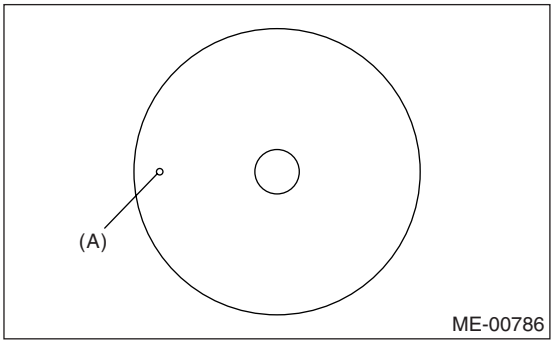

(A) Front mark

21) Installation of piston pin:
(1) Apply a coat of engine oil to ST3 before insertion, and then insert it into the service hole to align piston pin hole with connecting rod small end.

ST3 499017100 PISTON PIN GUIDE

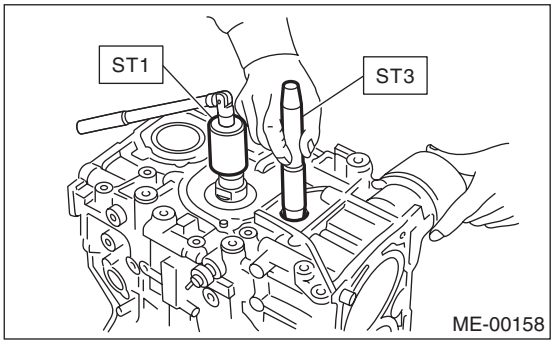

(2) Apply a coat of engine oil to piston pin, and insert the piston pin into piston and connecting rod through service hole.
(3) Install the snap ring.

NOTE:
Use new snap rings.

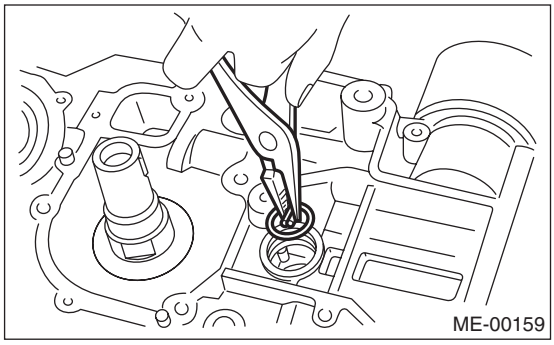

(4) Apply liquid gasket around the service hole plug.

Liquid gasket:
THREE BOND 1215 (Part No. 004403007) or equivalent

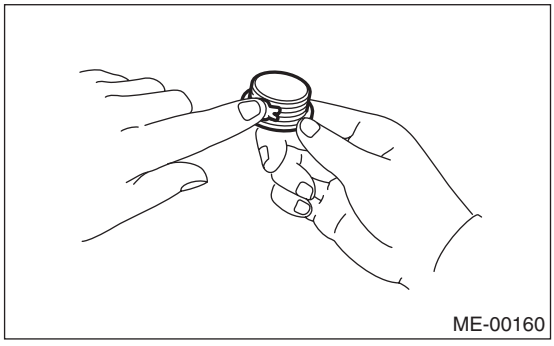

(5) Install the service hole plug and gasket.

NOTE:
Use a new gasket.

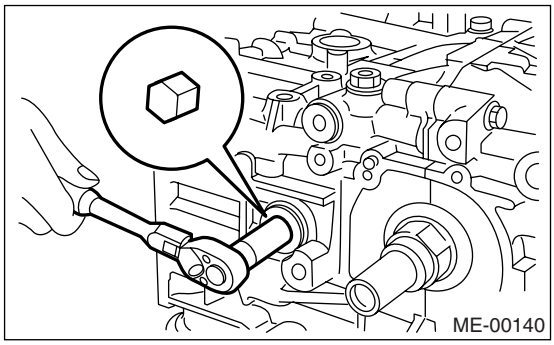

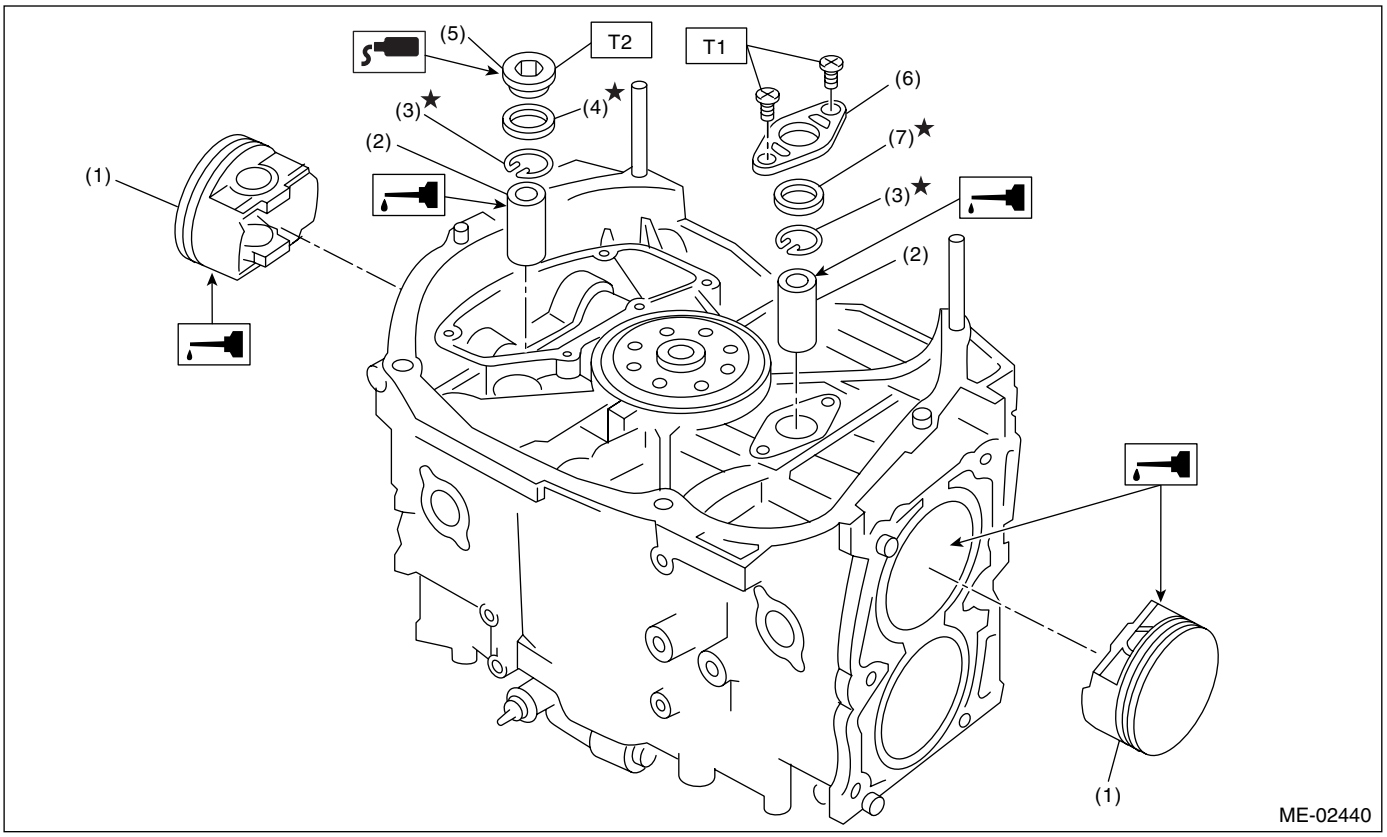

(1) Piston
(2) Piston pin
(3) Snap ring
(4) Gasket
(5) Service hole plug
(6) Service hole cover
(7) O-ring

Tightening torque: N·m (kgf-m, ft-lb)	
T1:	*6.4 (0.65, 4.7)*
T2:	*70 (7.1, 50.6)*

(6) Place the cylinder block to face the #3 and #4 cylinder side upward. Following the same procedures as used for #1 and #2 cylinders, install the pistons and piston pins.

22) Install the water pipe.

23) Install the baffle plate.

Tightening torque:
6.4 N·m (0.65 kgf-m, 4.7 ft-lb)

24) Install the oil strainer and O-ring.

Tightening torque:
10 N·m (1.0 kgf-m, 7.2 ft-lb)

25) Install the oil strainer stay.

26) Apply liquid gasket to mating surfaces and install the oil pan.

Liquid gasket:
THREE BOND 1207C (Part No. 004403012) or equivalent

Tightening torque:
6.4 N·m (0.65 kgf-m, 4.7 ft-lb)

Tightening torque:
5 N·m (0.5 kgf-m, 3.6 ft-lb)

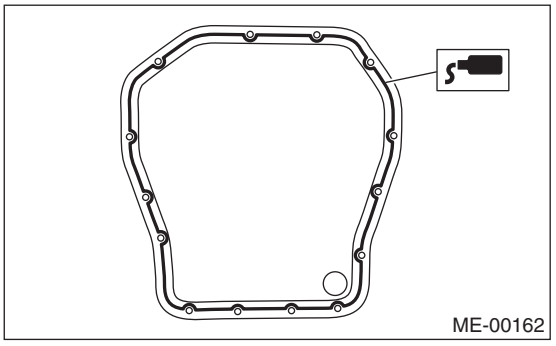

27) Apply liquid gasket to the mating surfaces and threaded portion of bolt (A) as shown in the figure, and install the oil separator cover.

NOTE:
Install them within 20 min. from applying liquid gasket.

Liquid gasket:
THREE BOND 1207C (Part No. 004403012) or equivalent

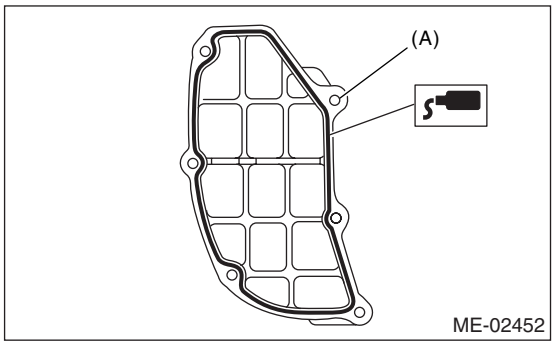

28) Install the flywheel. (MT model) <Ref. to CL-12, INSTALLATION, Flywheel.>
29) Install the clutch disc and cover. (MT model) <Ref. to CL-9, INSTALLATION, Clutch Disc and Cover.>
30) Install the drive plate. (AT model) <Ref. to 5AT-68, INSTALLATION, Drive Plate.>
31) Installation of oil pump:
(1) Install the front oil seal by using ST.
ST 499587100 OIL SEAL INSTALLER

NOTE:
Use a new front oil seal.

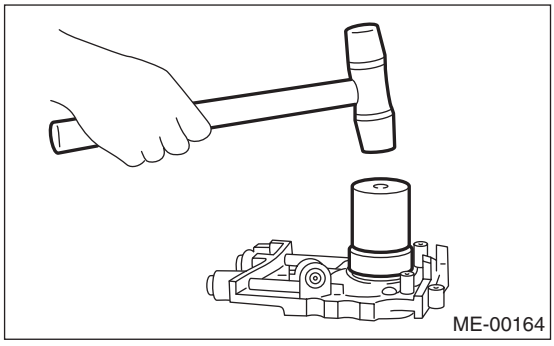

(2) Apply liquid gasket to the matching surface of oil pump.

Liquid gasket:
THREE BOND 1215 (Part No. 004403007) or equivalent

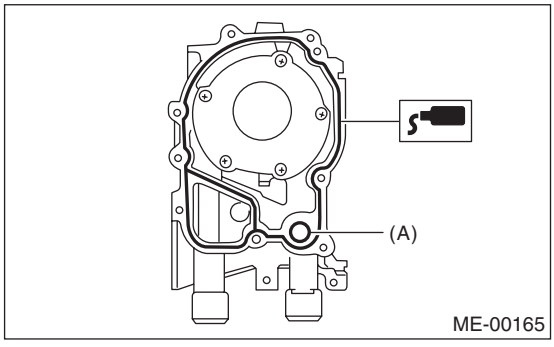

(A) O-ring

• When installing the water pump, tighten the bolts in two stages in alphabetical sequence as shown in the figure.

(3) Apply a coat of engine oil to the inside of oil seal.

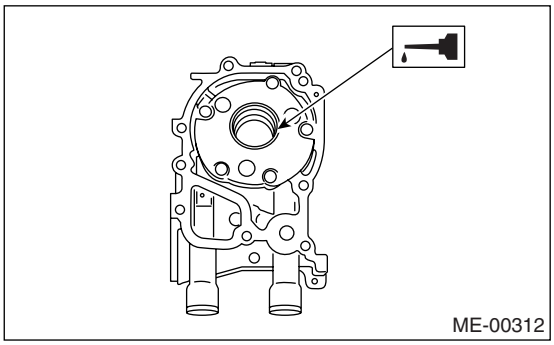

(4) Install the oil pump on cylinder block. Be careful not to damage the oil seal during installation.
(5) Apply liquid gasket to the threaded portion of three bolts.

Fluid packing:
THREE BOND 1215 (Part No. 004403007) or equivalent

Tightening torque:
6.4 N·m (0.65 kgf-m, 4.7 ft-lb)

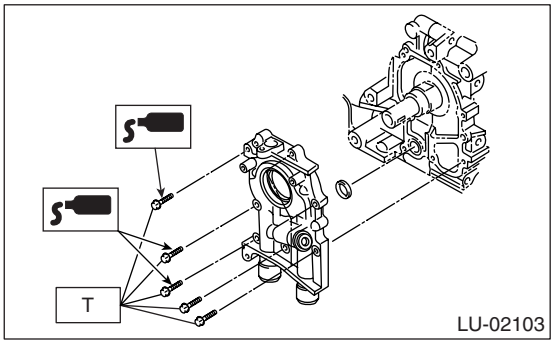

CAUTION:
• Do not forget to install the O-ring and seal when installing the oil pump.
• Align the flat surface of oil pump's inner rotor with crankshaft before installation.

32) Install the water pump and gasket.

Tightening torque:
First: 12 N·m (1.2 kgf-m, 8.9 ft-lb)
Second: 12 N·m (1.2 kgf-m, 8.9 ft-lb))

CAUTION:
• Be sure to use a new gasket.

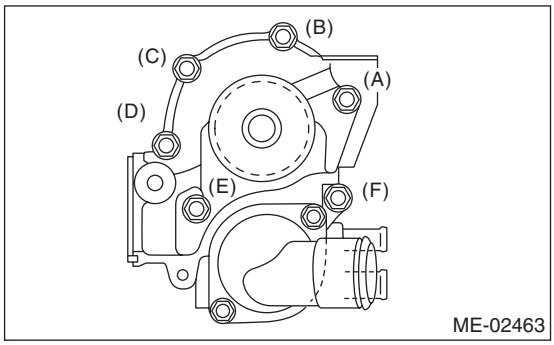

33) Install the water by-pass pipe for heater.
34) Install the oil cooler.

Tightening torque:
T1: 54 N·m (5.5 kgf-m, 40 ft-lb)
T2: 70 N·m (7.1 kgf-m, 50.6 ft-lb)

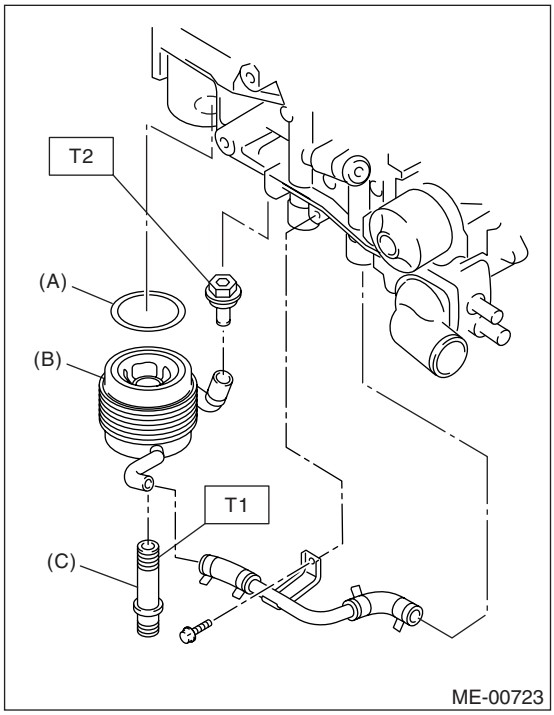

(A) O-ring
(B) Oil cooler
(C) Oil cooler connector

35) Install the oil filter. <Ref. to LU(H4DOTC)-24, INSTALLATION, Engine Oil Filter.>
36) Install the water by-pass pipe between oil cooler and water pump.
37) Install the water pipe.

NOTE:
Always use new O-rings.

38) Install the cylinder head.
<Ref. to ME(H4DOTC)-57, INSTALLATION, Cylinder Head.>
39) Install the oil level gauge guide. (LH side)
40) Install the rocker cover and rocker cover gasket.

NOTE:
Use a new rocker cover gasket.

41) Install the crank sprocket.
<Ref. to ME(H4DOTC)-51, INSTALLATION, Crank Sprocket.>
42) Install the cam sprocket.
<Ref. to ME(H4DOTC)-50, INSTALLATION, Cam Sprocket.>
43) Install the timing belt.
<Ref. to ME(H4DOTC)-43, INSTALLATION, Timing Belt.>
44) Install the timing belt cover.
<Ref. to ME(H4DOTC)-41, INSTALLATION, Timing Belt Cover.>
45) Install the crank pulley.
<Ref. to ME(H4DOTC)-39, INSTALLATION, Crank Pulley.>
46) Install the generator and A/C compressor brackets on cylinder head.
47) Install the V-belts. <Ref. to ME(H4DOTC)-37, INSTALLATION, V-belt.>
48) Install the intake manifold.
<Ref. to FU(H4DOTC)-14, INSTALLATION, Intake Manifold.>

C: DISASSEMBLY

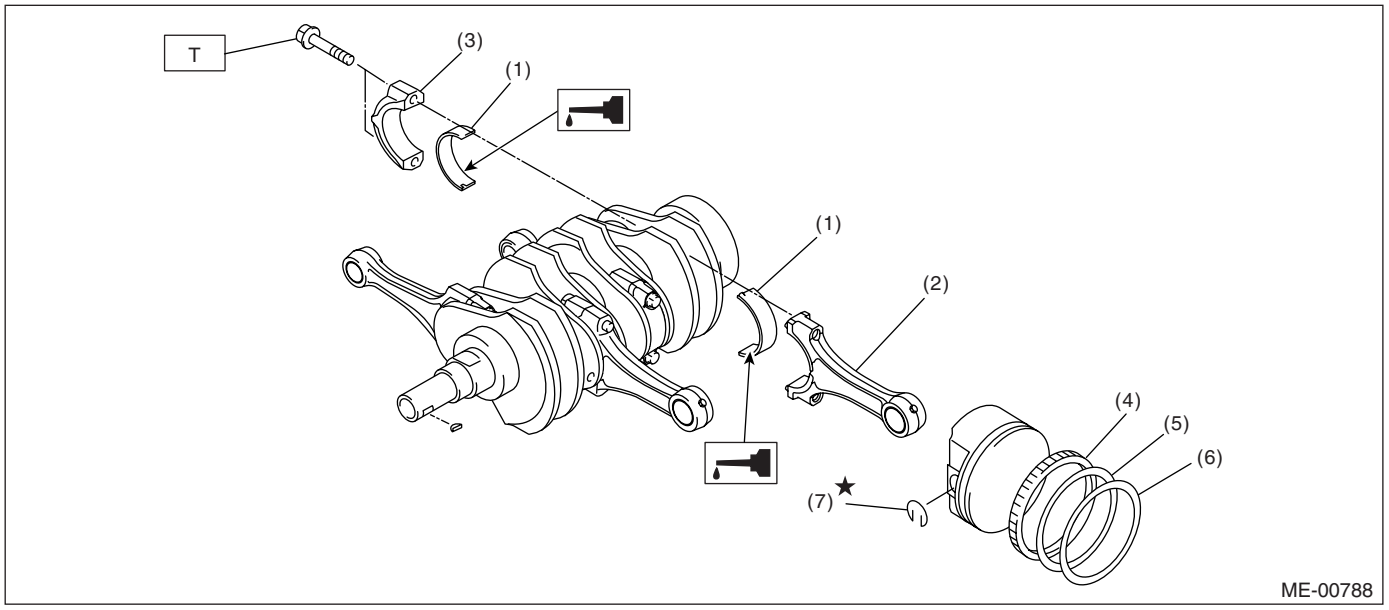

(1) Connecting rod bearing
(2) Connecting rod
(3) Connecting rod cap
(4) Oil ring
(5) Second ring
(6) Top ring
(7) Snap ring

Tightening torque: N·m (kgf-m, ft-lb)
T: 52 (5.3, 38.4)

1) Remove the connecting rod cap.
2) Remove the connecting rod bearing.

NOTE:
Arrange the removed connecting rod, connecting rod cap and bearing in order to prevent confusion.

3) Remove the piston rings using a piston ring expander.
4) Remove the oil ring by hand.

NOTE:
Arrange the removed piston rings in proper order to prevent confusion.

5) Remove the snap ring.

D: ASSEMBLY

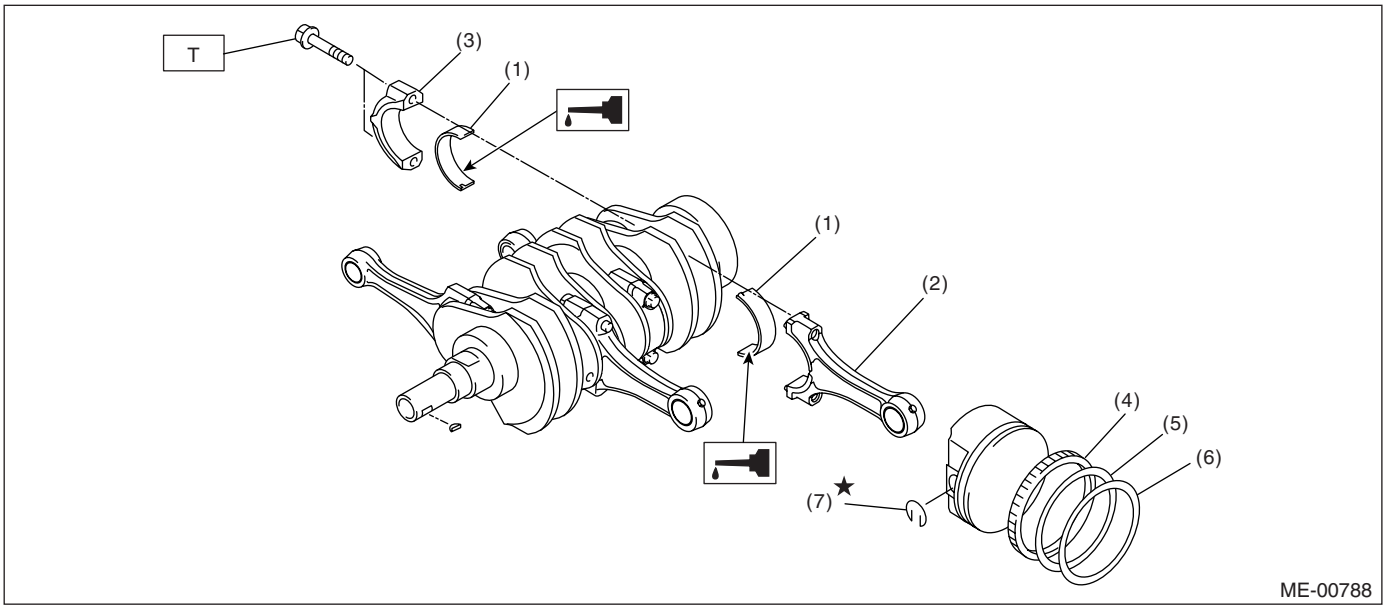

(1) Connecting rod bearing
(2) Connecting rod
(3) Connecting rod cap
(4) Oil ring
(5) Second ring
(6) Top ring
(7) Snap ring

Tightening torque: N·m (kgf-m, ft-lb)
T: 52 (5.3, 38.4)

1) Apply oil to the surfaces of the connecting rod bearings. Install the connecting rod bearings on connecting rods and connecting rod caps.
2) Install the connecting rod on crankshaft.

NOTE:
Position each connecting rod with the side marked facing forward.

3) Install the connecting rod cap.
Ensure the arrow mark on connecting rod cap facing front during installation.

CAUTION:
• Each connecting rod has its own mating cap. Make sure that they are assembled correctly by checking their matching number.
• When tightening the connecting rod nuts, apply oil on the threads.

4) Install the oil ring spacer, upper rail and lower rail in this order by hand. Then install the second ring and top ring using a piston ring expander.

E: INSPECTION

1. CYLINDER BLOCK

1) Visually check for cracks and damage. Especially, inspect the important parts using liquid penetrant tester.
2) Check the oil passages for clogging.
3) Inspect the crankcase surface that mates with cylinder head for warping by using a straight edge, and correct by grinding if necessary.

Warping limit:
0.025 mm (0.00098 in)

Grinding limit:
0.1 mm (0.004 in)

Standard height of cylinder block:
201.0 mm (7.91 in)

2. CYLINDER AND PISTON

1) The cylinder bore size is stamped on the cylinder block's front upper surface.

NOTE:
• Measurement should be performed at a temperature of 20°C (68°F).
• Standard sized pistons are classified into two grades, "A" and "B". These grades should be used as guide lines in selecting a standard piston.

Standard diameter:
A: 99.505 — 99.515 mm (3.9175 — 3.9179 in)
B: 99.495 — 99.505 mm (3.9171 — 3.9175 in)

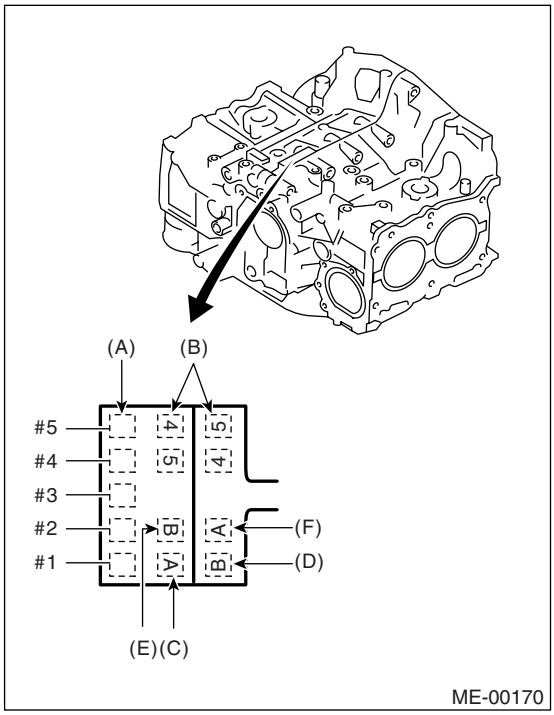

(A) Main journal size mark
(B) Cylinder block (RH) – (LH) combination mark
(C) #1 cylinder bore size mark
(D) #2 cylinder bore size mark
(E) #3 cylinder bore size mark
(F) #4 cylinder bore size mark

2) How to measure the inner diameter of each cylinder:
Measure the inner diameter of each cylinder in both the thrust and piston pin directions at the heights as shown in the figure, using a cylinder bore gauge.

NOTE:
Measurement should be performed at a temperature of 20°C (68°F).

Taper:
Standard
0.015 mm (0.0006 in)

Piston outer diameter:

Standard
A: 99.505 — 99.515 mm (3.9175 — 3.9179 in)
B: 99.495 — 99.505 mm (3.9171 — 3.9175 in)
0.25 mm (0.0098 in) oversize
99.745 — 99.765 mm (3.9270 — 3.9278 in)
0.50 mm (0.0197 in) oversize
99.995 — 100.015 mm (3.9368 — 3.9376 in)

Out-of-roundness:
Standard
0.010 mm (0.0004 in)

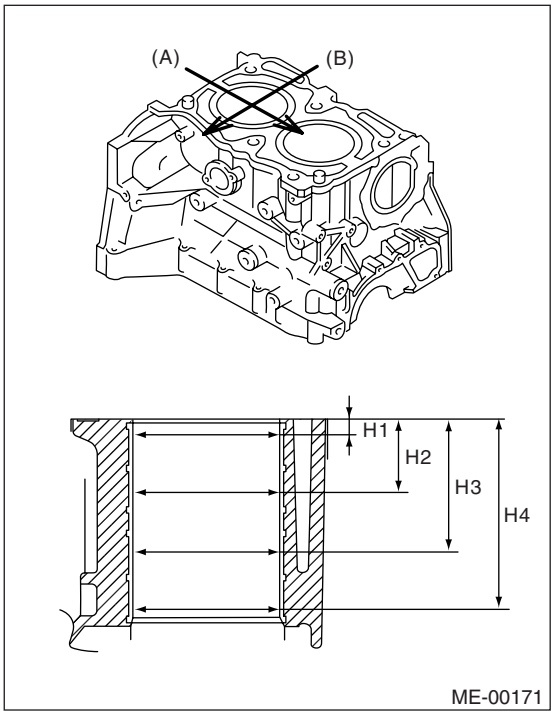

(A) Piston pin direction
(B) Thrust direction
H1: 10 mm (0.39 in)
H2: 45 mm (1.77 in)
H3: 80 mm (3.15 in)
H4: 115 mm (4.53 in)

3) When the piston is to be replaced due to general or cylinder wear, determine a suitable sized piston by measuring the piston clearance.
4) How to measure the outer diameter of each piston:
Measure the outer diameter of each piston at the height as shown in the figure. (Thrust direction)

NOTE:
Measurement should be performed at a temperature of 20°C (68°F).

Piston grade point H:
38.2 mm (1.50 in)

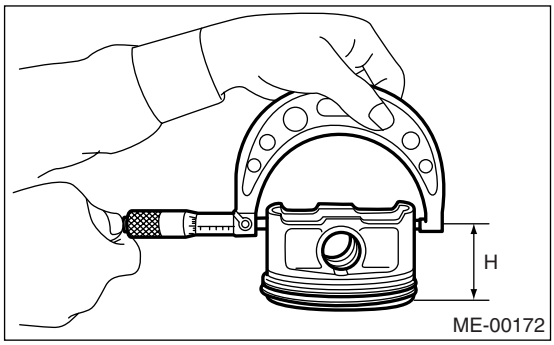

5) Calculate the clearance between cylinder and piston.

NOTE:
Measurement should be performed at a temperature of 20°C (68°F).

Cylinder to piston clearance at 20°C (68°F):
Standard
–0.010 — 0.010 mm (–0.00039 — 0.00039 in)

6) Boring and honing:
(1) If one of the values of taper, out-of-roundness, or cylinder-to-piston clearance exceeds the specified limit or is out of standard, or if there is any damage on the cylinder wall, rebore it to use an oversize piston.

CAUTION:
When any of the cylinders needs reboring, all other cylinders must be bored at the same time, and use oversize pistons. Do not perform boring on one cylinder only. Nor use an oversize piston for one cylinder only.

(2) If the cylinder inner diameter exceeds 100.015 mm (3.9376 in) after boring and honing, replace the crankcase.

NOTE:
Immediately after reboring, the cylinder diameter may differ from its real diameter due to temperature rise. Thus, pay attention to this when measuring the cylinder diameter.

3. PISTON AND PISTON PIN

1) Check the pistons and piston pins for damage, cracks, and wear and the piston ring grooves for wear and damage. Replace if defective.
2) Measure the piston-to-cylinder clearance at each cylinder. <Ref. to ME(H4DOTC)-76, CYLINDER AND PISTON, INSPECTION, Cylinder Block.> If any of the clearances is out of specification, replace the piston or bore the cylinder to use an oversize piston.
3) Make sure that the piston pin can be inserted into the piston pin hole with your thumb at 20°C (68°F). Replace if defective.

Standard clearance between piston pin and hole in piston:
Standard
0.004 — 0.008 mm (0.0002 — 0.0003 in)

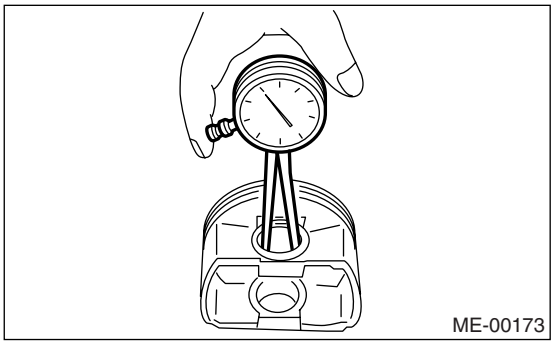

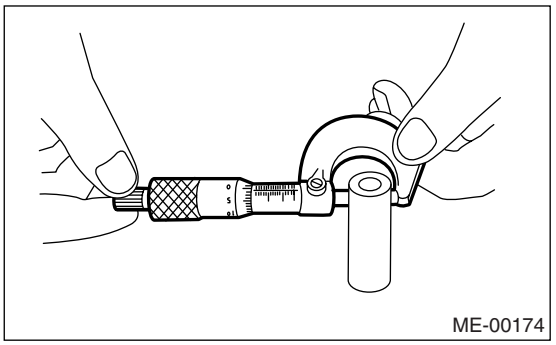

4) Check the snap ring installation groove on the piston for burr (A). If necessary, remove burr from the groove so that the piston pin can lightly move.

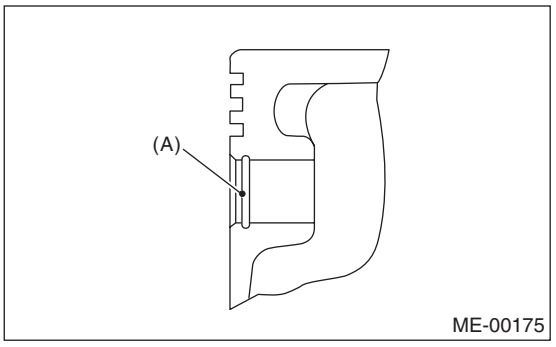

5) Check the piston pin snap ring for distortion, cracks and wear.

4. PISTON RING

1) If the piston ring is broken, damaged or worn, or if its tension is insufficient, or when the piston is replaced, replace the piston ring with a new one of the same size as the piston.

CAUTION:
• Marks are displayed on the end of top and second rings. When installing the rings to the piston, face those marks upward.

• Oil ring consists of the upper rail, expander and lower rail. When installing on piston, be careful of each rail's direction.

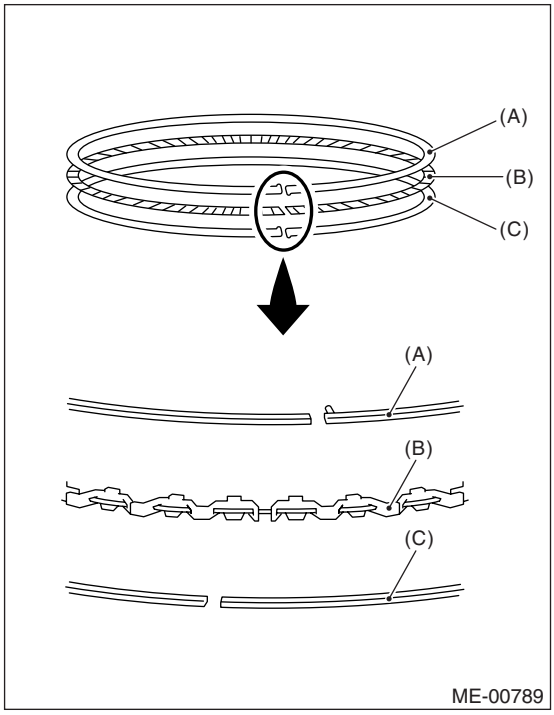

(A) Upper rail
(B) Expander
(C) Lower rail

2) Squarely place the piston ring and oil ring in cylinder, and measure the piston ring gap with a thickness gauge.

		Standard mm (in)
Piston ring gap	Top ring	0.20 — 0.25 (0.0079 — 0.0098)
	Second ring	0.37 — 0.52 (0.015 — 0.020)
	Oil ring rail	0.20 — 0.50 (0.0079 — 0.0197)

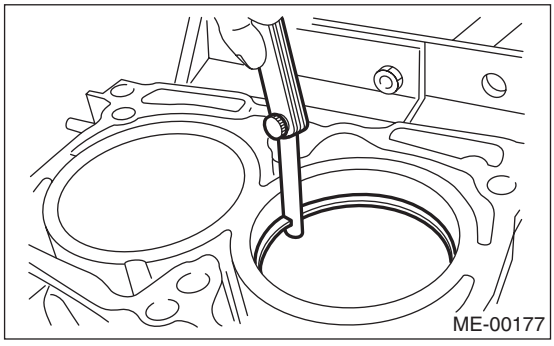

3) Measure the clearance between piston ring and piston ring groove with a thickness gauge.

NOTE:
Before measuring the clearance, clean the piston ring groove and piston ring.

		Standard mm (in)
Clearance between piston ring and piston ring groove	Top ring	0.040 — 0.080 (0.0016 — 0.0031)
	Second ring	0.030 — 0.070 (0.0012 — 0.0028)

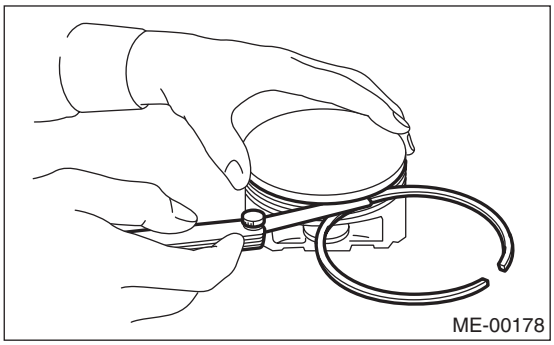

5. CONNECTING ROD

1) Replace the connecting rod, if the large or small end thrust surface is damaged.
2) Check for bend or twist using a connecting rod aligner. Replace the connecting rod if the bend or twist exceeds the limit.

Limit of bend or twist per 100 mm (3.94 in) in length:
0.10 mm (0.0039 in)

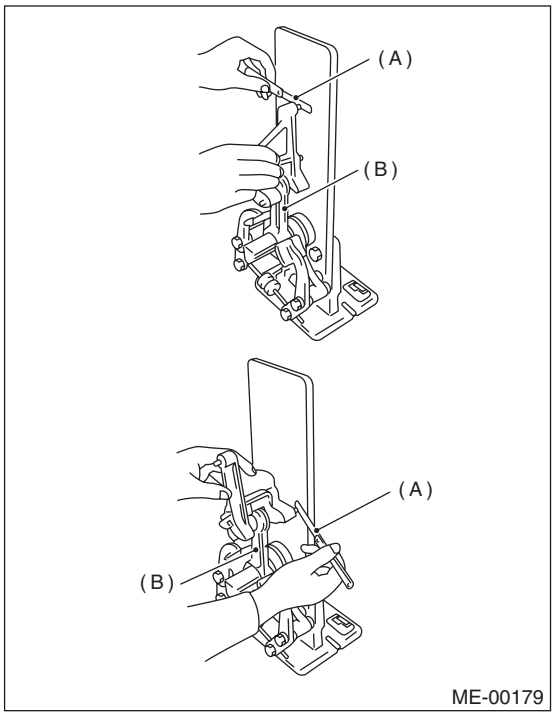

(A) Thickness gauge
(B) Connecting rod

3) Install the connecting rod fitted with bearing to crankshaft and measure the side clearance (thrust clearance). If side clearance exceeds the limit or has partial wear, replace the connecting rod.

Connecting rod side clearance:
Standard
0.070 — 0.330 mm (0.0028 — 0.0130 in)

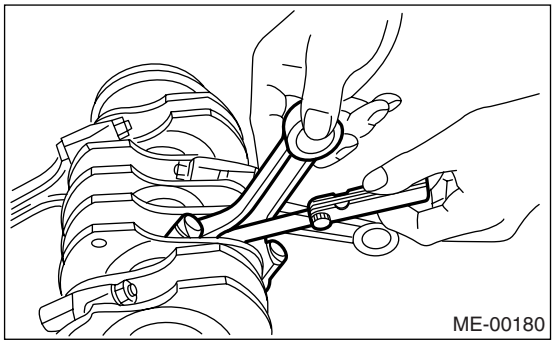

4) Inspect the connecting rod bearing for scar, peeling, seizure, melting, wear, etc.
5) Measure the oil clearance on individual connecting rod bearings by means of plastigauge. If any oil clearance is not within the specification, replace the defective bearing with a new one of standard size or undersize as necessary. (See the table below.)

Connecting rod oil clearance:
Standard
0.017 — 0.045 mm (0.0007 — 0.0018 in)

Unit: mm (in)

Bearings	Bearing size (Thickness at center)	Outer diameter of crank pin
Standard	1.490 — 1.502 (0.0587 — 0.0591)	51.984 — 52.000 (2.0466 — 2.0472)
0.03 (0.0012) undersize	1.504 — 1.512 (0.0592 — 0.0595)	51.954 — 51.970 (2.0454 — 2.0461)
0.05 (0.0020) undersize	1.514 — 1.522 (0.0596 — 0.0599)	51.934 — 51.950 (2.0447 — 2.0453)
0.25 (0.0098) undersize	1.614 — 1.622 (0.0635 — 0.0639)	51.734 — 51.750 (2.0368 — 2.0374)

6) Inspect the bushing at connecting rod small end, and replace if worn or damaged. Also measure the piston pin clearance at the connecting rod small end.

Clearance between piston pin and bushing:
Standard
0 — 0.022 mm (0 — 0.0009 in)

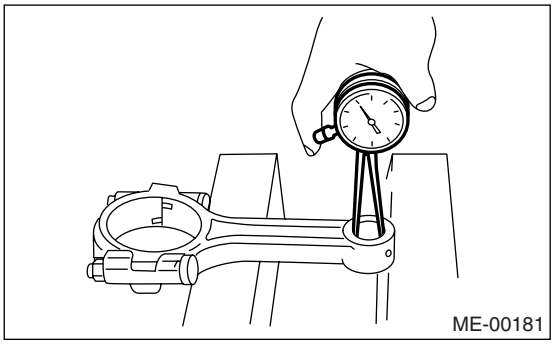

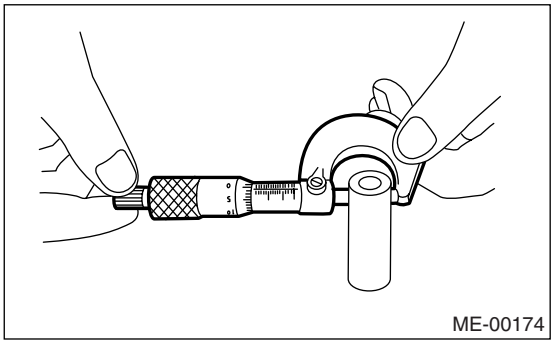

7) Replacement procedure is as follows.
(1) Remove the bushing from connecting rod with ST and press.
(2) Press the bushing with ST after applying oil on the periphery of bushing.

ST 499037100 CONNECTING ROD BUSHING REMOVER AND INSTALLER

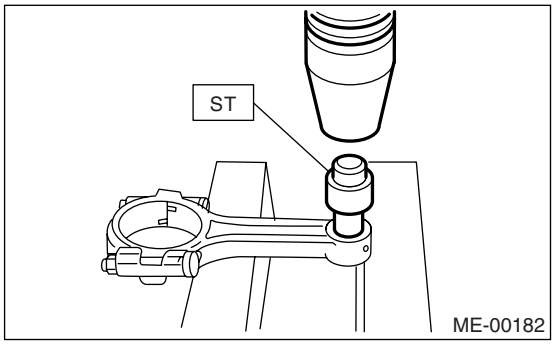

(3) Make two 3 mm (0.12 in) holes in bushing. Ream the inside of bushing.
(4) After completion of reaming, clean the bushing to remove chips.

6. CRANKSHAFT AND CRANKSHAFT BEARING

1) Clean the crankshaft completely, and check it for cracks using liquid penetrant tester. Replace if defective.
2) Measure the bend of crankshaft. If it exceeds the limit, repair or replace it.

NOTE:
If a suitable V-block is not available, install #1 and #5 crankshaft bearing on cylinder block, position the crankshaft on these bearings, and then measure the crankshaft bend using a dial gauge.

Crankshaft bend limit:
0.035 mm (0.0014 in)

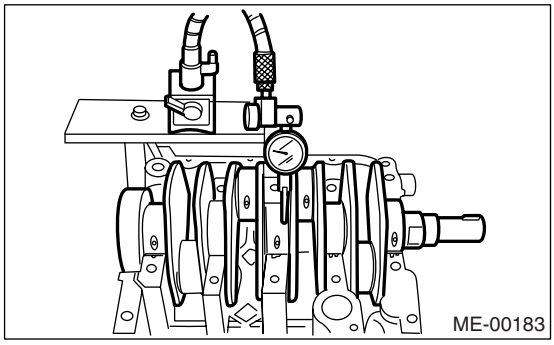

3) Inspect the crank journal and crank pin for wear. If they are not within the specifications, replace the bearing with a suitable (undersize) one, and replace or recondition crankshaft as necessary. When grinding the crank journal or crank pin, finish them to the specified dimensions according to the undersize bearing to be used.

Crank pin:
Out-of-roundness
0.003 mm (0.0001 in)
Cylindricality
0.004 mm (0.0002 in)
Grinding limit (dia)
To 51.750 mm (2.0374 in)

Crank journal:
Out-of-roundness
0.005 mm (0.0002 in)
Cylindricality
0.006 mm (0.0002 in)
Grinding limit (dia)
To 59.750 mm (2.3524 in)

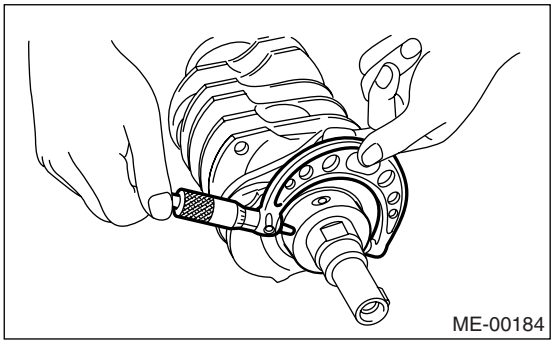

Unit: mm (in)

		Crank journal diameter		Crank pin diameter
		#1, #3	#2, #4, #5	
Standard	Journal O.D.	59.992 — 60.008 (2.3619 — 2.3625)	59.992 — 60.008 (2.3619 — 2.3625)	51.984 — 52.000 (2.0466 — 2.0472)
	Bearing size (Thickness at center)	1.998 — 2.011 (0.0787 — 0.0792)	2.000 — 2.013 (0.0787 — 0.0793)	1.486 — 1.498 (0.0585 — 0.0590)
0.03 (0.0012) undersize	Journal O.D.	59.962 — 59.978 (2.3607 — 2.3613)	59.962 — 59.978 (2.3607 — 2.3613)	51.954 — 51.970 (2.0454 — 2.0461)
	Bearing size (Thickness at center)	2.017 — 2.020 (0.0794 — 0.0795)	2.019 — 2.022 (0.0795 — 0.0796)	1.504 — 1.512 (0.0592 — 0.0595)
0.05 (0.0020) undersize	Journal O.D.	59.942 — 59.958 (2.3599 — 2.3605)	59.942 — 59.958 (2.3599 — 2.3605)	51.934 — 51.950 (2.0447 — 2.0453)
	Bearing size (Thickness at center)	2.027 — 2.030 (0.0798 — 0.0799)	2.029 — 2.032 (0.0799 — 0.0800)	1.514 — 1.522 (0.0596 — 0.0599)
0.25 (0.0098) undersize	Journal O.D.	59.742 — 59.758 (2.3520 — 2.3527)	59.742 — 59.758 (2.3520 — 2.3527)	51.734 — 51.750 (2.0368 — 2.0374)
	Bearing size (Thickness at center)	2.127 — 2.130 (0.0837 — 0.0839)	2.129 — 2.132 (0.0838 — 0.0839)	1.614 — 1.622 (0.0635 — 0.0639)

O.D. : Outer Diameter

4) Measure the thrust clearance of crankshaft at center bearing. If clearance exceeds the limit, replace the bearing.

Crankshaft side clearance:
Standard
0.030 — 0.115 mm (0.0012 — 0.0045 in)

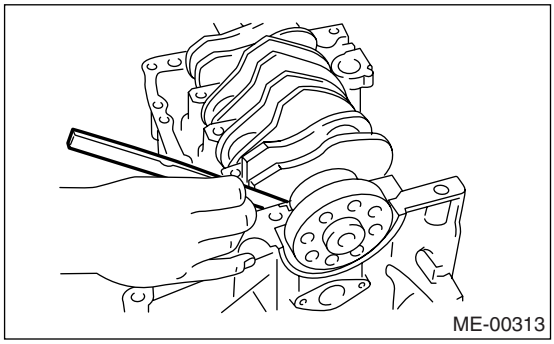
ME-00313

5) Inspect individual crankshaft bearings for signs of flaking, seizure, melting, and wear.
6) Measure the oil clearance on each crankshaft bearing by means of plastigauge. If the measurement is not within the specification, replace the defective bearing with an undersize one, and replace or recondition the crankshaft as necessary.

Crankshaft oil clearance:
Standard
0.010 — 0.030 mm (0.0004 — 0.0012 in)

21.Intake and Exhaust Valve

A: SPECIFICATION

Refer to “Cylinder Head” for removal and installation procedures of intake and exhaust valves. <Ref. to ME(H4DOTC)-57, REMOVAL, Cylinder Head.> <Ref. to ME(H4DOTC)-57, INSTALLATION, Cylinder Head.>

22.Piston

A: SPECIFICATION

Refer to “Cylinder Block” for removal and installation procedures of pistons. <Ref. to ME(H4DOTC)-64, REMOVAL, Cylinder Block.> <Ref. to ME(H4DOTC)-67, INSTALLATION, Cylinder Block.>

23.Connecting Rod

A: SPECIFICATION

Refer to “Cylinder Block” for removal and installation procedures of connecting rod. <Ref. to ME(H4DOTC)-64, REMOVAL, Cylinder Block.> <Ref. to ME(H4DOTC)-67, INSTALLATION, Cylinder Block.>

24.Crankshaft

A: SPECIFICATION

Refer to “Cylinder Block” for removal and installation procedures of crankshaft. <Ref. to ME(H4DOTC)-64, REMOVAL, Cylinder Block.> <Ref. to ME(H4DOTC)-67, INSTALLATION, Cylinder Block.>

25.Engine Trouble in General

A: INSPECTION

NOTE:
“RANK” shown in the chart refers to the possibility of the cause of trouble in order (“Very often” to “Rarely”)
A — Very often
B — Sometimes
C — Rarely

Symptom	Problem parts, etc.	Possible cause	RANK
1. Engine does not start.			
1) Starter does not turn.	Starter	Defective battery-to-starter harness	B
		Defective ignition starter switch	C
		Defective inhibitor switch or neutral switch	C
		Defective starter	B
	Battery	Poor terminal connection	A
		Run-down battery	A
		Defective charging system	B
	Friction	Seizure of crankshaft and connecting rod bearing	C
		Seized camshaft	C
		Seized or stuck piston and cylinder	C
2) Initial combustion does not occur.	Starter	Defective starter	C
	Engine control system <Ref. to EN(H4DOTC)(diag)-2, Basic Diagnostic Procedure.>		A
	Fuel line	Defective fuel pump and relay	A
		Lack of or insufficient fuel	B
	Belt	Trouble	B
		Defective timing	B
	Compression	Incorrect valve clearance	C
		Loosened spark plug or defective gasket	C
		Loosened cylinder head bolt or defective gasket	C
		Improper valve sealing	C
		Defective valve stem	C
		Worn or broken valve spring	B
		Worn or stuck piston rings, cylinder and piston	C
		Incorrect valve timing	B
		Improper engine oil (low viscosity)	B
3) Initial combustion occurs.	Engine control system <Ref. to EN(H4DOTC)(diag)-2, Basic Diagnostic Procedure.>		A
	Intake system	Defective intake manifold gasket	B
		Defective throttle body gasket	B
	Fuel line	Defective fuel pump and relay	C
		Clogged fuel line	C
		Lack of or insufficient fuel	B
	Belt	Trouble	B
		Defective timing	B
	Compression	Incorrect valve clearance	C
		Loosened spark plug or defective gasket	C
		Loosened cylinder head bolt or defective gasket	C
		Improper valve sealing	C
		Defective valve stem	C
		Worn or broken valve spring	B
		Worn or stuck piston rings, cylinder and piston	C
		Incorrect valve timing	B
		Improper engine oil (low viscosity)	B

Symptom	Problem parts, etc.	Possible cause	RANK
4) Engine stalls after initial combustion.	Engine control system <Ref. to EN(H4DOTC)(diag)-2, Basic Diagnostic Procedure.>		A
	Intake system	Loosened or cracked intake duct	B
		Loosened or cracked PCV hose	C
		Loosened or cracked vacuum hose	C
		Defective intake manifold gasket	B
		Defective throttle body gasket	B
		Dirty air cleaner element	C
	Fuel line	Clogged fuel line	C
		Lack of or insufficient fuel	B
	Belt	Trouble	B
		Defective timing	B
	Compression	Incorrect valve clearance	C
		Loosened spark plug or defective gasket	C
		Loosened cylinder head bolt or defective gasket	C
		Improper valve sealing	C
		Defective valve stem	C
		Worn or broken valve spring	B
		Worn or stuck piston rings, cylinder and piston	C
		Incorrect valve timing	B
		Improper engine oil (low viscosity)	B
2. Rough idle and engine stall	Engine control system <Ref. to EN(H4DOTC)(diag)-2, Basic Diagnostic Procedure.>		A
	Intake system	Loosened or cracked intake duct	A
		Loosened or cracked PCV hose	A
		Loosened or cracked vacuum hose	A
		Defective intake manifold gasket	B
		Defective throttle body gasket	B
		Defective PCV valve	C
		Loosened oil filler cap	B
		Dirty air cleaner element	C
	Fuel line	Defective fuel pump and relay	C
		Clogged fuel line	C
		Lack of or insufficient fuel	B
	Belt	Defective timing	C
	Compression	Incorrect valve clearance	B
		Loosened spark plug or defective gasket	B
		Loosened cylinder head bolt or defective gasket	B
		Improper valve sealing	B
		Defective valve stem	C
		Worn or broken valve spring	B
		Worn or stuck piston rings, cylinder and piston	B
		Incorrect valve timing	A
		Improper engine oil (low viscosity)	B
	Lubrication system	Incorrect oil pressure	B
		Defective rocker cover gasket	C
	Cooling System	Over-heating	C
	Other	Evaporative emission control system malfunction	A
		Stuck or damaged throttle valve	B

Symptom	Problem parts, etc.	Possible cause	RANK
3. Low output, hesitation and poor acceleration	Engine control system <Ref. to EN(H4DOTC)(diag)-2, Basic Diagnostic Procedure.>		A
	Intake system	Loosened or cracked intake duct	A
		Loosened or cracked PCV hose	A
		Loosened or cracked vacuum hose	B
		Defective intake manifold gasket	B
		Defective throttle body gasket	B
		Defective PCV valve	B
		Loosened oil filler cap	B
		Dirty air cleaner element	A
	Fuel line	Defective fuel pump and relay	B
		Clogged fuel line	B
		Lack of or insufficient fuel	C
	Belt	Defective timing	B
	Compression	Incorrect valve clearance	B
		Loosened spark plug or defective gasket	B
		Loosened cylinder head bolt or defective gasket	B
		Improper valve sealing	B
		Defective valve stem	C
		Worn or broken valve spring	B
		Worn or stuck piston rings, cylinder and piston	C
		Incorrect valve timing	A
		Improper engine oil (low viscosity)	B
	Lubrication system	Incorrect oil pressure	B
	Cooling System	Over-heating	C
		Over-cooling	C
	Other	Evaporative emission control system malfunction	A
4. Surging	Engine control system <Ref. to EN(H4DOTC)(diag)-2, Basic Diagnostic Procedure.>		A
	Intake system	Loosened or cracked intake duct	A
		Loosened or cracked PCV hose	A
		Loosened or cracked vacuum hose	A
		Defective intake manifold gasket	B
		Defective throttle body gasket	B
		Defective PCV valve	B
		Loosened oil filler cap	B
		Dirty air cleaner element	B
	Fuel line	Defective fuel pump and relay	B
		Clogged fuel line	B
		Lack of or insufficient fuel	C
	Belt	Defective timing	B
	Compression	Incorrect valve clearance	B
		Loosened spark plug or defective gasket	C
		Loosened cylinder head bolt or defective gasket	C
		Improper valve sealing	C
		Defective valve stem	C
		Worn or broken valve spring	C
		Worn or stuck piston rings, cylinder and piston	C
		Incorrect valve timing	A
		Improper engine oil (low viscosity)	B
	Cooling System	Over-heating	B
	Other	Evaporative emission control system malfunction	C

Symptom	Problem parts, etc.	Possible cause	RANK
5. Engine does not return to idle.	Engine control system <Ref. to EN(H4DOTC)(diag)-2, Basic Diagnostic Procedure.>		A
	Intake system	Loosened or cracked vacuum hose	A
	Other	Stuck or damaged throttle valve	A
6. Dieseling (Run-on)	Engine control system <Ref. to EN(H4DOTC)(diag)-2, Basic Diagnostic Procedure.>		A
	Cooling System	Over-heating	B
	Other	Evaporative emission control system malfunction	B
7. After burning in exhaust system	Engine control system <Ref. to EN(H4DOTC)(diag)-2, Basic Diagnostic Procedure.>		A
	Intake system	Loosened or cracked intake duct	C
		Loosened or cracked PCV hose	C
		Loosened or cracked vacuum hose	B
		Defective PCV valve	B
		Loosened oil filler cap	C
	Belt	Defective timing	B
	Compression	Incorrect valve clearance	B
		Loosened spark plug or defective gasket	C
		Loosened cylinder head bolt or defective gasket	C
		Improper valve sealing	B
		Defective valve stem	C
		Worn or broken valve spring	C
		Worn or stuck piston rings, cylinder and piston	C
		Incorrect valve timing	A
	Lubrication system	Incorrect oil pressure	C
	Cooling System	Over-cooling	C
	Other	Evaporative emission control system malfunction	C
8. Knocking	Engine control system <Ref. to EN(H4DOTC)(diag)-2, Basic Diagnostic Procedure.>		A
	Intake system	Loosened oil filler cap	B
	Belt	Defective timing	B
	Compression	Incorrect valve clearance	C
		Incorrect valve timing	B
	Cooling System	Over-heating	A
9. Excessive engine oil consumption	Intake system	Loosened or cracked PCV hose	A
		Defective PCV valve	B
		Loosened oil filler cap	C
	Compression	Defective valve stem	A
		Worn or stuck piston rings, cylinder and piston	A
	Lubrication system	Loosened oil pump attaching bolts and defective gasket	B
		Defective oil filter O-ring	B
		Defective crankshaft oil seal	B
		Defective rocker cover gasket	B
		Loosened oil drain plug or defective gasket	B
		Loosened oil pan fitting bolts or defective oil pan	B

Symptom	Problem parts, etc.	Possible cause	RANK
10. Excessive fuel consumption	Engine control system <Ref. to EN(H4DOTC)(diag)-2, Basic Diagnostic Procedure.>		A
	Intake system	Dirty air cleaner element	A
	Belt	Defective timing	B
	Compression	Incorrect valve clearance	B
		Loosened spark plug or defective gasket	C
		Loosened cylinder head bolt or defective gasket	C
		Improper valve sealing	B
		Defective valve stem	C
		Worn or broken valve spring	C
		Worn or stuck piston rings, cylinder and piston	B
		Incorrect valve timing	B
	Lubrication system	Incorrect oil pressure	C
	Cooling System	Over-cooling	C

26.Engine Noise

A: INSPECTION

Type of sound	Condition	Possible cause
Regular clicking sound	Sound increases as engine speed increases.	• Valve mechanism is defective. • Incorrect valve clearance • Worn camshaft • Broken valve spring
Heavy and dull clank	Oil pressure is low.	• Worn crankshaft main bearing • Worn connecting rod bearing (large end)
	Oil pressure is normal.	• Loose flywheel mounting bolts • Damaged engine mounting
High-pitched clank	Sound is noticeable when accelerating with an overload.	• Ignition timing advanced • Accumulation of carbon inside combustion chamber • Wrong spark plug • Improper gasoline
Clank when engine speed is 1,000 to 2,000 rpm	Sound is reduced when fuel injector connector of noisy cylinder is disconnected. (NOTE*)	• Worn crankshaft main bearing • Worn bearing at crankshaft end of connecting rod
Knocking sound when engine is operating under idling speed and engine is warm	Sound is reduced when fuel injector connector of noisy cylinder is disconnected. (NOTE*)	• Worn cylinder liner and piston ring • Broken or stuck piston ring • Worn piston pin and hole at piston end of connecting rod
	Sound is not reduced if each fuel injector connector is disconnected in turn. (NOTE*)	• Unusually worn valve lifter • Worn cam sprocket • Worn camshaft journal bore in crankcase
Squeaky sound	—	• Insufficient generator lubrication
Rubbing sound	—	• Defective generator brush and rotor contact
Gear scream when starting engine	—	• Defective ignition starter switch • Worn gear and starter pinion
Sound like polishing glass with a dry cloth	—	• Loose drive belt • Defective water pump shaft
Hissing sound	—	• Loss of compression • Air leakage in air intake system, hoses, connections or manifolds
Timing belt noise	—	• Loose timing belt • Belt contacting case/adjacent part
Valve tappet noise	—	• Incorrect valve clearance

NOTE*:
When disconnecting the fuel injector connector, the malfunction indicator light illuminates and DTC is stored in ECM memory. Therefore, carry out the clear memory mode <Ref. to EN(H4DOTC)(diag)-45, OPERATION, Clear Memory Mode.> and inspection mode <Ref. to EN(H4DOTC)(diag)-36, PROCEDURE, Inspection Mode.> after connecting the fuel injector connector.

EXHAUST

EX(H4DOTC)

Page

1. General Description 2
2. Front Exhaust Pipe....6
3. Center Exhaust Pipe 8
4. Joint Pipe 11
5. Rear Exhaust Pipe 12
6. Muffler 13

1. General Description

A: COMPONENT

1. FRONT EXHAUST PIPE

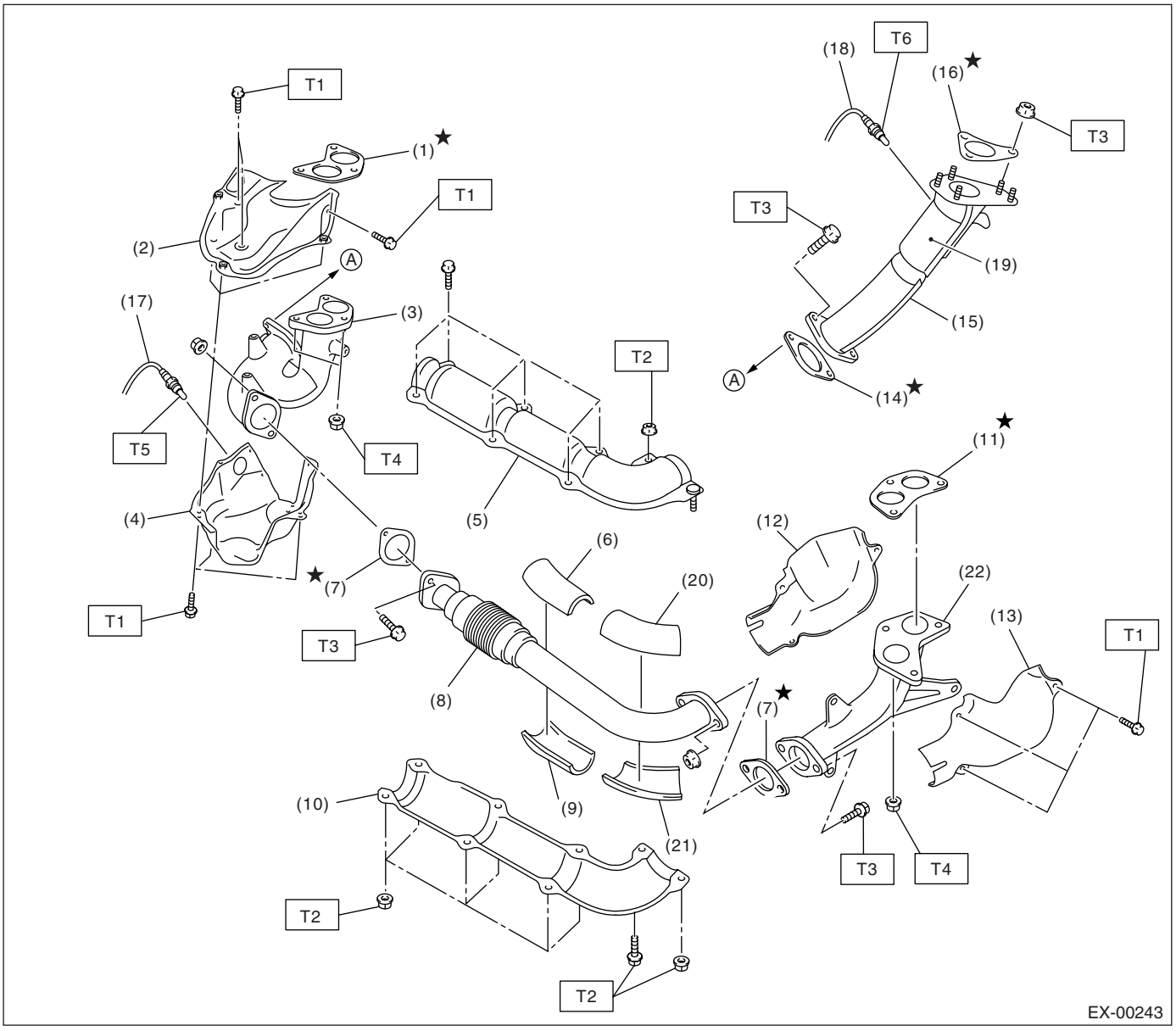

(1) Gasket
(2) Exhaust manifold upper cover (RH)
(3) Exhaust manifold (RH)
(4) Exhaust manifold lower cover (RH)
(5) Front exhaust pipe upper cover
(6) Front exhaust pipe upper insulator (RH)
(7) Gasket
(8) Front exhaust pipe
(9) Front exhaust pipe lower insulator (RH)
(10) Front exhaust pipe lower cover
(11) Gasket
(12) Exhaust manifold upper cover (LH)
(13) Exhaust manifold lower cover (LH)
(14) Gasket
(15) Turbocharger joint pipe
(16) Gasket
(17) Front oxygen (A/F) sensor
(18) Exhaust temperature sensor
(19) Precatalytic converter
(20) Front exhaust pipe upper insulator (LH)
(21) Front exhaust pipe lower insulator (LH)
(22) Exhaust manifold (LH)

Tightening torque: N·m (kgf-m, ft-lb)

T1: 19 (1.9, 13.7)
T2: 7.5 (0.8, 5.5)
T3: 35 (3.6, 26.0)
T4: 40 (4, 28.9)
T5: <Ref. to FU(H4DOTC)-35, INSTALLATION, Front Oxygen (A/F) Sensor.>
T6: <Ref. to FU(H4DOTC)-38, INSTALLATION, Exhaust Temperature Sensor.>

2. CENTER AND REAR EXHAUST PIPE, AND MUFFLER

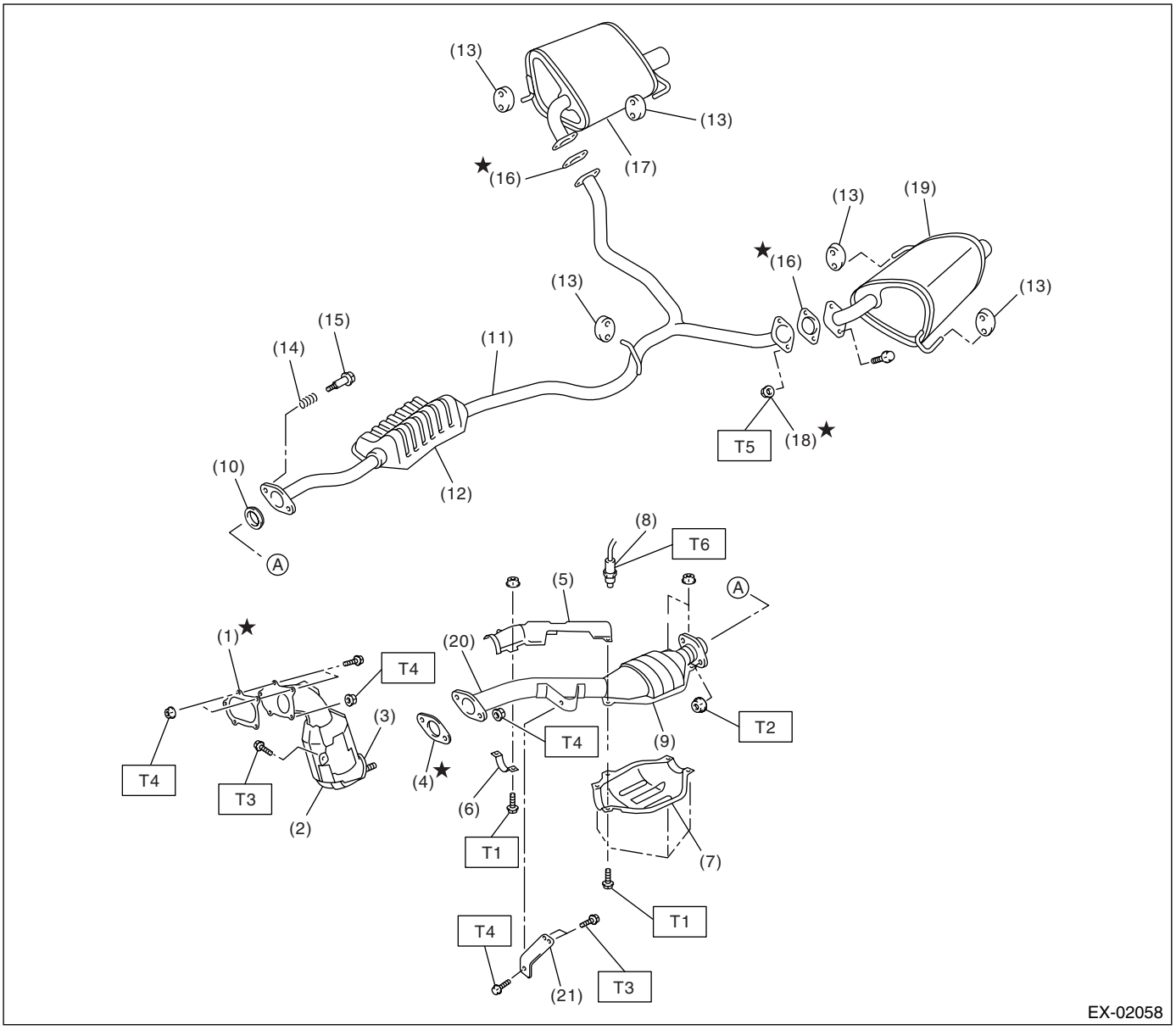

(1) Gasket
(2) Front catalytic converter
(3) Center exhaust pipe (Front)
(4) Gasket
(5) Center pipe upper cover (Rear)
(6) Clamp
(7) Rear catalytic converter lower cover
(8) Rear oxygen sensor
(9) Rear catalytic converter
(10) Gasket
(11) Rear exhaust pipe
(12) Chamber
(13) Cushion rubber
(14) Spring
(15) Bolt
(16) Gasket
(17) Muffler (RH)
(18) Self-locking nut
(19) Muffler (LH)
(20) Center exhaust pipe (Rear)
(21) Bracket

Tightening torque: N·m (kgf-m, ft-lb)
T1: 13 (1.3, 9.6)
T2: 18 (1.8, 13.0)
T3: 30 (3.1, 22.4)
T4: 35 (3.6, 26.0)
T5: 48 (4.9, 35.4)
T6: <Ref. to FU(H4DOTC)-37, INSTALLATION, Rear Oxygen Sensor.>

B: CAUTION

- Wear work clothing, including a cap, protective goggles, and protective shoes during operation.
- Remove contamination including dirt and corrosion before removal, installation or disassembly.
- Keep the disassembled parts in order and protect them from dust and dirt.
- Before removal, installation or disassembly, be sure to clarify the failure. Avoid unnecessary removal, installation, disassembly and replacement.
- Be careful not to burn yourself, because each part on the vehicle is hot after running.
- Be sure to tighten fasteners including bolts and nuts to the specified torque.
- Place shop jacks or rigid racks at the specified points.
- Before disconnecting electrical connectors of sensors or units, be sure to disconnect the ground cable from battery.

2. Front Exhaust Pipe

A: REMOVAL

1) Disconnect the ground cable from battery.

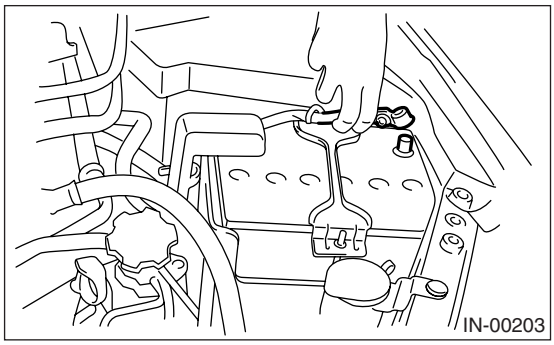

2) Remove the front oxygen (A/F) sensor. <Ref. to FU(H4DOTC)-35, REMOVAL, Front Oxygen (A/F) Sensor.>
3) Remove the under cover.
4) Remove the exhaust manifold lower cover (RH) and the exhaust manifold lower cover (LH).

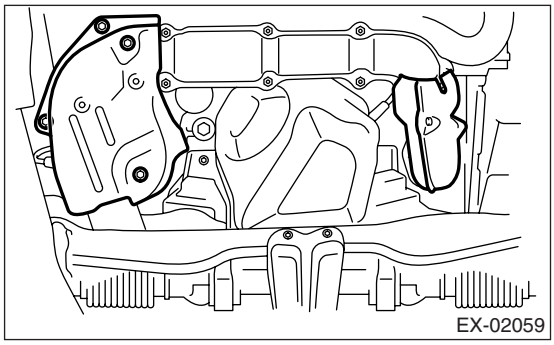

5) Remove the nuts which hold front exhaust pipe assembly to turbocharger joint pipe.
6) While holding the front exhaust pipe assembly with one hand, remove the nuts which hold front exhaust pipe assembly to cylinder head exhaust port.

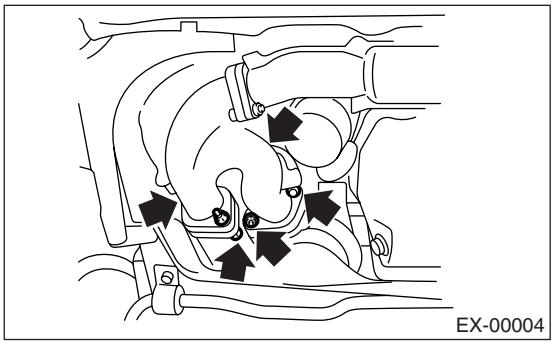

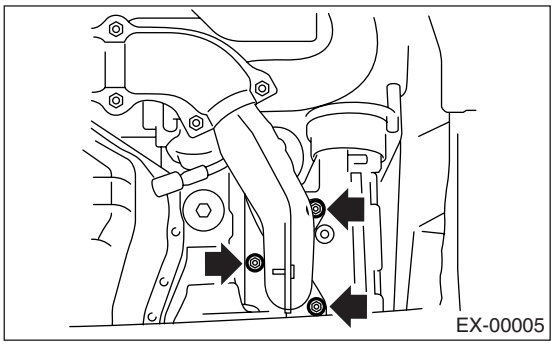

7) Remove the front exhaust pipe assembly.
8) Remove the covers from exhaust manifold and front exhaust pipe.
9) Separate the front exhaust pipe from exhaust manifolds.

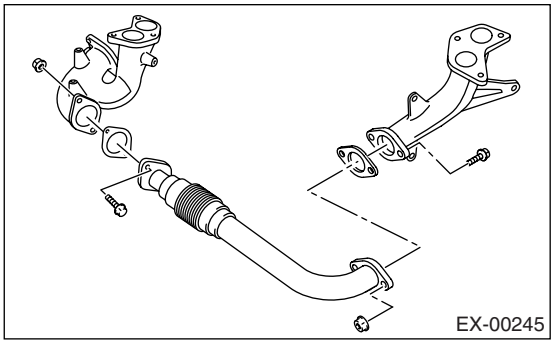

B: INSTALLATION

NOTE:
Replace the gaskets with new ones.

1) Assemble the front exhaust pipe and exhaust manifolds.

Tightening torque:
35 N·m (3.6 kgf-m, 26.0 ft-lb)

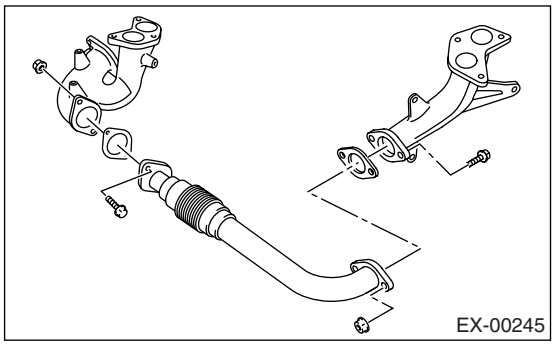

2) Install the front exhaust pipe covers.

Tightening torque:
7.5 N·m (0.8 kgf-m, 5.5 ft-lb)

3) Install the exhaust manifold upper cover (RH).

Tightening torque:
19 N·m (1.9 kgf-m, 13.7 ft-lb)

4) Install the front exhaust pipe assembly.

Tightening torque:
35 N·m (3.6 kgf-m, 26.0 ft-lb)

5) Connect the exhaust manifold (RH) to turbo-charger joint pipe.

Tightening torque:
T1: 35 N·m (3.6 kgf-m, 26.0 ft-lb)
T2: 40 N·m (4.0 kgf-m, 28.9 ft-lb)

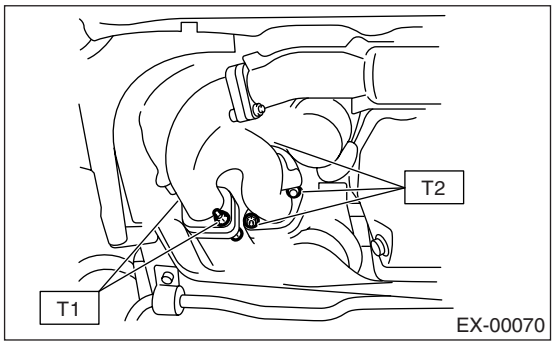

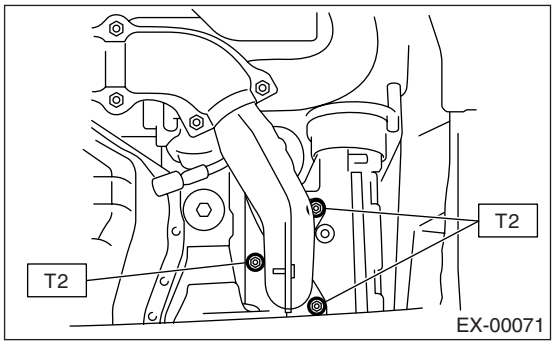

6) Install the exhaust manifold lower cover (RH) and the exhaust manifold lower cover (LH).

Tightening torque:
19 N·m (1.9 kgf-m, 13.7 ft-lb)

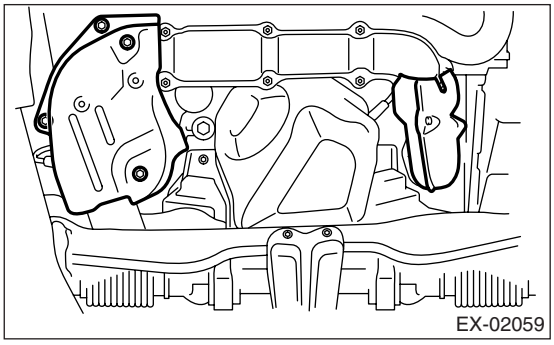

7) Install the front oxygen (A/F) sensor. <Ref. to FU(H4DOTC)-35, INSTALLATION, Front Oxygen (A/F) Sensor.>
8) Install the under cover.
9) Connect the battery ground cable to battery.

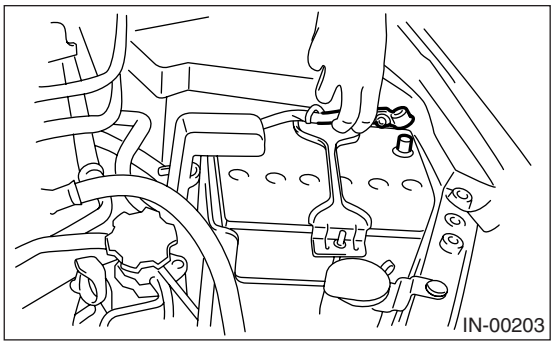

C: INSPECTION

1) Check the connections and welds for exhaust leaks.
2) Check the front exhaust pipe for holes or rust.

3. Center Exhaust Pipe

A: REMOVAL

1) Set the vehicle on a lift.
2) Remove the collector cover.
3) Disconnect the ground cable from battery.
4) Remove the intercooler. <Ref. to IN(H4DOTC)-12, REMOVAL, Intercooler.>
5) Remove the intercooler bracket.

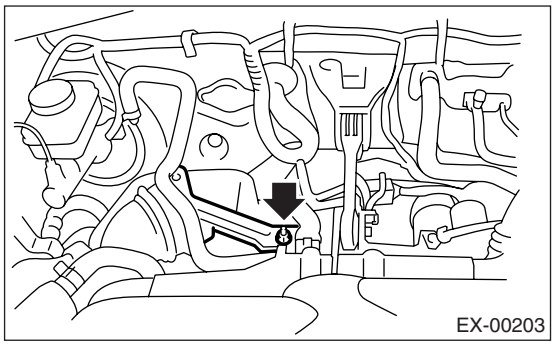
EX-00203

6) Lift-up the vehicle.
7) Remove the under cover.
8) Remove the bolts which install lower side of turbocharger upper cover.

CAUTION:
Be careful, the turbocharger and exhaust pipe are hot.

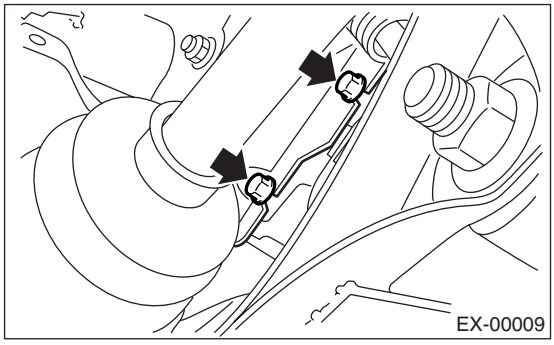
EX-00009

9) Lower the vehicle.
10) Remove the turbocharger upper cover.

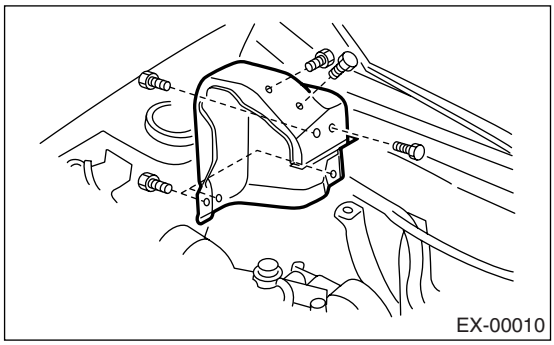
EX-00010

11) Remove the bolts which install upper side of turbocharger upper cover.

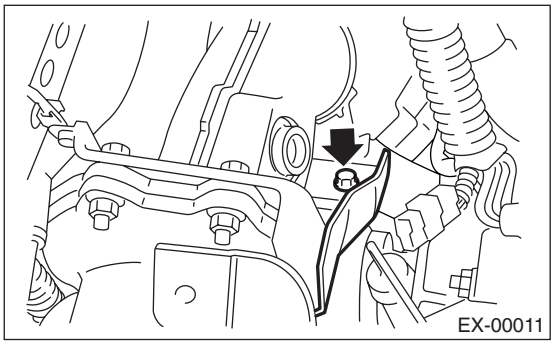
EX-00011

12) Separate the center exhaust pipe from turbocharger.

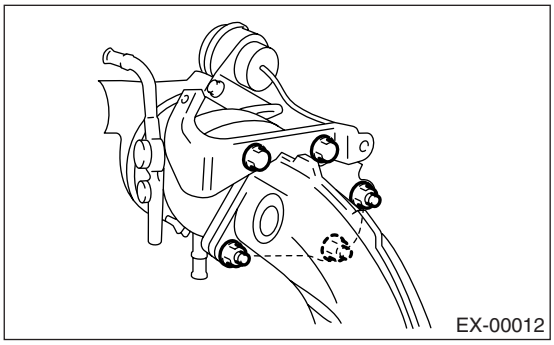
EX-00012

13) Lift-up the vehicle.
14) Disconnect the connector from rear oxygen sensor.

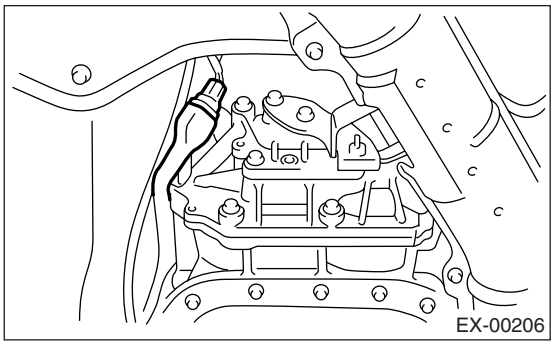
EX-00206

15) Separate the center exhaust pipe from rear exhaust pipe.

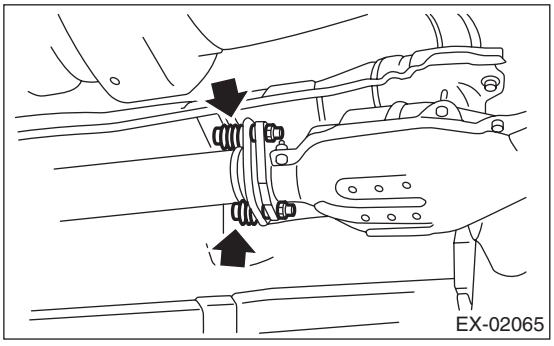
EX-02065

16) Remove the bolt which holds center exhaust pipe bracket to transmission.

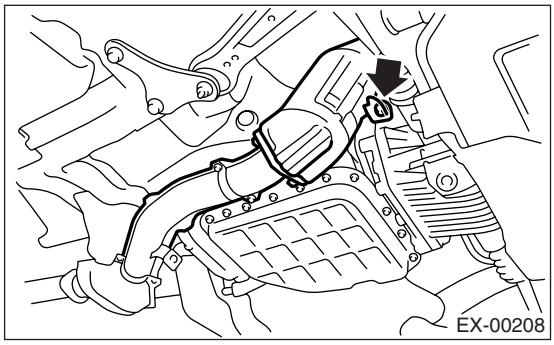

17) Remove the intercooler bracket.
18) Remove the bolt which holds center exhaust pipe to hanger bracket.

CAUTION:
Be careful not to pull down the center exhaust pipe.

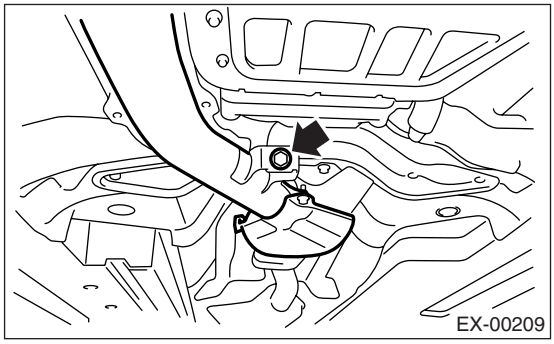

19) Remove the center exhaust pipe.

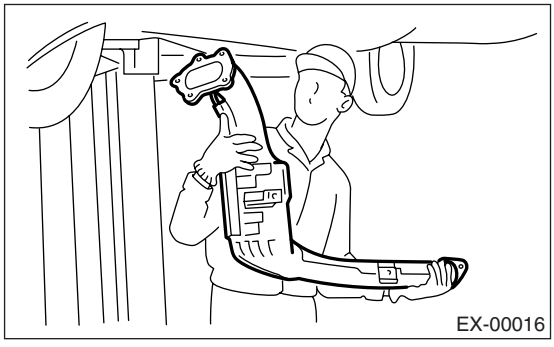

B: INSTALLATION

NOTE:
Replace the gaskets with new ones.

1) Install the center exhaust pipe and temporarily tighten the bolt which holds center exhaust pipe to hanger bracket.
2) Temporarily tighten the bolt which holds center pipe to transmission.
3) Connect the center exhaust pipe to turbocharger.

Tightening torque:
35 N·m (3.6 kgf-m, 26.0 ft-lb)

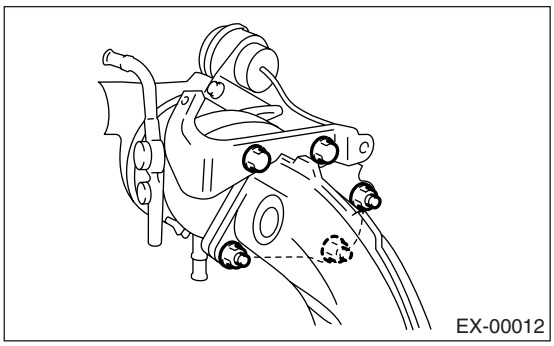

4) Install the center exhaust pipe to rear exhaust pipe.

Tightening torque:
18 N·m (1.8 kgf-m, 13.0 ft-lb)

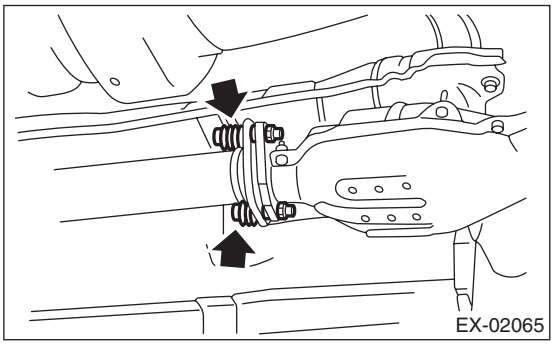

5) Connect the connector to rear oxygen sensor.

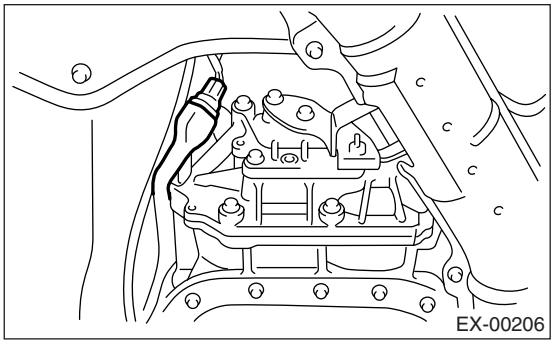

6) Tighten the bolt which holds center exhaust pipe bracket to transmission.

Tightening torque:
30 N·m (3.1 kgf-m, 22.4 ft-lb)

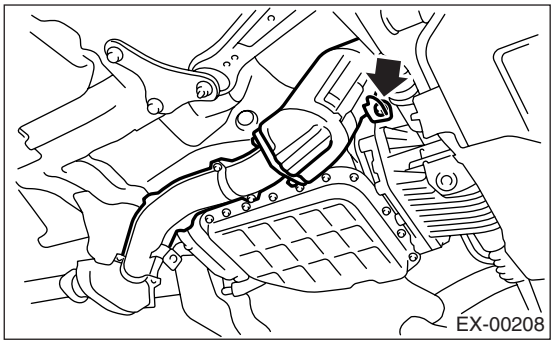

7) Tighten the bolt which holds center exhaust pipe to hanger bracket.

Tightening torque:
35 N·m (3.6 kgf-m, 26.0 ft-lb)

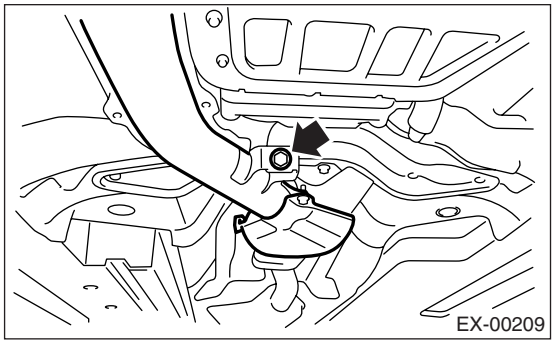

8) Tighten the bolts which hold intercooler bracket.

Tightening torque:
35 N·m (3.6 kgf-m, 26.0 ft-lb)

9) Lower the vehicle.
10) Place the turbocharger lower cover, and tighten the bolts which install upper side of lower cover.

Tightening torque:
7.4 N·m (0.75 kgf-m, 5.4 ft-lb)

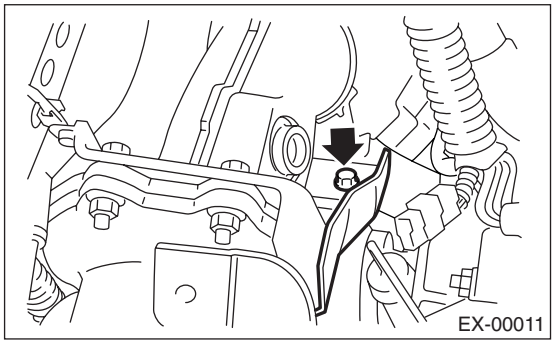

11) Place the turbocharger upper cover, and tighten the bolts which install upper side of upper cover.

Tightening torque:
7.4 N·m (0.75 kgf-m, 5.4 ft-lb)

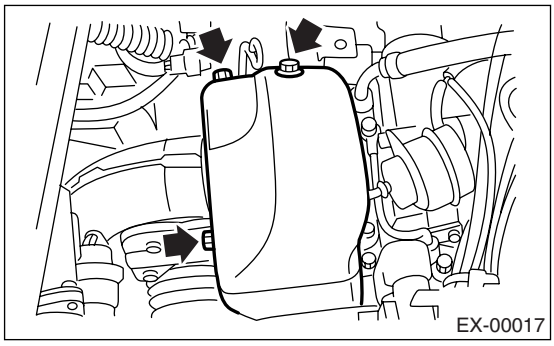

12) Lift-up the vehicle.
13) Tighten the bolts which install under side of turbocharger upper cover.

Tightening torque:
7.4 N·m (0.75 kgf-m, 5.4 ft-lb)

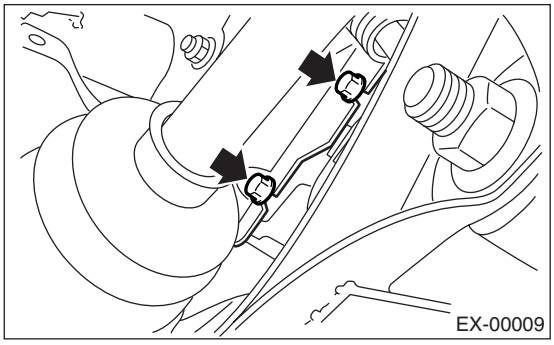

14) Install the under cover.
15) Lower the vehicle.
16) Install the intercooler bracket.

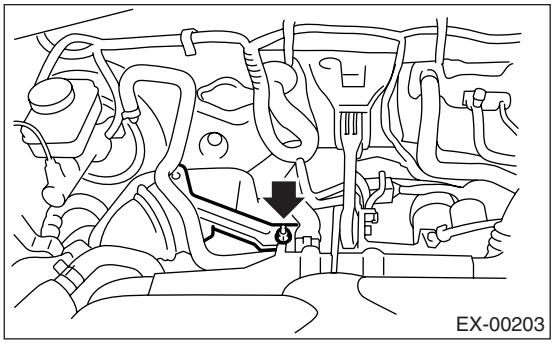

17) Install the intercooler. <Ref. to IN(H4DOTC)-12, INSTALLATION, Intercooler.>
18) Install the collector cover.

C: INSPECTION

1) Check the connections and welds for exhaust leaks.
2) Check the center exhaust pipe for holes or rust.

4. Joint Pipe

A: REMOVAL

1) Remove the collector cover.
2) Disconnect the battery ground cable.

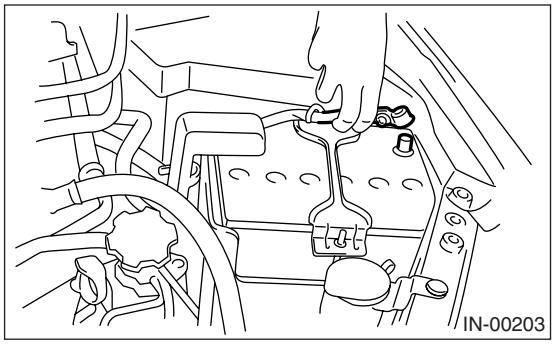

3) Disconnect the exhaust temperature sensor connector.

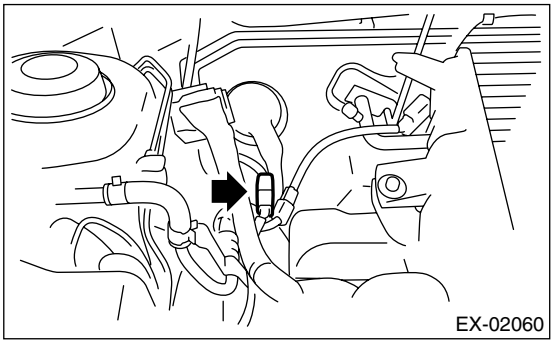

4) Remove the front oxygen (A/F) sensor. <Ref. to FU(H4DOTC)-35, REMOVAL, Front Oxygen (A/F) Sensor.>
5) Remove the under cover.
6) Remove the exhaust manifold lower cover (RH).

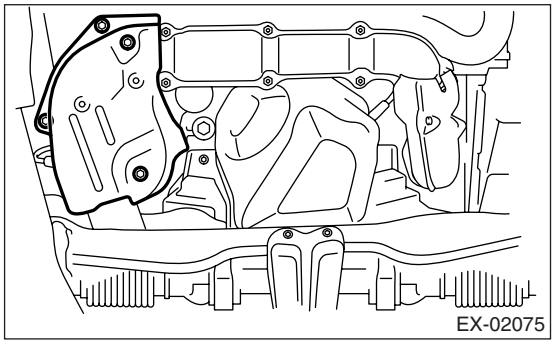

7) Remove the nuts which hold front exhaust manifold to joint pipe.

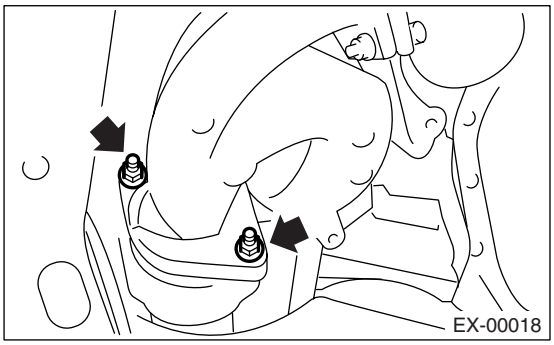

8) Remove the center exhaust pipe. <Ref. to EX(H4DOTC)-8, REMOVAL, Center Exhaust Pipe.>
9) Remove the turbocharger. <Ref. to IN(H4DOTC)-13, REMOVAL, Turbocharger.>
10) Take off the joint pipe in the upward direction.

B: INSTALLATION

Install in the reverse order of removal.

Tightening torque:
T: 35 N·m (3.6 kgf-m, 26.0 ft-lb)

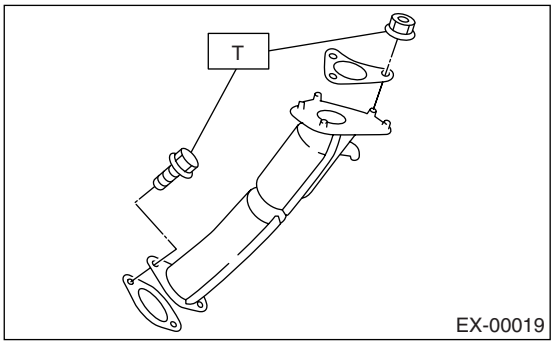

C: INSPECTION

1) Check the connections and welds for exhaust leaks.
2) Check the joint pipe for holes or rust.

5. Rear Exhaust Pipe

A: REMOVAL

1) Lift-up the vehicle.
2) Separate the rear exhaust pipe from center exhaust pipe.

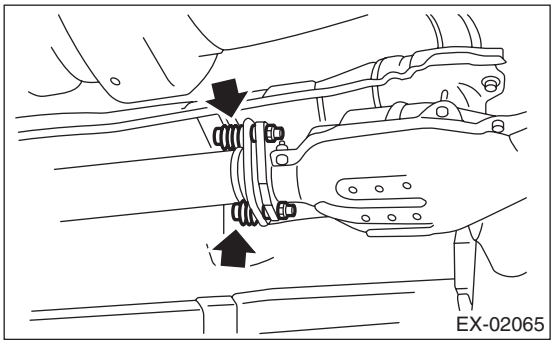

3) Separate the rear exhaust pipe from both mufflers.

CAUTION:
Be careful not to pull down the rear exhaust pipe.

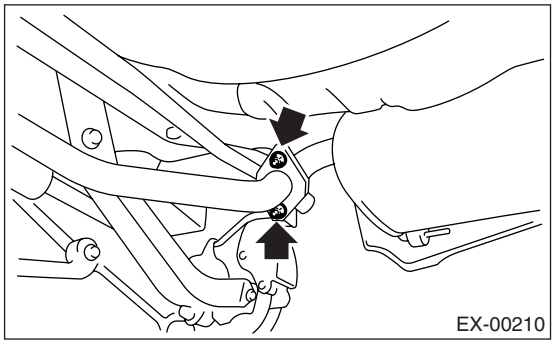

4) Apply a coat of spray type lubricant to the mating area of cushion rubber.
5) Remove the rear exhaust pipe bracket from cushion rubber.

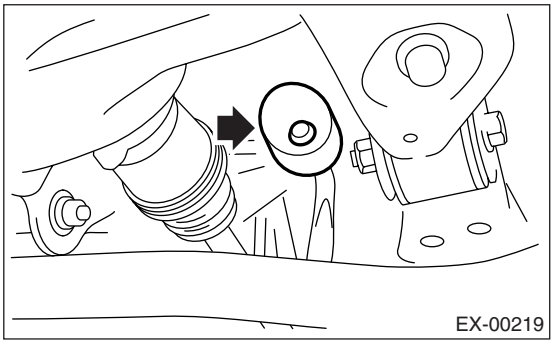

6) Remove the rear exhaust pipe.

B: INSTALLATION

1) Apply a coat of spray type lubricant to the mating area of cushion rubber.
2) Install the rear exhaust pipe bracket to cushion rubber.

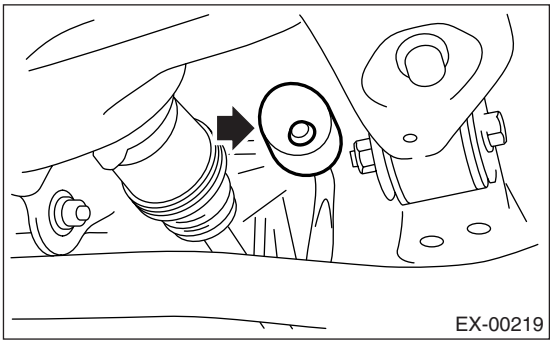

3) Install the rear exhaust pipe to both mufflers.

NOTE:
Use a new gasket.

Tightening torque:
48 N·m (4.9 kgf-m, 35.4 ft-lb)

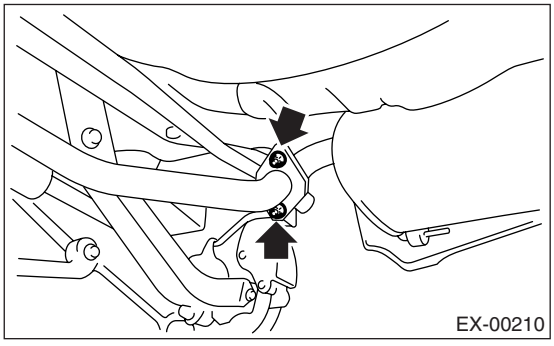

4) Install the rear exhaust pipe to center exhaust pipe.

Tightening torque:
35 N·m (3.6 kgf-m, 26.0 ft-lb)

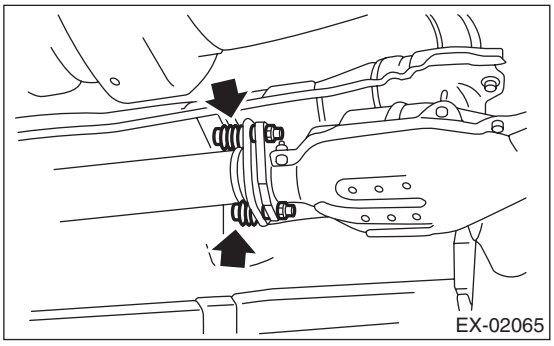

5) Lower the vehicle.

C: INSPECTION

1) Check the connections and welds for exhaust leaks.
2) Check the rear exhaust pipe for holes or rust.
3) Check the cushion rubber for wear or crack.

6. Muffler

A: REMOVAL

1) Separate the muffler (RH) from rear exhaust pipe.

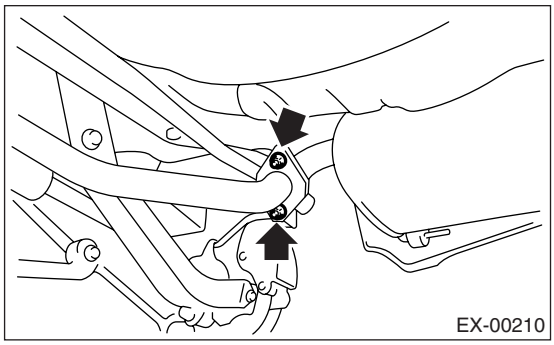

2) Remove the cushion rubbers, and detach the muffler.

CAUTION:
Be careful not to drop the muffler during removal.

NOTE:
To facilitate removal, apply a coat of spray type lubricant to the mating area of cushion rubbers in advance.

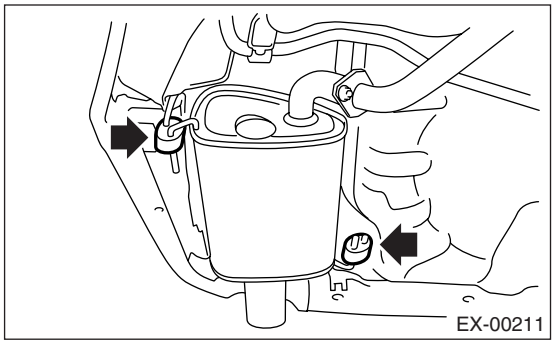

3) Perform the same procedure for muffler (LH).

B: INSTALLATION

Install in the reverse order of removal.

NOTE:
Always use a new gasket and self-locking nuts.

Tightening torque:
48 N·m (4.9 kgf-m, 35.4 ft-lb)

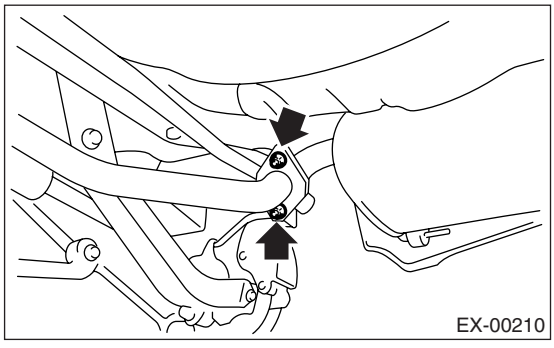

C: INSPECTION

1) Check the connections and welds for exhaust leaks.
2) Check the mufflers for holes or rust.
3) Check the cushion rubber for wear or crack.

COOLING

CO(H4DOTC)

		Page
1.	General Description	2
2.	Radiator Fan System	8
3.	Engine Coolant	13
4.	Water Pump	15
5.	Thermostat	17
6.	Radiator	19
7.	Radiator Cap	23
8.	Radiator Main Fan and Fan Motor	24
9.	Radiator Sub Fan and Fan Motor	27
10.	Reservoir Tank	30
11.	Coolant Filler Tank	31
12.	Engine Cooling System Trouble in General	32

1. General Description

A: SPECIFICATION

Cooling system			Electric fan + Forced engine coolant circulation system
Total engine coolant capacity ℓ (US qt, Imp qt)			MT: Approx. 7.3 (7.7, 6.4) AT: Approx. 7.2 (7.6, 6.3)
Water pump	Type		Centrifugal impeller type
	Discharge performance I	Discharge amount ℓ (US gal, Imp gal)/min	20 (5.3, 4.4)
		Pump speed — Discharge pressure	760 rpm — 2.9 kPa (0.3 mAq)
		Engine coolant temperature	85°C (185°F)
	Discharge performance II	Discharge amount ℓ (US gal, Imp gal)/min	100 (26.4, 22.0)
		Pump speed — Discharge pressure	3,000 rpm — 49.0 kPa (5.0 mAq)
		Engine coolant temperature	85°C (185°F)
	Discharge performance III	Discharge amount ℓ (US gal, Imp gal)/min	200 (52.8, 44.0)
		Pump speed — Discharge pressure	6,000 rpm — 225.4 kPa (23.0 mAq)
		Engine coolant temperature	85°C (185°F)
	Impeller diameter mm (in)		76 (2.99)
	Number of impeller vanes		8
	Pump pulley diameter mm (in)		60 (2.36)
	Clearance between impeller and case	Standard mm (in)	0.5 — 1.5 (0.020 — 0.059)
Thermostat	Type		Wax pellet type
	Starting temperature to open		76 — 80°C (169 — 176°F)
	Fully opens		91°C (196°F)
	Valve lift mm (in)		9.0 (0.354) or more
	Valve bore mm (in)		35 (1.38)
Radiator fan	Motor input	Main fan W	120
		Sub fan W	120
	Fan diameter / Blades	Main fan	320 mm (12.6 in) /5
		Sub fan	320 mm (12.6 in) /7
Radiator	Type		Down flow
	Core dimensions	Width × Height × Thickness mm (in)	687.4 × 340 × 16 (27.06 × 13.39 × 0.63)
	Pressure range in which cap valve is open	Coolant filler tank side kPa (kg/cm^2, psi)	Above: 108±15 (1.1±0.15, 16±2) Below: −1.0 — −4.9 (−0.01 — −0.05, −0.1 — −0.7)
		Radiator side kPa (kg/cm^2, psi)	Above only: 137±14.7 (1.40±0.15, 20±2.1)
	Fins		Corrugated fin type
Reservoir tank	Capacity ℓ (US qt, Imp qt)		0.45 (0.48, 0.40)

Vehicle speed	A/C compressor load	Engine coolant temperature		
		When increased: 94°C (201°F) or less When decreased: 91°C (196°F) or less	When increased: 95 — 96°C (203 — 205°F) When decreased: 92 — 94°C (198 — 201°F)	When increased: 97°C (207°F) or more When decreased: 95°C (203°F) or more
		Operation of radiator fan	Operation of radiator fan	Operation of radiator fan
When accelerating: 19 km/h (12 MPH) or less When decelerating: 10 km/h (6 MPH) or less	OFF	OFF	Low-Speed	High-Speed
	Low	Low-Speed	Low-Speed	High-Speed
	High	High-Speed	High-Speed	High-Speed
When accelerating: 20 — 69 km/h (12 — 43 MPH) When decelerating: 11 — 64 km/h (7 — 40 MPH)	OFF	OFF	Low-Speed	High-Speed
	Low	High-Speed	High-Speed	High-Speed
	High	High-Speed	High-Speed	High-Speed
When accelerating: 70 — 105 km/h (43 — 65 MPH) When decelerating: 65 — 100 km/h (40 — 62 MPH)	OFF	OFF	Low-Speed	High-Speed
	Low	High-Speed	High-Speed	High-Speed
	High	High-Speed	High-Speed	High-Speed
When accelerating: 106 km/h (66 MPH) or more When decelerating: 101 km/h (63 MPH) or more	OFF	OFF	High-Speed	High-Speed
	Low	High-Speed	High-Speed	High-Speed
	High	High-Speed	High-Speed	High-Speed

B: COMPONENT

1. WATER PUMP

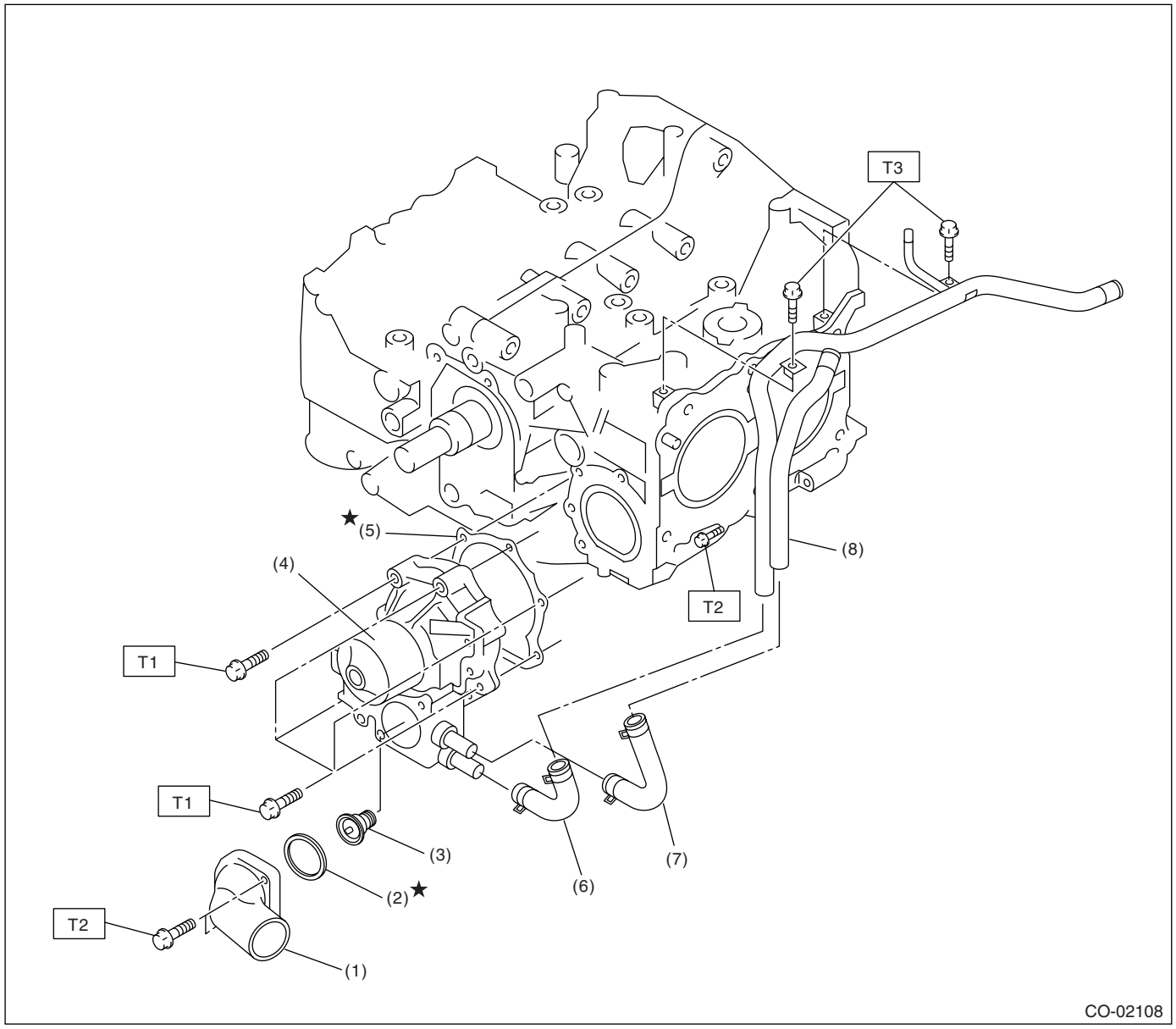

(1) Thermostat cover
(2) Gasket
(3) Thermostat
(4) Water pump ASSY
(5) Gasket
(6) Heater by-pass hose
(7) Coolant filler by-pass hose
(8) Water by-pass pipe

Tightening torque: N·m (kgf-m, ft-lb)
T1: First 12 (1.2, 8.9)
Second 12 (1.2, 8.9)
T2: 12 (1.2, 8.9)
T3: 6.5 (0.7, 4.8)

2. RADIATOR AND RADIATOR FAN

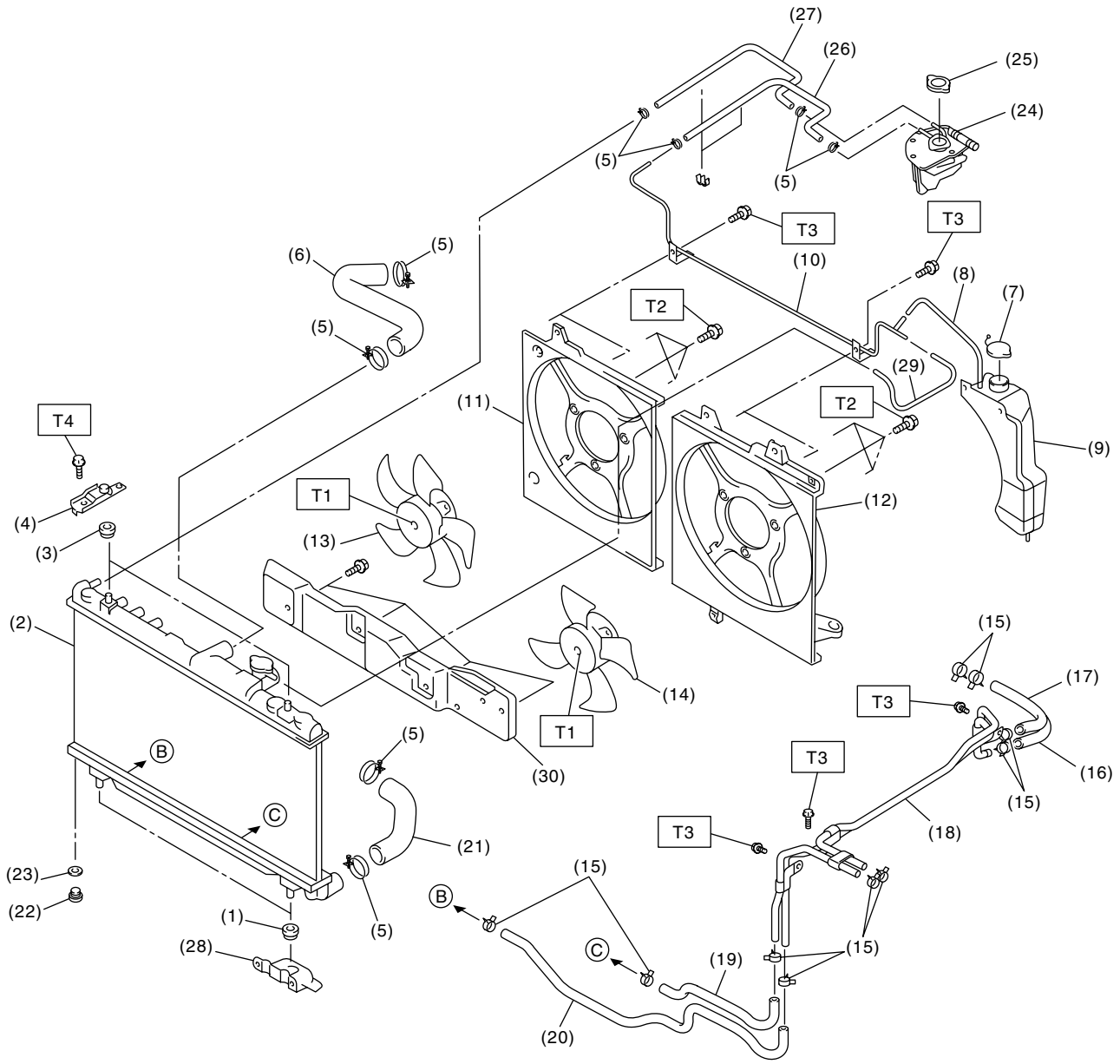

CO-02132

(1) Radiator lower cushion
(2) Radiator
(3) Radiator upper cushion
(4) Radiator upper bracket
(5) Clamp
(6) Radiator hose A
(7) Engine coolant reservoir tank cap
(8) Overflow hose A
(9) Engine coolant reservoir tank
(10) Overflow pipe
(11) Radiator sub fan shroud
(12) Radiator main fan shroud
(13) Radiator sub fan ASSY
(14) Radiator main fan ASSY
(15) ATF hose clamp (AT model)
(16) ATF hose A (AT model)
(17) ATF hose B (AT model)
(18) ATF pipe (AT model)
(19) ATF hose C (AT model)
(20) ATF hose D (AT model)
(21) Radiator hose B
(22) Radiator drain plug
(23) O-ring
(24) Engine coolant filler tank
(25) Radiator cap (Engine coolant filler tank cap)
(26) Coolant filler hose A
(27) Coolant filler hose B
(28) Radiator lower bracket
(29) Overflow hose B
(30) Heat shield cover (AT model)

Tightening torque: N·m (kgf-m, ft-lb)	
T1:	*3.4 (0.35, 2.5)*
T2:	*5 (0.5, 3.6)*
T3:	*7.5 (0.76, 5.5)*
T4:	*12 (1.2, 8.9)*

C: CAUTION

• Wear work clothing, including a cap, protective goggles, and protective shoes during operation.
• Remove contamination including dirt and corrosion before removal, installation or disassembly.
• Keep the disassembled parts in order and protect them from dust and dirt.
• Before removal, installation or disassembly, be sure to clarify the failure. Avoid unnecessary removal, installation, disassembly and replacement.
• Be careful not to burn yourself, because each part on the vehicle is hot after running.
• Be sure to tighten fasteners including bolts and nuts to the specified torque.
• Place shop jacks or rigid racks at the specified points.
• Before disconnecting electrical connectors of sensors or units, be sure to disconnect the ground cable from battery.

D: PREPARATION TOOL

ILLUSTRATION	TOOL NUMBER	DESCRIPTION	REMARKS
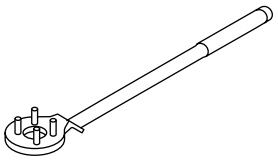 ST-499977100	499977100	CRANK PULLEY WRENCH	Used for stopping crank pulley when loosening and tightening crank pulley bolts.
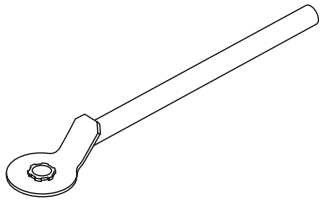 ST-499977500	499977500	CAM SPROCKET WRENCH	Used for removing and installing the intake camshaft sprocket.
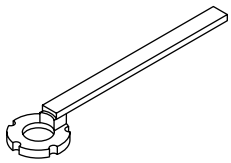 ST-499207400	499207400	CAM SPROCKET WRENCH	Used for removing and installing the exhaust camshaft sprocket.

2. Radiator Fan System

A: WIRING DIAGRAM

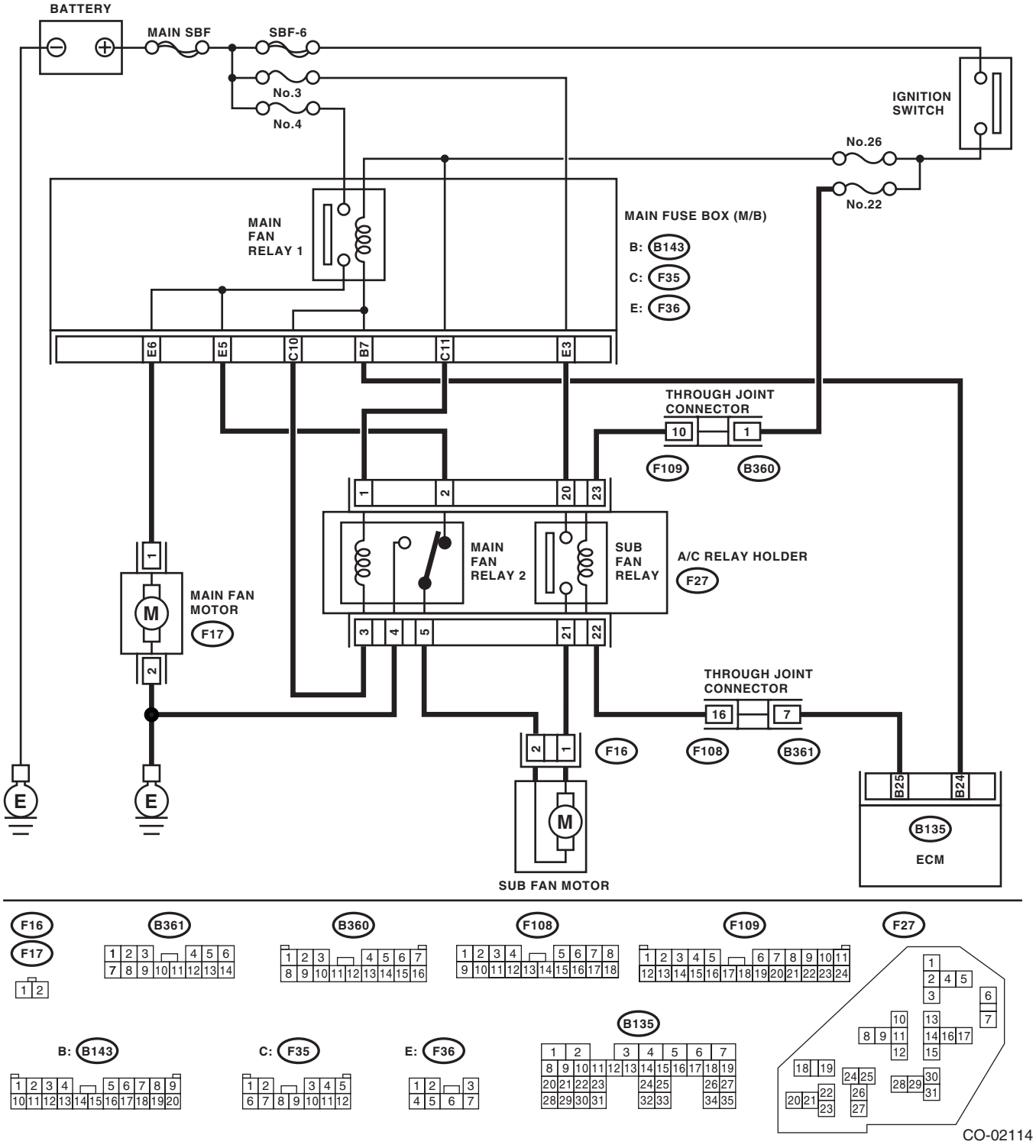

B: INSPECTION

DETECTING CONDITION:

- Engine coolant temperature is more than 96°C (205°F).
- Vehicle speed is below 19 km/h (12 MPH).

TROUBLE SYMPTOMS:

Radiator main and sub fan do not rotate under the above conditions.

	Step	Check	Yes	No
1	**CHECK OPERATION OF RADIATOR FAN.** 1) Connect the test mode connector. 2) Turn the ignition switch to ON. 3) Perform the compulsory operation check for the radiator fan relay using Subaru Select Monitor. NOTE: • When performing the compulsory operation check for the radiator fan relay using Subaru Select Monitor, the radiator main fan and sub fan will repeat such a operation as low speed revolution → high speed revolution → OFF in this order. • Refer to Compulsory Valve Operation Check Mode for more operation procedure. <Ref. to EN(H4DOTC)(diag)-46, Compulsory Valve Operation Check Mode.>	Do the radiator main fan and sub fan rotate at low speed?	Go to step **2.**	Go to step **3.**
2	**CHECK OPERATION OF RADIATOR FAN.** 1) Connect the test mode connector. 2) Turn the ignition switch to ON. 3) Perform the compulsory operation check for the radiator fan relay using Subaru Select Monitor. NOTE: • When performing the compulsory operation check for the radiator fan relay using Subaru Select Monitor, the radiator main fan and sub fan will repeat such a operation as low speed revolution → high speed revolution → OFF in this order. • Refer to Compulsory Valve Operation Check Mode for more operation procedure. <Ref. to EN(H4DOTC)(diag)-46, Compulsory Valve Operation Check Mode.>	Do the radiator main fan and sub fan rotate at high speed?	Radiator fan system is normal.	Go to step **27.**
3	**CHECK POWER SUPPLY TO SUB FAN RELAY.** 1) Turn the ignition switch to OFF. 2) Remove the sub fan relay from A/C relay holder. 3) Measure the voltage between sub fan relay terminal and chassis ground. ***Connector & terminal*** ***(F27) No. 20 (+) — Chassis ground (−):***	Is the voltage more than 10 V?	Go to step **4.**	Go to step **5.**
4	**CHECK POWER SUPPLY TO SUB FAN RELAY.** 1) Turn the ignition switch to ON. 2) Measure the voltage between sub fan relay terminal and chassis ground. ***Connector & terminal*** ***(F27) No. 23 (+) — Chassis ground (−):***	Is the voltage more than 10 V?	Go to step **7.**	Go to step **6.**

	Step	Check	Yes	No
5	**CHECK FUSE.** 1) Turn the ignition switch to OFF. 2) Remove the fuse No. 3. 3) Check the condition of fuse.	Is the fuse blown out?	Replace the fuse.	Repair the power supply line.
6	**CHECK FUSE.** 1) Turn the ignition switch to OFF. 2) Remove the fuse No. 22. 3) Check the condition of fuse.	Is the fuse blown out?	Replace the fuse.	Repair the power supply line.
7	**CHECK SUB FAN RELAY.** 1) Turn the ignition switch to OFF. 2) Measure the resistance between sub fan relay terminals. ***Terminals*** ***No. 20 — No. 21:***	Is the resistance more than 1 MΩ?	Go to step **8.**	Replace the sub fan relay.
8	**CHECK SUB FAN RELAY.** 1) Connect the terminals No. 22 and No. 23 of sub fan relay to battery. 2) Measure the resistance between sub fan relay terminals. ***Terminals*** ***No. 20 — No. 21:***	Is the resistance less than 1 Ω?	Go to step **9.**	Replace the sub fan relay.
9	**CHECK HARNESS BETWEEN SUB FAN RELAY TERMINAL AND SUB FAN MOTOR CONNECTOR.** 1) Disconnect the connector from sub fan motor. 2) Measure the resistance of harness between sub fan relay terminal and sub fan motor connector. ***Connector & terminal*** ***(F16) No. 1 — (F27) No. 21:***	Is the resistance less than 1 Ω?	Go to step **10.**	Repair the open circuit of harness between sub fan relay terminal and sub fan motor connector.
10	**CHECK HARNESS BETWEEN SUB FAN MOTOR CONNECTOR AND MAIN FAN RELAY 2 CONNECTOR.** 1) Remove the main fan relay 2 from A/C relay holder. 2) Measure the resistance of harness between sub fan motor connector and main fan relay 2 connector. ***Connector & terminal*** ***(F16) No. 2 — (F27) No. 5:***	Is the resistance less than 1 Ω?	Go to step **11.**	Repair the open harness between sub fan motor connector and main fan relay 2 connector.
11	**CHECK POOR CONTACT.** Check the poor contact in sub fan motor connector.	Is there poor contact in sub fan motor connector?	Repair the poor contact in sub fan motor connector.	Go to step **12.**
12	**CHECK SUB FAN MOTOR.** Connect the battery positive (+) terminal to terminal No. 1 of sub fan motor, and the ground (–) terminal to terminal No. 2.	Does the sub fan rotate?	Go to step **13.**	Replace the sub fan motor.
13	**CHECK MAIN FAN RELAY 2.** Measure the resistance of main fan relay 2. ***Terminals*** ***No. 2 — No. 5:***	Is the resistance less than 1 Ω?	Go to step **14.**	Replace the main fan relay 2.

	Step	Check	Yes	No
14	**CHECK HARNESS BETWEEN MAIN FAN RELAY 2 TERMINAL AND MAIN FAN MOTOR CONNECTOR.** 1) Disconnect the connector from main fan motor. 2) Measure the resistance of harness between main fan relay 2 terminal and main fan motor connector. ***Connector & terminal*** ***(F17) No. 1 — (F27) No. 2:***	Is the resistance less than 1 Ω?	Go to step **15.**	Repair the open circuit of harness between main fan relay 2 terminal and main fan motor connector.
15	**CHECK MAIN FAN MOTOR AND GROUND CIRCUIT.** Measure the resistance between main fan motor connector and chassis ground. ***Connector & terminal*** ***(F17) No. 2 — Chassis ground:***	Is the resistance less than5 Ω?	Go to step **16.**	Repair the open circuit in harness between main fan motor connector and chassis ground.
16	**CHECK POOR CONTACT.** Check poor contact in main fan motor connector.	Is there poor contact in main fan motor connector?	Repair the poor contact in main fan motor connector.	Go to step **17.**
17	**CHECK MAIN FAN MOTOR.** Connect the battery positive (+) terminal to terminal No. 1 of main fan motor, and the ground (−) terminal to terminal No. 2.	Does the main fan rotate?	Go to step **18.**	Replace the main fan motor.
18	**CHECK HARNESS BETWEEN SUB FAN RELAY AND ECM.** 1) Disconnect the connector from ECM. 2) Measure the resistance between sub fan relay terminal and ECM connector. ***Connector & terminal*** ***(B135) No. 25 — (F27) No. 22:***	Is the resistance less than 1 Ω?	Go to step **19.**	Repair the open circuit in harness between sub fan relay terminal and ECM.
19	**CHECK POOR CONTACT.** Check poor contact in ECM connector.	Is there a poor contact in ECM connector?	Repair the poor contact in ECM connector.	Check the DTC. Repair the trouble cause. <Ref. to EN(H4DOTC)(diag)-35, Read Diagnostic Trouble Code (DTC).>
20	**CHECK MAIN FAN RELAY 1.** 1) Turn the ignition switch to OFF. 2) Remove the main fan relay 1 from main fuse box. 3) Measure the resistance of terminal in main fan relay 1 switch.	Is the resistance more than 1 MΩ?	Go to step **21.**	Replace the main fan relay 1.
21	**CHECK MAIN FAN RELAY 1.** 1) Connect the terminal of main fan relay 1 coil side terminal to battery. 2) Measure the resistance between terminals of main fan relay 1 switch.	Is the resistance less than 1 Ω?	Go to step **22.**	Replace the main fan relay 1.
22	**CHECK HARNESS BETWEEN MAIN FAN RELAY 1 TERMINAL AND MAIN FAN MOTOR CONNECTOR.** 1) Disconnect the connector from main fan motor. 2) Measure the resistance of harness between main fan relay 1 terminal and main fan motor connector. ***Connector & terminal*** ***(F17) No. 1 — (F36) No. 6:***	Is the resistance less than 1 Ω?	Go to step **23.**	Repair the open circuit of harness between main fan relay 1 terminal and main fan motor connector.

	Step	Check	Yes	No
23	**CHECK HARNESS BETWEEN MAIN FAN RELAY 1 AND ECM.** 1) Disconnect the connector from ECM. 2) Measure the resistance between main fan relay 1 terminal and ECM connector. ***Connector & terminal*** ***(B135) No. 24 — (B143) No. 7:***	Is the resistance less than 1 Ω?	Go to step **24.**	Repair the open circuit of harness between main fan relay 1 terminal and ECM.
24	**CHECK HARNESS BETWEEN MAIN FAN RELAY 2 AND ECM.** Measure the resistance between main fan relay 2 terminal and ECM connector. ***Connector & terminal*** ***(B135) No. 24 — (F27) No. 3:***	Is the resistance less than 1 Ω?	Go to step **25.**	Repair the open circuit of harness between main fan relay 2 terminal and ECM.
25	**CHECK FUSE.** 1) Turn the ignition switch to OFF. 2) Remove the fuse No. 4 and No. 26. 3) Check the condition of fuse.	Is the fuse blown out?	Replace the fuse.	Go to step **26.**
26	**CHECK POOR CONTACT.** Check poor contact in ECM connector.	Is there a poor contact in ECM connector?	Repair the poor contact in ECM connector.	Repair the power supply circuit for main fuse box.
27	**CHECK OPERATION OF RADIATOR FAN.** Check the sub fan rotates when both fans do not rotate at high speed under the step 2.	Does the sub fan rotate?	Go to step **20.**	Go to step **28.**
28	**CHECK GROUND CIRCUIT OF MAIN FAN RELAY 2.** 1) Remove the main fan relay 2 from A/C relay holder. 2) Measure the resistance between main fan relay 2 terminal and chassis ground. ***Connector & terminal*** ***(F27) No. 4 — Chassis ground:***	Is the resistance less than 1 Ω?	Go to step **29.**	Repair the open circuit in harness between main fan relay 2 and chassis ground.
29	**CHECK POWER SUPPLY TO MAIN FAN RELAY 2.** 1) Turn the ignition switch to ON. 2) Measure the voltage between main fan relay 2 terminal and chassis ground. ***Connector & terminal*** ***(F27) No. 1 (+) — Chassis ground (−):***	Is the voltage more than 10 V?	Go to step **30.**	Repair the power supply line.
30	**CHECK MAIN FAN RELAY 2.** 1) Turn the ignition switch to OFF. 2) Remove the main fan relay 2. 3) Measure the resistance of main fan relay 2. ***Terminals*** ***(F27) No. 4 — (F27) No. 5:***	Is the resistance more than 1 MΩ?	Go to step **31.**	Replace the main fan relay 2.
31	**CHECK MAIN FAN RELAY 2.** 1) Connect the battery to terminals No. 1 and No. 3 of main fan relay 2. 2) Measure the resistance of main fan relay 2. ***Terminals*** ***(F27) No. 4 — (F27) No. 5:***	Is the resistance less than 1 Ω?	Go to step **23.**	Replace the main fan relay 2.

3. Engine Coolant

A: REPLACEMENT

1. DRAINING OF ENGINE COOLANT

1) Lift-up the vehicle.
2) Remove the under cover.
3) Remove the drain plug to drain engine coolant into container.

NOTE:
Remove the coolant filler tank cap so that engine coolant will drain faster.

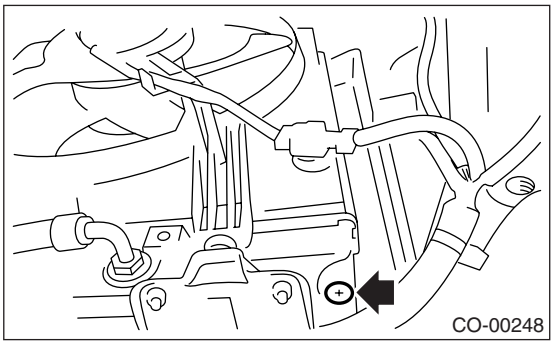

4) Install the drain plug.

2. FILLING OF ENGINE COOLANT

1) Remove the collector cover.
2) Pour cooling system conditioner through the filler neck.

Cooling system protective agent:
COOLING SYSTEM CONDITIONER (Part No. SOA635071)

3) Fill engine coolant into coolant filler tank up to the filler neck position.

Coolant capacity (fill up to "FULL" level):
AT model
Approx. 7.2 ℓ (7.6 US qt, 6.3 Imp qt)
MT model
Approx. 7.3 ℓ (7.7 US qt, 6.4 Imp qt)

CAUTION:
Do not confuse the cap of coolant filler tank with that of radiator.

NOTE:
• When pouring the engine coolant, the radiator side cap must not be removed.
• The SUBARU Genuine Coolant containing anti-freeze and anti-rust agents is especially made for SUBARU engine, which has an aluminum crankcase. Always use SUBARU Genuine Coolant, since other coolant may cause corrosion.

4) Fill engine coolant into the reservoir tank up to "FULL" level.
5) Close the coolant filler tank cap, start the engine and race 5 to 6 times at less than 3,000 rpm, then stop the engine. (Complete this operation within 40 seconds.)
6) Wait for one minute after the engine stops, open the coolant filler tank cap. If the engine coolant level drops, add engine coolant to the filler neck position of radiator.
7) Perform the procedures 5) and 6) again.
8) Attach the coolant filler tank cap and reservoir tank cap properly.
9) Start the engine and operate the heater at maximum hot position and the blower speed setting to "LO".
10) Run the engine at 2,000 rpm or less until radiator fan starts and stops.

NOTE:
• Be careful with the engine coolant temperature gauge to prevent overheating.
• If the radiator hose becomes harden by engine coolant pressure at this time, air purge seems to be mostly completed.

11) Stop the engine and wait until engine coolant temperature lowers to 30°C (86°F) or less.
12) Open the coolant filler tank cap. If the engine coolant level drops, add engine coolant into the coolant filler tank up to the filler neck position and the reservoir tank to "FULL" level.
13) Attach the coolant filler tank cap and reservoir tank cap properly.
14) Set the heater setting to maximum hot position and the blower speed setting to "LO" and start the engine. Perform racing at less than 3,000 rpm. If the flowing sound is heard from heater core, repeat the procedures from step 10).
15) Install the collector cover.

B: INSPECTION

1. RERATIONSHIP OF SUBARU COOLANT CONCENTRATION AND FREEZING TEMPERTAURE

Concentration and safe operating temperature of SUBARU coolant is shown in the diagram. Measuring the temperature and specific gravity of the coolant will provide this information.
[Example]
If the coolant temperature is 25°C (77°F) and its specific gravity is 1.054 and the concentration is 35% (point A), the safe operating temperature is −14°C (7°F) (point B), and the freezing temperature is −20°C (−4°F) (point C).

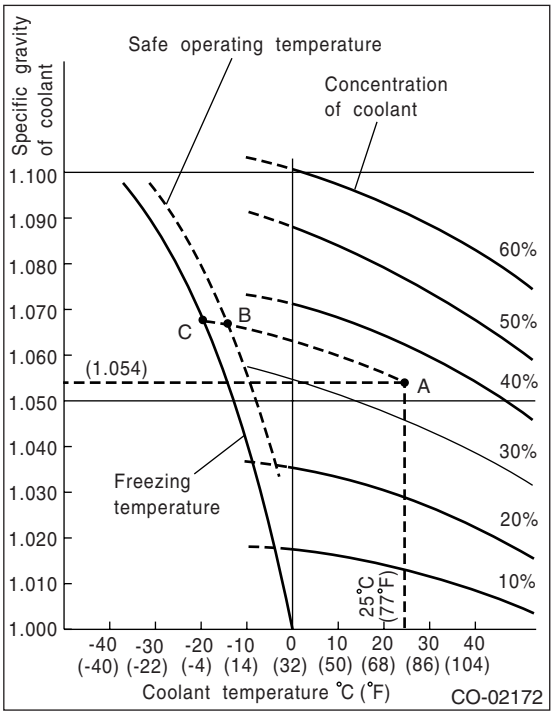

2. PROCEDURE TO ADJUST THE CONCENTRATION OF THE COOLANT

To adjust the concentration of coolant according to temperature, find the proper fluid concentration in the above diagram and replace the necessary amount of coolant with an undiluted solution of SUBARU genuine coolant (concentration 50%).
The amount of coolant that should be replaced can be determined using the diagram.
[Example]
Assume that the coolant concentration must be increased from 25% to 40%. Find point A, where the 25% line of coolant concentration intersects with the 40% curve of the necessary coolant concentration, and read the scale on the vertical axis of the graph at height A. The quantity of coolant to be drained is 2.1 ℓ (2.2 US qt, 1.8 Imp qt). Drain 2.1 ℓ (2.2 US qt, 1.8 Imp qt) of coolant from the cooling system and add 2.1 ℓ (2.2 US qt, 1.8 Imp qt) of the undiluted solution of SUBARU coolant.
If a coolant concentration of 50% is needed, drain all the coolant and refill with the undiluted solution only.

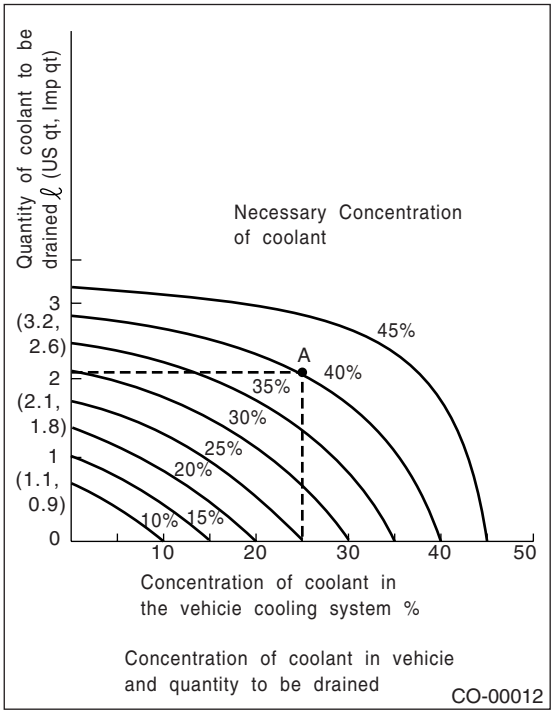

4. Water Pump

A: REMOVAL

1) Remove the collector cover.
2) Remove the radiator. <Ref. to CO(H4DOTC)-19, REMOVAL, Radiator.>
3) Remove the V-belts. <Ref. to ME(H4DOTC)-37, REMOVAL, V-belt.>
4) Remove the timing belt. <Ref. to ME(H4DOTC)-42, REMOVAL, Timing Belt.>
5) Remove the automatic belt tension adjuster (A).
6) Remove the belt idler (B).
7) Remove the belt idler No. 2 (C).

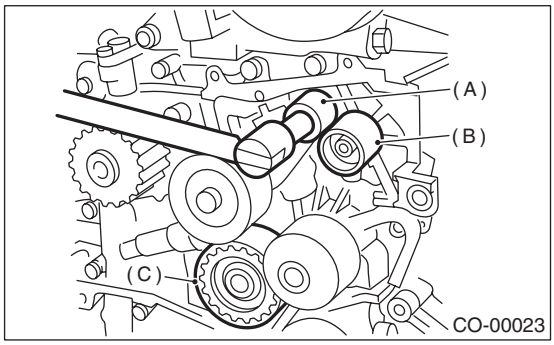

8) Remove the camshaft position sensor. <Ref. to FU(H4DOTC)-24, REMOVAL, Camshaft Position Sensor.>
9) Remove the cam sprocket (LH) using ST. <Ref. to ME(H4DOTC)-50, REMOVAL, Cam Sprocket.>
10) Remove the tensioner bracket.

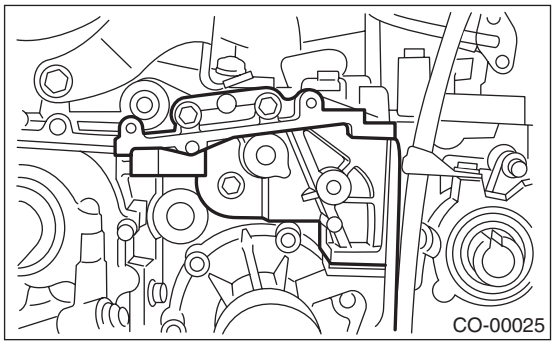

11) Remove the belt cover No. 2 (LH).

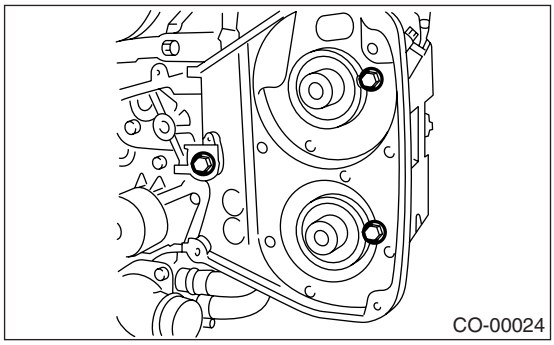

12) Disconnect the hose from water pump.
13) Remove the water pump.

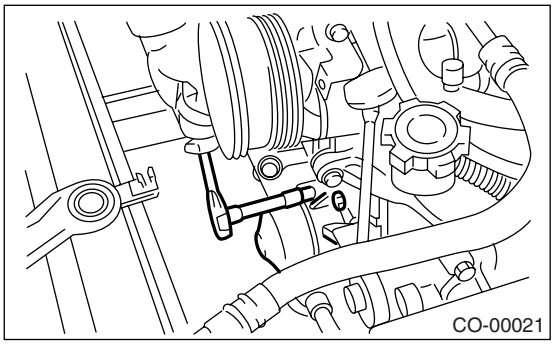

B: INSTALLATION

1) Install the water pump onto cylinder block (LH).

NOTE:
- Always use new gasket.
- When installing the water pump, tighten the bolts in two stages in alphabetical sequence as shown in the figure.

Tightening torque:
First:
12 N·m (1.2 kgf-m, 8.9 ft-lb)
Second:
12 N·m (1.2 kgf-m, 8.9 ft-lb)

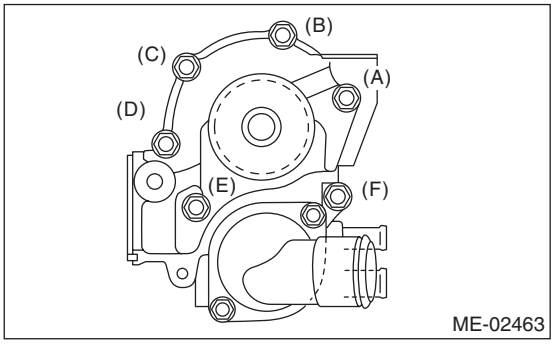

2) Install the hose to water pump.
3) Install the belt cover No. 2 (LH).

Tightening torque:
5 N·m (0.5 kgf-m, 3.6 ft-lb)

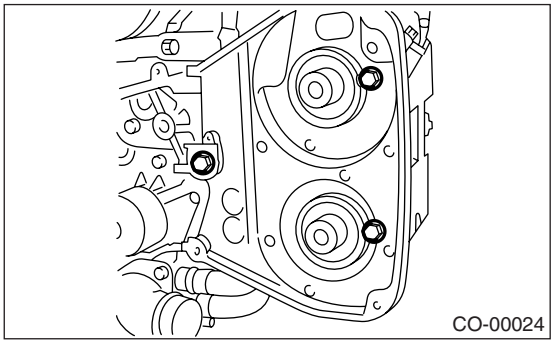

4) Install the tensioner bracket.

Tightening torque:
25 N·m (2.5 kgf-m, 18.1 ft-lb)

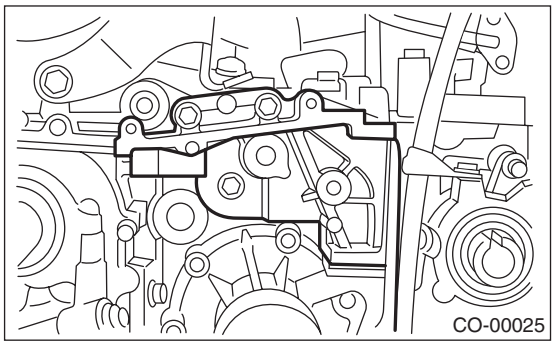

5) Install the cam sprocket (LH) using ST. <Ref. to ME(H4DOTC)-50, INSTALLATION, Cam Sprocket.>
6) Install the camshaft position sensor. <Ref. to FU(H4DOTC)-24, INSTALLATION, Camshaft Position Sensor.>
7) Install the belt idler No. 2 (C).
8) Install the belt idler (B).
9) Install the automatic belt tension adjuster (A) which has a tension rod held by a pin. <Ref. to ME(H4DOTC)-43, AUTOMATIC BELT TENSION ADJUSTER ASSEMBLY AND BELT IDLER, INSTALLATION, Timing Belt.>

Tightening torque:
39 N·m (4.0 kgf-m, 28.9 ft-lb)

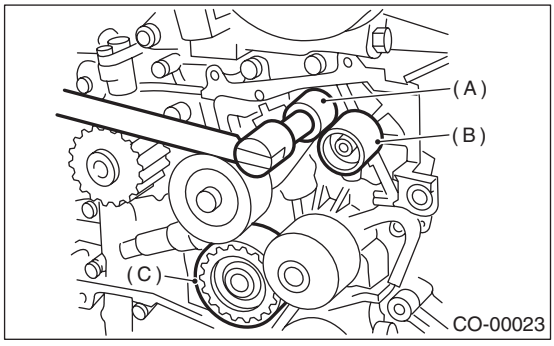

10) Install the timing belt. <Ref. to ME(H4DOTC)-44, TIMING BELT, INSTALLATION, Timing Belt.>
11) Install the V-belts. <Ref. to ME(H4DOTC)-37, INSTALLATION, V-belt.>
12) Install the radiator. <Ref. to CO(H4DOTC)-20, INSTALLATION, Radiator.>
13) Install the collector cover.

C: INSPECTION

1) Check the water pump bearing for smooth rotation.
2) Check the water pump pulley for abnormalities.
3) Make sure the impeller is not deformed or damaged.
4) Inspect the clearance between impeller and pump case.

Clearance between impeller and pump case:
Standard value
0.5 — 1.5 mm (0.020 — 0.059 in)

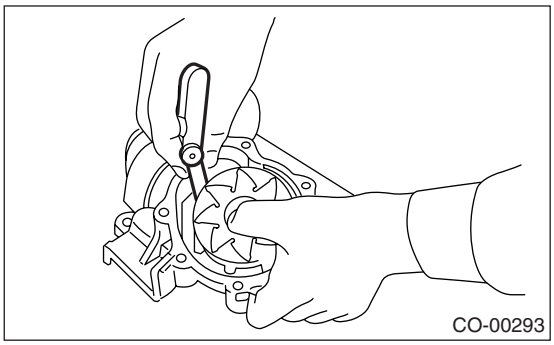

5) After water pump installation, check the pulley shaft for engine coolant leaks and noise. If leaks or noise are noted, replace the water pump assembly.

5. Thermostat

A: REMOVAL

1) Set the vehicle on a lift.
2) Lift-up the vehicle.
3) Remove the under cover.
4) Drain engine coolant completely.
<Ref. to CO(H4DOTC)-13, DRAINING OF ENGINE COOLANT, REPLACEMENT, Engine Coolant.>

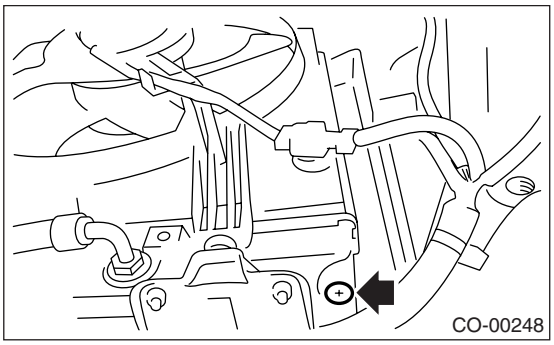

5) Disconnect the radiator outlet hose from the thermostat cover.

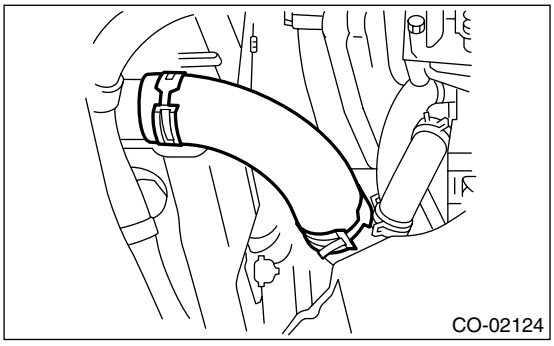

6) Remove the thermostat cover, and then remove the gasket and thermostat.

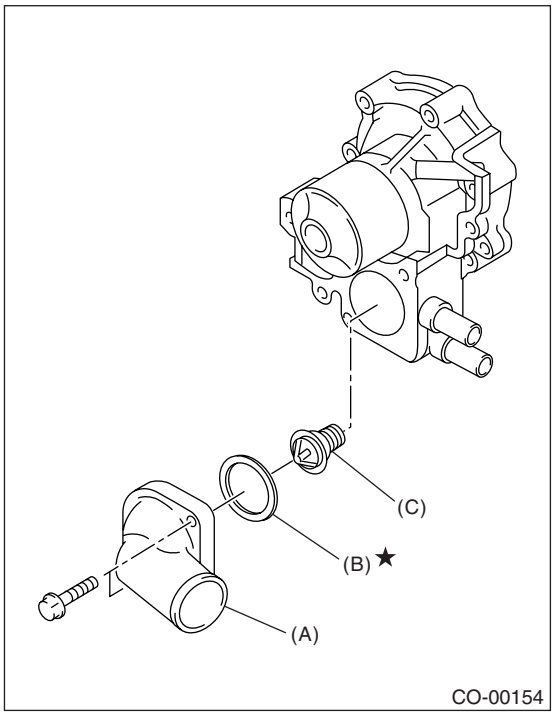

(A) Thermostat cover
(B) Gasket
(C) Thermostat

B: INSTALLATION

1) Install the gasket to thermostat, and install the thermostat and gasket to water pump as a unit. Then, install the thermostat cover.

NOTE:
• When reinstalling the thermostat, use a new gasket.
• The thermostat must be installed with the jiggle pin facing upward.

Tightening torque:
12 N·m (1.2 kgf-m, 8.9 ft-lb)

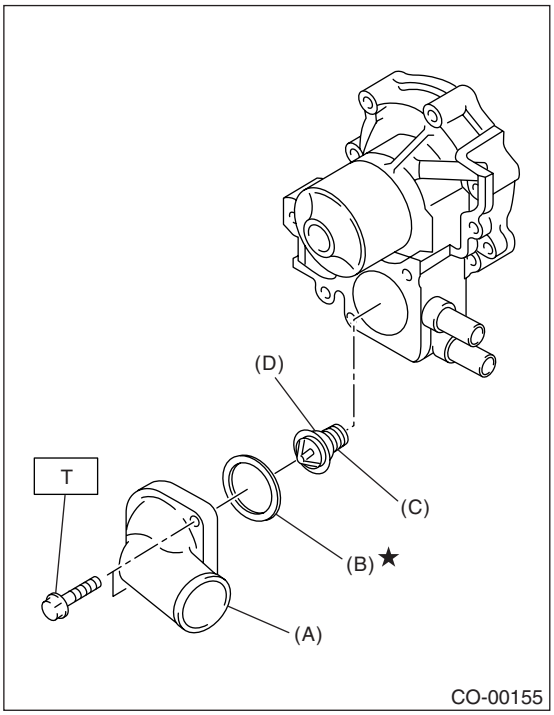

(A) Thermostat cover
(B) Gasket
(C) Thermostat
(D) Jiggle pin

2) Connect the radiator outlet hose to thermostat cover.
3) Install the under cover.
4) Lower the vehicle.
5) Fill with engine coolant. <Ref. to CO(H4DOTC)-13, FILLING OF ENGINE COOLANT, REPLACEMENT, Engine Coolant.>

C: INSPECTION

Replace the thermostat if the valve does not close completely at an ambient temperature or if the following test shows unsatisfactory results.

• Inspection method

Immerse the thermostat and a thermometer in water. Raise water temperature gradually, and measure the temperature and valve lift when the valve begins to open and when the valve is fully opened. During the test, agitate the water for even temperature distribution. The measurement should be to the specification.

NOTE:
• Leave the thermostat in a boiled water for more than five minutes before measuring the valve lift.
• Hold the thermostat with a wire or the like to avoid contacting with the bottom of container.

Starting temperature to open:
76 — 80°C (169 — 176°F)

Fully opens:
91°C (196°F)

Valve lift:
9.0 mm (0.354 in) or more

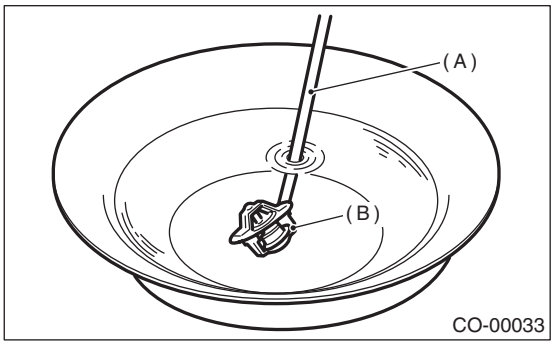

(A) Thermometer
(B) Thermostat

6. Radiator

A: REMOVAL

WARNING:
The radiator is pressurized. Wait until engine cools down before working on the radiator.

1) Set the vehicle on a lift.
2) Remove the collector cover.
3) Disconnect the ground cable from battery.

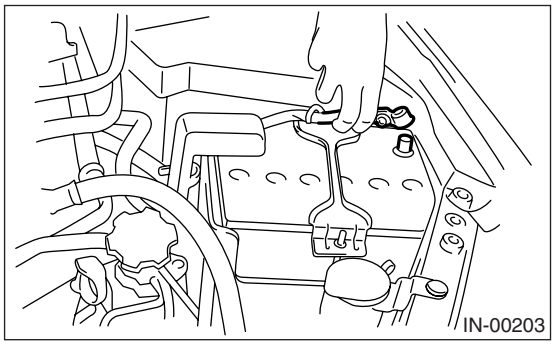

4) Lift-up the vehicle.
5) Remove the under cover.
6) Remove the heat shield cover from radiator. (AT model)

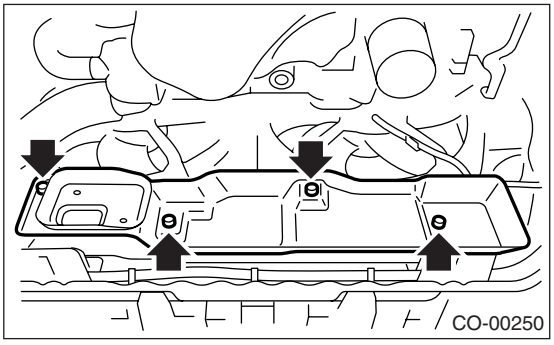

7) Drain engine coolant completely.
<Ref. to CO(H4DOTC)-13, DRAINING OF ENGINE COOLANT, REPLACEMENT, Engine Coolant.>

8) Disconnect the connectors of radiator main fan motor (A) and sub fan motor (B).

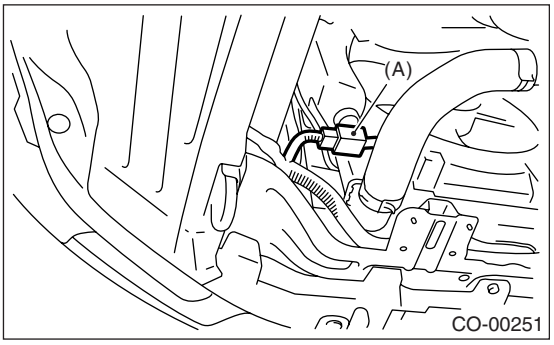

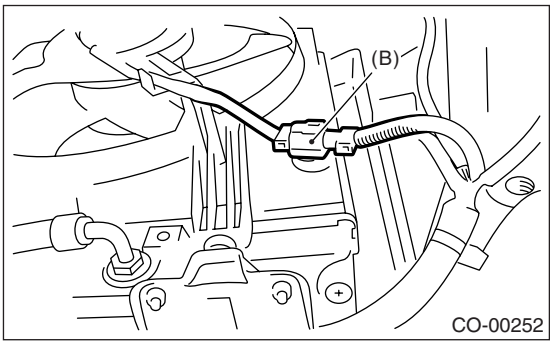

9) Disconnect the ATF cooler hoses from ATF pipes.
Plug the ATF pipe to prevent ATF leaks. (AT model)

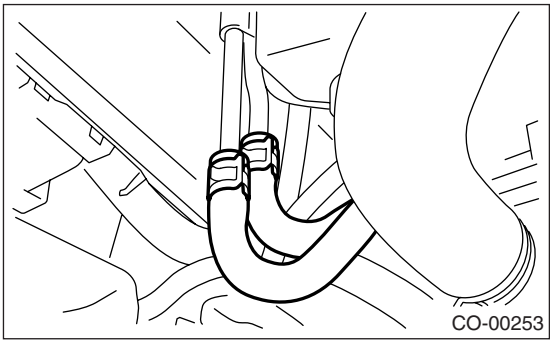

10) Disconnect the radiator outlet hose from thermostat cover.

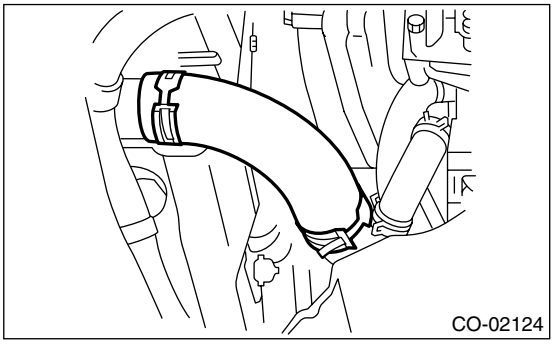

11) Lower the vehicle.
12) Remove the air intake duct. <Ref. to IN(H4DOTC)-9, REMOVAL, Air Intake Duct.>
13) Disconnect the over flow hose.

14) Remove the reservoir tank. <Ref. to CO(H4DOTC)-30, REMOVAL, Reservoir Tank.>
15) Disconnect the radiator inlet hose (A) from radiator.
16) Remove the hood stay holder (B).

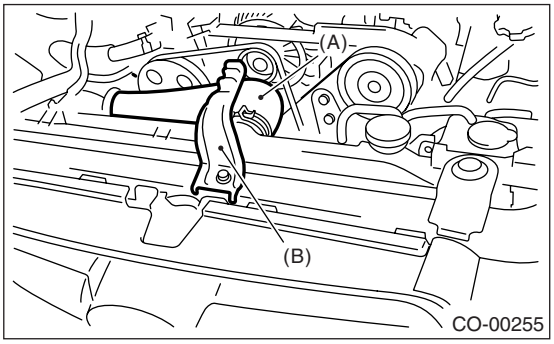

17) Disconnect the two coolant filler tank hoses from radiator.

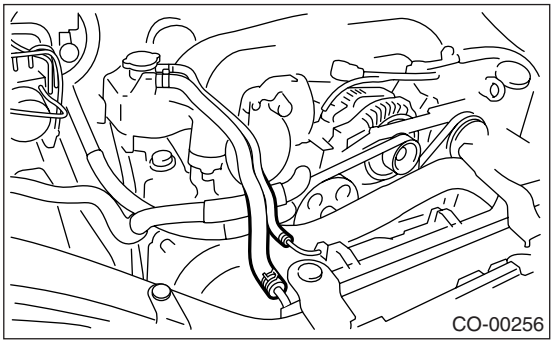

18) Remove the radiator upper brackets.

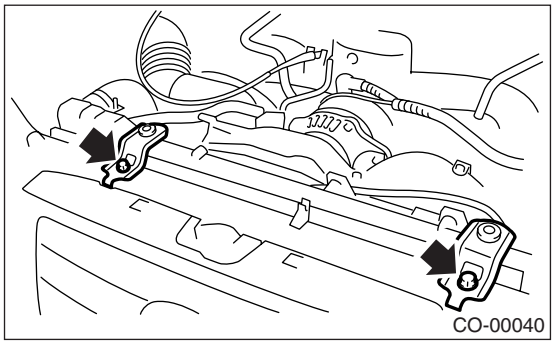

19) While lifting the radiator up, slide it to the left.
20) Lift the radiator up and away from vehicle.

B: INSTALLATION

1) Attach the radiator lower cushions to holes on the radiator lower bracket.

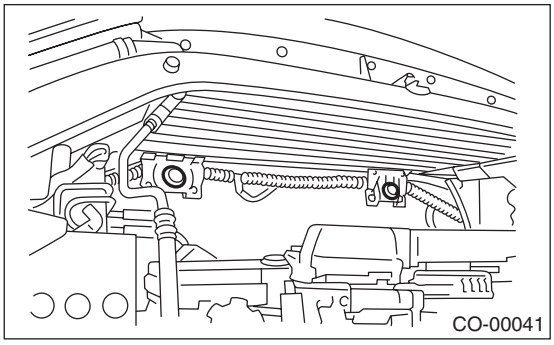

2) Install the radiator to vehicle.

NOTE:
Make pins on the lower side of radiator be fitted into the radiator lower cushions on body side.

3) Install the radiator upper brackets and tighten the bolts.

Tightening torque:
12 N·m (1.2 kgf-m, 8.9 ft-lb)

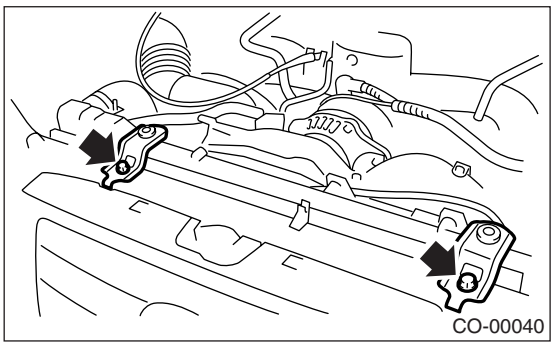

4) Connect the two coolant filler tank hoses to radiator.

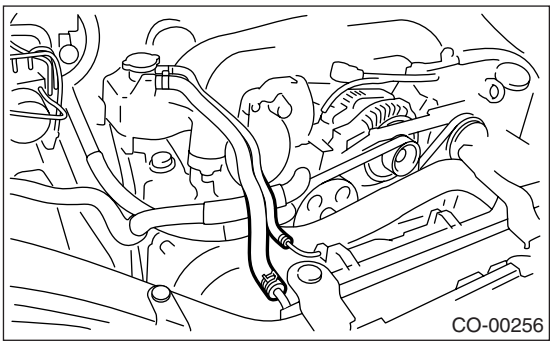

5) Connect the radiator inlet hose (A).

6) Install the hood stay holder (B).

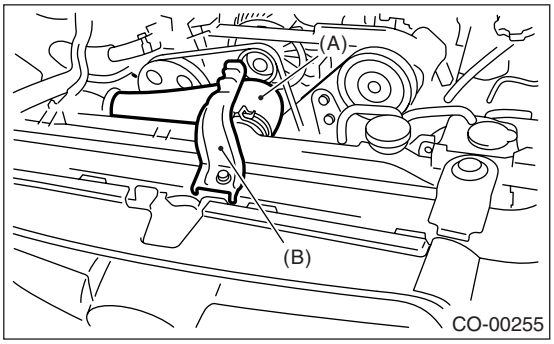

7) Install the reservoir tank. <Ref. to CO(H4DOTC)-30, INSTALLATION, Reservoir Tank.>
8) Connect the over flow hose.
9) Install the air intake duct.
<Ref. to IN(H4DOTC)-9, INSTALLATION, Air Intake Duct.>
10) Lift-up the vehicle.
11) Connect the ATF cooler hoses. (AT model)

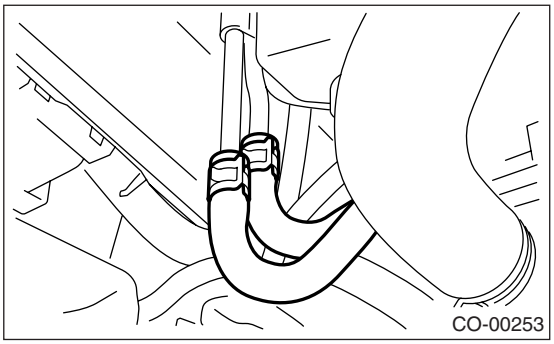

12) Connect the radiator outlet hose.

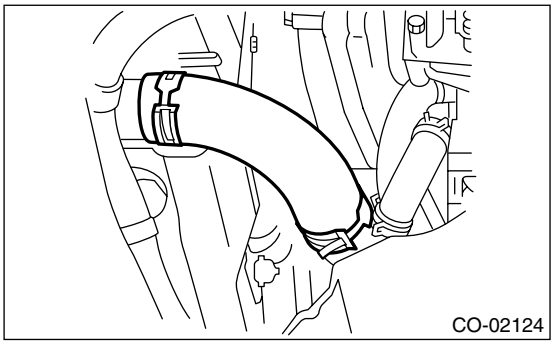

13) Connect the connectors to radiator main fan motor (A) and sub fan motor (B).

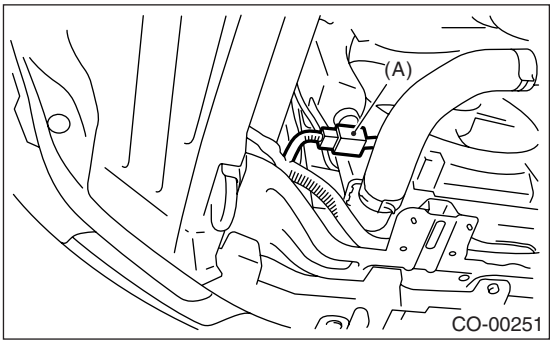

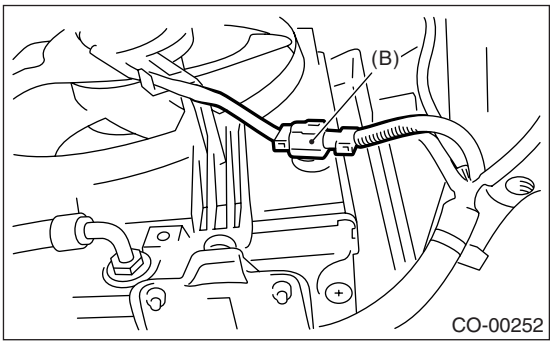

14) Install the heat shield cover. (AT model)

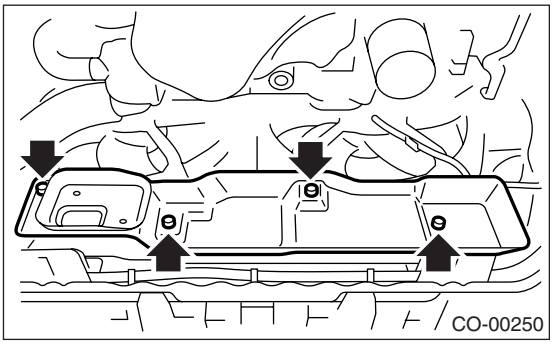

15) Install the under cover.
16) Lower the vehicle.
17) Connect the battery ground cable to battery.

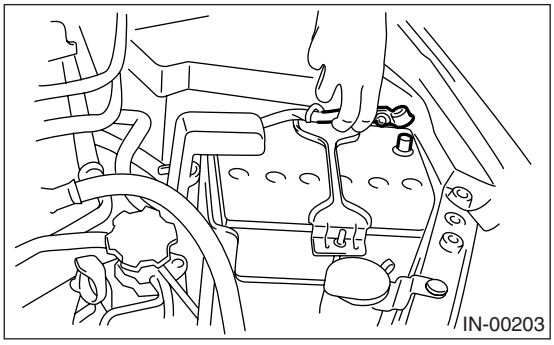

18) Fill engine coolant.
<Ref. to CO(H4DOTC)-13, FILLING OF ENGINE COOLANT, REPLACEMENT, Engine Coolant.>
19) Check the ATF level. <Ref. to 5AT-27, INSPECTION, Automatic Transmission Fluid.>
20) Install the collector cover.

C: INSPECTION

1) Remove the coolant filler tank cap and fill engine coolant to coolant filler tank, then attach the tester to radiator in place of cap.

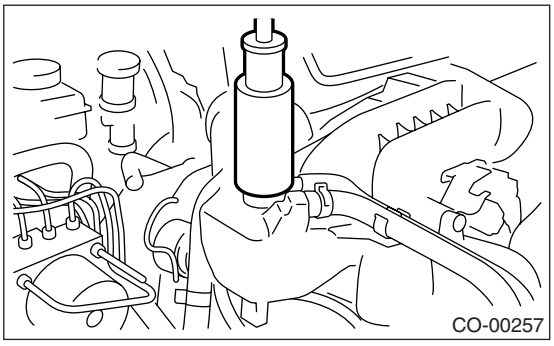

2) Apply a pressure of 122 kPa (1.2 kg/cm^2, 18 psi) to the radiator to check if:

- Engine coolant leaks at or around radiator.
- Engine coolant leaks at/around hoses or connections.

CAUTION:

- **Inspection must be carried out at the side of coolant filler tank, not at the side of radiator.**
- **Engine should be turned off.**
- **Wipe engine coolant from check points in advance.**
- **Be careful to prevent engine coolant from spurting out when removing tester.**
- **Be careful not to deform the filler neck of coolant filler tank when installing or removing the tester.**

7. Radiator Cap

A: INSPECTION

1) Attach the radiator cap to tester.

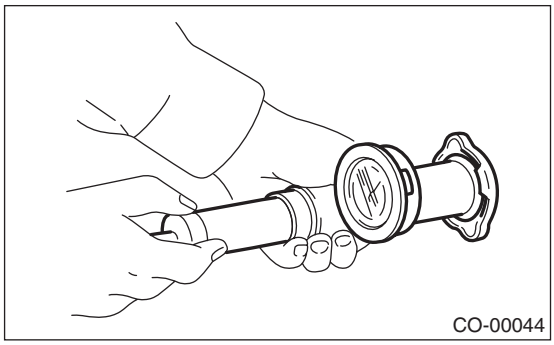

2) Increase pressure until the tester gauge pointer stops. Radiator cap is functioning properly if it holds the service limit pressure for five to six seconds.

Coolant filler tank side

Standard pressure:

93 — 123 kPa (0.95 — 1.25 kg/cm^2, 14 — 18 psi)

Service limit pressure:

83 kPa (0.85 kg/cm^2, 12 psi)

Radiator side

Standard pressure:

122 — 152 kPa (1.24 — 1.55 kg/cm^2, 18 — 22 psi)

Service limit pressure:

112 kPa (1.14 kg/cm^2, 16 psi)

CAUTION:

• Be sure to remove foreign matter and rust from the cap in advance. Otherwise, results of pressure test will be incorrect.

• Not to confuse the cap of coolant filler tank and cap of radiator.

8. Radiator Main Fan and Fan Motor

A: REMOVAL

1) Remove the collector cover.
2) Disconnect the ground cable from battery.

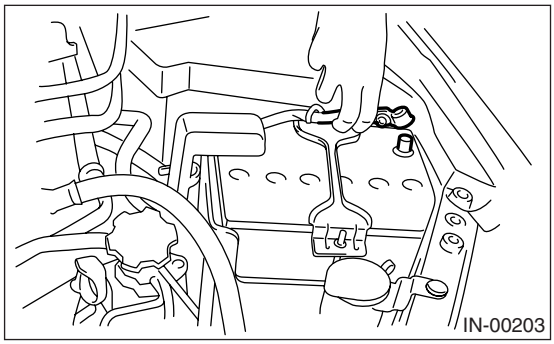

3) Lift-up the vehicle.
4) Remove the under cover.
5) Disconnect the main fan motor connector (A).

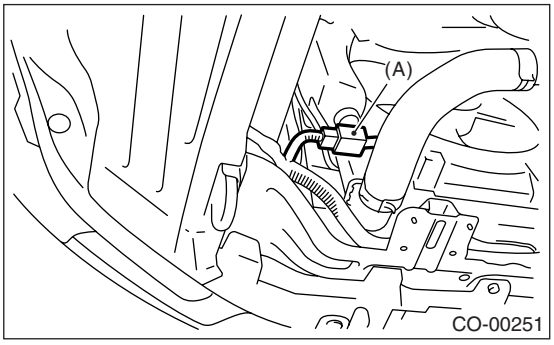

6) Remove the heat shield cover from radiator. (AT model)

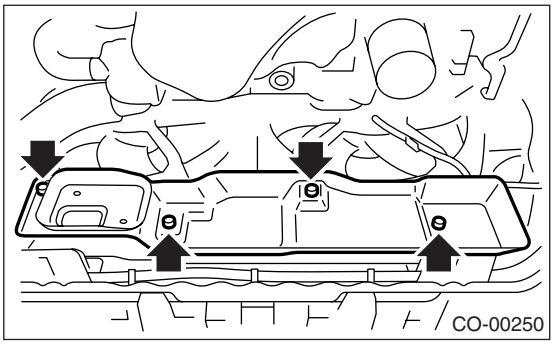

7) Drain the coolant about 1 ℓ (1.06 US qt, 0.88 Imp qt). <Ref. to CO(H4DOTC)-13, DRAINING OF ENGINE COOLANT, REPLACEMENT, Engine Coolant.>

8) Remove the ATF hose from the clip of radiator main fan motor assembly. (AT model)

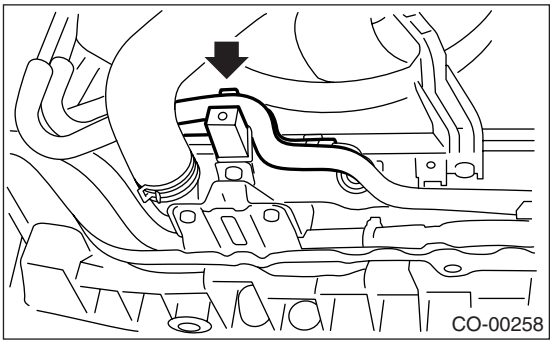

9) Lower the vehicle.
10) Remove the air intake duct.
11) Disconnect the over flow hose.
12) Remove the over flow pipe.
13) Remove the reservoir tank. <Ref. to CO(H4DOTC)-30, REMOVAL, Reservoir Tank.>
14) Remove the mounting bolts from radiator main fan motor assembly.

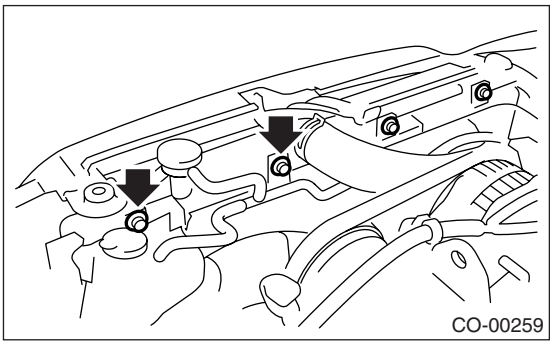

15) Disconnect the radiator inlet hose (A) from radiator.
16) Remove the hood stay holder (B).

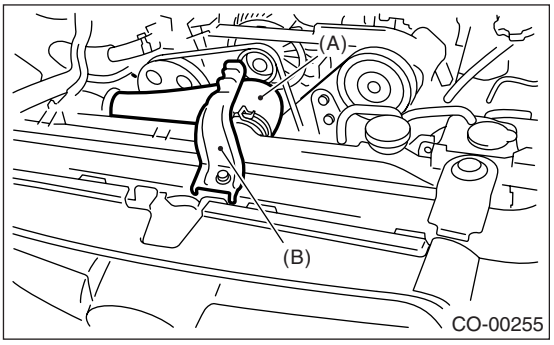

17) Remove the radiator main fan motor assembly from vehicle.

B: INSTALLATION

1) Install the radiator main fan motor assembly to vehicle.
2) Connect the radiator inlet hose (A) to radiator.

3) Install the hood stay holder (B).

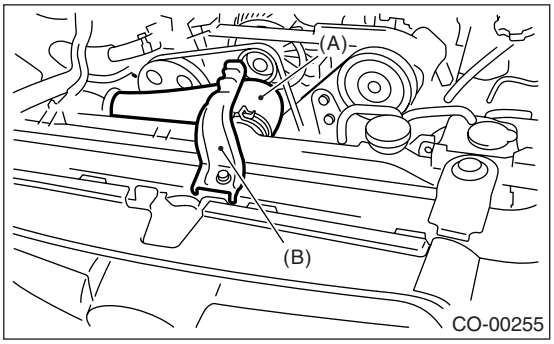

4) Install the mounting bolts of radiator main fan motor assembly.

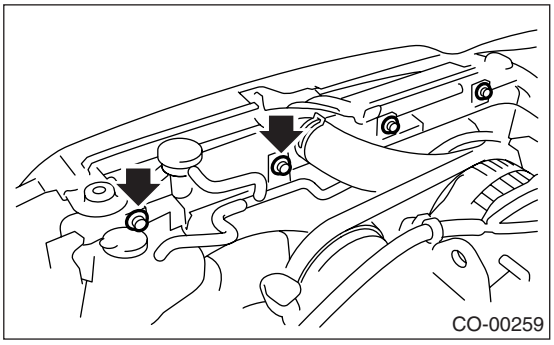

5) Install the reservoir tank. <Ref. to CO(H4DOTC)-30, INSTALLATION, Reservoir Tank.>
6) Install the over flow pipe.
7) Connect the over flow hose.
8) Install the air intake duct.
9) Lift-up the vehicle.
10) Attach the ATF hose to the clip of radiator main fan motor assembly. (AT model)
11) Install the heat shield cover to radiator. (AT model)

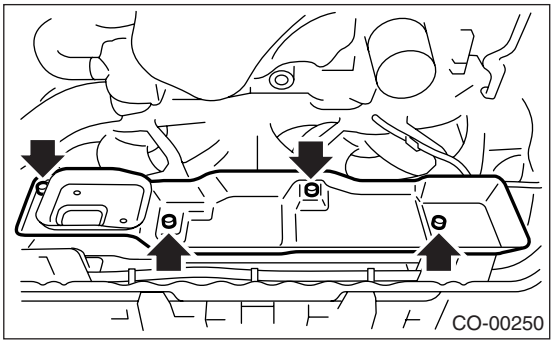

12) Connect the main fan motor connector (A).

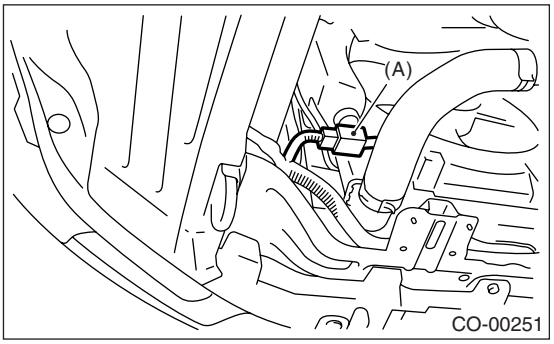

13) Install the under cover.
14) Lower the vehicle.
15) Connect the battery ground cable to battery.

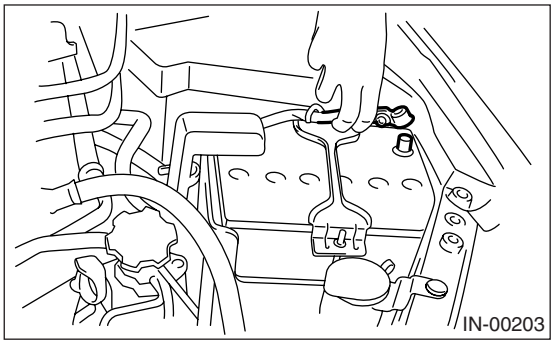

16) Fill engine coolant.<Ref. to CO(H4DOTC)-13, FILLING OF ENGINE COOLANT, REPLACEMENT, Engine Coolant.>
17) Install the collector cover.

C: DISASSEMBLY

1) Remove the clip which holds fan motor connector onto shroud.
2) Remove the nut which holds fan itself onto fan motor and shroud assembly.

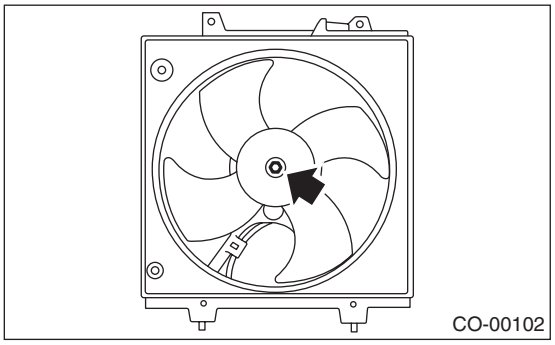

3) Remove the bolts which hold fan motor onto shroud.

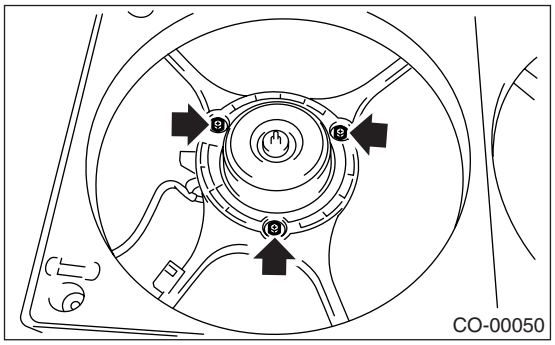

D: ASSEMBLY

Assemble in the reverse order of disassembly.

Tightening torque:
5 N·m (0.5 kgf-m, 3.6 ft-lb)

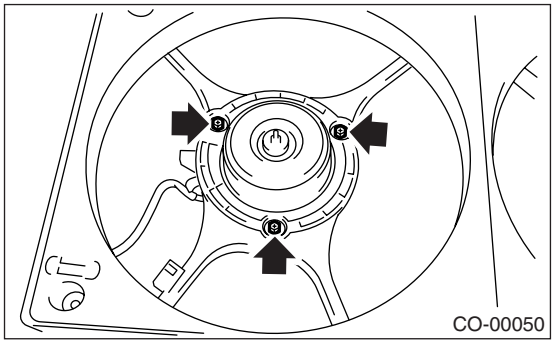

Tightening torque:
3.4 N·m (0.35 kgf-m, 2.5 ft-lb)

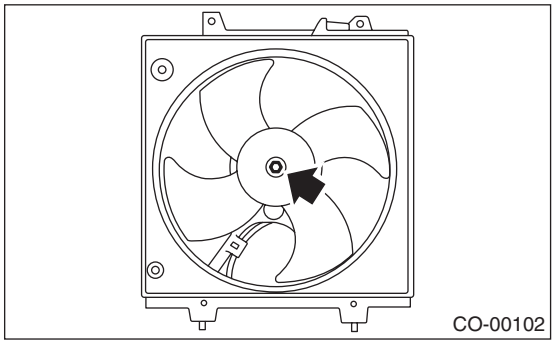

9. Radiator Sub Fan and Fan Motor

A: REMOVAL

1) Remove the collector cover.
2) Disconnect the ground cable from battery.

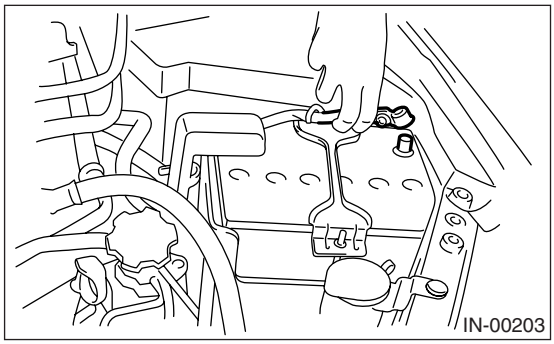

3) Lift-up the vehicle.
4) Remove the under cover.
5) Disconnect the sub fan motor connector (B).

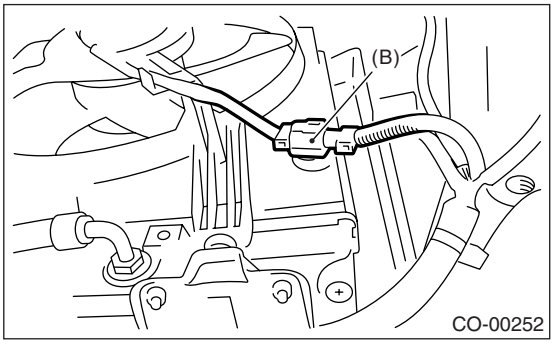

6) Remove the heat shield cover from radiator. (AT model)

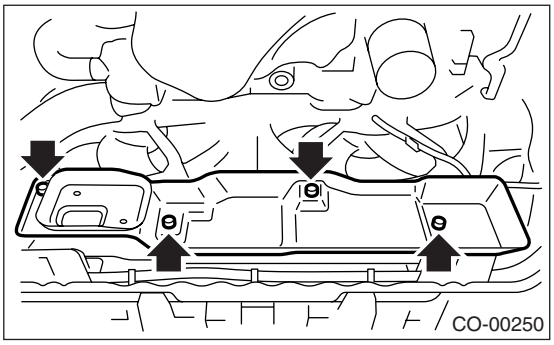

7) Drain the coolant about 1 ℓ (1.06 US qt, 0.88 Imp qt). <Ref. to CO(H4DOTC)-13, DRAINING OF ENGINE COOLANT, REPLACEMENT, Engine Coolant.>
8) Remove the ATF hose from the clip of radiator sub fan motor assembly. (AT model)
9) Lower the vehicle.
10) Remove the air intake duct.
11) Disconnect the over flow hose.
12) Remove the over flow pipe.
13) Remove the reservoir tank. <Ref. to CO(H4DOTC)-30, REMOVAL, Reservoir Tank.>
14) Remove the mounting bolts of radiator sub fan motor assembly.

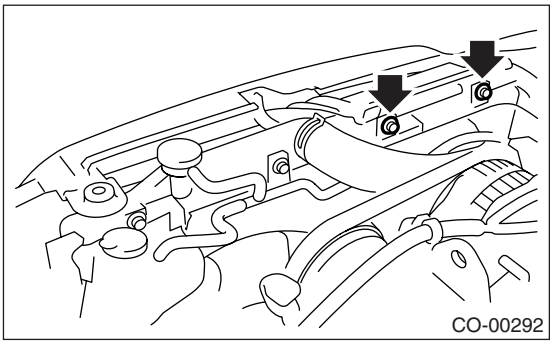

15) Disconnect the radiator inlet hose (A) from radiator.
16) Remove the hood stay holder (B).

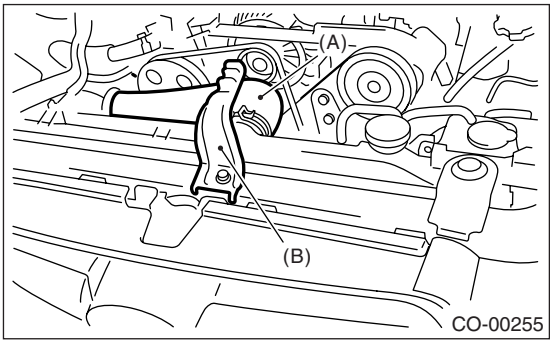

17) Remove the radiator sub fan motor assembly from vehicle.

B: INSTALLATION

1) Install the radiator sub fan motor assembly to vehicle.
2) Connect the radiator inlet hose (A) to radiator.
3) Install the hood stay holder (B).

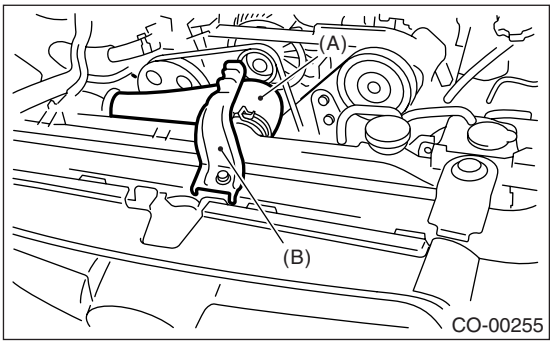

4) Install the mounting bolts of radiator sub fan motor assembly.

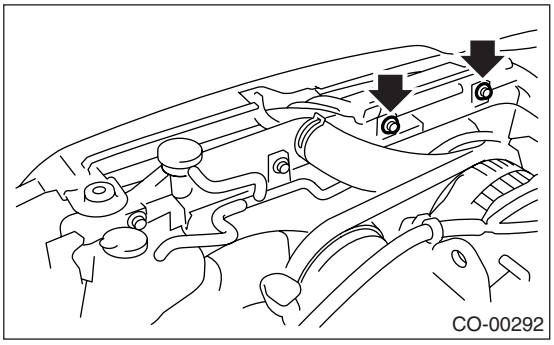
CO-00292

5) Install the reservoir tank. <Ref. to CO(H4DOTC)-30, INSTALLATION, Reservoir Tank.>
6) Install the over flow pipe.
7) Connect the over flow hose.
8) Install the air intake duct.
9) Lift-up the vehicle.
10) Attach the ATF hose to the clip of radiator sub fan motor assembly. (AT model)
11) Install the heat shield cover to radiator. (AT model)

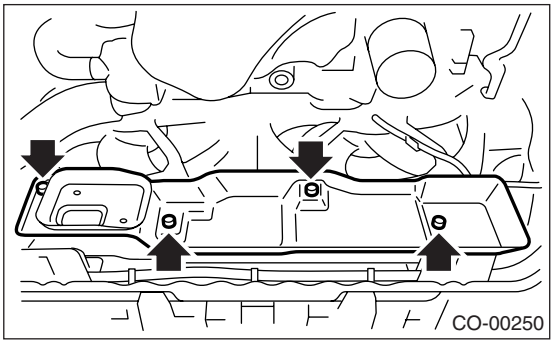
CO-00250

12) Connect the sub fan motor connector (B).

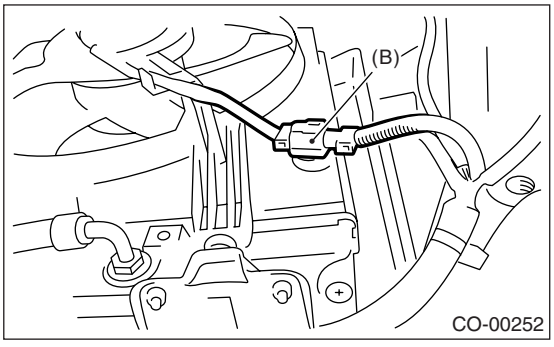

CO-00252

13) Install the under cover.
14) Lower the vehicle.
15) Connect the battery ground cable to battery.

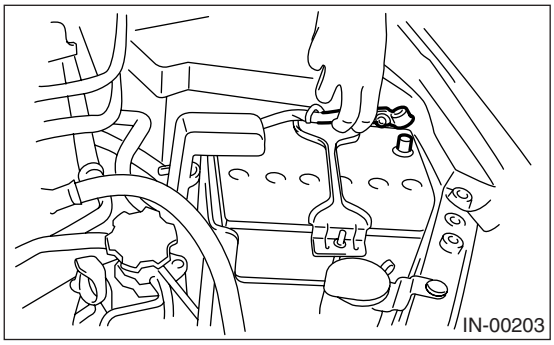
IN-00203

16) Fill engine coolant.<Ref. to CO(H4DOTC)-13, FILLING OF ENGINE COOLANT, REPLACEMENT, Engine Coolant.>
17) Install the collector cover.

C: DISASSEMBLY

1) Remove the clip which holds fan motor connector onto shroud.
2) Remove the nut which holds fan itself onto fan motor and shroud assembly.

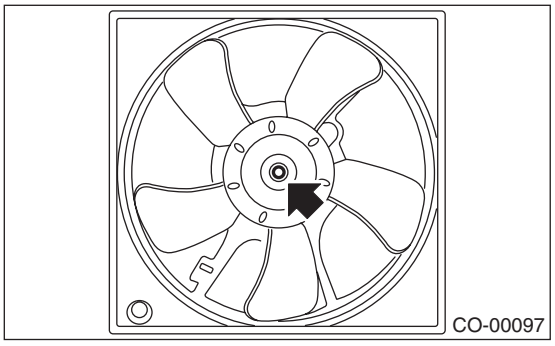
CO-00097

3) Remove the bolts which hold fan motor onto shroud.

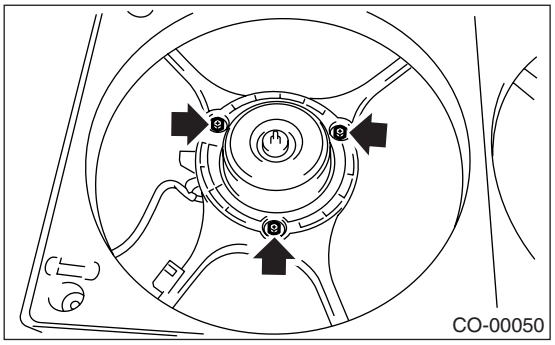
CO-00050

D: ASSEMBLY

Assemble in the reverse order of disassembly.

Tightening torque:
5 N·m (0.5 kgf-m, 3.6 ft-lb)

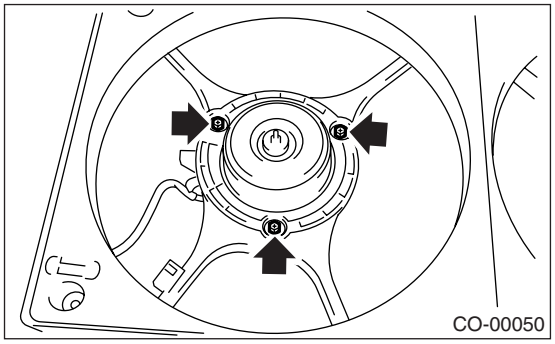

Tightening torque:
3.4 N·m (0.35 kgf-m, 2.5 ft-lb)

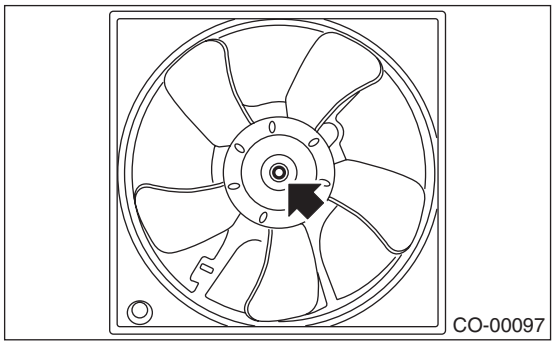

10.Reservoir Tank

A: REMOVAL

1) Remove the collector cover.
2) Disconnect the over flow hose (A).
3) Pull out the reservoir tank to the arrow direction while pushing the claw (B).

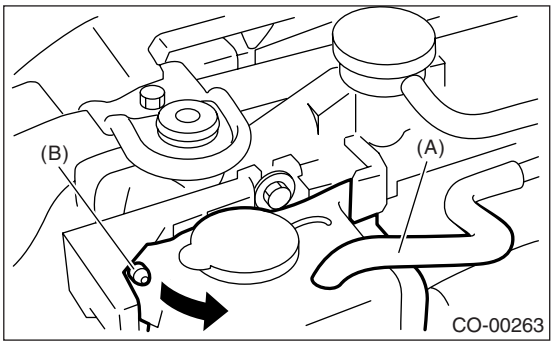

B: INSTALLATION

Install in the reverse order of removal.

C: INSPECTION

Make sure the engine coolant level is between “FULL” and “LOW”.

11.Coolant Filler Tank

A: REMOVAL

WARNING:
The radiator is pressurized. Wait until engine cools down before working on the radiator.

1) Remove the collector cover.
2) Drain the coolant about 3.0 ℓ (3.2 US qt, 2.6 Imp qt). <Ref. to CO(H4DOTC)-13, DRAINING OF ENGINE COOLANT, REPLACEMENT, Engine Coolant.>
3) Disconnect the engine coolant hoses from coolant filler tank.
4) Remove the bolts which install the coolant filler tank.
5) Disconnect the engine coolant hose which connects the under side of coolant filler tank.
6) Remove the coolant filler tank.

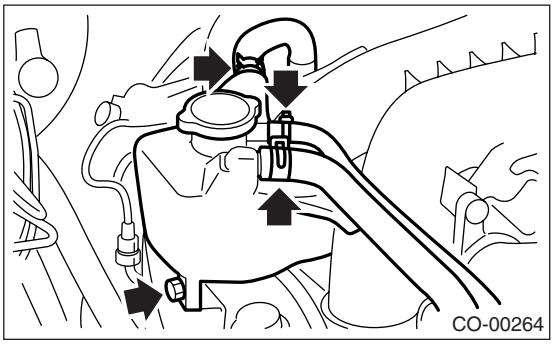

B: INSTALLATION

1) Install in the reverse order of removal.

Tightening torque:
16 N·m (1.6 kgf-m, 11.8 ft-lb)

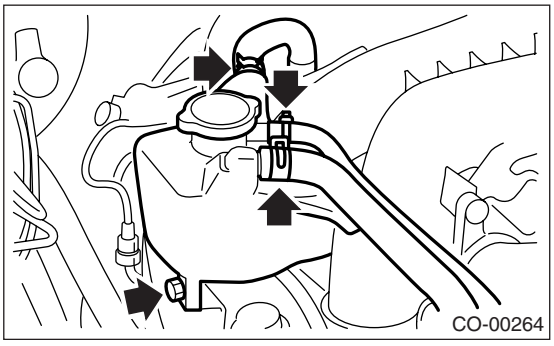

2) Fill with engine coolant. <Ref. to CO(H4DOTC)-13, FILLING OF ENGINE COOLANT, REPLACEMENT, Engine Coolant.>

12.Engine Cooling System Trouble in General

A: INSPECTION

Trouble	Possible cause	Corrective action
Over-heating	a. Insufficient engine coolant	Replenish engine coolant, inspect for leakage, and repair it if necessary.
	b. Loose timing belt	Repair or replace timing belt tensioner.
	c. Oil on drive belt	Replace.
	d. Malfunction of thermostat	Replace.
	e. Malfunction of water pump	Replace.
	f. Clogged engine coolant passage	Clean.
	g. Improper ignition timing	Inspect and repair the ignition control system. <Ref. to EN(H4DOTC)(diag)-2, PROCEDURE, Basic Diagnostic Procedure.>
	h. Clogged or leaking radiator	Clean, repair or replace.
	i. Improper engine oil in engine coolant	Replace engine coolant.
	j. Air/fuel mixture ratio too lean	Inspect and repair the fuel injection system. <Ref. to EN(H4DOTC)(diag)-2, PROCEDURE, Basic Diagnostic Procedure.>
	k. Excessive back pressure in exhaust system	Clean or replace.
	l. Insufficient clearance between piston and cylinder	Adjust or replace.
	m. Slipping clutch	Repair or replace.
	n. Dragging brake	Adjustment.
	o. Defective radiator fan	Inspect radiator fan relay, engine coolant temperature sensor or radiator motor and replace there.
Over-cooling	a. Ambient temperature extremely low	Partly cover radiator front area.
	b. Defective thermostat	Replace.
Engine coolant leaks	a. Loosened or damaged connecting units on hoses	Repair or replace.
	b. Leakage from water pump	Replace.
	c. Leakage from water pipe	Repair or replace.
	d. Leakage around cylinder head gasket	Retighten cylinder head bolts or replace gasket.
	e. Damaged or cracked cylinder head and crankcase	Repair or replace.
	f. Damaged or cracked thermostat case	Repair or replace.
	g. Leakage from radiator	Repair or replace.
Noise	a. Defective drive belt	Replace.
	b. Defective radiator fan	Replace.
	c. Defective water pump bearing	Replace water pump.
	d. Defective water pump mechanical seal	Replace water pump.

LUBRICATION

LU(H4DOTC)

		Page
1.	General Description	2
2.	Oil Pressure System	7
3.	Engine Oil	9
4.	Oil Pump	11
5.	Oil Pan and Strainer	15
6.	Oil Pressure Switch	18
7.	Oil Pipe	19
8.	Engine Oil Cooler	23
9.	Engine Oil Filter	24
10.	Engine Lubrication System Trouble in General	25

1. General Description

A: SPECIFICATION

Lubrication method					Forced lubrication
Oil pump	Pump type				Trochoid type
	Number of teeth	Inner rotor			9
		Outer rotor			10
	Outer rotor diameter × thickness			mm (in)	78 × 10 (3.07 × 0.47)
	Tip clearance between inner and outer rotors			mm (in)	0.04 — 0.14 (0.0016 — 0.0055)
	Side clearance between inner rotor and pump case			mm (in)	0.02 — 0.07 (0.0008 — 0.0028)
	Case clearance between outer rotor and pump case		Standard value	mm (in)	0.10 — 0.175 (0.0039 — 0.0069)
	Performance at 80°C (176°F)	600 rpm	Discharge pressure	kPa (kg/cm^2, psi)	98 (1.0, 14)
			Discharge	ℓ (US qt, Imp qt)/min.	4.6 (4.9, 4.0) or more
		5,000 rpm	Discharge pressure	kPa (kg/cm^2, psi)	294 (3.0, 43)
			Discharge	ℓ (US qt, Imp qt)/min.	47.0 (49.7, 41.4) or more
	Relief valve working pressure			kPa (kg/cm^2, psi)	588 (6.0, 85)
Oil filter	Filter type				Full-flow filter type
	Filtration area			cm^2 (sq in)	Outer diameter 68 mm (2.68 in): 800 (124) / Outer diameter 65 mm (2.56 in): 470 (72.9)
	By-pass valve opening pressure			kPa (kg/cm^2, psi)	160 (1.63, 23.2)
	Outer diameter × width			mm (in)	Outer diameter 68 mm (2.68 in): 68 × 65 (2.68 × 2.56) / Outer diameter 65 mm (2.56 in): 65 × 74.4 (2.56 × 2.93)
	Installation screw specifications				M 20 × 1.5
Oil pressure switch	Type				Immersed contact point type
	Working voltage — wattage				12 V — 3.4 W or less
	Warning light activation pressure			kPa (kg/cm^2, psi)	14.7 (0.15, 2.1)
	Proof pressure			kPa (kg/cm^2, psi)	981 (10, 142) or more
Oil capacity (at replacement)				ℓ (US qt, Imp qt)	4.0 (4.2, 3.5)

Recommended oil:

API standard SL with the "Energy Conserving" logo is printed (if you cannot obtain the oil with SL grade, you may use SJ grade "ENERGY CONSERVING" oil.)
ILSAC standard, GF-3 or New API certification mark (Star burst mark) label is on the container

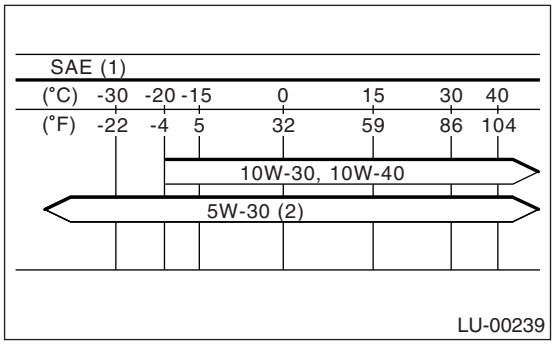

(1) SAE viscosity No. and applicable temperature
(2) Recommended

The proper viscosity helps vehicle get good cold and hot starting by reducing viscous friction and thus increasing cranking speed.

CAUTION:
When replenishing oil, it does not matter if the oil to be added is a different brand from that in the engine; however, use oil having the API standard and SAE viscosity No. designated by SUBARU.

NOTE:
If the vehicle is used in areas with very high temperatures or for other heavy duty applications, the following viscosity oils may be used: API standard: SL or SJ
SAE Viscosity No.: 30, 40, 10W-50, 20W-40, 20W-50.

B: COMPONENT

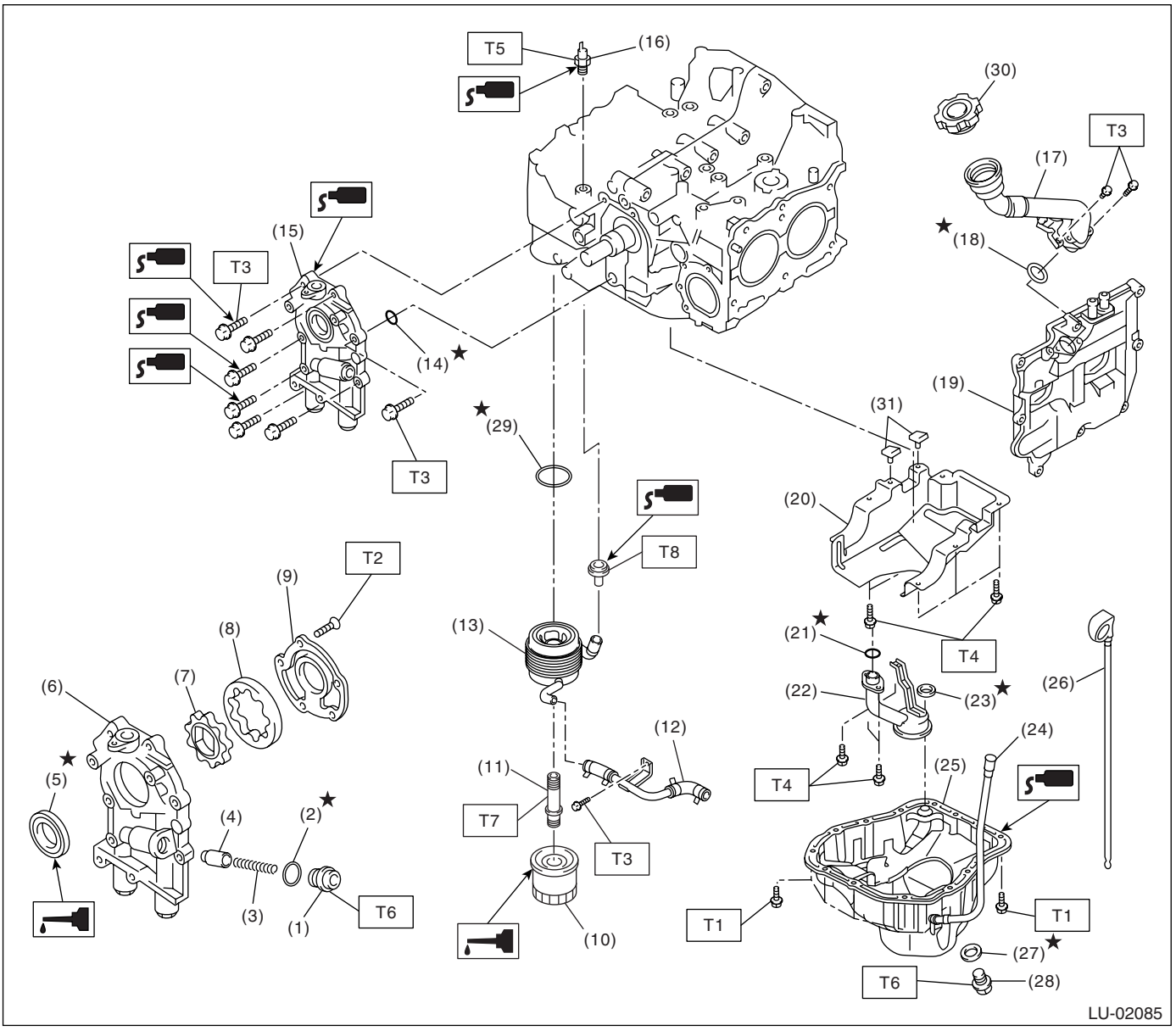

(1) Plug
(2) Gasket
(3) Relief valve spring
(4) Relief valve
(5) Oil seal
(6) Oil pump case
(7) Inner rotor
(8) Outer rotor
(9) Oil pump cover
(10) Oil filter
(11) Oil cooler connector
(12) Water bypass pipe
(13) Oil cooler
(14) O-ring
(15) Oil pump ASSY
(16) Oil pressure switch
(17) Oil filler duct
(18) O-ring
(19) Rocker cover
(20) Baffle plate
(21) O-ring
(22) Oil strainer
(23) Gasket
(24) Oil level gauge guide
(25) Oil pan
(26) Oil level gauge
(27) Metal gasket
(28) Drain plug
(29) O-ring
(30) Oil filler cap
(31) Seal

Tightening torque: N·m (kgf-m, ft-lb)
T1: 5 (0.5, 3.6)
T2: 5.4 (0.55, 4.0)
T3: 6.4 (0.65, 4.7)
T4: 10 (1.0, 7.0)
T5: 25 (2.5, 18.1)
T6: 44 (4.5, 32.5)
T7: 54 (5.5, 40)
T8: 69 (7.0, 50)

C: CAUTION

• Wear work clothing, including a cap, protective goggles and protective shoes during operation.
• Remove contamination including dirt and corrosion before removal, installation or disassembly.
• Keep the disassembled parts in order and protect them from dust and dirt.
• Before removal, installation or disassembly, be sure to clarify the failure. Avoid unnecessary removal, installation, disassembly and replacement.
• Be careful not to burn yourself, because each part on the vehicle is hot after running.
• Be sure to tighten fasteners including bolts and nuts to the specified torque.
• Place shop jacks or rigid racks at the specified points.
• Before disconnecting electrical connectors of sensors or units, be sure to disconnect the ground cable from battery.

D: PREPARATION TOOL

1. SPECIAL TOOL

ILLUSTRATION	TOOL NUMBER	DESCRIPTION	REMARKS
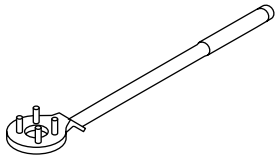 ST-499977100	499977100	CRANK PULLEY WRENCH	Used for stopping rotation of crank pulley when removing and tightening crank pulley bolt.
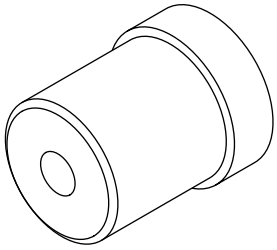 ST-499587100	499587100	OIL SEAL INSTALLER	Used for installing oil seal into oil pump.
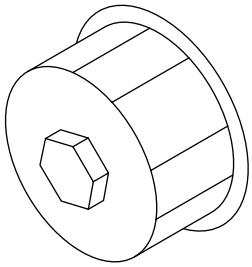 ST18332AA000	18332AA000	OIL FILTER WRENCH	Used for removing and installing oil filter. (Outer diameter: 68 mm (2.68 in))

ILLUSTRATION	TOOL NUMBER	DESCRIPTION	REMARKS
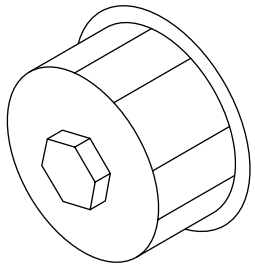 ST18332AA010	18332AA010	OIL FILTER WRENCH	Used for removing and installing oil filter. (Outer diameter: 65 mm (2.56 in))

2. Oil Pressure System

A: WIRING DIAGRAM

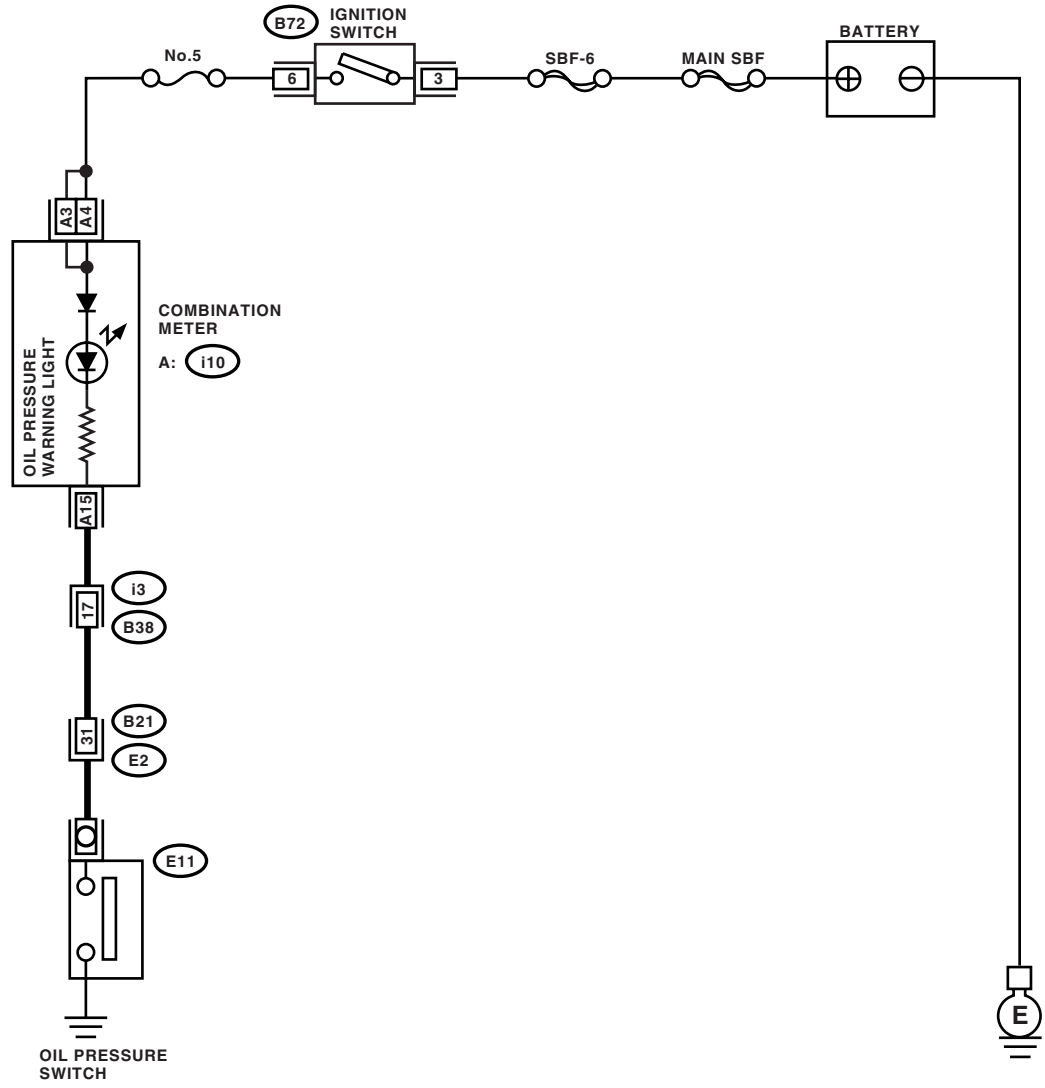

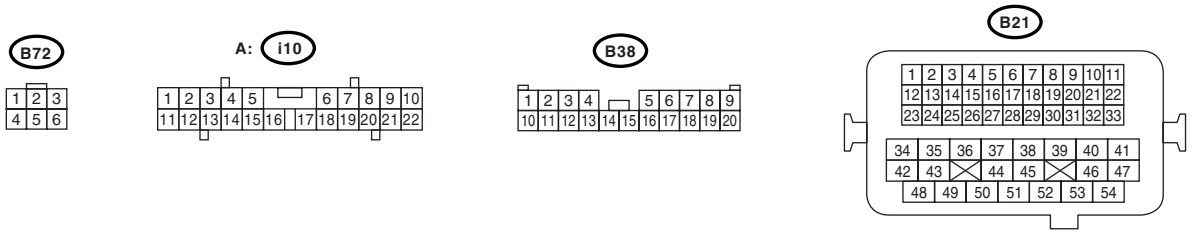

LU-02113

B: INSPECTION

	Step	Check	Yes	No
1	**CHECK COMBINATION METER.** 1) Turn the ignition switch to ON (engine OFF). 2) Check the warning light of combination meter.	Does the warning light illuminate?	Go to step **2.**	Repair or replace the combination meter. <Ref. to IDI-3, INSPECTION, Combination Meter System.>
2	**CHECK HARNESS CONNECTOR BETWEEN COMBINATION METER AND OIL PRESSURE SWITCH.** 1) Turn the ignition switch to OFF. 2) Disconnect the connector from oil pressure switch. 3) Turn the ignition switch to ON. 4) Measure the voltage of harness between oil pressure switch connector and chassis ground. ***Connector & terminal*** ***(E11) No. 1 (+) — Chassis ground (–):***	Is the voltage more than 10 V?	Replace the oil pressure switch.	Go to step **3.**
3	**CHECK COMBINATION METER.** 1) Turn the ignition switch to OFF. 2) Remove the combination meter. 3) Measure the resistance of combination meter. ***Terminals*** ***(i10) No. 4 — (i10) No. 15:*** ***(i10) No. 3 — (i10) No. 15:***	Is the resistance less than 10 Ω?	Replace the harness connector between combination meter and oil pressure switch.	Repair or replace the combination meter. <Ref. to IDI-3, INSPECTION, Combination Meter System.>

3. Engine Oil

A: INSPECTION

1) Park the vehicle on a level surface.
2) Remove the oil level gauge and wipe it clean.
3) Reinsert the level gauge all the way. Be sure that the level gauge is correctly inserted and properly orientated.
4) Remove it again and check the engine oil level. If the engine oil level is below “L” line, add oil to bring the level up to “F” line.
5) After turning off the engine, wait a few minutes for the oil to return to the oil pan before checking the level.
6) Just after driving or while the engine is warm, engine oil level show in the range between “F” line and notch mark. This is caused by thermal expansion of the engine oil.

NOTE:
To prevent overfilling the engine oil, do not add oil above “F” line when the engine is cold.

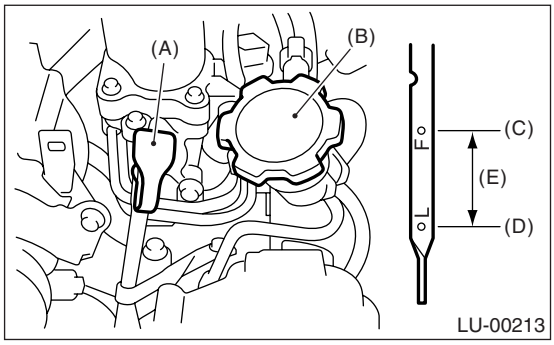

(A) Oil level gauge
(B) Engine oil filler cap
(C) Upper level
(D) Lower level
(E) Approx. 1.0 ℓ (1.1 US qt, 0.9 Imp qt)

B: REPLACEMENT

1) Open the engine oil filler cap for quick draining of engine oil.
2) Lift-up the vehicle.
3) Drain engine oil by loosening the engine oil drain plug.

NOTE:
Prepare the container for draining of engine oil.

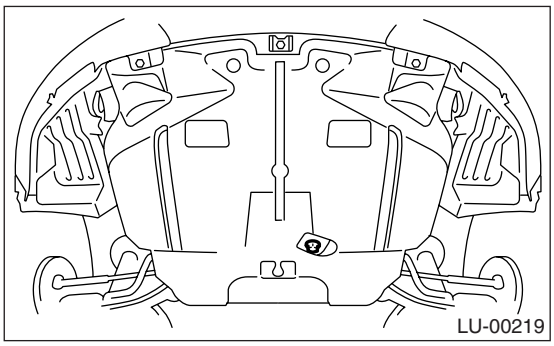

4) Tighten the engine oil drain plug after draining engine oil.

NOTE:
Use a new metal gasket.

Tightening torque:
44 N·m (4.5 kgf-m, 32.5 ft-lb)

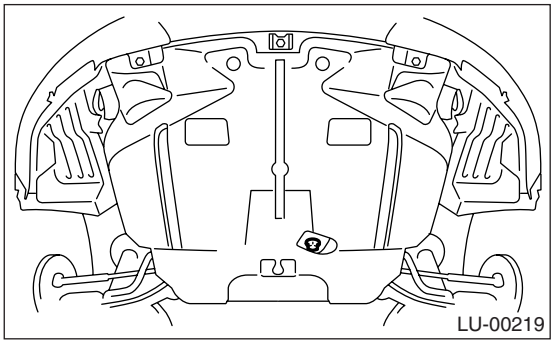

5) Use the engine oil of proper quality and viscosity, fill engine oil through the oil filler duct to upper point on level gauge. Make sure that the vehicle is parked on a level surface when checking oil level.

Recommended oil:
<Ref. to LU(H4DOTC)-2, SPECIFICATION, General Description.>

Engine oil capacity:
Upper level
4.0 ℓ (4.2 US qt, 3.5 Imp qt)
Lower level
3.0 ℓ (3.2 US qt, 2.6 Imp qt)

6) Close the engine oil filler cap.
7) Start the engine and warm it up for a time.

8) After the engine stops, recheck the oil level. If necessary, add engine oil up to the upper level on level gauge.

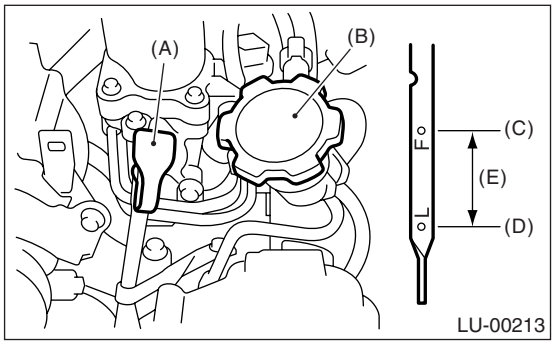

(A) Oil level gauge
(B) Engine oil filler cap
(C) Upper level
(D) Lower level
(E) Approx. 1.0 ℓ (1.1 US qt, 0.9 Imp qt)

4. Oil Pump

A: REMOVAL

1) Remove the collector cover.
2) Disconnect the ground cable from battery.

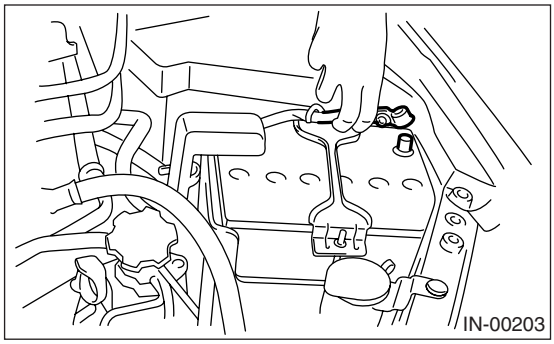

3) Lift-up the vehicle.
4) Remove the under cover.
5) Remove the bolts which install water pipe of oil cooler to oil pump.

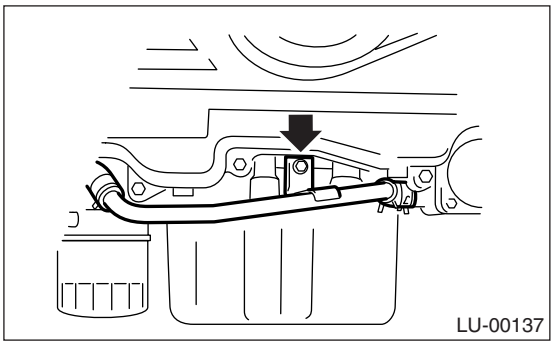

6) Remove the water pipe and hoses between oil cooler and water pump. (MT model)

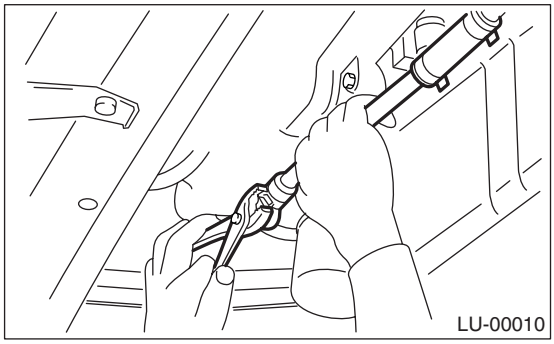

7) Lower the vehicle.
8) Remove the radiator. <Ref. to CO(H4DOTC)-19, REMOVAL, Radiator.>
9) Remove the V-belts. <Ref. to ME(H4DOTC)-37, REMOVAL, V-belt.>
10) Remove the rear side V-belt tensioner.

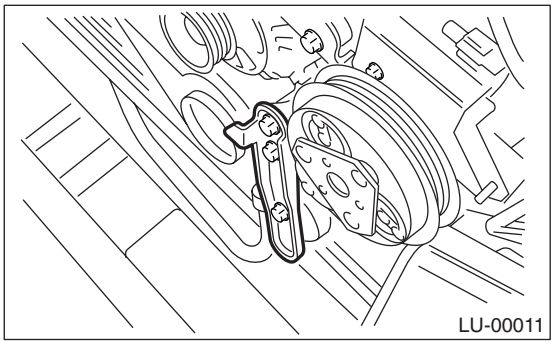

11) Remove the crankshaft position sensor.

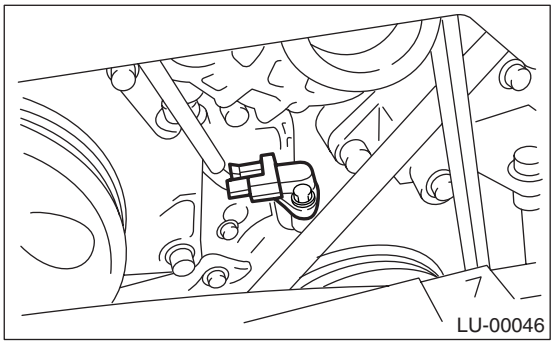

12) Remove the crank pulley by using ST. <Ref. to ME(H4DOTC)-39, REMOVAL, Crank Pulley.>

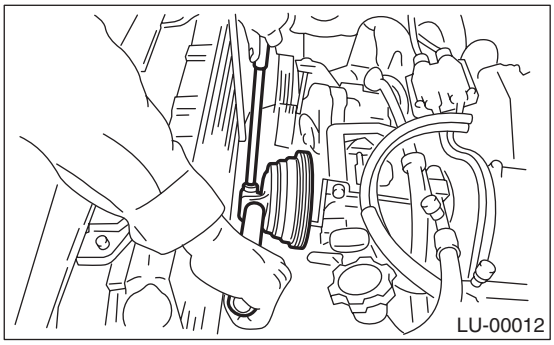

13) Remove the water pump. <Ref. to CO(H4DOTC)-15, REMOVAL, Water Pump.>
14) Remove the timing belt guide.

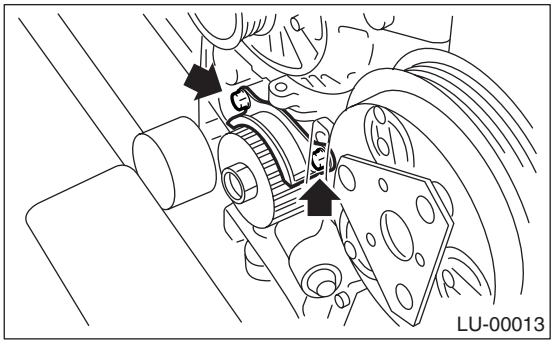

15) Remove the crank sprocket.

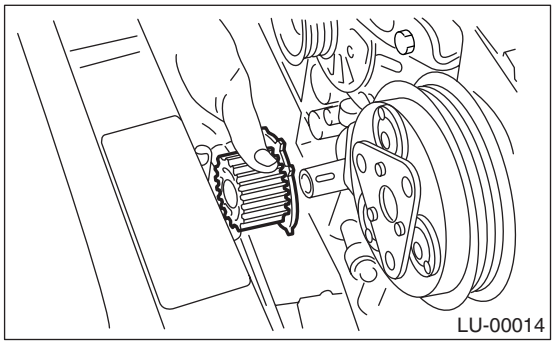

16) Remove the bolts which hold oil pump onto cylinder block.

NOTE:
When disassembling and checking the oil pump, loosen the relief valve plug before removing oil pump.

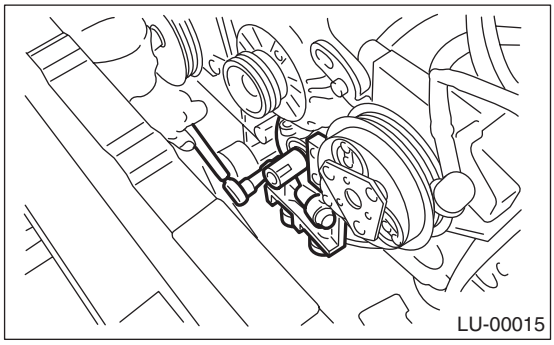

17) Remove the oil pump by using flat bladed screwdriver.

CAUTION:
Be careful not to scratch mating surfaces of cylinder block and oil pump.

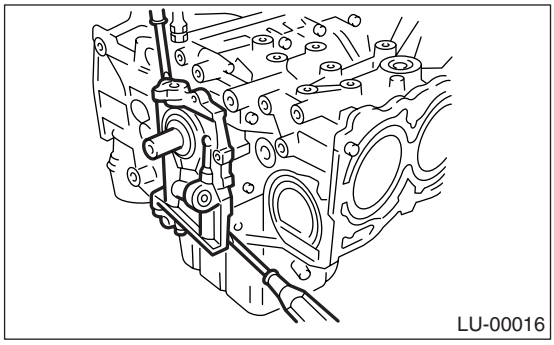

B: INSTALLATION

Install in the reverse order of removal.
Perform the following.
1) Apply liquid gasket to the matching surfaces of oil pump.

Liquid gasket:
THREE BOND 1215 (Part No. 004403007) or equivalent

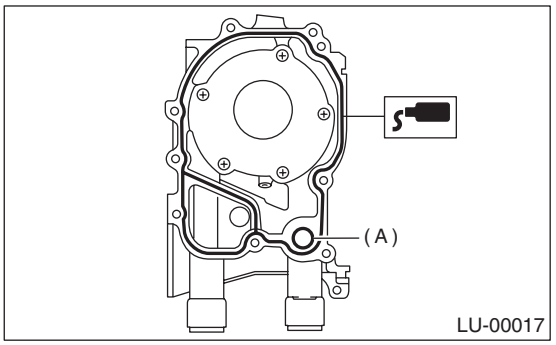

2) Replace the O-ring (A) with a new one.
3) Apply a coat of engine oil to the inside of oil seal.

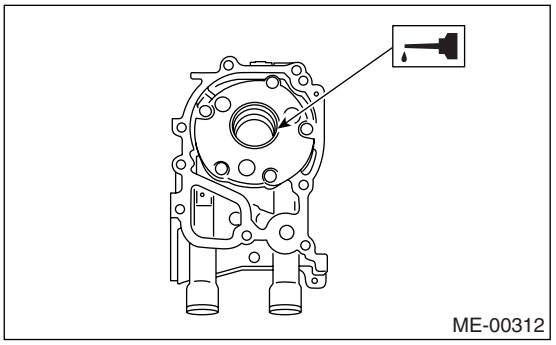

4) Position the oil pump, aligning the notched area with crankshaft, and push the oil pump straight.

CAUTION:
- **Make sure the oil seal lip is not folded.**
- **Be careful not to scratch oil seal when installing oil pump on cylinder block.**

5) Install the oil pump.
6) Apply liquid gasket to the threaded portion of three bolts.

Liquid gasket:
THREE BOND 1215 (Part No. 004403007) or equivalent

Tightening torque:
6.4 N·m (0.65 kgf-m, 4.7 ft-lb)

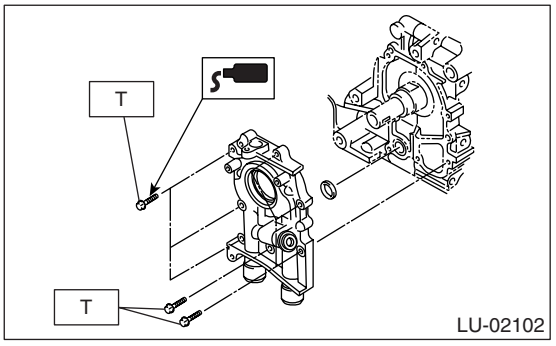

C: DISASSEMBLY

Remove the screws which secure oil pump cover and then disassemble oil pump. Inscribe alignment marks on the inner and outer rotors so that they can be replaced in their original positions during reassembly.

CAUTION:
Before disassembling the oil pump, remove the relief valve.

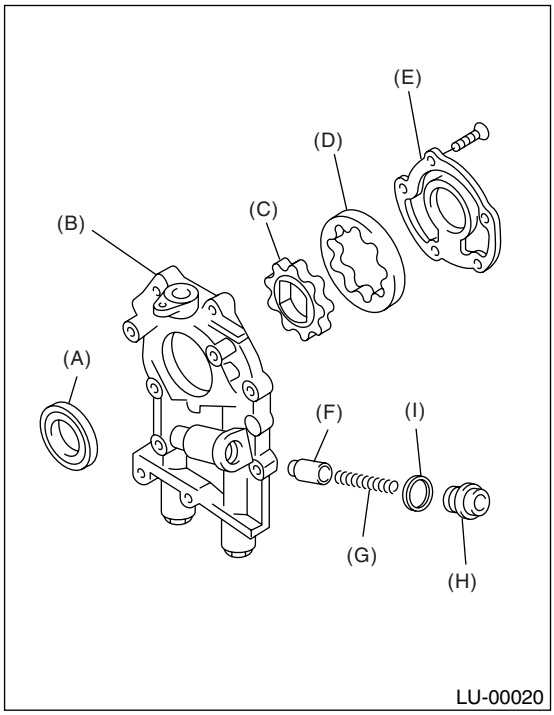

(A) Oil seal
(B) Pump case
(C) Inner rotor
(D) Outer rotor
(E) Pump cover
(F) Relief valve
(G) Relief valve spring
(H) Plug
(I) Gasket

D: ASSEMBLY

1) Install the front oil seal by using ST.
ST 499587100 OIL SEAL INSTALLER

NOTE:
Use a new oil seal.

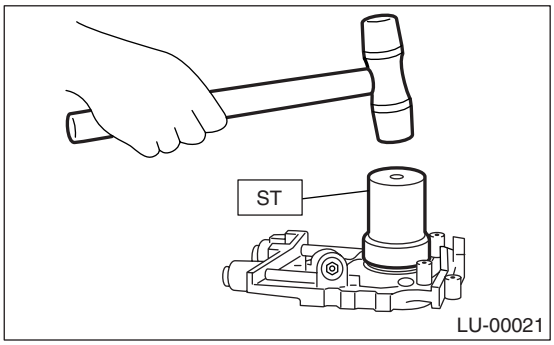

2) Apply a coat of engine oil to the inner and outer rotors.
3) Install the inner and outer rotors in their original positions.
4) Install the oil relief valve and relief valve spring and plug.

NOTE:
Use a new gasket.

5) Install the oil pump cover.

Tightening torque:
T1: 5.4 N·m (0.55 kgf-m, 4.0 ft-lb)
T2: 44 N·m (4.5 kgf-m, 32.5 ft-lb)

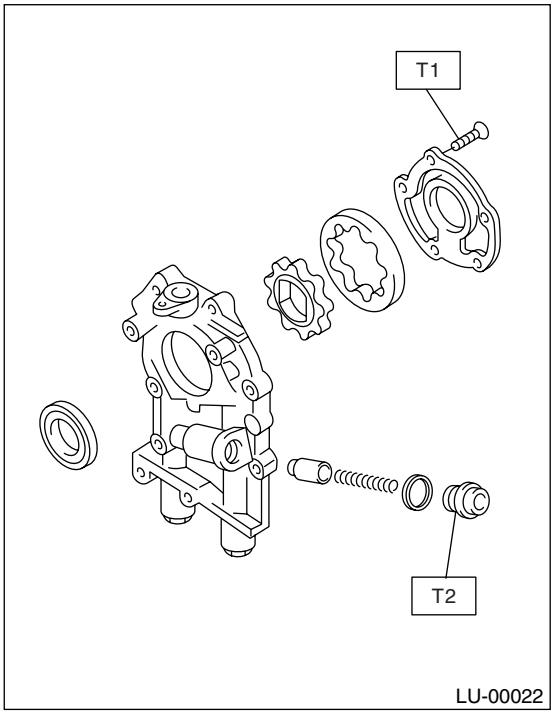

E: INSPECTION

1. TIP CLEARANCE

Measure the tip clearance of rotors. If the clearance exceeds the standard value, replace the rotors as a matched set.

Tip clearance:
Standard value
0.04 — 0.14 mm (0.0016 — 0.0055 in)

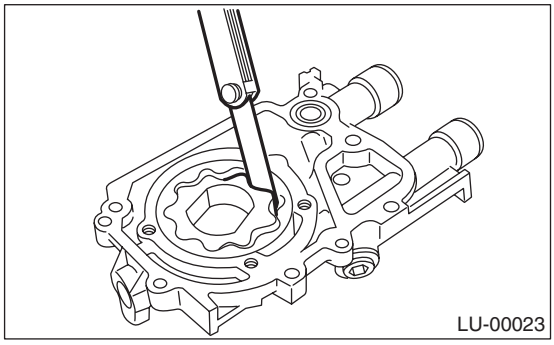

2. CASE CLEARANCE

Measure the clearance between outer rotor and oil pump rotor housing. If the clearance exceeds the standard value, replace the oil pump case.

Case clearance:
Standard value
0.10 — 0.175 mm (0.0039 — 0.0069 in)

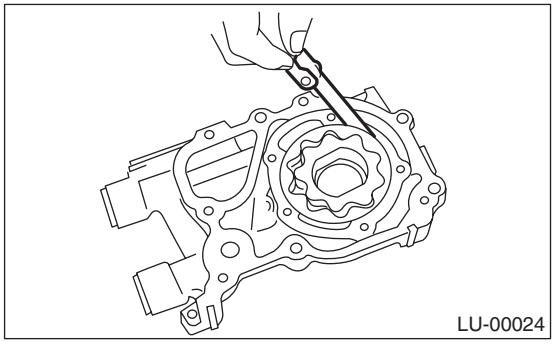

3. SIDE CLEARANCE

Measure the clearance between oil pump inner rotor and pump cover. If the clearance exceeds the standard value, replace the rotor or pump body.

Side clearance:
Standard value
0.02 — 0.07 mm (0.0008 — 0.0028 in)

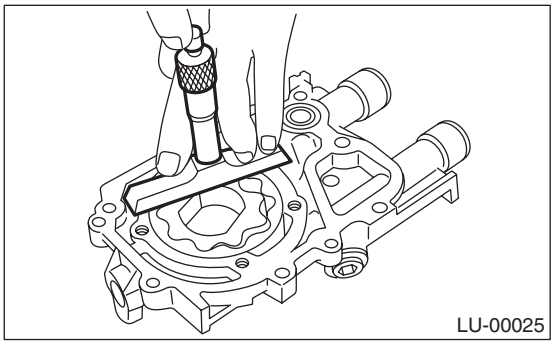

4. OIL RELIEF VALVE

Check the valve for fitting condition and damage, and the relief valve spring for damage and deterioration. Replace the parts if defective.

Relief valve spring:
Free length
73.7 mm (2.902 in)
Installed length
54.7 mm (2.154 in)
Load when installed
93.1 N (9.49 kgf, 20.88 lb)

5. OIL PUMP CASE

Check the oil pump case for worn shaft hole, clogged oil passage, worn rotor chamber, cracks and other faults.

6. OIL SEAL

Check the oil seal lips for deformation, hardening, wear, etc. and replace if defective.

5. Oil Pan and Strainer

A: REMOVAL

1) Set the vehicle on a lift.
2) Remove the front wheels.
3) Remove the collector cover.
4) Disconnect the ground cable from battery.

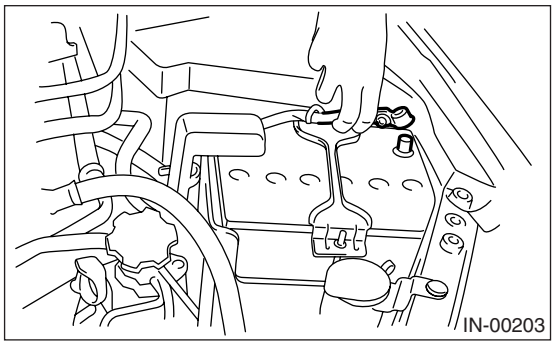

5) Disconnect the connector from mass airflow sensor.
6) Remove the air intake boot and air cleaner upper cover.

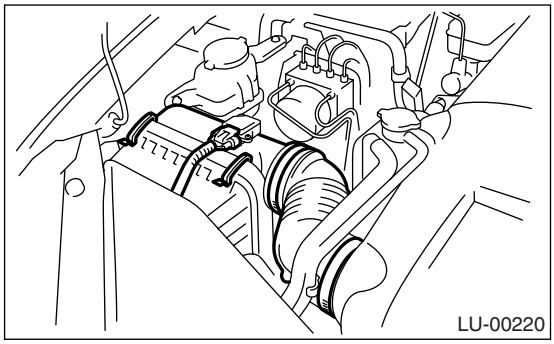

7) Remove the intercooler.
<Ref. to IN(H4DOTC)-12, REMOVAL, Intercooler.>
8) Remove the pitching stopper.

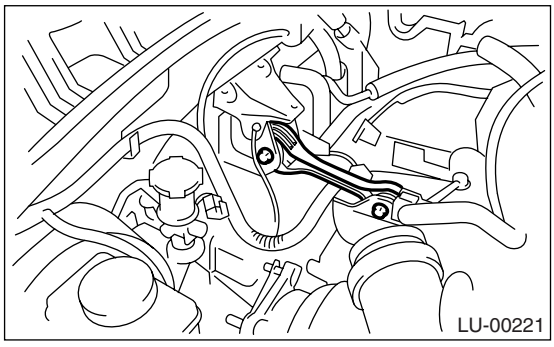

9) Remove the radiator upper brackets.

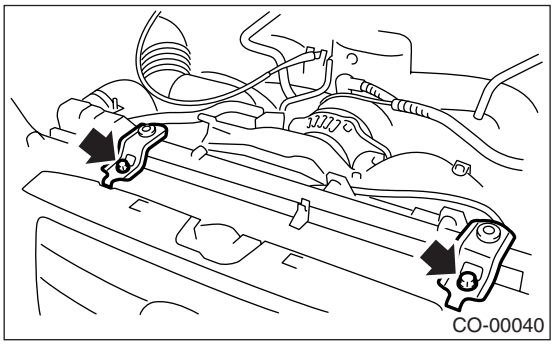

10) Support the engine with a lifting device and wire ropes.

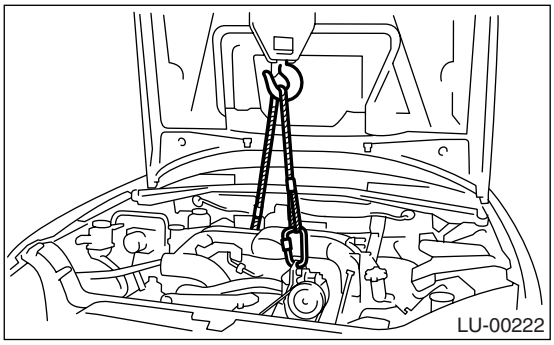

11) Lift-up the vehicle.

CAUTION:
When lifting up the vehicle, raise up wire ropes at the same time.

12) Remove the under cover.
13) Drain engine oil.
14) Remove the front exhaust pipe.
<Ref. to EX(H4DOTC)-6, REMOVAL, Front Exhaust Pipe.>
15) Remove the nuts which install front cushion rubber onto front crossmember.

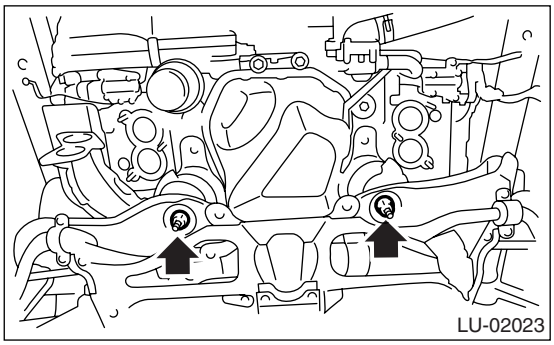

16) Remove the bolts which install oil pan on cylinder block with the engine raised up.
17) Insert the oil pan cutter blade into the clearance between cylinder block and oil pan.

CAUTION:
Do not use a screwdriver or similar tool in place of oil pan cutter.

18) Remove the oil strainer.

19) Remove the baffle plate.

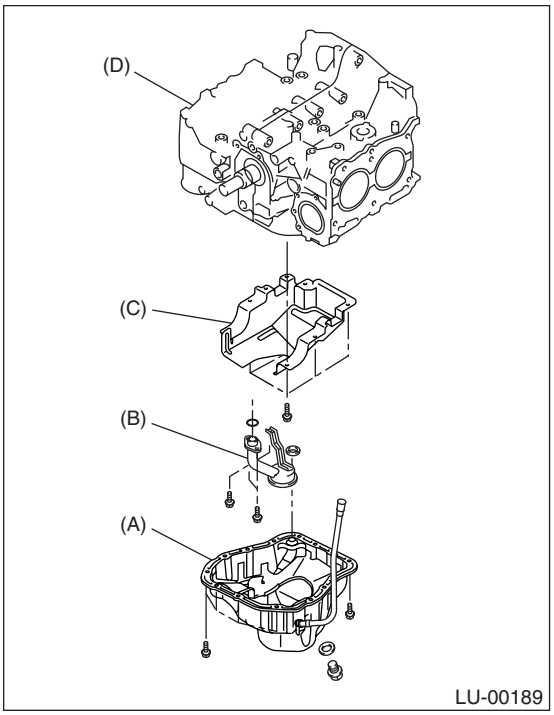

(A) Oil pan
(B) Oil strainer
(C) Baffle plate
(D) Cylinder block

B: INSTALLATION

CAUTION:
Before installing the oil pan, wipe clean the oil pan and the mating face of engine block.

1) Check the seal (A) is securely installed in baffle plate in the direction as shown in the figure.

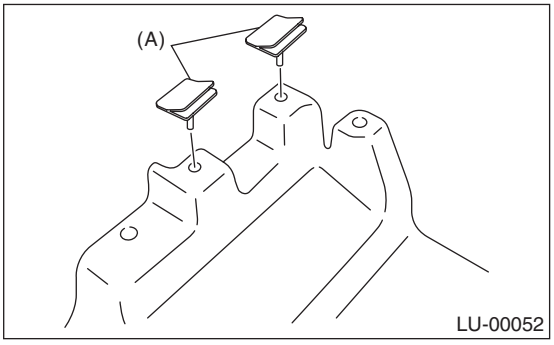

2) Install the baffle plate.

Tightening torque:
6.4 N·m (0.65 kgf-m, 4.7 ft-lb)

3) Install the oil strainer onto baffle plate.

NOTE:
Replace O-ring with new one.

Tightening torque:
10 N·m (1.0 kgf-m, 7.0 ft-lb)

4) Apply liquid gasket to the mating surfaces and install the oil pan.

Liquid gasket:
THREE BOND 1207C (Part No. 004403012) or equivalent

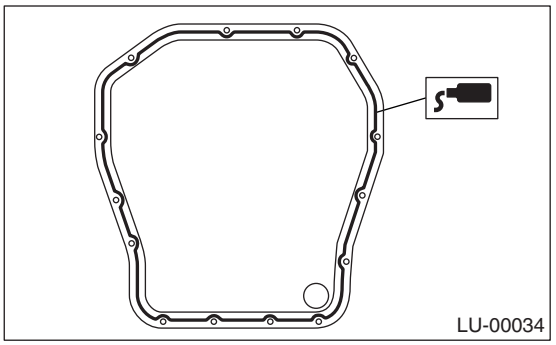

5) Tighten the bolts which install oil pan onto engine block.

Tightening torque:
5 N·m (0.5 kgf-m, 3.6 ft-lb)

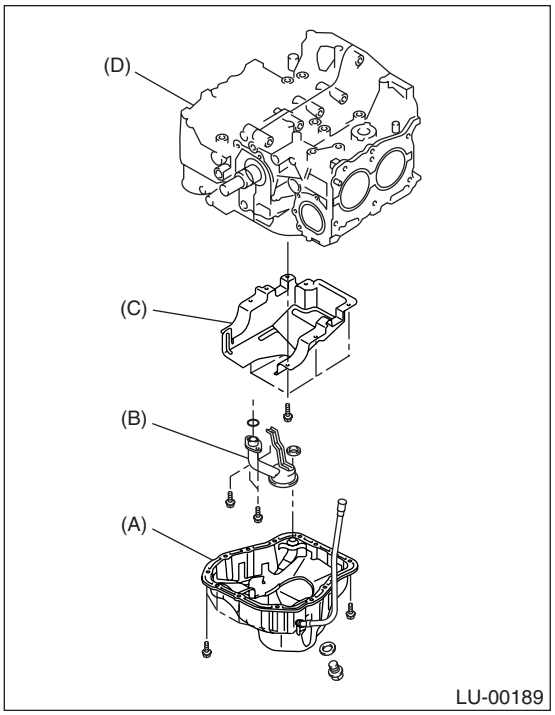

(A) Oil pan
(B) Oil strainer
(C) Baffle plate
(D) Cylinder block

6) Lower the engine onto front crossmember.
7) Tighten the nuts which hold front cushion rubber onto front crossmember.

Tightening torque:
83 N·m (8.5 kgf-m, 61 ft-lb)

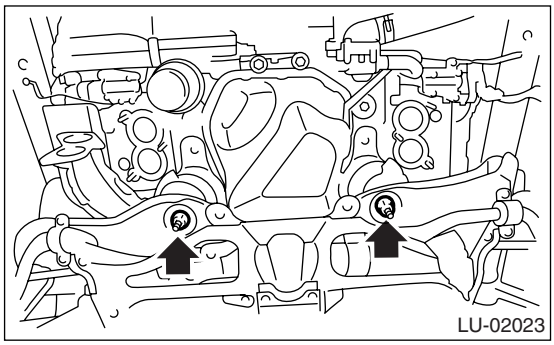

8) Install the front exhaust pipe. <Ref. to EX(H4DOTC)-6, INSTALLATION, Front Exhaust Pipe.> <Ref. to EX(H4SO)-5, INSTALLATION, Front Exhaust Pipe.>
9) Install the under cover.
10) Lower the vehicle.

CAUTION:
When lowing the vehicle, lower the lift-up device and wire ropes at the same time.

11) Remove the lifting device and wire ropes.

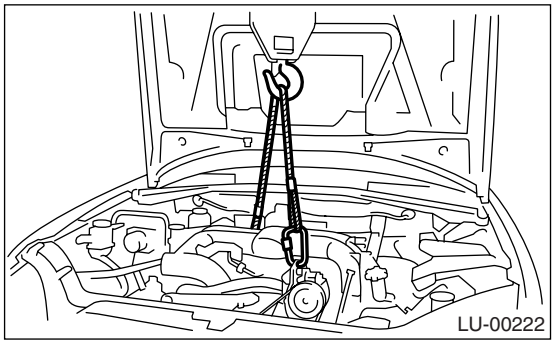

12) Install the pitching stopper.

Tightening torque:
T1: 50 N·m (5.1 kgf-m, 36.9 ft-lb)
T2: 58 N·m (5.9 kgf-m, 42.8 ft-lb)

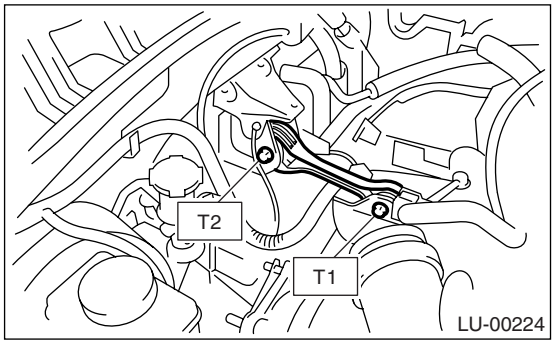

13) Install the radiator upper brackets.

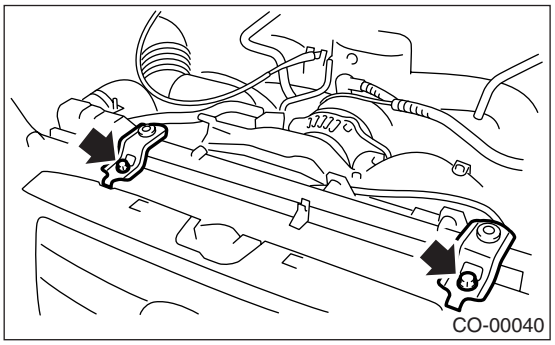

14) Install the intercooler. <Ref. to IN(H4DOTC)-12, INSTALLATION, Intercooler.>
15) Install the air intake boot and air cleaner upper cover.
16) Connect the connector to mass air flow sensor.

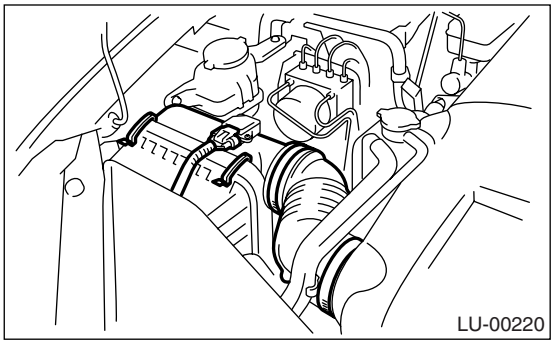

17) Install the front wheels.
18) Install the collector cover.
19) Connect the battery ground cable to battery.

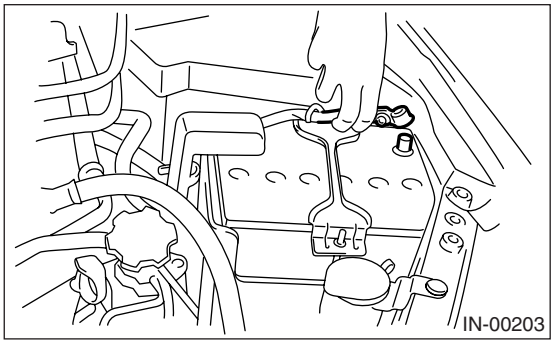

20) Fill engine oil. <Ref. to LU(H4DOTC)-9, INSPECTION, Engine Oil.>

C: INSPECTION

Visually check that the oil pan, oil strainer, oil strainer stay and baffle plate are not damaged.

6. Oil Pressure Switch

A: REMOVAL

1) Remove the collector cover.
2) Remove the generator from bracket. <Ref. to SC(H4SO)-20, REMOVAL, Generator.>
3) Disconnect the terminal from oil pressure switch.

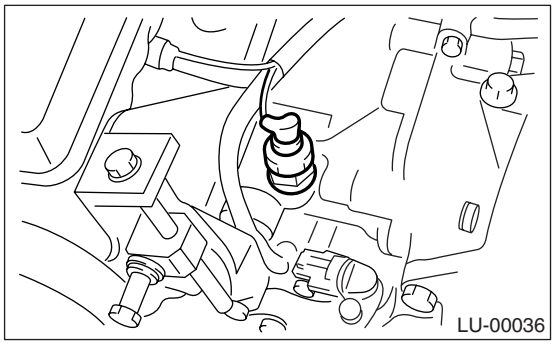

4) Remove the oil pressure switch.

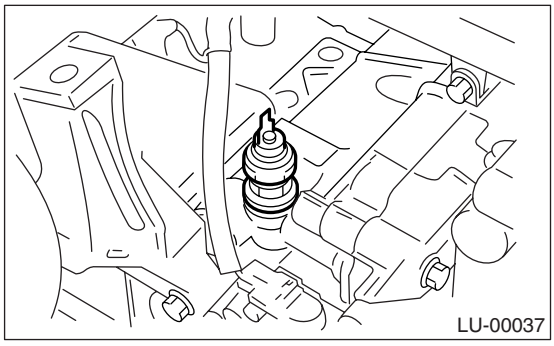

B: INSTALLATION

1) Apply liquid gasket to the oil pressure switch threads.

Liquid gasket:
THREE BOND 1324 (Part No. 004403007) or equivalent

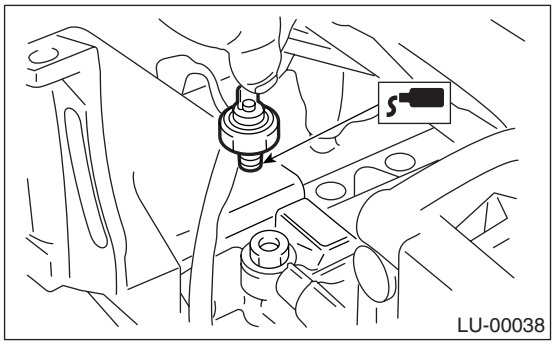

2) Install the oil pressure switch onto engine block.

Tightening torque:
25 N·m (2.5 kgf-m, 18.1 ft-lb)

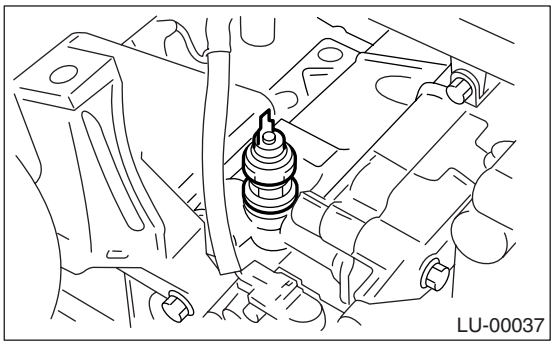

3) Connect the terminal to oil pressure switch.

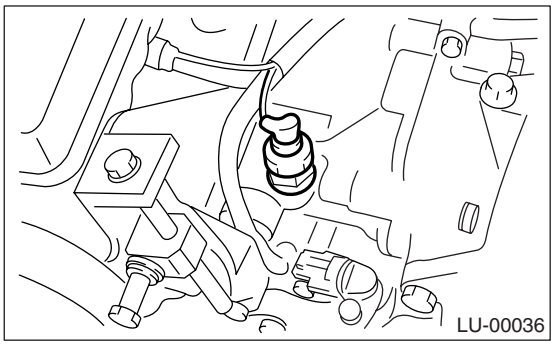

4) Install the generator to bracket. <Ref. to SC(H4SO)-20, INSTALLATION, Generator.>
5) Install the collector cover.

C: INSPECTION

Make sure oil does not leak or seep from where the oil pressure switch is installed.

7. Oil Pipe

A: REMOVAL

1) Remove the collector cover.
2) Disconnect the ground cable from battery.

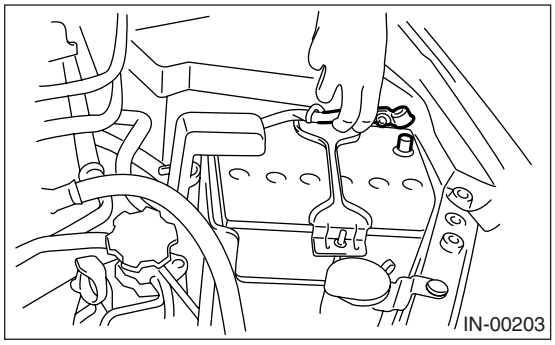

3) Remove the intercooler. <Ref. to IN(H4DOTC)-12, REMOVAL, Intercooler.>
4) Remove the intercooler bracket RH.
5) Remove the turbocharger upper cover.

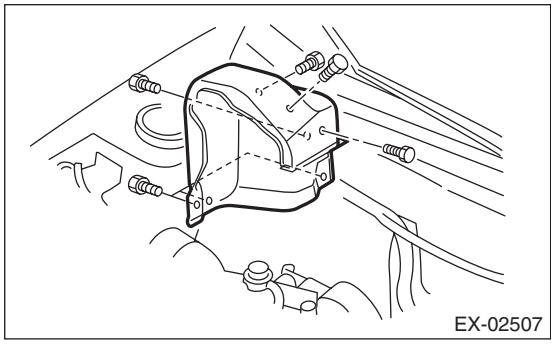

6) Remove the oil inlet pipe from the turbocharger.

CAUTION:
In order to prevent damaging the oil pipe on the cylinder head side, fix the section (a) shown in the figure when loosing the oil inlet pipe flare nut, and avoid the part from rotating together while loosening the nut.

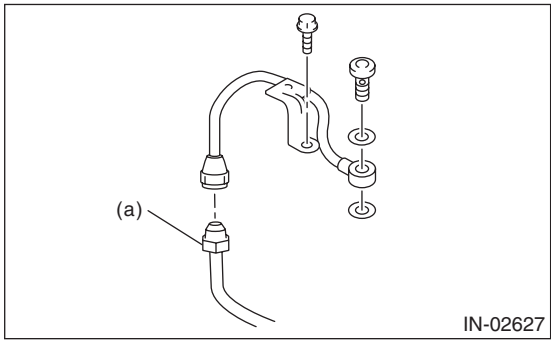

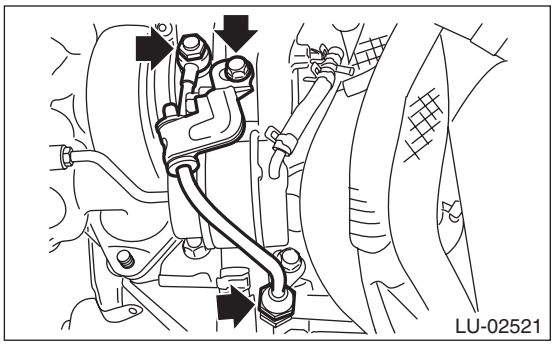

7) Remove the intake manifold. <Ref. to FU(H4DOTC)-12, REMOVAL, Intake Manifold.>
8) Remove the radiator main fan and radiator sub fan. <Ref. to CO(H4DOTC)-24, REMOVAL, Radiator Main Fan and Fan Motor.> <Ref. to CO(H4DOTC)-27, REMOVAL, Radiator Sub Fan and Fan Motor.>
9) Remove the V-belts. <Ref. to ME(H4DOTC)-37, REMOVAL, V-belt.>
10) Remove the crank pulley. <Ref. to ME(H4DOTC)-39, REMOVAL, Crank Pulley.>
11) Remove the timing belt cover. <Ref. to ME(H4DOTC)-41, REMOVAL, Timing Belt Cover.>
12) Remove the timing belt. <Ref. to ME(H4DOTC)-42, REMOVAL, Timing Belt.>
13) Remove the cam sprocket LH. <Ref. to ME(H4DOTC)-50, REMOVAL, Cam Sprocket.>
14) Remove the belt cover No. 2 LH.

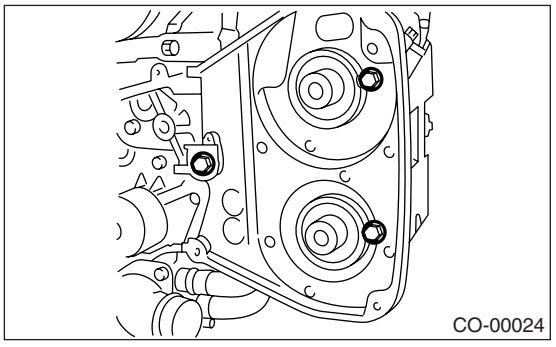

15) Remove the oil pipe.

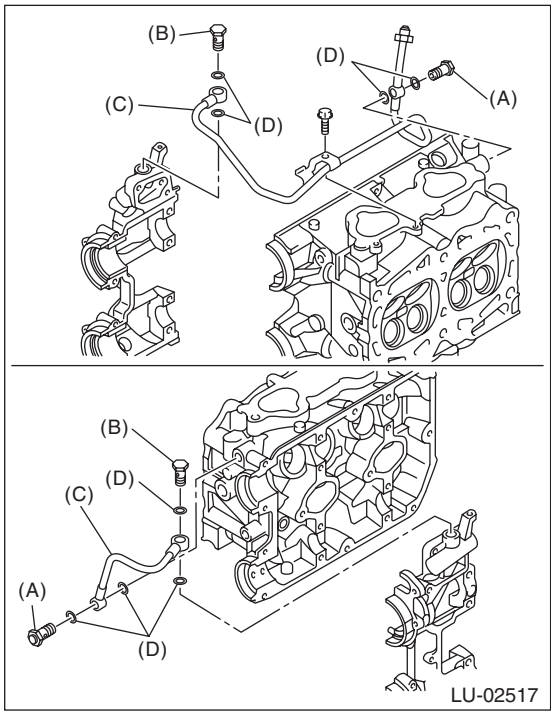

(A) Union screw with filter (with protrusion)
(B) Union screw without filter (without protrusion)
(C) Oil pipe
(D) Gasket

B: INSTALLATION

1) Inspect the union screw with filter. <Ref. to LU(H4DOTC)-22, INSPECTING UNION SCREW WITH FILTER, INSPECTION, Oil Pipe.>
2) Install the oil pipe.

NOTE:
• Make sure not to mix up the union screws with filter and without filter as their installation positions are different.
• Use a new gasket.

Tightening torque:
T1: 8 N·m (0.8 kgf-m, 5.9 ft-lb)
T2: 29 N·m (3.0 kgf-m, 21.4 ft-lb)

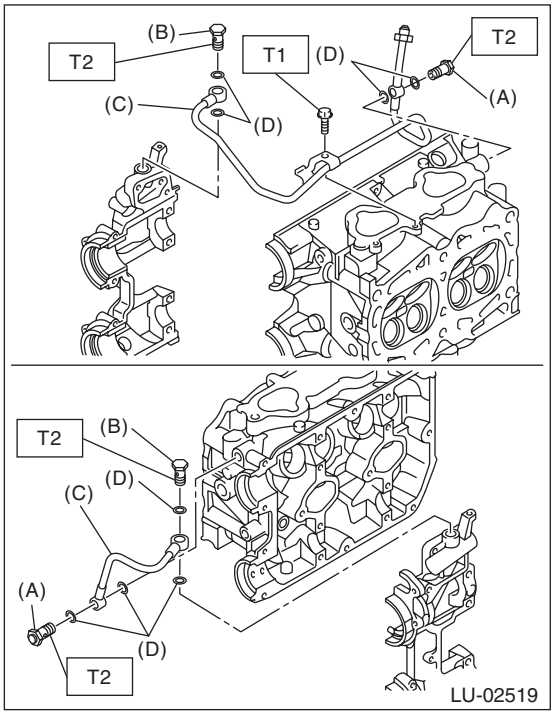

(A) Union screw with filter (with protrusion)
(B) Union screw without filter (without protrusion)
(C) Oil pipe
(D) Gasket

3) Install the belt cover No. 2 LH.

Tightening torque:
5 N·m (0.5 kgf-m, 3.7 ft-lb)

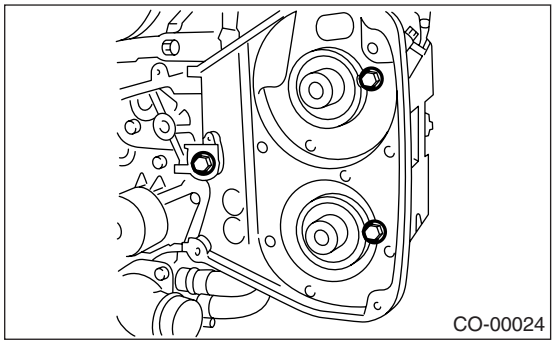

4) Install the cam sprocket LH. <Ref. to ME(H4DOTC)-50, INSTALLATION, Cam Sprocket.>
5) Install the timing belt. <Ref. to ME(H4DOTC)-44, TIMING BELT, INSTALLATION, Timing Belt.>
6) Install the timing belt cover. <Ref. to ME(H4DOTC)-41, INSTALLATION, Timing Belt Cover.>
7) Install the crank pulley. <Ref. to ME(H4DOTC)-39, INSTALLATION, Crank Pulley.>
8) Install the V-belts. <Ref. to ME(H4DOTC)-37, INSTALLATION, V-belt.>
9) Install the radiator main fan and the radiator sub fan. <Ref. to CO(H4DOTC)-24, INSTALLATION, Radiator Main Fan and Fan Motor.> <Ref. to CO(H4DOTC)-27, INSTALLATION, Radiator Sub Fan and Fan Motor.>
10) Install the intake manifold. <Ref. to FU(H4DOTC)-14, INSTALLATION, Intake Manifold.>
11) Temporarily tighten the bolts and flare nuts which secure the oil inlet pipe to the turbocharger.

NOTE:
Use a new gasket.

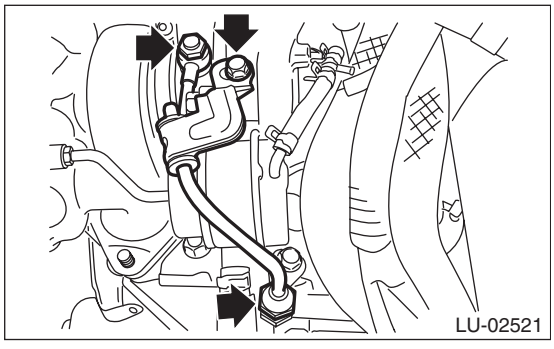

12) Tighten the union screws and flare nuts which secure the oil inlet pipe to the turbocharger.

CAUTION:
In order to prevent damaging the oil pipe on the cylinder head side, fix the section (a) shown in the figure when tightening the oil inlet pipe flare nut, and avoid the part from rotating together while tightening the nut.

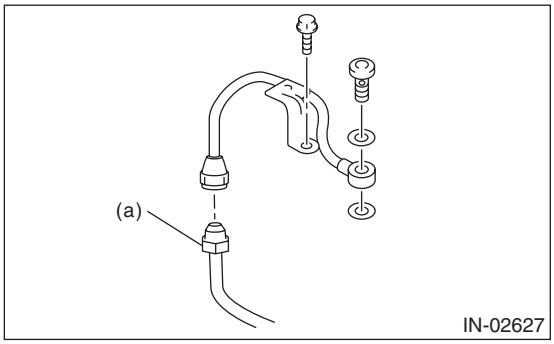

Tightening torque:
T1: 16 N·m (1.6 kgf-m, 11.8 ft-lb)
T2: 20 N·m (2.0 kgf-m, 14.8 ft-lb)

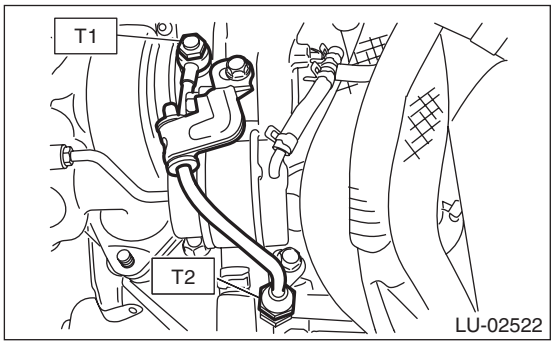

13) Tighten the bolts which hold the oil inlet pipe stay to the turbocharger.

Tightening torque:
5 N·m (0.5 kgf-m, 3.7 ft-lb)

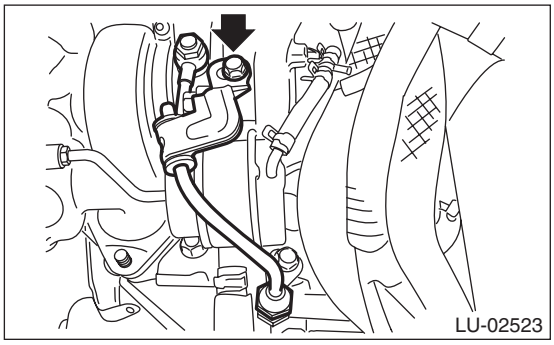

14) Install the turbocharger upper cover.

Tightening torque:
7.5 N·m (0.8 kgf-m, 5.5 ft-lb)

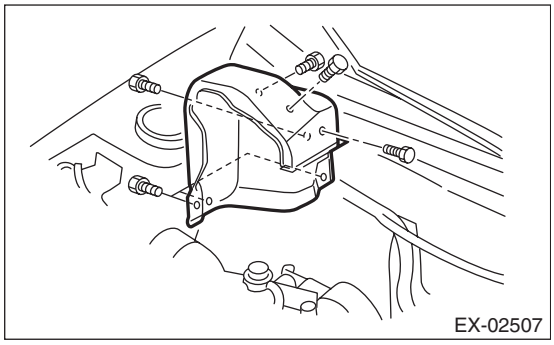

15) Install the intercooler bracket RH.
16) Install the intercooler. <Ref. to IN(H4DOTC)-12, INSTALLATION, Intercooler.>
17) Connect the ground cable to battery.

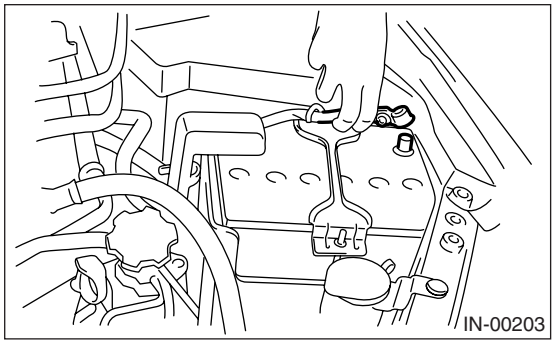

18) Install the collector cover.

C: INSPECTION

1. INSPECTING UNION SCREW WITH FILTER

Check the filter part of union screw for clogging or damage, and if defective, replace the union screw with filter with a new part.

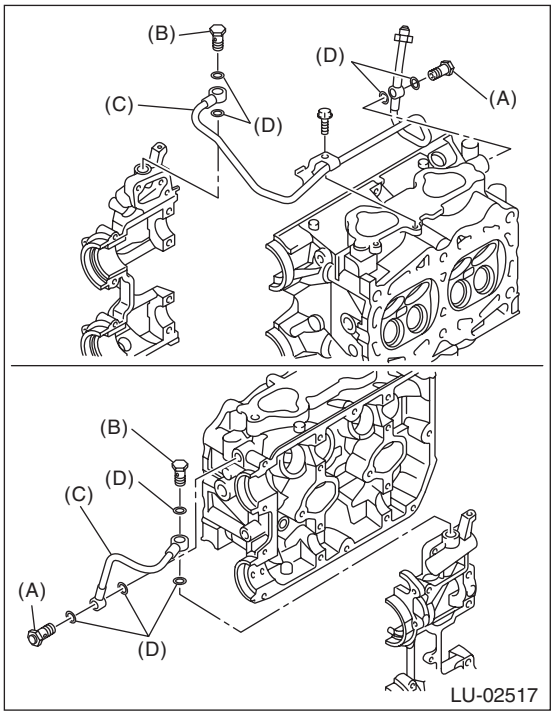

(A) Union screw with filter (with protrusion)
(B) Union screw without filter (without protrusion)
(C) Oil pipe
(D) Gasket

2. OTHER INSPECTIONS

1) Check that the oil pipe and union screw have no deformation, cracks and other damages.
2) Check that there are no oil leaks or oil oozing from the oil pipe attachment section.

8. Engine Oil Cooler

A: REMOVAL

1) Lift-up the vehicle.
2) Remove the under cover.
3) Drain engine oil.
4) Drain coolant.
5) Remove the water by-pass pipe between oil cooler and water pump.

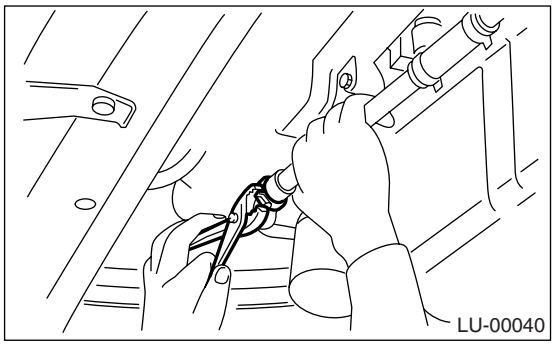

6) Remove the engine oil filter. <Ref. to LU(H4DOTC)-24, REMOVAL, Engine Oil Filter.>
7) Remove the oil cooler connector and remove oil cooler.

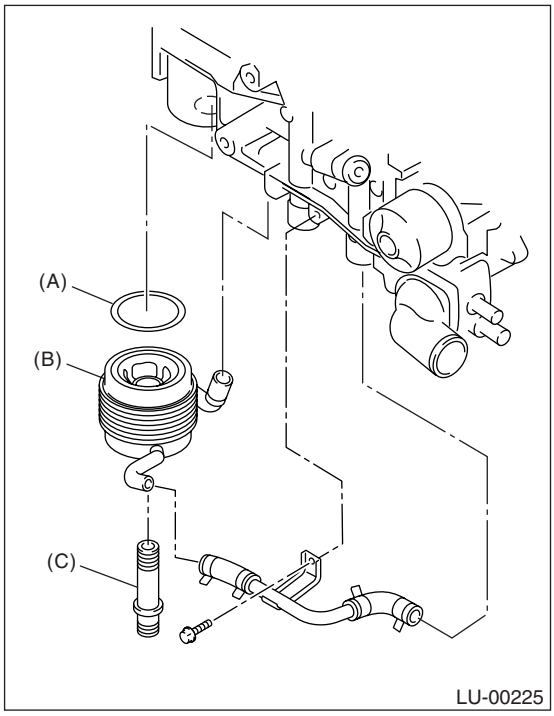

(A) O-ring
(B) Oil cooler
(C) Oil cooler connector

B: INSTALLATION

Install in the reverse order of removal.

NOTE:
Use new O-rings.

Tightening torque:
T: 54 N·m (5.5 kgf-m, 40 ft-lb)

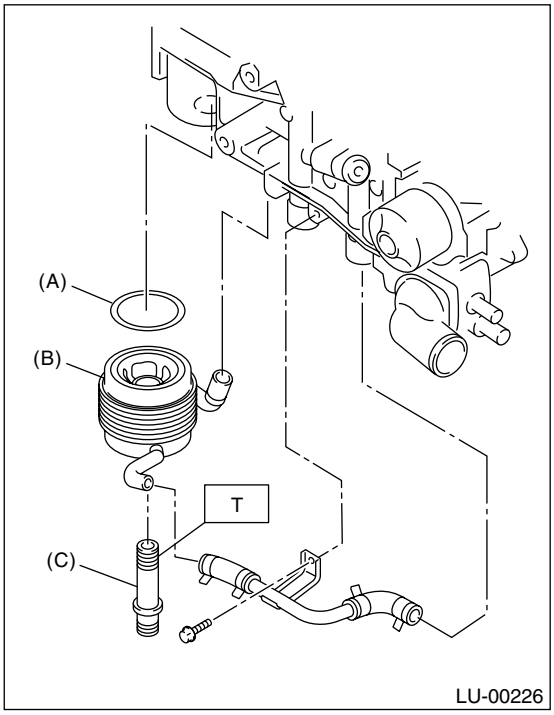

(A) O-ring
(B) Oil cooler
(C) Oil cooler connector

C: INSPECTION

1) Check that coolant passages are not clogged by blowing compressed air.
2) Check the mating surfaces of cylinder block, O-ring groove and oil filter for damage.

9. Engine Oil Filter

A: REMOVAL

1) Lift-up the vehicle.
2) Remove the under cover.
3) Remove the oil filter using STs.

ST	18332AA000	OIL FILTER WRENCH (Outer diameter: 68 mm (2.68 in))
ST	18332AA010	OIL FILTER WRENCH (Outer diameter: 65 mm (2.56 in))

NOTE:
Standard oil filter is outer diameter of 68 mm (2.68 in). However, SUBARU genuine oil filter having outer diameter of 65 mm (2.56 in) can also be used.

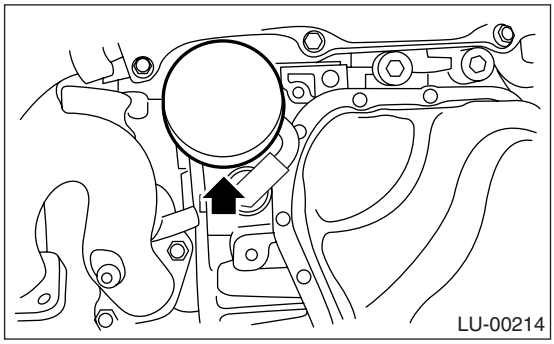

B: INSTALLATION

1) Clean the oil filter installation surface on cylinder block or oil cooler.
2) Obtain a new oil filter and apply a thin coat of engine oil to seal rubber.
3) Install the oil filter, turning it by hand, being careful not to damage seal rubber.
4) Tighten more after the seal rubber contacts oil cooler.

NOTE:
• In case of oil filter in diameter 68 mm (2.68 in), tighten by approx. one turn.
• In case of oil filter in diameter 65 mm (2.56 in), tighten by approx. 2/3 to 3/4 turn.
• Over-tightening may cause oil leak.

5) Install the under cover.
6) Lower the vehicle.

C: INSPECTION

1) After installing the oil filter, run the engine and make sure that no oil is leaking around seal rubber.

NOTE:
The filter element and filter case are permanently jointed; therefore, interior cleaning is not necessary.

2) Check the engine oil level.
<Ref. to LU(H4DOTC)-9, INSPECTION, Engine Oil.>

10.Engine Lubrication System Trouble in General

A: INSPECTION

Before performing diagnosis, make sure that the engine oil level is correct and no oil leakage exists.

Symptom	Possible cause		Corrective action
1. Warning light remains on.	1) Oil pressure switch failure	Cracked diaphragm or oil leakage within switch	Replace.
		Broken spring or seized contacts	Replace.
	2) Low oil pressure	Clogging of oil filter	Replace.
		Malfunction of oil by-pass valve in oil filter	Clean or replace.
		Malfunction of oil relief valve in oil pump	Clean or replace.
		Clogged oil passage	Clean.
		Excessive tip clearance and side clearance of oil pump rotor and gear	Replace.
		Clogged oil strainer or broken pipe	Clean or replace.
	3) No oil pressure	Insufficient engine oil	Replenish.
		Broken pipe of oil strainer	Replace.
		Stuck oil pump rotor	Replace.
2. Warning light does not come on.	1) Malfunction of combination meter		Replace.
	2) Poor contact of switch contact points		Replace.
	3) Disconnection of wiring		Repair.
3. Warning light flickers momentarily.	1) Poor contact at terminals		Repair.
	2) Defective wiring harness		Repair.
	3) Low oil pressure		Check for the same possible causes as listed in 1).— 2).

SPEED CONTROL SYSTEMS

SP(H4DOTC)

Page

1. General Description 2

1. General Description

A: SPECIFICATION

Specifications for turbo model are the same as SOHC model. <Ref. to SP(H4SO)-2, General Description.>

IGNITION

IG(H4DOTC)

Page

1. General Description 2
2. Spark Plug.....4
3. Ignition Coil and Ignitor Assembly.....6

1. General Description

A: SPECIFICATION

Item		Specification
Ignition coil and ignitor ASSY	Model	FK0186
	Ignition system	Independent ignition coil
	Manufacturer	Diamond Electric
Spark plug	Manufacturer and type	NGK: ILFR6B
	Thread size (diameter, pitch, length) mm	14, 1.25, 26.5
	Spark plug gap mm (in)	0.7 — 0.8 (0.028 — 0.031)
	Electrode	Iridium

B: COMPONENT

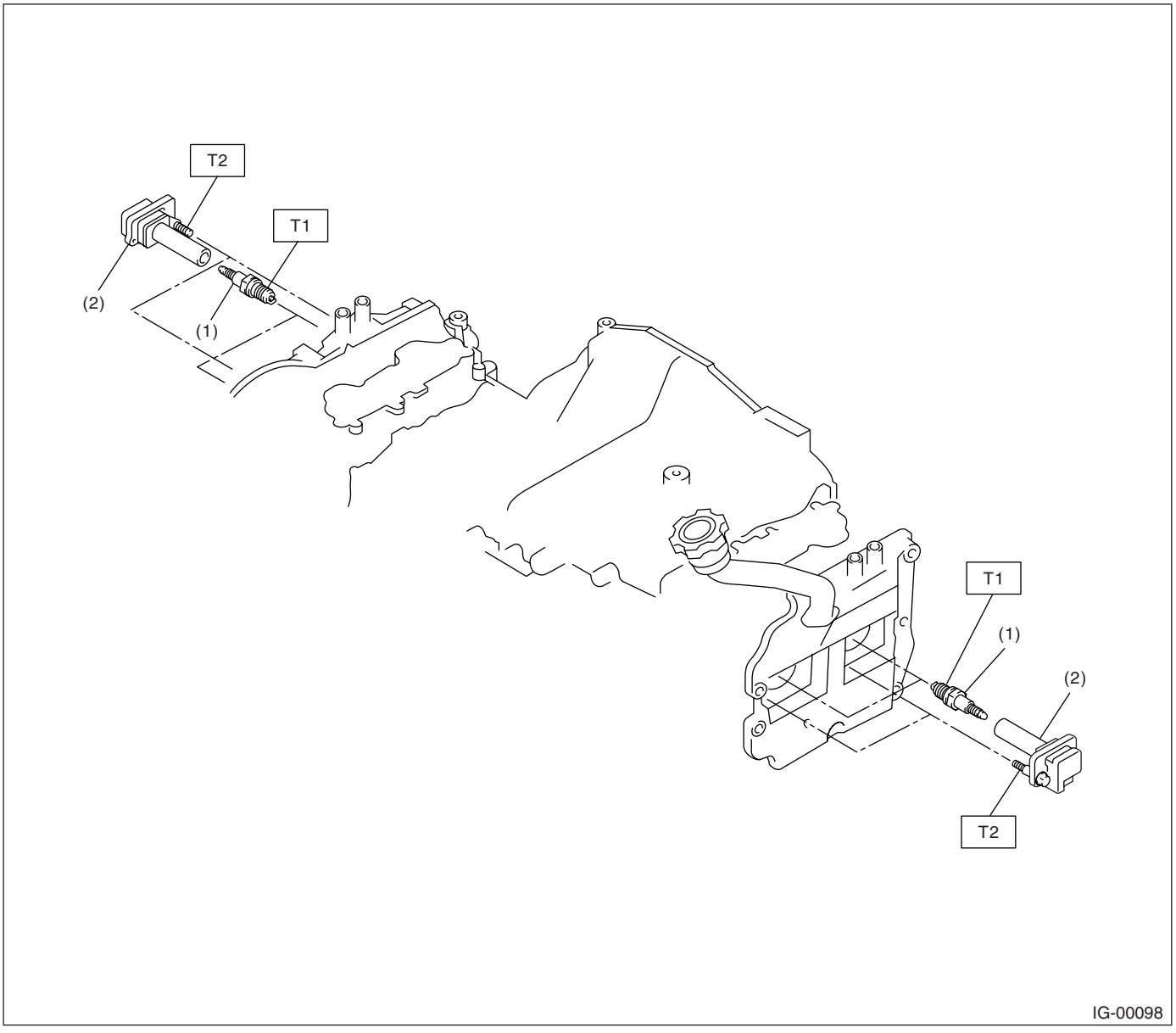

(1) Spark plug
(2) Ignition coil and ignitor ASSY

Tightening torque: N·m (kgf-m, ft-lb)
T1: 21 (2.1, 15.2)
T2: 16 (1.6, 11.7)

C: CAUTION

• Wear work clothing, including a cap, protective goggle and protective shoes during operation.
• Remove contamination including dirt and corrosion before removal, installation or disassembly.
• Keep the disassembled parts in order and protect them from dust and dirt.
• Before removal, installation or disassembly, be sure to clarify the failure. Avoid unnecessary removal, installation, disassembly and replacement.
• Be careful not to burn yourself, because each part on the vehicle is hot after running.
• Be sure to tighten fasteners including bolts and nuts to the specified torque.
• Place shop jacks or rigid racks at the specified points.
• Before disconnecting electrical connectors of sensors or units, be sure to disconnect the ground cable from battery.

2. Spark Plug

A: REMOVAL

CAUTION:
All spark plugs installed on an engine must be of the same heat range.

Spark plug:
<Ref. to IG(H4DOTC)-2, SPECIFICATION, General Description.>

1. RH SIDE

1) Remove the collector cover.
2) Disconnect the ground cable from battery.

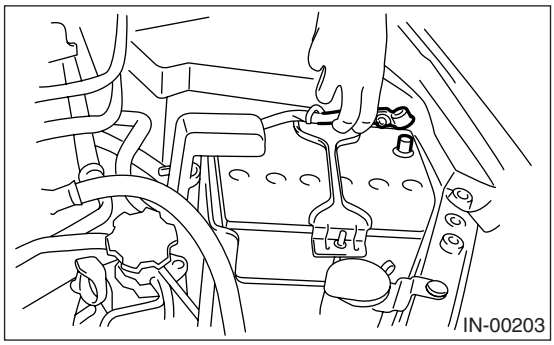

3) Remove the air cleaner case.
<Ref. to IN(H4DOTC)-8, REMOVAL, Air Cleaner Case.>
4) Disconnect the connector from ignition coil.
5) Remove the ignition coil.

NOTE:
Turn the #3 ignition coil by 180° to remove it.

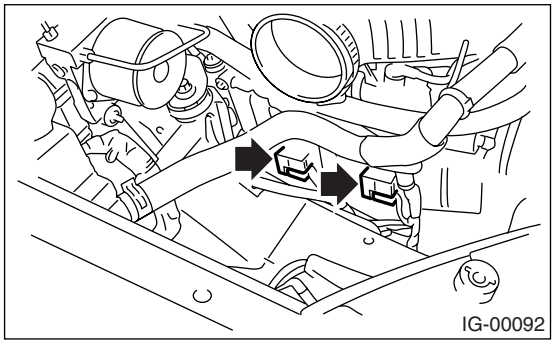

6) Remove the spark plug with a spark plug socket.

2. LH SIDE

1) Remove the collector cover.
2) Remove the battery and battery carrier.
3) Disconnect the connector from ignition coil.
4) Remove the ignition coil.

NOTE:
Turn the #4 ignition coil by 180° to remove it.

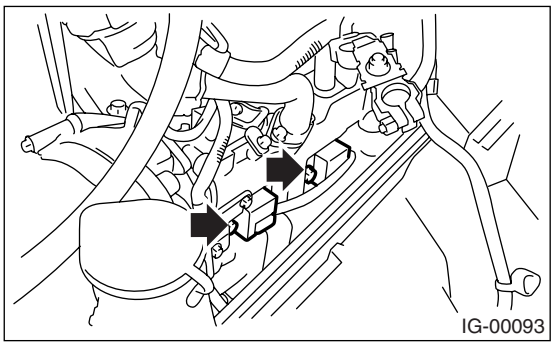

5) Remove the spark plug with a spark plug socket.

B: INSTALLATION

1. RH SIDE

Install in the reverse order of removal.

Tightening torque (Spark plug):
21 N·m (2.1 kgf-m, 15.2 ft-lb)

Tightening torque (Ignition coil):
16 N·m (1.6 kgf-m, 11.7 ft-lb)

NOTE:
The above torque should only be applied to new spark plugs without oil on their threads.
In case their threads are lubricated, the torque should be reduced by approximately 1/3 of the specified torque in order to avoid over-stressing.

2. LH SIDE

Install in the reverse order of removal.

Tightening torque (Spark plug):
21 N·m (2.1 kgf-m, 15.2 ft-lb)

Tightening torque (Ignition coil):
16 N·m (1.6 kgf-m, 11.7 ft-lb)

NOTE:
The above torque should only be applied to new spark plugs without oil on their threads.
In case their threads are lubricated, the torque should be reduced by approx. 1/3 of the specified torque in order to avoid over-stressing.

C: INSPECTION

Check the electrodes and inner and outer ceramic insulator of plugs, noting the type of deposits and the degree of electrode erosion.

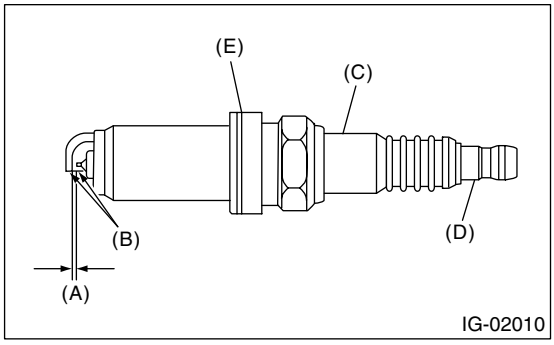

(A) Spark plug gap
(B) Carbon accumulation or wear
(C) Crack
(D) Damage
(E) Damaged gasket

1) Normal:
Brown to grayish-tan deposits and slight electrode wear indicate correct spark plug heat range.

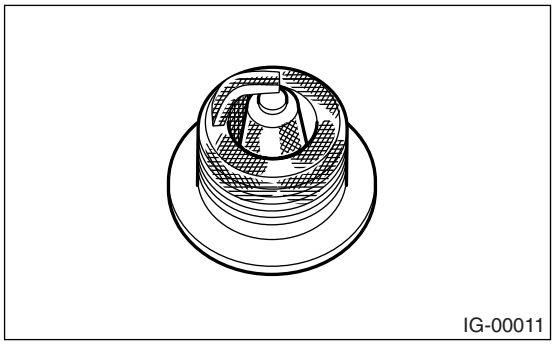

2) Carbon fouled:
Dry fluffy carbon deposits on insulator and electrode are mostly caused by slow speed driving in the city, weak ignition, too rich fuel mixture and dirty air cleaner.

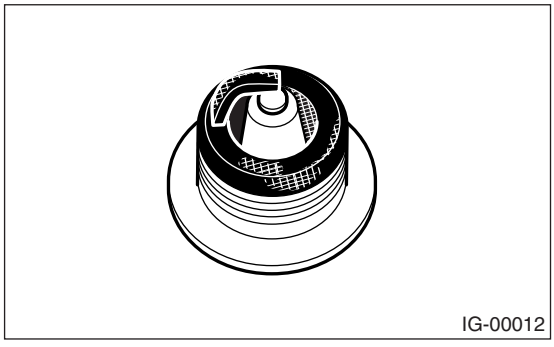

3) Oil fouled:
Wet black deposits show oil entrance into the combustion chamber through worn rings and pistons or excessive clearance between valve guides and stems.

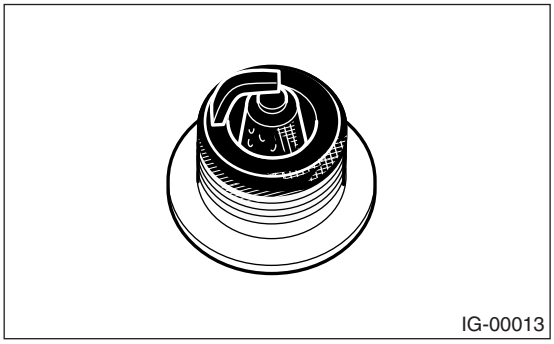

4) Overheating:
White or light gray insulator with black or brown spots and bluish burnt electrodes indicate engine overheating. Moreover, the appearance results from incorrect ignition timing, loose spark plugs, wrong selection of fuel, hotter range plug, etc.

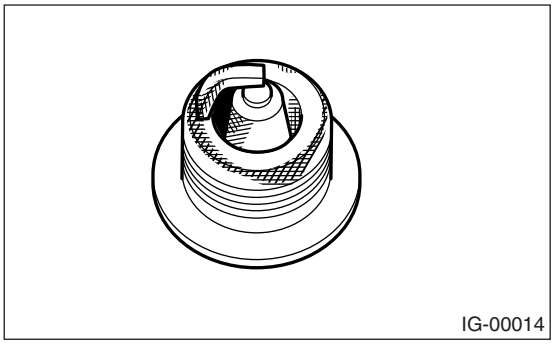

D: ADJUSTMENT

Clean the spark plugs using a wire brush.
Clean and remove the carbon or oxide deposits. But do not wear away ceramic insulator.
If deposits are too stubborn, replace the plugs.

NOTE:
Do not use a plug cleaner because the spark plugs are applied with iridium tip.

Spark plug gap: L
0.7 — 0.8 mm (0.028 — 0.031 in)

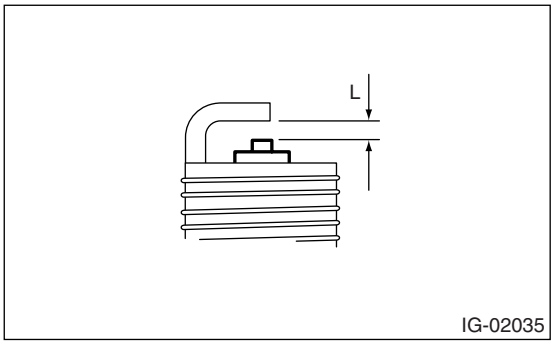

3. Ignition Coil and Ignitor Assembly

A: REMOVAL

Direct ignition type has been adopted. Refer to “Spark Plug” for removal procedure. <Ref. to IG(H4DOTC)-4, REMOVAL, Spark Plug.>

B: INSTALLATION

Install in the reverse order of removal.

Tightening torque:
16 N·m (1.6 kgf-m, 11.7 ft-lb)

C: INSPECTION

For inspection procedure, refer to “Diagnostics for Engine Starting Failure”. <Ref. to EN(H4DOTC)(diag)-64, IGNITION CONTROL SYSTEM, Diagnostics for Engine Starting Failure.>

STARTING/CHARGING SYSTEMS

SC(H4DOTC)

Page

1. General Description 2

1. General Description

A: SPECIFICATION

Specifications for Turbo model is included in SC(H4SO) section. <Ref. to SC(H4SO)-2, General Description.>

ENGINE (DIAGNOSTICS)

EN(H4DOTC)(diag)

		Page
1.	Basic Diagnostic Procedure	2
2.	Check List for Interview	3
3.	General Description	5
4.	Electrical Component Location	8
5.	Engine Control Module (ECM) I/O Signal	18
6.	Engine Condition Data	23
7.	Data Link Connector	24
8.	General Scan Tool	25
9.	Subaru Select Monitor	28
10.	Read Diagnostic Trouble Code (DTC)	35
11.	Inspection Mode	36
12.	Drive Cycle	41
13.	Clear Memory Mode	45
14.	Compulsory Valve Operation Check Mode	46
15.	Malfunction Indicator Light	48
16.	Diagnostics for Engine Starting Failure	57
17.	List of Diagnostic Trouble Code (DTC)	71
18.	Diagnostic Procedure with Diagnostic Trouble Code (DTC)	78
19.	General Diagnostic Table	331

1. Basic Diagnostic Procedure

A: PROCEDURE

1. ENGINE

	Step	Check	Yes	No
1	**CHECK ENGINE START FAILURE.** 1) Ask the customer when and how the trouble occurred using the interview check list. <Ref. to EN(H4DOTC)(diag)-3, CHECK, Check List for Interview.> 2) Start the engine.	Does the engine start?	Go to step **2.**	Inspection using "Diagnostics for Engine Starting Failure". <Ref. to EN(H4DOTC)(diag)-57, Diagnostics for Engine Starting Failure.>
2	**CHECK ILLUMINATION OF MALFUNCTION INDICATOR LIGHT.**	Does malfunction indicator light illuminate?	Go to step **3.**	Inspection using "General Diagnostic Table". <Ref. to EN(H4DOTC)(diag)-331, General Diagnostic Table.>
3	**CHECK INDICATION OF DTC ON SCREEN.** 1) Turn the ignition switch to OFF. 2) Connect the Subaru Select Monitor or general scan tool to data link connector. 3) Turn the ignition switch to ON, and the Subaru Select Monitor or general scan tool switch to ON. 4) Read DTC on Subaru Select Monitor or general scan tool.	Is DTC displayed on the Subaru Select Monitor or general scan tool?	Record the DTC. Repair the trouble cause. <Ref. to EN(H4DOTC)(diag)-71, List of Diagnostic Trouble Code (DTC).> Go to step **4.**	Repair the related parts. NOTE: If DTC is not shown on display although the malfunction indicator light illuminates, perform the diagnostics for malfunction indicator light circuit or combination meter. <Ref. to EN(H4DOTC)(diag)-48, Malfunction Indicator Light.>
4	**PERFORM THE DIAGNOSIS.** 1) Perform clear memory mode. <Ref. to EN(H4DOTC)(diag)-45, Clear Memory Mode.> 2) Perform the inspection mode. <Ref. to EN(H4DOTC)(diag)-36, Inspection Mode.>	Is DTC displayed on the Subaru Select Monitor or general scan tool?	Check on "Diagnostic Chart with Diagnostic Trouble Code (DTC)" <Ref. to EN(H4DOTC)(diag)-78, Diagnostic Procedure with Diagnostic Trouble Code (DTC).>	Finish the diagnosis.

2. Check List for Interview

A: CHECK

1. CHECK LIST No. 1

Check the following items when problem has occurred.

NOTE:
Use copies of this page for interviewing customers.

Customer's name		Engine No.	
Date of sale		Fuel brand	
Date of repair		Odometer reading	km
V.I.N.			miles
Weather	❑ Fine ❑ Cloudy ❑ Rainy ❑ Snowy ❑ Various/Others:		
Ambient air temperature	°C (°F)		
	❑ Hot ❑ Warm ❑ Cool ❑ Cold		
Place	❑ Highway ❑ Suburbs ❑ Inner city ❑ Uphill ❑ Downhill ❑ Rough road ❑ Others:		
Engine temperature	❑ Cold ❑ Warming-up ❑ After warming-up ❑ Any temperature ❑ Others:		
Engine speed	rpm		
Vehicle speed	km/h (MPH)		
Driving conditions	❑ Not affected ❑ At starting ❑ While idling ❑ At racing ❑ While accelerating ❑ While cruising ❑ While decelerating ❑ While turning (RH/LH)		
Headlight	❑ ON / ❑ OFF	Rear defogger	❑ ON / ❑ OFF
Blower	❑ ON / ❑ OFF	Audio	❑ ON / ❑ OFF
A/C compressor	❑ ON / ❑ OFF	Car phone	❑ ON / ❑ OFF
Radiator fan	❑ ON / ❑ OFF		
Front wiper	❑ ON / ❑ OFF		
Rear wiper	❑ ON / ❑ OFF		

2. CHECK LIST No. 2

Check the following items about the vehicle's state when malfunction indicator light turns on.

NOTE:
Use copies of this page for interviewing customers.

a) Other warning lights or indicators turn on. ❑ Yes / ❑ No
❑ Low fuel warning light ❑ Charge indicator light ❑ AT diagnostic indicator light ❑ ABS warning light ❑ Oil pressure indicator light
b) Fuel level
• Lack of gasoline: ❑ Yes / ❑ No • Indicator position of fuel gauge: • Experienced running out of fuel: ❑ Yes / ❑ No
c) Intentional connecting or disconnecting of harness connectors or spark plug cords: ❑ Yes / ❑ No
• What:
d) Intentional connecting or disconnecting of hoses: ❑ Yes / ❑ No
• What:
e) Installing of other parts except genuine parts: ❑ Yes / ❑ No
• What: • Where:
f) Occurrence of noise: ❑ Yes / ❑ No
• From where: • What kind:
g) Occurrence of smell: ❑ Yes / ❑ No
• From where: • What kind:
h) Intrusion of water into engine compartment or passenger compartment: ❑ Yes / ❑ No
i) Troubles occurred
❑ Engine does not start. ❑ Engine stalls during idling. ❑ Engine stalls while driving. ❑ Engine speed decreases. ❑ Engine speed does not decrease. ❑ Rough idling ❑ Poor acceleration ❑ Back fire ❑ After fire ❑ Does not shift. ❑ Excessive shift shock

3. General Description

A: CAUTION

1) Airbag system wiring harness is routed near the ECM, main relay and fuel pump relay.

CAUTION:
• All airbag system wiring harnesses and connectors are colored yellow. Do not use the electrical test equipment on these circuits.
• Be careful not to damage the airbag system wiring harness when servicing the ECM, TCM, main relay and fuel pump relay.

2) Never connect the battery in reverse polarity.
The ECM will be destroyed instantly.
The fuel injector and other part will be damaged.
3) Do not disconnect the battery terminals while the engine is running.
A large counter electromotive force will be generated in the generator, and this voltage may damage electronic parts such as ECM, etc.
4) Before disconnecting the connectors of each sensor and the ECM, be sure to turn the ignition switch to OFF.
5) Poor contact has been identified as a primary cause of this problem. Measure the voltage or resistance of individual sensor or all electrical control modules using a tapered pin with a diameter of less than 0.64 mm (0.025 in). Do not insert the pin more than 5 mm (0.20 in) into the part.
6) Remove the ECM from the located position after disconnecting two cables on battery.
Otherwise, the ECM may be damaged.

CAUTION:
When replacing the ECM, be careful not to use the wrong spec. ECM to avoid any damage on the fuel injection system.

NOTE:
Immobilizer system must be registered when installing the ECM of the model with immobilizer. For doing so, all ignition keys and ID cards should be prepared. Refer to “REGISTRATION MANUAL FOR IMMOBILIZER”.

7) Connectors to each sensor in the engine compartment and the harness connectors on the engine side and body side are all designed to be waterproof. However, it is still necessary to take care not to allow water to get into the connectors when washing the vehicle, or when servicing the vehicle on a rainy day.

8) Use ECM mounting stud bolts as the grounding point to the body when measuring voltage and resistance inside the passenger compartment.

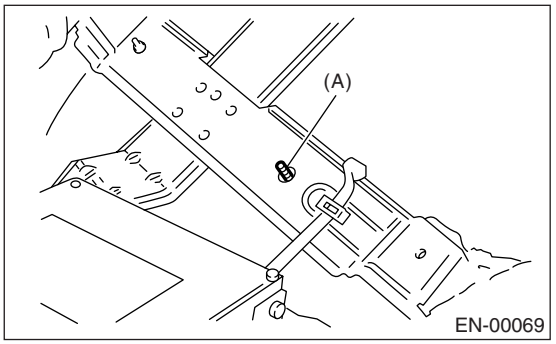

(A) Stud bolt

9) Use engine grounding terminal or engine proper as the grounding point to the body when measuring voltage and resistance in the engine compartment.

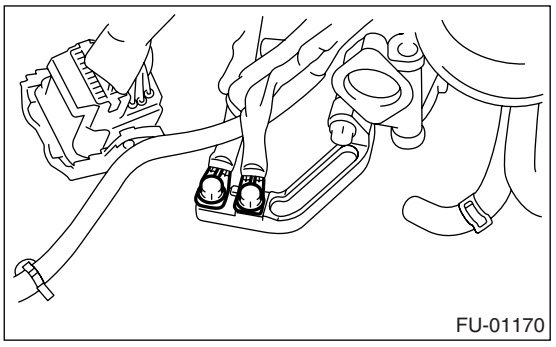

10) Every MFI-related part is a precision part. Do not drop them.
11) Observe the following cautions when installing a radio in MFI equipped models.

CAUTION:
• The antenna must be kept as far apart as possible from the control unit. (The ECM is located under the steering column, inside of the instrument panel lower trim panel.)
• The antenna feeder must be placed as far apart as possible from the ECM and MFI harness.
• Carefully adjust the antenna for correct matching.
• When mounting a large power type radio, pay special attention to the three items above mentioned.
• Incorrect installation of the radio may affect the operation of the ECM.

12) Before disconnecting the fuel hose, disconnect the fuel pump connector and crank the engine for more than five seconds to release pressure in the fuel system. If engine starts during this operation, run it until it stops.

13) Diagnostics should be conducted by rotating with simple, easy operations and proceeding to complicated, difficult operations. The most important thing in diagnostics is to understand the customer's complaint, and distinguish between the three causes.
14) On the model with ABS, when performing driving test in jacked-up or lifted-up position, sometimes the warning light may be lit, but this is not a malfunction of the system. The reason for this is the speed difference between the front and rear wheels. After diagnosis of engine control system, perform the ABS memory clearance procedure of self-diagnosis function.

B: INSPECTION

Before performing diagnostics, check the following items which might affect engine problems:

1. BATTERY

1) Measure battery voltage and specific gravity of electrolyte.

Standard voltage: 12 V

Specific gravity: Above 1.260

2) Check the condition of the main and other fuses, and harnesses and connectors. Also check for proper grounding.

2. ENGINE GROUND

Make sure the engine grounding terminal is properly connected to engine.

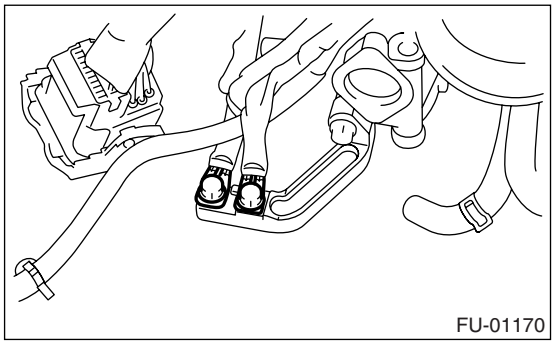

C: NOTE

1. DESCRIPTION

• The on-board diagnostics (OBD) system detects and indicates a fault in various inputs and outputs of the complex electronic control. Malfunction indicator light in the combination meter indicates occurrence of a fault or trouble.
• Further, against such a failure or sensors as may disable the drive, the fail-safe function is provided to ensure the minimal driveability.
• The OBD system incorporated with the vehicles within this engine family complies with OBD-II Regulations. The OBD system monitors the components and the system malfunction listed in Engine Section which affects on emissions.
• When the system decides that a malfunction occurs, malfunction indicator light illuminates. At the same time of the malfunction indicator light illumination or blinking, a DTC and a freeze frame engine conditions are stored into on-board computer.
• The OBD system stores freeze frame engine condition data (engine load, engine coolant temperature, fuel trim, engine speed and vehicle speed, etc.) into on-board computer when it detects a malfunction first.
• If the OBD system detects the various malfunctions including the fault of fuel trim or misfire, the OBD system first stores freeze frame engine conditions about the fuel trim or misfire.
• When the malfunction does not occur again for three consecutive driving cycles, malfunction indicator light is turned off, but DTC remains at on-board computer.
• When troubleshooting the vehicle which complies with OBD-II Regulations, connect the Subaru Select Monitor or general scan tool to the vehicle.

2. ENGINE AND EMISSION CONTROL SYSTEM

• The Multipoint Fuel Injection (MFI) system is a system that supplies the optimum air-fuel mixture to the engine for all the various operating conditions through the use of the latest electronic technology.
With this system fuel, which is pressurized at a constant pressure, is injected into the intake air passage of the cylinder head. The injection quantity of fuel is controlled by an intermittent injection system where the electro-magnetic injection valve (fuel injector) opens only for a short period of time, depending on the quantity of air required for one cycle of operation. In actual operation, the injection quantity is determined by the duration of an electric pulse applied to the fuel injector and this permits simple, yet highly precise metering of the fuel.

• Further, all the operating conditions of the engine are converted into electric signals, and this results in additional features of the system, such as large improved adaptability, easier addition of compensating element, etc.

The MFI system also has the following features:
- Reduced emission of harmful exhaust gases.
- Reduced in fuel consumption.
- Increased engine output.
- Superior acceleration and deceleration.
- Superior startability and warm-up performance in cold weather since compensation is made for coolant and intake air temperature.

D: PREPARATION TOOL

ILLUSTRATION	TOOL NUMBER	DESCRIPTION	REMARKS
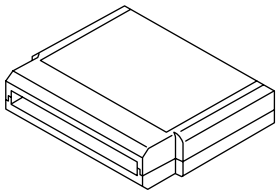 ST24082AA260	24082AA260	CARTRIDGE	Troubleshooting for electrical system.
ST22771AA030	22771AA030	SUBARU SELECT MONITOR KIT	Troubleshooting for electrical system.

4. Electrical Component Location

A: LOCATION

1. ENGINE

- Control module

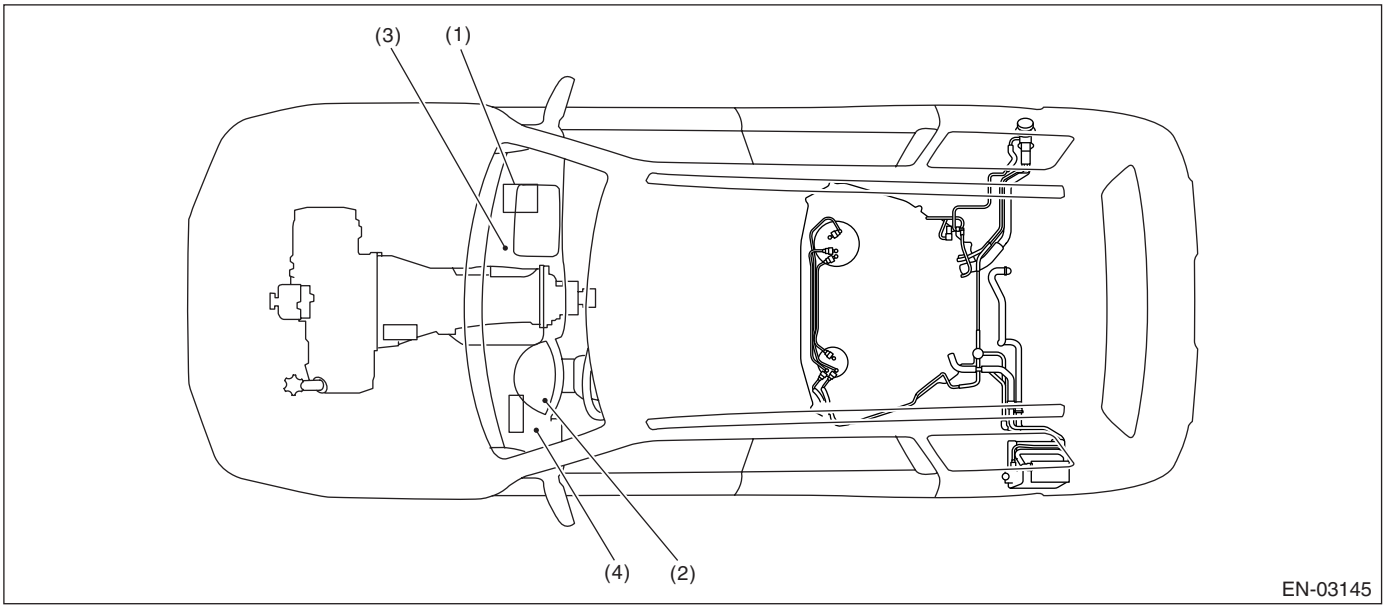

(1) Engine control module (ECM)
(2) Malfunction indicator light
(3) Test mode connector
(4) Data link connector

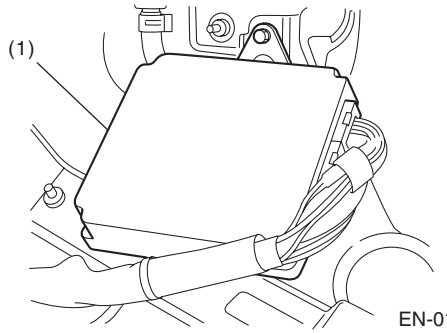

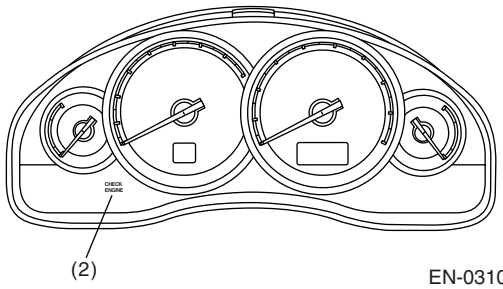

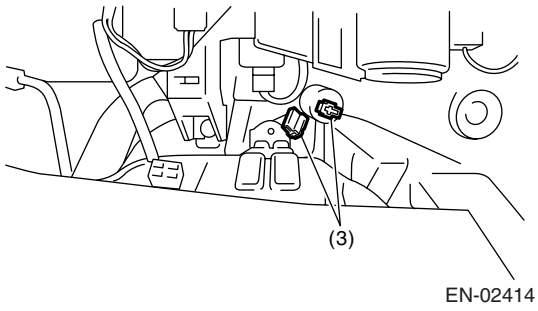

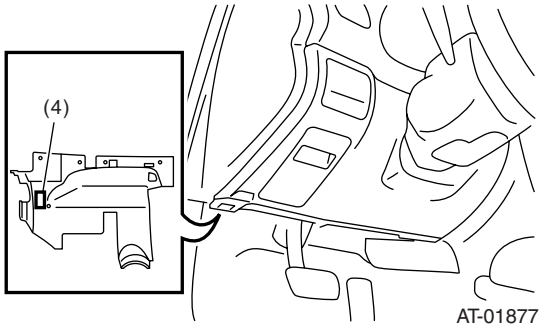

- Sensor

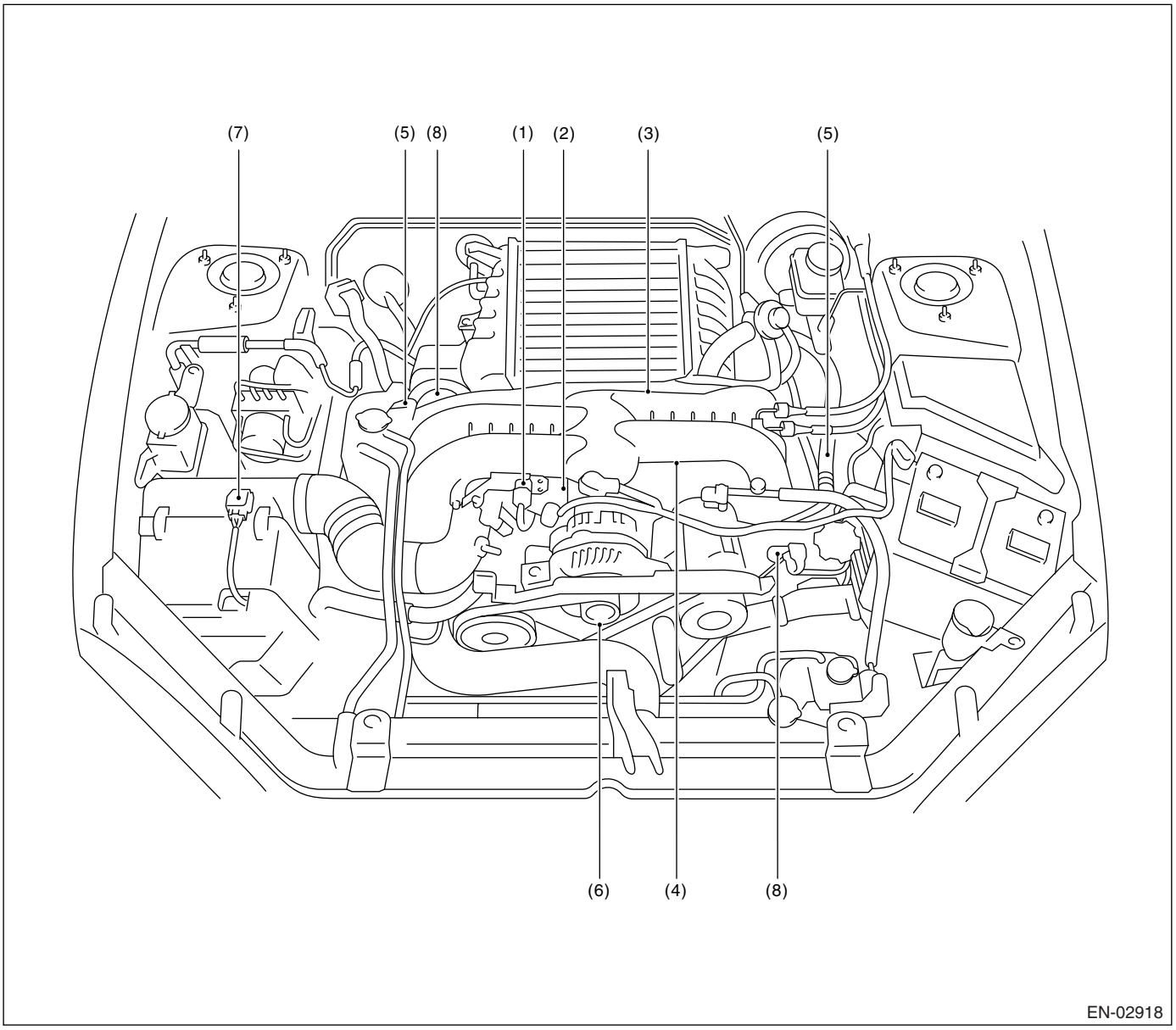

(1) Manifold absolute pressure sensor
(2) Engine coolant temperature sensor
(3) Electronic throttle control
(4) Knock sensor
(5) Intake camshaft position sensor
(6) Crankshaft position sensor
(7) Mass air flow and intake air temperature sensor
(8) Tumble generator valve position sensor

Electrical Component Location

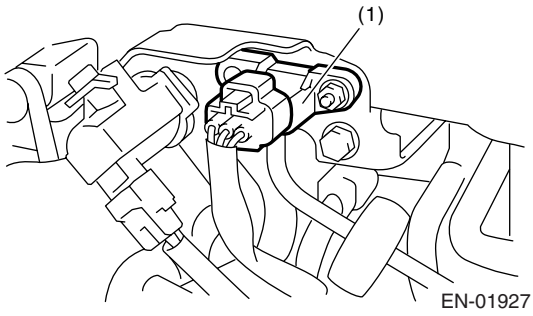

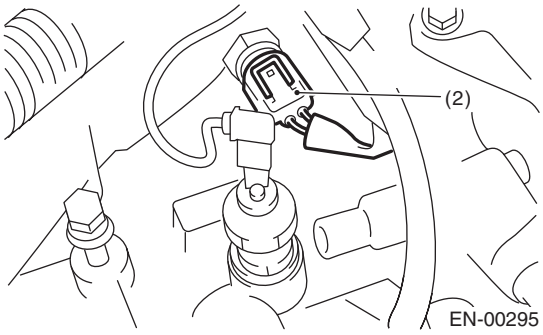

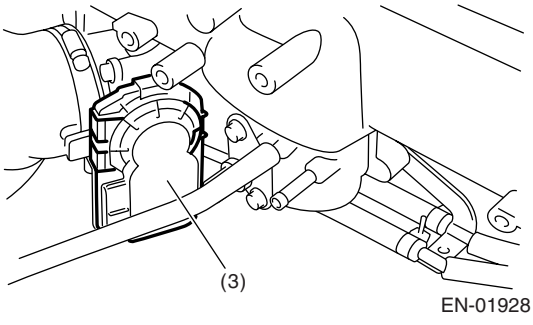

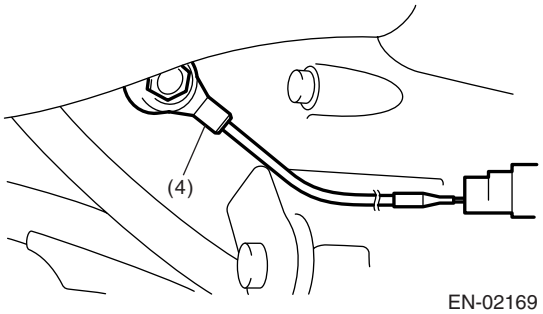

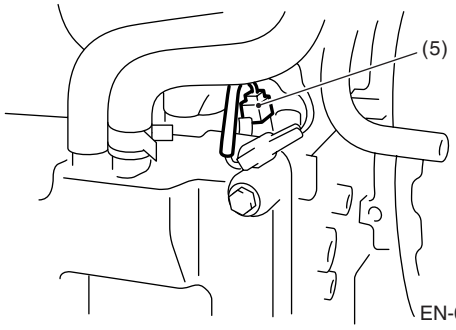

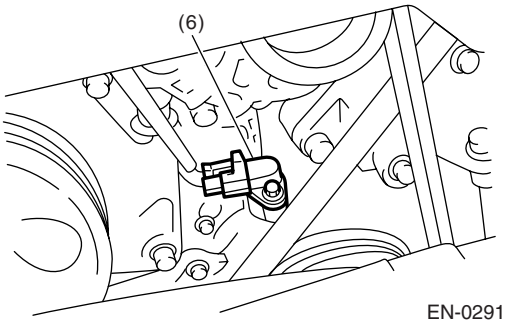

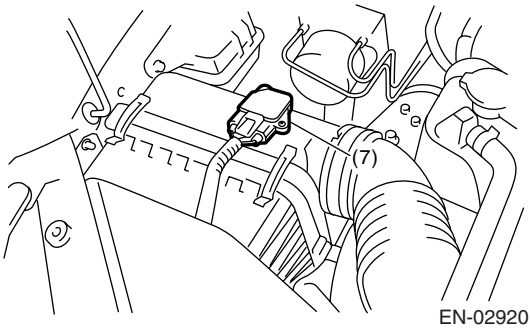

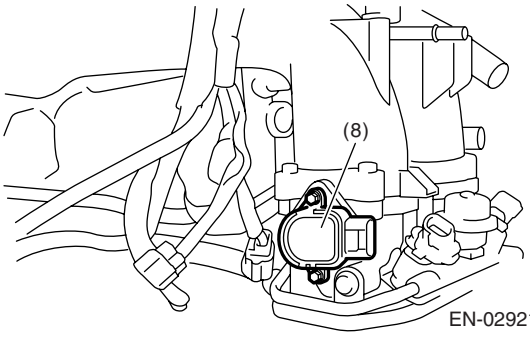

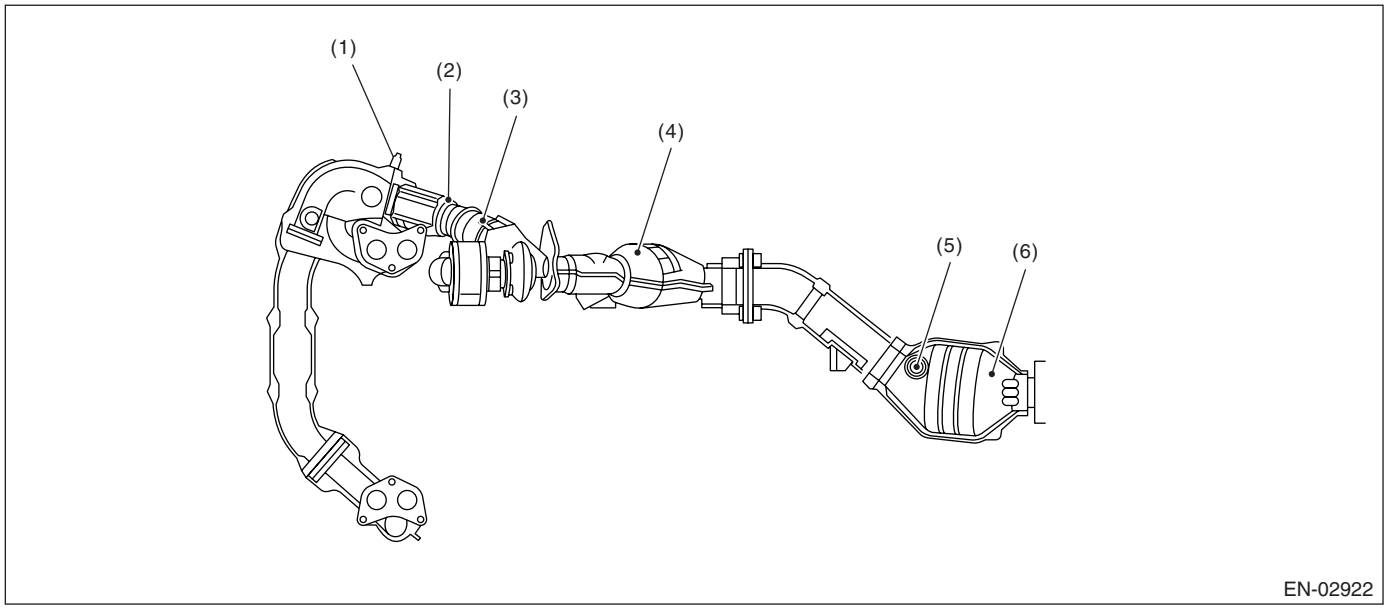

(1) Front oxygen (A/F) sensor
(2) Precatalytic converter
(3) Exhaust gas temperature sensor
(4) Front catalytic converter
(5) Rear oxygen sensor
(6) Rear catalytic converter

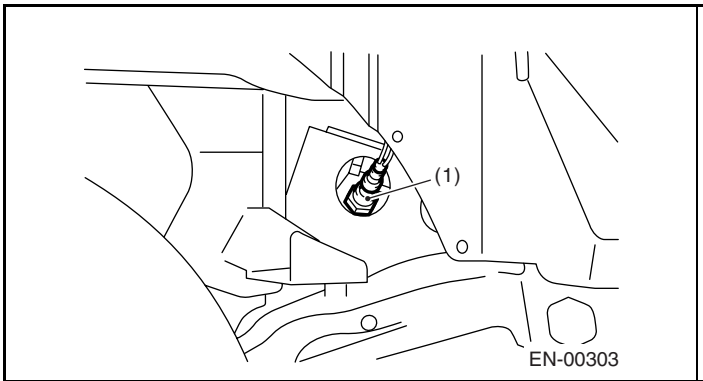

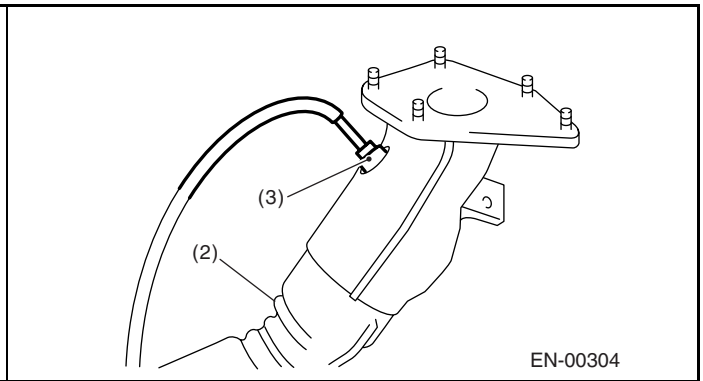

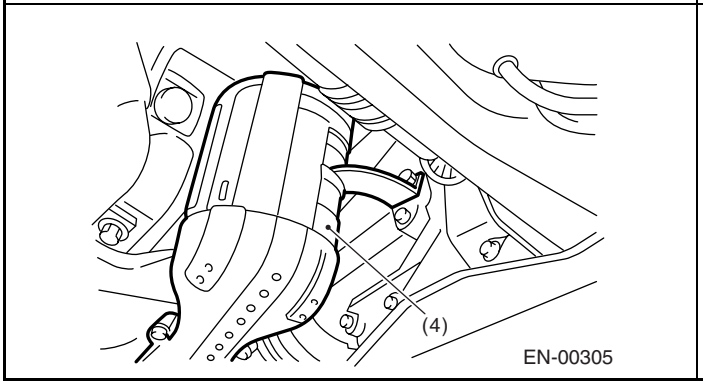

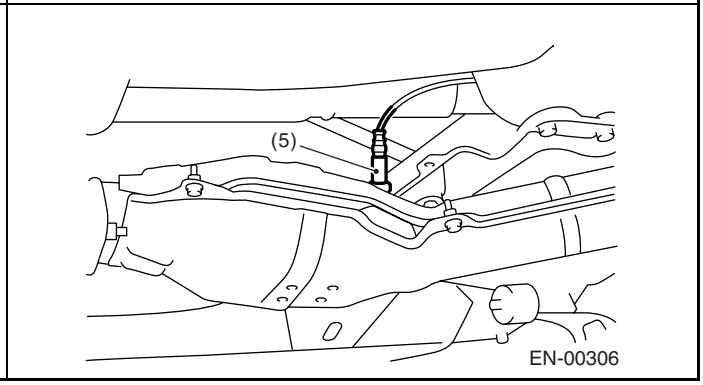

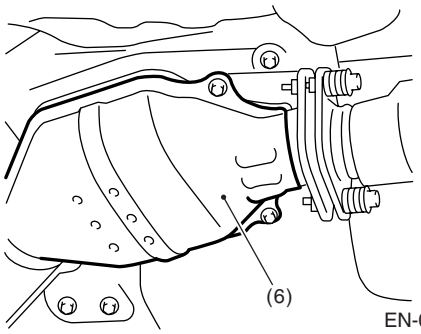

EN-00307

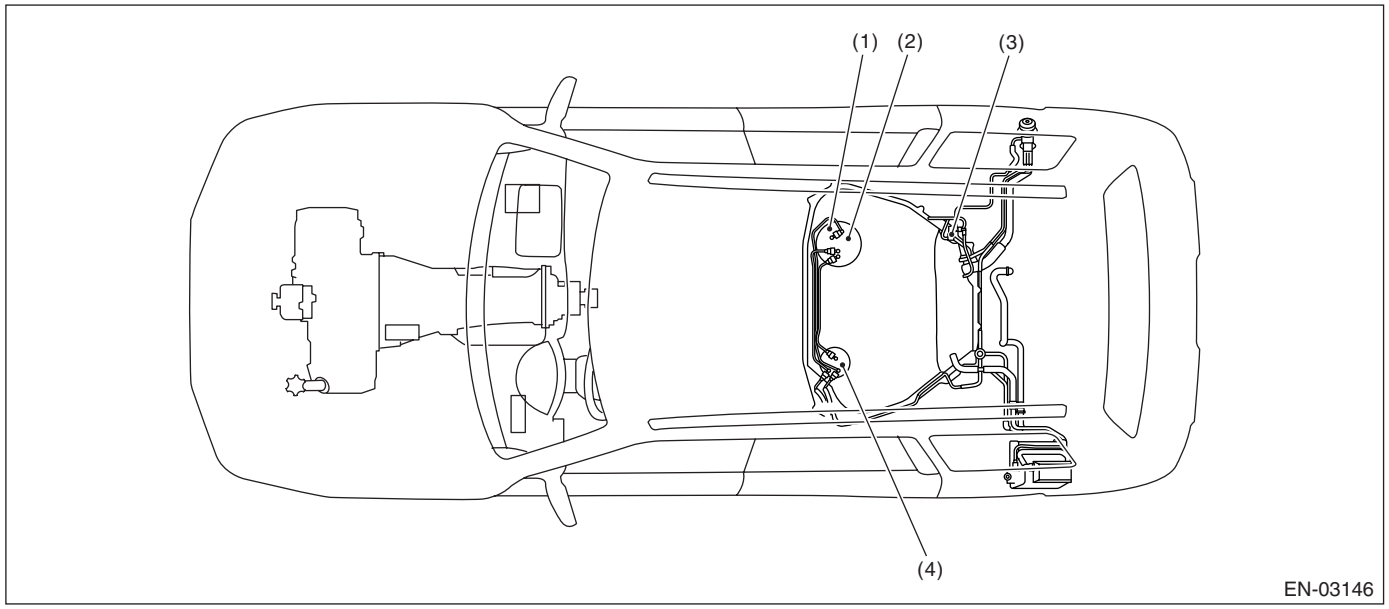

EN-03146

(1) Fuel level sensor
(2) Fuel temperature sensor
(3) Fuel tank pressure sensor
(4) Fuel sub level sensor

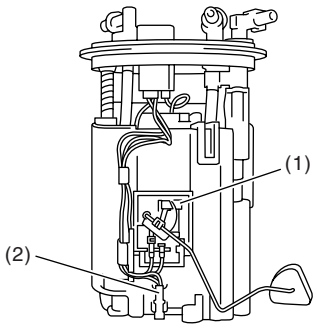

EN-03147

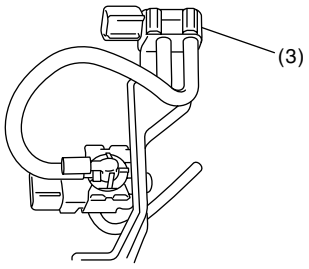

EN-03003

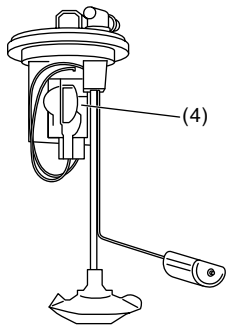

EN-03132

- Solenoid valve, actuator, emission control system parts and ignition system parts

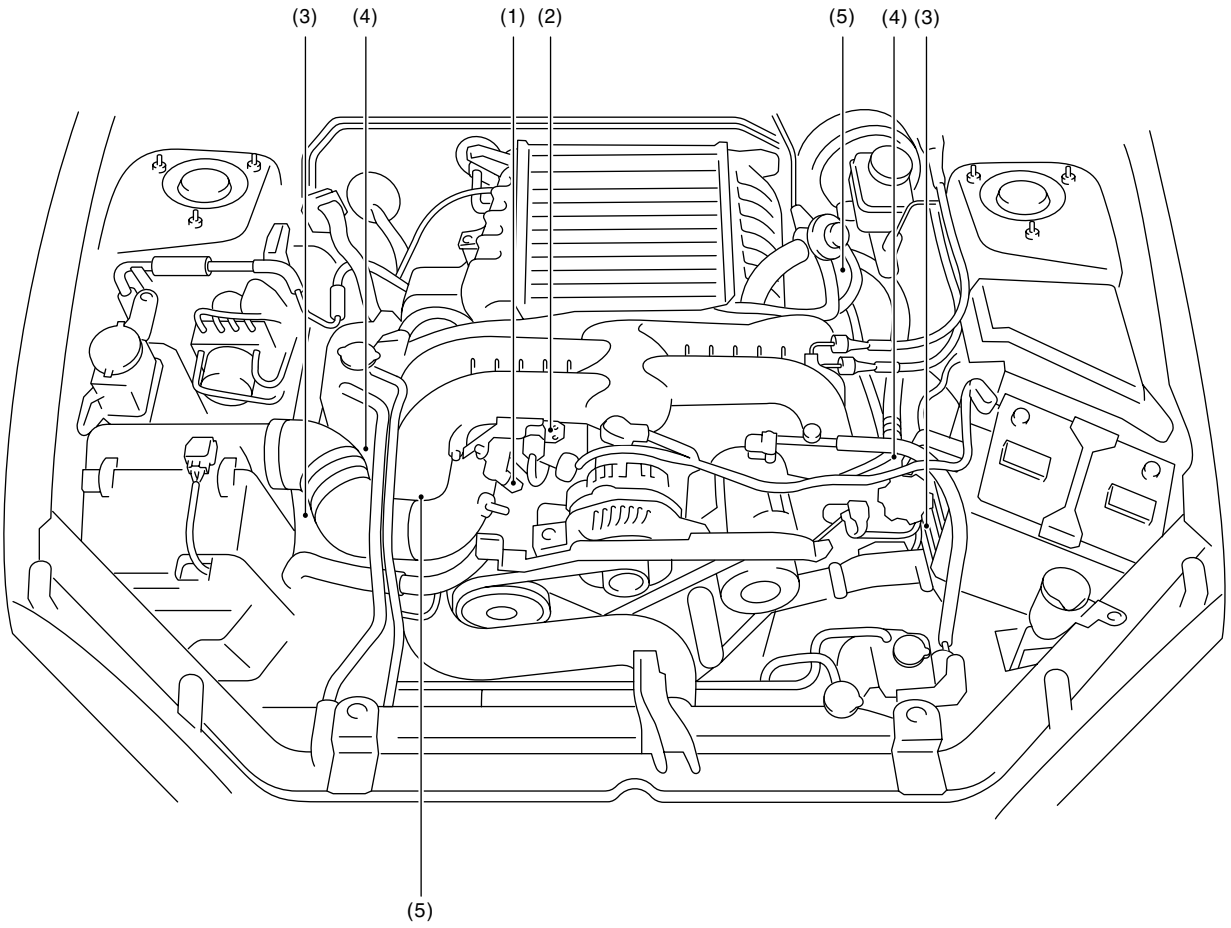

EN-02927

(1) Wastegate control solenoid valve
(2) Purge control solenoid valve
(3) Ignition coil
(4) Intake oil flow control solenoid valve
(5) Tumble generator valve actuator

Electrical Component Location

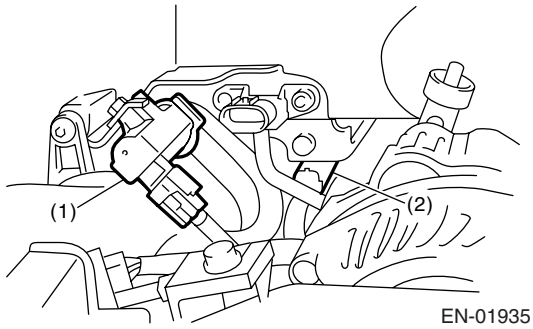

EN-01935

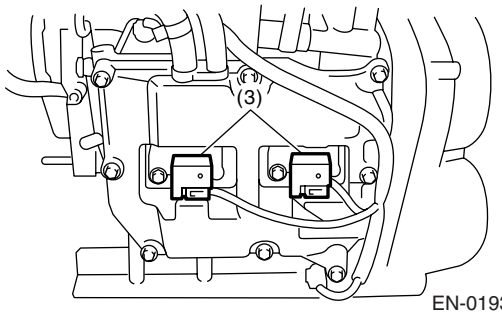

EN-01936

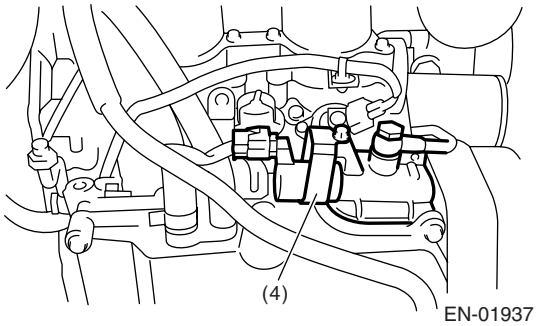

EN-01937

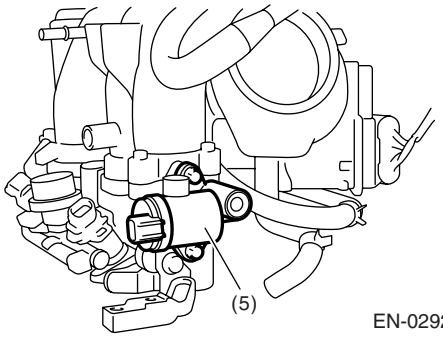

EN-02928

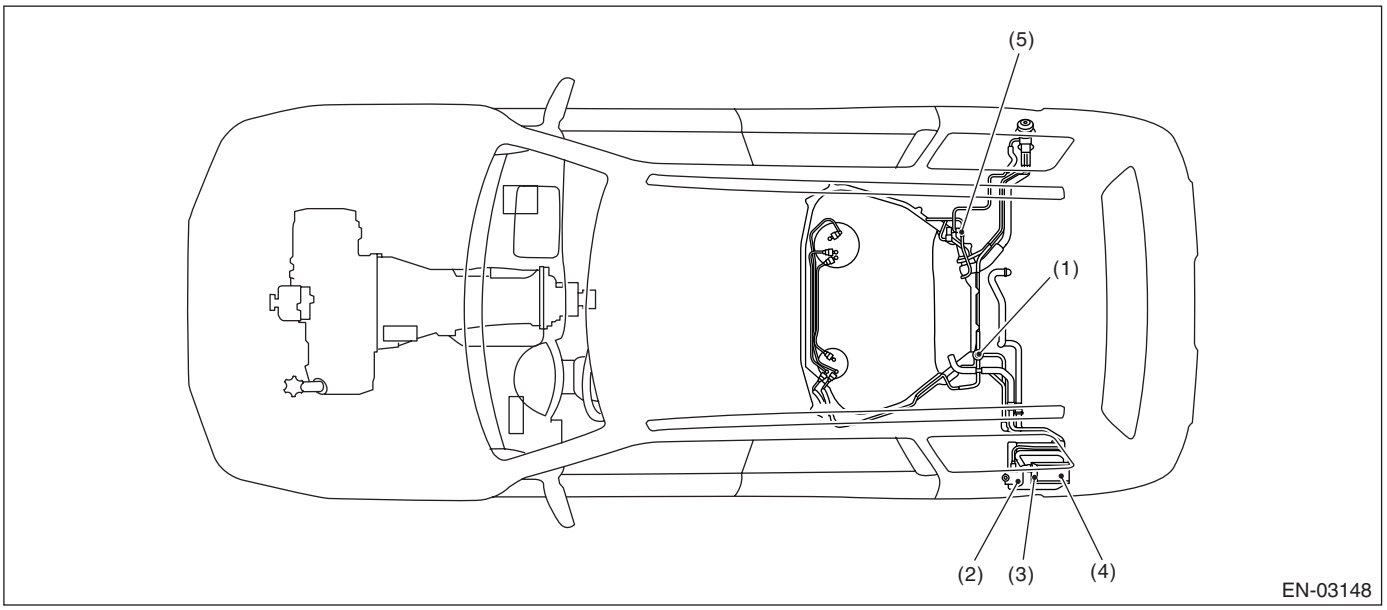

(1) Pressure control solenoid valve
(2) Canister
(3) Drain valve
(4) Drain filter
(5) Fuel tank sensor control valve

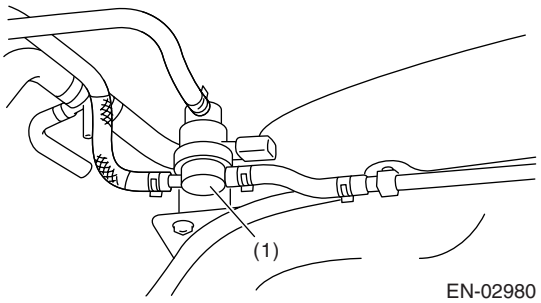

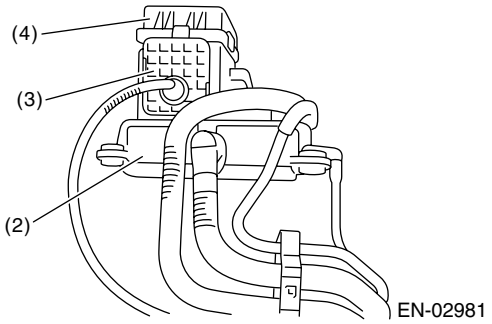

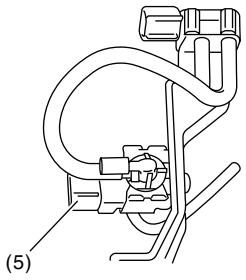

Electrical Component Location

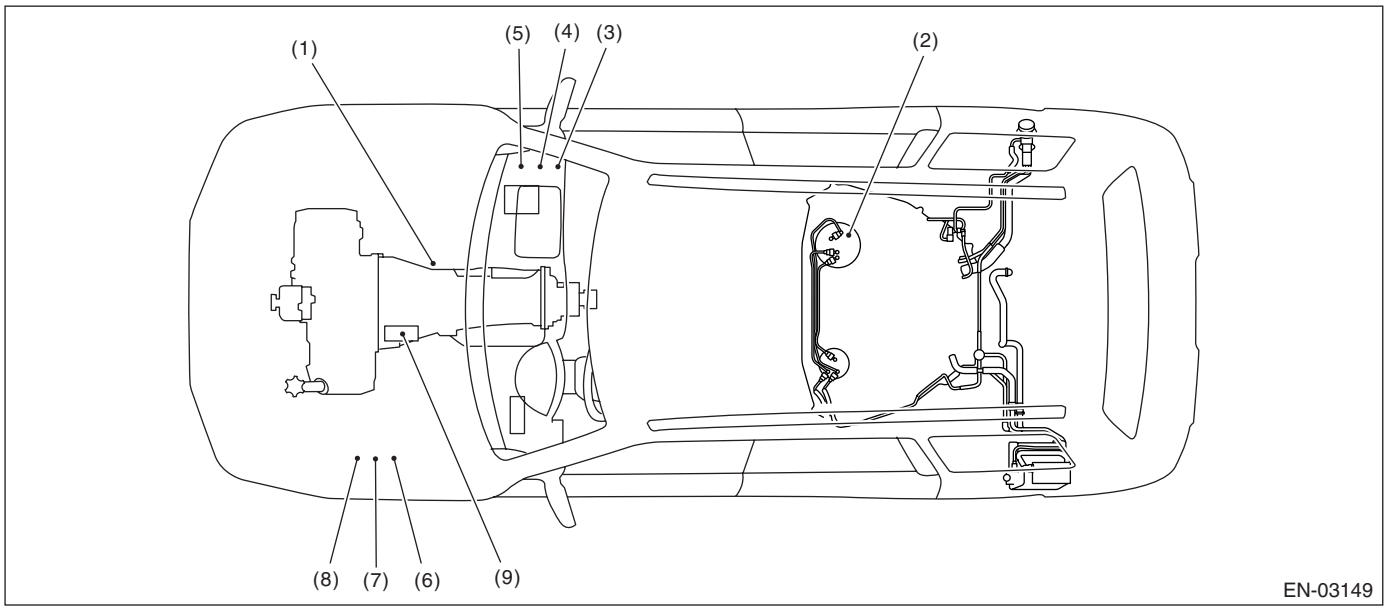

(1) Inhibitor switch
(2) Fuel pump
(3) Main relay
(4) Fuel pump relay
(5) Electronic throttle control relay
(6) Radiator main fan relay 1
(7) Radiator sub fan relay
(8) Radiator main fan relay 2
(9) Starter

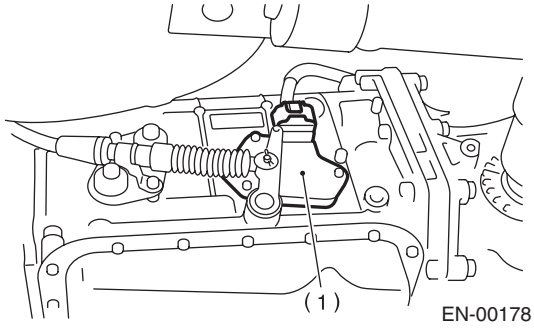

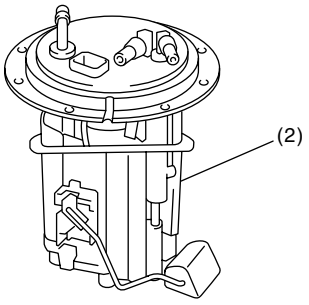

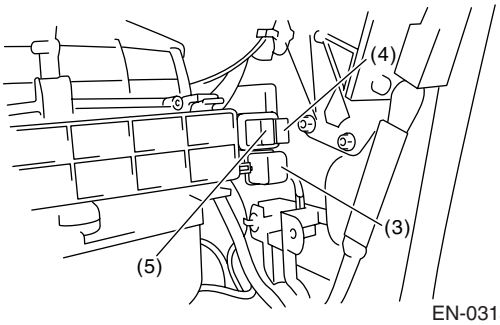

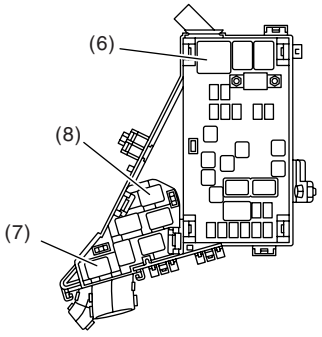

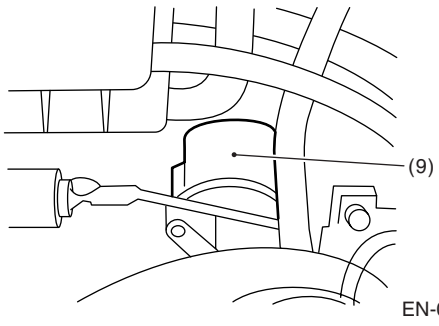
(9)
EN-02096

5. Engine Control Module (ECM) I/O Signal

A: ELECTRICAL SPECIFICATION

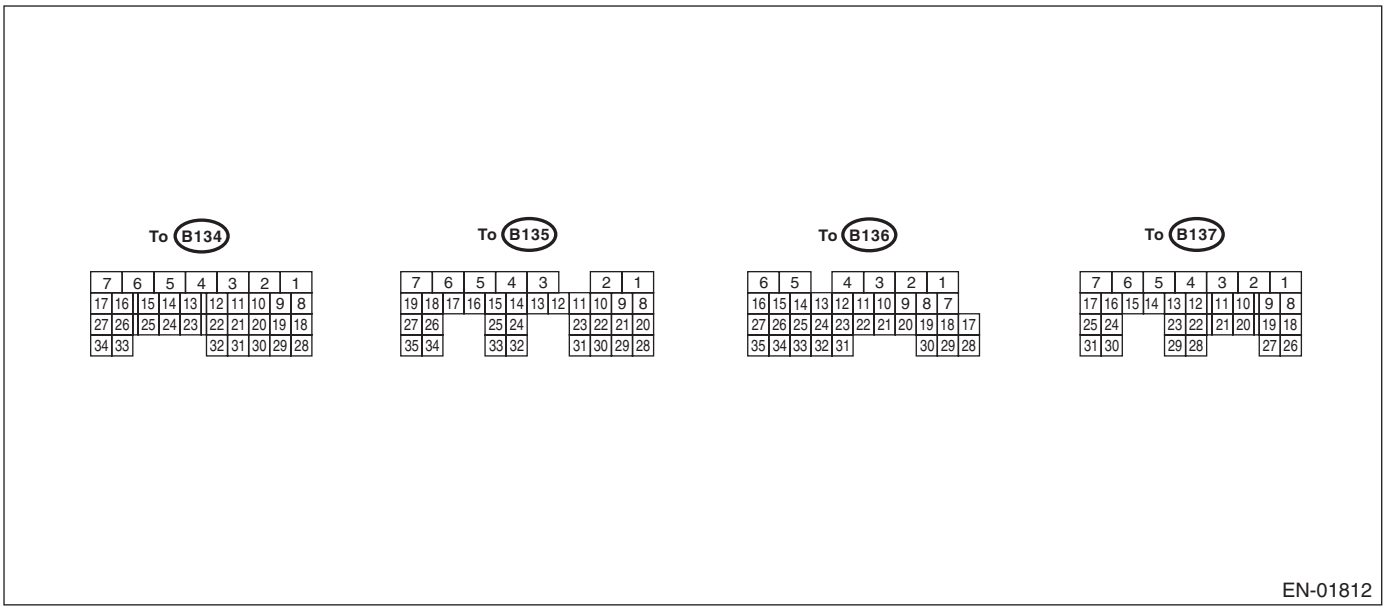

Description		Connector No.	Terminal No.	Signal (V)		Note
				Ignition SW ON (engine OFF)	Engine ON (idling)	
Crankshaft position sensor	Signal (+)	B135	10	0	–7 — +7	Waveform
	Signal (–)	B135	22	0	0	—
	Shield	B135	31	0	0	—
Rear oxygen sensor	Signal	B137	25	0	0 — 0.9	—
	Shield	B137	31	0	0	—
	GND (sensor)	B136	35	0	0	—
Front oxygen (A/F) sensor heater	Signal 1	B134	3	—	—	Waveform
	Signal 2	B134	2	—	—	Waveform
Rear oxygen sensor heater signal		B135	2	0 — 13	13 — 14	Waveform
Engine coolant temperature sensor	Signal	B136	14	1.0 — 1.4	1.0 — 1.4	After engine is warmed-up.
	GND (sensor)	B136	35	0	0	After engine is warmed-up.
Air flow sensor	Signal	B136	23	—	0.3 — 4.5	—
	Shield	B136	32	0	0	—
	GND	B136	31	0	0	—
Intake air temperature sensor signal		B136	13	0.3 — 4.6	0.3 — 4.6	—
Wastegate control solenoid valve		B134	32	0 or 10 — 13	0 or 13 — 14	Waveform
Starter switch		B137	8	0	0	Cranking: 8 — 14
A/C switch		B137	17	ON: 10 — 13 OFF: 0	ON: 13 — 14 OFF: 0	—
Ignition switch		B137	14	10 — 13	13 — 14	—
Neutral position switch (MT)		B137	9	ON: 10 — 13 OFF: 0	ON: 13 — 14 OFF: 0	—

Description		Connector No.	Terminal No.	Signal (V)		Note
				Ignition SW ON (engine OFF)	Engine ON (idling)	
Neutral position switch (AT)		B137	9	ON: 0 OFF: 10 — 13	ON: 0 OFF: 13 — 14	—
Test mode connector		B137	15	10 — 13	13 — 14	When connected: 0
Knock sensor	Signal	B136	25	2.8	2.8	—
	Shield	B136	33	0	0	—
Back-up power supply		B135	19	10 — 13	13 — 14	Ignition switch “OFF”: 10 — 13
Control module power supply		B135	5	10 — 13	13 — 14	—
		B135	6	10 — 13	13 — 14	—
Sensor power supply		B136	16	5	5	—
Ignition control	#1	B135	18	0	13 — 14	Waveform
	#2	B135	17	0	13 — 14	Waveform
	#3	B135	16	0	13 — 14	Waveform
	#4	B135	15	0	13 — 14	Waveform
Fuel injector	#1	B136	6	10 — 13	1 — 14	Waveform
	#2	B136	5	10 — 13	1 — 14	Waveform
	#3	B136	4	10 — 13	1 — 14	Waveform
	#4	B136	3	10 — 13	1 — 14	Waveform
Fuel pump control unit	Signal 1	B137	28	10 — 13	13 — 14	—
	Signal 2	B135	27	0 or 5	0 or 5	Waveform
A/C relay control		B135	33	ON: 0.5 or less OFF: 10 — 13	ON: 0.5 or less OFF: 13 — 14	—
Radiator fan relay 1 control		B135	25	ON: 0.5 or less OFF: 10 — 13	ON: 0.5 or less OFF: 13 — 14	—
Radiator fan relay 2 control		B135	24	ON: 0.5 or less OFF: 10 — 13	ON: 0.5 or less OFF: 13 — 14	Model with A/C
Malfunction indicator light		B134	17	—	—	Light “ON”: 1 or less Light “OFF”: 10 — 14
Engine speed output		B134	23	—	0 — 13 or more	Waveform
Purge control solenoid valve		B134	14	ON: 1 or less OFF: 10 — 13	ON: 1 or less OFF: 13 — 14	Waveform
Manifold absolute pressure sensor	Signal	B136	22	1.7 — 2.4	1.1 — 1.6	—
	Power supply	B136	16	5	5	
	GND (sensor)	B136	35	0	0	
Power steering oil pressure switch		B137	10	10 — 13	ON: 0 OFF: 13 — 14	—
Front oxygen (A/F) sensor signal (+)		B134	33	2.8 — 3.2	2.8 — 3.2	—
Front oxygen (A/F) sensor signal (–)		B134	26	2.4 — 2.7	2.4 — 2.7	—
Front oxygen (A/F) sensor shield		B134	25	0	0	—
SSM communication line		B137	20	Less than 1←→ More than 4	Less than 1←→ More than 4	—
GND (injector)		B137	7	0	0	—
GND (sensor)		B136	35	0	0	—
GND (ignition system)		B135	12	0	0	—
GND (power supply)		B135	4	0	0	—
		B135	1	0	0	—
GND (control system)		B137	1	0	0	—
		B137	2	0	0	—

Engine Control Module (ECM) I/O Signal

Description		Connector No.	Terminal No.	Signal (V)		Note
				Ignition SW ON (engine OFF)	Engine ON (idling)	
GND (Front oxygen (A/F) sensor heater 1)		B134	7	0	0	—
GND (Front oxygen (A/F) sensor heater 2)		B134	6	0	0	—
GND (Electronic throttle control)		B137	3	0	0	—
Intake camshaft position sensor (LH)		B135	8	0 or 5	0 or 5	Waveform
Intake camshaft position sensor (RH)		B135	9	0 or 5	0 or 5	Waveform
Electronic throttle control	Main	B136	18	0.64 — 0.72 Fully open: 3.96	0.64 — 0.72 (After engine is warmed-up.)	Fully closed: 0.6 Fully open: 3.96
	Sub	B136	29	1.51 — 1.58 Fully open: 4.17	1.51 — 1.58 (After engine is warmed-up.)	Fully closed: 1.48 Fully open: 4.17
	Power supply	B136	16	5	5	—
	GND (sensor)	B136	35	0	0	—
Electronic throttle control motor (+)		B137	5	Duty waveform	Duty waveform	Drive frequency: 500 Hz
Electronic throttle control motor (−)		B137	4	Duty waveform	Duty waveform	Drive frequency: 500 Hz
Electronic throttle control motor power supply		B137	6	10 — 13	13 — 14	—
Electronic throttle control motor relay		B135	35	ON: 0 OFF: 10 — 13	ON: 0 OFF: 13 — 14	When ignition switch is turned to ON: ON
Intake AVCS solenoid (LH)	Signal (+)	B134	19	ON: 10 — 13 OFF: 0	ON: 13 — 14 OFF: 0	—
	Signal (−)	B134	29	0	0	—
Intake AVCS solenoid (RH)	Signal (+)	B134	18	ON: 10 — 13 OFF: 0	ON: 13 — 14 OFF: 0	—
	Signal (−)	B134	28	0	0	—
Accelerator position sensor	Main	B136	17	Fully closed: 1 Fully open: 3.3	Fully closed: 1 Fully open: 3.3	—
	Power supply	B136	15	5	5	—
	GND (sensor)	B136	34	0	0	—
	Sub	B136	28	Fully closed: 1 Fully open: 3.3	Fully closed: 1 Fully open: 3.3	—
	Shield	B137	2	0	0	—
	Power supply	B136	16	5	5	—
	GND (sensor)	B136	35	0	0	—
Starter relay		B135	32	ON: 0 OFF: 10 — 13	ON: 0 OFF: 13 — 14	ON: Cranking
A/C middle pressure switch		B136	30	ON: 0 OFF: 10 — 13	ON: 0 OFF: 13 — 14	—

Description	Connector No.	Terminal No.	Signal (V)		Note
			Ignition SW ON (engine OFF)	Engine ON (idling)	
Clutch switch	B134	1	When clutch pedal is depressed: 0 When clutch pedal is released: 10 — 13	When clutch pedal is depressed: 0 When clutch pedal is released: 13 — 14	—
Brake switch 1	B136	9	When brake pedal is depressed: 0 When brake pedal is released: 10 — 13	When brake pedal is depressed: 0 When brake pedal is released: 13 — 14	—
Brake switch 2	B136	8	When brake pedal is depressed: 10 — 13 When brake pedal is released: 0	When brake pedal is depressed: 13 — 14 When brake pedal is released: 0	—
Cruise control command switch	B136	11	When operating nothing: 3.5 — 4.5 When operating RES/ACC: 2.5 — 3.5 When operating SET/COAST: 0.5 — 1.5 When operating CANCEL: 0 — 0.5	When operating nothing: 3.5 — 4.5 When operating RES/ACC: 2.5 — 3.5 When operating SET/COAST: 0.5 — 1.5 When operating CANCEL: 0 — 0.5	—
Cruise control main switch	B136	7	ON: 0 OFF: 5	ON: 0 OFF: 5	—
Exhaust gas temperature sensor	B136	24	—	—	—
Fuel tank pressure sensor	B136	21	2.3 — 2.7	2.3 — 2.7	—
Pressure control solenoid valve	B134	12	ON: 1 or less OFF: 10 — 13	ON: 1 or less OFF: 13 — 14	—
Drain valve	B134	13	ON: 1 or less OFF: 10 — 13	ON: 1 or less OFF: 13 — 14	—
Fuel tank sensor control valve	B134	24	ON: 1 or less OFF: 10 — 13	ON: 1 or less OFF: 13 — 14	—
Fuel temperature sensor signal	B136	12	2.5 — 3.8	2.5 — 3.8	Ambient temperature: 25°C
Immobilizer Signal 1	B137	19	—	—	—
Immobilizer Signal 2	B137	27	—	—	—
CAN Communication (+)	B137	18	—	—	—
CAN Communication (−)	B137	26	—	—	—
AT/MT identification signal	B134	34	0	0	—
Blow-by leak diagnosis signal	B137	24	0	0	—
Tumble generator valve position sensor RH	B136	27	Fully closed: 3.8 — 4.9 Fully opened: 0.2 — 0.9	Fully closed: 3.8 — 4.9 Fully opened: 0.2 — 0.9	—
Tumble generator valve position sensor LH	B136	26	Fully closed: 3.8 — 4.9 Fully opened: 0.2 — 0.9	Fully closed: 3.8 — 4.9 Fully opened: 0.2 — 0.9	—
Tumble generator valve RH (close)	B134	8	0 or 10 — 13	0 or 13 — 14	—
Tumble generator valve LH (close)	B134	10	0 or 10 — 13	0 or 13 — 14	—

Description	Connector No.	Terminal No.	Signal (V)		Note
			Ignition SW ON (engine OFF)	Engine ON (idling)	
Tumble generator valve RH (open)	B134	9	0 or 10 — 13	0 or 13 — 14	—
Tumble generator valve LH (open)	B134	11	0 or 10 — 13	0 or 13 — 14	—

6. Engine Condition Data

A: ELECTRICAL SPECIFICATION

Remarks	Specification
Engine load	1.6 — 3.2 (%): Idling
	5.0 — 10.2 (%): 2,500 rpm racing

Measuring condition:
- After engine is warmed-up.
- Gear position is in neutral.
- A/C is turned off.
- Turn all accessory switches to OFF.

7. Data Link Connector

A: NOTE

This connector is used for Subaru Select Monitor.

CAUTION:
Do not connect any scan tools other than Subaru Select Monitor and general scan tool, because the circuit for the Subaru Select Monitor may be damaged.

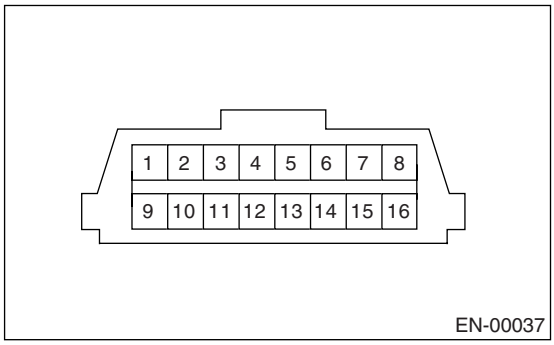

Terminal No.	Remarks	Terminal No.	Remarks
1	Power supply	9	Empty
2	Empty	10	Subaru Select Monitor signal
3	Empty	11	Empty
4	Empty	12	Ground
5	Empty	13	Ground
6	Line end check signal 1	14	Empty
7	Empty	15	Empty
8	Empty	16	Empty

8. General Scan Tool

A: OPERATION

1. HOW TO USE GENERAL SCAN TOOL

1) Prepare a general scan tool required by SAE J1978.
2) Open the cover and connect the general scan tool to data link connector located in the lower portion of instrument panel (on the driver's side).

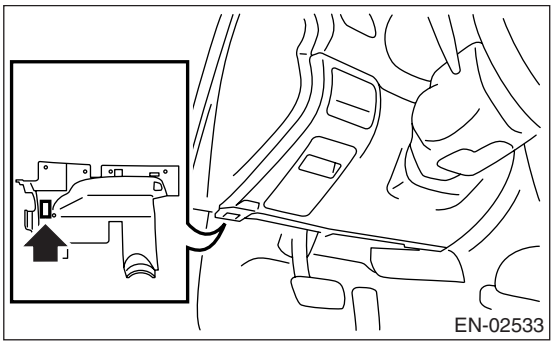

3) Using the general scan tool, call up DTC and freeze frame data.
General scan tool functions consist of:
(1) MODE $01: Current powertrain diagnostic data
(2) MODE $02: Powertrain freeze frame data
(3) MODE $03: Emission-related powertrain DTC
(4) MODE $04: Clear/Reset emission-related diagnostic information
(5) MODE $06: Request on-board monitoring test results for non-continuously monitored systems
(6) MODE $07: Request on-board monitoring test results for continuously monitored systems
(7) MODE $09: Request vehicle information
Read out the data according to repair procedures. (For detailed operation procedures, refer to the operation manual of general scan tool.)

NOTE:
For details concerning DTC, refer to "List of Diagnostic Trouble Code (DTC)". <Ref. to EN(H4DOTC)(diag)-71, List of Diagnostic Trouble Code (DTC).>

2. MODE $01 (CURRENT POWERTRAIN DIAGNOSTIC DATA)

Refer to data denoting the current operating condition of analog input/output, digital input/output and/or the powertrain system.
A list of the support data and PID (Parameter Identification) codes are shown in the following table.

PID	Data	Unit of measure
01	Number of emission-related powertrain DTC and malfunction indicator light status and diagnosis support information	—
03	Fuel system control status	—
04	Calculated engine load value	%
05	Engine coolant temperature	°C
06	Short term fuel trim	%
07	Long term fuel trim	%
0B	Intake manifold absolute pressure	kPa
0C	Engine revolution	rpm
0D	Vehicle speed	MPH
0E	Ignition timing advance	°
0F	Intake air temperature	°C
10	Air flow rate from mass air flow sensor	g/sec
11	Throttle valve absolute opening angle	%
13	Check whether oxygen sensor is installed.	—
15	Oxygen sensor output voltage and short term fuel trim associated with oxygen sensor	V and %
1C	Supporting OBD system	—
21	Driving distance after MIL illuminates	miles
24	A/F value and A/F sensor output voltage	— and V

NOTE:
Refer to general scan tool manufacturer's instruction manual to access generic OBD-II PIDs (MODE $01).

3. MODE $02 (POWERTRAIN FREEZE FRAME DATA)

Refer to data denoting the operating condition when trouble is detected by the on-board diagnosis system. A list of the support data and PID (Parameter Identification) codes are shown in the following table.

PID	Data	Unit of measure
02	DTC that caused CARB required freeze frame data storage	—
03	Fuel system control status	—
04	Calculated engine load value	%
05	Engine coolant temperature	°C
06	Short term fuel trim	%
07	Long term fuel trim	%
0B	Intake manifold absolute pressure	kPa
0C	Engine speed	rpm
0D	Vehicle speed	MPH
0E	Ignition timing advance	°
0F	Intake air temperature	°C
10	Air flow rate from mass air flow sensor	g/sec
11	Throttle valve opening angle	%

NOTE:
Refer to general scan tool manufacturer's operation manual to access freeze frame data (MODE $02).

4. MODE $03 (EMISSION-RELATED POWERTRAIN DIAGNOSTIC TROUBLE CODE (DTC))

Refer to "List of Diagnostic Trouble Code (DTC)" for information about data denoting emission-related powertrain DTC. <Ref. to EN(H4DOTC)(diag)-71, List of Diagnostic Trouble Code (DTC).>

5. MODE $04 (CLEAR/RESET EMISSION-RELATED DIAGNOSTIC INFORMATION)

Refer to the mode used to clear or reset emission-related diagnostic information (OBD-II trouble diagnostic information).

NOTE:
Refer to general scan tool manufacturer's operation manual to clear or reset emission-related diagnostic information (MODE $04).

6. MODE $06

Refer to test value of troubleshooting and data of test limit on support data bit sequence table. List of support data is shown in the following table.

TID	CID	Test value & Test limit
$81	$01	Catalyst system efficiency
$83	$01	Evaporative emission control system 0.04 inch leak
	$02	Evaporative emission control system 0.04 inch leak
	$03	Evaporative emission control system 0.04 inch leak
	$04	Evaporative emission control system 0.04 inch leak
	$05	Evaporative emission control system 0.02 inch leak
	$86	Evaporative emission control system 0.02 inch leak
$84	$01	A/F sensor circuit slow response (Bank 1 Sensor 1)
$85	$01	O_2 sensor circuit (Bank 1 Sensor 2) (rich → lean)
	$02	O_2 sensor circuit (Bank 1 Sensor 2) (lean → rich)
$41	$81	O_2 sensor circuit (Bank 1 Sensor 2)
	$02	O_2 sensor circuit (Bank 1 Sensor 2)

7. MODE $07

Refer to the data of DTC (pending code) for troubleshooting result about emission in first time.

8. MODE $09

Refer to the data of vehicle specification (VIN, calibration ID, etc.).

9. Subaru Select Monitor

A: OPERATION

1. HOW TO USE SUBARU SELECT MONITOR

1) Prepare the Subaru Select Monitor kit. <Ref. to EN(H4DOTC)(diag)-7, PREPARATION TOOL, General Description.>

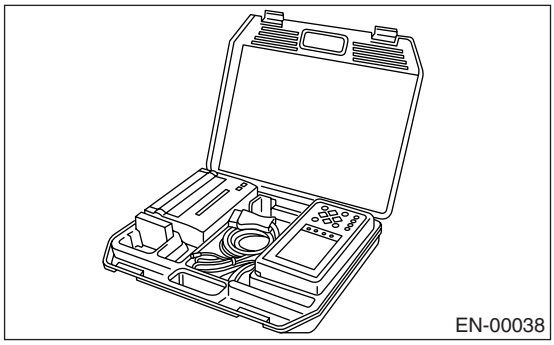

2) Connect the diagnosis cable to Subaru Select Monitor.
3) Insert the cartridge to Subaru Select Monitor. <Ref. to EN(H4DOTC)(diag)-7, PREPARATION TOOL, General Description.>

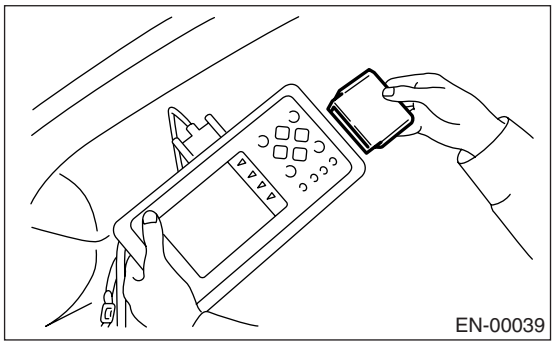

4) Connect the Subaru Select Monitor to data link connector.

(1) Data link connector is located in the lower portion of the instrument panel (on the driver's side).

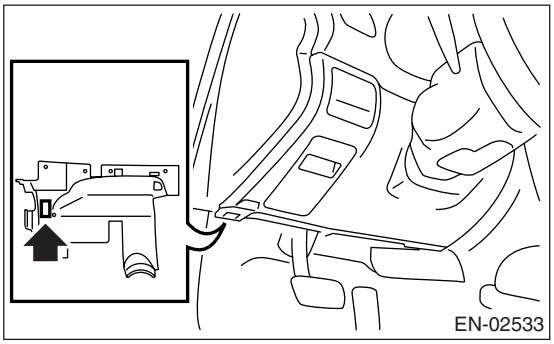

(2) Connect the diagnosis cable to data link connector.

CAUTION:
Do not connect the scan tools except for Subaru Select Monitor and general scan tool.

5) Turn the ignition switch to ON (engine OFF) and turn Subaru Select Monitor switch to ON.

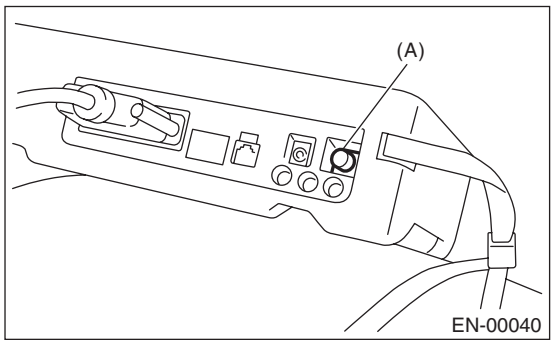

(A) Power switch

6) Using the Subaru Select Monitor, call up DTC and data, then record them.

2. READ DIAGNOSTIC TROUBLE CODE (DTC) FOR ENGINE (NORMAL MODE)

Refer to "Read Diagnostic Trouble Code (DTC)" for information about how to indicate DTC. <Ref. to EN(H4DOTC)(diag)-35, Read Diagnostic Trouble Code (DTC).>

3. READ DIAGNOSTIC TROUBLE CODE (DTC) FOR ENGINE (OBD MODE)

Refer to "Read Diagnostic Trouble Code (DTC)" for information about how to indicate DTC. <Ref. to EN(H4DOTC)(diag)-35, Read Diagnostic Trouble Code (DTC).>

4. READ CURRENT DATA FOR ENGINE. (NORMAL MODE)

1) On the «Main Menu» display screen, select the {Each System Check} and press the [YES] key.
2) On the «System Selection Menu» display screen, select the {Engine} and press the [YES] key.
3) Press the [YES] key after the information of engine type was displayed.
4) On the «Engine Diagnosis» screen, select the {Current Data Display/Save}, and then press the [YES] key.
5) On the «Data Display Menu» screen, select the {Data Display} and press the [YES] key.
6) Using the scroll key, move the display screen up or down until the desired data is shown.

• A list of the support data is shown in the following table.

Remarks	Display	Unit of measure	Note (at idling)
Engine coolant temperature signal	Coolant Temp.	°C or °F	80 — 100°C or 176 — 212°F
A/F correction 1	A/F Correction #1	%	–10 — +10%
A/F learning 1	A/F Learning #1	%	–15 — +15%
Intake manifold absolute pressure	Mani. Absolute Pressure	mmHg, kPa, inHg or psig	220 — 275 mmHg, 29.5 — 37 kPa, 8.7 — 10 inHg or 4.2 — 5.3 psig
Engine speed signal	Engine Speed	rpm	630 — 770 rpm (Agree with the tachometer indication)
Vehicle speed signal	Vehicle Speed	km/h or MPH	0 km/h or 0 MPH (at parking)
Ignition timing signal	Ignition Timing	deg	10 — 15 deg
Intake air temperature signal	Intake Air Temp.	°C or °F	20 — 50°C or 68 — 122°F
Amount of intake air	Mass Air Flow	g/s or lb/m	2.1 — 3.1 g/s or 0.35 — 0.40 lb/m
Throttle opening angle signal	Throttle Opening Angle	%	2.0 — 2.4%
Rear oxygen sensor voltage	Rear O2 Sensor	V	0 — 1.0 V
Battery voltage	Battery Voltage	V	12 — 15 V
Mass air flow voltage	Air Flow Sensor Voltage	V	1.0 — 1.7 V
Injection 1 pulse width	Fuel Injection #1 Pulse	ms	1.2 — 2.2 ms
Knock sensor correction	Knock Correction	deg	0.0 deg
Acceleration opening angle signal	Accel. Opening Angle	%	0.0%
Primary supercharged pressure control signal	Primary Control	%	0.0%
Purge control solenoid duty ratio	CPC Valve Duty Ratio	%	0 — 25%
Generator duty ratio	ALT Duty	%	0 — 100%
Fuel pump duty ratio	Fuel Pump Duty	%	30 — 40%
AVCS advance angle amount RH	VVT Adv. Ang. Amount R	deg	±5 deg
AVCS advance angle amount LH	VVT Adv. Ang. Amount L	deg	±5 deg
Oil flow control solenoid valve duty RH (AVCS)	OCV Duty R	%	0 — 20%
Oil flow control solenoid valve duty LH (AVCS)	OCV Duty L	%	0 — 20%
Oil flow control solenoid valve current RH	OCV Current R	mA	40 — 100 mA
Oil flow control solenoid valve current LH	OCV Current L	mA	40 — 100 mA
A/F sensor current value 1	A/F Sensor #1 Current	mA	–20 — 20 mA
A/F sensor resistance value 1	A/F Sensor #1 Resistance	Ω	27 — 35 mA
A/F sensor output lambda 1	A/F Sensor #1	—	1.0
A/F correction 3	A/F Correction #3	%	0.00%
Throttle motor duty	Throttle Motor Duty	%	–5%
Throttle power supply voltage	Throttle Motor Voltage	V	12 — 15 V
Sub throttle sensor voltage	Sub-throttle Sensor	V	1.5 V
Main throttle sensor voltage	Main-throttle Sensor	V	0.6 V
Sub accelerator sensor voltage	Sub-accelerator Sensor	V	1.1 V

Remarks	Display	Unit of measure	Note (at idling)
Fuel tank pressure signal	Fuel Tank Pressure	mmHg, kPa, inHg or psig	+8.8 mmHg, +1.2 kPa, +0.4 inHg or + 0.2 psig
Fuel temperature signal	Fuel Temp.	°C or °F	+28
Main accelerator sensor voltage	Main-accelerator Sensor	V	1.0 V
Atmospheric pressure signal	Atmospheric Pressure	mmHg, kPa, inHg or psig	—
Intake manifold relative pressure	Mani. Relative Pressure	mmHg, kPa, inHg or psig	Intake manifold absolute pressure – Atmospheric pressure
Memory vehicle speed	Memorized Cruise Speed	km/h or MPH	—
Estimated cumulative driving distance	Estimated Cumulative Driving Distance	km	—
Fuel level signal	Fuel Level	V	5.10
Tumble generator valve RH opening angle signal	TGV Position Sensor R	V	0.34
Tumble generator valve LH opening angle signal	TGV Position Sensor L	V	0.32
Exhaust gas temperature signal	Exhaust Gas Temperature	°C or °F	385 °C or 725°F
#1 cylinder roughness monitor	Roughness Monitor #1	—	0
#2 cylinder roughness monitor	Roughness Monitor #2	—	0
#3 cylinder roughness monitor	Roughness Monitor #3	—	0
#4 cylinder roughness monitor	Roughness Monitor #4	—	0
AT/MT identification terminal	AT Vehicle ID Signal	—	AT/MT
Test mode terminal	Test Mode Signal	—	U-check
Neutral position switch signal	Neutral Position Switch	—	Neutral
Soft idle switch signal	Soft Idle Switch Signal	—	In idle
Ignition switch signal	Ignition Switch	—	ON
Power steering switch input signal	P/S Switch	—	OFF (At OFF)
Air conditioning switch signal	A/C Switch	—	OFF (At OFF)
Starter switch signal	Starter Switch	—	OFF
Rear O2 monitor	Rear O2 Rich Signal	—	Rich/Lean
Knocking signal	Knocking Signal	—	None
Crankshaft position sensor signal	Crankshaft Position Sig.	—	Provided
Camshaft position sensor signal	Camshaft Position Sig.	—	Provided
Rear defogger switch signal	Rear Defogger SW	—	OFF (At OFF)
Blower fan switch signal	Blower Fan SW	—	OFF (At OFF)
Light switch signal	Light Switch	—	OFF (At OFF)
A/C middle pressure switch signal	A/C Mid Pressure Switch	—	OFF (At OFF)
Air conditioner compressor relay output signal	A/C Compressor Signal	—	OFF (At OFF)
Radiator fan relay 1 signal	Radiator Fan Relay #1	—	OFF (At OFF)
Radiator fan relay 2 signal	Radiator Fan Relay #2	—	OFF (At OFF)
PCV hose assembly diagnosis signal	Blow-by leak Connector	—	Connect
Pressure control solenoid valve signal	PCV Solenoid	—	OFF (At OFF)
Tumble generator valve output signal	TGV Output	—	OFF
Tumble generator valve drive signal	TGV Drive	—	Open
Drain valve signal	Vent Control Solenoid	—	OFF (At OFF)
Fuel tank sensor control valve signal	Fuel Tank Sensor Ctrl Valve	—	OFF (At OFF)
AT coordinate retard angle demand signal	Retard Signal from AT	—	None
AT coordinate fuel cut demand signal	Fuel Cut Signal from AT	—	None
AT coordinate permission demand	Torque Permission Signal	—	Permission/Prohibition

Remarks	Display	Unit of measure	Note (at idling)
ETC motor relay signal	ETC Motor Relay	—	ON
Clutch switch signal	Clutch Switch	—	OFF (At OFF)
Stop light switch signal	Stop Light Switch	—	OFF (At OFF)
SET/COAST switch signal	SET/COAST Switch	—	OFF (At OFF)
RES/ACC switch signal	RESUME/ACCEL Switch	—	OFF (At OFF)
Brake switch signal	Brake Switch	—	OFF (At OFF)
Main switch signal	Main Switch	—	OFF (At OFF)
Integrated unit data reception	Body Int. Unit Data	—	Provided
Integrated unit data update	Body Int. Unit Count	—	Provided
Cruise control cancel switch signal	CC Cancel SW	—	OFF (At OFF)

NOTE:
For detailed operation procedure, refer to the “SUBARU SELECT MONITOR OPERATION MANUAL”.

5. READ CURRENT DATA FOR ENGINE (OBD MODE)

1) On the «Main Menu» display screen, select the {Each System Check} and press the [YES] key.
2) On the «System Selection Menu» display screen, select the {Engine} and press the [YES] key.
3) Press the [YES] key after the information of engine type was displayed.
4) On the «Engine Diagnosis» display screen, select the {OBD System} and press the [YES] key.
5) On the «OBD Menu» screen, select the {Current Data Display/Save}, and then press the [YES] key.
6) On the «Data Display Menu» screen, select the {Data Display} and press the [YES] key.
7) Using the scroll key, move the display screen up or down until the desired data is shown.

- A list of the support data is shown in the following table.

Description	Display	Unit of measure	Note (at idling)
Number of diagnosis code	Number of Diag. Code:	—	—
Condition of malfunction indicator light	MI (MIL)	—	ON or OFF
Monitoring test of misfire	Misfire monitoring	—	complete or incomplete
Monitoring test of fuel system	Fuel system monitoring	—	complete or incomplete
Monitoring test of comprehensive component	Component monitoring	—	complete or incomplete
Test of catalyst	Catalyst Diagnosis	—	complete or incomplete
Test of heating-type catalyst	Heated catalyst	—	no support
Test of evaporative emission purge control system	Evaporative purge system	—	complete or incomplete
Test of secondary air system	Secondary air system	—	no support
Test of air conditioning system refrigerant	A/C system refrigerant	—	no support
Test of oxygen sensor	Oxygen sensor	—	complete or incomplete
Test of oxygen sensor heater	O2 Heater Diagnosis	—	complete or incomplete
Test of EGR system	EGR system	—	no support
Air fuel ratio control system for bank 1	Fuel System for Bank 1	—	CLOSE normal
Engine load data	Calculated load value	%	1.6%
Engine coolant temperature signal	Coolant Temp.	°C or °F	+91°C or 196°F
Short term fuel trim by front oxygen (A/F) sensor	Short term fuel trim B1	%	+0.0%
Long term fuel trim by front oxygen (A/F) sensor	Long term fuel trim B1	%	+1.6%
Intake manifold absolute pressure signal	Mani. Absolute Pressure	mmHg, kPa, inHg or psig	256 mmHg
Engine speed signal	Engine Speed	rpm	693 rpm
Vehicle speed signal	Vehicle Speed	km/h or MPH	0 km/h
Ignition timing advance for #1 cylinder	Ignition timing adv. #1	°	+16.0°
Intake air temperature signal	Intake Air Temp.	°C or °F	54°C or 129°F
Intake air amount	Mass Air Flow	g/s or lb/m	3.1 g/s

Description	Display	Unit of measure	Note (at idling)
Throttle position signal	Throttle Opening Angle	%	13%
Oxygen sensor #12	Oxygen Sensor #12	V	+0.800 V
Air fuel ratio correction by rear oxygen sensor	Short term fuel trim #12	%	+0.8%
On-board diagnostic system	OBD System	—	CARB-OBD2
Oxygen sensor #11	Oxygen Sensor #11	—	Support
Rear oxygen sensor output signal	Oxygen Sensor #12	—	Support
A/F sensor output signal	A/F sensor #11	—	0.984
A/F lambda signal	A/F sensor #11	V	2.712 V
A/F lambda signal #11	A/F sensor #11	—	0.992
A/F sensor current #11	A/F sensor #11	mA	−0.03 mA

NOTE:
For detailed operation procedure, refer to the “SUBARU SELECT MONITOR OPERATION MANUAL”.

6. READ FREEZE FRAME DATA FOR ENGINE (OBD MODE)

1) On the «Main Menu» display screen, select the {Each System Check} and press the [YES] key.
2) On the «System Selection Menu» display screen, select the {Engine} and press the [YES] key.
3) Press the [YES] key after the information of engine type has been displayed.
4) On the «Engine Diagnosis» display screen, select the {OBD System} and press the [YES] key.
5) On the «OBD Menu» display screen, select the {Freeze Frame Data} and press the [YES] key.

- A list of the support data is shown in the following table.

DESCRIPTION	Display	Unit of measure
DTC of freeze frame data	Freeze frame data	DTC
Air fuel ratio control system for bank 1	Fuel system for Bank1	—
Engine load data	Engine Load	%
Engine coolant temperature signal	Coolant Temp.	°C or °F
Short term fuel trim by front oxygen (A/F) sensor (bank 1)	Short term fuel trim B1	%
Long term fuel trim by front oxygen (A/F) sensor (bank 1)	Long term fuel trim B1	%
Intake manifold absolute pressure signal	Mani. Absolute Pressure	mmHg, kPa, inHg or psi
Engine speed signal	Engine Speed	rpm
Vehicle speed signal	Vehicle Speed	km/h or MPH
Ignition timing #1	Ignition timing adv. #1	°
Intake air temperature	Intake Air Temp.	°C
Amount of intake air	Mass Air Flow	g/s
Throttle valve angle	Throttle Opening Angle	%

NOTE:
For detailed operation procedures, refer to the SUBARU SELECT MONITOR OPERATION MANUAL.

7. LED OPERATION MODE FOR ENGINE

1) On the «Main Menu» display screen, select the {Each System Check} and press the [YES] key.
2) On the «System Selection Menu» display screen, select the {Engine} and press the [YES] key.
3) Press the [YES] key after the information of engine type was displayed.
4) On the «Engine Diagnosis» screen, select the {Current Data Display/Save}, and then press the [YES] key.
5) On the «Data Display» screen, select the {Data & LED Display} and press the [YES] key.
6) Using the scroll key, move the display screen up or down until the desired data is shown.

• A list of the support data is shown in the following table.

Remarks	Display	Message	LED "ON" requirements
AT/MT identification signal	AT Vehicle ID Signal	ON or OFF	Illuminate (AT model)
Test mode signal	Test Mode Signal	ON or OFF	When test mode connector is connected.
Neutral position switch signal	Neutral Position Switch	ON or OFF	When neutral position signal is entered.
Idle switch signal	Idle Switch Signal	ON or OFF	When idle switch signal is entered.
Ignition switch signal	Ignition Switch	ON or OFF	When ignition switch is turned to ON.
Power steering switch signal	P/S Switch	ON or OFF	When power steering switch is entered.
Starter switch signal	Starter Switch	ON or OFF	When starter switch is input.
Air conditioning switch signal	A/C Switch	ON or OFF	When air conditioning switch is input.
Rear oxygen sensor rich signal	Rear O2 Rich Signal	Lean or Rich	When rear oxygen sensor mixture ratio is rich.
Knocking signal	Knocking Signal	Provided or None	When knocking signal is input.
Crankshaft position sensor signal	Crankshaft Position Signal	Provided or None	When crankshaft position sensor signal is input.
Camshaft position sensor signal	Camshaft Position Signal	Provided or None	When camshaft position sensor signal is input.
Rear defogger switch signal	Rear Defogger Switch	ON or OFF	When rear defogger switch is turned to ON.
Blower fan switch signal	Blower Fan Switch	ON or OFF	When blower fan switch is turned to ON.
Small light switch signal	Light Switch	ON or OFF	When small light switch is turned to ON.
A/C middle pressure switch signal	A/C Mid Pressure Switch	ON or OFF	When A/C middle pressure switch is turned to ON.
Air conditioning relay signal	A/C Compressor Signal	ON or OFF	When air conditioning relay is in function.
Radiator fan relay 1 signal	Radiator Fan Relay #1	ON or OFF	When radiator fan relay 1 is in function.
Radiator fan relay 2 signal	Radiator Fan Relay #2	ON or OFF	When radiator fan relay 2 is in function.
PCV hose assembly diagnosis signal	Blow-by leak Connector	Connect or Unconnect	When PCV hose assembly is connected.
Pressure control solenoid valve signal	PCV Solenoid	ON or OFF	When pressure control solenoid valve is ON.
Tumble generator valve signal	TGV Output	Provided or None	When tumble generator valve signal is input.
Tumble generator valve drive signal	TGV Drive	Open or Close	When tumble generator valve is open.
Drain valve signal	Vent Control Solenoid	ON or OFF	When drain valve is ON.
Fuel tank sensor control valve signal	Fuel Tank Sensor Ctrl Valve	ON or OFF	When fuel tank sensor control valve is ON.

Remarks	Display	Message	LED “ON” requirements
AT retard angle demand signal	Retard Signal	Provided or None	When AT retard angle demand signal is input.
AT fuel cut signal	Fuel Cut	Provided or None	When AT fuel cut signal is input.
AT coordinate permission signal	Torque Control Permission	Provided or None	When AT coordinate permission signal is input.
Electronic throttle control motor relay signal	ETC Motor Relay	ON or OFF	When electronic throttle control motor relay is in function.
Clutch switch signal	Clutch Switch	ON or OFF	When clutch switch is turned to ON.
Stop light switch signal	Stop Light Switch	ON or OFF	When stop switch is turned to ON.
SET/COAST switch signal	SET/COAST Switch	ON or OFF	When SET/COAST switch is turned to ON.
RES/ACC switch signal	RESUME/ACCEL Switch	ON or OFF	When RES/ACC switch is turned to ON.
Brake switch signal	Brake Switch	ON or OFF	When brake switch is turned to ON.
Main switch signal	Main Switch	ON or OFF	When main switch is turned to ON.
Cancel switch signal	Cancel Switch	ON or OFF	When cancel switch is turned to ON.
Data reception signal	Body Int. Unit Data	Provided or None	When data reception signal is entered.
Counter update signal	Body Int. Unit Count	Provided or None	When counter update signal is entered.

NOTE:
For detailed operation procedure, refer to the “SUBARU SELECT MONITOR OPERATION MANUAL”.

8. VIN REGISTRATION

1) On the «Main Menu» display screen, select the {Each System Check} and press the [YES] key.
2) On the «System Selection Menu» display screen, select the {Engine} and press the [YES] key.
3) Press the [YES] key after the information of engine type was displayed.
4) On the «Engine Diagnosis» display screen, select the {VIN registration} and press the [YES] key.
5) Perform the procedure as shown in the display.

NOTE:
For detailed operation procedure, refer to the “SUBARU SELECT MONITOR OPERATION MANUAL”.

10. Read Diagnostic Trouble Code (DTC)

A: OPERATION

1. SUBARU SELECT MONITOR (NORMAL MODE)

1) On the «Main Menu» display screen, select the {Each System Check} and press the [YES] key.
2) On the «System Selection Menu» display screen, select the {Engine} and press the [YES] key.
3) Press the [YES] key after the information of engine type was displayed.
4) On the «Engine Diagnosis» screen, select the {DTC Display}, and then press the [YES] key.
5) On the «Diagnostic Code(s) Display» screen, select the {Current Diagnostic Code(s)} or {History Diagnostic Code(s)}, and then press the [YES] key.

NOTE:
• For detailed operation procedure, refer to the “SUBARU SELECT MONITOR OPERATION MANUAL”.
• For details concerning DTCs, refer to the List of Diagnostic Trouble Code (DTC). <Ref. to EN(H4DOTC)(diag)-71, List of Diagnostic Trouble Code (DTC).>

2. SUBARU SELECT MONITOR (OBD MODE)

1) On the «Main Menu» display screen, select the {Each System Check} and press the [YES] key.
2) On the «System Selection Menu» display screen, select the {Engine} and press the [YES] key.
3) Press the [YES] key after the information of engine type was displayed.
4) On the «Engine Diagnosis» display screen, select the {OBD System} and press the [YES] key.
5) On the «OBD Menu» display screen, select the {DTC Display} and press the [YES] key.
6) Make sure DTC is shown on the screen.

NOTE:
• For detailed operation procedure, refer to the “SUBARU SELECT MONITOR OPERATION MANUAL”.
• For details concerning DTCs, refer to the List of Diagnostic Trouble Code (DTC). <Ref. to EN(H4DOTC)(diag)-71, List of Diagnostic Trouble Code (DTC).>

11.Inspection Mode

A: PROCEDURE

Carry out trouble diagnosis shown in the following DTC table.
When performing trouble diagnosis which is not shown in the DTC table, refer to the next item Drive cycle. <Ref. to EN(H4DOTC)(diag)-41, Drive Cycle.>

DTC	Item	Condition
P0011	Intake Camshaft Position Timing - Over-Advanced (Bank 1)	—
P0021	Intake Camshaft Position Timing - Over-Advanced (Bank 2)	—
P0031	HO2S Heater Control Circuit Low (Bank 1 Sensor 1)	—
P0032	HO2S Heater Control Circuit High (Bank 1 Sensor 1)	—
P0037	HO2S Heater Control Circuit Low (Bank 1 Sensor 2)	—
P0038	HO2S Heater Control Circuit High (Bank 1 Sensor 2)	—
P0102	Mass or Volume Air Flow Circuit Low Input	—
P0103	Mass or Volume Air Flow Circuit High Input	—
P0107	Manifold Absolute Pressure/Barometric Pressure Circuit Low Input	—
P0108	Manifold Absolute Pressure/Barometric Pressure Circuit High Input	—
P0112	Intake Air Temperature Circuit Low Input	—
P0113	Intake Air Temperature Circuit High Input	—
P0117	Engine Coolant Temperature Circuit Low Input	—
P0118	Engine Coolant Temperature Circuit High Input	—
P0122	Throttle/Pedal Position Sensor/Switch “A” Circuit Low Input	—
P0123	Throttle/Pedal Position Sensor/Switch “A” Circuit High Input	—
P0131	O2 Sensor Circuit Low Voltage (Bank 1 Sensor 1)	—
P0132	O2 Sensor Circuit High Voltage (Bank 1 Sensor 1)	—
P0137	O2 Sensor Circuit Low Voltage (Bank 1 Sensor 2)	—
P0138	O2 Sensor Circuit High Voltage (Bank 1 Sensor 2)	—
P0182	Fuel Temperature Sensor “A” Circuit Low Input	—
P0183	Fuel Temperature Sensor “A” Circuit High Input	—
P0222	Throttle/Pedal Position Sensor/Switch “B” Circuit Low Input	—
P0223	Throttle/Pedal Position Sensor/Switch “B” Circuit High Input	—
P0230	Fuel Pump Primary Circuit	—
P0245	Turbo/Super Charger Wastegate Solenoid “A” Low	—
P0327	Knock Sensor 1 Circuit Low Input (Bank 1 or Single Sensor)	—
P0328	Knock Sensor 1 Circuit High Input (Bank 1 or Single Sensor)	—
P0335	Crankshaft Position Sensor “A” Circuit	—
P0336	Crankshaft Position Sensor “A” Circuit Range/Performance	—
P0340	Camshaft Position Sensor “A” Circuit (Bank 1 or Single Sensor)	—
P0345	Camshaft Position Sensor “A” Circuit (Bank 2)	—
P0447	Evaporative Emission Control System Vent Control Circuit Open	—
P0448	Evaporative Emission Control System Vent Control Circuit Shorted	—
P0452	Evaporative Emission Control System Pressure Sensor Low Input	—
P0453	Evaporative Emission Control System Pressure Sensor High Input	—
P0458	Evaporative Emission Control System Purge Control Valve Circuit Low	—
P0462	Fuel Level Sensor Circuit Low Input	—
P0463	Fuel Level Sensor Circuit High Input	—
P0500	Vehicle Speed Sensor	—
P0513	Incorrect Immobilizer Key	—
P0512	Starter Request Circuit	—
P0519	Idle Control System Malfunction (Fail-Safe)	—
P0545	Exhaust Gas Temperature Sensor Circuit Low-Bank 1	—
P0600	Serial Communication Link	—

DTC	Item	Condition
P0604	Internal Control Module Random Access Memory (RAM) Error	—
P0605	Internal Control Module Read Only Memory (ROM) Error	—
P0607	Control Module Performance	—
P0638	Throttle Actuator Control Range/Performance (Bank 1)	—
P0691	Cooling Fan 1 Control Circuit Low	—
P0700	Transmission Control System (MIL Request)	—
P0851	Neutral Switch Input Circuit Low	—
P0852	Neutral Switch Input Circuit High	—
P1152	O2 Sensor Circuit Range/Performance (Low) (Bank1 Sensor1)	—
P1153	O2 Sensor Circuit Range/Performance (High) (Bank1 Sensor1)	—
P1160	Return Spring Failure	—
P1400	Fuel Tank Pressure Control Solenoid Valve Circuit Low	—
P1420	Fuel Tank Pressure Control Sol. Valve Circuit High	—
P1446	Fuel Tank Sensor Control Valve Circuit Low	—
P1447	Fuel Tank Sensor Control Valve Circuit High	—
P1491	Positive Crankcase Ventilation (Blow-by) Function Problem	—
P1518	Starter Switch Circuit Low Input	—
P1544	Exhaust Gas Temperature Too High	—
P1560	Back-up Voltage Circuit Malfunction	—
P1570	Antenna	—
P1571	Reference Code Incompatibility	—
P1572	IMM Circuit Failure (Except Antenna Circuit)	—
P1574	Key Communication Failure	—
P1576	EGI Control Module EEPROM	—
P1577	IMM Control Module EEPROM	—
P1578	Meter Failure	—
P2006	Intake Manifold Runner Control Stuck Closed (Bank 1)	—
P2007	Intake Manifold Runner Control Stuck Closed (Bank 2)	—
P2008	Intake Manifold Runner Control Circuit / Open (Bank 1)	—
P2009	Intake Manifold Runner Control Circuit Low (Bank 1)	—
P2011	Intake Manifold Runner Control Circuit / Open (Bank 2)	—
P2012	Intake Manifold Runner Control Circuit Low (Bank 2)	—
P2016	Intake Manifold Runner Position Sensor/Switch Circuit Low (Bank 1)	—
P2017	Intake Manifold Runner Position Sensor/Switch Circuit High (Bank 1)	—
P2021	Intake Manifold Runner Position Sensor/Switch Circuit Low (Bank 2)	—
P2022	Intake Manifold Runner Position Sensor/Switch Circuit High (Bank 2)	—
P2088	OCV Solenoid Valve Signal A Circuit Open (Bank 1)	—
P2089	OCV Solenoid Valve Signal A Circuit Short (Bank 1)	—
P2092	OCV Solenoid Valve Signal A Circuit Open (Bank 2)	—
P2093	OCV Solenoid Valve Signal A Circuit Short (Bank 2)	—
P2101	Throttle Actuator Control Motor Circuit Range/Performance	—
P2102	Throttle Actuator Control Motor Circuit Low	—
P2103	Throttle Actuator Control Motor Circuit High	—
P2109	Throttle/Pedal Position Sensor A Minimum Stop Performance	—
P2122	Throttle/Pedal Position Sensor/Switch “D” Circuit Low Input	—
P2123	Throttle/Pedal Position Sensor/Switch “D” Circuit High Input	—
P2127	Throttle/Pedal Position Sensor/Switch “E” Circuit Low Input	—
P2128	Throttle/Pedal Position Sensor/Switch “E” Circuit High Input	—
P2135	Throttle/Pedal Position Sensor/Switch “A” / “B” Voltage Rationality	—
P2138	Throttle/Pedal Position Sensor/Switch “D” / “E” Voltage Rationality	—
P2227	Barometric Pressure Circuit Range/Performance	—

DTC	Item	Condition
P2228	Barometric Pressure Circuit Low Input	—
P2229	Barometric Pressure Circuit High Input	—

1. PREPARATION FOR THE INSPECTION MODE

1) Make sure that the fuel remains approx. half amount [20 — 40 ℓ (5.3 — 10.6 US gal, 4.4 — 8.8 Imp gal)] and the battery voltage is 12 V or more.
2) Raise the vehicle using a garage jack and place on safety stands or drive the vehicle onto free rollers.

WARNING:
• Before raising the vehicle, ensure the parking brake is applied.
• Do not use a pantograph jack in place of a safety stand.
• Secure a rope or wire to the front and rear towing or tie-down hooks to prevent the lateral runout of front wheels.
• Do not abruptly depress/release the clutch pedal or accelerator pedal during works even when engine is operating at low speeds since this may cause vehicle to jump off free rollers.
• In order to prevent the vehicle from slipping due to vibration, do not place any wooden blocks or similar items between the safety stands and the vehicle.
• Since the rear wheels will also rotate, do not place anything near them. Also, make sure that nobody goes in front of the vehicle.

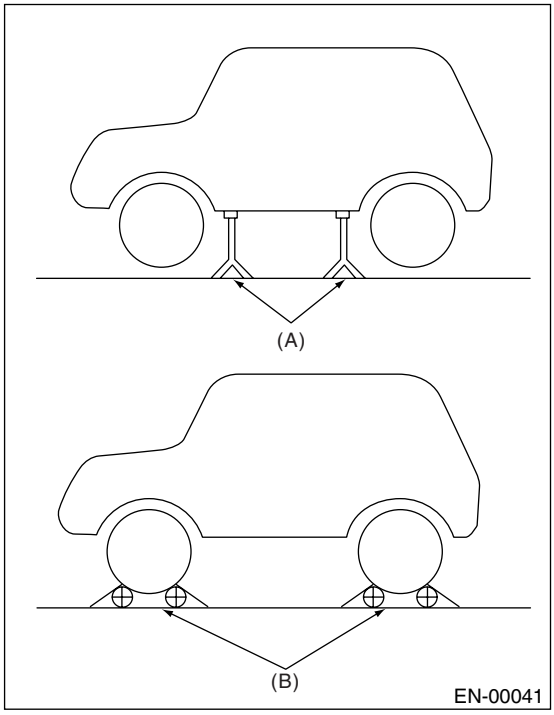

(A) Safety stand
(B) Free rollers

2. SUBARU SELECT MONITOR

1) After clearing the memory, check for any remaining trouble data unresolved. <Ref. to EN(H4DOTC)(diag)-45, Clear Memory Mode.>
2) Warm up the engine.
3) Prepare the Subaru Select Monitor kit. <Ref. to EN(H4DOTC)(diag)-7, PREPARATION TOOL, General Description.>

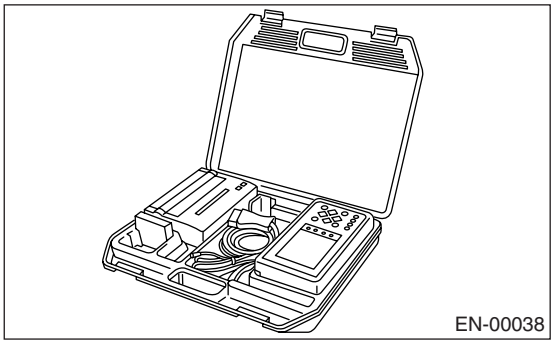

4) Connect the diagnosis cable to Subaru Select Monitor.
5) Insert the cartridge into Subaru Select Monitor. <Ref. to EN(H4DOTC)(diag)-7, PREPARATION TOOL, General Description.>

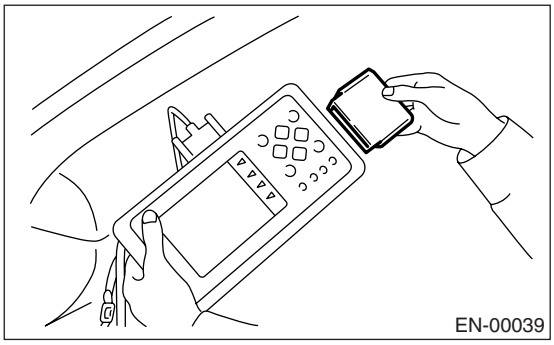

6) Connect the test mode connector (A) at the lower portion of glove box.

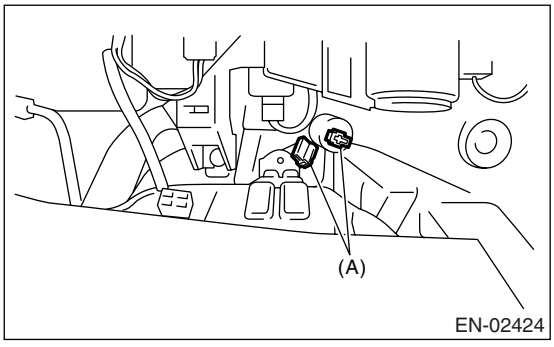

(A) Test mode connector

7) Connect the Subaru Select Monitor to data link connector located in the lower portion of the instrument panel (on the driver's side).

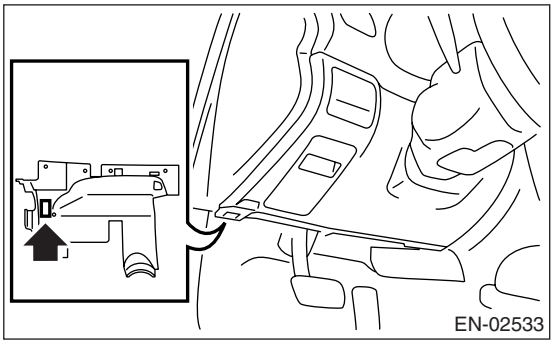

CAUTION:
Do not connect the scan tools except for Subaru Select Monitor and general scan tool.

8) Turn the ignition switch to ON (engine OFF) and Subaru Select Monitor switch to ON.

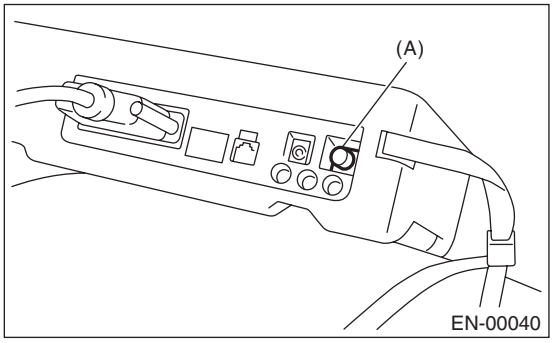

(A) Power switch

9) On the «Main Menu» display screen, select the {2. Each System Check} and press the [YES] key.
10) On the «System Selection Menu» display screen, select the {Engine Control System} and press the [YES] key.
11) Press the [YES] key after the information of engine type is displayed.
12) On the «Engine Diagnosis» display screen, select the {Dealer Check Mode Procedure} and press the [YES] key.
13) When the "Perform Inspection (Dealer Check) Mode?" is shown on the display screen, press the [YES] key.
14) Perform subsequent procedures as instructed on the display screen.

- If trouble still remains in the memory, the corresponding DTC appears on the display screen.

NOTE:

- For detailed operation procedure, refer to the SUBARU SELECT MONITOR OPERATION MANUAL.
- For detailed concerning the DTC, refer to the List of Diagnostic Trouble Code (DTC).

<Ref. to EN(H4DOTC)(diag)-71, List of Diagnostic Trouble Code (DTC).>

- Release the parking brake.
- The speed difference between front and rear wheels may light either the ABS warning light, but this indicates no malfunctions. When the engine control diagnosis is finished, perform the ABS memory clearance procedure of self-diagnosis function. <Ref. to ABS(diag)-25, Clear Memory Mode.>

3. GENERAL SCAN TOOL

1) After clearing the memory, check for any remaining trouble data unresolved. <Ref. to EN(H4DOTC)(diag)-45, Clear Memory Mode.>
2) Warm up the engine.
3) Connect the test mode connector (A) at the lower side of glove box.

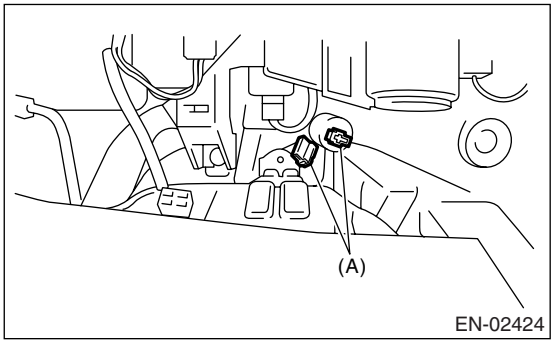

4) Connect the general scan tool to its data link connector in the lower portion of instrument panel (on the driver's side).

CAUTION:
Do not connect the scan tools except for Subaru Select Monitor and general scan tool.

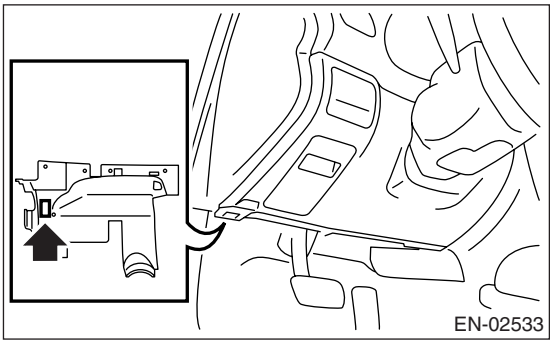

5) Start the engine.

NOTE:

- Ensure the selector lever is placed in "P" position before starting. (AT model)
- Depress the clutch pedal when starting engine. (MT model)

6) Using the selector lever or shift lever, turn the “P” position switch and “N” position switch to ON.
7) Depress the brake pedal to turn brake switch ON. (AT model)
8) Keep the engine speed in 2,500 — 3,000 rpm range for 40 seconds.
9) Place the selector lever or shift lever in “D” position (AT model) or “1st” gear (MT model) and drive the vehicle at 5 to 10 km/h (3 to 6 MPH).

NOTE:
• On AWD model, release the parking brake.
• The speed difference between front and rear wheels may light ABS warning light, but this indicates no malfunctions. When the engine control diagnosis is finished, perform the ABS memory clearance procedure of self-diagnosis function. <Ref. to ABS(diag)-25, Clear Memory Mode.>

10) Using the general scan tool, check for DTC and record the result(s).

NOTE:
• For detailed operation procedures, refer to the general scan tool instruction manual.
• For detailed concerning DTC, refer to the List of Diagnostic Trouble Code (DTC).
<Ref. to EN(H4DOTC)(diag)-71, List of Diagnostic Trouble Code (DTC).>

12.Drive Cycle

A: PROCEDURE

There are five drive patterns of drive cycles A — E for the trouble diagnosis. Performing the specified drive pattern allows to diagnose malfunctioning items listed below. After the malfunctioning items listed below are repaired, always check if they correctly resume their functions by performing the required drive pattern.

1. PREPARATION FOR THE DRIVE CYCLE

1) Make sure that the fuel remains approx. half amount [20 — 40 ℓ (5.3 — 10.6 US gal, 4.4 — 8.8 Imp gal)], and battery voltage is 12 V or more.
2) After performing the diagnostics and cleaning memory, check for any remaining unresolved trouble data. <Ref. to EN(H4DOTC)(diag)-45, Clear Memory Mode.>
3) Disconnect the test mode connector.

NOTE:
• Except for the engine coolant temperature specified items at starting, the diagnosis is carried out after engine warm up.
• Carry out the diagnosis which is marked * on DTC twice, then, after finishing first diagnosis, stop the engine and do second time at the same condition.

2. DRIVE CYCLE A (AFTER RUNNING 20 MINUTES AT 80 KM/H (50 MPH), IDLE ENGINE FOR 1 MINUTE.)

DTC	Item	Condition
*P0125	Insufficient Coolant Temperature for Closed Loop Fuel Control	Engine coolant temperature is less than 20°C (68°F) at engine start.
*P0126	Insufficient Coolant Temperature for Stable Operation	—
*P0128	Coolant Thermostat	Engine coolant temperature is less than 55°C (131°F) at engine start.
*P0133	O2 Sensor Circuit Slow Response (Bank 1 Sensor 1)	—
*P0171	Fuel System 1 (Lean)	Diagnosis completes in drive cycle B or C as well.
*P0172	Fuel System 2 (Rich)	Diagnosis completes in drive cycle B or C as well.
*P0301	Cylinder 1 Misfire Detected	Diagnosis completes in drive cycle B or C as well.
*P0302	Cylinder 2 Misfire Detected	Diagnosis completes in drive cycle B or C as well.
*P0303	Cylinder 3 Misfire Detected	Diagnosis completes in drive cycle B or C as well.
*P0304	Cylinder 4 Misfire Detected	Diagnosis completes in drive cycle B or C as well.
*P0420	Catalyst System Efficiency Below Threshold (Bank 1)	—
*P0442	Evaporative Emission Control System Leak Detected (small leak)	Engine coolant temperature at engine start is 25°C (77°F) or less.
*P0451	Evaporative Emission Control System Pressure Sensor Range/Performance	—
*P0456	Evaporative Emission Control System Leak Detected (very small leak)	Engine coolant temperature at engine start is 25°C (77°F) or less.
*P0457	Evaporative Emission Control System Leak Detected (fuel cap loose/off)	Engine coolant temperature at engine start is 25°C (77°F) or less.
P0459	Evaporative Emission Control System Purge Control Valve Circuit High	—
P0546	Exhaust Gas Temperature Sensor Circuit High-Bank1	—
P0692	Cooling Fan 1 Control Circuit High	—
P1301	Misfire Detected (High Temperature Exhaust Gas)	Diagnosis completes in drive cycle B or C as well.
P1312	Exhaust Gas Temperature Sensor Malfunction	Engine coolant temperature is less than 30°C (86°F) at engine start.

DTC	Item	Condition
P1443	Vent Control Solenoid Valve Function Problem	—
*P2096	Post Catalyst Fuel Trim System Too Lean Bank 1	Diagnosis completes in drive cycle B or C as well.
*P2097	Post Catalyst Fuel Trim System Too Rich Bank 1	Diagnosis completes in drive cycle B or C as well.

3. DRIVE CYCLE B (10 MINUTES IDLING)

NOTE:
Before the diagnosis, drive the vehicle at 10 km/h (6 MPH) or more.

DTC	Item	Condition
*P0111	Intake Air Temperature Sensor Range/Performance Problem	Engine coolant temperature is less than 30°C (86°F) at engine start.
*P0171	System too Lean (Bank 1)	Diagnosis completes in drive cycle A or C as well.
*P0172	System too Rich (Bank 1)	Diagnosis completes in drive cycle A or C as well.
*P0301	Cylinder 1 Misfire Detected	Diagnosis completes in drive cycle A or C as well.
*P0302	Cylinder 2 Misfire Detected	Diagnosis completes in drive cycle A or C as well.
*P0303	Cylinder 3 Misfire Detected	Diagnosis completes in drive cycle A or C as well.
*P0304	Cylinder 4 Misfire Detected	Diagnosis completes in drive cycle A or C as well.
*P0464	Fuel Level Sensor Circuit Intermittent	—
*P0483	Cooling Fan Rationality Check	—
*P0506	Idle Control System RPM Lower Than Expected	—
*P0507	Idle Control System RPM Higher Than Expected	—
P1301	Misfire Detected (High Temperature Exhaust Gas)	Diagnosis completes in drive cycle A or C as well.
*P2096	Post Catalyst Fuel Trim System Too Lean (Bank 1)	Diagnosis completes in drive cycle A or C as well.
*P2097	Post Catalyst Fuel Trim System Too Rich (Bank 1)	Diagnosis completes in drive cycle A or C as well.

4. DRIVE CYCLE C (DRIVE ACCORDING TO THE FOLLOWING DRIVE PATTERN)

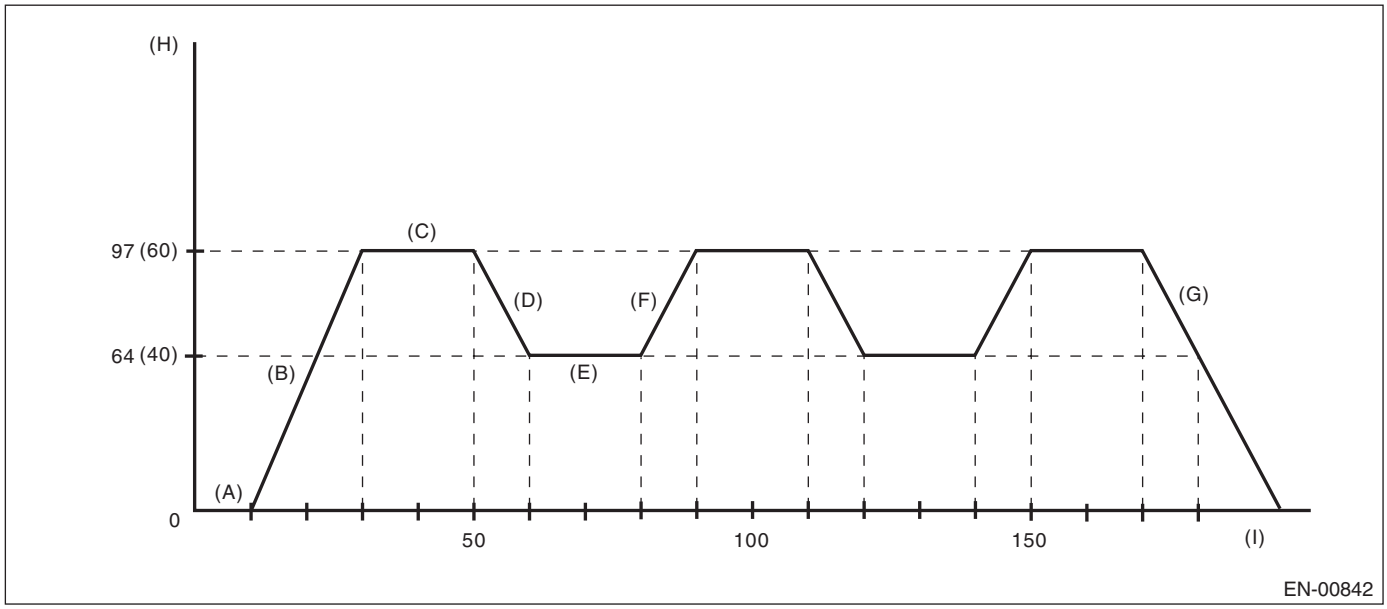

(A) Idle engine for 10 seconds or more.
(B) Accelerate to 97 km/h (60 MPH) within 20 seconds.
(C) Drive vehicle at 97 km/h (60 MPH) for 20 seconds.
(D) Decelerate with fully closed throttle to 64 km/h (40 MPH).
(E) Drive vehicle at 64 km/h (40 MPH) for 20 seconds.
(F) Accelerate to 97 km/h (60 MPH) within 10 seconds.
(G) Stop vehicle with throttle fully closed.
(H) Vehicle speed km/h (MPH)
(I) (Seconds)

DTC	Item	Condition
*P0030	HO2S Heater Control Circuit (Bank 1 Sensor 1)	—
P0068	MAP/MAF - Throttle Position Correlation	—
*P0101	Mass or Volume Air Flow Circuit Range/Performance	—
P0134	O_2 Sensor Circuit No Activity Detected (Bank 1 Sensor 1)	—
*P0139	O_2 Sensor Circuit Slow Response (Bank 1 Sensor 2)	—
*P0171	System too Lean (Bank 1)	Diagnosis completes in drive cycle A or B as well.
*P0172	System too Rich (Bank 1)	Diagnosis completes in drive cycle A or B as well.
*P0244	Turbo/Supercharger Wastegate Solenoid “A” Range/Performance	—
P0246	Turbo/Supercharger Wastegate Solenoid “A” High	—
*P0301	Cylinder 1 Misfire Detected	Diagnosis completes in drive cycle A or B as well.
*P0302	Cylinder 2 Misfire Detected	Diagnosis completes in drive cycle A or B as well.
*P0303	Cylinder 3 Misfire Detected	Diagnosis completes in drive cycle A or B as well.
*P0304	Cylinder 4 Misfire Detected	Diagnosis completes in drive cycle A or B as well.
P1301	Misfire Detected (High Temperature Exhaust Gas)	Diagnosis completes in drive cycle A or B as well.
P2004	Intake Manifold Runner Control Stuck Open (Bank 1)	—
P2005	Intake Manifold Runner Control Stuck Open (Bank 2)	—
*P2096	Post Catalyst Fuel Trim System Too Lean (Bank 1)	Diagnosis completes in drive cycle A or B as well.

DTC	Item	Condition
*P2097	Post Catalyst Fuel Trim System Too Rich (Bank 1)	Diagnosis completes in drive cycle A or B as well.

5. DRIVE CYCLE D

• DRIFT DIAGNOSIS

1) Make sure that the engine coolant temperature at engine starting is less than 30°C (86°F).
2) Make sure that fuel of more than 9.6 ℓ (2.5 US gal, 2.1 Imp gal) remains and the battery voltage is more than 10.9 V.
3) Make sure that the engine coolant temperature rises for more than 10°C (50°F) from the level of engine starting and is also more than 75°C (167°F).
4) Idle the engine for more than 120 seconds in the condition of step 3.

• STUCK DIAGNOSIS

1) Make sure that the battery voltage is more than 10.9 V.
2) Perform the clear memory mode. <Ref. to EN(H4DOTC)(diag)-45, Clear Memory Mode.>
3) Drive the vehicle for the distance equal to fuel of 50 ℓ (13.2 US gal, 11 Imp gal).

NOTE:
• It is possible to drive intermittently.
• Do not disconnect the terminal of battery during diagnosis. (If disconnecting the terminal of battery, the data will be cleared.)

DTC	Item	Condition
P0181	Fuel Temperature Sensor “A” Circuit Range/Performance	—

6. DRIVE CYCLE E

1) Make sure that the battery voltage is more than 10.9 V.
2) Perform the clear memory mode. <Ref. to EN(H4DOTC)(diag)-45, Clear Memory Mode.>
3) Drive the vehicle for the distance equal to fuel of 30 ℓ (7.9 US gal, 6.6 Imp gal).

NOTE:
• It is possible to drive intermittently.
• Do not disconnect the terminal of battery during diagnosis. (If disconnecting the terminal of battery, the data will be cleared.)

DTC	Item	Condition
P0461	Fuel Level Sensor Circuit Range/Performance	—

13.Clear Memory Mode

A: OPERATION

1. SUBARU SELECT MONITOR (NORMAL MODE)

1) On the «Main Menu» display screen, select the {Each System Check} and press the [YES] key.
2) On the «System Selection Menu» display screen, select the {Engine} and press the [YES] key.
3) Press the [YES] key after the information of engine type was displayed.
4) On the «Engine Diagnosis» display screen, select the {Memory Clear} and press the [YES] key.
5) When the “Done” and “Turn Ignition Switch OFF” are shown on the display screen, turn the ignition switch to OFF and then Subaru Select Monitor to OFF.

NOTE:
• Initial diagnosis of electronic throttle control is performed after memory clearance. For this reason, start the engine after 10 seconds or more have elapsed since the ignition switch is turned ON.
• For detailed operation procedure, refer to the “SUBARU SELECT MONITOR OPERATION MANUAL”.

2. SUBARU SELECT MONITOR (OBD MODE)

1) On the «Main Menu» display screen, select the {Each System Check} and press the [YES] key.
2) On the «System Selection Menu» display screen, select the {Engine} and press the [YES] key.
3) Press the [YES] key after the information of engine type was displayed.
4) On the «Engine Diagnosis» display screen, select the {OBD System} and press the [YES] key.
5) On the «OBD Menu» display screen, select the {DTC Clear} and press the [YES] key.
6) When the “Perform Diagnostic Code(s) Clear?” is shown on the screen, press the [YES] key.
7) Turn the ignition switch to OFF and then turn the Subaru Select Monitor switch to OFF.

NOTE:
• Initial diagnosis of electronic throttle control is performed after memory clearance. For this reason, start the engine after 10 seconds or more have elapsed since the ignition switch is turned ON.
• For detailed operation procedure, refer to the “SUBARU SELECT MONITOR OPERATION MANUAL”.

3. GENERAL SCAN TOOL

For clear memory procedures using the general scan tool, refer to the general scan tool instruction manual.

14.Compulsory Valve Operation Check Mode

A: OPERATION

1) Prepare the Subaru Select Monitor kit. <Ref. to EN(H4DOTC)(diag)-7, PREPARATION TOOL, General Description.>

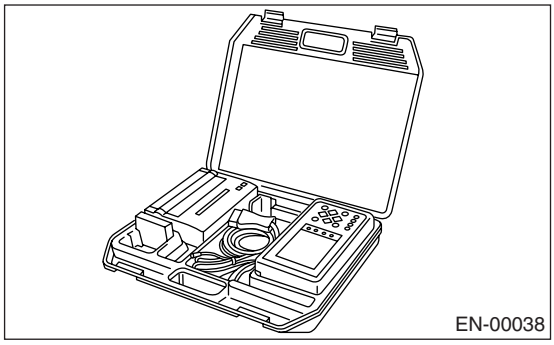

2) Connect the diagnosis cable to Subaru Select Monitor.
3) Insert the cartridge to Subaru Select Monitor. <Ref. to EN(H4DOTC)(diag)-7, PREPARATION TOOL, General Description.>

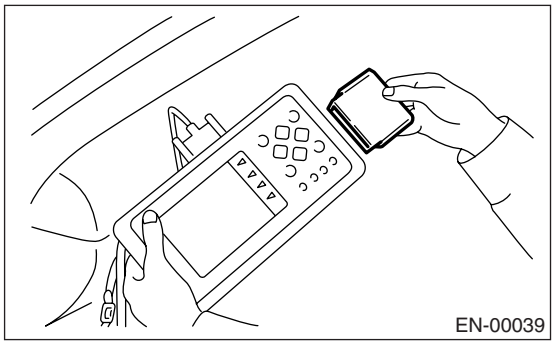

4) Connect the test mode connector (A) located at the lower portion of glove box.

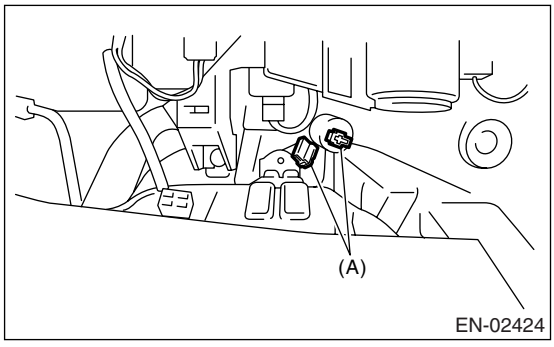

5) Connect the Subaru Select Monitor to data link connector located in the lower portion of the instrument panel (on the driver's side).

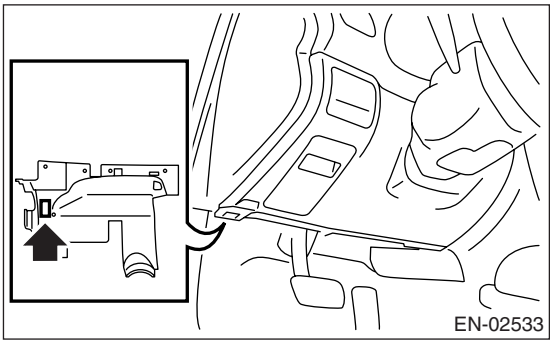

CAUTION:
Do not connect the scan tools except for Subaru Select Monitor and general scan tool.

6) Turn the ignition switch to ON (engine OFF) and turn Subaru Select Monitor switch to ON.

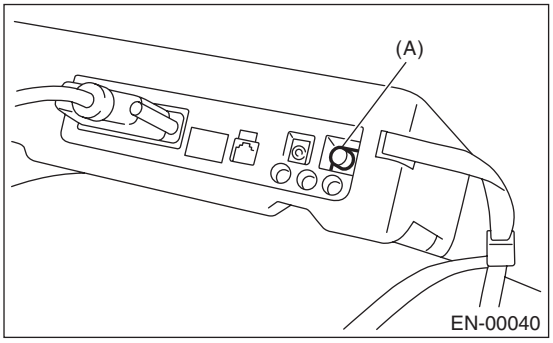

(A) Power switch

7) On the «Main Menu» display screen, select the {Each System Check} and press the [YES] key.
8) On the «System Selection Menu» display screen, select the {Engine} and press the [YES] key.
9) Press the [YES] key after the information of engine type was displayed.
10) On the «Engine Diagnosis» display screen, select the {System Operation Check Mode} and press the [YES] key.
11) On the «System Operation Check Mode» screen, select the {Actuator ON/OFF Operation} and press the [YES] key.
12) On the «Actuator ON/OFF Operation» screen, select the desired compulsory actuator and press the [YES] key.
13) Pressing the [NO] key completes the compulsory valve operation check mode. The display will then return to the «Actuator ON/OFF Operation» screen.

• A list of the support data is shown in the following table.

Description	Display
Compulsory fuel pump relay operation check	Fuel Pump
Compulsory radiator fan relay operation check	Radiator Fan Relay
Compulsory air conditioning relay operation check	A/C Compressor Relay
Compulsory purge control solenoid valve operation check	CPC Solenoid
Compulsory wastegate control solenoid valve operation check	Wastegate control solenoid
Compulsory pressure control solenoid valve operation check	PCV solenoid
Compulsory drain valve operation check	Vent Control Solenoid
Compulsory fuel tank sensor control valve operation check	Fuel Tank Sensor Ctrl Valve

NOTE:
• The following parts will be displayed but not functional.

Display
EGR Solenoid
ASV Solenoid
FICD Solenoid
AAI Solenoid
EXH. Bypass Control Permit Flag

• For detailed operation procedure, refer to the “SUBARU SELECT MONITOR OPERATION MANUAL”.

15.Malfunction Indicator Light

A: PROCEDURE

1. Activation of malfunction indicator light. <Ref. to EN(H4DOTC)(diag)-49, ACTIVATION OF MALFUNCTION INDICATOR LIGHT, Malfunction Indicator Light.>
↓
2. Check that the malfunction indicator light does not come on. <Ref. to EN(H4DOTC)(diag)-50, MALFUNCTION INDICATOR LIGHT DOES NOT COME ON, Malfunction Indicator Light.>
↓
3. Check that the malfunction indicator light does not go off. <Ref. to EN(H4DOTC)(diag)-52, MALFUNCTION INDICATOR LIGHT DOES NOT GO OFF., Malfunction Indicator Light.>
↓
4. Check that the malfunction indicator light does not blink. <Ref. to EN(H4DOTC)(diag)-53, MALFUNCTION INDICATOR LIGHT DOES NOT BLINK., Malfunction Indicator Light.>
↓
5. Check that the malfunction indicator light remains blinking. <Ref. to EN(H4DOTC)(diag)-55, MALFUNCTION INDICATOR LIGHT REMAINS BLINKING., Malfunction Indicator Light.>

B: ACTIVATION OF MALFUNCTION INDICATOR LIGHT

1) When the ignition switch is turned to ON (engine OFF), the malfunction indicator light (A) in the combination meter illuminates.

NOTE:
If the malfunction indicator light does not illuminate, perform the diagnosis of malfunction indicator light circuit or the combination meter circuit. <Ref. to EN(H4DOTC)(diag)-50, MALFUNCTION INDICATOR LIGHT DOES NOT COME ON, Malfunction Indicator Light.>

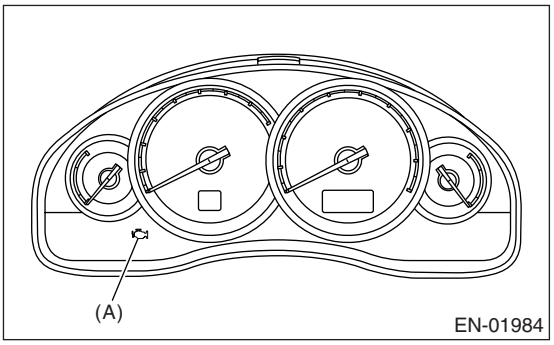

2) After starting the engine, the malfunction indicator light goes out. If it does not, either the engine or the emission control system is malfunctioning.

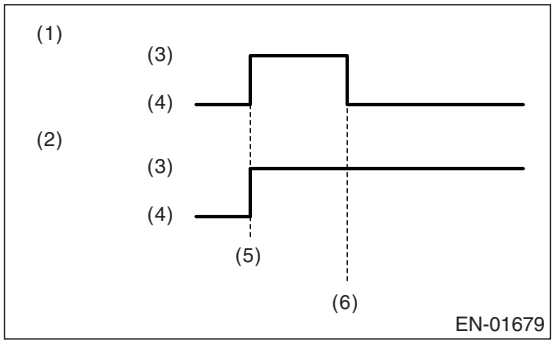

(1) No trouble
(2) Trouble occurs
(3) ON
(4) OFF
(5) Ignition switch ON
(6) Engine start

3) Turn the ignition switch to OFF and connect the test mode connector.

(1) When the ignition switch is turned to ON (engine OFF), the malfunction indicator light illuminates.

(2) Malfunction indicator light blinks at a cycle of 0.5 Hz after starting the engine. (During diagnosis)

(3) Malfunction indicator light blinks at a cycle of 3 Hz after diagnosis if there is no trouble. Malfunction indicator light illuminates if faulty.

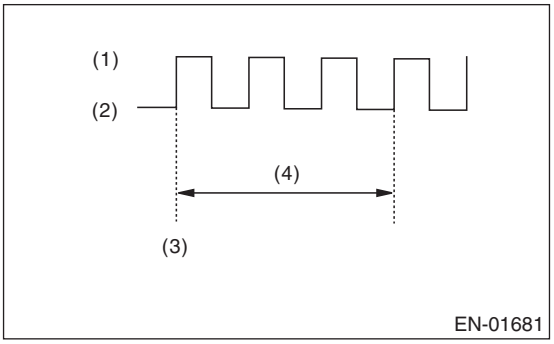

(1) ON
(2) OFF
(3) Ignition switch ON
(4) 1 second

C: MALFUNCTION INDICATOR LIGHT DOES NOT COME ON

DIAGNOSIS:
The malfunction indicator light circuit is open or shorted.
TROUBLE SYMPTOM:
When the ignition switch is turned to ON (engine OFF), malfunction indicator light does not come on.
WIRING DIAGRAM:

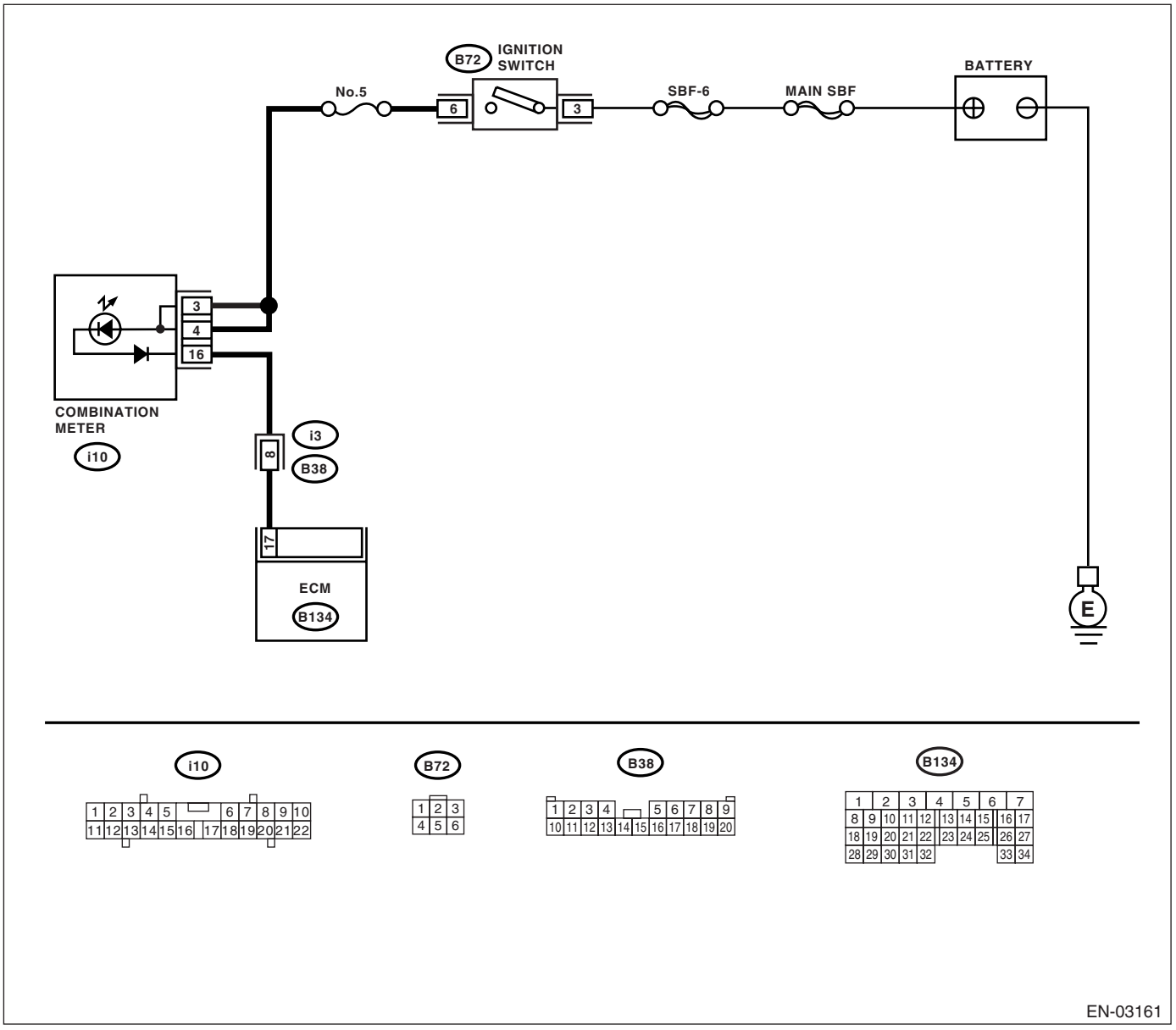

	Step	Check	Yes	No
1	**CHECK OUTPUT SIGNAL FROM ECM.** 1) Turn the ignition switch to ON. 2) Measure the voltage between ECM connector and chassis ground. ***Connector & terminal*** ***(B134) No. 17 (+) — Chassis ground (−):***	Is the voltage less than 1 V?	Go to step **4.**	Go to step **2.**
2	**CHECK POOR CONTACT.** Check for poor connection when shaking or pulling ECM connector and harness.	Does malfunction indicator light illuminate?	Repair the poor contact in ECM connector.	Go to step **3.**
3	**CHECK ECM CONNECTOR.** Check the connection of ECM connector.	Is the ECM connector correctly connected?	Replace the ECM. <Ref. to FU(H4DOTC)-39, Engine Control Module (ECM).>	Repair the connection of ECM connector.
4	**CHECK HARNESS BETWEEN COMBINATION METER AND ECM CONNECTOR.** 1) Turn the ignition switch to OFF. 2) Remove the combination meter. <Ref. to IDI-15, Combination Meter.> 3) Disconnect the connector from ECM and combination meter. 4) Measure the resistance of harness between ECM and combination meter connector. ***Connector & terminal*** ***(B134) No. 17 — (i10) No. 16:***	Is the resistance less than 1 Ω?	Go to step **5.**	Repair the harness and connector. NOTE: In this case, repair the following: • Open circuit in harness between ECM and combination meter connector • Poor contact in coupling connector
5	**CHECK POOR CONTACT.** Check poor contact in combination meter connector.	Is there poor contact in combination meter connector?	Repair the poor contact in combination meter connector.	Go to step **6.**
6	**CHECK HARNESS BETWEEN COMBINATION METER AND IGNITION SWITCH CONNECTOR.** 1) Turn the ignition switch to ON. 2) Measure the voltage between combination meter connector and chassis ground. ***Connector & terminal*** ***(i10) No. 3 (+) — Chassis ground (−):*** ***(i10) No. 4 (+) — Chassis ground (−):***	Is the voltage more than 10 V?	Replace the board of combination meter. <Ref. to IDI-15, Combination Meter.>	Check the following and repair if necessary. NOTE: • Blown out fuse • Open or short circuit in harness between fuse and battery terminal • Poor contact in ignition switch connector

D: MALFUNCTION INDICATOR LIGHT DOES NOT GO OFF.

DIAGNOSIS:
The malfunction indicator light circuit is shorted.

TROUBLE SYMPTOM:
Although malfunction indicator light comes on when the engine runs, DTC is not shown on the Subaru Select Monitor display.

WIRING DIAGRAM:

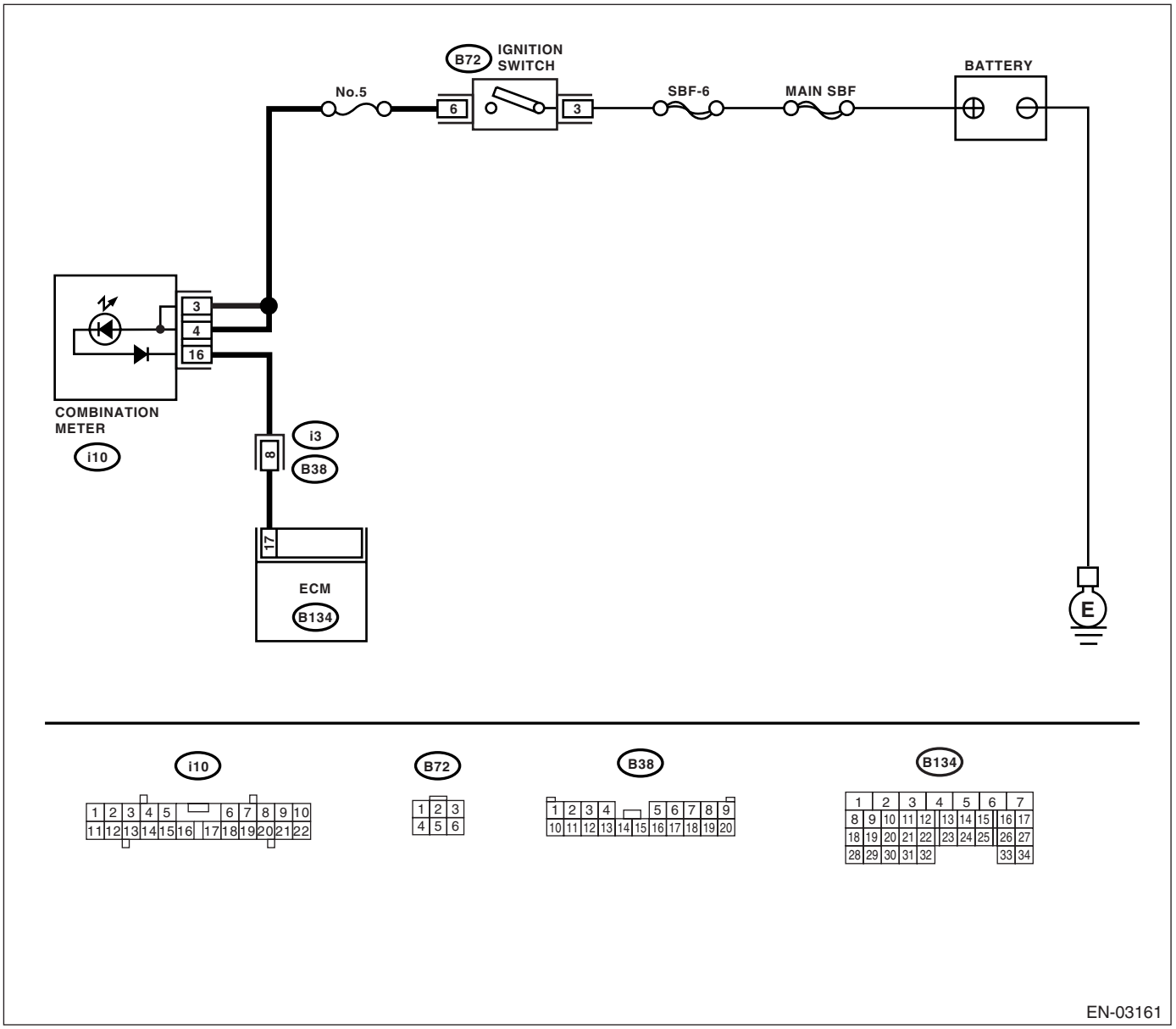

Step		Check	Yes	No
1	**CHECK HARNESS BETWEEN COMBINATION METER AND ECM CONNECTOR.** 1) Turn the ignition switch to OFF. 2) Disconnect the connector from ECM. 3) Turn the ignition switch to ON.	Does malfunction indicator light illuminate?	Repair the short circuit in harness between combination meter and ECM connector.	Replace the ECM. <Ref. to FU(H4DOTC)-39, Engine Control Module (ECM).>

E: MALFUNCTION INDICATOR LIGHT DOES NOT BLINK.

DIAGNOSIS:

- The malfunction indicator light circuit is open or shorted.
- Test mode connector circuit is open.

TROUBLE SYMPTOM:

Malfunction indicator light does not blink during inspection mode.

WIRING DIAGRAM:

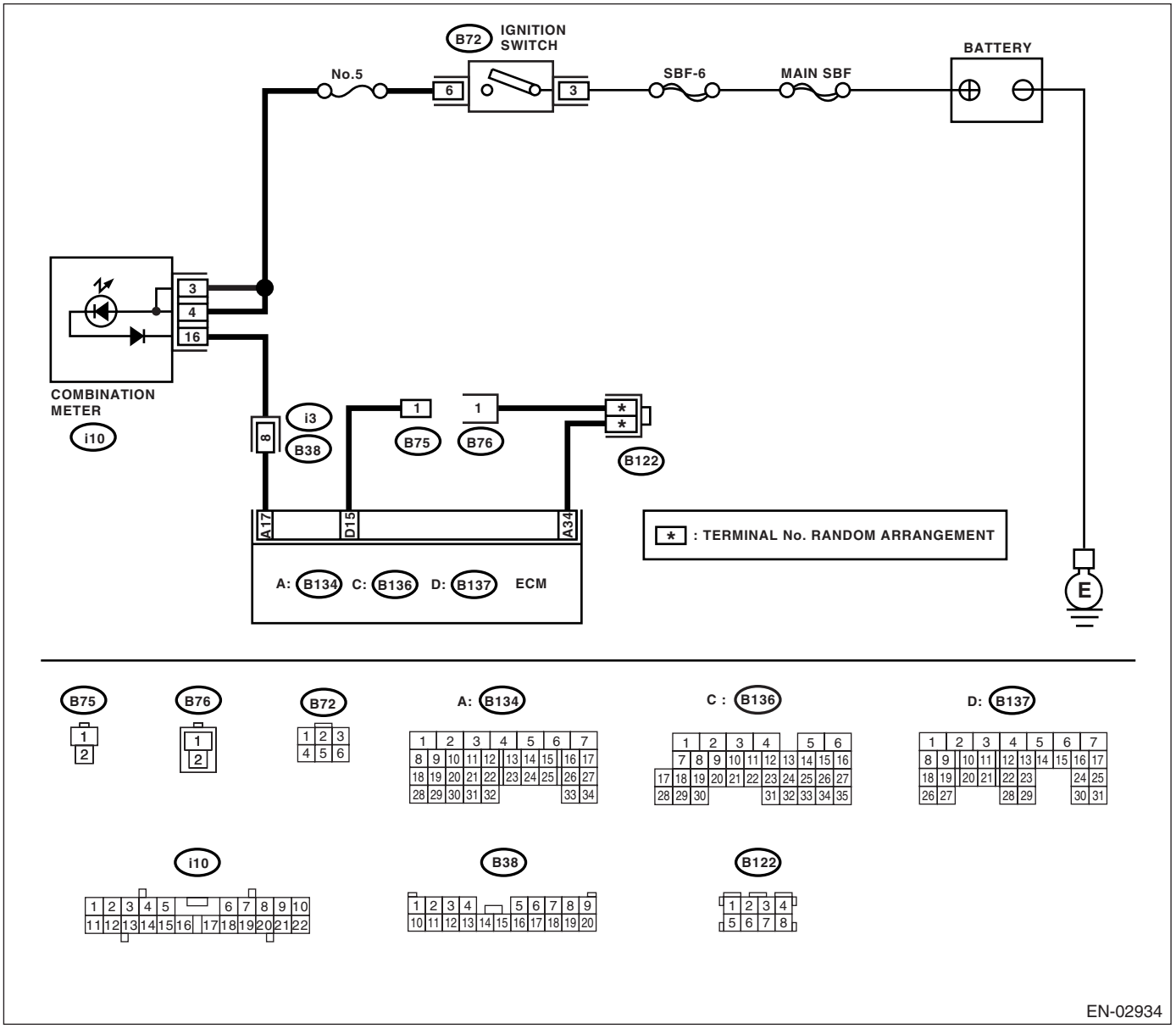

	Step	Check	Yes	No
1	**CHECK STATUS OF MALFUNCTION INDICATOR LIGHT.** 1) Turn the ignition switch to OFF. 2) Disconnect the test mode connector. 3) Turn the ignition switch to ON. (engine OFF)	Does malfunction indicator light illuminate?	Go to step **2.**	Repair the malfunction indictor light circuit. <Ref. to EN(H4DOTC)(diag)-50, MALFUNCTION INDICATOR LIGHT DOES NOT COME ON, Malfunction Indicator Light.>
2	**CHECK HARNESS BETWEEN COMBINATION METER AND ECM CONNECTOR.** 1) Turn the ignition switch to OFF. 2) Disconnect the connector from ECM. 3) Turn the ignition switch to ON.	Does malfunction indicator light illuminate?	Repair the ground short circuit in harness between combination meter and ECM connector.	Go to step **3.**
3	**CHECK HARNESS BETWEEN TEST MODE CONNECTOR AND ECM.** 1) Turn the ignition switch to OFF. 2) Disconnect the connector from ECM. 3) Measure the resistance of harness between test mode connector and ECM. ***Connector & terminal*** ***(B76) No. 1 — (B134) No. 34:***	Is the resistance less than 1 Ω?	Go to step **4.**	Repair the harness and connector. NOTE: In this case, repair the following: • Open circuit in harness between test mode connector and ECM • Poor contact in joint connector
4	**CHECK POOR CONTACT.** Check poor contact in ECM connector.	Is the poor contact in ECM connector?	Repair the poor contact in ECM connector.	Go to step **5.**
5	**CHECK HARNESS BETWEEN ECM AND TEST MODE CONNECTOR.** Measure the resistance of harness between ECM and test mode connector. ***Connector & terminal*** ***(B137) No. 15 — (B75) No. 1:***	Is the resistance less than 1 Ω?	Go to step **6.**	Repair the open circuit in harness between ECM and test mode connector.
6	**CHECK POOR CONTACT.** Check poor contact in ECM connector.	Is the poor contact in ECM connector?	Repair the poor contact in ECM connector.	Replace the ECM. <Ref. to FU(H4DOTC)-39, Engine Control Module (ECM).>

F: MALFUNCTION INDICATOR LIGHT REMAINS BLINKING.

DIAGNOSIS:

Test mode connector circuit is shorted.

TROUBLE SYMPTOM:

Malfunction indicator light blinks when test mode connector is not connected.

WIRING DIAGRAM:

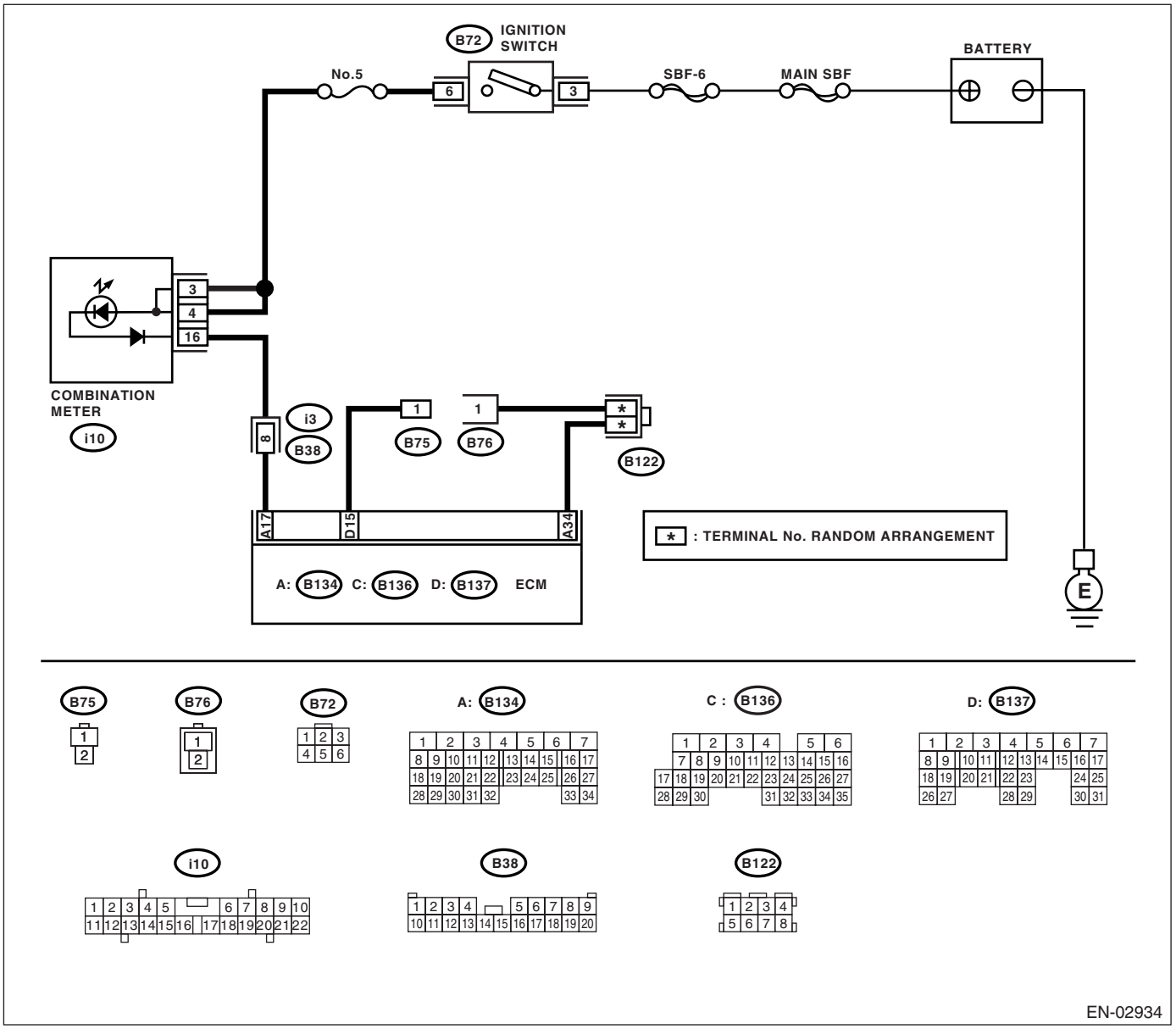

	Step	Check	Yes	No
1	**CHECK TEST MODE CONNECTOR.** 1) Disconnect the test mode connector. 2) Turn the ignition switch to ON.	Does the malfunction indicator light blink?	Go to step **2.**	System is in good order. NOTE: Malfunction indicator light blinks at a cycle of 3 Hz when test mode connector is connected.
2	**CHECK HARNESS BETWEEN ECM CONNECTOR AND CHASSIS GROUNDING TERMINAL.** 1) Turn the ignition switch to OFF. 2) Disconnect the connector from ECM. 3) Measure the resistance of harness between ECM connector and chassis ground. ***Connector & terminal*** ***(B137) No. 15 — Chassis ground:***	Is the resistance less than 5 Ω?	Repair the short circuit in harness between ECM and test mode connector.	Replace the ECM. <Ref. to FU(H4DOTC)-39, Engine Control Module (ECM).>

16.Diagnostics for Engine Starting Failure

A: PROCEDURE

1. Check for fuel amount.
↓
2. Inspection of starter motor circuit. <Ref. to EN(H4DOTC)(diag)-58, STARTER MOTOR CIRCUIT, Diagnostics for Engine Starting Failure.>
↓
3. Inspection of ECM power supply and ground line. <Ref. to EN(H4DOTC)(diag)-62, CHECK POWER SUPPLY AND GROUND LINE OF ENGINE CONTROL MODULE (ECM), Diagnostics for Engine Starting Failure.>
↓
4. Inspection of ignition control system. <Ref. to EN(H4DOTC)(diag)-64, IGNITION CONTROL SYSTEM, Diagnostics for Engine Starting Failure.>
↓
5. Inspection of fuel pump circuit. <Ref. to EN(H4DOTC)(diag)-67, FUEL PUMP CIRCUIT, Diagnostics for Engine Starting Failure.>
↓
6. Inspection of fuel injector circuit. <Ref. to EN(H4DOTC)(diag)-69, FUEL INJECTOR CIRCUIT, Diagnostics for Engine Starting Failure.>

B: STARTER MOTOR CIRCUIT

CAUTION:
After repair or replacement of faulty parts, conduct Clear Memory Mode <Ref. to EN(H4DOTC)(diag)-45, OPERATION, Clear Memory Mode.> and Inspection Mode <Ref. to EN(H4DOTC)(diag)-36, PROCEDURE, Inspection Mode.>.

WIRING DIAGRAM:

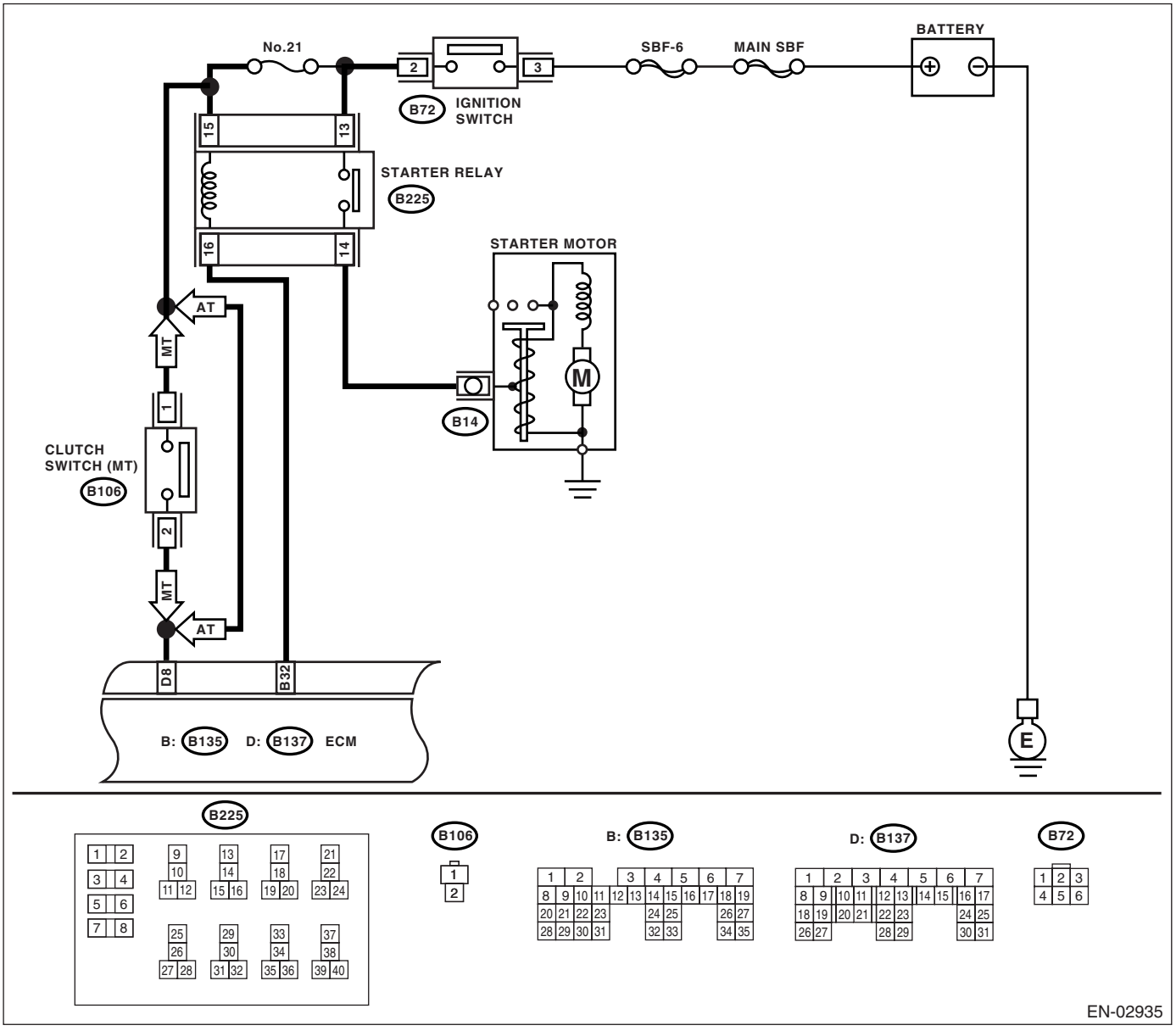

	Step	Check	Yes	No
1	**CHECK OPERATION OF STARTER MOTOR.**	Does the starter motor operate?	Go to step **2.**	Go to step **3.**
2	**CHECK DTC.**	Is DTC displayed? <Ref. to EN(H4DOTC)(diag)-35, OPERATION, Read Diagnostic Trouble Code (DTC).>	Inspect the relevant DTC using List of Diagnostic Trouble Code (DTC). <Ref. to EN(H4DOTC)(diag)-71, List of Diagnostic Trouble Code (DTC).>	Repair the poor contact in ECM connector.
3	**CHECK INPUT SIGNAL FOR STARTER MOTOR.** 1) Turn the ignition switch to OFF. 2) Disconnect the connector from starter motor. 3) Turn the ignition switch to START. 4) Measure the power supply voltage between starter motor connector terminal and engine ground. ***Connector & terminal*** ***(B14) No. 1 (+) — Engine ground (−):*** NOTE: • On AT vehicles, set the selector lever in the "P" or "N" range. • On MT vehicles, depress the clutch pedal.	Is the voltage more than 10 V?	Go to step **4.**	Go to step **5.**
4	**CHECK GROUND CIRCUIT OF STARTER MOTOR.** 1) Turn the ignition switch to OFF. 2) Disconnect the ground cable terminal from starter motor. 3) Measure the resistance of ground cable between ground cable terminal and engine ground.	Is the resistance less than 5 Ω?	Check the starter motor. <Ref. to SC(H4SO)-6, Starter.>	Repair the open circuit of ground cable.
5	**CHECK HARNESS BETWEEN BATTERY AND IGNITION SWITCH CONNECTOR.** 1) Disconnect the connector from ignition switch. 2) Measure the power supply voltage between ignition switch connector and chassis ground. ***Connector & terminal*** ***(B72) No. 3 (+) — Chassis ground (−):***	Is the voltage more than 10 V?	Go to step **6.**	Check the following and repair if necessary. • Blown out fuse • Open circuit in harness between ignition switch and battery
6	**CHECK IGNITION SWITCH.** 1) Disconnect the connector from ignition switch. 2) Measure the resistance between ignition switch terminals while turning the ignition switch to START position. ***Terminals*** ***No. 2 — No. 3:***	Is the resistance less than 5 Ω?	Go to step **7.**	Replace the ignition switch.

Diagnostics for Engine Starting Failure

	Step	Check	Yes	No
7	**CHECK INPUT VOLTAGE OF STARTER RELAY.** 1) Turn the ignition switch to OFF. 2) Disconnect the connector from starter relay. 3) Connect the connector to ignition switch. 4) Measure the input voltage between starter relay connector and chassis ground while turning the ignition switch to START position. ***Connector & terminal*** ***(B225) No. 14 (+) — Chassis ground (−):*** ***(B225) No. 16 (+) — Chassis ground (−):***	Is the voltage more than 10 V?	Go to step **8.**	Repair the open or ground short circuit in harness between starter relay and ignition switch.
8	**CHECK STARTER RELAY.** 1) Connect the battery to starter relay terminals No. 15 and No. 16. 2) Measure the resistance between starter relay terminals. ***Terminals*** ***No. 13 — No. 14:***	Is the resistance less than 1 Ω?	Go to step **9.**	Replace the starter relay.
9	**CHECK INPUT VOLTAGE FROM ECM.** 1) Turn the ignition switch to OFF. 2) Connect the starter relay connector. 3) Disconnect the connectors from ECM. 4) Measure the resistance of harness between ECM and starter relay connector. ***Connector & terminal*** ***(B135) No. 32 — (B225) No. 15:***	Is the resistance less than 1 Ω?	Go to step **10.**	Repair the open circuit in harness between ECM and starter relay.
10	**CHECK INPUT VOLTAGE FOR STARTER MOTOR.** 1) Turn the ignition switch to OFF. 2) Connect the connector to ECM. 3) Turn the ignition switch to START. 4) Measure the voltage between starter motor and engine ground. ***Connector & terminal*** ***(B14) No. 1 (+) — Engine ground (−):***	Is the voltage more than 10 V?	Go to step **15.**	Repair the open or ground short circuit in harness between starter relay and starter.
11	**CHECK TRANSMISSION TYPE.**	Is the transmission type AT?	Go to step **15.**	Go to step **12.**
12	**CHECK CLUTCH SWITCH INPUT VOLTAGE.** 1) Turn the ignition switch to OFF. 2) Disconnect the connector from clutch switch. 3) Turn the ignition switch to START. 4) Measure the voltage between clutch switch connector and chassis ground. ***Connector & terminal*** ***(B106) No. 1 (+) — Chassis ground (−):***	Is the voltage more than 10 V?	Go to step **13.**	Repair open circuit in harness between clutch switch and ignition switch.
13	**CHECK CLUTCH SWITCH.** 1) Turn the ignition switch to OFF. 2) Measure the resistance between clutch switch terminals while depressing the clutch pedal. ***Terminals*** ***No. 1 — No. 2:***	Is the resistance less than 1 Ω?	Go to step **14.**	Replace the clutch switch. <Ref. to CL-25, Clutch Switch.>

	Step	Check	Yes	No
14	**CHECK HARNESS BETWEEN CLUTCH SWITCH AND ECM.** 1) Disconnect the connector from ECM. 2) Measure the resistance of harness between clutch switch and ECM connector. ***Connector & terminal*** ***(B137) No. 8 — (B106) No. 2:***	Is the resistance less than 1 Ω?	Check engine control module (ECM) power supply and ground line. <Ref. to EN(H4DOTC)(diag)-62, CHECK POWER SUPPLY AND GROUND LINE OF ENGINE CONTROL MODULE (ECM), Diagnostics for Engine Starting Failure.>	Repair open circuit in harness between clutch switch and ECM.
15	**CHECK HARNESS BETWEEN IGNITION SWITCH AND ECM.** 1) Turn the ignition switch to OFF. 2) Disconnect the connector from ignition switch and ECM. 3) Measure the resistance of harness between ignition switch and ECM connector. ***Connector & terminal*** ***(B137) No. 8 — (B72) No. 2:***	Is the resistance less than 1 Ω?	Check engine control module (ECM) power supply and ground line. <Ref. to EN(H4DOTC)(diag)-62, CHECK POWER SUPPLY AND GROUND LINE OF ENGINE CONTROL MODULE (ECM), Diagnostics for Engine Starting Failure.>	Repair the open circuit between ignition switch and ECM.

C: CHECK POWER SUPPLY AND GROUND LINE OF ENGINE CONTROL MODULE (ECM)

CAUTION:
After repair or replacement of faulty parts, conduct Clear Memory Mode <Ref. to EN(H4DOTC)(diag)-45, OPERATION, Clear Memory Mode.> and Inspection Mode <Ref. to EN(H4DOTC)(diag)-36, PROCEDURE, Inspection Mode.>.

WIRING DIAGRAM:

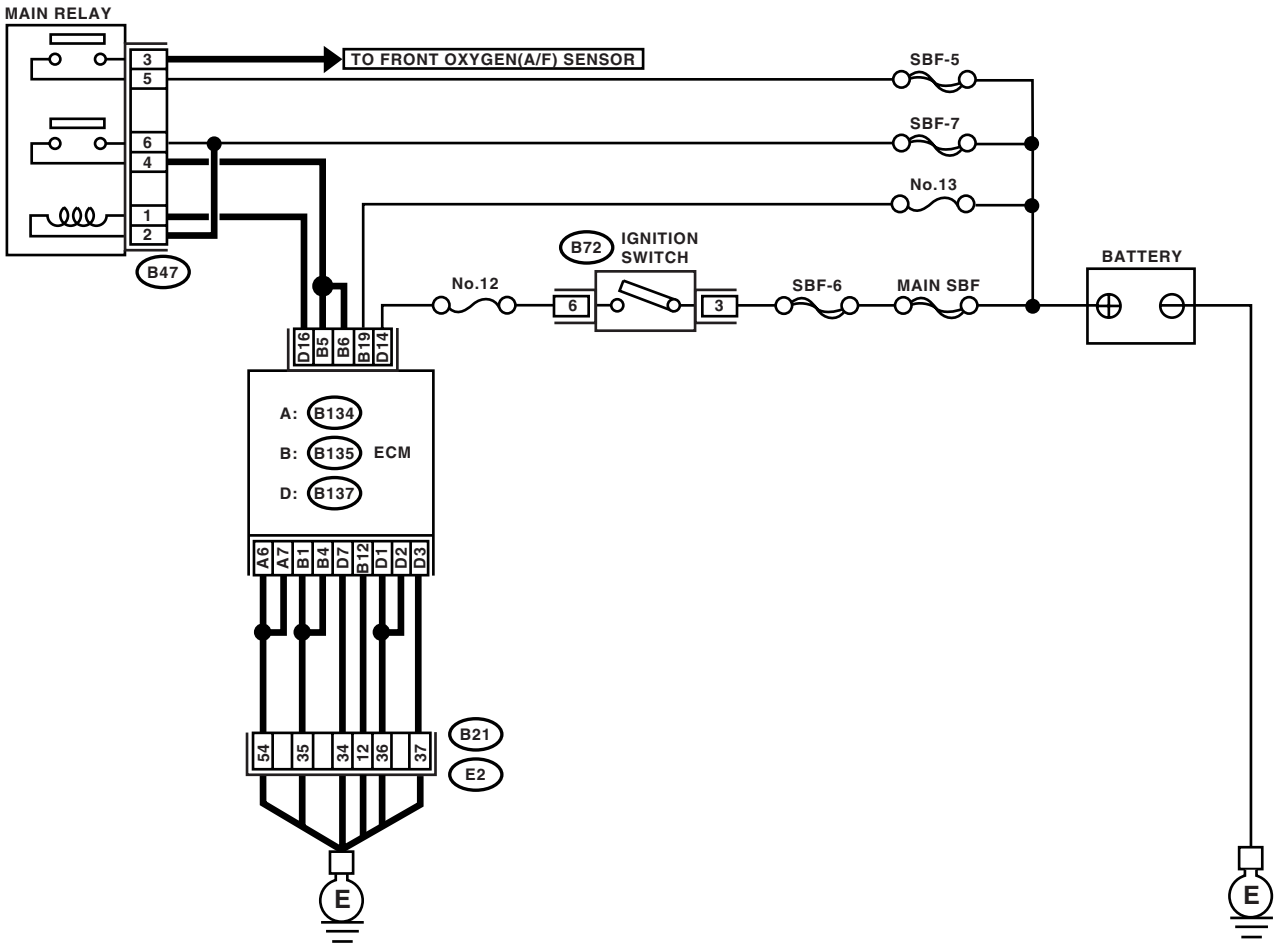

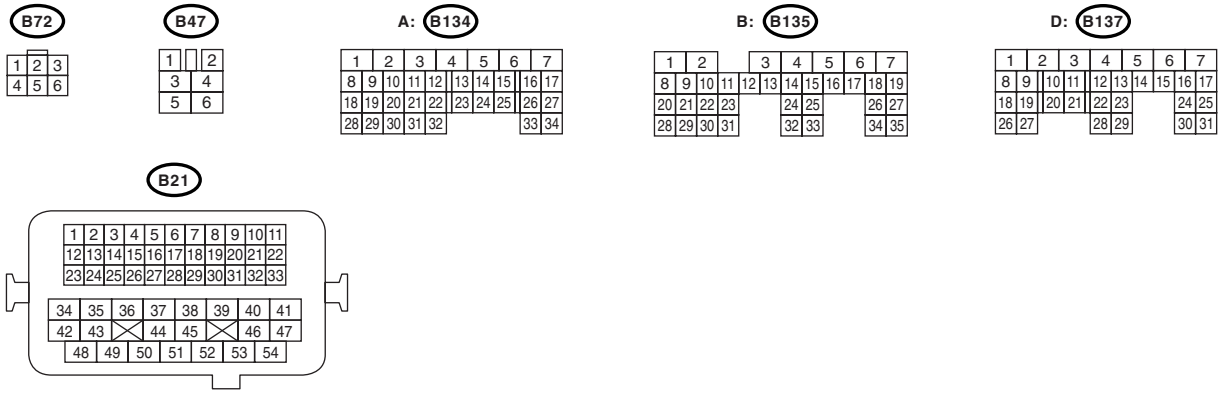

EN-03162

	Step	Check	Yes	No
1	**CHECK MAIN RELAY.** 1) Turn the ignition switch to OFF. 2) Remove the main relay. 3) Connect the battery to main relay terminals No. 1 and No. 2. 4) Measure the resistance between main relay terminals. ***Terminals*** ***No. 3 — No. 5:*** ***No. 4 — No. 6:***	Is the resistance less than 10 Ω?	Go to step **2.**	Replace the main relay.
2	**CHECK GROUND CIRCUIT FOR ECM.** 1) Disconnect the connector from ECM. 2) Measure the resistance of harness between ECM and chassis ground. ***Connector & terminal*** ***(B134) No. 6 — Chassis ground:*** ***(B134) No. 7 — Chassis ground:*** ***(B135) No. 1 — Chassis ground:*** ***(B135) No. 4 — Chassis ground:*** ***(B135) No. 12 — Chassis ground:*** ***(B137) No. 1 — Chassis ground:*** ***(B137) No. 2 — Chassis ground:*** ***(B137) No. 3 — Chassis ground:*** ***(B137) No. 7 — Chassis ground:***	Is the resistance less than 5 Ω?	Go to step **3.**	Repair the open circuit in harness between ECM connector and engine grounding terminal.
3	**CHECK INPUT VOLTAGE OF ECM.** Measure the voltage between ECM connector and chassis ground. ***Connector & terminal*** ***(B135) No. 19 (+) — Chassis ground (−):***	Is the voltage more than 10 V?	Go to step **4.**	Repair the open or ground short circuit of power supply circuit.
4	**CHECK INPUT VOLTAGE OF ECM.** 1) Turn the ignition switch to ON. 2) Measure the voltage between ECM connector and chassis ground. ***Connector & terminal*** ***(B137) No. 14 (+) — Chassis ground (−):***	Is the voltage more than 10 V?	Go to step **5.**	Repair the open or ground short circuit of power supply circuit.
5	**CHECK INPUT VOLTAGE OF MAIN RELAY.** Measure the voltage between main relay connector and chassis ground. ***Connector & terminal*** ***(B47) No. 2 (+) — Chassis ground (−):*** ***(B47) No. 5 (+) — Chassis ground (−):*** ***(B47) No. 6 (+) — Chassis ground (−):***	Is the voltage more than 10 V?	Go to step **6.**	Repair the open or ground short circuit in harness of power supply circuit.
6	**CHECK INPUT VOLTAGE OF ECM.** 1) Connect the main relay connector. 2) Turn the ignition switch to ON. 3) Measure the voltage between ECM connector and chassis ground. ***Connector & terminal*** ***(B135) No. 5 (+) — Chassis ground (−):*** ***(B135) No. 6 (+) — Chassis ground (−):***	Is the voltage more than 10 V?	Check ignition control system. <Ref. to EN(H4DOTC)(diag)-64, IGNITION CONTROL SYSTEM, Diagnostics for Engine Starting Failure.>	Repair the open or ground short circuit in harness between ECM connector and main relay connector.

D: IGNITION CONTROL SYSTEM

CAUTION:
After repair or replacement of faulty parts, conduct Clear Memory Mode <Ref. to EN(H4DOTC)(diag)-45, OPERATION, Clear Memory Mode.> and Inspection Mode <Ref. to EN(H4DOTC)(diag)-36, PROCEDURE, Inspection Mode.>.

WIRING DIAGRAM:

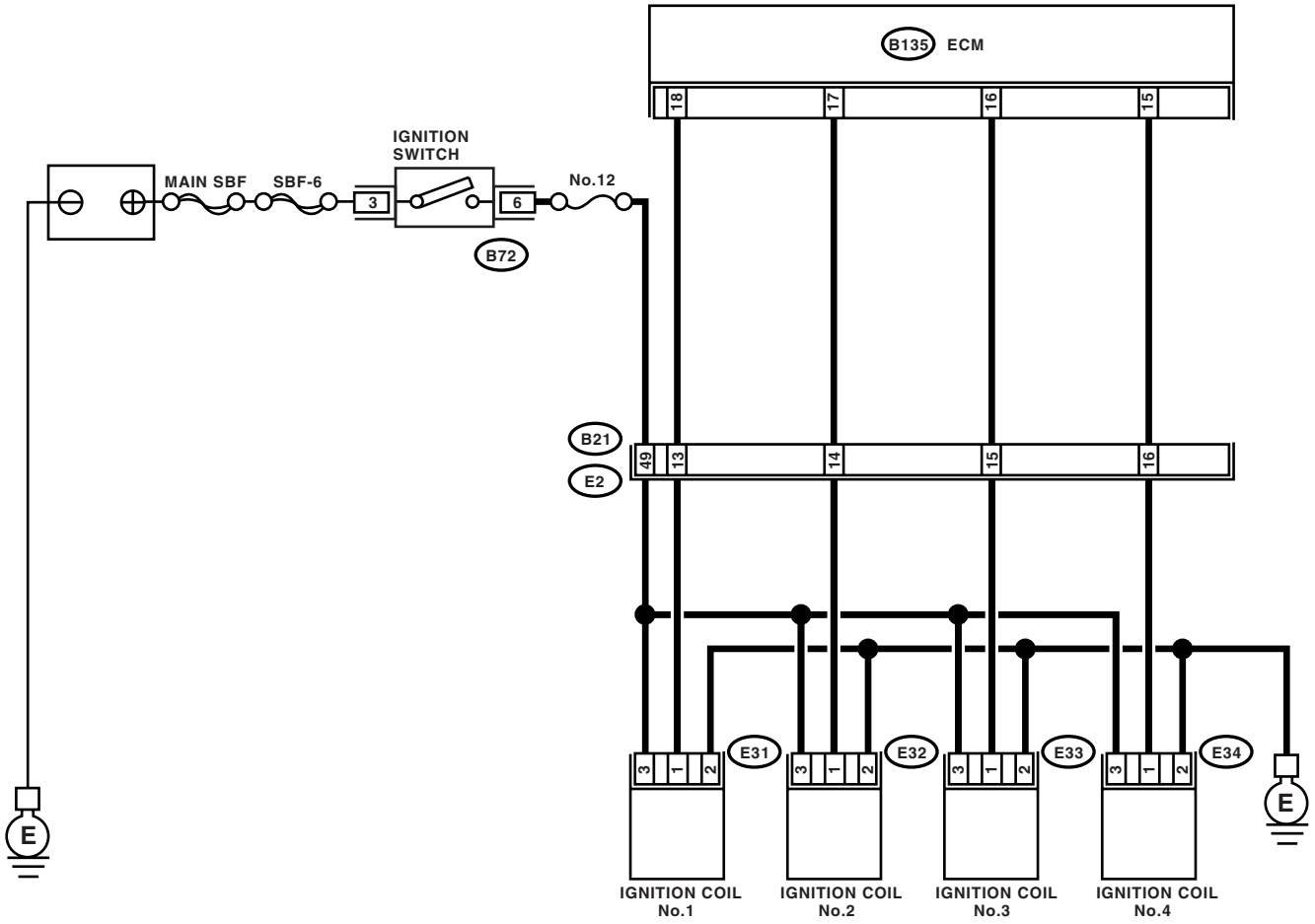

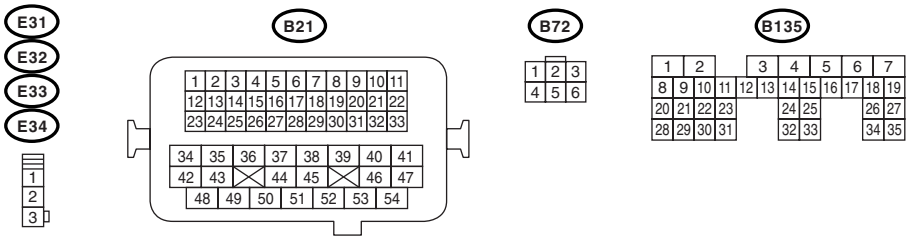

EN-03163

	Step	Check	Yes	No
1	**CHECK SPARK PLUG CONDITION.** 1) Remove the spark plug. <Ref. to IG(H4DOTC)-4, REMOVAL, Spark Plug.> 2) Check the spark plug condition. <Ref. to IG(H4DOTC)-5, INSPECTION, Spark Plug.>	Is the spark plug's status OK?	Go to step **2.**	Replace the spark plug.
2	**INSPECTION FOR SPARK OF IGNITION SYSTEM.** 1) Connect the spark plug to ignition coil. 2) Release the fuel pressure. <Ref. to FU(H4DOTC)-44, RELEASING OF FUEL PRESSURE, PROCEDURE, Fuel.> 3) Contact the spark plug's thread portion on engine. 4) While the throttle valve is opening fully, crank the engine to check that spark occurs at each cylinder.	Does spark occur at each cylinder?	Check fuel pump system. <Ref. to EN(H4DOTC)(diag)-67, FUEL PUMP CIRCUIT, Diagnostics for Engine Starting Failure.>	Go to step **3.**
3	**CHECK POWER SUPPLY CIRCUIT FOR IGNITION COIL AND IGNITOR ASSEMBLY.** 1) Turn the ignition switch to OFF. 2) Disconnect the connector from ignition coil and ignitor assembly. 3) Turn the ignition switch to ON. 4) Measure the power supply voltage between ignition coil and ignitor assembly connector and engine ground. ***Connector & terminal*** ***(E31) No. 3 (+) — Engine ground (–):*** ***(E32) No. 3 (+) — Engine ground (–):*** ***(E33) No. 3 (+) — Engine ground (–):*** ***(E34) No. 3 (+) — Engine ground (–):***	Is the voltage more than 10 V?	Go to step **4.**	Repair the harness and connector. NOTE: In this case, repair the following: • Open circuit in harness between ignition coil and ignitor assembly, and ignition switch connector • Poor contact in coupling connector
4	**CHECK HARNESS OF IGNITION COIL AND IGNITOR ASSEMBLY GROUND CIRCUIT.** 1) Turn the ignition switch to OFF. 2) Measure the resistance between ignition coil and ignitor assembly connector and engine ground. ***Connector & terminal*** ***(E31) No. 2 — Engine ground:*** ***(E32) No. 2 — Engine ground:*** ***(E33) No. 2 — Engine ground:*** ***(E34) No. 2 — Engine ground:***	Is the resistance less than 5 Ω?	Go to step **5.**	Repair the harness and connector. NOTE: In this case, repair the following: • Open circuit in harness between ignition coil and ignitor assembly connector and engine grounding terminal
5	**CHECK HARNESS BETWEEN ECM AND IGNITION COIL AND IGNITOR ASSEMBLY CONNECTOR.** 1) Turn the ignition switch to OFF. 2) Disconnect the connector from ECM. 3) Disconnect the connector from ignition coil and ignitor assembly. 4) Measure the resistance of harness between ECM and ignition coil and ignitor assembly connector. ***Connector & terminal*** ***(B135) No. 15 — (E34) No. 1:*** ***(B135) No. 16 — (E33) No. 1:*** ***(B135) No. 17 — (E32) No. 1:*** ***(B135) No. 18 — (E31) No. 1:***	Is the resistance less than 1 Ω?	Go to step **6.**	Repair the harness and connector. NOTE: In this case, repair the following: • Open circuit in harness between ECM and ignition coil and ignitor assembly connector • Poor contact in coupling connector

	Step	Check	Yes	No
6	**CHECK HARNESS BETWEEN ECM AND IGNITION COIL AND IGNITOR ASSEMBLY CONNECTOR.** Measure the resistance of harness between ECM and engine ground. ***Connector & terminal*** ***(B135) No. 15 — Engine ground:*** ***(B135) No. 16 — Engine ground:*** ***(B135) No. 17 — Engine ground:*** ***(B135) No. 18 — Engine ground:***	Is the resistance more than 1 MΩ?	Go to step **7.**	Repair the ground short circuit in harness between ECM and ignition coil and ignitor assembly connector.
7	**CHECK POOR CONTACT.** Check poor contact in ECM connector.	Is the poor contact in ECM connector?	Repair the poor contact in ECM connector.	Replace the ignition coil and ignitor assembly.

E: FUEL PUMP CIRCUIT

CAUTION:
After repair or replacement of faulty parts, conduct Clear Memory Mode <Ref. to EN(H4DOTC)(diag)-45, OPERATION, Clear Memory Mode.> and Inspection Mode <Ref. to EN(H4DOTC)(diag)-36, PROCEDURE, Inspection Mode.>.

WIRING DIAGRAM:

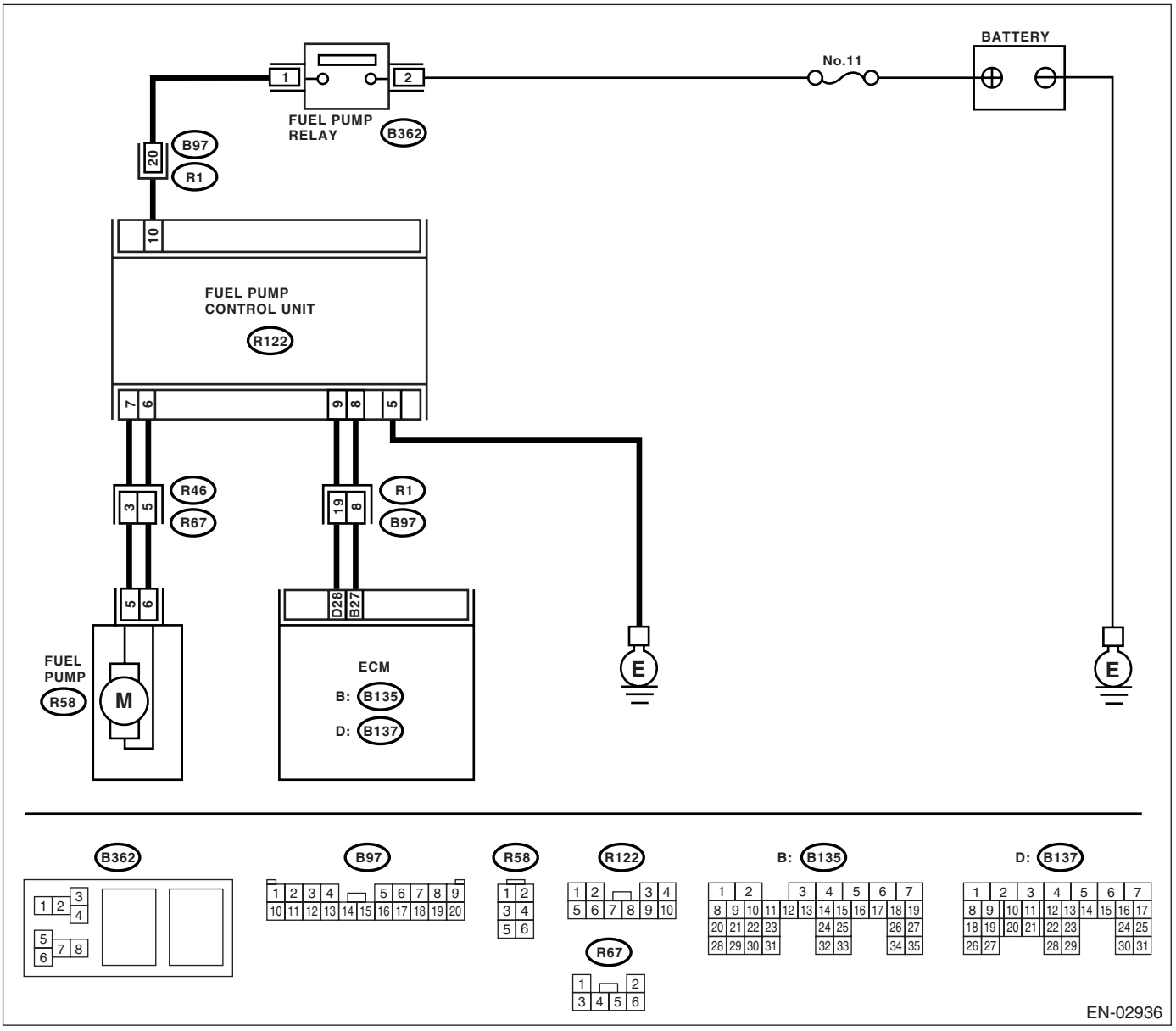

	Step	Check	Yes	No
1	**CHECK OPERATING SOUND OF FUEL PUMP.** Make sure that fuel pump is in operation for 2 seconds when turning the ignition switch to ON. NOTE: Fuel pump operation can also be executed using Subaru Select Monitor. Refer to “Compulsory Valve Operation Check Mode” for procedures. <Ref. to EN(H4DOTC)(diag)-46, Compulsory Valve Operation Check Mode.>	Does the fuel pump produce operating sound?	Check the fuel injector circuit. <Ref. to EN(H4DOTC)(diag)-69, FUEL INJECTOR CIRCUIT, Diagnostics for Engine Starting Failure.>	Display DTC. <Ref. to EN(H4DOTC)(diag)-35, OPERATION, Read Diagnostic Trouble Code (DTC).>

F: FUEL INJECTOR CIRCUIT

CAUTION:
- **Check or repair only faulty parts.**
- **After repair or replacement of faulty parts, conduct Clear Memory Mode <Ref. to EN(H4DOTC)(diag)-45, OPERATION, Clear Memory Mode.> and Inspection Mode <Ref. to EN(H4DOTC)(diag)-36, PROCEDURE, Inspection Mode.>.**

WIRING DIAGRAM:

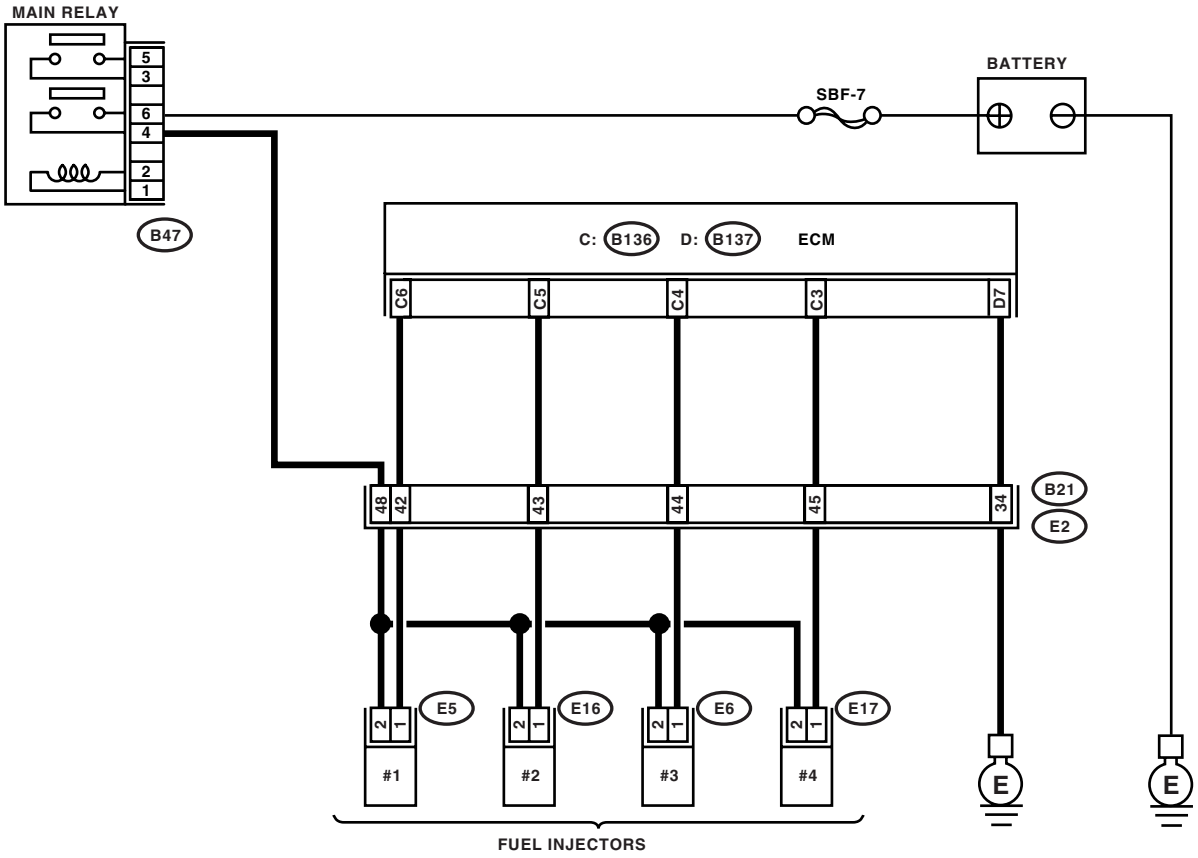

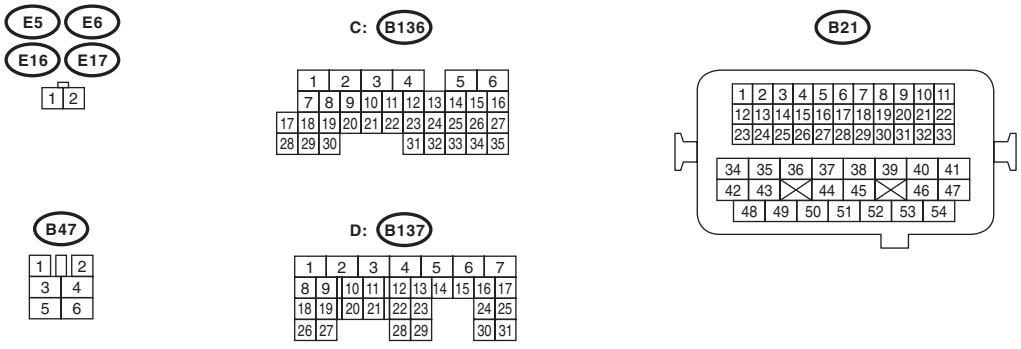

EN-03164

Diagnostics for Engine Starting Failure

	Step	Check	Yes	No
1	**CHECK OPERATION OF EACH FUEL INJECTOR.** While cranking the engine, check that each fuel injector emits operating sound. Use a sound scope or attach a screwdriver to the injector for this check.	Does the fuel pump produce operating sound?	Check the fuel pressure. <Ref. to ME(H4DOTC)-25, INSPECTION, Fuel Pressure.>	Go to step **2.**
2	**CHECK POWER SUPPLY TO EACH FUEL INJECTOR.** 1) Turn the ignition switch to OFF. 2) Disconnect the connector from fuel injector. 3) Turn the ignition switch to ON. 4) Measure the power supply voltage between fuel injector terminal and engine ground. ***Connector & terminal*** ***#1 (E5) No. 2 (+) — Engine ground (−):*** ***#2 (E16) No. 2 (+) — Engine ground (−):*** ***#3 (E6) No. 2 (+) — Engine ground (−):*** ***#4 (E17) No. 2 (+) — Engine ground (−):***	Is the voltage more than 10 V?	Go to step **3.**	Repair the harness and connector. NOTE: In this case, repair the following: • Open circuit in harness between main relay and fuel injector connector • Poor contact in main relay connector • Poor contact in coupling connector • Poor contact in fuel injector connector
3	**CHECK HARNESS BETWEEN ECM AND FUEL INJECTOR CONNECTOR.** 1) Disconnect the connector from ECM. 2) Measure the resistance of harness between ECM and fuel injector connector. ***Connector & terminal*** ***(B136) No. 6 — (E5) No. 1:*** ***(B136) No. 5 — (E16) No. 1:*** ***(B136) No. 4 — (E6) No. 1:*** ***(B136) No. 3 — (E17) No. 1:***	Is the resistance less than 1 Ω?	Go to step **4.**	Repair the harness and connector. NOTE: In this case, repair the following: • Open circuit in harness between ECM and fuel injector connector • Poor contact in coupling connector
4	**CHECK HARNESS BETWEEN ECM AND FUEL INJECTOR CONNECTOR.** Measure the resistance of harness between ECM and chassis ground. ***Connector & terminal*** ***(B136) No. 6 — Chassis ground:*** ***(B136) No. 5 — Chassis ground:*** ***(B136) No. 4 — Chassis ground:*** ***(B136) No. 3 — Chassis ground:***	Is the resistance more than 1 MΩ?	Go to step **5.**	Repair the ground short circuit in harness between ECM and fuel injector connector.
5	**CHECK EACH FUEL INJECTOR.** 1) Turn the ignition switch to OFF. 2) Measure the resistance between each fuel injector terminals. ***Terminals*** ***No. 1 — No. 2:***	Is the resistance 5 — 20 Ω?	Go to step **6.**	Replace the faulty fuel injector.
6	**CHECK POOR CONTACT.** Check poor contact in ECM connector.	Is the poor contact in ECM connector?	Repair the poor contact in ECM connector.	Inspection using “General Diagnostic Table” <Ref. to EN(H4DOTC)(diag)-331, INSPECTION, General Diagnostic Table.>

17.List of Diagnostic Trouble Code (DTC)

A: LIST

DTC	Item	Index
P0011	Intake Camshaft Position Timing - Over-Advanced (Bank 1)	<Ref. to EN(H4DOTC)(diag)-78, DTC P0011 INTAKE CAMSHAFT POSITION TIMING - OVER-ADVANCED (BANK 1), Diagnostic Procedure with Diagnostic Trouble Code (DTC).>
P0021	Intake Camshaft Position Timing - Over-Advanced (Bank 2)	<Ref. to EN(H4DOTC)(diag)-79, DTC P0021 INTAKE CAMSHAFT POSITION TIMING - OVER-ADVANCED (BANK 2), Diagnostic Procedure with Diagnostic Trouble Code (DTC).>
P0030	HO2S Heater Control Circuit (Bank 1 Sensor 1)	<Ref. to EN(H4DOTC)(diag)-80, DTC P0030 HO2S HEATER CONTROL CIRCUIT (BANK 1 SENSOR 1), Diagnostic Procedure with Diagnostic Trouble Code (DTC).>
P0031	HO2S Heater Control Circuit Low (Bank 1 Sensor 1)	<Ref. to EN(H4DOTC)(diag)-82, DTC P0031 HO2S HEATER CONTROL CIRCUIT LOW (BANK 1 SENSOR 1), Diagnostic Procedure with Diagnostic Trouble Code (DTC).>
P0032	HO2S Heater Control Circuit High (Bank 1 Sensor 1)	<Ref. to EN(H4DOTC)(diag)-84, DTC P0032 HO2S HEATER CONTROL CIRCUIT HIGH (BANK 1 SENSOR 1), Diagnostic Procedure with Diagnostic Trouble Code (DTC).>
P0037	HO2S Heater Control Circuit Low (Bank 1 Sensor 2)	<Ref. to EN(H4DOTC)(diag)-86, DTC P0037 HO2S HEATER CONTROL CIRCUIT LOW (BANK 1 SENSOR 2), Diagnostic Procedure with Diagnostic Trouble Code (DTC).>
P0038	HO2S Heater Control Circuit High (Bank 1 Sensor 2)	<Ref. to EN(H4DOTC)(diag)-89, DTC P0038 HO2S HEATER CONTROL CIRCUIT HIGH (BANK 1 SENSOR 2), Diagnostic Procedure with Diagnostic Trouble Code (DTC).>
P0068	MAP/MAF - Throttle Position Correlation	<Ref. to EN(H4DOTC)(diag)-91, DTC P0068 MAP/MAF - THROTTLE POSITION CORRELATION, Diagnostic Procedure with Diagnostic Trouble Code (DTC).>
P0101	Mass or Volume Air Flow Circuit Range/Performance	<Ref. to EN(H4DOTC)(diag)-93, DTC P0101 MASS OR VOLUME AIR FLOW CIRCUIT RANGE/PERFORMANCE, Diagnostic Procedure with Diagnostic Trouble Code (DTC).>
P0102	Mass or Volume Air Flow Circuit Low Input	<Ref. to EN(H4DOTC)(diag)-95, DTC P0102 MASS OR VOLUME AIR FLOW CIRCUIT LOW INPUT, Diagnostic Procedure with Diagnostic Trouble Code (DTC).>
P0103	Mass or Volume Air Flow Circuit High Input	<Ref. to EN(H4DOTC)(diag)-98, DTC P0103 MASS OR VOLUME AIR FLOW CIRCUIT HIGH INPUT, Diagnostic Procedure with Diagnostic Trouble Code (DTC).>
P0107	Manifold Absolute Pressure/Barometric Pressure Circuit Low Input	<Ref. to EN(H4DOTC)(diag)-100, DTC P0107 MANIFOLD ABSOLUTE PRESSURE/BAROMETRIC PRESSURE CIRCUIT LOW INPUT, Diagnostic Procedure with Diagnostic Trouble Code (DTC).>
P0108	Manifold Absolute Pressure/Barometric Pressure Circuit High Input	<Ref. to EN(H4DOTC)(diag)-102, DTC P0108 MANIFOLD ABSOLUTE PRESSURE/BAROMETRIC PRESSURE CIRCUIT HIGH INPUT, Diagnostic Procedure with Diagnostic Trouble Code (DTC).>
P0111	Intake Air Temperature Circuit Range/Performance	<Ref. to EN(H4DOTC)(diag)-104, DTC P0111 INTAKE AIR TEMPERATURE CIRCUIT RANGE/PERFORMANCE, Diagnostic Procedure with Diagnostic Trouble Code (DTC).>
P0112	Intake Air Temperature Circuit Low Input	<Ref. to EN(H4DOTC)(diag)-106, DTC P0112 INTAKE AIR TEMPERATURE CIRCUIT LOW INPUT, Diagnostic Procedure with Diagnostic Trouble Code (DTC).>
P0113	Intake Air Temperature Circuit High Input	<Ref. to EN(H4DOTC)(diag)-108, DTC P0113 INTAKE AIR TEMPERATURE CIRCUIT HIGH INPUT, Diagnostic Procedure with Diagnostic Trouble Code (DTC).>
P0117	Engine Coolant Temperature Circuit Low Input	<Ref. to EN(H4DOTC)(diag)-111, DTC P0117 ENGINE COOLANT TEMPERATURE CIRCUIT LOW INPUT, Diagnostic Procedure with Diagnostic Trouble Code (DTC).>
P0118	Engine Coolant Temperature Circuit High Input	<Ref. to EN(H4DOTC)(diag)-113, DTC P0118 ENGINE COOLANT TEMPERATURE CIRCUIT HIGH INPUT, Diagnostic Procedure with Diagnostic Trouble Code (DTC).>

DTC	Item	Index
P0122	Throttle/Pedal Position Sensor/ Switch “A” Circuit Low Input	<Ref. to EN(H4DOTC)(diag)-115, DTC P0122 THROTTLE/PEDAL POSITION SENSOR/SWITCH “A” CIRCUIT LOW INPUT, Diagnostic Procedure with Diagnostic Trouble Code (DTC).>
P0123	Throttle/Pedal Position Sensor/ Switch “A” Circuit High Input	<Ref. to EN(H4DOTC)(diag)-118, DTC P0123 THROTTLE/PEDAL POSITION SENSOR/SWITCH “A” CIRCUIT HIGH INPUT, Diagnostic Procedure with Diagnostic Trouble Code (DTC).>
P0125	Insufficient Coolant Temperature for Closed Loop Fuel Control	<Ref. to EN(H4DOTC)(diag)-121, DTC P0125 INSUFFICIENT ENGINE COOLANT TEMPERATURE FOR CLOSED LOOP FUEL CONTROL, Diagnostic Procedure with Diagnostic Trouble Code (DTC).>
P0126	Insufficient Coolant Temperature for Stable Operation	<Ref. to EN(H4DOTC)(diag)-123, DTC P0126 INSUFFICIENT ENGINE COOLANT TEMPERATURE FOR STABLE OPERATION, Diagnostic Procedure with Diagnostic Trouble Code (DTC).>
P0128	Coolant Thermostat (Coolant Temperature Below Thermostat Regulating Temperature)	<Ref. to EN(H4DOTC)(diag)-125, DTC P0128 COOLANT THERMOSTAT (ENGINE COOLANT TEMPERATURE BELOW THERMOSTAT REGULATING TEMPERATURE), Diagnostic Procedure with Diagnostic Trouble Code (DTC).>
P0131	O2 Sensor Circuit Low Voltage (Bank 1 Sensor 1)	<Ref. to EN(H4DOTC)(diag)-126, DTC P0131 O2 SENSOR CIRCUIT LOW VOLTAGE (BANK 1 SENSOR 1), Diagnostic Procedure with Diagnostic Trouble Code (DTC).>
P0132	O2 Sensor Circuit High Voltage (Bank 1 Sensor 1)	<Ref. to EN(H4DOTC)(diag)-128, DTC P0132 O2 SENSOR CIRCUIT HIGH VOLTAGE (BANK 1 SENSOR 1), Diagnostic Procedure with Diagnostic Trouble Code (DTC).>
P0133	O2 Sensor Circuit Slow Response (Bank 1 Sensor 1)	<Ref. to EN(H4DOTC)(diag)-130, DTC P0133 O2 SENSOR CIRCUIT SLOW RESPONSE (BANK 1 SENSOR 1), Diagnostic Procedure with Diagnostic Trouble Code (DTC).>
P0134	O2 Sensor Circuit No Activity Detected (Bank 1 Sensor 1)	<Ref. to EN(H4DOTC)(diag)-132, DTC P0134 O2 SENSOR CIRCUIT NO ACTIVITY DETECTED (BANK 1 SENSOR 1), Diagnostic Procedure with Diagnostic Trouble Code (DTC).>
P0137	O2 Sensor Circuit Low Voltage (Bank 1 Sensor 2)	<Ref. to EN(H4DOTC)(diag)-134, DTC P0137 O2 SENSOR CIRCUIT LOW VOLTAGE (BANK 1 SENSOR 2), Diagnostic Procedure with Diagnostic Trouble Code (DTC).>
P0138	O2 Sensor Circuit High Voltage (Bank 1 Sensor 2)	<Ref. to EN(H4DOTC)(diag)-137, DTC P0138 O2 SENSOR CIRCUIT HIGH VOLTAGE (BANK 1 SENSOR 2), Diagnostic Procedure with Diagnostic Trouble Code (DTC).>
P0139	O2 Sensor Circuit Slow Response (Bank 1 Sensor 2)	<Ref. to EN(H4DOTC)(diag)-140, DTC P0139 O2 SENSOR CIRCUIT SLOW RESPONSE (BANK 1 SENSOR 2), Diagnostic Procedure with Diagnostic Trouble Code (DTC).>
P0171	System too Lean (Bank 1)	<Ref. to EN(H4DOTC)(diag)-141, DTC P0171 SYSTEM TOO LEAN (BANK 1), Diagnostic Procedure with Diagnostic Trouble Code (DTC).>
P0172	System too Rich (Bank 1)	<Ref. to EN(H4DOTC)(diag)-142, DTC P0172 SYSTEM TOO RICH (BANK 1), Diagnostic Procedure with Diagnostic Trouble Code (DTC).>
P0181	Fuel Temperature Sensor “A” Circuit Range/Performance	<Ref. to EN(H4DOTC)(diag)-144, DTC P0181 FUEL TEMPERATURE SENSOR “A” CIRCUIT RANGE/PERFORMANCE, Diagnostic Procedure with Diagnostic Trouble Code (DTC).>
P0182	Fuel Temperature Sensor “A” Circuit Low Input	<Ref. to EN(H4DOTC)(diag)-146, DTC P0182 FUEL TEMPERATURE SENSOR “A” CIRCUIT LOW INPUT, Diagnostic Procedure with Diagnostic Trouble Code (DTC).>
P0183	Fuel Temperature Sensor “A” Circuit High Input	<Ref. to EN(H4DOTC)(diag)-148, DTC P0183 FUEL TEMPERATURE SENSOR “A” CIRCUIT HIGH INPUT, Diagnostic Procedure with Diagnostic Trouble Code (DTC).>
P0222	Throttle/Pedal Position Sensor/ Switch “B” Circuit Low Input	<Ref. to EN(H4DOTC)(diag)-150, DTC P0222 THROTTLE/PEDAL POSITION SENSOR/SWITCH “B” CIRCUIT LOW INPUT, Diagnostic Procedure with Diagnostic Trouble Code (DTC).>
P0223	Throttle/Pedal Position Sensor/ Switch "B" Circuit High Input	<Ref. to EN(H4DOTC)(diag)-153, DTC P0223 THROTTLE/PEDAL POSITION SENSOR/SWITCH “B” CIRCUIT HIGH INPUT, Diagnostic Procedure with Diagnostic Trouble Code (DTC).>

DTC	Item	Index
P0230	Fuel Pump Primary Circuit	<Ref. to EN(H4DOTC)(diag)-156, DTC P0230 FUEL PUMP PRIMARY CIRCUIT, Diagnostic Procedure with Diagnostic Trouble Code (DTC).>
P0244	Turbo/Super Charger Wastegate Solenoid “A” Range/Performance	<Ref. to EN(H4DOTC)(diag)-159, DTC P0244 TURBO/SUPER CHARGER WASTEGATE SOLENOID “A” RANGE/PERFORMANCE, Diagnostic Procedure with Diagnostic Trouble Code (DTC).>
P0245	Turbo/Super Charger Wastegate Solenoid “A” Low	<Ref. to EN(H4DOTC)(diag)-161, DTC P0245 TURBO/SUPER CHARGER WASTEGATE SOLENOID “A” LOW, Diagnostic Procedure with Diagnostic Trouble Code (DTC).>
P0246	Turbo/Super Charger Wastegate Solenoid “A” High	<Ref. to EN(H4DOTC)(diag)-163, DTC P0246 TURBO/SUPER CHARGER WASTEGATE SOLENOID “A” HIGH, Diagnostic Procedure with Diagnostic Trouble Code (DTC).>
P0301	Cylinder 1 Misfire Detected	<Ref. to EN(H4DOTC)(diag)-165, DTC P0301 CYLINDER 1 MISFIRE DETECTED, Diagnostic Procedure with Diagnostic Trouble Code (DTC).>
P0302	Cylinder 2 Misfire Detected	<Ref. to EN(H4DOTC)(diag)-165, DTC P0302 CYLINDER 2 MISFIRE DETECTED, Diagnostic Procedure with Diagnostic Trouble Code (DTC).>
P0303	Cylinder 3 Misfire Detected	<Ref. to EN(H4DOTC)(diag)-165, DTC P0303 CYLINDER 3 MISFIRE DETECTED, Diagnostic Procedure with Diagnostic Trouble Code (DTC).>
P0304	Cylinder 4 Misfire Detected	<Ref. to EN(H4DOTC)(diag)-165, DTC P0304 CYLINDER 4 MISFIRE DETECTED, Diagnostic Procedure with Diagnostic Trouble Code (DTC).>
P0327	Knock Sensor 1 Circuit Low Input (Bank 1 or Single Sensor)	<Ref. to EN(H4DOTC)(diag)-170, DTC P0327 KNOCK SENSOR 1 CIRCUIT LOW INPUT (BANK 1 OR SINGLE SENSOR), Diagnostic Procedure with Diagnostic Trouble Code (DTC).>
P0328	Knock Sensor 1 Circuit High Input (Bank 1 or Single Sensor)	<Ref. to EN(H4DOTC)(diag)-172, DTC P0328 KNOCK SENSOR 1 CIRCUIT HIGH INPUT (BANK 1 OR SINGLE SENSOR), Diagnostic Procedure with Diagnostic Trouble Code (DTC).>
P0335	Crankshaft Position Sensor “A” Circuit	<Ref. to EN(H4DOTC)(diag)-174, DTC P0335 CRANKSHAFT POSITION SENSOR “A” CIRCUIT, Diagnostic Procedure with Diagnostic Trouble Code (DTC).>
P0336	Crankshaft Position Sensor “A” Circuit Range/Performance	<Ref. to EN(H4DOTC)(diag)-176, DTC P0336 CRANKSHAFT POSITION SENSOR “A” CIRCUIT RANGE/PERFORMANCE, Diagnostic Procedure with Diagnostic Trouble Code (DTC).>
P0340	Camshaft Position Sensor “A” Circuit (Bank 1 or Single Sensor)	<Ref. to EN(H4DOTC)(diag)-178, DTC P0340 CAMSHAFT POSITION SENSOR “A” CIRCUIT (BANK 1 OR SINGLE SENSOR), Diagnostic Procedure with Diagnostic Trouble Code (DTC).>
P0345	Camshaft Position Sensor “A” Circuit (Bank 2)	<Ref. to EN(H4DOTC)(diag)-180, DTC P0345 CAMSHAFT POSITION SENSOR “A” CIRCUIT (BANK 2), Diagnostic Procedure with Diagnostic Trouble Code (DTC).>
P0420	Catalyst System Efficiency Below Threshold (Bank 1)	<Ref. to EN(H4DOTC)(diag)-182, DTC P0420 CATALYST SYSTEM EFFICIENCY BELOW THRESHOLD (BANK 1), Diagnostic Procedure with Diagnostic Trouble Code (DTC).>
P0442	Evaporative Emission Control System Leak Detected (small Leak)	<Ref. to EN(H4DOTC)(diag)-186, DTC P0442 EVAPORATIVE EMISSION CONTROL SYSTEM LEAK DETECTED (SMALL LEAK), Diagnostic Procedure with Diagnostic Trouble Code (DTC).>
P0447	Evaporative Emission Control System Vent Control Circuit Open	<Ref. to EN(H4DOTC)(diag)-190, DTC P0447 EVAPORATIVE EMISSION CONTROL SYSTEM VENT CONTROL CIRCUIT OPEN, Diagnostic Procedure with Diagnostic Trouble Code (DTC).>
P0448	Evaporative Emission Control System Vent Control Circuit Shorted	<Ref. to EN(H4DOTC)(diag)-193, DTC P0448 EVAPORATIVE EMISSION CONTROL SYSTEM VENT CONTROL CIRCUIT SHORTED, Diagnostic Procedure with Diagnostic Trouble Code (DTC).>
P0451	Evaporative Emission Control System Pressure Sensor Range/Performance	<Ref. to EN(H4DOTC)(diag)-195, DTC P0451 EVAPORATIVE EMISSION CONTROL SYSTEM PRESSURE SENSOR, Diagnostic Procedure with Diagnostic Trouble Code (DTC).>
P0452	Evaporative Emission Control System Pressure Sensor Low Input	<Ref. to EN(H4DOTC)(diag)-197, DTC P0452 EVAPORATIVE EMISSION CONTROL SYSTEM PRESSURE SENSOR LOW INPUT, Diagnostic Procedure with Diagnostic Trouble Code (DTC).>

DTC	Item	Index
P0453	Evaporative Emission Control System Pressure Sensor High Input	<Ref. to EN(H4DOTC)(diag)-200, DTC P0453 EVAPORATIVE EMISSION CONTROL SYSTEM PRESSURE SENSOR HIGH INPUT, Diagnostic Procedure with Diagnostic Trouble Code (DTC).>
P0456	Evaporative Emission Control System Leak Detected (Very Small Leak)	<Ref. to EN(H4DOTC)(diag)-203, DTC P0456 EVAPORATIVE EMISSION CONTROL SYSTEM LEAK DETECTED (VERY SMALL LEAK), Diagnostic Procedure with Diagnostic Trouble Code (DTC).>
P0457	Evaporative Emission Control System Leak Detected (Fuel Cap Loose/Off)	<Ref. to EN(H4DOTC)(diag)-206, DTC P0457 EVAPORATIVE EMISSION CONTROL SYSTEM LEAK DETECTED (FUEL CAP LOOSE/OFF), Diagnostic Procedure with Diagnostic Trouble Code (DTC).>
P0458	Evaporative Emission Control System Purge Control Valve Circuit Low	<Ref. to EN(H4DOTC)(diag)-210, DTC P0458 EVAPORATIVE EMISSION CONTROL SYSTEM PURGE CONTROL VALVE CIRCUIT LOW, Diagnostic Procedure with Diagnostic Trouble Code (DTC).>
P0459	Evaporative Emission Control System Purge Control Valve Circuit High	<Ref. to EN(H4DOTC)(diag)-212, DTC P0459 EVAPORATIVE EMISSION CONTROL SYSTEM PURGE CONTROL VALVE CIRCUIT HIGH, Diagnostic Procedure with Diagnostic Trouble Code (DTC).>
P0461	Fuel Level Sensor Circuit Range/Performance	<Ref. to EN(H4DOTC)(diag)-214, DTC P0461 FUEL LEVEL SENSOR CIRCUIT RANGE/PERFORMANCE, Diagnostic Procedure with Diagnostic Trouble Code (DTC).>
P0462	Fuel Level Sensor Circuit Low Input	<Ref. to EN(H4DOTC)(diag)-214, DTC P0462 FUEL LEVEL SENSOR CIRCUIT LOW INPUT, Diagnostic Procedure with Diagnostic Trouble Code (DTC).>
P0463	Fuel Level Sensor Circuit High Input	<Ref. to EN(H4DOTC)(diag)-215, DTC P0463 FUEL LEVEL SENSOR CIRCUIT HIGH INPUT, Diagnostic Procedure with Diagnostic Trouble Code (DTC).>
P0464	Fuel Level Sensor Circuit Intermittent	<Ref. to EN(H4DOTC)(diag)-215, DTC P0464 FUEL LEVEL SENSOR CIRCUIT INTERMITTENT, Diagnostic Procedure with Diagnostic Trouble Code (DTC).>
P0483	Cooling Fan Rationality Check	<Ref. to EN(H4DOTC)(diag)-216, DTC P0483 COOLING FAN RATIONALITY CHECK, Diagnostic Procedure with Diagnostic Trouble Code (DTC).>
P0500	Vehicle Speed Sensor	<Ref. to EN(H4DOTC)(diag)-216, DTC P0500 VEHICLE SPEED SENSOR, Diagnostic Procedure with Diagnostic Trouble Code (DTC).>
P0506	Idle Control System RPM Lower Than Expected	<Ref. to EN(H4DOTC)(diag)-217, DTC P0506 IDLE CONTROL SYSTEM RPM LOWER THAN EXPECTED, Diagnostic Procedure with Diagnostic Trouble Code (DTC).>
P0507	Idle Control System RPM Higher Than Expected	<Ref. to EN(H4DOTC)(diag)-219, DTC P0507 IDLE CONTROL SYSTEM RPM HIGHER THAN EXPECTED, Diagnostic Procedure with Diagnostic Trouble Code (DTC).>
P0512	Starter Request Circuit	<Ref. to EN(H4DOTC)(diag)-222, DTC P0512 STARTER REQUEST CIRCUIT, Diagnostic Procedure with Diagnostic Trouble Code (DTC).>
P0513	Incorrect Immobilizer Key	<Ref. to IM(diag)-17, DTC P0513 INCORRECT IMMOBILIZER KEY, Diagnostic Procedure with Diagnostic Trouble Code (DTC).>
P0519	Idle Control System Malfunction (Fail-Safe)	<Ref. to EN(H4DOTC)(diag)-223, DTC P0519 IDLE CONTROL SYSTEM MALFUNCTION (FAIL-SAFE), Diagnostic Procedure with Diagnostic Trouble Code (DTC).>
P0545	Exhaust Gas Temperature Sensor Circuit Low-Bank 1	<Ref. to EN(H4DOTC)(diag)-224, DTC P0545 EXHAUST GAS TEMPERATURE SENSOR CIRCUIT LOW-BANK 1, Diagnostic Procedure with Diagnostic Trouble Code (DTC).>
P0546	Exhaust Gas Temperature Sensor Circuit High-Bank 1	<Ref. to EN(H4DOTC)(diag)-226, DTC P0546 EXHAUST GAS TEMPERATURE SENSOR CIRCUIT HIGH-BANK 1, Diagnostic Procedure with Diagnostic Trouble Code (DTC).>
P0600	Serial Communication Link	<Ref. to EN(H4DOTC)(diag)-228, DTC P0600 SERIAL COMMUNICATION LINK, Diagnostic Procedure with Diagnostic Trouble Code (DTC).>
P0604	Internal Control Module Random Access Memory (RAM) Error	<Ref. to EN(H4DOTC)(diag)-228, DTC P0604 INTERNAL CONTROL MODULE RANDOM ACCESS MEMORY (RAM) ERROR, Diagnostic Procedure with Diagnostic Trouble Code (DTC).>

DTC	Item	Index
P0605	Internal Control Module Read Only Memory (ROM) Error	<Ref. to EN(H4DOTC)(diag)-228, DTC P0605 INTERNAL CONTROL MODULE READ ONLY MEMORY (ROM) ERROR, Diagnostic Procedure with Diagnostic Trouble Code (DTC).>
P0607	Control Module Performance	<Ref. to EN(H4DOTC)(diag)-228, DTC P0607 CONTROL MODULE PERFORMANCE, Diagnostic Procedure with Diagnostic Trouble Code (DTC).>
P0638	Throttle Actuator Control Range/Performance (Bank 1)	<Ref. to EN(H4DOTC)(diag)-230, DTC P0638 THROTTLE ACTUATOR CONTROL RANGE/PERFORMANCE (BANK 1), Diagnostic Procedure with Diagnostic Trouble Code (DTC).>
P0691	Cooling Fan 1 Control Circuit Low	<Ref. to EN(H4DOTC)(diag)-230, DTC P0691 COOLING FAN 1 CONTROL CIRCUIT LOW, Diagnostic Procedure with Diagnostic Trouble Code (DTC).>
P0692	Cooling Fan 1 Control Circuit High	<Ref. to EN(H4DOTC)(diag)-231, DTC P0692 COOLING FAN 1 CONTROL CIRCUIT HIGH, Diagnostic Procedure with Diagnostic Trouble Code (DTC).>
P0700	Transmission Control System (MIL Request)	<Ref. to EN(H4DOTC)(diag)-231, DTC P0700 TRANSMISSION CONTROL SYSTEM (MIL REQUEST), Diagnostic Procedure with Diagnostic Trouble Code (DTC).>
P0851	Neutral Switch Input Circuit Low	<Ref. to EN(H4DOTC)(diag)-231, DTC P0851 NEUTRAL SWITCH INPUT CIRCUIT LOW, Diagnostic Procedure with Diagnostic Trouble Code (DTC).>
P0852	Neutral Switch Input Circuit High	<Ref. to EN(H4DOTC)(diag)-231, DTC P0852 NEUTRAL SWITCH INPUT CIRCUIT HIGH, Diagnostic Procedure with Diagnostic Trouble Code (DTC).>
P1152	O2 Sensor Circuit Range/Performance (Low) (Bank1 Sensor1)	<Ref. to EN(H4DOTC)(diag)-232, DTC P1152 O2 SENSOR CIRCUIT RANGE/PERFORMANCE (LOW) (BANK1 SENSOR1), Diagnostic Procedure with Diagnostic Trouble Code (DTC).>
P1153	O2 Sensor Circuit Range/Performance (High) (Bank1 Sensor1)	<Ref. to EN(H4DOTC)(diag)-234, DTC P1153 O2 SENSOR CIRCUIT RANGE/PERFORMANCE (HIGH) (BANK1 SENSOR1), Diagnostic Procedure with Diagnostic Trouble Code (DTC).>
P1160	Return Spring Failure	<Ref. to EN(H4DOTC)(diag)-236, DTC P1160 RETURN SPRING FAILURE, Diagnostic Procedure with Diagnostic Trouble Code (DTC).>
P1301	Misfire Detected (High Temperature Exhaust Gas)	<Ref. to EN(H4DOTC)(diag)-237, DTC P1301 MISFIRE DETECTED (HIGH TEMPERATURE EXHAUST GAS), Diagnostic Procedure with Diagnostic Trouble Code (DTC).>
P1312	Exhaust Gas Temperature Sensor Malfunction	<Ref. to EN(H4DOTC)(diag)-238, DTC P1312 EXHAUST GAS TEMPERATURE SENSOR MALFUNCTION, Diagnostic Procedure with Diagnostic Trouble Code (DTC).>
P1400	Fuel Tank Pressure Control Solenoid Valve Circuit Low	<Ref. to EN(H4DOTC)(diag)-240, DTC P1400 FUEL TANK PRESSURE CONTROL SOLENOID VALVE CIRCUIT LOW, Diagnostic Procedure with Diagnostic Trouble Code (DTC).>
P1420	Fuel Tank Pressure Control Sol. Valve Circuit High	<Ref. to EN(H4DOTC)(diag)-242, DTC P1420 FUEL TANK PRESSURE CONTROL SOL. VALVE CIRCUIT HIGH, Diagnostic Procedure with Diagnostic Trouble Code (DTC).>
P1443	Vent Control Solenoid Valve Function Problem	<Ref. to EN(H4DOTC)(diag)-244, DTC P1443 VENT CONTROL SOLENOID VALVE FUNCTION PROBLEM, Diagnostic Procedure with Diagnostic Trouble Code (DTC).>
P1446	Fuel Tank Sensor Control Valve Circuit Low	<Ref. to EN(H4DOTC)(diag)-246, DTC P1446 FUEL TANK SENSOR CONTROL VALVE CIRCUIT LOW, Diagnostic Procedure with Diagnostic Trouble Code (DTC).>
P1447	Fuel Tank Sensor Control Valve Circuit High	<Ref. to EN(H4DOTC)(diag)-249, DTC P1447 FUEL TANK SENSOR CONTROL VALVE CIRCUIT HIGH, Diagnostic Procedure with Diagnostic Trouble Code (DTC).>
P1491	Positive Crankcase Ventilation (Blow-by) Function Problem	<Ref. to EN(H4DOTC)(diag)-251, DTC P1491 POSITIVE CRANKCASE VENTILATION (BLOW-BY) FUNCTION PROBLEM, Diagnostic Procedure with Diagnostic Trouble Code (DTC).>
P1518	Starter Switch Circuit Low Input	<Ref. to EN(H4DOTC)(diag)-253, DTC P1518 STARTER SWITCH CIRCUIT LOW INPUT, Diagnostic Procedure with Diagnostic Trouble Code (DTC).>

DTC	Item	Index
P1544	Exhaust Gas Temperature Too High	<Ref. to EN(H4DOTC)(diag)-255, DTC P1544 EXHAUST GAS TEMPERATURE TOO HIGH, Diagnostic Procedure with Diagnostic Trouble Code (DTC).>
P1560	Back-Up Voltage Circuit Malfunction	<Ref. to EN(H4DOTC)(diag)-256, DTC P1560 BACK-UP VOLTAGE CIRCUIT MALFUNCTION, Diagnostic Procedure with Diagnostic Trouble Code (DTC).>
P1570	Antenna	<Ref. to IM(diag)-18, DTC P1570 ANTENNA, Diagnostic Procedure with Diagnostic Trouble Code (DTC).>
P1571	Reference Code Incompatibility	<Ref. to IM(diag)-20, DTC P1571 REFERENCE CODE INCOMPATIBILITY, Diagnostic Procedure with Diagnostic Trouble Code (DTC).>
P1572	IMM Circuit Failure (Except Antenna Circuit)	<Ref. to IM(diag)-21, DTC P1572 IMM CIRCUIT FAILURE (EXCEPT ANTENNA CIRCUIT), Diagnostic Procedure with Diagnostic Trouble Code (DTC).>
P1574	Key Communication Failure	<Ref. to IM(diag)-24, DTC P1574 KEY COMMUNICATION FAILURE, Diagnostic Procedure with Diagnostic Trouble Code (DTC).>
P1576	EGI Control Module EEPROM	<Ref. to IM(diag)-24, DTC P1576 EGI CONTROL MODULE EEPROM, Diagnostic Procedure with Diagnostic Trouble Code (DTC).>
P1577	IMM Control Module EEPROM	<Ref. to IM(diag)-24, DTC P1577 IMM CONTROL MODULE EEPROM, Diagnostic Procedure with Diagnostic Trouble Code (DTC).>
P1578	Meter Failure	<Ref. to IM(diag)-25, DTC P1578 METER FAILURE, Diagnostic Procedure with Diagnostic Trouble Code (DTC).>
P2004	Intake Manifold Runner Control Stuck Open (Bank 1)	<Ref. to EN(H4DOTC)(diag)-258, DTC P2004 INTAKE MANIFOLD RUNNER CONTROL STUCK OPEN (BANK 1), Diagnostic Procedure with Diagnostic Trouble Code (DTC).>
P2005	Intake Manifold Runner Control Stuck Open (Bank 2)	<Ref. to EN(H4DOTC)(diag)-259, DTC P2005 INTAKE MANIFOLD RUNNER CONTROL STUCK OPEN (BANK 2), Diagnostic Procedure with Diagnostic Trouble Code (DTC).>
P2006	Intake Manifold Runner Control Stuck Closed (Bank 1)	<Ref. to EN(H4DOTC)(diag)-259, DTC P2006 INTAKE MANIFOLD RUNNER CONTROL STUCK CLOSED (BANK 1), Diagnostic Procedure with Diagnostic Trouble Code (DTC).>
P2007	Intake Manifold Runner Control Stuck Closed (Bank 2)	<Ref. to EN(H4DOTC)(diag)-260, DTC P2007 INTAKE MANIFOLD RUNNER CONTROL STUCK CLOSED (BANK 2), Diagnostic Procedure with Diagnostic Trouble Code (DTC).>
P2008	Intake Manifold Runner Control Circuit / Open (Bank 1)	<Ref. to EN(H4DOTC)(diag)-261, DTC P2008 INTAKE MANIFOLD RUNNER CONTROL CIRCUIT / OPEN (BANK 1), Diagnostic Procedure with Diagnostic Trouble Code (DTC).>
P2009	Intake Manifold Runner Control Circuit Low (Bank 1)	<Ref. to EN(H4DOTC)(diag)-263, DTC P2009 INTAKE MANIFOLD RUNNER CONTROL CIRCUIT LOW (BANK 1), Diagnostic Procedure with Diagnostic Trouble Code (DTC).>
P2011	Intake Manifold Runner Control Circuit / Open (Bank 2)	<Ref. to EN(H4DOTC)(diag)-265, DTC P2011 INTAKE MANIFOLD RUNNER CONTROL CIRCUIT / OPEN (BANK 2), Diagnostic Procedure with Diagnostic Trouble Code (DTC).>
P2012	Intake Manifold Runner Control Circuit Low (Bank 2)	<Ref. to EN(H4DOTC)(diag)-267, DTC P2012 INTAKE MANIFOLD RUNNER CONTROL CIRCUIT LOW (BANK 2), Diagnostic Procedure with Diagnostic Trouble Code (DTC).>
P2016	Intake Manifold Runner Position Sensor/Switch Circuit Low (Bank 1)	<Ref. to EN(H4DOTC)(diag)-269, DTC P2016 INTAKE MANIFOLD RUNNER POSITION SENSOR / SWITCH CIRCUIT LOW (BANK 1), Diagnostic Procedure with Diagnostic Trouble Code (DTC).>
P2017	Intake Manifold Runner Position Sensor/Switch Circuit High (Bank 1)	<Ref. to EN(H4DOTC)(diag)-272, DTC P2017 INTAKE MANIFOLD RUNNER POSITION SENSOR / SWITCH CIRCUIT HIGH (BANK 1), Diagnostic Procedure with Diagnostic Trouble Code (DTC).>
P2021	Intake Manifold Runner Position Sensor/Switch Circuit Low (Bank 2)	<Ref. to EN(H4DOTC)(diag)-274, DTC P2021 INTAKE MANIFOLD RUNNER POSITION SENSOR / SWITCH CIRCUIT LOW (BANK 2), Diagnostic Procedure with Diagnostic Trouble Code (DTC).>
P2022	Intake Manifold Runner Position Sensor/Switch Circuit High (Bank 2)	<Ref. to EN(H4DOTC)(diag)-277, DTC P2022 INTAKE MANIFOLD RUNNER POSITION SENSOR / SWITCH CIRCUIT HIGH (BANK 2), Diagnostic Procedure with Diagnostic Trouble Code (DTC).>

DTC	Item	Index
P2088	OCV Solenoid Valve Signal A Circuit Open (Bank 1)	<Ref. to EN(H4DOTC)(diag)-279, DTC P2088 OCV SOLENOID VALVE SIGNAL A CIRCUIT OPEN (BANK 1), Diagnostic Procedure with Diagnostic Trouble Code (DTC).>
P2089	OCV Solenoid Valve Signal A Circuit Short (Bank 1)	<Ref. to EN(H4DOTC)(diag)-281, DTC P2089 OCV SOLENOID VALVE SIGNAL A CIRCUIT SHORT (BANK 1), Diagnostic Procedure with Diagnostic Trouble Code (DTC).>
P2092	OCV Solenoid Valve Signal A Circuit Open (Bank 2)	<Ref. to EN(H4DOTC)(diag)-283, DTC P2092 OCV SOLENOID VALVE SIGNAL A CIRCUIT OPEN (BANK 2), Diagnostic Procedure with Diagnostic Trouble Code (DTC).>
P2093	OCV Solenoid Valve Signal A Circuit Short (Bank 2)	<Ref. to EN(H4DOTC)(diag)-285, DTC P2093 OCV SOLENOID VALVE SIGNAL A CIRCUIT SHORT (BANK 2), Diagnostic Procedure with Diagnostic Trouble Code (DTC).>
P2096	Post Catalyst Fuel Trim System Too Lean Bank 1	<Ref. to EN(H4DOTC)(diag)-287, DTC P2096 POST CATALYST FUEL TRIM SYSTEM TOO LEAN BANK 1, Diagnostic Procedure with Diagnostic Trouble Code (DTC).>
P2097	Post Catalyst Fuel Trim System Too Rich Bank 1	<Ref. to EN(H4DOTC)(diag)-294, DTC P2097 POST CATALYST FUEL TRIM SYSTEM TOO RICH BANK 1, Diagnostic Procedure with Diagnostic Trouble Code (DTC).>
P2101	Throttle Actuator Control Motor Circuit Range/Performance	<Ref. to EN(H4DOTC)(diag)-300, DTC P2101 THROTTLE ACTUATOR CONTROL MOTOR CIRCUIT RANGE/PERFORMANCE, Diagnostic Procedure with Diagnostic Trouble Code (DTC).>
P2102	Throttle Actuator Control Motor Circuit Low	<Ref. to EN(H4DOTC)(diag)-306, DTC P2102 THROTTLE ACTUATOR CONTROL MOTOR CIRCUIT LOW, Diagnostic Procedure with Diagnostic Trouble Code (DTC).>
P2103	Throttle Actuator Control Motor Circuit High	<Ref. to EN(H4DOTC)(diag)-309, DTC P2103 THROTTLE ACTUATOR CONTROL MOTOR CIRCUIT HIGH, Diagnostic Procedure with Diagnostic Trouble Code (DTC).>
P2109	Throttle/Pedal Position Sensor A Minimum Stop Performance	<Ref. to EN(H4DOTC)(diag)-310, DTC P2109 THROTTLE/PEDAL POSITION SENSOR A MINIMUM STOP PERFORMANCE, Diagnostic Procedure with Diagnostic Trouble Code (DTC).>
P2122	Throttle/Pedal Position Sensor/ Switch “D” Circuit Low Input	<Ref. to EN(H4DOTC)(diag)-311, DTC P2122 THROTTLE/PEDAL POSITION SENSOR/SWITCH “D” CIRCUIT LOW INPUT, Diagnostic Procedure with Diagnostic Trouble Code (DTC).>
P2123	Throttle/Pedal Position Sensor/ Switch “D” Circuit High Input	<Ref. to EN(H4DOTC)(diag)-314, DTC P2123 THROTTLE/PEDAL POSITION SENSOR/SWITCH “D” CIRCUIT HIGH INPUT, Diagnostic Procedure with Diagnostic Trouble Code (DTC).>
P2127	Throttle/Pedal Position Sensor/ Switch “E” Circuit Low Input	<Ref. to EN(H4DOTC)(diag)-316, DTC P2127 THROTTLE/PEDAL POSITION SENSOR/SWITCH “E” CIRCUIT LOW INPUT, Diagnostic Procedure with Diagnostic Trouble Code (DTC).>
P2128	Throttle/Pedal Position Sensor/ Switch “E” Circuit High Input	<Ref. to EN(H4DOTC)(diag)-319, DTC P2128 THROTTLE/PEDAL POSITION SENSOR/SWITCH “E” CIRCUIT HIGH INPUT, Diagnostic Procedure with Diagnostic Trouble Code (DTC).>
P2135	Throttle/Pedal Position Sensor/ Switch “A”/“B” Voltage Rationality	<Ref. to EN(H4DOTC)(diag)-321, DTC P2135 THROTTLE/PEDAL POSITION SENSOR/SWITCH “A”/“B” VOLTAGE RATIONALITY, Diagnostic Procedure with Diagnostic Trouble Code (DTC).>
P2138	Throttle/Pedal Position Sensor/ Switch “D”/“E” Voltage Rationality	<Ref. to EN(H4DOTC)(diag)-326, DTC P2138 THROTTLE/PEDAL POSITION SENSOR/SWITCH “D”/“E” VOLTAGE RATIONALITY, Diagnostic Procedure with Diagnostic Trouble Code (DTC).>
P2227	Barometric Pressure Circuit Range/ Performance	<Ref. to EN(H4DOTC)(diag)-329, DTC P2227 BAROMETRIC PRESSURE CIRCUIT RANGE/PERFORMANCE, Diagnostic Procedure with Diagnostic Trouble Code (DTC).>
P2228	Barometric Pressure Circuit Low Input	<Ref. to EN(H4DOTC)(diag)-330, DTC P2228 BAROMETRIC PRESSURE CIRCUIT LOW INPUT, Diagnostic Procedure with Diagnostic Trouble Code (DTC).>
P2229	Barometric Pressure Circuit High Input	<Ref. to EN(H4DOTC)(diag)-330, DTC P2229 BAROMETRIC PRESSURE CIRCUIT HIGH INPUT, Diagnostic Procedure with Diagnostic Trouble Code (DTC).>

18.Diagnostic Procedure with Diagnostic Trouble Code (DTC)

A: DTC P0011 INTAKE CAMSHAFT POSITION TIMING - OVER-ADVANCED (BANK 1)

DTC DETECTING CONDITION:

- Two consecutive driving cycles with fault
- GENERAL DESCRIPTION <Ref. to GD(H4DOTC)-9, DTC P0011 INTAKE CAMSHAFT POSITION TIMING - OVER-ADVANCED (BANK 1), Diagnostic Trouble Code (DTC) Detecting Criteria.>

TROUBLE SYMPTOM:

- Engine stalls.
- Erroneous idling

CAUTION:
After repair or replacement of faulty parts, conduct Clear Memory Mode <Ref. to EN(H4DOTC)(diag)-45, OPERATION, Clear Memory Mode.> and Inspection Mode <Ref. to EN(H4DOTC)(diag)-36, PROCEDURE, Inspection Mode.>.

	Step	Check	Yes	No
1	**CHECK FOR ANY OTHER DTC ON DISPLAY.**	Is any other DTC displayed?	Inspect the relevant DTC using "List of Diagnostic Trouble Code (DTC)". <Ref. to EN(H4DOTC)(diag)-71, List of Diagnostic Trouble Code (DTC).>	Go to step **2.**
2	**CHECK CURRENT DATA.** 1) Start the engine and let it idle. 2) Inspect the VVT advance timing and OCV duty output using Subaru Select Monitor or general scan tool. NOTE: • Subaru Select Monitor For detailed operation procedure, refer to the "READ CURRENT DATA FOR ENGINE". <Ref. to EN(H4DOTC)(diag)-28, Subaru Select Monitor.> • General scan tool For detailed operation procedures, refer to the general scan tool instruction manual.	Is the VVT advance timing more than approx. 0°C and the OCV duty output more than approx. 10%?	Inspect the following items and repair or replace if necessary. • Engine oil (amount, contamination) • Oil pipe (clog) • Oil flow control solenoid valve (clog or contamination in oil passage, settling at spring, stuck at valve) • Intake camshaft (sludge, damage at camshaft) • Timing belt (timing mark aligning)	A temporary malfunction. Conduct the following to clean the oil passage. Replace the engine oil and idle the engine for 5 minutes, then replace the oil filter and engine oil.

B: DTC P0021 INTAKE CAMSHAFT POSITION TIMING - OVER-ADVANCED (BANK 2)

DTC DETECTING CONDITION:

- Two consecutive driving cycles with fault
- GENERAL DESCRIPTION <Ref. to GD(H4DOTC)-11, DTC P0021 INTAKE CAMSHAFT POSITION TIMING - OVER-ADVANCED (BANK 2), Diagnostic Trouble Code (DTC) Detecting Criteria.>

TROUBLE SYMPTOM:

- Engine stalls.
- Erroneous idling

CAUTION:
After repair or replacement of faulty parts, conduct Clear Memory Mode <Ref. to EN(H4DOTC)(diag)-45, OPERATION, Clear Memory Mode.> and Inspection Mode <Ref. to EN(H4DOTC)(diag)-36, PROCEDURE, Inspection Mode.>.

	Step	Check	Yes	No
1	**CHECK FOR ANY OTHER DTC ON DISPLAY.**	Is any other DTC displayed?	Inspect the relevant DTC using "List of Diagnostic Trouble Code (DTC)". <Ref. to EN(H4DOTC)(diag)-71, List of Diagnostic Trouble Code (DTC).>	Go to step **2.**
2	**CHECK CURRENT DATA.** 1) Start the engine and let it idle. 2) Inspect the VVT advance timing and OCV duty output using Subaru Select Monitor or general scan tool. NOTE: • Subaru Select Monitor For detailed operation procedure, refer to the "READ CURRENT DATA FOR ENGINE". <Ref. to EN(H4DOTC)(diag)-28, Subaru Select Monitor.> • General scan tool For detailed operation procedures, refer to the general scan tool instruction manual.	Is the VVT advance timing more than approx. 0°C and the OCV duty output more than approx. 10%?	Inspect the following items and repair or replace if necessary. • Engine oil (amount, contamination) • Oil pipe (clog) • Oil flow control solenoid valve (clog or contamination in oil passage, settling at spring, stuck at valve) • Intake camshaft (sludge, damage at camshaft) • Timing belt (timing mark aligning)	A temporary malfunction. Conduct the following to clean the oil passage. Replace the engine oil and idle the engine for 5 minutes, then replace the oil filter and engine oil.

C: DTC P0030 HO2S HEATER CONTROL CIRCUIT (BANK 1 SENSOR 1)

DTC DETECTING CONDITION:

- Two consecutive driving cycles with fault
- GENERAL DESCRIPTION <Ref. to GD(H4DOTC)-12, DTC P0030 HO2S HEATER CONTROL CIRCUIT (BANK 1 SENSOR 1), Diagnostic Trouble Code (DTC) Detecting Criteria.>

CAUTION:
After repair or replacement of faulty parts, conduct Clear Memory Mode <Ref. to EN(H4DOTC)(diag)-45, OPERATION, Clear Memory Mode.> and Inspection Mode <Ref. to EN(H4DOTC)(diag)-36, PROCEDURE, Inspection Mode.>.

WIRING DIAGRAM:

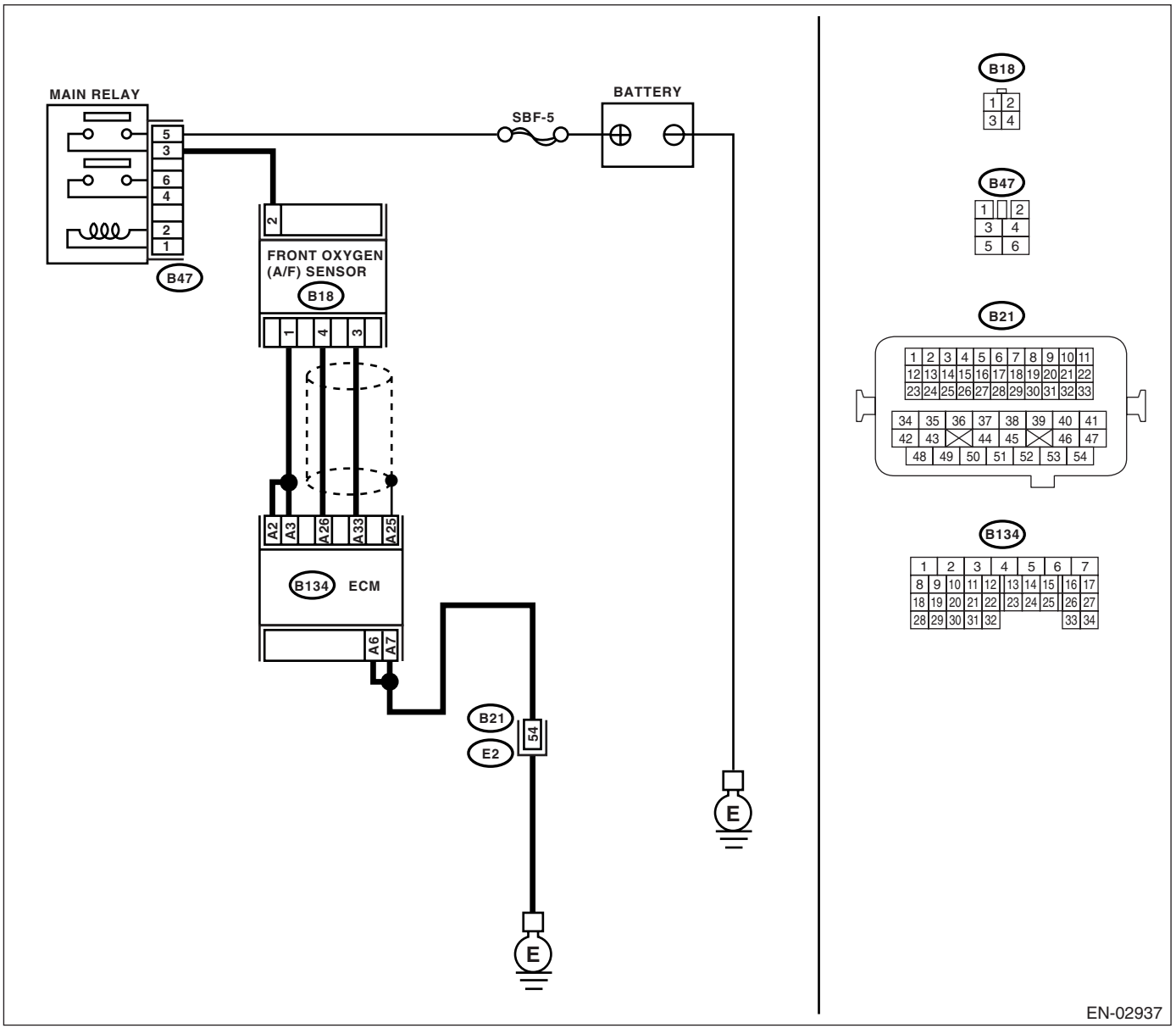

	Step	Check	Yes	No
1	**CHECK HARNESS BETWEEN ECM AND FRONT OXYGEN (A/F) SENSOR CONNECTOR.** 1) Start the engine and warm-up engine. 2) Turn the ignition switch to OFF. 3) Disconnect the connectors from ECM and front oxygen (A/F) sensor. 4) Measure the resistance of harness between ECM and front oxygen (A/F) sensor connector. ***Connector & terminal*** ***(B134) No. 2 — (B18) No. 1:*** ***(B134) No. 3 — (B18) No. 1:***	Is the resistance less than 1 Ω?	Go to step **2.**	Repair the open circuit in harness between ECM and front oxygen (A/F) sensor connector.
2	**CHECK HARNESS BETWEEN ECM AND FRONT OXYGEN (A/F) SENSOR CONNECTOR.** Measure the resistance of harness between ECM and front oxygen (A/F) sensor connector. ***Connector & terminal*** ***(B134) No. 26 — (B18) No. 4:*** ***(B134) No. 33 — (B18) No. 3:***	Is the resistance less than 1 Ω?	Go to step **3.**	Repair the open circuit in harness between ECM and front oxygen (A/F) sensor connector.
3	**CHECK HARNESS BETWEEN ECM AND FRONT OXYGEN (A/F) SENSOR CONNECTOR.** Measure the resistance of harness between main relay and front oxygen (A/F) sensor connector. ***Connector & terminal*** ***(B47) No. 3 — (B18) No. 2:***	Is the resistance less than 1 Ω?	Go to step **4.**	Repair the open circuit in harness between ECM and front oxygen (A/F) sensor connector.
4	**CHECK FRONT OXYGEN (A/F) SENSOR.** Measure the resistance between front oxygen (A/F) sensor connector terminals. ***Terminals*** ***No. 1 — No. 2:***	Is the resistance less than 5 Ω?	Go to step **5.**	Replace the front oxygen (A/F) sensor. <Ref. to FU(H4DOTC)-35, Front Oxygen (A/F) Sensor.>
5	**CHECK POOR CONTACT.** Check the poor contact in ECM and front oxygen (A/F) sensor connector.	Is there poor contact in ECM or front oxygen (A/F) sensor connector?	Repair the poor contact in ECM or front oxygen (A/F) sensor connector.	Replace the front oxygen (A/F) sensor. <Ref. to FU(H4DOTC)-35, Front Oxygen (A/F) Sensor.>

D: DTC P0031 HO2S HEATER CONTROL CIRCUIT LOW (BANK 1 SENSOR 1)

DTC DETECTING CONDITION:

- Detect as soon as the malfunction occurs.
- GENERAL DESCRIPTION <Ref. to GD(H4DOTC)-14, DTC P0031 HO2S HEATER CONTROL CIRCUIT LOW (BANK 1 SENSOR 1), Diagnostic Trouble Code (DTC) Detecting Criteria.>

CAUTION:
After repair or replacement of faulty parts, conduct Clear Memory Mode <Ref. to EN(H4DOTC)(diag)-45, OPERATION, Clear Memory Mode.> and Inspection Mode <Ref. to EN(H4DOTC)(diag)-36, PROCEDURE, Inspection Mode.>.

WIRING DIAGRAM:

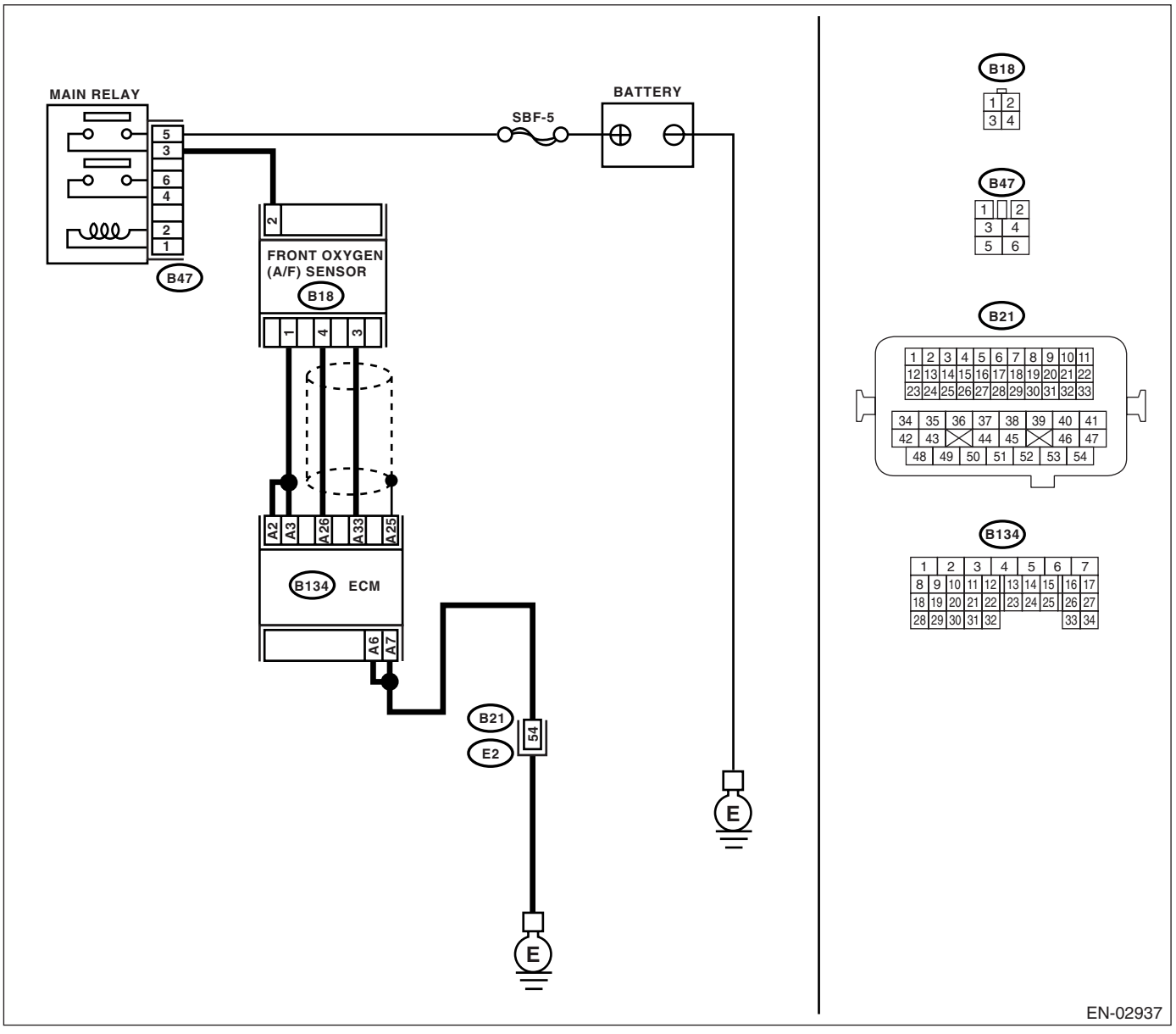

	Step	Check	Yes	No
1	**CHECK POWER SUPPLY TO FRONT OXYGEN (A/F) SENSOR.** 1) Turn the ignition switch to OFF. 2) Disconnect the connector from front oxygen (A/F) sensor. 3) Turn the ignition switch to ON. 4) Measure the voltage between front oxygen (A/F) sensor connector and engine ground. ***Connector & terminal*** ***(B18) No. 2 (+) — Engine ground (−):***	Is the voltage more than 10 V?	Go to step **2.**	Repair the power supply line. NOTE: In this case, repair the following: • Open circuit in harness between main relay and front oxygen (A/F) sensor connector • Poor contact in main relay connector • Malfunction in main relay
2	**CHECK HARNESS BETWEEN FRONT OXYGEN (A/F) SENSOR AND ECM.** 1) Turn the ignition switch to OFF. 2) Disconnect the connectors from ECM. 3) Measure the resistance between front oxygen (A/F) sensor connector and ECM. ***Connector & terminal*** ***(B18) No. 1 — (B134) No. 2:*** ***(B18) No. 1 — (B134) No. 3:***	Is the resistance less than 1 Ω?	Go to step **3.**	Repair the open circuit in harness between ECM and front oxygen (A/F) sensor.
3	**CHECK HARNESS BETWEEN FRONT OXYGEN (A/F) SENSOR AND ECM.** Measure the resistance between ECM connector and chassis ground. ***Connector & terminal*** ***(B134) No. 2 — Chassis ground:*** ***(B134) No. 3 — Chassis ground:***	Is the resistance more than 1 MΩ?	Go to step **4.**	Repair the ground short circuit in harness between ECM and front oxygen (A/F) sensor.
4	**CHECK FRONT OXYGEN (A/F) SENSOR.** 1) Turn the ignition switch to OFF. 2) Measure the resistance between front oxygen (A/F) sensor connector terminals. ***Terminals*** ***No. 1 — No. 2:***	Is the resistance 2.4 Ω?	Repair the poor contact in ECM connector.	Replace the front oxygen (A/F) sensor. <Ref. to FU(H4DOTC)-35, Front Oxygen (A/F) Sensor.>

E: DTC P0032 HO2S HEATER CONTROL CIRCUIT HIGH (BANK 1 SENSOR 1)

DTC DETECTING CONDITION:

- Detect as soon as the malfunction occurs.
- GENERAL DESCRIPTION <Ref. to GD(H4DOTC)-16, DTC P0032 HO2S HEATER CONTROL CIRCUIT HIGH (BANK 1 SENSOR 1), Diagnostic Trouble Code (DTC) Detecting Criteria.>

CAUTION:
After repair or replacement of faulty parts, conduct Clear Memory Mode <Ref. to EN(H4DOTC)(diag)-45, OPERATION, Clear Memory Mode.> and Inspection Mode <Ref. to EN(H4DOTC)(diag)-36, PROCEDURE, Inspection Mode.>.

WIRING DIAGRAM:

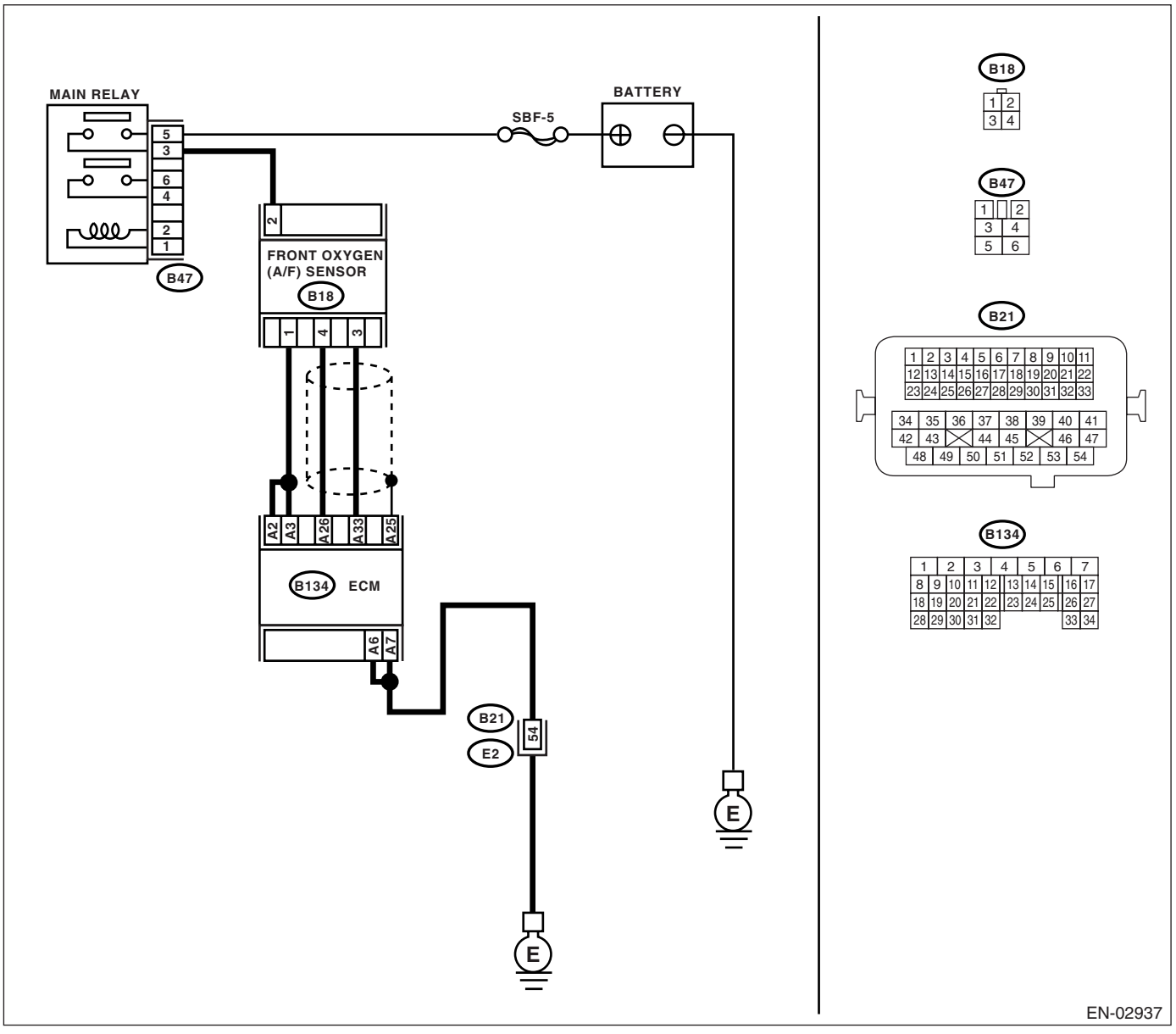

	Step	Check	Yes	No
1	**CHECK GROUND CIRCUIT FOR ECM.** 1) Turn the ignition switch to OFF. 2) Disconnect the connector from ECM. 3) Measure the resistance between ECM connector and chassis ground. ***Connector & terminal*** ***(B134) No. 6 — Chassis ground:*** ***(B136) No. 7 — Chassis ground:***	Is the resistance less than 5 Ω?	Go to step **2.**	Repair the open circuit in harness between ECM connector and chassis ground.
2	**CHECK VOLTAGE BETWEEN ECM AND FRONT OXYGEN (A/F) SENSOR.** Measure the voltage between ECM connector and chassis ground. ***Connector & terminal*** ***(B137) No. 2 (+) — Chassis ground (−):*** ***(B137) No. 3 (+) — Chassis ground (−):***	Is the voltage more than 10 V?	Repair the battery short circuit in harness between ECM and front oxygen (A/F) sensor connector.	Repair the poor contact in ECM connector.

F: DTC P0037 HO2S HEATER CONTROL CIRCUIT LOW (BANK 1 SENSOR 2)

DTC DETECTING CONDITION:

- Two consecutive driving cycles with fault
- GENERAL DESCRIPTION <Ref. to GD(H4DOTC)-18, DTC P0037 HO2S HEATER CONTROL CIRCUIT LOW (BANK 1 SENSOR 2), Diagnostic Trouble Code (DTC) Detecting Criteria.>

CAUTION:
After repair or replacement of faulty parts, conduct Clear Memory Mode <Ref. to EN(H4DOTC)(diag)-45, OPERATION, Clear Memory Mode.> and Inspection Mode <Ref. to EN(H4DOTC)(diag)-36, PROCEDURE, Inspection Mode.>.

WIRING DIAGRAM:

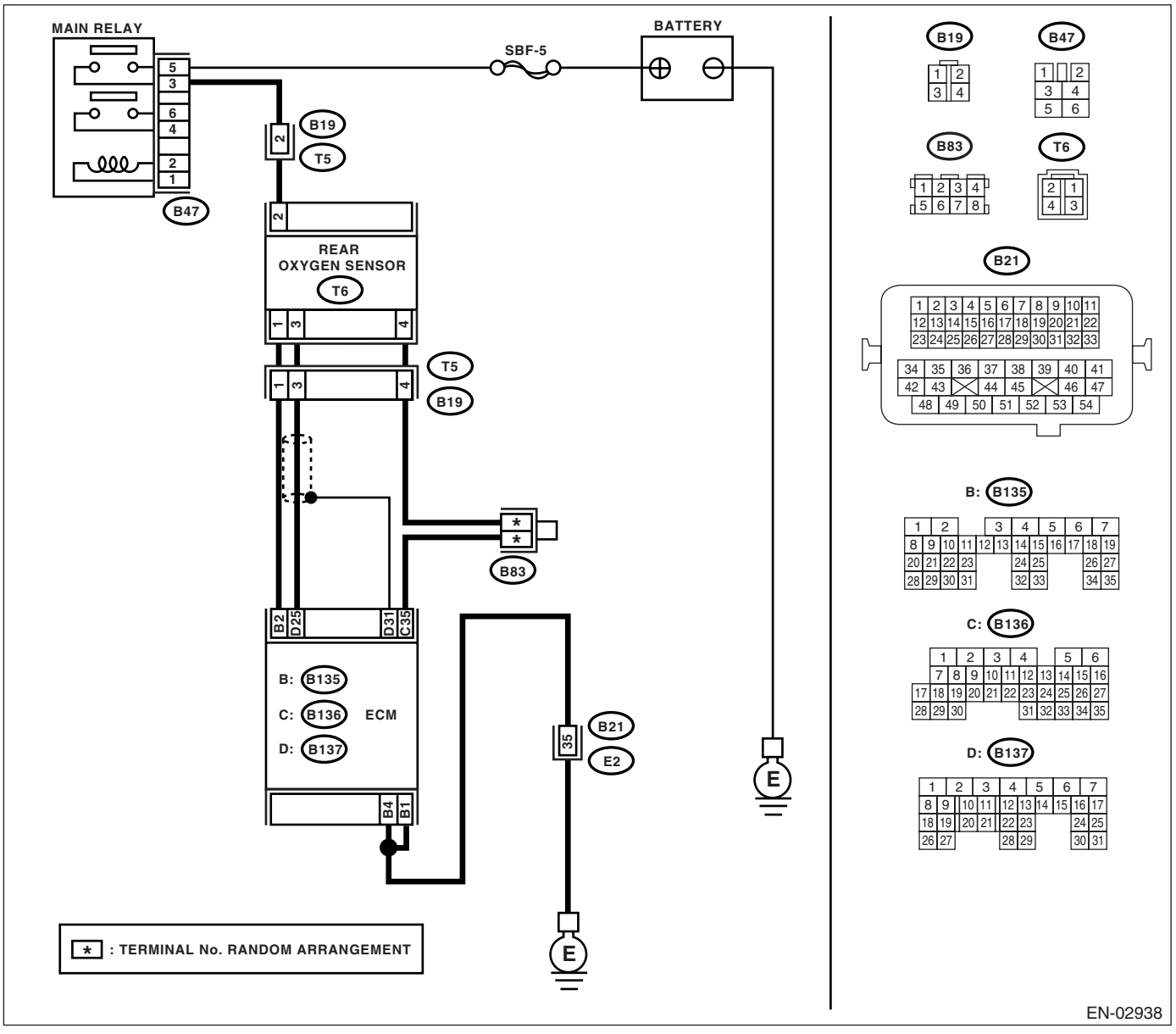

	Step	Check	Yes	No
1	**CHECK GROUND CIRCUIT FOR ECM.** 1) Turn the ignition switch to OFF. 2) Disconnect the connector from ECM. 3) Measure the resistance of harness between ECM connector and chassis ground. ***Connector & terminal*** ***(B135) No. 1 — Chassis ground:*** ***(B135) No. 4 — Chassis ground:***	Is the resistance less than 5 Ω?	Go to step **2.**	Repair the harness and connector. NOTE: In this case, repair the following: • Open circuit in harness between ECM and engine ground cable • Poor contact in ECM connector • Poor contact in coupling connector
2	**CHECK HARNESS BETWEEN ECM AND REAR OXYGEN SENSOR.** 1) Disconnect the connector from rear oxygen sensor. 2) Measure the resistance between ECM connector and chassis ground. ***Connector & terminal*** ***(B135) No. 2 — Chassis ground:***	Is the resistance more than 1 MΩ?	Go to step **3.**	Repair the ground short circuit in harness between ECM and rear oxygen sensor connector.
3	**CHECK HARNESS BETWEEN ECM AND REAR OXYGEN SENSOR.** Measure the resistance between ECM connector and chassis ground. ***Connector & terminal*** ***(B135) No. 2 — Chassis ground:***	Does the resistance change by shaking the ECM harness and connector?	Repair the poor contact in ECM connector.	Go to step **4.**
4	**CHECK POWER SUPPLY TO REAR OXYGEN SENSOR.** 1) Connect the connector to ECM. 2) Turn the ignition switch to ON. 3) Measure the voltage between rear oxygen sensor connector and chassis ground. ***Connector & terminal*** ***(T6) No. 2 (+) — Chassis ground (−):***	Is the voltage more than 10 V?	Go to step **5.**	Repair the power supply line. NOTE: In this case, repair the following: • Open circuit in harness between main relay and rear oxygen sensor connector • Poor contact in main relay connector • Poor contact in coupling connector • Malfunction in main relay

	Step	Check	Yes	No
5	**CHECK REAR OXYGEN SENSOR.** 1) Turn the ignition switch to OFF. 2) Measure the resistance between rear oxygen sensor connector terminals. ***Terminals*** ***No. 1 — No. 2:***	Is the resistance less than 30 Ω?	Repair the harness and connector. NOTE: In this case, repair the following: • Open circuit in harness between rear oxygen sensor and ECM connector • Poor contact in rear oxygen sensor connector • Poor contact in ECM connector • Poor contact in coupling connector	Replace the rear oxygen sensor. <Ref. to FU(H4DOTC)-37, Rear Oxygen Sensor.>

G: DTC P0038 HO2S HEATER CONTROL CIRCUIT HIGH (BANK 1 SENSOR 2)

DTC DETECTING CONDITION:

- Two consecutive driving cycles with fault
- GENERAL DESCRIPTION <Ref. to GD(H4DOTC)-20, DTC P0038 HO2S HEATER CONTROL CIRCUIT HIGH (BANK 1 SENSOR 2), Diagnostic Trouble Code (DTC) Detecting Criteria.>

CAUTION:

After repair or replacement of faulty parts, conduct Clear Memory Mode <Ref. to EN(H4DOTC)(diag)-45, OPERATION, Clear Memory Mode.> and Inspection Mode <Ref. to EN(H4DOTC)(diag)-36, PROCEDURE, Inspection Mode.>.

WIRING DIAGRAM:

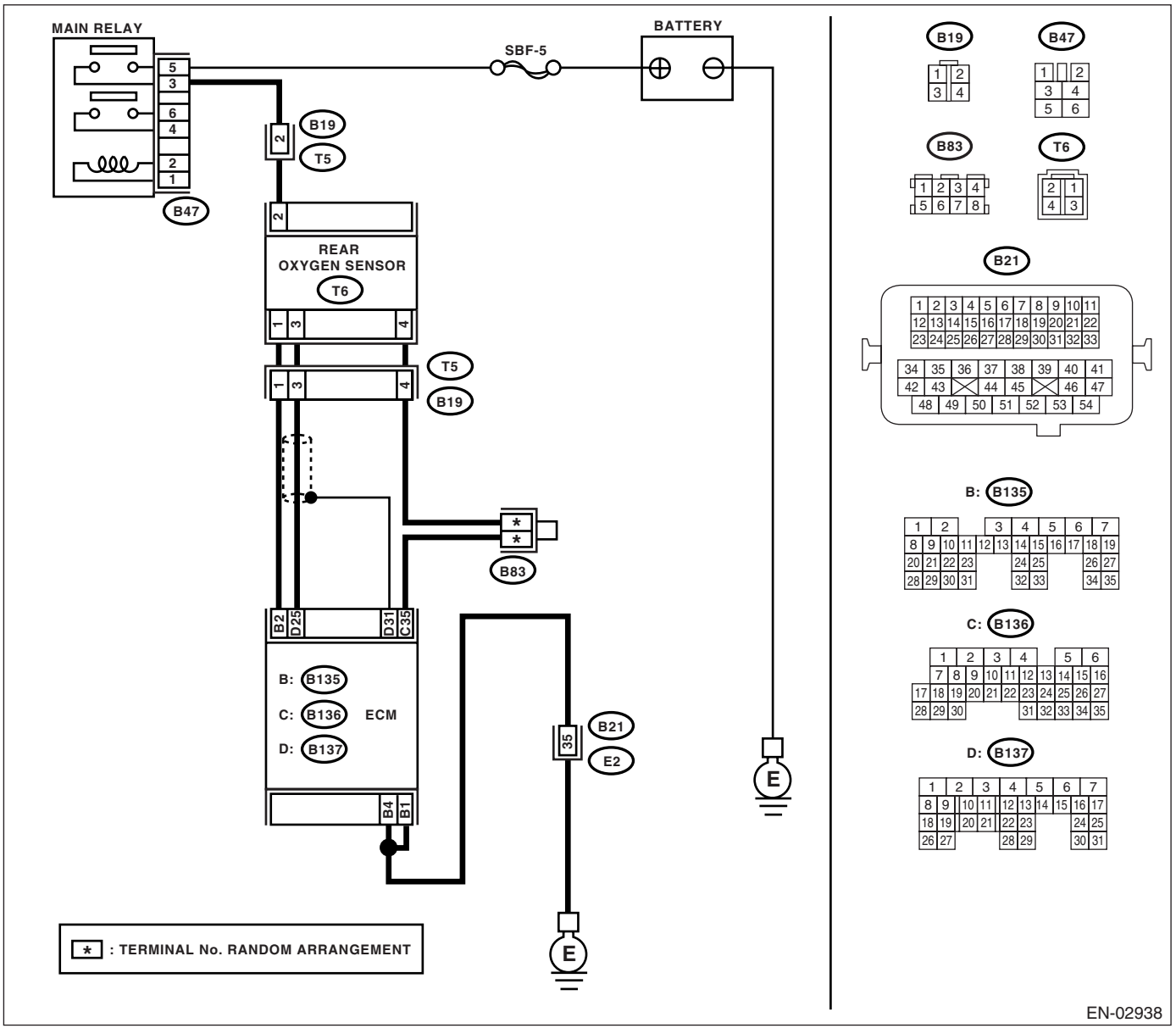

	Step	Check	Yes	No
1	**CHECK GROUND CIRCUIT FOR ECM.** 1) Turn the ignition switch to OFF. 2) Disconnect the connector from ECM. 3) Measure the resistance of harness between ECM connector and chassis ground. ***Connector & terminal*** ***(B135) No. 4 — Chassis ground:*** ***(B135) No. 1 — Chassis ground:***	Is the resistance less than 5 Ω?	Go to step **2.**	Repair the harness and connector. NOTE: In this case, repair the following: • Open circuit in harness between ECM and engine ground cable • Poor contact in ECM connector • Poor contact in coupling connector
2	**CHECK HARNESS BETWEEN ECM AND REAR OXYGEN SENSOR.** Measure the voltage between ECM and chassis ground. ***Connector & terminal*** ***(B135) No. 2 (+) — Chassis ground (−):***	Is the voltage more than 10 V?	Repair the battery short circuit in harness between ECM and rear oxygen sensor.	Repair the poor connection in ECM connector.

H: DTC P0068 MAP/MAF - THROTTLE POSITION CORRELATION

DTC DETECTING CONDITION:

- Two consecutive driving cycles with fault
- GENERAL DESCRIPTION <Ref. to GD(H4DOTC)-22, DTC P0068 MAP/MAF - THROTTLE POSITION CORRELATION, Diagnostic Trouble Code (DTC) Detecting Criteria.>

TROUBLE SYMPTOM:

Failure of engine to start

CAUTION:

After repair or replacement of faulty parts, conduct Clear Memory Mode <Ref. to EN(H4DOTC)(diag)-45, OPERATION, Clear Memory Mode.> and Inspection Mode <Ref. to EN(H4DOTC)(diag)-36, PROCEDURE, Inspection Mode.>.

WIRING DIAGRAM:

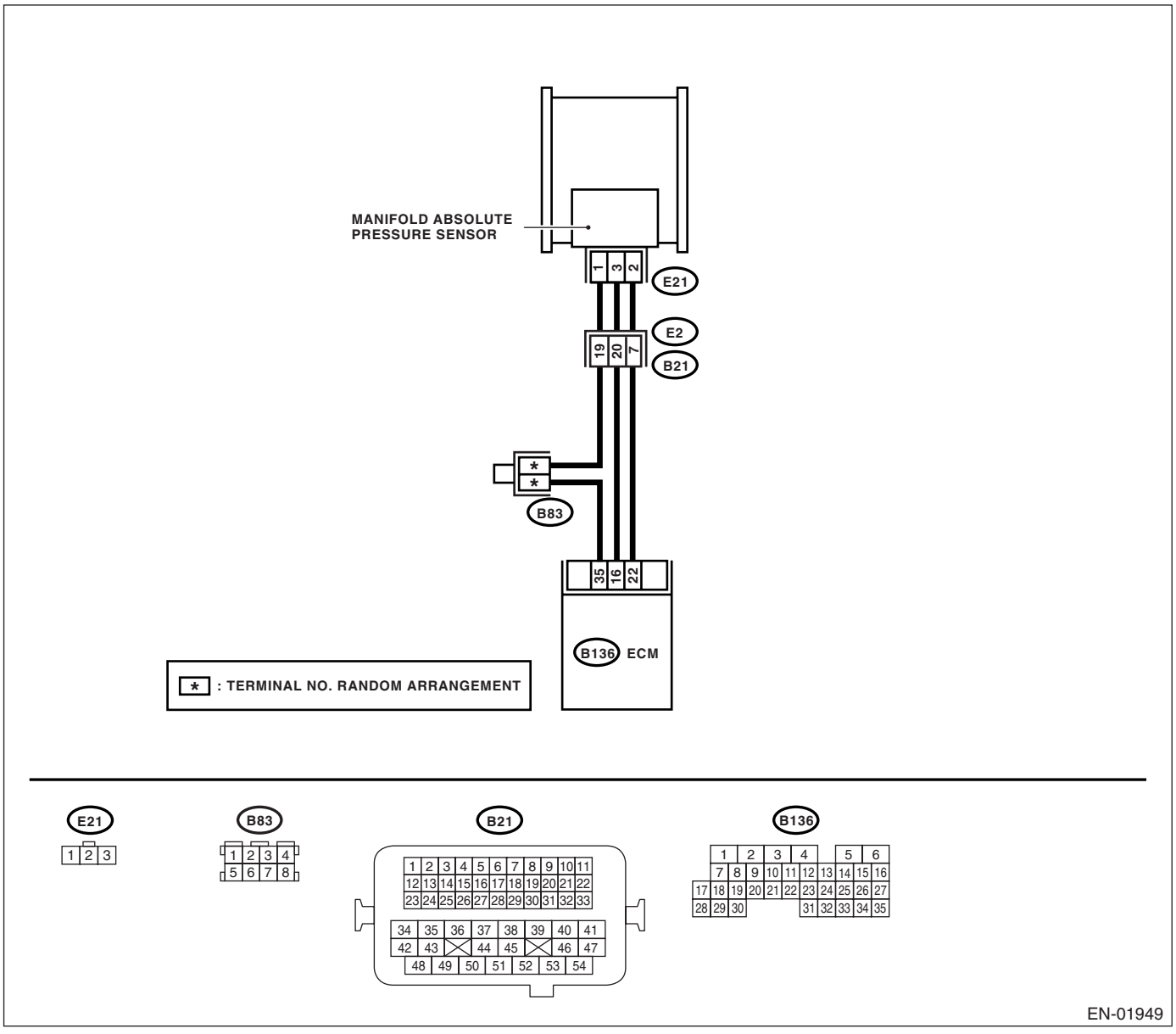

	Step	Check	Yes	No
1	**CHECK IDLE SWITCH SIGNAL.** 1) Turn the ignition switch to ON. 2) Operate the LED operation mode for engine using Subaru Select Monitor. NOTE: • Subaru Select Monitor For detailed operation procedure, refer to the "LED OPERATION MODE FOR ENGINE". <Ref. to EN(H4DOTC)(diag)-28, Subaru Select Monitor.>	Does the LED of {Idle Switch Signal} come on?	Go to step **2.**	Check the throttle position sensor circuit. <Ref. to EN(H4DOTC)(diag)-321, DTC P2135 THROTTLE/PEDAL POSITION SENSOR/SWITCH "A"/"B" VOLTAGE RATIONALITY, Diagnostic Procedure with Diagnostic Trouble Code (DTC).> NOTE: In this case, it is not necessary to inspect DTC P0106.
2	**CHECK FOR ANY OTHER DTC ON DISPLAY.**	Is any other DTC displayed?	Inspect the relevant DTC. "List of Diagnostic Trouble Code (DTC)". <Ref. to EN(H4DOTC)(diag)-71, List of Diagnostic Trouble Code (DTC).> NOTE: In this case, it is not necessary to inspect DTC P0106.	Go to step **3.**
3	**CHECK CONDITION OF MANIFOLD ABSOLUTE PRESSURE SENSOR.**	Is the manifold absolute pressure sensor installation bolt tightened securely?	Go to step **4.**	Tighten the manifold absolute pressure sensor installation bolt securely.
4	**CHECK CONDITION OF THROTTLE BODY.**	Is the throttle body installation bolt tightened securely?	Replace the manifold absolute pressure sensor. <Ref. to FU(H4DOTC)-28, Manifold Absolute Pressure Sensor.>	Tighten the throttle body installation bolt securely.

I: DTC P0101 MASS OR VOLUME AIR FLOW CIRCUIT RANGE/PERFORMANCE

DTC DETECTING CONDITION:

- Two consecutive driving cycles with fault
- GENERAL DESCRIPTION <Ref. to GD(H4DOTC)-24, DTC P0101 MASS OR VOLUME AIR FLOW CIRCUIT RANGE/PERFORMANCE, Diagnostic Trouble Code (DTC) Detecting Criteria.>

TROUBLE SYMPTOM:

- Erroneous idling
- Engine stalls.
- Poor driving performance

CAUTION:

After repair or replacement of faulty parts, conduct Clear Memory Mode <Ref. to EN(H4DOTC)(diag)-45, OPERATION, Clear Memory Mode.> and Inspection Mode <Ref. to EN(H4DOTC)(diag)-36, PROCEDURE, Inspection Mode.>.

WIRING DIAGRAM:

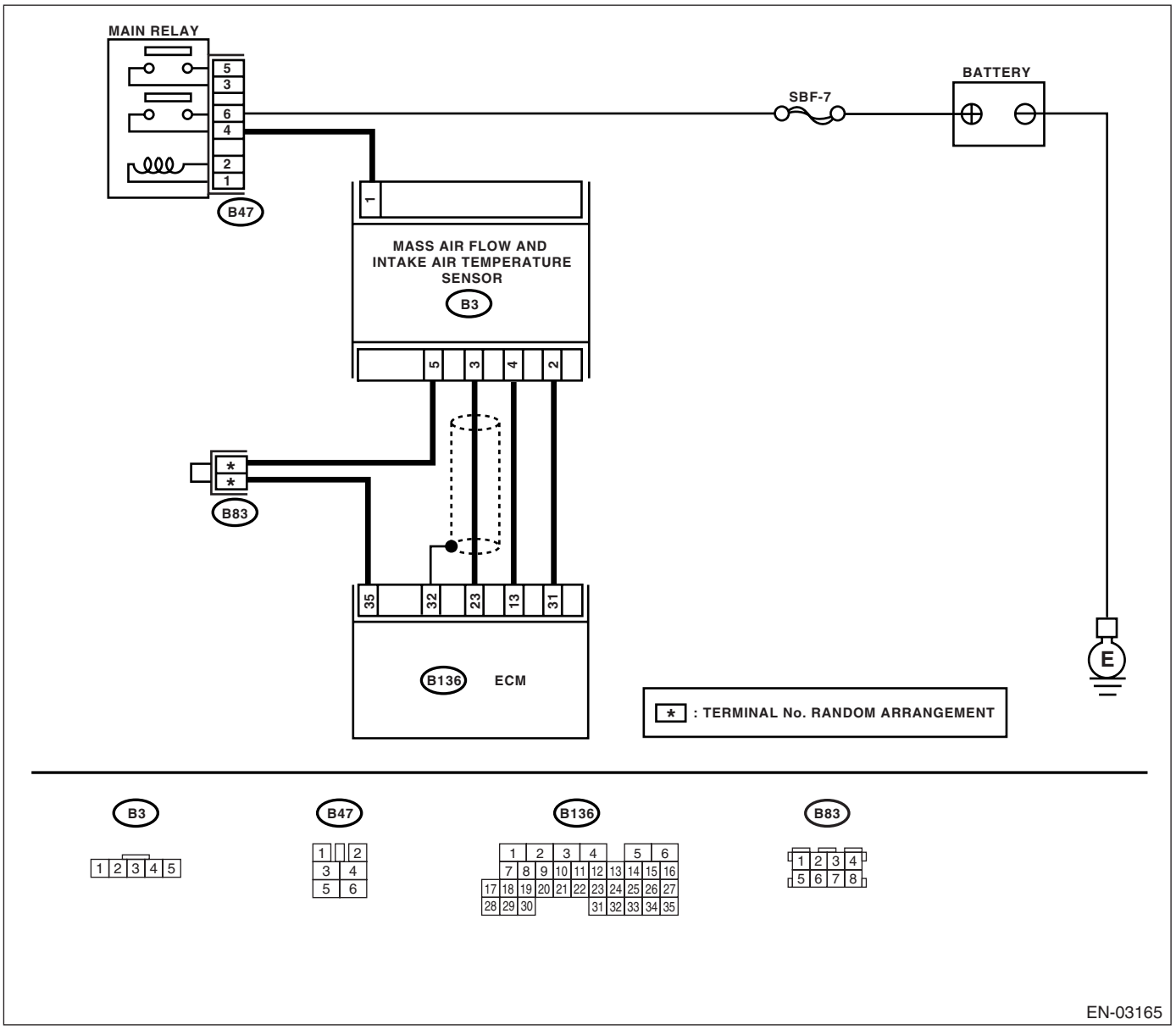

	Step	Check	Yes	No
1	**CHECK FOR ANY OTHER DTC ON DISPLAY.**	Is any other DTC displayed?	Inspect the relevant DTC using "List of Diagnostic Trouble Code (DTC)". <Ref. to EN(H4DOTC)(diag)-71, List of Diagnostic Trouble Code (DTC).> NOTE: In this case, it is not necessary to inspect DTC P0101.	Replace the mass air flow and intake air temperature sensor. <Ref. to FU(H4DOTC)-27, Mass Air Flow and Intake Air Temperature Sensor.>

J: DTC P0102 MASS OR VOLUME AIR FLOW CIRCUIT LOW INPUT

DTC DETECTING CONDITION:

- Detect as soon as the malfunction occurs.
- GENERAL DESCRIPTION <Ref. to GD(H4DOTC)-27, DTC P0102 MASS OR VOLUME AIR FLOW CIRCUIT LOW INPUT, Diagnostic Trouble Code (DTC) Detecting Criteria.>

TROUBLE SYMPTOM:

- Erroneous idling
- Engine stalls.
- Poor driving performance

CAUTION:

After repair or replacement of faulty parts, conduct Clear Memory Mode <Ref. to EN(H4DOTC)(diag)-45, OPERATION, Clear Memory Mode.> and Inspection Mode <Ref. to EN(H4DOTC)(diag)-36, PROCEDURE, Inspection Mode.>.

WIRING DIAGRAM:

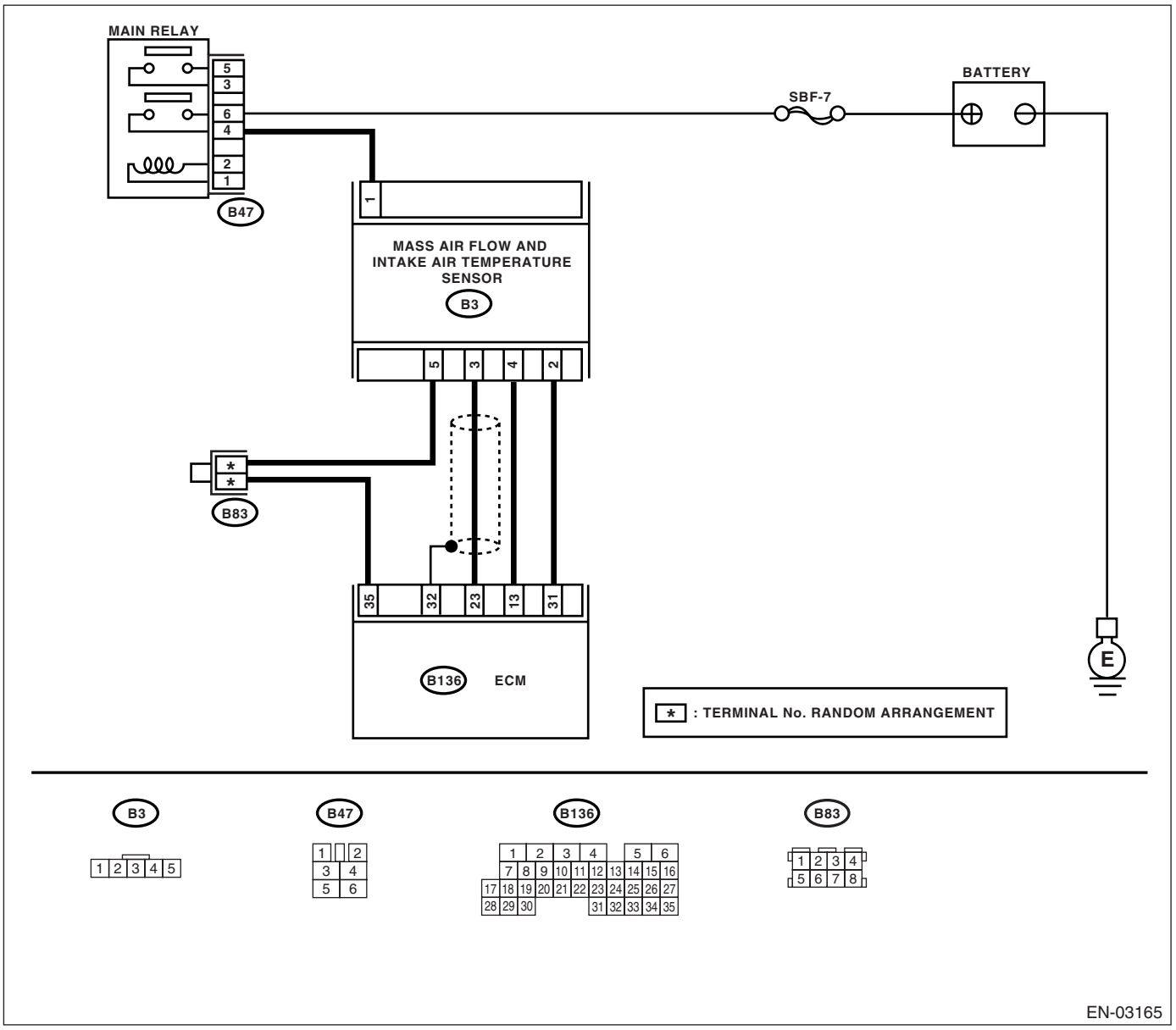

	Step	Check	Yes	No
1	**READ THE DATA CONNECTING SUBARU SELECT MONITOR OR GENERAL SCAN TOOL.** 1) Turn the ignition switch to OFF. 2) Connect the Subaru Select Monitor to data link connector. 3) Turn the ignition switch to ON, and the Subaru Select Monitor switch to ON. 4) Start and idle the engine. 5) Read the voltage of mass air flow sensor using Subaru Select Monitor or general scan tool. NOTE: • Subaru Select Monitor For detailed operation procedure, refer to the "READ CURRENT DATA SHOWN ON DISPLAY FOR ENGINE". <Ref. to EN(H4DOTC)(diag)-28, Subaru Select Monitor.> • General scan tool For detailed operation procedure, refer to the general scan tool instruction manual.	Is the voltage 0.2 — 4.7 V?	Even if the malfunction indicator light illuminates, the circuit has returned to a normal condition at this time. A temporary poor contact of the connector or harness may be the cause. Repair harness or connector in the mass air flow sensor. NOTE: In this case, repair the following: • Open or ground short circuit in harness between mass air flow sensor and ECM connector • Poor contact in mass air flow sensor or ECM connector	Go to step **2.**
2	**CHECK INPUT SIGNAL FROM ECM.** Measure the voltage between ECM connector and chassis ground while engine is idling. ***Connector & terminal*** ***(B136) No. 23 (+) — Chassis ground (−):***	Is the voltage more than 0.2 V?	Go to step **4.**	Go to step **3.**
3	**CHECK INPUT SIGNAL FOR ECM (USING SUBARU SELECT MONITOR).** Measure the voltage between ECM connector and chassis ground while engine is idling.	Does the voltage change by shaking the harness and connector of ECM while monitoring the value with Subaru Select Monitor?	Repair the poor contact in ECM connector.	Replace and check it again because of ECM malfunction possibility.
4	**CHECK POWER SUPPLY TO MASS AIR FLOW SENSOR.** 1) Turn the ignition switch to OFF. 2) Disconnect the connector from mass air flow sensor. 3) Turn the ignition switch to ON. 4) Measure voltage between mass air flow sensor connector and chassis ground. ***Connector & terminal*** ***(B3) No. 1 (+) — Chassis ground (−):***	Is the voltage more than 10 V?	Go to step **5.**	Repair the open circuit between mass air flow sensor and main relay.
5	**CHECK HARNESS BETWEEN ECM AND MASS AIR FLOW SENSOR CONNECTOR.** 1) Turn the ignition switch to OFF. 2) Disconnect the connector from ECM. 3) Measure the resistance of harness between ECM and mass air flow sensor connector. ***Connector & terminal*** ***(B136) No. 23 — (B3) No. 3:*** ***(B136) No. 31 — (B3) No. 2:*** ***(B136) No. 35 — (B3) No. 5:***	Is the resistance less than 1 Ω?	Go to step **6.**	Repair the open circuit between ECM and mass air flow sensor connector.

	Step	Check	Yes	No
6	**CHECK HARNESS BETWEEN ECM AND MASS AIR FLOW SENSOR CONNECTOR.** Measure the resistance of harness between ECM and chassis ground. ***Connector & terminal*** ***(B136) No. 23 — Chassis ground:*** ***(B136) No. 31 — Chassis ground:*** ***(B136) No. 35 — Chassis ground:***	Is the resistance more than 1 MΩ?	Go to step **7.**	Repair the ground short circuit between ECM and mass air flow sensor connector.
7	**CHECK POOR CONTACT.** Check poor contact in mass air flow sensor connector.	Is there poor contact in mass air flow sensor connector?	Repair the poor contact in mass air flow sensor connector.	Replace the mass air flow and intake air temperature sensor. <Ref. to FU(H4DOTC)-27, Mass Air Flow and Intake Air Temperature Sensor.>

K: DTC P0103 MASS OR VOLUME AIR FLOW CIRCUIT HIGH INPUT

DTC DETECTING CONDITION:

- Detect as soon as the malfunction occurs.
- GENERAL DESCRIPTION <Ref. to GD(H4DOTC)-29, DTC P0103 MASS OR VOLUME AIR FLOW CIRCUIT HIGH INPUT, Diagnostic Trouble Code (DTC) Detecting Criteria.>

TROUBLE SYMPTOM:

- Erroneous idling
- Engine stalls.
- Poor driving performance

CAUTION:

After repair or replacement of faulty parts, conduct Clear Memory Mode <Ref. to EN(H4DOTC)(diag)-45, OPERATION, Clear Memory Mode.> and Inspection Mode <Ref. to EN(H4DOTC)(diag)-36, PROCEDURE, Inspection Mode.>.

WIRING DIAGRAM:

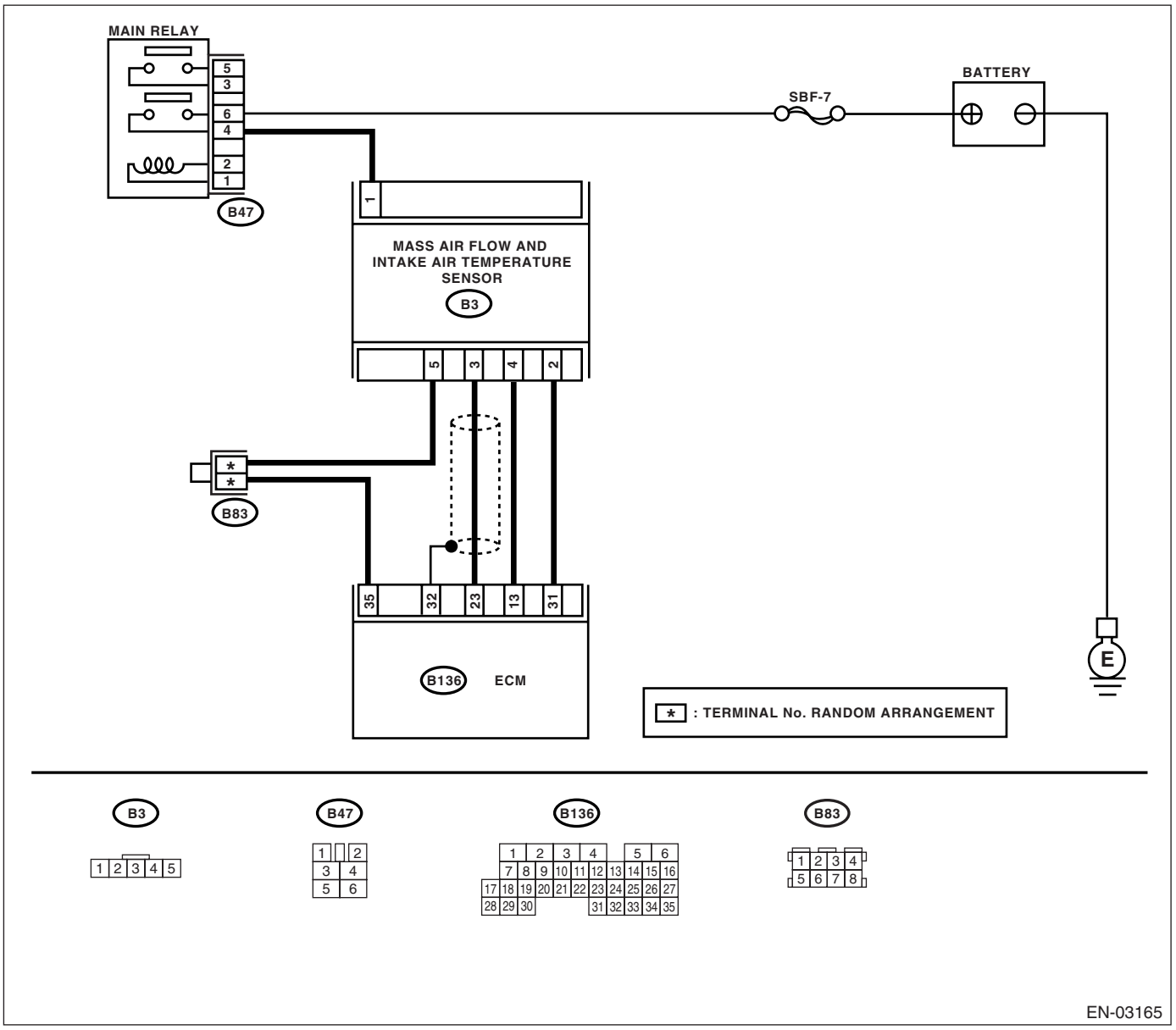

	Step	Check	Yes	No
1	**READ THE DATA CONNECTING SUBARU SELECT MONITOR OR GENERAL SCAN TOOL.** 1) Turn the ignition switch to OFF. 2) Connect the Subaru Select Monitor to data link connector. 3) Turn the ignition switch to ON, and the Subaru Select Monitor switch to ON. 4) Start and idle the engine. 5) Read the voltage of mass air flow sensor using Subaru Select Monitor or general scan tool. NOTE: • Subaru Select Monitor For detailed operation procedure, refer to the "READ CURRENT DATA SHOWN ON DISPLAY FOR ENGINE". <Ref. to EN(H4DOTC)(diag)-28, Subaru Select Monitor.> • General scan tool For detailed operation procedure, refer to the general scan tool instruction manual.	Is the voltage 0.2 — 4.7 V?	Even if the malfunction indicator light illuminates, the circuit has returned to a normal condition at this time.	Go to step **2.**
2	**CHECK HARNESS BETWEEN ECM AND MASS AIR FLOW SENSOR CONNECTOR.** 1) Turn the ignition switch to OFF. 2) Disconnect the connector from mass airflow sensor. 3) Turn the ignition switch to ON. 4) Measure voltage between mass air flow sensor connector and chassis ground. ***Connector & terminal*** ***(B3) No. 3 (+) — Chassis ground (−):***	Is the voltage more than 5 V?	Repair the battery short circuit in harness between mass air flow sensor connector and ECM connector.	Go to step **3.**
3	**CHECK HARNESS BETWEEN ECM AND MASS AIR FLOW SENSOR CONNECTOR.** 1) Turn the ignition switch to OFF. 2) Disconnect the connector from ECM. 3) Measure the resistance of harness between ECM connector and mass air flow sensor connector. ***Connector & terminal*** ***(B3) No. 2 — (B136) No. 31:***	Is the resistance less than 1 Ω?	Replace the mass air flow sensor. <Ref. to FU(H4DOTC)-27, Mass Air Flow and Intake Air Temperature Sensor.>	Repair the open circuit in harness between mass air flow sensor connector and ECM connector.

L: DTC P0107 MANIFOLD ABSOLUTE PRESSURE/BAROMETRIC PRESSURE CIRCUIT LOW INPUT

DTC DETECTING CONDITION:

- Detect as soon as the malfunction occurs.
- GENERAL DESCRIPTION <Ref. to GD(H4DOTC)-31, DTC P0107 MANIFOLD ABSOLUTE PRESSURE/ BAROMETRIC PRESSURE CIRCUIT LOW INPUT, Diagnostic Trouble Code (DTC) Detecting Criteria.>

CAUTION:

After repair or replacement of faulty parts, conduct Clear Memory Mode <Ref. to EN(H4DOTC)(diag)-45, OPERATION, Clear Memory Mode.> and Inspection Mode <Ref. to EN(H4DOTC)(diag)-36, PROCEDURE, Inspection Mode.>.

WIRING DIAGRAM:

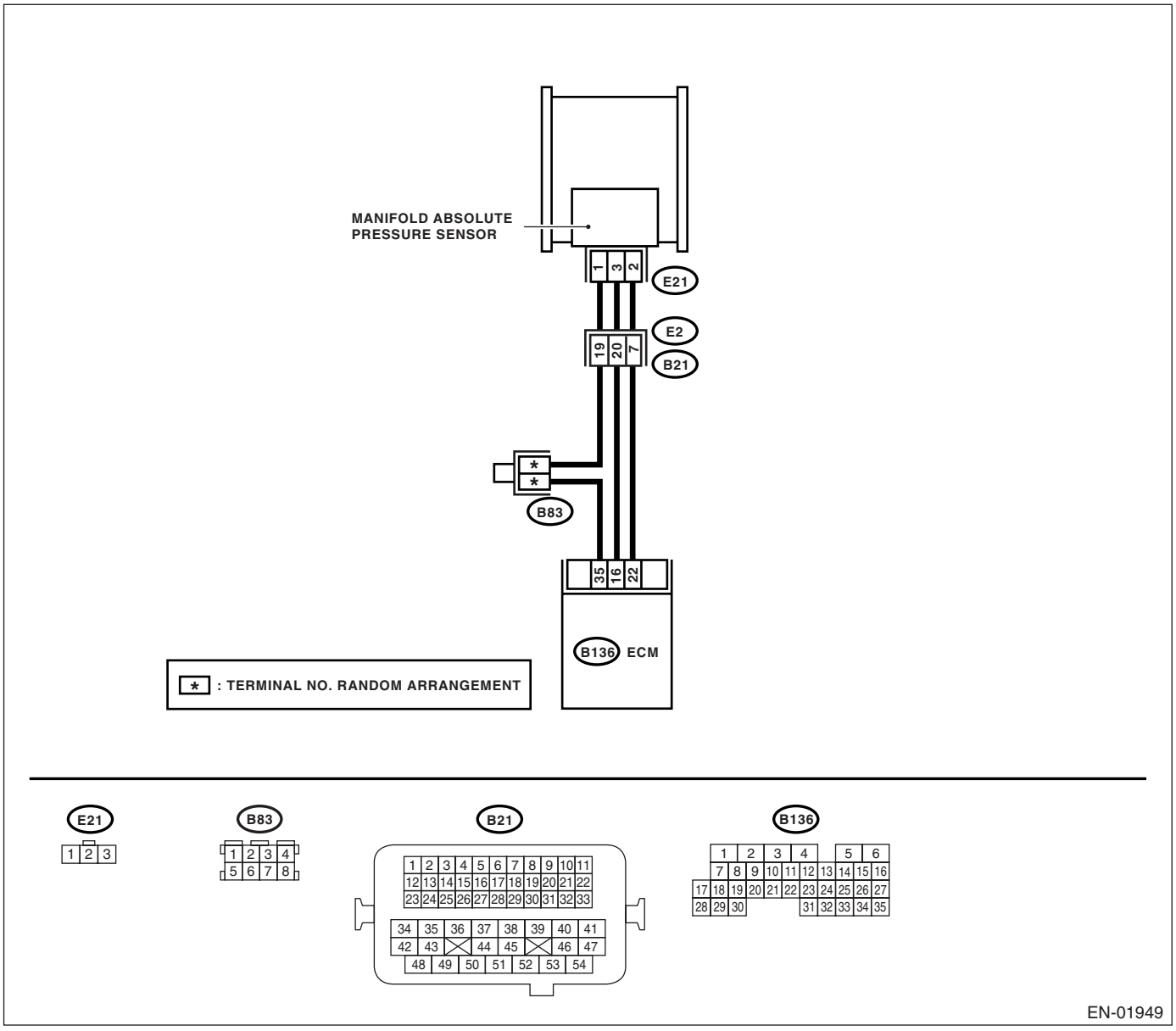

	Step	Check	Yes	No
1	**CHECK INPUT SIGNAL FROM ECM.** Measure the voltage between ECM connector and chassis ground. ***Connector & terminal*** ***(B136) No. 16 (+) — Chassis ground (–):***	Is the voltage more than 4.5 V?	Go to step **3.**	Go to step **2.**
2	**CHECK INPUT SIGNAL FROM ECM.** Measure the voltage between ECM connector and chassis ground. ***Connector & terminal*** ***(B136) No. 16 (+) — Chassis ground (–):***	Does the voltage change by shaking the harness and connector of ECM while monitoring the value with voltage meter?	Repair the poor contact in ECM connector.	Replace the ECM. <Ref. to FU(H4DOTC)-39, Engine Control Module (ECM).>
3	**CHECK INPUT SIGNAL FROM ECM.** Measure the voltage between ECM and chassis ground. ***Connector & terminal*** ***(B136) No. 22 (+) — Chassis ground (–):***	Is the voltage less than 0.7 V?	Go to step **4.**	Replace the ECM. <Ref. to FU(H4DOTC)-39, Engine Control Module (ECM).>
4	**CHECK HARNESS BETWEEN ECM AND MANIFOLD ABSOLUTE PRESSURE SENSOR CONNECTOR.** 1) Turn the ignition switch to OFF. 2) Disconnect the connector from manifold absolute pressure sensor. 3) Turn the ignition switch to ON. 4) Measure the voltage between manifold absolute pressure sensor connector and engine ground. ***Connector & terminal*** ***(E21) No. 3 (+) — Engine ground (–):***	Is the voltage more than 4.5 V?	Go to step **5.**	Repair the open circuit in harness between ECM and manifold absolute pressure sensor connector.
5	**CHECK HARNESS BETWEEN ECM AND MANIFOLD ABSOLUTE PRESSURE SENSOR CONNECTOR.** 1) Turn the ignition switch to OFF. 2) Disconnect the connector from ECM. 3) Measure the resistance of harness between ECM and manifold absolute pressure sensor connector. ***Connector & terminal*** ***(B136) No. 35 — (E21) No. 1:***	Is the resistance less than 1 Ω?	Go to step **6.**	Repair the open circuit in harness between ECM and manifold absolute pressure sensor connector.
6	**CHECK HARNESS BETWEEN ECM AND MANIFOLD ABSOLUTE PRESSURE SENSOR CONNECTOR.** Measure the resistance of harness between manifold absolute pressure sensor connector and engine ground. ***Connector & terminal*** ***(E21) No. 1 — Engine ground:***	Is the resistance more than 1 MΩ?	Go to step **7.**	Repair the ground short circuit in harness between ECM and manifold absolute pressure sensor connector.
7	**CHECK POOR CONTACT.** Check poor contact in manifold absolute pressure sensor connector.	Is there poor contact in manifold absolute pressure sensor connector?	Repair the poor contact in manifold absolute pressure sensor connector.	Replace the manifold absolute pressure sensor. <Ref. to FU(H4DOTC)-27, Mass Air Flow and Intake Air Temperature Sensor.>

M: DTC P0108 MANIFOLD ABSOLUTE PRESSURE/BAROMETRIC PRESSURE CIRCUIT HIGH INPUT

DTC DETECTING CONDITION:

- Detect as soon as the malfunction occurs.
- GENERAL DESCRIPTION <Ref. to GD(H4DOTC)-33, DTC P0108 MANIFOLD ABSOLUTE PRESSURE/ BAROMETRIC PRESSURE CIRCUIT HIGH INPUT, Diagnostic Trouble Code (DTC) Detecting Criteria.>

CAUTION:

After repair or replacement of faulty parts, conduct Clear Memory Mode <Ref. to EN(H4DOTC)(diag)-45, OPERATION, Clear Memory Mode.> and Inspection Mode <Ref. to EN(H4DOTC)(diag)-36, PROCEDURE, Inspection Mode.>.

WIRING DIAGRAM:

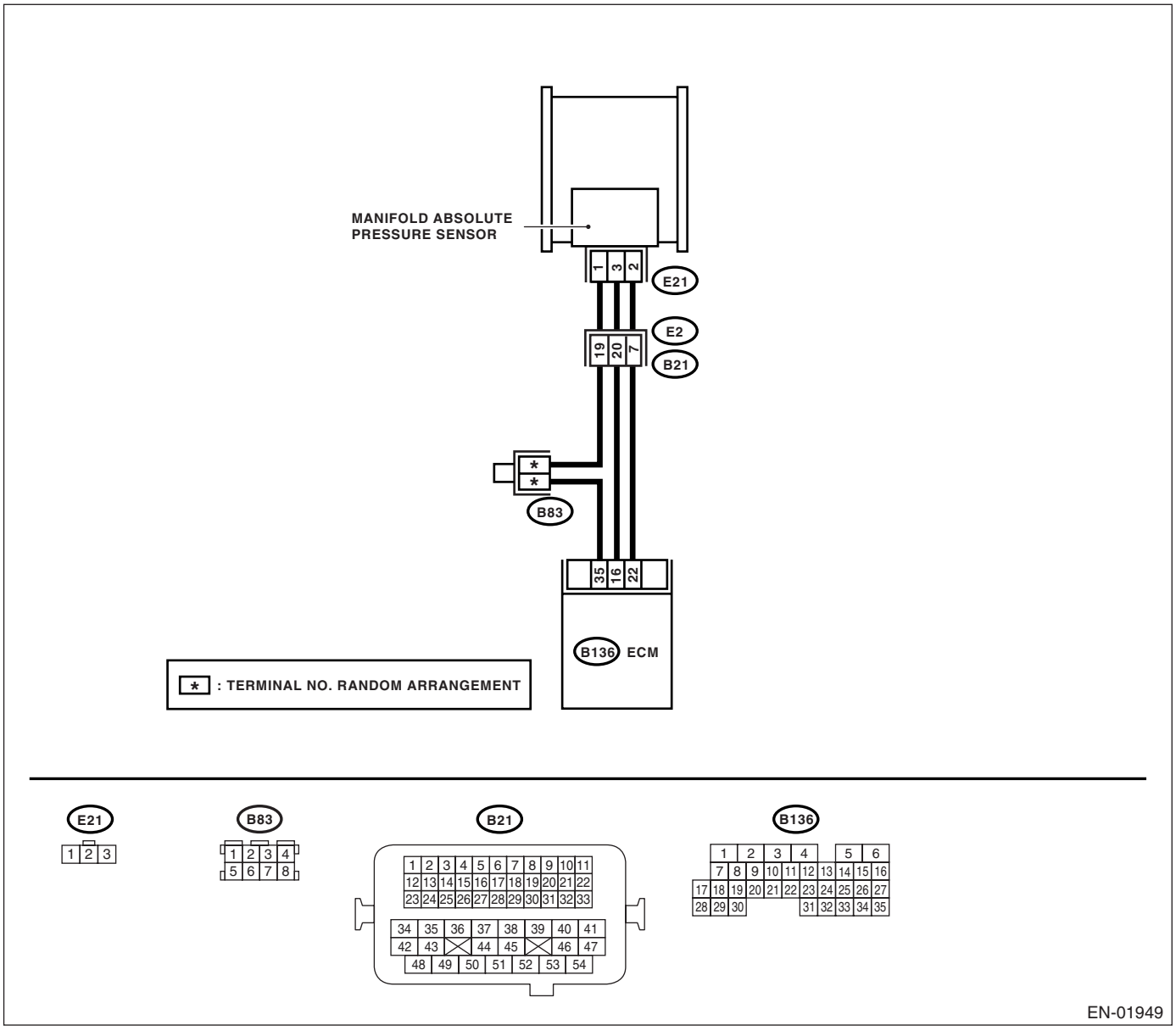

	Step	Check	Yes	No
1	**CHECK INPUT SIGNAL FROM ECM.** Measure the voltage between ECM connector and chassis ground. ***Connector & terminal*** ***(B136) No. 16 (+) — Chassis ground (–):***	Is the voltage more than 4.5 V?	Go to step **3.**	Go to step **2.**
2	**CHECK INPUT SIGNAL FROM ECM.** Measure the voltage between ECM connector and chassis ground. ***Connector & terminal*** ***(B136) No. 16 (+) — Chassis ground (–):***	Does the voltage change by shaking the harness and connector of ECM while monitoring the value with voltage meter?	Repair the poor contact in ECM connector.	Replace the ECM. <Ref. to FU(H4DOTC)-39, Engine Control Module (ECM).>
3	**CHECK INPUT SIGNAL FROM ECM.** Measure the voltage between ECM connector and chassis ground. ***Connector & terminal*** ***(B136) No. 22 (+) — Chassis ground (–):***	Is the voltage more than 4.5 V?	Go to step **4.**	Replace the ECM. <Ref. to FU(H4DOTC)-39, Engine Control Module (ECM).>
4	**CHECK HARNESS BETWEEN ECM AND MANIFOLD ABSOLUTE PRESSURE SENSOR CONNECTOR.** 1) Turn the ignition switch to OFF. 2) Disconnect the connector from manifold absolute pressure sensor. 3) Turn the ignition switch to ON. 4) Measure the voltage between manifold absolute pressure sensor connector and engine ground. ***Connector & terminal*** ***(E21) No. 3 (+) — Engine ground (–):***	Is the voltage more than 4.5 V?	Go to step **5.**	Repair the open circuit in harness between ECM and manifold absolute pressure sensor connector.
5	**CHECK HARNESS BETWEEN ECM AND MANIFOLD ABSOLUTE PRESSURE SENSOR CONNECTOR.** 1) Turn the ignition switch to OFF. 2) Disconnect the connector from ECM. 3) Measure the resistance of harness between ECM and manifold absolute pressure sensor connector. ***Connector & terminal*** ***(B136) No. 22 — (E21) No. 2:***	Is the resistance less than 1 Ω?	Go to step **6.**	Repair the open circuit in harness between ECM and manifold absolute pressure sensor connector.
6	**CHECK HARNESS BETWEEN ECM AND MANIFOLD ABSOLUTE PRESSURE SENSOR CONNECTOR.** Measure the resistance of harness between ECM and manifold absolute pressure sensor connector. ***Connector & terminal*** ***(B136) No. 35 — (E21) No. 1:***	Is the resistance less than 1 Ω?	Go to step **7.**	Repair the open circuit in harness between ECM and manifold absolute pressure sensor connector.
7	**CHECK POOR CONTACT.** Check poor contact in manifold absolute pressure sensor connector.	Is there poor contact in manifold absolute pressure sensor connector?	Repair the poor contact in manifold absolute pressure sensor connector.	Replace the manifold absolute pressure sensor. <Ref. to FU(H4DOTC)-28, Manifold Absolute Pressure Sensor.>

N: DTC P0111 INTAKE AIR TEMPERATURE CIRCUIT RANGE/PERFORMANCE

DTC DETECTING CONDITION:

- Two consecutive driving cycles with fault
- GENERAL DESCRIPTION <Ref. to GD(H4DOTC)-35, DTC P0111 INTAKE AIR TEMPERATURE CIRCUIT RANGE/PERFORMANCE, Diagnostic Trouble Code (DTC) Detecting Criteria.>

TROUBLE SYMPTOM:

- Erroneous idling
- Poor driving performance

CAUTION:

After repair or replacement of faulty parts, conduct Clear Memory Mode <Ref. to EN(H4DOTC)(diag)-45, OPERATION, Clear Memory Mode.> and Inspection Mode <Ref. to EN(H4DOTC)(diag)-36, PROCEDURE, Inspection Mode.>.

WIRING DIAGRAM:

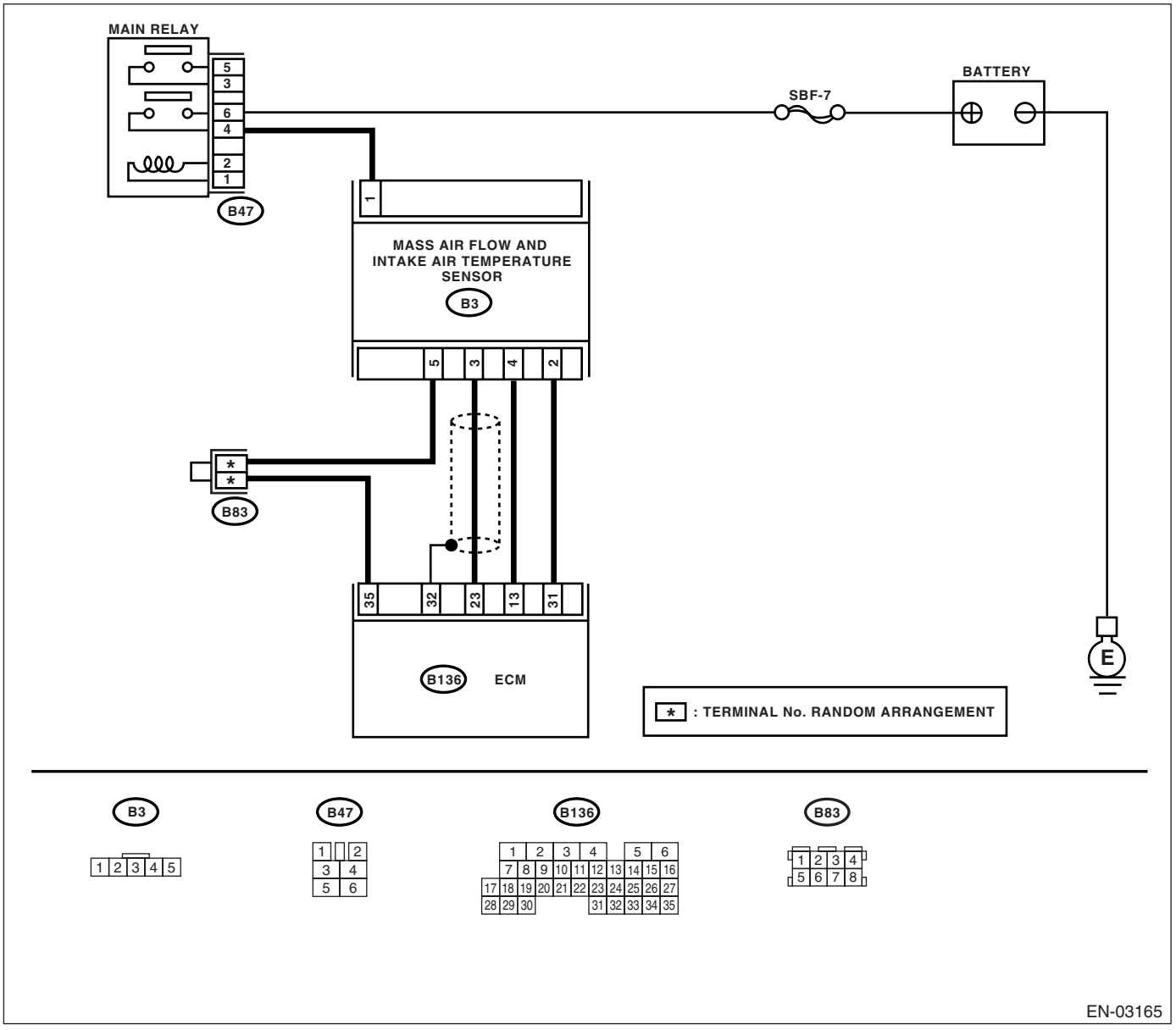

	Step	Check	Yes	No
1	**CHECK FOR ANY OTHER DTC ON DISPLAY.**	Is any other DTC displayed?	Inspect the relevant DTC using "List of Diagnostic Trouble Code (DTC)". <Ref. to EN(H4DOTC)(diag)-71, List of Diagnostic Trouble Code (DTC).> NOTE: In this case, it is not necessary to inspect DTC P0111.	Go to step **2.**
2	**CHECK ENGINE COOLANT TEMPERATURE.** 1) Start the engine and warm it up completely. 2) Measure the engine coolant temperature using Subaru Select Monitor or general scan tool. NOTE: • Subaru Select Monitor For detailed operation procedure, refer to the "READ CURRENT DATA FOR ENGINE". <Ref. to EN(H4DOTC)(diag)-28, Subaru Select Monitor.> • General scan tool For detailed operation procedures, refer to the general scan tool instruction manual.	Is the engine coolant temperature 75°C (167°F) to 95°C (203°F)?	Replace the mass air flow and intake air temperature sensor. <Ref. to FU(H4DOTC)-27, Mass Air Flow and Intake Air Temperature Sensor.>	Inspect the DTC P0125 using "List of Diagnostic Trouble Code (DTC)". <Ref. to EN(H4DOTC)(diag)-71, List of Diagnostic Trouble Code (DTC).>

O: DTC P0112 INTAKE AIR TEMPERATURE CIRCUIT LOW INPUT

DTC DETECTING CONDITION:

- Detect as soon as the malfunction occurs.
- GENERAL DESCRIPTION <Ref. to GD(H4DOTC)-37, DTC P0112 INTAKE AIR TEMPERATURE CIRCUIT LOW INPUT, Diagnostic Trouble Code (DTC) Detecting Criteria.>

TROUBLE SYMPTOM:

- Erroneous idling
- Poor driving performance

CAUTION:

After repair or replacement of faulty parts, conduct Clear Memory Mode <Ref. to EN(H4DOTC)(diag)-45, OPERATION, Clear Memory Mode.> and Inspection Mode <Ref. to EN(H4DOTC)(diag)-36, PROCEDURE, Inspection Mode.>.

WIRING DIAGRAM:

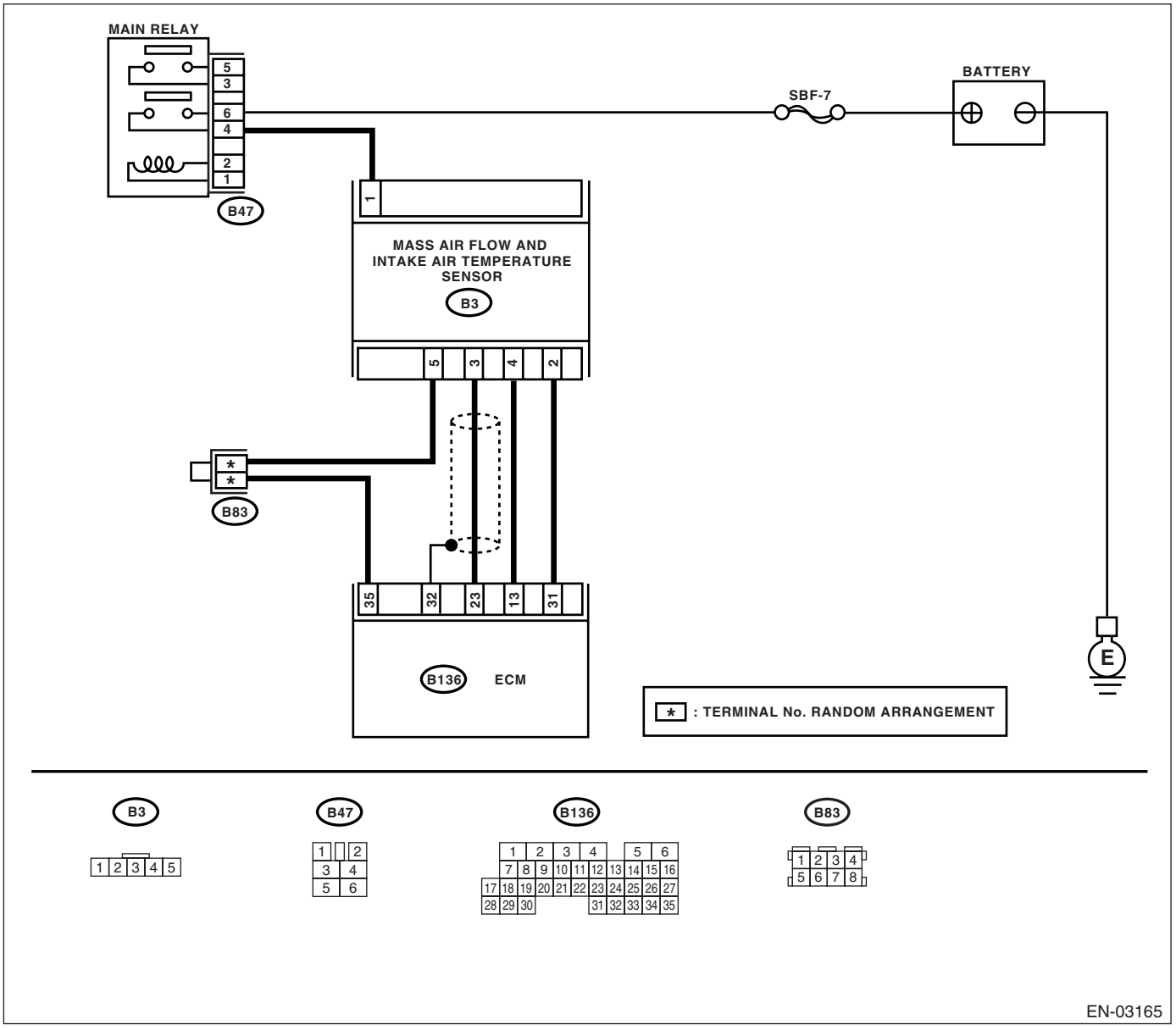

	Step	Check	Yes	No
1	**CHECK CURRENT DATA.** 1) Start the engine. 2) Read the data of intake air temperature sensor signal using Subaru Select Monitor or general scan tool. NOTE: • Subaru Select Monitor For detailed operation procedure, refer to the "READ CURRENT DATA SHOWN ON DISPLAY FOR ENGINE". <Ref. to EN(H4DOTC)(diag)-28, Subaru Select Monitor.> • General scan tool For detailed operation procedure, refer to the general scan tool instruction manual.	Is intake air temperature more than 55°C (131°F)?	Go to step **2.**	Repair the poor contact. NOTE: In this case, repair the following: • Poor contact in mass air flow and intake air temperature sensor • Poor contact in ECM • Poor contact in joint connector
2	**CHECK HARNESS BETWEEN MASS AIR FLOW AND INTAKE AIR TEMPERATURE SENSOR AND ECM CONNECTOR.** 1) Turn the ignition switch to OFF. 2) Disconnect the connector from mass air flow and intake air temperature sensor. 3) Turn the ignition switch to ON. 4) Read the data of intake air temperature sensor signal using Subaru Select Monitor or general scan tool. NOTE: • Subaru Select Monitor For detailed operation procedure, refer to the "READ CURRENT DATA SHOWN ON DISPLAY FOR ENGINE". <Ref. to EN(H4DOTC)(diag)-28, Subaru Select Monitor.> • General scan tool For detailed operation procedure, refer to the general scan tool instruction manual.	Is the value less than –36°C (–33°F)?	Replace the mass air flow and intake air temperature sensor. <Ref. to FU(H4DOTC)-27, Mass Air Flow and Intake Air Temperature Sensor.>	Repair the ground short circuit in harness between mass air flow and intake air temperature sensor and ECM connector.

P: DTC P0113 INTAKE AIR TEMPERATURE CIRCUIT HIGH INPUT

DTC DETECTING CONDITION:

- Detect as soon as the malfunction occurs.
- GENERAL DESCRIPTION <Ref. to GD(H4DOTC)-39, DTC P0113 INTAKE AIR TEMPERATURE CIRCUIT HIGH INPUT, Diagnostic Trouble Code (DTC) Detecting Criteria.>

TROUBLE SYMPTOM:

- Erroneous idling
- Poor driving performance

CAUTION:

After repair or replacement of faulty parts, conduct Clear Memory Mode <Ref. to EN(H4DOTC)(diag)-45, OPERATION, Clear Memory Mode.> and Inspection Mode <Ref. to EN(H4DOTC)(diag)-36, PROCEDURE, Inspection Mode.>.

WIRING DIAGRAM:

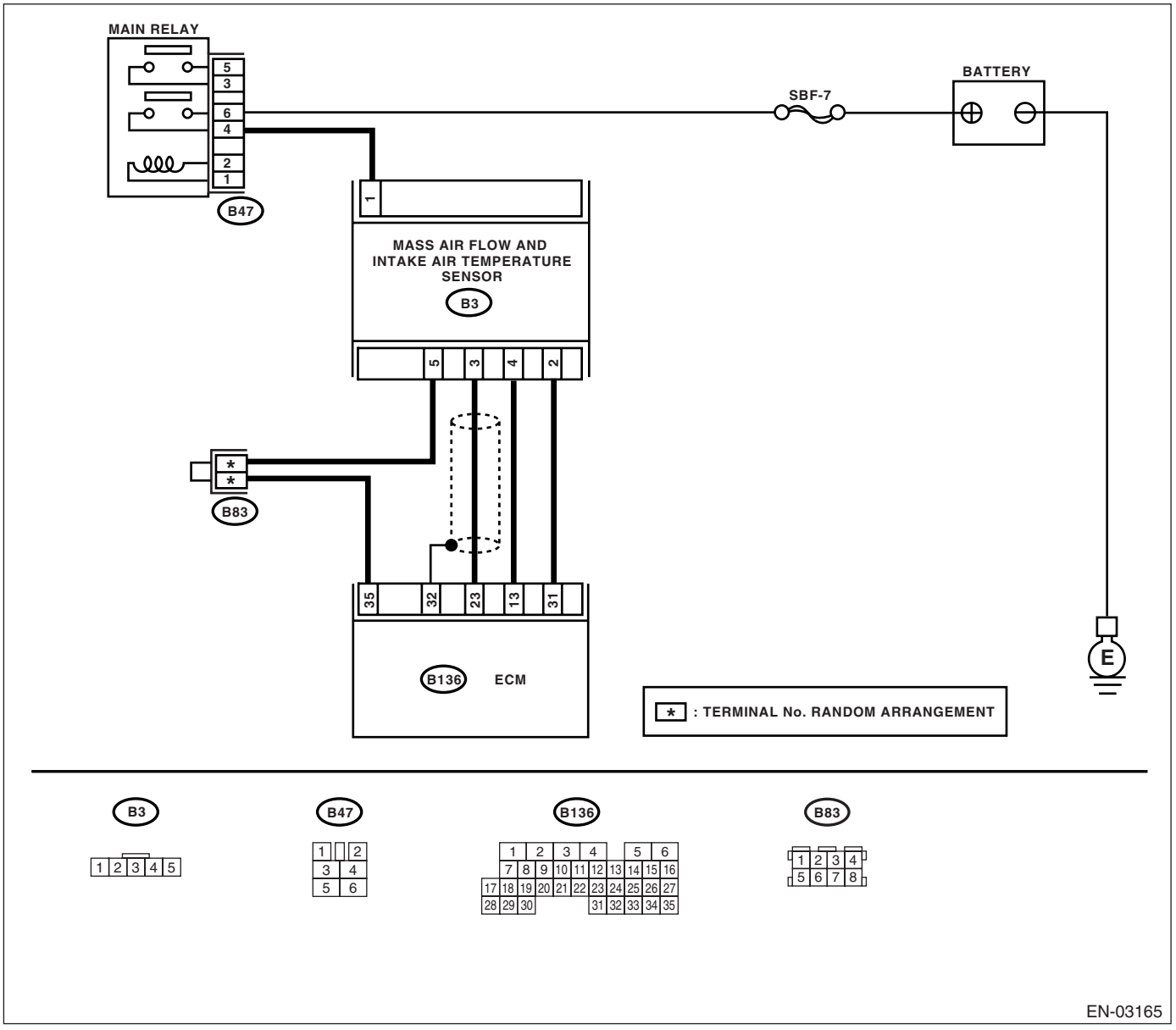

	Step	Check	Yes	No
1	**CHECK CURRENT DATA.** 1) Start the engine. 2) Read the data of intake air temperature sensor signal using Subaru Select Monitor or general scan tool. NOTE: • Subaru Select Monitor For detailed operation procedure, refer to the "READ CURRENT DATA SHOWN ON DISPLAY FOR ENGINE". <Ref. to EN(H4DOTC)(diag)-28, Subaru Select Monitor.> • General scan tool For detailed operation procedure, refer to the general scan tool instruction manual.	Is the value less than –36°C (–33°F)?	Go to step **2.**	Repair the poor contact. NOTE: In this case, repair the following: • Poor contact in mass air flow and intake air temperature sensor • Poor contact in ECM • Poor contact in joint connector
2	**CHECK HARNESS BETWEEN MASS AIR FLOW AND INTAKE AIR TEMPERATURE SENSOR AND ECM CONNECTOR.** 1) Turn the ignition switch to OFF. 2) Disconnect the connector from mass air flow and intake air temperature sensor. 3) Measure the voltage between mass air flow and intake air temperature sensor connector and engine ground. ***Connector & terminal*** ***(B3) No. 4 (+) — Engine ground (–):***	Is the voltage more than 10 V?	Repair the battery short circuit in harness between mass air flow and intake air temperature sensor and ECM connector.	Go to step **3.**
3	**CHECK HARNESS BETWEEN MASS AIR FLOW AND INTAKE AIR TEMPERATURE SENSOR AND ECM CONNECTOR.** 1) Turn the ignition switch to ON. 2) Measure the voltage between mass air flow and intake air temperature sensor connector and engine ground. ***Connector & terminal*** ***(B3) No. 4 (+) — Engine ground (–):***	Is the voltage more than 10 V?	Repair the battery short circuit in harness between mass air flow and intake air temperature sensor and ECM connector.	Go to step **4.**
4	**CHECK HARNESS BETWEEN MASS AIR FLOW AND INTAKE AIR TEMPERATURE SENSOR AND ECM CONNECTOR.** Measure the voltage between mass air flow and intake air temperature sensor connector and engine ground. ***Connector & terminal*** ***(B3) No. 4 (+) — Engine ground (–):***	Is the voltage more than 4 V?	Go to step **5.**	Repair the harness and connector. NOTE: In this case, repair the following: • Open circuit in ness between mass air flow and intake air temperature sensor and ECM connector • Poor contact in mass air flow and intake air temperature sensor • Poor contact in ECM • Poor contact in joint connector

	Step	Check	Yes	No
5	**CHECK HARNESS BETWEEN MASS AIR FLOW AND INTAKE AIR TEMPERATURE SENSOR AND ECM CONNECTOR.** 1) Turn the ignition switch to OFF. 2) Measure the resistance of harness between mass air flow and intake air temperature sensor and engine ground. ***Connector & terminal*** ***(B3) No. 5 — Engine ground:***	Is the resistance less than 5 Ω?	Replace the mass air flow and intake air temperature sensor. <Ref. to FU(H4DOTC)-27, Mass Air Flow and Intake Air Temperature Sensor.>	Repair the harness and connector. NOTE: In this case, repair the following: • Open circuit in ness between mass air flow and intake air temperature sensor and ECM connector • Poor contact in mass air flow and intake air temperature sensor • Poor contact in ECM • Poor contact in joint connector

Q: DTC P0117 ENGINE COOLANT TEMPERATURE CIRCUIT LOW INPUT

DTC DETECTING CONDITION:

- Detect as soon as the malfunction occurs.
- GENERAL DESCRIPTION <Ref. to GD(H4DOTC)-41, DTC P0117 ENGINE COOLANT TEMPERATURE CIRCUIT LOW INPUT, Diagnostic Trouble Code (DTC) Detecting Criteria.>

TROUBLE SYMPTOM:

- Hard to start
- Erroneous idling
- Poor driving performance

CAUTION:

After repair or replacement of faulty parts, conduct Clear Memory Mode <Ref. to EN(H4DOTC)(diag)-45, OPERATION, Clear Memory Mode.> and Inspection Mode <Ref. to EN(H4DOTC)(diag)-36, PROCEDURE, Inspection Mode.>.

WIRING DIAGRAM:

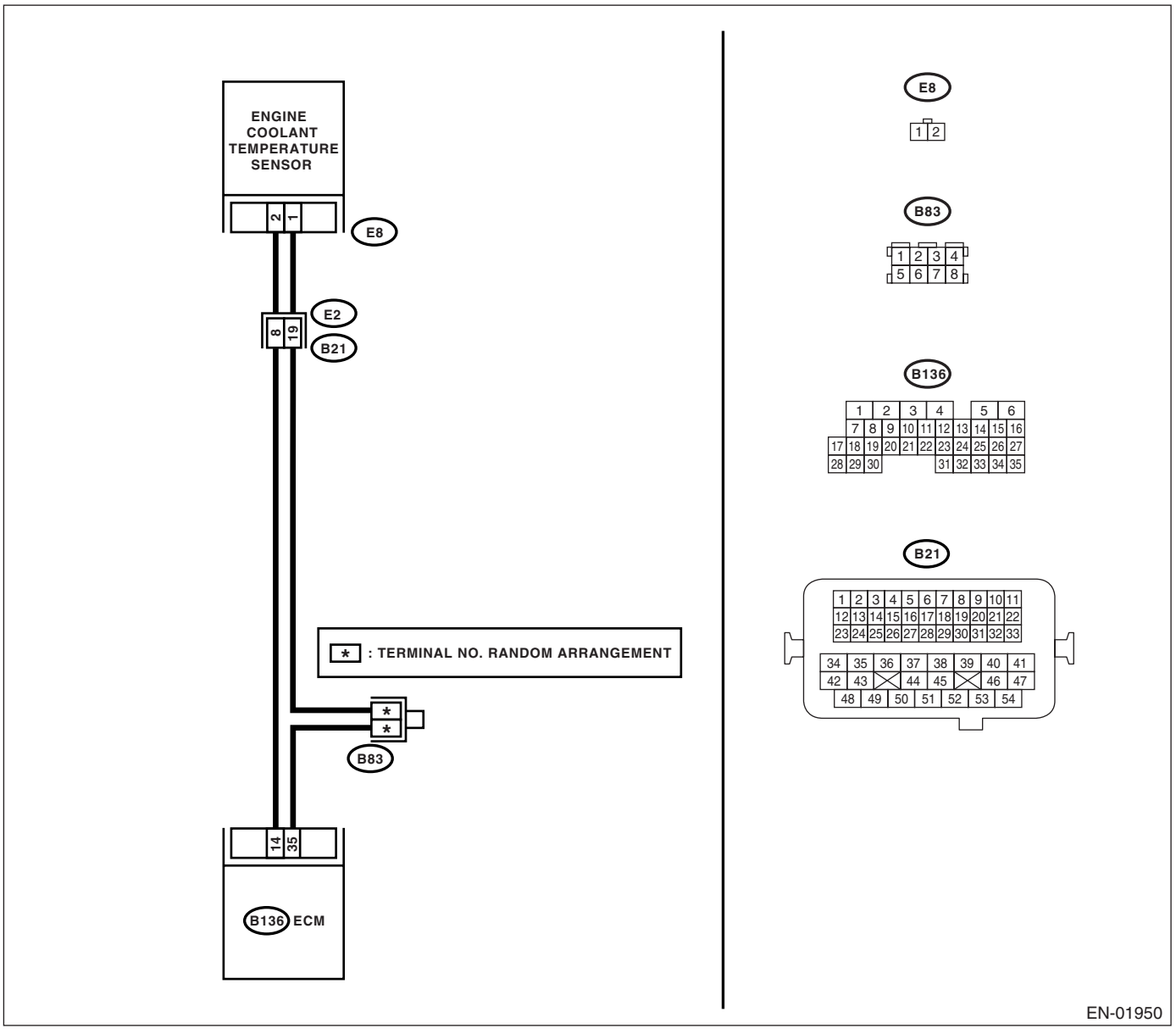

	Step	Check	Yes	No
1	**CHECK CURRENT DATA.** 1) Start the engine. 2) Read the data of engine coolant temperature sensor signal using Subaru Select Monitor or general scan tool. NOTE: • Subaru Select Monitor For detailed operation procedure, refer to the "READ CURRENT DATA SHOWN ON DISPLAY FOR ENGINE". <Ref. to EN(H4DOTC)(diag)-28, Subaru Select Monitor.> • General scan tool For detailed operation procedure, refer to the general scan tool instruction manual.	Is engine coolant temperature more than 120°C (248°F)?	Go to step **2.**	Repair the poor contact. NOTE: In this case, repair the following: • Poor contact in engine coolant temperature sensor • Poor contact in ECM • Poor contact in coupling connector • Poor contact in joint connector
2	**CHECK HARNESS BETWEEN ENGINE COOLANT TEMPERATURE SENSOR AND ECM CONNECTOR.** 1) Turn the ignition switch to OFF. 2) Disconnect the connectors from the engine coolant temperature sensor. 3) Turn the ignition switch to ON. 4) Read the data of engine coolant temperature sensor signal using Subaru Select Monitor or general scan tool. NOTE: • Subaru Select Monitor For detailed operation procedure, refer to the "READ CURRENT DATA SHOWN ON DISPLAY FOR ENGINE". <Ref. to EN(H4DOTC)(diag)-28, Subaru Select Monitor.> • General scan tool For detailed operation procedure, refer to the general scan tool instruction manual.	Is engine coolant temperature less than −40°C (−40°F)?	Replace the engine coolant temperature sensor. <Ref. to FU(H4DOTC)-22, Engine Coolant Temperature Sensor.>	Repair the ground short circuit in harness between engine coolant temperature sensor and ECM connector.

R: DTC P0118 ENGINE COOLANT TEMPERATURE CIRCUIT HIGH INPUT

DTC DETECTING CONDITION:

- Detect as soon as the malfunction occurs.
- GENERAL DESCRIPTION <Ref. to GD(H4DOTC)-43, DTC P0118 ENGINE COOLANT TEMPERATURE CIRCUIT HIGH INPUT, Diagnostic Trouble Code (DTC) Detecting Criteria.>

TROUBLE SYMPTOM:

- Hard to start
- Erroneous idling
- Poor driving performance

CAUTION:

After repair or replacement of faulty parts, conduct Clear Memory Mode <Ref. to EN(H4DOTC)(diag)-45, OPERATION, Clear Memory Mode.> and Inspection Mode <Ref. to EN(H4DOTC)(diag)-36, PROCEDURE, Inspection Mode.>.

WIRING DIAGRAM:

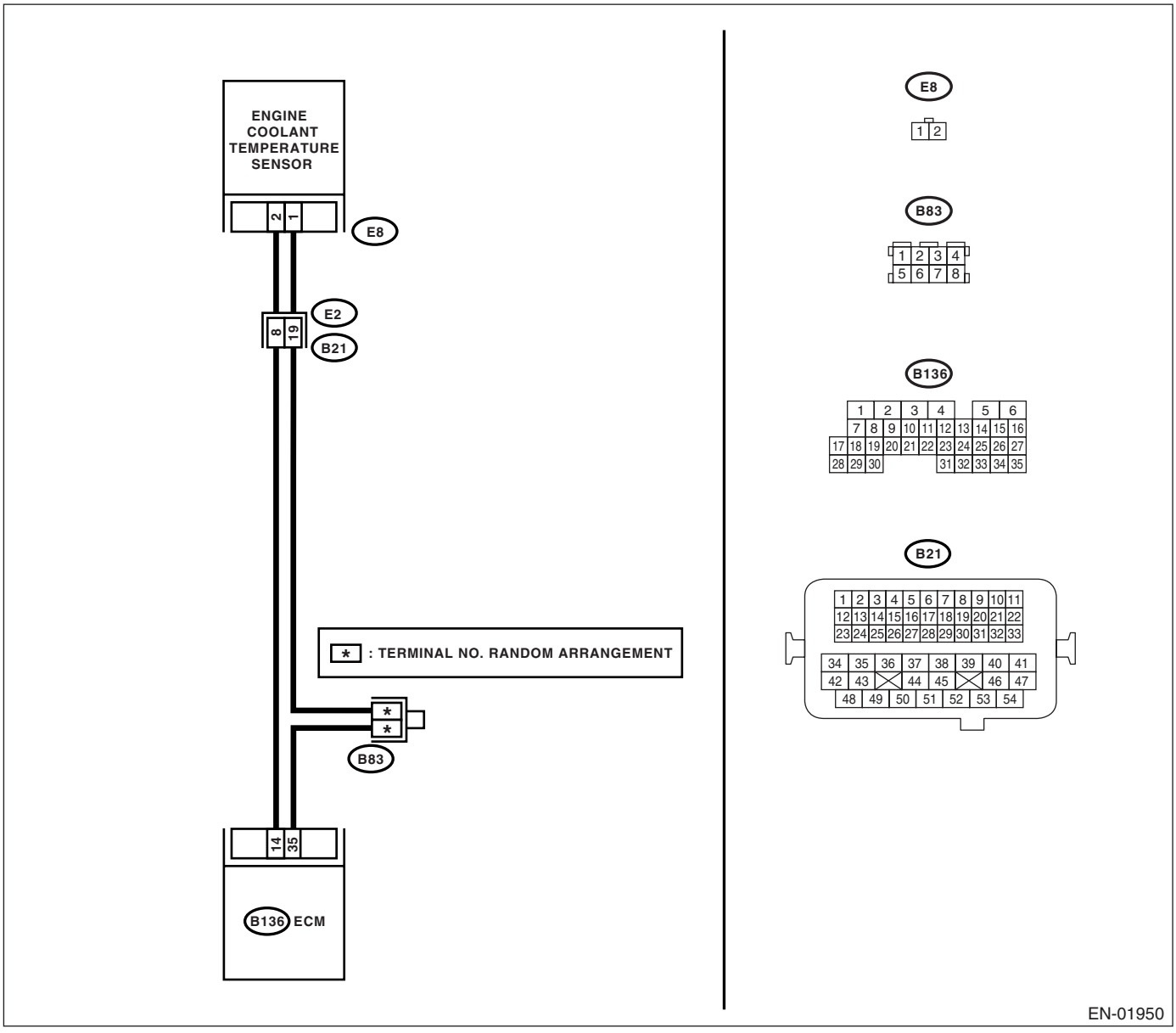

	Step	Check	Yes	No
1	**CHECK CURRENT DATA.** 1) Start the engine. 2) Read the data of engine coolant temperature sensor signal using Subaru Select Monitor or general scan tool. NOTE: • Subaru Select Monitor For detailed operation procedure, refer to the "READ CURRENT DATA SHOWN ON DISPLAY FOR ENGINE". <Ref. to EN(H4DOTC)(diag)-28, Subaru Select Monitor.> • General scan tool For detailed operation procedure, refer to the general scan tool instruction manual.	Is engine coolant temperature less than −40°C (−40°F)?	Go to step **2.**	Repair the poor contact. NOTE: In this case, repair the following: • Poor contact in engine coolant temperature sensor • Poor contact in ECM • Poor contact in coupling connector • Poor contact in joint connector
2	**CHECK HARNESS BETWEEN ENGINE COOLANT TEMPERATURE SENSOR AND ECM CONNECTOR.** 1) Turn the ignition switch to OFF. 2) Disconnect the connectors from the engine coolant temperature sensor. 3) Measure the voltage between engine coolant temperature sensor connector and engine ground. ***Connector & terminal*** ***(E8) No. 2 (+) — Engine ground (−):***	Is the voltage more than 10 V?	Repair the battery short circuit in harness between ECM and engine coolant temperature sensor connector.	Go to step **3.**
3	**CHECK HARNESS BETWEEN ENGINE COOLANT TEMPERATURE SENSOR AND ECM CONNECTOR.** 1) Turn the ignition switch to ON. 2) Measure the voltage between engine coolant temperature sensor connector and engine ground. ***Connector & terminal*** ***(E8) No. 2 (+) — Engine ground (−):***	Is the voltage more than 10 V?	Repair the battery short circuit in harness between ECM and engine coolant temperature sensor connector.	Go to step **4.**
4	**CHECK HARNESS BETWEEN ENGINE COOLANT TEMPERATURE SENSOR AND ECM CONNECTOR.** Measure the voltage between engine coolant temperature sensor connector and engine ground. ***Connector & terminal*** ***(E8) No. 2 (+) — Engine ground (−):***	Is the voltage more than 4 V?	Go to step **5.**	Repair the harness and connector. NOTE: In this case, repair the following: • Open circuit in harness between ECM and engine coolant temperature sensor connector • Poor contact in engine coolant temperature sensor connector • Poor contact in ECM connector • Poor contact in coupling connector • Poor contact in joint connector

	Step	Check	Yes	No
5	**CHECK HARNESS BETWEEN ENGINE COOLANT TEMPERATURE SENSOR AND ECM CONNECTOR.** 1) Turn the ignition switch to OFF. 2) Measure the resistance of harness between engine coolant temperature sensor connector and engine ground. ***Connector & terminal*** ***(E8) No. 1 — Engine ground:***	Is the resistance less than 5 Ω?	Replace the engine coolant temperature sensor. <Ref. to FU(H4DOTC)-22, Engine Coolant Temperature Sensor.>	Repair the harness and connector. NOTE: In this case, repair the following: • Open circuit in harness between ECM and engine coolant temperature sensor connector • Poor contact in engine coolant temperature sensor connector • Poor contact in ECM connector • Poor contact in coupling connector • Poor contact in joint connector

S: DTC P0122 THROTTLE/PEDAL POSITION SENSOR/SWITCH “A” CIRCUIT LOW INPUT

DTC DETECTING CONDITION:

- Detect as soon as the malfunction occurs.
- GENERAL DESCRIPTION <Ref. to GD(H4DOTC)-45, DTC P0122 THROTTLE/PEDAL POSITION SENSOR/SWITCH “A” CIRCUIT LOW INPUT, Diagnostic Trouble Code (DTC) Detecting Criteria.>

TROUBLE SYMPTOM:

- Erroneous idling
- Engine stalls.
- Poor driving performance

WIRING DIAGRAM:

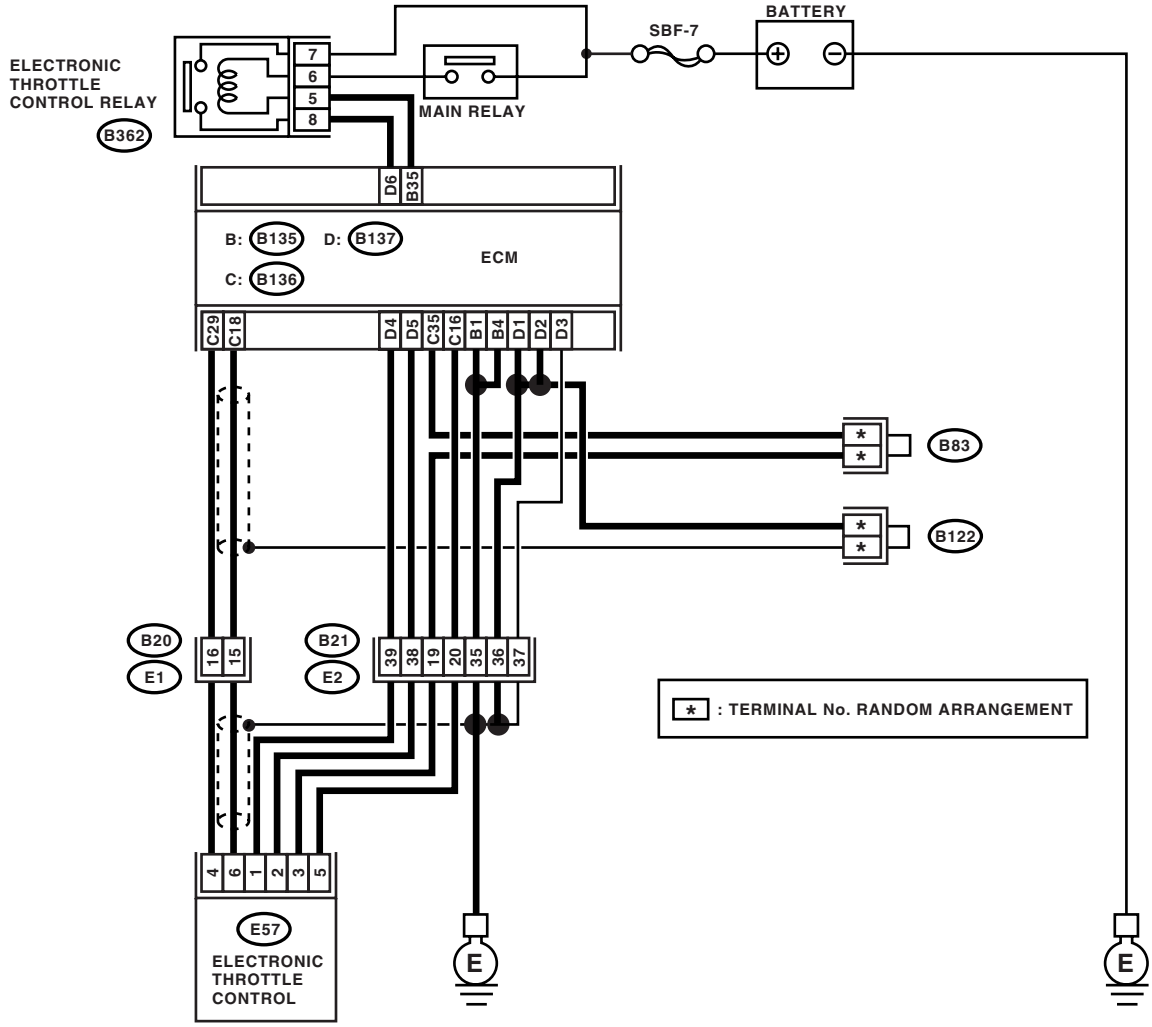

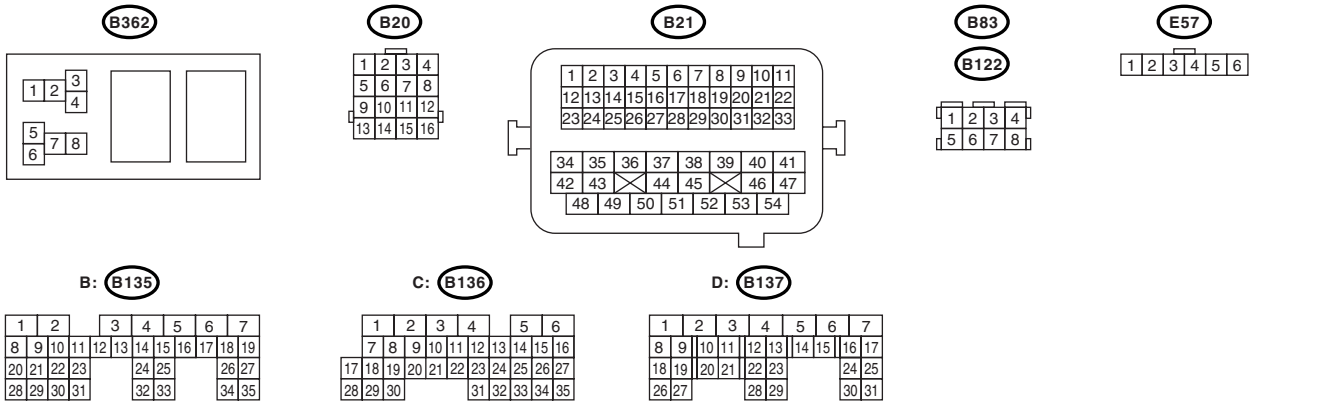

EN-02939

	Step	Check	Yes	No
1	**CHECK SENSOR OUTPUT.** 1) Turn the ignition switch to ON. 2) Read the data of main throttle sensor signal using Subaru Select Monitor or general scan tool. NOTE: • Subaru Select Monitor For detailed operation procedure, refer to the "READ CURRENT DATA FOR ENGINE". <Ref. to EN(H4DOTC)(diag)-28, Subaru Select Monitor.>	Is the voltage more than 0.4 V?	Go to step **2.**	Go to step **3.**
2	**CHECK POOR CONTACT.** Check the poor contact in connector between ECM and electronic throttle control.	Is there poor contact in connector between ECM and electronic throttle control?	Repair the poor contact.	Temporary poor contact occurred, but it is normal at present.
3	**CHECK HARNESS BETWEEN ECM AND ELECTRONIC THROTTLE CONTROL.** 1) Turn the ignition switch to OFF. 2) Disconnect the connector from ECM. 3) Disconnect the connectors from the electronic throttle control control. 4) Measure the resistance between ECM connector and electronic throttle control connector. ***Connector & terminal*** ***(B136) No. 16 — (E57) No. 5:*** ***(B136) No. 18 — (E57) No. 6:***	Is the resistance less than 1 Ω?	Go to step **4.**	Repair the open circuit of harness connector.
4	**CHECK HARNESS BETWEEN ECM AND ELECTRONIC THROTTLE CONTROL.** Measure the resistance between ECM connector and chassis ground. ***Connector & terminal*** ***(B136) No. 18 — Chassis ground:*** ***(B136) No. 16 — Chassis ground:***	Is the resistance more than 1 MΩ?	Go to step **5.**	Repair the chassis short circuit of harness.
5	**CHECK POWER SUPPLY OF ELECTRONIC THROTTLE CONTROL.** 1) Connect the ECM connector. 2) Turn the ignition switch to ON. 3) Measure the voltage between electronic throttle control connector and engine ground. ***Connector & terminal*** ***(E57) No. 5 (+) — Engine ground (−):***	Is the voltage 4.5 — 5.5 V?	Go to step **6.**	Repair the poor contact in ECM connector. Replace the ECM if defective. <Ref. to FU(H4DOTC)-39, Engine Control Module (ECM).>
6	**CHECK SHORT CIRCUIT INSIDE THE ECM.** 1) Turn the ignition switch to OFF. 2) Measure the resistance between electronic throttle control control connector and engine ground. ***Connector & terminal*** ***(E57) No. 6 — Engine ground:***	Is the resistance more than 10 Ω?	Repair the poor contact of electronic throttle control connector. Replace the electronic throttle control if defective.	Repair the poor contact in ECM connector. Replace the ECM if defective. <Ref. to FU(H4DOTC)-39, Engine Control Module (ECM).>

T: DTC P0123 THROTTLE/PEDAL POSITION SENSOR/SWITCH “A” CIRCUIT HIGH INPUT

DTC DETECTING CONDITION:

- Detect as soon as the malfunction occurs.
- GENERAL DESCRIPTION <Ref. to GD(H4DOTC)-47, DTC P0123 THROTTLE/PEDAL POSITION SENSOR/SWITCH “A” CIRCUIT HIGH INPUT, Diagnostic Trouble Code (DTC) Detecting Criteria.>

TROUBLE SYMPTOM:

- Erroneous idling
- Engine stalls.
- Poor driving performance

WIRING DIAGRAM:

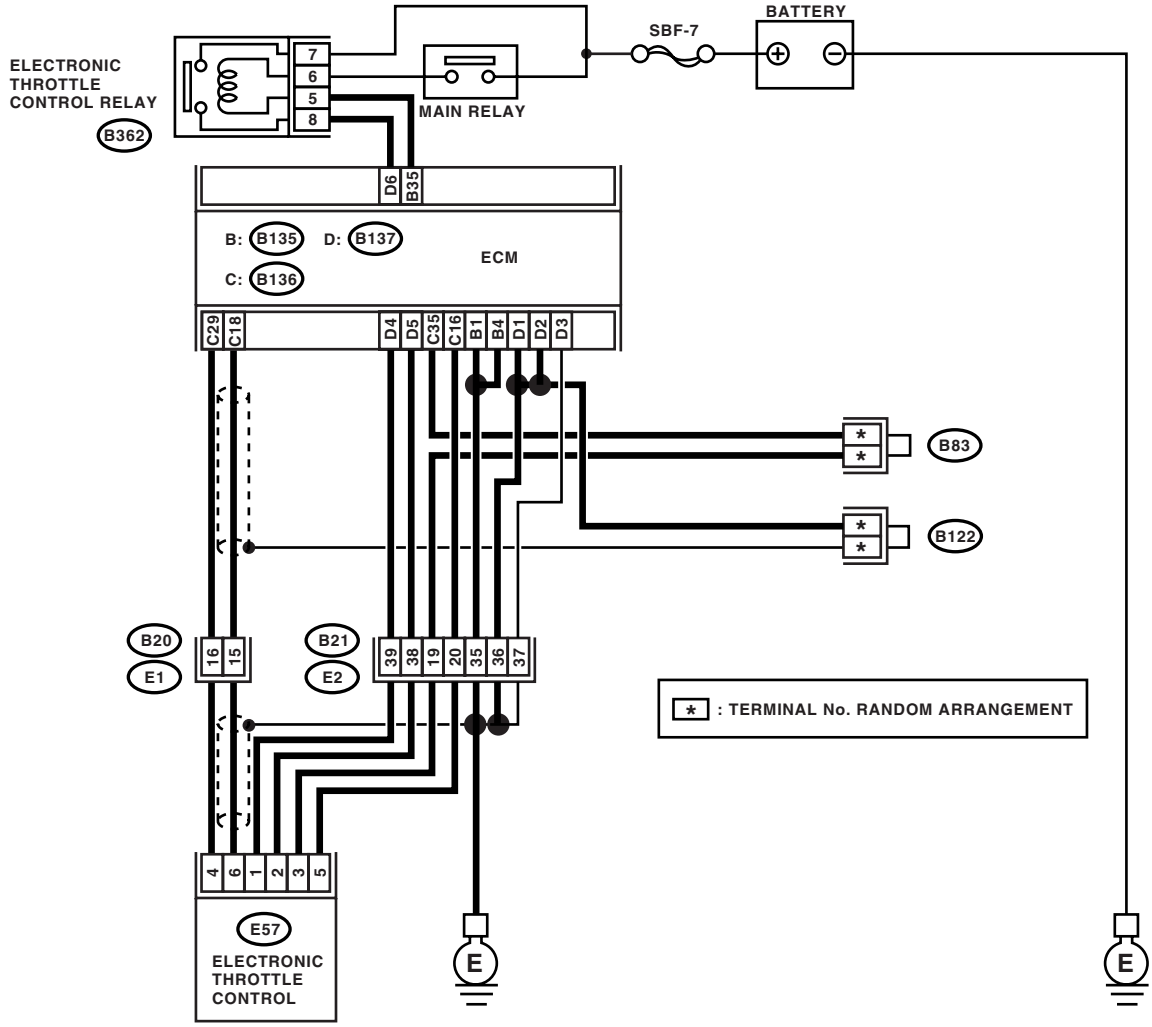

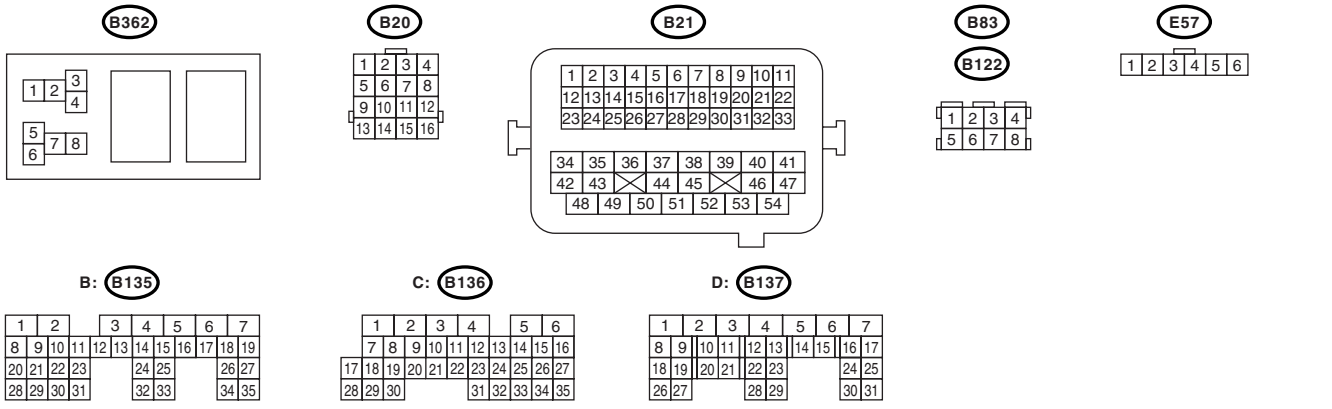

EN-02939

	Step	Check	Yes	No
1	**CHECK SENSOR OUTPUT.** 1) Turn the ignition switch to ON. 2) Read the data of main throttle sensor signal using Subaru Select Monitor. NOTE: • Subaru Select Monitor For detailed operation procedure, refer to the "READ CURRENT DATA FOR ENGINE". <Ref. to EN(H4DOTC)(diag)-28, Subaru Select Monitor.>	Is the voltage less than 4.63 V?	Go to step **2.**	Go to step **3.**
2	**CHECK POOR CONTACT.** Check the poor contact in connector between ECM and electronic throttle control.	Is there poor contact in connector between ECM and electronic throttle control?	Repair the poor contact.	Temporary poor contact occurred, but it is normal at present.
3	**CHECK HARNESS BETWEEN ECM AND ELECTRONIC THROTTLE CONTROL.** 1) Turn the ignition switch to OFF. 2) Disconnect the connector from ECM. 3) Disconnect the connectors from the electronic throttle control control. 4) Measure the resistance between ECM connector and electronic throttle control connector. ***Connector & terminal*** ***(B136) No. 18 — (E57) No. 6:*** ***(B136) No. 35 — (E57) No. 3:***	Is the resistance less than 1 Ω?	Go to step **4.**	Repair the open circuit of harness connector.
4	**CHECK HARNESS BETWEEN ECM AND ELECTRONIC THROTTLE CONTROL.** 1) Turn the ignition switch to ON. 2) Measure the voltage between electronic throttle control connector and engine ground. ***Connector & terminal*** ***(E57) No. 6 (+) — Engine ground (−):*** 3) Check the voltage change by shaking the harness and connector of ECM and engine harness connector while monitoring the value with voltage meter.	Is the voltage less than 10 V?	Go to step **5.**	Repair the battery short circuit in harness between ECM connector and electronic throttle control connector.
5	**CHECK HARNESS BETWEEN ECM AND ELECTRONIC THROTTLE CONTROL.** 1) Turn the ignition switch to OFF. 2) Disconnect the connector from ECM. 3) Measure the resistance between ECM connectors. ***Connector & terminal*** ***(B136) No. 18 — (B136) No. 16:***	Is the resistance more than 1 MΩ?	Repair the poor contact in harness. Repair the electronic throttle control.	Repair the short circuit to sensor power supply.

U: DTC P0125 INSUFFICIENT ENGINE COOLANT TEMPERATURE FOR CLOSED LOOP FUEL CONTROL

DTC DETECTING CONDITION:

- Two consecutive driving cycles with fault
- GENERAL DESCRIPTION <Ref. to GD(H4DOTC)-49, DTC P0125 INSUFFICIENT ENGINE COOLANT TEMPERATURE FOR CLOSED LOOP FUEL CONTROL, Diagnostic Trouble Code (DTC) Detecting Criteria.>

TROUBLE SYMPTOM:

Engine does not return to idling.

CAUTION:

After repair or replacement of faulty parts, conduct Clear Memory Mode <Ref. to EN(H4DOTC)(diag)-45, OPERATION, Clear Memory Mode.> and Inspection Mode <Ref. to EN(H4DOTC)(diag)-36, PROCEDURE, Inspection Mode.>.

WIRING DIAGRAM:

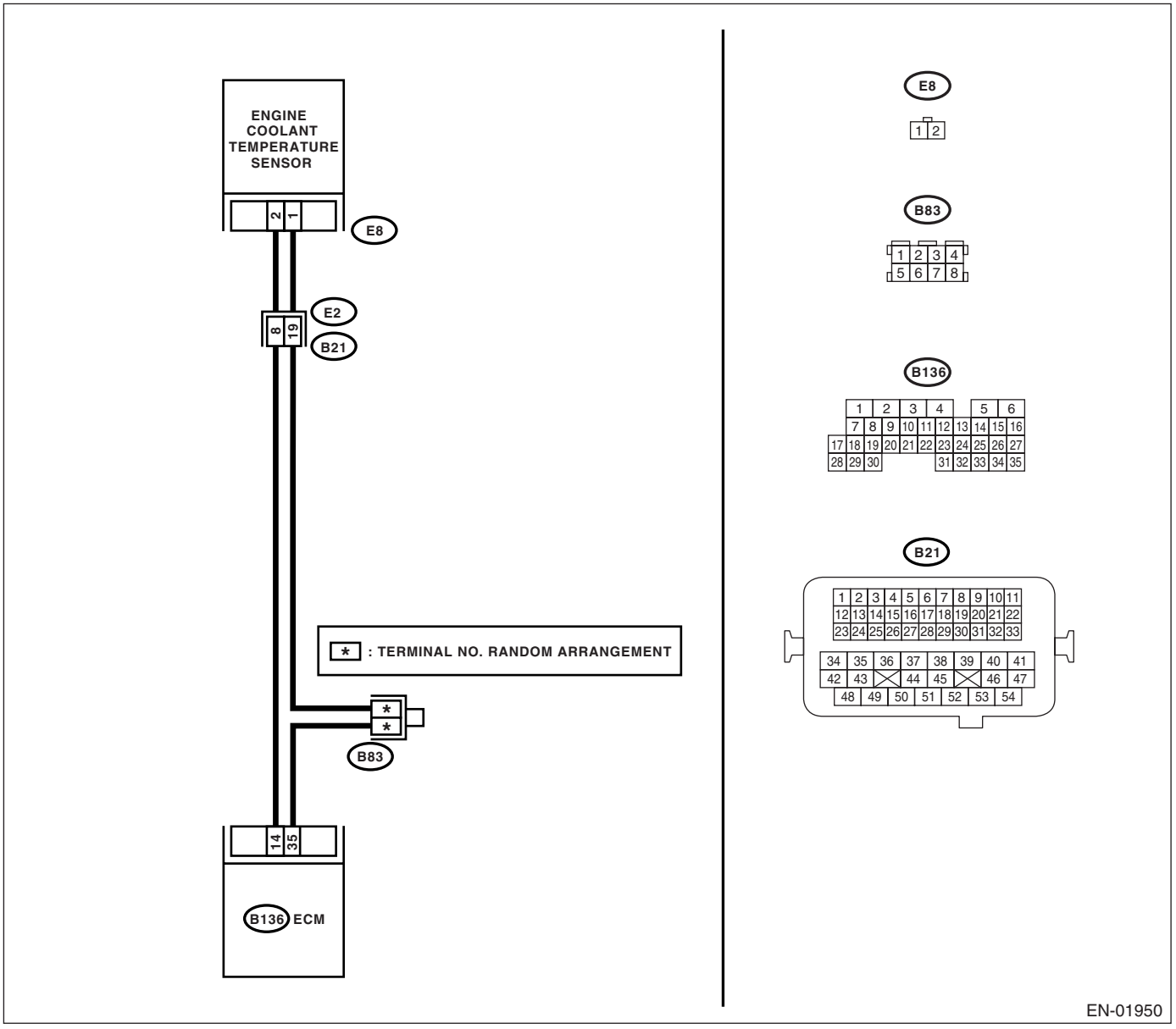

	Step	Check	Yes	No
1	**CHECK FOR ANY OTHER DTC ON DISPLAY.**	Is any other DTC displayed?	Inspect the relevant DTC using "List of Diagnostic Trouble Code (DTC)". <Ref. to EN(H4DOTC)(diag)-71, List of Diagnostic Trouble Code (DTC).> NOTE: In this case, it is not necessary to inspect DTC P0125.	Go to step **2.**
2	**CHECK ENGINE COOLING SYSTEM.** NOTE: Check the following items. • Thermostat open stuck • Coolant level • Coolant freeze • Tire diameter	Is there any fault in engine cooling system?	Replace the thermostat. <Ref. to CO(H4SO)-17, Thermostat.>	Replace the engine coolant temperature sensor. <Ref. to FU(H4DOTC)-22, Engine Coolant Temperature Sensor.>

V: DTC P0126 INSUFFICIENT ENGINE COOLANT TEMPERATURE FOR STABLE OPERATION

DTC DETECTING CONDITION:

- Two consecutive driving cycles with fault
- GENERAL DESCRIPTION <Ref. to GD(H4DOTC)-51, DTC P0126 INSUFFICIENT ENGINE COOLANT TEMPERATURE FOR STABLE OPERATION, Diagnostic Trouble Code (DTC) Detecting Criteria.>

TROUBLE SYMPTOM:

- Hard to start
- Erroneous idling
- Poor driving performance

CAUTION:

After repair or replacement of faulty parts, conduct Clear Memory Mode <Ref. to EN(H4DOTC)(diag)-45, OPERATION, Clear Memory Mode.> and Inspection Mode <Ref. to EN(H4DOTC)(diag)-36, PROCEDURE, Inspection Mode.>.

WIRING DIAGRAM:

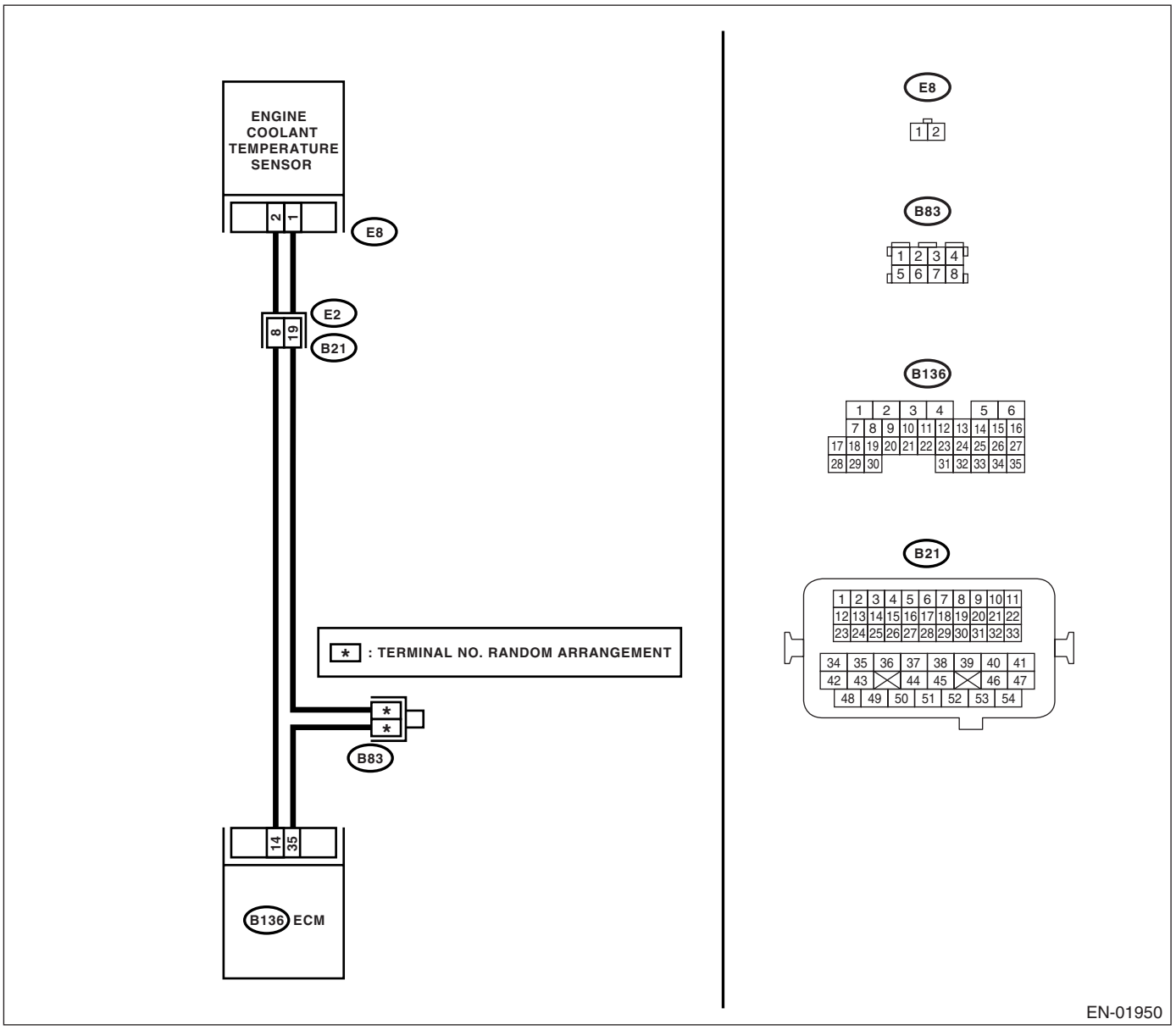

	Step	Check	Yes	No
1	**CHECK FOR ANY OTHER DTC ON DISPLAY.**	Is any other DTC displayed?	Inspect the relevant DTC using "List of Diagnostic Trouble Code (DTC)". <Ref. to EN(H4DOTC)(diag)-71, List of Diagnostic Trouble Code (DTC).>	Go to step **2.**
2	**CHECK ENGINE COOLANT TEMPERATURE SENSOR.** Measure the resistance between engine coolant temperature sensor terminals when engine coolant is cold and after warmed-up. ***Terminals*** ***No. 1 — No. 2:***	Is the resistance of engine coolant temperature sensor different between when engine coolant is cold and after warmed-up?	Contact your SOA Service Center.	Replace the engine coolant temperature sensor. <Ref. to FU(H4DOTC)-22, Engine Coolant Temperature Sensor.>

W: DTC P0128 COOLANT THERMOSTAT (ENGINE COOLANT TEMPERATURE BELOW THERMOSTAT REGULATING TEMPERATURE)

DTC DETECTING CONDITION:

- Two consecutive driving cycles with fault
- GENERAL DESCRIPTION <Ref. to GD(H4DOTC)-53, DTC P0128 COOLANT THERMOSTAT (ENGINE COOLANT TEMPERATURE BELOW THERMOSTAT REGULATING TEMPERATURE), Diagnostic Trouble Code (DTC) Detecting Criteria.>

TROUBLE SYMPTOM:

Thermostat remains open.

CAUTION:

After repair or replacement of faulty parts, conduct Clear Memory Mode <Ref. to EN(H4DOTC)(diag)-45, OPERATION, Clear Memory Mode.> and Inspection Mode <Ref. to EN(H4DOTC)(diag)-36, PROCEDURE, Inspection Mode.>.

	Step	Check	Yes	No
1	**CHECK VEHICLE CONDITION.**	Was the vehicle driven or idled with the engine partially submerged under water?	In this case, it is not necessary to inspect DTC P0128.	Go to step **2.**
2	**CHECK FOR ANY OTHER DTC ON DISPLAY.**	Is any other DTC displayed?	Inspect the relevant DTC using "List of Diagnostic Trouble Codes (DTC)". <Ref. to EN(H4DOTC)(diag)-71, List of Diagnostic Trouble Code (DTC).>	Go to step **3.**
3	**CHECK ENGINE COOLANT.**	Are coolant level and mixture ratio of cooling water to antifreeze solution correct?	Go to step **4.**	Replace the engine coolant. <Ref. to CO(H4SO)-12, REPLACEMENT, Engine Coolant.>
4	**CHECK RADIATOR FAN.** 1) Start the engine. 2) Check radiator fan operation.	Does the radiator fan continuously rotate for more than 3 minutes during idling?	Repair radiator fan circuit. <Ref. to CO(H4SO)-23, Radiator Main Fan and Fan Motor.> and <Ref. to CO(H4SO)-25, Radiator Sub Fan and Fan Motor.>.	Replace the thermostat. <Ref. to CO(H4SO)-17, Thermostat.>

X: DTC P0131 O2 SENSOR CIRCUIT LOW VOLTAGE (BANK 1 SENSOR 1)

DTC DETECTING CONDITION:

- Detect as soon as the malfunction occurs.
- GENERAL DESCRIPTION <Ref. to GD(H4DOTC)-55, DTC P0131 O2 SENSOR CIRCUIT LOW VOLTAGE (BANK 1 SENSOR 1), Diagnostic Trouble Code (DTC) Detecting Criteria.>

CAUTION:
After repair or replacement of faulty parts, conduct Clear Memory Mode <Ref. to EN(H4DOTC)(diag)-45, OPERATION, Clear Memory Mode.> and Inspection Mode <Ref. to EN(H4DOTC)(diag)-36, PROCEDURE, Inspection Mode.>.

WIRING DIAGRAM:

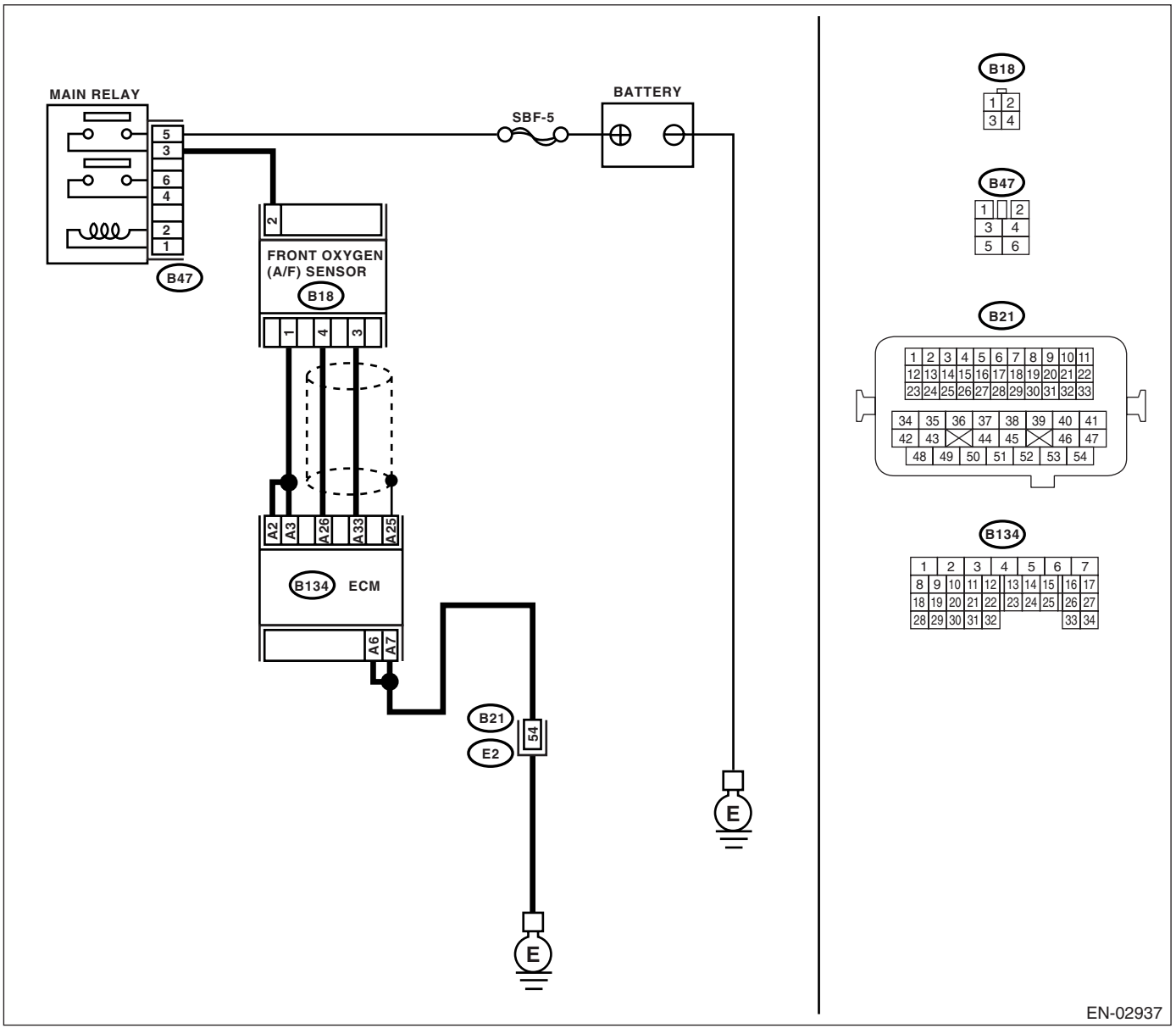

	Step	Check	Yes	No
1	**CHECK HARNESS BETWEEN ECM AND FRONT OXYGEN (A/F) SENSOR CONNECTOR.** 1) Turn the ignition switch to OFF. 2) Disconnect the connector from ECM and front oxygen (A/F) sensor connector. 3) Measure the resistance of harness between ECM connector and chassis ground. ***Connector & terminal*** ***(B134) No. 26 — Chassis ground:*** ***(B134) No. 33 — Chassis ground:***	Is the resistance more than 1 MΩ?	Replace the front oxygen (A/F) sensor. <Ref. to FU(H4DOTC)-35, Front Oxygen (A/F) Sensor.>	Repair the ground short circuit in harness between ECM and front oxygen (A/F) sensor connector.

Y: DTC P0132 O2 SENSOR CIRCUIT HIGH VOLTAGE (BANK 1 SENSOR 1)

DTC DETECTING CONDITION:

- Detect as soon as the malfunction occurs.
- GENERAL DESCRIPTION <Ref. to GD(H4DOTC)-57, DTC P0132 O2 SENSOR CIRCUIT HIGH VOLTAGE (BANK 1 SENSOR 1), Diagnostic Trouble Code (DTC) Detecting Criteria.>

CAUTION:
After repair or replacement of faulty parts, conduct Clear Memory Mode <Ref. to EN(H4DOTC)(diag)-45, OPERATION, Clear Memory Mode.> and Inspection Mode <Ref. to EN(H4DOTC)(diag)-36, PROCEDURE, Inspection Mode.>.

WIRING DIAGRAM:

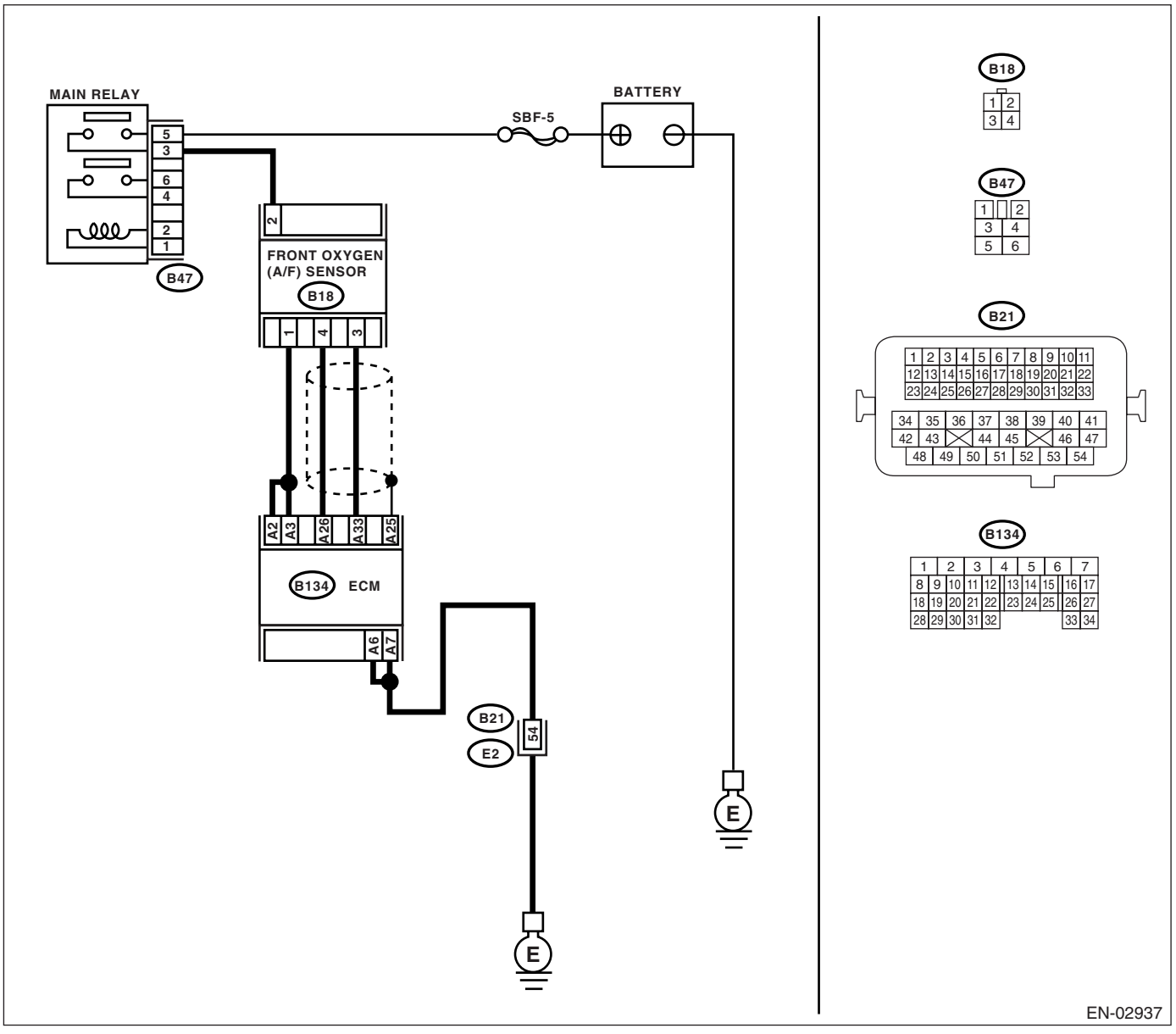

	Step	Check	Yes	No
1	**CHECK HARNESS BETWEEN ECM AND FRONT OXYGEN (A/F) SENSOR CONNECTOR.** 1) Turn the ignition switch to ON. 2) Disconnect the connector from front oxygen (A/F) sensor. 3) Measure the voltage of harness between ECM connector and chassis ground. ***Connector & terminal*** ***(B134) No. 26 (+) — Chassis ground (−):*** ***(B134) No. 33 (+) — Chassis ground (−):***	Is the voltage more than 8 V?	Replace the front oxygen (A/F) sensor. <Ref. to FU(H4DOTC)-35, Front Oxygen (A/F) Sensor.>	Repair the battery short circuit in harness between ECM and front oxygen (A/F) sensor connector.

Z: DTC P0133 O2 SENSOR CIRCUIT SLOW RESPONSE (BANK 1 SENSOR 1)

DTC DETECTING CONDITION:

- Two consecutive driving cycles with fault
- GENERAL DESCRIPTION <Ref. to GD(H4DOTC)-59, DTC P0133 O2 SENSOR CIRCUIT SLOW RESPONSE (BANK 1 SENSOR 1), Diagnostic Trouble Code (DTC) Detecting Criteria.>

CAUTION:
After repair or replacement of faulty parts, conduct Clear Memory Mode <Ref. to EN(H4DOTC)(diag)-45, OPERATION, Clear Memory Mode.> and Inspection Mode <Ref. to EN(H4DOTC)(diag)-36, PROCEDURE, Inspection Mode.>.

WIRING DIAGRAM:

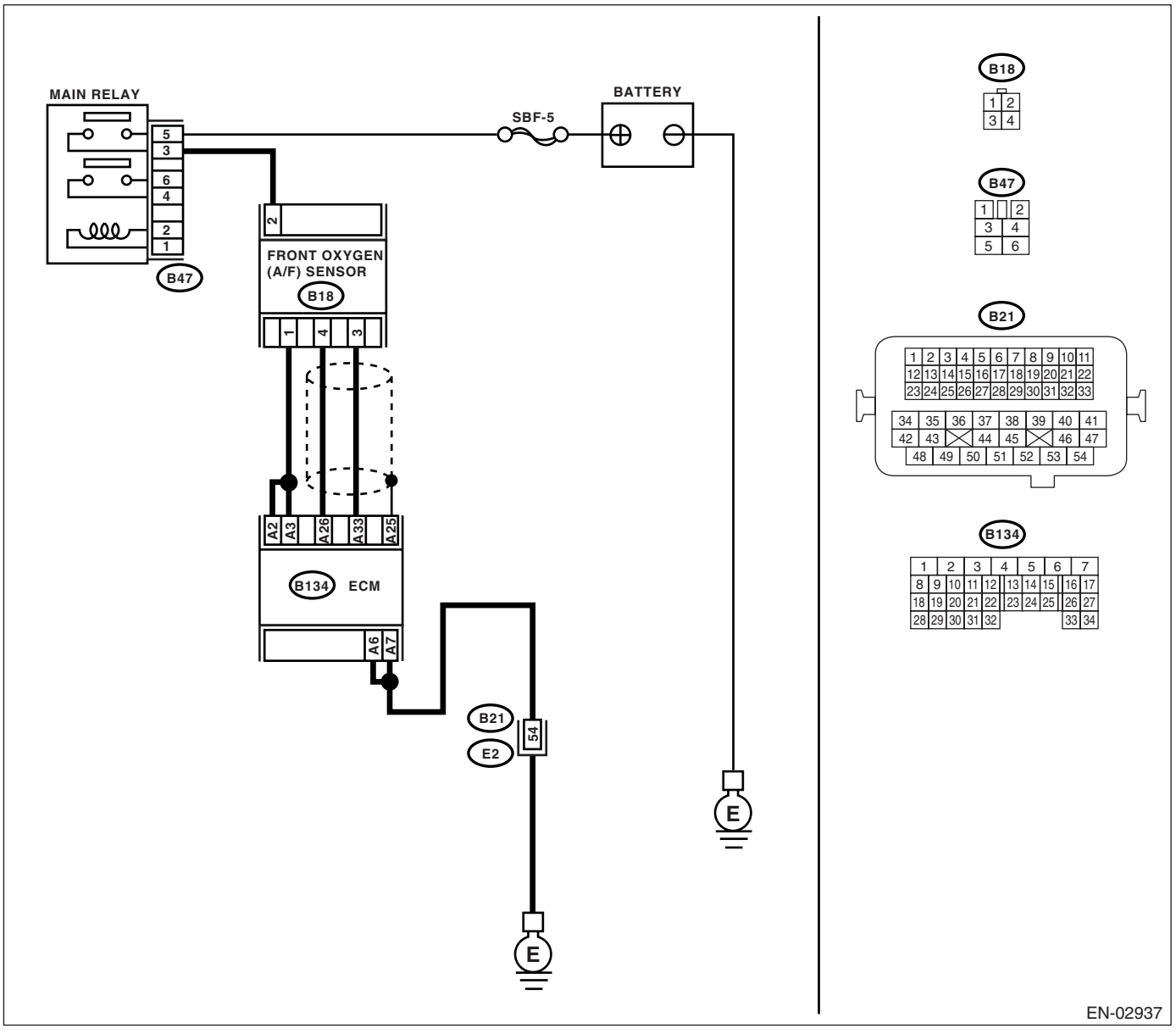

	Step	Check	Yes	No
1	**CHECK FOR ANY OTHER DTC ON DISPLAY.**	Is any other DTC displayed?	Inspect the relevant DTC using "List of Diagnostic Trouble Code (DTC)". <Ref. to EN(H4DOTC)(diag)-71, List of Diagnostic Trouble Code (DTC).> NOTE: In this case, it is not necessary to inspect DTC P0133.	Go to step **2.**
2	**CHECK EXHAUST SYSTEM.** NOTE: Check the following items. • Loose installation of front portion of exhaust pipe onto cylinder heads • Loose connection between front exhaust pipe and front catalytic converter • Damage of exhaust pipe resulting in a hole	Is there any fault in exhaust system?	Repair the exhaust system.	Replace the front oxygen (A/F) sensor. <Ref. to FU(H4DOTC)-35, Front Oxygen (A/F) Sensor.>

AA:DTC P0134 O2 SENSOR CIRCUIT NO ACTIVITY DETECTED (BANK 1 SENSOR 1)

DTC DETECTING CONDITION:

- Detect as soon as the malfunction occurs.
- GENERAL DESCRIPTION <Ref. to GD(H4DOTC)-62, DTC P0134 O2 SENSOR CIRCUIT NO ACTIVITY DETECTED (BANK 1 SENSOR 1), Diagnostic Trouble Code (DTC) Detecting Criteria.>

CAUTION:

After repair or replacement of faulty parts, conduct Clear Memory Mode <Ref. to EN(H4DOTC)(diag)-45, OPERATION, Clear Memory Mode.> and Inspection Mode <Ref. to EN(H4DOTC)(diag)-36, PROCEDURE, Inspection Mode.>.

WIRING DIAGRAM:

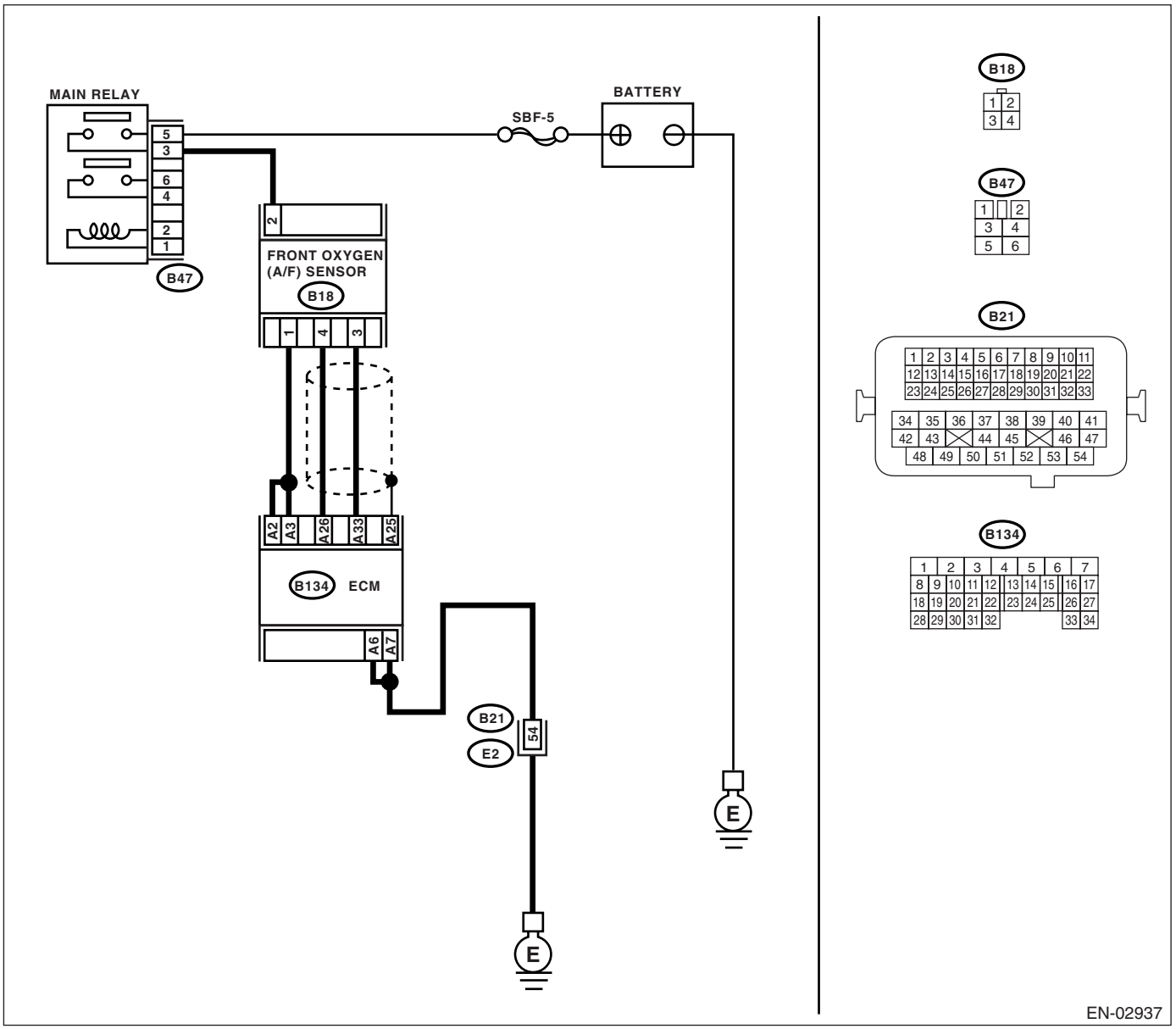

	Step	Check	Yes	No
1	**CHECK HARNESS BETWEEN ECM AND FRONT OXYGEN (A/F) SENSOR CONNECTOR.** 1) Turn the ignition switch to OFF. 2) Disconnect the connector from ECM and front oxygen (A/F) sensor. 3) Measure the resistance of harness between ECM and front oxygen (A/F) sensor connector. ***Connector & terminal*** ***(B134) No. 26 — (B18) No. 4:*** ***(B134) No. 33 — (B18) No. 3:***	Is the resistance less than 1 Ω?	Replace the front oxygen (A/F) sensor. <Ref. to FU(H4DOTC)-35, Front Oxygen (A/F) Sensor.>	Repair the open circuit in harness between ECM and front oxygen (A/F) sensor connector.

AB:DTC P0137 O2 SENSOR CIRCUIT LOW VOLTAGE (BANK 1 SENSOR 2)

DTC DETECTING CONDITION:

- Two consecutive driving cycles with fault
- GENERAL DESCRIPTION <Ref. to GD(H4DOTC)-64, DTC P0137 O2 SENSOR CIRCUIT LOW VOLTAGE (BANK 1 SENSOR 2), Diagnostic Trouble Code (DTC) Detecting Criteria.>

CAUTION:
After repair or replacement of faulty parts, conduct Clear Memory Mode <Ref. to EN(H4DOTC)(diag)-45, OPERATION, Clear Memory Mode.> and Inspection Mode <Ref. to EN(H4DOTC)(diag)-36, PROCEDURE, Inspection Mode.>.

WIRING DIAGRAM:

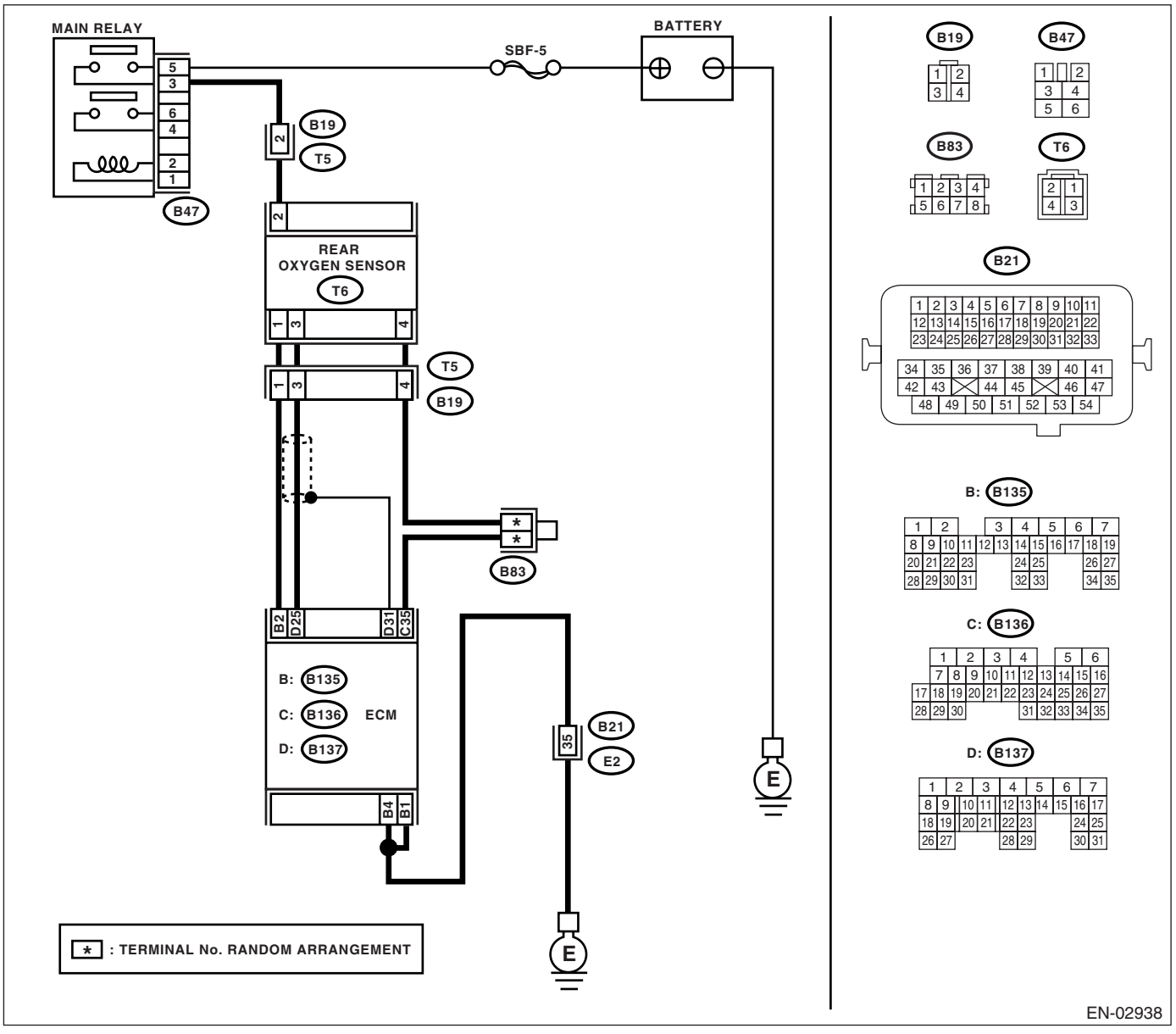

	Step	Check	Yes	No
1	**CHECK FOR ANY OTHER DTC ON DISPLAY.**	Is any other DTC displayed?	Inspect the DTC using "List of Diagnostic Trouble Code (DTC)". <Ref. to EN(H4DOTC)(diag)-71, List of Diagnostic Trouble Code (DTC).> NOTE: In this case, it is not necessary to inspect DTC P0137.	Go to step **2.**
2	**CHECK REAR OXYGEN SENSOR DATA.** 1) Warm-up the engine until engine coolant temperature is above 70°C (158°F), and keep the engine speed at 5,000 rpm. 2) Read the data of rear oxygen sensor signal using Subaru Select Monitor or general scan tool. NOTE: • Subaru Select Monitor For detailed operation procedure, refer to the "READ CURRENT DATA SHOWN ON DISPLAY FOR ENGINE". <Ref. to EN(H4DOTC)(diag)-28, Subaru Select Monitor.> • General scan tool For detailed operation procedure, refer to the general scan tool instruction manual.	Is the voltage more than 490 mV?	Go to step **5.**	Go to step **3.**
3	**CHECK HARNESS BETWEEN ECM AND REAR OXYGEN SENSOR CONNECTOR.** 1) Turn the ignition switch to OFF. 2) Disconnect the connector from ECM and rear oxygen sensor. 3) Measure the resistance in harness between ECM and rear oxygen sensor connector. ***Connector & terminal*** ***(B137) No. 25 — (T6) No. 3:*** ***(B136) No. 35 — (T6) No. 4:***	Is the resistance more than 3 Ω?	Repair the open circuit in harness between ECM and rear oxygen sensor connector.	Go to step **4.**
4	**CHECK HARNESS BETWEEN REAR OXYGEN SENSOR AND ECM CONNECTOR.** 1) Turn the ignition switch to OFF. 2) Disconnect the connector from rear oxygen sensor. 3) Turn the ignition switch to ON. 4) Measure the voltage between rear oxygen sensor harness connector and chassis ground. ***Connector & terminal*** ***(T6) No. 3 (+) — Chassis ground (−):***	Is the voltage 0.2 — 0.5 V?	Replace the rear oxygen sensor. <Ref. to FU(H4DOTC)-37, Rear Oxygen Sensor.>	Repair the harness and connector. NOTE: In this case, repair the following: • Open circuit in harness between rear oxygen sensor and ECM connector • Poor contact in rear oxygen sensor connector • Poor contact in ECM connector

Step		Check	Yes	No
5	**CHECK EXHAUST SYSTEM.** Check exhaust system parts. NOTE: Check the following items: • Loose part of exhaust system and incomplete installation • Damage (crack, hole etc.) of parts • Looseness and ill fitting of parts between front oxygen (A/F) sensor and rear oxygen sensor	Is there any fault in exhaust system?	Repair or replace the faulty part.	Replace the rear oxygen sensor. <Ref. to FU(H4DOTC)-37, Rear Oxygen Sensor.>

AC:DTC P0138 O2 SENSOR CIRCUIT HIGH VOLTAGE (BANK 1 SENSOR 2)

DTC DETECTING CONDITION:

- Two consecutive driving cycles with fault
- GENERAL DESCRIPTION <Ref. to GD(H4DOTC)-66, DTC P0138 O2 SENSOR CIRCUIT HIGH VOLTAGE (BANK 1 SENSOR 2), Diagnostic Trouble Code (DTC) Detecting Criteria.>

CAUTION:

After repair or replacement of faulty parts, conduct Clear Memory Mode <Ref. to EN(H4DOTC)(diag)-45, OPERATION, Clear Memory Mode.> and Inspection Mode <Ref. to EN(H4DOTC)(diag)-36, PROCEDURE, Inspection Mode.>.

WIRING DIAGRAM:

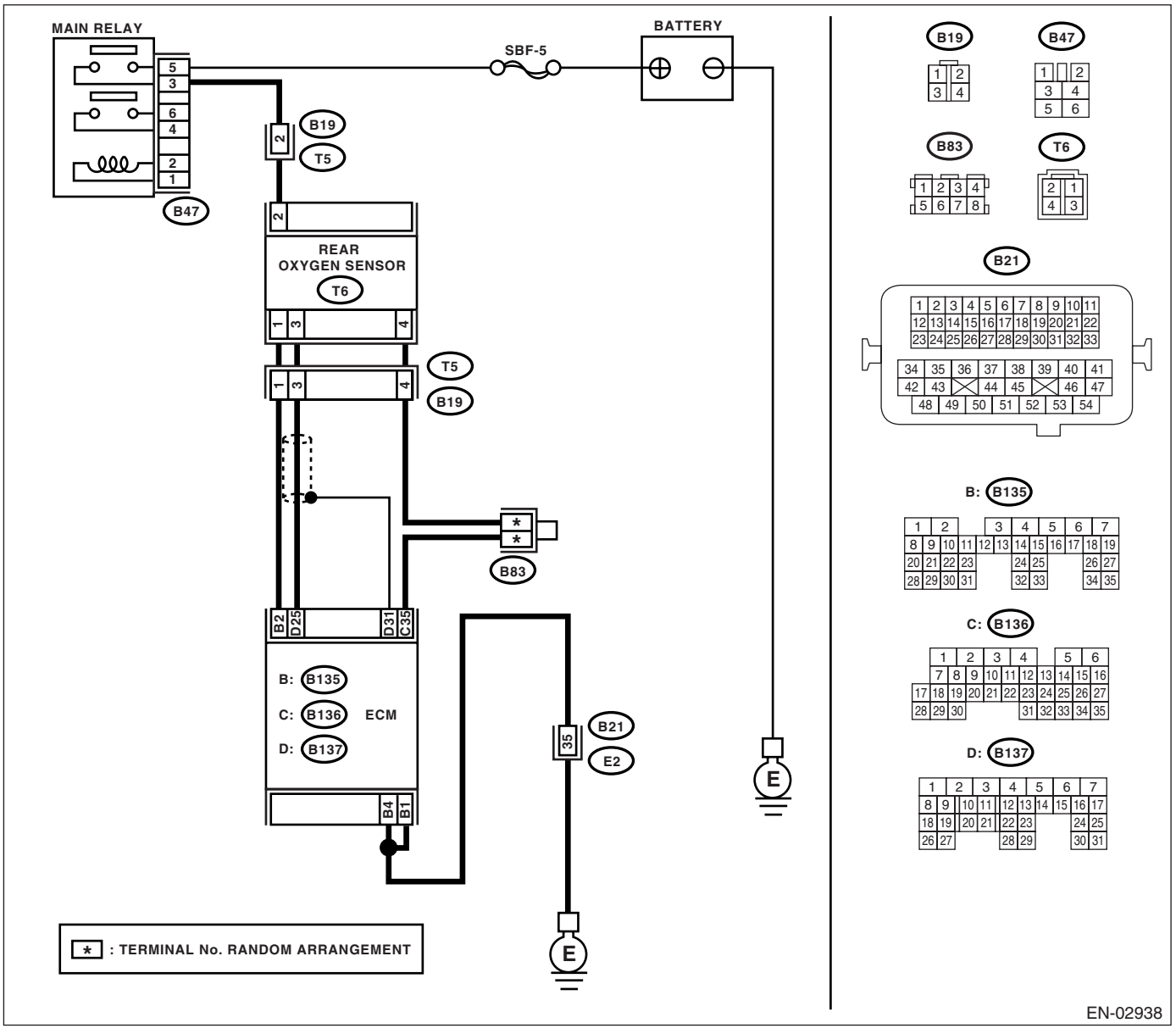

	Step	Check	Yes	No
1	**CHECK FOR ANY OTHER DTC ON DISPLAY.**	Is any other DTC displayed?	Inspect the DTC using “List of Diagnostic Trouble Code (DTC)”. <Ref. to EN(H4DOTC)(diag)-71, List of Diagnostic Trouble Code (DTC).> NOTE: In this case, it is not necessary to inspect DTC P0138.	Go to step **2.**
2	**CHECK REAR OXYGEN SENSOR DATA.** 1) Warm-up the engine until engine coolant temperature is above 70°C (158°F), and lower the engine speed rapidly from 5,000 rpm. 2) Read the data of rear oxygen sensor signal using Subaru Select Monitor or general scan tool. NOTE: • Subaru Select Monitor For detailed operation procedure, refer to the “READ CURRENT DATA SHOWN ON DISPLAY FOR ENGINE”. <Ref. to EN(H4DOTC)(diag)-28, Subaru Select Monitor.> • General scan tool For detailed operation procedure, refer to the general scan tool instruction manual.	Is the voltage less than 250 mV?	Go to step **5.**	Go to step **3.**
3	**CHECK HARNESS BETWEEN ECM AND REAR OXYGEN SENSOR CONNECTOR.** 1) Turn the ignition switch to OFF. 2) Disconnect the connector from ECM and rear oxygen sensor. 3) Measure the resistance in harness between ECM and rear oxygen sensor connector. ***Connector & terminal*** ***(B137) No. 25 — (T6) No. 3:*** ***(B136) No. 35 — (T6) No. 4:***	Is the resistance more than 3 Ω?	Repair the open circuit in harness between ECM and rear oxygen sensor connector.	Go to step **4.**
4	**CHECK HARNESS BETWEEN REAR OXYGEN SENSOR AND ECM CONNECTOR.** 1) Turn the ignition switch to OFF. 2) Disconnect the connector from rear oxygen sensor. 3) Turn the ignition switch to ON. 4) Measure the voltage between rear oxygen sensor harness connector and chassis ground. ***Connector & terminal*** ***(T6) No. 3 (+) — Chassis ground (−):***	Is the voltage 0.2 — 0.5 V?	Replace the rear oxygen sensor. <Ref. to FU(H4DOTC)-37, Rear Oxygen Sensor.>	Repair the harness and connector. NOTE: In this case, repair the following: • Open circuit in harness between rear oxygen sensor and ECM connector • Poor contact in rear oxygen sensor connector • Poor contact in ECM connector

Step		Check	Yes	No
5	**CHECK EXHAUST SYSTEM.** Check exhaust system parts. NOTE: Check the following items: • Loose part of exhaust system and incomplete installation • Damage (crack, hole etc.) of parts • Looseness and ill fitting of parts between front oxygen (A/F) sensor and rear oxygen sensor	Is there any fault in exhaust system?	Repair or replace the faulty part.	Replace the rear oxygen sensor. <Ref. to FU(H4DOTC)-37, Rear Oxygen Sensor.>

AD:DTC P0139 O2 SENSOR CIRCUIT SLOW RESPONSE (BANK 1 SENSOR 2)

DTC DETECTING CONDITION:

- Two consecutive driving cycles with fault
- GENERAL DESCRIPTION <Ref. to GD(H4DOTC)-68, DTC P0139 O2 SENSOR CIRCUIT SLOW RESPONSE (BANK 1 SENSOR 2), Diagnostic Trouble Code (DTC) Detecting Criteria.>

CAUTION:
After repair or replacement of faulty parts, conduct Clear Memory Mode <Ref. to EN(H4DOTC)(diag)-45, OPERATION, Clear Memory Mode.> and Inspection Mode <Ref. to EN(H4DOTC)(diag)-36, PROCEDURE, Inspection Mode.>.

WIRING DIAGRAM:

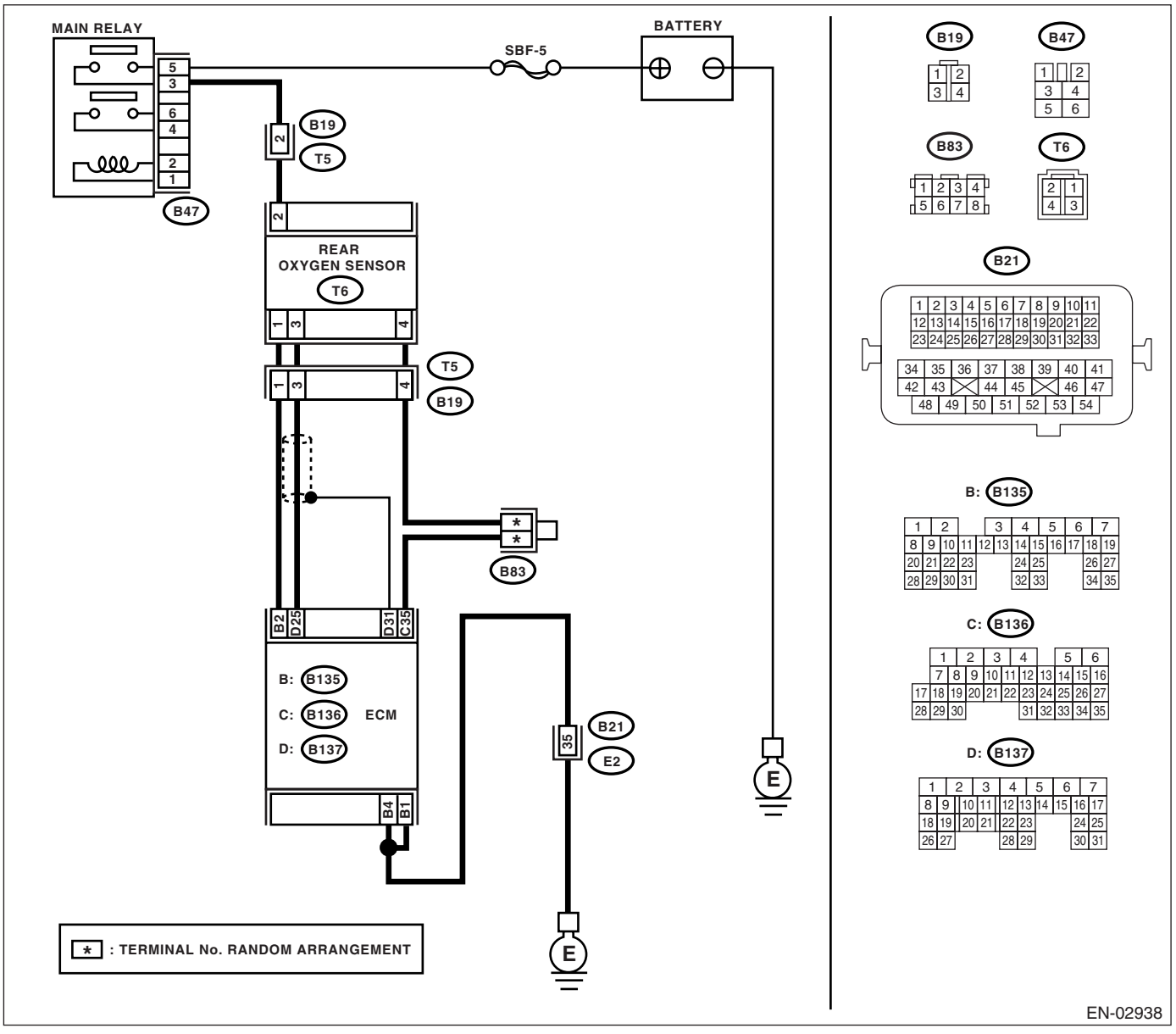

	Step	Check	Yes	No
1	**CHECK ANY OTHER DTC ON DISPLAY.**	Is any other DTC displayed?	Check DTC using "List of Diagnostic Trouble Code (DTC)". <Ref. to EN(H4DOTC)(diag)-71, List of Diagnostic Trouble Code (DTC).> NOTE: In this case, it is not necessary to inspect DTC P0139.	Go to step **2.**
2	**CHECK HARNESS BETWEEN ECM AND REAR OXYGEN SENSOR CONNECTOR.** 1) Turn the ignition switch to OFF. 2) Disconnect the connectors from ECM and rear oxygen sensor. 3) Measure the resistance of harness between ECM and rear oxygen sensor connector. ***Connector & terminal*** ***(B137) No. 25 — (T6) No. 3:***	Is the resistance less than 1 Ω?	Go to step **3.**	Repair harness and connector. NOTE: In this case, repair the following: • Open circuit in harness between rear oxygen sensor and ECM connector
3	**CHECK HARNESS BETWEEN REAR OXYGEN SENSOR AND ECM CONNECTOR.** Measure the resistance between rear oxygen sensor harness connector and chassis ground. ***Connector & terminal*** ***(T6) No. 3 — Chassis ground:***	Is the resistance more than 1 MΩ?	Go to step **4.**	Repair short circuit to ground in harness between rear oxygen sensor and ECM connector.
4	**CHECK REAR OXYGEN SENSOR DATA.** Measure the resistance between connector terminals of rear oxygen sensor. ***terminals*** ***No. 3 — No. 4:***	Is the resistance less than 1 Ω?	Replace the rear oxygen sensor. <Ref. to FU(H4DOTC)-37, Rear Oxygen Sensor.>	Repair connector. Poor contact in rear oxygen sensor connector.

AE:DTC P0171 SYSTEM TOO LEAN (BANK 1)

NOTE:
For diagnostic procedure, refer to DTC P0172. <Ref. to EN(H4DOTC)(diag)-142, DTC P0172 SYSTEM TOO RICH (BANK 1), Diagnostic Procedure with Diagnostic Trouble Code (DTC).>

AF:DTC P0172 SYSTEM TOO RICH (BANK 1)

DTC DETECTING CONDITION:

- Two consecutive driving cycles with fault
- GENERAL DESCRIPTION <Ref. to GD(H4DOTC)-76, DTC P0172 SYSTEM TOO RICH (BANK 1), Diagnostic Trouble Code (DTC) Detecting Criteria.>

TROUBLE SYMPTOM:

- Erroneous idling
- Engine stalls.
- Poor driving performance

CAUTION:
After repair or replacement of faulty parts, conduct Clear Memory Mode <Ref. to EN(H4DOTC)(diag)-45, OPERATION, Clear Memory Mode.> and Inspection Mode <Ref. to EN(H4DOTC)(diag)-36, PROCEDURE, Inspection Mode.>.

	Step	Check	Yes	No
1	**CHECK EXHAUST SYSTEM.**	Are there holes or loose bolts on exhaust system?	Repair exhaust system.	Go to step **2.**
2	**CHECK AIR INTAKE SYSTEM.**	Are there holes, loose bolts or disconnection of hoses on air intake system?	Repair air intake system.	Go to step **3.**
3	**CHECK FUEL PRESSURE.** **Warning:** **• Place "NO FIRE" signs near the working area.** **• Be careful not to spill fuel.** Measure the fuel pressure while disconnecting pressure regulator vacuum hose from intake manifold. <Ref. to ME(H4DOTC)-25, INSPECTION, Fuel Pressure.> **Warning:** **Release fuel pressure before removing the fuel pressure gauge.** NOTE: If fuel pressure does not increase, squeeze the fuel return hose 2 to 3 times, then measure fuel pressure again.	Is fuel pressure 284 — 314 kPa (2.9 — 3.2 kg/cm^2, 41 — 46 psi)?	Go to step **4.**	Repair the following items. Fuel pressure is too high: • Clogged fuel return line or bent hose Fuel pressure is too low: • Improper fuel pump discharge • Clogged fuel supply line
4	**CHECK FUEL PRESSURE.** After connecting the pressure regulator vacuum hose, measure fuel pressure. <Ref. to ME(H4DOTC)-25, INSPECTION, Fuel Pressure.> **Warning:** **Release fuel pressure before removing the fuel pressure gauge.** NOTE: • If fuel pressure does not increase, squeeze fuel return hose 2 to 3 times, then measure fuel pressure again. • If out of specification as measured at this step, check or replace pressure regulator and pressure regulator vacuum hose.	Is measured value 206 — 235 kPa (2.1 — 2.4 kg/cm^2, 30 — 34 psi)?	Go to step **5.**	Repair the following items. Fuel pressure is too high: • Faulty pressure regulator • Clogged fuel return line or bent hose Fuel pressure is too low: • Faulty pressure regulator • Improper fuel pump discharge • Clogged fuel supply line

	Step	Check	Yes	No
5	**CHECK ENGINE COOLANT TEMPERATURE SENSOR.** 1) Start the engine and warm-up completely. 2) Read the data of engine coolant temperature sensor signal using Subaru Select Monitor or general scan tool. NOTE: • Subaru Select Monitor For detailed operation procedure, refer to the "READ CURRENT DATA SHOWN ON DISPLAY FOR ENGINE". <Ref. to EN(H4DOTC)(diag)-28, Subaru Select Monitor.> • General scan tool For detailed operation procedure, refer to the general scan tool instruction manual.	Is engine coolant temperature more than 60°C (140°F)?	Go to step **6.**	Replace the engine coolant temperature sensor. <Ref. to FU(H4DOTC)-22, Engine Coolant Temperature Sensor.>
6	**CHECK MASS AIR FLOW AND INTAKE AIR TEMPERATURE SENSOR.** 1) Start and warm-up the engine until engine coolant temperature is greater than 60°C (140°F). 2) Place the shift lever in neutral position. 3) Turn the A/C switch to OFF. 4) Turn all accessory switches to OFF. 5) Read the data of mass air flow and intake air temperature sensor signal using Subaru Select Monitor or general scan tool. NOTE: • Subaru Select Monitor For detailed operation procedure, refer to the "READ CURRENT DATA SHOWN ON DISPLAY FOR ENGINE". <Ref. to EN(H4DOTC)(diag)-28, Subaru Select Monitor.> • General scan tool For detailed operation procedure, refer to the general scan tool instruction manual.	Is the measured value 2.1 — 3.4 g/s (0.28 — 0.45 lb/m)?	Go to step **7.**	Replace the mass air flow and intake air temperature sensor. <Ref. to FU(H4DOTC)-27, Mass Air Flow and Intake Air Temperature Sensor.>
7	**CHECK MASS AIR FLOW AND INTAKE AIR TEMPERATURE SENSOR.** 1) Start and warm-up the engine until engine coolant temperature is greater than 60°C (140°F). 2) Place the shift lever in neutral position. 3) Turn the A/C switch to OFF. 4) Turn all accessory switches to OFF. 5) Open the hood. 6) Measure the ambient temperature. 7) Read the data of mass air flow and intake air temperature sensor signal using Subaru Select Monitor or general scan tool. NOTE: • Subaru Select Monitor For detailed operation procedure, refer to the "READ CURRENT DATA SHOWN ON DISPLAY FOR ENGINE". <Ref. to EN(H4DOTC)(diag)-28, Subaru Select Monitor.> • General scan tool For detailed operation procedure, refer to the general scan tool instruction manual.	Subtract the ambient temperature from intake air temperature, and is the value from −10°C (14°F) to 50°C (122°F)?	Replace the ECM. <Ref. to FU(H4DOTC)-39, Engine Control Module (ECM).>	Check mass air flow and intake air temperature sensor. <Ref. to FU(H4DOTC)-27, Mass Air Flow and Intake Air Temperature Sensor.>

AG:DTC P0181 FUEL TEMPERATURE SENSOR “A” CIRCUIT RANGE/PERFORMANCE

DTC DETECTING CONDITION:

- Two consecutive driving cycles with fault
- GENERAL DESCRIPTION <Ref. to GD(H4DOTC)-78, DTC P0181 FUEL TEMPERATURE SENSOR “A” CIRCUIT RANGE/PERFORMANCE, Diagnostic Trouble Code (DTC) Detecting Criteria.>

CAUTION:

After repair or replacement of faulty parts, conduct Clear Memory Mode <Ref. to EN(H4DOTC)(diag)-45, OPERATION, Clear Memory Mode.> and Inspection Mode <Ref. to EN(H4DOTC)(diag)-36, PROCEDURE, Inspection Mode.>.

WIRING DIAGRAM:

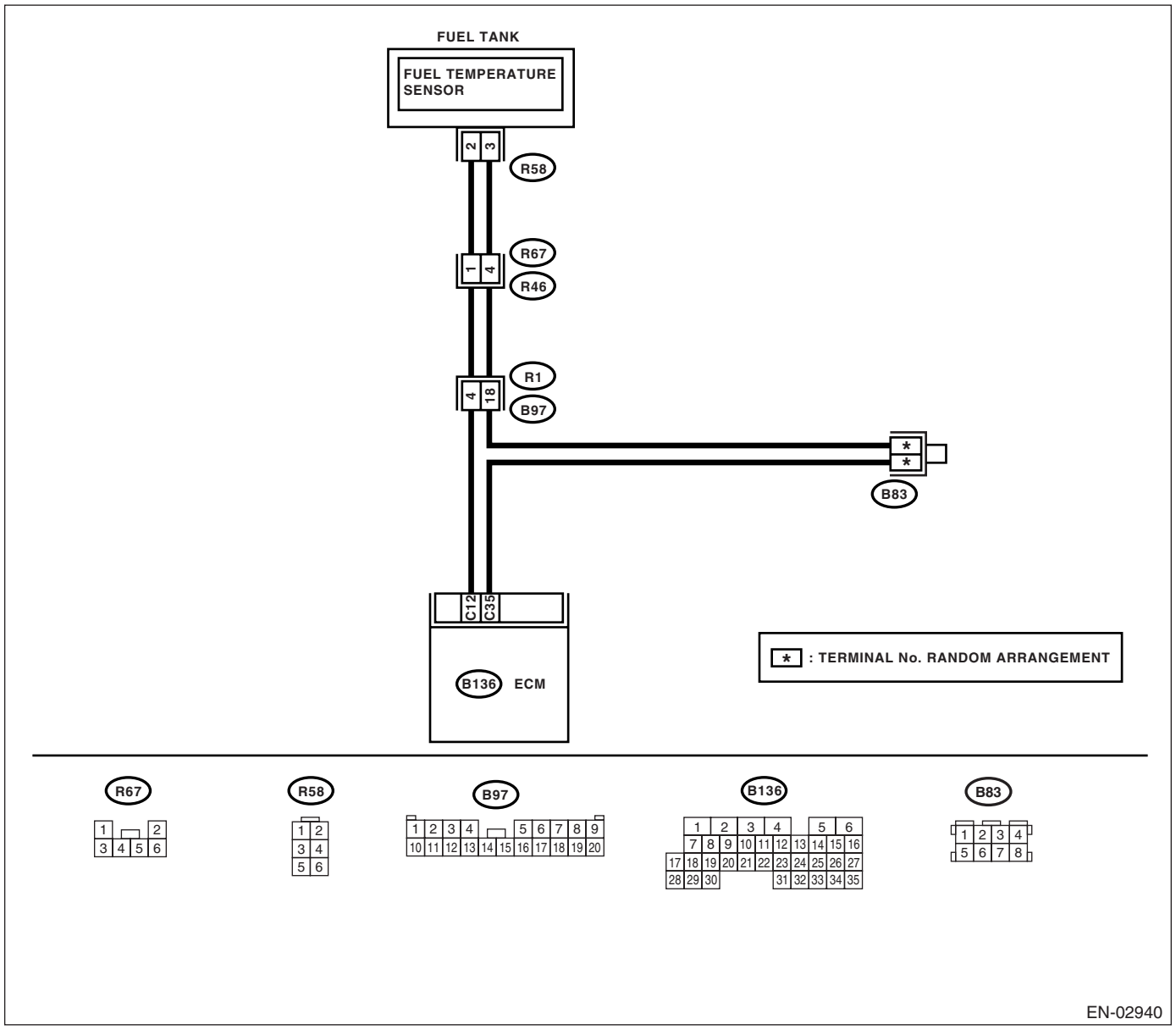

Step		Check	Yes	No
1	**CHECK FOR ANY OTHER DTC ON DISPLAY.**	Is any other DTC displayed?	Inspect the relevant DTC using "List of Diagnostic Trouble Codes (DTC)". <Ref. to EN(H4DOTC)(diag)-71, List of Diagnostic Trouble Code (DTC).> NOTE: In this case, it is not necessary to inspect DTC P0181.	Replace the fuel temperature sensor. <Ref. to EC(H4DOTC)-9, Fuel Temperature Sensor.>

AH:DTC P0182 FUEL TEMPERATURE SENSOR “A” CIRCUIT LOW INPUT

DTC DETECTING CONDITION:

- Detect as soon as malfunction occurs.
- GENERAL DESCRIPTION <Ref. to GD(H4DOTC)-81, DTC P0182 FUEL TEMPERATURE SENSOR “A” CIRCUIT LOW INPUT, Diagnostic Trouble Code (DTC) Detecting Criteria.>

CAUTION:
After repair or replacement of faulty parts, conduct Clear Memory Mode <Ref. to EN(H4DOTC)(diag)-45, OPERATION, Clear Memory Mode.> and Inspection Mode <Ref. to EN(H4DOTC)(diag)-36, PROCEDURE, Inspection Mode.>.

WIRING DIAGRAM:

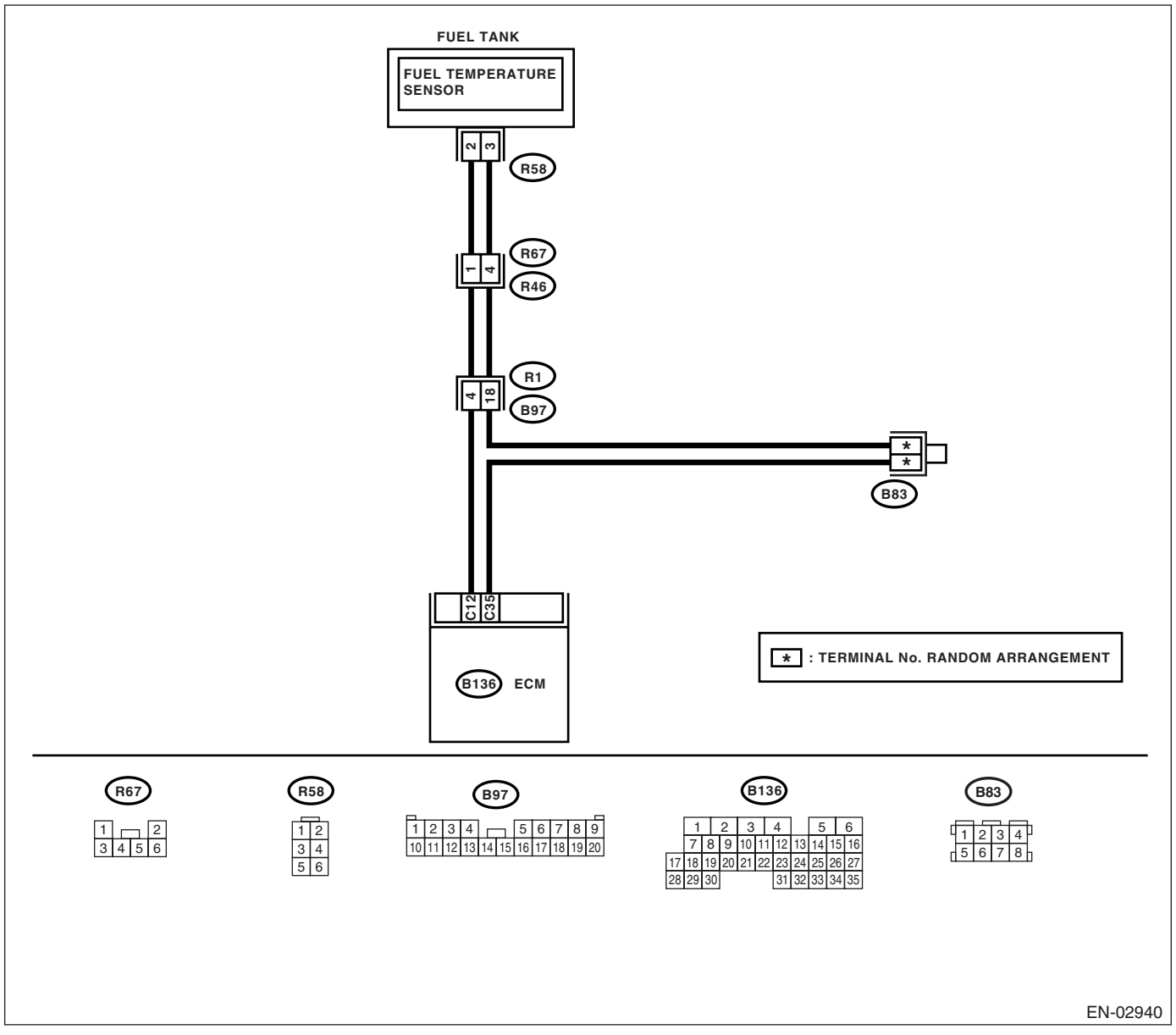

	Step	Check	Yes	No
1	**CHECK CURRENT DATA.** 1) Start the engine. 2) Read the data of fuel temperature sensor signal using Subaru Select Monitor. NOTE: • Subaru Select Monitor For detailed operation procedures, refer to "READ CURRENT DATA FOR ENGINE". <Ref. to EN(H4DOTC)(diag)-28, Subaru Select Monitor.>	Is the temperature more than 150°C (302°F)?	Go to step **2.**	The malfunction indicator light may light up, however, the circuit is returned to the normal status at the moment.
2	**CHECK CURRENT DATA.** 1) Turn the ignition switch to OFF. 2) Remove the access hole lid. 3) Disconnect the connector from fuel pump. 4) Turn the ignition switch to ON. 5) Read the data of fuel temperature sensor signal using Subaru Select Monitor. NOTE: • Subaru Select Monitor For detailed operation procedures, refer to "READ CURRENT DATA FOR ENGINE". <Ref. to EN(H4DOTC)(diag)-28, Subaru Select Monitor.>	Is the temperature less than −40°C (−40°F)?	Replace the fuel temperature sensor. <Ref. to EC(H4DOTC)-9, Fuel Temperature Sensor.>	Repair short circuit to ground in harness between fuel pump and ECM connector.

AI: DTC P0183 FUEL TEMPERATURE SENSOR “A” CIRCUIT HIGH INPUT

DTC DETECTING CONDITION:

- Detect as soon as malfunction occurs.
- GENERAL DESCRIPTION <Ref. to GD(H4DOTC)-83, DTC P0183 FUEL TEMPERATURE SENSOR “A” CIRCUIT HIGH INPUT, Diagnostic Trouble Code (DTC) Detecting Criteria.>

CAUTION:
After repair or replacement of faulty parts, conduct Clear Memory Mode <Ref. to EN(H4DOTC)(diag)-45, OPERATION, Clear Memory Mode.> and Inspection Mode <Ref. to EN(H4DOTC)(diag)-36, PROCEDURE, Inspection Mode.>.

WIRING DIAGRAM:

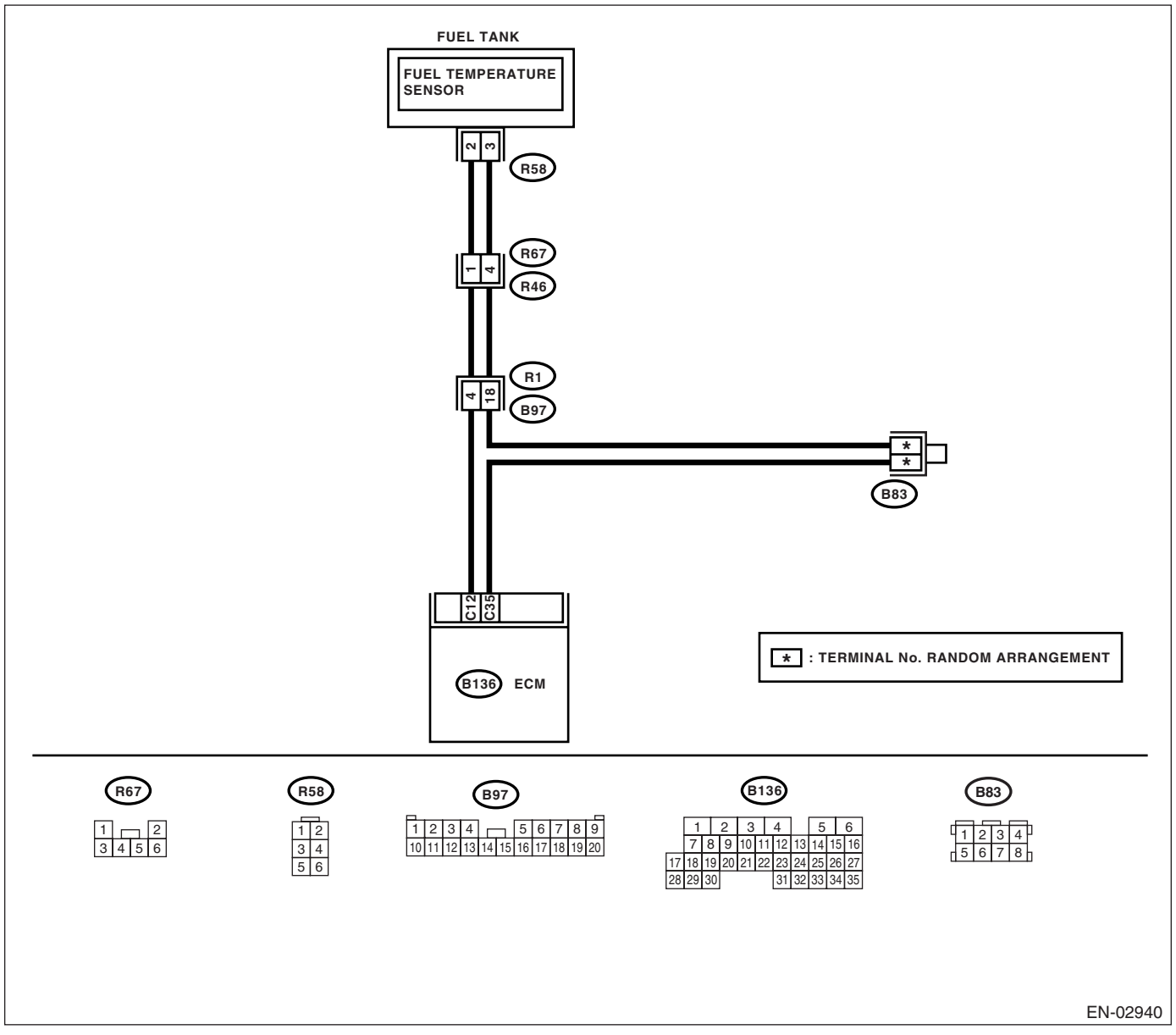

	Step	Check	Yes	No
1	**CHECK CURRENT DATA.** 1) Start the engine. 2) Read the data of fuel temperature sensor signal using Subaru Select Monitor. NOTE: • Subaru Select Monitor For detailed operation procedures, refer to "READ CURRENT DATA FOR ENGINE". <Ref. to EN(H4DOTC)(diag)-28, Subaru Select Monitor.>	Is the temperature less than −40°C (−40°F)?	Go to step **2.**	Repair poor contact. NOTE: In this case, repair the following: • Poor contact in fuel pump connector • Poor contact in ECM connector • Poor contact in coupling connector • Poor contact in joint connector
2	**CHECK HARNESS BETWEEN FUEL TEMPERATURE SENSOR AND ECM CONNECTOR.** 1) Turn the ignition switch to OFF. 2) Remove the access hole lid. 3) Disconnect the connector from fuel pump. 4) Measure the voltage between fuel pump connector and chassis ground. ***Connector & terminal*** ***(R58) No. 2 (+) — Chassis ground (−):***	Is the voltage more than 10 V?	Repair short circuit to battery in harness between ECM and fuel pump connector.	Go to step **3.**
3	**CHECK HARNESS BETWEEN FUEL TEMPERATURE SENSOR AND ECM CONNECTOR.** 1) Turn the ignition switch to ON. 2) Measure the voltage between fuel pump connector and chassis ground. ***Connector & terminal*** ***(R58) No. 2 (+) — Chassis ground (−):***	Is the voltage more than 10 V?	Repair short circuit to battery in harness between ECM and fuel pump connector.	Go to step **4.**
4	**CHECK HARNESS BETWEEN FUEL TEMPERATURE SENSOR AND ECM CONNECTOR.** Measure the voltage between fuel pump connector and chassis ground. ***Connector & terminal*** ***(R58) No. 2 (+) — Chassis ground (−):***	Is the voltage more than 4 V?	Go to step **5.**	Repair harness and connector. NOTE: In this case, repair the following: • Open circuit in harness between ECM and fuel pump connector • Poor contact in fuel pump connector • Poor contact in ECM connector • Poor contact in coupling connector

	Step	Check	Yes	No
5	**CHECK HARNESS BETWEEN FUEL TEMPERATURE SENSOR AND ECM CONNECTOR.** 1) Turn the ignition switch to OFF. 2) Disconnect the connector from ECM. 3) Measure the resistance of harness between fuel pump connector and ECM. ***Connector & terminal*** ***(R58) No. 3 — (B136) No. 35:***	Is the resistance less than 1 Ω?	Replace the fuel temperature sensor. <Ref. to EC(H4DOTC)-9, Fuel Temperature Sensor.>	Repair harness and connector. NOTE: In this case, repair the following: • Open circuit in harness between ECM and fuel pump connector • Poor contact in fuel pump connector • Poor contact in ECM connector • Poor contact in coupling connector • Poor contact in joint connector

AJ:DTC P0222 THROTTLE/PEDAL POSITION SENSOR/SWITCH “B” CIRCUIT LOW INPUT

DTC DETECTING CONDITION:

- Detect as soon as the malfunction occurs.
- GENERAL DESCRIPTION <Ref. to GD(H4DOTC)-85, DTC P0222 THROTTLE/PEDAL POSITION SENSOR/SWITCH “B” CIRCUIT LOW INPUT, Diagnostic Trouble Code (DTC) Detecting Criteria.>

TROUBLE SYMPTOM:

- Erroneous idling
- Poor driving performance
- Engine stalls.

WIRING DIAGRAM:

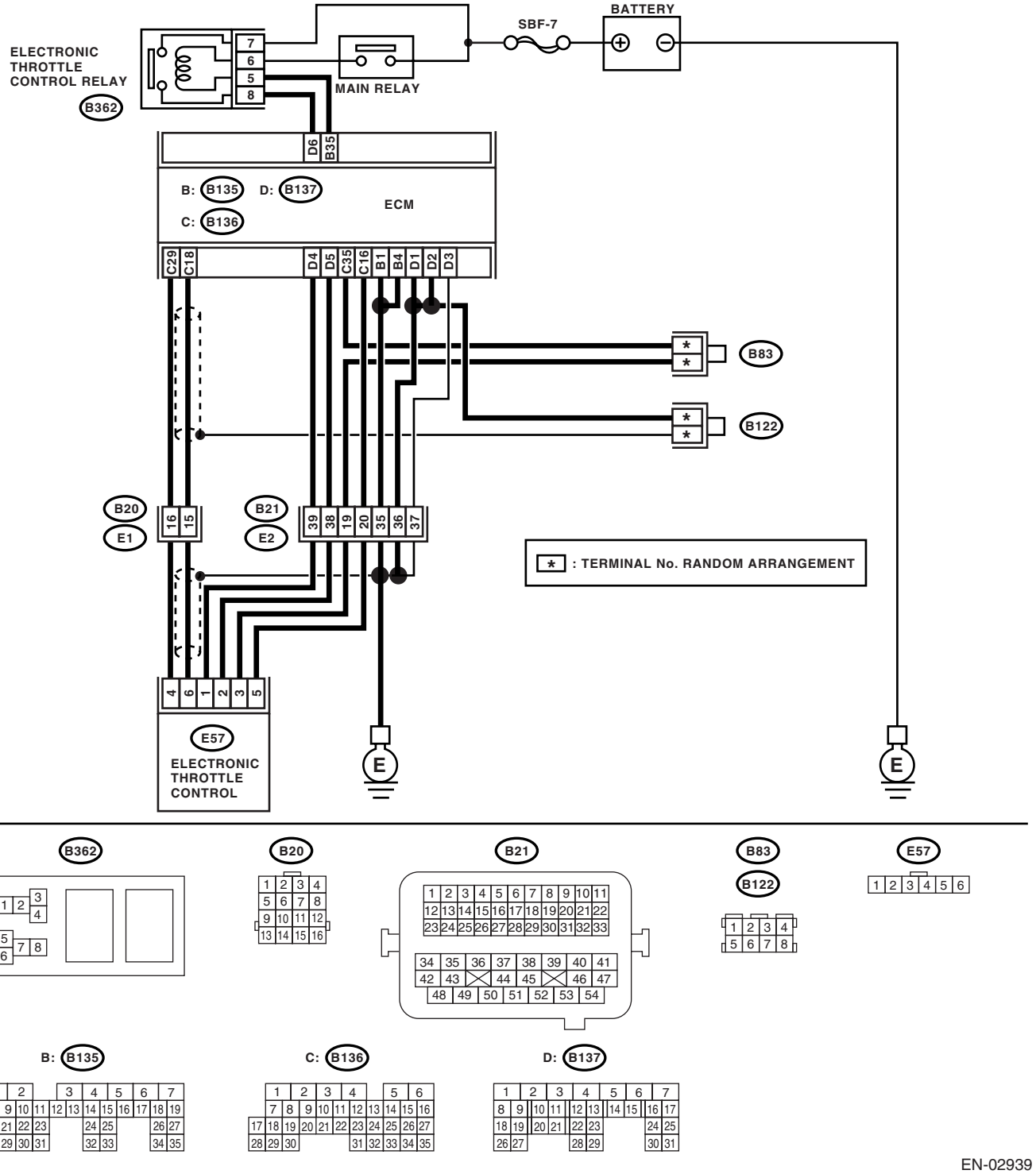

	Step	Check	Yes	No
1	**CHECK SENSOR OUTPUT.** 1) Turn the ignition switch to ON. 2) Read the data of sub throttle sensor signal using Subaru Select Monitor. NOTE: • Subaru Select Monitor For detailed operation procedure, refer to the "READ CURRENT DATA FOR ENGINE". <Ref. to EN(H4DOTC)(diag)-28, Subaru Select Monitor.>	Is the voltage more than 0.8 V?	Go to step **2.**	Go to step **3.**
2	**CHECK POOR CONTACT.** Check the poor contact in connector between ECM and electronic throttle control.	Is there poor contact?	Repair the poor contact.	Temporary poor contact occurred, but it is normal at present.
3	**CHECK HARNESS BETWEEN ECM AND ELECTRONIC THROTTLE CONTROL.** 1) Turn the ignition switch to OFF. 2) Disconnect the connector from ECM. 3) Disconnect the connectors from the electronic throttle control control. 4) Measure the resistance between ECM connector and electronic throttle control connector. ***Connector & terminal*** ***(B136) No. 16 — (E57) No. 5:*** ***(B136) No. 29 — (E57) No. 4:***	Is the resistance less than 1 Ω?	Go to step **4.**	Repair the open circuit of harness connector.
4	**CHECK HARNESS BETWEEN ECM AND ELECTRONIC THROTTLE CONTROL.** Measure the resistance between ECM connector and chassis ground. ***Connector & terminal*** ***(B136) No. 29 — Chassis ground:*** ***(B136) No. 16 — Chassis ground:***	Is the resistance more than 1 MΩ?	Go to step **5.**	Repair the chassis short circuit of harness.
5	**CHECK SENSOR POWER SUPPLY.** 1) Connect the ECM connector. 2) Turn the ignition switch to ON. 3) Measure the voltage between electronic throttle control connector and engine ground. ***Connector & terminal*** ***(E57) No. 5 (+) — Engine ground (−):***	Is the voltage 4.5 — 5.5 V?	Go to step **6.**	Repair the poor contact in ECM connector. Replace the ECM if defective. <Ref. to FU(H4DOTC)-39, Engine Control Module (ECM).>
6	**CHECK SHORT CIRCUIT INSIDE THE ECM.** 1) Turn the ignition switch to OFF. 2) Measure the resistance between electronic throttle control control connector and engine ground. ***Connector & terminal*** ***(E57) No. 4 — Engine ground:***	Is the resistance more than 10 Ω?	Repair the poor contact of electronic throttle control connector. Replace the electronic throttle control if defective.	Repair the poor contact in ECM connector. Replace the ECM if defective. <Ref. to FU(H4DOTC)-39, Engine Control Module (ECM).>

AK:DTC P0223 THROTTLE/PEDAL POSITION SENSOR/SWITCH “B” CIRCUIT HIGH INPUT

DTC DETECTING CONDITION:

- Detect as soon as the malfunction occurs.
- GENERAL DESCRIPTION <Ref. to GD(H4DOTC)-87, DTC P0223 THROTTLE/PEDAL POSITION SENSOR/SWITCH “B” CIRCUIT HIGH INPUT, Diagnostic Trouble Code (DTC) Detecting Criteria.>

TROUBLE SYMPTOM:

- Erroneous idling
- Poor driving performance
- Engine stalls.

WIRING DIAGRAM:

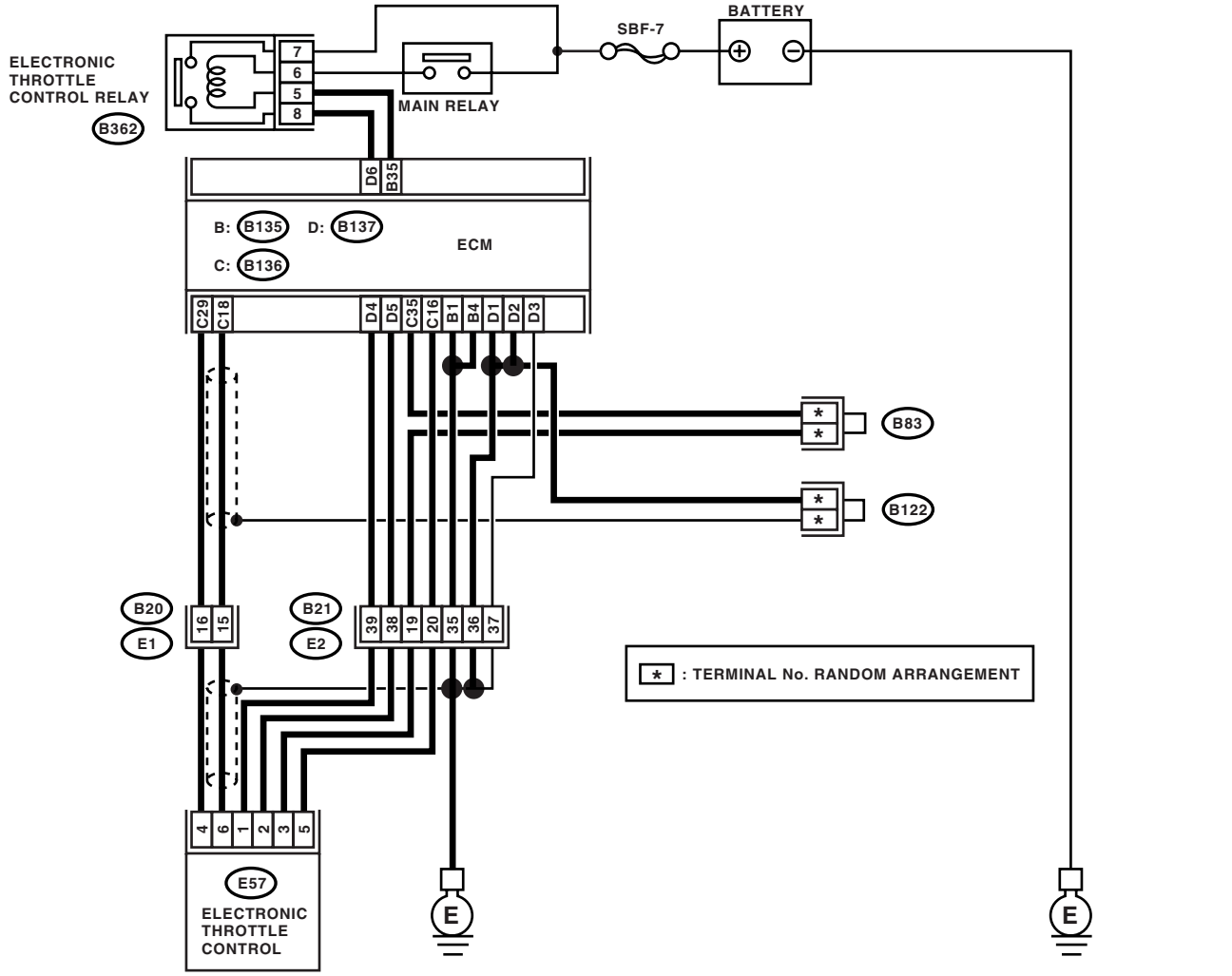

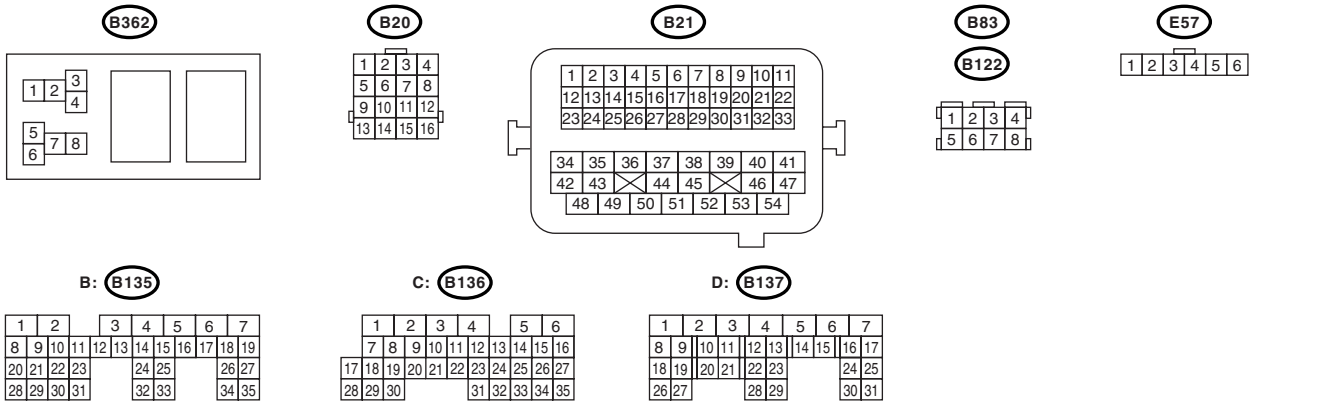

EN-02939

	Step	Check	Yes	No
1	**CHECK SENSOR OUTPUT.** 1) Turn the ignition switch to ON. 2) Read the data of sub throttle sensor signal using Subaru Select Monitor. NOTE: • Subaru Select Monitor For detailed operation procedure, refer to the "READ CURRENT DATA FOR ENGINE". <Ref. to EN(H4DOTC)(diag)-28, Subaru Select Monitor.>	Is the voltage less than 4.73 V?	Go to step **2.**	Go to step **3.**
2	**CHECK POOR CONTACT.** Check the poor contact in connector between ECM and electronic throttle control.	Is there poor contact in connector between ECM and electronic throttle control?	Repair the poor contact.	Temporary poor contact occurred, but it is normal at present.
3	**CHECK HARNESS BETWEEN ECM AND ELECTRONIC THROTTLE CONTROL.** 1) Turn the ignition switch to OFF. 2) Disconnect the connector from ECM. 3) Disconnect the connectors from the electronic throttle control control. 4) Measure the resistance between ECM connector and electronic throttle control connector. ***Connector & terminal*** ***(B136) No. 35 — (E57) No. 3:*** ***(B136) No. 29 — (E57) No. 4:***	Is the resistance less than 1 Ω?	Go to step **4.**	Repair the open circuit of harness connector.
4	**CHECK HARNESS BETWEEN ECM AND ELECTRONIC THROTTLE CONTROL.** 1) Connect the ECM connector. 2) Turn the ignition switch to ON. 3) Measure the voltage between electronic throttle control connector and engine ground. ***Connector & terminal*** ***(E57) No. 4 (+) — Engine ground (−):***	Is the voltage less than 10 V?	Go to step **5.**	Repair the battery short circuit in harness between ECM connector and electronic throttle control connector.
5	**CHECK HARNESS BETWEEN ECM AND ELECTRONIC THROTTLE CONTROL.** 1) Turn the ignition switch to OFF. 2) Disconnect the connector from ECM. 3) Measure the resistance between connector terminals. ***Connector & terminal*** ***(B136) No. 29 — (B136) No. 16:***	Is the resistance more than 1 MΩ?	Repair the poor contact. Repair the electronic throttle control.	Sensor power supply circuit may be shorted.

AL:DTC P0230 FUEL PUMP PRIMARY CIRCUIT

DTC DETECTING CONDITION:

- Detect as soon as the malfunction occurs.
- GENERAL DESCRIPTION <Ref. to GD(H4DOTC)-89, DTC P0230 FUEL PUMP PRIMARY CIRCUIT, Diagnostic Trouble Code (DTC) Detecting Criteria.>

CAUTION:
After repair or replacement of faulty parts, conduct Clear Memory Mode <Ref. to EN(H4DOTC)(diag)-45, OPERATION, Clear Memory Mode.> and Inspection Mode <Ref. to EN(H4DOTC)(diag)-36, PROCEDURE, Inspection Mode.>.

WIRING DIAGRAM:

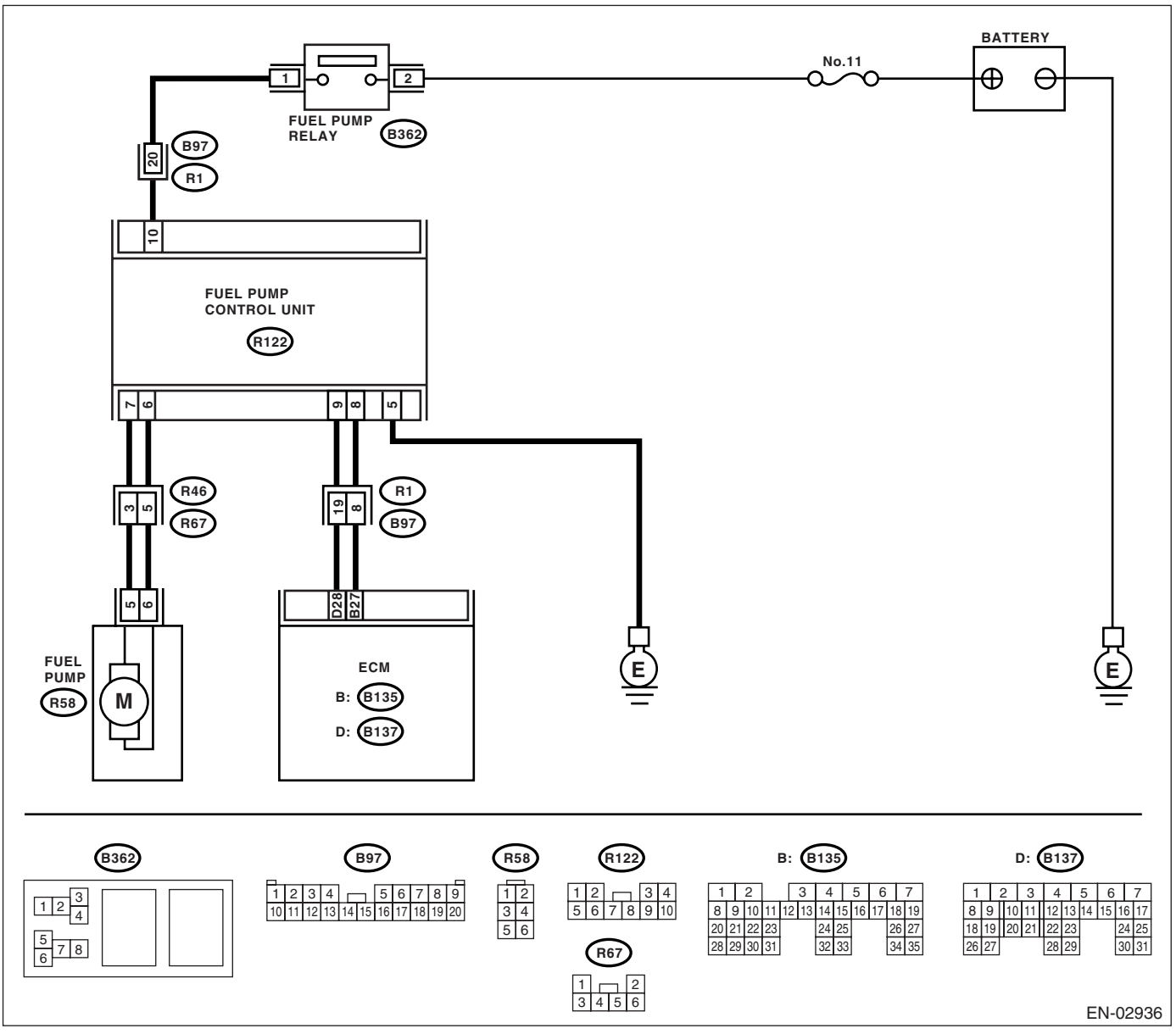

	Step	Check	Yes	No
1	**CHECK POWER SUPPLY CIRCUIT TO FUEL PUMP CONTROL UNIT.** 1) Turn the ignition switch to OFF. 2) Disconnect the connector from fuel pump control unit. 3) Turn the ignition switch to ON. 4) Measure the voltage between fuel pump control unit and chassis ground. ***Connector & terminal*** ***(R122) No. 10 (+) — Chassis ground (−):***	Is the voltage more than 10 V?	Go to step **2.**	Repair the power supply circuit. NOTE: In this case, repair the following: • Open or ground short circuit in harness between fuel pump relay and fuel pump control unit • Poor contact in fuel pump control unit connector • Poor contact in fuel pump relay connector
2	**CHECK GROUND CIRCUIT OF FUEL PUMP CONTROL UNIT.** 1) Turn the ignition switch to OFF. 2) Measure the resistance of harness between fuel pump control unit and chassis ground. ***Connector & terminal*** ***(R122) No. 5 — Chassis ground:***	Is the resistance less than 5 Ω?	Go to step **3.**	Repair the harness and connector. NOTE: In this case, repair the following: • Open circuit between fuel pump control unit and chassis ground • Poor contact in fuel pump control unit connector
3	**CHECK HARNESS BETWEEN FUEL PUMP CONTROL UNIT AND FUEL PUMP CONNECTOR.** 1) Disconnect the connector from fuel pump. 2) Measure the resistance of harness between fuel pump control unit and fuel pump connector. ***Connector & terminal*** ***(R122) No. 7 — (R58) No. 5:*** ***(R122) No. 6 — (R58) No. 6:***	Is the resistance less than 1 Ω?	Go to step **4.**	Repair the open circuit between fuel pump control unit and fuel pump.
4	**CHECK HARNESS BETWEEN FUEL PUMP CONTROL UNIT AND FUEL PUMP CONNECTOR.** Measure the resistance of harness between fuel pump control unit and chassis ground. ***Connector & terminal*** ***(R122) No. 7 — Chassis ground:*** ***(R122) No. 6 — Chassis ground:***	Is the resistance more than 1 MΩ?	Go to step **5.**	Repair the ground short circuit between fuel pump control unit and fuel pump.

	Step	Check	Yes	No
5	**CHECK HARNESS BETWEEN FUEL PUMP CONTROL UNIT AND ECM CONNECTOR.** 1) Turn the ignition switch to OFF. 2) Disconnect the connector from ECM. 3) Measure the resistance in harness between fuel pump control unit and ECM connector. ***Connector & terminal*** ***(R122) No. 9 — (B137) No. 28:*** ***(R122) No. 8 — (B135) No. 27:***	Is the resistance less than 1 Ω?	Go to step **6.**	Repair the harness and connector. NOTE: In this case, repair the following: • Open circuit between fuel pump control unit and ECM • Poor contact in fuel pump control unit and ECM connector
6	**CHECK HARNESS BETWEEN FUEL PUMP CONTROL UNIT AND ECM CONNECTOR.** Measure the resistance of harness between fuel pump control unit and chassis ground. ***Connector & terminal*** ***(R122) No. 9 — Chassis ground:*** ***(R122) No. 8 — Chassis ground:***	Is the resistance more than 1 MΩ?	Go to step **7.**	Repair the ground short circuit between fuel pump control unit and ECM.
7	**CHECK POOR CONTACT.** Check poor contact in ECM and fuel pump control unit connector.	Is there poor contact in ECM and fuel pump control unit connector?	Repair the poor contact in ECM and fuel pump control unit.	Go to step **8.**
8	**CHECK EXPERIENCE OF RUNNING OUT OF FUEL.**	Did the vehicle experience running out of fuel?	Finish the diagnosis. NOTE: DTC record may be conducted as a result of fuel pump idling while running out of fuel.	Replace the fuel pump control unit. <Ref. to FU(H4DOTC)-43, Fuel Pump Control Unit.>

AM:DTC P0244 TURBO/SUPER CHARGER WASTEGATE SOLENOID “A” RANGE/PERFORMANCE

DTC DETECTING CONDITION:

- Detect as soon as malfunction occurs.
- GENERAL DESCRIPTION <Ref. to GD(H4DOTC)-91, DTC P0244 TURBO/SUPER CHARGER WASTEGATE SOLENOID “A” RANGE/PERFORMANCE, Diagnostic Trouble Code (DTC) Detecting Criteria.>

TROUBLE SYMPTOM:

- Erroneous idling
- Engine stalls.
- Poor driving performance

CAUTION:

After repair or replacement of faulty parts, conduct Clear Memory Mode <Ref. to EN(H4DOTC)(diag)-45, OPERATION, Clear Memory Mode.> and Inspection Mode <Ref. to EN(H4DOTC)(diag)-36, PROCEDURE, Inspection Mode.>.

WIRING DIAGRAM:

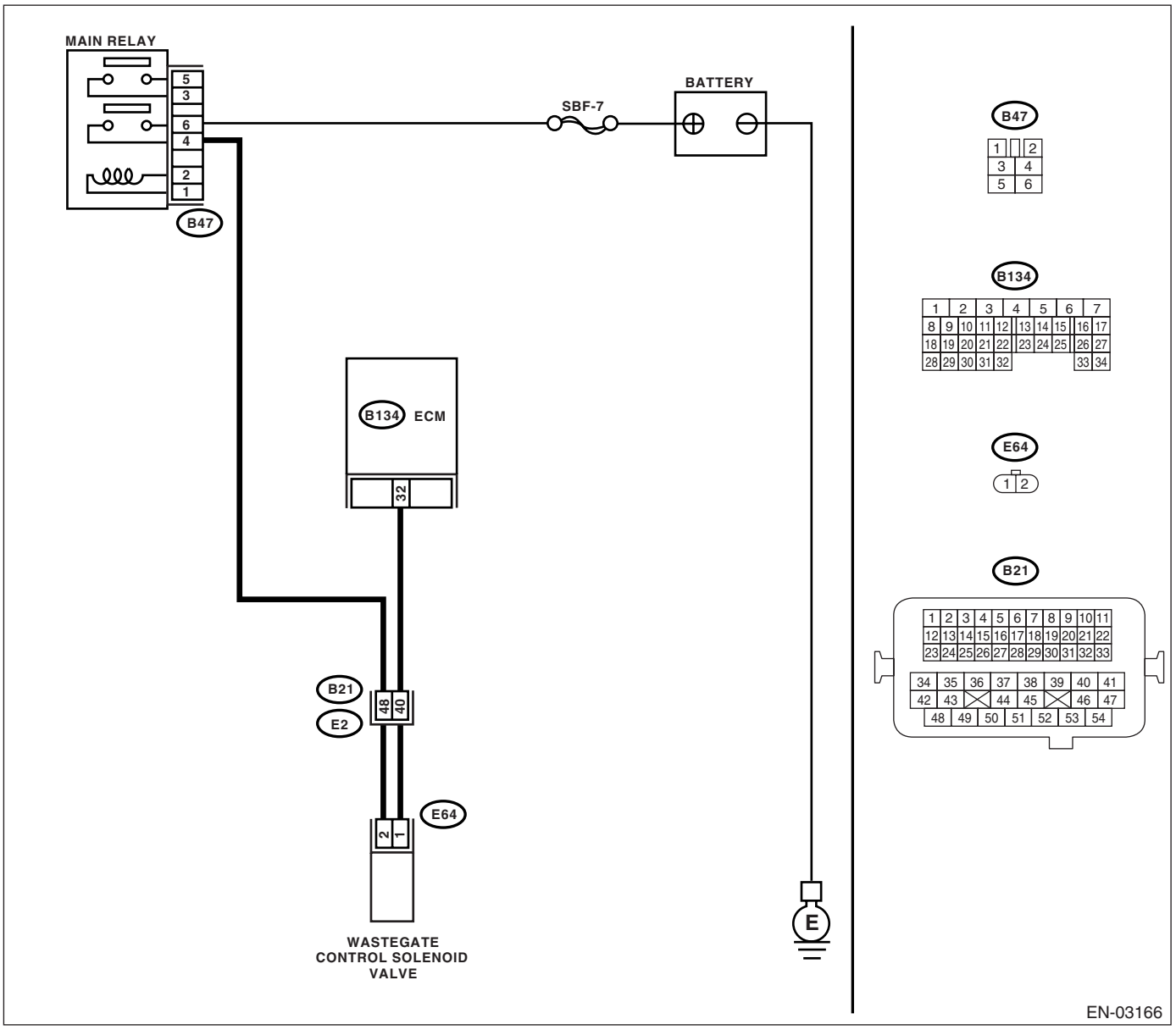

Step		Check	Yes	No
1	**CHECK FOR ANY OTHER DTC ON DISPLAY.**	Is any other DTC displayed?	Inspect the relevant DTC using "List of Diagnostic Trouble Code (DTC)". <Ref. to EN(H4DOTC)(diag)-71, List of Diagnostic Trouble Code (DTC).> NOTE: In this case, it is not necessary to inspect DTC P0244.	Replace the wastegate control solenoid valve. <Ref. to FU(H4DOTC)-34, Wastegate Control Solenoid Valve.>

AN:DTC P0245 TURBO/SUPER CHARGER WASTEGATE SOLENOID “A” LOW

DTC DETECTING CONDITION:

- Detect as soon as the malfunction occurs.
- GENERAL DESCRIPTION <Ref. to GD(H4DOTC)-93, DTC P0245 TURBO/SUPER CHARGER WASTEGATE SOLENOID “A” LOW, Diagnostic Trouble Code (DTC) Detecting Criteria.>

TROUBLE SYMPTOM:

Erroneous idling

CAUTION:

After repair or replacement of faulty parts, conduct Clear Memory Mode <Ref. to EN(H4DOTC)(diag)-45, OPERATION, Clear Memory Mode.> and Inspection Mode <Ref. to EN(H4DOTC)(diag)-36, PROCEDURE, Inspection Mode.>.

WIRING DIAGRAM:

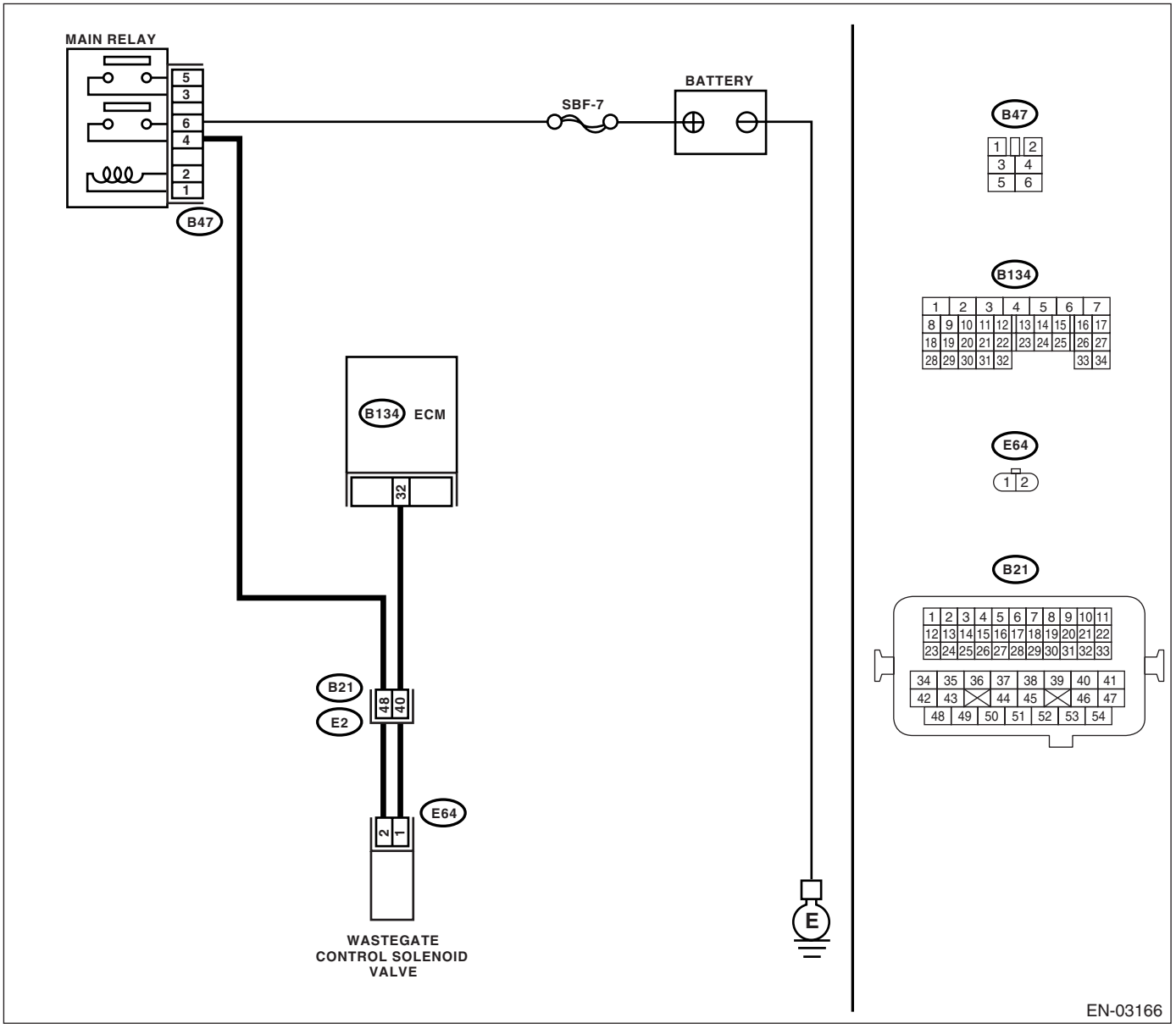

	Step	Check	Yes	No
1	**CHECK OUTPUT SIGNAL FROM ECM.** 1) Turn the ignition switch to ON. 2) Measure the voltage between ECM and chassis ground. ***Connector & terminal*** ***(B134) No. 32 (+) — Chassis ground (−):***	Is the voltage more than 10 V?	Even if the malfunction indicator light illuminates, the circuit has returned to a normal condition at this time.	Go to step **2.**
2	**CHECK HARNESS BETWEEN WASTEGATE CONTROL SOLENOID VALVE AND ECM CONNECTOR.** 1) Turn the ignition switch to OFF. 2) Disconnect the connectors from wastegate control solenoid valve and ECM. 3) Measure the resistance in harness between wastegate control solenoid valve connector and engine ground. ***Connector & terminal*** ***(E64) No. 1 — Engine ground:***	Is the resistance more than 1 MΩ?	Go to step **3.**	Repair the ground short circuit in harness between ECM and wastegate control solenoid valve connector.
3	**CHECK HARNESS BETWEEN WASTEGATE CONTROL SOLENOID VALVE AND ECM CONNECTOR.** Measure the resistance of harness between wastegate control solenoid valve of harness connector and ECM. ***Connector & terminal*** ***(B134) No. 32 — (E64) No. 1:***	Is the resistance less than 1 Ω?	Go to step **4.**	Repair the open circuit in harness between ECM and wastegate control solenoid valve connector. NOTE: In this case, repair the following: • Open circuit in harness between ECM and wastegate control solenoid valve connector
4	**CHECK WASTEGATE CONTROL SOLENOID VALVE.** 1) Remove the wastegate control solenoid valve. 2) Measure the resistance between wastegate control solenoid valve terminals. ***Terminals*** ***No. 1 — No. 2:***	Is the resistance 30 — 34 Ω?	Go to step **5.**	Replace the wastegate control solenoid valve. <Ref. to FU(H4DOTC)-34, Wastegate Control Solenoid Valve.>
5	**CHECK POWER SUPPLY TO WASTEGATE CONTROL SOLENOID VALVE.** 1) Turn the ignition switch to ON. 2) Measure the voltage between wastegate control solenoid valve and engine ground. ***Connector & terminal*** ***(E64) No. 2 (+) — Engine ground (−):***	Is the voltage more than 10 V?	Go to step **6.**	Repair the open circuit in harness between main relay and wastegate control solenoid valve connector.
6	**CHECK POOR CONTACT.** Check poor contact in wastegate control solenoid valve connector.	Is there poor contact in wastegate control solenoid valve connector?	Repair the poor contact in wastegate control solenoid valve connector.	Replace the ECM. <Ref. to FU(H4DOTC)-39, Engine Control Module (ECM).>

AO:DTC P0246 TURBO/SUPER CHARGER WASTEGATE SOLENOID “A” HIGH

DTC DETECTING CONDITION:

- Detect as soon as the malfunction occurs.
- GENERAL DESCRIPTION <Ref. to GD(H4DOTC)-95, DTC P0246 TURBO/SUPER CHARGER WASTEGATE SOLENOID “A” HIGH, Diagnostic Trouble Code (DTC) Detecting Criteria.>

TROUBLE SYMPTOM:

Erroneous idling

CAUTION:

After repair or replacement of faulty parts, conduct Clear Memory Mode <Ref. to EN(H4DOTC)(diag)-45, OPERATION, Clear Memory Mode.> and Inspection Mode <Ref. to EN(H4DOTC)(diag)-36, PROCEDURE, Inspection Mode.>.

WIRING DIAGRAM:

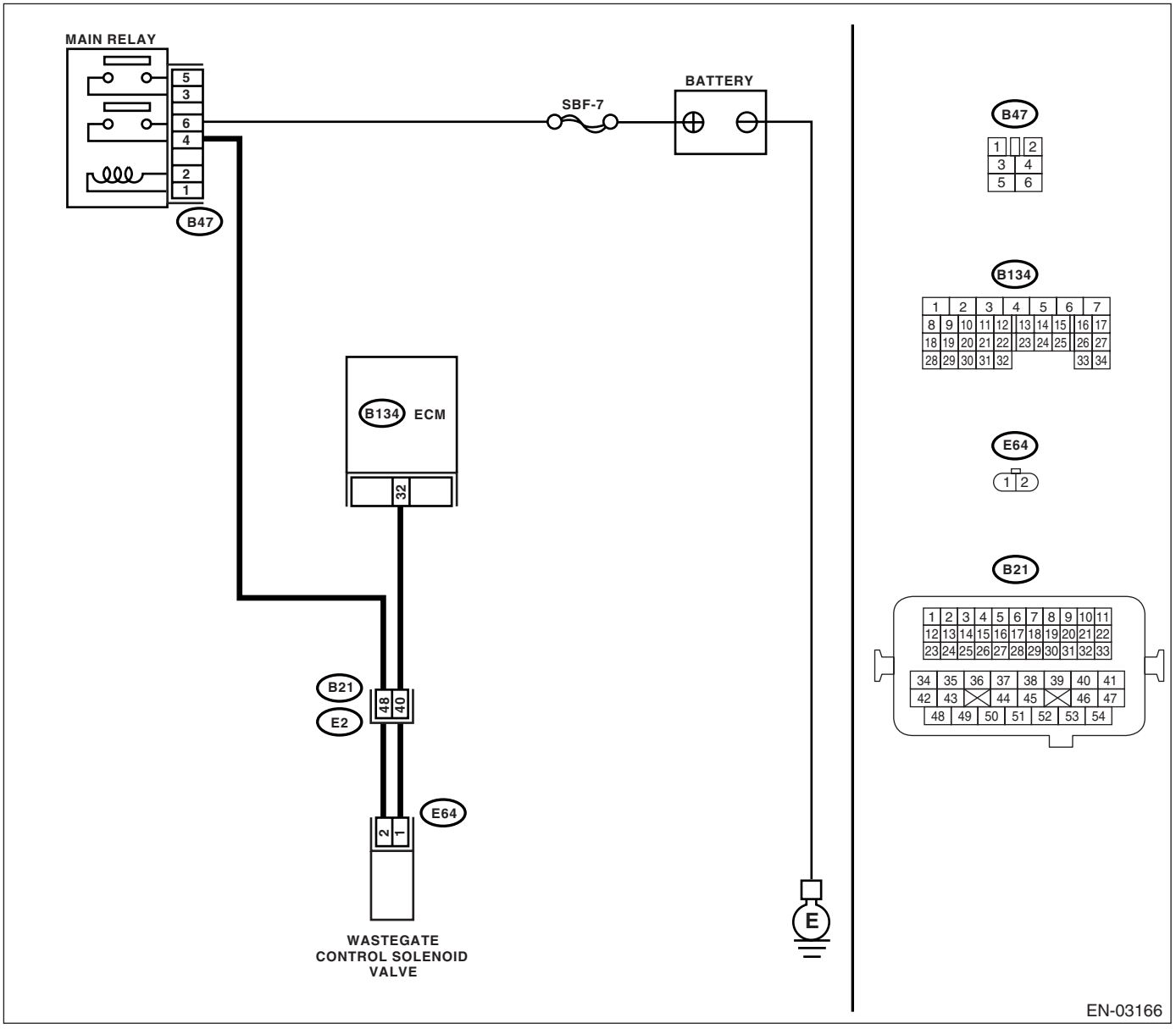

	Step	Check	Yes	No
1	**CHECK OUTPUT SIGNAL FROM ECM.** 1) Turn the ignition switch to ON. 2) Measure the voltage between ECM and chassis ground. ***Connector & terminal*** ***(B134) No. 32 (+) — Chassis ground (−):***	Is the voltage more than 10 V?	Go to step **3.**	Go to step **2.**
2	**CHECK POOR CONTACT.** Check poor contact in ECM connector.	Is there poor contact in ECM connector?	Repair the poor contact in ECM connector.	Replace the ECM. <Ref. to FU(H4DOTC)-39, Engine Control Module (ECM).>
3	**CHECK HARNESS BETWEEN WASTEGATE CONTROL SOLENOID VALVE AND ECM CONNECTOR.** 1) Turn the ignition switch to OFF. 2) Disconnect the connector from wastegate control solenoid valve. 3) Turn the ignition switch to ON. 4) Measure the voltage between ECM and chassis ground. ***Connector & terminal*** ***(B134) No. 32 (+) — Chassis ground (−):***	Is the voltage more than 10 V?	Repair the battery short circuit in harness between ECM and wastegate control solenoid valve connector. After repair, replace the ECM. <Ref. to FU(H4DOTC)-39, Engine Control Module (ECM).>	Go to step **4.**
4	**CHECK WASTEGATE CONTROL SOLENOID VALVE.** 1) Turn the ignition switch to OFF. 2) Measure the resistance between wastegate control solenoid valve terminals. ***Terminals*** ***No. 1 — No. 2:***	Is the resistance less than 1 Ω?	Replace the wastegate control solenoid valve and ECM. <Ref. to FU(H4DOTC)-34, Wastegate Control Solenoid Valve.> <Ref. to FU(H4DOTC)-39, Engine Control Module (ECM).>	Go to step **5.**
5	**CHECK POOR CONTACT.** Check poor contact in ECM connector.	Is the poor contact in ECM connector?	Repair the poor contact in ECM connector.	Replace the ECM. <Ref. to FU(H4DOTC)-39, Engine Control Module (ECM).>

AP:DTC P0301 CYLINDER 1 MISFIRE DETECTED

NOTE:
For the diagnostic procedure, refer to DTC P0304. <Ref. to EN(H4DOTC)(diag)-165, DTC P0304 CYLINDER 4 MISFIRE DETECTED, Diagnostic Procedure with Diagnostic Trouble Code (DTC).>

AQ:DTC P0302 CYLINDER 2 MISFIRE DETECTED

NOTE:
For the diagnostic procedure, refer to DTC P0304. <Ref. to EN(H4DOTC)(diag)-165, DTC P0304 CYLINDER 4 MISFIRE DETECTED, Diagnostic Procedure with Diagnostic Trouble Code (DTC).>

AR:DTC P0303 CYLINDER 3 MISFIRE DETECTED

NOTE:
For the diagnostic procedure, refer to DTC P0304. <Ref. to EN(H4DOTC)(diag)-165, DTC P0304 CYLINDER 4 MISFIRE DETECTED, Diagnostic Procedure with Diagnostic Trouble Code (DTC).>

AS:DTC P0304 CYLINDER 4 MISFIRE DETECTED

DTC DETECTING CONDITION:

- Two consecutive driving cycles with fault
- Detect as soon as malfunction occurs. (A misfire which could damage catalyst occurs.)
- GENERAL DESCRIPTION <Ref. to GD(H4DOTC)-102, DTC P0304 CYLINDER 4 MISFIRE DETECTED, Diagnostic Trouble Code (DTC) Detecting Criteria.>

TROUBLE SYMPTOM:

- Engine stalls.
- Erroneous idling
- Rough driving

CAUTION:
After repair or replacement of faulty parts, conduct Clear Memory Mode <Ref. to EN(H4DOTC)(diag)-45, OPERATION, Clear Memory Mode.> and Inspection Mode <Ref. to EN(H4DOTC)(diag)-36, PROCEDURE, Inspection Mode.>.

WIRING DIAGRAM:

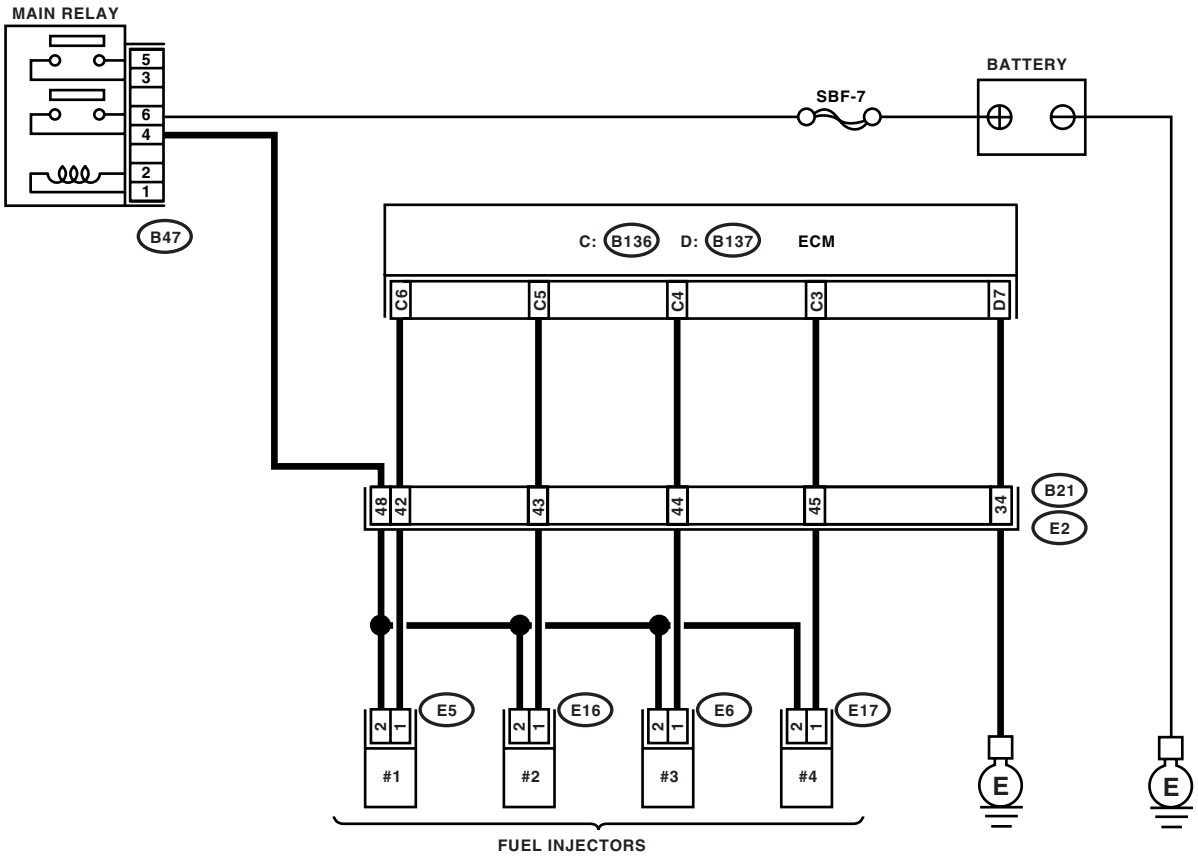

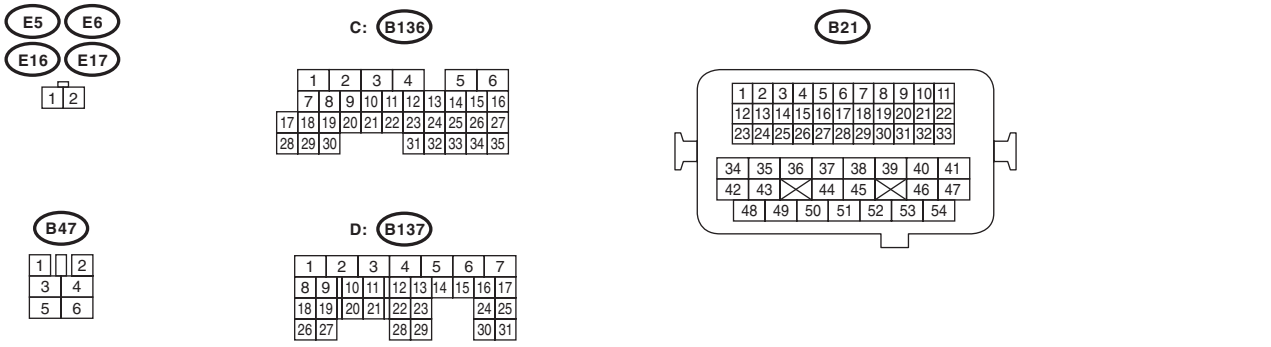

EN-03164

	Step	Check	Yes	No
1	**CHECK FOR ANY OTHER DTC ON DISPLAY.**	Is any other DTC displayed?	Inspect the relevant DTC using "List of Diagnostic Trouble Code (DTC)". <Ref. to EN(H4DOTC)(diag)-71, List of Diagnostic Trouble Code (DTC).>	Go to step **2.**
2	**CHECK OUTPUT SIGNAL FROM ECM.** 1) Turn the ignition switch to ON. 2) Measure the voltage between ECM connector and chassis ground on faulty cylinders. ***Connector & terminal*** ***#1 (B136) No. 6 (+) — Chassis ground (–):*** ***#2 (B136) No. 5 (+) — Chassis ground (–):*** ***#3 (B136) No. 4 (+) — Chassis ground (–):*** ***#4 (B136) No. 3 (+) — Chassis ground (–):***	Is the voltage more than 10 V?	Go to step **7.**	Go to step **3.**
3	**CHECK HARNESS BETWEEN FUEL INJECTOR AND ECM CONNECTOR.** 1) Turn the ignition switch to OFF. 2) Disconnect the connector from fuel injector on faulty cylinders. 3) Disconnect the connector from ECM. 4) Measure the resistance between ECM connector and engine ground on faulty cylinders. ***Connector & terminal*** ***#1 (E5) No. 1 — Engine ground:*** ***#2 (E16) No. 1 — Engine ground:*** ***#3 (E6) No. 1 — Engine ground:*** ***#4 (E17) No. 1 — Engine ground:***	Is the resistance more than 1 MΩ?	Go to step **4.**	Repair the ground short circuit in harness between fuel injector and ECM connector.
4	**CHECK HARNESS BETWEEN FUEL INJECTOR AND ECM CONNECTOR.** Measure the resistance of harness connector between ECM connector and fuel injector on faulty cylinders. ***Connector & terminal*** ***#1 (B136) No. 6 — (E5) No. 1:*** ***#2 (B136) No. 5 — (E16) No. 1:*** ***#3 (B136) No. 4 — (E6) No. 1:*** ***#4 (B136) No. 3 — (E17) No. 1:***	Is the resistance less than 1 Ω?	Go to step **5.**	Repair the harness and connector. NOTE: In this case, repair the following: • Open circuit in harness between ECM and fuel injector connector • Poor contact in coupling connector
5	**CHECK FUEL INJECTOR.** Measure the resistance between fuel injector terminals on faulty cylinder. ***Terminals*** ***No. 1 — No. 2:***	Is the resistance 5 — 20 Ω?	Go to step **6.**	Replace the faulty fuel injector. <Ref. to FU(H4DOTC)-29, Fuel Injector.>

	Step	Check	Yes	No
6	**CHECK POWER SUPPLY LINE.** 1) Turn the ignition switch to ON. 2) Measure the voltage between fuel injector and engine ground on faulty cylinders. ***Connector & terminal*** ***#1 (E5) No. 2 (+) — Engine ground (−):*** ***#2 (E16) No. 2 (+) — Engine ground (−):*** ***#3 (E6) No. 2 (+) — Engine ground (−):*** ***#4 (E17) No. 2 (+) — Engine ground (−):***	Is the voltage more than 10 V?	Repair the poor contact in all connectors in fuel injector circuit.	Repair the harness and connector. NOTE: In this case, repair the following: • Open circuit in harness between main relay and fuel injector connector on faulty cylinders • Poor contact in coupling connector • Poor contact in main relay connector • Poor contact in fuel injector connector on faulty cylinders
7	**CHECK HARNESS BETWEEN FUEL INJECTOR AND ECM CONNECTOR.** 1) Turn the ignition switch to OFF. 2) Disconnect the connector from fuel injector on faulty cylinder. 3) Turn the ignition switch to ON. 4) Measure the voltage between ECM connector and chassis ground on faulty cylinders. ***Connector & terminal*** ***#1 (B136) No. 6 (+) — Chassis ground (−):*** ***#2 (B136) No. 5 (+) — Chassis ground (−):*** ***#3 (B136) No. 4 (+) — Chassis ground (−):*** ***#4 (B136) No. 3 (+) — Chassis ground (−):***	Is the voltage more than 10 V?	Repair the battery short circuit in harness between ECM and fuel injector. After repair, replace the ECM. <Ref. to FU(H4DOTC)-39, Engine Control Module (ECM).>	Go to step **8.**
8	**CHECK FUEL INJECTOR.** 1) Turn the ignition switch to OFF. 2) Measure the resistance between fuel injector terminals on faulty cylinder. ***Terminals*** ***No. 1 — No. 2:***	Is the resistance 5 — 20 Ω?	Go to step **9.**	Replace the faulty fuel injector <Ref. to FU(H4DOTC)-29, Fuel Injector.> and ECM <Ref. to FU(H4DOTC)-39, Engine Control Module (ECM).>
9	**CHECK INSTALLATION OF CAMSHAFT POSITION SENSOR/CRANKSHAFT POSITION SENSOR.**	Is the camshaft position sensor or crankshaft position sensor loosely installed?	Tighten the camshaft position sensor or crankshaft position sensor.	Go to step **10.**
10	**CHECK CRANK SPROCKET.** Remove the timing belt cover.	Is the crank sprocket rusted or does it have broken teeth?	Replace the crank sprocket. <Ref. to ME(H4DOTC)-51, Crank Sprocket.>	Go to step **11.**
11	**CHECK INSTALLATION CONDITION OF TIMING BELT.** Turn the crankshaft, and align alignment mark on crank sprocket with alignment mark on cylinder block.	Is the timing belt dislocated from its proper position?	Repair the installation condition of timing belt. <Ref. to ME(H4DOTC)-42, Timing Belt.>	Go to step **12.**

Step		Check	Yes	No
12	**CHECK FUEL LEVEL.**	Is the fuel meter indication higher than the “Lower” level?	Go to step **13.**	Replenish the fuel so fuel meter indication is higher than the “Lower” level. After replenishing fuel; Go to step **13.**
13	**CHECK STATUS OF MALFUNCTION INDICATOR LIGHT.** 1) Clear the memory using Subaru Select Monitor. <Ref. to EN(H4DOTC)(diag)-45, Clear Memory Mode.> 2) Start the engine, and drive the vehicle more than 10 minutes.	Is the malfunction indicator light coming on or blinking?	Go to step **15.**	Go to step **14.**
14	**CHECK CAUSE OF MISFIRE DIAGNOSED.**	Was the cause of misfire diagnosed when the engine is running?	Finish the diagnostics operation, if the engine has no abnormality.	Repair the poor contact. NOTE: In this case, repair the following: • Poor contact in ignition coil connector • Poor contact in fuel injector connector on faulty cylinders • Poor contact in ECM connector • Poor contact in coupling connector
15	**CHECK AIR INTAKE SYSTEM.**	Is there any fault in air intake system?	Repair the air intake system. NOTE: Check the following items: • Are there air leaks or air suction caused by loose or dislocated nuts and bolts? • Are there cracks or any disconnection of hoses?	Go to step **16.**
16	**CHECK CYLINDER.**	Is there any fault in that cylinder?	Repair or replace the faulty parts. NOTE: Check the following items. • Spark plug • Fuel injector • Compression pressure	Go to DTC P0171 and P0172. <Ref. to EN(H4DOTC)(diag)-141, DTC P0171 SYSTEM TOO LEAN (BANK 1), Diagnostic Procedure with Diagnostic Trouble Code (DTC).>

AT:DTC P0327 KNOCK SENSOR 1 CIRCUIT LOW INPUT (BANK 1 OR SINGLE SENSOR)

DTC DETECTING CONDITION:

- Detect as soon as the malfunction occurs.
- GENERAL DESCRIPTION <Ref. to GD(H4DOTC)-103, DTC P0327 KNOCK SENSOR 1 CIRCUIT LOW INPUT (BANK 1 OR SINGLE SENSOR), Diagnostic Trouble Code (DTC) Detecting Criteria.>

TROUBLE SYMPTOM:

- Poor driving performance
- Knocking occurs.

CAUTION:
After repair or replacement of faulty parts, conduct Clear Memory Mode <Ref. to EN(H4DOTC)(diag)-45, OPERATION, Clear Memory Mode.> and Inspection Mode <Ref. to EN(H4DOTC)(diag)-36, PROCEDURE, Inspection Mode.>.

WIRING DIAGRAM:

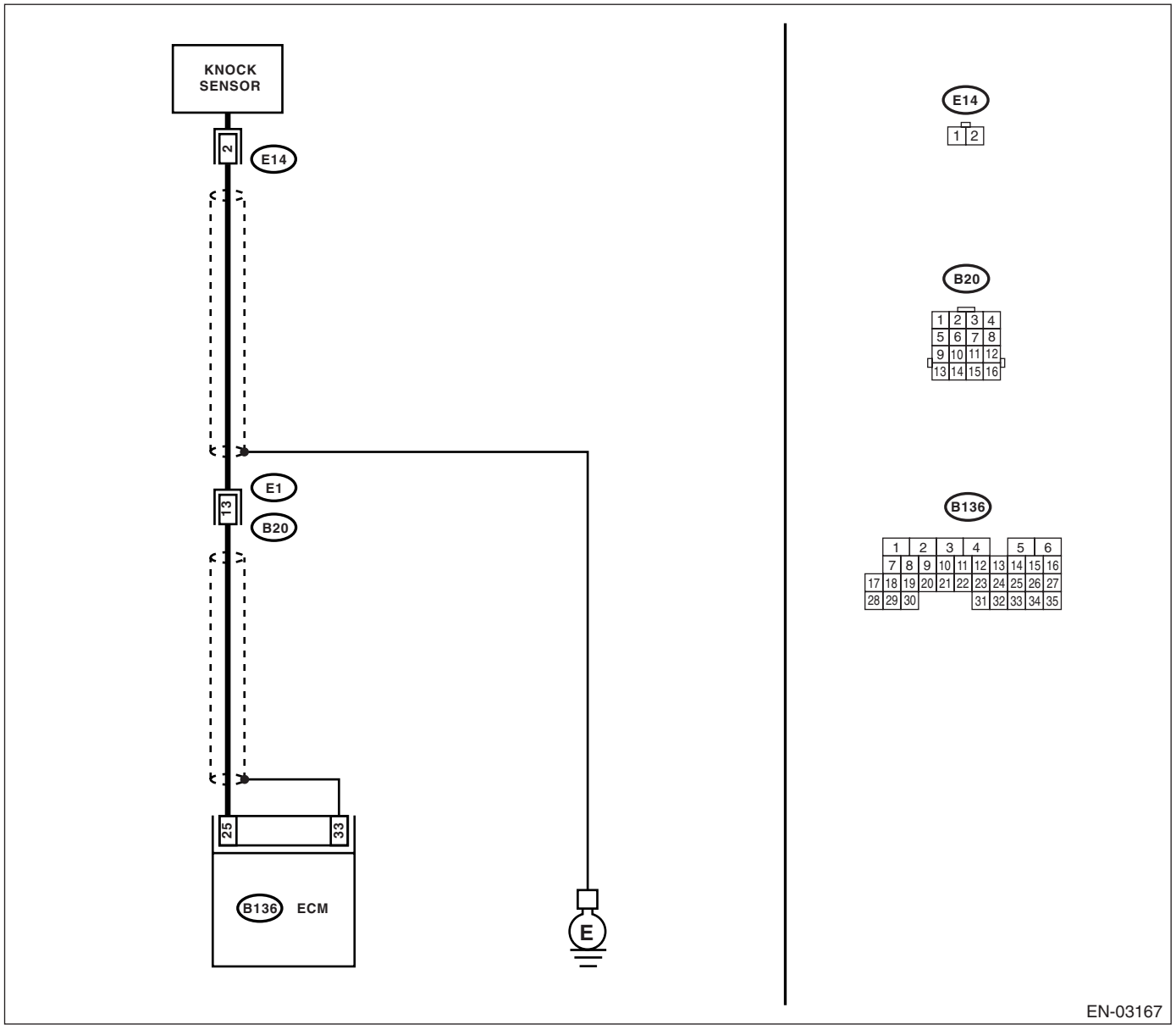

	Step	Check	Yes	No
1	**CHECK HARNESS BETWEEN KNOCK SENSOR AND ECM CONNECTOR.** 1) Turn the ignition switch to OFF. 2) Disconnect the connector from ECM. 3) Measure the resistance between ECM harness connector and chassis ground. ***Connector & terminal*** ***(B136) No. 25 — Chassis ground:***	Is the resistance more than 700 kΩ?	Go to step **2.**	Repair the harness and connector. NOTE: In this case, repair the followingin this case, repair the following: • Open circuit in harness between knock sensor and ECM connector • Poor contact in knock sensor connector • Poor contact in coupling connector
2	**CHECK KNOCK SENSOR.** 1) Disconnect the connector from knock sensor. 2) Measure the resistance between knock sensor connector terminal and engine ground. ***Terminals*** ***No. 2 — Engine ground:***	Is the resistance more than 700 kΩ?	Go to step **3.**	Repair the harness and connector. NOTE: In this case, repair the followingin this case, repair the following: • Poor contact in knock sensor connector • Poor contact in coupling connector
3	**CHECK CONDITION OF KNOCK SENSOR INSTALLATION.**	Is the knock sensor installation bolt tightened securely?	Replace the knock sensor. <Ref. to FU(H4DOTC)-25, Knock Sensor.>	Tighten knock sensor installation bolt securely.

AU:DTC P0328 KNOCK SENSOR 1 CIRCUIT HIGH INPUT (BANK 1 OR SINGLE SENSOR)

DTC DETECTING CONDITION:

- Detect as soon as the malfunction occurs.
- GENERAL DESCRIPTION <Ref. to GD(H4DOTC)-105, DTC P0328 KNOCK SENSOR 1 CIRCUIT HIGH INPUT (BANK 1 OR SINGLE SENSOR), Diagnostic Trouble Code (DTC) Detecting Criteria.>

TROUBLE SYMPTOM:

- Poor driving performance
- Knocking occurs.

CAUTION:
After repair or replacement of faulty parts, conduct Clear Memory Mode <Ref. to EN(H4DOTC)(diag)-45, OPERATION, Clear Memory Mode.> and Inspection Mode <Ref. to EN(H4DOTC)(diag)-36, PROCEDURE, Inspection Mode.>.

WIRING DIAGRAM:

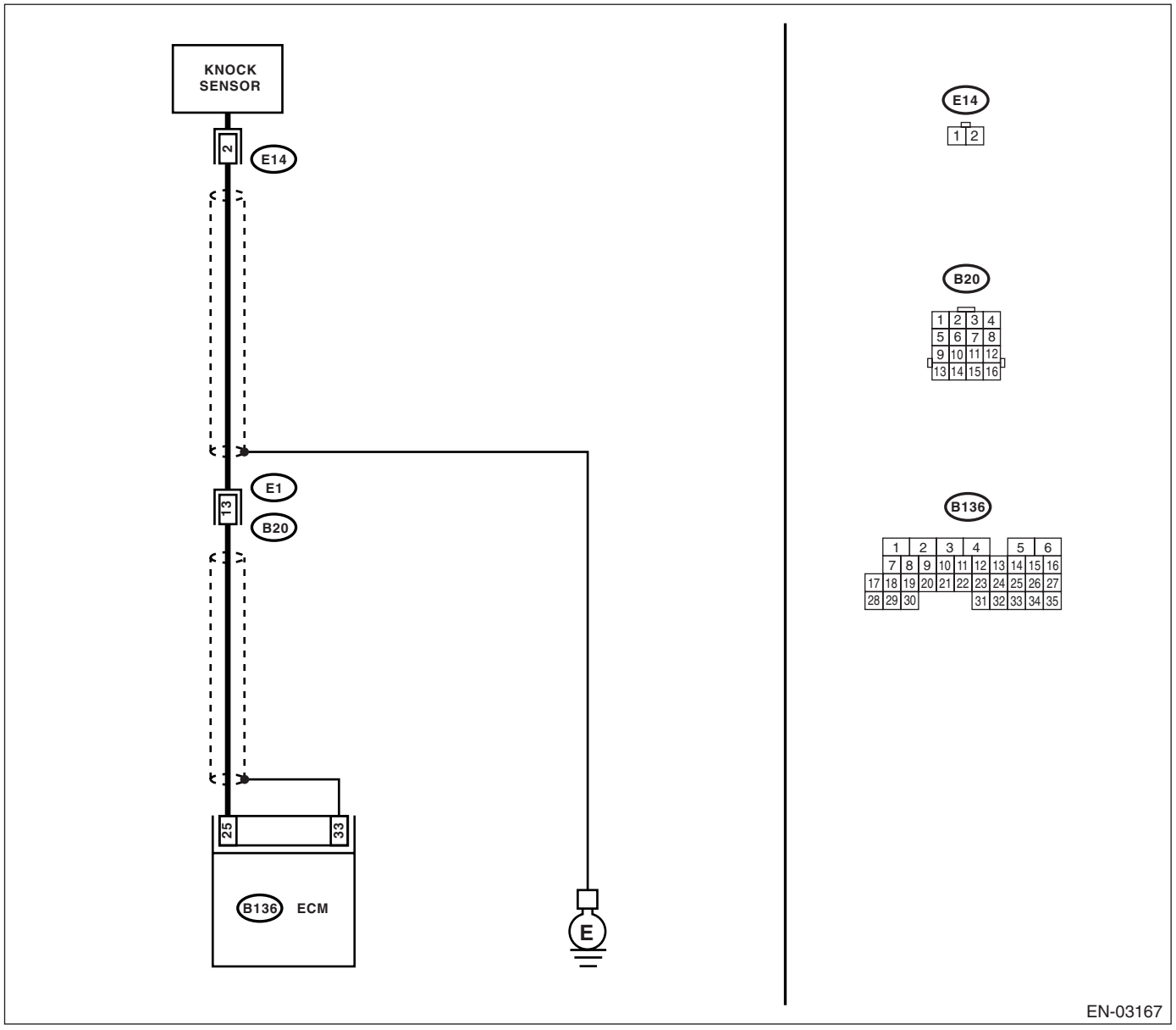

	Step	Check	Yes	No
1	**CHECK HARNESS BETWEEN KNOCK SENSOR AND ECM CONNECTOR.** Measure the resistance of harness between ECM connector and chassis ground. ***Connector & terminal*** ***(B136) No. 25 — Chassis ground:***	Is the resistance less than 400 kΩ?	Go to step **2.**	Go to step **3.**
2	**CHECK KNOCK SENSOR.** 1) Disconnect the connector from knock sensor. 2) Measure the resistance between knock sensor connector terminal and engine ground. ***Terminals*** ***No. 2 — Engine ground:***	Is the resistance less than 400 kΩ?	Replace the knock sensor. <Ref. to FU(H4DOTC)-25, Knock Sensor.>	Repair the ground short circuit in harness between knock sensor connector and ECM connector. NOTE: The harness between both connectors are shielded. Repair the short circuit in harness covered with shield.
3	**CHECK INPUT SIGNAL FROM ECM.** 1) Connect the connectors to ECM and knock sensor. 2) Turn the ignition switch to ON. 3) Measure the voltage between ECM and chassis ground. ***Connector & terminal*** ***(B136) No. 25 (+) — Chassis ground (−):***	Is the voltage more than 2 V?	Even if the malfunction indicator light illuminates, the circuit has returned to a normal condition at this time. (However, the possibility of poor contact still remains.) NOTE: In this case, repair the following: • Poor contact in knock sensor connector • Poor contact in ECM connector • Poor contact in coupling connector	Repair the poor contact in ECM connector.

AV:DTC P0335 CRANKSHAFT POSITION SENSOR “A” CIRCUIT

DTC DETECTING CONDITION:

- Detect as soon as the malfunction occurs.
- GENERAL DESCRIPTION <Ref. to GD(H4DOTC)-107, DTC P0335 CRANKSHAFT POSITION SENSOR “A” CIRCUIT, Diagnostic Trouble Code (DTC) Detecting Criteria.>

TROUBLE SYMPTOM:

- Engine stalls.
- Failure of engine to start

CAUTION:

After repair or replacement of faulty parts, conduct Clear Memory Mode <Ref. to EN(H4DOTC)(diag)-45, OPERATION, Clear Memory Mode.> and Inspection Mode <Ref. to EN(H4DOTC)(diag)-36, PROCEDURE, Inspection Mode.>.

WIRING DIAGRAM:

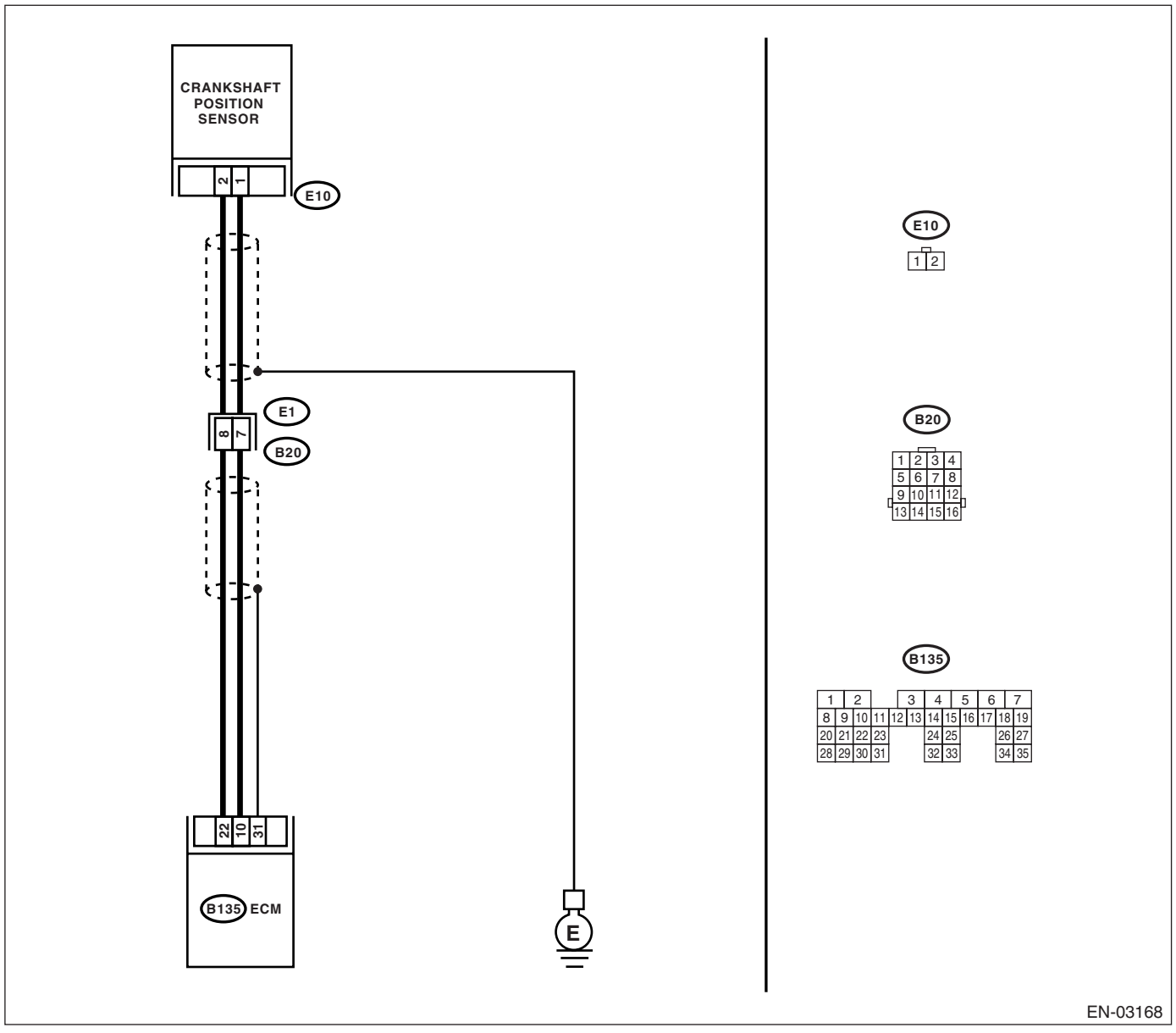

	Step	Check	Yes	No
1	**CHECK FOR ANY OTHER DTC ON DISPLAY.**	Is any other DTC displayed?	Inspect the DTC using "List of Diagnostic Trouble Code (DTC)". <Ref. to EN(H4DOTC)(diag)-71, List of Diagnostic Trouble Code (DTC).>	Go to step **2.**
2	**CHECK HARNESS BETWEEN CRANKSHAFT POSITION SENSOR AND ECM CONNECTOR.** 1) Turn the ignition switch to OFF. 2) Disconnect the connector from the crankshaft position sensor. 3) Measure the resistance of harness between crankshaft position sensor connector and engine ground. ***Connector & terminal*** ***(E10) No. 1 — (B135) No. 10:*** ***(E10) No. 2 — (B135) No. 22:***	Is the resistance more than 100 kΩ?	Repair the harness and connector. NOTE: In this case, repair the following: • Open circuit in harness between crankshaft position sensor and ECM connector • Poor contact in ECM connector • Poor contact in coupling connector	Go to step **3.**
3	**CHECK HARNESS BETWEEN CRANKSHAFT POSITION SENSOR AND ECM CONNECTOR.** Measure the resistance of harness between crankshaft position sensor connector and engine ground. ***Connector & terminal*** ***(E10) No. 1 — Engine ground:*** ***(E10) No. 2 — Engine ground:***	Is the resistance more than 1 MΩ?	Go to step **4.**	Repair the ground short circuit in harness between crankshaft position sensor and ECM connector. NOTE: The harness between both connectors are shielded. Repair the ground short circuit in harness together with shield.
4	**CHECK CONDITION OF CRANKSHAFT POSITION SENSOR.**	Is the crankshaft position sensor installation bolt tightened securely?	Go to step **5.**	Tighten the crankshaft position sensor installation bolt securely.
5	**CHECK CRANKSHAFT POSITION SENSOR.** 1) Remove the crankshaft position sensor. 2) Measure the resistance between connector terminals of crankshaft position sensor. ***Terminals*** ***No. 1 — No. 2:***	Is the resistance 1 — 4 kΩ?	Repair the poor contact in crankshaft position sensor connector.	Replace the crankshaft position sensor. <Ref. to FU(H4DOTC)-23, Crankshaft Position Sensor.>

AW:DTC P0336 CRANKSHAFT POSITION SENSOR “A” CIRCUIT RANGE/PERFORMANCE

DTC DETECTING CONDITION:

- Two consecutive driving cycles with fault
- GENERAL DESCRIPTION <Ref. to GD(H4DOTC)-109, DTC P0336 CRANKSHAFT POSITION SENSOR “A” CIRCUIT RANGE/PERFORMANCE, Diagnostic Trouble Code (DTC) Detecting Criteria.>

TROUBLE SYMPTOM:

- Engine stalls.
- Failure of engine to start

CAUTION:
After repair or replacement of faulty parts, conduct Clear Memory Mode <Ref. to EN(H4DOTC)(diag)-45, OPERATION, Clear Memory Mode.> and Inspection Mode <Ref. to EN(H4DOTC)(diag)-36, PROCEDURE, Inspection Mode.>.

WIRING DIAGRAM:

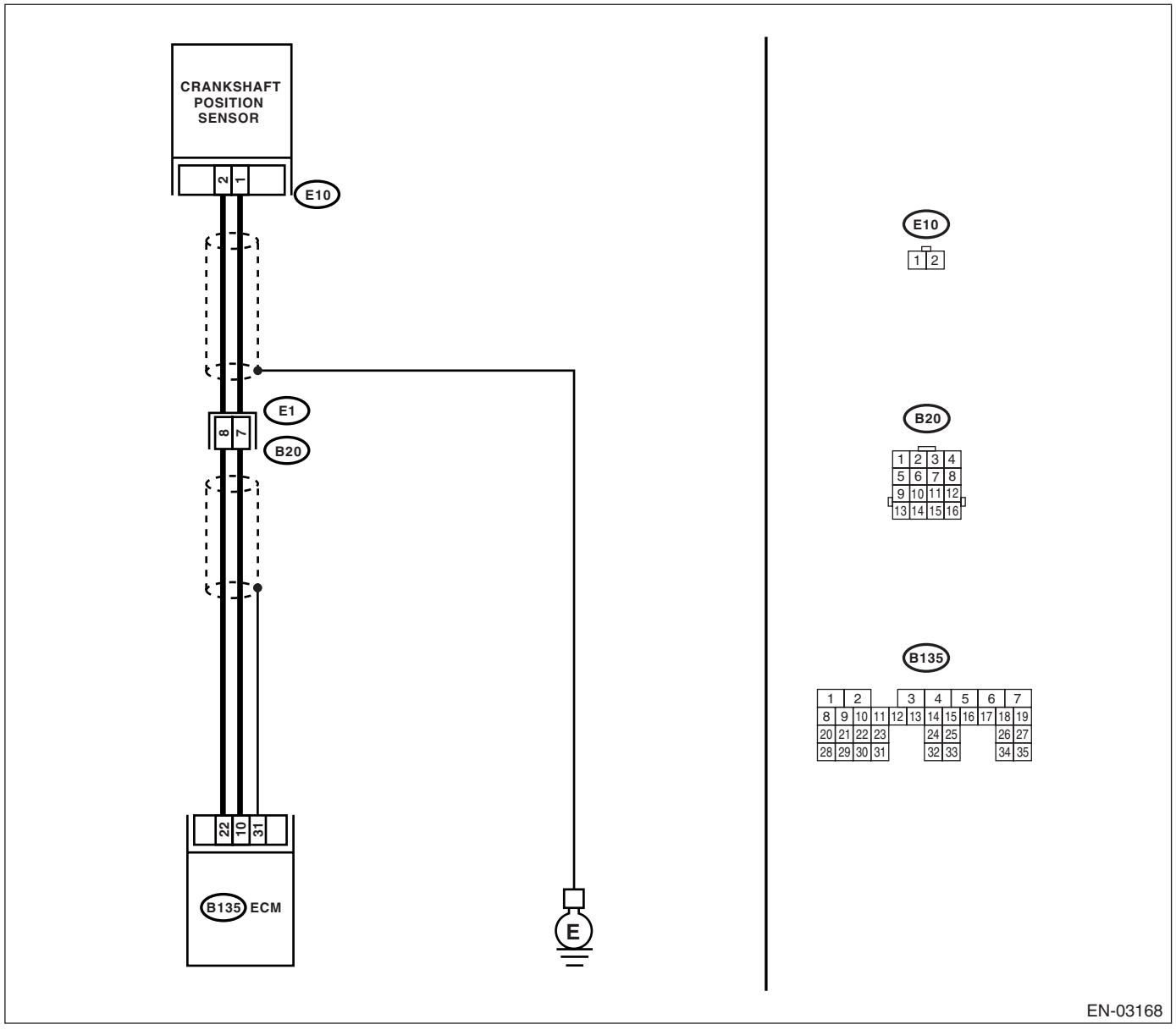

	Step	Check	Yes	No
1	**CHECK FOR ANY OTHER DTC ON DISPLAY.**	Is any other DTC displayed?	Inspect the relevant DTC using "List of Diagnostic Trouble Code (DTC)". <Ref. to EN(H4DOTC)(diag)-71, List of Diagnostic Trouble Code (DTC).>	Go to step **2.**
2	**CHECK CONDITION OF CRANKSHAFT POSITION SENSOR.** Turn the ignition switch to OFF.	Is the crankshaft position sensor installation bolt tightened securely?	Go to step **3.**	Tighten the crankshaft position sensor installation bolt securely.
3	**CHECK CRANK SPROCKET.** Remove the front belt cover.	Are the crank sprocket teeth cracked or damaged?	Replace the crank sprocket. <Ref. to FU(H4DOTC)-23, Crankshaft Position Sensor.>	Go to step **4.**
4	**CHECK INSTALLATION CONDITION OF TIMING BELT.** Turn the crankshaft, and align alignment mark on crank sprocket with alignment mark on cylinder block.	Is the timing belt dislocated from its proper position?	Repair the installation condition of timing belt. <Ref. to ME(H4DOTC)-42, Timing Belt.>	Replace the crankshaft position sensor. <Ref. to FU(H4DOTC)-23, Crankshaft Position Sensor.>

AX:DTC P0340 CAMSHAFT POSITION SENSOR “A” CIRCUIT (BANK 1 OR SINGLE SENSOR)

DTC DETECTING CONDITION:

- Detect as soon as the malfunction occurs.
- GENERAL DESCRIPTION <Ref. to GD(H4DOTC)-111, DTC P0340 CAMSHAFT POSITION SENSOR “A” CIRCUIT (BANK 1 OR SINGLE SENSOR), Diagnostic Trouble Code (DTC) Detecting Criteria.>

TROUBLE SYMPTOM:

- Engine stalls.
- Failure of engine to start

CAUTION:

After repair or replacement of faulty parts, conduct Clear Memory Mode <Ref. to EN(H4DOTC)(diag)-45, OPERATION, Clear Memory Mode.> and Inspection Mode <Ref. to EN(H4DOTC)(diag)-36, PROCEDURE, Inspection Mode.>.

WIRING DIAGRAM:

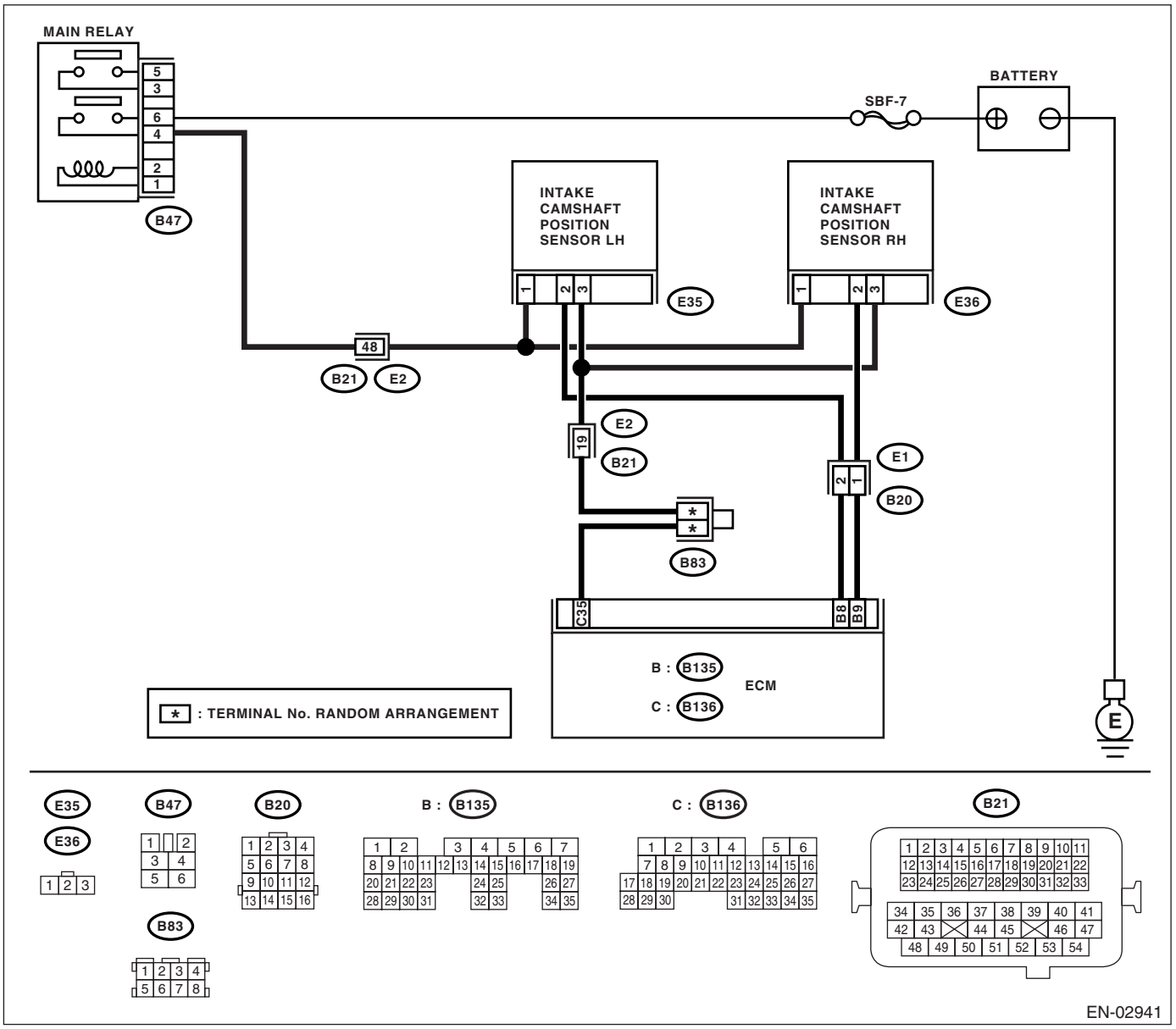

	Step	Check	Yes	No
1	**CHECK FOR ANY OTHER DTC ON DISPLAY.**	Is any other DTC displayed?	Inspect the DTC using "List of Diagnostic Trouble Code (DTC)". <Ref. to EN(H4DOTC)(diag)-71, List of Diagnostic Trouble Code (DTC).>	Go to step **2.**
2	**CHECK POWER SUPPLY OF CAMSHAFT POSITION SENSOR.** 1) Turn the ignition switch to OFF. 2) Disconnect the connector from camshaft position sensor. 3) Measure the voltage between camshaft position sensor connector and engine ground. ***Connector & terminal*** ***(E36) No. 1 (+) — Engine ground (−):***	Is the voltage more than 10 V?	Repair the battery short circuit between main relay connector and camshaft position sensor connector.	Go to step **3.**
3	**CHECK POWER SUPPLY OF CAMSHAFT POSITION SENSOR.** 1) Turn the ignition switch to ON. 2) Measure the voltage between camshaft position sensor connector and engine ground. ***Connector & terminal*** ***(E36) No. 1 (+) — Engine ground (−):***	Is the voltage more than 10 V?	Go to step **4.**	Repair the open or ground short circuit between main relay connector and camshaft position sensor connector.
4	**CHECK HARNESS BETWEEN CAMSHAFT POSITION SENSOR CONNECTOR AND ECM.** 1) Turn the ignition switch to OFF. 2) Disconnect the connector from ECM. 3) Measure the resistance between camshaft position sensor connector and ECM. ***Connector & terminal*** ***(E36) No. 2 — (B135) No. 9:*** ***(E36) No. 3 — (B136) No. 35:***	Is the resistance less than 1 Ω?	Go to step **5.**	Repair the open circuit between camshaft position sensor and ECM.
5	**CHECK HARNESS BETWEEN CAMSHAFT POSITION SENSOR CONNECTOR AND ECM.** Measure the resistance between camshaft position sensor connector and engine ground. ***Connector & terminal*** ***(E36) No. 2 — Engine ground:***	Is the resistance more than 1 MΩ?	Go to step **6.**	Repair the ground short circuit between camshaft position sensor and ECM.
6	**CHECK CONDITION OF CAMSHAFT POSITION SENSOR.**	Is the camshaft position sensor installation bolt tightened securely?	Go to step **7.**	Tighten the camshaft position sensor installation bolt securely.
7	**CHECK CAMSHAFT POSITION SENSOR.** Check waveform of camshaft position sensor. <Ref. to EN(H4DOTC)(diag)-18, Engine Control Module (ECM) I/O Signal.>	Is there any abnormality in waveform?	Replace the camshaft position sensor. <Ref. to FU(H4DOTC)-24, Camshaft Position Sensor.>	Go to step **8.**
8	**CHECK POOR CONTACT.** Check poor contact in ECM connector.	Is there poor contact in ECM connector?	Repair the poor contact in ECM connector.	Replace the ECM. <Ref. to FU(H4DOTC)-39, Engine Control Module (ECM).>

AY:DTC P0345 CAMSHAFT POSITION SENSOR “A” CIRCUIT (BANK 2)

DTC DETECTING CONDITION:

- Detect as soon as the malfunction occurs.
- GENERAL DESCRIPTION <Ref. to GD(H4DOTC)-112, DTC P0345 CAMSHAFT POSITION SENSOR “A” CIRCUIT (BANK 2), Diagnostic Trouble Code (DTC) Detecting Criteria.>

TROUBLE SYMPTOM:

- Engine stalls.
- Failure of engine to start

CAUTION:

After repair or replacement of faulty parts, conduct Clear Memory Mode <Ref. to EN(H4DOTC)(diag)-45, OPERATION, Clear Memory Mode.> and Inspection Mode <Ref. to EN(H4DOTC)(diag)-36, PROCEDURE, Inspection Mode.>.

WIRING DIAGRAM:

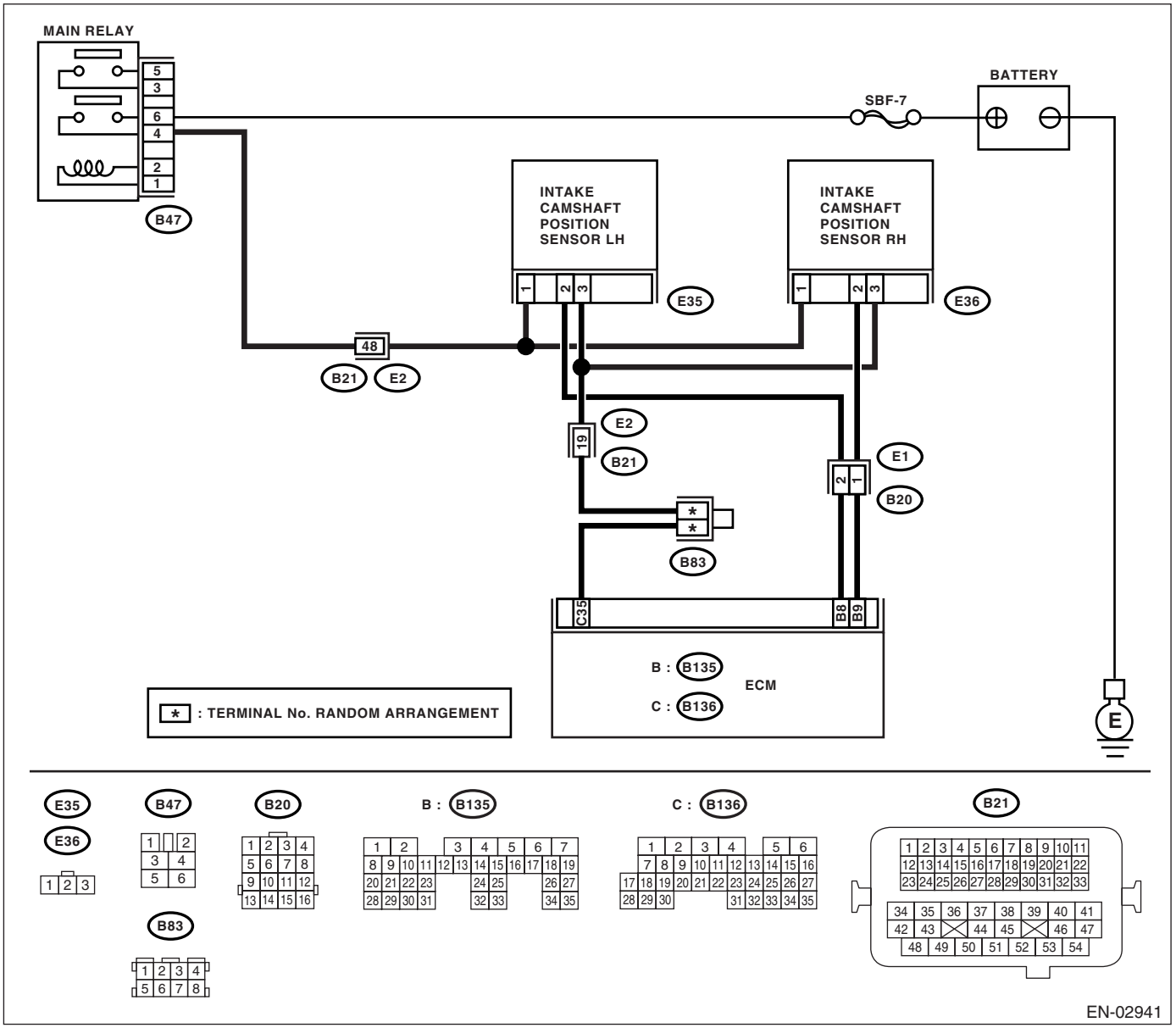

	Step	Check	Yes	No
1	**CHECK FOR ANY OTHER DTC ON DISPLAY.**	Is any other DTC displayed?	Inspect the DTC using "List of Diagnostic Trouble Code (DTC)". <Ref. to EN(H4DOTC)(diag)-71, List of Diagnostic Trouble Code (DTC).>	Go to step **2.**
2	**CHECK POWER SUPPLY OF CAMSHAFT POSITION SENSOR.** 1) Turn the ignition switch to OFF. 2) Disconnect the connector from camshaft position sensor. 3) Measure the voltage between camshaft position sensor connector and engine ground. ***Connector & terminal*** ***(E35) No. 1 (+) — Engine ground (−):***	Is the voltage more than 10 V?	Repair the battery short circuit between main relay connector and camshaft position sensor connector.	Go to step **3.**
3	**CHECK POWER SUPPLY OF CAMSHAFT POSITION SENSOR.** 1) Turn the ignition switch to ON. 2) Measure the voltage between camshaft position sensor connector and engine ground. ***Connector & terminal*** ***(E35) No. 1 (+) — Engine ground (−):***	Is the voltage more than 10 V?	Go to step **4.**	Repair the open or ground short circuit between main relay connector and camshaft position sensor connector.
4	**CHECK HARNESS BETWEEN CAMSHAFT POSITION SENSOR CONNECTOR AND ECM.** 1) Turn the ignition switch to OFF. 2) Disconnect the connector from ECM. 3) Measure the resistance between camshaft position sensor connector and ECM. ***Connector & terminal*** ***(E35) No. 2 — (B135) No. 8:*** ***(E35) No. 3 — (B136) No. 35:***	Is the resistance less than 1 Ω?	Go to step **5.**	Repair the open circuit between camshaft position sensor and ECM.
5	**CHECK HARNESS BETWEEN CAMSHAFT POSITION SENSOR CONNECTOR AND ECM.** Measure the resistance between camshaft position sensor connector and engine ground. ***Connector & terminal*** ***(E35) No. 2 — Engine ground:***	Is the resistance more than 1 MΩ?	Go to step **6.**	Repair the ground short circuit between camshaft position sensor and ECM.
6	**CHECK CONDITION OF CAMSHAFT POSITION SENSOR.**	Is the camshaft position sensor installation bolt tightened securely?	Go to step **7.**	Tighten the camshaft position sensor installation bolt securely.
7	**CHECK CAMSHAFT POSITION SENSOR.** Check waveform of camshaft position sensor. <Ref. to EN(H4DOTC)(diag)-18, Engine Control Module (ECM) I/O Signal.>	Is there any abnormality in waveform?	Replace the camshaft position sensor. <Ref. to FU(H4DOTC)-24, Camshaft Position Sensor.>	Go to step **8.**
8	**CHECK POOR CONTACT.** Check poor contact in ECM connector.	Is there poor contact in ECM connector?	Repair the poor contact in ECM connector.	Replace the ECM. <Ref. to FU(H4DOTC)-39, Engine Control Module (ECM).>

AZ:DTC P0420 CATALYST SYSTEM EFFICIENCY BELOW THRESHOLD (BANK 1)

DTC DETECTING CONDITION:

- Two consecutive driving cycles with fault
- GENERAL DESCRIPTION <Ref. to GD(H4DOTC)-113, DTC P0420 CATALYST SYSTEM EFFICIENCY BELOW THRESHOLD (BANK 1), Diagnostic Trouble Code (DTC) Detecting Criteria.>

TROUBLE SYMPTOM:

- Engine stalls.
- Idle mixture is out of specifications.

CAUTION:

After repair or replacement of faulty parts, conduct Clear Memory Mode <Ref. to EN(H4DOTC)(diag)-45, OPERATION, Clear Memory Mode.> and Inspection Mode <Ref. to EN(H4DOTC)(diag)-36, PROCEDURE, Inspection Mode.>.

WIRING DIAGRAM:

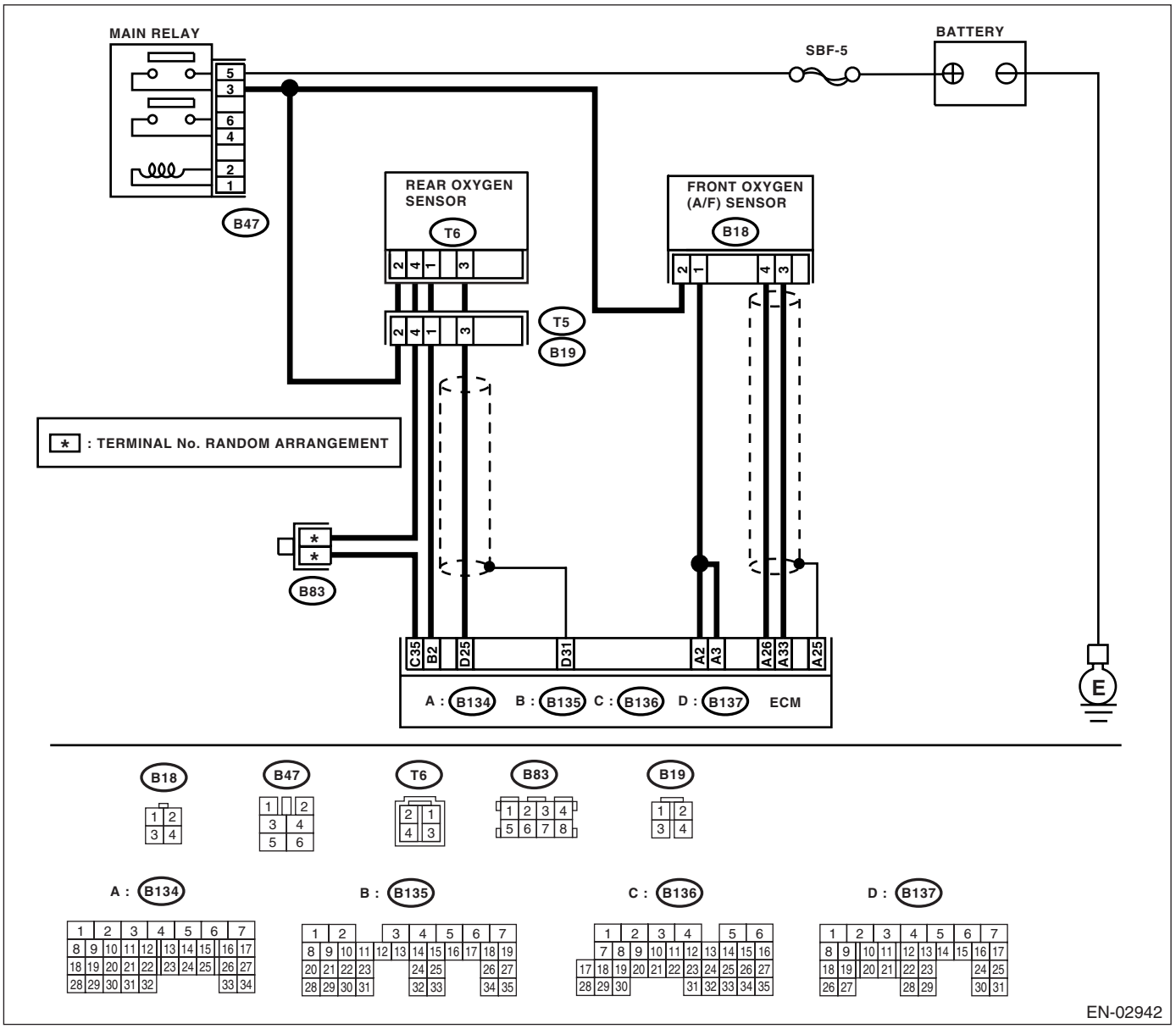

	Step	Check	Yes	No
1	**CHECK ANY OTHER DTC ON DISPLAY.**	Is any other DTC displayed?	Check the appropriate DTC using the "List of Diagnostic Trouble Code (DTC)". <Ref. to EN(H4DOTC)(diag)-71, List of Diagnostic Trouble Code (DTC).> NOTE: In this case, it is not necessary to inspect DTC P0420.	Go to step **2.**
2	**CHECK EXHAUST SYSTEM.** Check for gas leaks or air suction caused by loose or dislocated nuts and bolts, and open hole at exhaust pipes. NOTE: Check the following positions. • Between cylinder head and front exhaust pipe • Between front exhaust pipe and front catalytic converter • Between front catalytic converter and rear catalytic converter • Loose part and improper installation of front oxygen (A/F) sensor or rear oxygen sensor	Is there any fault in exhaust system?	Repair or replace the exhaust system. <Ref. to EX(H4DOTC)-2, General Description.>	Go to step **3.**
3	**CHECK WAVEFORM DATA ON SUBARU SELECT MONITOR (WHILE DRIVING).** 1) Drive the vehicle at a constant speed of 80 — 112 km/h (50 — 70 MPH). 2) Keep the condition of step 1) for 5 minutes, then read the waveform data in a driving condition using Subaru Select Monitor. 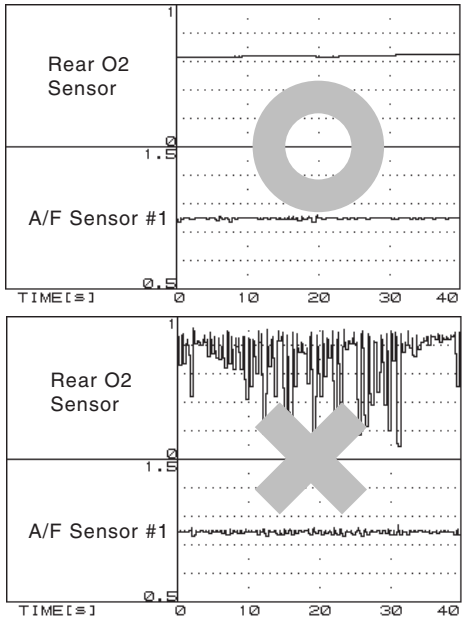	Is normal waveform pattern displayed?	Contact your SOA Service Center. NOTE: The probable cause is considered as the deterioration of multiple parts.	Go to step **4.**

	Step	Check	Yes	No
4	**CHECK WAVEFORM DATA ON SUBARU SELECT MONITOR (WHILE IDLING).** 1) Idle the engine. 2) Under the condition of step 1), read the waveform data using Subaru Select Monitor. 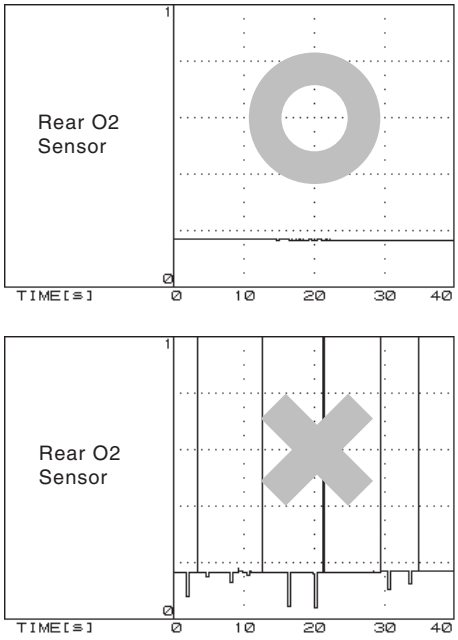 EN-04681	Is normal waveform pattern displayed?	Go to step **10.**	Go to step **5.**
5	**CHECK REAR OXYGEN SENSOR VOLTAGE.** 1) Warm-up the engine until engine coolant temperature is above 70°C (158°F), and keep the engine speed at 3,000 rpm. (Max. 2 minutes) 2) Read the voltage of rear oxygen (A/F) sensor using Subaru Select Monitor. NOTE: • For MT model, depress the clutch pedal. • Subaru Select Monitor For detailed operation procedure, refer to "READ CURRENT DATA FOR ENGINE". <Ref. to EN(H4DOTC)(diag)-28, Subaru Select Monitor.>	Is the voltage more than 490 mV?	Go to step **9.**	Go to step **6.**
6	**CHECK REAR OXYGEN SENSOR CONNECTOR AND COUPLING CONNECTOR.**	Does water enter the connector?	Dry the water thoroughly.	Go to step **7.**
7	**CHECK HARNESS BETWEEN ECM AND REAR OXYGEN SENSOR CONNECTOR.** 1) Turn the ignition switch to OFF. 2) Disconnect the connector from ECM and rear oxygen sensor. 3) Measure the resistance of harness between ECM and rear oxygen sensor connector. ***Connector & terminal*** ***(B137) No. 25 — (T6) No. 3:*** ***(B136) No. 35 — (T6) No. 4:***	Is the resistance more than 3 Ω?	Repair the open circuit of harness between ECM and rear oxygen sensor connector.	Go to step **8.**

	Step	Check	Yes	No
8	**CHECK HARNESS BETWEEN ECM AND REAR OXYGEN SENSOR CONNECTOR.** 1) Turn the ignition switch to ON. 2) Measure the voltage between rear oxygen sensor connector and chassis ground. ***Connector & terminal*** ***(T6) No. 3 (+) — Chassis ground (−):***	Is the voltage 0.2 — 0.5 V?	Go to step **11.**	Repair the harness and connector. NOTE: Repair the following. • Open circuit in harness between rear oxygen sensor and ECM connector • Poor contact in rear oxygen sensor and ECM connector • Poor contact in ECM connector
9	**CHECK REAR OXYGEN SENSOR VOLTAGE.** 1) Warm-up the engine until engine coolant temperature is above 70°C (158°F), and rapidly reduce the engine speed from 3,000 rpm. 2) Read the voltage of rear oxygen (A/F) sensor using Subaru Select Monitor. NOTE: • For MT model, depress the clutch pedal. • Subaru Select Monitor For detailed operation procedure, refer to "READ CURRENT DATA FOR ENGINE". <Ref. to EN(H4DOTC)(diag)-28, Subaru Select Monitor.>	Is the voltage 250 mV or less?	Contact your SOA Service Center. NOTE: The probable cause is considered as the deterioration of multiple parts.	Go to step **6.**
10	**CHECK CATALYTIC CONVERTER.**	Is the catalytic converter damaged?	Replace the catalytic converter. <Ref. to EC(H4DOTC)-3, Front Catalytic Converter.>	Contact your SOA Service Center. NOTE: The probable cause is considered as the deterioration of multiple parts.
11	**CHECK REAR OXYGEN SENSOR SHIELD.** 1) Turn the ignition switch to OFF. 2) Bare the harness sensor shield on the body side of rear oxygen sensor connector. 3) Measure the resistance between sensor shield and chassis ground.	Is resistance less than 1 Ω?	Replace the rear oxygen sensor. <Ref. to FU(H4DOTC)-37, Rear Oxygen Sensor.>	Repair the open circuit of rear oxygen sensor harness.

BA:DTC P0442 EVAPORATIVE EMISSION CONTROL SYSTEM LEAK DETECTED (SMALL LEAK)

DTC DETECTING CONDITION:

- Two consecutive driving cycles with fault
- GENERAL DESCRIPTION <Ref. to GD(H4DOTC)-116, DTC P0442 EVAPORATIVE EMISSION CONTROL SYSTEM LEAK DETECTED (SMALL LEAK), Diagnostic Trouble Code (DTC) Detecting Criteria.>

TROUBLE SYMPTOM:

- Fuel odor
- There is a hole of more than 1.0 mm (0.04 in) dia. in evaporation system or fuel tank.

CAUTION:
After repair or replacement of faulty parts, conduct Clear Memory Mode <Ref. to EN(H4DOTC)(diag)-45, OPERATION, Clear Memory Mode.> and Inspection Mode <Ref. to EN(H4DOTC)(diag)-36, PROCEDURE, Inspection Mode.>.

WIRING DIAGRAM:

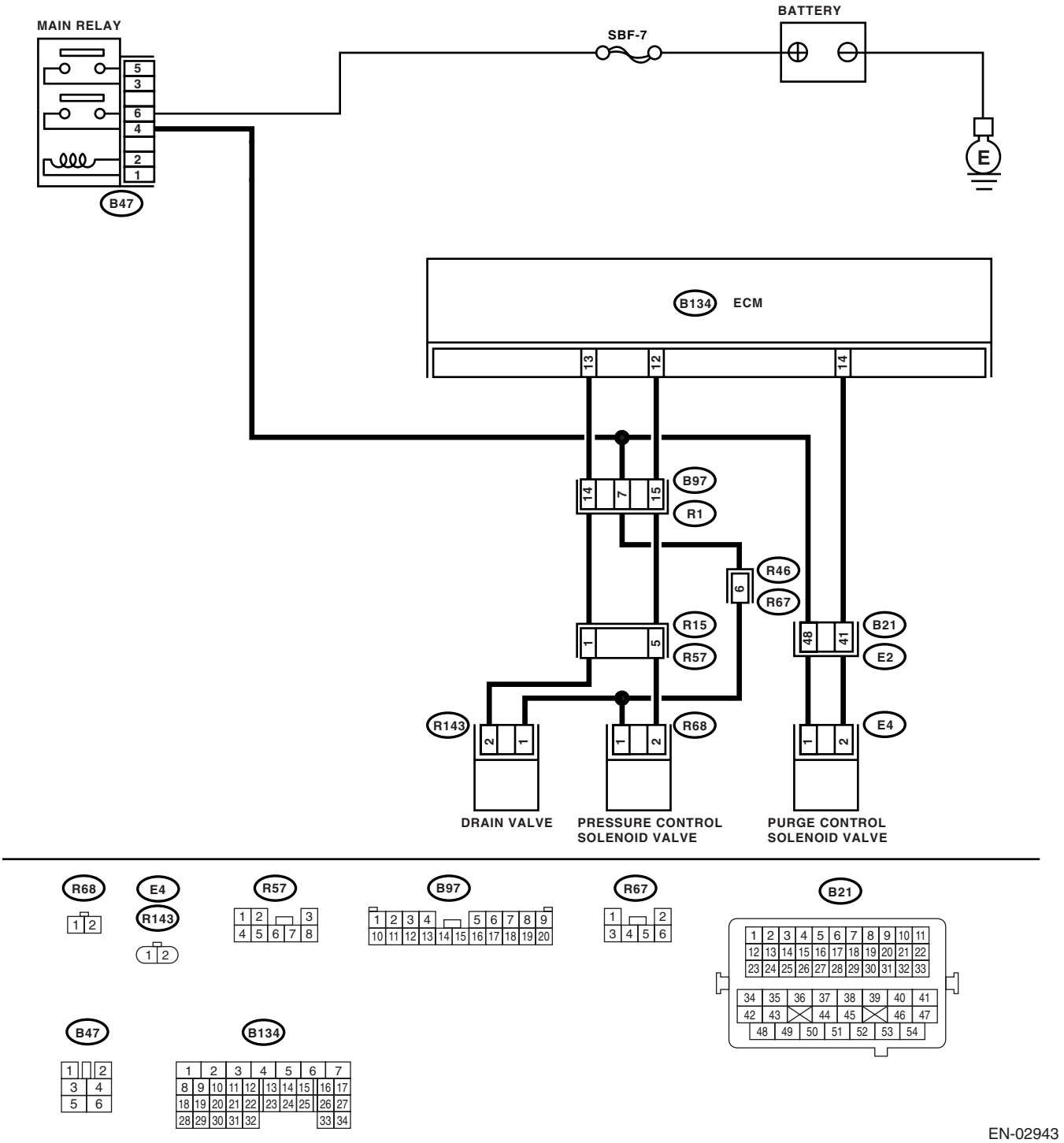

EN-02943

	Step	Check	Yes	No
1	**CHECK FOR ANY OTHER DTC ON DISPLAY.**	Is any other DTC displayed?	Inspect the relevant DTC using "List of Diagnostic Trouble Code (DTC)". <Ref. to EN(H4DOTC)(diag)-71, List of Diagnostic Trouble Code (DTC).>	Go to step **2.**
2	**CHECK FUEL FILLER CAP.** 1) Turn the ignition switch to OFF. 2) Check the fuel filler cap. NOTE: The DTC is stored in memory if fuel filler cap is or was loose or if the cap chain was caught while tightening.	Is the fuel filler cap tightened securely?	Go to step **3.**	Tighten fuel filler cap securely.
3	**CHECK FUEL FILLER CAP.**	Is the fuel filler cap SUBARU genuine?	Go to step **4.**	Replace with a SUBARU genuine fuel filler cap.
4	**CHECK FUEL FILLER PIPE PACKING.**	Is there any damage to the seal between fuel filler cap and fuel filler pipe?	Repair or replace the fuel filler cap and fuel filler pipe. <Ref. to FU(H4DOTC)-51, Fuel Filler Pipe.>	Go to step **5.**
5	**CHECK DRAIN VALVE.** 1) Connect the test mode connector. 2) Turn the ignition switch to ON. 3) Operate the drain valve. NOTE: Drain valve operation can also be executed using Subaru Select Monitor. For the procedure, refer to "Compulsory Valve Operation Check Mode". <Ref. to EN(H4DOTC)(diag)-46, Compulsory Valve Operation Check Mode.>	Does the drain valve operate?	Go to step **6.**	Replace the drain valve. <Ref. to EC(H4DOTC)-16, Drain Valve.>
6	**CHECK PURGE CONTROL SOLENOID VALVE.** Operate the purge control solenoid valve. NOTE: Purge control solenoid valve operation can also be executed using Subaru Select Monitor. For the procedure, refer to "Compulsory Valve Operation Check Mode". <Ref. to EN(H4DOTC)(diag)-46, Compulsory Valve Operation Check Mode.>	Does the purge control solenoid valve operate?	Go to step **7.**	Replace the purge control solenoid valve. <Ref. to EC(H4DOTC)-7, Purge Control Solenoid Valve.>
7	**CHECK PRESSURE CONTROL SOLENOID VALVE.** Operate the pressure control solenoid valve. NOTE: Pressure control solenoid valve operation can also be executed using Subaru Select Monitor. For the procedure, refer to "Compulsory Valve Operation Check Mode". <Ref. to EN(H4DOTC)(diag)-46, Compulsory Valve Operation Check Mode.>	Does the pressure control solenoid valve operate?	Go to step **8.**	Replace the pressure control solenoid valve. <Ref. to EC(H4DOTC)-13, Pressure Control Solenoid Valve.>

	Step	Check	Yes	No
8	**CHECK EVAPORATIVE EMISSION CONTROL SYSTEM LINE.** Turn the ignition switch to OFF.	Is there a hole of more than 1.0 mm (0.04 in) dia. on evaporation line?	Repair or replace the evaporation line. <Ref. to FU(H4DOTC)-60, Fuel Delivery, Return and Evaporation Lines.>	Go to step **9.**
9	**CHECK CANISTER.**	Is the canister damaged or is there a hole of more than 1.0 mm (0.04 in) dia. in it?	Repair or replace the canister. <Ref. to EC(H4DOTC)-6, Canister.>	Go to step **10.**
10	**CHECK FUEL TANK.** Remove the fuel tank. <Ref. to FU(H4DOTC)-45, Fuel Tank.>	Is the fuel tank damaged or is there a hole of more than 1.0 mm (0.04 in) dia. in it?	Repair or replace the fuel tank. <Ref. to FU(H4DOTC)-45, Fuel Tank.>	Go to step **11.**
11	**CHECK ANY OTHER MECHANICAL TROUBLE IN EVAPORATIVE EMISSION CONTROL SYSTEM.**	Are there holes of more than 1.0 mm (0.04 in) dia., cracks, clogging, or disconnections, bend, misconnection of hoses or pipes in evaporative emission control system?	Repair or replace the hoses or pipes.	Contact with SOA Service Center.

BB:DTC P0447 EVAPORATIVE EMISSION CONTROL SYSTEM VENT CONTROL CIRCUIT OPEN

DTC DETECTING CONDITION:

- Detect as soon as the malfunction occurs.
- GENERAL DESCRIPTION <Ref. to GD(H4DOTC)-131, DTC P0447 EVAPORATIVE EMISSION CONTROL SYSTEM VENT CONTROL CIRCUIT OPEN, Diagnostic Trouble Code (DTC) Detecting Criteria.>

CAUTION:

After repair or replacement of faulty parts, conduct Clear Memory Mode <Ref. to EN(H4DOTC)(diag)-45, OPERATION, Clear Memory Mode.> and Inspection Mode <Ref. to EN(H4DOTC)(diag)-36, PROCEDURE, Inspection Mode.>.

WIRING DIAGRAM:

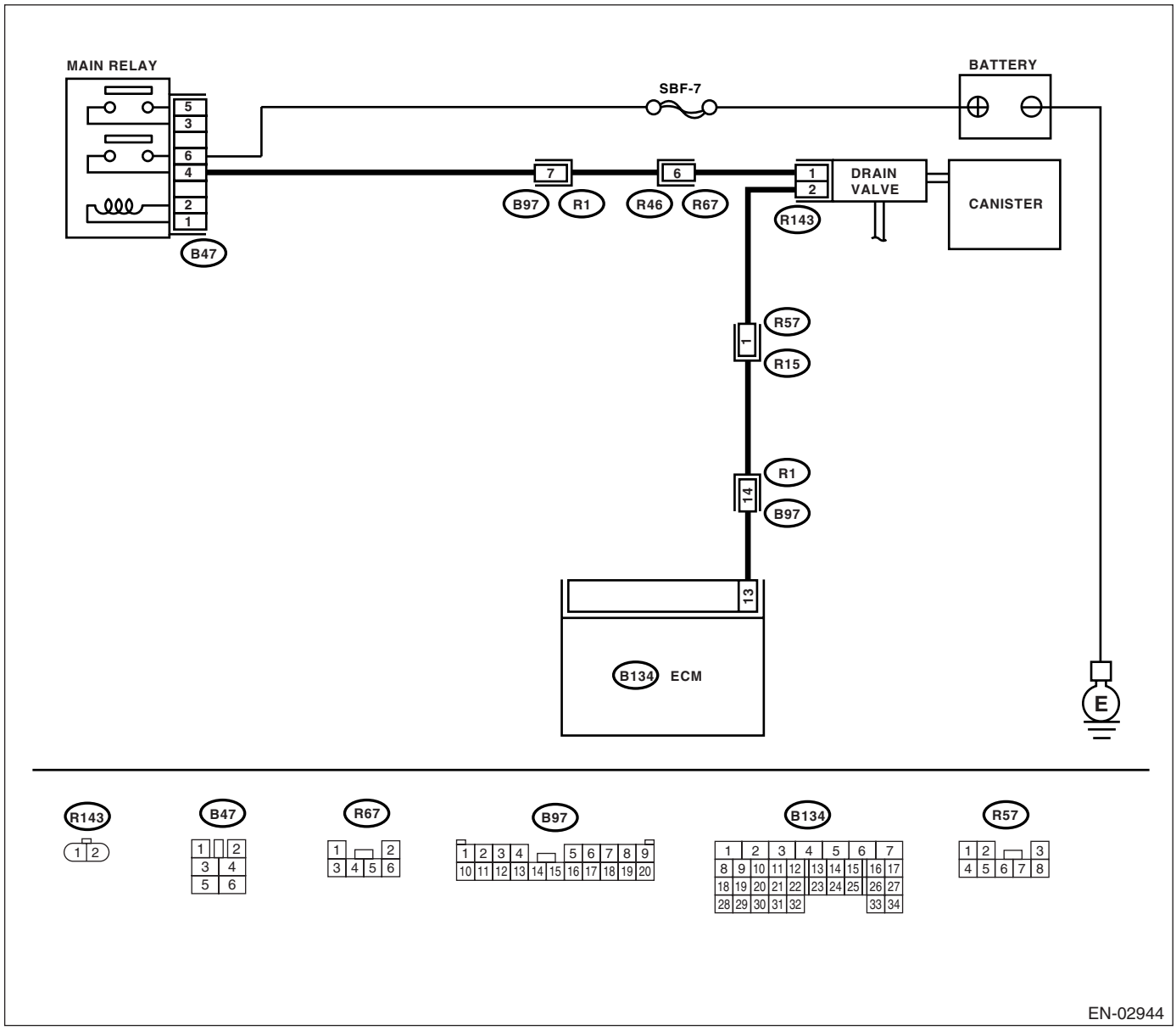

EN-02944

	Step	Check	Yes	No
1	**CHECK OUTPUT SIGNAL FROM ECM.** 1) Turn the ignition switch to ON. 2) Measure the voltage between ECM and chassis ground. ***Connector & terminal*** ***(B134) No. 13 (+) — Chassis ground (−):***	Is the voltage more than 10 V?	Go to step **2.**	Go to step **3.**
2	**CHECK POOR CONTACT.** Check poor contact in ECM connector.	Is there poor contact in ECM connector?	Repair poor contact in ECM connector.	The malfunction indicator light may light up, however, the circuit is returned to the normal status at the moment. (However, the possibility of poor contact still remains.) NOTE: In this case, repair the following: • Poor contact in drain valve connector • Poor contact in ECM connector • Poor contact in coupling connector
3	**CHECK HARNESS BETWEEN DRAIN VALVE AND ECM CONNECTOR.** 1) Turn the ignition switch to OFF. 2) Disconnect the connectors from drain valve and ECM. 3) Measure the resistance of harness between drain valve connector and chassis ground. ***Connector & terminal*** ***(R143) No. 2 — Chassis ground:***	Is the resistance more than 1 MΩ?	Go to step **4.**	Repair short circuit to ground in harness between ECM and drain valve connector.
4	**CHECK HARNESS BETWEEN DRAIN VALVE AND ECM CONNECTOR.** Measure the resistance of harness between ECM and drain valve connector. ***Connector & terminal*** ***(B134) No. 13 — (R143) No. 2:***	Is the resistance less than 1 Ω?	Go to step **5.**	Repair harness and connector. NOTE: In this case, repair the following: • Open circuit in harness between ECM and drain valve connector • Poor contact in coupling connector
5	**CHECK DRAIN VALVE.** Measure the resistance between drain valve terminals. ***Terminals*** ***No. 1 — No. 2:***	Is the resistance 10 — 100 Ω?	Go to step **6.**	Replace the drain valve. <Ref. to EC(H4DOTC)-16, Drain Valve.>

	Step	Check	Yes	No
6	**CHECK POWER SUPPLY TO DRAIN VALVE.** 1) Turn the ignition switch to ON. 2) Measure the voltage between drain valve and chassis ground. ***Connector & terminal*** ***(R143) No. 1 (+) — Chassis ground (−):***	Is the voltage more than 10 V?	Go to step **7.**	Repair harness and connector. NOTE: In this case, repair the following: • Open circuit in harness between main relay and drain valve • Poor contact in coupling connector • Poor contact in main relay connector
7	**CHECK POOR CONTACT.** Check poor contact in drain valve connector.	Is there poor contact in drain valve connector?	Repair poor contact in drain valve connector.	Contact with SOA Service Center.

BC:DTC P0448 EVAPORATIVE EMISSION CONTROL SYSTEM VENT CONTROL CIRCUIT SHORTED

DTC DETECTING CONDITION:

- Detect as soon as the malfunction occurs.
- GENERAL DESCRIPTION <Ref. to GD(H4DOTC)-133, DTC P0448 EVAPORATIVE EMISSION CONTROL SYSTEM VENT CONTROL CIRCUIT SHORTED, Diagnostic Trouble Code (DTC) Detecting Criteria.>

CAUTION:
After repair or replacement of faulty parts, conduct Clear Memory Mode <Ref. to EN(H4DOTC)(diag)-45, OPERATION, Clear Memory Mode.> and Inspection Mode <Ref. to EN(H4DOTC)(diag)-36, PROCEDURE, Inspection Mode.>.

WIRING DIAGRAM:

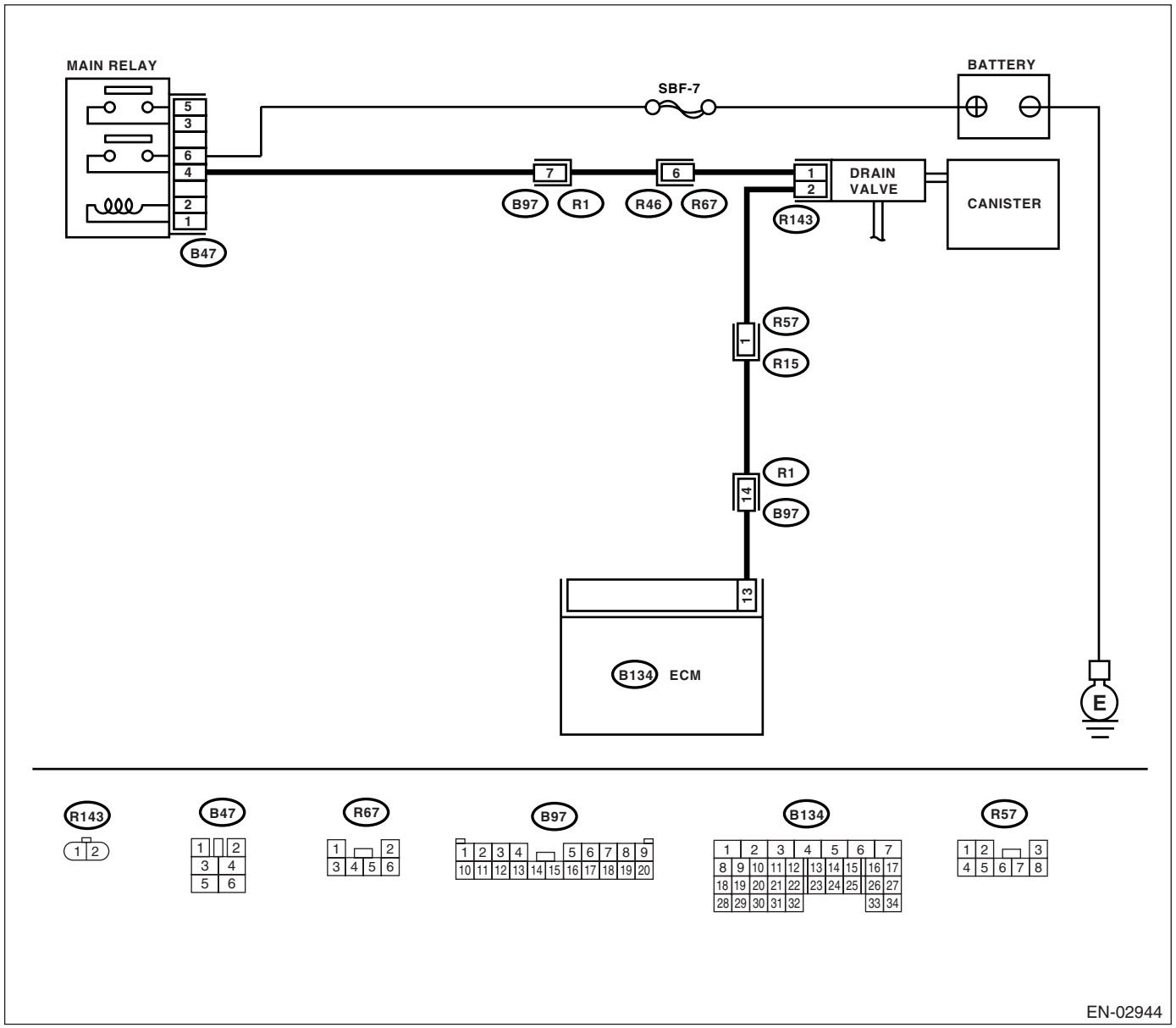

	Step	Check	Yes	No
1	**CHECK INPUT SIGNAL FOR ECM.** 1) Turn the ignition switch to OFF. 2) Connect the test mode connector at the lower portion of instrument panel (on the driver's side). 3) Turn the ignition switch to ON. 4) While operating the drain valve, measure voltage between ECM and chassis ground. NOTE: Drain valve operation can be executed using Subaru Select Monitor. For the procedure, refer to "Compulsory Valve Operation Check Mode". <Ref. to EN(H4DOTC)(diag)-46, Compulsory Valve Operation Check Mode.> ***Connector & terminal*** ***(B134) No. 13 (+) — Chassis ground (–):***	Is the voltage 0 — 10 V?	Go to step **2.**	The malfunction indicator light may light up, however, the circuit is returned to the normal status at the moment. In this case, repair poor contact in ECM connector.
2	**CHECK INPUT SIGNAL FOR ECM.** 1) Turn the ignition switch to ON. 2) Measure the voltage between ECM and chassis ground. ***Connector & terminal*** ***(B134) No. 13 (+) — Chassis ground (–):***	Is the voltage more than 10 V?	Go to step **4.**	Go to step **3.**
3	**CHECK POOR CONTACT.** Check poor contact in ECM connector.	Is there poor contact in ECM connector?	Repair poor contact in ECM connector.	Replace the ECM. <Ref. to FU(H4DOTC)-39, Engine Control Module (ECM).>
4	**CHECK HARNESS BETWEEN DRAIN VALVE AND ECM CONNECTOR.** 1) Turn the ignition switch to OFF. 2) Disconnect the connector from drain valve. 3) Turn the ignition switch to ON. 4) Measure the voltage between ECM and chassis ground. ***Connector & terminal*** ***(B134) No. 13 (+) — Chassis ground (–):***	Is the voltage more than 10 V?	Repair short circuit to battery in harness between ECM and drain valve connector. After repair, replace the ECM. <Ref. to FU(H4DOTC)-39, Engine Control Module (ECM).>	Go to step **5.**
5	**CHECK DRAIN VALVE.** 1) Turn the ignition switch to OFF. 2) Measure the resistance between drain valve terminals. ***Terminals*** ***No. 1 — No. 2:***	Is the resistance less than 1 Ω?	Replace the drain valve <Ref. to EC(H4DOTC)-16, Drain Valve.> and ECM <Ref. to FU(H4DOTC)-39, Engine Control Module (ECM).>.	Go to step **6.**
6	**CHECK POOR CONTACT.** Check poor contact in ECM connector.	Is there poor contact in ECM connector?	Repair poor contact in ECM connector.	Replace the ECM. <Ref. to FU(H4DOTC)-39, Engine Control Module (ECM).>

BD:DTC P0451 EVAPORATIVE EMISSION CONTROL SYSTEM PRESSURE SENSOR

DTC DETECTING CONDITION:

- Two consecutive driving cycles with fault
- GENERAL DESCRIPTION <Ref. to GD(H4DOTC)-135, DTC P0451 EVAPORATIVE EMISSION CONTROL SYSTEM PRESSURE SENSOR, Diagnostic Trouble Code (DTC) Detecting Criteria.>

CAUTION:

After repair or replacement of faulty parts, conduct Clear Memory Mode <Ref. to EN(H4DOTC)(diag)-45, OPERATION, Clear Memory Mode.> and Inspection Mode <Ref. to EN(H4DOTC)(diag)-36, PROCEDURE, Inspection Mode.>.

WIRING DIAGRAM:

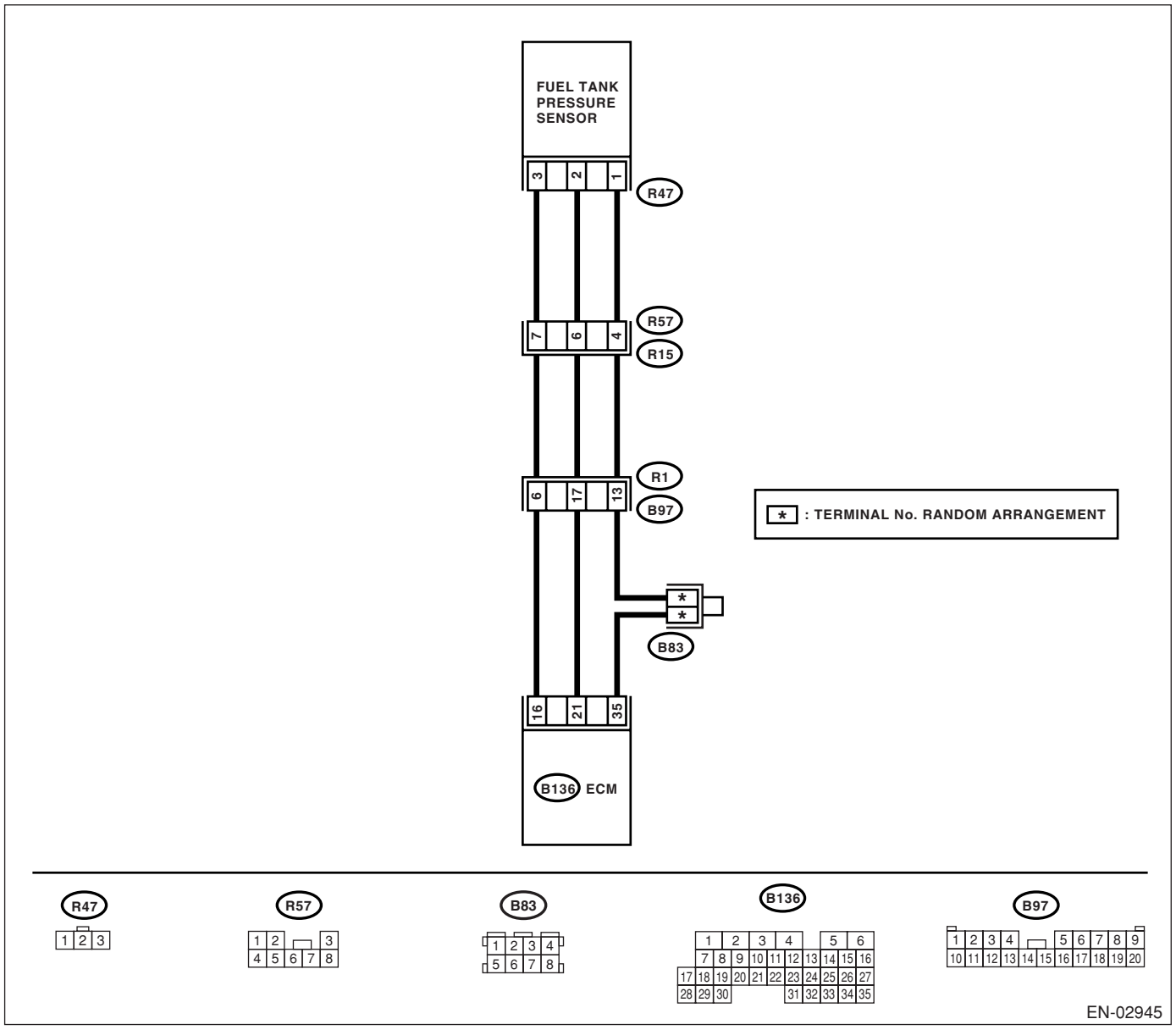

	Step	Check	Yes	No
1	**CHECK FOR ANY OTHER DTC ON DISPLAY.**	Is any other DTC displayed?	Inspect the relevant DTC using "List of Diagnostic Trouble Code (DTC)". <Ref. to EN(H4DOTC)(diag)-71, List of Diagnostic Trouble Code (DTC).>	Go to step **2.**
2	**CHECK FUEL FILLER CAP.** 1) Turn the ignition switch to OFF. 2) Open the fuel flap.	Is the fuel filler cap tightened securely?	Go to step **3.**	Tighten fuel filler cap securely.
3	**CHECK PRESSURE/VACUUM LINE.** NOTE: Check the following items. • Disconnection, leakage and clogging of the vacuum hoses and pipes between fuel tank pressure sensor and fuel tank • Disconnection, leakage and clogging of air ventilation hoses and pipes between fuel filler pipe and fuel tank	Is there any fault in pressure/vacuum line?	Repair or replace the hoses and pipes.	Replace the fuel tank pressure sensor. <Ref. to EC(H4DOTC)-11, Fuel Tank Pressure Sensor.>

BE:DTC P0452 EVAPORATIVE EMISSION CONTROL SYSTEM PRESSURE SENSOR LOW INPUT

DTC DETECTING CONDITION:

- Detect as soon as the malfunction occurs.
- GENERAL DESCRIPTION <Ref. to GD(H4DOTC)-137, DTC P0452 EVAPORATIVE EMISSION CONTROL SYSTEM PRESSURE SENSOR LOW INPUT, Diagnostic Trouble Code (DTC) Detecting Criteria.>

CAUTION:

After repair or replacement of faulty parts, conduct Clear Memory Mode <Ref. to EN(H4DOTC)(diag)-45, OPERATION, Clear Memory Mode.> and Inspection Mode <Ref. to EN(H4DOTC)(diag)-36, PROCEDURE, Inspection Mode.>.

WIRING DIAGRAM:

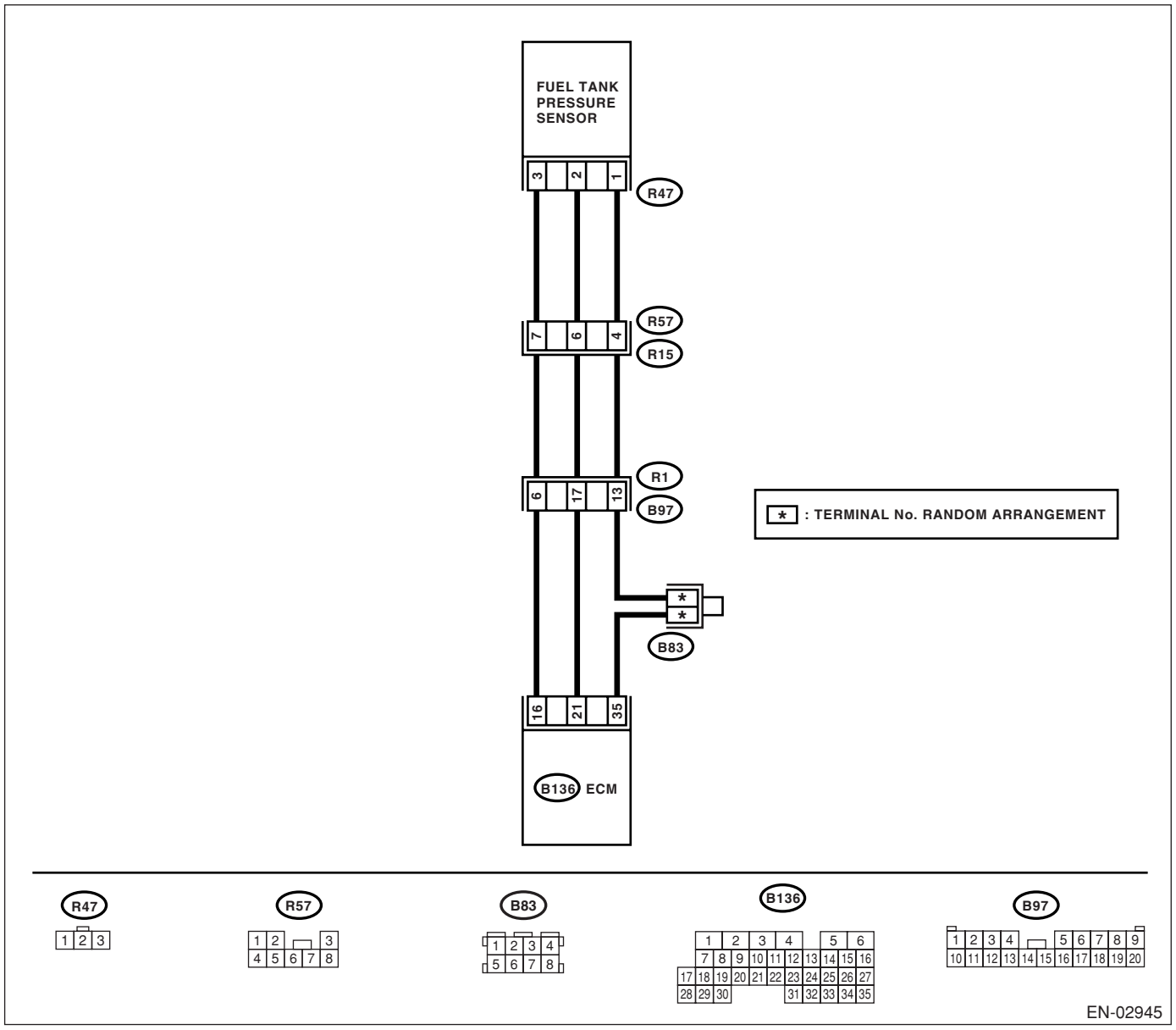

	Step	Check	Yes	No
1	**CHECK CURRENT DATA.** 1) Turn the ignition switch to OFF. 2) Remove the fuel filler cap. 3) Install the fuel filler cap. 4) Turn the ignition switch to ON. 5) Read the data of fuel tank pressure sensor signal using Subaru Select Monitor. NOTE: • Subaru Select Monitor For detailed operation procedure, refer to "READ CURRENT DATA FOR ENGINE". <Ref. to EN(H4DOTC)(diag)-28, Subaru Select Monitor.>	Is the measured valve less than –2.8 kPa (–21.0 mmHg, –0.827 inHg)?	Go to step **2.**	The malfunction indicator light may light up, however, the circuit is returned to the normal status at the moment.
2	**CHECK POWER SUPPLY TO FUEL TANK PRESSURE SENSOR.** Measure the voltage between ECM connector and chassis ground. ***Connector & terminal*** ***(B136) No. 16 (+) — Chassis ground (–):***	Is the voltage more than 4.5 V?	Go to step **4.**	Go to step **3.**
3	**CHECK POWER SUPPLY TO FUEL TANK PRESSURE SENSOR.** Measure the voltage between ECM connector and chassis ground. ***Connector & terminal*** ***(B136) No. 16 (+) — Chassis ground (–):***	Is the voltage more than 4.5 V?	Repair poor contact in ECM connector.	Contact with SOA Service Center.
4	**CHECK INPUT SIGNAL FOR ECM.** Measure the voltage between ECM and chassis ground. ***Connector & terminal*** ***(B136) No. 21 (+) — Chassis ground (–):***	Is the voltage less than 0.2 V?	Go to step **6.**	Go to step **5.**
5	**CHECK INPUT SIGNAL FOR ECM. (USING SUBARU SELECT MONITOR.)** Read the data of fuel tank pressure sensor signal using Subaru Select Monitor. NOTE: • Subaru Select Monitor For detailed operation procedure, refer to "READ CURRENT DATA FOR ENGINE". <Ref. to EN(H4DOTC)(diag)-28, Subaru Select Monitor.>	Does the measured value exceed the specified value by shaking the ECM harness and connector?	Repair poor contact in ECM connector.	Go to step **6.**
6	**CHECK HARNESS BETWEEN ECM AND COUPLING CONNECTOR IN REAR WIRING HARNESS.** 1) Turn the ignition switch to OFF. 2) Remove the rear seat cushion. 3) Separate rear wiring harness and fuel tank cord. 4) Turn the ignition switch to ON. 5) Measure the voltage between rear wiring harness connector and chassis ground. ***Connector & terminal*** ***(R15) No. 7 (+) — Chassis ground (–):***	Is the voltage more than 4.5 V?	Go to step **7.**	Repair harness and connector. NOTE: In this case, repair the following: • Open circuit in harness between ECM and rear wiring harness connector • Poor contact in coupling connector

	Step	Check	Yes	No
7	**CHECK HARNESS BETWEEN ECM AND COUPLING CONNECTOR IN REAR WIRING HARNESS.** 1) Turn the ignition switch to OFF. 2) Disconnect the connector from ECM. 3) Measure the resistance of harness between ECM and rear wiring harness connector. ***Connector & terminal*** ***(B136) No. 35 — (R15) No. 4:***	Is the resistance less than 1 Ω?	Go to step **8.**	Repair harness and connector. NOTE: In this case, repair the following: • Open circuit in harness between ECM and rear wiring harness connector • Poor contact in coupling connector • Poor contact in joint connector
8	**CHECK HARNESS BETWEEN ECM AND COUPLING CONNECTOR IN REAR WIRING HARNESS.** Measure the resistance of harness between rear wiring harness connector and chassis ground. ***Connector & terminal*** ***(R15) No. 4 — Chassis ground:***	Is the resistance more than 1 MΩ?	Go to step **9.**	Repair short circuit to ground in harness between ECM and rear wiring harness connector.
9	**CHECK FUEL TANK CORD.** 1) Disconnect the connector from fuel tank pressure sensor. 2) Measure the resistance of fuel tank cord. ***Connector & terminal*** ***(R57) No. 7 — (R47) No. 3:***	Is the resistance less than 1 Ω?	Go to step **10.**	Repair open circuit in fuel tank cord.
10	**CHECK FUEL TANK CORD.** Measure the resistance of fuel tank cord. ***Connector & terminal*** ***(R57) No. 4 — (R47) No. 1:***	Is the resistance less than 1 Ω?	Go to step **11.**	Repair open circuit in fuel tank cord.
11	**CHECK FUEL TANK CORD.** Measure the resistance of harness between fuel tank pressure sensor connector and engine ground. ***Connector & terminal*** ***(R47) No. 2 — Chassis ground:***	Is the resistance more than 1 MΩ?	Go to step **12.**	Repair short circuit to ground in fuel tank cord.
12	**CHECK POOR CONTACT.** Check poor contact in fuel tank pressure sensor connector.	Is there poor contact in fuel tank pressure sensor connector?	Repair poor contact in fuel tank pressure sensor connector.	Replace the fuel tank pressure sensor. <Ref. to EC(H4DOTC)-11, Fuel Tank Pressure Sensor.>

BF:DTC P0453 EVAPORATIVE EMISSION CONTROL SYSTEM PRESSURE SENSOR HIGH INPUT

DTC DETECTING CONDITION:

- Detect as soon as the malfunction occurs.
- GENERAL DESCRIPTION <Ref. to GD(H4DOTC)-139, DTC P0453 EVAPORATIVE EMISSION CONTROL SYSTEM PRESSURE SENSOR HIGH INPUT, Diagnostic Trouble Code (DTC) Detecting Criteria.>

CAUTION:

After repair or replacement of faulty parts, conduct Clear Memory Mode <Ref. to EN(H4DOTC)(diag)-45, OPERATION, Clear Memory Mode.> and Inspection Mode <Ref. to EN(H4DOTC)(diag)-36, PROCEDURE, Inspection Mode.>.

WIRING DIAGRAM:

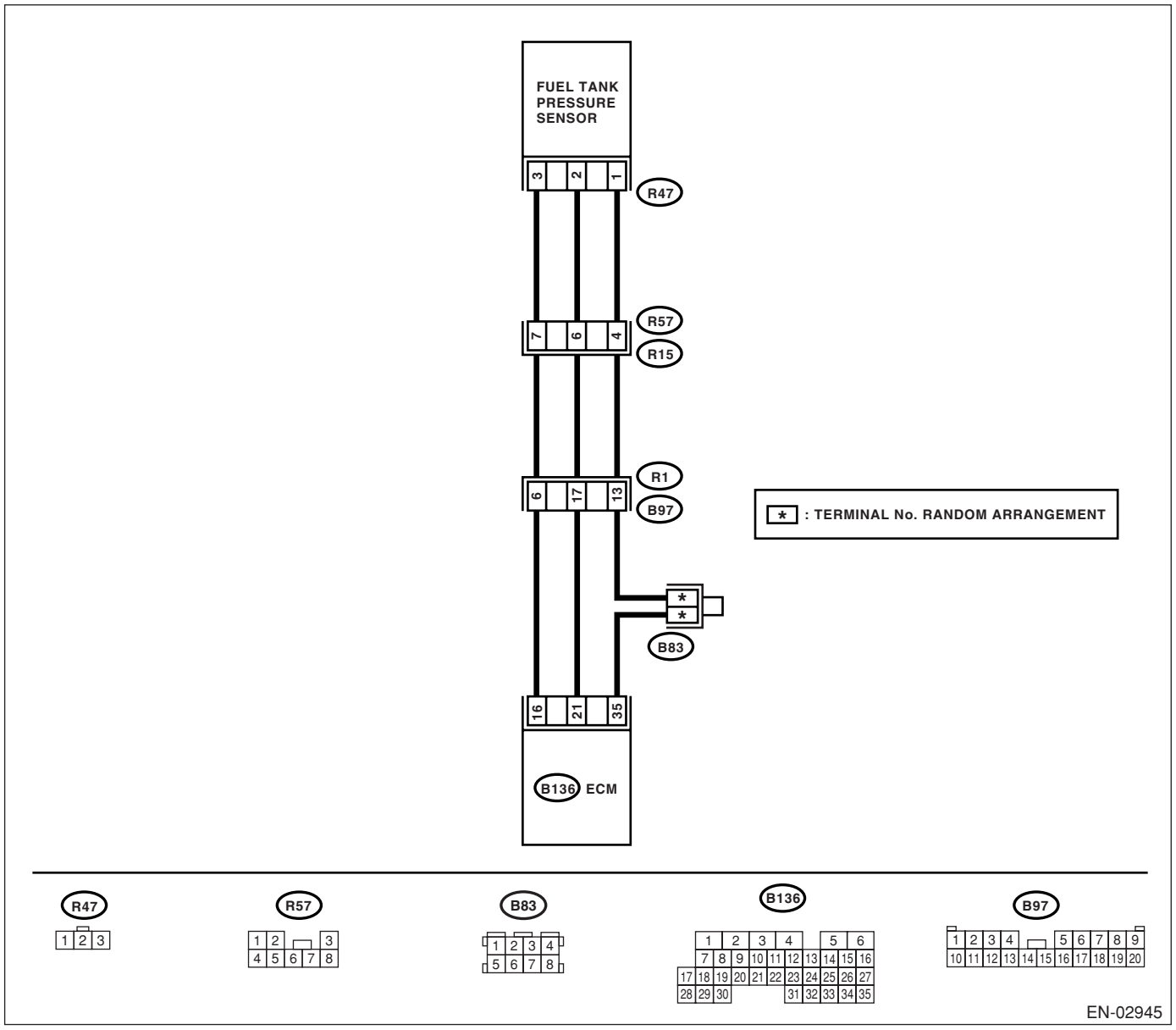

	Step	Check	Yes	No
1	**CHECK CURRENT DATA.** 1) Turn the ignition switch to OFF. 2) Remove the fuel filler cap. 3) Install the fuel filler cap. 4) Turn the ignition switch to ON. 5) Read the data of fuel tank pressure sensor signal using Subaru Select Monitor. NOTE: • Subaru Select Monitor For detailed operation procedure, refer to "READ CURRENT DATA FOR ENGINE". <Ref. to EN(H4DOTC)(diag)-28, Subaru Select Monitor.>	Is the measured value more than 2.8 kPa (21.0 mmHg, 0.827 inHg)	Go to step **11.**	Go to step **2.**
2	**CHECK POWER SUPPLY TO FUEL TANK PRESSURE SENSOR.** Measure the voltage between ECM connector and chassis ground. ***Connector & terminal*** ***(B136) No. 16 (+) — Chassis ground (−):***	Is the voltage more than 4.5 V?	Go to step **4.**	Go to step **3.**
3	**CHECK POWER SUPPLY TO FUEL TANK PRESSURE SENSOR.** Measure the voltage between ECM connector and chassis ground. ***Connector & terminal*** ***(B136) No. 16 (+) — Chassis ground (−):***	Does the measured value exceed the specified value by shaking the ECM harness and connector?	Repair poor contact in ECM connector.	Replace the ECM. <Ref. to FU(H4DOTC)-39, Engine Control Module (ECM).>
4	**CHECK INPUT SIGNAL FOR ECM.** Measure the voltage between ECM and chassis ground. ***Connector & terminal*** ***(B136) No. 21 (+) — Chassis ground (−):***	Is the voltage less than 0.2 V?	Go to step **6.**	Go to step **5.**
5	**CHECK INPUT SIGNAL FOR ECM. (USING SUBARU SELECT MONITOR.)** Read the data of fuel tank pressure sensor signal using Subaru Select Monitor. NOTE: • Subaru Select Monitor For detailed operation procedure, refer to "READ CURRENT DATA FOR ENGINE". <Ref. to EN(H4DOTC)(diag)-28, Subaru Select Monitor.>	Does the measured value exceed −2.8 kPa (−21.0 mmHg, −0.827 inHg) by shaking the ECM harness and connector?	Repair poor contact in ECM connector.	Go to step **6.**
6	**CHECK HARNESS BETWEEN ECM AND COUPLING CONNECTOR IN REAR WIRING HARNESS.** 1) Turn the ignition switch to OFF. 2) Remove the rear seat cushion. 3) Separate rear wiring harness and fuel tank cord. 4) Turn the ignition switch to ON. 5) Measure the voltage between rear wiring harness connector and chassis ground. ***Connector & terminal*** ***(R15) No. 7 (+) — Chassis ground (−):***	Is the voltage more than 4.5 V?	Go to step **7.**	Repair harness and connector. NOTE: In this case, repair the following: • Open circuit in harness between ECM and rear wiring harness connector • Poor contact in coupling connector

	Step	Check	Yes	No
7	**CHECK HARNESS BETWEEN ECM AND COUPLING CONNECTOR IN REAR WIRING HARNESS.** 1) Turn the ignition switch to OFF. 2) Disconnect the connector from ECM. 3) Measure the resistance of harness between ECM and rear wiring harness connector. ***Connector & terminal*** ***(B136) No. 21 — (R15) No. 6:*** ***(B136) No. 35 — (R15) No. 4:***	Is the resistance less than 1 Ω?	Go to step **8.**	Repair harness and connector. NOTE: In this case, repair the following: • Open circuit in harness between ECM and rear wiring harness connector • Poor contact in coupling connector
8	**CHECK FUEL TANK CORD.** 1) Disconnect the connector from fuel tank pressure sensor. 2) Measure the resistance of fuel tank cord. ***Connector & terminal*** ***(R57) No. 6 — (R47) No. 2:***	Is the resistance less than 1 Ω?	Go to step **9.**	Repair open circuit in fuel tank cord.
9	**CHECK FUEL TANK CORD.** Measure the resistance of fuel tank cord. ***Connector & terminal*** ***(R57) No. 4 — (R47) No. 1:***	Is the resistance less than 1 Ω?	Go to step **10.**	Repair open circuit in fuel tank cord.
10	**CHECK POOR CONTACT.** Check poor contact in fuel tank pressure sensor connector.	Is there poor contact in fuel tank pressure sensor connector?	Repair poor contact in fuel tank pressure sensor connector.	Replace the fuel tank pressure sensor. <Ref. to EC(H4DOTC)-11, Fuel Tank Pressure Sensor.>
11	**CHECK HARNESS BETWEEN ECM AND FUEL TANK PRESSURE SENSOR CONNECTOR.** 1) Turn the ignition switch to OFF. 2) Disconnect the connector from fuel tank pressure sensor. 3) Turn the ignition switch to ON. 4) Read the data of fuel tank pressure sensor signal using Subaru Select Monitor. NOTE: • Subaru Select Monitor For detailed operation procedure, refer to “READ CURRENT DATA FOR ENGINE”. <Ref. to EN(H4DOTC)(diag)-28, Subaru Select Monitor.>	Is the measured value more than 2.8 kPa (21.0 mmHg, 0.827 inHg)?	Repair short circuit to battery in harness between ECM and fuel tank pressure sensor connector.	Replace the fuel tank pressure sensor. <Ref. to EC(H4DOTC)-11, Fuel Tank Pressure Sensor.>

BG:DTC P0456 EVAPORATIVE EMISSION CONTROL SYSTEM LEAK DETECTED (VERY SMALL LEAK)

DTC DETECTING CONDITION:

- Two consecutive driving cycles with fault
- GENERAL DESCRIPTION <Ref. to GD(H4DOTC)-140, DTC P0456 EVAPORATIVE EMISSION CONTROL SYSTEM LEAK DETECTED (VERY SMALL LEAK), Diagnostic Trouble Code (DTC) Detecting Criteria.>

TROUBLE SYMPTOM:

- Fuel odor
- There is a hole of more than 0.5 mm (0.020 in) dia. in evaporation system or fuel tank.

CAUTION:
After repair or replacement of faulty parts, conduct Clear Memory Mode <Ref. to EN(H4DOTC)(diag)-45, OPERATION, Clear Memory Mode.> and Inspection Mode <Ref. to EN(H4DOTC)(diag)-36, PROCEDURE, Inspection Mode.>.

WIRING DIAGRAM:

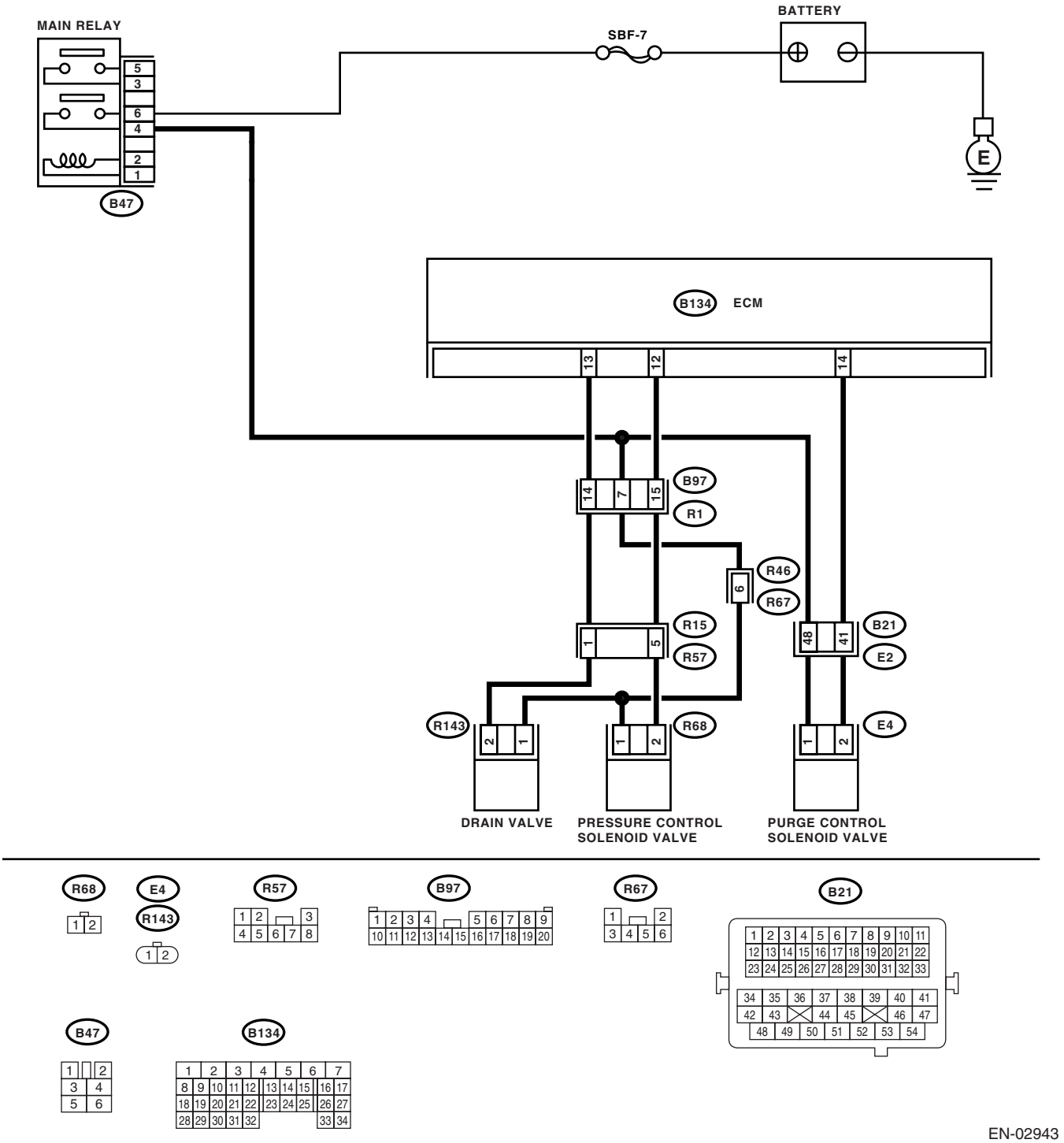

EN-02943

	Step	Check	Yes	No
1	**CHECK FOR ANY OTHER DTC ON DISPLAY.**	Is any other DTC displayed?	Inspect the relevant DTC using "List of Diagnostic Trouble Code (DTC)". <Ref. to EN(H4DOTC)(diag)-71, List of Diagnostic Trouble Code (DTC).>	Go to step **2.**
2	**CHECK FUEL FILLER CAP.** 1) Turn the ignition switch to OFF. 2) Check the fuel filler cap. NOTE: The DTC is stored in memory if fuel filler cap is or was loose or if the cap chain was caught while tightening.	Is the fuel filler cap tightened securely?	Go to step **3.**	Tighten fuel filler cap securely.
3	**CHECK FUEL FILLER CAP.**	Is the fuel filler cap SUBARU genuine?	Go to step **4.**	Replace with a SUBARU genuine fuel filler cap.
4	**CHECK FUEL FILLER PIPE PACKING.**	Is there any damage to the seal between fuel filler cap and fuel filler pipe?	Repair or replace the fuel filler cap and fuel filler pipe. <Ref. to FU(H4DOTC)-51, Fuel Filler Pipe.>	Go to step **5.**
5	**CHECK DRAIN VALVE.** 1) Connect the test mode connector. 2) Turn the ignition switch to ON. 3) Operate the drain valve. NOTE: Drain valve operation can also be executed using Subaru Select Monitor. For the procedure, refer to "Compulsory Valve Operation Check Mode". <Ref. to EN(H4DOTC)(diag)-46, Compulsory Valve Operation Check Mode.>	Does the drain valve operate?	Go to step **6.**	Replace the drain valve. <Ref. to EC(H4DOTC)-16, Drain Valve.>
6	**CHECK PURGE CONTROL SOLENOID VALVE.** Operate the purge control solenoid valve. NOTE: Purge control solenoid valve operation can also be executed using Subaru Select Monitor. For the procedure, refer to "Compulsory Valve Operation Check Mode". <Ref. to EN(H4DOTC)(diag)-46, Compulsory Valve Operation Check Mode.>	Does the purge control solenoid valve operate?	Go to step **7.**	Replace the purge control solenoid valve. <Ref. to EC(H4DOTC)-7, Purge Control Solenoid Valve.>
7	**CHECK PRESSURE CONTROL SOLENOID VALVE.** Operate the pressure control solenoid valve. NOTE: Pressure control solenoid valve operation can also be executed using Subaru Select Monitor. For the procedure, refer to "Compulsory Valve Operation Check Mode". <Ref. to EN(H4DOTC)(diag)-46, Compulsory Valve Operation Check Mode.>	Does the pressure control solenoid valve operate?	Go to step **8.**	Replace the pressure control solenoid valve. <Ref. to EC(H4DOTC)-7, Purge Control Solenoid Valve.>

	Step	Check	Yes	No
8	**CHECK EVAPORATIVE EMISSION CONTROL SYSTEM LINE.** Turn the ignition switch to OFF.	Is there a hole of more than 0.5 mm (0.020 in) dia. on evaporation line?	Repair or replace the evaporation line. <Ref. to FU(H4DOTC)-60, Fuel Delivery, Return and Evaporation Lines.>	Go to step **9.**
9	**CHECK CANISTER.**	Is the canister damaged or is there a hole of more than 0.5 mm (0.020 in) dia. in it?	Repair or replace the canister. <Ref. to EC(H4DOTC)-6, Canister.>	Go to step **10.**
10	**CHECK FUEL TANK.** Remove the fuel tank. <Ref. to FU(H4DOTC)-45, Fuel Tank.>	Is the fuel tank damaged or is there a hole of more than 0.5 mm (0.020 in) dia. in it?	Repair or replace the fuel tank. <Ref. to FU(H4DOTC)-45, Fuel Tank.>	Go to step **11.**
11	**CHECK ANY OTHER MECHANICAL TROUBLE IN EVAPORATIVE EMISSION CONTROL SYSTEM.**	Are there holes of more than 0.5 mm (0.020 in) dia., cracks, clogging, or disconnections, bend, misconnection of hoses or pipes in evaporative emission control system?	Repair or replace the hoses or pipes.	Contact with SOA Service Center.

BH:DTC P0457 EVAPORATIVE EMISSION CONTROL SYSTEM LEAK DETECTED (FUEL CAP LOOSE/OFF)

DTC DETECTING CONDITION:

- Two consecutive driving cycles with fault
- GENERAL DESCRIPTION <Ref. to GD(H4DOTC)-140, DTC P0457 EVAPORATIVE EMISSION CONTROL SYSTEM LEAK DETECTED (FUEL CAP LOOSE/OFF), Diagnostic Trouble Code (DTC) Detecting Criteria.>

TROUBLE SYMPTOM:

- Fuel odor
- Fuel filler cap is loose or not installed.

CAUTION:

After repair or replacement of faulty parts, conduct Clear Memory Mode <Ref. to EN(H4DOTC)(diag)-45, OPERATION, Clear Memory Mode.> and Inspection Mode <Ref. to EN(H4DOTC)(diag)-36, PROCEDURE, Inspection Mode.>.

WIRING DIAGRAM:

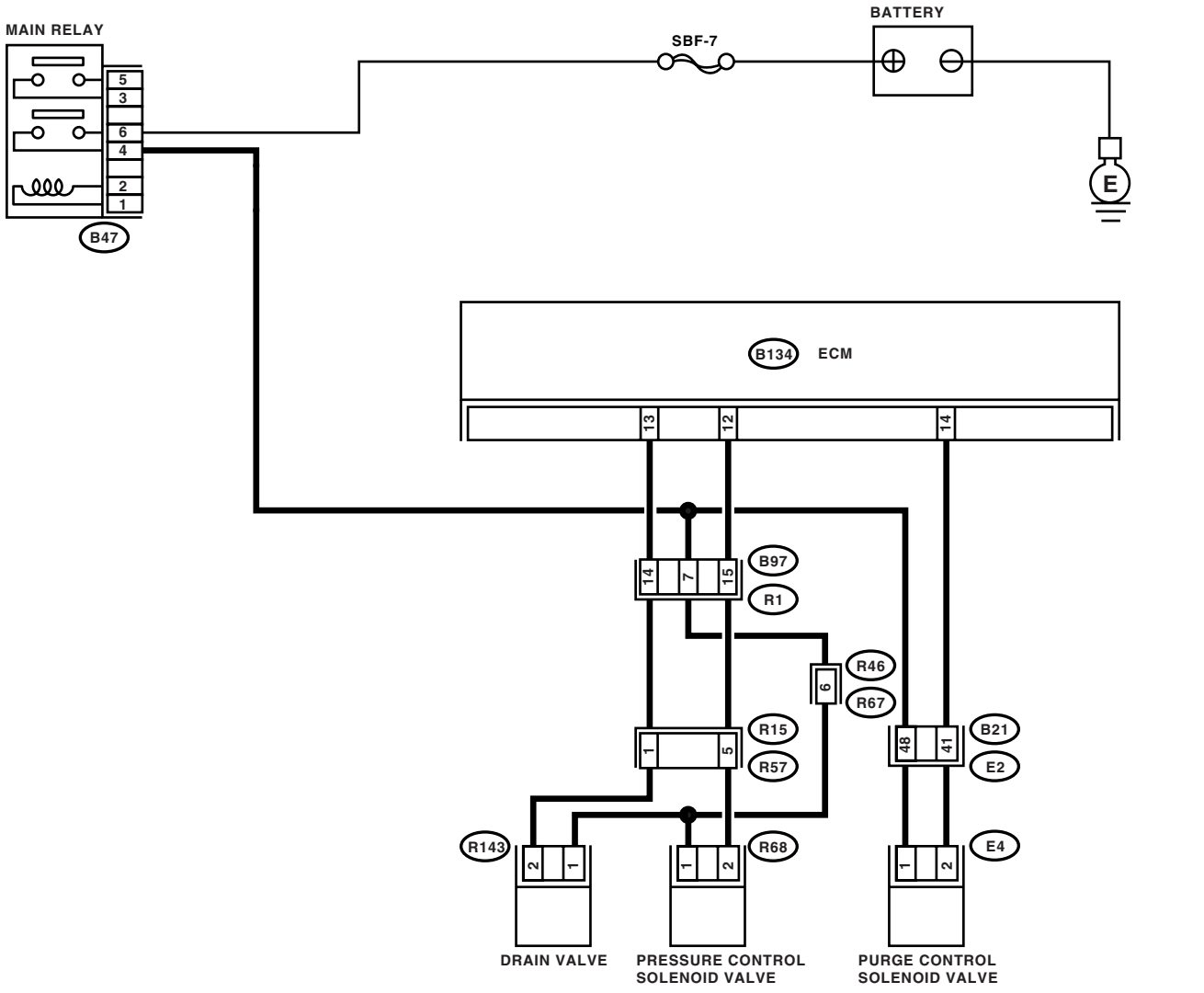

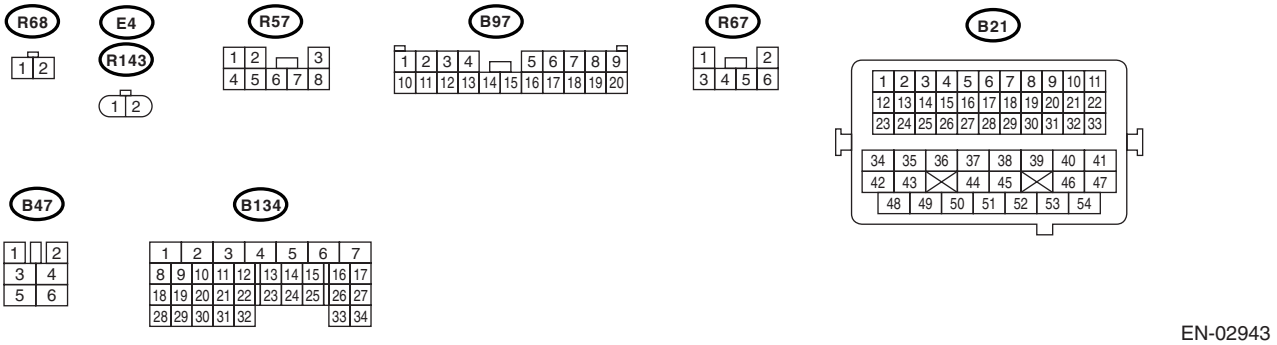

EN-02943

	Step	Check	Yes	No
1	**CHECK FOR ANY OTHER DTC ON DISPLAY.**	Is any other DTC displayed?	Inspect the relevant DTC using "List of Diagnostic Trouble Code (DTC)". <Ref. to EN(H4DOTC)(diag)-71, List of Diagnostic Trouble Code (DTC).>	Go to step **2.**
2	**CHECK FUEL FILLER CAP.** 1) Turn the ignition switch to OFF. 2) Check the fuel filler cap. NOTE: The DTC is stored in memory if fuel filler cap is or was loose or if the cap chain was caught while tightening.	Is the fuel filler cap tightened securely?	Go to step **3.**	Tighten fuel filler cap securely.
3	**CHECK FUEL FILLER CAP.**	Is the fuel filler cap SUBARU genuine?	Go to step **4.**	Replace with a SUBARU genuine fuel filler cap.
4	**CHECK FUEL FILLER PIPE PACKING.**	Is there any damage to the seal between fuel filler cap and fuel filler pipe?	Repair or replace the fuel filler cap and fuel filler pipe. <Ref. to FU(H4DOTC)-51, Fuel Filler Pipe.>	Go to step **5.**
5	**CHECK DRAIN VALVE.** 1) Connect the test mode connector. 2) Turn the ignition switch to ON. 3) Operate the drain valve. NOTE: Drain valve operation can also be executed using Subaru Select Monitor. For the procedure, refer to "Compulsory Valve Operation Check Mode". <Ref. to EN(H4DOTC)(diag)-46, Compulsory Valve Operation Check Mode.>	Does the drain valve operate?	Go to step **6.**	Replace the drain valve. <Ref. to EC(H4DOTC)-7, Purge Control Solenoid Valve.>
6	**CHECK PURGE CONTROL SOLENOID VALVE.** Operate the purge control solenoid valve. NOTE: Purge control solenoid valve operation can also be executed using Subaru Select Monitor. For the procedure, refer to "Compulsory Valve Operation Check Mode". <Ref. to EN(H4DOTC)(diag)-71, List of Diagnostic Trouble Code (DTC).>	Does the purge control solenoid valve operate?	Go to step **7.**	Replace the purge control solenoid valve. <Ref. to EC(H4DOTC)-7, Purge Control Solenoid Valve.>
7	**CHECK PRESSURE CONTROL SOLENOID VALVE.** Operate the pressure control solenoid valve. NOTE: Pressure control solenoid valve operation can also be executed using Subaru Select Monitor. For the procedure, refer to "Compulsory Valve Operation Check Mode". <Ref. to EN(H4DOTC)(diag)-46, Compulsory Valve Operation Check Mode.>	Does the pressure control solenoid valve operate?	Go to step **8.**	Replace the pressure control solenoid valve. <Ref. to EC(H4DOTC)-7, Purge Control Solenoid Valve.>
8	**CHECK CANISTER.**	Is the canister damaged?	Repair or replace the canister. <Ref. to EC(H4DOTC)-6, Canister.>	Go to step **9.**

	Step	Check	Yes	No
9	**CHECK FUEL TANK.** Remove the fuel tank. <Ref. to FU(H4DOTC)-45, Fuel Tank.>	Is the fuel tank damaged?	Repair or replace the fuel tank. <Ref. to FU(H4DOTC)-45, Fuel Tank.>	Go to step **10.**
10	**CHECK ANY OTHER MECHANICAL TROUBLE IN EVAPORATIVE EMISSION CONTROL SYSTEM.**	Are there holes of more than 0.5 mm (0.020 in) dia., cracks, clogging, or disconnections, misconnection of hoses or pipes in evaporative emission control system?	Repair or replace the hoses or pipes.	Contact with SOA Service Center.

BI: DTC P0458 EVAPORATIVE EMISSION CONTROL SYSTEM PURGE CONTROL VALVE CIRCUIT LOW

DTC DETECTING CONDITION:

- Two consecutive driving cycles with fault
- GENERAL DESCRIPTION <Ref. to GD(H4DOTC)-141, DTC P0458 EVAPORATIVE EMISSION CONTROL SYSTEM PURGE CONTROL VALVE CIRCUIT LOW, Diagnostic Trouble Code (DTC) Detecting Criteria.>

TROUBLE SYMPTOM:

Erroneous idling

CAUTION:

After repair or replacement of faulty parts, conduct Clear Memory Mode <Ref. to EN(H4DOTC)(diag)-45, OPERATION, Clear Memory Mode.> and Inspection Mode <Ref. to EN(H4DOTC)(diag)-36, PROCEDURE, Inspection Mode.>.

WIRING DIAGRAM:

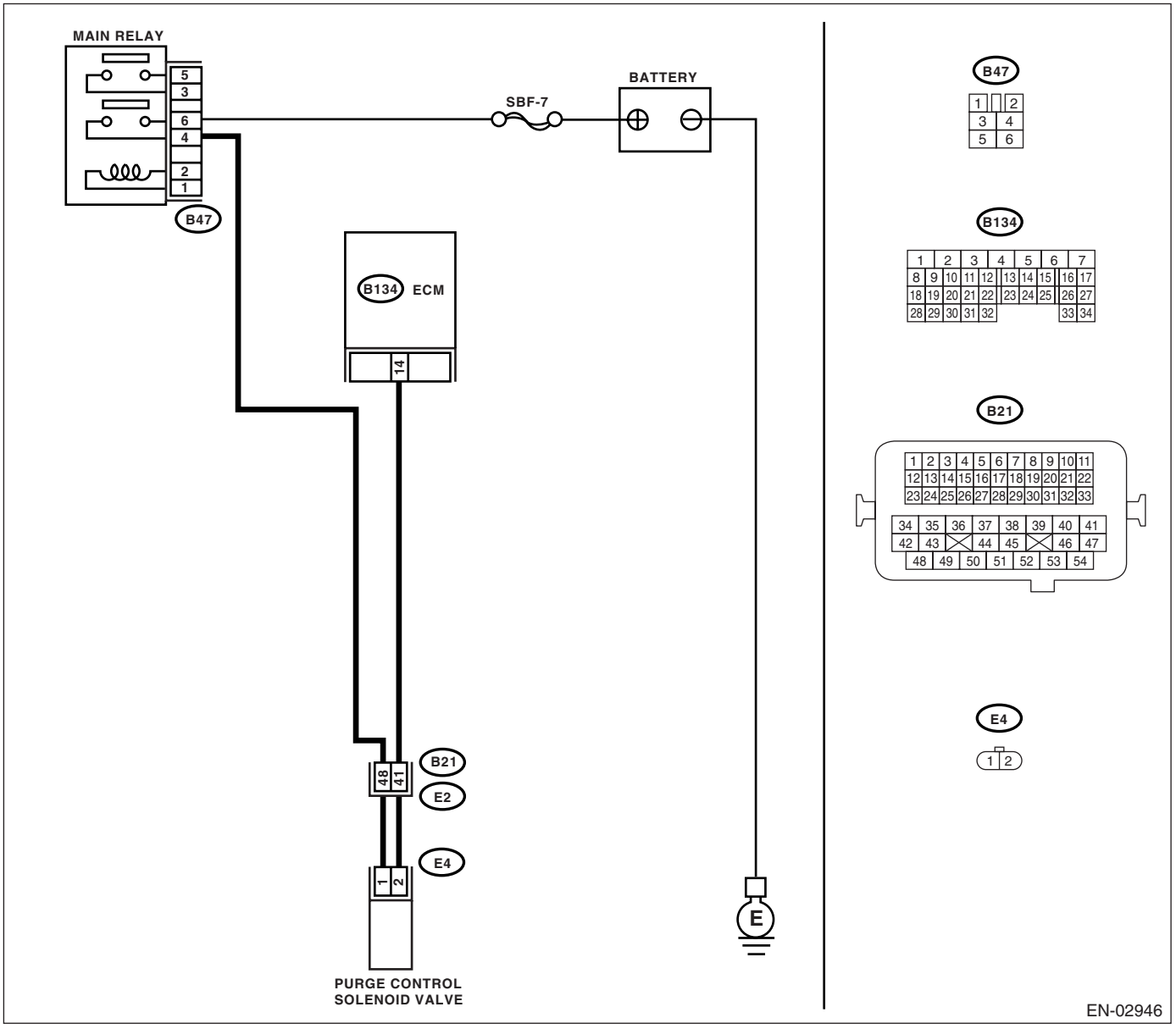

	Step	Check	Yes	No
1	**CHECK OUTPUT SIGNAL FROM ECM.** 1) Turn the ignition switch to ON. 2) Measure the voltage between ECM and chassis ground. ***Connector & terminal*** ***(B134) No. 14 (+) — Chassis ground (−):***	Is the voltage more than 10 V?	Even if the malfunction indicator light illuminates, the circuit has returned to a normal condition at this time.	Go to step **2.**
2	**CHECK HARNESS BETWEEN PURGE CONTROL SOLENOID VALVE AND ECM CONNECTOR.** 1) Turn the ignition switch to OFF. 2) Disconnect the connectors from purge control solenoid valve and ECM. 3) Measure the resistance of harness between purge control solenoid valve connector and engine ground. ***Connector & terminal*** ***(E4) No. 2 — Engine ground:***	Is the resistance more than 1 MΩ?	Go to step **3.**	Repair the ground short circuit in harness between ECM and purge control solenoid valve connector.
3	**CHECK HARNESS BETWEEN PURGE CONTROL SOLENOID VALVE AND ECM CONNECTOR.** Measure the resistance of harness between ECM and purge control solenoid valve of harness connector. ***Connector & terminal*** ***(B134) No. 14 — (E4) No. 2:***	Is the resistance less than 1 Ω?	Go to step **4.**	Repair the open circuit in harness between ECM and purge control solenoid valve connector. NOTE: In this case, repair the following: • Open circuit in harness between ECM and purge control solenoid valve connector • Poor contact in coupling connector
4	**CHECK PURGE CONTROL SOLENOID VALVE.** 1) Remove the purge control solenoid valve. 2) Measure the resistance between purge control solenoid valve terminals. ***Terminals*** ***No. 1 — No. 2:***	Is the resistance 29 — 35 Ω?	Go to step **5.**	Replace the purge control solenoid valve. <Ref. to EC(H4DOTC)-7, Purge Control Solenoid Valve.>
5	**CHECK POWER SUPPLY TO PURGE CONTROL SOLENOID VALVE.** 1) Turn the ignition switch to ON. 2) Measure the voltage between purge control solenoid valve and engine ground. ***Connector & terminal*** ***(E4) No. 1 (+) — Engine ground (−):***	Is the voltage more than 10 V?	Go to step **6.**	Repair the open circuit in harness between main relay and purge control solenoid valve connector.
6	**CHECK POOR CONTACT.** Check poor contact in purge control solenoid valve connector.	Is there poor contact in purge control solenoid valve connector?	Repair the poor contact in purge control solenoid valve connector.	Replace the ECM. <Ref. to FU(H4DOTC)-39, Engine Control Module (ECM).>

BJ:DTC P0459 EVAPORATIVE EMISSION CONTROL SYSTEM PURGE CONTROL VALVE CIRCUIT HIGH

DTC DETECTING CONDITION:

- Two consecutive driving cycles with fault
- GENERAL DESCRIPTION <Ref. to GD(H4DOTC)-143, DTC P0459 EVAPORATIVE EMISSION CONTROL SYSTEM PURGE CONTROL VALVE CIRCUIT HIGH, Diagnostic Trouble Code (DTC) Detecting Criteria.>

TROUBLE SYMPTOM:

Erroneous idling

CAUTION:

After repair or replacement of faulty parts, conduct Clear Memory Mode <Ref. to EN(H4DOTC)(diag)-45, OPERATION, Clear Memory Mode.> and Inspection Mode <Ref. to EN(H4DOTC)(diag)-36, PROCEDURE, Inspection Mode.>.

WIRING DIAGRAM:

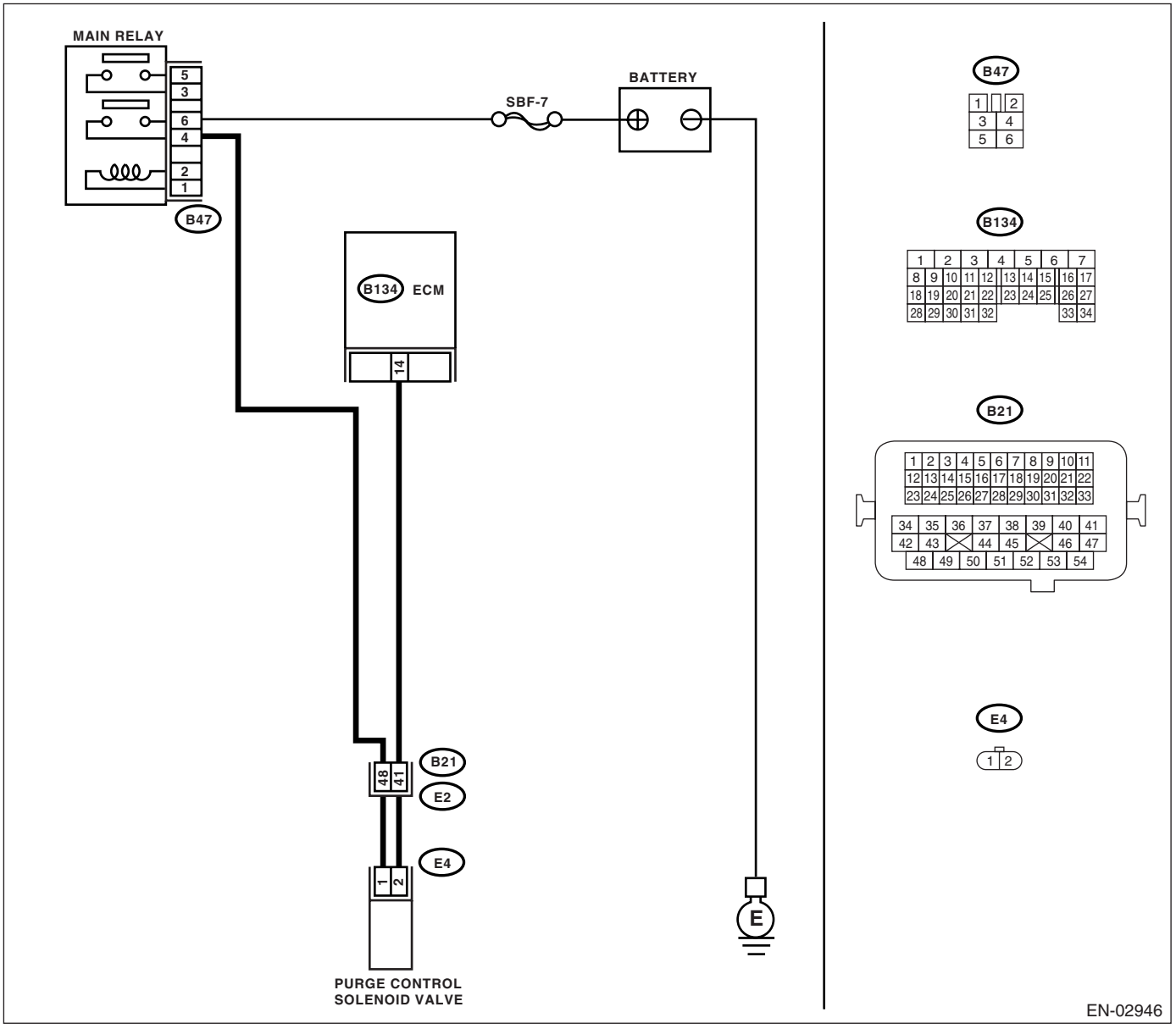

	Step	Check	Yes	No
1	**CHECK OUTPUT SIGNAL FROM ECM.** 1) Turn the ignition switch to OFF. 2) Connect the test mode connector at the lower portion of instrument panel (on the driver's side). 3) Turn the ignition switch to ON.	Does the purge control solenoid valve operate?	Go to step **2.**	Even if the malfunction indicator light illuminates, the circuit has returned to a normal condition at this time. In this case, repair the poor contact in ECM connector.
2	**CHECK PURGE CONTROL SOLENOID VALVE.** 1) Turn the ignition switch to OFF. 2) Disconnect the connector from purge control solenoid valve. 3) Measure the resistance between purge control solenoid valve terminals. ***Terminals*** ***No. 1 — No. 2:***	Is the resistance less than 29 — 35 Ω?	Go to step **3.**	Replace the purge control solenoid valve. <Ref. to EC(H4DOTC)-7, Purge Control Solenoid Valve.>
3	**CHECK HARNESS BETWEEN PURGE CONTROL SOLENOID VALVE AND ECM CONNECTOR.** 1) Turn the ignition switch to OFF. 2) Disconnect the connector from purge control solenoid valve. 3) Turn the ignition switch to ON. 4) Measure the voltage between ECM and chassis ground. ***Connector & terminal*** ***(B134) No. 14 (+) — Chassis ground (−):***	Is the voltage less than 1 V?	Go to step **4.**	Repair the battery short circuit in harness between ECM and purge control solenoid valve connector. After repair, replace the ECM. <Ref. to FU(H4DOTC)-39, Engine Control Module (ECM).>
4	**CHECK POOR CONTACT.** Check poor contact in ECM connector.	Is there poor contact in ECM connector?	Repair the poor contact in ECM connector.	Replace the ECM. <Ref. to FU(H4DOTC)-39, Engine Control Module (ECM).>

BK:DTC P0461 FUEL LEVEL SENSOR CIRCUIT RANGE/PERFORMANCE

DTC DETECTING CONDITION:

- Two consecutive driving cycles with fault
- GENERAL DESCRIPTION <Ref. to GD(H4DOTC)-145, DTC P0461 FUEL LEVEL SENSOR CIRCUIT RANGE/PERFORMANCE, Diagnostic Trouble Code (DTC) Detecting Criteria.>

CAUTION:
After repair or replacement of faulty parts, conduct Clear Memory Mode <Ref. to EN(H4DOTC)(diag)-45, OPERATION, Clear Memory Mode.> and Inspection Mode <Ref. to EN(H4DOTC)(diag)-36, PROCEDURE, Inspection Mode.>.

Step		Check	Yes	No
1	**CHECK FOR ANY OTHER DTC ON DISPLAY.**	Is any other DTC displayed?	Inspect the relevant DTC using "List of Diagnostic Trouble Code (DTC)". <Ref. to EN(H4DOTC)(diag)-71, List of Diagnostic Trouble Code (DTC).> NOTE: In this case, it is not necessary to inspect DTC P0461.	Replace the fuel level sensor. <Ref. to FU(H4DOTC)-56, Fuel Level Sensor.> and fuel sub level sensor <Ref. to FU(H4DOTC)-57, Fuel Sub Level Sensor.>

BL:DTC P0462 FUEL LEVEL SENSOR CIRCUIT LOW INPUT

DTC DETECTING CONDITION:

- Two consecutive driving cycles with fault
- GENERAL DESCRIPTION <Ref. to GD(H4DOTC)-147, DTC P0462 FUEL LEVEL SENSOR CIRCUIT LOW INPUT, Diagnostic Trouble Code (DTC) Detecting Criteria.>

CAUTION:
After repair or replacement of faulty parts, conduct Clear Memory Mode <Ref. to EN(H4DOTC)(diag)-45, OPERATION, Clear Memory Mode.> and Inspection Mode <Ref. to EN(H4DOTC)(diag)-36, PROCEDURE, Inspection Mode.>.

Step		Check	Yes	No
1	**CHECK FOR ANY OTHER DTC ON DISPLAY.**	Does DTC P0462 appear on the Subaru Select Monitor?	Check the combination meter. <Ref. to IDI-3, Combination Meter System.>	Temporary poor contact occurs.

BM:DTC P0463 FUEL LEVEL SENSOR CIRCUIT HIGH INPUT

DTC DETECTING CONDITION:

- Two consecutive driving cycles with fault
- GENERAL DESCRIPTION <Ref. to GD(H4DOTC)-149, DTC P0463 FUEL LEVEL SENSOR CIRCUIT HIGH INPUT, Diagnostic Trouble Code (DTC) Detecting Criteria.>

CAUTION:
After repair or replacement of faulty parts, conduct Clear Memory Mode <Ref. to EN(H4DOTC)(diag)-45, OPERATION, Clear Memory Mode.> and Inspection Mode <Ref. to EN(H4DOTC)(diag)-36, PROCEDURE, Inspection Mode.>.

	Step	Check	Yes	No
1	**CHECK FOR ANY OTHER DTC ON DISPLAY.**	Does DTC P0463 appear on the Subaru Select Monitor?	Check the combination meter. <Ref. to IDI-3, Combination Meter System.>	Temporary poor contact occurs.

BN:DTC P0464 FUEL LEVEL SENSOR CIRCUIT INTERMITTENT

DTC DETECTING CONDITION:

- Two consecutive driving cycles with fault
- GENERAL DESCRIPTION <Ref. to GD(H4DOTC)-151, DTC P0464 FUEL LEVEL SENSOR CIRCUIT INTERMITTENT, Diagnostic Trouble Code (DTC) Detecting Criteria.>

CAUTION:
After repair or replacement of faulty parts, conduct Clear Memory Mode <Ref. to EN(H4DOTC)(diag)-45, OPERATION, Clear Memory Mode.> and Inspection Mode <Ref. to EN(H4DOTC)(diag)-36, PROCEDURE, Inspection Mode.>.

	Step	Check	Yes	No
1	**CHECK FOR ANY OTHER DTC ON DISPLAY.**	Does DTC P0464 appear on the Subaru Select Monitor?	Check the combination meter. <Ref. to IDI-3, Combination Meter System.>	Temporary poor contact occurs.

BO:DTC P0483 COOLING FAN RATIONALITY CHECK

DTC DETECTING CONDITION:

- Two consecutive driving cycles with fault
- GENERAL DESCRIPTION <Ref. to GD(H4DOTC)-154, DTC P0483 COOLING FAN RATIONALITY CHECK, Diagnostic Trouble Code (DTC) Detecting Criteria.>

TROUBLE SYMPTOM:

- Occurrence of noise
- Overheating

CAUTION:
After repair or replacement of faulty parts, conduct Clear Memory Mode <Ref. to EN(H4DOTC)(diag)-45, OPERATION, Clear Memory Mode.> and Inspection Mode <Ref. to EN(H4DOTC)(diag)-36, PROCEDURE, Inspection Mode.>.

NOTE:
If the vehicle, with the engine idling, is placed very close to a wall or another vehicle, preventing normal cooling function, the OBD system may detect malfunction.

	Step	Check	Yes	No
1	**CHECK FOR ANY OTHER DTC ON DISPLAY.**	Is any other DTC displayed?	Inspect the relevant DTC using "List of Diagnostic Trouble Code (DTC)". <Ref. to EN(H4DOTC)(diag)-71, List of Diagnostic Trouble Code (DTC).>	Check the radiator fan, fan motor and thermostat. <Ref. to CO(H4DOTC)-24, Radiator Main Fan and Fan Motor.> and <Ref. to CO(H4DOTC)-27, Radiator Sub Fan and Fan Motor.> If thermostat is stuck, replace thermostat.

BP:DTC P0500 VEHICLE SPEED SENSOR

DTC DETECTING CONDITION:

- Detect as soon as the malfunction occurs.
- GENERAL DESCRIPTION <Ref. to GD(H4DOTC)-155, DTC P0500 VEHICLE SPEED SENSOR, Diagnostic Trouble Code (DTC) Detecting Criteria.>

CAUTION:
After repair or replacement of faulty parts, conduct Clear Memory Mode <Ref. to EN(H4DOTC)(diag)-45, OPERATION, Clear Memory Mode.> and Inspection Mode <Ref. to EN(H4DOTC)(diag)-36, PROCEDURE, Inspection Mode.>.

	Step	Check	Yes	No
1	**CHECK DTC OF ABS.** Check DTC of ABS.	Is DTC of ABS displayed?	Perform the diagnosis according to the DTC. <Ref. to ABS(diag)-34, List of Diagnostic Trouble Code (DTC).>	Repair the poor contact in ECM.

BQ:DTC P0506 IDLE CONTROL SYSTEM RPM LOWER THAN EXPECTED

DTC DETECTING CONDITION:

- Two consecutive driving cycles with fault
- GENERAL DESCRIPTION <Ref. to GD(H4DOTC)-157, DTC P0506 IDLE CONTROL SYSTEM RPM LOWER THAN EXPECTED, Diagnostic Trouble Code (DTC) Detecting Criteria.>

TROUBLE SYMPTOM:

- Engine is difficult to start.
- Engine does not start.
- Erroneous idling
- Engine stalls.

CAUTION:
After repair or replacement of faulty parts, conduct Clear Memory Mode <Ref. to EN(H4DOTC)(diag)-45, OPERATION, Clear Memory Mode.> and Inspection Mode <Ref. to EN(H4DOTC)(diag)-36, PROCEDURE, Inspection Mode.>.

WIRING DIAGRAM:

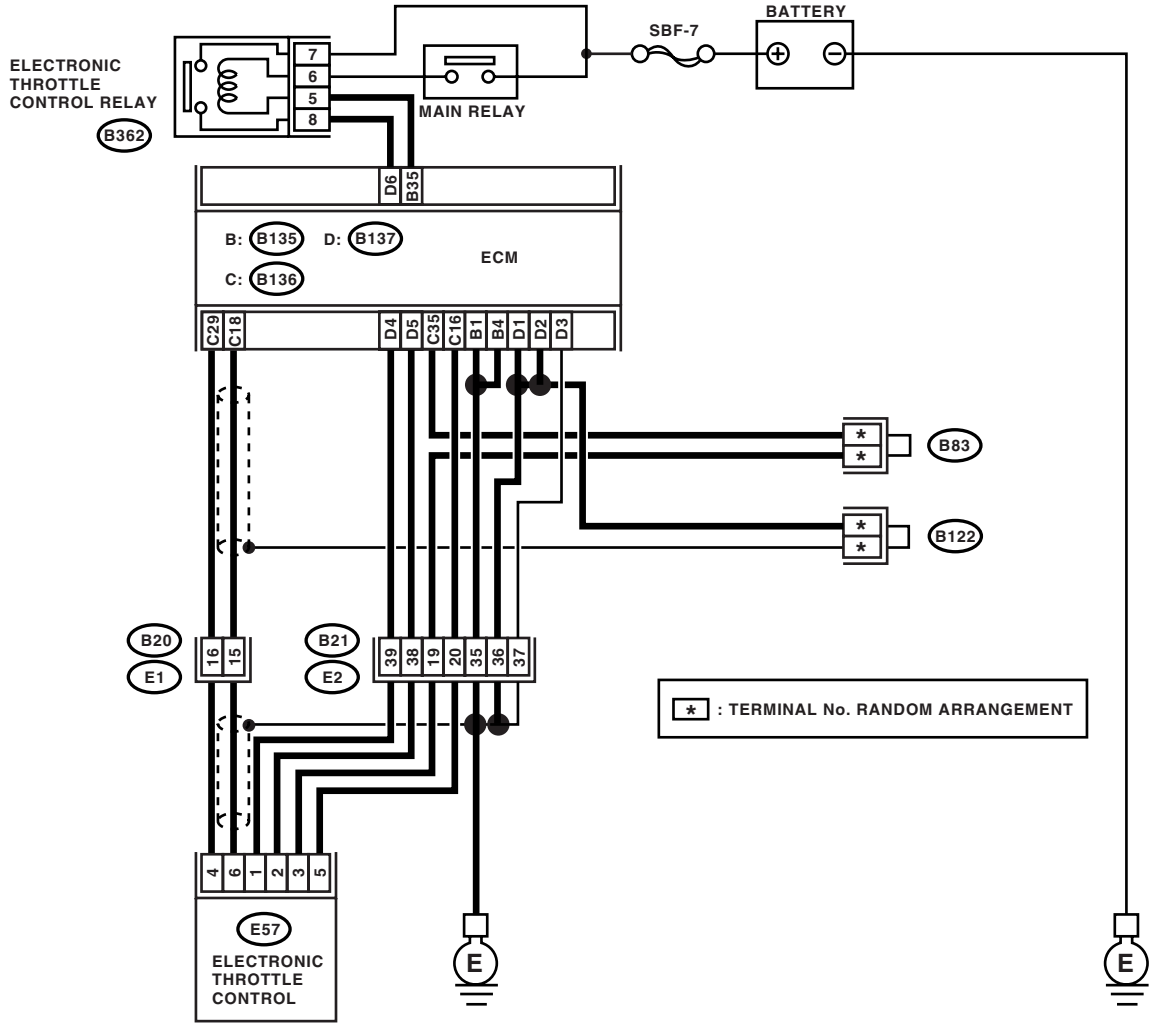

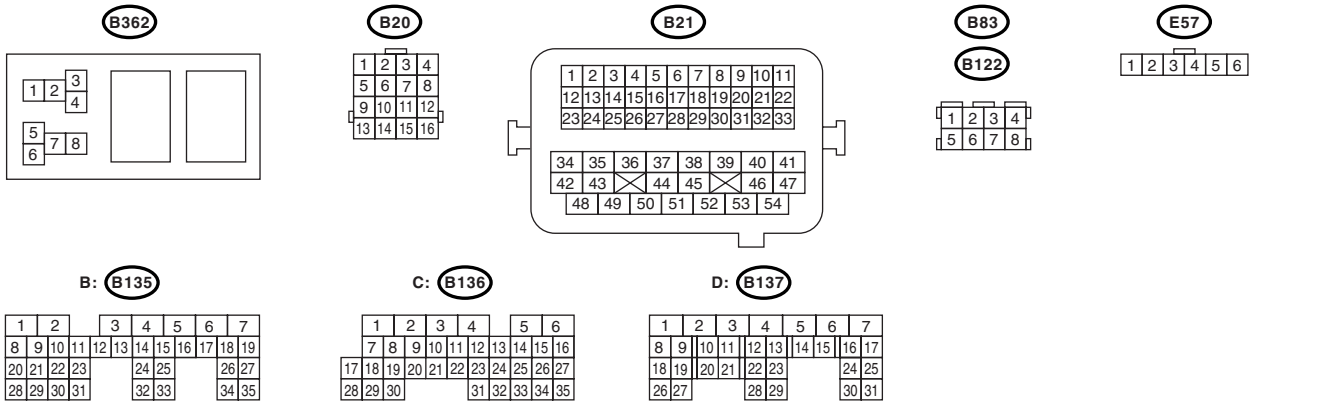

EN-02939

	Step	Check	Yes	No
1	**CHECK FOR ANY OTHER DTC ON DISPLAY.**	Is any other DTC displayed?	Inspect the relevant DTC using "List of Diagnostic Trouble Code (DTC)". <Ref. to EN(H4DOTC)(diag)-71, List of Diagnostic Trouble Code (DTC).> NOTE: In this case, it is not necessary to inspect DTC P0506.	Go to step **2.**
2	**CHECK THE AIR CLEANER ELEMENT.** 1) Turn the ignition switch to OFF. 2) Check the air cleaner element.	Is there excessive clogging on air cleaner element.	Replace the air cleaner element. <Ref. to IN(H4DOTC)-8, Air Cleaner Case.>	Go to step **3.**
3	**CHECK ELECTRONIC THROTTLE CONTROL.** 1) Turn the ignition switch to OFF. 2) Remove the electronic throttle control. 3) Check the electronic throttle control.	Are there foreign particles in electronic throttle control?	Remove the foreign particles from electronic throttle control.	Perform the diagnosis of DTC P2101.

BR:DTC P0507 IDLE CONTROL SYSTEM RPM HIGHER THAN EXPECTED

DTC DETECTING CONDITION:

- Two consecutive driving cycles with fault
- GENERAL DESCRIPTION <Ref. to GD(H4DOTC)-159, DTC P0507 IDLE CONTROL SYSTEM RPM HIGHER THAN EXPECTED, Diagnostic Trouble Code (DTC) Detecting Criteria.>

TROUBLE SYMPTOM:

Engine keeps running at higher revolution than specified idling revolution.

CAUTION:

After repair or replacement of faulty parts, conduct Clear Memory Mode <Ref. to EN(H4DOTC)(diag)-45, OPERATION, Clear Memory Mode.> and Inspection Mode <Ref. to EN(H4DOTC)(diag)-36, PROCEDURE, Inspection Mode.>.

WIRING DIAGRAM:

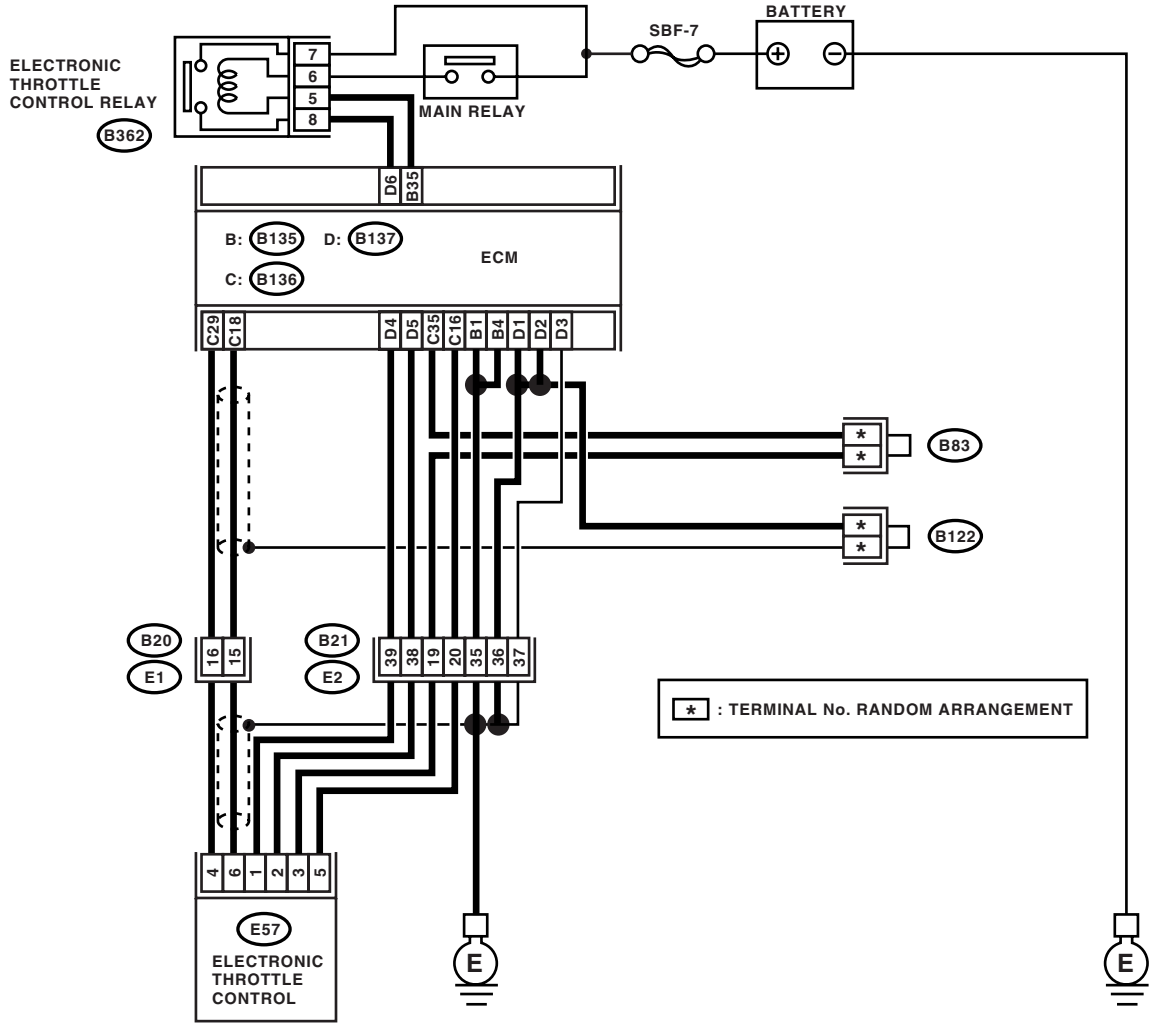

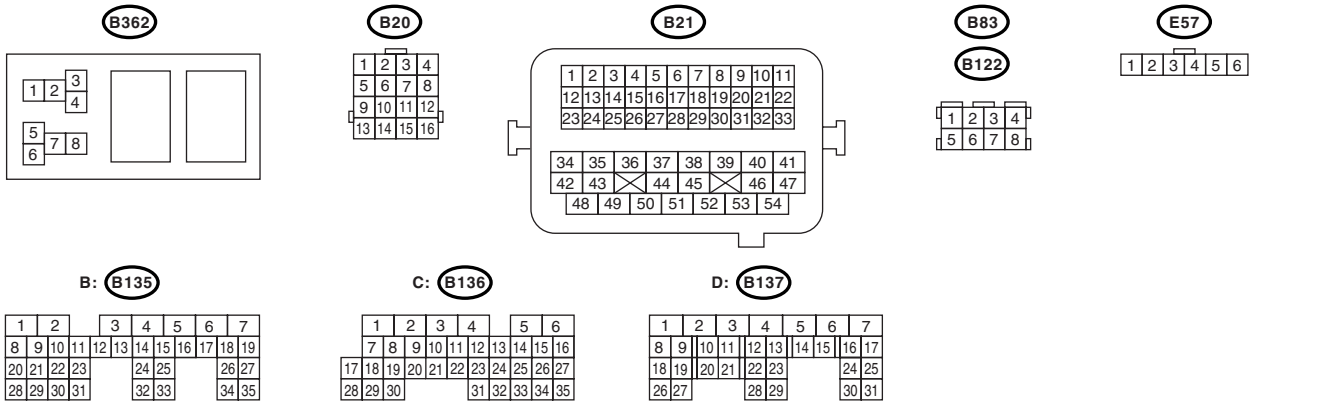

EN-02939

	Step	Check	Yes	No
1	**CHECK FOR ANY OTHER DTC ON DISPLAY.**	Is any other DTC displayed?	Inspect the relevant DTC using "List of Diagnostic Trouble Code (DTC)". <Ref. to EN(H4DOTC)(diag)-71, List of Diagnostic Trouble Code (DTC).> NOTE: In this case, it is not necessary to inspect DTC P0507.	Go to step **2.**
2	**CHECK AIR INTAKE SYSTEM.** 1) Turn the ignition switch to ON. 2) Start the engine, and idle it. 3) Check the following items. • Loose installation of intake manifold and throttle body • Cracks of intake manifold gasket and throttle body gasket • Disconnections of vacuum hoses	Is there any fault in air intake system?	Repair the air suction and leaks.	Go to step **3.**
3	**CHECK ELECTRONIC THROTTLE CONTROL.** 1) Turn the ignition switch to OFF. 2) Remove the electronic throttle control. 3) Check the electronic throttle control.	Are there foreign particles in electronic throttle control?	Remove the foreign particles from electronic throttle control.	Perform the diagnosis of DTC P2101.

BS:DTC P0512 STARTER REQUEST CIRCUIT

DTC DETECTING CONDITION:

- Detect as soon as the malfunction occurs.
- GENERAL DESCRIPTION <Ref. to GD(H4DOTC)-161, DTC P0512 STARTER REQUEST CIRCUIT, Diagnostic Trouble Code (DTC) Detecting Criteria.>

TROUBLE SYMPTOM:

Failure of engine to start

CAUTION:

After repair or replacement of faulty parts, conduct Clear Memory Mode <Ref. to EN(H4DOTC)(diag)-45, OPERATION, Clear Memory Mode.> and Inspection Mode <Ref. to EN(H4DOTC)(diag)-36, PROCEDURE, Inspection Mode.>.

WIRING DIAGRAM:

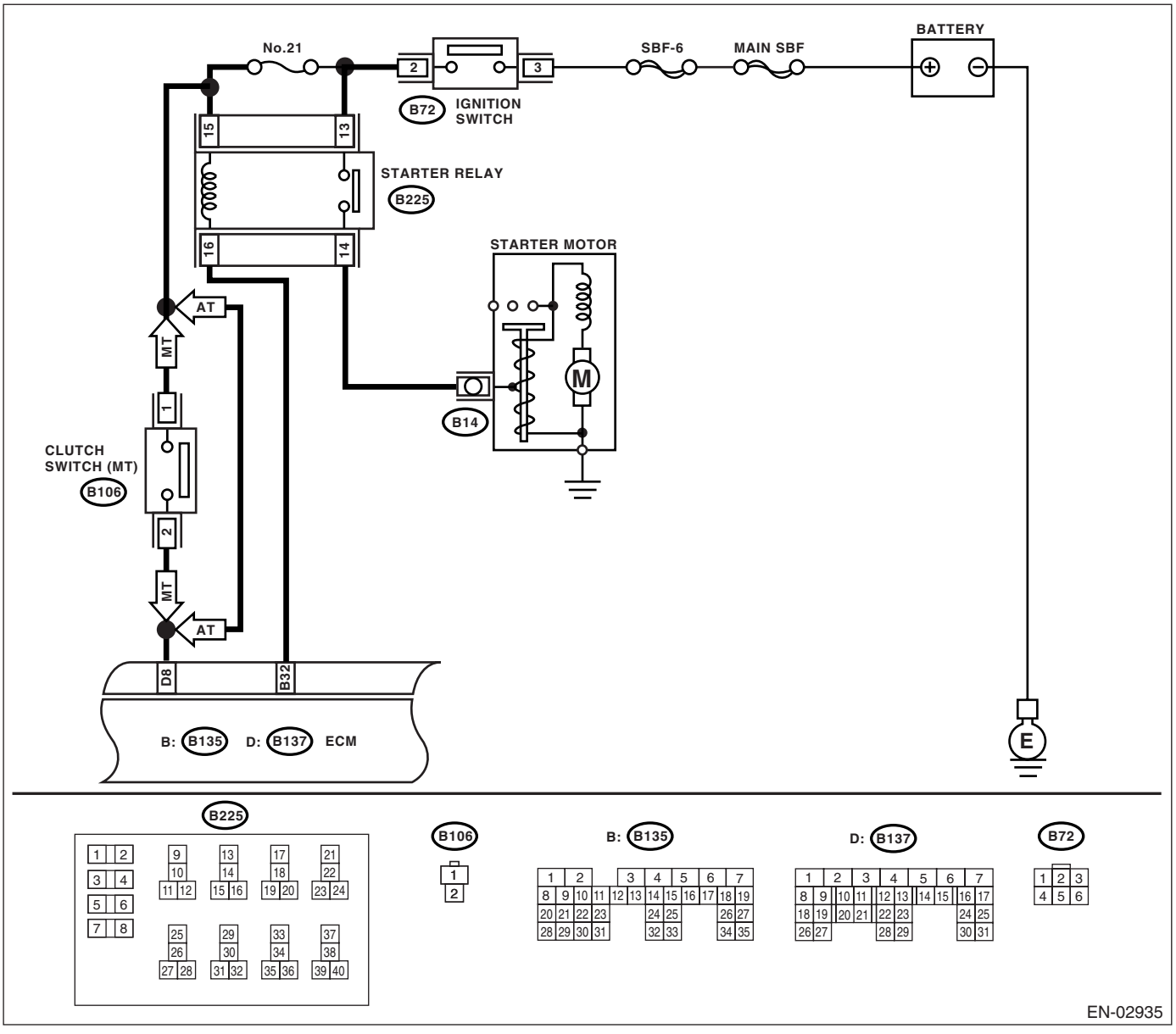

	Step	Check	Yes	No
1	**CHECK HARNESS BETWEEN IGNITION SWITCH AND ECM.** 1) Disconnect the connectors from ECM. 2) Measure the voltage between ECM and chassis ground. ***Connector & terminal*** ***(B137) No. 32 (+) — Chassis ground (−):***	Is the voltage more than 10 V?	Repair the battery short circuit in harness between ignition switch and ECM.	Repair the poor contact in ECM.

BT:DTC P0519 IDLE CONTROL SYSTEM MALFUNCTION (FAIL-SAFE)

DTC DETECTING CONDITION:

- Detect as soon as the malfunction occurs.
- GENERAL DESCRIPTION <Ref. to GD(H4DOTC)-163, DTC P0519 IDLE CONTROL SYSTEM MALFUNCTION (FAIL-SAFE), Diagnostic Trouble Code (DTC) Detecting Criteria.>

TROUBLE SYMPTOM:

- Engine keeps running at higher revolution than specified idling revolution.
- Fuel is cut according to fail-safe function.

CAUTION:
After repair or replacement of faulty parts, conduct Clear Memory Mode <Ref. to EN(H4DOTC)(diag)-45, OPERATION, Clear Memory Mode.> and Inspection Mode <Ref. to EN(H4DOTC)(diag)-36, PROCEDURE, Inspection Mode.>.

	Step	Check	Yes	No
1	**CHECK FOR ANY OTHER DTC ON DISPLAY.**	Is any other DTC displayed?	Inspect the relevant DTC using "List of Diagnostic Trouble Code (DTC)". <Ref. to EN(H4DOTC)(diag)-71, List of Diagnostic Trouble Code (DTC).> NOTE: In this case, it is not necessary to inspect DTC P0519.	Go to step **2.**
2	**CHECK AIR INTAKE SYSTEM.** 1) Turn the ignition switch to ON. 2) Start and idle the engine. 3) Check the following items: • Loose installation of intake manifold and throttle body • Cracks of intake manifold gasket and throttle body gasket • Disconnections of vacuum hoses	Is there any fault in air intake system?	Repair air suction and leaks.	Go to step **3.**
3	**CHECK ELECTRONIC THROTTLE CONTROL.** 1) Turn the ignition switch to OFF. 2) Remove the electronic throttle control. 3) Check the electronic throttle control.	Are foreign matters found inside the electronic throttle control?	Remove foreign matters from the electronic throttle control.	Perform the diagnosis of DTC P2101.

BU:DTC P0545 EXHAUST GAS TEMPERATURE SENSOR CIRCUIT LOW-BANK 1

DTC DETECTING CONDITION:

- Detect as soon as malfunction occurs.
- GENERAL DESCRIPTION <Ref. to GD(H4DOTC)-164, DTC P0545 EXHAUST GAS TEMPERATURE SENSOR CIRCUIT LOW-BANK 1, Diagnostic Trouble Code (DTC) Detecting Criteria.>

TROUBLE SYMPTOM:

- Hard to start
- Erroneous idling
- Poor driving performance

CAUTION:

After repair or replacement of faulty parts, conduct Clear Memory Mode <Ref. to EN(H4DOTC)(diag)-45, OPERATION, Clear Memory Mode.> and Inspection Mode <Ref. to EN(H4DOTC)(diag)-36, PROCEDURE, Inspection Mode.>.

WIRING DIAGRAM:

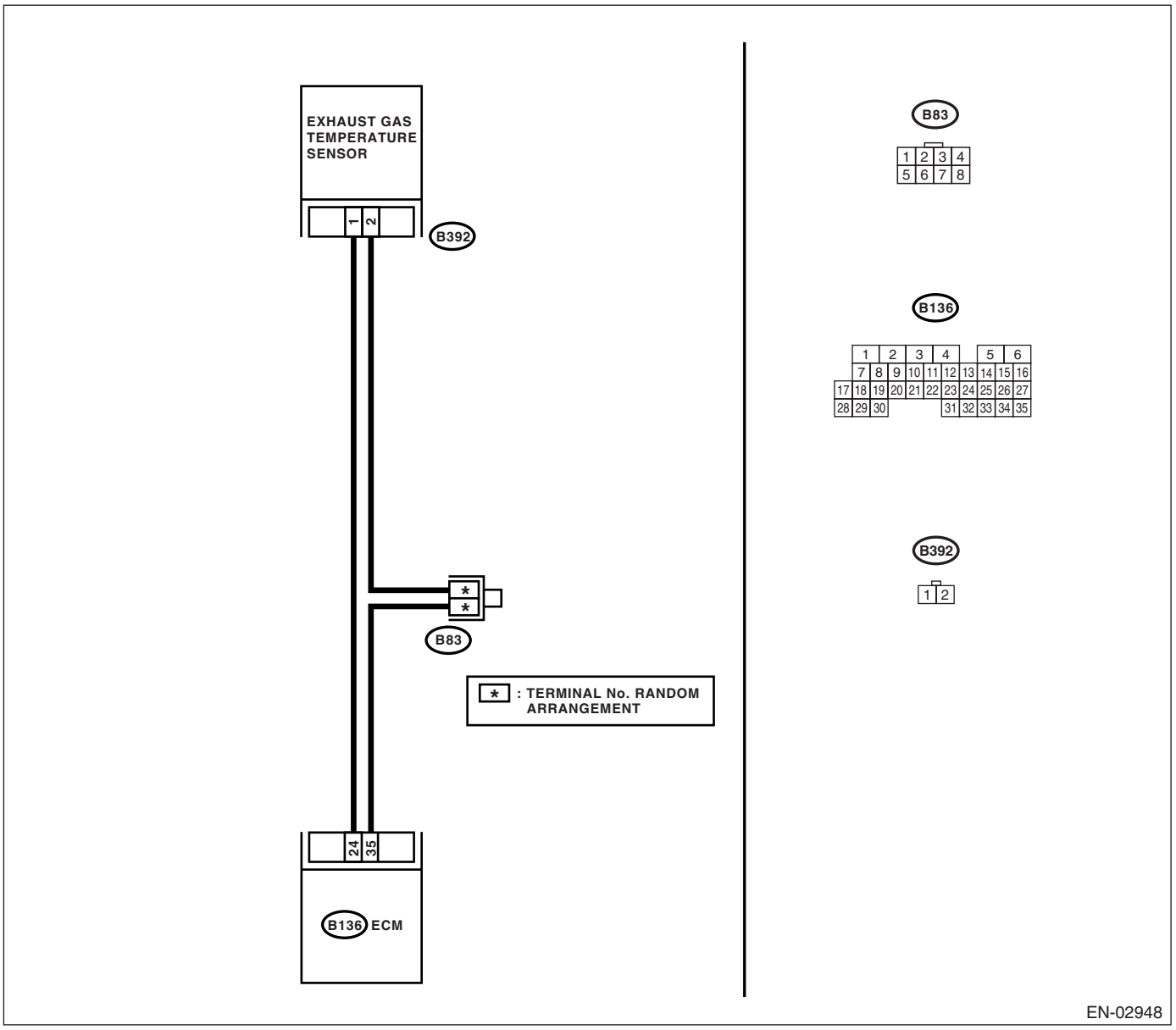

	Step	Check	Yes	No
1	**CHECK CURRENT DATA.** 1) Start the engine. 2) Read the data of exhaust gas temperature sensor signal using Subaru Select Monitor or general scan tool. NOTE: • Subaru Select Monitor For detailed operation procedure, refer to the "READ CURRENT DATA FOR ENGINE". <Ref. to EN(H4DOTC)(diag)-28, Subaru Select Monitor.> • General scan tool For detailed operation procedures, refer to the general scan tool instruction manual.	Is the temperature more than 1200°C (2192°F)?	Go to step **2.**	Repair the poor contact. NOTE: In this case, repair the following: • Poor contact in exhaust gas temperature sensor • Poor contact in ECM • Poor contact in joint connector
2	**CHECK HARNESS BETWEEN EXHAUST GAS TEMPERATURE SENSOR AND ECM CONNECTOR.** 1) Turn the ignition switch to OFF. 2) Disconnect the connector from exhaust gas temperature sensor. 3) Turn the ignition switch to ON. 4) Read the data of exhaust gas temperature sensor signal using Subaru Select Monitor or general scan tool. NOTE: • Subaru Select Monitor For detailed operation procedure, refer to the "READ CURRENT DATA FOR ENGINE". <Ref. to EN(H4DOTC)(diag)-28, Subaru Select Monitor.> • General scan tool For detailed operation procedures, refer to the general scan tool instruction manual.	Is the temperature less than 372°C (702°F)?	Replace the exhaust gas temperature sensor. <Ref. to FU(H4DOTC)-38, Exhaust Temperature Sensor.>	Repair the ground short circuit in harness between exhaust gas temperature sensor and ECM connector.

BV:DTC P0546 EXHAUST GAS TEMPERATURE SENSOR CIRCUIT HIGH-BANK 1

DTC DETECTING CONDITION:

- Detect as soon as malfunction occurs.
- GENERAL DESCRIPTION <Ref. to GD(H4DOTC)-166, DTC P0546 EXHAUST GAS TEMPERATURE SENSOR CIRCUIT HIGH-BANK 1, Diagnostic Trouble Code (DTC) Detecting Criteria.>

TROUBLE SYMPTOM:

- Hard to start
- Erroneous idling
- Poor driving performance

CAUTION:

After repair or replacement of faulty parts, conduct Clear Memory Mode <Ref. to EN(H4DOTC)(diag)-45, OPERATION, Clear Memory Mode.> and Inspection Mode <Ref. to EN(H4DOTC)(diag)-36, PROCEDURE, Inspection Mode.>.

WIRING DIAGRAM:

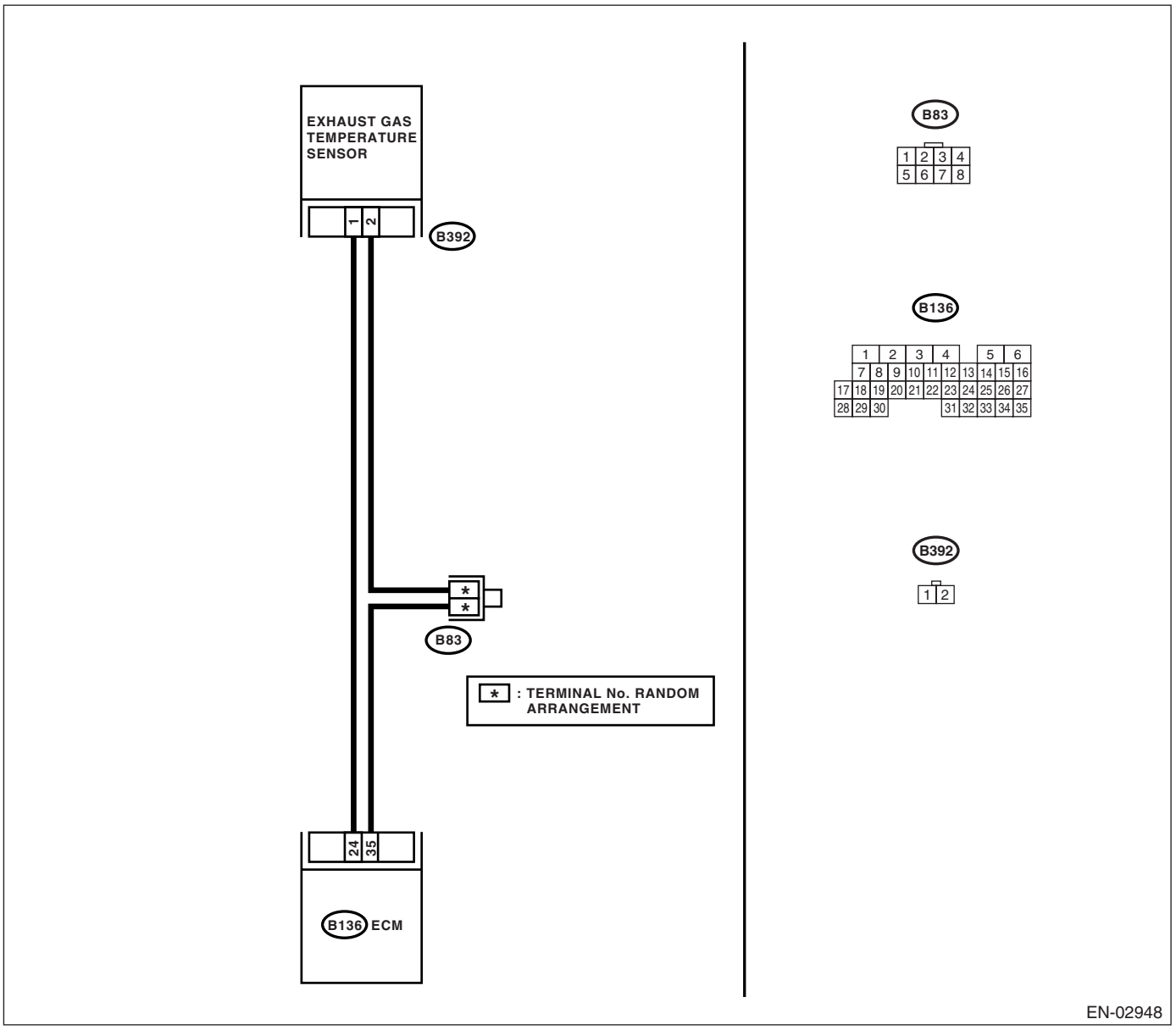

	Step	Check	Yes	No
1	**CHECK CURRENT DATA.** 1) Start the engine. 2) Read the data of exhaust gas temperature sensor signal using Subaru Select Monitor or general scan tool. NOTE: • Subaru Select Monitor For detailed operation procedure, refer to the "READ CURRENT DATA FOR ENGINE". <Ref. to EN(H4DOTC)(diag)-28, Subaru Select Monitor.> • General scan tool For detailed operation procedures, refer to the General Scan Tool Instruction Manual.	Is the temperature less than 372°C (702°F)?	Go to step **2.**	Repair the poor contact. NOTE: In this case, repair the following: • Poor contact in exhaust gas temperature sensor • Poor contact in ECM • Poor contact in joint connector
2	**CHECK HARNESS BETWEEN EXHAUST GAS TEMPERATURE SENSOR AND ECM CONNECTOR.** 1) Turn the ignition switch to OFF. 2) Disconnect the connector from exhaust gas temperature sensor. 3) Measure the voltage between exhaust gas temperature sensor connector and engine ground. ***Connector & terminal*** ***(B392) No. 1 (+) — Engine ground (−):***	Is the voltage more than 10 V?	Repair the battery short circuit in harness between ECM and exhaust gas temperature sensor connector.	Go to step **3.**
3	**CHECK HARNESS BETWEEN EXHAUST GAS TEMPERATURE SENSOR AND ECM CONNECTOR.** 1) Turn the ignition switch to ON. 2) Measure the voltage between exhaust gas temperature sensor connector and engine ground. ***Connector & terminal*** ***(B392) No. 1 (+) — Engine ground (−):***	Is the voltage more than 10 V?	Repair the battery short circuit in harness between ECM and exhaust gas temperature sensor connector.	Go to step **4.**
4	**CHECK HARNESS BETWEEN EXHAUST GAS TEMPERATURE SENSOR AND ECM CONNECTOR.** Measure the voltage between exhaust gas temperature sensor connector and engine ground. ***Connector & terminal*** ***(B392) No. 1 (+) — Engine ground (−):***	Is the voltage more than 4 V?	Go to step **5.**	Repair the harness and connector. NOTE: In this case, repair the following: • Open circuit in harness between ECM and exhaust gas temperature sensor connector • Poor contact in exhaust gas temperature sensor connector • Poor contact in ECM connector • Poor contact in joint connector

	Step	Check	Yes	No
5	**CHECK HARNESS BETWEEN EXHAUST GAS TEMPERATURE SENSOR AND ECM CONNECTOR.** 1) Turn the ignition switch to OFF. 2) Measure the resistance of harness between exhaust gas temperature sensor connector and engine ground. ***Connector & terminal*** ***(B392) No. 2 — Engine ground:***	Is the resistance less than 5 Ω?	Replace the exhaust gas temperature sensor. <Ref. to FU(H4DOTC)-38, Exhaust Temperature Sensor.>	Repair the harness and connector. NOTE: In this case, repair the following: • Open circuit in harness between ECM and exhaust gas temperature sensor connector • Poor contact in exhaust gas temperature sensor connector • Poor contact in ECM connector • Poor contact in joint connector

BW:DTC P0600 SERIAL COMMUNICATION LINK

NOTE:
For the diagnostic procedure, refer to LAN system.

BX:DTC P0604 INTERNAL CONTROL MODULE RANDOM ACCESS MEMORY (RAM) ERROR

NOTE:
For the diagnostic procedure, refer to DTC P0607. <Ref. to EN(H4DOTC)(diag)-228, DTC P0607 CONTROL MODULE PERFORMANCE, Diagnostic Procedure with Diagnostic Trouble Code (DTC).>

BY:DTC P0605 INTERNAL CONTROL MODULE READ ONLY MEMORY (ROM) ERROR

NOTE:
For the diagnostic procedure, refer to DTC P0607. <Ref. to EN(H4DOTC)(diag)-228, DTC P0607 CONTROL MODULE PERFORMANCE, Diagnostic Procedure with Diagnostic Trouble Code (DTC).>

BZ:DTC P0607 CONTROL MODULE PERFORMANCE

DTC DETECTING CONDITION:

- Detect as soon as the malfunction occurs.
- GENERAL DESCRIPTION <Ref. to GD(H4DOTC)-171, DTC P0607 CONTROL MODULE PERFORMANCE, Diagnostic Trouble Code (DTC) Detecting Criteria.>

TROUBLE SYMPTOM:

- Erroneous idling
- Poor driving performance

CAUTION:
After repair or replacement of faulty parts, conduct Clear Memory Mode <Ref. to EN(H4DOTC)(diag)-45, OPERATION, Clear Memory Mode.> and Inspection Mode <Ref. to EN(H4DOTC)(diag)-36, PROCEDURE, Inspection Mode.>.

WIRING DIAGRAM:

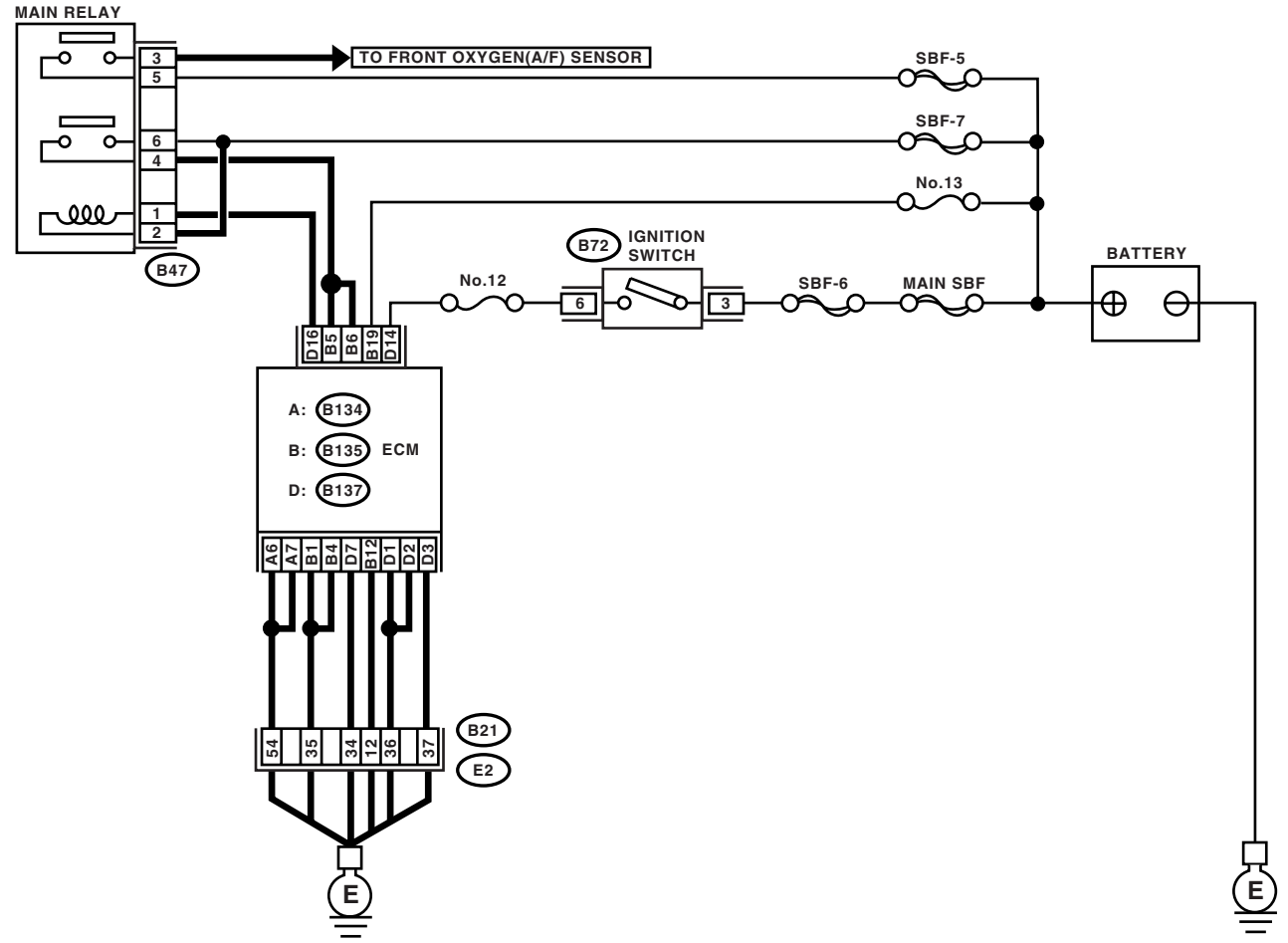

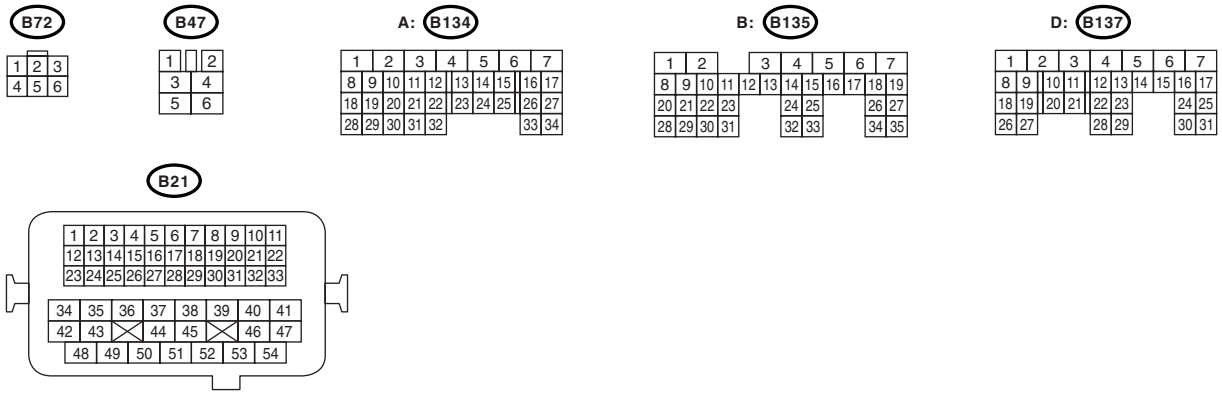

EN-03162

	Step	Check	Yes	No
1	**CHECK INPUT VOLTAGE OF ECM.** 1) Turn the ignition switch to ON. 2) Measure the voltage between ECM connector and chassis ground. ***Connector & terminal*** ***(B135) No. 5 (+) — Chassis ground (−):*** ***(B135) No. 6 (+) — Chassis ground (−):***	Is the voltage 10 — 13 V?	Go to step **2.**	Repair the open or ground short circuit of power supply circuit.
2	**CHECK INPUT VOLTAGE OF ECM.** 1) Start the engine. 2) Measure the voltage between ECM connector and chassis ground. ***Connector & terminal*** ***(B135) No. 5 (+) — Chassis ground (−):*** ***(B135) No. 6 (+) — Chassis ground (−):***	Is the voltage 13 — 15 V?	Go to step **3.**	Repair the open or ground short circuit of power supply circuit.
3	**CHECK ECM GROUND HARNESS.** Measure the voltage between ECM connector and chassis ground. ***Connector & terminal*** ***(B137) No. 1 (+) — Chassis ground (−):*** ***(B137) No. 2 (+) — Chassis ground (−):***	Is the voltage less than 1 V?	Repair the poor contact in ECM connector. Replace the ECM if defective. <Ref. to FU(H4DOTC)-39, Engine Control Module (ECM).>	Further tighten the engine ground terminal.

CA:DTC P0638 THROTTLE ACTUATOR CONTROL RANGE/PERFORMANCE (BANK 1)

NOTE:
For diagnostic procedure, refer to DTC P2101. <Ref. to EN(H4DOTC)(diag)-300, DTC P2101 THROTTLE ACTUATOR CONTROL MOTOR CIRCUIT RANGE/PERFORMANCE, Diagnostic Procedure with Diagnostic Trouble Code (DTC).>

CB:DTC P0691 COOLING FAN 1 CONTROL CIRCUIT LOW

DTC DETECTING CONDITION:

- Two consecutive driving cycles with fault
- GENERAL DESCRIPTION <Ref. to GD(H4DOTC)-177, DTC P0691 COOLING FAN 1 CONTROL CIRCUIT LOW, Diagnostic Trouble Code (DTC) Detecting Criteria.>

TROUBLE SYMPTOM:

- Radiator fan does not operate properly.
- Overheating

CAUTION:
After repair or replacement of faulty parts, conduct Clear Memory Mode <Ref. to EN(H4DOTC)(diag)-45, OPERATION, Clear Memory Mode.> and Inspection Mode <Ref. to EN(H4DOTC)(diag)-36, PROCEDURE, Inspection Mode.>.

	Step	Check	Yes	No
1	**CHECK FOR ANY OTHER DTC ON DISPLAY.**	Is DTC P0691 displayed on the Subaru Select Monitor?	Check the radiator fan relay. <Ref. to CO(H4DOTC)-8, Radiator Fan System.>	Temporary poor contact occurs.

CC:DTC P0692 COOLING FAN 1 CONTROL CIRCUIT HIGH

DTC DETECTING CONDITION:

- Two consecutive driving cycles with fault
- GENERAL DESCRIPTION <Ref. to GD(H4DOTC)-178, DTC P0692 COOLING FAN 1 CONTROL CIRCUIT HIGH, Diagnostic Trouble Code (DTC) Detecting Criteria.>

TROUBLE SYMPTOM:

- Radiator fan does not operate properly.
- Overheating

CAUTION:
After repair or replacement of faulty parts, conduct Clear Memory Mode <Ref. to EN(H4DOTC)(diag)-45, OPERATION, Clear Memory Mode.> and Inspection Mode <Ref. to EN(H4DOTC)(diag)-36, PROCEDURE, Inspection Mode.>.

	Step	Check	Yes	No
1	**CHECK FOR ANY OTHER DTC ON DISPLAY.**	Is DTC P0692 displayed on the Subaru Select Monitor?	Check the radiator fan relay. <Ref. to CO(H4DOTC)-8, Radiator Fan System.>	Temporary poor contact occurs.

CD:DTC P0700 TRANSMISSION CONTROL SYSTEM (MIL REQUEST)

NOTE:
For the diagnostic procedure, refer to AT section. <Ref. to 5AT(diag)-2, Basic Diagnostic Procedure.>

CE:DTC P0851 NEUTRAL SWITCH INPUT CIRCUIT LOW

NOTE:
For the diagnostic procedure, refer to AT section. <Ref. to 5AT(diag)-2, Basic Diagnostic Procedure.>

CF:DTC P0852 NEUTRAL SWITCH INPUT CIRCUIT HIGH

NOTE:
For the diagnostic procedure, refer to AT section. <Ref. to 5AT(diag)-2, Basic Diagnostic Procedure.>

CG:DTC P1152 O2 SENSOR CIRCUIT RANGE/PERFORMANCE (LOW) (BANK1 SENSOR1)

DTC DETECTING CONDITION:

- Two consecutive driving cycles with fault
- GENERAL DESCRIPTION <Ref. to GD(H4DOTC)-184, DTC P1152 O2 SENSOR CIRCUIT RANGE/ PERFORMANCE (LOW) (BANK1 SENSOR1), Diagnostic Trouble Code (DTC) Detecting Criteria.>

CAUTION:

After repair or replacement of faulty parts, conduct Clear Memory Mode <Ref. to EN(H4DOTC)(diag)-45, OPERATION, Clear Memory Mode.> and Inspection Mode <Ref. to EN(H4DOTC)(diag)-36, PROCEDURE, Inspection Mode.>.

WIRING DIAGRAM:

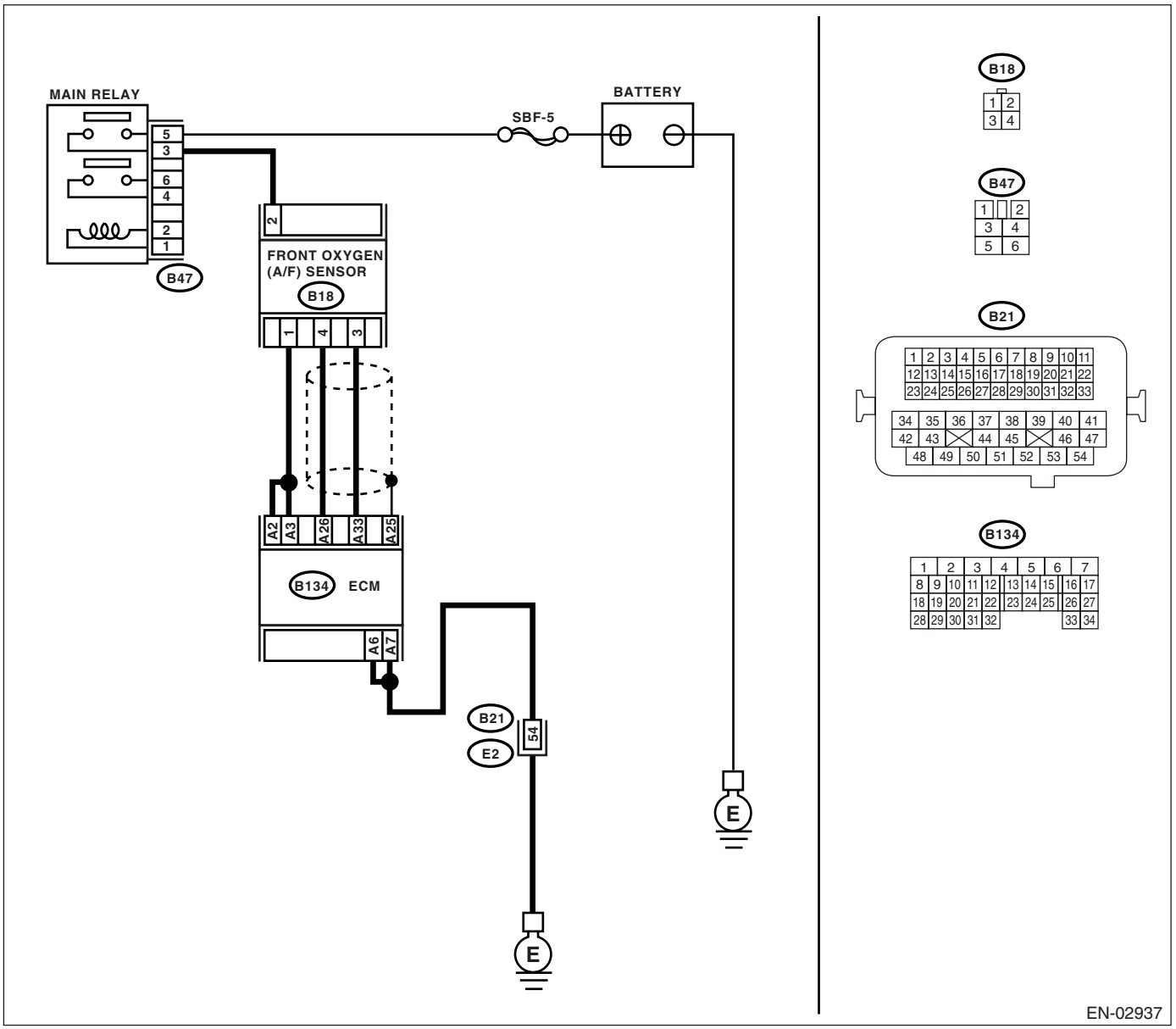

	Step	Check	Yes	No
1	**CHECK HARNESS BETWEEN ECM AND FRONT OXYGEN (A/F) SENSOR CONNECTOR.** 1) Turn the ignition switch to OFF. 2) Disconnect the connectors from ECM and front oxygen (A/F) sensor connector. 3) Measure the resistance of harness between ECM and front oxygen (A/F) sensor connector. ***Connector & terminal*** ***(B134) No. 26 — (B18) No. 4:*** ***(B134) No. 33 — (B18) No. 3:***	Is the measured value less than 1 Ω?	Go to step **2.**	Repair the harness and connector. NOTE: In this case, repair the following: • Open circuit in harness between ECM and front oxygen (A/F) sensor connector • Poor contact in front oxygen (A/F) sensor connector • Poor contact in ECM connector
2	**CHECK POOR CONTACT.** Check poor contact in front oxygen (A/F) sensor connector.	Is there poor contact in front oxygen (A/F) sensor connector?	Repair the poor contact in front oxygen (A/F) sensor connector.	Replace the front oxygen (A/F) sensor. <Ref. to FU(H4DOTC)-35, Front Oxygen (A/F) Sensor.>

CH:DTC P1153 O2 SENSOR CIRCUIT RANGE/PERFORMANCE (HIGH) (BANK1 SENSOR1)

DTC DETECTING CONDITION:

- Two consecutive driving cycles with fault
- GENERAL DESCRIPTION <Ref. to GD(H4DOTC)-187, DTC P1153 O2 SENSOR CIRCUIT RANGE/ PERFORMANCE (HIGH) (BANK1 SENSOR1), Diagnostic Trouble Code (DTC) Detecting Criteria.>

CAUTION:

After repair or replacement of faulty parts, conduct Clear Memory Mode <Ref. to EN(H4DOTC)(diag)-45, OPERATION, Clear Memory Mode.> and Inspection Mode <Ref. to EN(H4DOTC)(diag)-36, PROCEDURE, Inspection Mode.>.

WIRING DIAGRAM:

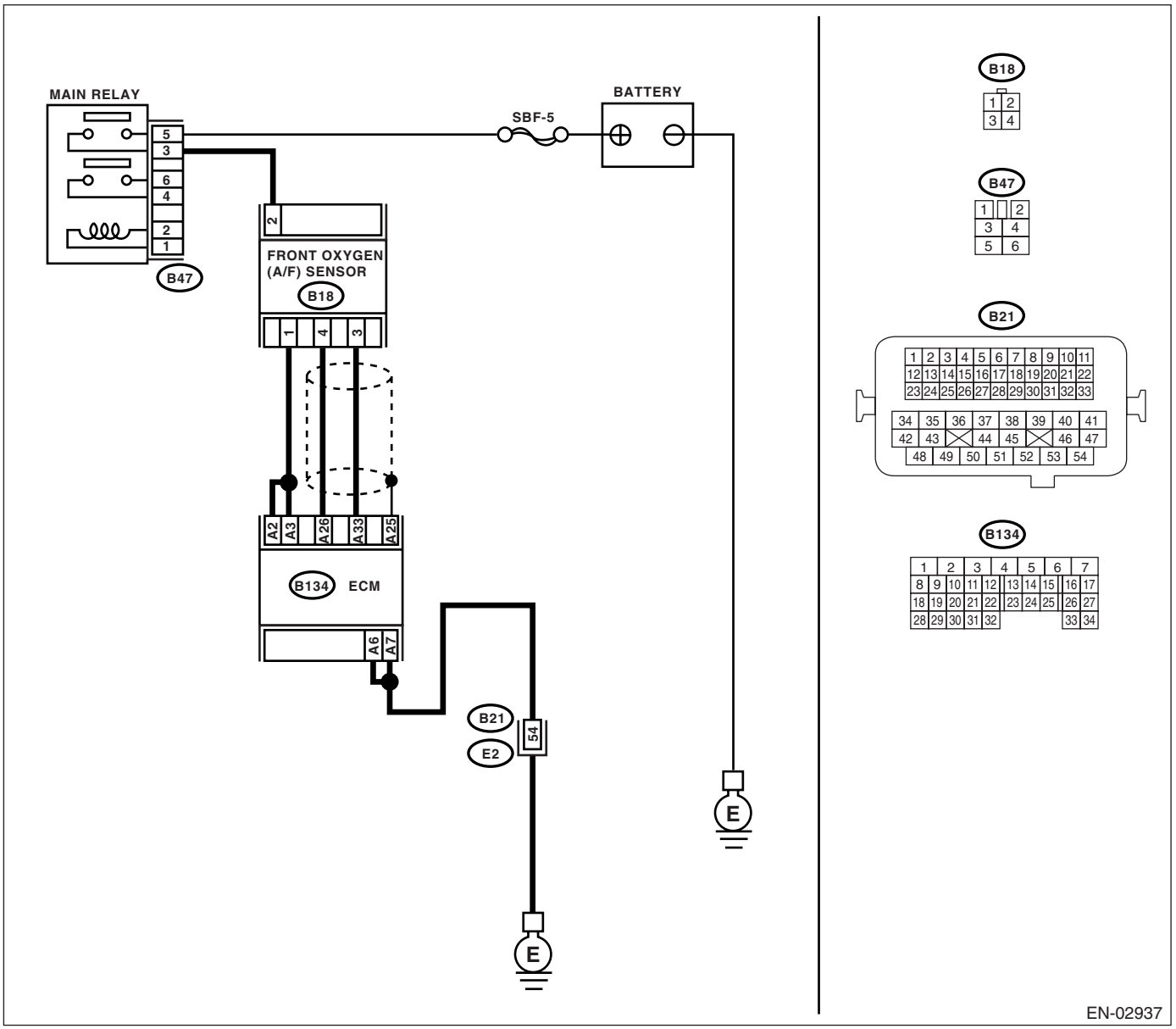

	Step	Check	Yes	No
1	**CHECK HARNESS BETWEEN ECM AND FRONT OXYGEN (A/F) SENSOR CONNECTOR.** 1) Turn the ignition switch to OFF. 2) Disconnect the connector from ECM. 3) Measure the resistance of harness between ECM connector and chassis ground. ***Connector & terminal*** ***(B134) No. 26 — Chassis ground:***	Is the measured value more than 1 MΩ?	Repair the ground short circuit in harness between ECM and front oxygen (A/F) sensor connector.	Go to step **2.**
2	**CHECK HARNESS BETWEEN ECM AND FRONT OXYGEN (A/F) SENSOR CONNECTOR.** Measure the resistance of harness between ECM connector and chassis ground. ***Connector & terminal*** ***(B134) No. 33 — Chassis ground:***	Is the measured value more than 1 MΩ?	Repair the ground short circuit in harness between ECM and front oxygen (A/F) sensor connector.	Go to step **3.**
3	**CHECK OUTPUT SIGNAL FOR ECM.** 1) Connect the connector to ECM. 2) Turn the ignition switch to ON. 3) Measure the voltage between ECM connector and chassis ground. ***Connector & terminal*** ***(B134) No. 26 (+) — Chassis ground (−):***	Is the measured value more than 4.5 V?	Go to step **4.**	Go to step **5.**
4	**CHECK OUTPUT SIGNAL FOR ECM.** Measure the voltage between ECM connector and chassis ground. ***Connector & terminal*** ***(B134) No. 26 (+) — Chassis ground (−):***	Is the measured value more than 10 V?	Repair the battery short circuit in harness between ECM and front oxygen (A/F) sensor connector. After repair, replace the ECM. <Ref. to FU(H4DOTC)-39, Engine Control Module (ECM).>	Repair the poor contact in ECM connector.
5	**CHECK OUTPUT SIGNAL FOR ECM.** Measure the voltage between ECM connector and chassis ground. ***Connector & terminal*** ***(B134) No. 33 (+) — Chassis ground (−):***	Is the measured value more than 4.95 V?	Go to step **6.**	Replace the front oxygen (A/F) sensor. <Ref. to FU(H4DOTC)-35, Front Oxygen (A/F) Sensor.>
6	**CHECK OUTPUT SIGNAL FOR ECM.** Measure the voltage between ECM connector and chassis ground. ***Connector & terminal*** ***(B134) No. 33 (+) — Chassis ground (−):***	Is the measured value more than 10 V?	Repair the battery short circuit in harness between ECM and front oxygen (A/F) sensor connector. After repair, replace the ECM. <Ref. to FU(H4DOTC)-39, Engine Control Module (ECM).>	Repair the poor contact in ECM connector.

CI: DTC P1160 RETURN SPRING FAILURE

NOTE:
For diagnostic procedure, refer to DTC P2101. <Ref. to EN(H4DOTC)(diag)-300, DTC P2101 THROTTLE ACTUATOR CONTROL MOTOR CIRCUIT RANGE/PERFORMANCE, Diagnostic Procedure with Diagnostic Trouble Code (DTC).>

CJ:DTC P1301 MISFIRE DETECTED (HIGH TEMPERATURE EXHAUST GAS)

DTC DETECTING CONDITION:

- Detect as soon as malfunction occurs.
- GENERAL DESCRIPTION <Ref. to GD(H4DOTC)-192, DTC P1301 MISFIRE DETECTED (HIGH TEMPERATURE EXHAUST GAS), Diagnostic Trouble Code (DTC) Detecting Criteria.>

TROUBLE SYMPTOM:

- Erroneous idling
- Engine stalls.
- Poor driving performance

CAUTION:

After repair or replacement of faulty parts, conduct Clear Memory Mode <Ref. to EN(H4DOTC)(diag)-45, OPERATION, Clear Memory Mode.> and Inspection Mode <Ref. to EN(H4DOTC)(diag)-36, PROCEDURE, Inspection Mode.>.

WIRING DIAGRAM:

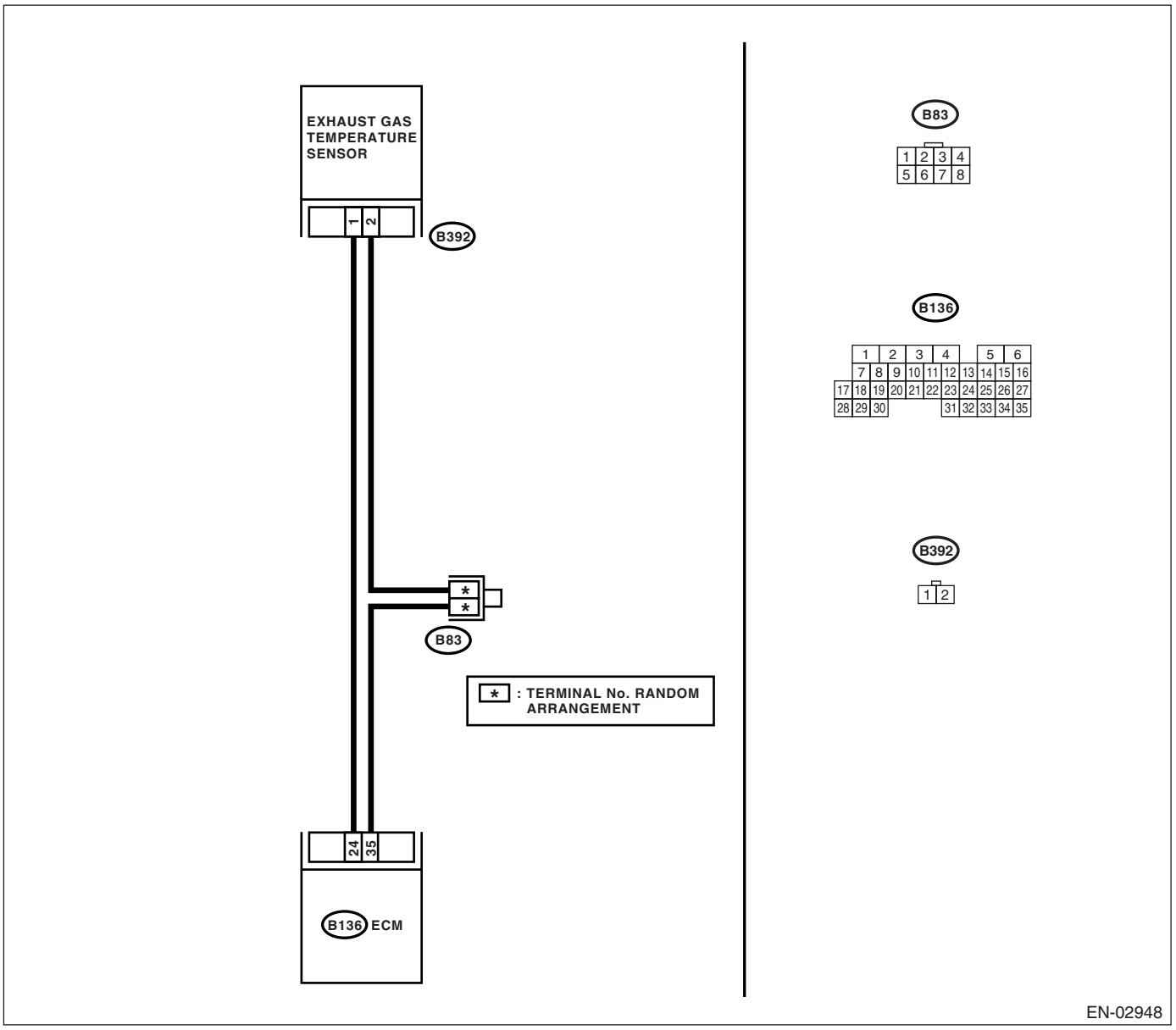

	Step	Check	Yes	No
1	**CHECK DTC.** Conduct the troubleshooting for all DTC P0301, P0302, P0303 and P0304. <Ref. to EN(H4DOTC)(diag)-71, List of Diagnostic Trouble Code (DTC).>	Is there any failure for repair or replacement exist?	Repair or replace the faulty part, then replace pre-catalytic converter.	Contact your SOA Service Center.

CK:DTC P1312 EXHAUST GAS TEMPERATURE SENSOR MALFUNCTION

DTC DETECTING CONDITION:

- Detect as soon as malfunction occurs.
- GENERAL DESCRIPTION <Ref. to GD(H4DOTC)-194, DTC P1312 EXHAUST GAS TEMPERATURE SENSOR MALFUNCTION, Diagnostic Trouble Code (DTC) Detecting Criteria.>

CAUTION:
After repair or replacement of faulty parts, conduct Clear Memory Mode <Ref. to EN(H4DOTC)(diag)-45, OPERATION, Clear Memory Mode.> and Inspection Mode <Ref. to EN(H4DOTC)(diag)-36, PROCEDURE, Inspection Mode.>.

WIRING DIAGRAM:

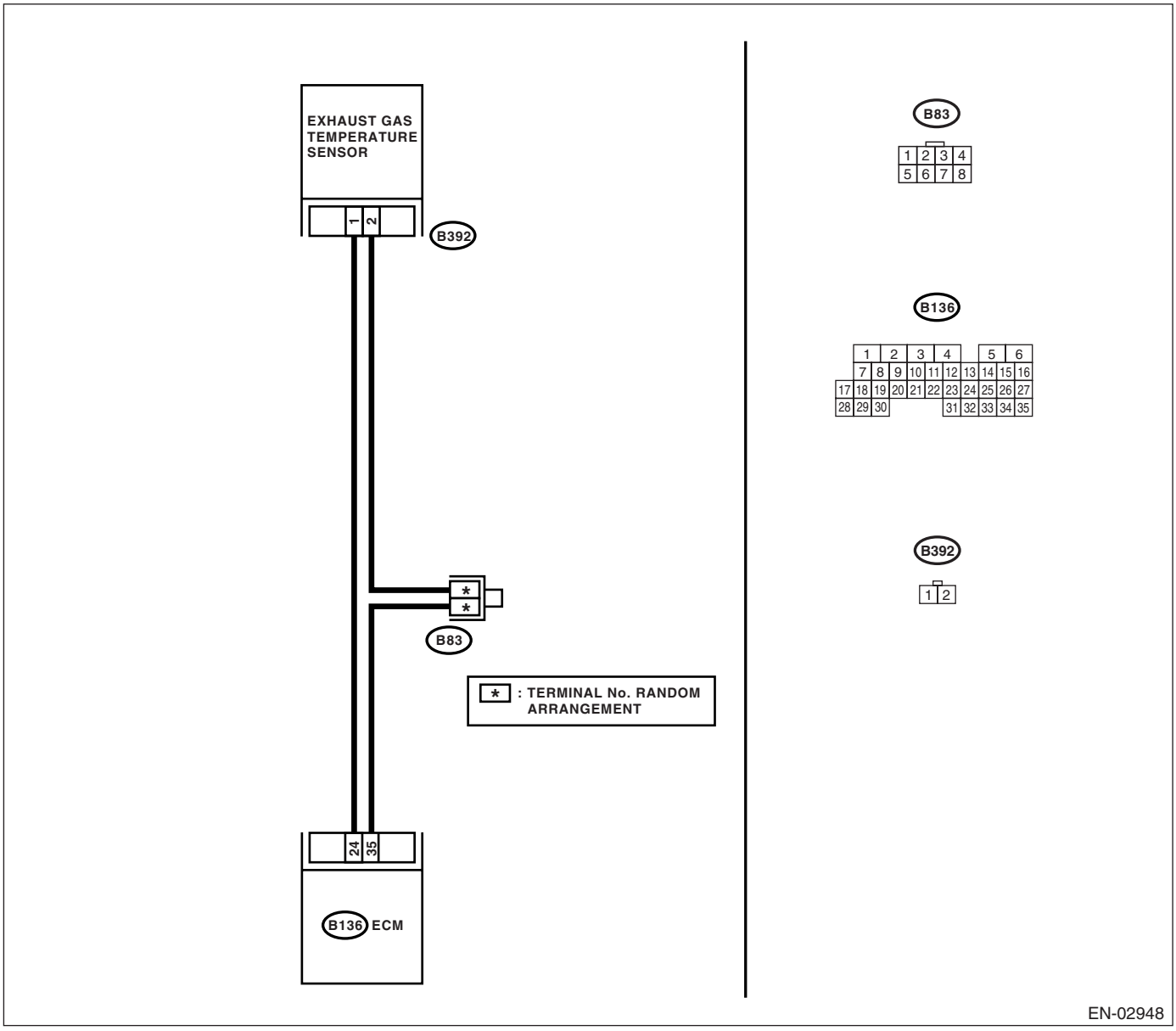

	Step	Check	Yes	No
1	**CHECK FOR ANY OTHER DTC ON DISPLAY.**	Is any other DTC displayed?	Inspect the relevant DTC using "List of Diagnostic Trouble Code (DTC)". <Ref. to EN(H4DOTC)(diag)-71, List of Diagnostic Trouble Code (DTC).> NOTE: In this case, it is not necessary to inspect DTC P1312.	Replace the exhaust gas temperature sensor. <Ref. to FU(H4DOTC)-38, Exhaust Temperature Sensor.>

CL:DTC P1400 FUEL TANK PRESSURE CONTROL SOLENOID VALVE CIRCUIT LOW

DTC DETECTING CONDITION:

- Two consecutive driving cycles with fault
- GENERAL DESCRIPTION <Ref. to GD(H4DOTC)-195, DTC P1400 FUEL TANK PRESSURE CONTROL SOLENOID VALVE CIRCUIT LOW, Diagnostic Trouble Code (DTC) Detecting Criteria.>

CAUTION:

After repair or replacement of faulty parts, conduct Clear Memory Mode <Ref. to EN(H4DOTC)(diag)-45, OPERATION, Clear Memory Mode.> and Inspection Mode <Ref. to EN(H4DOTC)(diag)-36, PROCEDURE, Inspection Mode.>.

WIRING DIAGRAM:

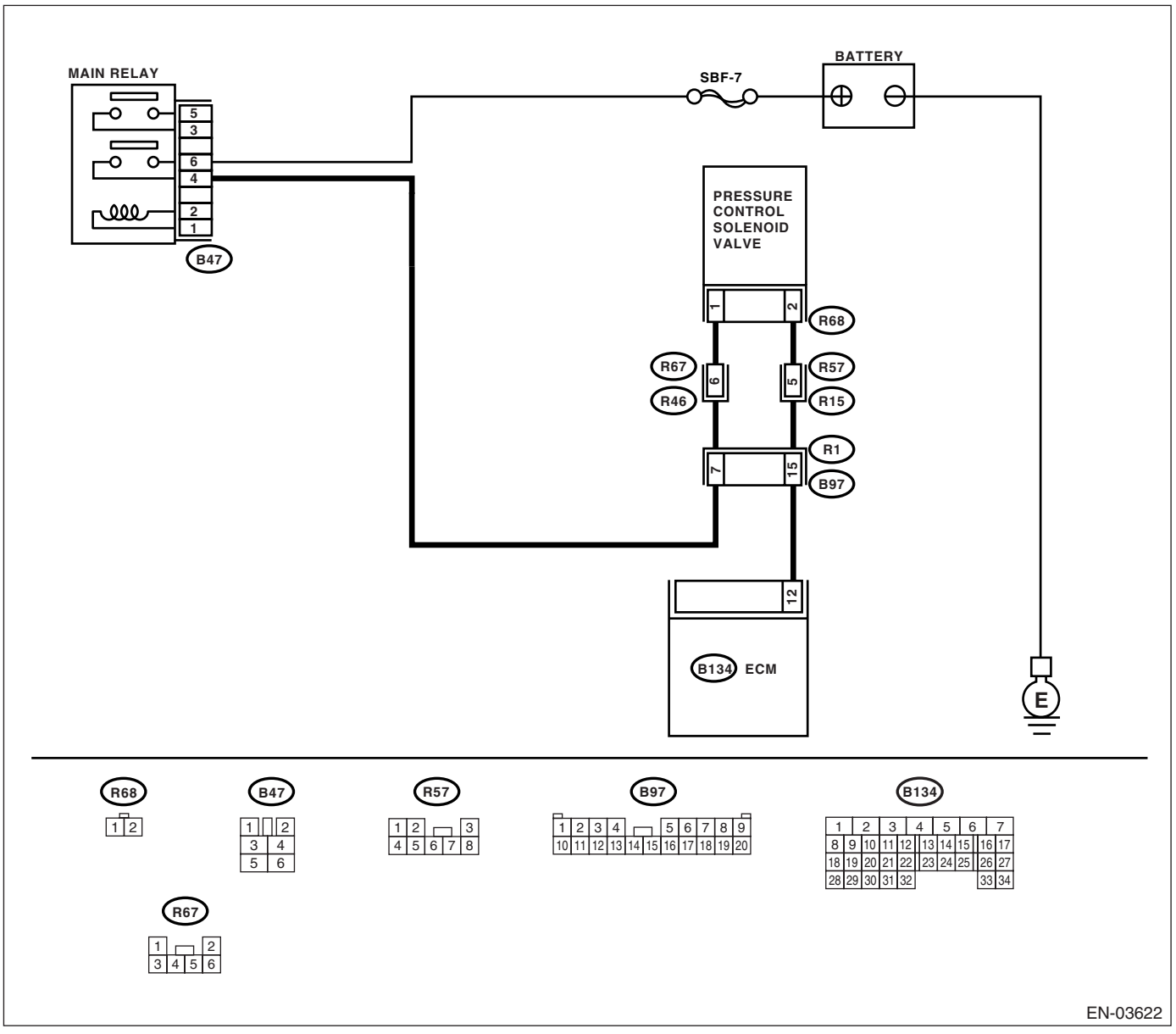

	Step	Check	Yes	No
1	**CHECK OUTPUT SIGNAL FROM ECM.** 1) Turn the ignition switch to ON. 2) Measure the voltage between ECM and chassis ground. ***Connector & terminal*** ***(B134) No. 12 (+) — Chassis ground (−):***	Is the voltage more than 10 V?	Go to step **2.**	Go to step **3.**
2	**CHECK POOR CONTACT.** Check poor contact in ECM connector.	Is there poor contact in ECM connector?	Repair poor contact in ECM connector.	Contact with SOA Service Center.
3	**CHECK HARNESS BETWEEN PRESSURE CONTROL SOLENOID VALVE AND ECM CONNECTOR.** 1) Turn the ignition switch to OFF. 2) Disconnect the connectors from pressure control solenoid valve and ECM. 3) Measure the resistance of harness between pressure control solenoid valve connector and chassis ground. ***Connector & terminal*** ***(R68) No. 2 — Chassis ground:***	Is the resistance more than 1 MΩ?	Go to step **4.**	Repair short circuit to ground in harness between ECM and pressure control solenoid valve connector.
4	**CHECK HARNESS BETWEEN PRESSURE CONTROL SOLENOID VALVE AND ECM CONNECTOR.** Measure the resistance of harness between ECM and pressure control solenoid valve connector. ***Connector & terminal*** ***(B134) No. 12 — (R68) No. 2:***	Is the resistance less than 1 Ω?	Go to step **5.**	Repair harness and connector. NOTE: In this case, repair the following: • Open circuit in harness between ECM and pressure control solenoid valve connector • Poor contact in coupling connector
5	**CHECK PRESSURE CONTROL SOLENOID VALVE.** Measure the resistance between pressure control solenoid valve terminals. ***Terminals*** ***No. 1 — No. 2:***	Is the resistance 10 — 100 Ω?	Go to step **6.**	Replace the pressure control solenoid valve. <Ref. to EC(H4DOTC)-13, Pressure Control Solenoid Valve.>
6	**CHECK POWER SUPPLY TO PRESSURE CONTROL SOLENOID VALVE.** 1) Turn the ignition switch to ON. 2) Measure the voltage between pressure control solenoid valve and chassis ground. ***Connector & terminal*** ***(R68) No. 1 (+) — Chassis ground (−):***	Is the voltage more than 10 V?	Go to step **7.**	Repair harness and connector. NOTE: In this case, repair the following: • Open circuit in harness between main relay and pressure control solenoid valve connector • Poor contact in coupling connector • Poor contact in main relay connector
7	**CHECK POOR CONTACT.** Check poor contact in pressure control solenoid valve connector.	Is there poor contact in pressure control solenoid valve connector?	Repair poor contact in pressure control solenoid valve connector.	Contact with SOA Service Center.

CM:DTC P1420 FUEL TANK PRESSURE CONTROL SOL. VALVE CIRCUIT HIGH

DTC DETECTING CONDITION:

- Two consecutive driving cycles with fault
- GENERAL DESCRIPTION <Ref. to GD(H4DOTC)-197, DTC P1420 FUEL TANK PRESSURE CONTROL SOL. VALVE CIRCUIT HIGH, Diagnostic Trouble Code (DTC) Detecting Criteria.>

CAUTION:
After repair or replacement of faulty parts, conduct Clear Memory Mode <Ref. to EN(H4DOTC)(diag)-45, OPERATION, Clear Memory Mode.> and Inspection Mode <Ref. to EN(H4DOTC)(diag)-36, PROCEDURE, Inspection Mode.>.

WIRING DIAGRAM:

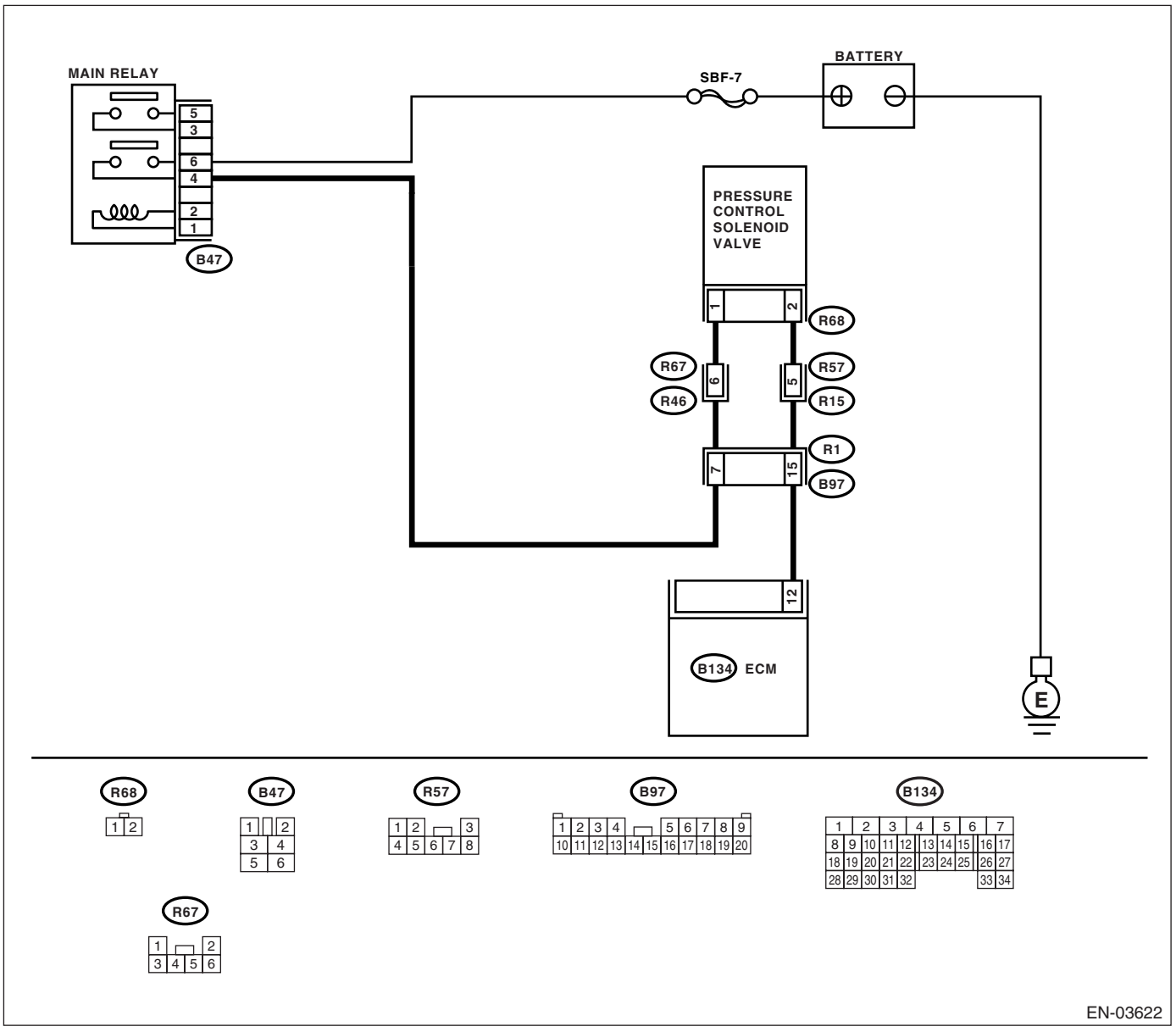

	Step	Check	Yes	No
1	**CHECK INPUT SIGNAL FOR ECM.** 1) Turn the ignition switch to OFF. 2) Connect the test mode connector at the lower portion of instrument panel (on the driver's side). 3) Turn the ignition switch to ON. 4) While operating the pressure control solenoid valve, measure voltage between ECM and chassis ground. NOTE: Pressure control solenoid valve operation can be executed using Subaru Select Monitor. For the procedure, refer to "Compulsory Valve Operation Check Mode". <Ref. to EN(H4DOTC)(diag)-46, Compulsory Valve Operation Check Mode.> ***Connector & terminal*** ***(B134) No. 12 (+) — Chassis ground (–):***	Does the voltage change 0 — 10 V?	Go to step **2.**	The malfunction indicator light may light up, however, the circuit is returned to the normal status at the moment. In this case, repair poor contact in ECM connector.
2	**CHECK INPUT SIGNAL FOR ECM.** 1) Turn the ignition switch to ON. 2) Measure the voltage between ECM and chassis ground. ***Connector & terminal*** ***(B134) No. 12 (+) — Chassis ground (–):***	Is the voltage more than 10 V?	Go to step **4.**	Go to step **3.**
3	**CHECK POOR CONTACT.** Check poor contact in ECM connector.	Is there poor contact in ECM connector?	Repair poor contact in ECM connector.	Replace the ECM. <Ref. to FU(H4DOTC)-39, Engine Control Module (ECM).>
4	**CHECK HARNESS BETWEEN PRESSURE CONTROL SOLENOID VALVE AND ECM CONNECTOR.** 1) Turn the ignition switch to OFF. 2) Disconnect the connector from pressure control solenoid valve. 3) Turn the ignition switch to ON. 4) Measure the voltage between ECM and chassis ground. ***Connector & terminal*** ***(B134) No. 12 (+) — Chassis ground (–):***	Is the voltage more than 10 V?	Repair short circuit to battery in harness between ECM and pressure control solenoid valve connector. After repair, replace the ECM. <Ref. to FU(H4DOTC)-39, Engine Control Module (ECM).>	Go to step **5.**
5	**CHECK PRESSURE CONTROL SOLENOID VALVE.** 1) Turn the ignition switch to OFF. 2) Measure the resistance between pressure control solenoid valve terminals. ***Terminals*** ***No. 1 — No. 2:***	Is the resistance less than 1 Ω?	Replace the pressure control solenoid valve <Ref. to EC(H4DOTC)-13, Pressure Control Solenoid Valve.> and the ECM <Ref. to FU(H4DOTC)-39, Engine Control Module (ECM).> .	Go to step **6.**
6	**CHECK POOR CONTACT.** Check poor contact in ECM connector.	Is there poor contact in ECM connector?	Repair poor contact in ECM connector.	Replace the ECM. <Ref. to FU(H4DOTC)-39, Engine Control Module (ECM).>

CN:DTC P1443 VENT CONTROL SOLENOID VALVE FUNCTION PROBLEM

DTC DETECTING CONDITION:

- Detect as soon as malfunction occurs.
- GENERAL DESCRIPTION <Ref. to GD(H4DOTC)-199, DTC P1443 VENT CONTROL SOLENOID VALVE FUNCTION PROBLEM, Diagnostic Trouble Code (DTC) Detecting Criteria.>

TROUBLE SYMPTOM:

Improper fuel supply

CAUTION:

After repair or replacement of faulty parts, conduct Clear Memory Mode <Ref. to EN(H4DOTC)(diag)-45, OPERATION, Clear Memory Mode.> and Inspection Mode <Ref. to EN(H4DOTC)(diag)-36, PROCEDURE, Inspection Mode.>.

WIRING DIAGRAM:

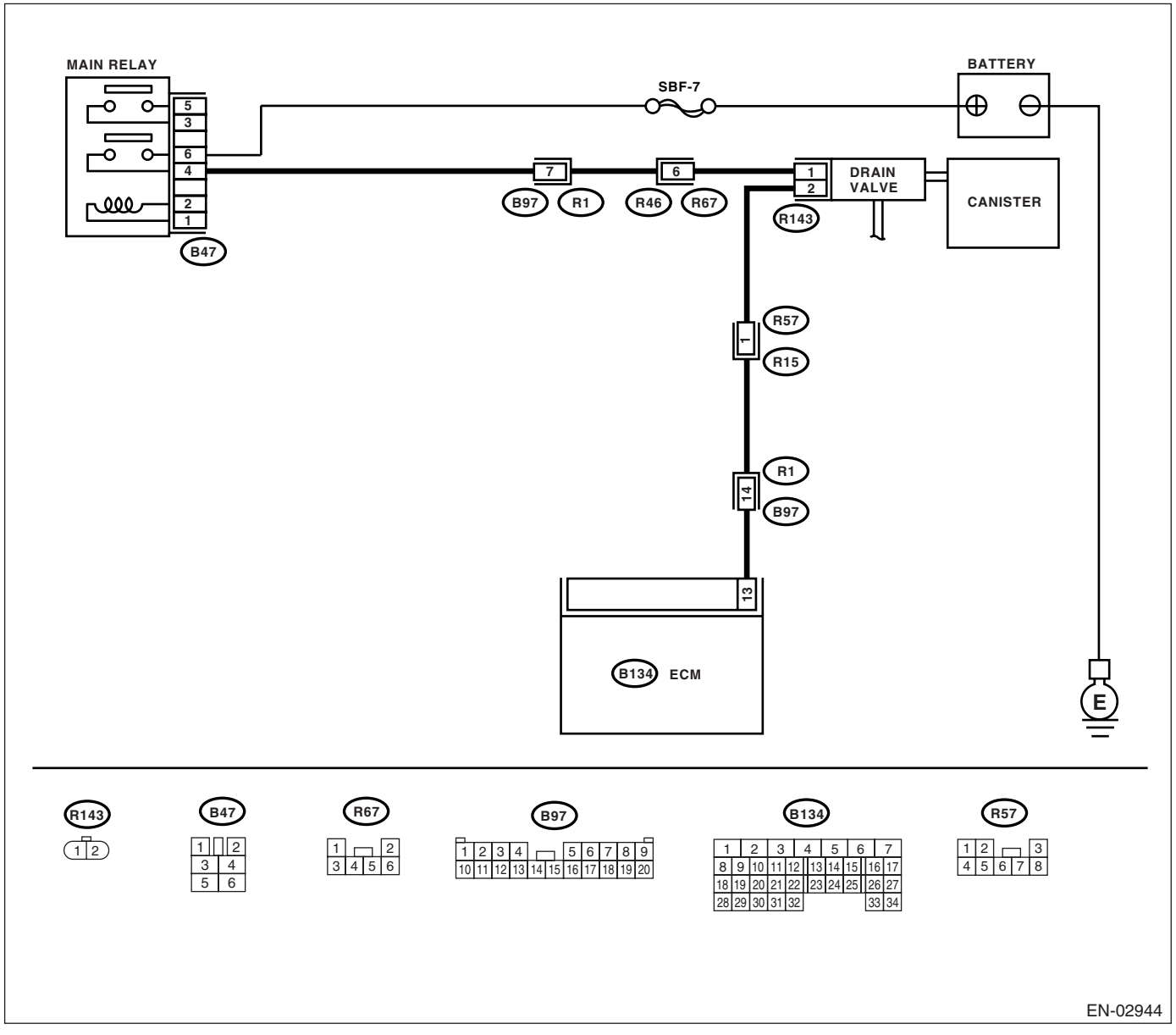

	Step	Check	Yes	No
1	**CHECK FOR ANY OTHER DTC ON DISPLAY.**	Is any other DTC displayed?	Inspect the relevant DTC using "List of Diagnostic Trouble Code (DTC)". <Ref. to EN(H4DOTC)(diag)-71, List of Diagnostic Trouble Code (DTC).>	Go to step **2.**
2	**CHECK DRAIN HOSE.** Check the drain hose for clogging.	Is there clogging in the drain hose?	Replace the drain hose.	Go to step **3.**
3	**CHECK DRAIN VALVE OPERATION.** 1) Turn the ignition switch to OFF. 2) Connect the test mode connector at the lower portion of instrument panel (on the driver's side). 3) Turn the ignition switch to ON. 4) Operate the drain valve. NOTE: Drain valve operation can also be executed using Subaru Select Monitor. For the procedure, refer to "Compulsory Valve Operation Check Mode". <Ref. to EN(H4DOTC)(diag)-46, Compulsory Valve Operation Check Mode.>	Does the drain valve operate?	Contact with SOA Service Center.	Replace the drain valve. <Ref. to EC(H4DOTC)-16, Drain Valve.>

CO:DTC P1446 FUEL TANK SENSOR CONTROL VALVE CIRCUIT LOW

DTC DETECTING CONDITION:

- Two consecutive driving cycles with fault
- GENERAL DESCRIPTION <Ref. to GD(H4DOTC)-201, DTC P1446 FUEL TANK SENSOR CONTROL VALVE CIRCUIT LOW, Diagnostic Trouble Code (DTC) Detecting Criteria.>

CAUTION:
After repair or replacement of faulty parts, conduct Clear Memory Mode <Ref. to EN(H4DOTC)(diag)-45, OPERATION, Clear Memory Mode.> and Inspection Mode <Ref. to EN(H4DOTC)(diag)-36, PROCEDURE, Inspection Mode.>.

WIRING DIAGRAM:

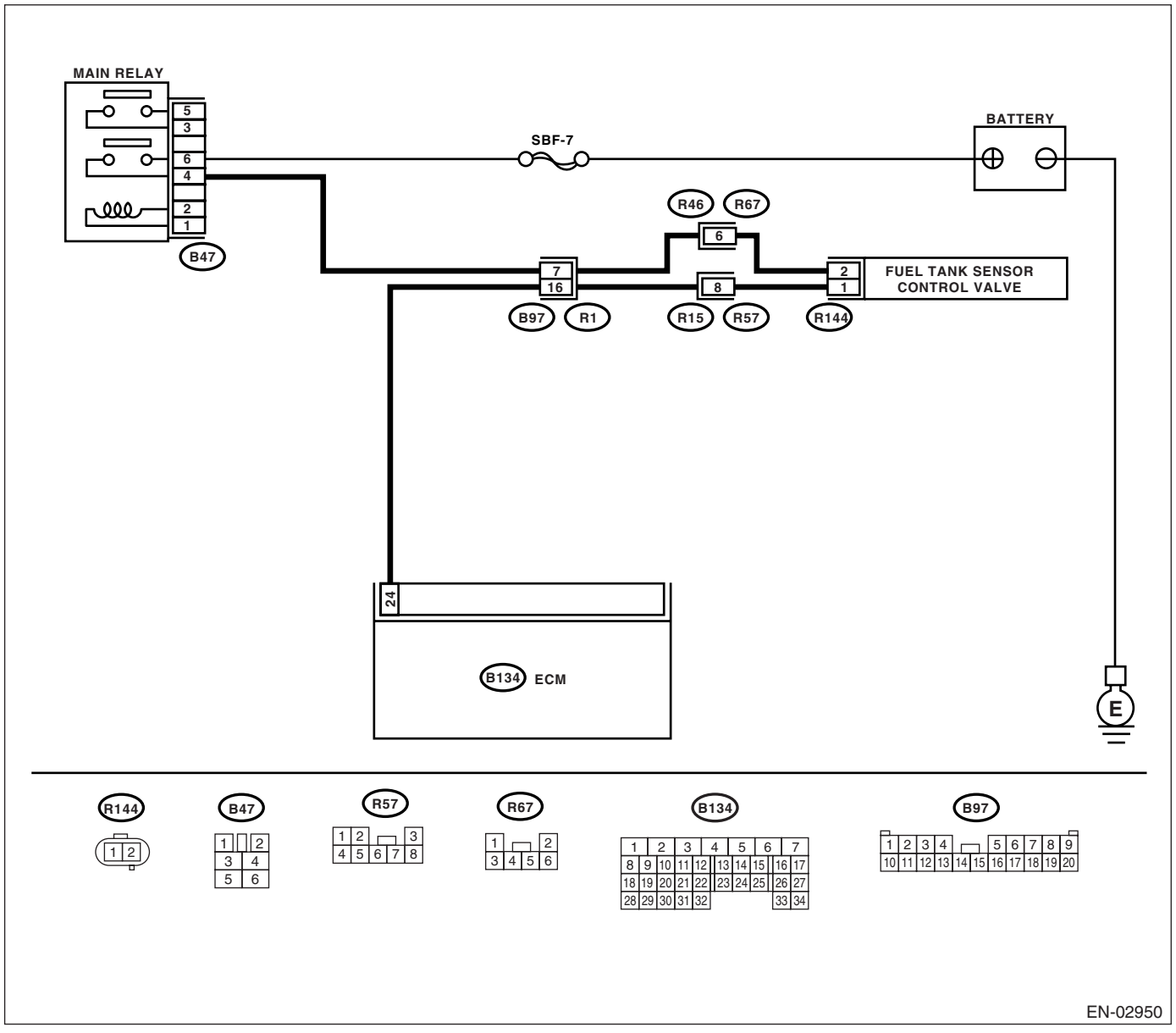

EN-02950

	Step	Check	Yes	No
1	**CHECK OUTPUT SIGNAL FROM ECM.** 1) Turn the ignition switch to ON. 2) Measure the voltage between ECM and chassis ground. ***Connector & terminal*** ***(B134) No. 24 (+) — Chassis ground (−):***	Is the voltage more than 10 V?	Go to step **2.**	Go to step **3.**
2	**CHECK POOR CONTACT.** Check poor contact in ECM connector.	Is there poor contact in ECM connector?	Repair poor contact in ECM connector.	The malfunction indicator light may light up, however, the circuit is returned to the normal status at the moment. (However, the possibility of poor contact still remains.) NOTE: In this case, repair the following: • Poor contact in fuel tank sensor control valve connector • Poor contact in ECM connector • Poor contact in coupling connector
3	**CHECK HARNESS BETWEEN FUEL TANK SENSOR CONTROL VALVE AND ECM CONNECTOR.** 1) Turn the ignition switch to OFF. 2) Disconnect the connectors from fuel tank sensor control valve and ECM. 3) Measure the resistance of harness between fuel tank sensor control valve connector and chassis ground. ***Connector & terminal*** ***(R144) No. 2 — Chassis ground:***	Is the resistance more than 1 MΩ?	Go to step **4.**	Repair short circuit to ground in harness between ECM and fuel tank sensor control valve connector.
4	**CHECK HARNESS BETWEEN FUEL TANK SENSOR CONTROL VALVE AND ECM CONNECTOR.** Measure the resistance of harness between ECM and fuel tank sensor control valve connector. ***Connector & terminal*** ***(B134) No. 24 — (R144) No. 1:***	Is the resistance less than 1 Ω?	Go to step **5.**	Repair harness and connector. NOTE: In this case, repair the following: • Open circuit in harness between ECM and fuel tank sensor control valve connector • Poor contact in coupling connector
5	**CHECK FUEL TANK SENSOR CONTROL VALVE.** Measure the resistance between fuel tank sensor control valve terminals. ***Terminals*** ***No. 1 — No. 2:***	Is the resistance 10 — 100 Ω?	Go to step **6.**	Replace the fuel tank sensor control valve. <Ref. to EC(H4DOTC)-16, Drain Valve.>

	Step	Check	Yes	No
6	**CHECK POWER SUPPLY TO FUEL TANK SENSOR CONTROL VALVE.** 1) Turn the ignition switch to ON. 2) Measure the voltage between fuel tank sensor control valve and chassis ground. ***Connector & terminal*** ***(R144) No. 1 (+) — Chassis ground (−):***	Is the voltage more than 10 V?	Go to step **7.**	Repair harness and connector. NOTE: In this case, repair the following: • Open circuit in harness between main relay and fuel tank sensor control valve • Poor contact in coupling connector • Poor contact in main relay connector
7	**CHECK POOR CONTACT.** Check poor contact in fuel tank sensor control valve connector.	Is there poor contact in fuel tank sensor control valve connector?	Repair poor contact in fuel tank sensor control valve connector.	Contact with SOA Service Center.

CP:DTC P1447 FUEL TANK SENSOR CONTROL VALVE CIRCUIT HIGH

DTC DETECTING CONDITION:

- Two consecutive driving cycles with fault
- GENERAL DESCRIPTION <Ref. to GD(H4DOTC)-203, DTC P1447 FUEL TANK SENSOR CONTROL VALVE CIRCUIT HIGH, Diagnostic Trouble Code (DTC) Detecting Criteria.>

CAUTION:

After repair or replacement of faulty parts, conduct Clear Memory Mode <Ref. to EN(H4DOTC)(diag)-45, OPERATION, Clear Memory Mode.> and Inspection Mode <Ref. to EN(H4DOTC)(diag)-36, PROCEDURE, Inspection Mode.>.

WIRING DIAGRAM:

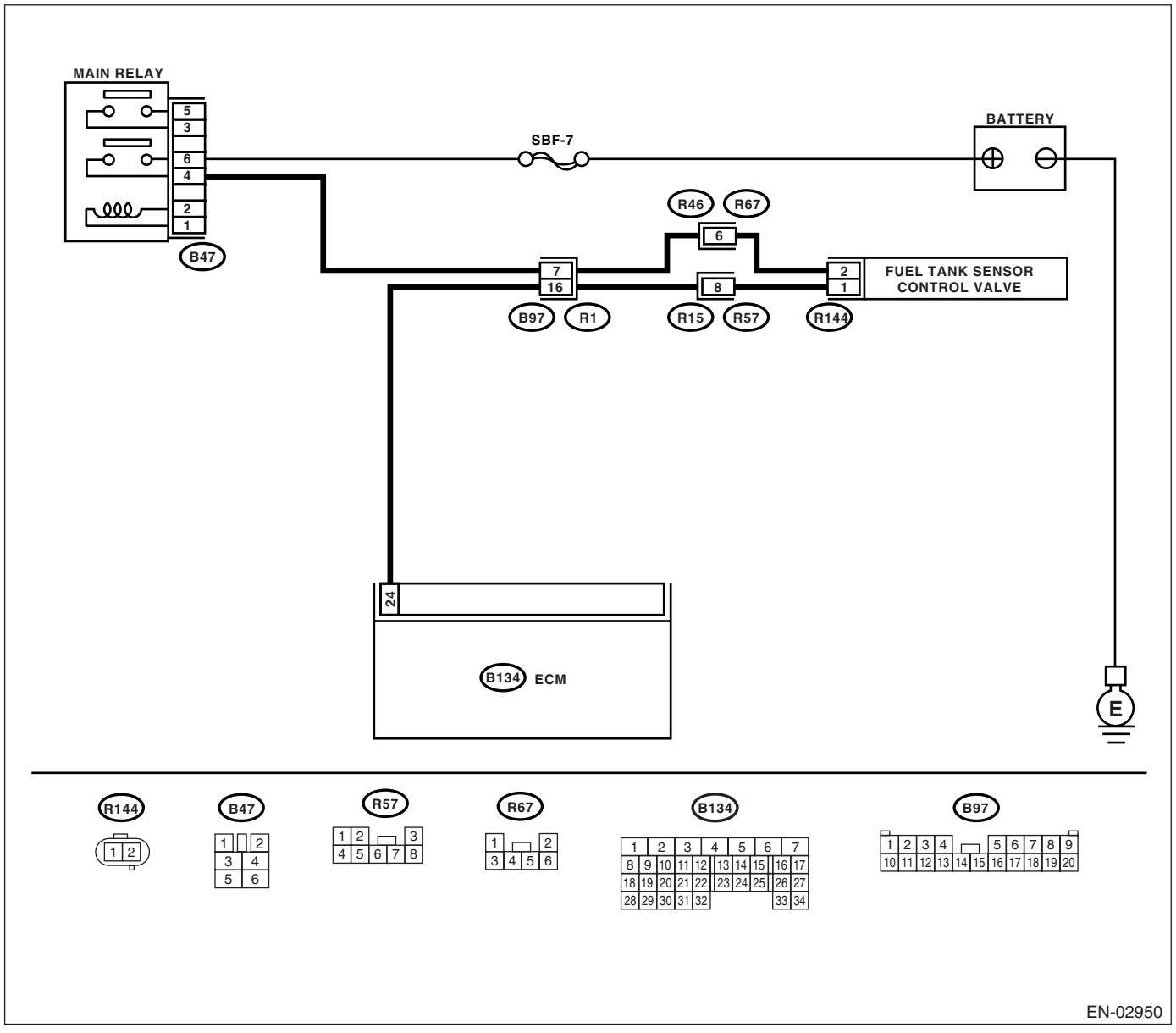

	Step	Check	Yes	No
1	**CHECK OUTPUT SIGNAL FROM ECM.** 1) Turn the ignition switch to ON. 2) Measure the voltage between ECM and chassis ground. ***Connector & terminal*** ***(B134) No. 24 (+) — Chassis ground (−):***	Is the voltage more than 10 V?	Go to step **3.**	Go to step **2.**
2	**CHECK POOR CONTACT.** Check poor contact in ECM connector.	Is there poor contact in ECM connector?	Repair poor contact in ECM connector.	Replace the ECM. <Ref. to FU(H4DOTC)-39, Engine Control Module (ECM).>
3	**CHECK HARNESS BETWEEN FUEL TANK SENSOR CONTROL VALVE AND ECM CONNECTOR.** 1) Turn the ignition switch to OFF. 2) Disconnect the connector from fuel tank sensor control valve. 3) Turn the ignition switch to ON. 4) Measure the voltage between ECM and chassis ground. ***Connector & terminal*** ***(B134) No. 24 (+) — Chassis ground (−):***	Is the voltage more than 10 V?	Repair short circuit to battery in harness between ECM and fuel tank sensor control valve connector. After repair, replace the ECM. <Ref. to FU(H4DOTC)-39, Engine Control Module (ECM).>	Go to step **4.**
4	**CHECK FUEL TANK SENSOR CONTROL VALVE.** 1) Turn the ignition switch to OFF. 2) Measure the resistance between fuel tank sensor control valve terminals. ***Terminals*** ***No. 1 — No. 2:***	Is the resistance less than 1 Ω?	Replace the fuel tank sensor control valve <Ref. to EC(H4DOTC)-12, Fuel Tank Sensor Control Valve.> and the ECM <Ref. to FU(H4DOTC)-39, Engine Control Module (ECM).>.	Go to step **5.**
5	**CHECK POOR CONTACT.** Check poor contact in ECM connector.	Is there poor contact in ECM connector?	Repair poor contact in ECM connector.	Replace the ECM. <Ref. to FU(H4DOTC)-39, Engine Control Module (ECM).>

CQ:DTC P1491 POSITIVE CRANKCASE VENTILATION (BLOW-BY) FUNCTION PROBLEM

DTC DETECTING CONDITION:

- Detect as soon as the malfunction occurs.
- GENERAL DESCRIPTION <Ref. to GD(H4DOTC)-205, DTC P1491 POSITIVE CRANKCASE VENTILATION (BLOW-BY) FUNCTION PROBLEM, Diagnostic Trouble Code (DTC) Detecting Criteria.>

TROUBLE SYMPTOM:

Erroneous idling

CAUTION:

After repair or replacement of faulty parts, conduct Clear Memory Mode <Ref. to EN(H4DOTC)(diag)-45, OPERATION, Clear Memory Mode.> and Inspection Mode <Ref. to EN(H4DOTC)(diag)-36, PROCEDURE, Inspection Mode.>.

WIRING DIAGRAM:

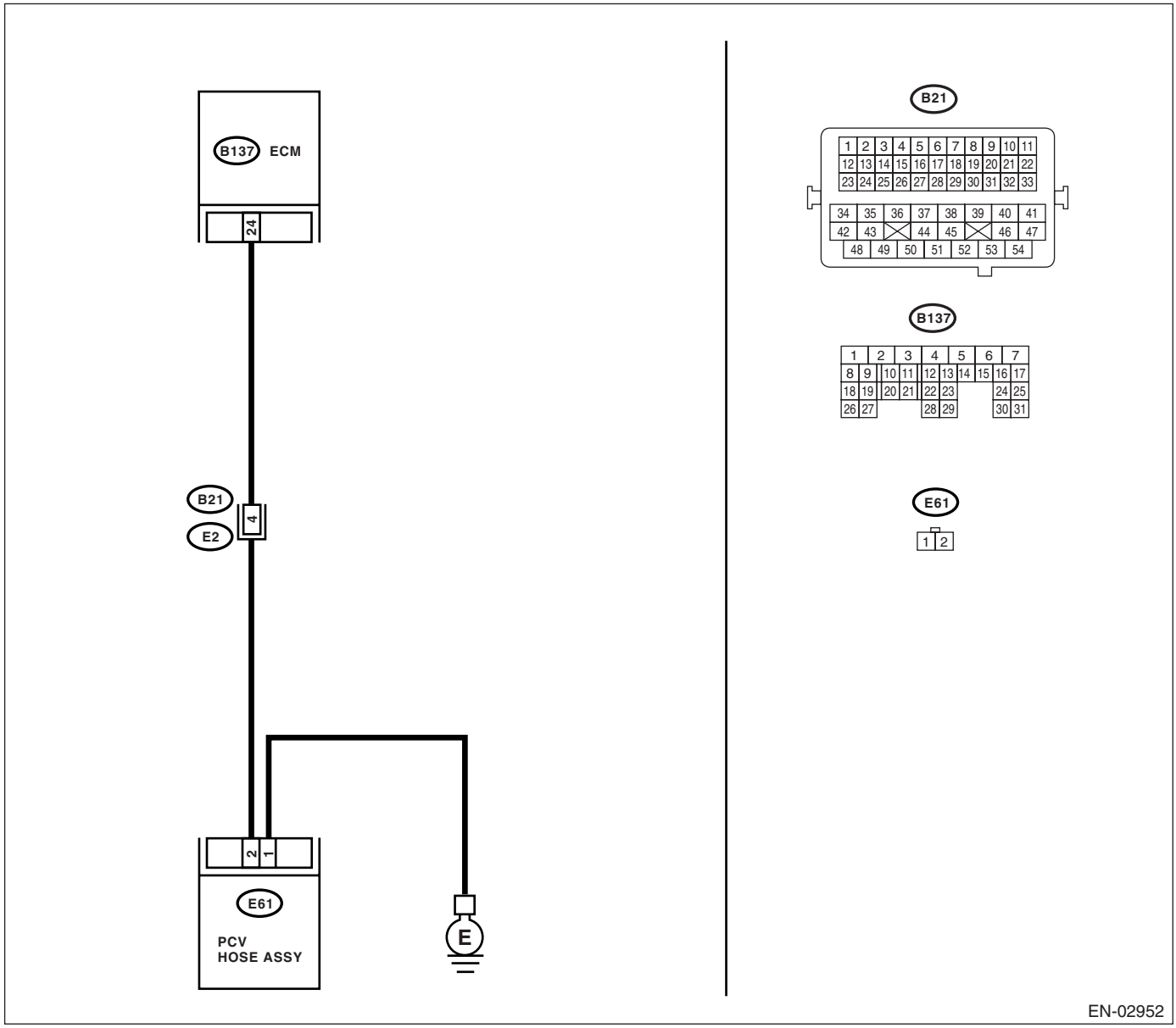

	Step	Check	Yes	No
1	**CHECK BLOW-BY HOSE.** Check the blow-by hose.	Is there disconnection or crack in blow-by hose?	Replace or repair blow-by hose.	Go to step **2.**
2	**CHECK HARNESS BETWEEN PCV HOSE ASSEMBLY AND ECM CONNECTOR.** 1) Turn the ignition switch to OFF. 2) Disconnect the connector from PCV hose assembly and ECM. 3) Measure the resistance of harness between PCV hose assembly and ECM connector. ***Connector & terminal*** ***(B137) No. 24 — (E61) No. 2:***	Is the resistance less than 1 Ω?	Go to step **3.**	Repair open circuit in harness between PCV hose assembly and ECM.
3	**CHECK HARNESS BETWEEN PCV HOSE ASSEMBLY AND ECM CONNECTOR.** Measure the resistance of harness between PCV hose assembly and chassis ground. ***Connector & terminal*** ***(B137) No. 24 — Chassis ground:***	Is the resistance more than 1 MΩ?	Go to step **4.**	Repair short circuit to chassis ground in harness between PCV hose assembly and ECM.
4	**CHECK PCV HOSE ASSEMBLY GROUND CIRCUIT.** Measure the resistance between PCV hose assembly and engine ground. ***Connector & terminal*** ***(B61) No. 1 — Engine ground:***	Is the resistance less than 5 Ω?	Go to step **5.**	Repair PCV hose assembly ground circuit.
5	**CHECK PCV HOSE ASSEMBLY.** Measure the resistance between PCV hose assembly and terminal. ***Terminals*** ***No. 1 — No. 2:***	Is the resistance less than 1 Ω?	Repair poor contact in ECM and PCV hose assembly.	Replace PCV hose assembly.

CR:DTC P1518 STARTER SWITCH CIRCUIT LOW INPUT

DTC DETECTING CONDITION:

- Detect as soon as the malfunction occurs.
- GENERAL DESCRIPTION <Ref. to GD(H4DOTC)-207, DTC P1518 STARTER SWITCH CIRCUIT LOW INPUT, Diagnostic Trouble Code (DTC) Detecting Criteria.>

TROUBLE SYMPTOM:

Failure of engine to start

CAUTION:

After repair or replacement of faulty parts, conduct Clear Memory Mode <Ref. to EN(H4DOTC)(diag)-45, OPERATION, Clear Memory Mode.> and Inspection Mode <Ref. to EN(H4DOTC)(diag)-36, PROCEDURE, Inspection Mode.>.

WIRING DIAGRAM:

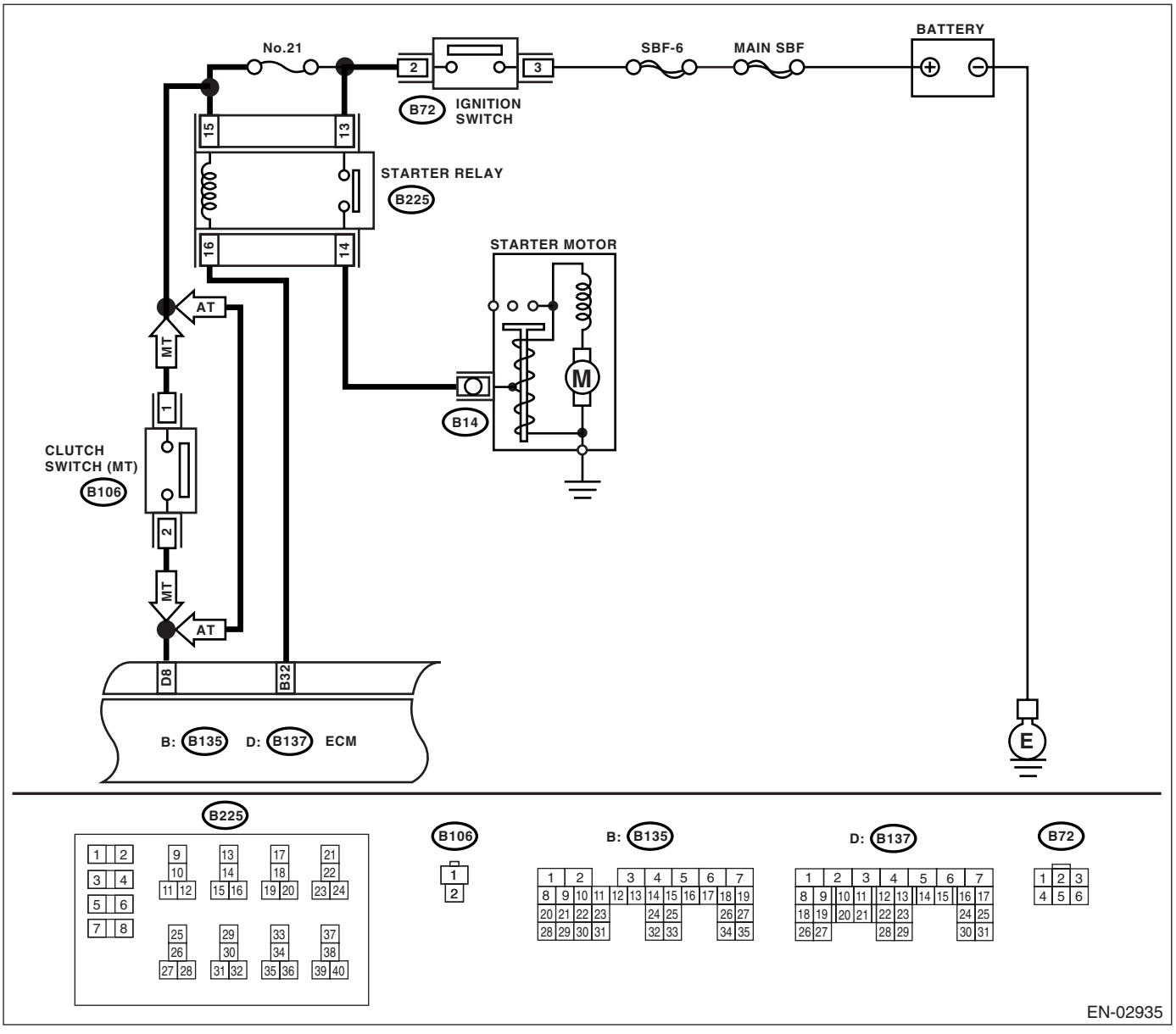

	Step	Check	Yes	No
1	**CHECK FOR ANY OTHER DTC ON DISPLAY.**	Is any other DTC displayed?	Inspect the DTC using “List of Diagnostic Trouble Code (DTC)”. <Ref. to EN(H4DOTC)(diag)-71, List of Diagnostic Trouble Code (DTC).>	Go to step **2.**
2	**CHECK HARNESS BETWEEN STARTER RELAY AND ECM.** 1) Disconnect the connectors from starter relay and ECM. 2) Measure the resistance of harness between ECM and chassis ground. ***Connector & terminal*** ***(B135) No. 32 — Chassis ground:***	Is the resistance more than 1 MΩ?	Repair the ground short circuit between starter motor and ECM.	Repair the poor contact in ECM connector.

CS:DTC P1544 EXHAUST GAS TEMPERATURE TOO HIGH

DTC DETECTING CONDITION:

- Detect as soon as malfunction occurs.
- GENERAL DESCRIPTION <Ref. to GD(H4DOTC)-208, DTC P1544 EXHAUST GAS TEMPERATURE TOO HIGH, Diagnostic Trouble Code (DTC) Detecting Criteria.>

TROUBLE SYMPTOM:

- Erroneous idling
- Poor driving performance

CAUTION:

After repair or replacement of faulty parts, conduct Clear Memory Mode <Ref. to EN(H4DOTC)(diag)-45, OPERATION, Clear Memory Mode.> and Inspection Mode <Ref. to EN(H4DOTC)(diag)-36, PROCEDURE, Inspection Mode.>.

WIRING DIAGRAM:

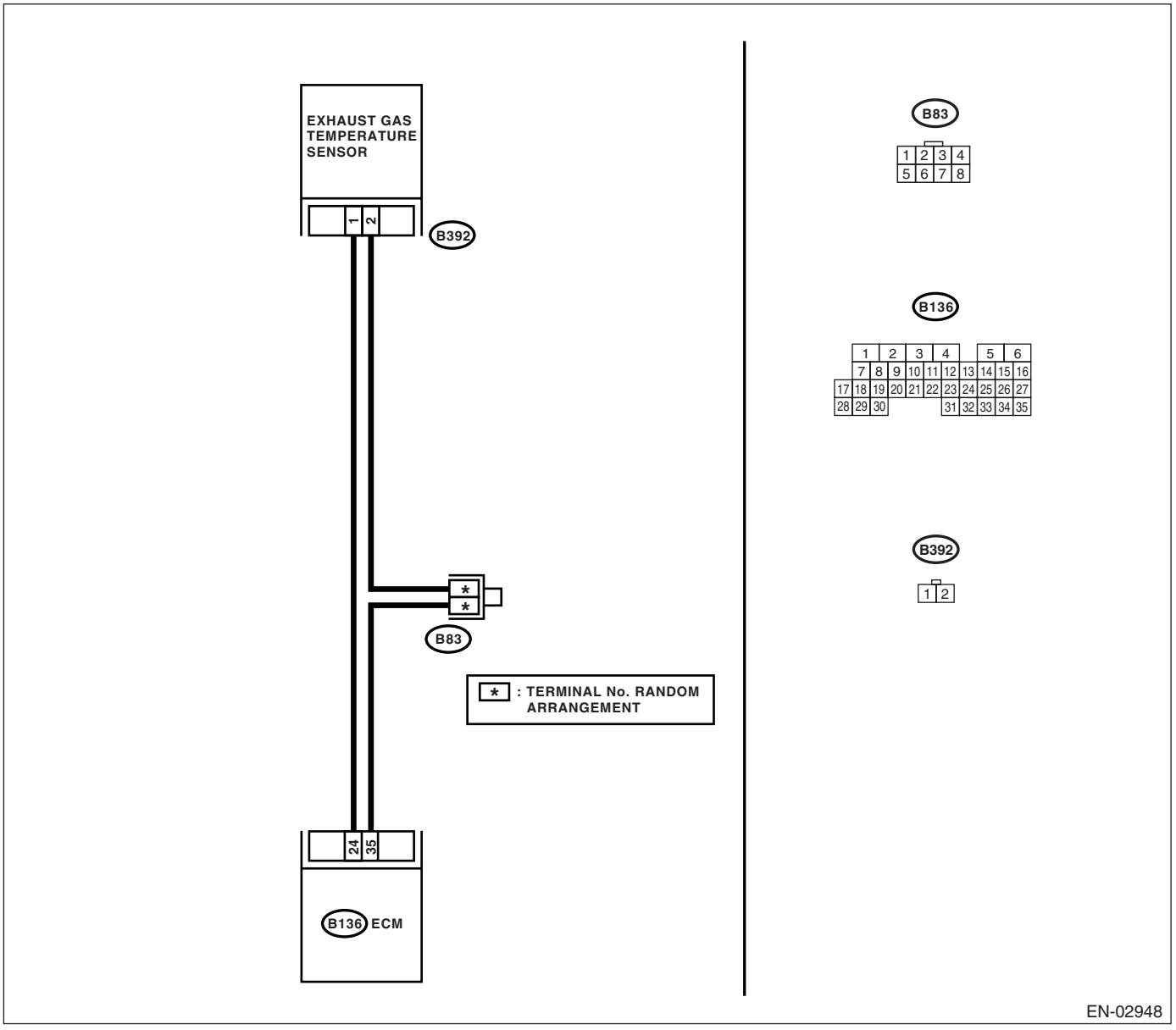

	Step	Check	Yes	No
1	**CHECK FOR ANY OTHER DTC ON DISPLAY.**	Is any other DTC displayed?	Inspect the relevant DTC using "List of Diagnostic Trouble Code (DTC)". <Ref. to EN(H4DOTC)(diag)-71, List of Diagnostic Trouble Code (DTC).> NOTE: In this case, it is not necessary to inspect DTC P1544.	Go to step **2.**
2	**CHECK EXHAUST SYSTEM.** Check the exhaust system parts. NOTE: Check the following items. • Loose installation of exhaust manifold • Cracks or hole of exhaust manifold • Loose installation of front oxygen (A/F) sensor	Is there any fault in exhaust system?	Repair or replace the failure, then replace precatalytic converter.	Contact your SOA Service Center.

CT:DTC P1560 BACK-UP VOLTAGE CIRCUIT MALFUNCTION

DTC DETECTING CONDITION:

- Detect as soon as the malfunction occurs.
- GENERAL DESCRIPTION <Ref. to GD(H4DOTC)-209, DTC P1560 BACK-UP VOLTAGE CIRCUIT MALFUNCTION, Diagnostic Trouble Code (DTC) Detecting Criteria.>

CAUTION:
After repair or replacement of faulty parts, conduct Clear Memory Mode <Ref. to EN(H4DOTC)(diag)-45, OPERATION, Clear Memory Mode.> and Inspection Mode <Ref. to EN(H4DOTC)(diag)-36, PROCEDURE, Inspection Mode.>.

WIRING DIAGRAM:

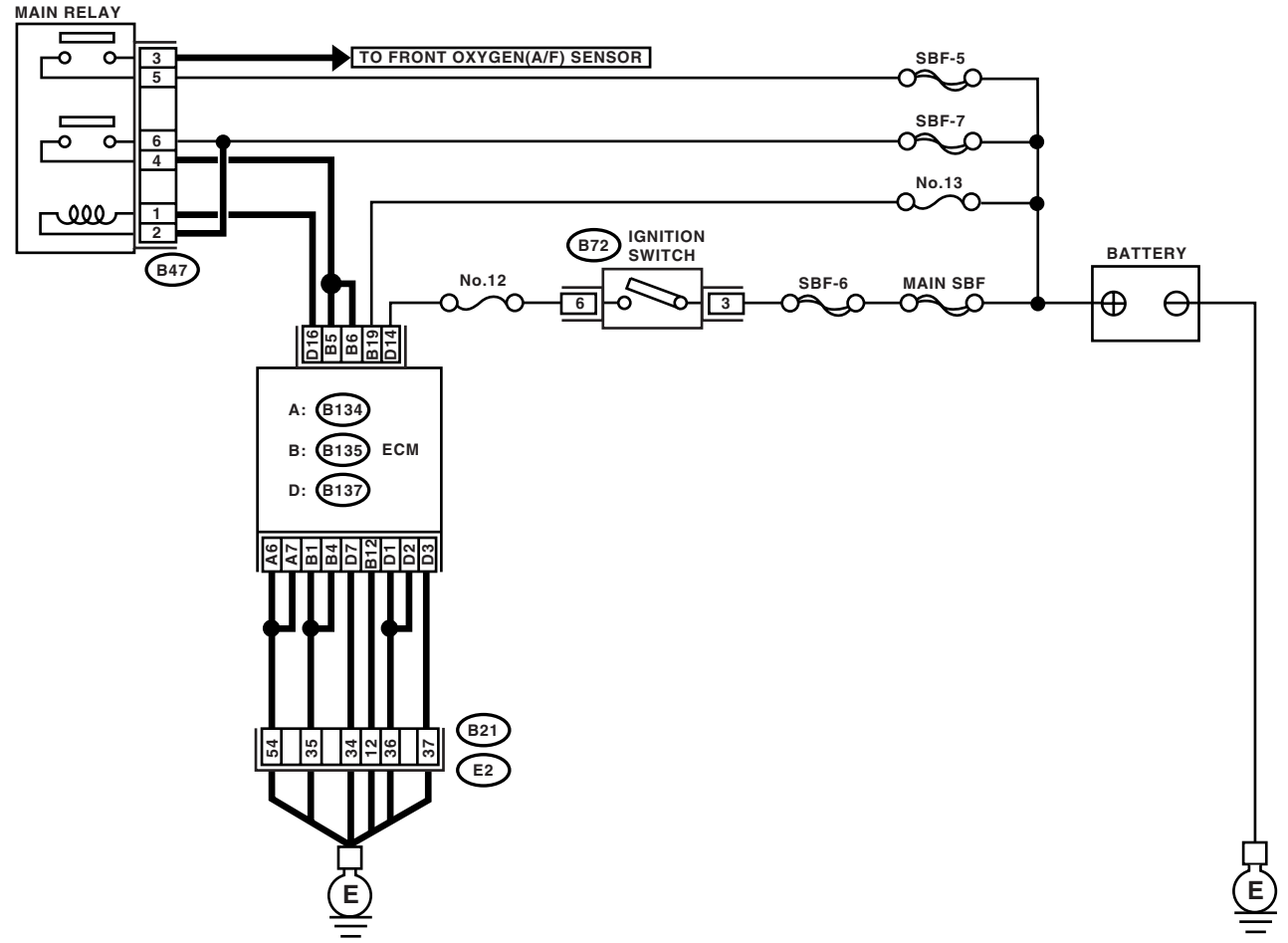

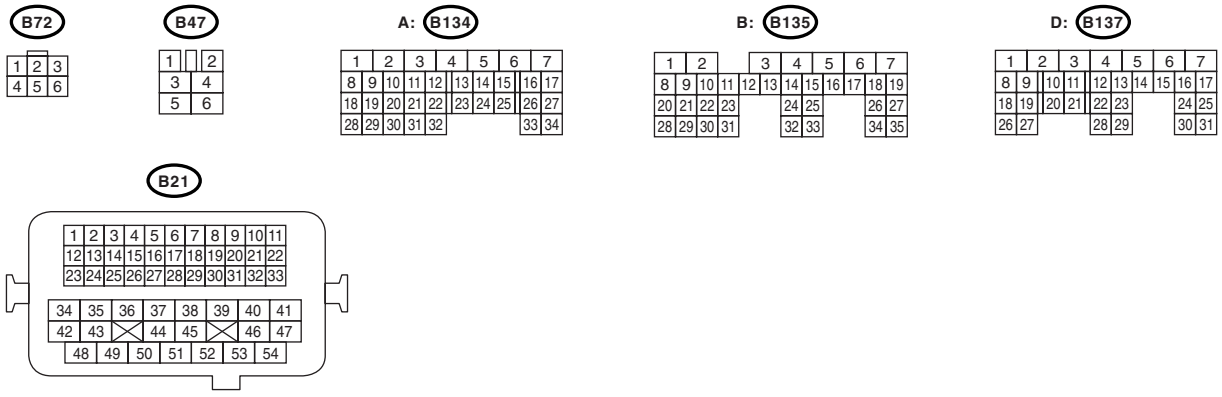

EN-03162

	Step	Check	Yes	No
1	**CHECK INPUT SIGNAL FROM ECM.** 1) Turn the ignition switch to OFF. 2) Measure the voltage between ECM and chassis ground. ***Connector & terminal*** ***(B135) No. 19 (+) — Chassis ground (−):***	Is the voltage more than 10 V?	Repair the poor contact in ECM connector.	Go to step **2.**
2	**CHECK HARNESS BETWEEN ECM AND MAIN FUSE BOX CONNECTOR.** 1) Disconnect the connector from ECM. 2) Measure the resistance of harness between ECM and chassis ground. ***Connector & terminal*** ***(B135) No. 19 — Chassis ground:***	Is the resistance less than 10 Ω?	Repair the ground short circuit in harness between ECM connector and battery terminal.	Go to step **3.**
3	**CHECK FUSE No. 13**	Is the fuse blown out?	Replace the fuse.	Repair the harness and connector. NOTE: In this case, repair the following: • Open circuit in harness between ECM and battery • Poor contact in ECM connector • Poor contact in battery terminal

CU:DTC P2004 INTAKE MANIFOLD RUNNER CONTROL STUCK OPEN (BANK 1)

DTC DETECTING CONDITION:

- Detect as soon as malfunction occurs.
- GENERAL DESCRIPTION <Ref. to GD(H4DOTC)-211, DTC P2004 INTAKE MANIFOLD RUNNER CONTROL STUCK OPEN (BANK 1), Diagnostic Trouble Code (DTC) Detecting Criteria.>

CAUTION:
After repair or replacement of faulty parts, conduct Clear Memory Mode <Ref. to EN(H4DOTC)(diag)-45, OPERATION, Clear Memory Mode.> and Inspection Mode <Ref. to EN(H4DOTC)(diag)-36, PROCEDURE, Inspection Mode.>.

	Step	Check	Yes	No
1	**CHECK FOR ANY OTHER DTC ON DISPLAY.**	Is any other DTC displayed?	Inspect the relevant DTC using "List of Diagnostic Trouble Code (DTC)". <Ref. to EN(H4DOTC)(diag)-71, List of Diagnostic Trouble Code (DTC).>	Go to step **2.**
2	**CHECK TUMBLE GENERATOR VALVE RH.** 1) Remove the tumble generator valve assembly. 2) Check the tumble generator valve body.	Does the tumble generator valve move smoothly? (No dirt or foreign materials clogged)	Replace the tumble generator valve assembly. <Ref. to FU(H4DOTC)-30, Tumble Generator Valve Assembly.>	Clean the tumble generator valve.

CV:DTC P2005 INTAKE MANIFOLD RUNNER CONTROL STUCK OPEN (BANK 2)

DTC DETECTING CONDITION:

- Detect as soon as malfunction occurs.
- GENERAL DESCRIPTION <Ref. to GD(H4DOTC)-212, DTC P2005 INTAKE MANIFOLD RUNNER CONTROL STUCK OPEN (BANK 2), Diagnostic Trouble Code (DTC) Detecting Criteria.>

CAUTION:
After repair or replacement of faulty parts, conduct Clear Memory Mode <Ref. to EN(H4DOTC)(diag)-45, OPERATION, Clear Memory Mode.> and Inspection Mode <Ref. to EN(H4DOTC)(diag)-36, PROCEDURE, Inspection Mode.>.

	Step	Check	Yes	No
1	**CHECK FOR ANY OTHER DTC ON DISPLAY.**	Is any other DTC displayed?	Inspect the relevant DTC using "List of Diagnostic Trouble Code (DTC)". <Ref. to EN(H4DOTC)(diag)-71, List of Diagnostic Trouble Code (DTC).>	Go to step **2.**
2	**CHECK TUMBLE GENERATOR VALVE LH.** 1) Remove the tumble generator valve assembly. 2) Check the tumble generator valve body.	Does the tumble generator valve move smoothly? (No dirt or foreign materials clogged)	Replace the tumble generator valve assembly. <Ref. to FU(H4DOTC)-30, Tumble Generator Valve Assembly.>	Clean the tumble generator valve.

CW:DTC P2006 INTAKE MANIFOLD RUNNER CONTROL STUCK CLOSED (BANK 1)

DTC DETECTING CONDITION:

- Detect as soon as malfunction occurs.
- GENERAL DESCRIPTION <Ref. to GD(H4DOTC)-213, DTC P2006 INTAKE MANIFOLD RUNNER CONTROL STUCK CLOSED (BANK 1), Diagnostic Trouble Code (DTC) Detecting Criteria.>

CAUTION:
After repair or replacement of faulty parts, conduct Clear Memory Mode <Ref. to EN(H4DOTC)(diag)-45, OPERATION, Clear Memory Mode.> and Inspection Mode <Ref. to EN(H4DOTC)(diag)-36, PROCEDURE, Inspection Mode.>.

	Step	Check	Yes	No
1	**CHECK FOR ANY OTHER DTC ON DISPLAY.**	Is any other DTC displayed?	Inspect the relevant DTC using "List of Diagnostic Trouble Code (DTC)" <Ref. to EN(H4DOTC)(diag)-71, List of Diagnostic Trouble Code (DTC).>	Go to step **2.**
2	**CHECK TUMBLE GENERATOR VALVE RH.** 1) Remove the tumble generator valve assembly. 2) Check the tumble generator valve body.	Does the tumble generator valve move smoothly? (No dirt or foreign materials clogged)	Replace the tumble generator valve assembly. <Ref. to FU(H4DOTC)-30, Tumble Generator Valve Assembly.>	Clean the tumble generator valve.

CX:DTC P2007 INTAKE MANIFOLD RUNNER CONTROL STUCK CLOSED (BANK 2)

DTC DETECTING CONDITION:

- Detect as soon as malfunction occurs.
- GENERAL DESCRIPTION <Ref. to GD(H4DOTC)-214, DTC P2007 INTAKE MANIFOLD RUNNER CONTROL STUCK CLOSED (BANK 2), Diagnostic Trouble Code (DTC) Detecting Criteria.>

CAUTION:
After repair or replacement of faulty parts, conduct Clear Memory Mode <Ref. to EN(H4DOTC)(diag)-45, OPERATION, Clear Memory Mode.> and Inspection Mode <Ref. to EN(H4DOTC)(diag)-36, PROCEDURE, Inspection Mode.>.

	Step	Check	Yes	No
1	**CHECK FOR ANY OTHER DTC ON DISPLAY.**	Is any other DTC displayed?	Inspect the relevant DTC using "List of Diagnostic Trouble Code (DTC)". <Ref. to EN(H4DOTC)(diag)-71, List of Diagnostic Trouble Code (DTC).>	Go to step **2.**
2	**CHECK TUMBLE GENERATOR VALVE LH.** 1) Remove the tumble generator valve assembly. 2) Check the tumble generator valve body.	Does the tumble generator valve move smoothly? (No dirt or foreign materials clogged)	Replace the tumble generator valve assembly. <Ref. to FU(H4DOTC)-30, Tumble Generator Valve Assembly.>	Clean the tumble generator valve.

CY:DTC P2008 INTAKE MANIFOLD RUNNER CONTROL CIRCUIT / OPEN (BANK 1)

DTC DETECTING CONDITION:

- Detect as soon as malfunction occurs.
- GENERAL DESCRIPTION <Ref. to GD(H4DOTC)-215, DTC P2008 INTAKE MANIFOLD RUNNER CONTROL CIRCUIT / OPEN (BANK 1), Diagnostic Trouble Code (DTC) Detecting Criteria.>

CAUTION:

After repair or replacement of faulty parts, conduct Clear Memory Mode <Ref. to EN(H4DOTC)(diag)-45, OPERATION, Clear Memory Mode.> and Inspection Mode <Ref. to EN(H4DOTC)(diag)-36, PROCEDURE, Inspection Mode.>.

WIRING DIAGRAM:

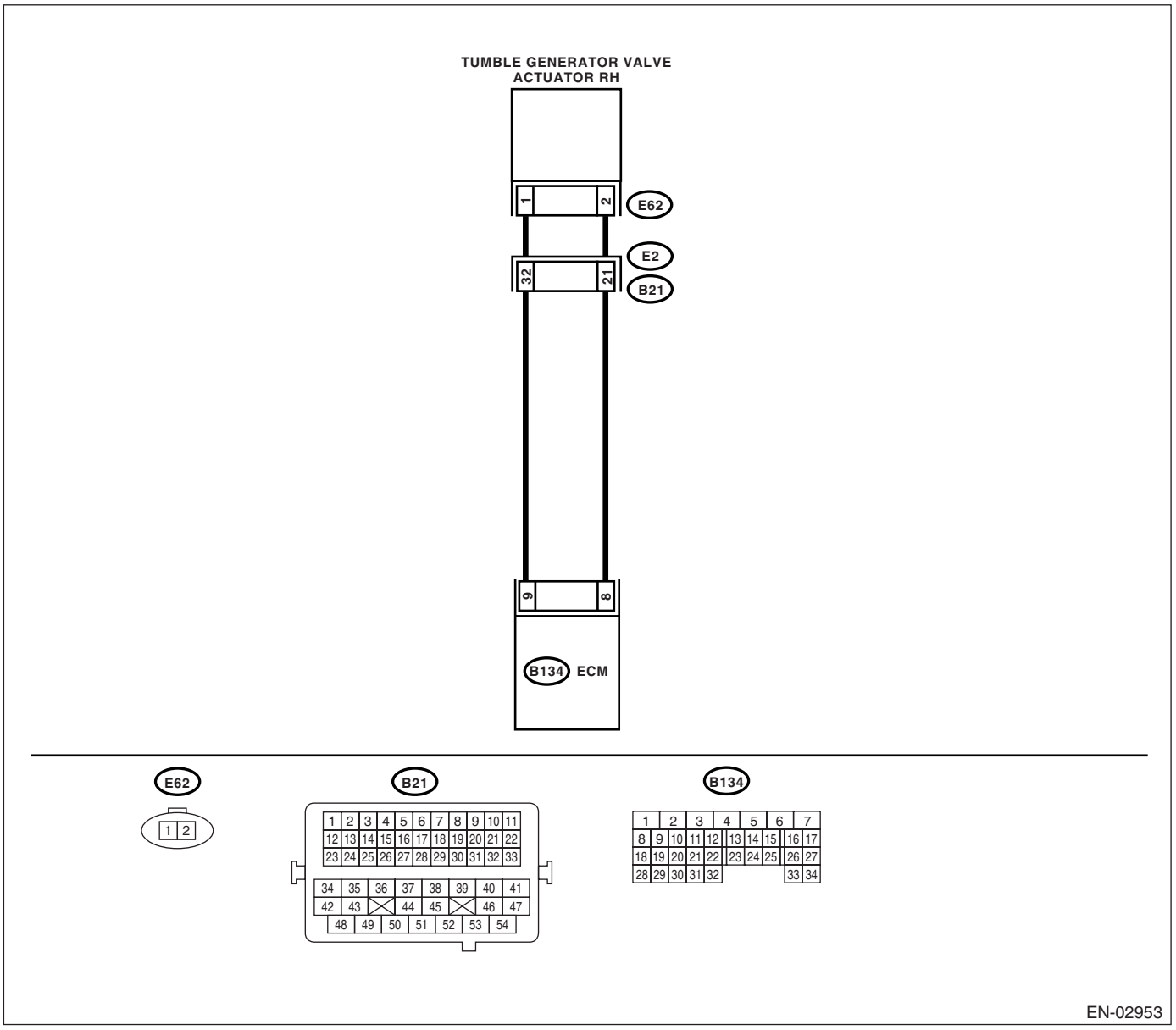

	Step	Check	Yes	No
1	**CHECK HARNESS BETWEEN ECM AND TUMBLE GENERATOR VALVE ACTUATOR CONNECTOR.** 1) Turn the ignition switch to OFF. 2) Disconnect the connector from tumble generator valve and ECM connector. 3) Measure the resistance between tumble generator valve actuator and ECM connector. ***Connector & terminal*** ***(E62) No. 1 — (B134) No. 9:*** ***(E62) No. 2 — (B134) No. 8:***	Is the resistance less than 1 Ω?	Go to step **2.**	Repair the open circuit between ECM and tumble generator valve connector. NOTE: In this case, repair the following: • Open circuit in harness between ECM and tumble generator valve actuator connector. • Poor contact in coupling connector.
2	**CHECK POOR CONTACT.** Check poor contact in tumble generator valve actuator connector.	Is there poor contact in tumble generator valve actuator connector?	Repair the poor contact in tumble generator valve actuator connector.	Replace the tumble generator valve actuator. <Ref. to FU(H4DOTC)-31, Tumble Generator Valve Actuator.>

CZ:DTC P2009 INTAKE MANIFOLD RUNNER CONTROL CIRCUIT LOW (BANK 1)

DTC DETECTING CONDITION:

- Detect as soon as malfunction occurs.
- GENERAL DESCRIPTION <Ref. to GD(H4DOTC)-217, DTC P2009 INTAKE MANIFOLD RUNNER CONTROL CIRCUIT LOW (BANK 1), Diagnostic Trouble Code (DTC) Detecting Criteria.>

CAUTION:

After repair or replacement of faulty parts, conduct Clear Memory Mode <Ref. to EN(H4DOTC)(diag)-45, OPERATION, Clear Memory Mode.> and Inspection Mode <Ref. to EN(H4DOTC)(diag)-36, PROCEDURE, Inspection Mode.>.

WIRING DIAGRAM:

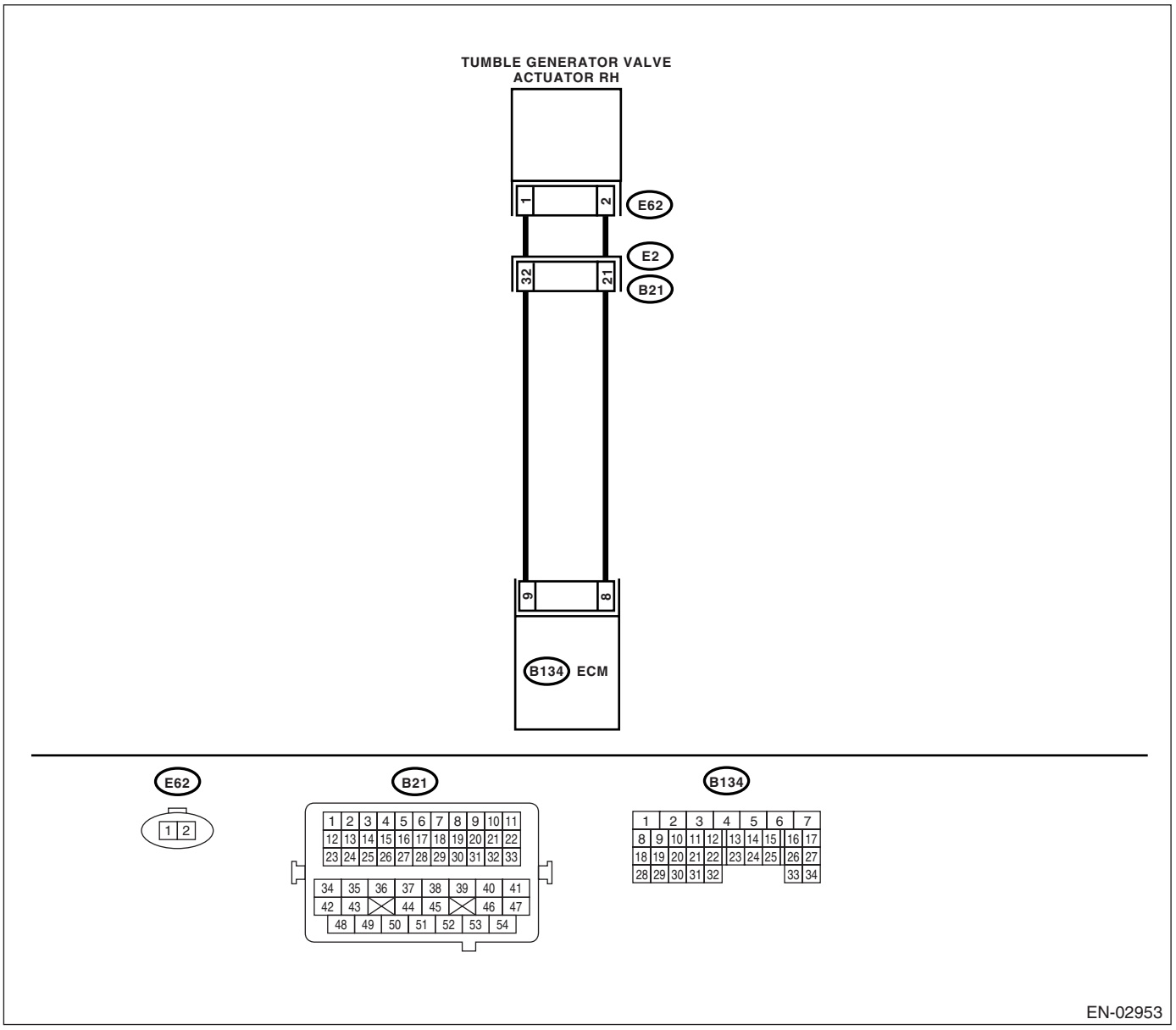

	Step	Check	Yes	No
1	**CHECK HARNESS BETWEEN ECM AND TUMBLE GENERATOR VALVE ACTUATOR CONNECTOR.** 1) Turn the ignition switch to OFF. 2) Disconnect the connector from tumble generator valve connector. 3) Measure the voltage between tumble generator valve actuator and chassis ground. ***Connector & terminal*** ***(E62) No. 1 (+) — Chassis ground (−):*** ***(E62) No. 2 (+) — Chassis ground (−):***	Is the voltage less than 5 V?	Replace the tumble generator valve actuator. <Ref. to FU(H4DOTC)-31, Tumble Generator Valve Actuator.>	Repair the battery short circuit between ECM and tumble generator valve actuator.

DA:DTC P2011 INTAKE MANIFOLD RUNNER CONTROL CIRCUIT / OPEN (BANK 2)

DTC DETECTING CONDITION:

- Detect as soon as malfunction occurs.
- GENERAL DESCRIPTION <Ref. to GD(H4DOTC)-219, DTC P2011 INTAKE MANIFOLD RUNNER CONTROL CIRCUIT / OPEN (BANK 2), Diagnostic Trouble Code (DTC) Detecting Criteria.>

CAUTION:

After repair or replacement of faulty parts, conduct Clear Memory Mode <Ref. to EN(H4DOTC)(diag)-45, OPERATION, Clear Memory Mode.> and Inspection Mode <Ref. to EN(H4DOTC)(diag)-36, PROCEDURE, Inspection Mode.>.

WIRING DIAGRAM:

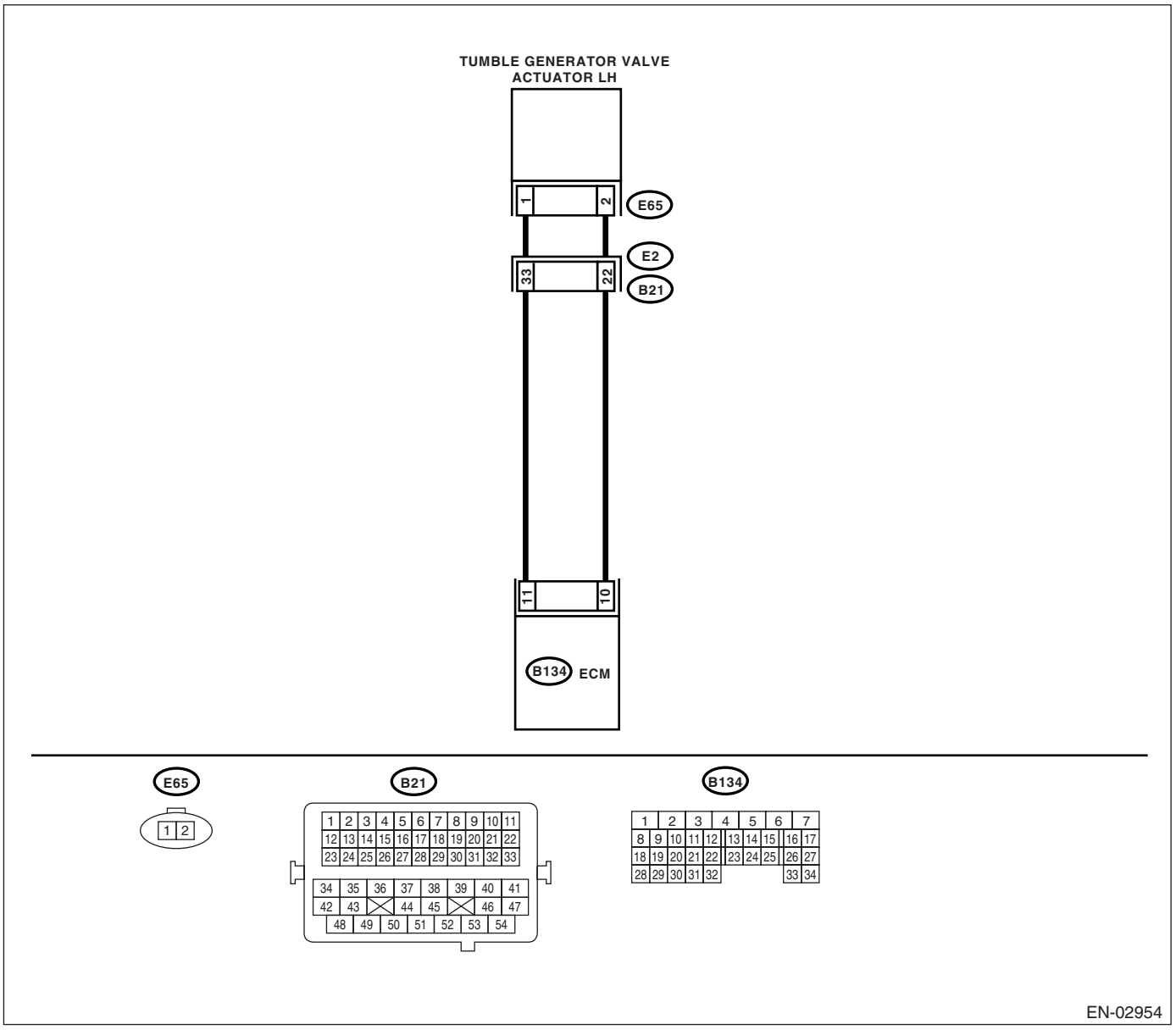

	Step	Check	Yes	No
1	**CHECK HARNESS BETWEEN ECM AND TUMBLE GENERATOR VALVE ACTUATOR CONNECTOR.** 1) Turn the ignition switch to OFF. 2) Disconnect the connector from tumble generator valve and ECM connector. 3) Measure the resistance between tumble generator valve actuator and ECM connector. ***Connector & terminal*** ***(E65) No. 1 — (B134) No. 11:*** ***(E65) No. 2 — (B134) No. 10:***	Is the resistance less than 1 Ω?	Go to step **2.**	Repair the open circuit between ECM and tumble generator valve connector. NOTE: In this case, repair the following: • Open circuit in harness between ECM and tumble generator valve actuator connector. • Poor contact in coupling connector.
2	**CHECK POOR CONTACT.** Check poor contact in tumble generator valve actuator connector.	Is there poor contact in tumble generator valve actuator connector?	Repair the poor contact in tumble generator valve actuator connector.	Replace the tumble generator valve actuator. <Ref. to FU(H4DOTC)-31, Tumble Generator Valve Actuator.>

DB:DTC P2012 INTAKE MANIFOLD RUNNER CONTROL CIRCUIT LOW (BANK 2)

DTC DETECTING CONDITION:

- Detect as soon as malfunction occurs.
- GENERAL DESCRIPTION <Ref. to GD(H4DOTC)-221, DTC P2012 INTAKE MANIFOLD RUNNER CONTROL CIRCUIT LOW (BANK 2), Diagnostic Trouble Code (DTC) Detecting Criteria.>

CAUTION:

After repair or replacement of faulty parts, conduct Clear Memory Mode <Ref. to EN(H4DOTC)(diag)-45, OPERATION, Clear Memory Mode.> and Inspection Mode <Ref. to EN(H4DOTC)(diag)-36, PROCEDURE, Inspection Mode.>.

WIRING DIAGRAM:

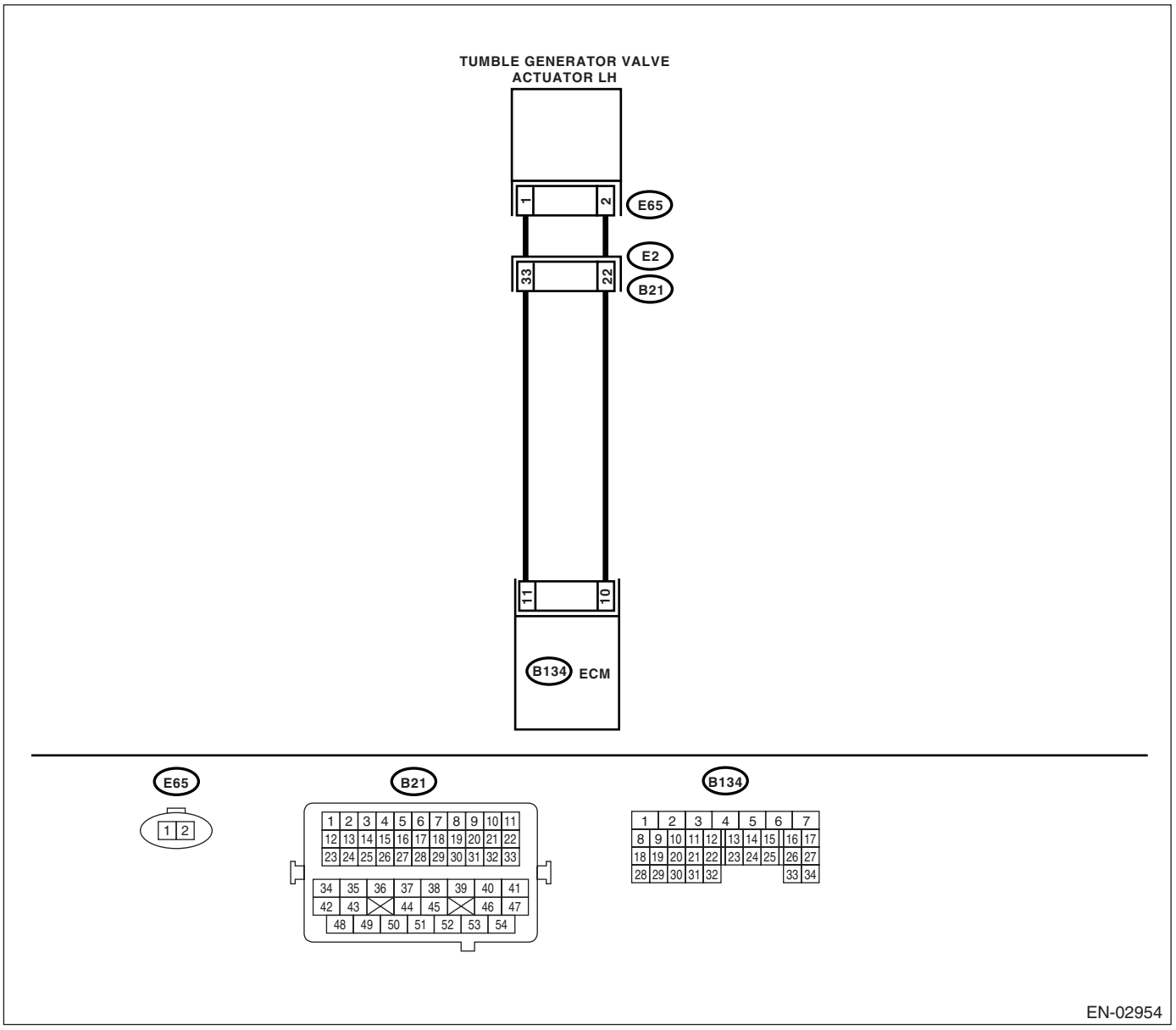

	Step	Check	Yes	No
1	**CHECK HARNESS BETWEEN ECM AND TUMBLE GENERATOR VALVE ACTUATOR CONNECTOR.** 1) Turn the ignition switch to OFF. 2) Disconnect the connector from tumble generator valve connector. 3) Measure the voltage between tumble generator valve actuator and chassis ground. ***Connector & terminal*** ***(E65) No. 1 (+) — Chassis ground (−):*** ***(E65) No. 2 (+) — Chassis ground (−):***	Is the voltage less than 5 V?	Replace the tumble generator valve actuator. <Ref. to FU(H4DOTC)-31, Tumble Generator Valve Actuator.>	Repair the battery short circuit between ECM and tumble generator valve actuator.

DC:DTC P2016 INTAKE MANIFOLD RUNNER POSITION SENSOR / SWITCH CIRCUIT LOW (BANK 1)

DTC DETECTING CONDITION:

- Detect as soon as malfunction occurs.
- GENERAL DESCRIPTION <Ref. to GD(H4DOTC)-223, DTC P2016 INTAKE MANIFOLD RUNNER POSITION SENSOR / SWITCH CIRCUIT LOW (BANK 1), Diagnostic Trouble Code (DTC) Detecting Criteria.>

TROUBLE SYMPTOM:

- Erroneous idling
- Engine stalls.
- Poor driving performance

CAUTION:

After repair or replacement of faulty parts, conduct Clear Memory Mode <Ref. to EN(H4DOTC)(diag)-45, OPERATION, Clear Memory Mode.> and Inspection Mode <Ref. to EN(H4DOTC)(diag)-36, PROCEDURE, Inspection Mode.>.

WIRING DIAGRAM:

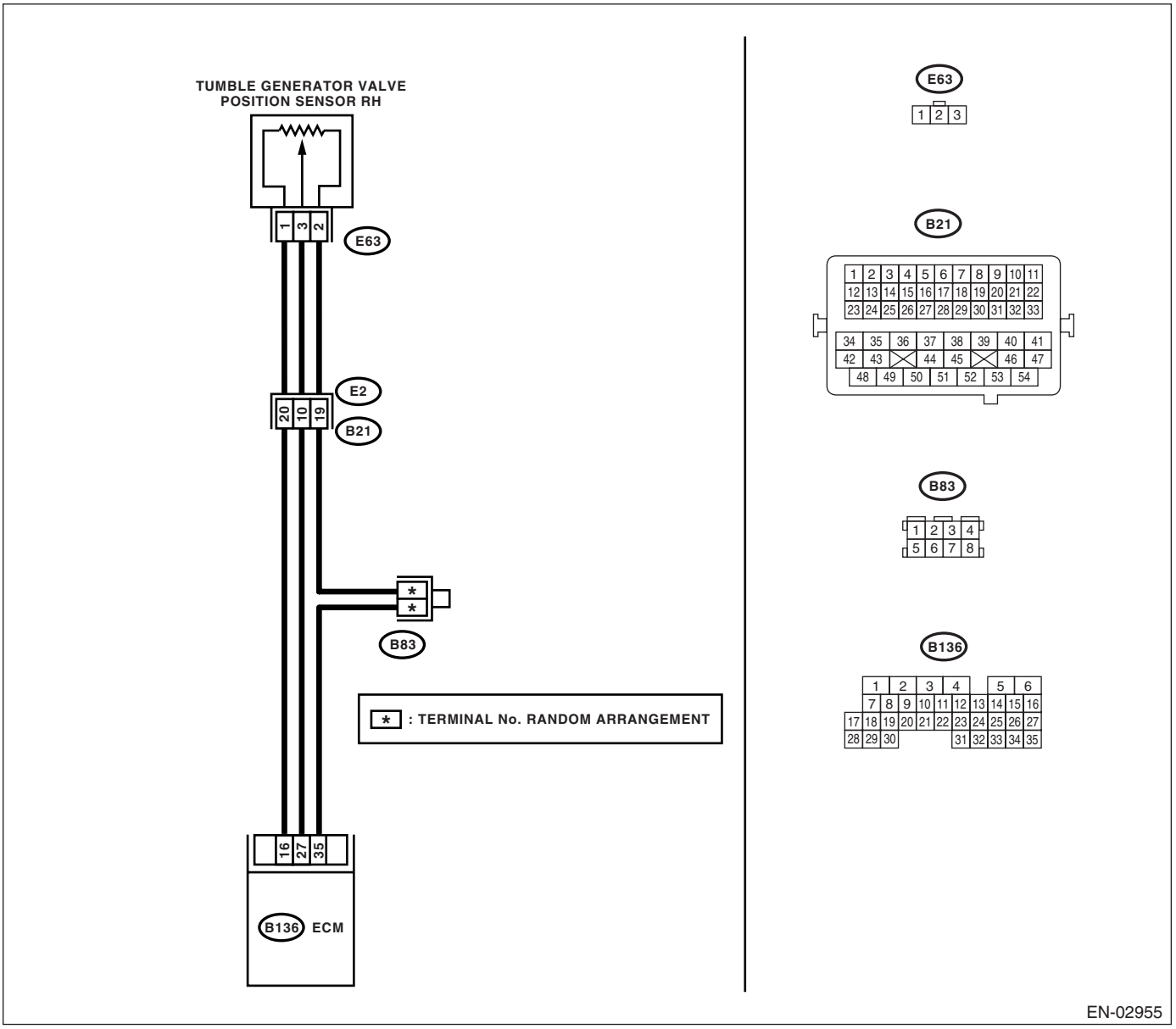

	Step	Check	Yes	No
1	**CHECK CURRENT DATA.** 1) Start the engine. 2) Read the data of tumble generator valve position sensor signal using Subaru Select Monitor or general scan tool. NOTE: • Subaru Select Monitor For detailed operation procedure, refer to the "READ CURRENT DATA FOR ENGINE". <Ref. to EN(H4DOTC)(diag)-28, Subaru Select Monitor.> • General scan tool For detailed operation procedure, refer to the general scan tool instruction manual.	Is the voltage less than 0.1 V?	Go to step **2.**	Even if malfunction indicator light lights up, the circuit has returned to a normal condition at this time. A temporary poor contact of the connector may be the cause. NOTE: In this case, repair the following: • Poor contact in tumble generator valve position sensor connector • Poor contact in ECM connector • Poor contact in coupling connector
2	**CHECK INPUT SIGNAL FOR ECM.** Measure the voltage between ECM connector and chassis ground. ***Connector & terminal*** ***(B136) No. 16 (+) — Chassis ground (–):***	Is the voltage more than 4.5 V?	Go to step **4.**	Go to step **3.**
3	**CHECK INPUT SIGNAL FOR ECM.** Measure the voltage between ECM connector and chassis ground. ***Connector & terminal*** ***(B136) No. 16 (+) — Chassis ground (–):***	Shake the ECM harness and connector, while monitoring value of voltage meter. Does the voltage change?	Repair the poor contact in ECM connector.	Contact your SOA Service Center.
4	**CHECK INPUT SIGNAL FOR ECM.** Measure the voltage between ECM connector and chassis ground. ***Connector & terminal*** ***(B136) No. 27 (+) — Chassis ground (–):***	Is the voltage less than 0.1 V?	Go to step **6.**	Go to step **5.**
5	**CHECK INPUT SIGNAL FOR ECM. (USING SUBARU SELECT MONITOR)** Measure the voltage between ECM connector and chassis ground.	Shake the ECM harness and connector, while monitoring value of Subaru Select Monitor. Does the voltage change?	Repair the poor contact in ECM connector.	Go to step **6.**

	Step	Check	Yes	No
6	**CHECK HARNESS BETWEEN ECM AND TUMBLE GENERATOR VALVE POSITION SENSOR CONNECTOR.** 1) Turn the ignition switch to OFF. 2) Disconnect the connectors from tumble generator valve position sensor. 3) Turn the ignition switch to ON. 4) Measure the voltage between tumble generator valve position sensor connector and engine ground. ***Connector & terminal*** ***(E63) No. 1 (+) — Engine ground (−):***	Is the voltage more than 4.5 V?	Go to step **7.**	Repair the harness and connector. NOTE: In this case, repair the following: • Open circuit in harness between tumble generator valve position sensor and ECM connector • Poor contact in tumble generator valve position sensor connector • Poor contact in ECM connector • Poor contact in coupling connector • Poor contact in joint connector
7	**CHECK HARNESS BETWEEN ECM AND TUMBLE GENERATOR VALVE POSITION SENSOR CONNECTOR.** 1) Turn the ignition switch to OFF. 2) Measure the resistance of harness between ECM connector and tumble generator valve position sensor connector. ***Connector & terminal*** ***(B136) No. 27 — (E63) No. 3:***	Is the resistance less than 1 Ω?	Go to step **8.**	Repair the harness and connector. NOTE: In this case, repair the following: • Open circuit in harness between tumble generator valve position sensor and ECM connector • Poor contact in ECM connector • Poor contact in tumble generator valve position sensor connector • Poor contact in coupling connector
8	**CHECK HARNESS BETWEEN ECM AND TUMBLE GENERATOR VALVE POSITION SENSOR CONNECTOR.** Measure the resistance of harness between tumble generator valve position sensor connector and engine ground. ***Connector & terminal*** ***(E63) No. 3 — Engine ground:***	Is the resistance more than 1 MΩ?	Go to step **9.**	Repair the ground short circuit in harness between tumble generator valve position sensor and ECM connector.
9	**CHECK POOR CONTACT.** Check poor contact in tumble generator valve position sensor connector.	Is there poor contact in tumble generator valve position sensor connector?	Repair the poor contact in tumble generator valve position sensor connector.	Replace the tumble generator valve position sensor. <Ref. to FU(H4DOTC)-32, Tumble Generator Valve Position Sensor.>

DD:DTC P2017 INTAKE MANIFOLD RUNNER POSITION SENSOR / SWITCH CIRCUIT HIGH (BANK 1)

DTC DETECTING CONDITION:

- Detect as soon as malfunction occurs.
- GENERAL DESCRIPTION <Ref. to GD(H4DOTC)-225, DTC P2017 INTAKE MANIFOLD RUNNER POSITION SENSOR / SWITCH CIRCUIT HIGH (BANK 1), Diagnostic Trouble Code (DTC) Detecting Criteria.>

TROUBLE SYMPTOM:

- Erroneous idling
- Engine stalls.
- Poor driving performance

CAUTION:

After repair or replacement of faulty parts, conduct Clear Memory Mode <Ref. to EN(H4DOTC)(diag)-45, OPERATION, Clear Memory Mode.> and Inspection Mode <Ref. to EN(H4DOTC)(diag)-36, PROCEDURE, Inspection Mode.>.

WIRING DIAGRAM:

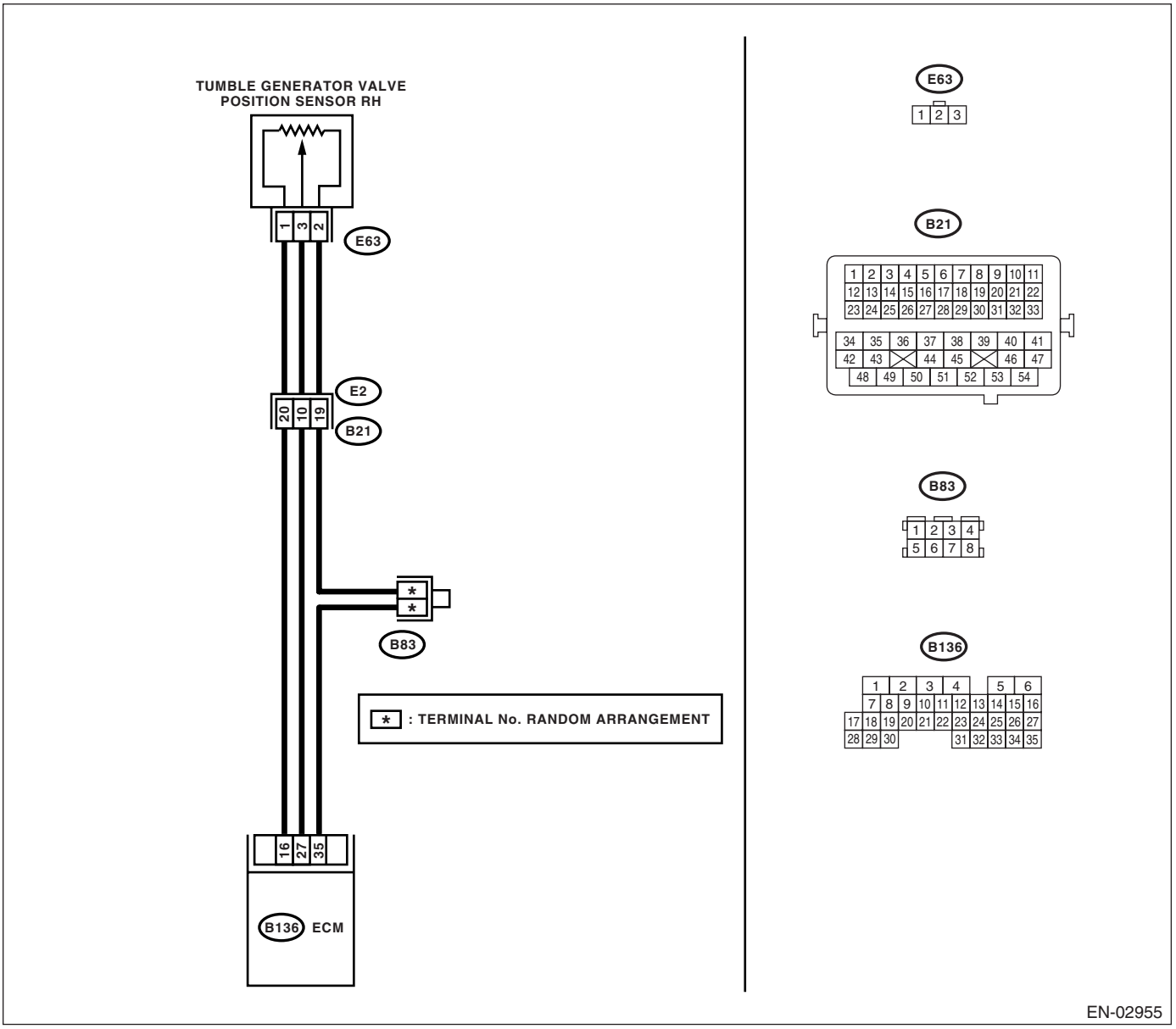

	Step	Check	Yes	No
1	**CHECK CURRENT DATA.** 1) Start the engine. 2) Read the data of tumble generator valve position sensor signal using Subaru Select Monitor or general scan tool. NOTE: • Subaru Select Monitor For detailed operation procedure, refer to the "READ CURRENT DATA FOR ENGINE". <Ref. to EN(H4DOTC)(diag)-28, Subaru Select Monitor.> • General scan tool For detailed operation procedures, refer to the general scan tool instruction manual.	Is the voltage more than 4.9 V?	Go to step **2.**	Even if malfunction indicator light lights up, the circuit has returned to a normal condition at this time. A temporary poor contact of the connector may be the cause. NOTE: In this case, repair the following: • Poor contact in tumble generator valve position sensor connector • Poor contact in ECM connector • Poor contact in coupling connector
2	**CHECK HARNESS BETWEEN TUMBLE GENERATOR VALVE POSITION SENSOR AND ECM CONNECTOR.** 1) Turn the ignition switch to OFF. 2) Disconnect the connector from tumble generator valve position sensor. 3) Measure the resistance of harness between tumble generator valve position sensor connector and engine ground. ***Connector & terminal*** ***(E63) No. 2 — Engine ground:***	Is the resistance less than 5 Ω?	Go to step **3.**	Repair the harness and connector. NOTE: In this case, repair the following: • Open circuit in harness between tumble generator valve position sensor and ECM connector • Poor contact in coupling connector • Poor contact in joint connector
3	**CHECK HARNESS BETWEEN TUMBLE GENERATOR VALVE POSITION SENSOR AND ECM CONNECTOR.** 1) Turn the ignition switch to ON. 2) Measure the voltage between tumble generator valve position sensor connector and engine ground. ***Connector & terminal*** ***(E63) No. 3 (+) — Engine ground (−):***	Is the voltage more than 4.9 V?	Repair the battery short circuit in harness between tumble generator valve position sensor and ECM connector. After repair, replace the ECM. <Ref. to FU(H4DOTC)-39, Engine Control Module (ECM).>	Replace the tumble generator valve position sensor. <Ref. to FU(H4DOTC)-32, Tumble Generator Valve Position Sensor.>

DE:DTC P2021 INTAKE MANIFOLD RUNNER POSITION SENSOR / SWITCH CIRCUIT LOW (BANK 2)

DTC DETECTING CONDITION:

- Detect as soon as malfunction occurs.
- GENERAL DESCRIPTION <Ref. to GD(H4DOTC)-227, DTC P2021 INTAKE MANIFOLD RUNNER POSITION SENSOR / SWITCH CIRCUIT LOW (BANK 2), Diagnostic Trouble Code (DTC) Detecting Criteria.>

TROUBLE SYMPTOM:

- Erroneous idling
- Engine stalls.
- Poor driving performance

CAUTION:

After repair or replacement of faulty parts, conduct Clear Memory Mode <Ref. to EN(H4DOTC)(diag)-45, OPERATION, Clear Memory Mode.> and Inspection Mode <Ref. to EN(H4DOTC)(diag)-36, PROCEDURE, Inspection Mode.>.

WIRING DIAGRAM:

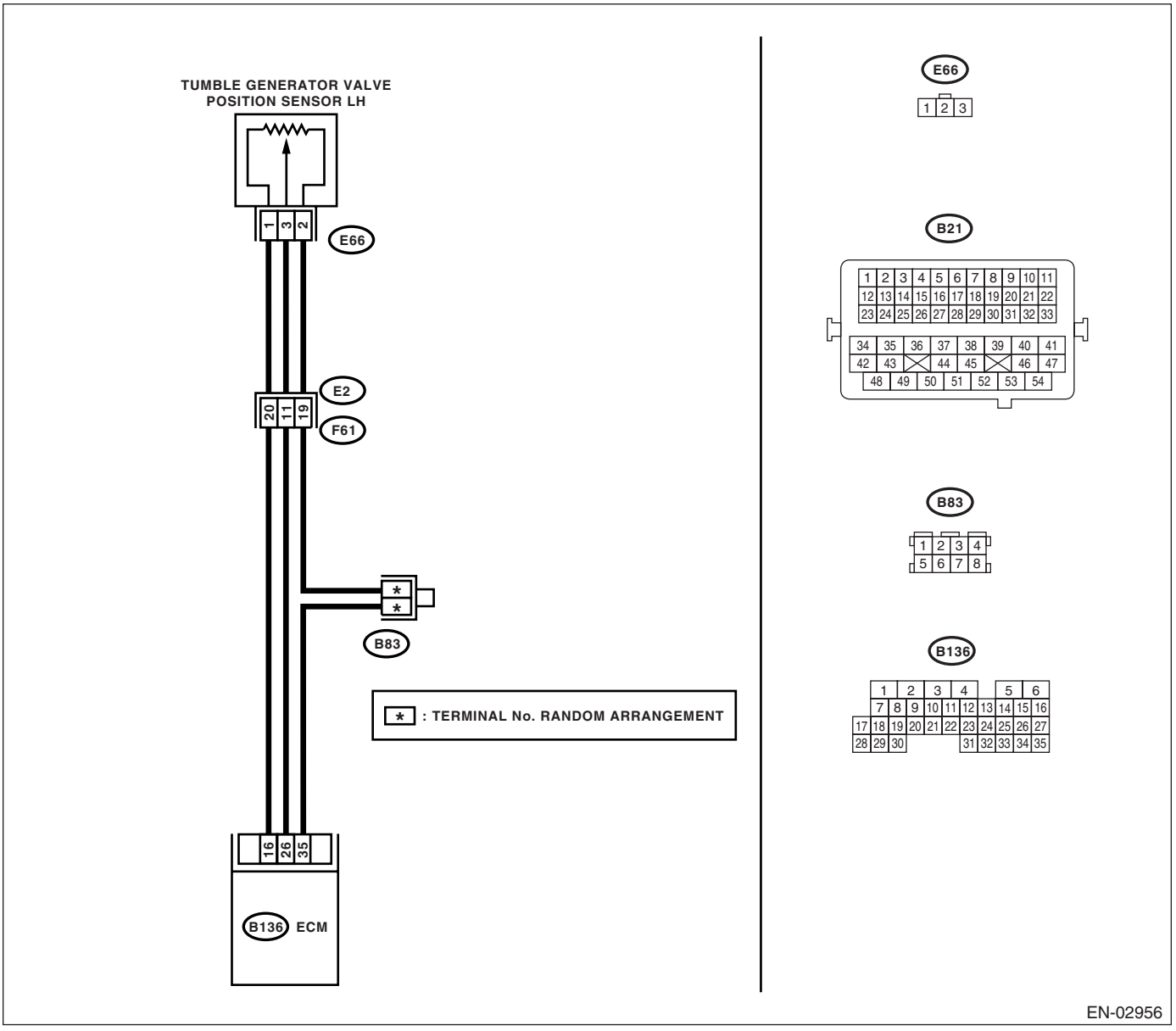

	Step	Check	Yes	No
1	**CHECK CURRENT DATA.** 1) Start the engine. 2) Read the data of tumble generator valve position sensor signal using Subaru Select Monitor or general scan tool. NOTE: • Subaru Select Monitor For detailed operation procedure, refer to the "READ CURRENT DATA FOR ENGINE". <Ref. to EN(H4DOTC)(diag)-28, Subaru Select Monitor.> • General scan tool For detailed operation procedure, refer to the general scan tool instruction manual.	Is the voltage less than 0.1 V?	Go to step **2.**	Even if malfunction indicator light lights up, the circuit has returned to a normal condition at this time. A temporary poor contact of the connector may be the cause. NOTE: In this case, repair the following: • Poor contact in tumble generator valve position sensor connector • Poor contact in ECM connector • Poor contact in coupling connector
2	**CHECK INPUT SIGNAL FOR ECM.** Measure the voltage between ECM connector and chassis ground. ***Connector & terminal*** ***(B136) No. 16 (+) — Chassis ground (−):***	Is the voltage more than 4.5 V?	Go to step **4.**	Go to step **3.**
3	**CHECK INPUT SIGNAL FOR ECM.** Measure the voltage between ECM connector and chassis ground. ***Connector & terminal*** ***(B136) No. 16 (+) — Chassis ground (−):***	Shake the ECM harness and connector, while monitoring value of voltage meter. Does the voltage change?	Repair the poor contact in ECM connector.	Contact your SOA Service Center.
4	**CHECK INPUT SIGNAL FOR ECM.** Measure the voltage between ECM connector and chassis ground. ***Connector & terminal*** ***(B136) No. 26 (+) — Chassis ground (−):***	Is the voltage less than 0.1 V?	Go to step **6.**	Go to step **5.**
5	**CHECK INPUT SIGNAL FOR ECM. (USING SUBARU SELECT MONITOR)** Measure the voltage between ECM connector and chassis ground.	Shake the ECM harness and connector, while monitoring value of Subaru Select Monitor. Does the voltage change?	Repair the poor contact in ECM connector.	Go to step **6.**

	Step	Check	Yes	No
6	**CHECK HARNESS BETWEEN ECM AND TUMBLE GENERATOR VALVE POSITION SENSOR CONNECTOR.** 1) Turn the ignition switch to OFF. 2) Disconnect the connectors from tumble generator valve position sensor. 3) Turn the ignition switch to ON. 4) Measure the voltage between tumble generator valve position sensor connector and engine ground. ***Connector & terminal*** ***(E66) No. 1 (+) — Engine ground (−):***	Is the voltage more than 4.5 V?	Go to step **7.**	Repair the harness and connector. NOTE: In this case, repair the following: • Open circuit in harness between tumble generator valve position sensor and ECM connector • Poor contact in tumble generator valve position sensor connector • Poor contact in ECM connector • Poor contact in coupling connector • Poor contact in joint connector
7	**CHECK HARNESS BETWEEN ECM AND TUMBLE GENERATOR VALVE POSITION SENSOR CONNECTOR.** 1) Turn the ignition switch to OFF. 2) Measure the resistance of harness between ECM connector and tumble generator valve position sensor connector. ***Connector & terminal*** ***(B136) No. 26 — (E66) No. 3:***	Is the resistance less than 1 Ω?	Go to step **8.**	Repair the harness and connector. NOTE: In this case, repair the following: • Open circuit in harness between tumble generator valve position sensor and ECM connector • Poor contact in ECM connector • Poor contact in tumble generator valve position sensor connector • Poor contact in coupling connector
8	**CHECK HARNESS BETWEEN ECM AND TUMBLE GENERATOR VALVE POSITION SENSOR CONNECTOR.** Measure the resistance of harness between tumble generator valve position sensor connector and engine ground. ***Connector & terminal*** ***(E66) No. 3 — Engine ground:***	Is the resistance more than 1 MΩ?	Go to step **9.**	Repair the ground short circuit in harness between tumble generator valve position sensor and ECM connector.
9	**CHECK POOR CONTACT.** Check poor contact in tumble generator valve position sensor connector.	Is there poor contact in tumble generator valve position sensor connector?	Repair the poor contact in tumble generator valve position sensor connector.	Replace the tumble generator valve position sensor. <Ref. to FU(H4DOTC)-32, Tumble Generator Valve Position Sensor.>

DF:DTC P2022 INTAKE MANIFOLD RUNNER POSITION SENSOR / SWITCH CIRCUIT HIGH (BANK 2)

DTC DETECTING CONDITION:

- Detect as soon as malfunction occurs.
- GENERAL DESCRIPTION <Ref. to GD(H4DOTC)-229, DTC P2022 INTAKE MANIFOLD RUNNER POSITION SENSOR / SWITCH CIRCUIT HIGH (BANK 2), Diagnostic Trouble Code (DTC) Detecting Criteria.>

TROUBLE SYMPTOM:

- Erroneous idling
- Engine stalls.
- Poor driving performance

CAUTION:

After repair or replacement of faulty parts, conduct Clear Memory Mode <Ref. to EN(H4DOTC)(diag)-45, OPERATION, Clear Memory Mode.> and Inspection Mode <Ref. to EN(H4DOTC)(diag)-36, PROCEDURE, Inspection Mode.>.

WIRING DIAGRAM:

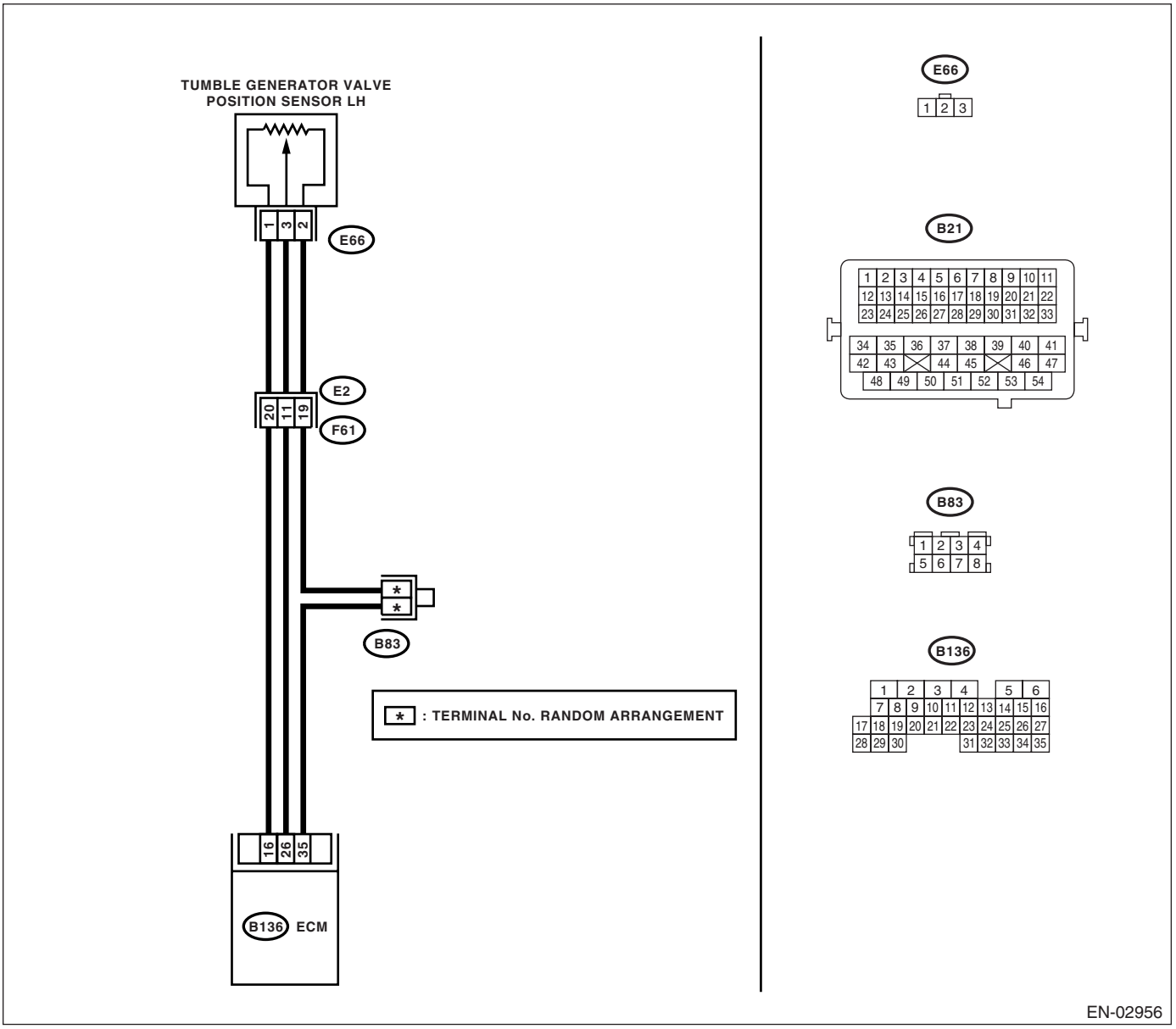

	Step	Check	Yes	No
1	**CHECK CURRENT DATA.** 1) Start the engine. 2) Read the data of tumble generator valve position sensor signal using Subaru Select Monitor or general scan tool. NOTE: • Subaru Select Monitor For detailed operation procedure, refer to the "READ CURRENT DATA FOR ENGINE". <Ref. to EN(H4DOTC)(diag)-28, Subaru Select Monitor.> • General scan tool For detailed operation procedure, refer to the general scan tool instruction manual.	Is the voltage more than 4.9 V?	Go to step **2.**	Even if malfunction indicator light lights up, the circuit has returned to a normal condition at this time. A temporary poor contact of the connector may be the cause. NOTE: In this case, repair the following: • Poor contact in tumble generator valve position sensor connector • Poor contact in ECM connector • Poor contact in coupling connector
2	**CHECK HARNESS BETWEEN TUMBLE GENERATOR VALVE POSITION SENSOR AND ECM CONNECTOR.** 1) Turn the ignition switch to OFF. 2) Disconnect the connector from tumble generator valve position sensor. 3) Measure the resistance of harness between tumble generator valve position sensor connector and engine ground. ***Connector & terminal*** ***(E66) No. 2 — Engine ground:***	Is the resistance less than 5 Ω?	Go to step **3.**	Repair the harness and connector. NOTE: In this case, repair the following: • Open circuit in harness between tumble generator valve position sensor and ECM connector • Poor contact in coupling connector • Poor contact in joint connector
3	**CHECK HARNESS BETWEEN TUMBLE GENERATOR VALVE POSITION SENSOR AND ECM CONNECTOR.** 1) Turn the ignition switch to ON. 2) Measure the voltage between tumble generator valve position sensor connector and engine ground. ***Connector & terminal*** ***(E66) No. 3 (+) — Engine ground (−):***	Is the voltage more than 4.9 V?	Repair the battery short circuit in harness between tumble generator valve position sensor and ECM connector. After repair, replace the ECM. <Ref. to FU(H4DOTC)-39, Engine Control Module (ECM).>	Replace the tumble generator valve position sensor. <Ref. to FU(H4DOTC)-32, Tumble Generator Valve Position Sensor.>

DG:DTC P2088 OCV SOLENOID VALVE SIGNAL A CIRCUIT OPEN (BANK 1)

DTC DETECTING CONDITION:

- Detect as soon as the malfunction occurs.
- GENERAL DESCRIPTION <Ref. to GD(H4DOTC)-231, DTC P2088 OCV SOLENOID VALVE SIGNAL A CIRCUIT OPEN (BANK 1), Diagnostic Trouble Code (DTC) Detecting Criteria.>

TROUBLE SYMPTOM:

Erroneous idling

CAUTION:

After repair or replacement of faulty parts, conduct Clear Memory Mode <Ref. to EN(H4DOTC)(diag)-45, OPERATION, Clear Memory Mode.> and Inspection Mode <Ref. to EN(H4DOTC)(diag)-36, PROCEDURE, Inspection Mode.>.

WIRING DIAGRAM:

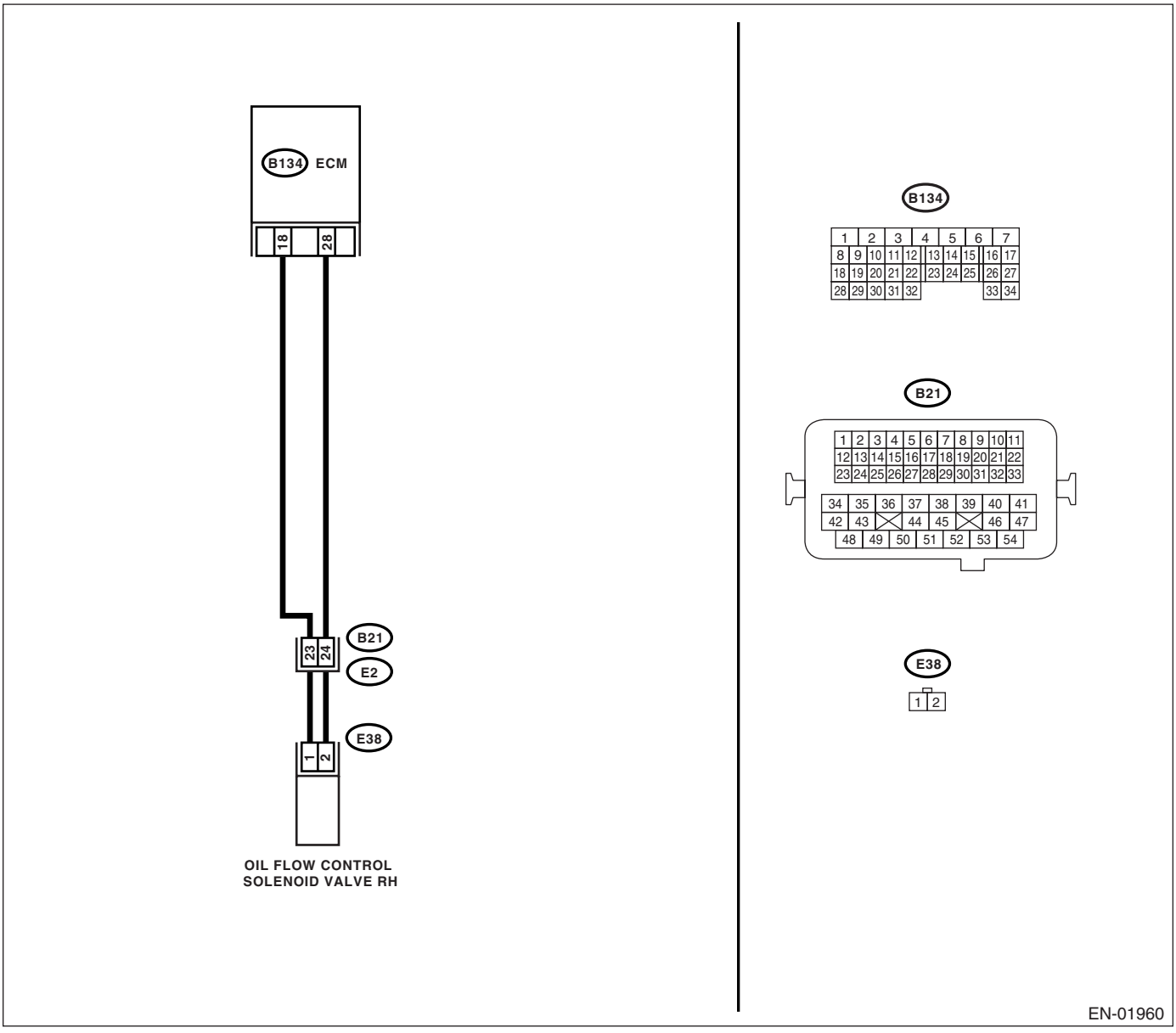

	Step	Check	Yes	No
1	**CHECK HARNESS BETWEEN ECM AND OIL FLOW CONTROL SOLENOID VALVE.** 1) Turn the ignition switch to OFF. 2) Disconnect the connector from ECM and oil flow control solenoid valve. 3) Measure the resistance between ECM and oil flow control solenoid valve. ***Connector & terminal*** ***(B134) No. 18 — (E38) No. 1:*** ***(B134) No. 28 — (E38) No. 2:***	Is the resistance less than 1 Ω?	Go to step **2.**	Repair the open circuit in harness between ECM and oil flow control solenoid valve connector. NOTE: In this case, repair the following: • Open circuit in harness between ECM and oil flow control solenoid valve connector • Poor contact in coupling connector
2	**CHECK OIL FLOW CONTROL SOLENOID VALVE.** 1) Disconnect the oil flow control solenoid valve connector. 2) Measure the resistance between oil flow control solenoid valve terminals. ***Terminals*** ***No. 1 — No. 2:***	Is the resistance 6 — 12 Ω?	Repair the poor contact in ECM and oil flow control solenoid valve.	Replace the oil flow control solenoid valve. <Ref. to ME(H4DOTC)-52, Camshaft.>

DH:DTC P2089 OCV SOLENOID VALVE SIGNAL A CIRCUIT SHORT (BANK 1)

DTC DETECTING CONDITION:

Detect as soon as the malfunction occurs.

- Detect as soon as the malfunction occurs.
- GENERAL DESCRIPTION <Ref. to GD(H4DOTC)-233, DTC P2089 OCV SOLENOID VALVE SIGNAL A CIRCUIT SHORT (BANK 1), Diagnostic Trouble Code (DTC) Detecting Criteria.>

TROUBLE SYMPTOM:

Erroneous idling

CAUTION:

After repair or replacement of faulty parts, conduct Clear Memory Mode <Ref. to EN(H4DOTC)(diag)-45, OPERATION, Clear Memory Mode.> and Inspection Mode <Ref. to EN(H4DOTC)(diag)-36, PROCEDURE, Inspection Mode.>.

WIRING DIAGRAM:

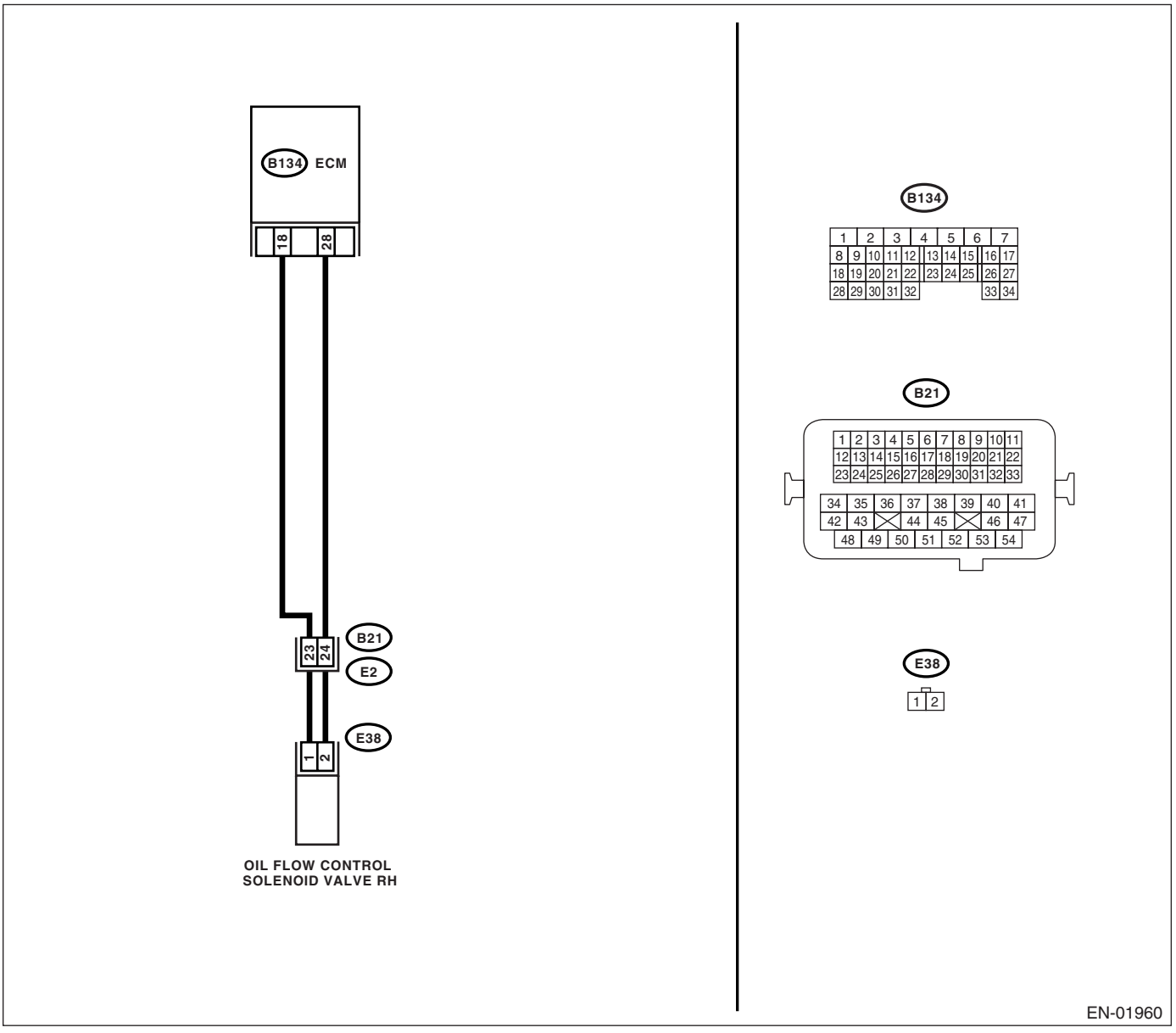

	Step	Check	Yes	No
1	**CHECK HARNESS BETWEEN ECM AND OIL FLOW CONTROL SOLENOID VALVE.** 1) Turn the ignition switch to OFF. 2) Disconnect the connector from ECM and oil flow control solenoid valve. 3) Measure the resistance between oil flow control solenoid valve and engine ground. ***Connector & terminal*** ***(E38) No. 1 — Engine ground:*** ***(E38) No. 2 — Engine ground:***	Is the resistance more than 1 MΩ?	Go to step **2.**	Repair the short circuit between ECM and oil flow control solenoid valve connector.
2	**CHECK OIL FLOW CONTROL SOLENOID VALVE.** 1) Disconnect the oil flow control solenoid valve connector. 2) Measure the resistance between oil flow control solenoid valve terminals. ***Terminals*** ***No. 1 — No. 2:***	Is the resistance 6 — 12 Ω?	Repair the poor contact in ECM and oil flow control solenoid valve.	Replace the oil flow control solenoid valve. <Ref. to ME(H4DOTC)-52, Camshaft.>

DI: DTC P2092 OCV SOLENOID VALVE SIGNAL A CIRCUIT OPEN (BANK 2)

DTC DETECTING CONDITION:

- Detect as soon as the malfunction occurs.
- GENERAL DESCRIPTION <Ref. to GD(H4DOTC)-234, DTC P2092 OCV SOLENOID VALVE SIGNAL A CIRCUIT OPEN (BANK 2), Diagnostic Trouble Code (DTC) Detecting Criteria.>

TROUBLE SYMPTOM:

Erroneous idling

CAUTION:

After repair or replacement of faulty parts, conduct Clear Memory Mode <Ref. to EN(H4DOTC)(diag)-45, OPERATION, Clear Memory Mode.> and Inspection Mode <Ref. to EN(H4DOTC)(diag)-36, PROCEDURE, Inspection Mode.>.

WIRING DIAGRAM:

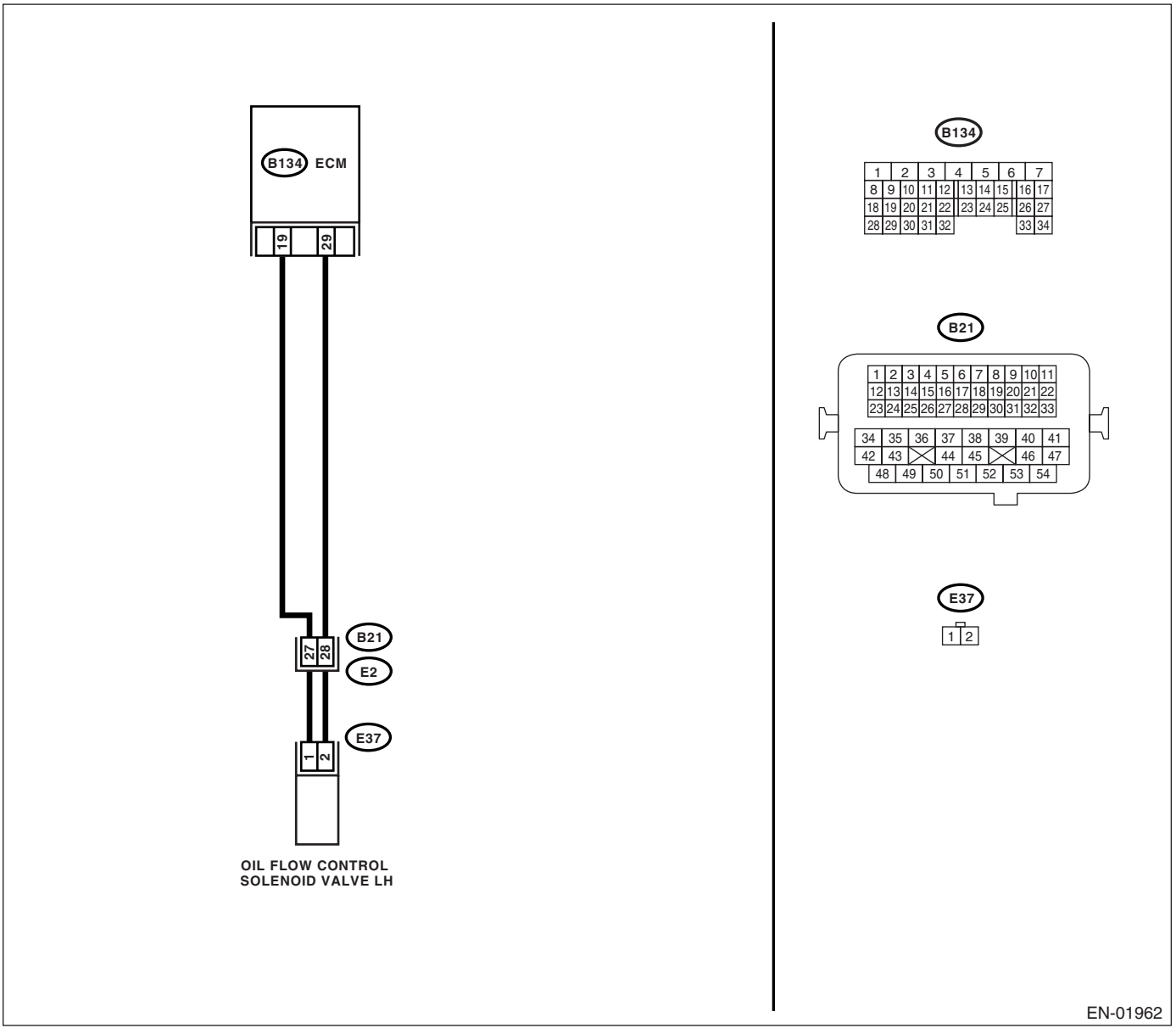

	Step	Check	Yes	No
1	**CHECK HARNESS BETWEEN ECM AND OIL FLOW CONTROL SOLENOID VALVE.** 1) Turn the ignition switch to OFF. 2) Disconnect the connector from ECM and oil flow control solenoid valve. 3) Measure the resistance between ECM and oil flow control solenoid valve. ***Connector & terminal*** ***(B134) No. 19 — (E37) No. 1:*** ***(B134) No. 29 — (E37) No. 2:***	Is the resistance less than 1 Ω?	Go to step **2.**	Repair the open circuit in harness between ECM and oil flow control solenoid valve connector. NOTE: In this case, repair the following: • Open circuit in harness between ECM and oil flow control solenoid valve connector • Poor contact in coupling connector
2	**CHECK OIL FLOW CONTROL SOLENOID VALVE.** 1) Disconnect the oil flow control solenoid valve connector. 2) Measure the resistance between oil flow control solenoid valve terminals. ***Terminals*** ***No. 1 — No. 2:***	Is the resistance 6 — 12 Ω?	Repair the poor contact in ECM and oil flow control solenoid valve.	Replace the oil flow control solenoid valve. <Ref. to ME(H4DOTC)-52, Camshaft.>

DJ:DTC P2093 OCV SOLENOID VALVE SIGNAL A CIRCUIT SHORT (BANK 2)

DTC DETECTING CONDITION:

- Detect as soon as the malfunction occurs.
- GENERAL DESCRIPTION <Ref. to GD(H4DOTC)-234, DTC P2093 OCV SOLENOID VALVE SIGNAL A CIRCUIT SHORT (BANK 2), Diagnostic Trouble Code (DTC) Detecting Criteria.>

TROUBLE SYMPTOM:

Erroneous idling

CAUTION:

After repair or replacement of faulty parts, conduct Clear Memory Mode <Ref. to EN(H4DOTC)(diag)-45, OPERATION, Clear Memory Mode.> and Inspection Mode <Ref. to EN(H4DOTC)(diag)-36, PROCEDURE, Inspection Mode.>.

WIRING DIAGRAM:

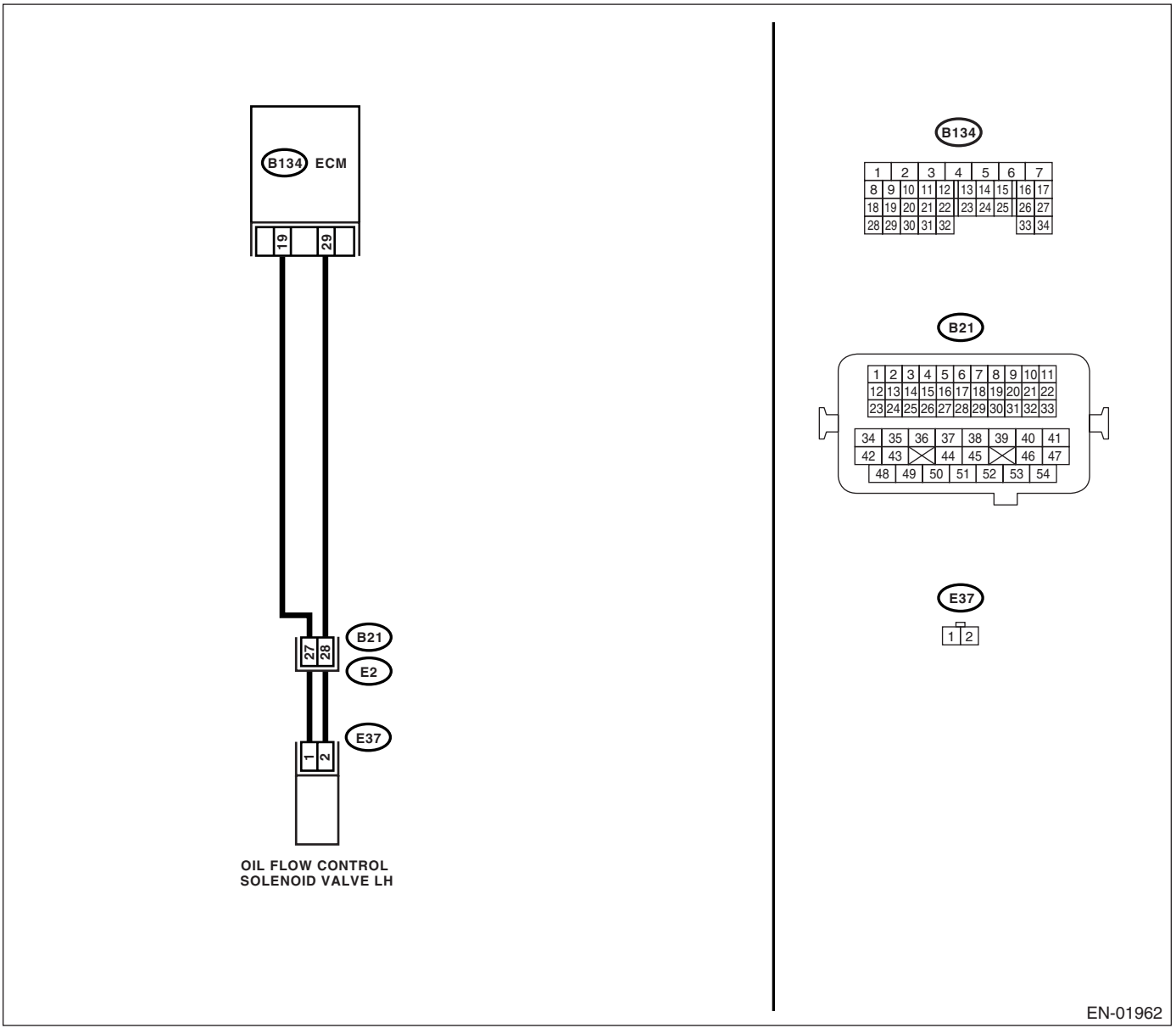

	Step	Check	Yes	No
1	**CHECK HARNESS BETWEEN ECM AND OIL FLOW CONTROL SOLENOID VALVE.** 1) Turn the ignition switch to OFF. 2) Disconnect the connector from ECM and oil flow control solenoid valve. 3) Measure the resistance between oil flow control solenoid valve and engine ground. ***Connector & terminal*** ***(E37) No. 1 — Engine ground:*** ***(E37) No. 2 — Engine ground:***	Is the resistance more than 1 MΩ?	Go to step **2.**	Repair the short circuit between ECM and oil flow control solenoid valve connector.
2	**CHECK OIL FLOW CONTROL SOLENOID VALVE.** 1) Disconnect the oil flow control solenoid valve connector. 2) Measure the resistance between oil flow control solenoid valve terminals. ***Terminals*** ***No. 1 — No. 2:***	Is the resistance 6 — 12 Ω?	Repair the poor contact in ECM and oil flow control solenoid valve.	Replace the oil flow control solenoid valve. <Ref. to ME(H4DOTC)-52, Camshaft.>

DK:DTC P2096 POST CATALYST FUEL TRIM SYSTEM TOO LEAN BANK 1

DTC DETECTING CONDITION:

- Two consecutive driving cycles with fault
- GENERAL DESCRIPTION <Ref. to GD(H4DOTC)-235, DTC P2096 POST CATALYST FUEL TRIM SYSTEM TOO LEAN BANK 1, Diagnostic Trouble Code (DTC) Detecting Criteria.>

CAUTION:
After repair or replacement of faulty parts, conduct Clear Memory Mode <Ref. to EN(H4DOTC)(diag)-45, OPERATION, Clear Memory Mode.> and Inspection Mode <Ref. to EN(H4DOTC)(diag)-36, PROCEDURE, Inspection Mode.>.

WIRING DIAGRAM:

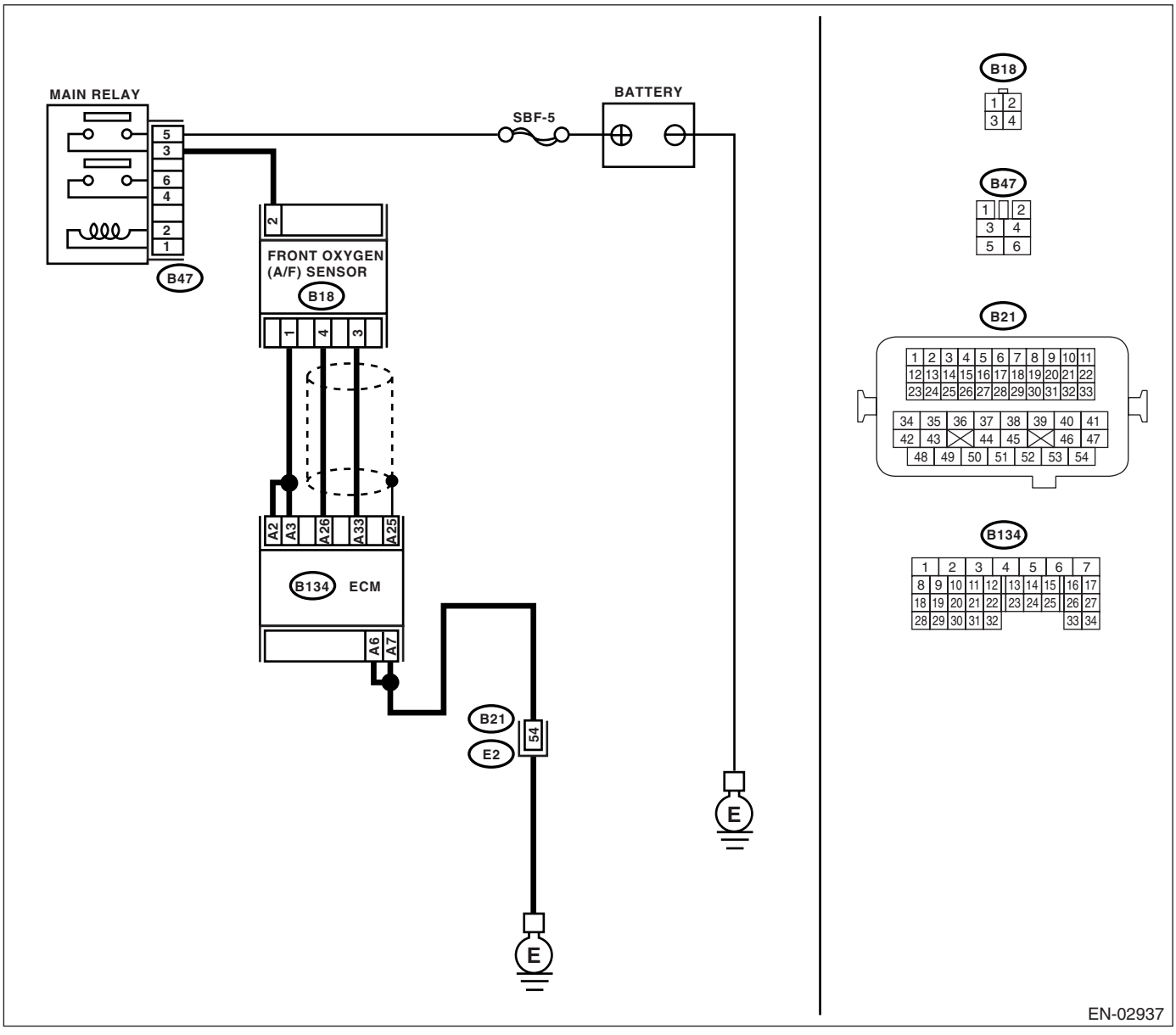

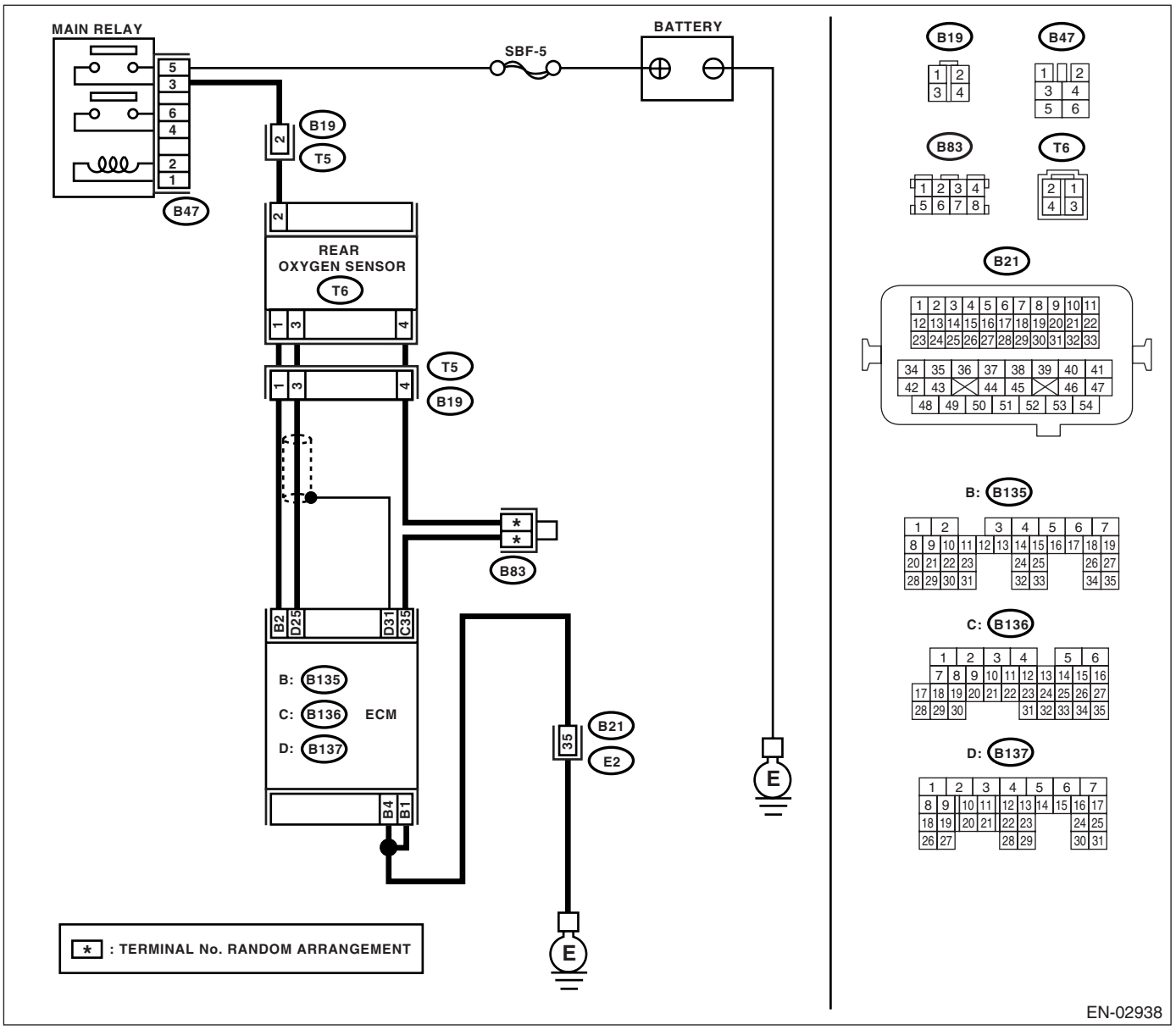

Step		Check	Yes	No
1	**CHECK FOR ANY OTHER DTC ON DISPLAY.**	Is any other DTC displayed?	Check DTC using "List of Diagnostic Trouble Code (DTC)". <Ref. to EN(H4DOTC)(diag)-71, List of Diagnostic Trouble Code (DTC).> NOTE: In this case, it is not necessary to inspect DTC P2096.	Go to step **2.**

	Step	Check	Yes	No
2	**CHECK HARNESS BETWEEN ECM AND REAR OXYGEN (A/F) SENSOR CONNECTOR.** 1) Turn the ignition switch to OFF. 2) Disconnect the connectors from ECM and front oxygen (A/F) sensor connector. 3) Measure the resistance of harness between ECM and front oxygen (A/F) sensor connector. ***Connector & terminal*** ***(B134) No. 26 — (B18) No. 4:*** ***(B134) No. 33 — (B18) No. 3:***	Is the measured value less than 1 Ω?	Go to step **3.**	Repair the harness and connector. NOTE: In this case, repair the following: • Open circuit in harness between ECM and front oxygen (A/F) sensor connector • Poor contact in front oxygen (A/F) sensor connector • Poor contact in ECM connector
3	**CHECK HARNESS BETWEEN ECM AND REAR OXYGEN (A/F) SENSOR CONNECTOR.** Measure the resistance of harness between ECM connector and chassis ground. ***Connector & terminal*** ***(B134) No. 26 — Chassis ground:*** ***(B134) No. 33 — Chassis ground:***	Is the measured value more than 1 MΩ?	Go to step **4.**	Repair the ground short circuit in harness between ECM and front oxygen (A/F) sensor connector.
4	**CHECK OUTPUT SIGNAL FOR ECM.** 1) Connect the connector to ECM. 2) Turn the ignition switch to ON. 3) Measure the voltage between ECM connector and chassis ground. ***Connector & terminal*** ***(B134) No. 26 (+) — Chassis ground (−):***	Is the measured value more than 4.5 V?	Go to step **5.**	Go to step **6.**
5	**CHECK OUTPUT SIGNAL FOR ECM.** Measure the voltage between ECM connector and chassis ground. ***Connector & terminal*** ***(B134) No. 26 (+) — Chassis ground (−):***	Is the measured value more than 10 V?	Repair the battery short circuit in harness between ECM and front oxygen (A/F) sensor connector. After repair, replace the ECM. <Ref. to FU(H4DOTC)-39, Engine Control Module (ECM).>	Repair the poor contact in ECM connector.
6	**CHECK OUTPUT SIGNAL FOR ECM.** Measure the voltage between ECM connector and chassis ground. ***Connector & terminal*** ***(B134) No. 33 (+) — Chassis ground (−):***	Is the measured value more than 4.95 V?	Go to step **7.**	Go to step **8.**
7	**CHECK OUTPUT SIGNAL FOR ECM.** Measure the voltage between ECM connector and chassis ground. ***Connector & terminal*** ***(B134) No. 33 (+) — Chassis ground (−):***	Is the measured value more than 10 V?	Repair the battery short circuit in harness between ECM and front oxygen (A/F) sensor connector. After repair, replace the ECM. <Ref. to FU(H4DOTC)-39, Engine Control Module (ECM).>	Repair the poor contact in ECM connector.

	Step	Check	Yes	No
8	**CHECK EXHAUST SYSTEM.**	Are there holes or loose bolts on exhaust system?	Repair the exhaust system.	Go to step **9.**
9	**CHECK AIR INTAKE SYSTEM.**	Are there holes, loose bolts or disconnection of hose on air intake system?	Repair the air intake system.	Go to step **10.**
10	**CHECK FUEL PRESSURE.** **Warning:** **• Place "NO FIRE" signs near the working area.** **• Be careful not to spill fuel on the floor.** Measure the fuel pressure while disconnecting pressure regulator vacuum hose from intake manifold. <Ref. to ME(H4DOTC)-25, INSPECTION, Fuel Pressure.> **Warning:** **Before removing the fuel pressure gauge, release fuel pressure.** NOTE: If the fuel pressure does not increase, squeeze fuel return hose 2 to 3 times, then measure fuel pressure again.	Is the measured value 284 — 314 kPa (2.9 — 3.2 kg/cm^2, 41 — 46 psi)?	Go to step **11.**	Repair the following items. Fuel pressure too high: • Clogged fuel return line or bent hose Fuel pressure too low: • Improper fuel pump discharge • Clogged fuel supply line
11	**CHECK FUEL PRESSURE.** After connecting the pressure regulator vacuum hose, measure fuel pressure. <Ref. to ME(H4DOTC)-25, INSPECTION, Fuel Pressure.> **Warning:** **Before removing the fuel pressure gauge, release fuel pressure.** NOTE: • If the fuel pressure does not increase, squeeze fuel return hose 2 to 3 times, then measure fuel pressure again. • If out of specification as measured at this step, check or replace the pressure regulator and pressure regulator vacuum hose.	Is the measured value 206 — 235 kPa (2.1 — 2.4 kg/cm^2, 30 — 34 psi)?	Go to step **12.**	Repair the following items. Fuel pressure too high: • Faulty pressure regulator • Clogged fuel return line or bent hose Fuel pressure too low: • Faulty pressure regulator • Improper fuel pump discharge • Clogged fuel supply line
12	**CHECK ENGINE COOLANT TEMPERATURE SENSOR.** 1) Start the engine and warm-up completely. 2) Read the data of engine coolant temperature sensor signal using Subaru Select Monitor or general scan tool. NOTE: • Subaru Select Monitor For detailed operation procedure, refer to the "READ CURRENT DATA FOR ENGINE". <Ref. to EN(H4DOTC)(diag)-28, Subaru Select Monitor.> • General scan tool For detailed operation procedure, refer to the general scan tool instruction manual.	Is the temperature more than 60°C (140°F)?	Go to step **13.**	Replace the engine coolant temperature sensor. <Ref. to FU(H4DOTC)-22, Engine Coolant Temperature Sensor.>

	Step	Check	Yes	No
13	**CHECK MASS AIR FLOW AND INTAKE AIR TEMPERATURE.** 1) Start the engine and warm-up engine until coolant temperature is greater than 60°C (140°F). 2) Place the shift lever in neutral position. 3) Turn the A/C switch to OFF. 4) Turn all accessory switches to OFF. 5) Read the data of mass air flow and intake air temperature sensor signal using Subaru Select Monitor or general scan tool. NOTE: • Subaru Select Monitor For detailed operation procedure, refer to the "READ CURRENT DATA FOR ENGINE". <Ref. to EN(H4DOTC)(diag)-28, Subaru Select Monitor.> • General scan tool For detailed operation procedure, refer to the general scan tool instruction manual.	Is the measured value 2.7 — 4.7 g/s (0.36 — 0.62 lb/m)?	Go to step **14.**	Replace the mass air flow and intake air temperature sensor. <Ref. to FU(H4DOTC)-27, Mass Air Flow and Intake Air Temperature Sensor.>
14	**CHECK MASS AIR FLOW AND INTAKE AIR TEMPERATURE SENSOR.** 1) Start the engine and warm-up engine until coolant temperature is greater than 60°C (140°F). 2) Place the shift lever in neutral position. 3) Turn the A/C switch to OFF. 4) Turn all accessory switches to OFF. 5) Open the front hood. 6) Measure the ambient temperature. 7) Read the data of mass air flow and intake air temperature sensor signal using Subaru Select Monitor or general scan tool. NOTE: • Subaru Select Monitor For detailed operation procedure, refer to the "READ CURRENT DATA FOR ENGINE". <Ref. to EN(H4DOTC)(diag)-28, Subaru Select Monitor.> • General scan tool For detailed operation procedure, refer to the general scan tool instruction manual.	Subtract ambient temperature from intake air temperature. Is the obtained value −10°C — 50°C (−18°F — 90°F)?	Go to step **15.**	Check the mass air flow and intake air temperature sensor. <Ref. to FU(H4DOTC)-27, Mass Air Flow and Intake Air Temperature Sensor.>
15	**CHECK REAR OXYGEN SENSOR DATA.** 1) Warm-up the engine until engine coolant temperature is above 70°C (158°F), and keep the engine speed at 5,000 rpm. 2) Read the data of rear oxygen sensor signal using Subaru Select Monitor or general scan tool. NOTE: • Subaru Select Monitor For detailed operation procedure, refer to the "READ CURRENT DATA SHOWN ON DISPLAY FOR ENGINE". <Ref. to EN(H4DOTC)(diag)-28, Subaru Select Monitor.> • General scan tool For detailed operation procedure, refer to the general scan tool instruction manual.	Is the measured value more than 490 mV?	Go to step **18.**	Go to step **16.**

	Step	Check	Yes	No
16	**CHECK HARNESS BETWEEN ECM AND REAR OXYGEN SENSOR CONNECTOR.** 1) Turn the ignition switch to OFF. 2) Disconnect the connectors from ECM and rear oxygen sensor. 3) Measure the resistance of harness between ECM and rear oxygen sensor connector. ***Connector & terminal*** ***(B137) No. 25 — (T6) No. 3:*** ***(B136) No. 35 — (T6) No. 4:***	Is the measured value more than 3 Ω?	Repair open circuit in harness between ECM and rear oxygen sensor connector.	Go to step **17.**
17	**CHECK HARNESS BETWEEN REAR OXYGEN SENSOR AND ECM CONNECTOR.** 1) Turn the ignition switch to OFF. 2) Disconnect the connector from rear oxygen sensor. 3) Turn the ignition switch to ON. 4) Measure the voltage between rear oxygen sensor harness connector and engine ground or chassis ground. ***Connector & terminal*** ***(T6) No. 3 (+) — Engine ground (−):***	Is the measured value within 0.2 to 0.5 V?	Replace the rear oxygen sensor. <Ref. to FU(H4DOTC)-37, Rear Oxygen Sensor.>	Repair harness and connector. NOTE: In this case, repair the following: • Open circuit in harness between rear oxygen sensor and ECM connector • Poor contact in rear oxygen sensor connector • Poor contact in ECM connector
18	**CHECK REAR OXYGEN SENSOR DATA.** 1) Warm-up the engine until engine coolant temperature is above 70°C (158°F), and immediately decrease the engine speed from 5,000 rpm. 2) Read the data of rear oxygen sensor signal using Subaru Select Monitor or general scan tool. NOTE: • Subaru Select Monitor For detailed operation procedure, refer to the “READ CURRENT DATA SHOWN ON DISPLAY FOR ENGINE”. <Ref. to EN(H4DOTC)(diag)-28, Subaru Select Monitor.> • General scan tool For detailed operation procedure, refer to the general scan tool instruction manual.	Is the measured value less than 250 mV?	Go to step **19.**	Go to step **20.**

	Step	Check	Yes	No
19	**CHECK FRONT OXYGEN (A/F) SENSOR AND REAR OXYGEN SENSOR DATA.** 1) Warm-up the engine until the engine coolant temperature exceeds 70°C (158°F), and leave it at idle for more than 5 minutes. 2) Read the data of rear oxygen sensor signal using Subaru Select Monitor or general scan tool. NOTE: • Subaru Select Monitor For detailed operation procedure, refer to the "READ CURRENT DATA SHOWN ON DISPLAY FOR ENGINE". <Ref. to EN(H4DOTC)(diag)-28, Subaru Select Monitor.> • General scan tool For detailed operation procedure, refer to the general scan tool instruction manual.	Does the voltage keep 0.8 V for more than 5 minutes?	Replace the front oxygen (A/F) sensor. <Ref. to FU(H4DOTC)-35, Front Oxygen (A/F) Sensor.>	Go to step **20.**
20	**CHECK HARNESS BETWEEN ECM AND REAR OXYGEN SENSOR CONNECTOR.** 1) Turn the ignition switch to OFF. 2) Disconnect the connectors from ECM and rear oxygen sensor. 3) Measure the resistance of harness between ECM and rear oxygen sensor connector. ***Connector & terminal*** ***(B137) No. 25 — (T6) No. 3:*** ***(B136) No. 35 — (T6) No. 4:***	Is the measured value more than 3 Ω?	Repair open circuit in harness between ECM and rear oxygen sensor connector.	Go to step **21.**
21	**CHECK HARNESS BETWEEN REAR OXYGEN SENSOR AND ECM CONNECTOR.** 1) Turn the ignition switch to OFF. 2) Disconnect the connector from rear oxygen sensor. 3) Turn the ignition switch to ON. 4) Measure the voltage between rear oxygen sensor harness connector and engine ground or chassis ground. ***Connector & terminal*** ***(T6) No. 3 (+) — Engine ground (−):***	Is the measured value within 0.2 to 0.5 V?	Replace the rear oxygen sensor. <Ref. to FU(H4DOTC)-37, Rear Oxygen Sensor.>	Repair harness and connector. NOTE: In this case, repair the following: • Open circuit in harness between rear oxygen sensor and ECM connector • Poor contact in rear oxygen sensor connector • Poor contact in ECM connector

DL:DTC P2097 POST CATALYST FUEL TRIM SYSTEM TOO RICH BANK 1

DTC DETECTING CONDITION:

- Two consecutive driving cycles with fault
- GENERAL DESCRIPTION <Ref. to GD(H4DOTC)-237, DTC P2097 POST CATALYST FUEL TRIM SYSTEM TOO RICH BANK 1, Diagnostic Trouble Code (DTC) Detecting Criteria.>

CAUTION:
After repair or replacement of faulty parts, conduct Clear Memory Mode <Ref. to EN(H4DOTC)(diag)-45, OPERATION, Clear Memory Mode.> and Inspection Mode <Ref. to EN(H4DOTC)(diag)-36, PROCEDURE, Inspection Mode.>.

WIRING DIAGRAM:

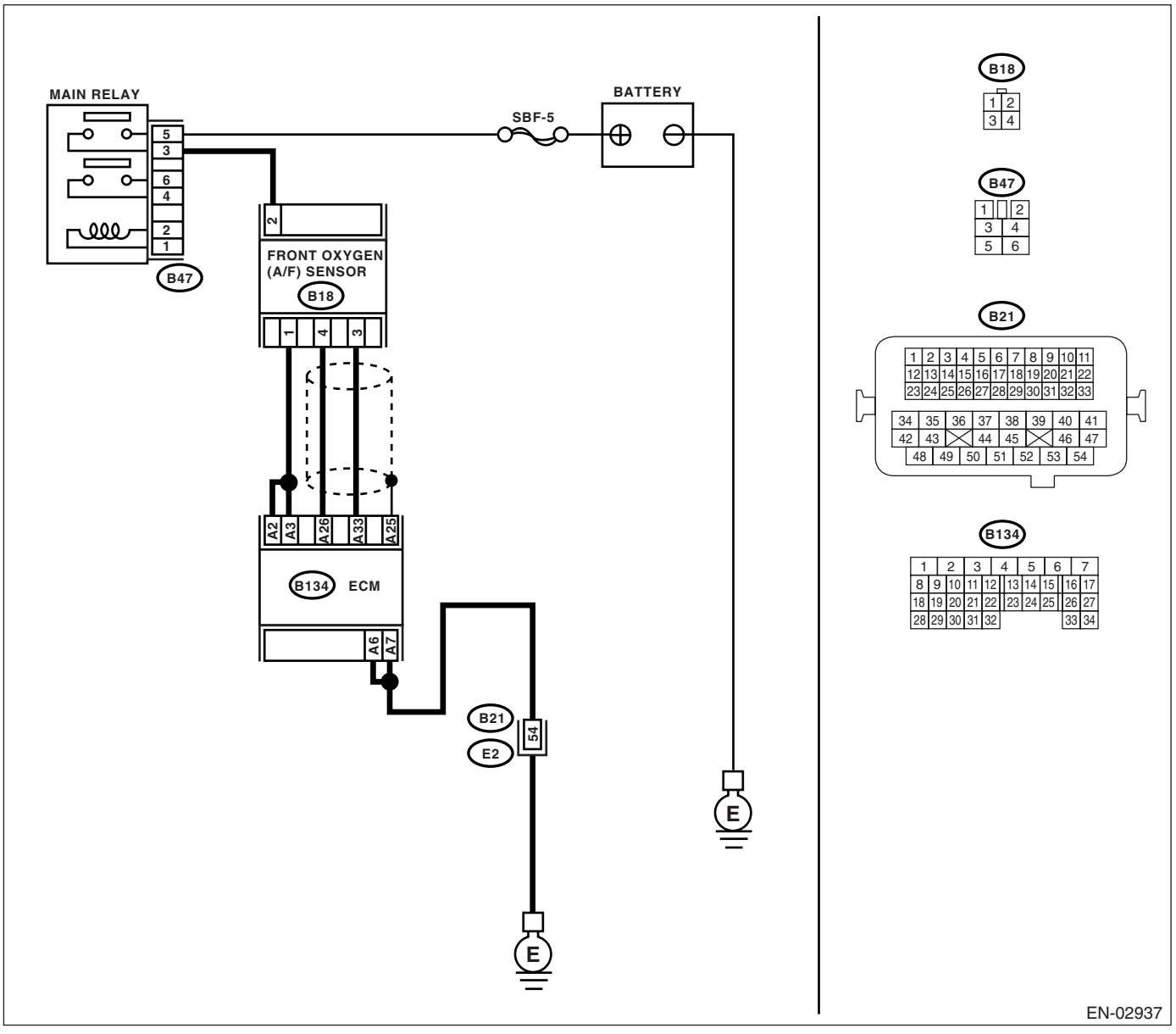

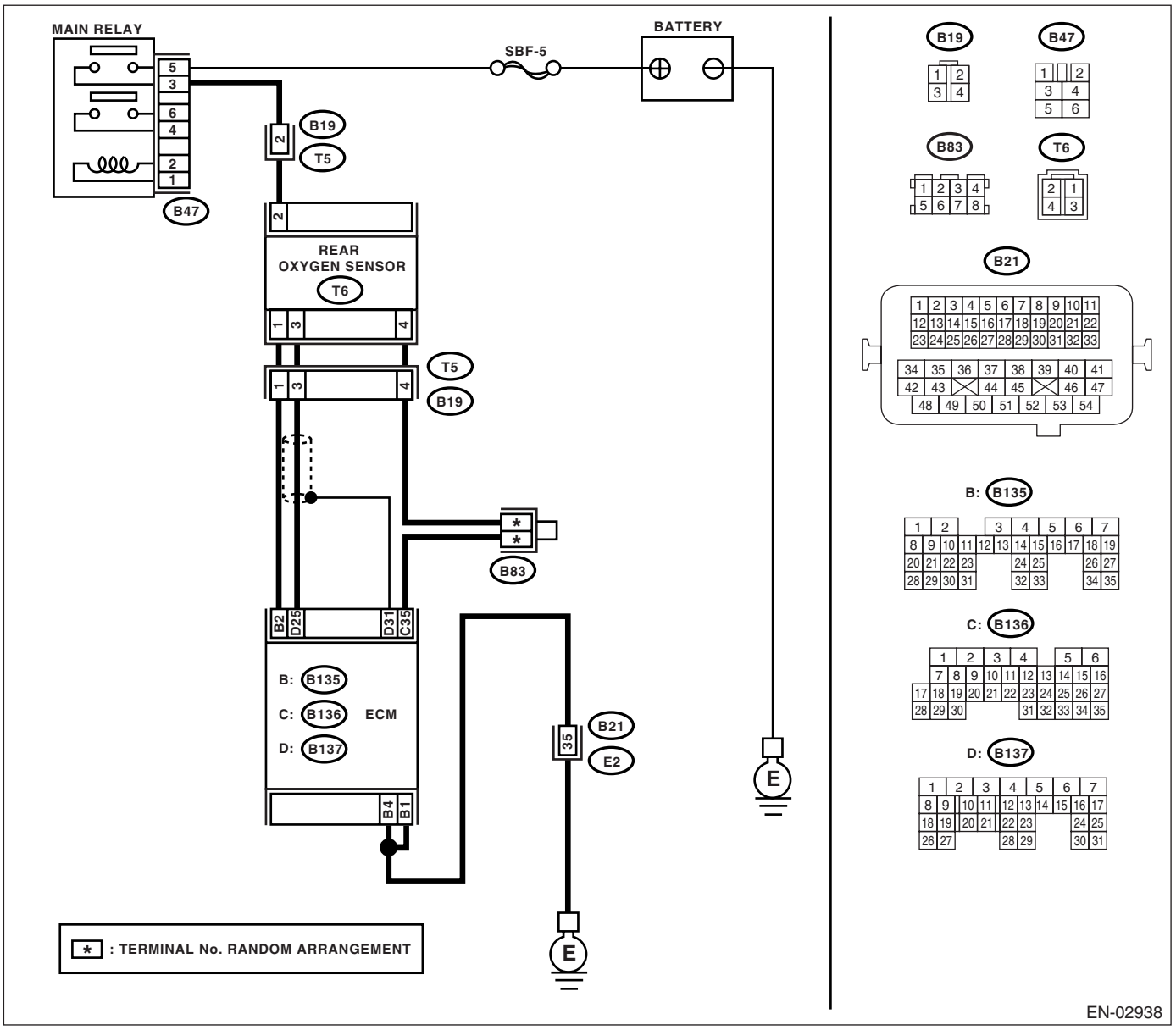

Step		Check	Yes	No
1	**CHECK FOR ANY OTHER DTC ON DISPLAY.**	Is any other DTC displayed?	Check DTC using “List of Diagnostic Trouble Code (DTC)”. <Ref. to EN(H4DOTC)(diag)-71, List of Diagnostic Trouble Code (DTC).> NOTE: In this case, it is not necessary to inspect DTC P2096.	Go to step **2.**

	Step	Check	Yes	No
2	**CHECK HARNESS BETWEEN ECM AND REAR OXYGEN (A/F) SENSOR CONNECTOR.** 1) Turn the ignition switch to OFF. 2) Disconnect the connectors from ECM and front oxygen (A/F) sensor connector. 3) Measure the resistance of harness between ECM and front oxygen (A/F) sensor connector. ***Connector & terminal*** ***(B134) No. 26 — (B18) No. 4:*** ***(B134) No. 33 — (B18) No. 3:***	Is the measured value less than 1 Ω?	Go to step **3.**	Repair the harness and connector. NOTE: In this case, repair the following: • Open circuit in harness between ECM and front oxygen (A/F) sensor connector • Poor contact in front oxygen (A/F) sensor connector • Poor contact in ECM connector
3	**CHECK HARNESS BETWEEN ECM AND REAR OXYGEN (A/F) SENSOR CONNECTOR.** Measure the resistance of harness between ECM connector and chassis ground. ***Connector & terminal*** ***(B134) No. 26 — Chassis ground:*** ***(B134) No. 33 — Chassis ground:***	Is the measured value more than 1 MΩ?	Go to step **4.**	Repair the ground short circuit in harness between ECM and front oxygen (A/F) sensor connector.
4	**CHECK OUTPUT SIGNAL FOR ECM.** 1) Connect the connector to ECM. 2) Turn the ignition switch to ON. 3) Measure the voltage between ECM connector and chassis ground. ***Connector & terminal*** ***(B134) No. 26 (+) — Chassis ground (−):***	Is the measured value more than 4.5 V?	Go to step **5.**	Go to step **6.**
5	**CHECK OUTPUT SIGNAL FOR ECM.** Measure the voltage between ECM connector and chassis ground. ***Connector & terminal*** ***(B134) No. 26 (+) — Chassis ground (−):***	Is the measured value more than 10 V?	Repair the battery short circuit in harness between ECM and front oxygen (A/F) sensor connector. After repair, replace the ECM. <Ref. to FU(H4DOTC)-39, Engine Control Module (ECM).>	Repair the poor contact in ECM connector.
6	**CHECK OUTPUT SIGNAL FOR ECM.** Measure the voltage between ECM connector and chassis ground. ***Connector & terminal*** ***(B134) No. 33 (+) — Chassis ground (−):***	Is the measured value more than 4.95 V?	Go to step **7.**	Go to step **8.**
7	**CHECK OUTPUT SIGNAL FOR ECM.** Measure the voltage between ECM connector and chassis ground. ***Connector & terminal*** ***(B134) No. 33 (+) — Chassis ground (−):***	Is the measured value more than 10 V?	Repair the battery short circuit in harness between ECM and front oxygen (A/F) sensor connector. After repair, replace the ECM. <Ref. to FU(H4DOTC)-39, Engine Control Module (ECM).>	Repair the poor contact in ECM connector.

	Step	Check	Yes	No
8	**CHECK EXHAUST SYSTEM.**	Are there holes or loose bolts on exhaust system?	Repair the exhaust system.	Go to step **9.**
9	**CHECK AIR INTAKE SYSTEM.**	Are there holes, loose bolts or disconnection of hose on air intake system?	Repair the air intake system.	Go to step **10.**
10	**CHECK FUEL PRESSURE.** **Warning:** **• Place "NO FIRE" signs near the working area.** **• Be careful not to spill fuel on the floor.** Measure the fuel pressure while disconnecting pressure regulator vacuum hose from intake manifold. <Ref. to ME(H4DOTC)-25, INSPECTION, Fuel Pressure.> **Warning:** **Before removing the fuel pressure gauge, release fuel pressure.** NOTE: If the fuel pressure does not increase, squeeze fuel return hose 2 to 3 times, then measure fuel pressure again.	Is the measured value 284 — 314 kPa (2.9 — 3.2 kg/cm^2, 41 — 46 psi)?	Go to step **11.**	Repair the following items. Fuel pressure too high: • Clogged fuel return line or bent hose Fuel pressure too low: • Improper fuel pump discharge • Clogged fuel supply line
11	**CHECK FUEL PRESSURE.** After connecting the pressure regulator vacuum hose, measure fuel pressure. <Ref. to ME(H4DOTC)-25, INSPECTION, Fuel Pressure.> **Warning:** **Before removing the fuel pressure gauge, release fuel pressure.** NOTE: • If the fuel pressure does not increase, squeeze fuel return hose 2 to 3 times, then measure fuel pressure again. • If out of specification as measured at this step, check or replace the pressure regulator and pressure regulator vacuum hose.	Is the measured value 206 — 235 kPa (2.1 — 2.4 kg/cm^2, 30 — 34 psi)?	Go to step **12.**	Repair the following items. Fuel pressure too high: • Faulty pressure regulator • Clogged fuel return line or bent hose Fuel pressure too low: • Faulty pressure regulator • Improper fuel pump discharge • Clogged fuel supply line
12	**CHECK ENGINE COOLANT TEMPERATURE SENSOR.** 1) Start the engine and warm-up completely. 2) Read the data of engine coolant temperature sensor signal using Subaru Select Monitor or general scan tool. NOTE: • Subaru Select Monitor For detailed operation procedure, refer to the "READ CURRENT DATA FOR ENGINE". <Ref. to EN(H4DOTC)(diag)-28, Subaru Select Monitor.> • General scan tool For detailed operation procedure, refer to the general scan tool instruction manual.	Is the temperature more than 60°C (140°F)?	Go to step **13.**	Replace the engine coolant temperature sensor. <Ref. to FU(H4DOTC)-22, Engine Coolant Temperature Sensor.>

	Step	Check	Yes	No
13	**CHECK MASS AIR FLOW AND INTAKE AIR TEMPERATURE.** 1) Start the engine and warm-up engine until coolant temperature is greater than 60°C (140°F). 2) Place the shift lever in neutral position. 3) Turn the A/C switch to OFF. 4) Turn all accessory switches to OFF. 5) Read the data of mass air flow and intake air temperature sensor signal using Subaru Select Monitor or general scan tool. NOTE: • Subaru Select Monitor For detailed operation procedure, refer to the "READ CURRENT DATA FOR ENGINE". <Ref. to EN(H4DOTC)(diag)-28, Subaru Select Monitor.> • General scan tool For detailed operation procedure, refer to the general scan tool instruction manual.	Is the measured value 2.7 — 4.7 g/s (0.36 — 0.62 lb/m)?	Go to step **14.**	Replace the mass air flow and intake air temperature sensor. <Ref. to FU(H4DOTC)-27, Mass Air Flow and Intake Air Temperature Sensor.>
14	**CHECK MASS AIR FLOW AND INTAKE AIR TEMPERATURE SENSOR.** 1) Start the engine and warm-up engine until coolant temperature is greater than 60°C (140°F). 2) Place the shift lever in neutral position. 3) Turn the A/C switch to OFF. 4) Turn all accessory switches to OFF. 5) Open the front hood. 6) Measure the ambient temperature. 7) Read the data of mass air flow and intake air temperature sensor signal using Subaru Select Monitor or general scan tool. NOTE: • Subaru Select Monitor For detailed operation procedure, refer to the "READ CURRENT DATA FOR ENGINE". <Ref. to EN(H4DOTC)(diag)-28, Subaru Select Monitor.> • General scan tool For detailed operation procedure, refer to the general scan tool instruction manual.	Subtract ambient temperature from intake air temperature. Is the obtained value −10°C — 50°C (−18°F — 90°F)?	Go to step **15.**	Check the mass air flow and intake air temperature sensor. <Ref. to FU(H4DOTC)-27, Mass Air Flow and Intake Air Temperature Sensor.>
15	**CHECK REAR OXYGEN SENSOR DATA.** 1) Warm-up the engine until engine coolant temperature is above 70°C (158°F), and keep the engine speed at 5,000 rpm. 2) Read the data of rear oxygen sensor signal using Subaru Select Monitor or general scan tool. NOTE: • Subaru Select Monitor For detailed operation procedure, refer to the "READ CURRENT DATA SHOWN ON DISPLAY FOR ENGINE". <Ref. to EN(H4DOTC)(diag)-28, Subaru Select Monitor.> • General scan tool For detailed operation procedure, refer to the general scan tool instruction manual.	Is the measured value more than 490 mV?	Go to step **18.**	Go to step **16.**

	Step	Check	Yes	No
16	**CHECK HARNESS BETWEEN ECM AND REAR OXYGEN SENSOR CONNECTOR.** 1) Turn the ignition switch to OFF. 2) Disconnect the connectors from ECM and rear oxygen sensor. 3) Measure the resistance of harness between ECM and rear oxygen sensor connector. ***Connector & terminal*** ***(B137) No. 25 — (T6) No. 3:*** ***(B136) No. 35 — (T6) No. 4:***	Is the measured value more than 3 Ω?	Repair open circuit in harness between ECM and rear oxygen sensor connector.	Go to step **17.**
17	**CHECK HARNESS BETWEEN REAR OXYGEN SENSOR AND ECM CONNECTOR.** 1) Turn the ignition switch to OFF. 2) Disconnect the connector from rear oxygen sensor. 3) Turn the ignition switch to ON. 4) Measure the voltage between rear oxygen sensor harness connector and engine ground or chassis ground. ***Connector & terminal*** ***(T6) No. 3 (+) — Engine ground (−):***	Is the measured value within 0.2 to 0.5 V?	Replace the rear oxygen sensor. <Ref. to FU(H4DOTC)-37, Rear Oxygen Sensor.>	Repair harness and connector. NOTE: In this case, repair the following: • Open circuit in harness between rear oxygen sensor and ECM connector • Poor contact in rear oxygen sensor connector • Poor contact in ECM connector
18	**CHECK REAR OXYGEN SENSOR DATA.** 1) Warm-up the engine until engine coolant temperature is above 70°C (158°F), and immediately decrease the engine speed from 5,000 rpm. 2) Read the data of rear oxygen sensor signal using Subaru Select Monitor or general scan tool. NOTE: • Subaru Select Monitor For detailed operation procedure, refer to the “READ CURRENT DATA SHOWN ON DISPLAY FOR ENGINE”. <Ref. to EN(H4DOTC)(diag)-28, Subaru Select Monitor.> • General scan tool For detailed operation procedure, refer to the general scan tool instruction manual.	Is the measured value less than 250 mV?	Go to step **19.**	Go to step **20.**

	Step	Check	Yes	No
19	**CHECK FRONT OXYGEN (A/F) SENSOR AND REAR OXYGEN SENSOR DATA.** 1) Warm-up the engine until the engine coolant temperature exceeds 70°C (158°F), and leave it at idle for more than 5 minutes. 2) Read the data of rear oxygen sensor signal using Subaru Select Monitor or general scan tool. NOTE: • Subaru Select Monitor For detailed operation procedure, refer to the "READ CURRENT DATA SHOWN ON DISPLAY FOR ENGINE". <Ref. to EN(H4DOTC)(diag)-28, Subaru Select Monitor.> • General scan tool For detailed operation procedure, refer to the general scan tool instruction manual.	Does the voltage keep 0.8 V for more than 5 minutes?	Replace the front oxygen (A/F) sensor. <Ref. to FU(H4DOTC)-35, Front Oxygen (A/F) Sensor.>	Go to step **20.**
20	**CHECK HARNESS BETWEEN ECM AND REAR OXYGEN SENSOR CONNECTOR.** 1) Turn the ignition switch to OFF. 2) Disconnect the connectors from ECM and rear oxygen sensor. 3) Measure the resistance of harness between ECM and rear oxygen sensor connector. ***Connector & terminal*** ***(B137) No. 25 — (T6) No. 3:*** ***(B136) No. 35 — (T6) No. 4:***	Is the measured value more than 3 Ω?	Repair open circuit in harness between ECM and rear oxygen sensor connector.	Go to step **21.**
21	**CHECK HARNESS BETWEEN REAR OXYGEN SENSOR AND ECM CONNECTOR.** 1) Turn the ignition switch to OFF. 2) Disconnect the connector from rear oxygen sensor. 3) Turn the ignition switch to ON. 4) Measure the voltage between rear oxygen sensor harness connector and engine ground or chassis ground. ***Connector & terminal*** ***(T6) No. 3 (+) — Engine ground (−):***	Is the measured value within 0.2 to 0.5 V?	Replace the rear oxygen sensor. <Ref. to FU(H4DOTC)-37, Rear Oxygen Sensor.>	Repair harness and connector. NOTE: In this case, repair the following: • Open circuit in harness between rear oxygen sensor and ECM connector • Poor contact in rear oxygen sensor connector • Poor contact in ECM connector

DM:DTC P2101 THROTTLE ACTUATOR CONTROL MOTOR CIRCUIT RANGE/PERFORMANCE

DTC DETECTING CONDITION:

- Detect as soon as the malfunction occurs.
- GENERAL DESCRIPTION <Ref. to GD(H4DOTC)-239, DTC P2101 THROTTLE ACTUATOR CONTROL MOTOR CIRCUIT RANGE/PERFORMANCE, Diagnostic Trouble Code (DTC) Detecting Criteria.>

TROUBLE SYMPTOM:

- Erroneous idling
- Poor driving performance
- Engine stalls.

WIRING DIAGRAM:

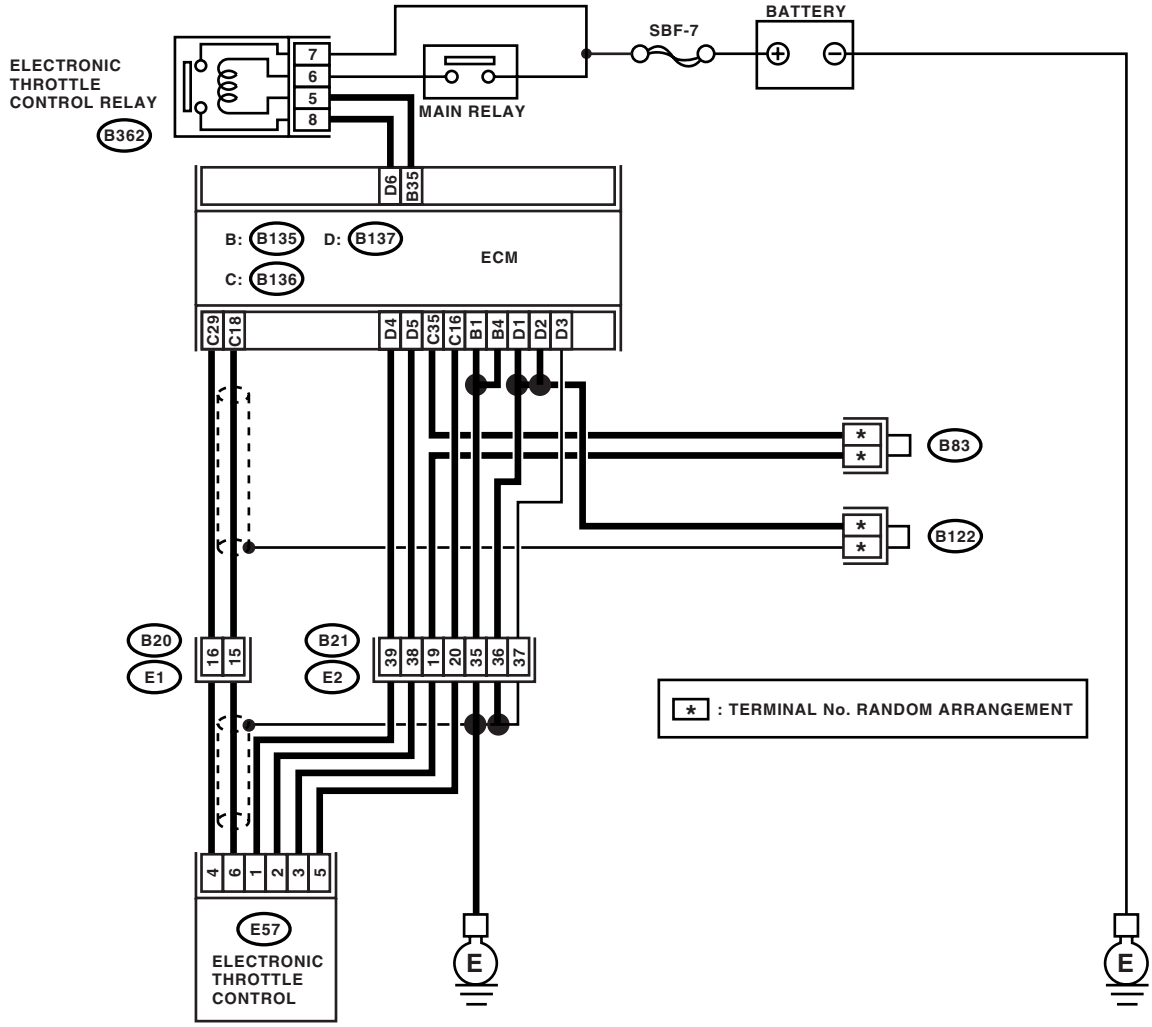

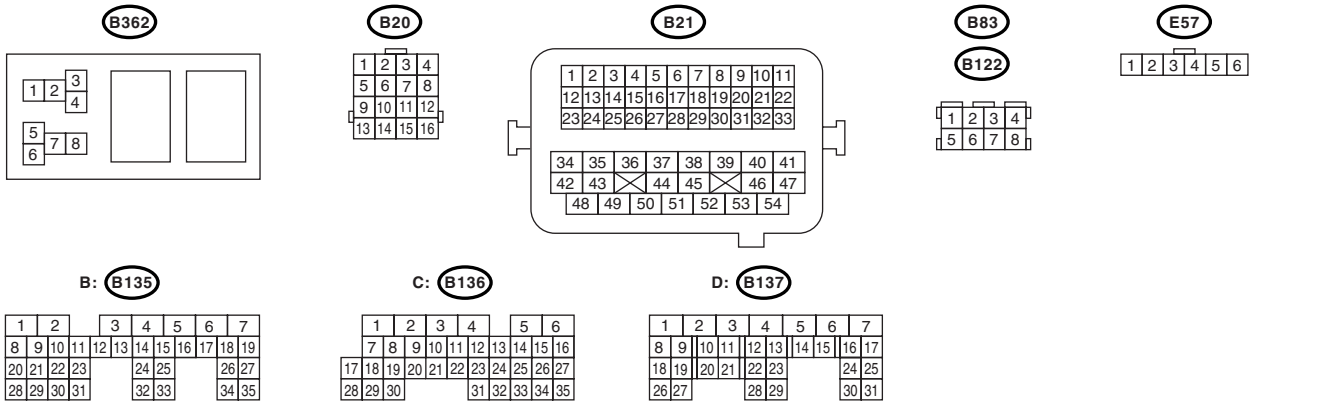

EN-02939

	Step	Check	Yes	No
1	**CHECK ELECTRONIC THROTTLE CONTROL RELAY.** 1) Turn the ignition switch to OFF. 2) Remove the electronic throttle control relay. 3) Connect the battery to terminals No. 5 and No. 6 of electronic throttle control relay. 4) Measure the resistance between electronic throttle control control relay terminals. ***Terminals*** ***No. 7 — No. 8:***	Is the resistance less than 1 Ω?	Go to step **2.**	Replace the electronic throttle control control relay.
2	**CHECK POWER SUPPLY OF ELECTRONIC THROTTLE CONTROL RELAY.** 1) Turn the ignition switch to ON. 2) Measure the voltage between electronic throttle control relay connector and chassis ground. ***Connector & terminal*** ***(B362) No. 7 (+) — Chassis ground (−):*** ***(B362) No. 6 (+) — Chassis ground (−):***	Is the voltage more than 10 V?	Go to step **3.**	Repair the open or ground short circuit of power supply circuit.
3	**CHECK HARNESS BETWEEN ECM AND ELECTRONIC THROTTLE CONTROL RELAY.** 1) Turn the ignition switch to OFF. 2) Disconnect the connector from ECM. 3) Turn the ignition switch to ON. 4) Measure the voltage between electronic throttle control relay connector and chassis ground. ***Connector & terminal*** ***(B362) No. 5 (+) — Chassis ground (−):***	Is the voltage more than 10 V?	Repair power supply short circuit in harness between ECM and electronic throttle control.	Go to step **4.**
4	**CHECK HARNESS BETWEEN ECM AND ELECTRONIC THROTTLE CONTROL RELAY.** 1) Turn the ignition switch to OFF. 2) Measure the resistance between electronic throttle control control relay connector and chassis ground. ***Connector & terminal*** ***(B362) No. 5 — Chassis ground:*** ***(B362) No. 8 — Chassis ground:***	Is the resistance more than 1 MΩ?	Go to step **5.**	Repair the ground short circuit in harness between ECM and electronic throttle control relay.
5	**CHECK HARNESS BETWEEN ECM AND ELECTRONIC THROTTLE CONTROL RELAY.** Measure the resistance between ECM connector and electronic throttle control relay connector. ***Connector & terminal*** ***(B135) No. 35 — (B362) No. 5:*** ***(B137) No. 6 — (B362) No. 8:***	Is the resistance less than 1 Ω?	Go to step **6.**	Repair the open circuit in harness between ECM and electronic throttle control relay.
6	**CHECK SENSOR OUTPUT.** 1) Connect all the connectors. 2) Turn the ignition switch to ON. 3) Measure the voltage between ECM connector terminals. ***Connector & terminal*** ***(B136) No. 18 (+) — (B136) No. 35 (−):***	Is the voltage more than 0.4 V?	Go to step **7.**	Go to step **9.**
7	**CHECK SENSOR OUTPUT.** 1) Connect all the connectors. 2) Turn the ignition switch to ON. 3) Measure the voltage between ECM connector terminals. ***Connector & terminal*** ***(B136) No. 29 (+) — (B136) No. 35 (−):***	Is the voltage more than 0.8 V?	Go to step **8.**	Go to step **9.**

	Step	Check	Yes	No
8	**CHECK POOR CONTACT.** Check the poor contact in connector between ECM and electronic throttle control.	Is there poor contact?	Repair the poor contact.	Go to step **13.**
9	**CHECK HARNESS BETWEEN ECM AND ELECTRONIC THROTTLE CONTROL.** 1) Turn the ignition switch to OFF. 2) Disconnect the connector from ECM. 3) Disconnect the connectors from the electronic throttle control control. 4) Measure the resistance between ECM connector and electronic throttle control connector. ***Connector & terminal*** ***(B136) No. 16 — (E57) No. 5:***	Is the resistance less than 1 Ω?	Go to step **10.**	Repair the open circuit of harness connector.
10	**CHECK HARNESS BETWEEN ECM AND ELECTRONIC THROTTLE CONTROL.** Measure the resistance between ECM connector and chassis ground. ***Connector & terminal*** ***(B136) No. 16 — Chassis ground:*** ***(B136) No. 18 — Chassis ground:*** ***(B136) No. 29 — Chassis ground:***	Is the resistance more than 1 MΩ?	Go to step **11.**	Repair the ground short circuit of harness.
11	**CHECK SENSOR POWER SUPPLY.** 1) Connect the ECM connector. 2) Turn the ignition switch to ON. 3) Measure the voltage between electronic throttle control connector and engine ground. ***Connector & terminal*** ***(E57) No. 5 (+) — Engine ground (−):***	Is the voltage 4.5 — 5.5 V?	Go to step **12.**	Repair the poor contact in ECM connector. Replace the ECM if defective. <Ref. to FU(H4DOTC)-39, Engine Control Module (ECM).>
12	**CHECK SHORT CIRCUIT IN ECM.** 1) Turn the ignition switch to OFF. 2) Measure the resistance between electronic throttle control control connector and engine ground. ***Connector & terminal*** ***(E57) No. 6 — Engine ground:*** ***(E57) No. 4 — Engine ground:***	Is the resistance more than 10 Ω?	Go to step **13.**	Repair the poor contact in ECM connector. Replace the ECM if defective. <Ref. to FU(H4DOTC)-39, Engine Control Module (ECM).>
13	**CHECK SENSOR OUTPUT.** 1) Connect all the connectors. 2) Turn the ignition switch to ON. 3) Read the data of main throttle sensor signal using Subaru Select Monitor. NOTE: • Subaru Select Monitor For detailed operation procedure, refer to the "READ CURRENT DATA FOR ENGINE". <Ref. to EN(H4DOTC)(diag)-28, Subaru Select Monitor.>	Is the voltage 4.63 V?	Go to step **14.**	Go to step **16.**
14	**CHECK SENSOR OUTPUT.** Read the data of sub throttle sensor signal using Subaru Select Monitor. NOTE: • Subaru Select Monitor For detailed operation procedure, refer to the "READ CURRENT DATA FOR ENGINE". <Ref. to EN(H4DOTC)(diag)-28, Subaru Select Monitor.>	Is the voltage 4.73 V?	Go to step **15.**	Go to step **16.**

	Step	Check	Yes	No
15	**CHECK POOR CONTACT.** Check the poor contact in connector between ECM and electronic throttle control.	Is there poor contact?	Repair the poor contact.	Go to step **20.**
16	**CHECK HARNESS BETWEEN ECM AND ELECTRONIC THROTTLE CONTROL.** 1) Turn the ignition switch to OFF. 2) Disconnect the connector from ECM. 3) Disconnect the connectors from the electronic throttle control control. 4) Measure the resistance between ECM connector and electronic throttle control connector. ***Connector & terminal*** ***(B136) No. 35 — (E57) No. 3:*** ***(B136) No. 18 — (E57) No. 6:*** ***(B136) No. 29 — (E57) No. 4:***	Is the resistance less than 1 Ω?	Go to step **17.**	Repair the open circuit of harness connector.
17	**CHECK HARNESS BETWEEN ECM AND ELECTRONIC THROTTLE CONTROL.** 1) Connect the ECM connector. 2) Measure the resistance between electronic throttle control control connector and engine ground. ***Connector & terminal*** ***(E57) No. 3 — Engine ground:***	Is the resistance less than 5 Ω?	Go to step **18.**	Repair the poor contact in ECM connector. Replace the ECM if defective. <Ref. to FU(H4DOTC)-39, Engine Control Module (ECM).>
18	**CHECK HARNESS BETWEEN ECM AND ELECTRONIC THROTTLE CONTROL.** Measure the voltage between electronic throttle control connector and engine ground. ***Connector & terminal*** ***(E57) No. 6 (+) — Engine ground (−):*** ***(E57) No. 4 (+) — Engine ground (−):***	Is the voltage less than 10 V?	Go to step **19.**	Repair the short circuit in harness between ECM connector and electronic throttle control connector.
19	**CHECK HARNESS BETWEEN ECM AND ELECTRONIC THROTTLE CONTROL.** 1) Turn the ignition switch to OFF. 2) Remove the ECM. 3) Measure the resistance between ECM connectors. ***Connector & terminal*** ***(B136) No. 18 — (B136) No. 35:*** ***(B136) No. 29 — (B136) No. 35:***	Is the resistance more than 1 MΩ?	Go to step **20.**	Repair the short circuit to sensor power supply.
20	**CHECK SENSOR OUTPUT.** 1) Turn the ignition switch to OFF. 2) Connect the connectors except of the electric control throttle relay. 3) Turn the ignition switch to ON. 4) Read the data of main throttle sensor signal using Subaru Select Monitor. NOTE: • Subaru Select Monitor For detailed operation procedure, refer to the “READ CURRENT DATA FOR ENGINE”. <Ref. to EN(H4DOTC)(diag)-28, Subaru Select Monitor.>	Is the voltage 0.81 — 0.87 V?	Go to step **21.**	Repair the poor contact of electronic throttle control connector. Replace the electronic throttle control if defective.

	Step	Check	Yes	No
21	**CHECK SENSOR OUTPUT.** Read the data of sub throttle sensor signal using Subaru Select Monitor. NOTE: • Subaru Select Monitor For detailed operation procedure, refer to the "READ CURRENT DATA FOR ENGINE". <Ref. to EN(H4DOTC)(diag)-28, Subaru Select Monitor.>	Is the voltage 1.64 — 1.70 V?	Go to step **22.**	Repair the poor contact in ECM connector. Replace the electronic throttle control if defective.
22	**CHECK HARNESS BETWEEN ECM AND ELECTRONIC THROTTLE CONTROL MOTOR.** 1) Turn the ignition switch to OFF. 2) Disconnect the connector from ECM. 3) Disconnect the connectors from the electronic throttle control control. 4) Measure the resistance between ECM connector and electronic throttle control connector. ***Connector & terminal*** ***(B137) No. 5 — (E57) No. 2:*** ***(B137) No. 4 — (E57) No. 1:***	Is the resistance less than 1 Ω?	Go to step **23.**	Repair the open circuit of harness connector.
23	**CHECK HARNESS BETWEEN ECM AND ELECTRONIC THROTTLE CONTROL MOTOR.** 1) Connect the connector to ECM. 2) Turn the ignition switch to ON. 3) Measure the voltage between electronic throttle control connector and engine ground. ***Connector & terminal*** ***(E57) No. 2 (+) — Engine ground (−):*** ***(E57) No. 1 (+) — Engine ground (−):***	Is the voltage less than 5 V?	Go to step **24.**	Repair power supply short circuit in harness between ECM and electronic throttle control.
24	**CHECK HARNESS BETWEEN ECM AND ELECTRONIC THROTTLE CONTROL MOTOR.** 1) Turn the ignition switch to OFF. 2) Disconnect the connector from ECM. 3) Measure the resistance between electronic throttle control control connector and engine ground. ***Connector & terminal*** ***(E57) No. 2 — Engine ground:*** ***(E57) No. 1 — Engine ground:***	Is the resistance more than 1 MΩ?	Go to step **25.**	Repair the short circuit of harness.
25	**CHECK ELECTRONIC THROTTLE CONTROL MOTOR HARNESS.** Measure the resistance between electronic throttle control connector terminals. ***Connector & terminal*** ***(E57) No. 2 — (E57) No. 1:***	Is the resistance more than 1 MΩ?	Go to step **26.**	Repair the short circuit of harness.
26	**CHECK ELECTRONIC THROTTLE CONTROL GROUND CIRCUIT.** Measure the resistance between ECM connector and chassis ground. ***Connector & terminal*** ***(B137) No. 3 — Chassis ground:***	Is the resistance less than 10 Ω?	Go to step **27.**	Repair the open circuit of harness.
27	**CHECK ELECTRONIC THROTTLE CONTROL.** Measure the resistance between electronic throttle control terminals. ***Terminals*** ***No. 1 — No. 2:***	Is the resistance less than 5 Ω?	Go to step **28.**	Replace the electronic throttle control control.

	Step	Check	Yes	No
28	**CHECK ELECTRONIC THROTTLE CONTROL.** Move the throttle valve to the fully open and fully closed positions with fingers. Check the valve returns to the specified position when releasing fingers.	Does the valve return to the specified position? Standard value: 3 mm (0.12 in) from fully closed position	Repair the poor contact in ECM connector. Replace the ECM if defective. <Ref. to FU(H4DOTC)-39, Engine Control Module (ECM).>	Replace the electronic throttle control control.

DN:DTC P2102 THROTTLE ACTUATOR CONTROL MOTOR CIRCUIT LOW

DTC DETECTING CONDITION:

- Detect as soon as the malfunction occurs.
- GENERAL DESCRIPTION <Ref. to GD(H4DOTC)-241, DTC P2102 THROTTLE ACTUATOR CONTROL MOTOR CIRCUIT LOW, Diagnostic Trouble Code (DTC) Detecting Criteria.>

TROUBLE SYMPTOM:

- Erroneous idling
- Poor driving performance
- Engine stalls.

WIRING DIAGRAM:

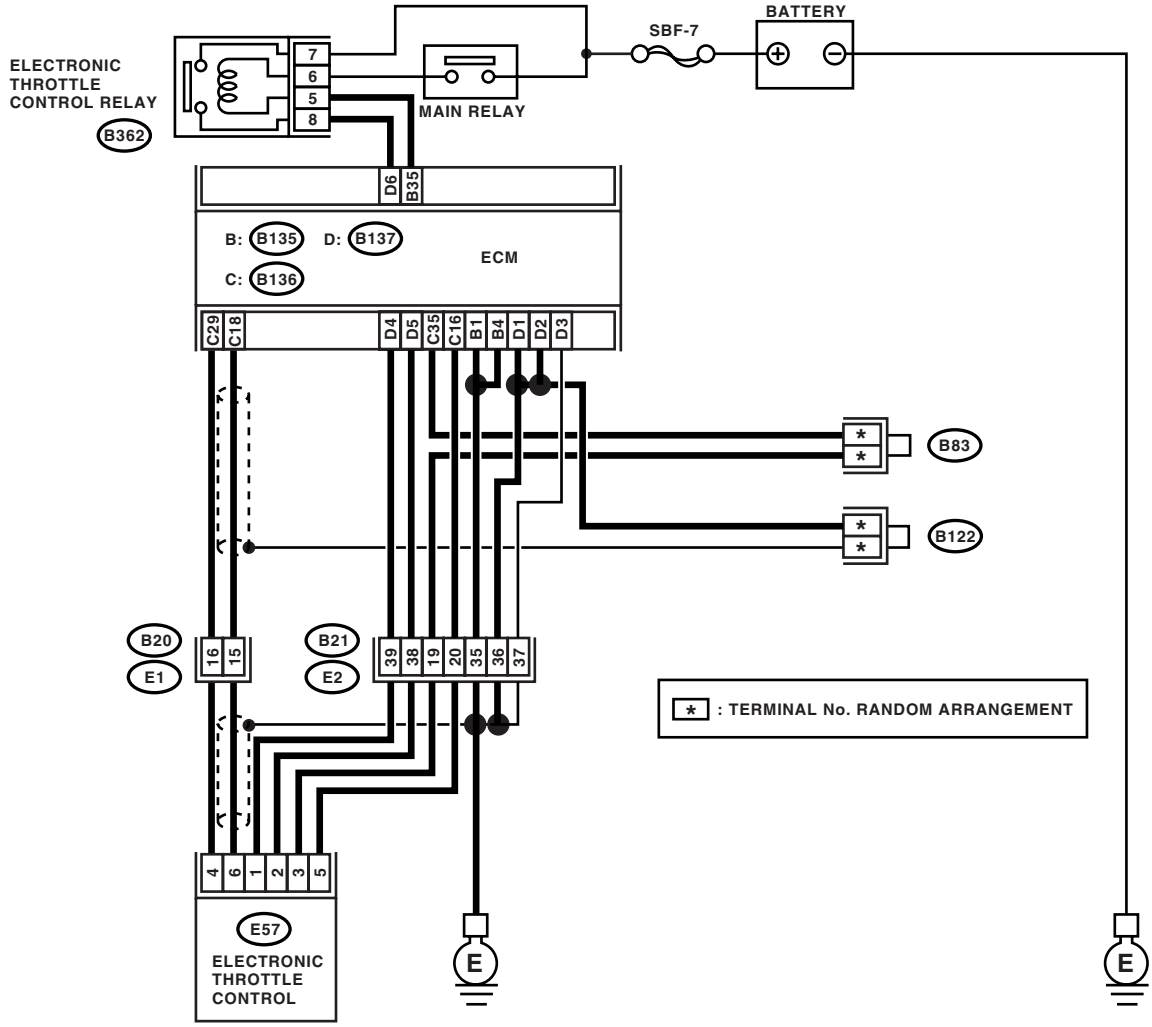

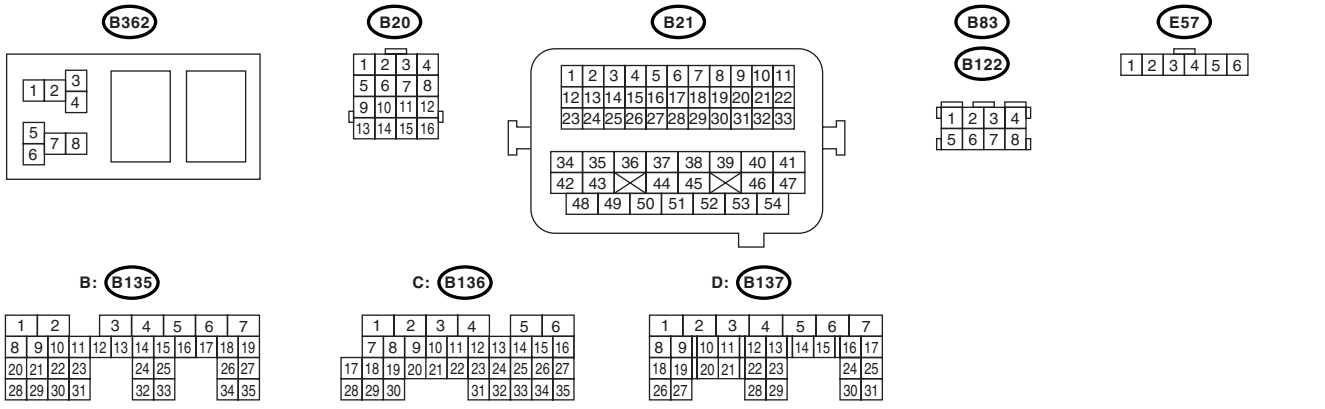

EN-02939

	Step	Check	Yes	No
1	**CHECK ELECTRONIC THROTTLE CONTROL RELAY.** 1) Turn the ignition switch to OFF. 2) Remove the electronic throttle control relay. 3) Connect the battery to terminals No. 5 and No. 6 of electronic throttle control relay. 4) Measure the resistance between electronic throttle control control terminals. ***Terminals*** ***(B362) No. 7 — (B362) No. 8:***	Is the resistance less than 1 Ω?	Go to step **2.**	Replace the electronic throttle control control relay.
2	**CHECK POWER SUPPLY OF ELECTRONIC THROTTLE CONTROL RELAY.** 1) Turn the ignition switch to ON. 2) Measure the voltage between electronic throttle control relay connector and chassis ground. ***Connector & terminal*** ***(B362) No. 7 (+) — Chassis ground (−):*** ***(B362) No. 6 (+) — Chassis ground (−):***	Is the voltage more than 10 V?	Go to step **3.**	Repair the open or ground short circuit of power supply circuit.
3	**CHECK HARNESS BETWEEN ECM AND ELECTRONIC THROTTLE CONTROL RELAY.** 1) Turn the ignition switch to OFF. 2) Disconnect the connector from ECM. 3) Turn the ignition switch to ON. 4) Measure the voltage between electronic throttle control relay connector and chassis ground. ***Connector & terminal*** ***(B362) No. 5 (+) — Chassis ground (−):***	Is the voltage more than 10 V?	Repair power supply short circuit in harness between ECM and electronic throttle control relay.	Go to step **4.**
4	**CHECK HARNESS BETWEEN ECM AND ELECTRONIC THROTTLE CONTROL RELAY.** 1) Turn the ignition switch to OFF. 2) Measure the resistance between electronic throttle control control relay connector and chassis ground. ***Connector & terminal*** ***(B362) No. 5 — Chassis ground:*** ***(B362) No. 8 — Chassis ground:***	Is the resistance more than 1 MΩ?	Go to step **5.**	Repair the ground short circuit in harness between ECM and electronic throttle control relay.
5	**CHECK HARNESS BETWEEN ECM AND ELECTRONIC THROTTLE CONTROL RELAY.** Measure the resistance between ECM connector and electronic throttle control relay connector. ***Connector & terminal*** ***(B135) No. 35 — (B362) No. 5:*** ***(B137) No. 6 — (B362) No. 8:***	Is the resistance less than 1 Ω?	Repair the poor contact in ECM connector. Replace the ECM if defective. <Ref. to FU(H4DOTC)-39, Engine Control Module (ECM).>	Repair the open circuit in harness between ECM and electronic throttle control relay.

DO:DTC P2103 THROTTLE ACTUATOR CONTROL MOTOR CIRCUIT HIGH

DTC DETECTING CONDITION:

- Detect as soon as the malfunction occurs.
- GENERAL DESCRIPTION <Ref. to GD(H4DOTC)-243, DTC P2103 THROTTLE ACTUATOR CONTROL MOTOR CIRCUIT HIGH, Diagnostic Trouble Code (DTC) Detecting Criteria.>

WIRING DIAGRAM:

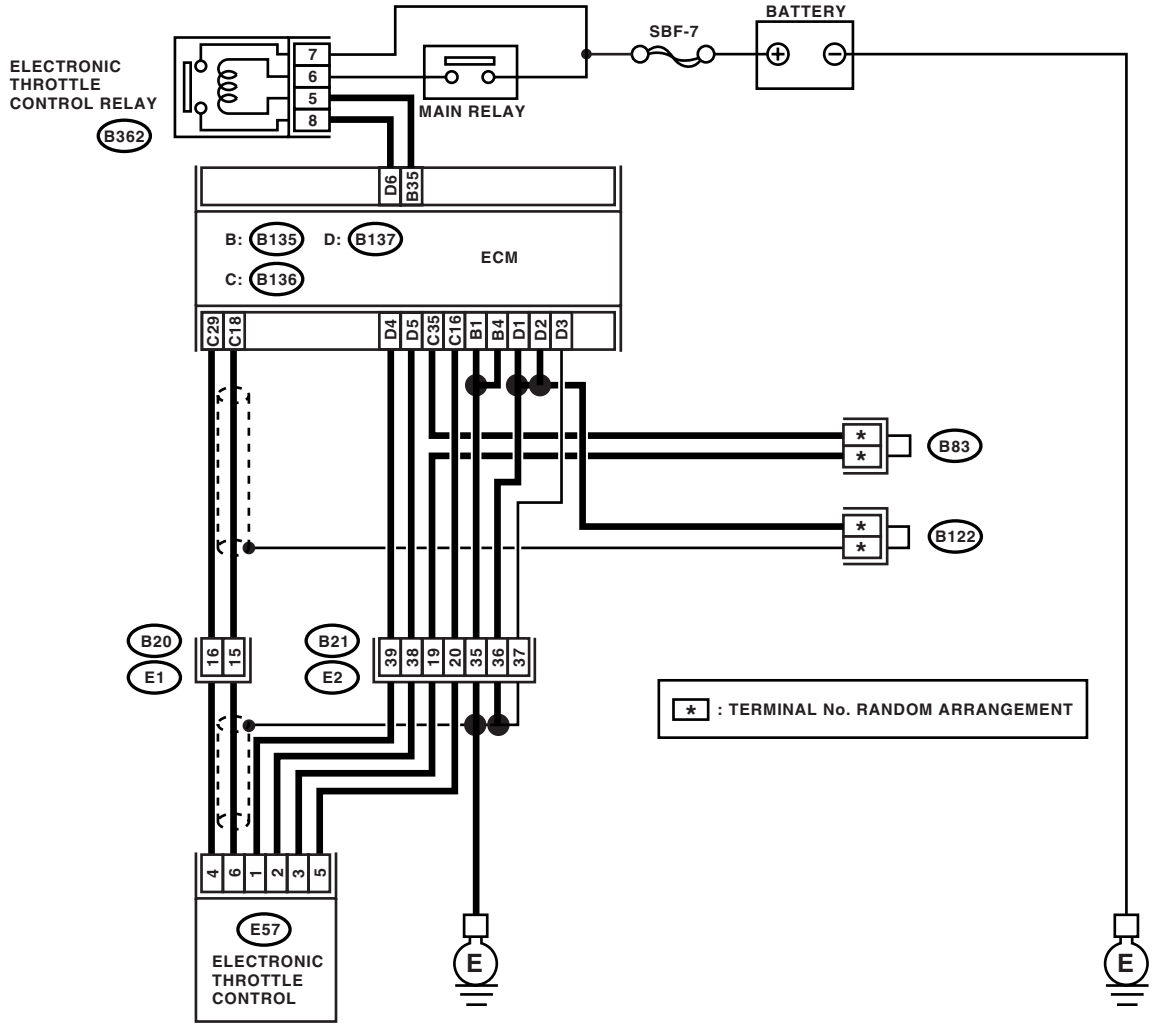

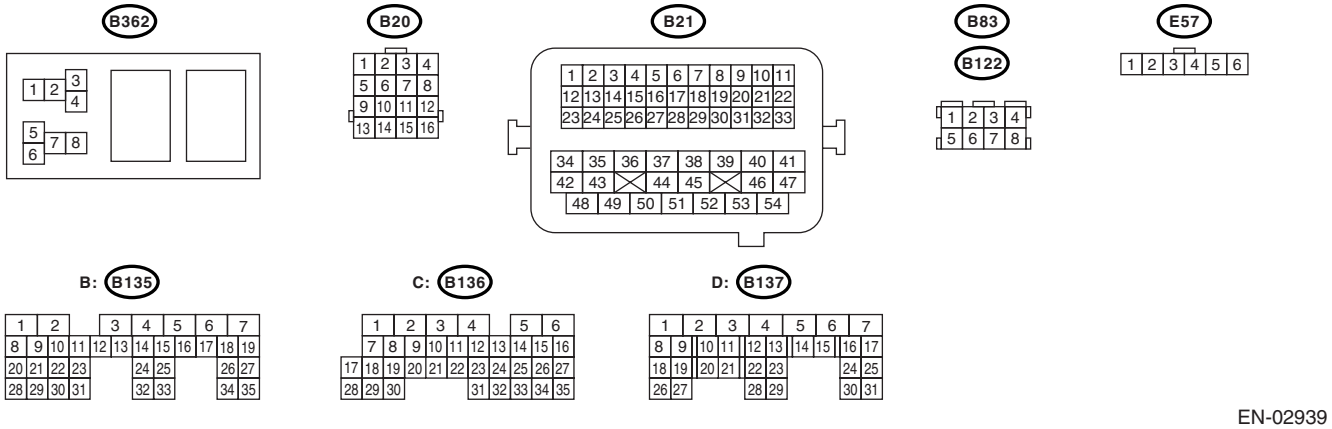

EN-02939

	Step	Check	Yes	No
1	**CHECK ELECTRONIC THROTTLE CONTROL RELAY.** 1) Turn the ignition switch to OFF. 2) Remove the electronic throttle control relay. 3) Measure the resistance between electronic throttle control control relay terminals. ***Terminals*** ***No. 7 — No. 8:***	Is the resistance more than 1 MΩ?	Go to step **2.**	Replace the electronic throttle control control relay.
2	**CHECK POWER SUPPLY SHORT CIRCUIT OF ELECTRONIC THROTTLE CONTROL RELAY.** 1) Turn the ignition switch to ON. 2) Measure the voltage between electronic throttle control relay connector and chassis ground. ***Connector & terminal*** ***(B362) No. 8 (+) — Chassis ground (−):***	Is the voltage more than 5 V?	Go to step **3.**	Repair power supply short circuit in harness between ECM and electronic throttle control relay.
3	**CHECK HARNESS BETWEEN ECM AND ELECTRONIC THROTTLE CONTROL RELAY.** 1) Turn the ignition switch to OFF. 2) Disconnect the connector from ECM. 3) Measure the resistance between ECM connector and chassis ground. ***Connector & terminal*** ***(B135) No. 35 — Chassis ground:***	Is the resistance more than 1 MΩ?	Repair the poor contact in ECM connector. Replace the ECM if defective. <Ref. to FU(H4DOTC)-39, Engine Control Module (ECM).>	Repair the ground short circuit in harness between ECM and electronic throttle control relay.

DP:DTC P2109 THROTTLE/PEDAL POSITION SENSOR A MINIMUM STOP PERFORMANCE

NOTE:
For diagnostic procedure, refer to DTC P2101. <Ref. to EN(H4DOTC)(diag)-300, DTC P2101 THROTTLE ACTUATOR CONTROL MOTOR CIRCUIT RANGE/PERFORMANCE, Diagnostic Procedure with Diagnostic Trouble Code (DTC).>

DQ:DTC P2122 THROTTLE/PEDAL POSITION SENSOR/SWITCH “D” CIRCUIT LOW INPUT

DTC DETECTING CONDITION:

- Detect as soon as the malfunction occurs.
- GENERAL DESCRIPTION <Ref. to GD(H4DOTC)-247, DTC P2122 THROTTLE/PEDAL POSITION SENSOR/SWITCH “D” CIRCUIT LOW INPUT, Diagnostic Trouble Code (DTC) Detecting Criteria.>

TROUBLE SYMPTOM:

- Erroneous idling
- Poor driving performance

WIRING DIAGRAM:

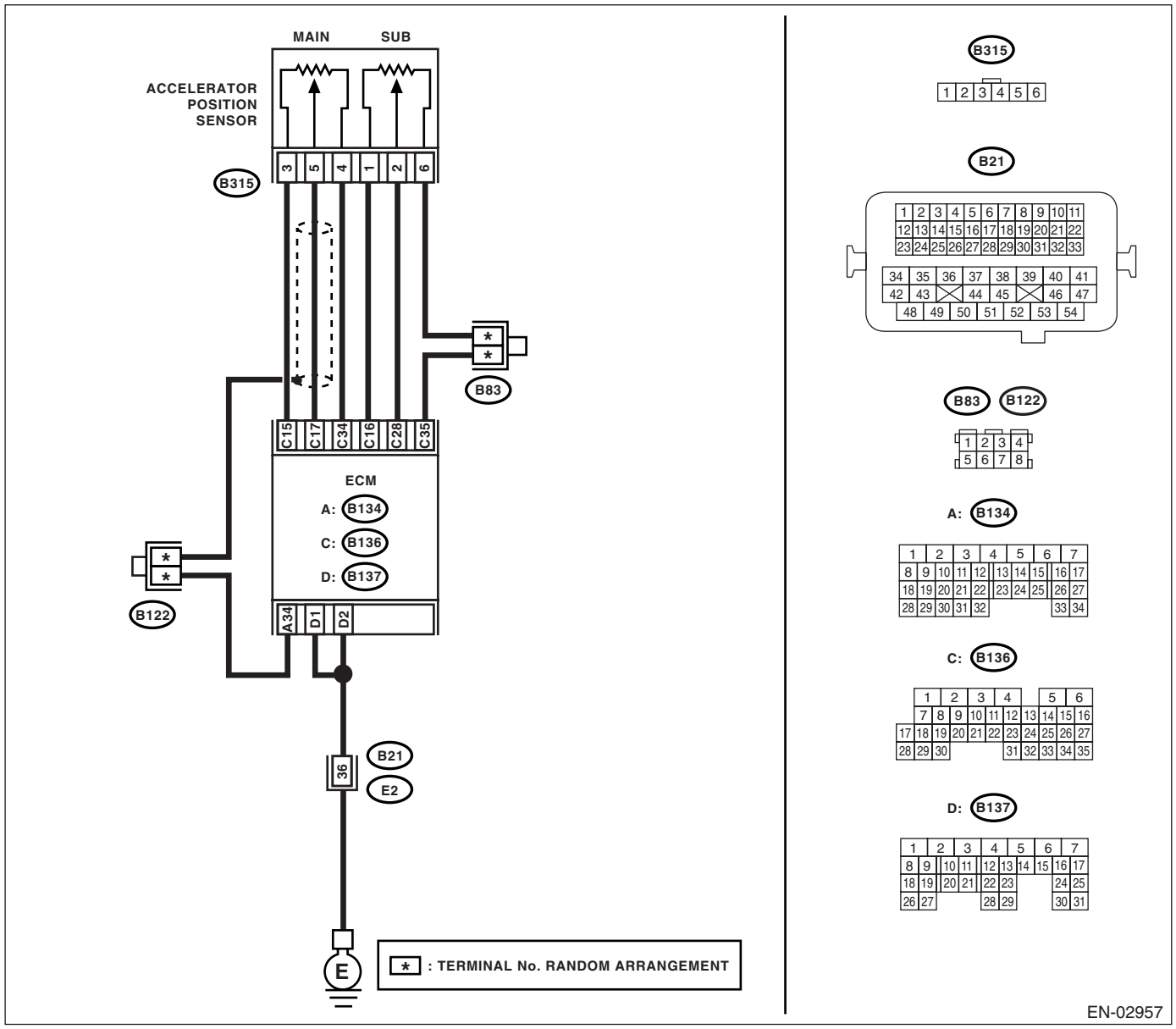

	Step	Check	Yes	No
1	**CHECK ACCELERATOR POSITION SENSOR OUTPUT.** 1) Turn the ignition switch to ON. 2) Read the data of main accelerator position sensor signal using Subaru Select Monitor. NOTE: • Subaru Select Monitor For detailed operation procedure, refer to the "READ CURRENT DATA FOR ENGINE". <Ref. to EN(H4DOTC)(diag)-28, Subaru Select Monitor.>	Is the voltage more than 0.4 V?	Go to step **2.**	Go to step **3.**
2	**CHECK POOR CONTACT.** Check poor contact in connector between ECM and accelerator position sensor.	Is there poor contact?	Repair the poor contact.	Temporary poor contact occurred, but it is normal at present.
3	**CHECK HARNESS BETWEEN ECM AND ACCELERATOR POSITION SENSOR.** 1) Turn the ignition switch to OFF. 2) Disconnect the connector from ECM. 3) Disconnect the connector from the accelerator position sensor. 4) Measure the resistance between ECM connector and accelerator position sensor connector. ***Connector & terminal*** ***(B136) No. 17 — (B315) No. 5:*** ***(B136) No. 15 — (B315) No. 3:***	Is the resistance less than 1 Ω?	Go to step **4.**	Repair the open circuit of harness connector.
4	**CHECK HARNESS BETWEEN ECM AND ACCELERATOR POSITION SENSOR.** Measure the resistance between ECM connector and chassis ground. ***Connector & terminal*** ***(B136) No. 17 — Chassis ground:*** ***(B136) No. 15 — Chassis ground:***	Is the resistance more than 1 MΩ?	Go to step **5.**	Repair the chassis short circuit of harness.
5	**CHECK POWER SUPPLY OF ACCELERATOR POSITION SENSOR.** 1) Connect the ECM connector. 2) Turn the ignition switch to ON. 3) Measure the voltage between accelerator position sensor connector and chassis ground. ***Connector & terminal*** ***(B315) No. 3 (+) — Chassis ground (−):***	Is the voltage 4.5 — 5.5 V?	Go to step **6.**	Repair the poor contact in ECM connector. Replace the ECM if defective. <Ref. to FU(H4DOTC)-39, Engine Control Module (ECM).>
6	**CHECK ACCELERATOR POSITION SENSOR.** Measure the resistance of accelerator position sensor. ***Terminals*** ***No. 3 — No. 4:***	Is the resistance 1.2 — 4.8 kΩ?	Go to step **7.**	Replace the accelerator position sensor.
7	**CHECK ACCELERATOR POSITION SENSOR.** Measure the resistance of accelerator position sensor. ***Terminals*** ***No. 5 — No. 4:*** Check the measured value is within the specification without depressing the accelerator pedal.	Is the resistance 0.2 — 1.0 kΩ?	Go to step **8.**	Replace the accelerator position sensor.

	Step	Check	Yes	No
8	**CHECK ACCELERATOR POSITION SENSOR.** Measure the resistance of accelerator position sensor. ***Terminals*** ***No. 5 — No. 4:*** Check the measured value is within the specification with the accelerator pedal depressed.	Is the resistance 0.5 — 2.5 kΩ?	Repair the poor contact in ECM connector. Replace the ECM if defective. <Ref. to FU(H4DOTC)-39, Engine Control Module (ECM).>	Replace the accelerator position sensor.

DR:DTC P2123 THROTTLE/PEDAL POSITION SENSOR/SWITCH “D” CIRCUIT HIGH INPUT

DTC DETECTING CONDITION:

- Detect as soon as the malfunction occurs.
- GENERAL DESCRIPTION <Ref. to GD(H4DOTC)-249, DTC P2123 THROTTLE/PEDAL POSITION SENSOR/SWITCH “D” CIRCUIT HIGH INPUT, Diagnostic Trouble Code (DTC) Detecting Criteria.>

TROUBLE SYMPTOM:

- Erroneous idling
- Poor driving performance

WIRING DIAGRAM:

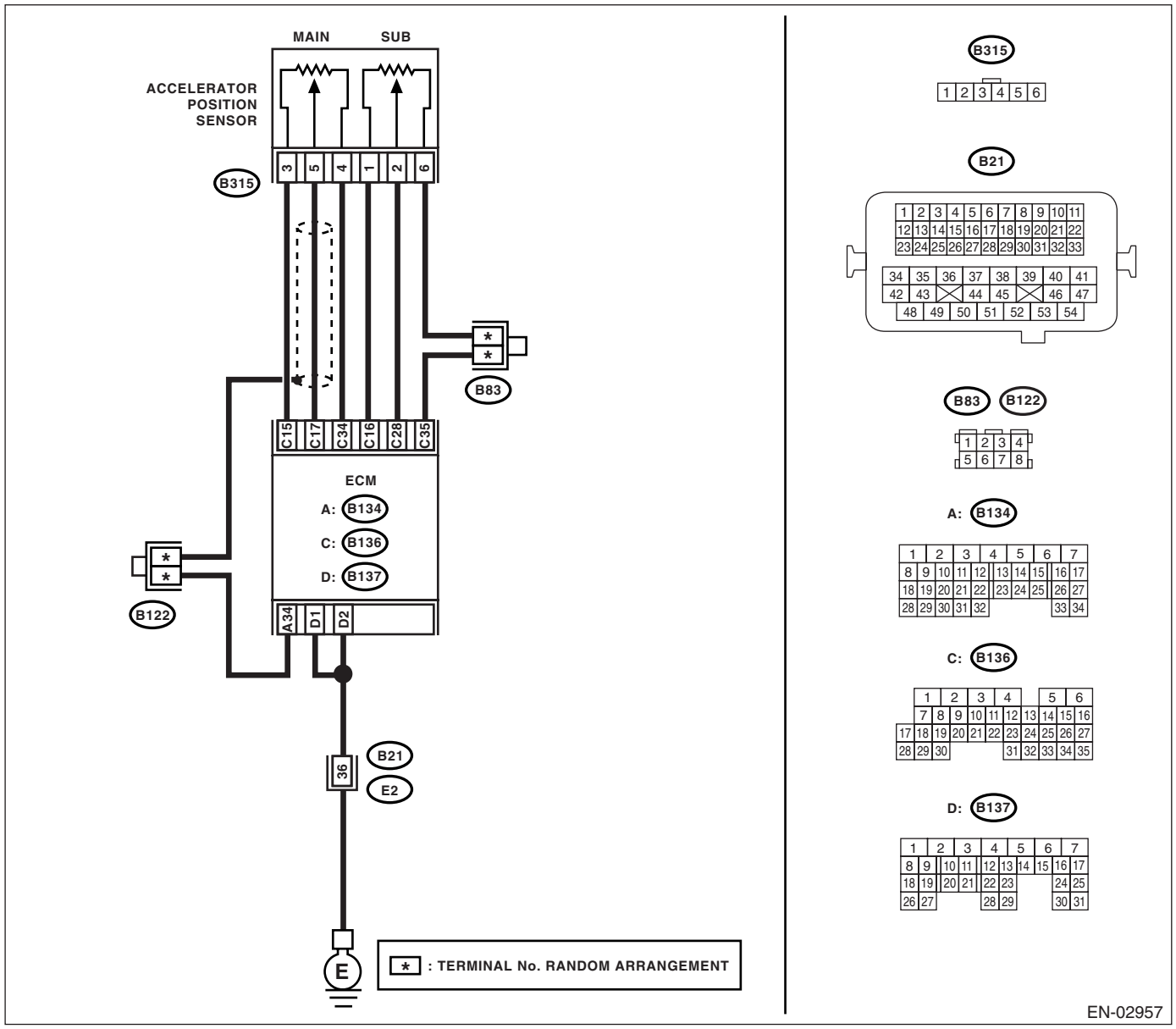

	Step	Check	Yes	No
1	**CHECK ACCELERATOR POSITION SENSOR OUTPUT.** 1) Turn the ignition switch to ON. 2) Read the data of main accelerator position sensor signal using Subaru Select Monitor. NOTE: • Subaru Select Monitor For detailed operation procedure, refer to the "READ CURRENT DATA FOR ENGINE". <Ref. to EN(H4DOTC)(diag)-28, Subaru Select Monitor.>	Is the voltage less than 4.8 V?	Go to step **2.**	Go to step **3.**
2	**CHECK POOR CONTACT.** Check poor contact in connector between ECM and accelerator position sensor.	Is there poor contact?	Repair the poor contact.	Temporary poor contact occurred, but it is normal at present.
3	**CHECK HARNESS BETWEEN ECM AND ACCELERATOR POSITION SENSOR.** 1) Turn the ignition switch to OFF. 2) Disconnect the connector from ECM. 3) Disconnect the connector from the accelerator position sensor. 4) Measure the resistance between ECM connector and accelerator position sensor connector. ***Connector & terminal*** ***(B136) No. 34 — (B315) No. 4:***	Is the resistance less than 1 Ω?	Go to step **4.**	Repair the open circuit of harness connector.
4	**CHECK HARNESS BETWEEN ECM AND ACCELERATOR POSITION SENSOR.** 1) Connect the ECM connector. 2) Measure the resistance between accelerator position sensor connector and chassis ground. ***Connector & terminal*** ***(B315) No. 4 — Chassis ground:***	Is the resistance less than 5 Ω?	Go to step **5.**	Repair the poor contact in ECM connector. Replace the ECM if defective. <Ref. to FU(H4DOTC)-39, Engine Control Module (ECM).>
5	**CHECK HARNESS BETWEEN ECM AND ACCELERATOR POSITION SENSOR.** 1) Connect the ECM connector. 2) Turn the ignition switch to ON. 3) Measure the voltage between accelerator position sensor connector and chassis ground. ***Connector & terminal*** ***(B315) No. 5 (+) — Chassis ground (−):***	Is the voltage less than 6 V?	Go to step **6.**	Repair the battery short circuit in harness between ECM connector and accelerator position sensor connector.
6	**CHECK HARNESS BETWEEN ECM AND ACCELERATOR POSITION SENSOR.** 1) Turn the ignition switch to OFF. 2) Disconnect the connector from ECM. 3) Measure the resistance between ECM connector terminals. ***Connector & terminal*** ***(B136) No. 17 — (B136) No. 15:*** ***(B136) No. 17 — (B136) No. 16:***	Is the resistance more than 1 MΩ?	Repair the poor contact in accelerator position sensor connector. Replace the accelerator position sensor if defective.	Repair the short circuit to sensor power supply.

DS:DTC P2127 THROTTLE/PEDAL POSITION SENSOR/SWITCH “E” CIRCUIT LOW INPUT

DTC DETECTING CONDITION:

- Detect as soon as the malfunction occurs.
- GENERAL DESCRIPTION <Ref. to GD(H4DOTC)-251, DTC P2127 THROTTLE/PEDAL POSITION SENSOR/SWITCH “E” CIRCUIT LOW INPUT, Diagnostic Trouble Code (DTC) Detecting Criteria.>

TROUBLE SYMPTOM:

- Erroneous idling
- Poor driving performance

WIRING DIAGRAM:

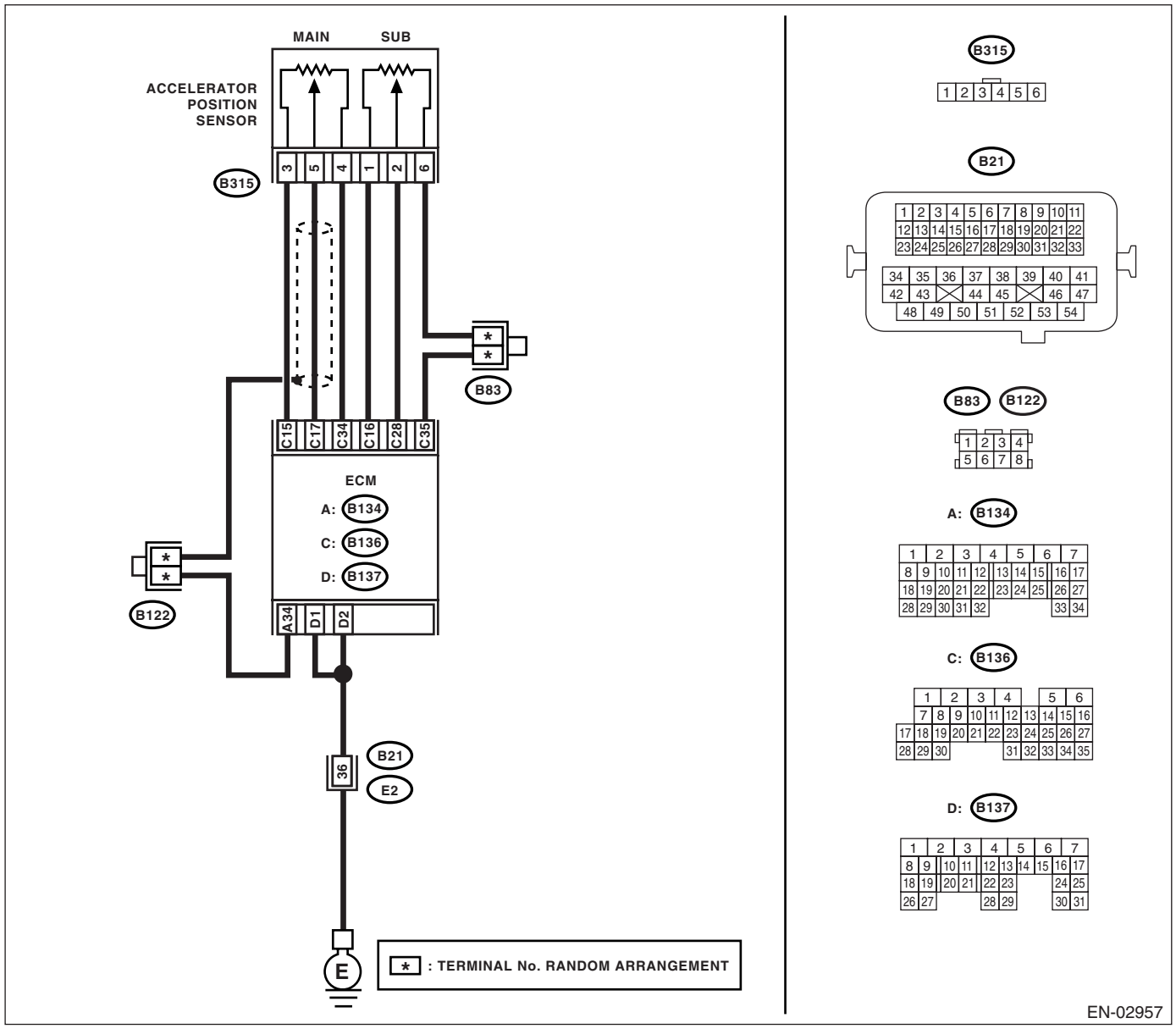

	Step	Check	Yes	No
1	**CHECK ACCELERATOR POSITION SENSOR OUTPUT.** 1) Turn the ignition switch to ON. 2) Read the data of sub accelerator position sensor signal using Subaru Select Monitor. NOTE: • Subaru Select Monitor For detailed operation procedure, refer to the "READ CURRENT DATA FOR ENGINE". <Ref. to EN(H4DOTC)(diag)-28, Subaru Select Monitor.>	Is the voltage more than 0.4 V?	Go to step **2.**	Go to step **3.**
2	**CHECK POOR CONTACT.** Check poor contact in connector between ECM and accelerator position sensor.	Is there poor contact?	Repair the poor contact.	Temporary poor contact occurred, but it is normal at present.
3	**CHECK HARNESS BETWEEN ECM AND ACCELERATOR POSITION SENSOR.** 1) Turn the ignition switch to OFF. 2) Disconnect the connector from ECM. 3) Disconnect the connector from the accelerator position sensor. 4) Measure the resistance between ECM connector and accelerator position sensor connector. ***Connector & terminal*** ***(B136) No. 28 — (B315) No. 2:*** ***(B136) No. 16 — (B315) No. 1:***	Is the resistance less than 1 Ω?	Go to step **4.**	Repair the open circuit of harness connector.
4	**CHECK HARNESS BETWEEN ECM AND ACCELERATOR POSITION SENSOR.** Measure the resistance between ECM connector and chassis ground. ***Connector & terminal*** ***(B136) No. 28 — Chassis ground:*** ***(B136) No. 16 — Chassis ground:***	Is the resistance more than 1 MΩ?	Go to step **5.**	Repair the chassis short circuit of harness.
5	**CHECK POWER SUPPLY OF ACCELERATOR POSITION SENSOR.** 1) Connect the ECM connector. 2) Turn the ignition switch to ON. 3) Measure the voltage between accelerator position sensor connector and chassis ground. ***Connector & terminal*** ***(B315) No. 1 (+) — Chassis ground (−):***	Is the voltage 4.5 — 5.5 V?	Go to step **6.**	Repair the poor contact in ECM connector. Replace the ECM if defective. <Ref. to FU(H4DOTC)-39, Engine Control Module (ECM).>
6	**CHECK ACCELERATOR POSITION SENSOR.** Measure the resistance of accelerator position sensor. ***Terminals*** ***No. 1 — No. 6:***	Is the resistance 0.75 — 3.15 kΩ?	Go to step **7.**	Replace the accelerator position sensor.
7	**CHECK ACCELERATOR POSITION SENSOR.** 1) Measure the resistance of accelerator position sensor. ***Terminals*** ***No. 2 — No. 6:*** 2) Check the measured value is within the specification without depressing the accelerator pedal.	Is the resistance 0.15 — 0.63 kΩ?	Go to step **8.**	Replace the accelerator position sensor.

	Step	Check	Yes	No
8	**CHECK ACCELERATOR POSITION SENSOR.** 1) Measure the resistance of accelerator position sensor. ***Terminals*** ***No. 2 — No. 6:*** 2) Check the measured value is within the specification with the accelerator pedal depressed.	Is the resistance 0.28 — 1.68 kΩ?	Repair the poor contact in ECM connector. Replace the ECM if defective. <Ref. to FU(H4DOTC)-39, Engine Control Module (ECM).>	Replace the accelerator position sensor.

DT:DTC P2128 THROTTLE/PEDAL POSITION SENSOR/SWITCH “E” CIRCUIT HIGH INPUT

DTC DETECTING CONDITION:

- Detect as soon as the malfunction occurs.
- GENERAL DESCRIPTION <Ref. to GD(H4DOTC)-253, DTC P2128 THROTTLE/PEDAL POSITION SENSOR/SWITCH “E” CIRCUIT HIGH INPUT, Diagnostic Trouble Code (DTC) Detecting Criteria.>

TROUBLE SYMPTOM:

- Erroneous idling
- Poor driving performance

WIRING DIAGRAM:

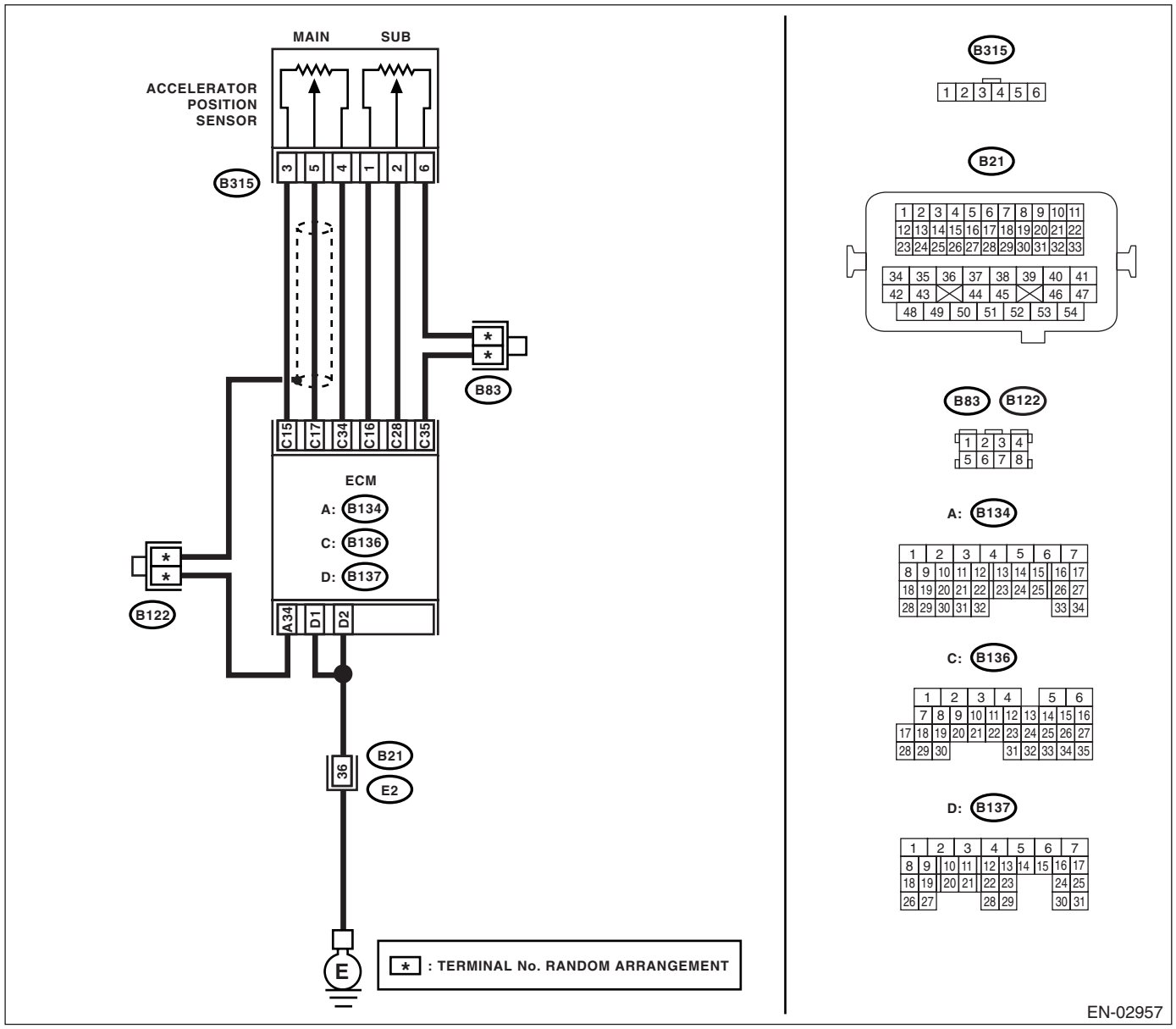

	Step	Check	Yes	No
1	**CHECK ACCELERATOR POSITION SENSOR OUTPUT.** 1) Turn the ignition switch to ON. 2) Read the data of sub accelerator position sensor signal using Subaru Select Monitor. NOTE: • Subaru Select Monitor For detailed operation procedure, refer to the "READ CURRENT DATA FOR ENGINE". <Ref. to EN(H4DOTC)(diag)-28, Subaru Select Monitor.>	Is the voltage less than 4.8 V?	Go to step **2.**	Go to step **3.**
2	**CHECK POOR CONTACT.** Check poor contact in connector between ECM and accelerator position sensor.	Is there poor contact?	Repair the poor contact.	Temporary poor contact occurred, but it is normal at present.
3	**CHECK HARNESS BETWEEN ECM AND ACCELERATOR POSITION SENSOR.** 1) Turn the ignition switch to OFF. 2) Disconnect the connector from ECM. 3) Disconnect the connector from the accelerator position sensor. 4) Measure the resistance between ECM connector and accelerator position sensor connector. ***Connector & terminal*** ***(B136) No. 35 — (B315) No. 6:***	Is the resistance less than 1 Ω?	Go to step **4.**	Repair the open circuit of harness connector.
4	**CHECK HARNESS BETWEEN ECM AND ACCELERATOR POSITION SENSOR.** 1) Connect the ECM connector. 2) Measure the resistance between accelerator position sensor connector and chassis ground. ***Connector & terminal*** ***(B315) No. 6 — Chassis ground:***	Is the resistance less than 5 Ω?	Go to step **5.**	Repair the poor contact in ECM connector. Replace the ECM if defective. <Ref. to FU(H4DOTC)-39, Engine Control Module (ECM).>
5	**CHECK HARNESS BETWEEN ECM AND ACCELERATOR POSITION SENSOR.** 1) Connect the ECM connector. 2) Turn the ignition switch to ON. 3) Measure the voltage between accelerator position sensor connector and chassis ground. ***Connector & terminal*** ***(B315) No. 2 (+) — Chassis ground (−):***	Is the voltage less than 6 V?	Go to step **6.**	Repair the battery short circuit in harness between ECM connector and accelerator position sensor connector.
6	**CHECK HARNESS BETWEEN ECM AND ACCELERATOR POSITION SENSOR.** 1) Turn the ignition switch to OFF. 2) Measure the resistance between ECM connector terminals. ***Connector & terminal*** ***(B137) No. 28 — (B137) No. 15:*** ***(B137) No. 28 — (B137) No. 16:***	Is the resistance more than 1 MΩ?	Repair the poor contact in accelerator position sensor connector. Replace the accelerator position sensor if defective.	Repair the short circuit to sensor power supply.

DU:DTC P2135 THROTTLE/PEDAL POSITION SENSOR/SWITCH “A”/“B” VOLTAGE RATIONALITY

DTC DETECTING CONDITION:

- Detect as soon as the malfunction occurs.
- GENERAL DESCRIPTION <Ref. to GD(H4DOTC)-254, DTC P2135 THROTTLE/PEDAL POSITION SENSOR/SWITCH “A”/“B” VOLTAGE RATIONALITY, Diagnostic Trouble Code (DTC) Detecting Criteria.>

TROUBLE SYMPTOM:

- Erroneous idling
- Poor driving performance

WIRING DIAGRAM:

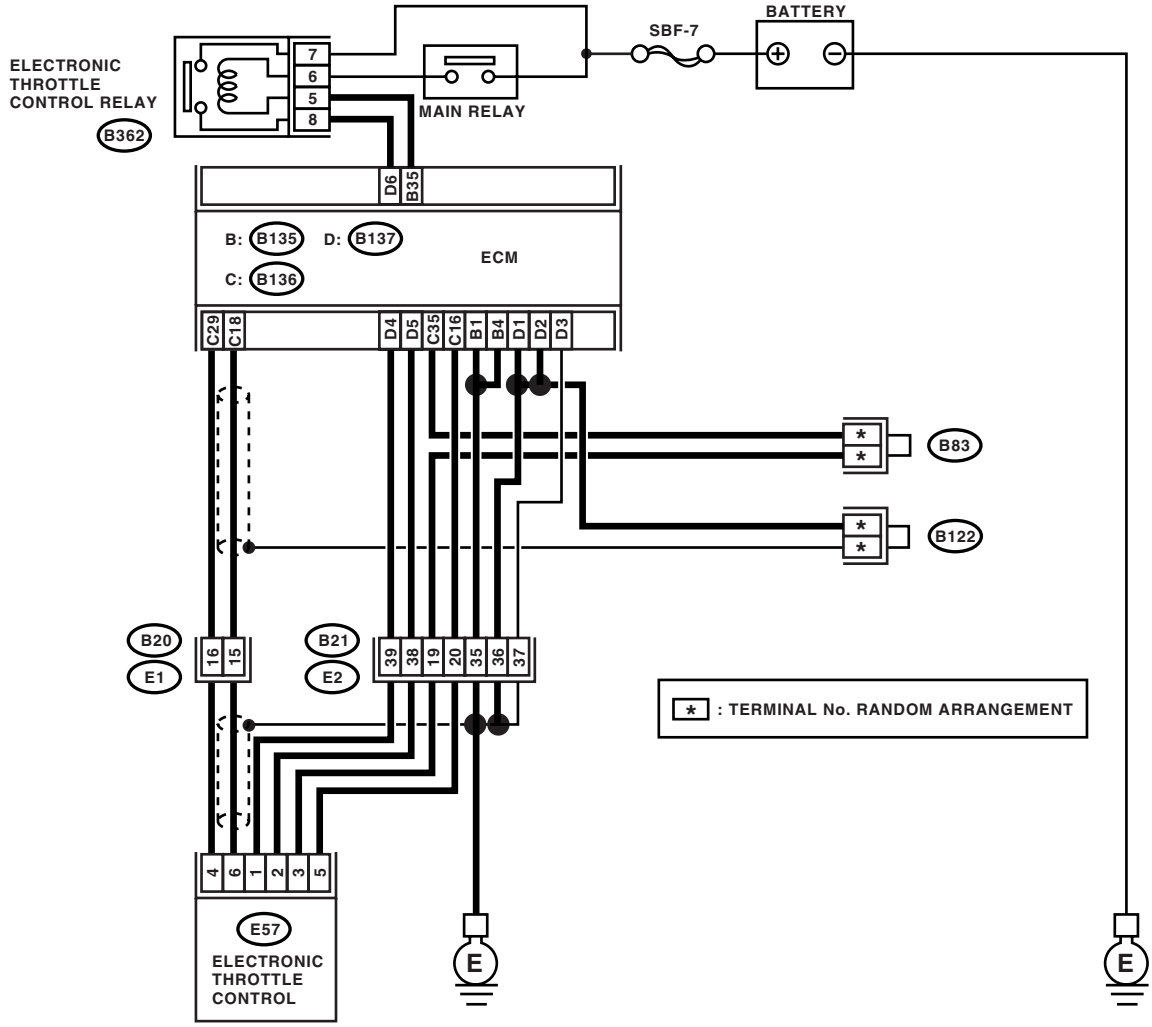

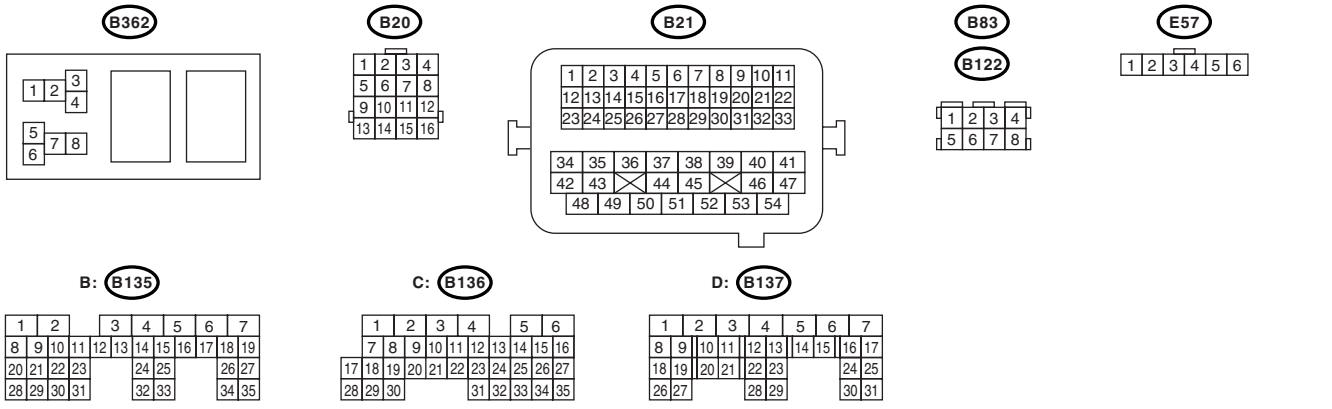

EN-02939

	Step	Check	Yes	No
1	**CHECK SENSOR OUTPUT.** 1) Turn the ignition switch to ON. 2) Measure the voltage between ECM connector terminals. ***Connector & terminal*** ***(B136) No. 18 (+) — (B136) No. 35 (–):***	Is the voltage more than 0.4 V?	Go to step **2.**	Go to step **4.**
2	**CHECK SENSOR OUTPUT.** Measure the voltage between ECM connector terminals. ***Connector & terminal*** ***(B136) No. 29 (+) — (B136) No. 35 (–):***	Is the voltage more than 0.8 V?	Go to step **3.**	Go to step **4.**
3	**CHECK POOR CONTACT.** Check the poor contact in connector between ECM and electronic throttle control.	Is there poor contact?	Repair the poor contact.	Go to step **14.**
4	**CHECK HARNESS BETWEEN ECM AND ELECTRONIC THROTTLE CONTROL.** 1) Turn the ignition switch to OFF. 2) Disconnect the connector from ECM. 3) Disconnect the connectors from the electronic throttle control control. 4) Measure the resistance between ECM connector and electronic throttle control connector. ***Connector & terminal*** ***(B136) No. 16 — (E57) No. 5:***	Is the resistance less than 1 Ω?	Go to step **5.**	Repair the open circuit of harness connector.
5	**CHECK HARNESS BETWEEN ECM AND ELECTRONIC THROTTLE CONTROL.** Measure the resistance between ECM connector and chassis ground. ***Connector & terminal*** ***(B136) No. 18 — Chassis ground:*** ***(B136) No. 29 — Chassis ground:*** ***(B136) No. 16 — Chassis ground:***	Is the resistance more than 1 MΩ?	Go to step **6.**	Repair the ground short circuit of harness.
6	**CHECK SENSOR POWER SUPPLY.** 1) Connect the ECM connector. 2) Turn the ignition switch to ON. 3) Measure the voltage between electronic throttle control connector and engine ground. ***Connector & terminal*** ***(E57) No. 5 (+) — Engine ground (–):***	Is the voltage 4.5 — 5.5 V?	Go to step **7.**	Repair the poor contact in ECM connector. Replace the ECM if defective. <Ref. to FU(H4DOTC)-39, Engine Control Module (ECM).>
7	**CHECK SHORT CIRCUIT IN ECM.** 1) Turn the ignition switch to OFF. 2) Measure the resistance between electronic throttle control control connector and engine ground. ***Connector & terminal*** ***(E57) No. 6 — Engine ground:*** ***(E57) No. 4 — Engine ground:***	Is the resistance more than 10 Ω?	Go to step **8.**	Repair the poor contact in ECM connector. Replace the ECM if defective. <Ref. to FU(H4DOTC)-39, Engine Control Module (ECM).>

	Step	Check	Yes	No
8	**CHECK SENSOR OUTPUT.** 1) Connect all the connectors. 2) Turn the ignition switch to ON. 3) Read the data of main throttle sensor signal using Subaru Select Monitor. NOTE: • Subaru Select Monitor For detailed operation procedure, refer to the "READ CURRENT DATA FOR ENGINE". <Ref. to EN(H4DOTC)(diag)-28, Subaru Select Monitor.>	Is the voltage less than 4.63 V?	Go to step **9.**	Go to step **11.**
9	**CHECK SENSOR OUTPUT.** Read the data of sub throttle sensor signal using Subaru Select Monitor. NOTE: • Subaru Select Monitor For detailed operation procedure, refer to the "READ CURRENT DATA FOR ENGINE". <Ref. to EN(H4DOTC)(diag)-28, Subaru Select Monitor.>	Is the voltage less than 4.73 V?	Go to step **10.**	Go to step **11.**
10	**CHECK POOR CONTACT.** Check the poor contact in connector between ECM and electronic throttle control.	Is there poor contact?	Repair the poor contact.	Temporary poor contact occurred, but it is normal at present.
11	**CHECK HARNESS BETWEEN ECM AND ELECTRONIC THROTTLE CONTROL.** 1) Turn the ignition switch to OFF. 2) Disconnect the connector from ECM. 3) Disconnect the connectors from the electronic throttle control control. 4) Measure the resistance between ECM connector and electronic throttle control connector. ***Connector & terminal*** ***(B136) No. 35 — (E57) No. 3:*** ***(B136) No. 18 — (E57) No. 6:*** ***(B136) No. 29 — (E57) No. 4:***	Is the resistance less than 1 Ω?	Go to step **12.**	Repair the open circuit of harness connector.
12	**CHECK HARNESS BETWEEN ECM AND ELECTRONIC THROTTLE CONTROL.** 1) Connect the ECM connector. 2) Measure the resistance between electronic throttle control control connector and engine ground. ***Connector & terminal*** ***(E57) No. 3 — Engine ground:***	Is the resistance less than 5 Ω?	Go to step **13.**	Repair the poor contact in ECM connector. Replace the ECM if defective. <Ref. to FU(H4DOTC)-39, Engine Control Module (ECM).>
13	**CHECK HARNESS BETWEEN ECM AND ELECTRONIC THROTTLE CONTROL.** 1) Connect the ECM connector. 2) Turn the ignition switch to ON. 3) Measure the voltage between electronic throttle control connector and engine ground. ***Connector & terminal*** ***(E57) No. 5 (+) — Engine ground (–):***	Is the voltage less than 10 V?	Go to step **14.**	Repair the battery short circuit in harness between ECM connector and electronic throttle control connector.
14	**CHECK HARNESS BETWEEN ECM AND ELECTRONIC THROTTLE CONTROL.** Measure the voltage between electronic throttle control connector and engine ground. ***Connector & terminal*** ***(E57) No. 6 (+) — Engine ground (–):*** ***(E57) No. 4 (+) — Engine ground (–):***	Is the voltage less than 10 V?	Go to step **15.**	Repair the short circuit in harness between ECM connector and electronic throttle control connector.

	Step	Check	Yes	No
15	**CHECK HARNESS BETWEEN ECM AND ELECTRONIC THROTTLE CONTROL.** 1) Turn the ignition switch to OFF. 2) Disconnect the connector from ECM. 3) Measure the resistance between ECM connectors. ***Connector & terminal*** ***(B136) No. 18 — (B136) No. 35:*** ***(B136) No. 29 — (B136) No. 35:***	Is the resistance more than 1 MΩ?	Go to step **16.**	Repair the short circuit to sensor power supply.
16	**CHECK ELECTRONIC THROTTLE CONTROL HARNESS.** 1) Disconnect the connector from ECM. 2) Disconnect the connectors from the electronic throttle control control. 3) Measure the resistance between electronic throttle control control connector terminals. ***Connector & terminal*** ***(E57) No. 6 — (E57) No. 4:***	Is the resistance more than 1 MΩ?	Repair the poor contact in ECM connector. Replace the ECM if defective. <Ref. to FU(H4DOTC)-39, Engine Control Module (ECM).>	Repair the short circuit of harness.

DV:DTC P2138 THROTTLE/PEDAL POSITION SENSOR/SWITCH “D”/“E” VOLTAGE RATIONALITY

DTC DETECTING CONDITION:

- Detect as soon as the malfunction occurs.
- GENERAL DESCRIPTION <Ref. to GD(H4DOTC)-256, DTC P2138 THROTTLE/PEDAL POSITION SENSOR/SWITCH “D”/“E” VOLTAGE RATIONALITY, Diagnostic Trouble Code (DTC) Detecting Criteria.>

TROUBLE SYMPTOM:

- Erroneous idling
- Poor driving performance

WIRING DIAGRAM:

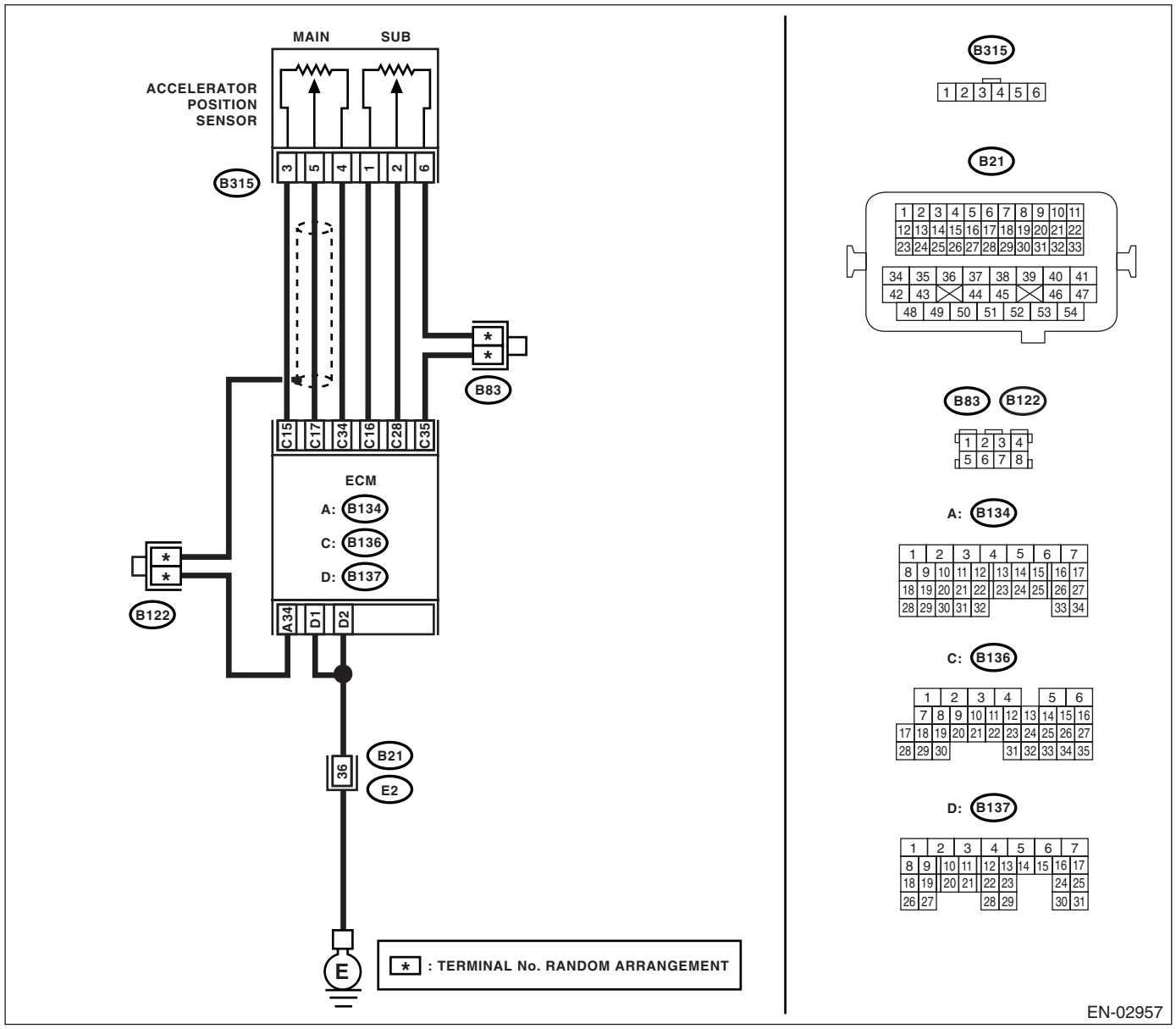

	Step	Check	Yes	No
1	**CHECK ACCELERATOR POSITION SENSOR OUTPUT.** 1) Turn the ignition switch to ON. 2) Read the data of main accelerator position sensor signal and sub accelerator position sensor signal using Subaru Select Monitor. NOTE: • Subaru Select Monitor For detailed operation procedure, refer to the "READ CURRENT DATA FOR ENGINE". <Ref. to EN(H4DOTC)(diag)-28, Subaru Select Monitor.>	Is the voltage more than 0.4 V?	Go to step **2.**	Go to step **3.**
2	**CHECK POOR CONTACT.** Check poor contact in connector between ECM and accelerator position sensor.	Is there poor contact?	Repair the poor contact.	Go to step **12.**
3	**CHECK HARNESS BETWEEN ECM AND ACCELERATOR POSITION SENSOR.** 1) Turn the ignition switch to OFF. 2) Disconnect the connector from ECM. 3) Disconnect the connector from the accelerator position sensor. 4) Measure the resistance between ECM connector and accelerator position sensor connector. ***Connector & terminal*** ***(B136) No. 17 — (B315) No. 5:*** ***(B136) No. 15 — (B315) No. 3:*** ***(B136) No. 28 — (B315) No. 2:*** ***(B136) No. 16 — (B315) No. 1:***	Is the resistance less than 1 Ω?	Go to step **4.**	Repair the open circuit of harness connector.
4	**CHECK HARNESS BETWEEN ECM AND ACCELERATOR POSITION SENSOR.** Measure the resistance between ECM connector and chassis ground. ***Connector & terminal*** ***(B136) No. 17 — Chassis ground:*** ***(B136) No. 15 — Chassis ground:*** ***(B136) No. 28 — Chassis ground:*** ***(B136) No. 16 — Chassis ground:***	Is the resistance more than 1 MΩ?	Go to step **5.**	Repair the ground short circuit of harness.
5	**CHECK POWER SUPPLY OF ACCELERATOR POSITION SENSOR.** 1) Connect the ECM connector. 2) Turn the ignition switch to ON. 3) Measure the voltage between accelerator position sensor connector and chassis ground. ***Connector & terminal*** ***(B315) No. 3 (+) — Chassis ground (−):*** ***(B315) No. 1 (+) — Chassis ground (−):***	Is the voltage 4.5 — 5.5 V?	Go to step **6.**	Repair the poor contact in ECM connector. Replace the ECM if defective. <Ref. to FU(H4DOTC)-39, Engine Control Module (ECM).>
6	**CHECK ACCELERATOR POSITION SENSOR.** Measure the resistance of accelerator position sensor. ***Terminals*** ***No. 3 — No. 4:***	Is the resistance 1.2 — 4.8 kΩ?	Go to step **7.**	Replace the accelerator position sensor.
7	**CHECK ACCELERATOR POSITION SENSOR.** Measure the resistance of accelerator position sensor. ***Terminals*** ***No. 1 — No. 6:***	Is the resistance 0.75 — 3.15 kΩ?	Go to step **8.**	Replace the accelerator position sensor.

	Step	Check	Yes	No
8	**CHECK ACCELERATOR POSITION SENSOR.** Measure the resistance of accelerator position sensor without depressing the accelerator pedal. ***Terminals*** ***No. 5 — No. 4:***	Is the resistance 0.2 — 0.8 kΩ?	Go to step **9.**	Replace the accelerator position sensor.
9	**CHECK ACCELERATOR POSITION SENSOR.** Measure the resistance of accelerator position sensor without depressing the accelerator pedal. ***Terminals*** ***No. 2 — No. 6:***	Is the resistance 0.15 — 0.63 kΩ?	Go to step **10.**	Replace the accelerator position sensor.
10	**CHECK ACCELERATOR POSITION SENSOR.** Measure the resistance of accelerator position sensor with the accelerator pedal depressed. ***Terminals*** ***No. 5 — No. 4:***	Is the resistance 0.5 — 2.5 kΩ?	Go to step **11.**	Replace the accelerator position sensor.
11	**CHECK ACCELERATOR POSITION SENSOR.** Measure the resistance of accelerator position sensor with the accelerator pedal depressed. ***Terminals*** ***No. 2 — No. 6:***	Is the resistance 0.28 — 1.68 kΩ?	Go to step **12.**	Replace the accelerator position sensor.
12	**CHECK ACCELERATOR POSITION SENSOR OUTPUT.** 1) Turn the ignition switch to OFF. 2) Connect all the connectors. 3) Turn the ignition switch to ON. 4) Read the data of main throttle sensor signal and sub accelerator position sensor signal using Subaru Select Monitor.	Is the voltage less than 4.8 V?	Go to step **13.**	Go to step **14.**
13	**CHECK POOR CONTACT.** Check poor contact in connector between ECM and accelerator position sensor.	Is there poor contact?	Repair the poor contact.	Go to step **18.**
14	**CHECK HARNESS BETWEEN ECM AND ACCELERATOR POSITION SENSOR.** 1) Turn the ignition switch to OFF. 2) Disconnect the connector from ECM. 3) Disconnect the connector from the accelerator position sensor. 4) Measure the resistance between ECM connector and accelerator position sensor connector. ***Connector & terminal*** ***(B136) No. 34 — (B315) No. 4:*** ***(B136) No. 35 — (B315) No. 6:***	Is the resistance less than 1 Ω?	Go to step **15.**	Repair the open circuit of harness connector.
15	**CHECK HARNESS BETWEEN ECM AND ACCELERATOR POSITION SENSOR.** 1) Connect the ECM connector. 2) Measure the resistance between accelerator position sensor connector and chassis ground. ***Connector & terminal*** ***(B315) No. 4 — Chassis ground:*** ***(B315) No. 6 — Chassis ground:***	Is the resistance less than 5 Ω?	Go to step **16.**	Repair the poor contact in ECM connector. Replace the ECM if defective. <Ref. to FU(H4DOTC)-39, Engine Control Module (ECM).>

	Step	Check	Yes	No
16	**CHECK HARNESS BETWEEN ECM AND ACCELERATOR POSITION SENSOR.** 1) Connect the ECM connector. 2) Turn the ignition switch to ON. 3) Measure the voltage between accelerator position sensor connector and chassis ground. ***Connector & terminal*** ***(B315) No. 5 (+) — Chassis ground (−):*** ***(B315) No. 2 (+) — Chassis ground (−):***	Is the voltage less than 6 V?	Go to step **17.**	Repair the battery short circuit in harness between ECM connector and accelerator position sensor connector.
17	**CHECK HARNESS BETWEEN ECM AND ACCELERATOR POSITION SENSOR.** 1) Turn the ignition switch to OFF. 2) Disconnect the connector from ECM. 3) Measure the resistance between ECM connector terminals. ***Connector & terminal*** ***(B136) No. 17 — (B136) No. 15:*** ***(B136) No. 17 — (B136) No. 16:*** ***(B136) No. 28 — (B136) No. 15:*** ***(B136) No. 28 — (B136) No. 16:***	Is the resistance more than 1 MΩ?	Go to step **18.**	Repair the short circuit to sensor power supply.
18	**CHECK HARNESS BETWEEN ECM AND ACCELERATOR POSITION SENSOR.** 1) Turn the ignition switch to OFF. 2) Disconnect the connector from ECM. 3) Disconnect the connector from the accelerator position sensor. 4) Measure the resistance between connector terminals of accelerator position sensor. ***Connector & terminal*** ***(B315) No. 5 — (B315) No. 2:***	Is the resistance more than 1 MΩ?	Repair the poor contact in ECM connector. Replace the ECM if defective. <Ref. to FU(H4DOTC)-39, Engine Control Module (ECM).>	Repair the short circuit in harness between ECM connector and accelerator position sensor connector.

DW:DTC P2227 BAROMETRIC PRESSURE CIRCUIT RANGE/PERFORMANCE

DTC DETECTING CONDITION:

- Two consecutive driving cycles with fault
- GENERAL DESCRIPTION <Ref. to GD(H4DOTC)-258, DTC P2227 BAROMETRIC PRESSURE CIRCUIT RANGE/PERFORMANCE, Diagnostic Trouble Code (DTC) Detecting Criteria.>

CAUTION:
After repair or replacement of faulty parts, conduct Clear Memory Mode <Ref. to EN(H4DOTC)(diag)-45, OPERATION, Clear Memory Mode.> and Inspection Mode <Ref. to EN(H4DOTC)(diag)-36, PROCEDURE, Inspection Mode.>.

	Step	Check	Yes	No
1	**CHECK FOR ANY OTHER DTC ON DISPLAY.**	Is any other DTC displayed?	Replace the ECM. <Ref. to FU(H4DOTC)-39, Engine Control Module (ECM).> NOTE: Atmospheric pressure sensor is built into ECM.	NOTE: It is not necessary to inspect DTC P0129.

DX:DTC P2228 BAROMETRIC PRESSURE CIRCUIT LOW INPUT

DTC DETECTING CONDITION:

- Detect as soon as malfunction occurs.
- GENERAL DESCRIPTION <Ref. to GD(H4DOTC)-259, DTC P2228 BAROMETRIC PRESSURE CIRCUIT LOW INPUT, Diagnostic Trouble Code (DTC) Detecting Criteria.>

CAUTION:
After repair or replacement of faulty parts, conduct Clear Memory Mode <Ref. to EN(H4DOTC)(diag)-45, OPERATION, Clear Memory Mode.> and Inspection Mode <Ref. to EN(H4DOTC)(diag)-36, PROCEDURE, Inspection Mode.>.

	Step	Check	Yes	No
1	**CHECK FOR ANY OTHER DTC ON DISPLAY.**	Does the Subaru Select Monitor or general scan tool indicate DTC P1110?	Replace the ECM. <Ref. to FU(H4DOTC)-39, Engine Control Module (ECM).> NOTE: Atmospheric pressure sensor is built into ECM.	A temporary poor contact.

DY:DTC P2229 BAROMETRIC PRESSURE CIRCUIT HIGH INPUT

DTC DETECTING CONDITION:

- Detect as soon as malfunction occurs.
- GENERAL DESCRIPTION <Ref. to GD(H4DOTC)-260, DTC P2229 BAROMETRIC PRESSURE CIRCUIT HIGH INPUT, Diagnostic Trouble Code (DTC) Detecting Criteria.>

CAUTION:
After repair or replacement of faulty parts, conduct Clear Memory Mode <Ref. to EN(H4DOTC)(diag)-45, OPERATION, Clear Memory Mode.> and Inspection Mode <Ref. to EN(H4DOTC)(diag)-36, PROCEDURE, Inspection Mode.>.

	Step	Check	Yes	No
1	**CHECK FOR ANY OTHER DTC ON DISPLAY.**	Does the Subaru Select Monitor or general scan tool indicate DTC P1111?	Replace the ECM. <Ref. to FU(H4DOTC)-39, Engine Control Module (ECM).> NOTE: Atmospheric pressure sensor is built into ECM.	A temporary poor contact.

19.General Diagnostic Table

A: INSPECTION

1. ENGINE

NOTE:
Malfunction of parts other than those listed is also possible. <Ref. to ME(H4DOTC)-87, Engine Trouble in General.>

Symptom	Problem parts
1. Engine stalls during idling.	1) Electronic throttle control 2) Manifold absolute pressure sensor 3) Mass air flow and intake air temperature sensor 4) Ignition parts (*1) 5) Engine coolant temperature sensor (*2) 6) Crankshaft position sensor (*3) 7) Camshaft position sensor (*3) 8) Fuel injection parts (*4)
2. Rough idling	1) Electronic throttle control 2) Manifold absolute pressure sensor 3) Mass air flow and intake air temperature sensor 4) Engine coolant temperature sensor (*2) 5) Ignition parts (*1) 6) Air intake system (*5) 7) Fuel injection parts (*4) 8) Crankshaft position sensor (*3) 9) Camshaft position sensor (*3) 10) Oxygen sensor 11) Fuel pump and fuel pump relay
3. Engine does not return to idle.	1) Electronic throttle control 2) Engine coolant temperature sensor 3) Manifold absolute pressure sensor 4) Mass air flow sensor
4. Poor acceleration	1) Manifold absolute pressure sensor 2) Mass air flow and intake air temperature sensor 3) Electronic throttle control 4) Fuel injection parts (*4) 5) Fuel pump and fuel pump relay 6) Engine coolant temperature sensor (*2) 7) Crankshaft position sensor (*3) 8) Camshaft position sensor (*3) 9) A/C switch and A/C cut relay 10) Engine torque control signal circuit 11) Ignition parts (*1)
5. Engine stalls or engine sags or hesitates at acceleration.	1) Manifold absolute pressure sensor 2) Mass air flow and intake air temperature sensor 3) Engine coolant temperature sensor (*2) 4) Crankshaft position sensor (*3) 5) Camshaft position sensor (*3) 6) Purge control solenoid valve 7) Fuel injection parts (*4) 8) Fuel pump and fuel pump relay
6.Surge	1) Manifold absolute pressure sensor 2) Mass air flow and intake air temperature sensor 3) Engine coolant temperature sensor (*2) 4) Crankshaft position sensor (*3) 5) Camshaft position sensor (*3) 6) Fuel injection parts (*4) 7) Throttle position sensor 8) Fuel pump and fuel pump relay

Symptom	Problem parts
7. Spark knock	1) Manifold absolute pressure sensor 2) Mass air flow and intake air temperature sensor 3) Engine coolant temperature sensor 4) Knock sensor 5) Fuel injection parts (*4) 6) Fuel pump and fuel pump relay
8. After burning in exhaust system	1) Manifold absolute pressure sensor 2) Mass air flow and intake air temperature sensor 3) Engine coolant temperature sensor (*2) 4) Fuel injection parts (*4) 5) Fuel pump and fuel pump relay

*1: Check ignition coil and ignitor assembly and spark plug.
*2: Indicate the symptom occurring only in cold temperatures.
*3: Ensure the secure installation.
*4: Check fuel injector, fuel pressure regulator and fuel filter.
*5: Inspect air leak in air intake system.

GENERAL DESCRIPTION

GD(H4DOTC)

Page

1. List of Diagnostic Trouble Code (DTC) 2
2. Diagnostic Trouble Code (DTC) Detecting Criteria 9

1. List of Diagnostic Trouble Code (DTC)

A: LIST

DTC	Item	Index
P0011	Intake Camshaft Position Timing - Over-Advanced (Bank 1)	<Ref. to GD(H4DOTC)-9, DTC P0011 INTAKE CAMSHAFT POSITION TIMING - OVER-ADVANCED (BANK 1), Diagnostic Trouble Code (DTC) Detecting Criteria.>
P0021	Intake Camshaft Position Timing - Over-Advanced (Bank 2)	<Ref. to GD(H4DOTC)-11, DTC P0021 INTAKE CAMSHAFT POSITION TIMING - OVER-ADVANCED (BANK 2), Diagnostic Trouble Code (DTC) Detecting Criteria.>
P0030	HO2S Heater Control Circuit (Bank 1 Sensor 1)	<Ref. to GD(H4DOTC)-12, DTC P0030 HO2S HEATER CONTROL CIRCUIT (BANK 1 SENSOR 1), Diagnostic Trouble Code (DTC) Detecting Criteria.>
P0031	HO2S Heater Control Circuit Low (Bank 1 Sensor 1)	<Ref. to GD(H4DOTC)-14, DTC P0031 HO2S HEATER CONTROL CIRCUIT LOW (BANK 1 SENSOR 1), Diagnostic Trouble Code (DTC) Detecting Criteria.>
P0032	HO2S Heater Control Circuit High (Bank 1 Sensor 1)	<Ref. to GD(H4DOTC)-16, DTC P0032 HO2S HEATER CONTROL CIRCUIT HIGH (BANK 1 SENSOR 1), Diagnostic Trouble Code (DTC) Detecting Criteria.>
P0037	HO2S Heater Control Circuit Low (Bank 1 Sensor 2)	<Ref. to GD(H4DOTC)-18, DTC P0037 HO2S HEATER CONTROL CIRCUIT LOW (BANK 1 SENSOR 2), Diagnostic Trouble Code (DTC) Detecting Criteria.>
P0038	HO2S Heater Control Circuit High (Bank 1 Sensor 2)	<Ref. to GD(H4DOTC)-20, DTC P0038 HO2S HEATER CONTROL CIRCUIT HIGH (BANK 1 SENSOR 2), Diagnostic Trouble Code (DTC) Detecting Criteria.>
P0068	MAP/MAF - Throttle Position Correlation	<Ref. to GD(H4DOTC)-22, DTC P0068 MAP/MAF - THROTTLE POSITION CORRELATION, Diagnostic Trouble Code (DTC) Detecting Criteria.>
P0101	Mass or Volume Air Flow Circuit Range/Performance	<Ref. to GD(H4DOTC)-24, DTC P0101 MASS OR VOLUME AIR FLOW CIRCUIT RANGE/PERFORMANCE, Diagnostic Trouble Code (DTC) Detecting Criteria.>
P0102	Mass or Volume Air Flow Circuit Low Input	<Ref. to GD(H4DOTC)-27, DTC P0102 MASS OR VOLUME AIR FLOW CIRCUIT LOW INPUT, Diagnostic Trouble Code (DTC) Detecting Criteria.>
P0103	Mass or Volume Air Flow Circuit High Input	<Ref. to GD(H4DOTC)-29, DTC P0103 MASS OR VOLUME AIR FLOW CIRCUIT HIGH INPUT, Diagnostic Trouble Code (DTC) Detecting Criteria.>
P0107	Manifold Absolute Pressure/Barometric Pressure Circuit Low Input	<Ref. to GD(H4DOTC)-31, DTC P0107 MANIFOLD ABSOLUTE PRESSURE/BAROMETRIC PRESSURE CIRCUIT LOW INPUT, Diagnostic Trouble Code (DTC) Detecting Criteria.>
P0108	Manifold Absolute Pressure/Barometric Pressure Circuit High Input	<Ref. to GD(H4DOTC)-33, DTC P0108 MANIFOLD ABSOLUTE PRESSURE/BAROMETRIC PRESSURE CIRCUIT HIGH INPUT, Diagnostic Trouble Code (DTC) Detecting Criteria.>
P0111	Intake Air Temperature Circuit Range/Performance	<Ref. to GD(H4DOTC)-35, DTC P0111 INTAKE AIR TEMPERATURE CIRCUIT RANGE/PERFORMANCE, Diagnostic Trouble Code (DTC) Detecting Criteria.>
P0112	Intake Air Temperature Circuit Low Input	<Ref. to GD(H4DOTC)-37, DTC P0112 INTAKE AIR TEMPERATURE CIRCUIT LOW INPUT, Diagnostic Trouble Code (DTC) Detecting Criteria.>
P0113	Intake Air Temperature Circuit High Input	<Ref. to GD(H4DOTC)-39, DTC P0113 INTAKE AIR TEMPERATURE CIRCUIT HIGH INPUT, Diagnostic Trouble Code (DTC) Detecting Criteria.>
P0117	Engine Coolant Temperature Circuit Low Input	<Ref. to GD(H4DOTC)-41, DTC P0117 ENGINE COOLANT TEMPERATURE CIRCUIT LOW INPUT, Diagnostic Trouble Code (DTC) Detecting Criteria.>
P0118	Engine Coolant Temperature Circuit High Input	<Ref. to GD(H4DOTC)-43, DTC P0118 ENGINE COOLANT TEMPERATURE CIRCUIT HIGH INPUT, Diagnostic Trouble Code (DTC) Detecting Criteria.>
P0122	Throttle/Pedal Position Sensor/ Switch “A” Circuit Low Input	<Ref. to GD(H4DOTC)-45, DTC P0122 THROTTLE/PEDAL POSITION SENSOR/SWITCH “A” CIRCUIT LOW INPUT, Diagnostic Trouble Code (DTC) Detecting Criteria.>
P0123	Throttle/Pedal Position Sensor/ Switch “A” Circuit High Input	<Ref. to GD(H4DOTC)-47, DTC P0123 THROTTLE/PEDAL POSITION SENSOR/SWITCH “A” CIRCUIT HIGH INPUT, Diagnostic Trouble Code (DTC) Detecting Criteria.>

DTC	Item	Index
P0125	Insufficient Engine Coolant Temperature for Closed Loop Fuel Control	<Ref. to GD(H4DOTC)-49, DTC P0125 INSUFFICIENT ENGINE COOLANT TEMPERATURE FOR CLOSED LOOP FUEL CONTROL, Diagnostic Trouble Code (DTC) Detecting Criteria.>
P0126	Insufficient Engine Coolant Temperature for Stable Operation	<Ref. to GD(H4DOTC)-51, DTC P0126 INSUFFICIENT ENGINE COOLANT TEMPERATURE FOR STABLE OPERATION, Diagnostic Trouble Code (DTC) Detecting Criteria.>
P0128	Coolant Thermostat (Engine Coolant Temperature Below Thermostat Regulating Temperature)	<Ref. to GD(H4DOTC)-53, DTC P0128 COOLANT THERMOSTAT (ENGINE COOLANT TEMPERATURE BELOW THERMOSTAT REGULATING TEMPERATURE), Diagnostic Trouble Code (DTC) Detecting Criteria.>
P0131	O2 Sensor Circuit Low Voltage (Bank 1 Sensor 1)	<Ref. to GD(H4DOTC)-55, DTC P0131 O2 SENSOR CIRCUIT LOW VOLTAGE (BANK 1 SENSOR 1), Diagnostic Trouble Code (DTC) Detecting Criteria.>
P0132	O2 Sensor Circuit High Voltage (Bank 1 Sensor 1)	<Ref. to GD(H4DOTC)-57, DTC P0132 O2 SENSOR CIRCUIT HIGH VOLTAGE (BANK 1 SENSOR 1), Diagnostic Trouble Code (DTC) Detecting Criteria.>
P0133	O2 Sensor Circuit Slow Response (Bank 1 Sensor 1)	<Ref. to GD(H4DOTC)-59, DTC P0133 O2 SENSOR CIRCUIT SLOW RESPONSE (BANK 1 SENSOR 1), Diagnostic Trouble Code (DTC) Detecting Criteria.>
P0134	O2 Sensor Circuit No Activity Detected (Bank 1 Sensor 1)	<Ref. to GD(H4DOTC)-62, DTC P0134 O2 SENSOR CIRCUIT NO ACTIVITY DETECTED (BANK 1 SENSOR 1), Diagnostic Trouble Code (DTC) Detecting Criteria.>
P0137	O2 Sensor Circuit Low Voltage (Bank 1 Sensor 2)	<Ref. to GD(H4DOTC)-64, DTC P0137 O2 SENSOR CIRCUIT LOW VOLTAGE (BANK 1 SENSOR 2), Diagnostic Trouble Code (DTC) Detecting Criteria.>
P0138	O2 Sensor Circuit High Voltage (Bank 1 Sensor 2)	<Ref. to GD(H4DOTC)-66, DTC P0138 O2 SENSOR CIRCUIT HIGH VOLTAGE (BANK 1 SENSOR 2), Diagnostic Trouble Code (DTC) Detecting Criteria.>
P0139	O2 Sensor Circuit Slow Response (Bank 1 Sensor 2)	<Ref. to GD(H4DOTC)-68, DTC P0139 O2 SENSOR CIRCUIT SLOW RESPONSE (BANK 1 SENSOR 2), Diagnostic Trouble Code (DTC) Detecting Criteria.>
P0171	System Too Lean (Bank 1)	<Ref. to GD(H4DOTC)-74, DTC P0171 SYSTEM TOO LEAN (BANK 1), Diagnostic Trouble Code (DTC) Detecting Criteria.>
P0172	System Too Rich (Bank 1)	<Ref. to GD(H4DOTC)-76, DTC P0172 SYSTEM TOO RICH (BANK 1), Diagnostic Trouble Code (DTC) Detecting Criteria.>
P0181	Fuel Temperature Sensor “A” Circuit Range/Performance	<Ref. to GD(H4DOTC)-78, DTC P0181 FUEL TEMPERATURE SENSOR “A” CIRCUIT RANGE/PERFORMANCE, Diagnostic Trouble Code (DTC) Detecting Criteria.>
P0182	Fuel Temperature Sensor “A” Circuit Low Input	<Ref. to GD(H4DOTC)-81, DTC P0182 FUEL TEMPERATURE SENSOR “A” CIRCUIT LOW INPUT, Diagnostic Trouble Code (DTC) Detecting Criteria.>
P0183	Fuel Temperature Sensor “A” Circuit High Input	<Ref. to GD(H4DOTC)-83, DTC P0183 FUEL TEMPERATURE SENSOR “A” CIRCUIT HIGH INPUT, Diagnostic Trouble Code (DTC) Detecting Criteria.>
P0222	Throttle/Pedal Position Sensor/ Switch “B” Circuit Low Input	<Ref. to GD(H4DOTC)-85, DTC P0222 THROTTLE/PEDAL POSITION SENSOR/SWITCH “B” CIRCUIT LOW INPUT, Diagnostic Trouble Code (DTC) Detecting Criteria.>
P0223	Throttle/Pedal Position Sensor/ Switch “B” Circuit High Input	<Ref. to GD(H4DOTC)-87, DTC P0223 THROTTLE/PEDAL POSITION SENSOR/SWITCH “B” CIRCUIT HIGH INPUT, Diagnostic Trouble Code (DTC) Detecting Criteria.>
P0230	Fuel Pump Primary Circuit	<Ref. to GD(H4DOTC)-89, DTC P0230 FUEL PUMP PRIMARY CIRCUIT, Diagnostic Trouble Code (DTC) Detecting Criteria.>
P0244	Turbo/Super Charger Wastegate Solenoid “A” Range/Performance	<Ref. to GD(H4DOTC)-91, DTC P0244 TURBO/SUPER CHARGER WASTEGATE SOLENOID “A” RANGE/PERFORMANCE, Diagnostic Trouble Code (DTC) Detecting Criteria.>
P0245	Turbo/Super Charger Wastegate Solenoid “A” Low	<Ref. to GD(H4DOTC)-93, DTC P0245 TURBO/SUPER CHARGER WASTEGATE SOLENOID “A” LOW, Diagnostic Trouble Code (DTC) Detecting Criteria.>

DTC	Item	Index
P0246	Turbo/Super Charger Wastegate Solenoid “A” High	<Ref. to GD(H4DOTC)-95, DTC P0246 TURBO/SUPER CHARGER WASTEGATE SOLENOID “A” HIGH, Diagnostic Trouble Code (DTC) Detecting Criteria.>
P0301	Cylinder 1 Misfire Detected	<Ref. to GD(H4DOTC)-97, DTC P0301 CYLINDER 1 MISFIRE DETECTED, Diagnostic Trouble Code (DTC) Detecting Criteria.>
P0302	Cylinder 2 Misfire Detected	<Ref. to GD(H4DOTC)-102, DTC P0302 CYLINDER 2 MISFIRE DETECTED, Diagnostic Trouble Code (DTC) Detecting Criteria.>
P0303	Cylinder 3 Misfire Detected	<Ref. to GD(H4DOTC)-102, DTC P0303 CYLINDER 3 MISFIRE DETECTED, Diagnostic Trouble Code (DTC) Detecting Criteria.>
P0304	Cylinder 4 Misfire Detected	<Ref. to GD(H4DOTC)-102, DTC P0304 CYLINDER 4 MISFIRE DETECTED, Diagnostic Trouble Code (DTC) Detecting Criteria.>
P0327	Knock Sensor 1 Circuit Low Input (Bank 1 or Single Sensor)	<Ref. to GD(H4DOTC)-103, DTC P0327 KNOCK SENSOR 1 CIRCUIT LOW INPUT (BANK 1 OR SINGLE SENSOR), Diagnostic Trouble Code (DTC) Detecting Criteria.>
P0328	Knock Sensor 1 Circuit High Input (Bank 1 or Single Sensor)	<Ref. to GD(H4DOTC)-105, DTC P0328 KNOCK SENSOR 1 CIRCUIT HIGH INPUT (BANK 1 OR SINGLE SENSOR), Diagnostic Trouble Code (DTC) Detecting Criteria.>
P0335	Crankshaft Position Sensor “A” Circuit	<Ref. to GD(H4DOTC)-107, DTC P0335 CRANKSHAFT POSITION SENSOR “A” CIRCUIT, Diagnostic Trouble Code (DTC) Detecting Criteria.>
P0336	Crankshaft Position Sensor “A” Circuit Range/Performance	<Ref. to GD(H4DOTC)-109, DTC P0336 CRANKSHAFT POSITION SENSOR “A” CIRCUIT RANGE/PERFORMANCE, Diagnostic Trouble Code (DTC) Detecting Criteria.>
P0340	Camshaft Position Sensor “A” Circuit (Bank 1 or Single Sensor)	<Ref. to GD(H4DOTC)-111, DTC P0340 CAMSHAFT POSITION SENSOR “A” CIRCUIT (BANK 1 OR SINGLE SENSOR), Diagnostic Trouble Code (DTC) Detecting Criteria.>
P0345	Camshaft Position Sensor “A” Circuit (Bank 2)	<Ref. to GD(H4DOTC)-112, DTC P0345 CAMSHAFT POSITION SENSOR “A” CIRCUIT (BANK 2), Diagnostic Trouble Code (DTC) Detecting Criteria.>
P0420	Catalyst System Efficiency Below Threshold (Bank 1)	<Ref. to GD(H4DOTC)-113, DTC P0420 CATALYST SYSTEM EFFICIENCY BELOW THRESHOLD (BANK 1), Diagnostic Trouble Code (DTC) Detecting Criteria.>
P0442	Evaporative Emission Control System Leak Detected (Small Leak)	<Ref. to GD(H4DOTC)-116, DTC P0442 EVAPORATIVE EMISSION CONTROL SYSTEM LEAK DETECTED (SMALL LEAK), Diagnostic Trouble Code (DTC) Detecting Criteria.>
P0447	Evaporative Emission Control System Vent Control Circuit Open	<Ref. to GD(H4DOTC)-131, DTC P0447 EVAPORATIVE EMISSION CONTROL SYSTEM VENT CONTROL CIRCUIT OPEN, Diagnostic Trouble Code (DTC) Detecting Criteria.>
P0448	Evaporative Emission Control System Vent Control Circuit Shorted	<Ref. to GD(H4DOTC)-133, DTC P0448 EVAPORATIVE EMISSION CONTROL SYSTEM VENT CONTROL CIRCUIT SHORTED, Diagnostic Trouble Code (DTC) Detecting Criteria.>
P0451	Evaporative Emission Control System Pressure Sensor	<Ref. to GD(H4DOTC)-135, DTC P0451 EVAPORATIVE EMISSION CONTROL SYSTEM PRESSURE SENSOR, Diagnostic Trouble Code (DTC) Detecting Criteria.>
P0452	Evaporative Emission Control System Pressure Sensor Low Input	<Ref. to GD(H4DOTC)-137, DTC P0452 EVAPORATIVE EMISSION CONTROL SYSTEM PRESSURE SENSOR LOW INPUT, Diagnostic Trouble Code (DTC) Detecting Criteria.>
P0453	Evaporative Emission Control System Pressure Sensor High Input	<Ref. to GD(H4DOTC)-139, DTC P0453 EVAPORATIVE EMISSION CONTROL SYSTEM PRESSURE SENSOR HIGH INPUT, Diagnostic Trouble Code (DTC) Detecting Criteria.>
P0456	Evaporative Emission Control System Leak Detected (Very Small Leak)	<Ref. to GD(H4DOTC)-140, DTC P0456 EVAPORATIVE EMISSION CONTROL SYSTEM LEAK DETECTED (VERY SMALL LEAK), Diagnostic Trouble Code (DTC) Detecting Criteria.>
P0457	Evaporative Emission Control System Leak Detected (Fuel Cap Loose/Off)	<Ref. to GD(H4DOTC)-140, DTC P0457 EVAPORATIVE EMISSION CONTROL SYSTEM LEAK DETECTED (FUEL CAP LOOSE/OFF), Diagnostic Trouble Code (DTC) Detecting Criteria.>
P0458	Evaporative Emission Control System Purge Control Valve Circuit Low	<Ref. to GD(H4DOTC)-141, DTC P0458 EVAPORATIVE EMISSION CONTROL SYSTEM PURGE CONTROL VALVE CIRCUIT LOW, Diagnostic Trouble Code (DTC) Detecting Criteria.>

DTC	Item	Index
P0459	Evaporative Emission Control System Purge Control Valve Circuit High	<Ref. to GD(H4DOTC)-143, DTC P0459 EVAPORATIVE EMISSION CONTROL SYSTEM PURGE CONTROL VALVE CIRCUIT HIGH, Diagnostic Trouble Code (DTC) Detecting Criteria.>
P0461	Fuel Level Sensor Circuit Range/Performance	<Ref. to GD(H4DOTC)-145, DTC P0461 FUEL LEVEL SENSOR CIRCUIT RANGE/PERFORMANCE, Diagnostic Trouble Code (DTC) Detecting Criteria.>
P0462	Fuel Level Sensor Circuit Low Input	<Ref. to GD(H4DOTC)-147, DTC P0462 FUEL LEVEL SENSOR CIRCUIT LOW INPUT, Diagnostic Trouble Code (DTC) Detecting Criteria.>
P0463	Fuel Level Sensor Circuit High Input	<Ref. to GD(H4DOTC)-149, DTC P0463 FUEL LEVEL SENSOR CIRCUIT HIGH INPUT, Diagnostic Trouble Code (DTC) Detecting Criteria.>
P0464	Fuel Level Sensor Circuit Intermittent	<Ref. to GD(H4DOTC)-151, DTC P0464 FUEL LEVEL SENSOR CIRCUIT INTERMITTENT, Diagnostic Trouble Code (DTC) Detecting Criteria.>
P0483	Cooling Fan Rationality Check	<Ref. to GD(H4DOTC)-154, DTC P0483 COOLING FAN RATIONALITY CHECK, Diagnostic Trouble Code (DTC) Detecting Criteria.>
P0500	Vehicle Speed Sensor	<Ref. to GD(H4DOTC)-155, DTC P0500 VEHICLE SPEED SENSOR, Diagnostic Trouble Code (DTC) Detecting Criteria.>
P0506	Idle Control System RPM Lower Than Expected	<Ref. to GD(H4DOTC)-157, DTC P0506 IDLE CONTROL SYSTEM RPM LOWER THAN EXPECTED, Diagnostic Trouble Code (DTC) Detecting Criteria.>
P0507	Idle Control System RPM Higher Than Expected	<Ref. to GD(H4DOTC)-159, DTC P0507 IDLE CONTROL SYSTEM RPM HIGHER THAN EXPECTED, Diagnostic Trouble Code (DTC) Detecting Criteria.>
P0512	Starter Request Circuit	<Ref. to GD(H4DOTC)-161, DTC P0512 STARTER REQUEST CIRCUIT, Diagnostic Trouble Code (DTC) Detecting Criteria.>
P0513	Incorrect Immobilizer Key	<Ref. to GD(H4DOTC)-162, DTC P0513 INCORRECT IMMOBILIZER KEY, Diagnostic Trouble Code (DTC) Detecting Criteria.>
P0519	Idle Control System Malfunction (Fail-Safe)	<Ref. to GD(H4DOTC)-163, DTC P0519 IDLE CONTROL SYSTEM MALFUNCTION (FAIL-SAFE), Diagnostic Trouble Code (DTC) Detecting Criteria.>
P0545	Exhaust Gas Temperature Sensor Circuit Low-Bank 1	<Ref. to GD(H4DOTC)-164, DTC P0545 EXHAUST GAS TEMPERATURE SENSOR CIRCUIT LOW-BANK 1, Diagnostic Trouble Code (DTC) Detecting Criteria.>
P0546	Exhaust Gas Temperature Sensor Circuit High-Bank 1	<Ref. to GD(H4DOTC)-166, DTC P0546 EXHAUST GAS TEMPERATURE SENSOR CIRCUIT HIGH-BANK 1, Diagnostic Trouble Code (DTC) Detecting Criteria.>
P0600	Serial Communication Link	<Ref. to GD(H4DOTC)-168, DTC P0600 SERIAL COMMUNICATION LINK, Diagnostic Trouble Code (DTC) Detecting Criteria.>
P0604	Internal Control Module Random Access Memory (RAM) Error	<Ref. to GD(H4DOTC)-169, DTC P0604 INTERNAL CONTROL MODULE RANDOM ACCESS MEMORY (RAM) ERROR, Diagnostic Trouble Code (DTC) Detecting Criteria.>
P0605	Internal Control Module Read Only Memory (ROM) Error	<Ref. to GD(H4DOTC)-170, DTC P0605 INTERNAL CONTROL MODULE READ ONLY MEMORY (ROM) ERROR, Diagnostic Trouble Code (DTC) Detecting Criteria.>
P0607	Control Module Performance	<Ref. to GD(H4DOTC)-171, DTC P0607 CONTROL MODULE PERFORMANCE, Diagnostic Trouble Code (DTC) Detecting Criteria.>
P0638	Throttle Actuator Control Range/Performance (Bank 1)	<Ref. to GD(H4DOTC)-174, DTC P0638 THROTTLE ACTUATOR CONTROL RANGE/PERFORMANCE (BANK 1), Diagnostic Trouble Code (DTC) Detecting Criteria.>
P0691	Cooling Fan 1 Control Circuit Low	<Ref. to GD(H4DOTC)-177, DTC P0691 COOLING FAN 1 CONTROL CIRCUIT LOW, Diagnostic Trouble Code (DTC) Detecting Criteria.>
P0692	Cooling Fan 1 Control Circuit High	<Ref. to GD(H4DOTC)-178, DTC P0692 COOLING FAN 1 CONTROL CIRCUIT HIGH, Diagnostic Trouble Code (DTC) Detecting Criteria.>
P0700	Transmission Control System (MIL Request)	<Ref. to GD(H4DOTC)-179, DTC P0700 TRANSMISSION CONTROL SYSTEM (MIL REQUEST), Diagnostic Trouble Code (DTC) Detecting Criteria.>
P0851	Neutral Switch Input Circuit Low (AT Model)	<Ref. to GD(H4DOTC)-180, DTC P0851 NEUTRAL SWITCH INPUT CIRCUIT LOW (AT MODEL), Diagnostic Trouble Code (DTC) Detecting Criteria.>

DTC	Item	Index
P0851	Neutral Switch Input Circuit Low (MT Model)	<Ref. to GD(H4DOTC)-181, DTC P0851 NEUTRAL SWITCH INPUT CIRCUIT LOW (MT MODEL), Diagnostic Trouble Code (DTC) Detecting Criteria.>
P0852	Neutral Switch Input Circuit High (AT Model)	<Ref. to GD(H4DOTC)-182, DTC P0852 NEUTRAL SWITCH INPUT CIRCUIT HIGH (AT MODEL), Diagnostic Trouble Code (DTC) Detecting Criteria.>
P0852	Neutral Switch Input Circuit High (MT Model)	<Ref. to GD(H4DOTC)-183, DTC P0852 NEUTRAL SWITCH INPUT CIRCUIT HIGH (MT MODEL), Diagnostic Trouble Code (DTC) Detecting Criteria.>
P1152	O2 Sensor Circuit Range/Performance (Low) (Bank1 Sensor1)	<Ref. to GD(H4DOTC)-184, DTC P1152 O2 SENSOR CIRCUIT RANGE/PERFORMANCE (LOW) (BANK1 SENSOR1), Diagnostic Trouble Code (DTC) Detecting Criteria.>
P1153	O2 Sensor Circuit Range/Performance (High) (Bank1 Sensor1)	<Ref. to GD(H4DOTC)-187, DTC P1153 O2 SENSOR CIRCUIT RANGE/PERFORMANCE (HIGH) (BANK1 SENSOR1), Diagnostic Trouble Code (DTC) Detecting Criteria.>
P1160	Return Spring Failure	<Ref. to GD(H4DOTC)-190, DTC P1160 RETURN SPRING FAILURE, Diagnostic Trouble Code (DTC) Detecting Criteria.>
P1301	Misfire Defected (High Temperature Exhaust Gas)	<Ref. to GD(H4DOTC)-192, DTC P1301 MISFIRE DETECTED (HIGH TEMPERATURE EXHAUST GAS), Diagnostic Trouble Code (DTC) Detecting Criteria.>
P1312	Exhaust Gas Temperature Sensor Malfunction	<Ref. to GD(H4DOTC)-194, DTC P1312 EXHAUST GAS TEMPERATURE SENSOR MALFUNCTION, Diagnostic Trouble Code (DTC) Detecting Criteria.>
P1400	Fuel Tank Pressure Control Solenoid Valve Circuit Low	<Ref. to GD(H4DOTC)-195, DTC P1400 FUEL TANK PRESSURE CONTROL SOLENOID VALVE CIRCUIT LOW, Diagnostic Trouble Code (DTC) Detecting Criteria.>
P1420	Fuel Tank Pressure Control Sol. Valve Circuit High	<Ref. to GD(H4DOTC)-197, DTC P1420 FUEL TANK PRESSURE CONTROL SOL. VALVE CIRCUIT HIGH, Diagnostic Trouble Code (DTC) Detecting Criteria.>
P1443	Vent Control Solenoid Valve Function Problem	<Ref. to GD(H4DOTC)-199, DTC P1443 VENT CONTROL SOLENOID VALVE FUNCTION PROBLEM, Diagnostic Trouble Code (DTC) Detecting Criteria.>
P1446	Fuel Tank Sensor Control Valve Circuit Low	<Ref. to GD(H4DOTC)-201, DTC P1446 FUEL TANK SENSOR CONTROL VALVE CIRCUIT LOW, Diagnostic Trouble Code (DTC) Detecting Criteria.>
P1447	Fuel Tank Sensor Control Valve Circuit High	<Ref. to GD(H4DOTC)-203, DTC P1447 FUEL TANK SENSOR CONTROL VALVE CIRCUIT HIGH, Diagnostic Trouble Code (DTC) Detecting Criteria.>
P1491	Positive Crankcase Ventilation (Blow-by) Function Problem	<Ref. to GD(H4DOTC)-205, DTC P1491 POSITIVE CRANKCASE VENTILATION (BLOW-BY) FUNCTION PROBLEM, Diagnostic Trouble Code (DTC) Detecting Criteria.>
P1518	Starter Switch Circuit Low Input	<Ref. to GD(H4DOTC)-207, DTC P1518 STARTER SWITCH CIRCUIT LOW INPUT, Diagnostic Trouble Code (DTC) Detecting Criteria.>
P1544	Exhaust Gas Temperature Tool High	<Ref. to GD(H4DOTC)-208, DTC P1544 EXHAUST GAS TEMPERATURE TOO HIGH, Diagnostic Trouble Code (DTC) Detecting Criteria.>
P1560	Back-Up Voltage Circuit Malfunction	<Ref. to GD(H4DOTC)-209, DTC P1560 BACK-UP VOLTAGE CIRCUIT MALFUNCTION, Diagnostic Trouble Code (DTC) Detecting Criteria.>
P1570	Antenna	<Ref. to GD(H4DOTC)-210, DTC P1570 ANTENNA, Diagnostic Trouble Code (DTC) Detecting Criteria.>
P1571	Reference Code Incompatibility	<Ref. to GD(H4DOTC)-210, DTC P1571 REFERENCE CODE INCOMPATIBILITY, Diagnostic Trouble Code (DTC) Detecting Criteria.>
P1572	IMM Circuit Failure (Except Antenna Circuit)	<Ref. to GD(H4DOTC)-210, DTC P1572 IMM CIRCUIT FAILURE (EXCEPT ANTENNA CIRCUIT), Diagnostic Trouble Code (DTC) Detecting Criteria.>
P1574	Key Communication Failure	<Ref. to GD(H4DOTC)-210, DTC P1574 KEY COMMUNICATION FAILURE, Diagnostic Trouble Code (DTC) Detecting Criteria.>
P1576	EGI Control Module EEPROM	<Ref. to GD(H4DOTC)-210, DTC P1576 EGI CONTROL MODULE EEPROM, Diagnostic Trouble Code (DTC) Detecting Criteria.>
P1577	IMM Control Module EEPROM	<Ref. to GD(H4DOTC)-210, DTC P1577 IMM CONTROL MODULE EEPROM, Diagnostic Trouble Code (DTC) Detecting Criteria.>

DTC	Item	Index
P1578	Meter Failure	<Ref. to GD(H4DOTC)-210, DTC P1578 METER FAILURE, Diagnostic Trouble Code (DTC) Detecting Criteria.>
P2004	Intake Manifold Runner Control Stuck Open (Bank 1)	<Ref. to GD(H4DOTC)-211, DTC P2004 INTAKE MANIFOLD RUNNER CONTROL STUCK OPEN (BANK 1), Diagnostic Trouble Code (DTC) Detecting Criteria.>
P2005	Intake Manifold Runner Control Stuck Open (Bank 2)	<Ref. to GD(H4DOTC)-212, DTC P2005 INTAKE MANIFOLD RUNNER CONTROL STUCK OPEN (BANK 2), Diagnostic Trouble Code (DTC) Detecting Criteria.>
P2006	Intake Manifold Runner Control Stuck Closed (Bank 1)	<Ref. to GD(H4DOTC)-213, DTC P2006 INTAKE MANIFOLD RUNNER CONTROL STUCK CLOSED (BANK 1), Diagnostic Trouble Code (DTC) Detecting Criteria.>
P2007	Intake Manifold Runner Control Stuck Closed (Bank 2)	<Ref. to GD(H4DOTC)-214, DTC P2007 INTAKE MANIFOLD RUNNER CONTROL STUCK CLOSED (BANK 2), Diagnostic Trouble Code (DTC) Detecting Criteria.>
P2008	Intake Manifold Runner Control Circuit / Open (Bank 1)	<Ref. to GD(H4DOTC)-215, DTC P2008 INTAKE MANIFOLD RUNNER CONTROL CIRCUIT / OPEN (BANK 1), Diagnostic Trouble Code (DTC) Detecting Criteria.>
P2009	Intake Manifold Runner Control Circuit Low (Bank 1)	<Ref. to GD(H4DOTC)-217, DTC P2009 INTAKE MANIFOLD RUNNER CONTROL CIRCUIT LOW (BANK 1), Diagnostic Trouble Code (DTC) Detecting Criteria.>
P2011	Intake Manifold Runner Control Circuit / Open (Bank 2)	<Ref. to GD(H4DOTC)-219, DTC P2011 INTAKE MANIFOLD RUNNER CONTROL CIRCUIT / OPEN (BANK 2), Diagnostic Trouble Code (DTC) Detecting Criteria.>
P2012	Intake Manifold Runner Control Circuit Low (Bank 2)	<Ref. to GD(H4DOTC)-221, DTC P2012 INTAKE MANIFOLD RUNNER CONTROL CIRCUIT LOW (BANK 2), Diagnostic Trouble Code (DTC) Detecting Criteria.>
P2016	Intake Manifold Runner Position Sensor / Switch Circuit Low (Bank 1)	<Ref. to GD(H4DOTC)-223, DTC P2016 INTAKE MANIFOLD RUNNER POSITION SENSOR / SWITCH CIRCUIT LOW (BANK 1), Diagnostic Trouble Code (DTC) Detecting Criteria.>
P2017	Intake Manifold Runner Position Sensor / Switch Circuit High (Bank 1)	<Ref. to GD(H4DOTC)-225, DTC P2017 INTAKE MANIFOLD RUNNER POSITION SENSOR / SWITCH CIRCUIT HIGH (BANK 1), Diagnostic Trouble Code (DTC) Detecting Criteria.>
P2021	Intake Manifold Runner Position Sensor / Switch Circuit Low (Bank 2)	<Ref. to GD(H4DOTC)-227, DTC P2021 INTAKE MANIFOLD RUNNER POSITION SENSOR / SWITCH CIRCUIT LOW (BANK 2), Diagnostic Trouble Code (DTC) Detecting Criteria.>
P2022	Intake Manifold Runner Position Sensor / Switch Circuit High (Bank 2)	<Ref. to GD(H4DOTC)-229, DTC P2022 INTAKE MANIFOLD RUNNER POSITION SENSOR / SWITCH CIRCUIT HIGH (BANK 2), Diagnostic Trouble Code (DTC) Detecting Criteria.>
P2088	OCV Solenoid Valve Signal A Circuit Open (Bank 1)	<Ref. to GD(H4DOTC)-231, DTC P2088 OCV SOLENOID VALVE SIGNAL A CIRCUIT OPEN (BANK 1), Diagnostic Trouble Code (DTC) Detecting Criteria.>
P2089	OCV Solenoid Valve Signal A Circuit Short (Bank 1)	<Ref. to GD(H4DOTC)-233, DTC P2089 OCV SOLENOID VALVE SIGNAL A CIRCUIT SHORT (BANK 1), Diagnostic Trouble Code (DTC) Detecting Criteria.>
P2092	OCV Solenoid Valve Signal A Circuit Open (Bank 2)	<Ref. to GD(H4DOTC)-234, DTC P2092 OCV SOLENOID VALVE SIGNAL A CIRCUIT OPEN (BANK 2), Diagnostic Trouble Code (DTC) Detecting Criteria.>
P2093	OCV Solenoid Valve Signal A Circuit Short (Bank 2)	<Ref. to GD(H4DOTC)-234, DTC P2093 OCV SOLENOID VALVE SIGNAL A CIRCUIT SHORT (BANK 2), Diagnostic Trouble Code (DTC) Detecting Criteria.>
P2096	Post Catalyst Fuel Trim System Too Lean Bank 1	<Ref. to GD(H4DOTC)-235, DTC P2096 POST CATALYST FUEL TRIM SYSTEM TOO LEAN BANK 1, Diagnostic Trouble Code (DTC) Detecting Criteria.>
P2097	Post Catalyst Fuel Trim System Too Rich Bank 1	<Ref. to GD(H4DOTC)-237, DTC P2097 POST CATALYST FUEL TRIM SYSTEM TOO RICH BANK 1, Diagnostic Trouble Code (DTC) Detecting Criteria.>

DTC	Item	Index
P2101	Throttle Actuator Control Motor Circuit Range/Performance	<Ref. to GD(H4DOTC)-239, DTC P2101 THROTTLE ACTUATOR CONTROL MOTOR CIRCUIT RANGE/PERFORMANCE, Diagnostic Trouble Code (DTC) Detecting Criteria.>
P2102	Throttle Actuator Control Motor Circuit Low	<Ref. to GD(H4DOTC)-241, DTC P2102 THROTTLE ACTUATOR CONTROL MOTOR CIRCUIT LOW, Diagnostic Trouble Code (DTC) Detecting Criteria.>
P2103	Throttle Actuator Control Motor Circuit High	<Ref. to GD(H4DOTC)-243, DTC P2103 THROTTLE ACTUATOR CONTROL MOTOR CIRCUIT HIGH, Diagnostic Trouble Code (DTC) Detecting Criteria.>
P2109	Throttle/Pedal Position Sensor A Minimum Stop Performance	<Ref. to GD(H4DOTC)-245, DTC P2109 THROTTLE/PEDAL POSITION SENSOR A MINIMUM STOP PERFORMANCE, Diagnostic Trouble Code (DTC) Detecting Criteria.>
P2122	Throttle/Pedal Position Sensor/ Switch “D” Circuit Low Input	<Ref. to GD(H4DOTC)-247, DTC P2122 THROTTLE/PEDAL POSITION SENSOR/SWITCH “D” CIRCUIT LOW INPUT, Diagnostic Trouble Code (DTC) Detecting Criteria.>
P2123	Throttle/Pedal Position Sensor/ Switch “D” Circuit High Input	<Ref. to GD(H4DOTC)-249, DTC P2123 THROTTLE/PEDAL POSITION SENSOR/SWITCH “D” CIRCUIT HIGH INPUT, Diagnostic Trouble Code (DTC) Detecting Criteria.>
P2127	Throttle/Pedal Position Sensor/ Switch “E” Circuit Low Input	<Ref. to GD(H4DOTC)-251, DTC P2127 THROTTLE/PEDAL POSITION SENSOR/SWITCH “E” CIRCUIT LOW INPUT, Diagnostic Trouble Code (DTC) Detecting Criteria.>
P2128	Throttle/Pedal Position Sensor/ Switch “E” Circuit High Input	<Ref. to GD(H4DOTC)-253, DTC P2128 THROTTLE/PEDAL POSITION SENSOR/SWITCH “E” CIRCUIT HIGH INPUT, Diagnostic Trouble Code (DTC) Detecting Criteria.>
P2135	Throttle/Pedal Position Sensor/ Switch “A”/“B” Voltage Rationality	<Ref. to GD(H4DOTC)-254, DTC P2135 THROTTLE/PEDAL POSITION SENSOR/SWITCH “A”/“B” VOLTAGE RATIONALITY, Diagnostic Trouble Code (DTC) Detecting Criteria.>
P2138	Throttle/Pedal Position Sensor/ Switch “D”/“E” Voltage Rationality	<Ref. to GD(H4DOTC)-256, DTC P2138 THROTTLE/PEDAL POSITION SENSOR/SWITCH “D”/“E” VOLTAGE RATIONALITY, Diagnostic Trouble Code (DTC) Detecting Criteria.>
P2227	Barometric Pressure Circuit Range/ Performance	<Ref. to GD(H4DOTC)-258, DTC P2227 BAROMETRIC PRESSURE CIRCUIT RANGE/PERFORMANCE, Diagnostic Trouble Code (DTC) Detecting Criteria.>
P2228	Barometric Pressure Circuit Low Input	<Ref. to GD(H4DOTC)-259, DTC P2228 BAROMETRIC PRESSURE CIRCUIT LOW INPUT, Diagnostic Trouble Code (DTC) Detecting Criteria.>
P2229	Barometric Pressure Circuit High Input	<Ref. to GD(H4DOTC)-260, DTC P2229 BAROMETRIC PRESSURE CIRCUIT HIGH INPUT, Diagnostic Trouble Code (DTC) Detecting Criteria.>

2. Diagnostic Trouble Code (DTC) Detecting Criteria

A: DTC P0011 INTAKE CAMSHAFT POSITION TIMING - OVER-ADVANCED (BANK 1)

1. OUTLINE OF DIAGNOSIS

Detect the malfunction of AVCS system.
1) Judge NG when the amount of AVCS actual timing advance does not approach to the amount of AVCS target timing advance.
2) Judge NG when the most retarded learning value is outside of the normal range.

2. COMPONENT DESCRIPTION

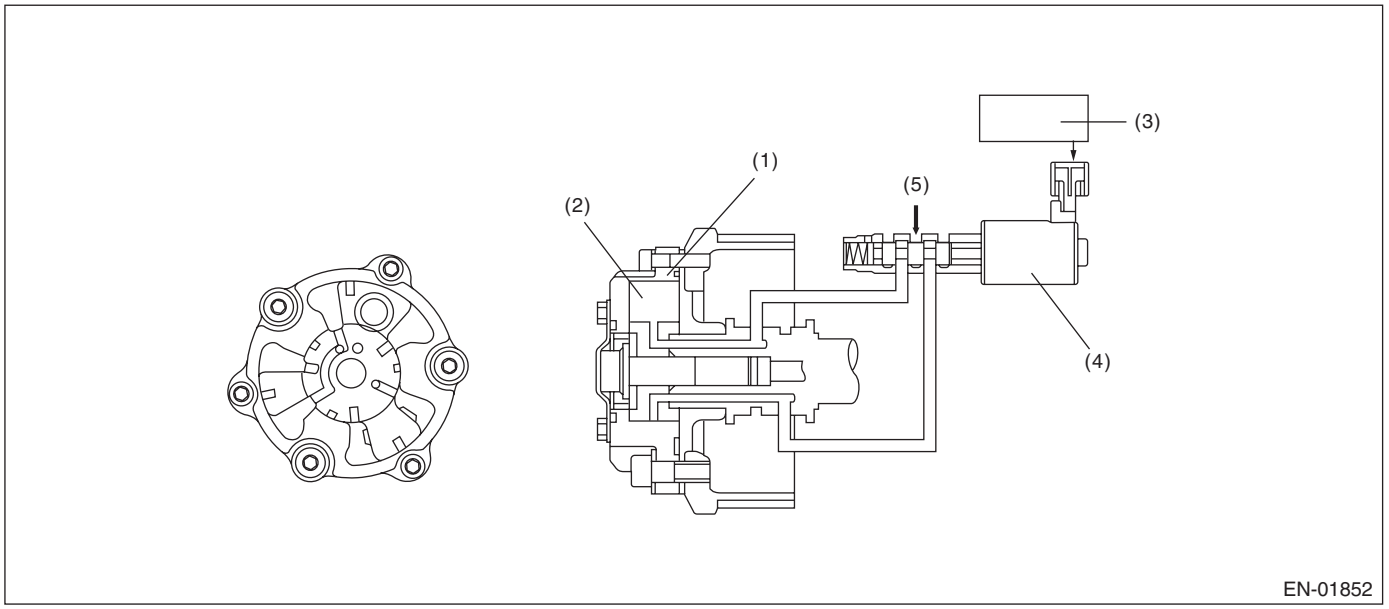

(1) AVCS timing controller
(2) Vane
(3) Engine control module (ECM)
(4) Oil flow control solenoid valve
(5) Oil pressure

3. ENABLE CONDITION (FOR ABNORMALITY JUDGMENT ONLY)

Secondary Parameters	Enable Conditions
Abnormality judgement (1)	
Battery voltage	≥ 10.9 V
Engine speed	≥ 1500 rpm
Engine coolant temperature	≥ 60°C (140°F)
AVCS control	Operating
Abnormality judgement (2)	
Battery voltage	≥ 10.9 V
Engine speed	≥ 500 rpm
Engine coolant temperature	≥ 60°C (140°F)

4. GENERAL DRIVING CYCLE

1) Always perform the diagnosis after warming up when the engine speed is more than 1500 rpm.
2) Always perform the diagnosis after warming up the engine when the engine speed is more than 500 rpm.

5. DIAGNOSTIC METHOD

1) Judge NG when the difference of the amount of AVCS target timing advance and the amount of AVCS actual timing advance becomes large.

2) Judge NG when the most retarded learning value is outside of the normal range.

• Abnormality Judgment

Judge NG when the continuous time of completing the malfunction criteria below becomes more than 20 seconds.

Judgment Value

Malfunction Criteria	Threshold Value
(1) Judgement value |AVCS target position − AVCS actual position|	≥ 0°
(2) Judgement value AVCS control Most timing retard learning value	 During most timing retard learning < −13°CA or > 25°CA

Time Needed for Diagnosis: 20 seconds

Malfunction Indicator Light Illumination: Illuminates when malfunction occurs in 2 continuous driving cycles.

• Normality Judgment

Judge OK and clear the NG when the continuous time of completing the malfunction criteria below becomes more than 1 second.

Judgment Value

Malfunction Criteria	Threshold Value
(1) Judgement value	
AVCS control	Operating
Amount of AVCS target timing advance	5 — 30°CA
AVCS target position − AVCS actual position	< 10°
(2) Judgement value	
Most timing retard learning value	−13 — 25°CA

6. DTC CLEAR CONDITION

- When the OK idling cycle was completed 40 times in a row
- When “Clear Memory” was performed

7. MALFUNCTION INDICATOR LIGHT CLEAR CONDITION

- When the OK driving cycle was completed 3 times in a row
- When “Clear Memory” was performed

8. FAIL SAFE

- Ignition timing whole learning compensation:
  – Enter the initial value (whole learning compensation factor = 0.5, Variable amount of whole learning compensation factor = 0.25) to the whole learning compensation factor and variable amount of whole learning compensation factor when IG OFF, and then make the whole learning incomplete.
  – Enter the initial value (whole learning compensation factor = 0.5, Variable amount of whole learning compensation factor = 0.25) to the whole learning compensation factor and variable amount of whole learning compensation factor when making a normality judgment from abnormality judgment, and then make the whole learning incomplete.
- Ignition timing partial learning compensation:
  – Enter the initial value (0°CA) to the compensation value of partial learning zone when IG OFF.
  – Enter the initial value (0°CA) to the compensation value of partial learning zone when making a normality judgment from abnormality judgment.
- AVCS control: Most timing retard learning is not complete or most timing retard learning completion is not experienced.

• ISC feedback compensation: Do not perform the AVCS actual timing advance compensation. Make the OCV driving Duty to be the given value (9.36%).

9. ECM OPERATION AT DTC SETTING

Memorize the freeze frame data. (For test mode $02)

B: DTC P0021 INTAKE CAMSHAFT POSITION TIMING - OVER-ADVANCED (BANK 2)

1. OUTLINE OF DIAGNOSIS

For the detecting criteria, refer to DTC P0011. <Ref. to GD(H4DOTC)-9, DTC P0011 INTAKE CAMSHAFT POSITION TIMING - OVER-ADVANCED (BANK 1), Diagnostic Trouble Code (DTC) Detecting Criteria.>

C: DTC P0030 HO2S HEATER CONTROL CIRCUIT (BANK 1 SENSOR 1)

1. OUTLINE OF DIAGNOSIS

Detect the malfunction of front oxygen (A/F) sensor heater.
Judge NG when impedance of front oxygen (A/F) sensor is larger than the standard value by referring to the engine condition such as fuel shut-off in deceleration, etc.

2. COMPONENT DESCRIPTION

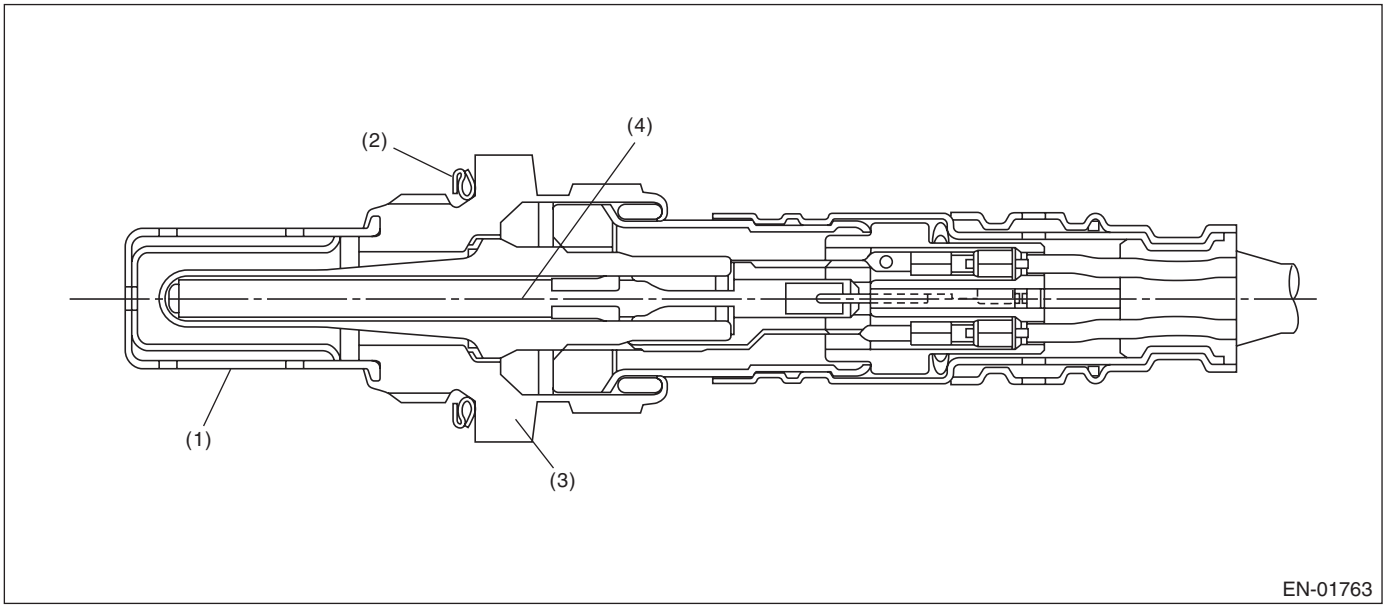

(1) Protection tube
(2) Gasket
(3) Sensor housing
(4) Ceramic heater

3. ENABLE CONDITION

Secondary Parameters	Enable Conditions
Time needed for all secondary parameters to be in enable conditions	60 seconds or more
Battery voltage	> 10.9 V
Heater continuity	Permitted
Front oxygen (A/F) sensor heater control duty ≥ 35%	Experienced
After fuel shut-off	20 seconds or more

4. GENERAL DRIVING CYCLE

Perform diagnosis continuously in 60 seconds after starting engine.

5. DIAGNOSTIC METHOD

Judge NG when the continuous time of completing the malfunction criteria below becomes more than the time needed for diagnosis (10 seconds). Judge OK and clear NG when the continuous time of not completing the malfunction criteria below becomes more than the time needed for diagnosis (10 seconds).

Judgment Value

Malfunction Criteria	Threshold Value
Impedance of front oxygen (A/F) sensor	> 50 Ω

Time Needed for Diagnosis: 10 seconds
Malfunction Indicator Light Illumination: Illuminates when malfunction occurs in 2 continuous driving cycles.

6. DTC CLEAR CONDITION

- When the OK idling cycle was completed 40 times in a row
- When “Clear Memory” was performed

7. MALFUNCTION INDICATOR LIGHT CLEAR CONDITION

- When the OK driving cycle was completed 3 times in a row
- When “Clear Memory” was performed

8. FAIL SAFE

- Front oxygen (A/F) sensor main learning correction: Not allowed to calculate
- Correction when re-starting at high temperature: Normally minimum value 0.06 → 0
- Purge control: Not allowed to purge

9. ECM OPERATION AT DTC SETTING

Memorize the freeze frame data. (For test mode $02)

D: DTC P0031 HO2S HEATER CONTROL CIRCUIT LOW (BANK 1 SENSOR 1)

1. OUTLINE OF DIAGNOSIS

Detect the open or short circuit of heater.
The heater conducts the duty control. The output terminal voltage at ON becomes 0 V, and the output terminal voltage at OFF becomes battery voltage.
Judge NG when the terminal voltage remains Low.

2. COMPONENT DESCRIPTION

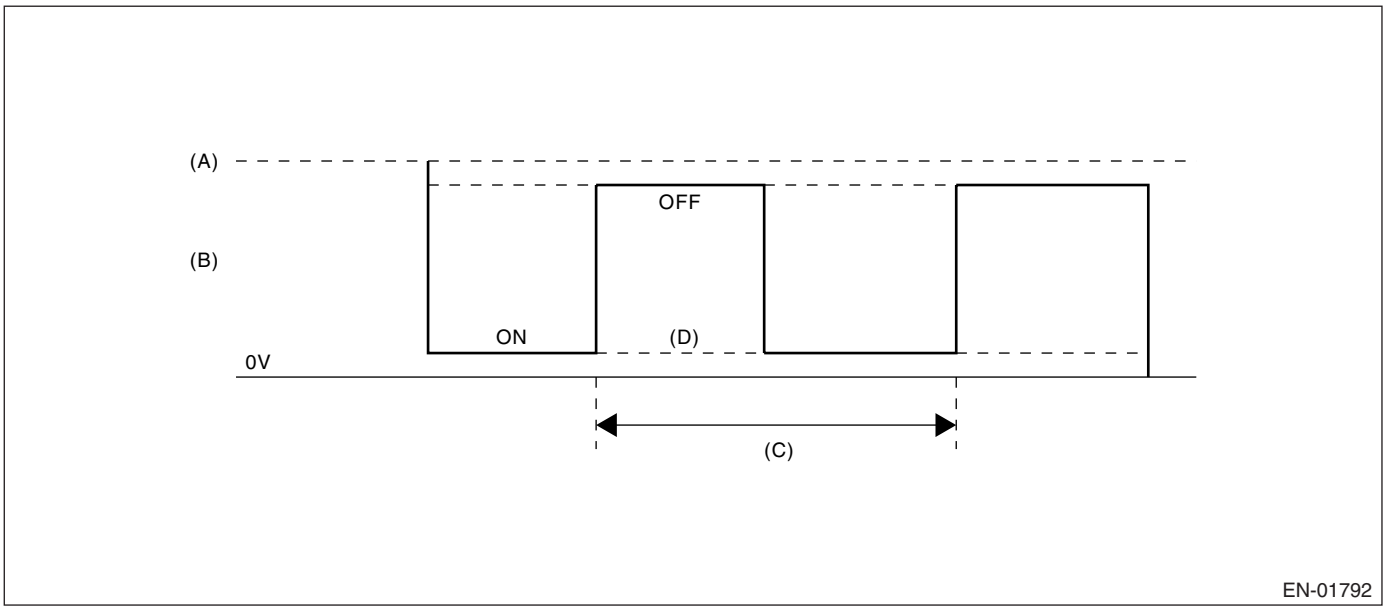

(A) Battery voltage
(B) Front oxygen (A/F) sensor heater output voltage
(C) 128 milliseconds
(D) Low malfunction

3. ENABLE CONDITION

Secondary Parameters	Enable Conditions
Battery voltage	≥ 10.9 V

4. GENERAL DRIVING CYCLE

Always perform diagnosis continuously.

5. DIAGNOSTIC METHOD

• Abnormality Judgment

Judge NG when the continuous time of completing the malfunction criteria below becomes more than 1 second (8 cycles).

Judgment Value

Malfunction Criteria	Threshold Value
Output voltage level	Low
Front oxygen (A/F) sensor heater control duty	< 87.5%

Time Needed for Diagnosis: 1 second
Malfunction Indicator Light Illumination: Illuminates as soon as malfunction occurs.

• Normality Judgment

Judge OK and clear the NG when all the malfunction criteria below are completed.
Judgment Value

Malfunction Criteria	Threshold Value
Output voltage level	High

6. DTC CLEAR CONDITION

- When the OK idling cycle was completed 40 times in a row
- When “Clear Memory” was performed

7. MALFUNCTION INDICATOR LIGHT CLEAR CONDITION

- When the OK driving cycle was completed 3 times in a row
- When “Clear Memory” was performed

8. FAIL SAFE

- Front oxygen (A/F) sensor activation judgment: Front oxygen (A/F) sensor full activation is not complete, or front oxygen (A/F) sensor half activation is not complete.
- A/F main learning: Not allowed to calculate the A/F main learning compensation factor.
- Compensation when starting the engine at high temperature: Make the MIN value to be 0 from 0.3 normally.
- Purge control: Not allowed to purge.

9. ECM OPERATION AT DTC SETTING

Memorize the freeze frame data. (For test mode $02)

E: DTC P0032 HO2S HEATER CONTROL CIRCUIT HIGH (BANK 1 SENSOR 1)

1. OUTLINE OF DIAGNOSIS

Detect the open or short circuit of heater.
The heater conducts the duty control. The output terminal voltage at ON becomes 0 V, and the output terminal voltage at OFF becomes battery voltage.
Judge NG when the terminal voltage remains High.

2. COMPONENT DESCRIPTION

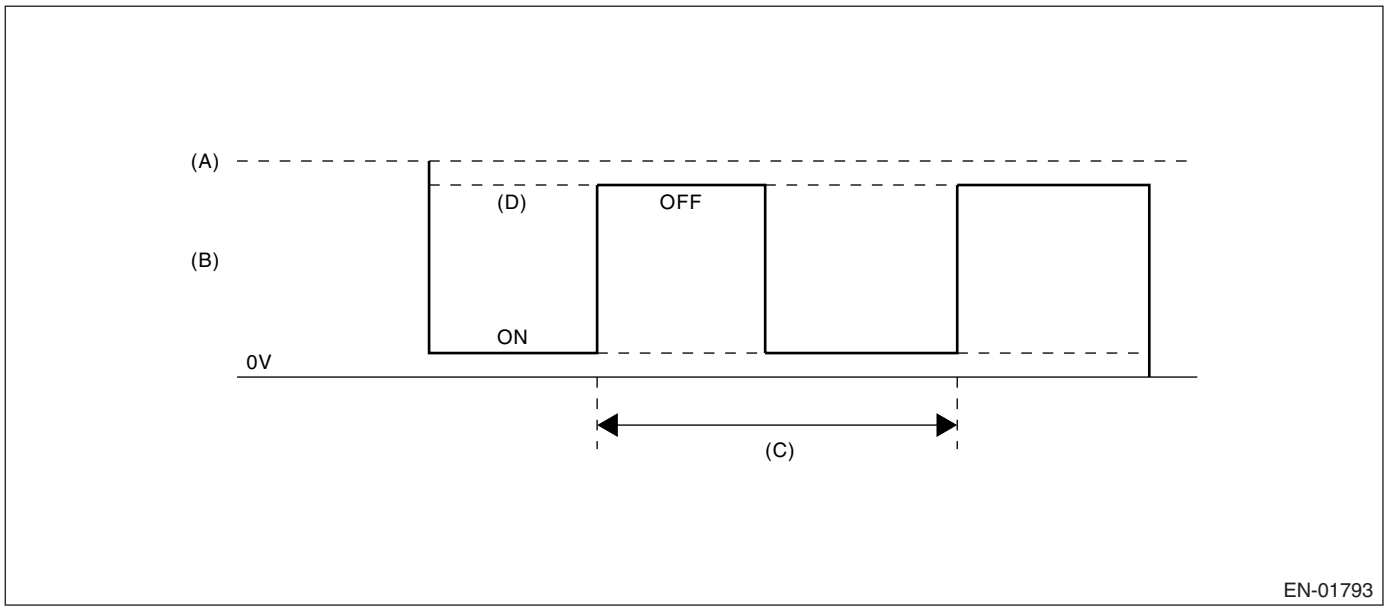

(A) Battery voltage
(B) Front oxygen (A/F) sensor heater output voltage
(C) 128 milliseconds
(D) High abnormality

3. ENABLE CONDITION

Secondary Parameters	Enable Conditions
Battery voltage	≥ 10.9 V

4. GENERAL DRIVING CYCLE

Always perform diagnosis continuously.

5. DIAGNOSTIC METHOD

• Abnormality Judgment

Judge NG when the continuous time of completing the malfunction criteria below becomes 1 second (8 cycles).

Judgment Value

Malfunction Criteria	Threshold Value
Output voltage level	High
Front oxygen (A/F) sensor heater control duty	≥ 12.5%

Time Needed for Diagnosis: 1 second
Malfunction Indicator Light Illumination: Illuminates as soon as malfunction occurs.

• Normality Judgment

Judge OK and clear the NG when all the malfunction criteria below are completed.

Judgment Value

Malfunction Criteria	Threshold Value
Output voltage level	Low

6. DTC CLEAR CONDITION

- When the OK idling cycle was completed 40 times in a row
- When “Clear Memory” was performed

7. MALFUNCTION INDICATOR LIGHT CLEAR CONDITION

- When the OK driving cycle was completed 3 times in a row
- When “Clear Memory” was performed

8. FAIL SAFE

- Front oxygen (A/F) sensor activation judgment: Front oxygen (A/F) sensor full activation is not complete, or front oxygen (A/F) sensor half activation is not complete.
- A/F main learning: Not allowed to calculate the A/F main learning compensation factor.
- Compensation when starting the engine at high temperature: Make the MIN value to be 0 from 0.3 normally.
- Purge control: Not allowed to purge.

9. ECM OPERATION AT DTC SETTING

Memorize the freeze frame data. (For test mode $02)

F: DTC P0037 HO2S HEATER CONTROL CIRCUIT LOW (BANK 1 SENSOR 2)

1. OUTLINE OF DIAGNOSIS

Detect open or short circuit of rear oxygen sensor heater.
Rear oxygen sensor heater conducted the duty control, and the output terminal voltage at ON is 0 V and the output terminal voltage at OFF is the battery voltage.
Judge NG when the terminal voltage remains Low.

2. COMPONENT DESCRIPTION

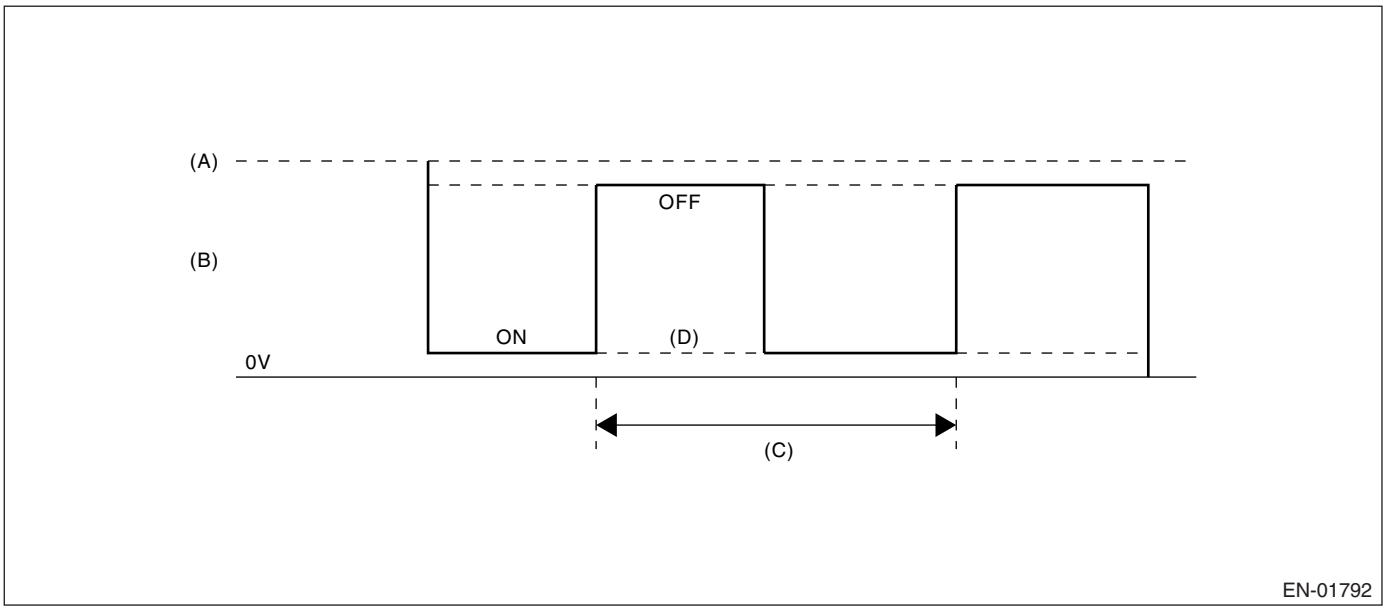

(A) Battery voltage
(B) Rear oxygen sensor heater output voltage
(C) 256 milliseconds (cycles)
(D) Low malfunction

3. ENABLE CONDITION

Secondary Parameters	Enable Conditions
Battery voltage	> 10.9 V
After starting engine	1 second or more

4. GENERAL DRIVING CYCLE

Perform the diagnosis continuously after engine starting.

5. DIAGNOSTIC METHOD

• Abnormality Judgment

Judge NG when the continuous time of completing all the malfunction criteria below becomes more than 2560 milliseconds (10 cycles).

Judgment Value

Malfunction Criteria	Threshold Value
Output voltage level	Low
Rear oxygen sensor heater control duty	< 75%

Time Needed for Diagnosis: 2.56 seconds
Malfunction Indicator Light Illumination: Illuminates when malfunction occurs in 2 continuous driving cycles.

• Normality Judgment

Judge OK and clear the NG when all the malfunction criteria below are completed.
Judgment Value

Malfunction Criteria	Threshold Value
Output voltage level	High

6. DTC CLEAR CONDITION

- When the OK idling cycle was completed 40 times in a row
- When “Clear Memory” was performed

7. MALFUNCTION INDICATOR LIGHT CLEAR CONDITION

- When the OK driving cycle was completed 3 times in a row
- When “Clear Memory” was performed

8. FAIL SAFE

Sub feedback control: Not allowed

9. ECM OPERATION AT DTC SETTING

Memorize the freeze frame data. (For test mode $02)

G: DTC P0038 HO2S HEATER CONTROL CIRCUIT HIGH (BANK 1 SENSOR 2)

1. OUTLINE OF DIAGNOSIS

Detect open or short circuit of rear oxygen heater.
Rear oxygen heater conducted the duty control, and the output terminal voltage at ON is 0 V and the output terminal voltage at OFF is the battery voltage.
Judge NG when the terminal voltage remains to be High.

2. COMPONENT DESCRIPTION

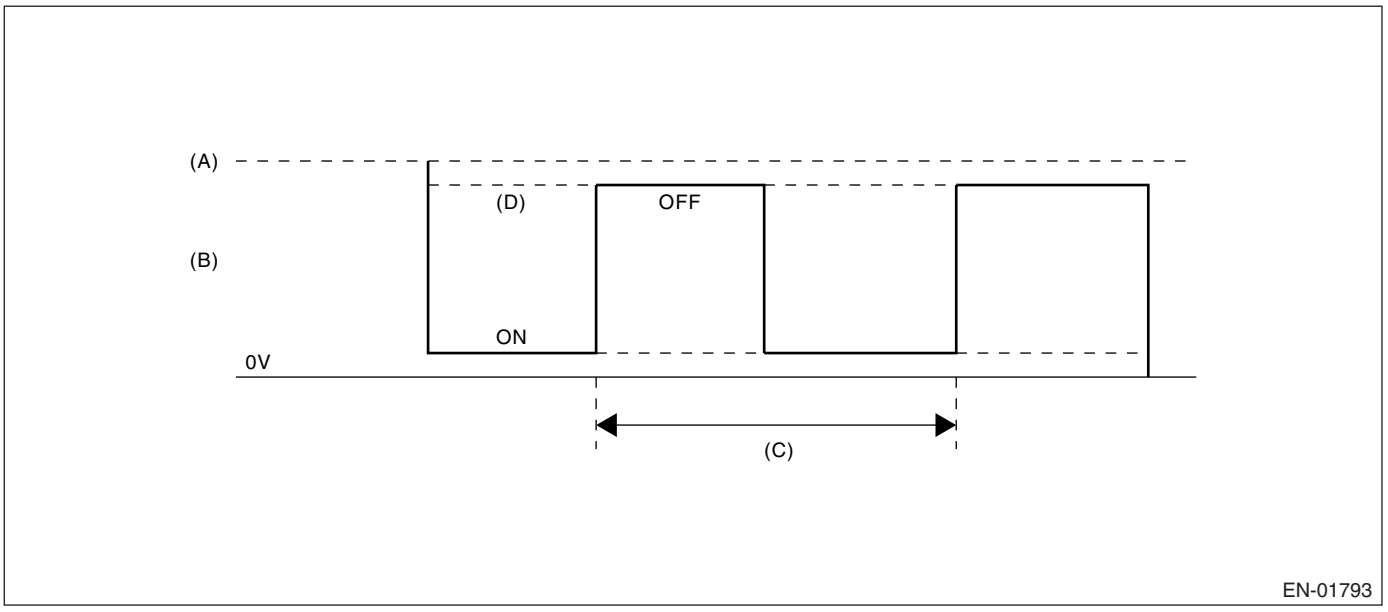

(A) Battery voltage
(B) Rear oxygen sensor heater output voltage
(C) 256 milliseconds (cycle)
(D) High malfunction

3. ENABLE CONDITION

Secondary Parameters	Enable Conditions
Battery voltage	> 10.9 V
After starting engine	1 second or more

4. GENERAL DRIVING CYCLE

Perform the diagnosis continuously after engine starting.

5. DIAGNOSTIC METHOD

• Abnormality Judgment

Judge NG when the continuous time of completing all the malfunction criteria below becomes more than 2560 milliseconds (10 cycles).

Judgment Value

Malfunction Criteria	Threshold Value
Output voltage level	High
Rear oxygen sensor heater control duty	≥ 25%

Time Needed for Diagnosis: 2.56 seconds
Malfunction Indicator Light Illumination: Illuminates when malfunction occurs in 2 continuous driving cycles.

• Normality Judgment

Judge OK and clear the NG when all the malfunction criteria below are completed.
Judgment Value

Malfunction Criteria	Threshold Value
Output voltage level	Low

6. DTC CLEAR CONDITION

- When the OK idling cycle was completed 40 times in a row
- When “Clear Memory” was performed

7. MALFUNCTION INDICATOR LIGHT CLEAR CONDITION

- When the OK driving cycle was completed 3 times in a row
- When “Clear Memory” was performed

8. FAIL SAFE

Sub feedback control: Not allowed

9. ECM OPERATION AT DTC SETTING

Memorize the freeze frame data. (For test mode $02)

H: DTC P0068 MAP/MAF - THROTTLE POSITION CORRELATION

1. OUTLINE OF DIAGNOSIS

Detect the malfunction of intake manifold pressure sensor output property. Judge NG when the intake air pressure AD value is Low whereas it seemed to be High from the viewpoint of engine condition, or when it is High whereas it seemed to be Low from the engine condition.

2. COMPONENT DESCRIPTION

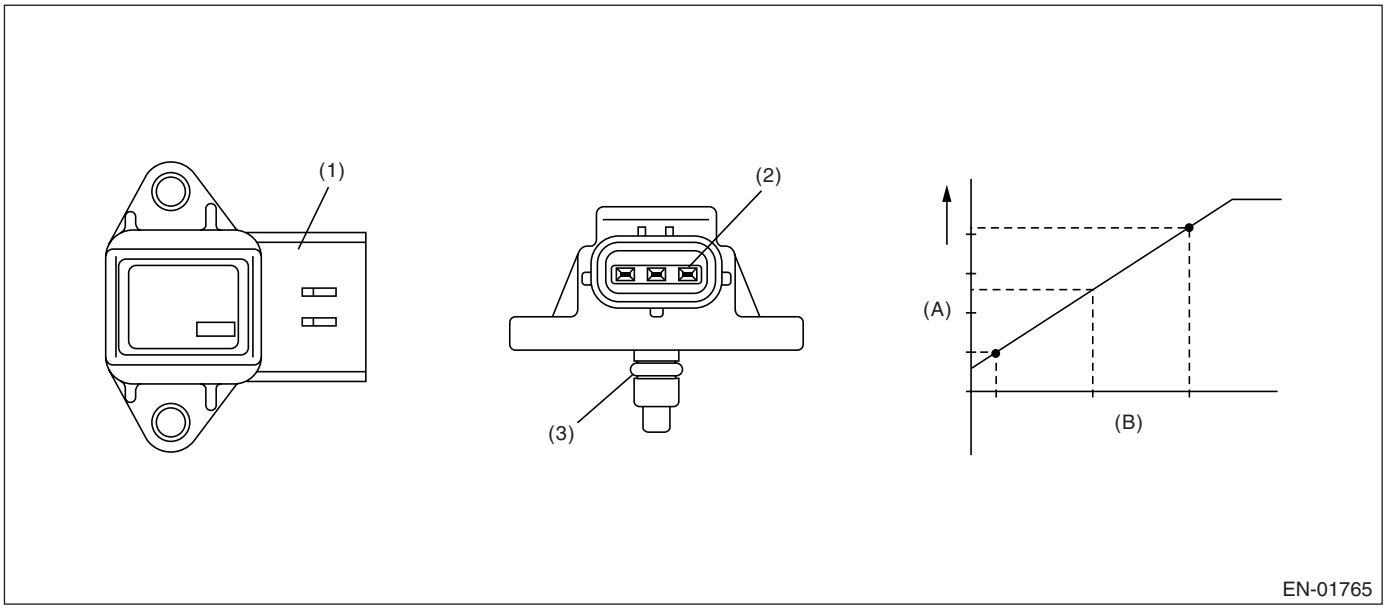

(1) Connector
(2) Terminal
(3) O-ring
(A) Output voltage
(B) Absolute pressure

3. ENABLE CONDITION

Secondary Parameters	Enable Conditions
Engine coolant temperature	≥ 75°C (167°F)

4. GENERAL DRIVING CYCLE

Perform the diagnosis continuously after idling.

5. DIAGNOSTIC METHOD

• Abnormality Judgment

Judge NG when either Low side or High side becomes NG. Judge NG when the continuous time of completing the malfunction criteria below becomes more than 3 seconds.

Judgment Value

Malfunction Criteria	Threshold Value
Low side	
Engine speed	< 2500 rpm
Throttle position	≥ 10°
Amount of intake air during 0.5 engine rev	1.356 g (0.048 oz) / rev
Output voltage	< 1.0 V
High side	
Engine speed	600 ←→ 900 rpm
Throttle position	< 1.3°
Amount of intake air during 0.5 engine rev	0.4 g (0.014 oz) / rev
Output voltage	≥ 2.36 V

Time Needed for Diagnosis: 3 seconds
Malfunction Indicator Light Illumination: Illuminates when malfunction occurs in 2 continuous driving cycles.

• Normality Judgment

Judge OK and clear the NG when both Low side and High side become OK. Judge OK when the malfunction criteria below are completed.

Judgment Value

Malfunction Criteria	Threshold Value
Low side	
Engine speed	< 2500 rpm
Throttle position	≥ 10°
Output voltage	≥ 1.0 V
High side	
Engine speed	600 ←→ 900 rpm
Throttle position	< 1.3°
Output voltage	< 2.36 V

6. DTC CLEAR CONDITION

- When the OK idling cycle was completed 40 times in a row
- When “Clear Memory” was performed

7. MALFUNCTION INDICATOR LIGHT CLEAR CONDITION

- When the OK driving cycle was completed 3 times in a row
- When “Clear Memory” was performed

8. FAIL SAFE

- Intake manifold pressure sensor process: Estimate the pressure from engine load.
- ISC feedback: Not allowed to calculate the amount of feedback.
- Heavy fuel judgment: Not allowed to carry out the heavy judgment.
- Fuel cut control: Not allowed to cut the over pressure charged fuel.

9. ECM OPERATION AT DTC SETTING

Memorize the freeze frame data. (For test mode $02)

I: DTC P0101 MASS OR VOLUME AIR FLOW CIRCUIT RANGE/PERFORMANCE

1. OUTLINE OF DIAGNOSIS

Detect the malfunction of air flow sensor output property. Judge Low side NG when the air flow voltage indicates low value in spite of the driving condition that the air flow voltage might be high; otherwise, judge High side NG when the air flow voltage indicates high value in spite of the driving condition that the air flow voltage might be low. Judge air flow sensor property NG when the Low side or High side becomes NG.

2. COMPONENT DESCRIPTION

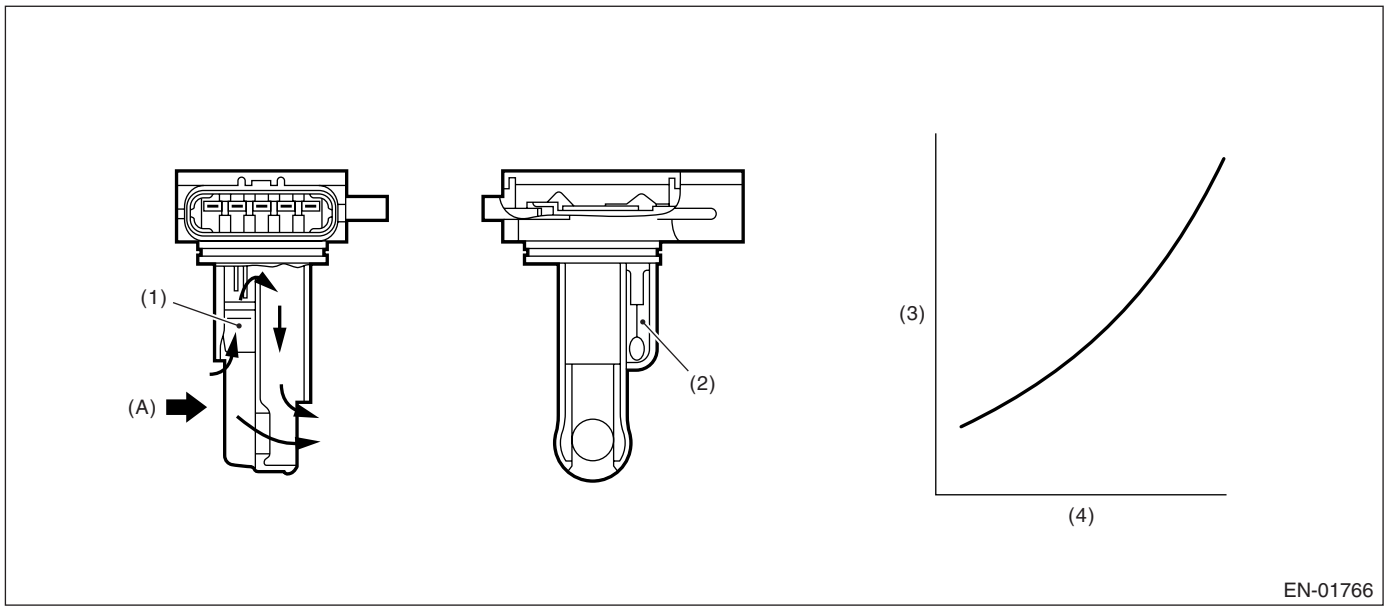

(1) Air flow sensor
(2) Intake air temperature sensor
(3) Voltage (V)
(4) Intake air volume (kg (lb)/s)
(A) Air

3. ENABLE CONDITION

Secondary Parameters	Enable Conditions
Engine coolant temperature	≥ 70°C (158°F)

4. GENERAL DRIVING CYCLE

Perform the diagnosis continuously after idling.

5. DIAGNOSTIC METHOD

• Abnormality Judgment

Judge NG when the continuous time of completing the malfunction criteria below becomes more then the time needed for diagnosis.

Judgment Value

Malfunction Criteria	Threshold Value
Low side NG	
Output voltage	< 1.5 V
Engine speed	≥ 2500 rpm
Throttle opening angle	≥ 15°
Intake manifold pressure	≥ 53.3 kPa (400 mmHg, 15.7 inHg)
High side NG (1)	
Output voltage	≥ 1.95 V
Engine speed	600 ←→ 900 rpm
Throttle opening angle	< 4.1°
Intake manifold pressure	< 52.7 kPa (395 mmHg, 15.6 inHg)
High side NG (2)	
Output voltage	≥ 1.7 V
Engine speed	600 ←→ 900 rpm
Throttle opening angle	< 4.1°
Intake manifold pressure	< 52.7 kPa (395 mmHg, 15.6 inHg)
Fuel system diagnosis	Rich side NG

Time Needed for Diagnosis:

Low side	3 seconds
High side	10 seconds

Malfunction Indicator Light Illumination: Illuminates when malfunction occurs in 2 continuous driving cycles.

• Normality Judgment

Judge OK the when the malfunction criteria below are completed.

Judgment Value

Malfunction Criteria	Threshold Value
Low side NG	
Output voltage	≥ 1.5 V
Engine speed	≥ 2500 rpm
Throttle opening angle	≥ 15°
Intake manifold pressure	≥ 53.3 kPa (400 mmHg, 15.7 inHg)
High side NG	
Output voltage	< 1.95 V
Engine speed	600 ←→ 900 rpm
Throttle opening angle	< 4.1°
Intake manifold pressure	< 52.7 kPa (395 mmHg, 15.6 inHg)
Fuel system diagnosis	Rich side OK

6. DTC CLEAR CONDITION

- When the OK idling cycle was completed 40 times in a row
- When “Clear Memory” was performed

7. MALFUNCTION INDICATOR LIGHT CLEAR CONDITION

- When the OK driving cycle was completed 3 times in a row
- When “Clear Memory” was performed

8. FAIL SAFE

None

9. ECM OPERATION AT DTC SETTING

Memorize the freeze frame data. (For test mode $02)

J: DTC P0102 MASS OR VOLUME AIR FLOW CIRCUIT LOW INPUT

1. OUTLINE OF DIAGNOSIS

Detect the open or short circuit of air flow sensor. Judge NG when out of the standard value.

2. COMPONENT DESCRIPTION

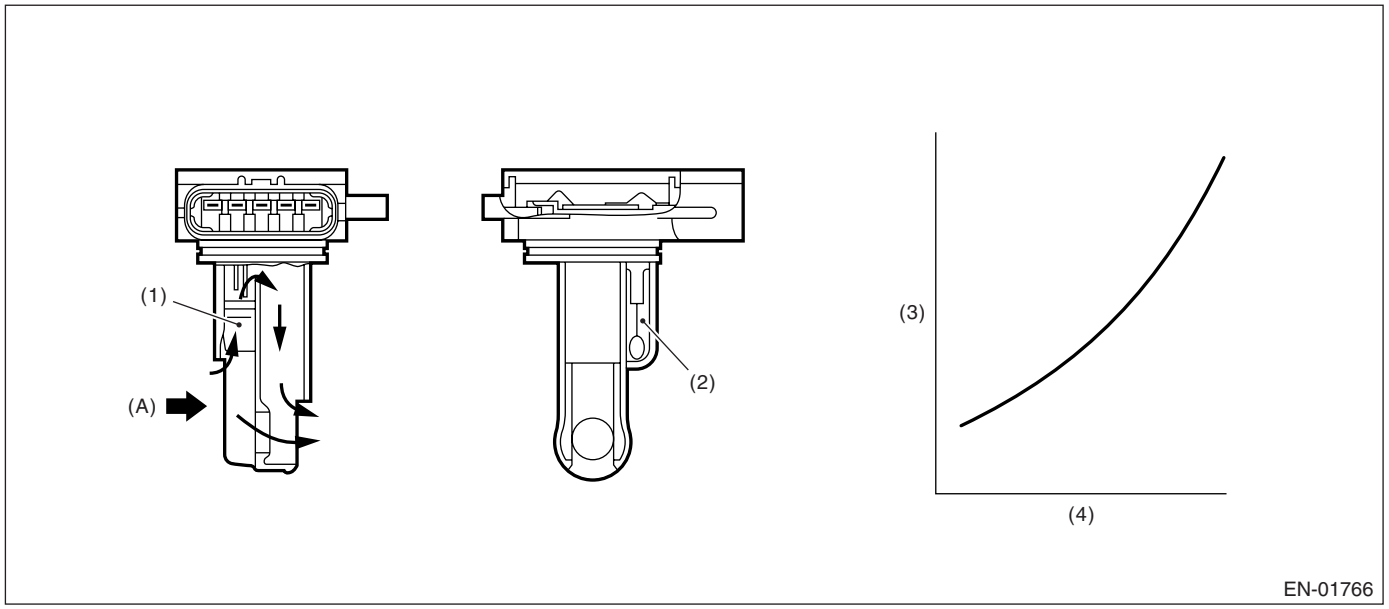

(1) Air flow sensor
(2) Intake air temperature sensor
(3) Voltage (V)
(4) Intake air volume (kg (lb)/s)
(A) Air

3. ENABLE CONDITION

Secondary Parameters	Enable Conditions
None	

4. GENERAL DRIVING CYCLE

Always perform the diagnosis continuously.

5. DIAGNOSTIC METHOD

Judge NG when the continuous time of completing the malfunction criteria below becomes more than 0.5 seconds. Judge OK and clear the NG when the malfunction criteria below are not completed.

Judgment Value

Malfunction Criteria	Threshold Value
Output voltage	≤ 0.2 V

Time Needed for Diagnosis: 0.5 seconds
Malfunction Indicator Light Illumination: Illuminates as soon as the malfunction occurs.

6. DTC CLEAR CONDITION

- When the OK idling cycle was completed 40 times in a row
- When “Clear Memory” was performed

7. MALFUNCTION INDICATOR LIGHT CLEAR CONDITION

- When the OK driving cycle was completed 3 times in a row
- When “Clear Memory” was performed

8. FAIL SAFE

- Air flow meter: Engine load is normally calculated by manifold pressure and engine speed; however, calculated only by manifold pressure.
- EVAP conc. learning (fuel): Not allowed to learn.
- Knock compensation:
  - Knock compensation final timing advance and retard value = knock compensation + whole learning compensation value + partial learning compensation value.
  - At normal: knock compensation = 0°CA is fixed.
  - At trouble: knock compensation ≠ 0°CA is fixed. (Retard max. 12°CA at knock.)
  - Not allowed to update the whole learning compensation factor.
  - Not allowed to calculate the partial learning zone compensation value.
- ISC control: Make the open loop compensation to be the given value (1 g (0.04 oz)/s). Stop calculating the throttle sensor temperature compensation. (Hold the previous value.)
- Purge control: Not allowed to purge.

9. ECM OPERATION AT DTC SETTING

Memorize the freeze frame data. (For test mode $02)

K: DTC P0103 MASS OR VOLUME AIR FLOW CIRCUIT HIGH INPUT

1. OUTLINE OF DIAGNOSIS

Detect the open or short circuit of air flow sensor. Judge NG when out of the standard value.

2. COMPONENT DESCRIPTION

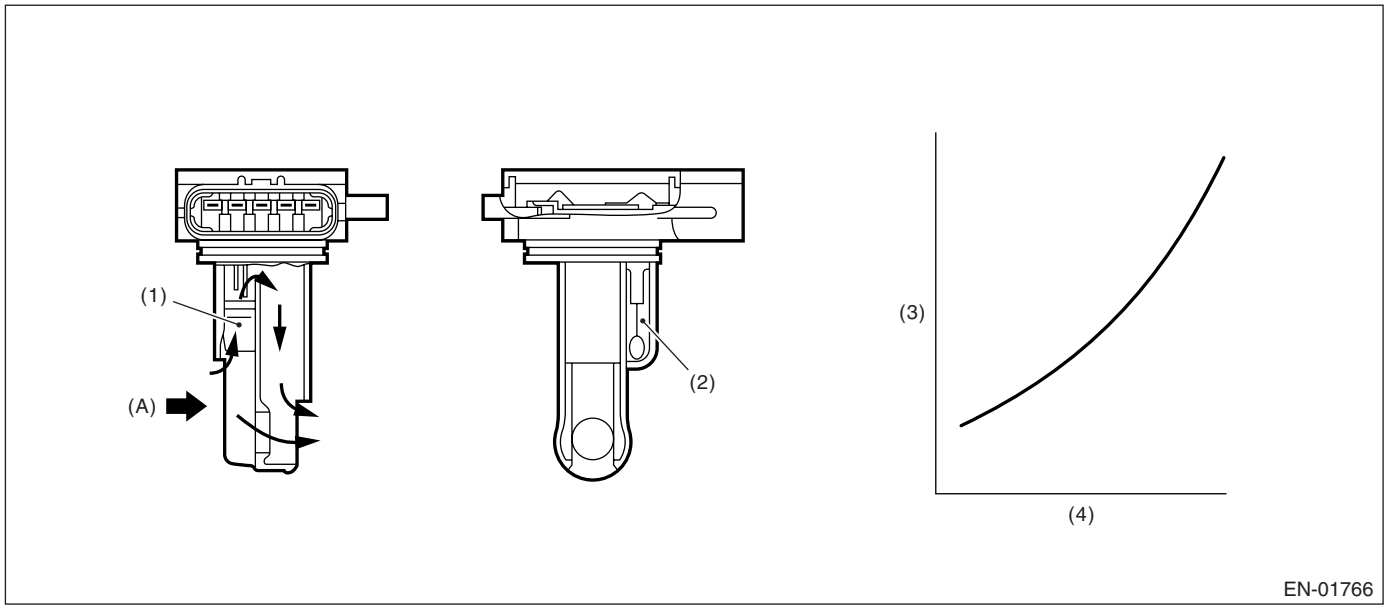

(1) Air flow sensor
(2) Intake air temperature sensor
(3) Voltage (V)
(4) Intake air volume (kg (lb)/s)
(A) Air

3. ENABLE CONDITION

Secondary Parameters	Enable Conditions
None	

4. GENERAL DRIVING CYCLE

Always perform the diagnosis continuously.

5. DIAGNOSTIC METHOD

Judge NG when the continuous time of completing the malfunction criteria below becomes more than 0.5 seconds. Judge OK and clear the NG when the malfunction criteria below are not completed.

Judgment Value

Malfunction Criteria	Threshold Value
Output voltage	≥ 4.985 V

Time Needed for Diagnosis: 0.5 seconds
Malfunction Indicator Light Illumination: Illuminates as soon as the malfunction occurs.

6. DTC CLEAR CONDITION

- When the OK idling cycle was completed 40 times in a row
- When “Clear Memory” was performed

7. MALFUNCTION INDICATOR LIGHT CLEAR CONDITION

- When the OK driving cycle was completed 3 times in a row
- When “Clear Memory” was performed

8. FAIL SAFE

• Air flow meter: Engine load is normally calculated by manifold pressure and engine speed; however, calculated only by manifold pressure.
• EVAP conc. learning (fuel): Not allowed to learn.
• Knock compensation:
  – Knock compensation final timing advance and retard value = knock compensation + whole learning compensation value + partial learning compensation value.
  – At normal: knock compensation = 0°CA is fixed.
  – At trouble: knock compensation ≠ 0°CA is fixed. (Retard max. 12°CA at knock.)
  – Not allowed to update the whole learning compensation factor.
  – Not allowed to calculate the partial learning zone compensation value.
• ISC control: Make the open loop compensation to be the given value (1 g (0.04 oz)/s). Stop calculating the throttle sensor temperature compensation. (Hold the previous value.)
• Purge control: Not allowed to purge.

9. ECM OPERATION AT DTC SETTING

Memorize the freeze frame data. (For test mode $02)

L: DTC P0107 MANIFOLD ABSOLUTE PRESSURE/BAROMETRIC PRESSURE CIRCUIT LOW INPUT

1. OUTLINE OF DIAGNOSIS

Detect the open or short circuit of intake manifold pressure sensor. Judge NG when out of the standard value.

2. COMPONENT DESCRIPTION

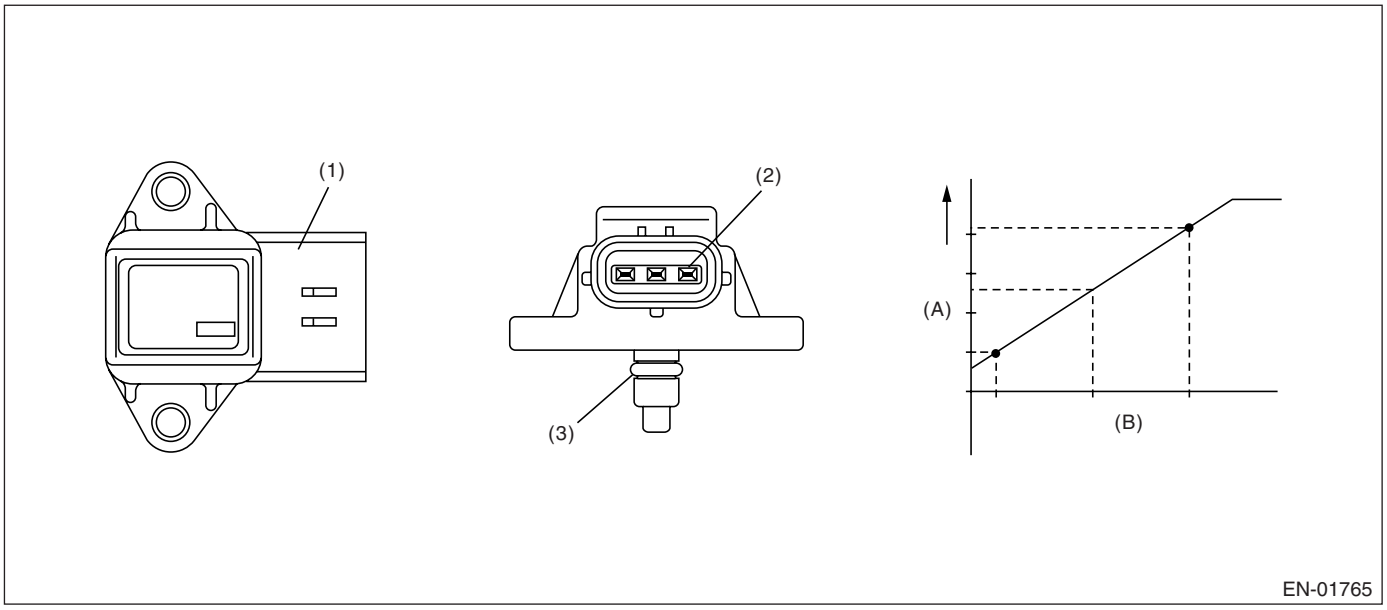

(1) Connector
(2) Terminal
(3) O-ring
(A) Output voltage
(B) Absolute pressure

3. ENABLE CONDITION

Secondary Parameters	Enable Conditions
Battery voltage	≥ 10.9 V

4. GENERAL DRIVING CYCLE

Always perform the diagnosis continuously.

5. DIAGNOSTIC METHOD

Judge NG when the continuous time of completing the malfunction criteria below becomes more than 0.5 seconds. Judge OK and clear the NG when the malfunction criteria below are not completed.

Judgment Value

Malfunction Criteria	Threshold Value
Output voltage	< 0.568 V

Time Needed for Diagnosis: 0.5 seconds
Malfunction Indicator Light Illumination: Illuminates as soon as the malfunction occurs.

6. DTC CLEAR CONDITION

- When the OK idling cycle was completed 40 times in a row
- When “Clear Memory” was performed

7. MALFUNCTION INDICATOR LIGHT CLEAR CONDITION

- When the OK driving cycle was completed 3 times in a row
- When “Clear Memory” was performed

8. FAIL SAFE

- Intake manifold pressure sensor process: Estimate the pressure from engine load.
- ISC feedback: Not allowed to calculate the amount of feedback.
- Heavy fuel judgment: Not allowed to carry out the heavy judgment.
- Fuel cut control: Not allowed to cut the over pressure charged fuel.

9. ECM OPERATION AT DTC SETTING

Memorize the freeze frame data. (For test mode $02)

M: DTC P0108 MANIFOLD ABSOLUTE PRESSURE/BAROMETRIC PRESSURE CIRCUIT HIGH INPUT

1. OUTLINE OF DIAGNOSIS

Detect the open or short circuit of intake manifold pressure sensor. Judge NG when out of the standard value.

2. COMPONENT DESCRIPTION

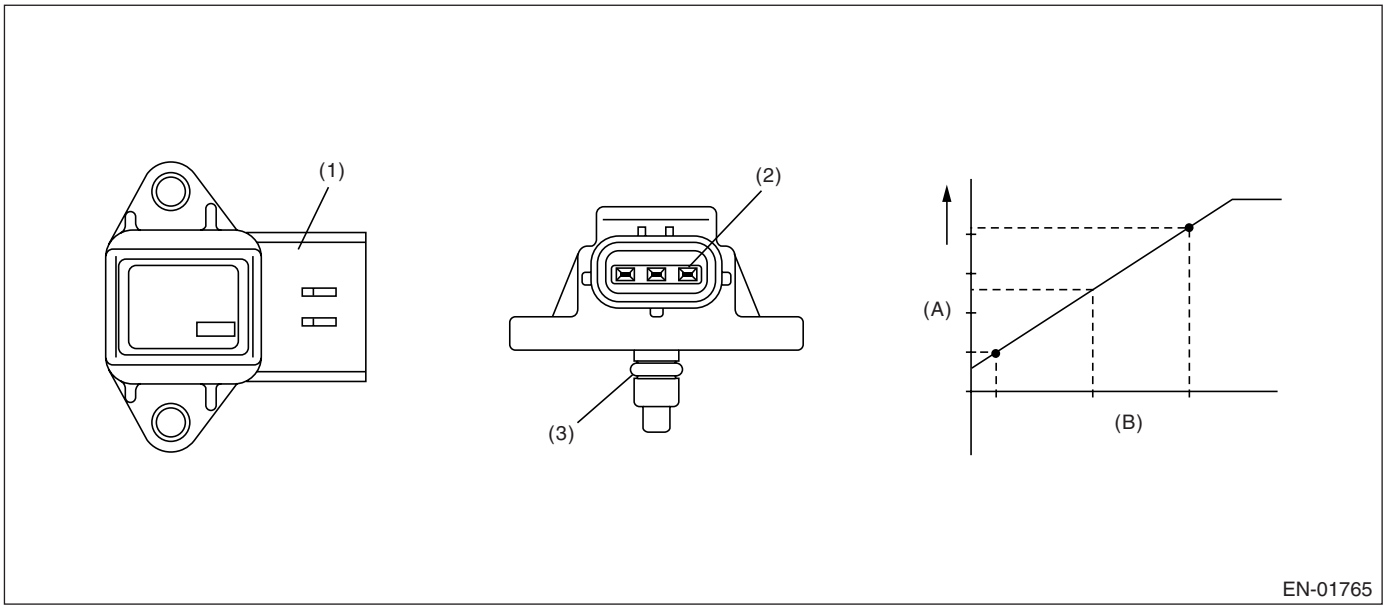

(1) Connector
(2) Terminal
(3) O-ring
(A) Output voltage
(B) Absolute pressure

3. ENABLE CONDITION

Secondary Parameters	Enable Conditions
Battery voltage	≥ 10.9 V

4. GENERAL DRIVING CYCLE

Always perform the diagnosis continuously.

5. DIAGNOSTIC METHOD

Judge NG when the continuous time of completing the malfunction criteria below becomes more than 0.5 seconds. Judge OK and clear the NG when the malfunction criteria below are not completed.

Judgment Value

Malfunction Criteria	Threshold Value
Output voltage	≥ 4.921 V

Time Needed for Diagnosis: 0.5 seconds
Malfunction Indicator Light Illumination: Illuminates as soon as the malfunction occurs.

6. DTC CLEAR CONDITION

- When the OK idling cycle was completed 40 times in a row
- When “Clear Memory” was performed

7. MALFUNCTION INDICATOR LIGHT CLEAR CONDITION

- When the OK driving cycle was completed 3 times in a row
- When “Clear Memory” was performed

8. FAIL SAFE

- Intake manifold pressure sensor process: Estimate the pressure from engine load.
- ISC feedback: Not allowed to calculate the amount of feedback.
- Heavy fuel judgment: Not allowed to carry out the heavy judgment.
- Fuel cut control: Not allowed to cut the over pressure charged fuel.

9. ECM OPERATION AT DTC SETTING

Memorize the freeze frame data. (For test mode $02)

N: DTC P0111 INTAKE AIR TEMPERATURE CIRCUIT RANGE/PERFORMANCE

1. OUTLINE OF DIAGNOSIS

Detect the malfunction of intake air temperature sensor output property. Judge NG when the intake air temperature is not varied whereas it seemed to be varied from the viewpoint of engine condition.

2. COMPONENT DESCRIPTION

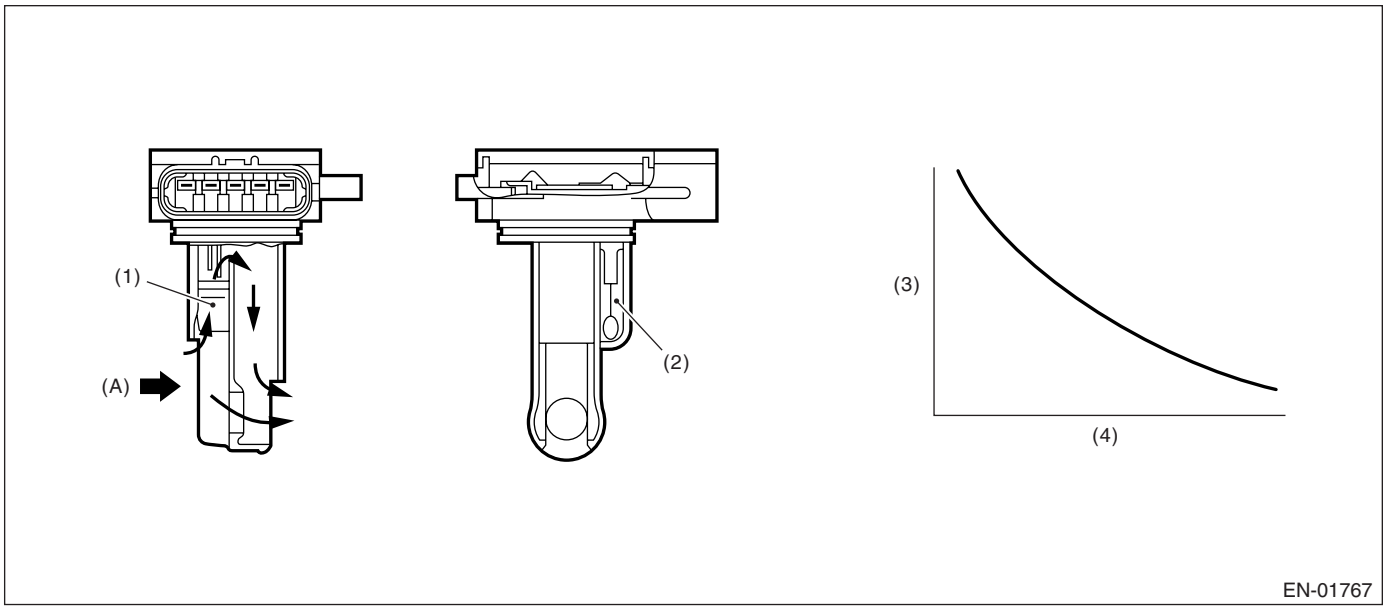

(1) Air flow sensor
(2) Intake air temperature sensor
(3) Resistance value (Ω)
(4) Intake air temperature °C (°F)
(A) Air

3. ENABLE CONDITION

Secondary Parameters	Enable Conditions
Coolant temp. before engine start	< 30°C (86°F)
Engine coolant temperature	> 95°C (203°F)
Battery voltage	≥ 10.9 V
Continuous time when the vehicle speed is less than 50 km/h (31 MPH)	600 seconds or more

4. GENERAL DRIVING CYCLE

Perform the diagnosis when the vehicle speed condition is completed after idling from starting the cooled engine.

5. DIAGNOSTIC METHOD

• Abnormality Judgment

Judge NG when the continuous time of completing the malfunction criteria below becomes more than 1 second.

Judgment Value

Malfunction Criteria	Threshold Value
Output voltage difference between Max. and Min.	< 20 mV (Approx. 0.5°C (33°F) is equivalent to around 25°.)
Exhaust temperature above 500°C (932°F)	60 seconds or more

Time Needed for Diagnosis: 1 second

Malfunction Indicator Light Illumination: Illuminates when malfunction occurs in 2 continuous driving cycles.

• Normality Judgment

Judge OK and clear the NG when the malfunction criteria below are completed.

Judgment Value

Malfunction Criteria	Threshold Value
Output voltage difference between Max. and Min.	≥ 20 mV

6. DTC CLEAR CONDITION

- When the OK idling cycle was completed 40 times in a row
- When “Clear Memory” was performed

7. MALFUNCTION INDICATOR LIGHT CLEAR CONDITION

- When the OK driving cycle was completed 3 times in a row
- When “Clear Memory” was performed

8. FAIL SAFE

Intake air temperature sensor process: Intake air temperature is fixed at 20°C (68°F).

9. ECM OPERATION AT DTC SETTING

Memorize the freeze frame data. (For test mode $02)

O: DTC P0112 INTAKE AIR TEMPERATURE CIRCUIT LOW INPUT

1. OUTLINE OF DIAGNOSIS

Detect the open or short circuit of intake air temperature sensor. Judge NG when out of the standard value.

2. COMPONENT DESCRIPTION

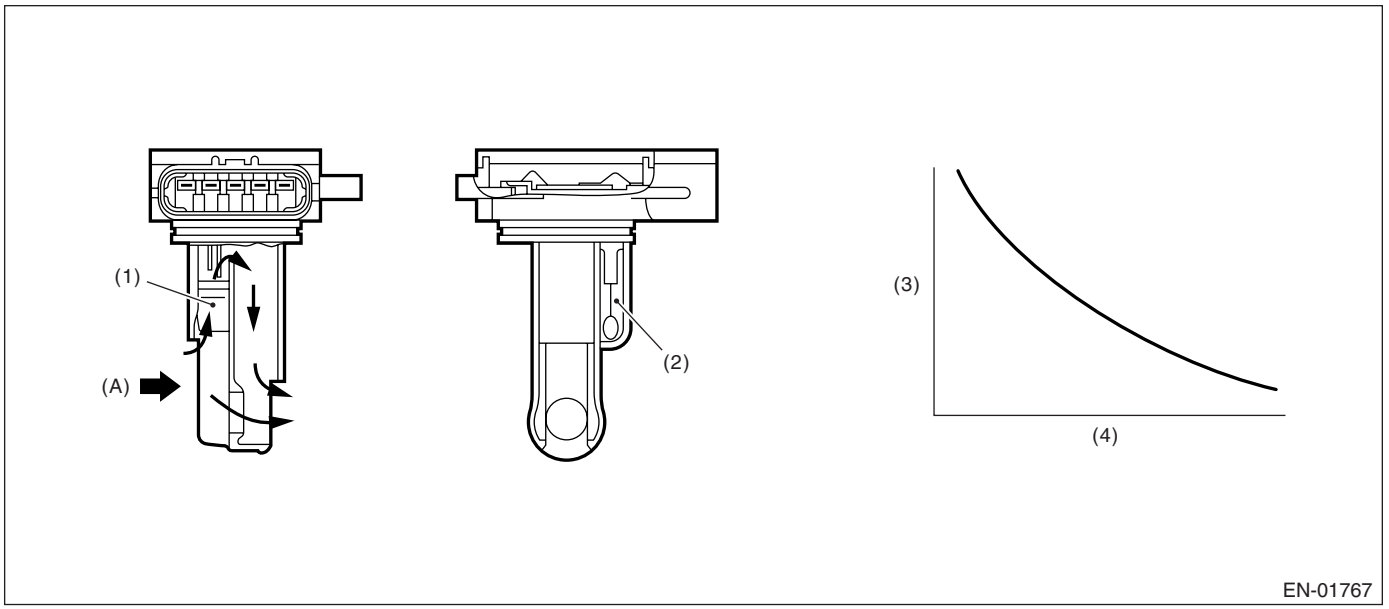

(1) Air flow sensor
(2) Intake air temperature sensor
(3) Resistance value (Ω)
(4) Intake air temperature °C (°F)
(A) Air

3. ENABLE CONDITION

Secondary Parameters	Enable Conditions
None	

4. GENERAL DRIVING CYCLE

Always perform the diagnosis continuously.

5. DIAGNOSTIC METHOD

• Abnormality Judgment

Judge NG when the continuous time of completing the malfunction criteria below becomes more than 0.5 seconds.

Judgment Value

Malfunction Criteria	Threshold Value
Output voltage	〈 0.165 V
Ignition switch	ON

Time Needed for Diagnosis: 0.5 seconds
Malfunction Indicator Light Illumination: Illuminates as soon as the malfunction occurs.

• Normality Judgment

Judge OK and clear the NG when the malfunction criteria below are completed.

Judgment Value

Malfunction Criteria	Threshold Value
Output voltage	≥ 0.165 V
Ignition switch	ON

6. DTC CLEAR CONDITION

- When the OK idling cycle was completed 40 times in a row
- When “Clear Memory” was performed

7. MALFUNCTION INDICATOR LIGHT CLEAR CONDITION

- When the OK driving cycle was completed 3 times in a row
- When “Clear Memory” was performed

8. FAIL SAFE

Intake air temperature sensor process: Intake air temperature is fixed at 20°C (68°F).

9. ECM OPERATION AT DTC SETTING

Memorize the freeze frame data. (For test mode $02)

P: DTC P0113 INTAKE AIR TEMPERATURE CIRCUIT HIGH INPUT

1. OUTLINE OF DIAGNOSIS

Detect the open or short circuit of intake air temperature sensor. Judge NG when out of the standard value.

2. COMPONENT DESCRIPTION

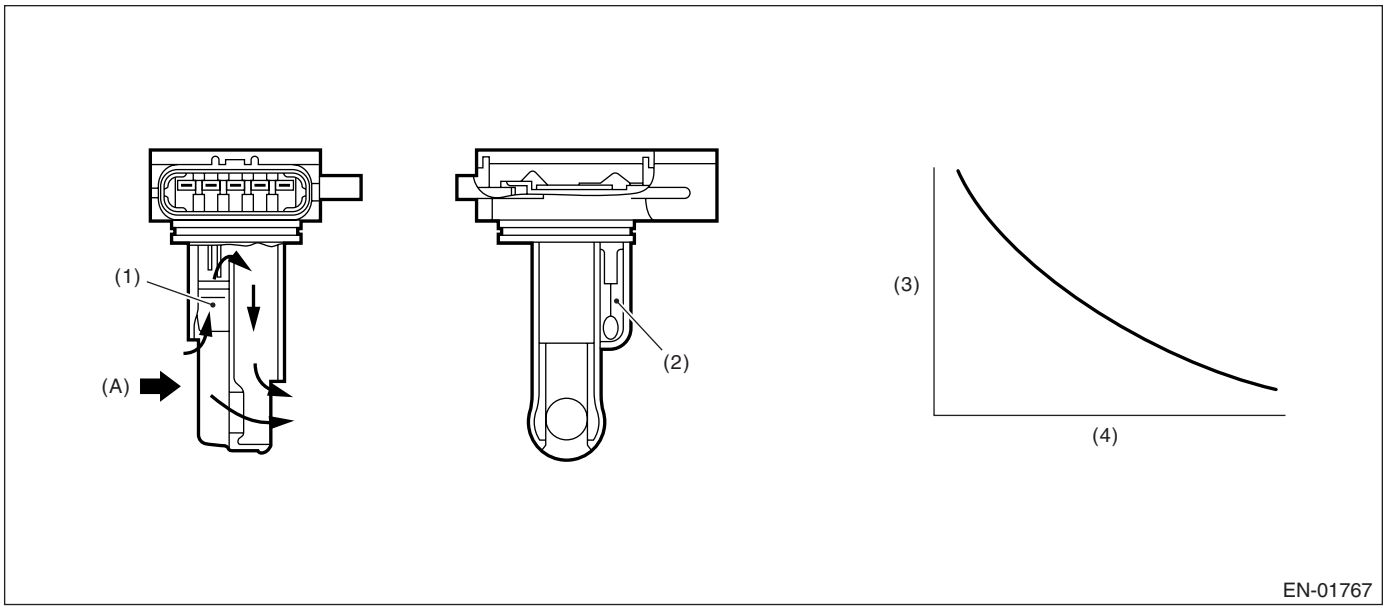

(1) Air flow sensor
(2) Intake air temperature sensor
(3) Resistance value (Ω)
(4) Intake air temperature °C (°F)
(A) Air

3. ENABLE CONDITION

Secondary Parameters	Enable Conditions
None	

4. GENERAL DRIVING CYCLE

Always perform the diagnosis continuously.

5. DIAGNOSTIC METHOD

• Abnormality Judgment

Judge NG when the continuous time of completing the malfunction criteria below becomes more than 0.5 seconds.

Judgment Value

Malfunction Criteria	Threshold Value
Output voltage	≥ 4.72 V
Ignition switch	ON

Time Needed for Diagnosis: 0.5 seconds
Malfunction Indicator Light Illumination: Illuminates as soon as the malfunction occurs.

• Normality Judgment

Judge OK and clear the NG when the malfunction criteria below are completed.

Judgment Value

Malfunction Criteria	Threshold Value
Output voltage	≥ 4.72 V
Ignition switch	ON

6. DTC CLEAR CONDITION

- When the OK idling cycle was completed 40 times in a row
- When “Clear Memory” was performed

7. MALFUNCTION INDICATOR LIGHT CLEAR CONDITION

- When the OK driving cycle was completed 3 times in a row
- When “Clear Memory” was performed

8. FAIL SAFE

Intake air temperature sensor process: Intake air temperature is fixed at 20°C (68°F).

9. ECM OPERATION AT DTC SETTING

Memorize the freeze frame data. (For test mode $02)

Q: DTC P0117 ENGINE COOLANT TEMPERATURE CIRCUIT LOW INPUT

1. OUTLINE OF DIAGNOSIS

Detect the open or short circuit of engine coolant temperature sensor. Judge NG when out of the standard value.

2. COMPONENT DESCRIPTION

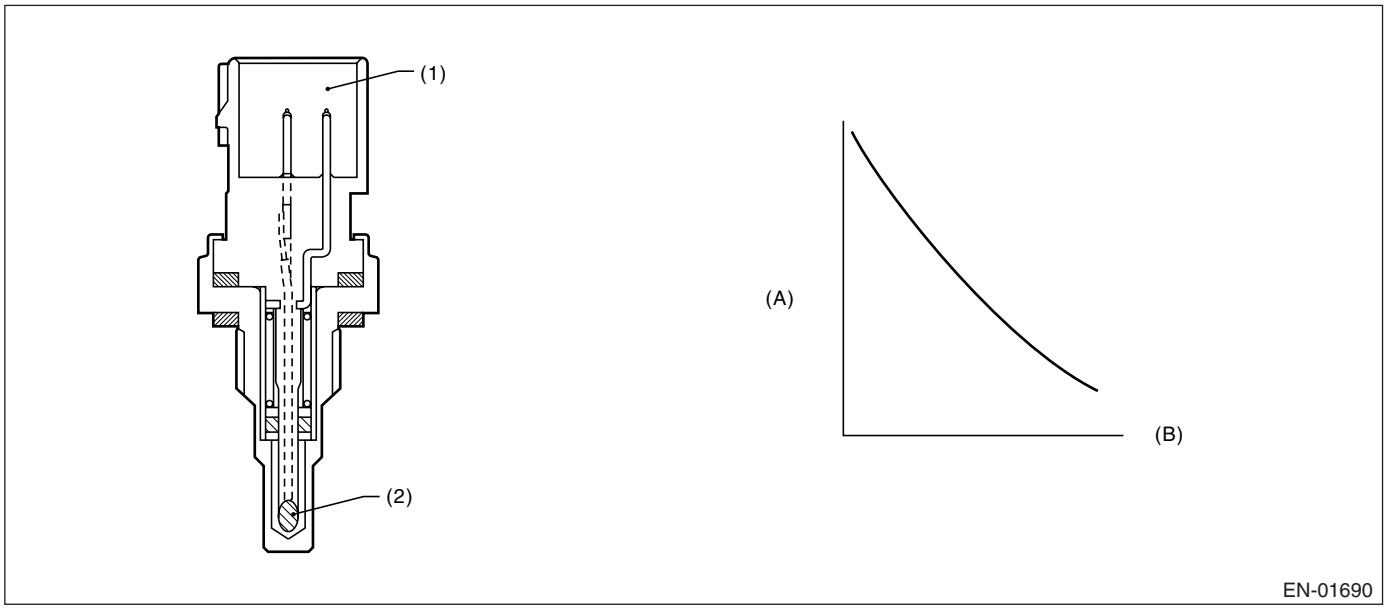

(1) Connector
(2) Thermistor element
(A) Resistance value (kΩ)
(B) Temperature °C (°F)

3. ENABLE CONDITION

Secondary Parameters	Enable Conditions
None	

4. GENERAL DRIVING CYCLE

Always perform the diagnosis continuously.

5. DIAGNOSTIC METHOD

Judge NG when the continuous time of completing the malfunction criteria below becomes more than 0.5 seconds. Judge OK and clear the NG when the malfunction criteria below are not completed.

Judgment Value

Malfunction Criteria	Threshold Value
Output voltage	〈 0.165 V

Time Needed for Diagnosis: 0.5 seconds
Malfunction Indicator Light Illumination: Illuminates as soon as the malfunction occurs.

6. DTC CLEAR CONDITION

- When the OK idling cycle was completed 40 times in a row
- When “Clear Memory” was performed

7. MALFUNCTION INDICATOR LIGHT CLEAR CONDITION

- When the OK driving cycle was completed 3 times in a row
- When “Clear Memory” was performed

8. FAIL SAFE

- Engine coolant temperature process: Fix the engine coolant temperature at 70°C (158°F).
- ISC feedback: Calculate the target engine speed setting the engine coolant temperature to 70°C (158°F).
- ISC learning: Not allowed to learn.
- Heavy fuel judgment control: Not allowed to carry out the heavy judgment.
- Air conditioner control: Not allowed to turn the air conditioner to ON.
- Radiator fan control: Both main and sub fan are in High driving.
- Increase compensation factor at high engine coolant temperature: Increase normally occurs with high temperature and other conditions; however, occurs with other conditions except engine coolant temperature condition.
- AVCS control: Make the oil flow control valve driving output to be Duty=0%.
- Tumble generator valve control: Open the tumble generator valve.

9. ECM OPERATION AT DTC SETTING

Memorize the freeze frame data. (For test mode $02)

R: DTC P0118 ENGINE COOLANT TEMPERATURE CIRCUIT HIGH INPUT

1. OUTLINE OF DIAGNOSIS

Detect the open or short circuit of engine coolant temperature sensor. Judge NG when out of the standard value.

2. COMPONENT DESCRIPTION

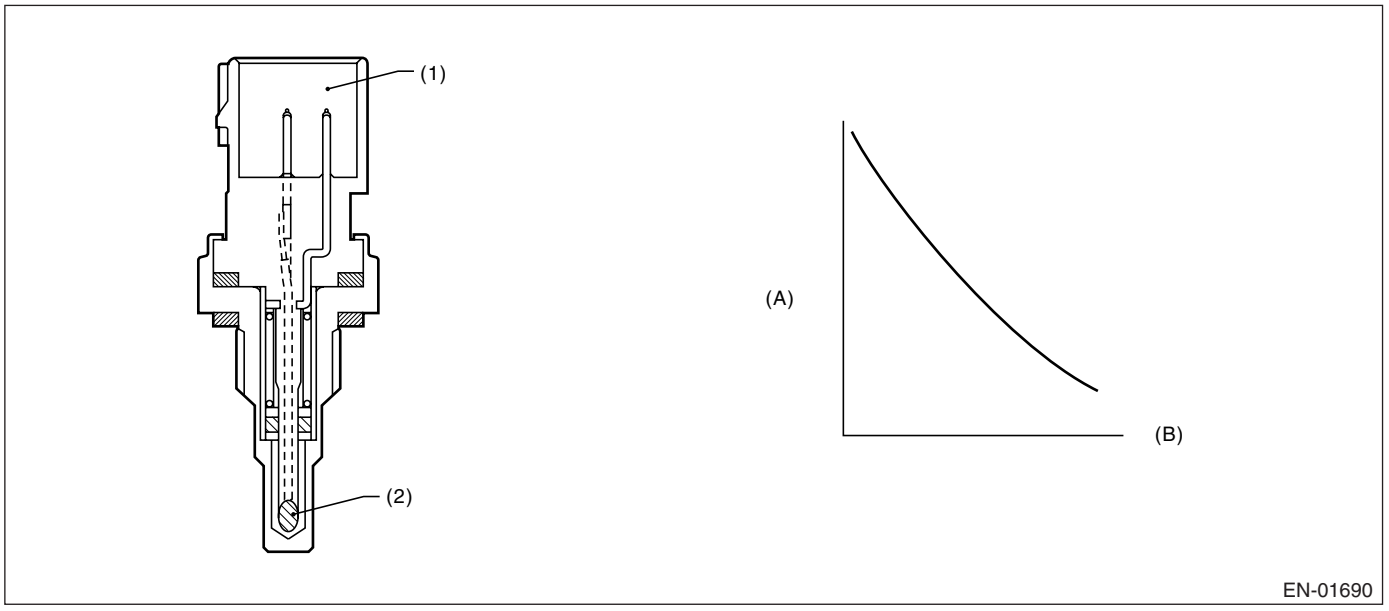

(1) Connector
(2) Thermistor element
(A) Resistance value (kΩ)
(B) Temperature °C (°F)

3. ENABLE CONDITION

Secondary Parameters	Enable Conditions
None	

4. GENERAL DRIVING CYCLE

Always perform the diagnosis continuously.

5. DIAGNOSTIC METHOD

Judge NG when the continuous time of completing the malfunction criteria below becomes more than 0.5 seconds. Judge OK and clear the NG when the malfunction criteria below are not completed.

Judgment Value

Malfunction Criteria	Threshold Value
Output voltage	≥ 4.72 V

Time Needed for Diagnosis: 0.5 seconds
Malfunction Indicator Light Illumination: Illuminates as soon as the malfunction occurs.

6. DTC CLEAR CONDITION

- When the OK idling cycle was completed 40 times in a row
- When “Clear Memory” was performed

7. MALFUNCTION INDICATOR LIGHT CLEAR CONDITION

- When the OK driving cycle was completed 3 times in a row
- When “Clear Memory” was performed

8. FAIL SAFE

- Engine coolant temperature process: Fix the engine coolant temperature at 70°C (158°F).
- ISC feedback: Calculate the target engine speed setting the engine coolant temperature to 70°C (158°F).
- ISC learning: Not allowed to learn.
- Heavy fuel judgment control: Not allowed to carry out the heavy judgment.
- Air conditioner control: Not allowed to turn the air conditioner to ON.
- Radiator fan control: Both main and sub fan are in High driving.
- Increase compensation factor at high engine coolant temperature: Increase normally occurs with high temperature and other conditions; however, occurs with other conditions except engine coolant temperature condition.
- AVCS control: Make the oil flow control valve driving output to be Duty=0%.
- Tumble generator valve control: Open the tumble generator valve.

9. ECM OPERATION AT DTC SETTING

Memorize the freeze frame data. (For test mode $02)

S: DTC P0122 THROTTLE/PEDAL POSITION SENSOR/SWITCH “A” CIRCUIT LOW INPUT

1. OUTLINE OF DIAGNOSIS

Detect the open or short circuit of throttle position sensor 1.
Judge NG when out of the standard value.

2. COMPONENT DESCRIPTION

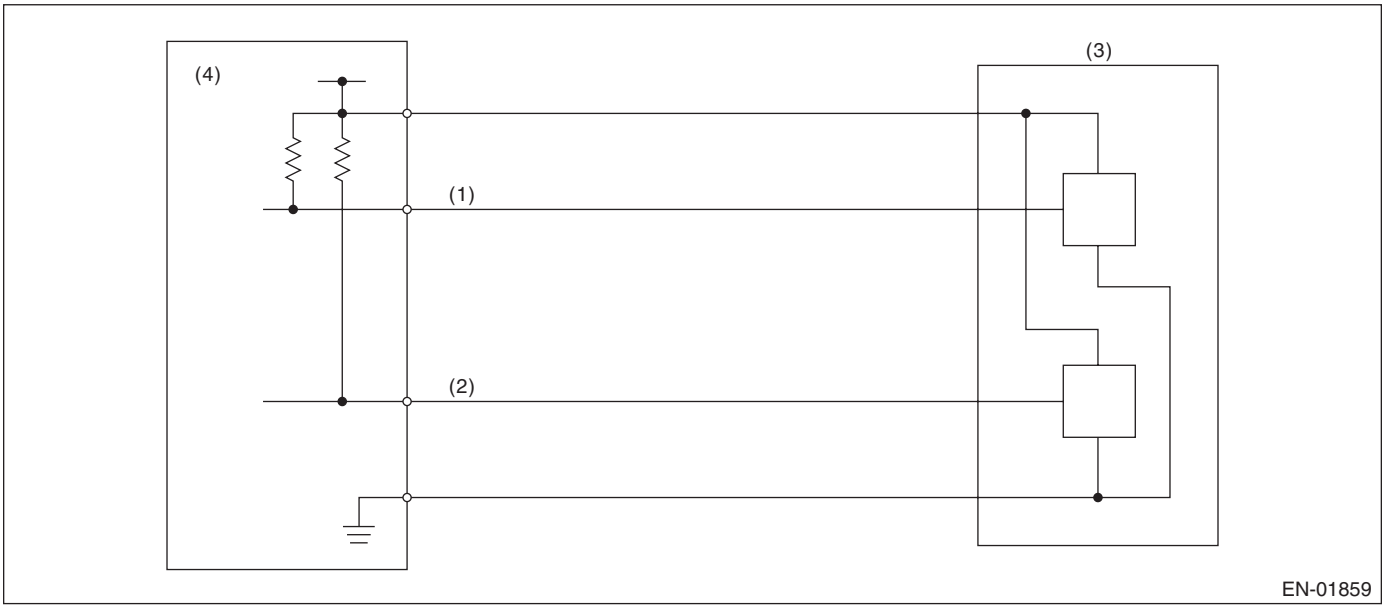

(1) Throttle position sensor 1 signal
(2) Throttle position sensor 2 signal
(3) Throttle position sensor
(4) Engine control module (ECM)

3. ENABLE CONDITION

Secondary Parameters	Enable Conditions
Ignition switch	ON

4. GENERAL DRIVING CYCLE

Always perform the diagnosis continuously.

5. DIAGNOSTIC METHOD

Judge OK and clear the NG when the malfunction criteria below are completed.
Judgment Value

Malfunction Criteria	Threshold Value
Sensor 1 input voltage	〉0.309 V

Time Needed for Diagnosis: 24 milliseconds
Malfunction Indicator Light Illumination: Illuminates as soon as malfunction occurs.

6. DTC CLEAR CONDITION

- When the OK idling cycle was completed 40 times in a row
- When “Clear Memory” was performed (Only with engine stopped)

7. MALFUNCTION INDICATOR LIGHT CLEAR CONDITION

- When the OK driving cycle was completed 3 times in a row
- When “Clear Memory” was performed (Only with engine stopped)

8. FAIL SAFE

Stop power distribution to electronic throttle control motor. (Throttle opening is fixed to 6°.)

9. ECM OPERATION AT DTC SETTING

Memorize the freeze frame data. (For test mode $02)

T: DTC P0123 THROTTLE/PEDAL POSITION SENSOR/SWITCH "A" CIRCUIT HIGH INPUT

1. OUTLINE OF DIAGNOSIS

Detect the open or short circuit of throttle position sensor 1.
Judge NG when out of the standard value.

2. COMPONENT DESCRIPTION

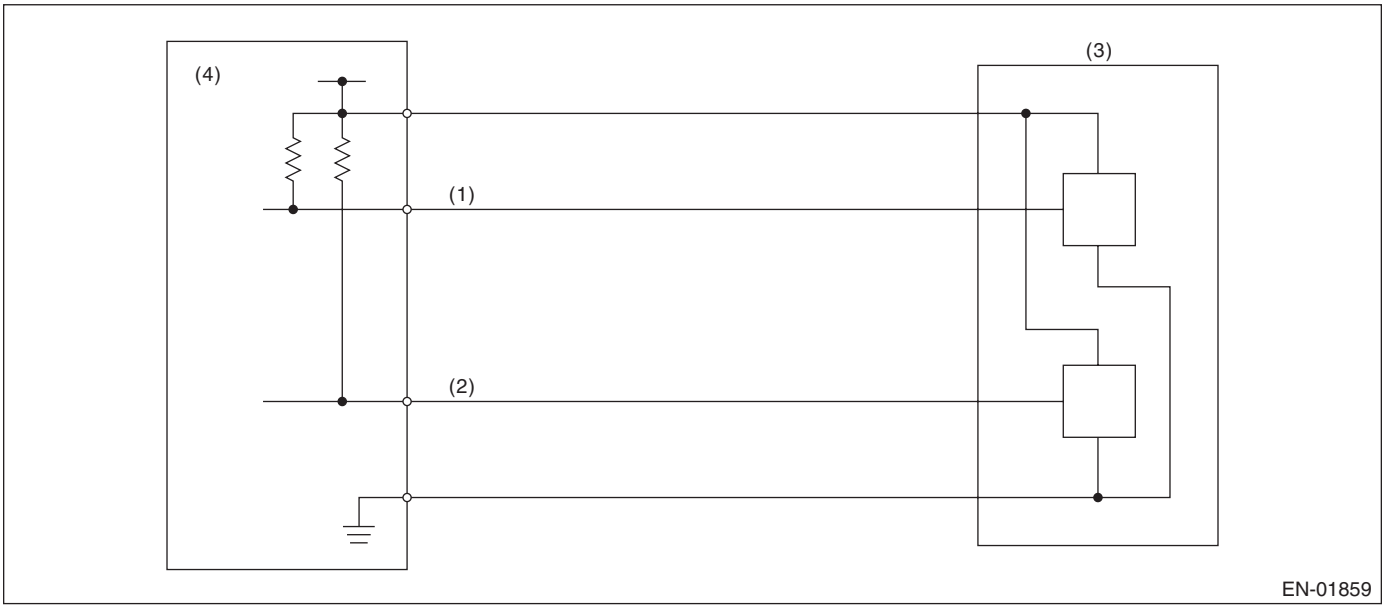

(1) Throttle position sensor 1 signal
(2) Throttle position sensor 2 signal
(3) Throttle position sensor
(4) Engine control module (ECM)

3. ENABLE CONDITION

Secondary Parameters	Enable Conditions
Ignition switch	ON

4. GENERAL DRIVING CYCLE

Always perform the diagnosis continuously.

5. DIAGNOSTIC METHOD

Judge OK and clear the NG when the malfunction criteria below are completed.
Judgment Value

Malfunction Criteria	Threshold Value
Sensor 1 input voltage	< 4.646 V

Time Needed for Diagnosis: 24 milliseconds
Malfunction Indicator Light Illumination: Illuminates as soon as malfunction occurs.

6. DTC CLEAR CONDITION

- When the OK idling cycle was completed 40 times in a row
- When "Clear Memory" was performed (Only with engine stopped)

7. MALFUNCTION INDICATOR LIGHT CLEAR CONDITION

- When the OK driving cycle was completed 3 times in a row
- When "Clear Memory" was performed (Only with engine stopped)

8. FAIL SAFE

Stop power distribution to electronic throttle control motor. (Throttle opening is fixed to 6°.)

9. ECM OPERATION AT DTC SETTING

Memorize the freeze frame data. (For test mode $02)

U: DTC P0125 INSUFFICIENT ENGINE COOLANT TEMPERATURE FOR CLOSED LOOP FUEL CONTROL

1. OUTLINE OF DIAGNOSIS

Detect the malfunction of engine coolant temperature output property. Judge NG when the engine coolant temperature does not rise whereas it seemed to rise from the viewpoint of the engine condition.

2. COMPONENT DESCRIPTION

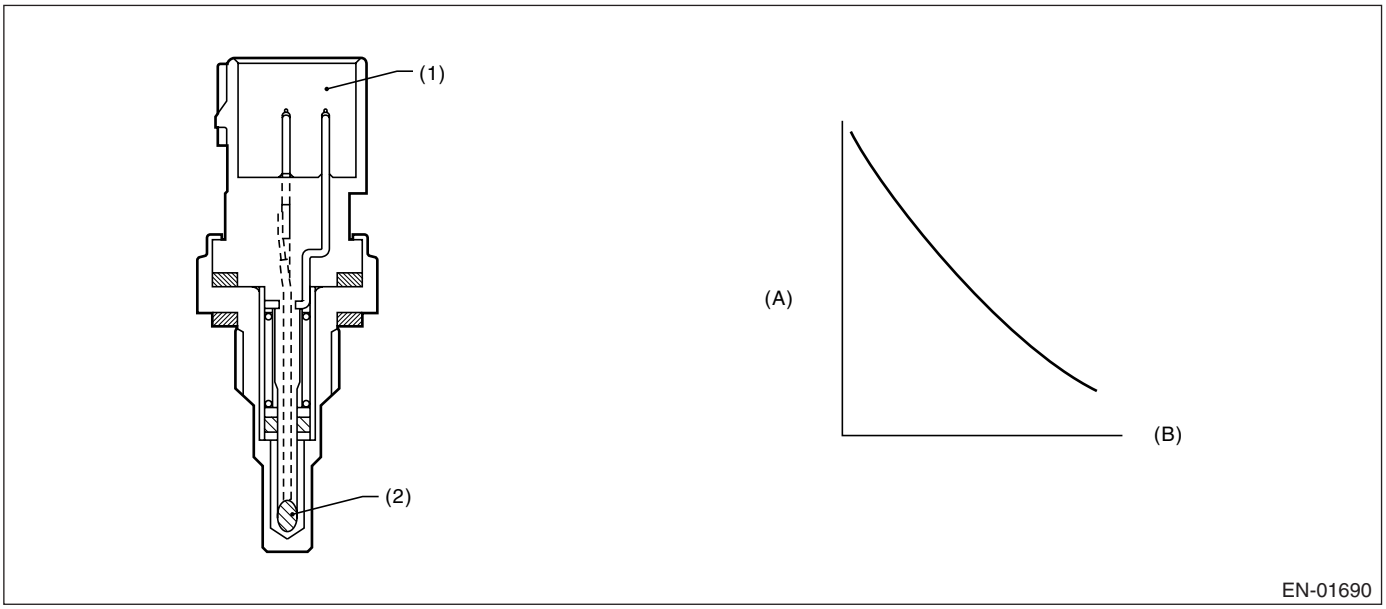

(1) Connector
(2) Thermistor element
(A) Resistance value (kΩ)
(B) Temperature °C (°F)

3. ENABLE CONDITION

Secondary Parameters	Enable Conditions
Engine speed	≥ 500 rpm
Battery voltage	〉10.9 V

4. GENERAL DRIVING CYCLE

Perform the diagnosis only once after engine starting.

5. DIAGNOSTIC METHOD

• Abnormality Judgment

Judge NG when the malfunction criteria below are completed.

Judgment Value

Malfunction Criteria	Threshold Value
Engine coolant temperature	〈 20°C (68°F)
Timer for diagnosis after engine starting	≥ Timer judgment value after engine starting

Timer for diagnosis after engine starting
a) Timer stop at fuel cut mode.
b) During the driving conditions (except a) above), timer count up by 64 milliseconds + TWCNT milliseconds at every 64 milliseconds.
Where, TWCNT is determined as follows,
TWCNT = 0 at idle switch ON,

Refer to the following table for TWCNT with idle switch OFF.

Temperature °C (°F)	Vehicle speed km/h (MPH)							
	0 (0)	8 (4.97)	16 (9.94)	24 (14.9)	32 (19.9)	40 (24.9)	48 (29.8)	56 (34.8)
−20 (−4)	0 ms	37.14 ms	74.27 ms	111.41 ms	126.66 ms	141.91 ms	163.59 ms	185.26 ms
−10 (14)	0 ms	27.39 ms	54.78 ms	82.17 ms	99.65 ms	117.13 ms	135.96 ms	154.80 ms
0 (32)	0 ms	17.65 ms	35.29 ms	52.94 ms	72.64 ms	92.34 ms	108.34 ms	124.33 ms
10 (50)	0 ms	7.90 ms	15.80 ms	23.70 ms	45.63 ms	67.56 ms	80.71 ms	93.87 ms
20 (68)	0 ms	7.90 ms	15.80 ms	23.70 ms	45.63 ms	67.56 ms	80.71 ms	93.87 ms

Judgment value of timer after engine starting
$t = 451.1 - 28.6 \times Ti$
Ti is the lowest engine coolant temperature after starting the engine.
Time Needed for Diagnosis: To be determined. (It is varied by the Min. engine coolant temperature and engine conditions such as vehicle speed and engine coolant temperature.)
Malfunction Indicator Light Illumination: Illuminates when malfunction occurs in 2 continuous driving cycles.
• Normality Judgment

Judge OK and clear the NG when the malfunction criteria below are completed.
Judgment Value

Malfunction Criteria	Threshold Value
Engine coolant temperature	≥ 20°C (68°F)

6. DTC CLEAR CONDITION

- When the OK idling cycle was completed 40 times in a row
- When “Clear Memory” was performed

7. MALFUNCTION INDICATOR LIGHT CLEAR CONDITION

- When the OK driving cycle was completed 3 times in a row
- When “Clear Memory” was performed

8. FAIL SAFE

- Engine coolant temperature process: Fix the engine coolant temperature at 70°C (158°F).
- ISC feedback: Calculate the target engine speed setting the engine coolant temperature to 70°C (158°F).
- ISC learning: Not allowed to learn.
- Heavy fuel judgment control: Not allowed to carry out the heavy judgment.
- Air conditioner control: Not allowed to turn the air conditioner to ON.
- Radiator fan control: Both main and sub fan are in High driving.
- Increase compensation factor at high engine coolant temperature: Increase normally occurs with high temperature and other conditions; however, occurs with other conditions except engine coolant temperature condition.
- AVCS control: Make the oil flow control valve driving output to be Duty=0%.
- Tumble generator valve control: Open the tumble generator valve.

9. ECM OPERATION AT DTC SETTING

Memorize the freeze frame data. (For test mode $02)

V: DTC P0126 INSUFFICIENT ENGINE COOLANT TEMPERATURE FOR STABLE OPERATION

1. OUTLINE OF DIAGNOSIS

Judge NG when the engine coolant temperature sensor output does not change.
Judge NG when the engine coolant temperature sensor output does not change though the vehicle is operated in a manner which is expected to affect the engine coolant temperature.

2. COMPONENT DESCRIPTION

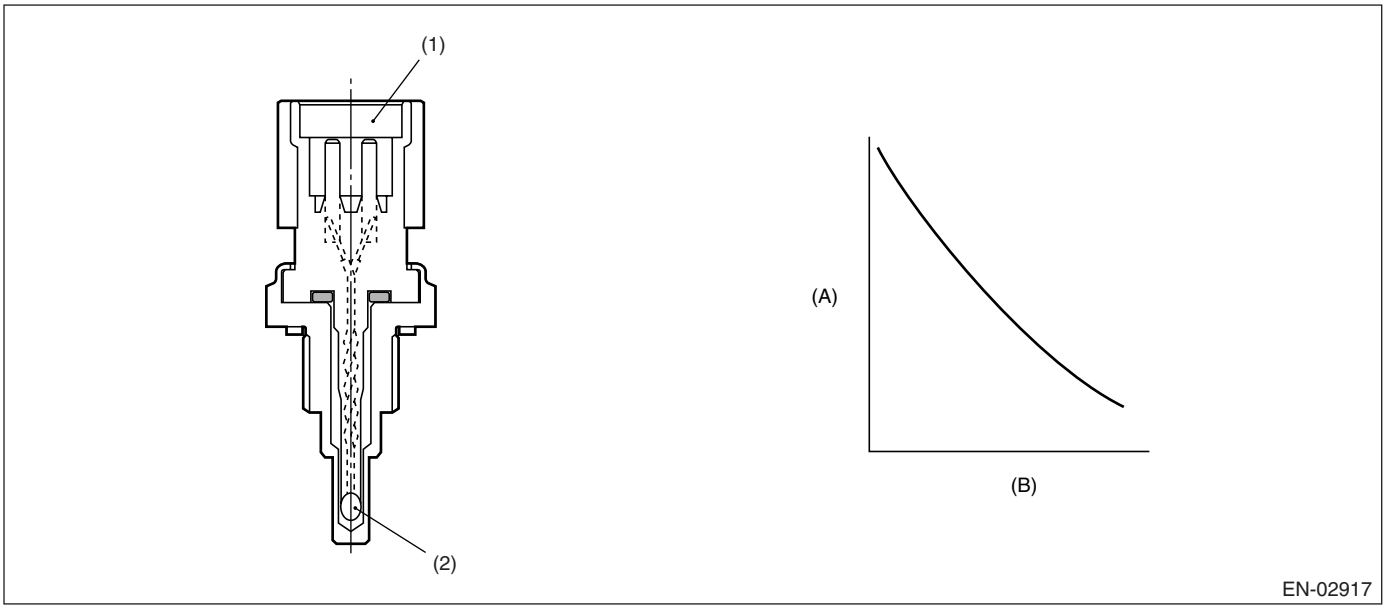

(1) Connector
(2) Thermistor element
(A) Resistance (kΩ)
(B) Temperature °C (°F)

3. ENABLE CONDITION

Secondary Parameters	Enable Conditions
Battery voltage	≥ 10.9 V
Kept for 20 seconds with vehicle speed ≥ 30 km/h (18.6 MPH)	Experienced
Kept for 20 seconds with all the following conditions satisfied After starting engine Idling Vehicle speed = 0 km/h (0 MPH)	Experienced

4. GENERAL DRIVING CYCLE

Perform the diagnosis once after idling and driving for predetermined time. (Judge OK/NG.)

5. DIAGNOSTIC METHOD

Judge NG when the following criteria are satisfied, and OK when not satisfied.
Judgment Value

Malfunction Criteria	Threshold Value
Engine coolant temperature sensor Max. voltage − Min. voltage	< 5 mV

Time Needed for Diagnosis: To be determined.
Malfunction Indicator Light Illuminations: Detect when malfunction occurs in 2 continuous driving cycles.

6. DTC CLEAR CONDITION

- When the OK idling cycle is completed 40 times in a row
- When “Clear Memory” was performed

7. MALFUNCTION INDICATOR LIGHT CLEAR CONDITION

- When the OK idling cycle was completed 40 times in a row
- When “Clear Memory” was performed

8. FAIL SAFE

None

9. ECM OPERATION AT DTC SETTING

Memorize the freeze frame data. (For test mode $02)

W: DTC P0128 COOLANT THERMOSTAT (ENGINE COOLANT TEMPERATURE BELOW THERMOSTAT REGULATING TEMPERATURE)

1. OUTLINE OF DIAGNOSIS

Detect the malfunction of thermostat function. Judge NG when the engine coolant temperature is lower than the estimated engine coolant temperature and the difference between them is large. Judge OK when the engine coolant temperature becomes 75°C (167°F) and the difference is small before judging NG.

2. COMPONENT DESCRIPTION

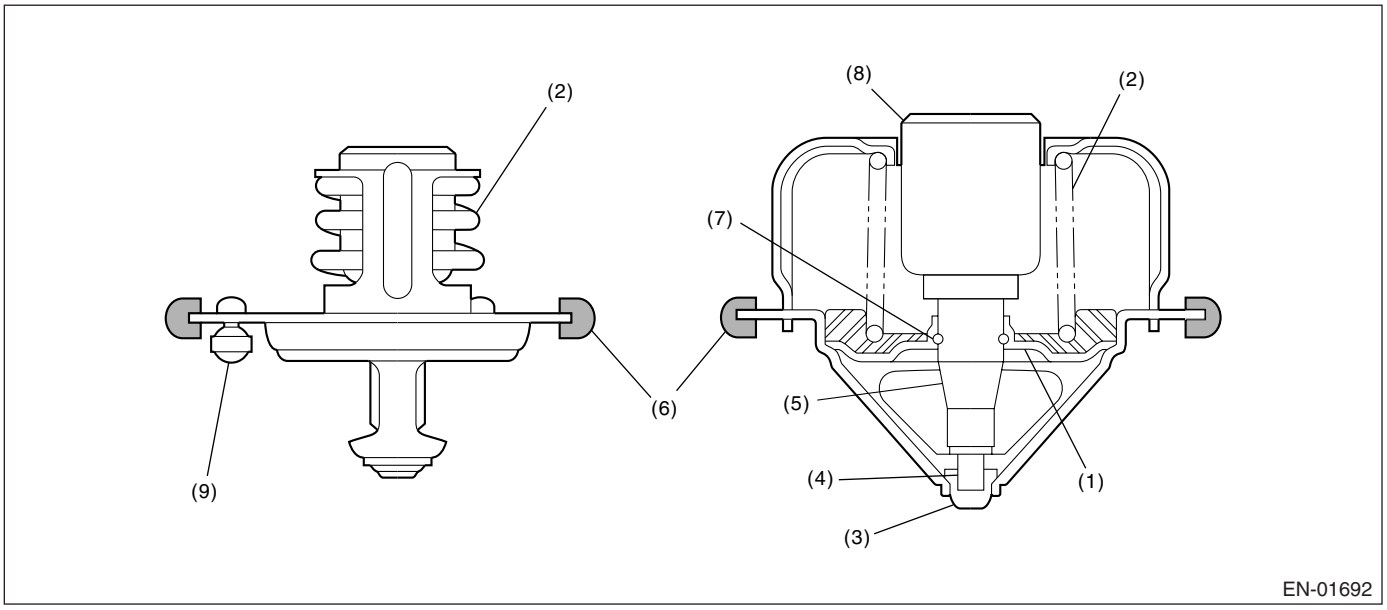

(1) Valve
(2) Spring
(3) Stopper
(4) Piston
(5) Guide
(6) Rubber packing
(7) Stop ring
(8) Wax element
(9) Jiggle valve

3. ENABLE CONDITION

Secondary Parameters	Enable Conditions
None	

4. GENERAL DRIVING CYCLE

Always perform the diagnosis continuously.

5. DIAGNOSTIC METHOD

• Abnormality Judgment

Judge NG when the continuous time of completing the malfunction criteria below becomes more than 30 seconds.

Judgment Value

Malfunction Criteria	Threshold Value
Battery voltage	≥ 10.9 V
Estimated ambient air temperature	≥ –7°C (19.4°F)
Engine coolant temperature at engine starting	< 55°C (131°F)
Estimated engine coolant temperature	≥ 75°C (167°F)
Engine coolant temperature	< 75°C (167°F)
(Estimated – measured) engine coolant temperature	> 30°C (86°F)
Vehicle speed	≥ 30 km/h (19 MPH)

Time Needed for Diagnosis: 30 seconds
Malfunction Indicator Light Illumination: Illuminates when malfunction occurs in 2 continuous driving cycles.

• Normality Judgment

Judge OK and clear the NG when the malfunction criteria below are completed.

Judgment Value

Malfunction Criteria	Threshold Value
Battery voltage	≥ 10.9 V
Estimated ambient air temperature	≥ –7°C (19.4°F)
Thermostat malfunction diagnosis	Not finished
Engine coolant temperature at engine starting	< 55°C (131°F)
Engine coolant temperature	≥ 75°C (167°F)
(Estimated – measured) engine coolant temperature	≤ 30°C (86°F)

6. DTC CLEAR CONDITION

- When the OK idling cycle was completed 40 times in a row
- When “Clear Memory” was performed

7. MALFUNCTION INDICATOR LIGHT CLEAR CONDITION

- When the OK driving cycle was completed 3 times in a row
- When “Clear Memory” was performed

8. FAIL SAFE

None

9. ECM OPERATION AT DTC SETTING

Memorize the freeze frame data. (For test mode $02)

X: DTC P0131 O2 SENSOR CIRCUIT LOW VOLTAGE (BANK 1 SENSOR 1)

1. OUTLINE OF DIAGNOSIS

Detect the open or short circuit of sensor.
Judge NG when the element impressed voltage is out of range, or the element current is out of range.

2. COMPONENT DESCRIPTION

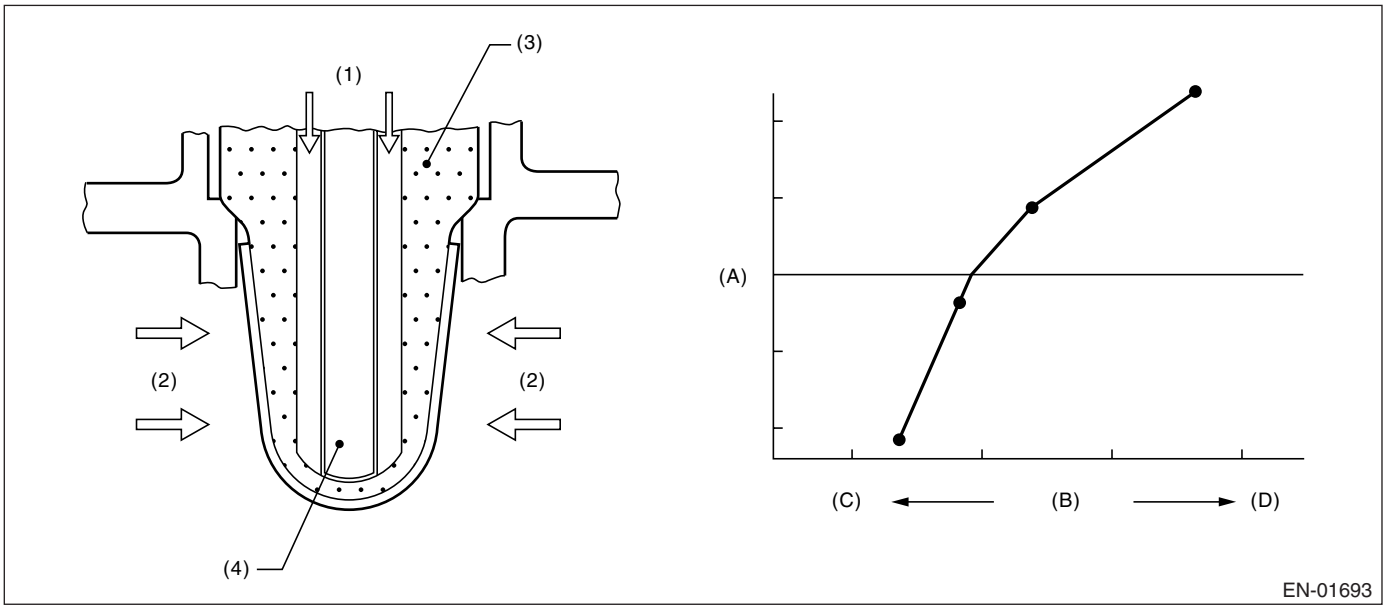

(1) Atmosphere
(2) Exhaust
(3) ZrO2
(4) Ceramic heater
(A) Electromotive force
(B) Air fuel ratio
(C) Lean
(D) Rich

3. ENABLE CONDITION

Secondary Parameters	Enable Conditions
Voltage	≥ 10.9 V

4. GENERAL DRIVING CYCLE

Always perform the diagnosis continuously.

5. DIAGNOSTIC METHOD

Judge NG when the continuous time of completing any malfunction criteria below becomes more than 1 second.

Judgment Value

Malfunction Criteria	Threshold Value
Input voltage	< 1.8 V
Input current	< –0.01 A

Time Needed for Diagnosis: 1 second
Malfunction Indicator Light Illumination: Illuminates as soon as the malfunction occurs.

6. DTC CLEAR CONDITION

- When the OK idling cycle was completed 40 times in a row
- When “Clear Memory” was performed

7. MALFUNCTION INDICATOR LIGHT CLEAR CONDITION

- When the OK driving cycle was completed 3 times in a row
- When “Clear Memory” was performed

8. FAIL SAFE

- Front oxygen (A/F) sensor activation judgment: Front oxygen (A/F) sensor full activation is not complete, or front oxygen (A/F) sensor half activation is not complete.
- A/F main learning: Not allowed to calculate the A/F main learning compensation factor.
- Compensation when starting the engine at high temperature: Make the MIN value to be 0 from 0.3 normally.
- Purge control: Not allowed to purge.

9. ECM OPERATION AT DTC SETTING

Memorize the freeze frame data. (For test mode $02)

Y: DTC P0132 O2 SENSOR CIRCUIT HIGH VOLTAGE (BANK 1 SENSOR 1)

1. OUTLINE OF DIAGNOSIS

Detect the open or short circuit of sensor.
Judge NG when the element impressed voltage is out of range, or the element current is out of range.

2. COMPONENT DESCRIPTION

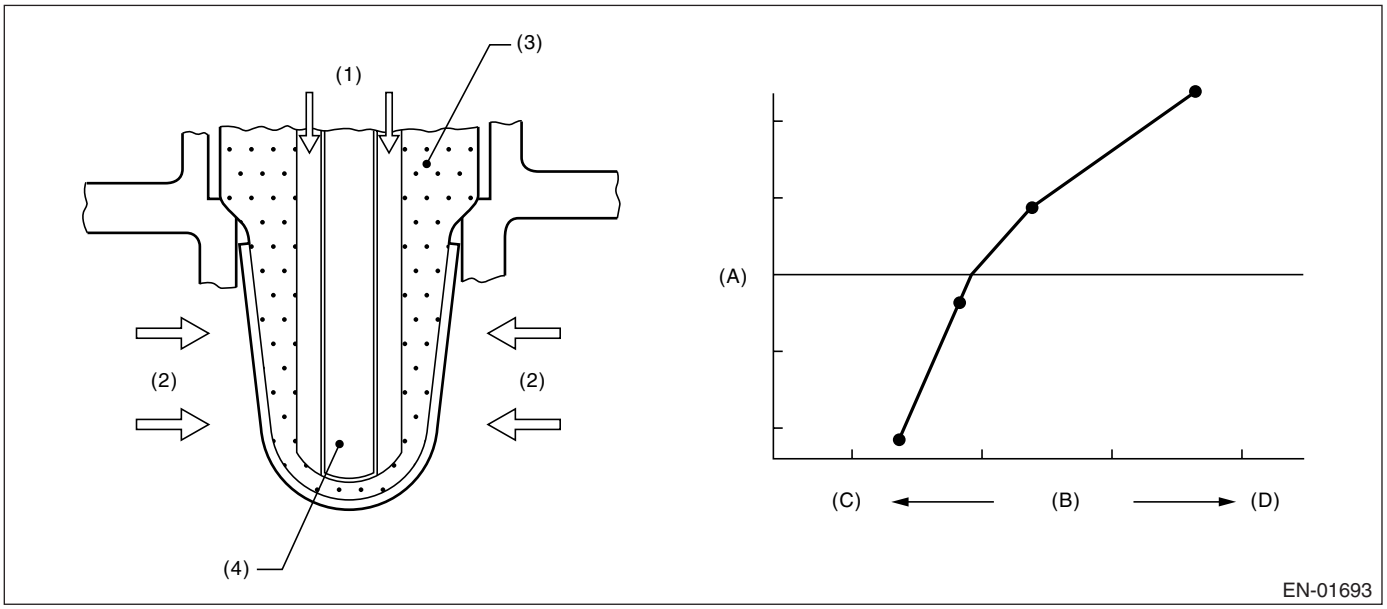

(1) Atmosphere
(2) Exhaust
(3) ZrO2
(4) Ceramic heater
(A) Electromotive force
(B) Air fuel ratio
(C) Lean
(D) Rich

3. ENABLE CONDITION

Secondary Parameters	Enable Conditions
Voltage	≥ 10.9 V

4. GENERAL DRIVING CYCLE

Always perform the diagnosis continuously.

5. DIAGNOSTIC METHOD

Judge NG when the continuous time of completing any malfunction criteria below becomes more than 1 second.

Judgment Value

Malfunction Criteria	Threshold Value
Input voltage	≥ 3.8 V
Input current	≥ 0.01 A

Time Needed for Diagnosis: 1 second
Malfunction Indicator Light Illumination: Illuminates as soon as the malfunction occurs.

6. DTC CLEAR CONDITION

- When the OK idling cycle was completed 40 times in a row
- When “Clear Memory” was performed

7. MALFUNCTION INDICATOR LIGHT CLEAR CONDITION

- When the OK driving cycle was completed 3 times in a row
- When “Clear Memory” was performed

8. FAIL SAFE

- Front oxygen (A/F) sensor activation judgment: Front oxygen (A/F) sensor full activation is not complete, or front oxygen (A/F) sensor half activation is not complete.
- A/F main learning: Not allowed to calculate the A/F main learning compensation factor.
- Compensation when starting the engine at high temperature: Make the MIN value to be 0 from 0.3 normally.
- Purge control: Not allowed to purge.

9. ECM OPERATION AT DTC SETTING

Memorize the freeze frame data. (For test mode $02)

Z: DTC P0133 O2 SENSOR CIRCUIT SLOW RESPONSE (BANK 1 SENSOR 1)

1. OUTLINE OF DIAGNOSIS

Detect time-lag of front oxygen (A/F) sensor response. Front oxygen (A/F) sensor cover has some ventilation holes for exhaust gas. Clogged ventilation holes are diagnosed. When the holes are clogged, the A/F output variation becomes slow comparing with the actual A/F variation because oxygen which reaches the zirconia layer is insufficient. Therefore, if the cover has clogged holes, the rich to lean judgment in ECM is delayed when the change from rich to lean is caused. Judge NG when the actual A/F variation is slow comparing with the ECM control amount.

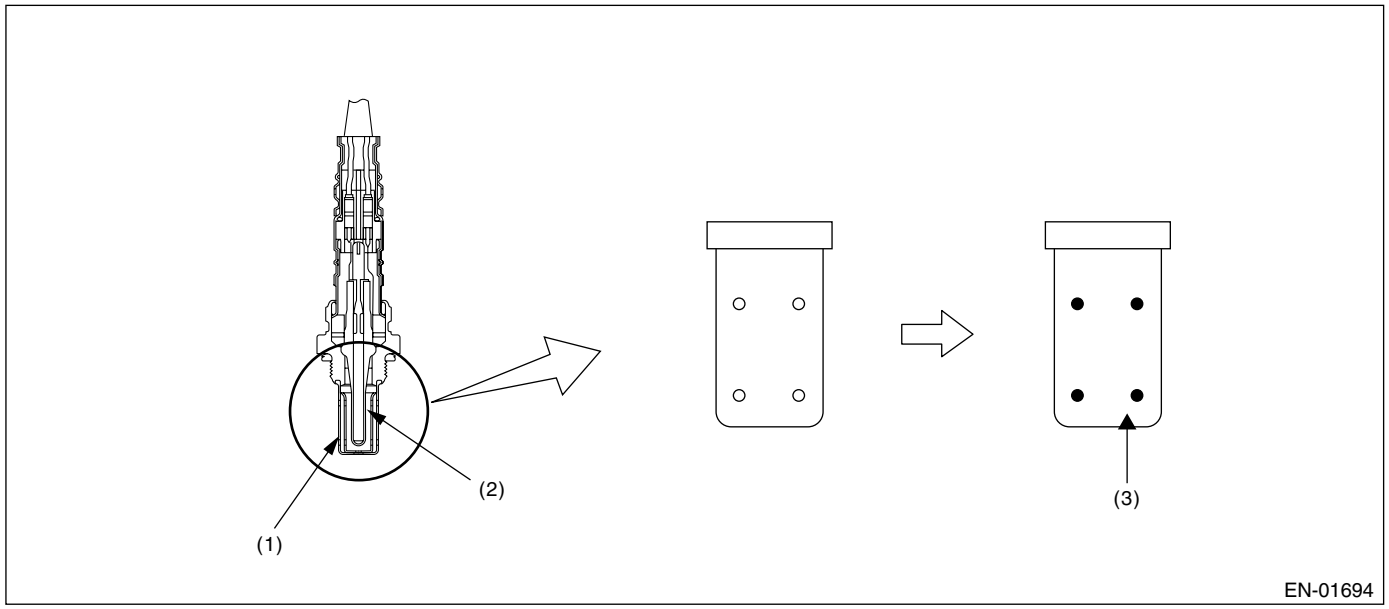

(1) Cover
(2) Zirconia
(3) Clogging

2. COMPONENT DESCRIPTION

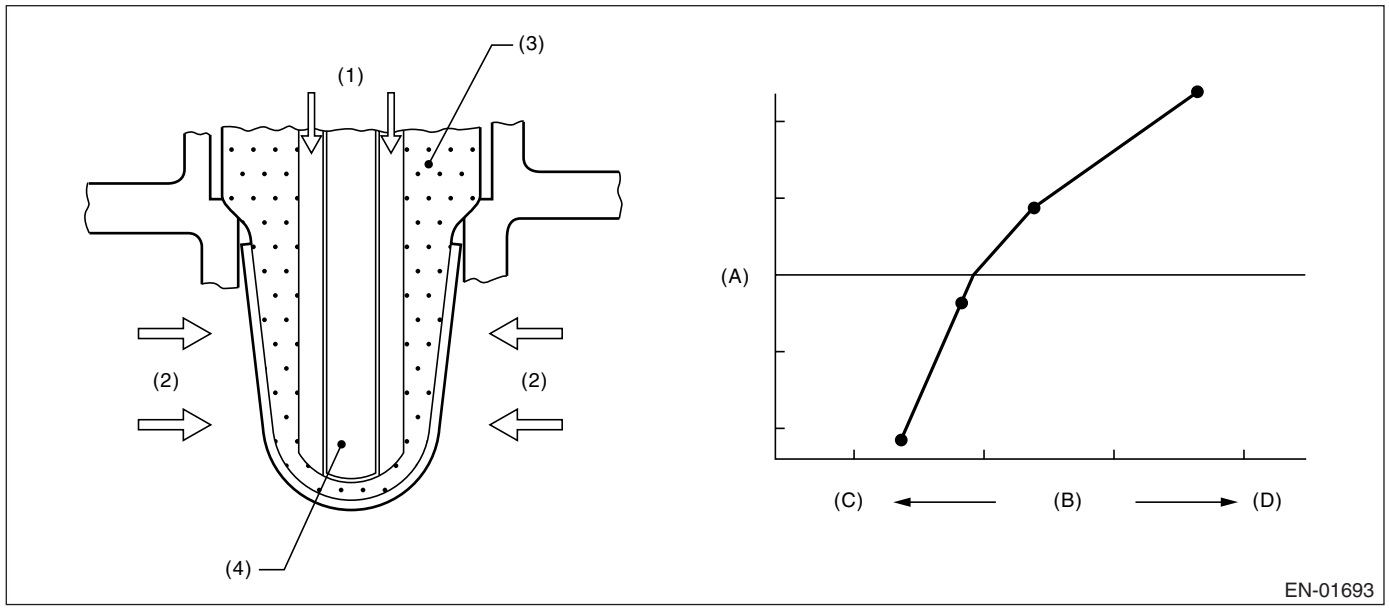

(1) Atmosphere
(2) Exhaust
(3) ZrO2
(4) Ceramic heater
(A) Electromotive force
(B) Air fuel ratio
(C) Lean
(D) Rich

3. ENABLE CONDITION

Secondary Parameters	Enable Conditions
All secondary parameter enable conditions	More than 1 second
Battery voltage	> 10.9 V
Atmospheric pressure	> 75.1 kPa (563 mmHg, 22.2 inHg)
Closed loop control with main feedback	Operating
Impedance of front oxygen (A/F) sensor	0 ←→ 50 Ω
After starting engine	120 seconds or more
Engine coolant temperature	≥ 75°C (167°F)
Engine speed	1000 ←→ 3200 rpm
Vehicle speed	10 ←→ 120 km/h (6.21 ←→ 74.6 MPH)
Amount of intake air	10 ←→ 31 g (0.35 ←→ 1.09 oz)/s
Engine load change during 0.5 engine rev.	≤ 0.02 g (0.001 oz)/rev
Learning value of EVAP conc. during purge	≤ 0.2
Accumulated time of operating canister purge	20 seconds or more

4. GENERAL DRIVING CYCLE

Perform diagnosis only once at a constant speed of 10 to 120 km/h (6.21 to 74.6 MPH) in 120 seconds after starting the engine.

5. DIAGNOSTIC METHOD

Integrate the difference of faf in every 128 milliseconds and difference of λ value.
After integrate 1640 times (210 seconds), calculate the diagnosis value.
Judge NG when the malfunction criteria below are completed. Judge OK and clear NG when the malfunction criteria below are not completed.

Judgment Value

Malfunction Criteria	Threshold Value
parafca = td2faf/td2lmd where, td2faf (N) = td2faf (n−1) + |d2faf (n)| td2lmd (N) = td2lmd (n−1) + |d2lmd (n)| add up for a total of 210 seconds d2faf (n) = (faf (n) − faf (n−1)) − (faf (n−1) − faf (n−2)) d2lmd (n) = (lmd (n) − lmd (n−1)) − (lmd (n−1) − lmd (n−2)) faf = main feedback compensation coefficient every 128 milliseconds lmd = output lambda every 128 milliseconds	≥ 0.417

Time Needed for Diagnosis: 210 seconds
Malfunction Indicator Light Illumination: Illuminates when malfunction occurs in 2 continuous driving cycles.

6. DTC CLEAR CONDITION

- When the OK idling cycle was completed 40 times in a row
- When “Clear Memory” was performed

7. MALFUNCTION INDICATOR LIGHT CLEAR CONDITION

- When the OK driving cycle was completed 3 times in a row
- When “Clear Memory” was performed

8. FAIL SAFE

- Front oxygen (A/F) sensor main learning correction: Not allowed to calculate.
- Correction when re-starting at high temperature: Normally minimum value 0.3 → 0.
- Purge control: Not allowed to purge.

9. ECM OPERATION AT DTC SETTING

- Memorize the freeze frame data. (For test mode $02)
- Memorize the diagnostic value and trouble standard value. (For test mode $06)

AA:DTC P0134 O2 SENSOR CIRCUIT NO ACTIVITY DETECTED (BANK 1 SENSOR 1)

1. OUTLINE OF DIAGNOSIS

Detect the open circuit of sensor.
Judge NG when the element impedance is large.

2. COMPONENT DESCRIPTION

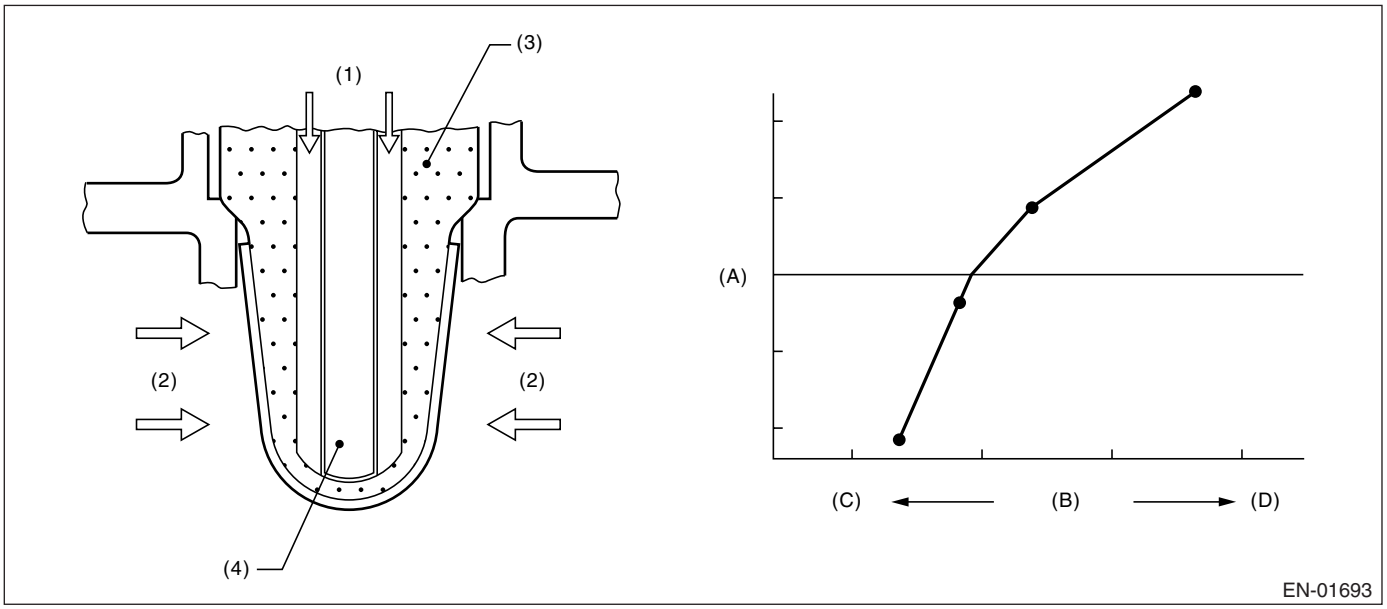

(1) Atmosphere
(2) Exhaust
(3) ZrO2
(4) Ceramic heater
(A) Electromotive force
(B) Air fuel ratio
(C) Lean
(D) Rich

3. ENABLE CONDITION

Secondary Parameters	Enable Conditions
None	

4. GENERAL DRIVING CYCLE

Always perform the diagnosis continuously.

5. DIAGNOSTIC METHOD

Judge NG when the continuous time of completing the malfunction criteria below becomes more than 5 seconds.

Judgment Value

Malfunction Criteria	Threshold Value
Voltage	≥ 10.9 V
Time after engine starting	≥ 50 seconds
Cumulative amount of Front oxygen (A/F) sensor heater control duty every 128 milliseconds	≥ 28000%
Front lambda sensor impedance	≥ 500 Ω

Time Needed for Diagnosis: 5 seconds
Malfunction Indicator Light Illumination: Illuminates as soon as the malfunction occurs.

6. DTC CLEAR CONDITION

- When the OK idling cycle was completed 40 times in a row
- When “Clear Memory” was performed

7. MALFUNCTION INDICATOR LIGHT CLEAR CONDITION

- When the OK driving cycle was completed 3 times in a row
- When “Clear Memory” was performed

8. FAIL SAFE

- Front oxygen (A/F) sensor activation judgment: Front oxygen (A/F) sensor full activation is not complete, or front oxygen (A/F) sensor half activation is not complete.
- A/F main learning: Not allowed to calculate the A/F main learning compensation factor.
- Compensation when starting the engine at high temperature: Make the MIN value to be 0 from 0.3 normally.
- Purge control: Not allowed to purge.

9. ECM OPERATION AT DTC SETTING

Memorize the freeze frame data. (For test mode $02)

AB:DTC P0137 O2 SENSOR CIRCUIT LOW VOLTAGE (BANK 1 SENSOR 2)

1. OUTLINE OF DIAGNOSIS

Detect the malfunction of rear oxygen sensor open or short circuit. Judge NG when the rear oxygen sensor voltage may be abnormal from rear oxygen sensor voltage value with considering the conditions such as intake air amount, engine coolant temperature, main feedback control.

2. COMPONENT DESCRIPTION

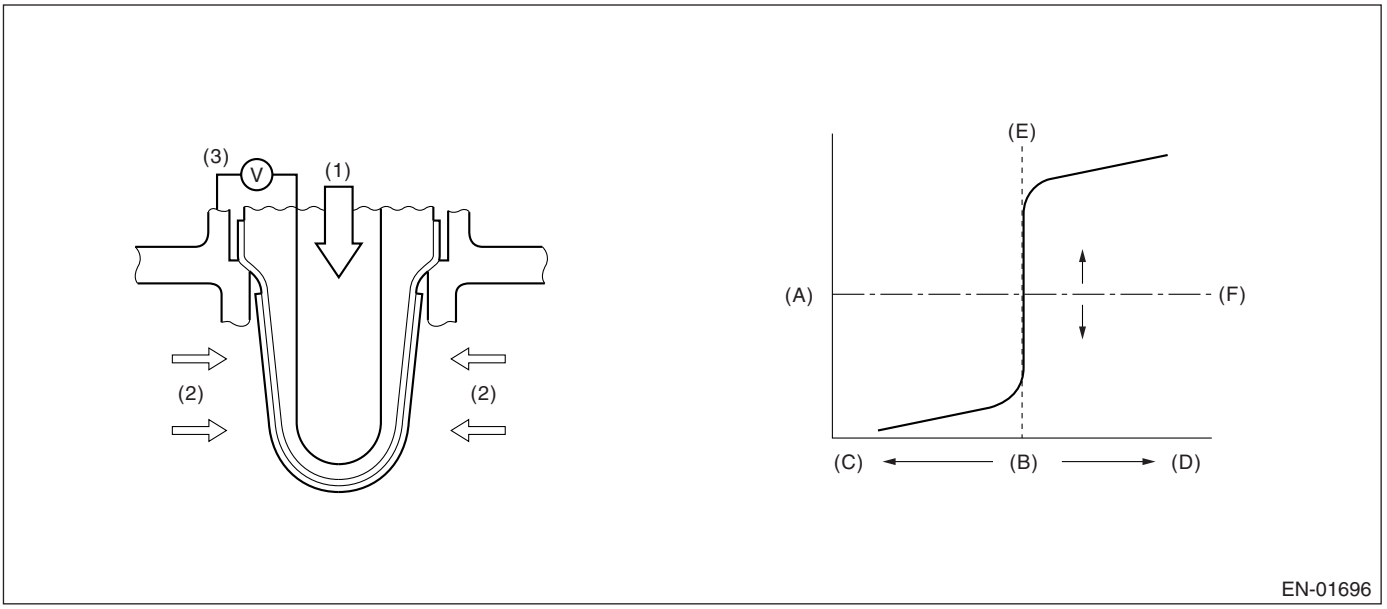

(1) Atmosphere
(2) Exhaust
(3) Electromotive force
(A) Electromotive force
(B) Air fuel ratio
(C) Rich
(D) Lean
(E) Theoretical air fuel ratio
(F) Comparative voltage

3. ENABLE CONDITION (USED ONLY FOR MALFUNCTION JUDGMENT)

Secondary Parameters	Enable Conditions
Closed loop control with main feedback control	In operation
Target output voltage of rear oxygen sensor	≥ 0.54 V
Amount of intake air	≥ 10 g (0.35 oz)/s
Engine coolant temperature	≥ 75°C (167°F)
Misfire detection during 200 engine revs.	< 5 times
Compensation factor for front oxygen (A/F) sensor with main feedback control	Not in limit value
Battery voltage	> 10.9 V
5 seconds or more fuel shut-off in decel.	Experienced

4. GENERAL DRIVING CYCLE

Perform the diagnosis once after warming up the engine.

5. DIAGNOSTIC METHOD

• Abnormality Judgment

Judge NG when the malfunction criteria below are completed.

Judgment Value

Malfunction Criteria	Threshold Value
Max. output voltage	< 490 mV

Time Needed for Diagnosis: 200 seconds
Malfunction Indicator Light Illumination: Illuminates when malfunction occurs in 2 continuous driving cycles.

• Normality Judgment

Judge OK when the malfunction criteria below are completed.

Judgment Value

Malfunction Criteria	Threshold Value
Low side diagnosis of rear oxygen sensor voltage	Incomplete
Max. output voltage	≥ 490 mV

6. DTC CLEAR CONDITION

- When the OK idling cycle was completed 40 times in a row
- When “Clear Memory” was performed

7. MALFUNCTION INDICATOR LIGHT CLEAR CONDITION

- When the OK driving cycle was completed 3 times in a row
- When “Clear Memory” was performed

8. FAIL SAFE

Sub feedback control: Not allowed

9. ECM OPERATION AT DTC SETTING

- Memorize the freeze frame data. (For test mode $02)
- Memorize the diagnostic value and trouble standard value. (For test mode $06)

AC:DTC P0138 O2 SENSOR CIRCUIT HIGH VOLTAGE (BANK 1 SENSOR 2)

1. OUTLINE OF DIAGNOSIS

Detect the malfunction of rear oxygen sensor open or short circuit. Judge NG when the rear oxygen sensor voltage may be abnormal with considering the conditions such as intake air amount, engine coolant temperature, main feedback control.

2. COMPONENT DESCRIPTION

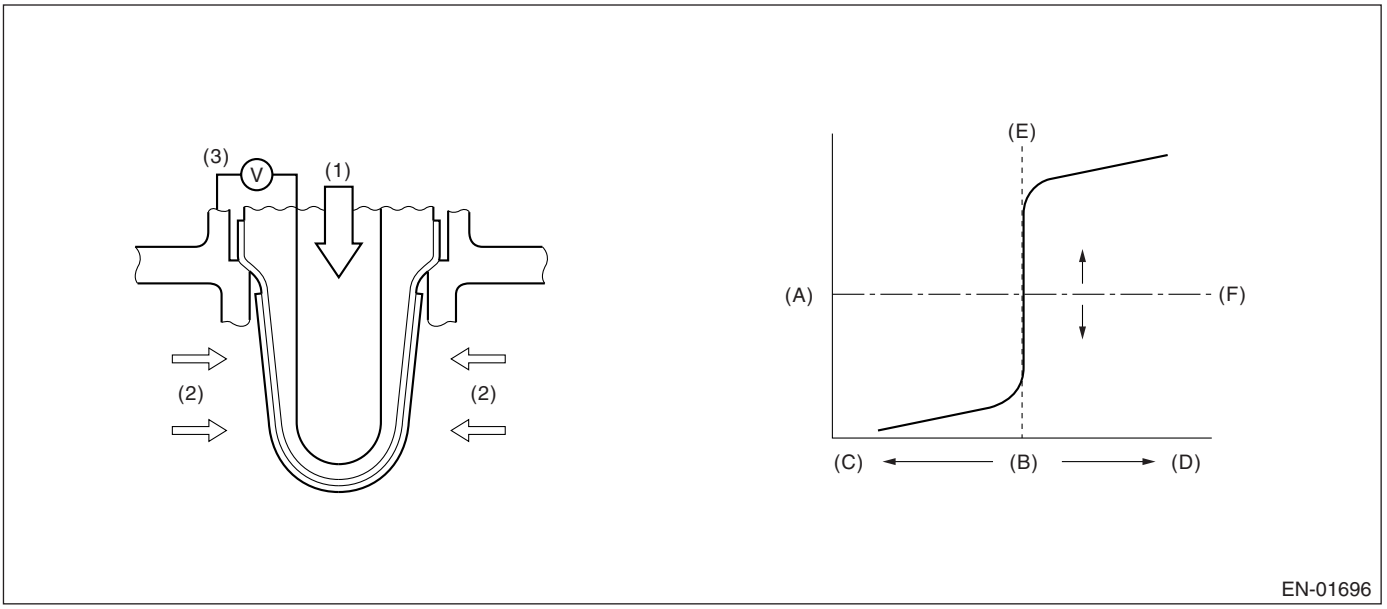

(1) Atmosphere
(2) Exhaust
(3) Electromotive force
(A) Electromotive force
(B) Air fuel ratio
(C) Rich
(D) Lean
(E) Theoretical air fuel ratio
(F) Comparative voltage

3. ENABLE CONDITION (USED ONLY FOR MALFUNCTION JUDGMENT)

Secondary Parameters	Enable Conditions
Closed loop control with main feedback control	In operation
Target output voltage of rear oxygen sensor	≥ 0.54 V
Amount of intake air	≥ 10 g (0.35 oz)/s
Engine coolant temperature	≥ 75°C (167°F)
Misfire detection during 200 engine revs.	< 5 times
Compensation factor for front oxygen (A/F) sensor with main feedback control	Not in limit value
Battery voltage with main feedback control	> 10.9 V
5 seconds or more fuel shut-off in decel.	Experienced

4. GENERAL DRIVING CYCLE

Perform the diagnosis once after warming up the engine.

5. DIAGNOSTIC METHOD

• Abnormality Judgment

Judge NG when the malfunction criteria below are completed.
Judgment Value

Malfunction Criteria	Threshold Value
Min. output voltage	〉250 mV

Time Needed for Diagnosis: 200 seconds
Malfunction Indicator Light Illumination: Detect when malfunction occurs in 2 continuous driving cycles.
• Normality Judgment

Judge OK when the malfunction criteria below are completed.
Judgment Value

Malfunction Criteria	Threshold Value
High side diagnosis of rear oxygen sensor voltage	Incomplete
Min. output voltage	≤ 250 mV

6. DTC CLEAR CONDITION

- When the OK idling cycle was completed 40 times in a row
- When “Clear Memory” was performed

7. MALFUNCTION INDICATOR LIGHT CLEAR CONDITION

- When the OK driving cycle was completed 3 times in a row
- When “Clear Memory” was performed

8. FAIL SAFE

Sub feedback control: Not allowed

9. ECM OPERATION AT DTC SETTING

- Memorize the freeze frame data. (For test mode $02)
- Memorize the diagnostic value and trouble standard value. (For test mode $06)

AD:DTC P0139 O2 SENSOR CIRCUIT SLOW RESPONSE (BANK 1 SENSOR 2)

1. OUTLINE OF DIAGNOSIS

Detect the slow response of rear oxygen sensor.
Judge NG when the Rich → Lean response diagnosis or Lean → Rich response diagnosis is NG and judge OK when both response diagnoses are OK.
[Rich → Lean diagnosis response]
(1) When the measured response time is larger than a threshold, since the A/F ratio is rich, the response time of the output change of O2 sensor when changing from Rich to Lean is measured, and it judges with NG, and when small, it judges with OK.
(2) When O2 sensor voltage at the time of a fuel shut-off in deceleration return is large (rich), it judges with NG.
[Lean → Rich diagnosis response]
(1) The response time of output change of O2 sensor when an A/F ratio changes from Lean to Rich is measured, and it is referred to as NG when the measured response time is larger than a threshold.
(2) It is referred to as NG when O2 sensor voltage after recovery of fuel shut-off in deceleration is small and still small.

• Diagnostic Method

Measure the response time of the output change of the oxygen sensor when the A/F ratio changes from rich to lean. And Judge NG when the measured response time is larger than the threshold value.

2. COMPONENT DESCRIPTION

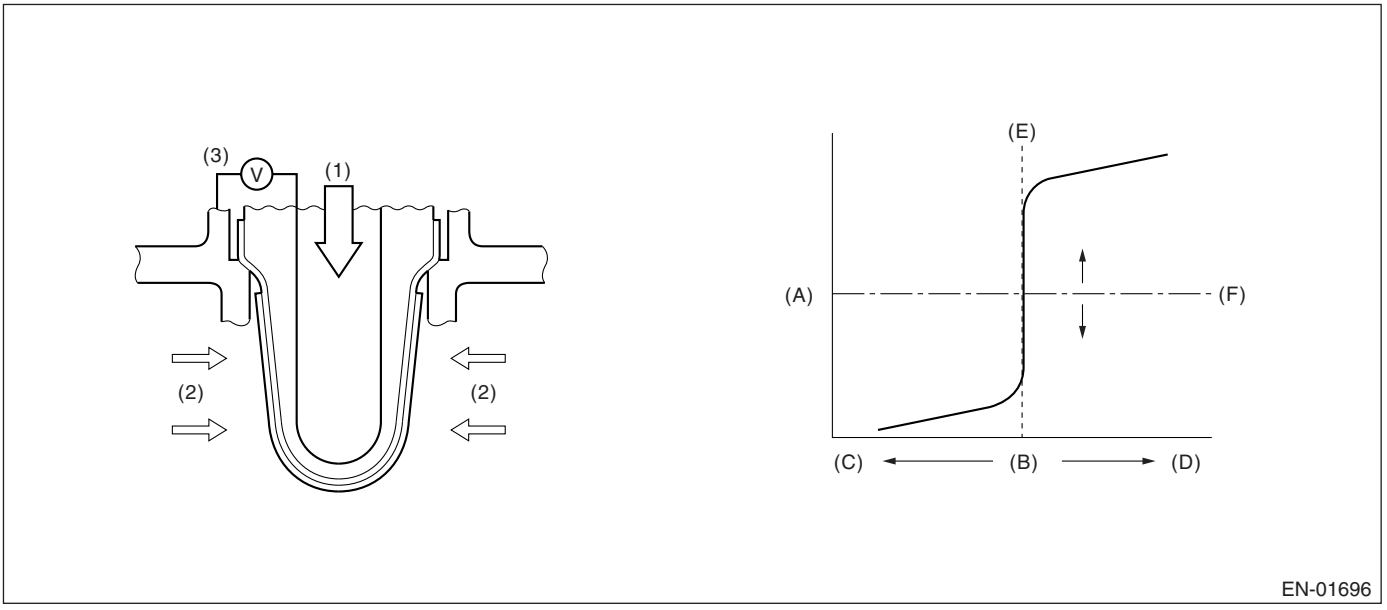

(1) Atmosphere
(2) Exhaust
(3) Electromotive force
(A) Electromotive force
(B) Air fuel ratio
(C) Rich
(D) Lean
(E) Theoretical air fuel ratio
(F) Comparative voltage

3. ENABLE CONDITION

- Rich → Lean response diagnosis

Secondary Parameters	Enable Conditions
Battery voltage	〉10.9 V
A/F sub feedback control condition	Completed
5 seconds or more fuel shut-off in decel.	Experienced
After fuel cut	≥ 2 seconds
Accumulated time with rear oxygen sensor heater ON	≥ 60 seconds
Continuous time with rear oxygen sensor heater ON	≥ 30 seconds
Catalyst couture warm up	≥ 8000 seconds
Number of the fuel shut-off in decel.	≥ 1 time

4. GENERAL DRIVING CYCLE

Perform the diagnosis only once when fuel shut-off in deceleration after rapid acceleration. (Pay attention to oxygen sensor voltage for the timing of deceleration.)

5. DIAGNOSTIC METHOD

When the oxygen sensor output voltage changes from 0.55 V (rich) to 0.25 V (lean), calculate the Min. value of response time regarded as judgment value while the output varies from 0.5 V to 0.3 V.

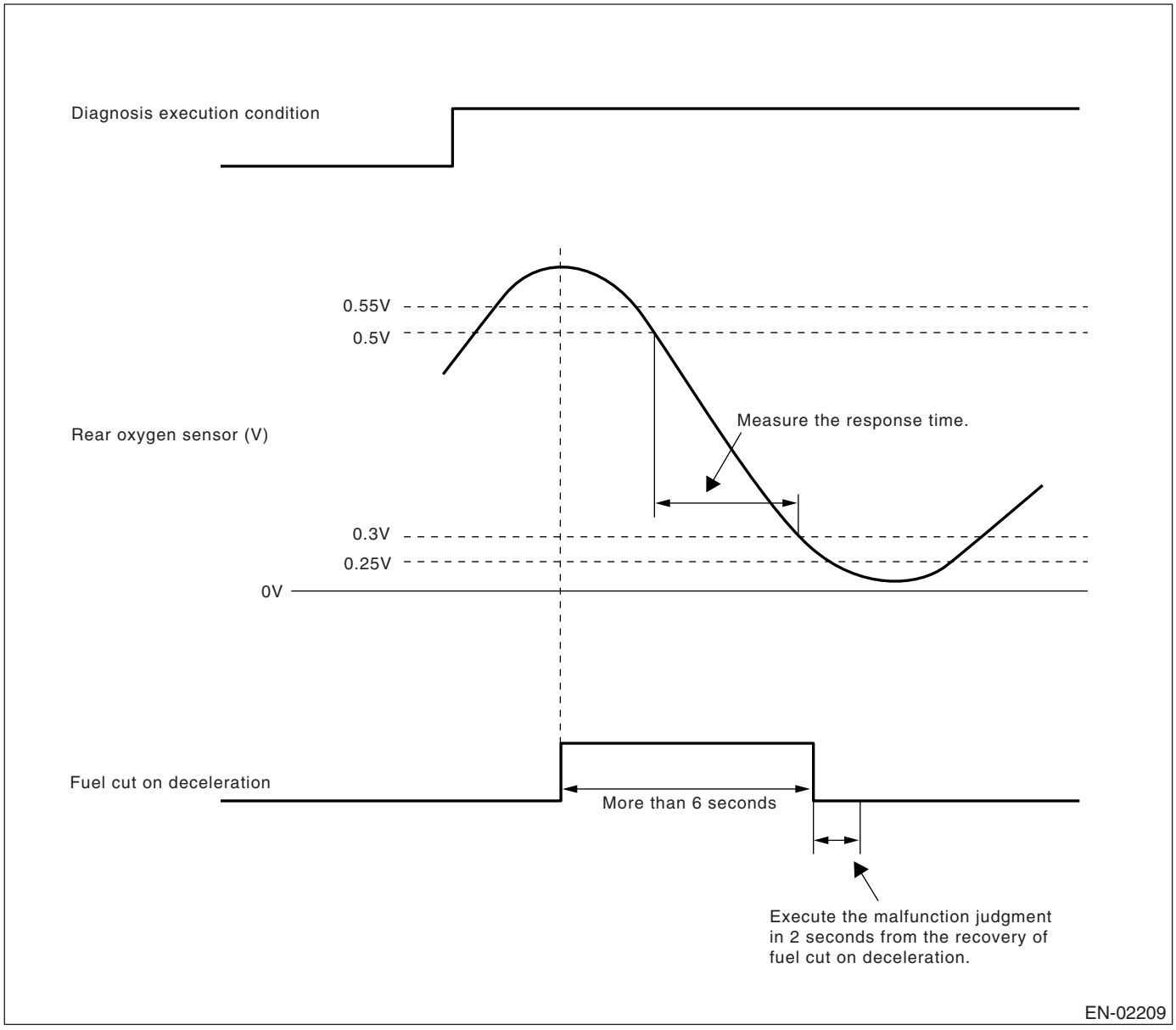

• Abnormality Judgment

(1) Judge NG when the judgment value is larger than the threshold value after fuel shut-off in deceleration.
Response time (Diagnosis value) > Threshold value → Abnormal

NOTE:
Variation time of rear oxygen sensor output voltage is short during fuel shut-off in deceleration. Carry out the NG judgment only after the fuel shut-off in deceleration. As for OK judgment, without the condition of fuel shut-off in deceleration, judge OK if the value is below the threshold value.

Judge NG when the malfunction criteria below are completed in 2 seconds after the recovery of fuel shut-off in deceleration which requires 6 seconds or more.

(2) Judge NG when the O2 sensor voltage after recovery of fuel shut-off in deceleration is large. Judge NG when fuel shut-off in deceleration is also long (6s or more), and although carried out the fuel shut-off in deceleration cut return, when O2 sensor voltage is large (more than 0.55V).

Judgment Value

Malfunction Criteria	Threshold Value
Shortest time change from rich (500 mV O2output) to lean (300 mV) if voltage reduces from 550 mV to 250 mV.	〉0.327 seconds
Time when more than 550 mV	〉2 seconds

Time Needed for Diagnosis: Once
Malfunction Indicator Light Illumination: Illuminates when malfunction occurs in 2 continuous driving cycles.

• Normality Judgement

(1) Judge Normal when the response time (diagnostic value) is smaller than threshold (judgment value) when changing to lean since O2 sensor voltage.
(2) A normal judging is not carried out.

Judgment Value

Judge OK when the following standards value are completed.

Malfunction Criteria	Threshold Value
Change of the shortest time from rich (500 mV02 output), when voltage decreases from 550 mV to 250 mV to lean (300 mV).	≤ 0.327 seconds

6. DTC CLEAR CONDITION

- When the OK idling cycle was completed 40 times in a row
- When “Clear Memory” was performed

7. MALFUNCTION INDICATOR LIGHT CLEAR CONDITION

- When the OK driving cycle was completed 3 times in a row
- When “Clear Memory” was performed

8. FAIL SAFE

Sub feedback control: Not allowed

9. ECM OPERATION AT DTC SETTING

- Memorize the freeze frame data. (For test mode $02)
- Memorize the diagnostic value and trouble standard value. (For test mode $06)

10.ENABLE CONDITION

- Lean → Rich response diagnosis

Secondary Parameters	Enable Conditions
Battery voltage	〉10.9 V
A/F main feedback control condition	Completed
Fuel cut on deceleration ≥ 5 seconds	Experienced
After fuel cut	≥ 2 seconds
Accumulative time of rear oxygen sensor heater energization	≥ 60 seconds
Continuous time of rear oxygen sensor heater energization	≥ 30 seconds
Number of the fuel shut-off in decel.	≥ 1 time

11.GENERAL DRIVING CYCLE

Perform the diagnosis only once when fuel shut-off in deceleration after rapid acceleration. (Pay attention to oxygen sensor voltage for the timing of deceleration.)

12.DIAGNOSTIC METHOD

When the oxygen sensor output voltage changes from 0.25 V (lean) to 0.55 V (rich), calculate the Min. value of response time regarded as judgment value while the output varies from 0.3 V to 0.5 V.

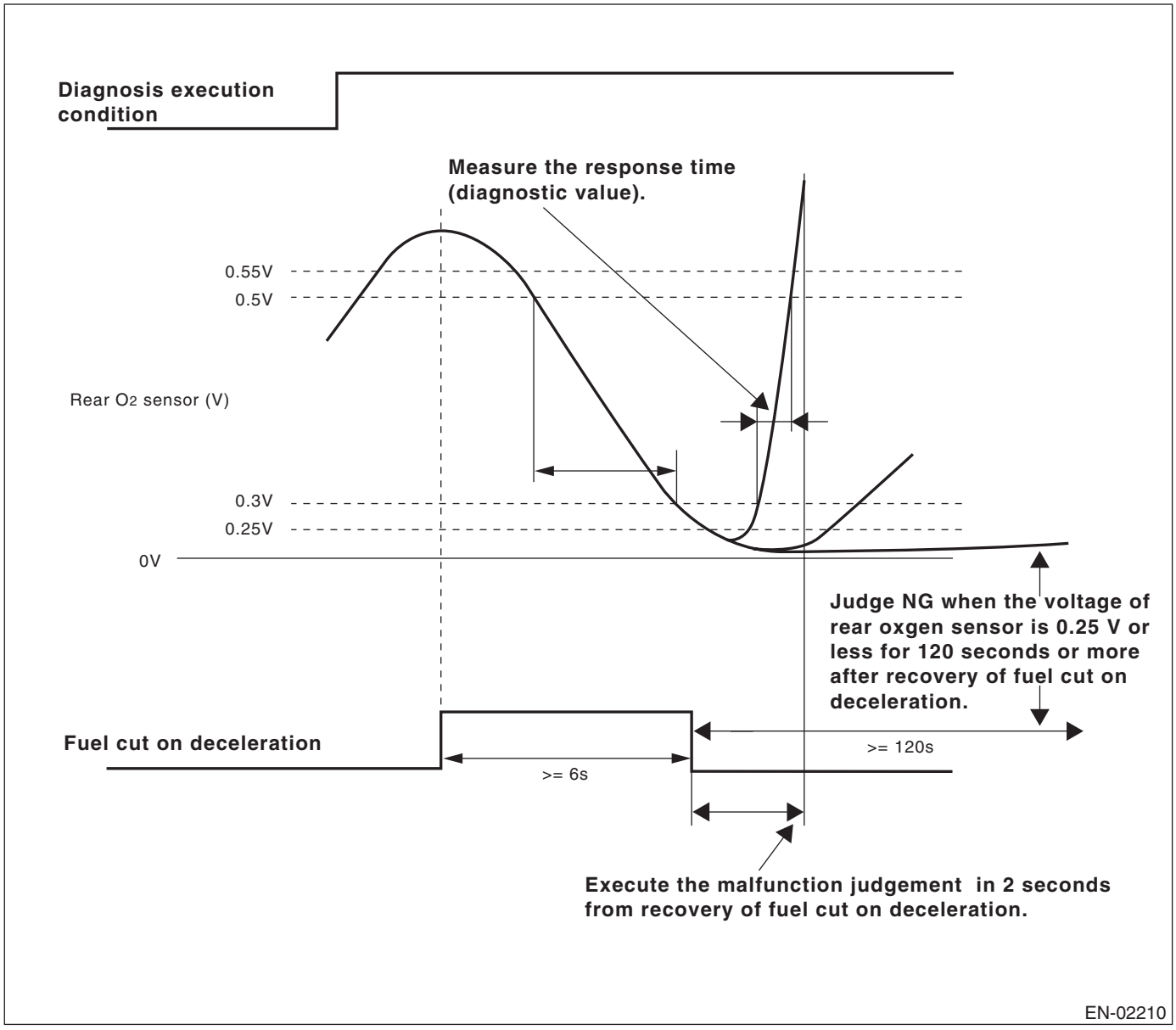

• Abnormality Judgment

(1) Judge NG when the judgment value is larger than the threshold value after recovery of fuel shut-off in deceleration.
Response time (Diagnosis value) > Threshold value → Abnormal
(2) Judge NG when the O2 sensor voltage after recovery of fuel shut-off in deceleration is small.

Judgment Value

Malfunction Criteria	Threshold Value
Shortest time change from lean (300 mV O2output) to rich (500 mV) if voltage reduces from 500 mV to 250 mV.	> 2 seconds
Or longest time to change to 250 mV	> 120 seconds

Time Needed for Diagnosis: Once
Malfunction Indicator Light Illumination: Illuminates when malfunction occurs in 2 continuous driving cycles.

• Normality Judgement

(1) Judge Normal when the response time (diagnostic value) is smaller than threshold (judgment value) when changing to lean since O2 sensor voltage.
Response Time (diagnosis value) ≤ Threshold value → Normal
(2) A normal judging is not carried out.

Judgment Value

Judge OK when the following standards value are completed.

Malfunction Criteria	Threshold Value
Change of the shortest time from rich (300 mV02 output), when voltage decreases from 550 mV to 250 mV to lean (500 mV).	≤ 2 seconds

13.DTC CLEAR CONDITION

- When the OK idling cycle was completed 40 times in a row
- When “Clear Memory” was performed

14.MALFUNCTION INDICATOR LIGHT CLEAR CONDITION

- When the OK driving cycle was completed 3 times in a row
- When “Clear Memory” was performed

15.FAIL SAFE

Sub feedback control: Not allowed

16.ECM OPERATION AT DTC SETTING

- Memorize the freeze frame data. (For test mode $02)
- Memorize the diagnostic value and trouble standard value. (For test mode $06)

AE:DTC P0171 SYSTEM TOO LEAN (BANK 1)

1. OUTLINE OF DIAGNOSIS

Detect the fuel system malfunction by the amount of main feedback control.

• Diagnostic Method

Fuel system is diagnosed by comparing the target air fuel ratio calculated by ECM with the actual air fuel ratio measured by sensor.

2. ENABLE CONDITION

Secondary Parameters	Enable Conditions
A/F main learning system	In operation
Engine coolant temperature	≥ 70°C (158°F)
Engine load	≥ Map 5
Intake air change during 0.5 engine rev.	≤ 0.02 g (0.001 oz)/rev

Map 5

Engine speed (rpm)	idle	800	1200	1600	2000	2400	2800	3200	3600	4000	4400
Measured value (g (oz)/rev)	NA	0.236 (0.008)	0.232 (0.008)	0.226 (0.008)	0.231 (0.008)	0.252 (0.009)	0.262 (0.009)	0.243 (0.009)	0.243 (0.009)	0.267 (0.009)	0.270 (0.010)

3. GENERAL DRIVING CYCLE

Perform the diagnosis continuously at idling or a constant speed after warming up the engine.

4. DIAGNOSTIC METHOD

• Abnormality Judgment

Judge that the fuel system malfunction occurs when the time during completing the malfunction criteria below continues 30 seconds or more by comparing the diagnosed value (fsobd) with threshold value.

Judgment Value

Malfunction Criteria	Threshold Value
fsobd = (sglmd − tglmda) + faf + flaf	≥ fsobdL1
where,	See Map 4
sglmd = measured lambda	
tglmda = target lambda	fsobdL1 = lean side threshold value of fsobd
faf = main feedback compensation coefficient every 64 milliseconds	
flaf = main feedback learning compensation coefficient	

Map 4 Threshold value for fuel system malfunction criteria

Amount of air (g (oz)/s)	0 (0)	2.3 (0.081)	4.7 (0.166)	7 (0.247)	9.4 (0.332)	11.7 (0.413)	14.1 (0.497)
fsobdL1 (%)	40	40	36.9	32.0	27.0	26.5	26.5

Time Needed for Diagnosis: 10 seconds × 5 times

Malfunction Indicator Light Illumination: Illuminates when malfunction occurs in 2 continuous driving cycles.

• Normality Judgment

Judge OK when the malfunction criteria below are continued for 10 seconds.

Judgment Value

Malfunction Criteria	Threshold Value
fsobd = (sglmd − tglmda) + faf + flaf	< 19%

5. DTC CLEAR CONDITION

- When the OK idling cycle was completed 40 times in a row
- When “Clear Memory” was performed

6. MALFUNCTION INDICATOR LIGHT CLEAR CONDITION

- When OK with similar drive in 3 driving cycles.
- When “Clear Memory” was performed

7. FAIL SAFE

Rich side malfunction
- Purge control solenoid valve control: Not allowed to purge.
- Heavy fuel judgment control: Not allowed to carry out the heavy judgment.

8. ECM OPERATION AT DTC SETTING

Memorize the freeze frame data. (For test mode $02)

AF:DTC P0172 SYSTEM TOO RICH (BANK 1)

1. OUTLINE OF DIAGNOSIS

Detect the fuel system malfunction by the amount of main feedback control.

• Diagnostic Method

Fuel system is diagnosed by comparing the target air fuel ratio calculated by ECM with the actual air fuel ratio measured by sensor.

2. ENABLE CONDITION

Secondary Parameters	Enable Conditions
A/F main learning system	In operation
Engine coolant temperature	≥ 70°C (158°F)
Engine load	≥ Map 5
Intake air change during 0.5 engine rev.	≤ 0.02 g (0.001 oz)/rev
Learning value of EVAP conc. during purge	≤ 0.1
Cumulative time of canister purge after engine start	20 seconds or more
Continuous period after canister purge starting	30 seconds or more

Map 5

Engine speed (rpm)	idle	800	1200	1600	2000	2400	2800	3200	3600	4000	4400
Measured value (g (oz)/ rev)	NA	0.236 (0.008)	0.232 (0.008)	0.226 (0.008)	0.231 (0.008)	0.252 (0.009)	0.262 (0.009)	0.243 (0.009)	0.243 (0.009)	0.267 (0.009)	0.270 (0.010)

3. GENERAL DRIVING CYCLE

Perform the diagnosis continuously at idling or a constant speed after warming up the engine.

4. DIAGNOSTIC METHOD

• Abnormality Judgment

Judge that the fuel system malfunction occurs when the time during completing the malfunction criteria below continues 30 seconds or more by comparing the diagnosed value (fsobd) with threshold value.

Judgment Value

Malfunction Criteria	Threshold Value
fsobd = (sglmd − tglmda) + faf + flaf	≤ fsobdR1
where,	See Map 4
sglmd = measured lambda	fsobdR1 = rich side threshold value of fsobd
tglmda = target lambda	
faf = main feedback compensation coefficient every 64 milliseconds	
flaf = main feedback learning compensation coefficient	

Map 4 Threshold value for fuel system malfunction criteria

Amount of air (g/s)	0 (0)	2.4 (0.085)	4.7 (0.166)	7 (0.247)	9.4 (0.332)	11.7 (0.413)
fsobdR1 (%)	−40	−40	−36.9	−32.0	−27.0	−27.0

Time Needed for Diagnosis: 10 seconds × 5 times

Malfunction Indicator Light Illumination: Illuminates when malfunction occurs in 2 continuous driving cycles.

• Normality Judgment

Judge OK when the malfunction criteria below are continued for 10 seconds.
Judgment Value

Malfunction Criteria	Threshold Value
fsobd = (sglmd − tglmda) + faf + flaf	≥ −20%

5. DTC CLEAR CONDITION

- When the OK idling cycle was completed 40 times in a row
- When “Clear Memory” was performed

6. MALFUNCTION INDICATOR LIGHT CLEAR CONDITION

- When OK with similar drive in 3 drive cycles.
- When “Clear Memory” was performed

7. FAIL SAFE

Rich side malfunction
- Purge control solenoid valve control: Not allowed to purge.
- Heavy fuel judgment control: Not allowed to carry out the heavy judgment.

8. ECM OPERATION AT DTC SETTING

Memorize the freeze frame data. (For test mode $02)

AG:DTC P0181 FUEL TEMPERATURE SENSOR “A” CIRCUIT RANGE/PERFORMANCE

1. OUTLINE OF DIAGNOSIS

Detect the malfunction of fuel temperature sensor output property. Perform the diagnosis in two methods; namely, drift diagnosis and stuck diagnosis. Judge NG when either of them results in NG, and judge OK when both of them result in OK.

• Drift Diagnosis

Normally fuel temperature is lower than engine coolant temperature. When the fuel temperature becomes higher than the engine coolant temperature, the range is considered to be shifted, and make an NG judgment.

2. COMPONENT DESCRIPTION

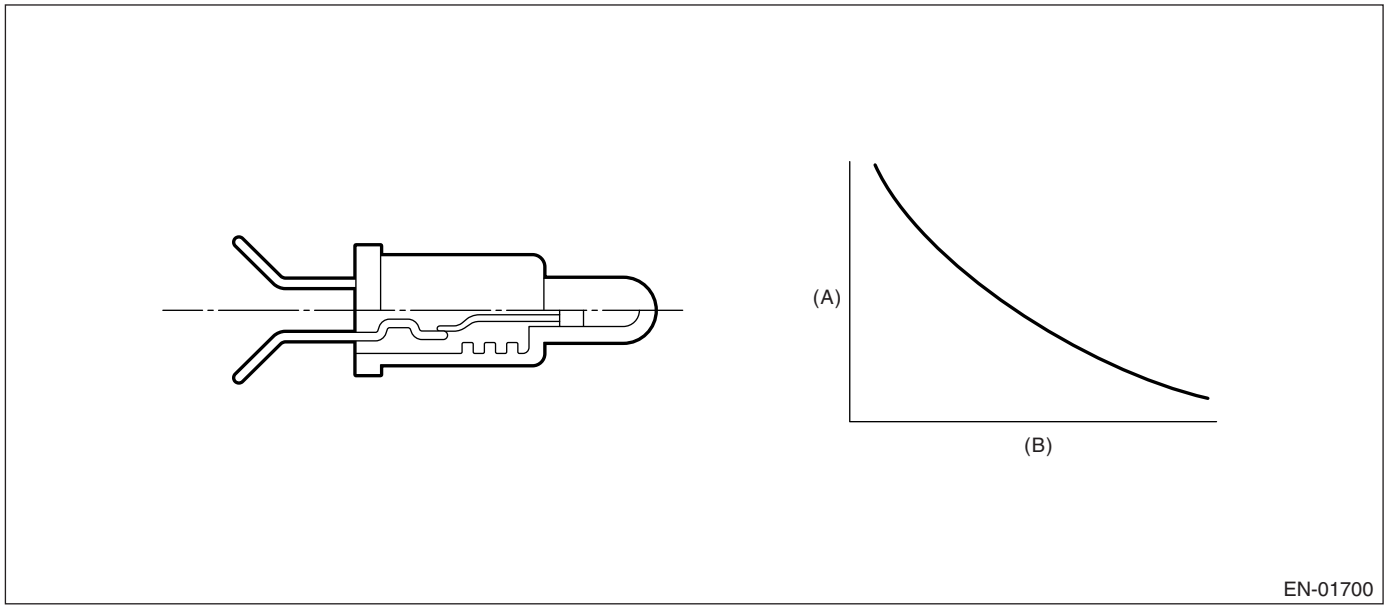

(A) Resistance value (Ω) (B) Fuel temperature °C (°F)

3. ENABLE CONDITION

Secondary Parameters	Enable Conditions
None	

4. GENERAL DRIVING CYCLE

Always perform the diagnosis continuously.

5. DIAGNOSTIC METHOD

• Abnormality Judgment

Judge NG when the continuous time of completing the malfunction criteria below becomes more than 120 seconds.

Judgment Value

Malfunction Criteria	Threshold Value
Fuel level	≥ 9.6 ℓ (2.54 US gal, 2.11 Imp gal)
After starting engine	20 seconds or more
Engine coolant temperature – engine coolant temperature at engine starting	≥ 10°C (50°F)
Fuel temperature – engine coolant temperature	≥ 10°C (50°F)
Battery voltage	〉10.9 V

Time Needed for Diagnosis: 120 seconds
Malfunction Indicator Light Illumination: Illuminates when malfunction occurs in 2 continuous driving cycles.

• Normality Judgment

Judge OK when the malfunction criteria below are completed.

Judgment Value

Malfunction Criteria	Threshold Value
Fuel level	≥ 9.6 ℓ (2.54 US gal, 2.11 Imp gal)
After starting engine	20 seconds or more
Engine coolant temperature – engine coolant temperature at engine starting	≥ 10°C (50°F)
Fuel temperature – engine coolant temperature	〈 10°C (50°F)
Battery voltage	〉10.9 V
Engine coolant temperature	〈 70°C (158°F)

• Stuck Diagnosis

If the fuel temperature which might rise along with the engine idling (the cumulative amount of intake air after engine starting is large) does not increase, the engine is considered to be stuck and make an NG judgment.

6. ENABLE CONDITION

Secondary Parameters	Enable Conditions
After starting engine	20 seconds or more
Battery voltage	〉10.9 V

7. GENERAL DRIVING CYCLE

Perform the diagnosis continuously in 20 seconds or more after starting the engine.

8. DIAGNOSTIC METHOD

• Abnormality Judgment

Judge NG when the malfunction criteria below are completed.

Judgment Value

Malfunction Criteria	Threshold Value
Accumulated amount of intake air	≥ 550 kg (1212.5 lb)
Fuel temperature difference between Max. and Min.	〈 2°C (35.6°F)

Time Needed for Diagnosis: To be determined.
Malfunction Indicator Light Illumination: Illuminates when malfunction occurs in 2 continuous driving cycles.

• Normality Judgment

Judge OK when the malfunction criteria below are completed.

Judgment Value

Malfunction Criteria	Threshold Value
Accumulated amount of intake air	≥ 550 kg (1212.5 lb)
Fuel temperature difference between Max. and Min.	≥ 2°C (35.6°F)

9. DTC CLEAR CONDITION

- When the OK idling cycle was completed 40 times in a row
- When “Clear Memory” was performed

10.MALFUNCTION INDICATOR LIGHT CLEAR CONDITION

- When the OK driving cycle was completed 3 times in a row
- When “Clear Memory” was performed

11.FAIL SAFE

None

12.ECM OPERATION AT DTC SETTING

Memorize the freeze frame data. (For test mode $02)

AH:DTC P0182 FUEL TEMPERATURE SENSOR “A” CIRCUIT LOW INPUT

1. OUTLINE OF DIAGNOSIS

Detect the open or short circuit of fuel temperature sensor. Judge NG when out of the standard value.

2. COMPONENT DESCRIPTION

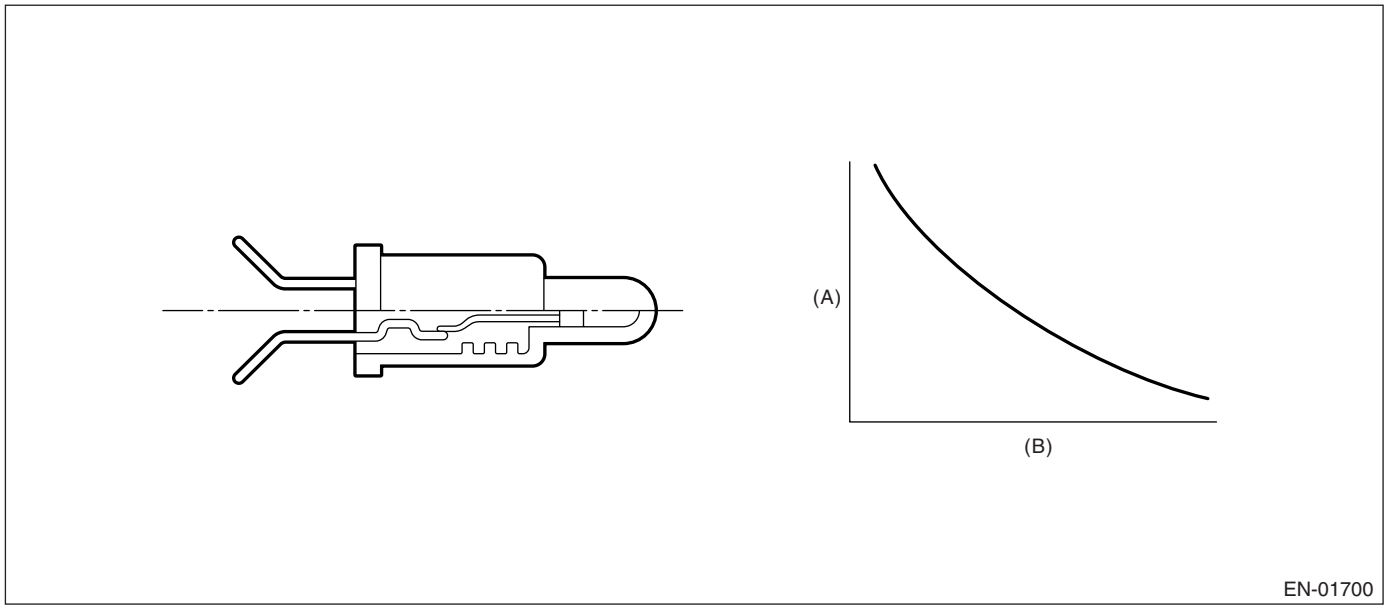

(A) Resistance value (Ω) (B) Fuel temperature °C (°F)

3. ENABLE CONDITION

Secondary Parameters	Enable Conditions
None	

4. GENERAL DRIVING CYCLE

Always perform the diagnosis continuously.

5. DIAGNOSTIC METHOD

• Abnormality Judgment

Judge NG when the continuous time of completing the malfunction criteria below becomes more than 2.5 seconds.

Judgment Value

Malfunction Criteria	Threshold Value
Output voltage	〈 0.1646 V
Battery voltage	≥ 10.9 V

Time Needed for Diagnosis: 2.5 seconds

Malfunction Indicator Light Illumination: Illuminates as soon as the malfunction occurs.

• Normality Judgment

Judge OK and clear NG when the malfunction criteria below are completed.

Judgment Value

Malfunction Criteria	Threshold Value
Output voltage	≥ 0.1646 V
Battery voltage	≥ 10.9 V

6. DTC CLEAR CONDITION

- When the OK idling cycle was completed 40 times in a row
- When “Clear Memory” was performed

7. MALFUNCTION INDICATOR LIGHT CLEAR CONDITION

- When the OK driving cycle was completed 3 times in a row
- When “Clear Memory” was performed

8. FAIL SAFE

None

9. ECM OPERATION AT DTC SETTING

Memorize the freeze frame data. (For test mode $02)

AI: DTC P0183 FUEL TEMPERATURE SENSOR “A” CIRCUIT HIGH INPUT

1. OUTLINE OF DIAGNOSIS

Detect the open or short circuit of fuel temperature sensor. Judge NG when out of the standard value.

2. COMPONENT DESCRIPTION

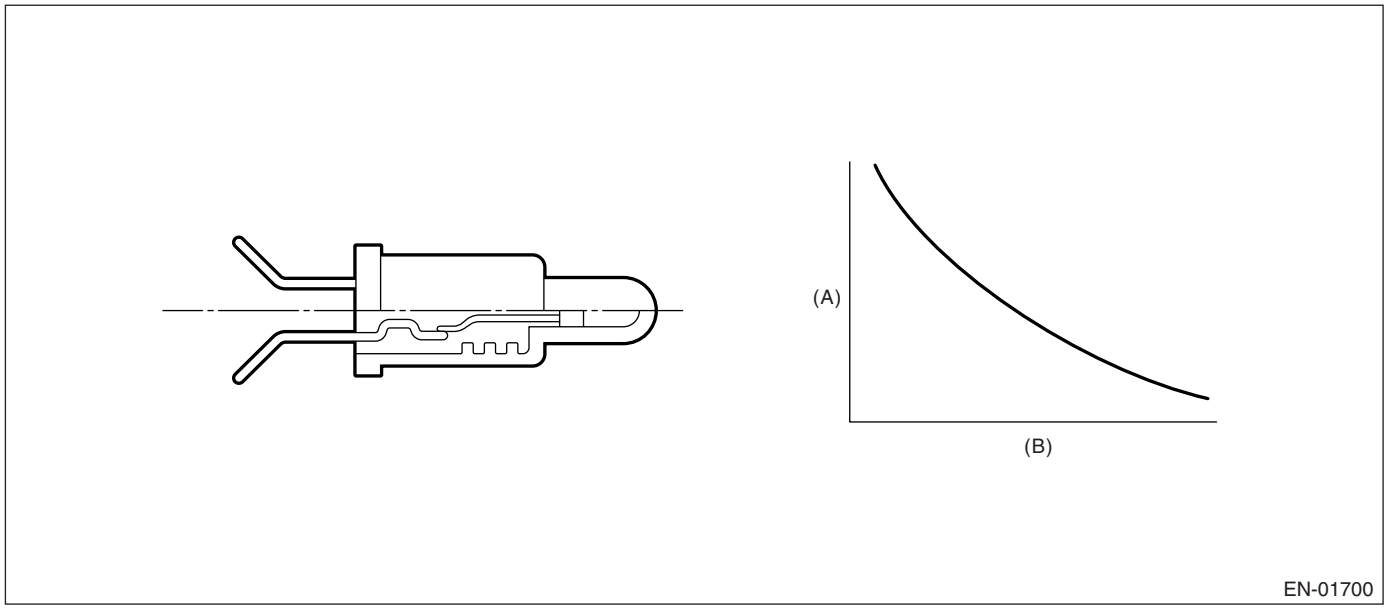

(A) Resistance value (Ω) (B) Fuel temperature °C (°F)

3. ENABLE CONDITION

Secondary Parameters	Enable Conditions
None	

4. GENERAL DRIVING CYCLE

Always perform the diagnosis continuously.

5. DIAGNOSTIC METHOD

• Abnormality Judgment

Judge NG when the continuous time of completing the malfunction criteria below becomes more than 2.5 seconds.

Judgment Value

Malfunction Criteria	Threshold Value
Output voltage	≥ 4.72 V
Battery voltage	≥ 10.9 V

Time Needed for Diagnosis: 2.5 seconds

Malfunction Indicator Light Illumination: Illuminates as soon as the malfunction occurs.

• Normality Judgment

Judge OK and clear NG when the malfunction criteria below are completed.

Judgment Value

Malfunction Criteria	Threshold Value
Output voltage	< 4.72 V
Battery voltage	≥ 10.9 V

6. DTC CLEAR CONDITION

- When the OK idling cycle was completed 40 times in a row
- When “Clear Memory” was performed

7. MALFUNCTION INDICATOR LIGHT CLEAR CONDITION

- When the OK driving cycle was completed 3 times in a row
- When “Clear Memory” was performed

8. FAIL SAFE

None

9. ECM OPERATION AT DTC SETTING

Memorize the freeze frame data. (For test mode $02)

AJ:DTC P0222 THROTTLE/PEDAL POSITION SENSOR/SWITCH “B” CIRCUIT LOW INPUT

1. OUTLINE OF DIAGNOSIS

Detect the open or short circuit of throttle position sensor 2.
Judge NG when out of the standard value.

2. COMPONENT DESCRIPTION

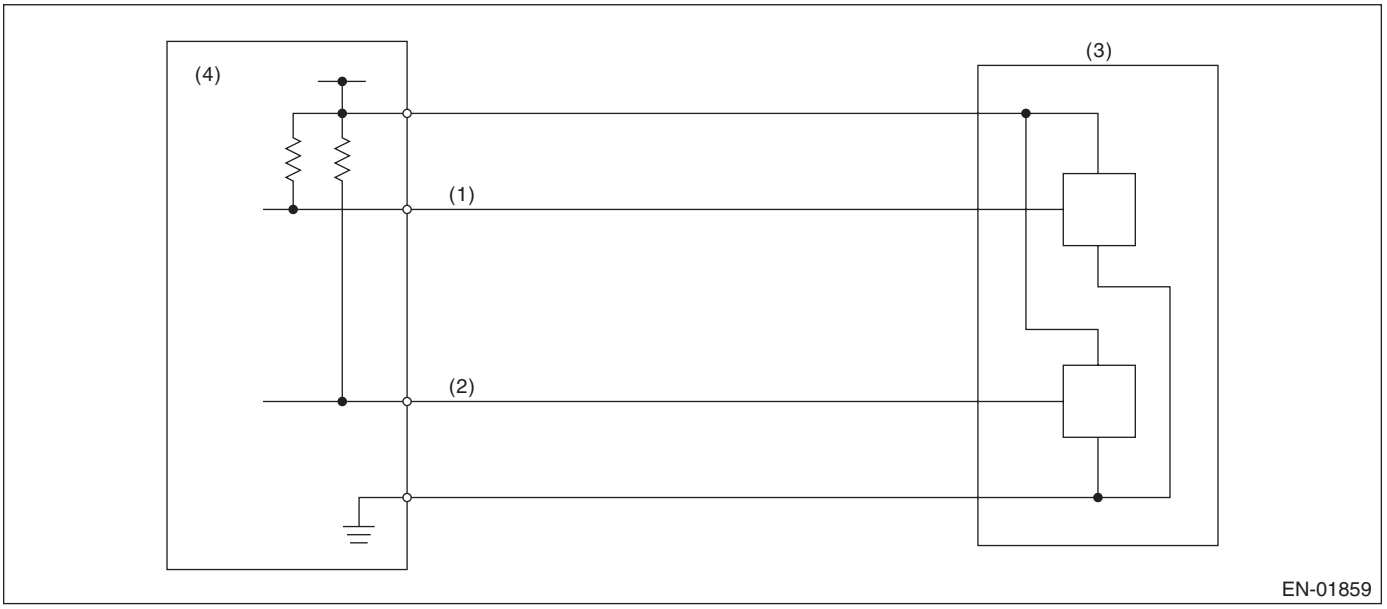

(1) Throttle position sensor 1 signal
(2) Throttle position sensor 2 signal
(3) Throttle position sensor
(4) Engine control module (ECM)

3. ENABLE CONDITION

Secondary Parameters	Enable Conditions
Ignition switch	ON

4. GENERAL DRIVING CYCLE

Always perform the diagnosis continuously.

5. DIAGNOSTIC METHOD

Judge OK and clear the NG when the malfunction criteria below are completed.
Judgment Value

Malfunction Criteria	Threshold Value
Sensor 1 input voltage	〉0.749 V

Time Needed for Diagnosis: 24 milliseconds
Malfunction Indicator Light Illumination: Illuminates as soon as malfunction occurs.

6. DTC CLEAR CONDITION

- When the OK idling cycle was completed 40 times in a row
- When “Clear Memory” was performed (Only with engine stopped)

7. MALFUNCTION INDICATOR LIGHT CLEAR CONDITION

- When the OK driving cycle was completed 3 times in a row
- When “Clear Memory” was performed (Only with engine stopped)

8. FAIL SAFE

Stop power distribution to electronic throttle control motor. (Throttle opening is fixed to 6°.)

9. ECM OPERATION AT DTC SETTING

Memorize the freeze frame data. (For test mode $02)

AK:DTC P0223 THROTTLE/PEDAL POSITION SENSOR/SWITCH “B” CIRCUIT HIGH INPUT

1. OUTLINE OF DIAGNOSIS

Detect the open or short circuit of throttle position sensor 2.
Judge NG when out of the standard value.

2. COMPONENT DESCRIPTION

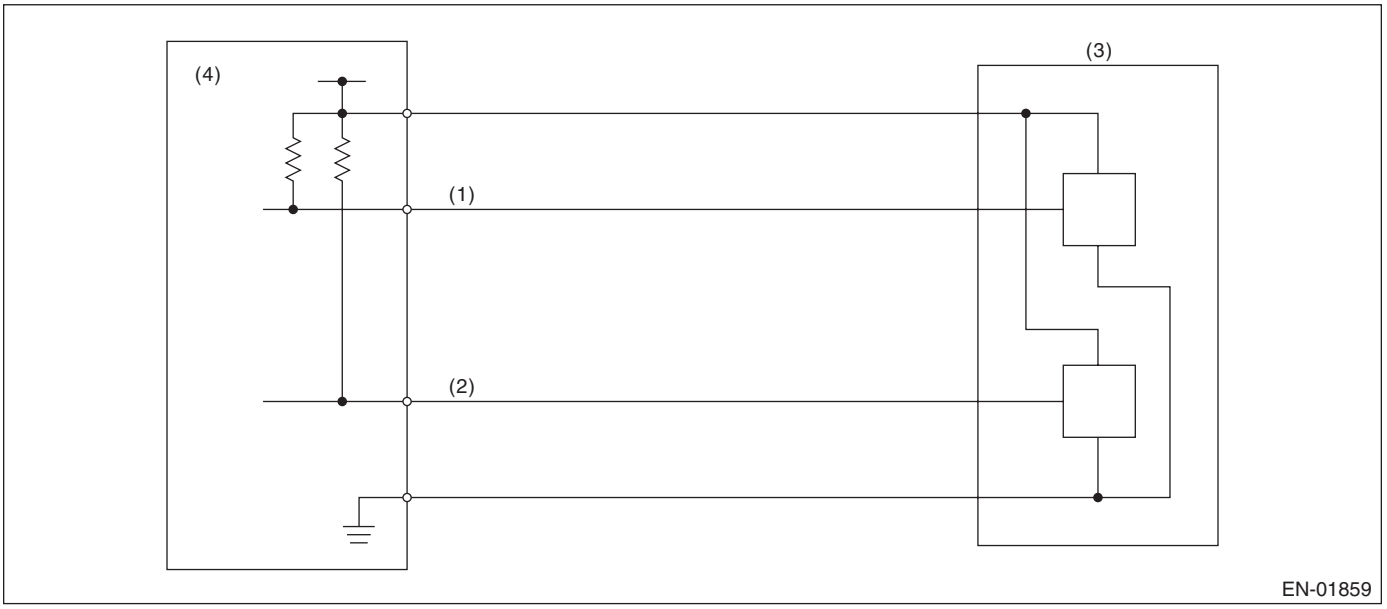

(1) Throttle position sensor 1 signal
(2) Throttle position sensor 2 signal
(3) Throttle position sensor
(4) Engine control module (ECM)

3. ENABLE CONDITION

Secondary Parameters	Enable Conditions
Ignition switch	ON

4. GENERAL DRIVING CYCLE

Always perform the diagnosis continuously.

5. DIAGNOSTIC METHOD

Judge OK and clear the NG when the malfunction criteria below are completed.
Judgment Value

Malfunction Criteria	Threshold Value
Sensor 1 input voltage	< 4.747 V

Time Needed for Diagnosis: 24 milliseconds
Malfunction Indicator Light Illumination: Illuminates as soon as malfunction occurs.

6. DTC CLEAR CONDITION

- When the OK idling cycle was completed 40 times in a row
- When “Clear Memory” was performed (Only with engine stopped)

7. MALFUNCTION INDICATOR LIGHT CLEAR CONDITION

- When the OK driving cycle was completed 3 times in a row
- When “Clear Memory” was performed (Only with engine stopped)

8. FAIL SAFE

Stop power distribution to electronic throttle control motor. (Throttle opening is fixed to 6°.)

9. ECM OPERATION AT DTC SETTING

Memorize the freeze frame data. (For test mode $02)

AL:DTC P0230 FUEL PUMP PRIMARY CIRCUIT

1. OUTLINE OF DIAGNOSIS

Detect the malfunction of fuel pump control unit. Judge NG when the NG signal is sent through a diagnostic line coming from the fuel pump control unit. Fuel pump control unit detects the open or short circuit malfunction for each line, and then sends NG signals if one of them is found NG.

2. COMPONENT DESCRIPTION

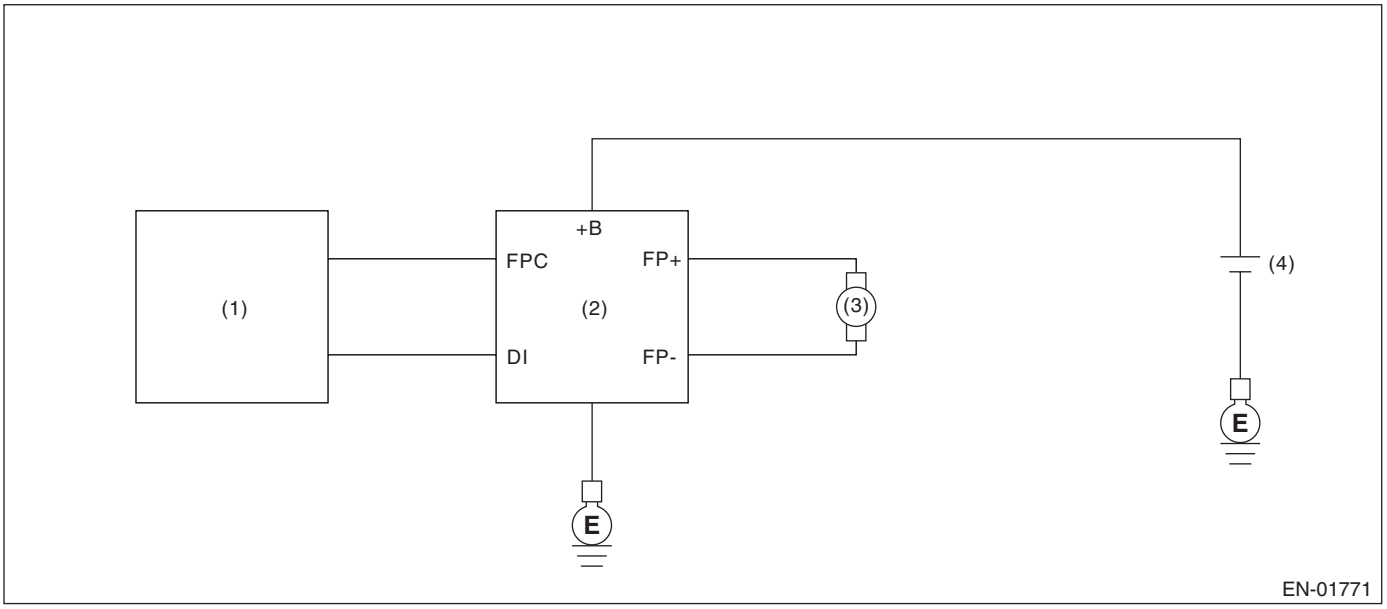

(1) Engine control module (ECM)
(2) Fuel pump control unit
(3) Fuel pump
(4) Battery

3. ENABLE CONDITION

Secondary Parameters	Enable Conditions
None	

4. GENERAL DRIVING CYCLE

Always perform the diagnosis continuously.

5. DIAGNOSTIC METHOD

• Abnormality Judgment

Judge NG when the continuous time of completing the malfunction criteria below becomes more than 2.5 seconds.

Judgment Value

Malfunction Criteria	Threshold Value
Battery voltage	≥ 8 V
After starting engine	180 seconds or more
Fuel pump control	ON
Fuel pump control unit output diagnosis signal	Low
Fuel level	≥ 10 ℓ (2.64 US gal, 2.2 Imp gal)

Time Needed for Diagnosis: 2.5 seconds
Malfunction Indicator Light Illumination: Illuminates when malfunction occurs in 2 continuous driving cycles.

• Normality Judgment

Judge OK and clear the NG when the malfunction criteria below are completed.

Judgment Value

Malfunction Criteria	Threshold Value
Battery voltage	≥ 8 V
After starting engine	1 second or more
Fuel pump control	ON
Fuel pump control unit output diagnosis signal	High
Fuel level	≥ 10 ℓ (2.64 US gal, 2.2 Imp gal)

6. DTC CLEAR CONDITION

- When the OK idling cycle was completed 40 times in a row
- When “Clear Memory” was performed

7. MALFUNCTION INDICATOR LIGHT CLEAR CONDITION

- When the OK driving cycle was completed 3 times in a row
- When “Clear Memory” was performed

8. FAIL SAFE

OFF setting may be needed depending on the NG portion.

9. ECM OPERATION AT DTC SETTING

Memorize the freeze frame data. (For test mode $02)

AM:DTC P0244 TURBO/SUPER CHARGER WASTEGATE SOLENOID "A" RANGE/PERFORMANCE

1. OUTLINE OF DIAGNOSIS

Detect the malfunction of wastegate control solenoid valve function. Judge NG when becoming high wastegate pressure.

2. COMPONENT DESCRIPTION

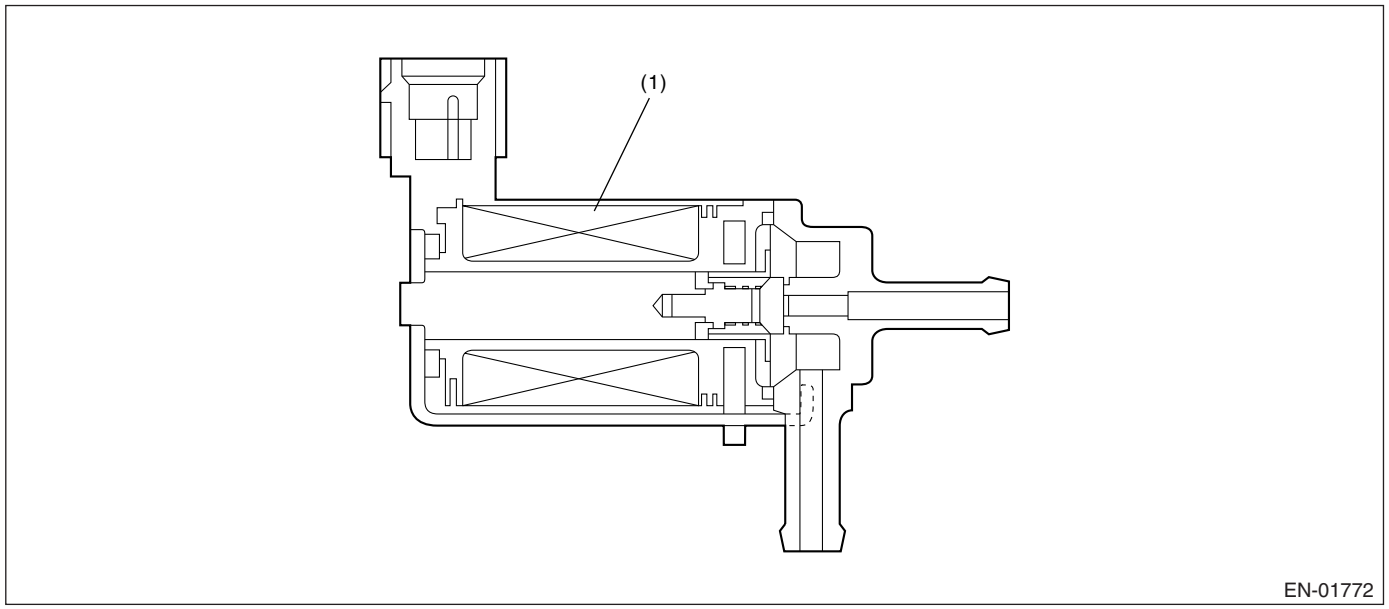

(1) Coil

3. ENABLE CONDITION

Secondary Parameters	Enable Conditions
None	

4. GENERAL DRIVING CYCLE

Always perform the diagnosis continuously.

5. DIAGNOSTIC METHOD

• Abnormality Judgment

Judge NG when the continuous time of completing the malfunction criteria below becomes more than 1 second.

Judgment Value

Malfunction Criteria	Threshold Value
Intake manifold pressure	≥ Map 10

Map 10

Atmosphere pressure (kPa (mmHg, inHg))	56.7 (440,17.3)	67.2 (504, 19.8)	75.7 (568, 22.4)	84.3 (632, 24.9)	92.8 (696, 27.4)	101.3 (760, 29.9)
Abnormal threshold (kPa (mmHg, inHg))	160.9 (1207, 47.5)	173.4 (1301, 51.2)	185.8 (1394, 54.9)	198.4 (1488, 58.6)	210.7 (1581, 62.2)	221.3 (1660, 65.4)
Normal threshold (kPa (mmHg, inHg))	138.5 (1039, 40.9)	151.0 (1133, 44.6)	163.4 (1226, 48.3)	176.0 (1320, 52.0)	188.4 (1413, 55.6)	198.9 (1492, 58.7)

Time Needed for Diagnosis: 1 second

Malfunction Indicator Light Illumination: Illuminates as soon as malfunction occurs.

• Normality Judgment

Judge OK and clear the NG when the malfunction criteria below are completed.

Judgment Value

Malfunction Criteria	Threshold Value
Intake manifold pressure	〈 Map 10

6. DTC CLEAR CONDITION

- When the OK idling cycle was completed 40 times in a row
- When “Clear Memory” was performed

7. MALFUNCTION INDICATOR LIGHT CLEAR CONDITION

- When the OK driving cycle was completed 3 times in a row
- When “Clear Memory” was performed

8. FAIL SAFE

None

9. ECM OPERATION AT DTC SETTING

Memorize the freeze frame data. (For test mode $02)

AN:DTC P0245 TURBO/SUPER CHARGER WASTEGATE SOLENOID “A” LOW

1. OUTLINE OF DIAGNOSIS

Detect the open or short circuit of wastegate control solenoid valve. Judge NG when the terminal output voltage remains Low during outputting the duty signal.

2. COMPONENT DESCRIPTION

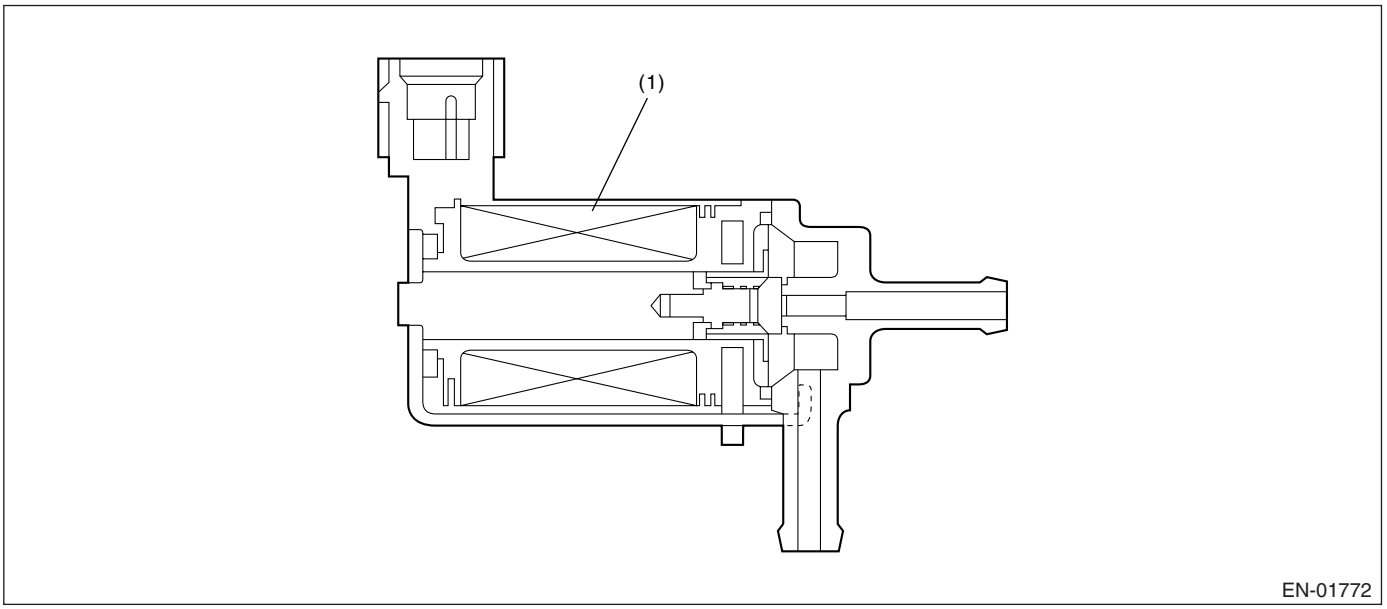

(1) Coil

3. ENABLE CONDITION

Secondary Parameters	Enable Conditions
Battery voltage	〉10.9 V
After starting engine	1 second or more

4. GENERAL DRIVING CYCLE

Perform the diagnosis continuously after starting the engine.

5. DIAGNOSTIC METHOD

• Abnormality Judgment

Judge NG when the continuous time until completing the malfunction criteria below becomes more than 655 milliseconds.

Judgment Value

Malfunction Criteria	Threshold Value
Terminal output voltage	Low
Duty ratio for turbocharged pressure control	〈 75%

Time Needed for Diagnosis: 655 milliseconds
Malfunction Indicator Light Illumination: Illuminates as soon as the malfunction occurs.

• Normality Judgment

Judge OK and clear the NG when the malfunction criteria below are completed.

Judgment Value

Malfunction Criteria	Threshold Value
Terminal output voltage	High

6. DTC CLEAR CONDITION

- When the OK idling cycle was completed 40 times in a row
- When “Clear Memory” was performed

7. MALFUNCTION INDICATOR LIGHT CLEAR CONDITION

- When the OK driving cycle was completed 3 times in a row
- When “Clear Memory” was performed

8. FAIL SAFE

None

9. ECM OPERATION AT DTC SETTING

Memorize the freeze frame data. (For test mode $02)

AO:DTC P0246 TURBO/SUPER CHARGER WASTEGATE SOLENOID “A” HIGH

1. OUTLINE OF DIAGNOSIS

Detect the open or short circuit of wastegate control solenoid valve. Judge NG when the terminal output voltage remains Low or High during outputting the duty signal.

2. COMPONENT DESCRIPTION

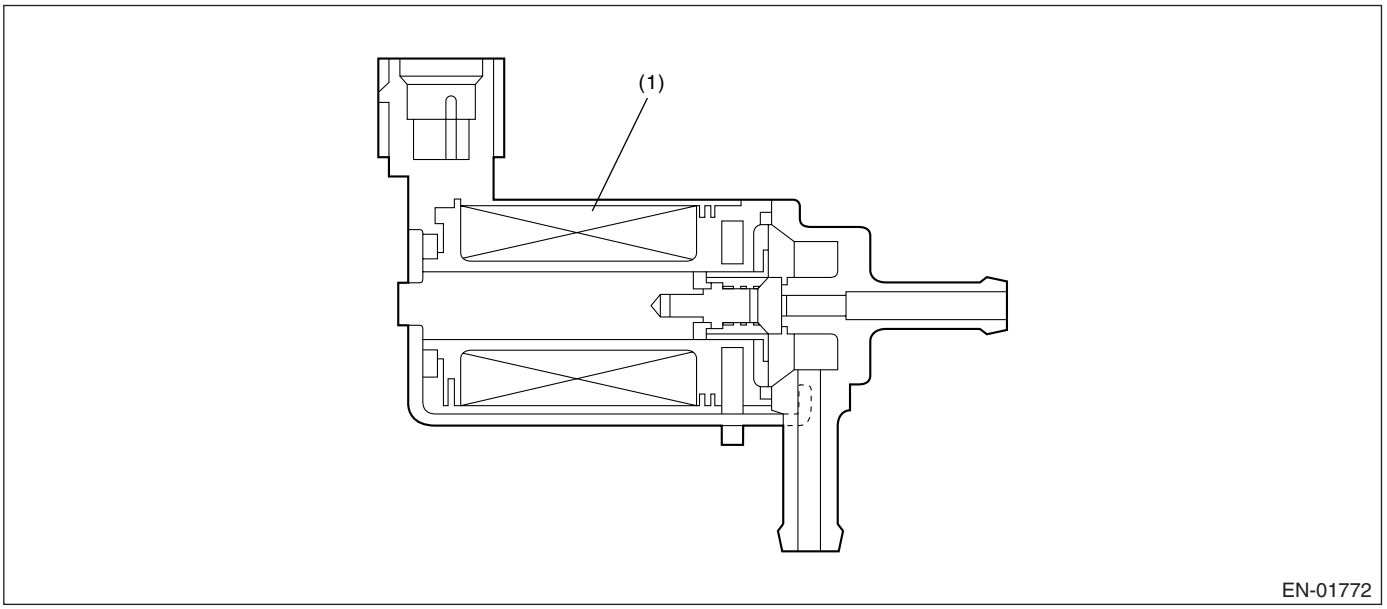

(1) Coil

3. ENABLE CONDITION

Secondary Parameters	Enable Conditions
Battery voltage	〉10.9 V
After starting engine	1 second or more

4. GENERAL DRIVING CYCLE

Perform the diagnosis continuously after starting the engine.

5. DIAGNOSTIC METHOD

• Abnormality Judgment

Judge NG when the continuous time until completing the malfunction criteria below becomes more than 655 milliseconds.

Judgment Value

Malfunction Criteria	Threshold Value
Terminal output voltage	High
Duty ratio for turbocharged pressure control	〉25%

Time Needed for Diagnosis: 655 milliseconds
Malfunction Indicator Light Illumination: Illuminates as soon as the malfunction occurs.

• Normality Judgment

Judge OK and clear the NG when the malfunction criteria below are completed.

Judgment Value

Malfunction Criteria	Threshold Value
Terminal output voltage	Low

6. DTC CLEAR CONDITION

- When the OK idling cycle was completed 40 times in a row
- When “Clear Memory” was performed

7. MALFUNCTION INDICATOR LIGHT CLEAR CONDITION

- When the OK driving cycle was completed 3 times in a row
- When “Clear Memory” was performed

8. FAIL SAFE

None

9. ECM OPERATION AT DTC SETTING

Memorize the freeze frame data. (For test mode $02)

AP:DTC P0301 CYLINDER 1 MISFIRE DETECTED

1. OUTLINE OF DIAGNOSIS

Detect whether the misfire occurred or not. (Revolution fluctuation method) Monitoring the misfire which influences exhaust deterioration (1.5 times of FTP) and catalyst damage is made obligatory by the law. Misfire affecting these two has three patterns below.

- Intermittent misfire (The same cylinder misfires in random, or different cylinders misfire in random.): FTP 1.5 times misfire
- Every time misfire (The same cylinder misfires every time.): FTP 1.5 times misfire, Catalyst damage misfire

The following detecting methods are adopted for these detection.

1) Intermittent misfire: FTP 1.5 times misfire
- 180° Interval Difference Method (MT: 1,800 rpm or less; AT: None)
- 360° Interval Difference Method (whole range)
- 720° Interval Difference Method (3,000 rpm or less)

2) Every time misfire: FTP 1.5 times misfire, Catalyst damage misfire
- 360° Interval Difference Method

2. ENABLE CONDITION

Secondary Parameters	Enable Conditions
Continuous time for completing all secondary parameters	≥ 1 second
Intake manifold pressure change during 0.5 engine rev.	< 16.0 kPa (120 mmHg, 4.72 inHg) (MT) < 14.7 kPa (110 mmHg, 4.33 inHg) (AT)
Engine speed change	< 1000 rpm/32 milliseconds
Throttle position change during 16 milliseconds	< 14°
Fuel shut-off function	Not in operation
Atmospheric pressure	≥ 75.1 kPa (563 mmHg, 22.2 inHg)
Fuel level	≥ 9.6 ℓ (2.54 US gal, 2.11 Imp gal)
VDC and AT control	Not in operation
Evaporative system check	Not in operation
Engine speed	450 — 6700 rpm
Intake manifold pressure	> Map 3 or more
Battery voltage	≥ 8 V

Map3
- MT (Tumble generator valve open)

Vehicle Speed < 64.4 km/h (40 MPH)

rpm	700	1000	1500	2000	2500	3000	3500	4000	4500	5000	5500	6000	6500	6700
kPa (mmHg, inHg)	25.1 (188, 7.40)	24.8 (186, 7.32)	25.6 (192, 7.56)	23.3 (175, 6.89)	26.3 (197, 7.76)	25.9 (194, 7.64)	28.9 (216.5, 8.52)	30.0 (225, 8.86)	31.7 (237.5, 9.35)	33.1 (248, 9.76)	37.1 (278.5, 10.96)	41.9 (314, 12.36)	47.0 (352.5, 13.88)	51.1 (383, 15.08)

Vehicle Speed ≥ 64.4 km/h (40 MPH)

rpm	700	1000	1500	2000	2500	3000	3500	4000	4500	5000	5500	6000	6500	6700
kPa (mmHg, inHg)	25.5 (191, 7.52)	25.1 (188, 7.40)	30.4 (227.7, 8.96)	35.6 (267.4, 10.52)	38.5 (288.9, 11.37)	40.4 (302.9, 11.93)	41.1 (308.6, 12.15)	40.8 (306, 12.05)	44.8 (335.8, 13.22)	47.3 (354.5, 13.96)	49.1 (368.2, 14.50)	50.9 (381.9, 15.04)	52.8 (396, 15.59)	52.8 (396, 15.59)

- AT (Tumble generator valve open)

rpm	700	1000	1500	2000	2500	3000	3500	4000	4500	5000	5500	6000	6500	6700
kPa (mmHg, inHg)	26.3 (197, 7.76)	24.7 (185, 7.28)	23.6 (177, 6.97)	25.5 (191, 7.52)	27.3 (205, 8.07)	26.1 (196, 7.72)	29.5 (221.5, 8.72)	31.3 (235, 9.25)	32.7 (245.5, 9.67)	34.1 (256, 10.08)	38.2 (286.5, 11.28)	33.6 (252.3, 9.93)	49.5 (371.5, 14.63)	51.5 (386, 15.20)

3. GENERAL DRIVING CYCLE

- Detecting misfire is able to be carried out in the condition between idling and high revolution.
- Perform the diagnosis continuously.

4. DIAGNOSTIC METHOD

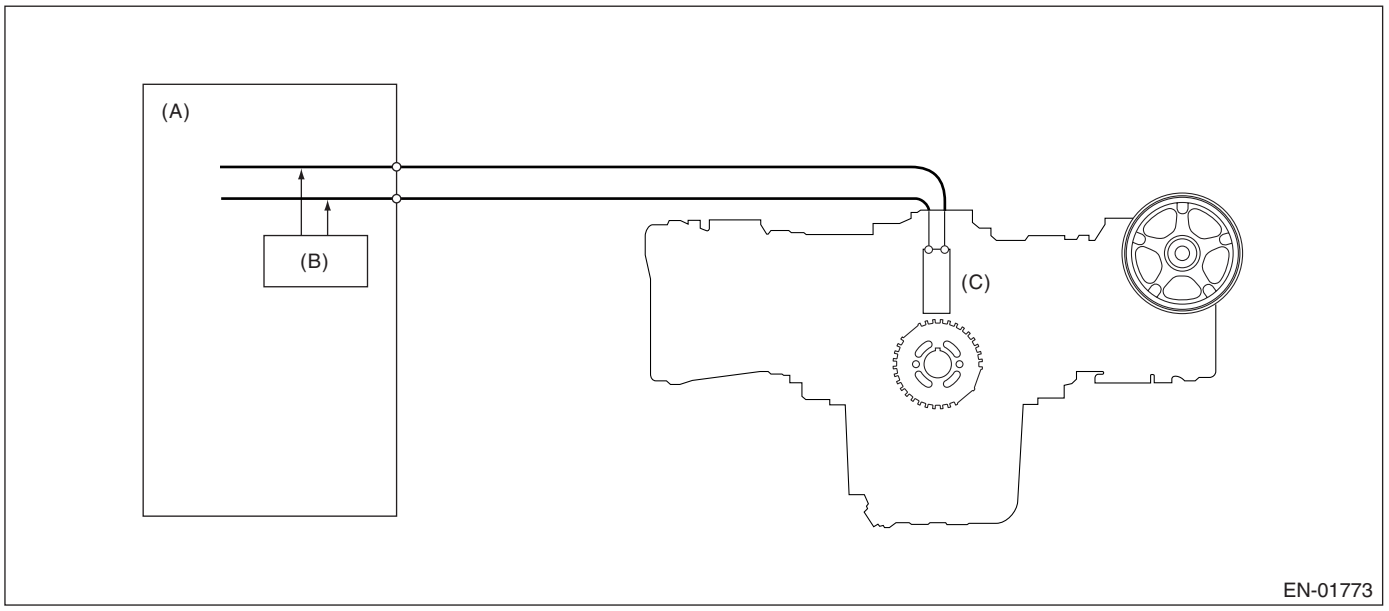

(A) Engine control module (ECM) (B) Diagnosis circuit (C) Crankshaft position sensor

When the misfire occurred, the engine speed is decreased and the crankshaft position speed will change. Calculate the interval difference value (diagnostic value) from crankshaft position speed by the following formula, and judge whether the misfire occurs or not comparing the calculated result with judgment value. Counting the number of misfire up, and if the misfire ratio is higher during 1000 rev. or 200 rev., judge NG for the corresponding cylinder.

Calculate the diagnostic value (from crankshaft position speed) → Misfire detection every single ignition (Compare diagnostic value with judgment value)
- 180° Interval Difference Method
- 360° Interval Difference Method
- 720° Interval Difference Method

→ NG judgment (Judge misfire occurrence required by the law) (Compare number of misfire with judgment)
- FTP1.5 times misfire NG judgment
- Catalyst damage misfire NG judgment

As the following figure, pick out a random cylinder as the standard and name it omg 0. And the former crankshaft position speed is named omg 1, the second former crankshaft position speed is named omg 2, the third is named omg 3, and the following is the same.

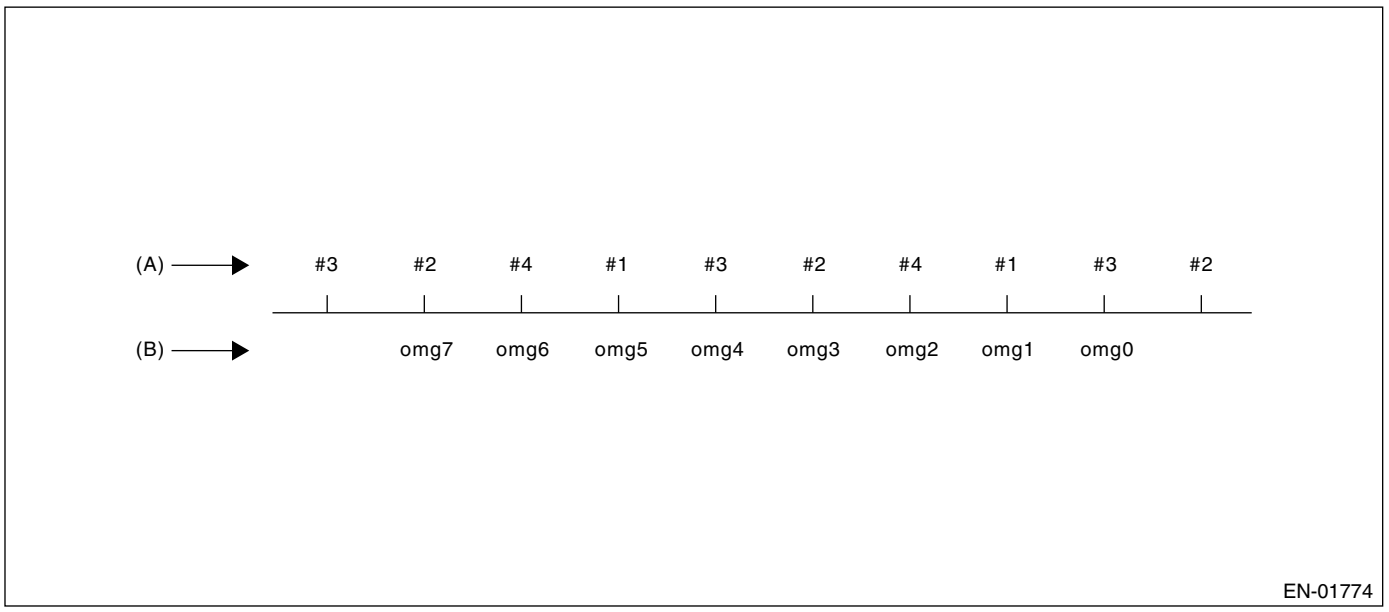

(A) Ignition order (B) Crankshaft position speed

• 180° Interval Difference Method

Diagnosis value domg 180 = (omg –1 omg 0) – (omg 7 – omg 1)/6

Judge misfire occurs in the following cases.

- domg 180 > judgment value of positive side
- domg 180 ≤ judgment value of negative side

(judgment value before 180°CA)

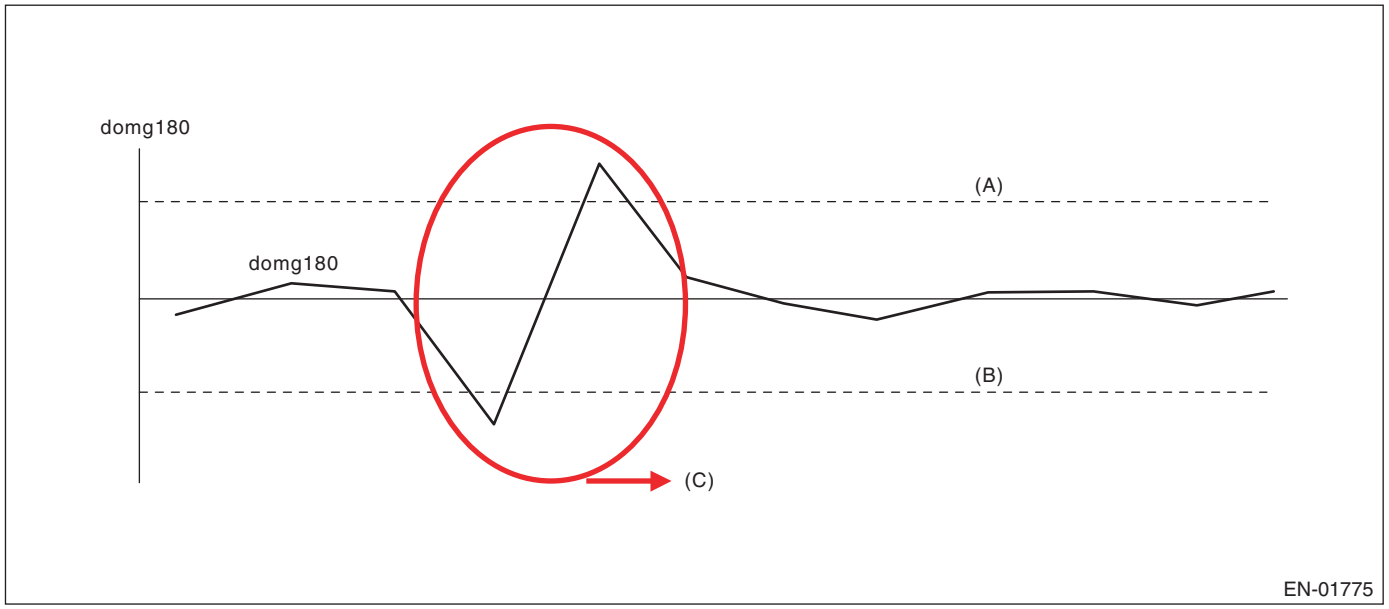

(A) Threshold value (positive judged value) (B) Threshold value (negative judged value) (C) Judged as misfire

• 360° Interval Difference Method

Diagnosis value	domg 360 = (omg 1 – omg 0) – (omg 4 – omg 3)		
Misfire judgment	domg 360 > judgment value	→	Misfire occurs

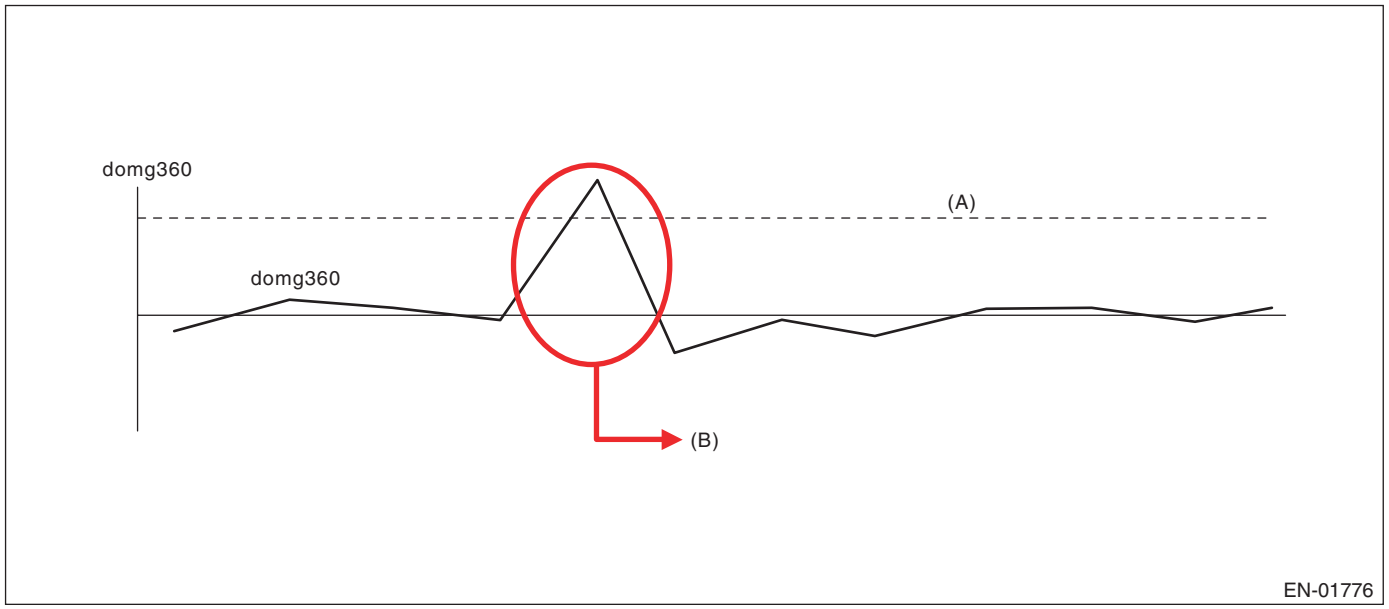

(A) Threshold value (B) Judged as misfire

• 720° Interval Difference Method

Diagnosis value	domg 720 = (omg 1 – omg 0) – (omg 7 – omg 6)		
Misfire judgment	domg 720 > judgment value	→	Misfire occurs

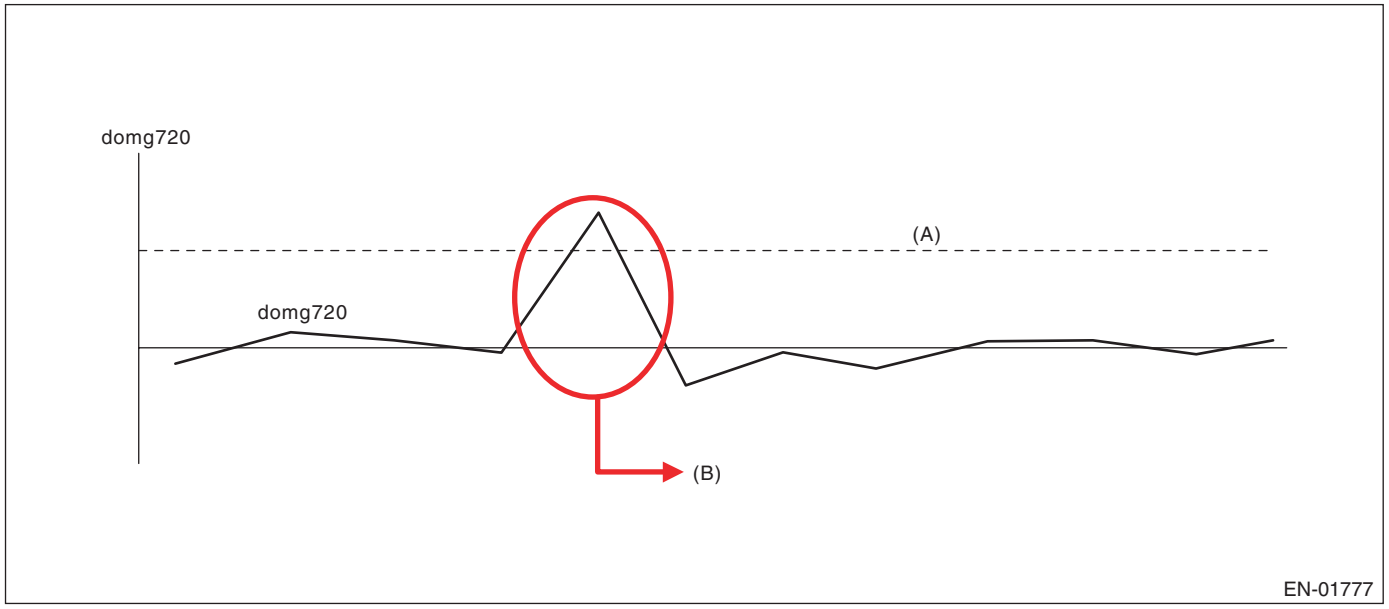

(A) Threshold value (B) Judged as misfire

• FTP 1.5 times misfire (Misfire occurrence level affecting exhaust gas)

Judgment Value (Judge that malfunction occurs when the misfire ratio is high in 1000 engine revs.)

Malfunction Criteria	Threshold Value
FTP emission judgment value	〉1.0% in 1000 revs.

Time Needed for Diagnosis: 1000 engine revs.
Malfunction Indicator Light Illumination: Illuminates when malfunction occurs in 2 continuous driving cycles.

• Catalyst damage misfire (Misfire occurrence level damaging catalyst)

Judgment Value (Judge that malfunction occurs when the misfire ratio is high in 200 engine revs. (400 ignitions))

Malfunction Criteria	Threshold Value
Catalyst damage misfire judgment value	See Map 1

Map 1 Fault criteria threshold for misfire which would result in catalyst damage

Percentage		Intake Air (g (oz)/rev.)									
		0.16 (0.006)	0.28 (0.010)	0.4 (0.014)	0.52 (0.018)	0.64 (0.023)	0.76 (0.027)	0.92 (0.032)	1.1 (0.039)	1.2 (0.042)	1.3 (0.046)
Engine speed (rpm)	1000	37.0	32.0	28.5	26.0	23.0	21.3	21.3	—	—	—
	1500	35.0	29.5	25.5	22.5	21.3	21.3	21.3	18.0	—	—
	2000	32.0	22.5	22.5	18.3	14.5	10.8	10.0	9.0	8.0	5.0
	2500	29.0	21.8	14.3	11.3	9.8	9.0	8.5	8.0	7.5	5.0
	3000	27.0	21.8	14.5	9.8	9.0	9.0	8.0	7.5	7.0	5.0
	3500	24.5	18.5	10.8	6.8	5.8	5.5	5.0	5.0	5.0	5.0
	4000	—	15.3	10.0	6.8	5.5	5.0	5.0	5.0	5.0	5.0
	4500	—	13.8	8.5	6.3	5.0	5.0	5.0	5.0	5.0	—
	5000	—	13.8	8.5	5.8	5.0	5.0	5.0	5.0	5.0	—
	5500	—	13.5	8.3	5.5	5.0	5.0	5.0	5.0	5.0	—
	6000	—	13.0	8.0	5.3	5.0	5.0	5.0	5.0	5.0	—
	6500	—	12.5	7.5	5.0	5.0	5.0	5.0	5.0	—	—
	6700	—	12.3	7.3	5.0	5.0	5.0	5.0	5.0	—	—

These figures mean the misfire ratio (%) in 400 ignitions; for example, 22.5 (%) means 400 (ignition) × 22.5 (%) = 90 (ignition) or more, so this case is judged misfire.
Time Needed for Diagnosis: 200 engine revs.
Malfunction Indicator Light Illumination: Illuminates as soon as the malfunction occurs.

5. DTC CLEAR CONDITION

- When the OK idling cycle was completed 40 times in a row
- When “Clear Memory” was performed

6. MALFUNCTION INDICATOR LIGHT CLEAR CONDITION

- When the OK driving cycle was completed 3 consecutive times.
- When “Clear Memory” was performed

7. FAIL SAFE

None

8. ECM OPERATION AT DTC SETTING

Memorize the freeze frame data. (For test mode $02)

AQ:DTC P0302 CYLINDER 2 MISFIRE DETECTED

1. OUTLINE OF DIAGNOSIS

For the detecting criteria, refer to DTC P0301. <Ref. to GD(H4DOTC)-97, DTC P0301 CYLINDER 1 MISFIRE DETECTED, Diagnostic Trouble Code (DTC) Detecting Criteria.>

AR:DTC P0303 CYLINDER 3 MISFIRE DETECTED

1. OUTLINE OF DIAGNOSIS

For the detecting criteria, refer to DTC P0301. <Ref. to GD(H4DOTC)-97, DTC P0301 CYLINDER 1 MISFIRE DETECTED, Diagnostic Trouble Code (DTC) Detecting Criteria.>

AS:DTC P0304 CYLINDER 4 MISFIRE DETECTED

1. OUTLINE OF DIAGNOSIS

For the detecting criteria, refer to DTC P0301. <Ref. to GD(H4DOTC)-97, DTC P0301 CYLINDER 1 MISFIRE DETECTED, Diagnostic Trouble Code (DTC) Detecting Criteria.>

AT:DTC P0327 KNOCK SENSOR 1 CIRCUIT LOW INPUT (BANK 1 OR SINGLE SENSOR)

1. OUTLINE OF DIAGNOSIS

Detect the open or short circuit of the knock sensor. Judge NG when out of the standard value.

2. COMPONENT DESCRIPTION

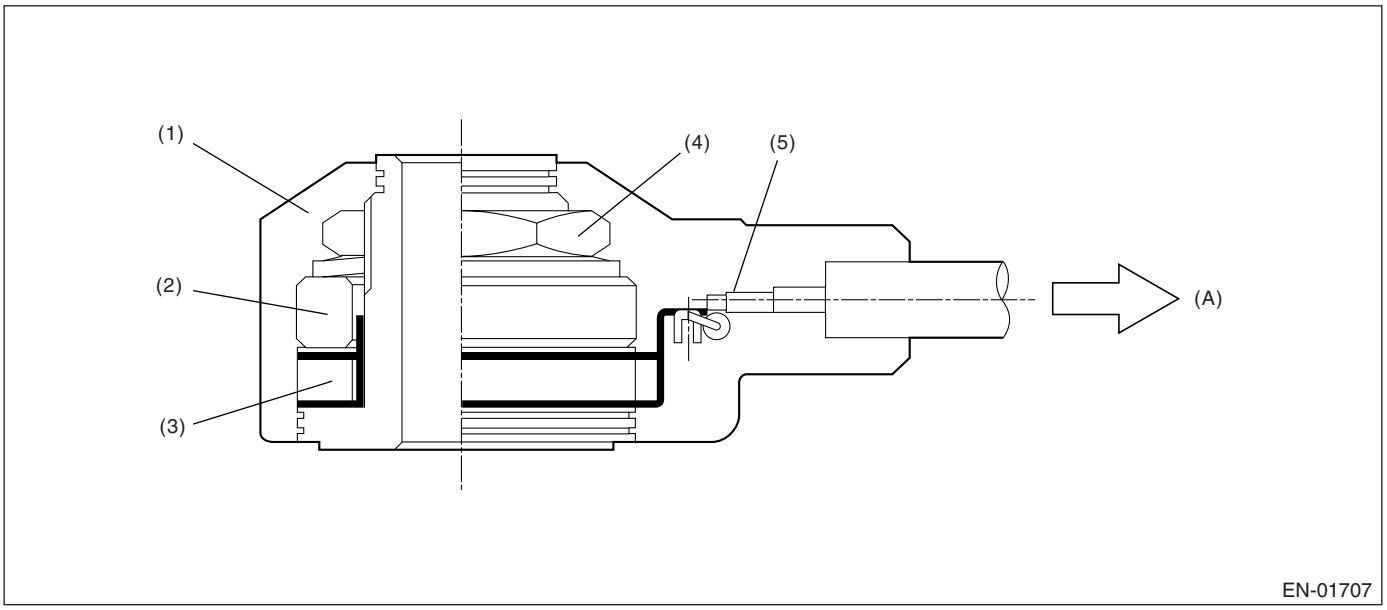

(1) Case
(2) Weight
(3) Piezoelectric element
(4) Nut
(5) Resistance
(A) To knock sensor harness

3. ENABLE CONDITION

Secondary Parameters	Enable Conditions
None	

4. GENERAL DRIVING CYCLE

Always perform the diagnosis continuously.

5. DIAGNOSTIC METHOD

• Abnormality Judgment

Judge NG when the continuous time of completing the malfunction criteria below becomes more than 1 second.

Judgment Value

Malfunction Criteria	Threshold Value
Output voltage	< 0.238 V
Ignition switch	ON

Time Needed for Diagnosis: 1 second
Malfunction Indicator Light Illumination: Illuminates as soon as the malfunction occurs.

• Normality Judgment

Judge OK and clear NG when the malfunction criteria below are completed.
Judgment Value

Malfunction Criteria	Threshold Value
Output voltage	≥ 0.238 V
Ignition switch	ON

6. DTC CLEAR CONDITION

- When the OK idling cycle was completed 40 times in a row
- When “Clear Memory” was performed

7. MALFUNCTION INDICATOR LIGHT CLEAR CONDITION

- When the OK driving cycle was completed 3 times in a row
- When “Clear Memory” was performed

8. FAIL SAFE

Knock compensation:
• Knock compensation final timing advance and retard value = knock compensation + whole learning compensation value + partial learning compensation value.
- At normal: knock compensation = 0°CA is fixed.
- At trouble: knock compensation = −5°CA. (Retard 5°CA.)
- Not allowed to update the whole learning compensation factor.
- Not allowed to calculate the partial learning zone compensation value.

9. ECM OPERATION AT DTC SETTING

Memorize the freeze frame data. (For test mode $02)

AU:DTC P0328 KNOCK SENSOR 1 CIRCUIT HIGH INPUT (BANK 1 OR SINGLE SENSOR)

1. OUTLINE OF DIAGNOSIS

Detect the open or short circuit of the knock sensor. Judge NG when out of the standard value.

2. COMPONENT DESCRIPTION

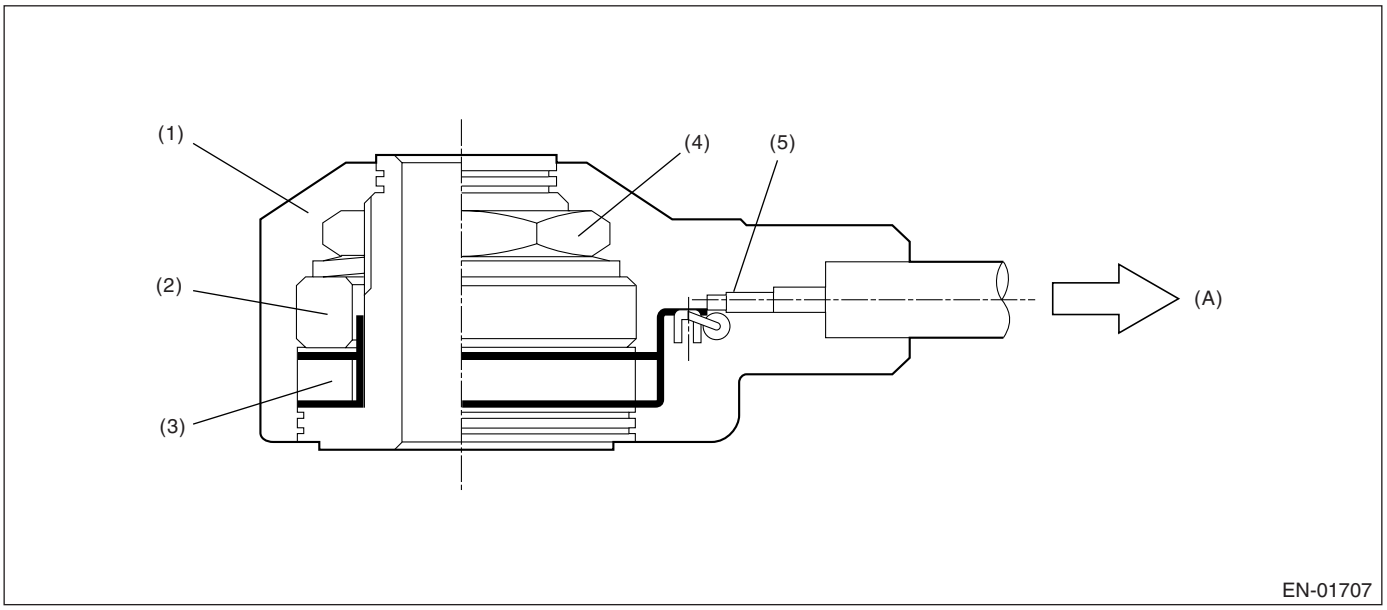

(1) Case
(2) Weight
(3) Piezoelectric element
(4) Nut
(5) Resistance
(A) To knock sensor harness

3. ENABLE CONDITION

Secondary Parameters	Enable Conditions
None	

4. GENERAL DRIVING CYCLE

Always perform diagnosis continuously.

5. DIAGNOSTIC METHOD

• Abnormality Judgment

Judge NG when the continuous time of completing the malfunction criteria below becomes more than 1 second.

Judgment Value

Malfunction Criteria	Threshold Value
Output voltage	≥ 4.714 V
Ignition switch	ON

Time Needed for Diagnosis: 1 second
Malfunction Indicator Light Illumination: Illuminates as soon as the malfunction occurs.

• Normality Judgment

Judge OK and clear NG when the malfunction criteria below are completed.

Judgment Value

Malfunction Criteria	Threshold Value
Output voltage	< 4.714 V
Ignition switch	ON

6. DTC CLEAR CONDITION

- When the OK idling cycle was completed 40 times in a row
- When “Clear Memory” was performed

7. MALFUNCTION INDICATOR LIGHT CLEAR CONDITION

- When the OK driving cycle was completed 3 times in a row
- When “Clear Memory” was performed

8. FAIL SAFE

Knock compensation:

- Knock compensation final timing advance and retard value = knock compensation + whole learning compensation value + partial learning compensation value.
- At normal: knock compensation = 0°CA is fixed.
- At trouble: knock compensation = −5°CA. (Retard 5°CA.)
- Not allowed to update the whole learning compensation factor.
- Not allowed to calculate the partial learning zone compensation value.

9. ECM OPERATION AT DTC SETTING

Memorize the freeze frame data. (For test mode $02)

AV:DTC P0335 CRANKSHAFT POSITION SENSOR “A” CIRCUIT

1. OUTLINE OF DIAGNOSIS

Detect the open or short circuit of crankshaft position sensor. Judge NG when the crankshaft signal does not input regardless of turning the starter.

2. COMPONENT DESCRIPTION

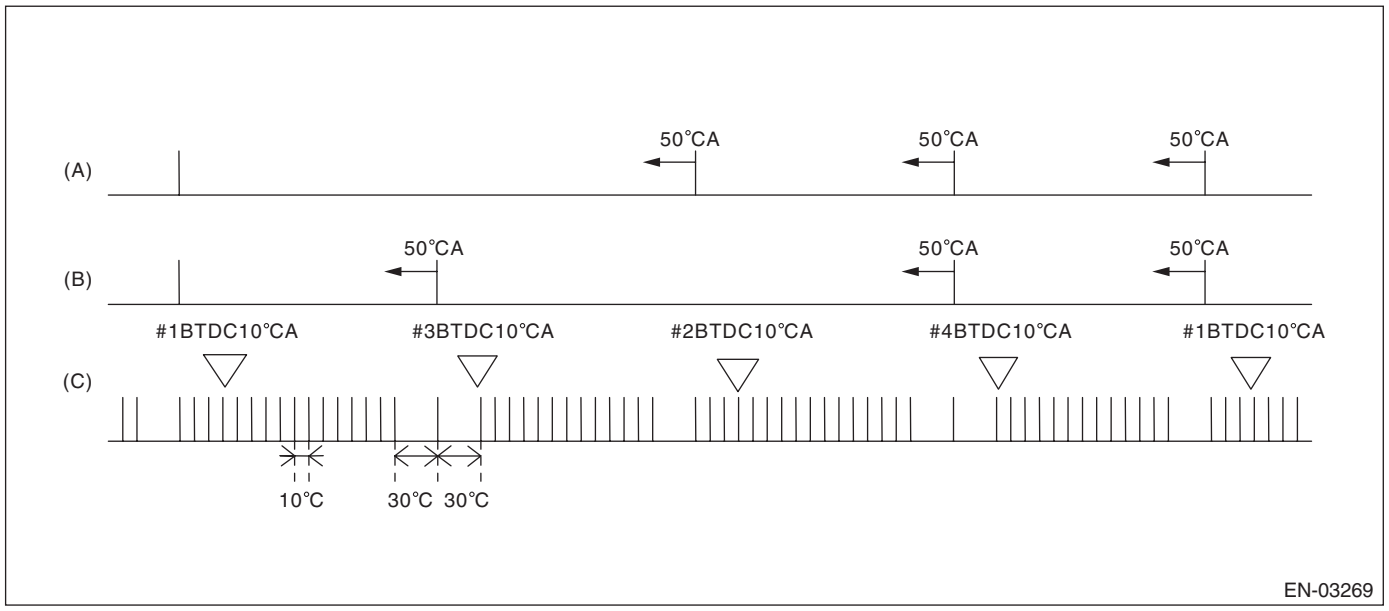

(A) Camshaft signal RH
(B) Camshaft signal LH
(C) Crankshaft signal

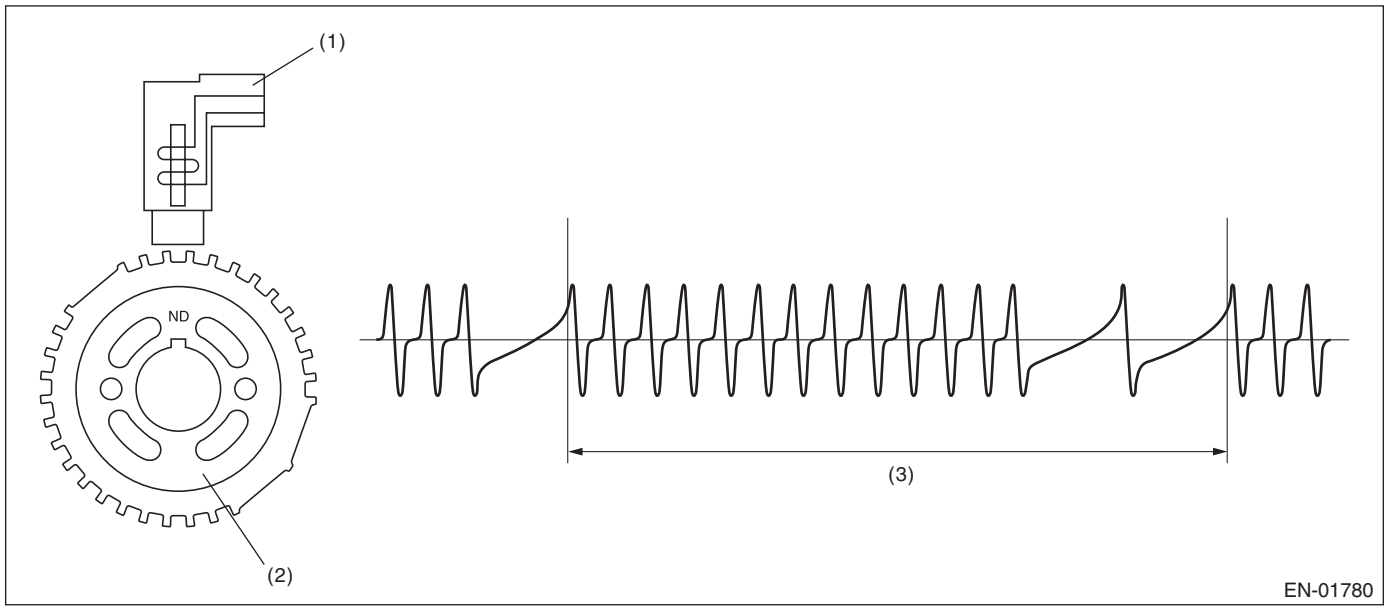

(1) Crankshaft position sensor
(2) Crank sprocket
(3) Crankshaft half-turn

3. ENABLE CONDITION

Secondary Parameters	Enable Conditions
None	

4. GENERAL DRIVING CYCLE

Always perform the diagnosis continuously.

5. DIAGNOSTIC METHOD

• Abnormality Judgment

Judge NG when the continuous time of completing the malfunction criteria below becomes more than 3 seconds.

Judgment Value

Malfunction Criteria	Threshold Value
Starter switch	ON
Crankshaft position sensor signal	Not detected
Battery voltage	≥ 8 V

Time Needed for Diagnosis: 3 seconds
Malfunction Indicator Light Illumination: Illuminates as soon as the malfunction occurs.

• Normality Judgment

Judge OK when the continuous time of completing the malfunction criteria below becomes more than 3 seconds.

Judgment Value

Malfunction Criteria	Threshold Value
Crankshaft position sensor signal	Input exists
Battery voltage	≥ 8 V

6. DTC CLEAR CONDITION

- When the OK idling cycle was completed 40 times in a row
- When “Clear Memory” was performed

7. MALFUNCTION INDICATOR LIGHT CLEAR CONDITION

- When the OK driving cycle was completed 3 times in a row
- When “Clear Memory” was performed

8. FAIL SAFE

None

9. ECM OPERATION AT DTC SETTING

Memorize the freeze frame data. (For test mode $02)

AW:DTC P0336 CRANKSHAFT POSITION SENSOR “A” CIRCUIT RANGE/PERFORMANCE

1. OUTLINE OF DIAGNOSIS

Detect the malfunction of crankshaft position sensor output property. Judge NG when the number of crankshaft signal every 1 revolution becomes abnormal.

2. COMPONENT DESCRIPTION

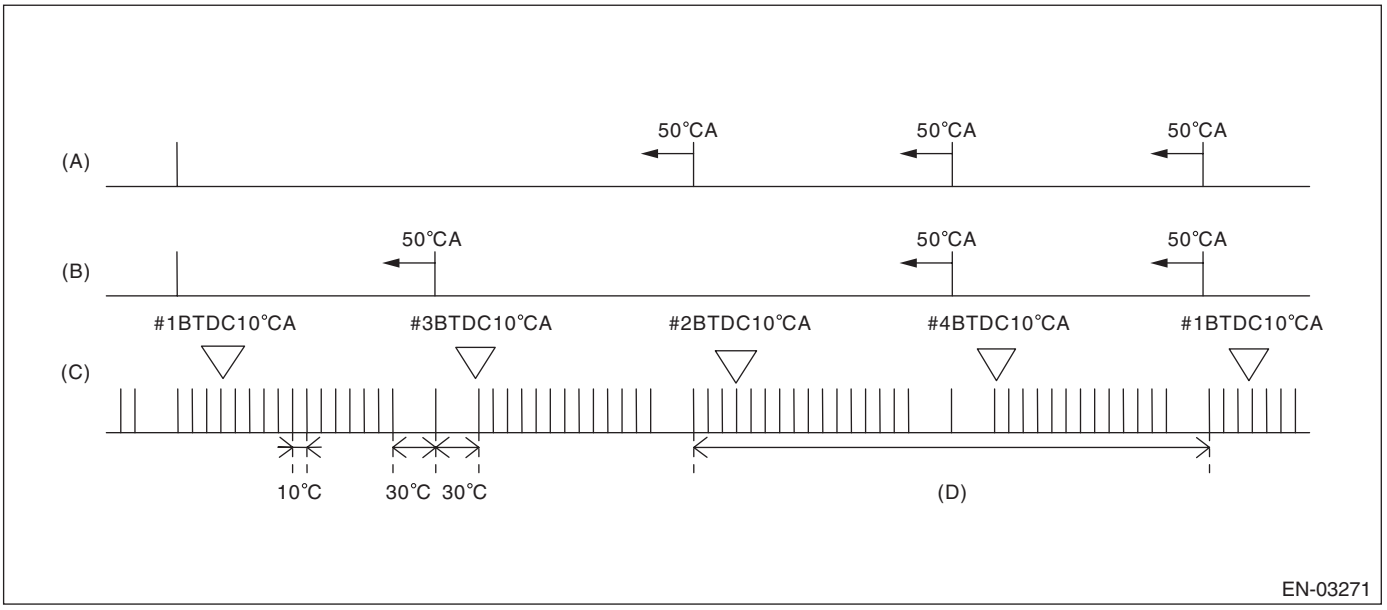

(A) Camshaft signal RH
(B) Camshaft signal LH
(C) Crankshaft signal
(D) Number of crankshaft signal = 30 is normal.

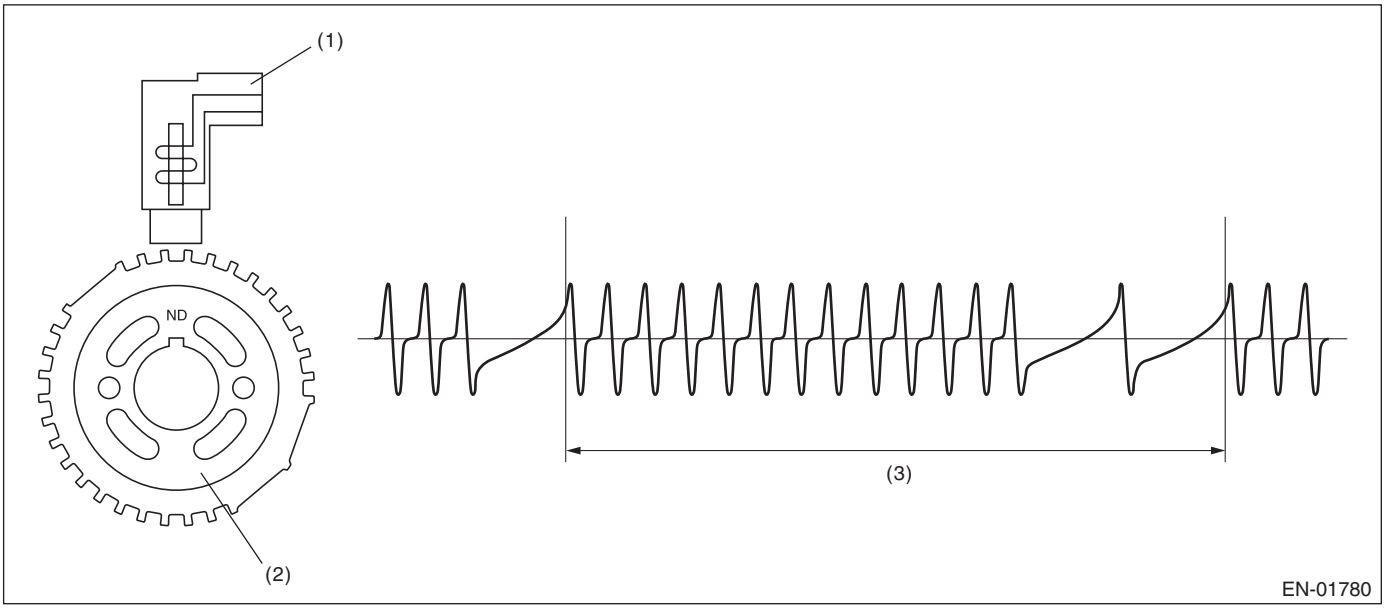

(1) Crankshaft position sensor
(2) Crank sprocket
(3) Crankshaft half-turn

3. ENABLE CONDITION

Secondary Parameters	Enable Conditions
Battery voltage	≥ 8 V
Engine speed	〈 3000 rpm

4. GENERAL DRIVING CYCLE

Perform the diagnosis continuously under 3000 rpm engine speed.

5. DIAGNOSTIC METHOD

• Abnormality Judgment

Judge NG when all the malfunction criteria below are completed more than 10 times in a row.
Judgment Value

Malfunction Criteria	Threshold Value
Cylinder number distinction	Completed
Amount of crank sensor signal during 1 rev.	Not = 30

Time Needed for Diagnosis: 10 engine revs.
Malfunction Indicator Light Illumination: Illuminates when malfunction occurs in 2 continuous driving cycles.

• Normality Judgment

Judge OK and clear the NG when the malfunction criteria below are completed.
Judgment Value

Malfunction Criteria	Threshold Value
Cylinder number distinction	Completed
Amount of crank sensor signal during 1 rev.	= 30

6. DTC CLEAR CONDITION

- When the OK idling cycle was completed 40 times in a row
- When “Clear Memory” was performed

7. MALFUNCTION INDICATOR LIGHT CLEAR CONDITION

- When the OK driving cycle was completed 3 times in a row
- When “Clear Memory” was performed

8. FAIL SAFE

None

9. ECM OPERATION AT DTC SETTING

Memorize the freeze frame data. (For test mode $02)

AX:DTC P0340 CAMSHAFT POSITION SENSOR “A” CIRCUIT (BANK 1 OR SINGLE SENSOR)

1. OUTLINE OF DIAGNOSIS

Detect the open or short circuit of camshaft position sensor. Judge NG when the number of camshaft signal remains to be abnormal.

2. COMPONENT DESCRIPTION

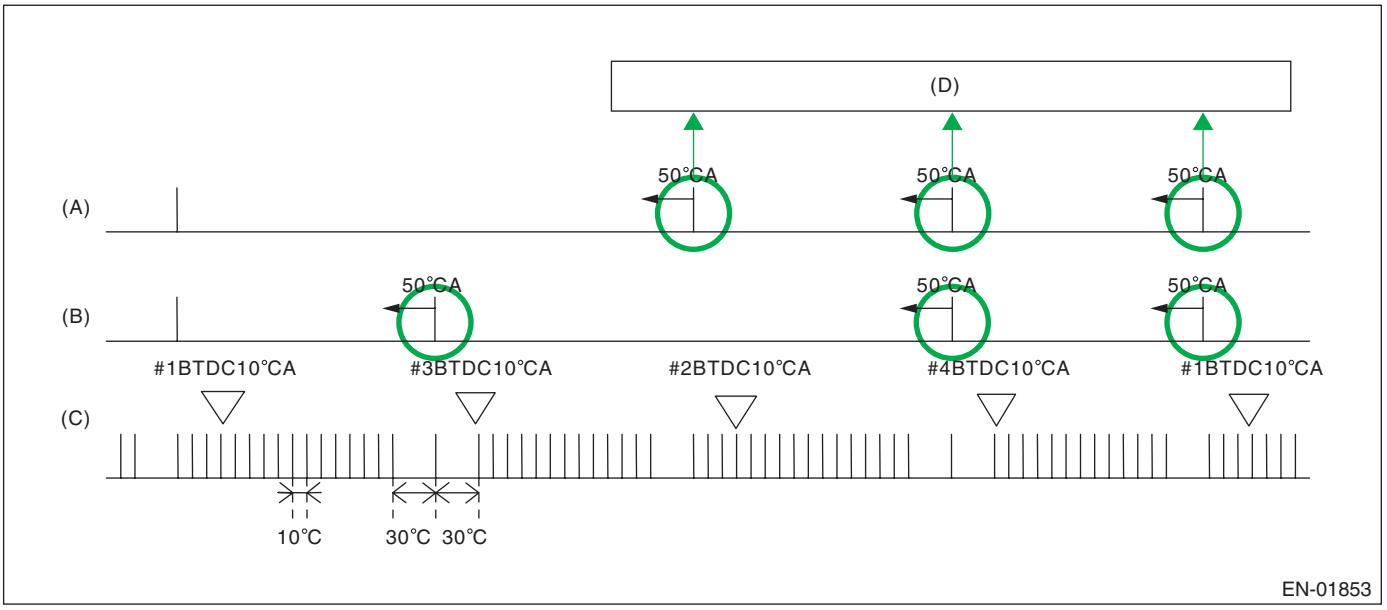

(A) Camshaft signal RH
(B) Camshaft signal LH
(C) Crankshaft signal
(D) Number of camshaft position signals = Receive camshaft position signal 3 times per tow engine revolutions.

3. ENABLE CONDITION

Secondary Parameters	Enable Conditions
Voltage	≥ 8 V
Engine speed	≥ 600 rpm

4. GENERAL DRIVING CYCLE

Always perform the diagnosis continuously.

5. DIAGNOSTIC METHOD

• Abnormality Judgment

The camshaft signal normally enters three times by two rev. of engine speed; however, judge NG when the camshaft signal does not enter three times continuously.
Judge NG when the malfunction criteria below are completed more than 100 rev. of engine speed. Judge OK and clear NG when the malfunction criteria below are not completed.

Judgment Value

Malfunction Criteria	Threshold Value
Number of camshaft sensor signal during 2 rev.	Except 3
Engine speed	≥ 600 rpm

Time Needed for Diagnosis: 100 rev.
Malfunction Indicator Light Illumination: Illuminates as soon as the malfunction occurs.

• Normality Judgment

Judge OK and clear the NG when the malfunction criteria below are completed.
Judgment Value

Malfunction Criteria	Threshold Value
Camshaft angle signal	Exists

6. DTC CLEAR CONDITION

- When the OK idling cycle was completed 40 times in a row
- When “Clear Memory” was performed

7. MALFUNCTION INDICATOR LIGHT CLEAR CONDITION

- When the OK driving cycle was completed 3 times in a row
- When “Clear Memory” was performed

8. FAIL SAFE

- Ignition timing whole learning compensation:
  – Enter the initial value (whole learning compensation factor = 0.5, Variable amount of whole learning compensation factor = 0.25) to the whole learning compensation factor and variable amount of whole learning compensation factor when IG OFF, and then make the whole learning incomplete.
  – Enter the initial value (whole learning compensation factor = 0.5, Variable amount of whole learning compensation factor = 0.25) to the whole learning compensation factor and variable amount of whole learning compensation factor when making a normality judgment from abnormality judgment, and then make the whole learning incomplete.
- Ignition timing partial learning compensation:
  – Enter the initial value (0°CA) to the compensation value of partial learning zone when IG OFF.
  – Enter the initial value (0°CA) to the compensation value of partial learning zone when making a normality judgment from abnormality judgment.
- AVCS control: Most timing retard learning is not complete or most timing retard learning completion is not experienced.
- ISC feedback compensation:
  – Do not perform the AVCS actual timing advance compensation.
  – Make the OCV driving Duty to be the given value (9.36%).

9. ECM OPERATION AT DTC SETTING

Memorize the freeze frame data. (For test mode $02)

AY:DTC P0345 CAMSHAFT POSITION SENSOR “A” CIRCUIT (BANK 2)

1. OUTLINE OF DIAGNOSIS

For diagnostic procedure, refer to DTC P0340. <Ref. to GD(H4DOTC)-111, DTC P0340 CAMSHAFT POSITION SENSOR “A” CIRCUIT (BANK 1 OR SINGLE SENSOR), Diagnostic Trouble Code (DTC) Detecting Criteria.>

AZ:DTC P0420 CATALYST SYSTEM EFFICIENCY BELOW THRESHOLD (BANK 1)

1. OUTLINE OF DIAGNOSIS

Detect the deterioration of catalyst function.
Though the rear oxygen sensor output would change slowly with a new catalyst, the sensor output with a deteriorated catalyst becomes high and the inversion time is shortened. For this reason, the catalyst diagnosis is carried out by monitoring the rear oxygen sensor output and comparing it with the front A/F sensor output.

2. COMPONENT DESCRIPTION

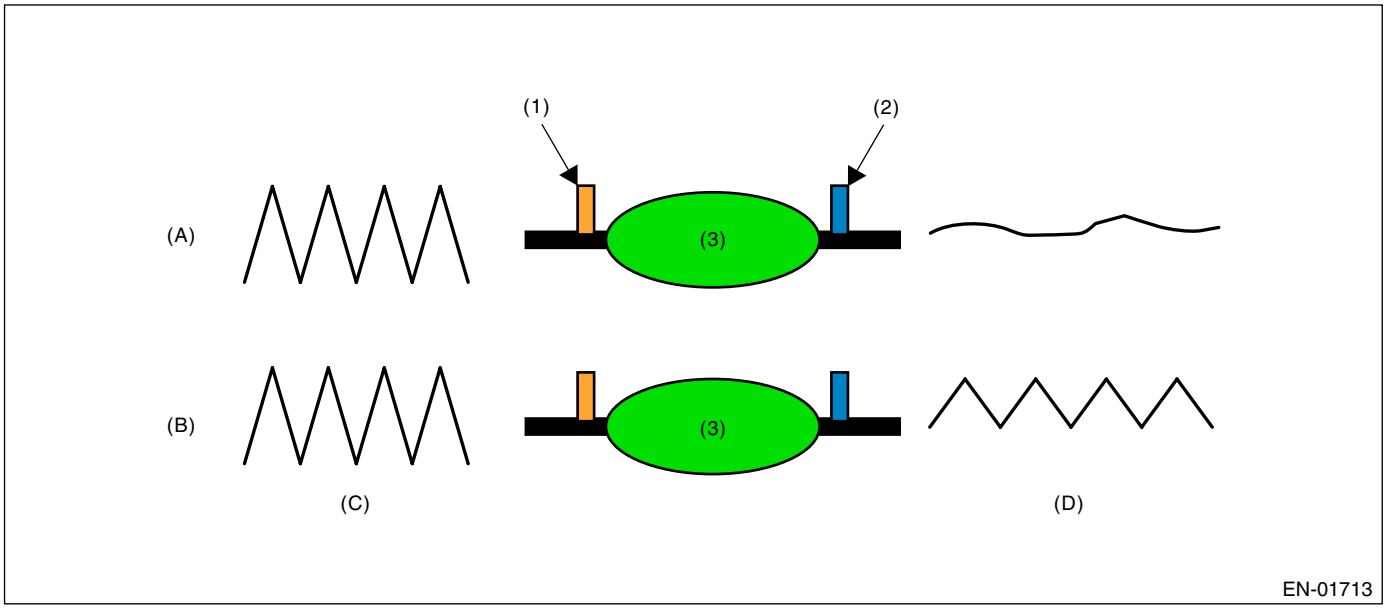

(1) Front oxygen (A/F) sensor
(2) Rear oxygen sensor
(3) Catalyst
(A) Normal
(B) Deterioration
(C) Front oxygen (A/F) sensor waveform
(D) Rear oxygen (A/F) sensor waveform

3. ENABLE CONDITION

Secondary Parameters	Enable Conditions
Accumulative time of canister purge after engine starting	≥ 19.9 seconds
Battery voltage	> 10.9 V
Atmospheric pressure	> 75.1 kPa (563 mmHg, 22.2 inHg)
Engine coolant temperature	≥ 70°C (158°F)
Catalyst warm-up counter on Map 2	≥ 8000
Misfire detection during 200 engine revs.	< 5 times
Learning value of evaporation gas density	< 0.20
Sub feedback	In operation
Evaporative system diagnostic	Not in operation
Difference between actual and target time lambda < 0.10	1000 milliseconds or more
Vehicle speed	≥ 70.4 km/h (44 MPH)
Amount of intake air	12 — 40 g (0.35 ←→ 1.41 oz)/s
Engine load change every 0.5 engine revs.	< 0.02 g (0.0007 oz)/rev
Rear O2 output change from below 600 mV to over	Experienced after fuel cut
After starting engine	≥ 235 seconds

• Map 2

Add the following value every 512 milliseconds.

Catalyst warm-up counter ≤ 9000

Amount of intake air (g (oz)/s)	0 (0)	5 (0.18)	7.5 (0.265)	10 (0.35)	15 (0.53)	20 (0.71)	25 (0.88)	30 (1.06)	35 (1.23)	40 (1.41)	45 (1.59)	50 (1.76)
Integrated value for warm-up counter	−36	−10	1	11	25	40	57	72	87	100	100	100

Catalyst warm-up counter > 9000

Amount of intake air (g (oz)/s)	0 (0)	5 (0.18)	7.5 (0.265)	10 (0.35)	15 (0.53)	20 (0.71)	25 (0.88)	30 (1.06)	35 (1.23)	40 (1.41)	45 (1.59)	50 (1.76)
Integrated value for warm-up counter	−16	−8	−1	3	6	8	9	11	13	14	14	14

4. GENERAL DRIVING CYCLE

Perform the diagnosis once at the constant vehicle speed of 7.5 km/h (46.6 MPH) or more after warming up the engine.

5. DIAGNOSTIC METHOD

After the malfunction criteria are completed, calculate the output fluctuation value of front oxygen (A/F) sensor and output fluctuation value of rear oxygen sensor.
Calculate the diagnosis value when the front oxygen (A/F) sensor output fluctuation value more than specified value.
Regard the A/F response properties and diagnosis value as parameters for judgment value.
Judge NG when the malfunction criteria below are completed, and judge OK when they are not completed.

Judgment Value

Malfunction Criteria	Threshold Value
Accumulated variation of output voltage of rear oxygen sensor per 32 milliseconds divided by accumulated variation of lambda of front oxygen (A/F) sensor per 32 milliseconds	≥ 9.5

Time Needed for Diagnosis: 30 — 55 seconds
Malfunction Indicator Light Illumination: Illuminates when malfunction occurs in 2 continuous driving cycles.

6. DTC CLEAR CONDITION

- When the OK idling cycle was completed 40 times in a row
- When “Clear Memory” was performed

7. MALFUNCTION INDICATOR LIGHT CLEAR CONDITION

- When the OK driving cycle was completed 3 times in a row
- When “Clear Memory” was performed

8. FAIL SAFE

None

9. ECM OPERATION AT DTC SETTING

- Memorize the freeze frame data. (For test mode $02)
- Memorize the diagnostic value and trouble standard value. (For test mode $06)

BA:DTC P0442 EVAPORATIVE EMISSION CONTROL SYSTEM LEAK DETECTED (SMALL LEAK)

1. OUTLINE OF DIAGNOSIS

Perform the diagnosis of leakage of fuels system and valve functions.

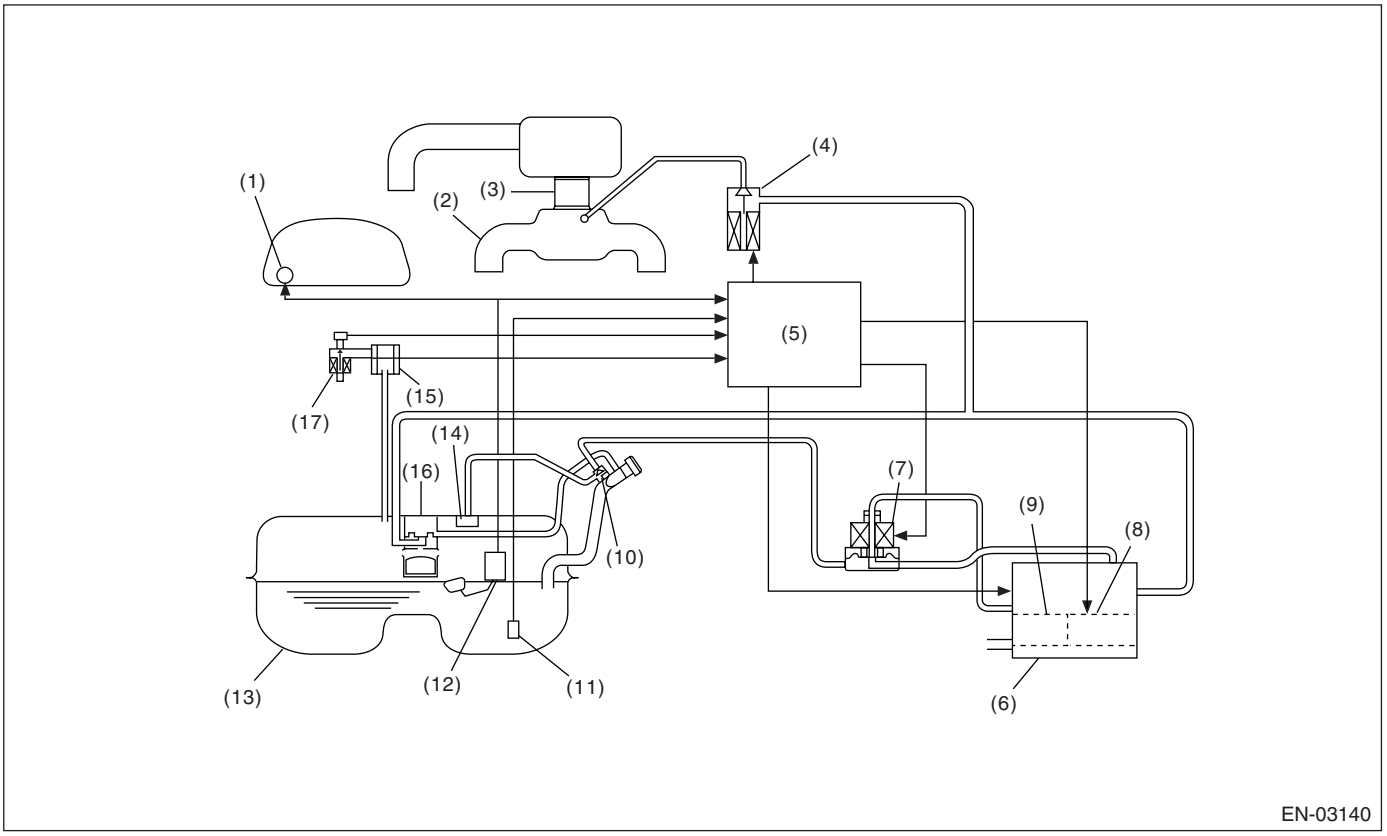

(1)	Fuel gauge	(7)	Pressure control solenoid valve	(13)	Fuel tank
(2)	Intake manifold	(8)	Drain valve	(14)	Fuel cut valve
(3)	Throttle body	(9)	Drain filter	(15)	Fuel tank pressure sensor
(4)	Purge control solenoid valve	(10)	Shut-off valve	(16)	Vent valve
(5)	Engine control module (ECM)	(11)	Fuel temperature sensor	(17)	Fuel tank sensor control valve
(6)	Canister	(12)	Fuel level sensor		

In this system diagnosis, checking for leakage and valve operation is conducted by changing the fuel tank pressure, and monitoring the pressure change using the fuel tank pressure sensor.
0.04 inch diagnosis is performed in the order of Mode Z, Mode A, Mode B, Mode C, Mode D, and 0.02 inch diagnosis is performed in the order of Mode A, Mode B, Mode C, Mode D, Mode E.

0.04-inch Diagnosis

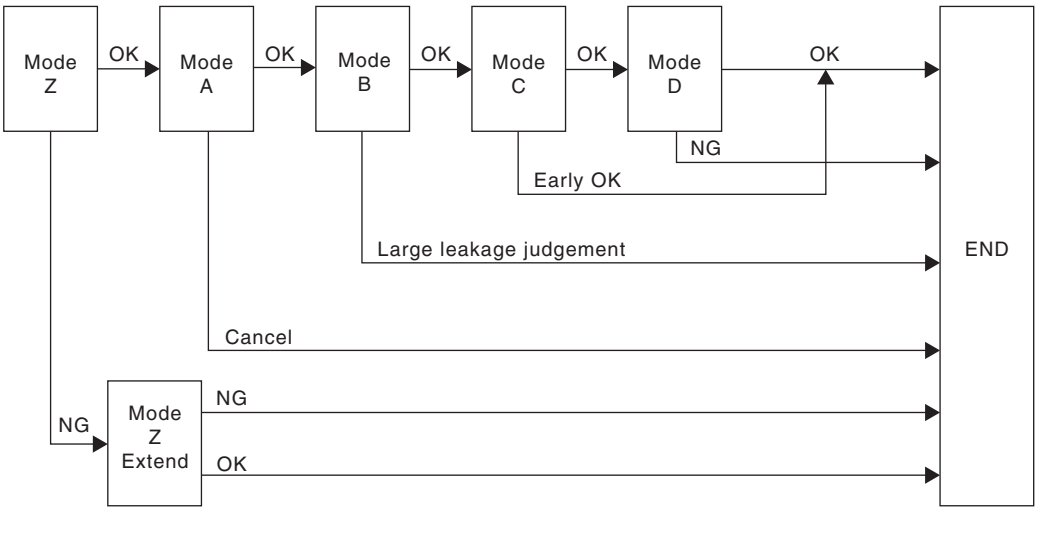

EN-02872

Mode	Mode Description	Diagnosis Period
Mode Z (CPC open fail diagnosis)	Perform the diagnosis of CPC open fail depending on the amount of the tank pressure change after the diagnosis has started.	3 — 16 seconds
Mode A (Estimated evaporation amount)	Calculate the tank pressure change amount (P1).	10 seconds
Mode B (Sealed negative pressure, large leakage judgment)	Introduce the intake manifold pressure to the fuel tank and reduce the tank pressure to the desired value. If the tank pressure cannot be reduced, diagnose that there is large leakage.	5 — 25 seconds
Mode C (Pressure increase check advanced OK judgment)	Wait until the tank pressure becomes to the target value (pressure to start calculating P2). If the tank pressure does not return to make advanced OK judgment.	1 — 15 seconds
Mode D (Negative pressure variation measurement evaporation leakage diagnosis)	Calculate the tank pressure variation (P2), and obtain the diagnostic value using P1 of Mode A. Perform the evaporation leakage diagnosis using the diagnosis value.	10 seconds

Mode table for Evaporative Emission Control System diagnosis

Mode	Normal conditions	Diagnostic item	DTC
Mode Z	Nearly same as atmospheric pressure (equivalent pressure of 0 kPa (0 mmHg, 0 inHg))	CPC is judged to be open.	P0457
Mode A	Pressure is in proportion to amount of evaporative emission.	—	
Mode B	Negative pressure is formed due to intake manifold negative pressure	Large leak	P0457
Mode C	Target pressure is reached.	—	—
Mode D	Pressure change is small.	EVAP system is judged to have large leak [1.0 mm (0.04 in)].	P0442

0.02-inch Diagnosis

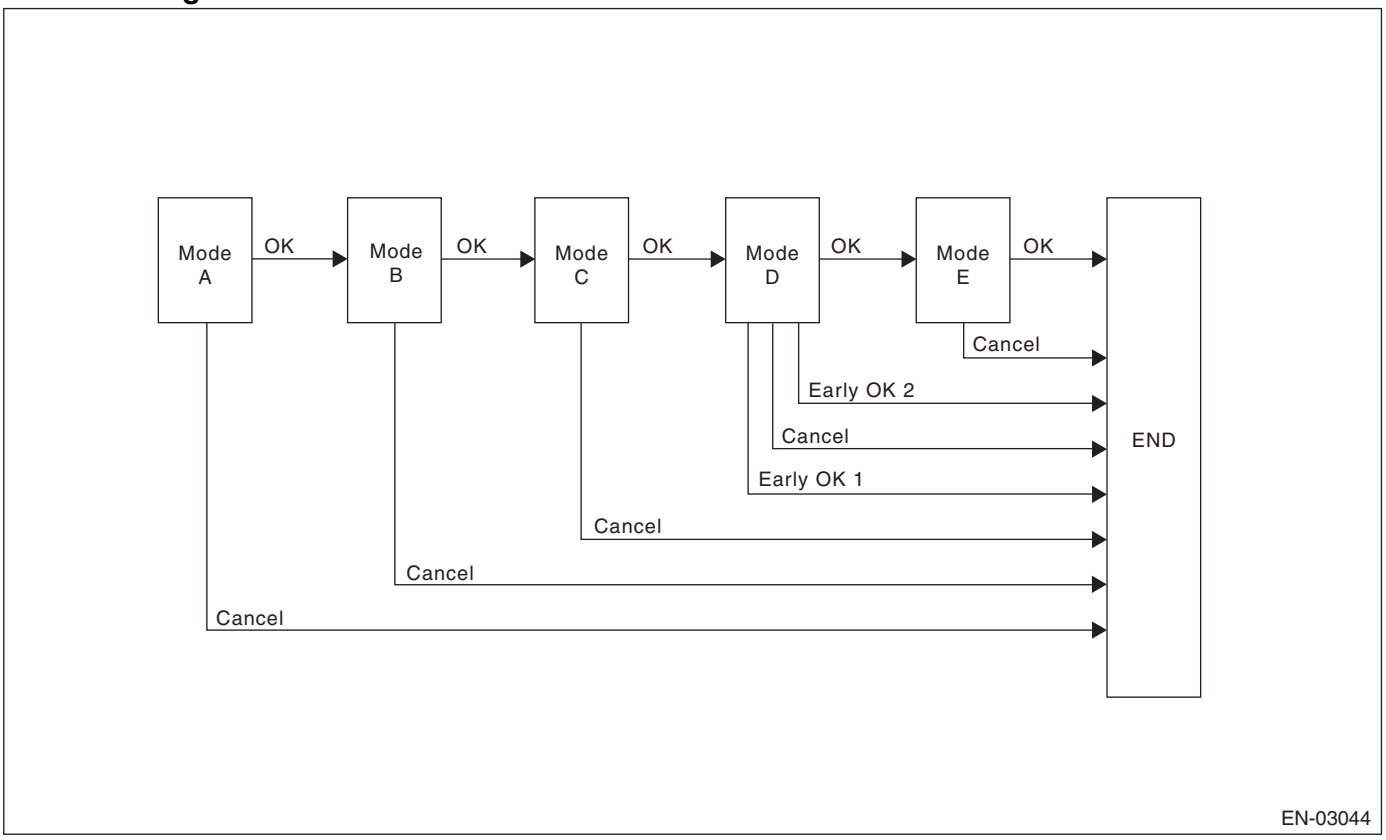

Mode	Mode Description	Diagnosis Period
Mode A (0 point correction)	Wait until the tank pressure returns to 0 point (0 kPa (0 mmHg, 0 inHg)) when tank pressure is high.	0 — 12 seconds
Mode B (Introduce negative pressure)	Introduce the intake manifold pressure to the fuel tank and reduce the tank pressure to the desired value.	0 — 27 seconds
Mode C (Maintain negative pressure)	Wait until the tank pressure returns to start pressure of P2 calculation.	0 — 20 seconds
Mode D (Calculation of negative pressure variation)	Calculate the time until the tank pressure becomes the end pressure of P2 calculation. Make advanced OK judgment when the tank pressure does not become the end pressure of P2 calculation.	0 — 200 seconds
Mode E (Calculation of Evaporative gas yield)	Calculate the amount of evaporative gas yield (P1).	0 — 280 seconds

2. COMPONENT DESCRIPTION

• Pressure Control Solenoid Valve

PCV controls the fuel tank pressure to be equal to the atmospheric air pressure. Normally, the solenoid is set to OFF, and the valve mechanically opens and closes in accordance with the difference between the tank pressure and atmospheric air pressure, and the tank pressure and canister pressure.

During the diagnosis, the valve is forcibly opened by setting the solenoid to ON.

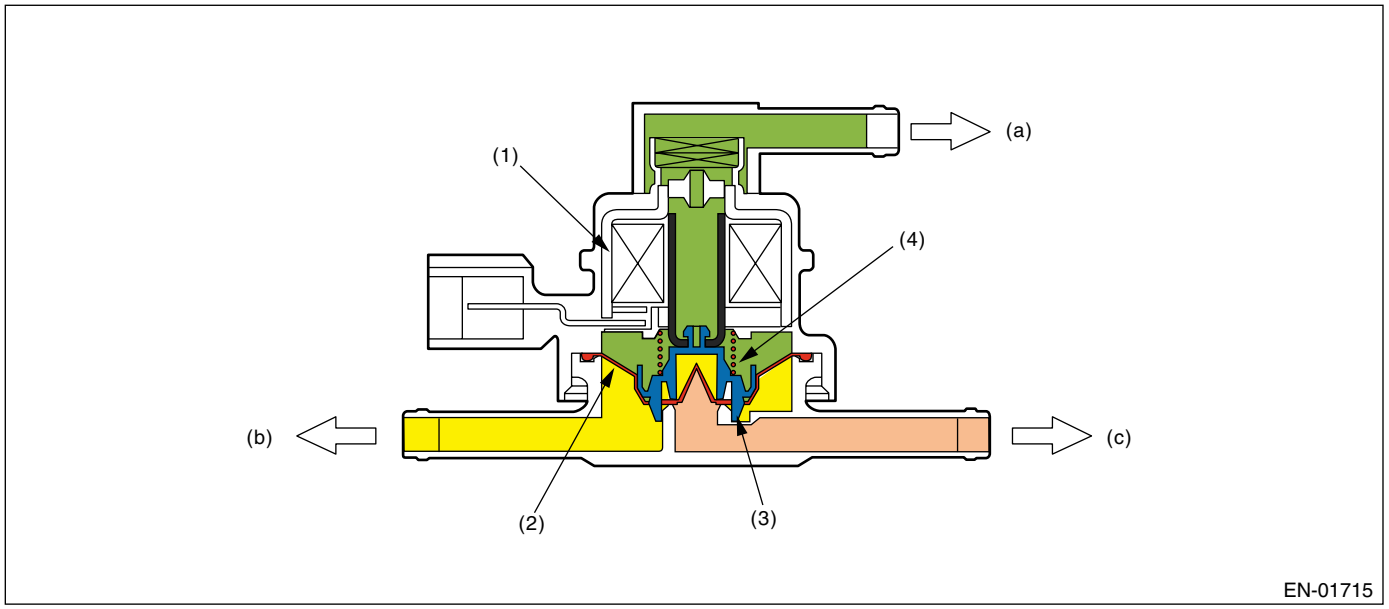

(1) Solenoid
(2) Diaphragm
(3) Valve
(4) Spring
(a) Atmospheric pressure
(b) Fuel tank
(c) Canister

• Valve Operation and Air Flow

As in the X parts below, there are the area with atmospheric air pressure above the diaphragm and the area with tank pressure below the diaphragm. Also, as in the Y parts below, there are the area with tank pressure above the diaphragm and the area with canister pressure below the diaphragm. In the table below the air flow from each port in accordance with pressure difference is shown with the atmospheric air pressure port A, tank pressure port B and canister pressure port C.

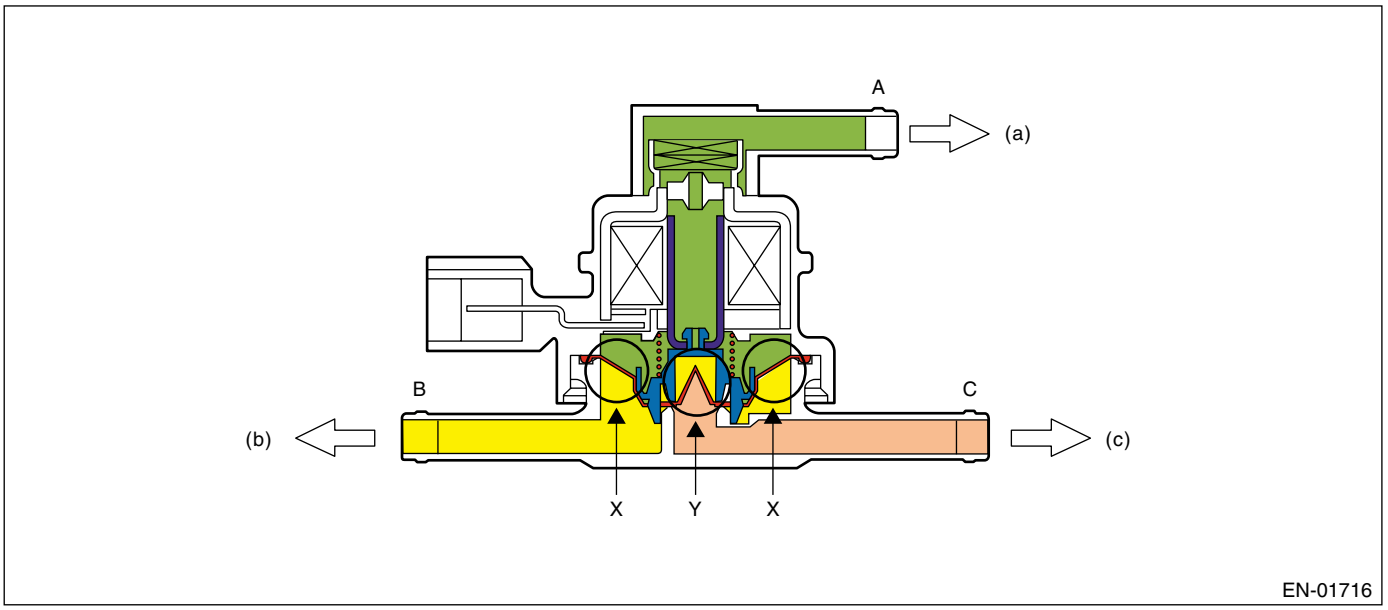

(a) Atmospheric pressure
(b) Fuel tank
(c) Canister

Pressure Status	Flow
A < B (Solenoid OFF)	B → C
B < C (Solenoid OFF)	C → B
Solenoid ON	B ←→ C

When A < B (Solenoid OFF)

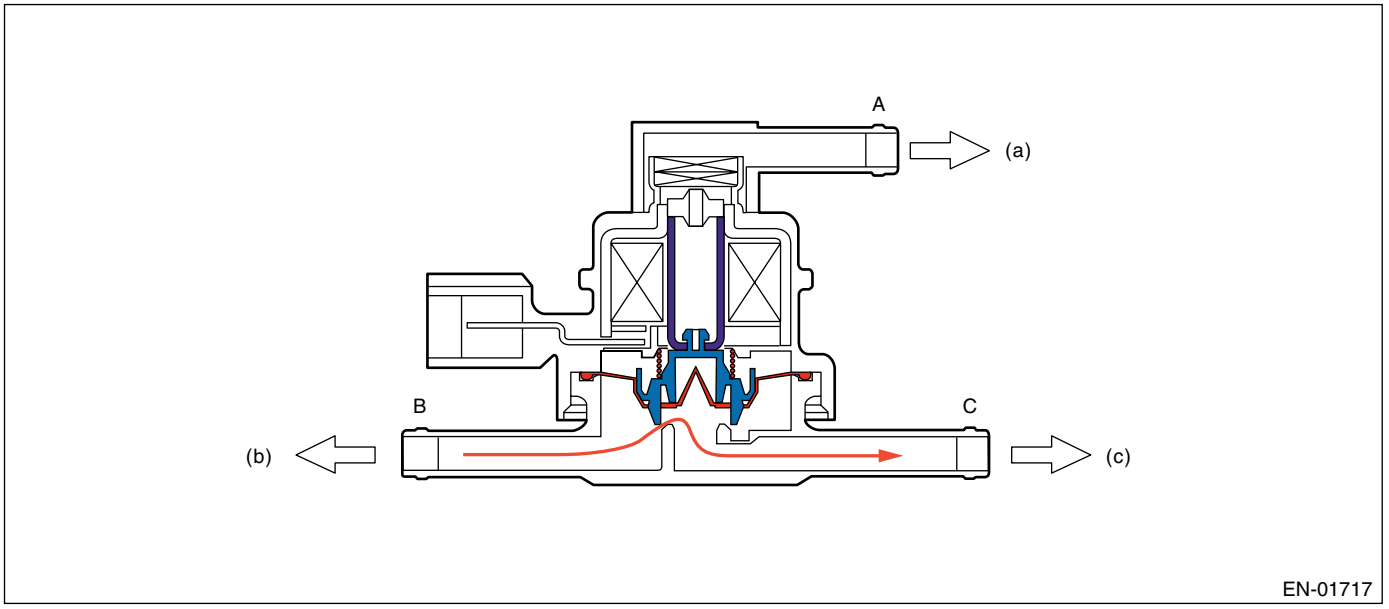

(a) Atmospheric pressure (b) Fuel tank (c) Canister

When B < C (Solenoid OFF)

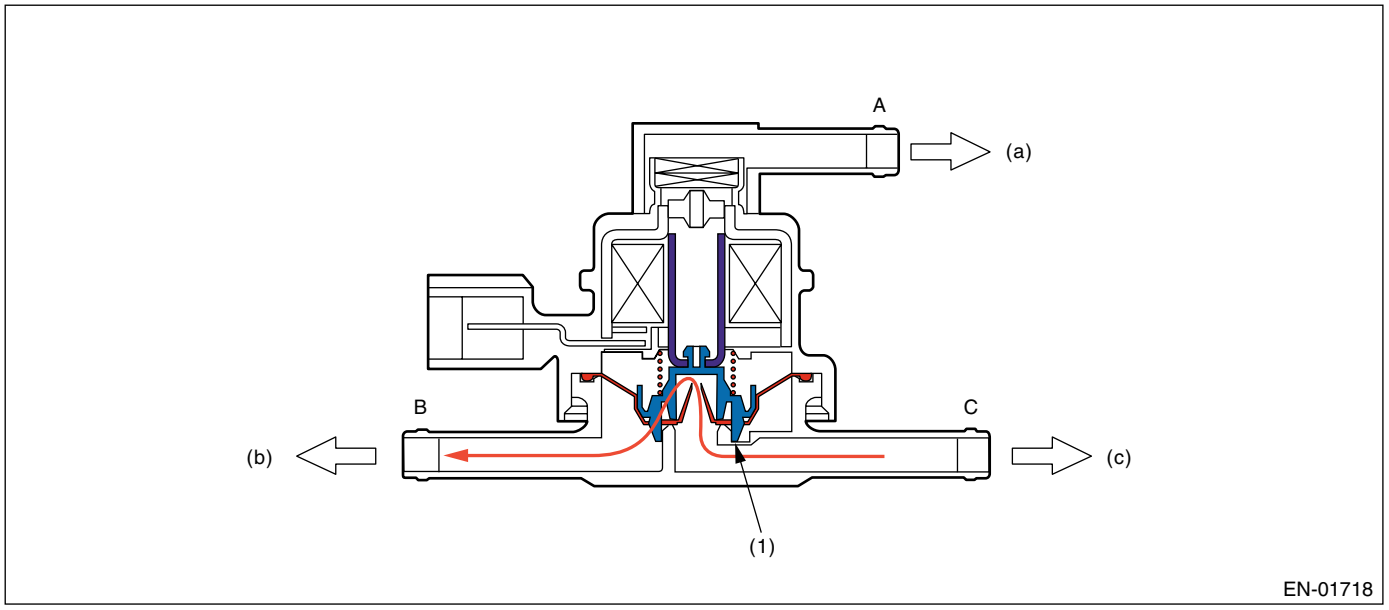

(1) Valve

(a) Atmospheric pressure
(b) Fuel tank
(c) Canister

When solenoid is ON

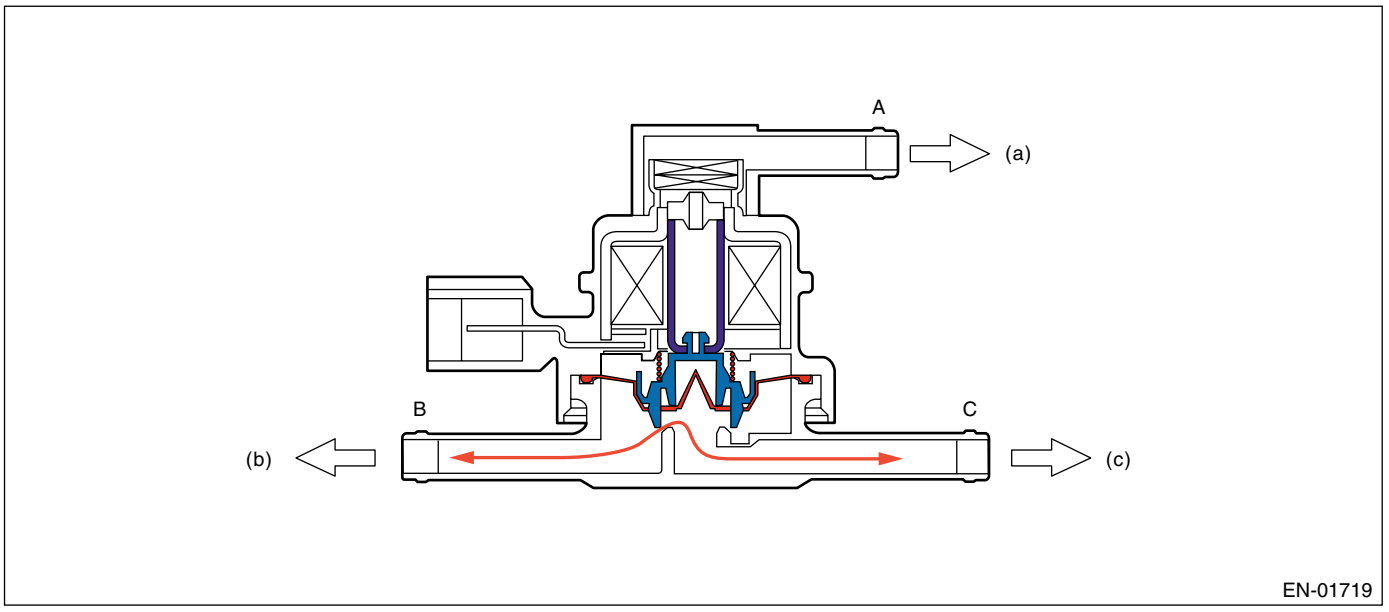

(a) Atmospheric pressure (b) Fuel tank (c) Canister

• Drain valve

Drain valve controls the ambient air to be introduced to the canister.

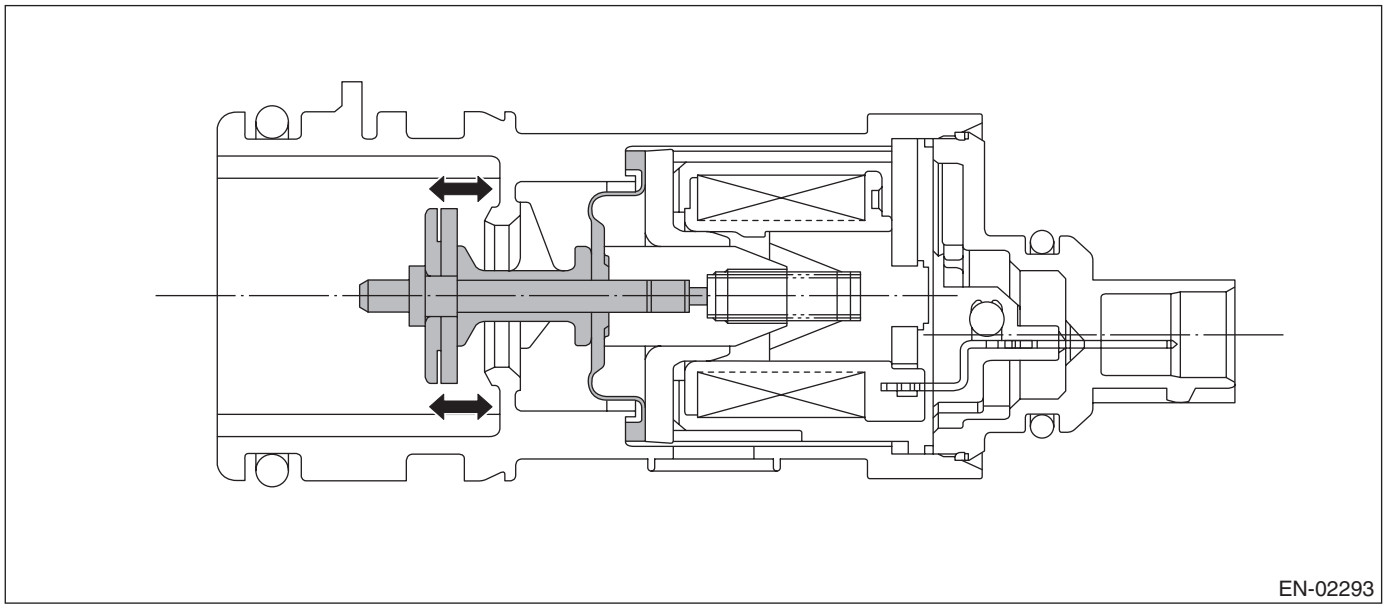

3. ENABLE CONDITION

0.04-inch Diagnosis

Secondary Parameters	Enable Conditions
Battery voltage	≥ 10.9 V
Barometric pressure	≥ 75.1 kPa (563 mmHg, 22.2 inHg)
Accumulated time of operating canister purge	120 seconds or more
After engine starting	856 seconds or more
Learning value of evaporation gas density	≤ 0.08
Engine speed	1050 ←→ 6500 rpm
Fuel tank pressure	< 1.42 kPa (10.7 mmHg, 0.42 inHg)
Intake manifold vacuum (relative pressure)	< −13.33 kPa (−100 mmHg, −3.94 inHg)
Vehicle speed	≥ 32 km/h (20 MPH)
Fuel level	9.6 ←→ 54.4 ℓ (2.54 ←→ 14.37 US gal, 2.11 ←→ 11.97 Imp gal)
Closed air fuel ratio control	In operation
Fuel temperature	− 10 ←→ 45°C (14 ←→ 113°F)
Intake air temperature	≥ −10°C (14°F)
Pressure change per second	< 0.12 kPa (0.95 mmHg, 0.04 inHg)
Min. pressure change per second − Max. pressure change per second	< 0.23 kPa (1.75 mmHg, 0.007 inHg)
Fuel level change	< 3 ℓ (3.2 US qt, 2.6 Imp qt)/131 milliseconds
Air fuel ratio	0.76 ←→ 1.25

0.02-inch Diagnosis

Secondary Parameters	Enable Conditions
(At starting a diagnosis)	
Evap. Diagnosis	Incomplete
Battery voltage	≥ 10.9 V
Atmospheric pressure	≥ 75.1 kPa (563 mmHg, 22.2 inHg)
Time since last incompleted diagnosis event of 0.02 inches leak	〉 600 seconds
Accumulated time of canister purge operation	120 seconds or more
After engine starting	770 seconds or more
Fuel temperature	−10 ←→ 55°C (14 ←→ 131°F)
Fuel level	9.6 ←→ 54.4 liters (2.54 ←→ 14.37 US gal, 2.11 ←→ 11.97 Imp gal)
Intake manifold vacuum (relative pressure)	< −13.3 kPa (−100 mmHg, −3.94 inHg)
Fuel tank pressure	−0.43 ←→ 1.43 kPa (−3.2 ←→ 10.7 mmHg, −0.13 ←→ 0.42 inHg)
Vehicle speed	≥ 68 km/h (42 MPH)
Closed air fuel ratio control	In operation
Engine speed	550 ←→ 6000 rpm
(During diagnosis)	
Change of fuel level	≤ 5 ℓ (1.3 US gal, 1.1 Imp gal)/128 ms
Pressure change (Mode D)	−0.47 ←→ 0.32 kPa (−3.5 ←→ 2.4 mmHg, −0.14 ←→ 0.09 inHg)
Pressure change (Mode E)	−0.32 ←→ 0.32 kPa (−2.4 ←→ 2.4 mmHg, −0.09 ←→ 0.09 inHg)

4. GENERAL DRIVING CYCLE

• 0.04-inch Diagnosis

• Perform the diagnosis only once in 856 seconds or more after starting the engine constantly at 32 km/h (19.9 MPH) or more.
• Pay attention to the fuel temperature and fuel level.

• 0.02-inch Diagnosis

• Perform the diagnosis in 770 seconds after starting the engine constantly at 68 km/h (42 MPH) or more, and perform OK/NG judgment.
• If OK/NG judgment is not possible, repeat the diagnosis.
• Pay attention to the fuel temperature and fuel level.

5. DIAGNOSTIC METHOD

• 0.04-inch Diagnosis

Mode Z (Diagnosing the CPC open)

When performing the leakage diagnosis of EVAP system, and CPC have to operate normally. Therefore, mode Z is used for monitoring the tank pressure to diagnose the CPC open fixation.
If the CPC open fixation trouble is detected, the evaporation system leakage diagnosis is cancelled.

• Diagnosing The CPC Open Fixation

DTC

P0457 Evaporative Emission Control System Leak Detected (Fuel Cap Loose/Off)

CPC open fixation diagnosis are performed in mode Z as shown in the figure below.

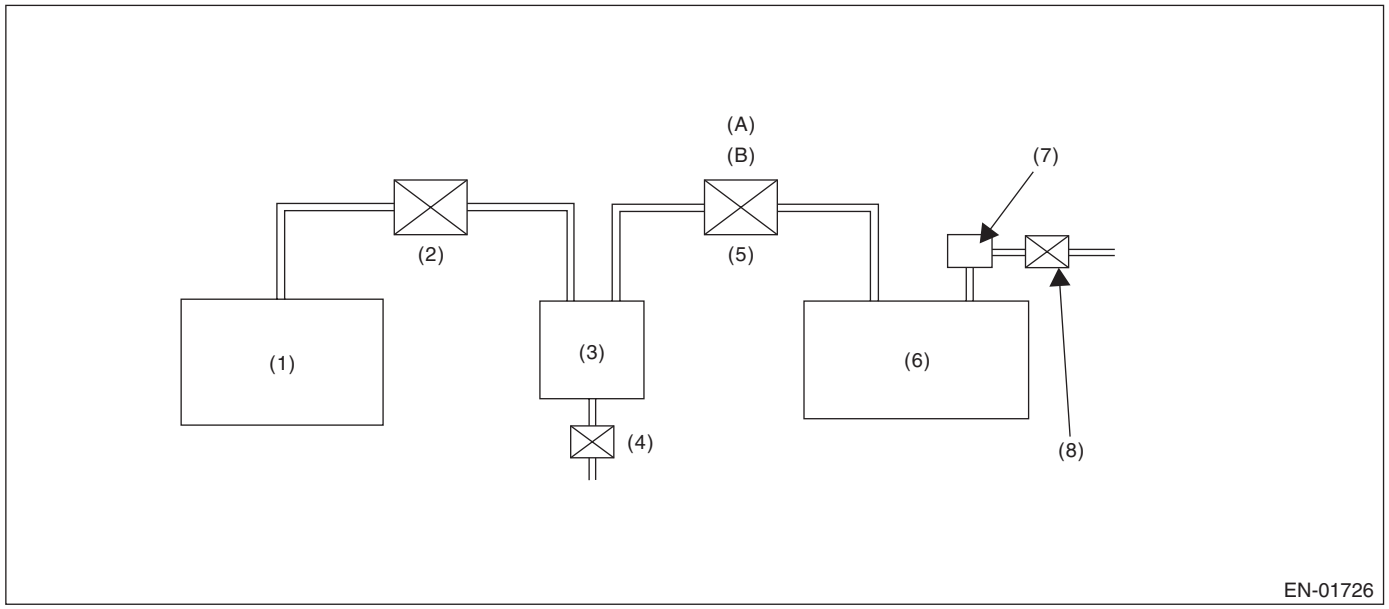

(1) Engine
(2) Purge control solenoid valve
(3) Canister
(4) Drain valve
(5) Pressure control solenoid valve
(6) Fuel tank
(7) Fuel tank pressure sensor
(8) Fuel tank sensor control valve

(A) Normal condition: mechanical control
(B) During diagnosis: electronic control

• Diagnosing function of CPC

DTC

P0457 Evaporative Emission Control System Leak Detected (Fuel Cap Loose/Off)

CPC functional diagnosis is performed by monitoring the tank pressure in Mode Z.

Normality Judgment

Make OK judgment in 3 seconds after Mode Z started, and change to Mode A if OK.

Judgment Value

Malfunction Criteria	Threshold Value	DTC
(Tank pressure when Mode Z started) — (Tank pressure when Mode Z finished)	≤ 0.4 kPa (3 mmHg, 0.12 inHg)	P0457

• Normal Operation

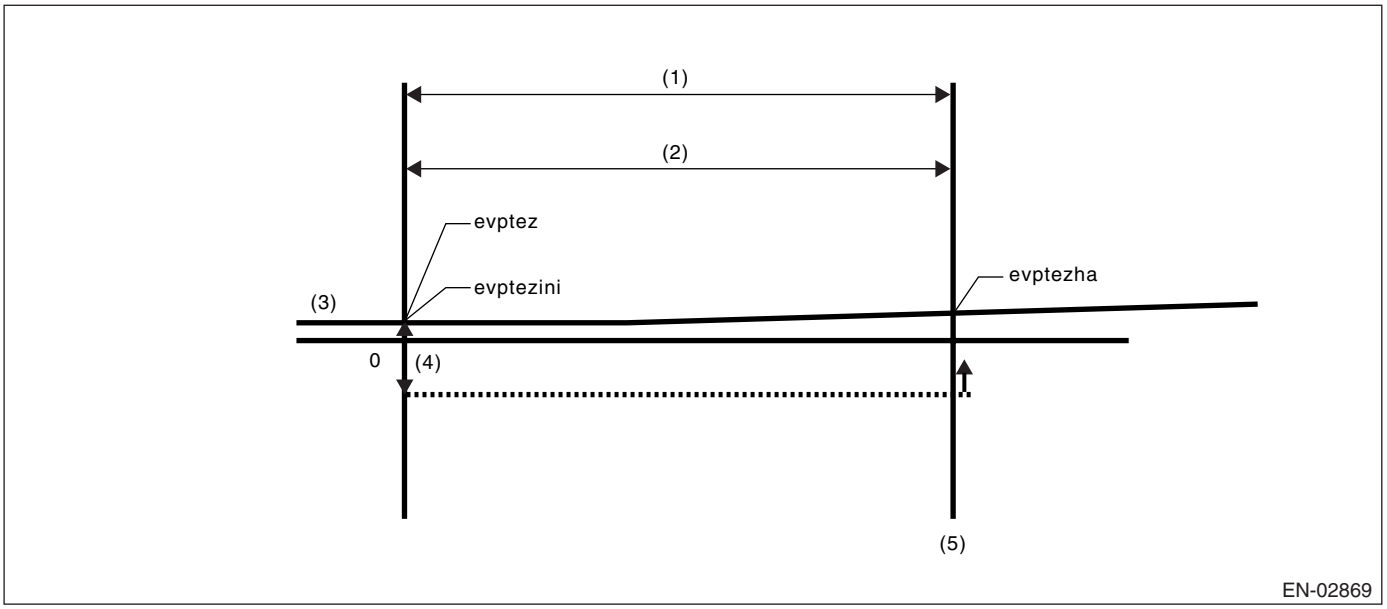

(1) Mode Z
(2) 3 seconds
(3) Fuel tank pressure
(4) 0.4 kPa (3.0 mmHg, 0.12 inHg)
(5) OK judgment

- evptez − evptezha ≤ 0.4 kPa (3.0 mmHg, 0.12 inHg)
- evptezini − evptezha ≤ 0.4 kPa (3.0 mmHg, 0.12 inHg)

Judge normal when both calculation is completed.

Abnormality Judgment

If OK judgment cannot be made, extend Mode Z 16 seconds more, and judge NG when all the criteria below are completed in 16 seconds.

Judgment Value

Malfunction Criteria	Threshold Value	DTC
(Tank pressure when Mode Z started) − (Tank pressure when Mode Z finished)	> 0.6 kPa (4.5 mmHg, 0.18 inHg)	P0457
Tank pressure when Mode Z started	≤ 1.43 kPa (10.7 mmHg, 0.42 inHg)	
Time for no fuel rolling of 2 ℓ or more	≥ 40 seconds	

Time Needed for Diagnosis: 16 seconds

Malfunction Indicator Light Illumination: Illuminates when malfunction occurs in 2 continuous driving cycles.

Finish the Evap. diagnosis when making NG judgment for purge control solenoid valve open fixation.

Cancel the Evap. diagnosis when the OK/NG judgment for drain valve close fixation and purge control solenoid valve open fixation cannot be made in Mode Z.

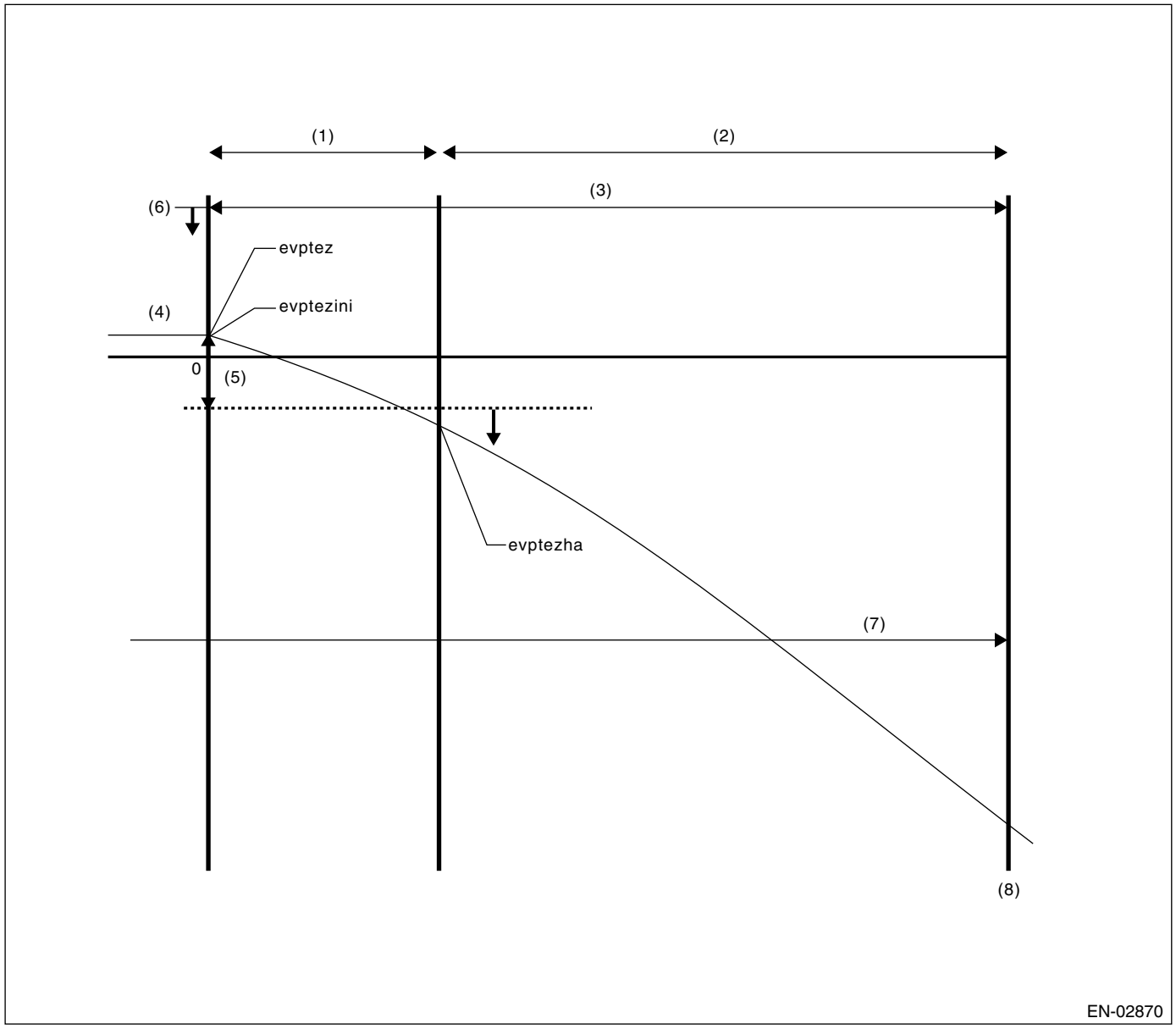

(1)	Mode Z	(4)	Fuel tank pressure	(7)	No fuel rolling for more than 40 seconds
(2)	Mode Z extension	(5)	0.87 kPa (6.5 mmHg, 0.26 inHg)		
(3)	16 seconds	(6)	1.43 kPa (10.7 mmHg, 0.42 inHg)	(8)	NG judgment

- evptezini, evptez ≤ 1.43 kPa (10.7 mmHg, 0.42 inHg)
- evptez − evptezha ≤ 0.87 kPa (6.5 mmHg, 0.26 inHg)
- evptezini − evptezha ≤ 0.87 kPa (6.5 mmHg, 0.26 inHg)
- No fuel rolling of above 2 ℓ (0.79 US gal, 0.67 Imp gal) for more than 40 seconds.

Judge normal when all calculations are completed.

• Leak Diagnosis

DTC

P0442 Evaporative Emission Control System Leak Detected (Small Leak)
P0457 Evaporative Emission Control System Leak Detected (Fuel Cap Loose/Off)

Diagnostic method

The diagnostic method consists of creating a sealed vacuum in the fuel tank and then determining the presence of leakage from the speed at which the tank internal pressure returns to atmospheric pressure.

Mode A: (Estimation of evaporation gas yield)
The amount of change of tank pressure (P1) in Mode A is calculated. After calculating P1, change to Mode B.
Mode B: (Seal negative pressure)
Introduce the negative pressure in the intake manifold to the tank.
Approx. 0 → −1.4 kPa (0 → −10.5 mmHg, 0 → −0.41 inHg)
When the pressure above (desired negative pressure) is reached, Mode C is entered.
In this case, if the tank pressure does not become the desired negative pressure, judge that there is a large leakage in the system and judge as large leak (10 or 25 seconds).
Abnormality Judgment
Judge NG (large leak) when the criteria below are completed in the specified time.
Judgment Value

Malfunction Criteria	Threshold Value	DTC
Time before reaching desired negative pressure	≥ 25 seconds	P0457
Or time for Mode B	≥ 10 seconds	
(Min. value of tank pressure during Mode B) − (Tank pressure when Mode B started)	< −0.3 kPa (−2.5 mmHg, −0.1 inHg)	

Mode C: (Check increasing pressure)
Stop the introduction of negative pressure. (Wait until the tank pressure returns to the start level of P2 calculation.)
Change to Mode D when the tank pressure returns to the start level of P2 calculation.
Judge immediate OK and change to Mode E when it does not return in spite of spending the specified time.

Tank pressure when P2 calculation started	Time for immediate OK judgment
−1.3 kPa (−9.75 mmHg, −0.38 inHg)	17 seconds

Mode D: (Measurement of negative pressure changes)
Monitor the pressure variation in the tank in Mode Z. In this case, the tank pressure increases, that is, the pressure becomes as high as the atmospheric air pressure, because evaporator is generated. However, if any leakage exists, the pressure increases additionally in proportion to this leakage. The pressure variation of this tank is P2.
After calculating P2, perform following small leak diagnosis.
• After Mode D

Assigning P1 and P2, which are tank variations measured in Mode A and Mode B, to the formula below, judge the small leakage of the system. If the measured judgment value exceeds the threshold value, it is judged to be malfunction.
Judge NG when the criteria below are completed and judge OK when not completed.
Judgment Value

Malfunction Criteria	Threshold Value	DTC
P2 − 1.5 × P1 P2: Change of tank pressure within 10 seconds on Mode D P1: Change of tank pressure within 10 seconds on Mode A	> Value on Map 7. * Threshold value: Figure (Fuel level vs Tank temperature)	P0442

***1.5:** Compensation value of the amount of evaporator occurrence. (Because evaporator increases more when becoming negative pressure.)

Map 7 Limit of malfunction criteria for 0.04-inch leak as Evap. diagnosis.

Fuel temperature & Fuel level	25°C (77°F)	30°C (86°F)	35°C (95°F)	40°C (104°F)	45°C (113°F)
10 L (2.6 US gal, 2.2 Imp gal)	0.28 kPa (2.1 mmHg, 0.083 inHg)	0.29 kPa (2.2 mmHg, 0.087 inHg)	0.31 kPa (2.3 mmHg, 0.090 inHg)	0.31 kPa (2.35 mmHg, 0.092 inHg)	0.32 kPa (2.4 mmHg, 0.094 inHg)
20 L (5.3 US gal, 4.4 Imp gal)	0.31 kPa (2.3 mmHg, 0.090 inHg)	0.32 kPa (2.4 mmHg, 0.094 inHg)	0.33 kPa (2.5 mmHg, 0.098 inHg)	0.35 kPa (2.6 mmHg, 0.102 inHg)	0.36 kPa (2.7 mmHg, 0.106 inHg)
30 L (7.9 US gal, 6.6 Imp gal)	0.39 kPa (2.9 mmHg, 0.114 inHg)	0.41 kPa (3.05 mmHg, 0.120 inHg)	0.42 kPa (3.15 mmHg, 0.124 inHg)	0.43 kPa (3.25 mmHg, 0.128 inHg)	0.45 kPa (3.35 mmHg, 0.134 inHg)
40 L (10.6 US gal, 8.8 Imp gal)	0.39 kPa (2.9 mmHg, 0.114 inHg)	0.42 kPa (3.15 mmHg, 0.124 inHg)	0.44 kPa (3.3 mmHg, 0.130 inHg)	0.45 kPa (3.4 mmHg, 0.134 inHg)	0.47 kPa (3.5 mmHg, 0.138 inHg)
50 L (13.2 US gal, 11.0 Imp gal)	0.43 kPa (3.2 mmHg, 0.126 inHg)	0.44 kPa (3.3 mmHg, 0.130 inHg)	0.47 kPa (3.5 mmHg, 0.138 inHg)	0.48 kPa (3.6 mmHg, 0.142 inHg)	0.49 kPa (3.7 mmHg, 0.146 inHg)

Time Needed for Diagnosis: 30 — 100 seconds

0.02 inch Diagnosis

DTC

P0456 Evaporative Emission Control System (Very Small Leak)

• Diagnostic method

The diagnostic method consists of creating a sealed vacuum in the fuel tank and then determining the presence of leakage from the speed at which the tank internal pressure returns to atmospheric pressure.

Mode A: (0 point correction)

Wait until the tank pressure returns to 0 point (0 kPa (0 mmHg, 0 inHg)) when the tank pressure is high. Change to Mode B when the tank pressure becomes 0. Cancel the diagnosis when the tank pressure does not return to 0 point in spite of spending the specified time.

Mode B: (Introduce negative pressure)

Introduce the intake manifold negative pressure to fuel tank.

About 0 → –2.0 kPa (0 mmHg → –15 mmHg, 0 → –0.59 inHg)

Change to Mode C when the tank pressure becomes the pressure (desired negative pressure) above. Cancel the diagnosis when the tank pressure does not become the value above.

Mode C: (Hold negative pressure)

Stop introducing the negative pressure and wait the tank pressure returns to the start level of P2 calculation. Change to Mode D when the tank pressure returns to the start level of P2 calculation or when spending the specified time.

Mode D: (Calculation of negative pressure variation)

Monitor the tank pressure on Mode D, and calculate the tank pressure variation (P2) and time until it returns to the end level of P2 (evpdset). When it returns, change to Mode E. Make advanced OK judgment or cancel depending on the P2 level, when it doesn't return in spite of spending the specified time.

Judge OK when the criteria below are completed.

Judgment Value

Malfunction Criteria	Threshold Value	DTC
Advanced OK judgment #1		P0456
Mode D time	≥ 30 s	
Tank pressure	≤ −1.8 kPa (−13.5 mmHg, −0.53 inHg)	
Advanced OK judgment #2		
Mode D time	≥ 200 s	
P2	≤ 0.9 — 1.3 kPa (7 — 9.6 mmHg, 0.28 — 0.38 inHg)	

Mode E: (Calculation of evaporation gas yield)

Calculate the tank pressure variation P1 in time evpdset, judge NG/OK from P1 value. (Gray judgment possible)

Abnormal judgment

Judge NG when the criteria below are completed.

Judgment Value

Malfunction Criteria	Threshold Value	DTC
P1	〈 Map 7 value * Threshold value: map (fuel level vs evpdset)	P0456

Map 7 Limit of malfunction criteria for 0.02-inch leak as Evap. diagnosis

Time evpdset & Fuel level	0 second	30 seconds	50 seconds	100 seconds	160 seconds	200 seconds
10 L (2.6 US gal, 2.2 Imp gal)	0 kPa (0 mmHg, 0 inHg)	0.07 kPa (0.5 mmHg, 0.020 inHg)	0.23 kPa (1.7 mmHg, 0.067 inHg)	0.36 kPa (2.7 mmHg, 0.106 inHg)	0.36 kPa (2.7 mmHg, 0.106 inHg)	0.36 kPa (2.7 mmHg, 0.106 inHg)
20 L (5.3 US gal, 4.4 Imp gal)	0 kPa (0 mmHg, 0 inHg)	0.07 kPa (0.5 mmHg, 0.020 inHg)	0.23 kPa (1.7 mmHg, 0.067 inHg)	0.36 kPa (2.7 mmHg, 0.106 inHg)	0.36 kPa (2.7 mmHg, 0.106 inHg)	0.36 kPa (2.7 mmHg, 0.106 inHg)
30 L (7.9 US gal, 6.6 Imp gal)	0 kPa (0 mmHg, 0 inHg)	0.07 kPa (0.5 mmHg, 0.020 inHg)	0.23 kPa (1.7 mmHg, 0.067 inHg)	0.36 kPa (2.7 mmHg, 0.106 inHg)	0.36 kPa (2.7 mmHg, 0.106 inHg)	0.36 kPa (2.7 mmHg, 0.106 inHg)
40 L (10.6 US gal, 8.8 Imp gal)	0 kPa (0 mmHg, 0 inHg)	0.07 kPa (0.5 mmHg, 0.020 inHg)	0.25 kPa (1.85 mmHg, 0.073 inHg)	0.33 kPa (2.5 mmHg, 0.098 inHg)	0.33 kPa (2.5 mmHg, 0.098 inHg)	0.33 kPa (2.5 mmHg, 0.098 inHg)
50 L (13.2 US gal, 11.0 Imp gal)	0 kPa (0 mmHg, 0 inHg)	0.07 kPa (0.5 mmHg, 0.020 inHg)	0.27 kPa (2.0 mmHg, 0.079 inHg)	0.31 kPa (2.3 mmHg, 0.091 inHg)	0.31 kPa (2.3 mmHg, 0.091 inHg)	0 kPa (0 mmHg, 0 inHg)

• Normality Judgment

Judge OK when all the malfunction criteria below are completed.

Judgment Value

Malfunction Criteria	Threshold Value	DTC
P1	〉Value of Map 8 * Threshold value: Map (Fuel level vs evpdset)	P0456

Map 8

Time evpdset & Fuel level	0 second	30 seconds	50 seconds	100 seconds	160 seconds	200 seconds
10 L (2.6 US gal, 2.2 Imp gal)	0.13 kPa (1.0 mmHg, 0.039 inHg)	0.47 kPa (3.5 mmHg, 0.138 inHg)	0.56 kPa (4.2 mmHg, 0.165 inHg)	0.56 kPa (4.2 mmHg, 0.165 inHg)	0.56 kPa (4.2 mmHg, 0.165 inHg)	0.56 kPa (4.2 mmHg, 0.165 inHg)
20 L (5.3 US gal, 4.4 Imp gal)	0.13 kPa (1.0 mmHg, 0.039 inHg)	0.43 kPa (3.25 mmHg, 0.128 inHg)	0.55 kPa (4.1 mmHg, 0.161 inHg)	0.55 kPa (4.1 mmHg, 0.161 inHg)	0.55 kPa (4.1 mmHg, 0.161 inHg)	0.55 kPa (4.1 mmHg, 0.161 inHg)
30 L (7.9 US gal, 6.6 Imp gal)	0.13 kPa (1.0 mmHg, 0.039 inHg)	0.4 kPa (3 mmHg, 0.118 inHg)	0.52 kPa (3.9 mmHg, 0.154 inHg)	0.52 kPa (3.9 mmHg, 0.154 inHg)	0.52 kPa (3.9 mmHg, 0.154 inHg)	0.52 kPa (3.9 mmHg, 0.154 inHg)
40 L (10.6 US gal, 8.8 Imp gal)	0.13 kPa (1.0 mmHg, 0.039 inHg)	0.30 kPa (2.25 mmHg, 0.089 inHg)	0.45 kPa (3.4 mmHg, 0.134 inHg)	0.45 kPa (3.4 mmHg, 0.134 inHg)	0.45 kPa (3.4 mmHg, 0.134 inHg)	0.45 kPa (3.4 mmHg, 0.134 inHg)
50 L (13.2 US gal, 11.0 Imp gal)	0.13 kPa (1.0 mmHg, 0.039 inHg)	0.20 kPa (1.5 mmHg, 0.059 inHg)	0.39 kPa (2.9 mmHg, 0.114 inHg)	0.39 kPa (2.9 mmHg, 0.114 inHg)	0.39 kPa (2.9 mmHg, 0.114 inHg)	0.39 kPa (2.9 mmHg, 0.114 inHg)

Time Needed for Diagnosis: 65 — 514 seconds
Malfunction Indicator Light Illumination: Illuminates when malfunction occurs in 2 continuous drive cycles.

6. DTC CLEAR CONDITION

- When the OK idling cycle was completed 40 times in a row
- When “Clear Memory” was performed

7. MALFUNCTION INDICATOR LIGHT CLEAR CONDITION

- When the OK driving cycle was completed 3 times in a row
- When “Clear Memory” was performed

8. FAIL SAFE

None

9. ECM OPERATION AT DTC SETTING

- Memorize the freeze frame data. (For test mode $02)
- Memorize the diagnostic value and trouble standard value. (For test mode $06)

BB:DTC P0447 EVAPORATIVE EMISSION CONTROL SYSTEM VENT CONTROL CIRCUIT OPEN

1. OUTLINE OF DIAGNOSIS

Detect the open or short circuit of drain valve.
Judge NG when the ECM output level is different from the actual terminal level.

2. COMPONENT DESCRIPTION

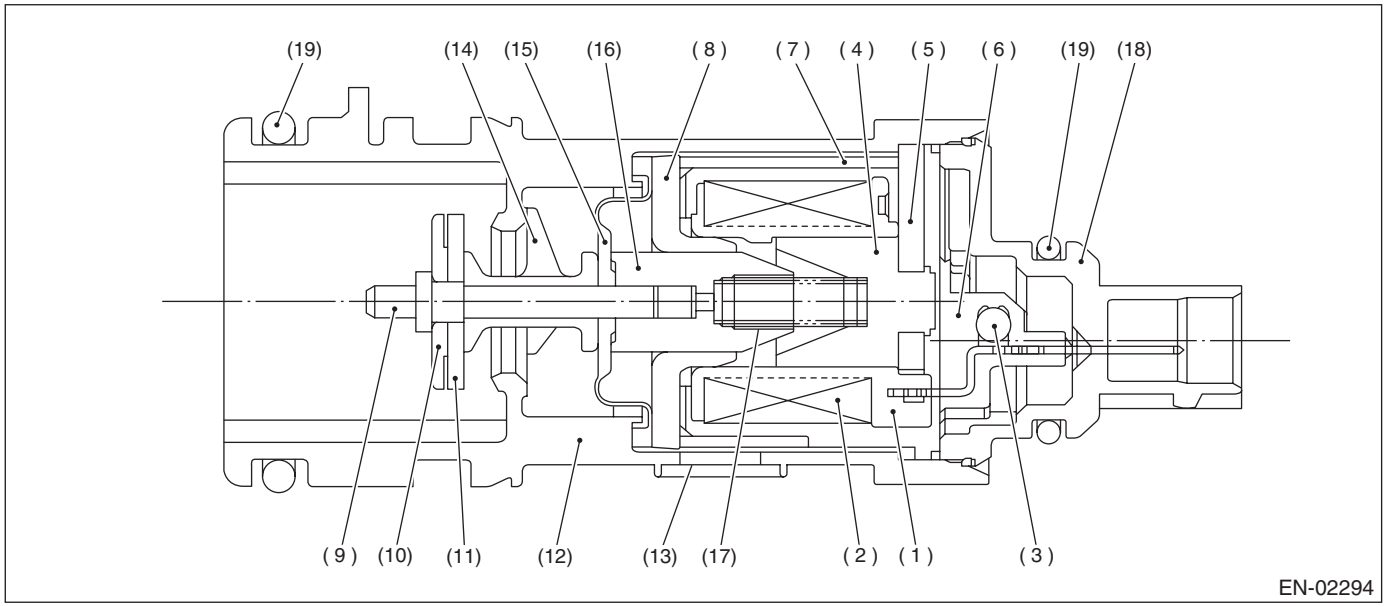

(1) Bobbin
(2) Coil
(3) Diode
(4) Stator core
(5) End plate
(6) Body
(7) Yoke
(8) Magnetic plate
(9) Shaft
(10) Plate
(11) Valve
(12) Housing
(13) Filter
(14) Retainer
(15) Diaphragm
(16) Moving core
(17) Spring
(18) Cover
(19) O-ring

3. ENABLE CONDITION

Secondary Parameters	Enable Conditions
None	

4. GENERAL DRIVING CYCLE

Always perform the diagnosis continuously.

5. DIAGNOSTIC METHOD

• Abnormality Judgment

Judge NG when the continuous time of completing the malfunction criteria below becomes more than 2.5 seconds.

Judgment Value

Malfunction Criteria	Threshold Value
Ignition switch	ON
Battery voltage	≥ 10.9 V
After starting engine	1 second or more
Terminal output voltage when ECM sends OFF signal	Low

Time Needed for Diagnosis: 2.5 seconds
Malfunction Indicator Light Illumination: Illuminates as soon as the malfunction occurs.
• Normality Judgment

Judge OK and clear the NG when the malfunction criteria below are completed.
Judgment Value

Malfunction Criteria	Threshold Value
Ignition switch	ON
Battery voltage	≥ 10.9 V
After starting engine	1 second or more
Terminal output voltage when ECM sends OFF signal	High

6. DTC CLEAR CONDITION

- When the OK idling cycle was completed 40 times in a row
- When “Clear Memory” was performed

7. MALFUNCTION INDICATOR LIGHT CLEAR CONDITION

- When the OK driving cycle was completed 3 times in a row
- When “Clear Memory” was performed

8. FAIL SAFE

PCV control: Open the PCV solenoid.

9. ECM OPERATION AT DTC SETTING

Memorize the freeze frame data. (For test mode $02)

BC:DTC P0448 EVAPORATIVE EMISSION CONTROL SYSTEM VENT CONTROL CIRCUIT SHORTED

1. OUTLINE OF DIAGNOSIS

Detect the open or short circuit of drain valve.
Judge NG when the ECM output level is different from the actual terminal level.

2. COMPONENT DESCRIPTION

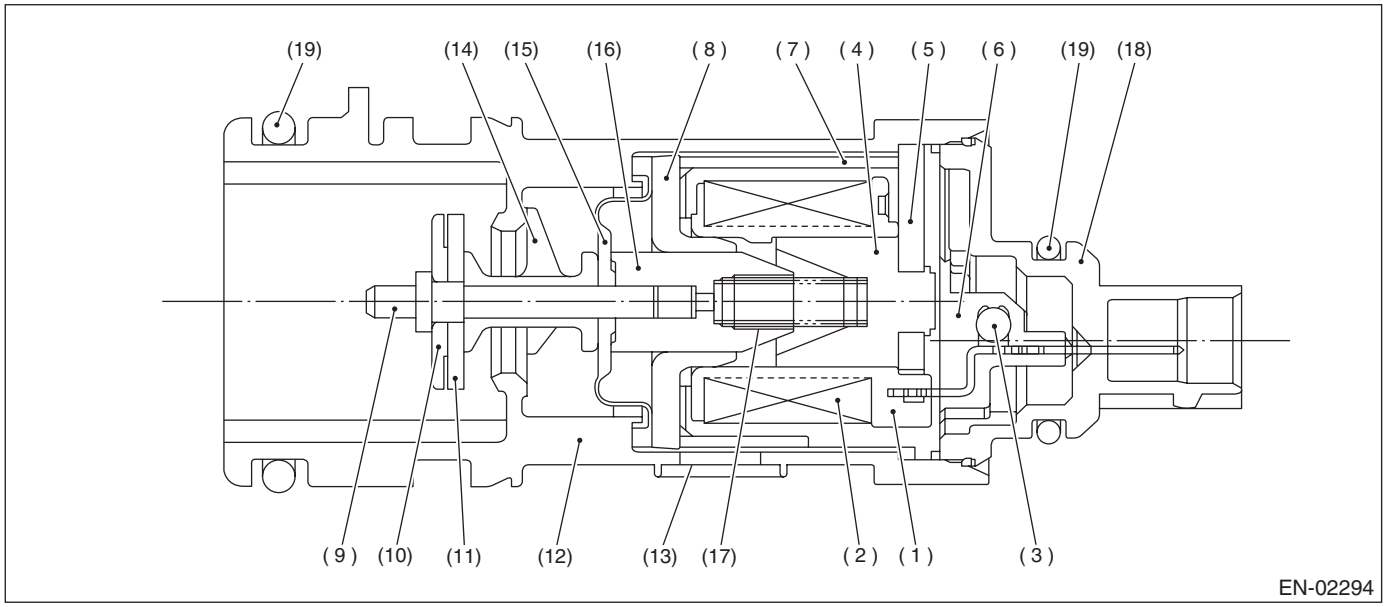

(1) Bobbin
(2) Coil
(3) Diode
(4) Stator core
(5) End plate
(6) Body
(7) Yoke
(8) Magnetic plate
(9) Shaft
(10) Plate
(11) Valve
(12) Housing
(13) Filter
(14) Retainer
(15) Diaphragm
(16) Moving core
(17) Spring
(18) Cover
(19) O-ring

3. ENABLE CONDITION

Secondary Parameters	Enable Conditions
None	

4. GENERAL DRIVING CYCLE

Always perform the diagnosis continuously.

5. DIAGNOSTIC METHOD

• Abnormality Judgment

Judge NG when the continuous time of completing the malfunction criteria below becomes more than 2.5 seconds.

Judgment Value

Malfunction Criteria	Threshold Value
Ignition switch	ON
Battery voltage	≥ 10.9 V
After starting engine	1 second or more
Terminal output voltage when ECM sends ON signal	High

Time Needed for Diagnosis: 2.5 seconds
Malfunction Indicator Light Illumination: Illuminates as soon as the malfunction occurs.
• Normality Judgment

Judge OK and clear the NG when the malfunction criteria below are completed.
Judgment Value

Malfunction Criteria	Threshold Value
Ignition switch	ON
Battery voltage	≥ 10.9 V
After starting engine	1 second or more
Terminal output voltage when ECM sends ON signal	Low

6. DTC CLEAR CONDITION

- When the OK idling cycle was completed 40 times in a row
- When “Clear Memory” was performed

7. MALFUNCTION INDICATOR LIGHT CLEAR CONDITION

- When the OK driving cycle was completed 3 times in a row
- When “Clear Memory” was performed

8. FAIL SAFE

PCV control: Open the PCV solenoid.

9. ECM OPERATION AT DTC SETTING

Memorize the freeze frame data. (For test mode $02)

BD:DTC P0451 EVAPORATIVE EMISSION CONTROL SYSTEM PRESSURE SENSOR

1. OUTLINE OF DIAGNOSIS

Detect the tank pressure sensor output property abnormality.
Judge NG when there is no pressure variation, which should exist in the tank, considering the engine status.

2. COMPONENT DESCRIPTION

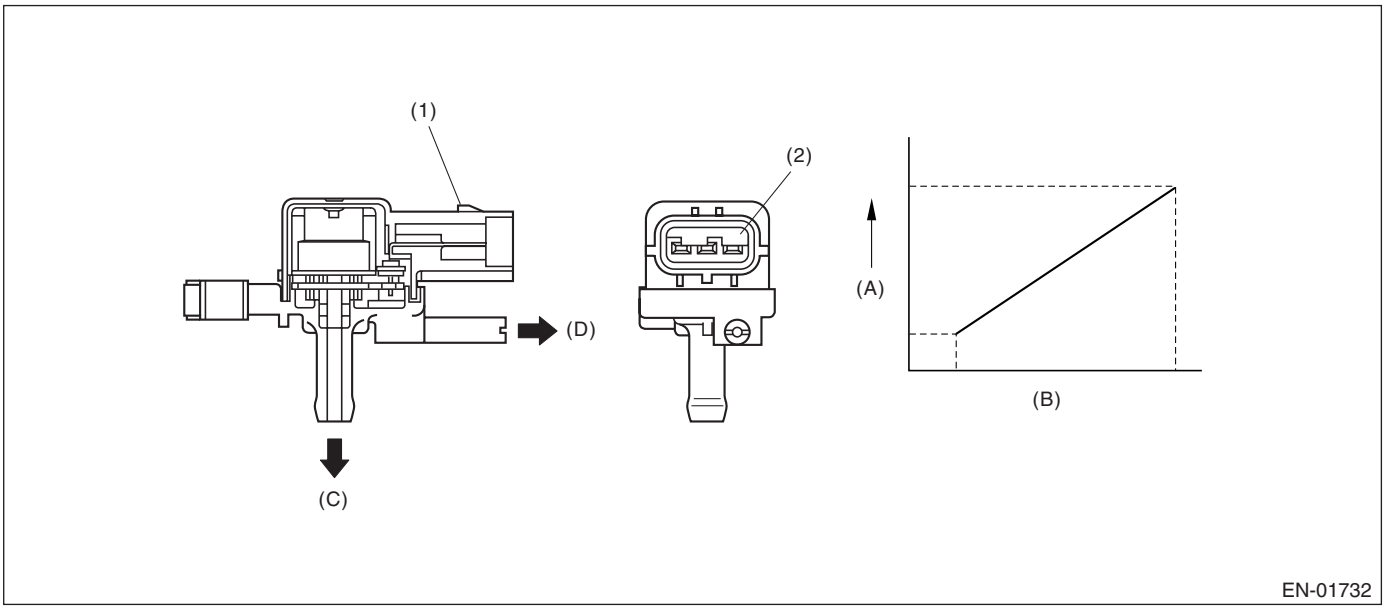

(1) Connector
(2) Terminal
(A) Output voltage
(B) Input voltage
(C) To fuel tank
(D) To fuel tank sensor control valve

3. ENABLE CONDITION

Secondary Parameters	Enable Conditions
After starting engine	60 seconds or more
Fuel level	≥ 9.6 ℓ (2.54 US gal, 2.11 Imp gal)
Fuel temperature	< 35°C (95°F)
Battery voltage	≥ 10.9 V
Atmospheric pressure	> 75.1 kPa (563 mmHg, 22.2 inHg)
Engine speed	< 6500 rpm
Purge control solenoid valve ON/OFF	Experienced

4. GENERAL DRIVING CYCLE

- Perform the diagnosis continuously in 60 seconds or more after starting the engine.
- Be sure to check the fuel level and fuel temperature.

5. DIAGNOSTIC METHOD

• Abnormality Judgment

Judge NG when the malfunction criteria below is completed.
Judgment Value

Malfunction Criteria	Threshold Value
Number of times when the difference between the Max. fuel level and the Min., fuel level every 60 seconds is 2 ℓ (0.53 US gal, 0.44 Imp gal) or more (with enable condition completed)	≥ 16 times
Max. − Min. tank pressure (with enable condition completed)	< 0.05 kPa (0.375 mmHg, 0.02 inHg)
Max. − Min. fuel temperature (with enable condition completed)	≥ 7°C (44.6°F)

If the fuel level (Max. − Min.) in every 60 seconds is less than 5 ℓ , extend 60 seconds more and make judgment with the Max. and Min. fuel level in 120 seconds.
If the difference did not appear though the time extended, extend the time (180, 240, 300 seconds) and continue the judgment.
Diagnosis counter will count up when the difference of fuel level (Max. − Min.) is more than 5 ℓ .
Time Needed for Diagnosis: 1 minute × 16 times or more
Malfunction Indicator Light Illumination: Illuminates when malfunction occurs in two continuous drive cycles.

• Normality Judgment

Judge OK when the malfunction criteria below is completed.
Judgment Value

Malfunction Criteria	Threshold Value
Max. − Min. tank pressure	≥ 0.05 kPa (0.375 mmHg, 0.02 inHg)

6. DTC CLEAR CONDITION

- When the OK idling cycle was completed 40 times in a row
- When “Clear Memory” was performed

7. MALFUNCTION INDICATOR LIGHT CLEAR CONDITION

- When the OK driving cycle was completed 3 times in a row
- When “Clear Memory” was performed

8. FAIL SAFE

Purge control solenoid valve control: Purge fixation mode is prohibited.

9. ECM OPERATION AT DTC SETTING

Memorize the freeze frame data. (For test mode $02)

BE:DTC P0452 EVAPORATIVE EMISSION CONTROL SYSTEM PRESSURE SENSOR LOW INPUT

1. OUTLINE OF DIAGNOSIS

Detect the open or short circuit of the fuel tank pressure sensor.
Judge NG when out of the standard value.

2. COMPONENT DESCRIPTION

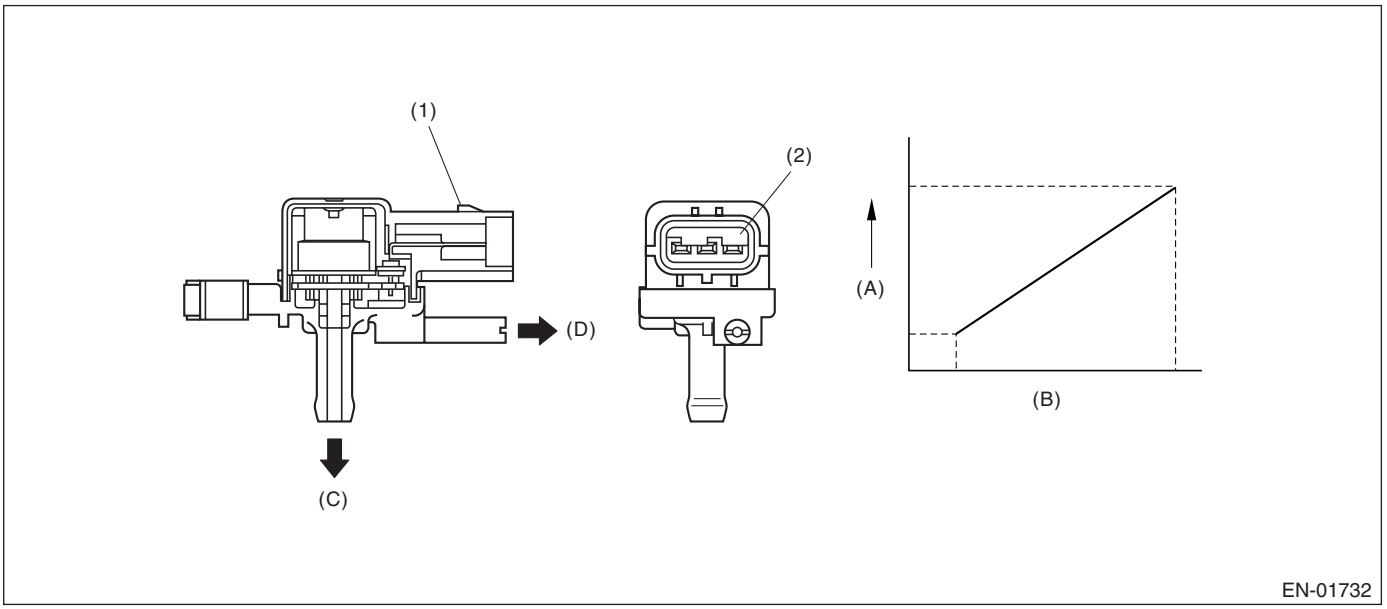

(1) Connector
(2) Terminal
(A) Output voltage
(B) Input voltage
(C) To fuel tank
(D) To fuel tank sensor control valve

3. ENABLE CONDITION

Secondary Parameters	Enable Conditions
Battery voltage	≥ 10.9 V

4. GENERAL DRIVING CYCLE

Always perform the diagnosis continuously.

5. DIAGNOSTIC METHOD

• Abnormality Judgment

Judge NG when the continuous time of completing the malfunction criteria below becomes more than 15 seconds.

Judgment Value

Malfunction Criteria	Threshold Value
Fuel tank pressure	< –7.45 kPa (–55.86 mmHg, –2.20 inHg)

Time Needed for Diagnosis: 15 seconds
Malfunction Indicator Light Illumination: Illuminates as soon as malfunction occurs.

• Normality Judgment

Judge OK when the malfunction criteria below is completed.

Judgment Value

Malfunction Criteria	Threshold Value
Fuel tank pressure	≥ −7.33 kPa (−55 mmHg, −2.17 inHg)
Feedback lambda coefficient	≥ 0.9

6. DTC CLEAR CONDITION

- When the OK idling cycle was completed 40 times in a row
- When “Clear Memory” was performed

7. MALFUNCTION INDICATOR LIGHT CLEAR CONDITION

- When the OK driving cycle was completed 3 times in a row
- When “Clear Memory” was performed

8. FAIL SAFE

Purge control solenoid valve control: Purge fixation mode is prohibited.

9. ECM OPERATION AT DTC SETTING

Memorize the freeze frame data. (For test mode $02)

BF:DTC P0453 EVAPORATIVE EMISSION CONTROL SYSTEM PRESSURE SENSOR HIGH INPUT

1. OUTLINE OF DIAGNOSIS

Detect the breaking/shortage of the fuel tank pressure sensor.
Judge NG when out of the standard value.

2. COMPONENT DESCRIPTION

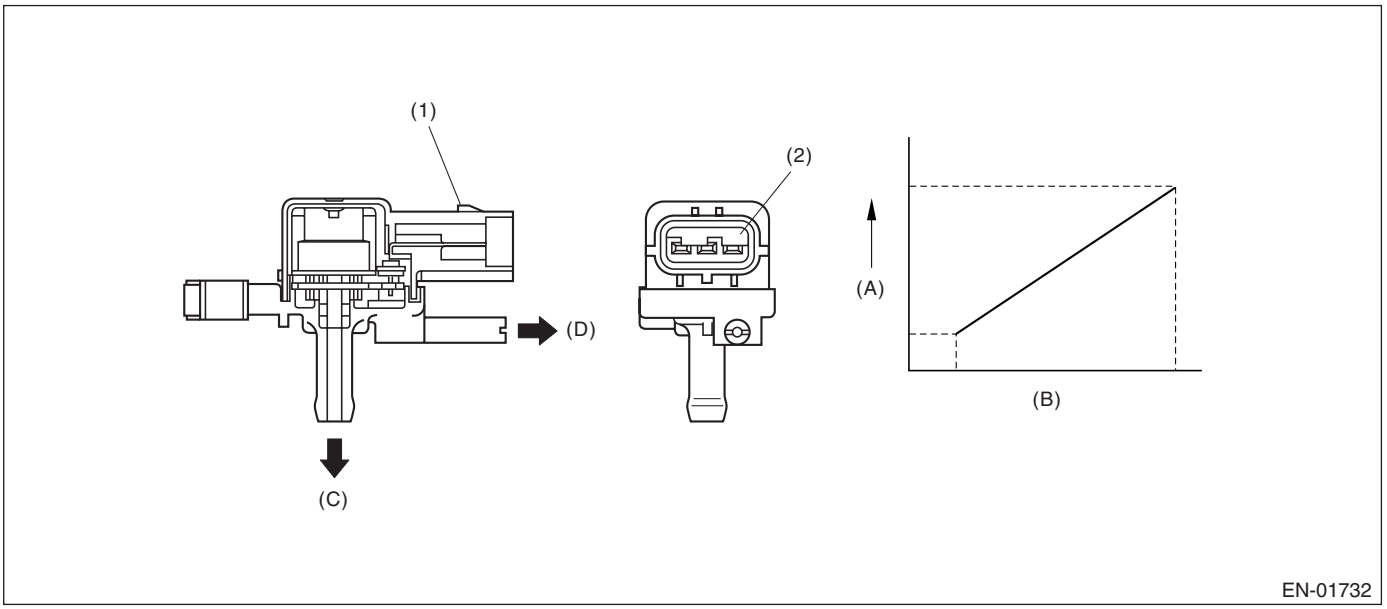

(1) Connector
(2) Terminal
(A) Output voltage
(B) Input voltage
(C) To fuel tank
(D) To fuel tank sensor control valve

3. ENABLE CONDITION

Secondary Parameters	Enable Conditions
Vehicle speed	≥ 2 km/h (1.24 MPH)
All conditions of EVAP canister purge	Complete
Evaporation gas density learning value	≤ 0.08
Main feedback compensation coefficient	≥ 0.9
Battery voltage	≥ 10.9 V

4. GENERAL DRIVING CYCLE

Perform the diagnosis continuously when purging.

5. DIAGNOSTIC METHOD

• Abnormality Judgment

Judge NG when the continuous time until completing the malfunction criteria below becomes more than 15 seconds.

Judgment Value

Malfunction Criteria	Threshold Value
Fuel tank pressure	≥ 7.98 kPa (59.85 mmHg, 2.36 inHg)
Fuel temperature	〈 35°C (95°F)
Atmospheric pressure	≥ 75.1 kPa (563 mmHg, 22.2 inHg)

Time Needed for Diagnosis: 15 seconds
Malfunction Indicator Light Illumination: Illuminates as soon as malfunction occurs.
• Normality Judgment

Judge OK when the malfunction criteria below is completed.
Judgment Value

Malfunction Criteria	Threshold Value
Fuel tank pressure	〈 7.33 kPa (55 mmHg, 2.17 inHg)

6. DTC CLEAR CONDITION

- When the OK idling cycle was completed 40 times in a row
- When “Clear Memory” was performed

7. MALFUNCTION INDICATOR LIGHT CLEAR CONDITION

- When the OK driving cycle was completed 3 times in a row
- When “Clear Memory” was performed

8. FAIL SAFE

Purge control solenoid valve control: Purge fixation mode is prohibited.

9. ECM OPERATION AT DTC SETTING

Memorize the freeze frame data. (For test mode $02)

BG:DTC P0456 EVAPORATIVE EMISSION CONTROL SYSTEM LEAK DETECTED (VERY SMALL LEAK)

1. OUTLINE OF DIAGNOSIS

For the detecting criteria, refer to DTC P0442 EVAPORATIVE EMISSION CONTROL SYSTEM LEAK DETECTED (SMALL LEAK). <Ref. to GD(H4DOTC)-116, DTC P0442 EVAPORATIVE EMISSION CONTROL SYSTEM LEAK DETECTED (SMALL LEAK), Diagnostic Trouble Code (DTC) Detecting Criteria.>

BH:DTC P0457 EVAPORATIVE EMISSION CONTROL SYSTEM LEAK DETECTED (FUEL CAP LOOSE/OFF)

1. OUTLINE OF DIAGNOSIS

For the detecting criteria, refer to DTC P0442 EVAPORATIVE EMISSION CONTROL SYSTEM LEAK DETECTED (SMALL LEAK). <Ref. to GD(H4DOTC)-116, DTC P0442 EVAPORATIVE EMISSION CONTROL SYSTEM LEAK DETECTED (SMALL LEAK), Diagnostic Trouble Code (DTC) Detecting Criteria.>

BI: DTC P0458 EVAPORATIVE EMISSION CONTROL SYSTEM PURGE CONTROL VALVE CIRCUIT LOW

1. OUTLINE OF DIAGNOSIS

Detect open or short circuit of purge control solenoid valve.
Judge NG when ECM output level is different from actual terminal level.

2. COMPONENT DESCRIPTION

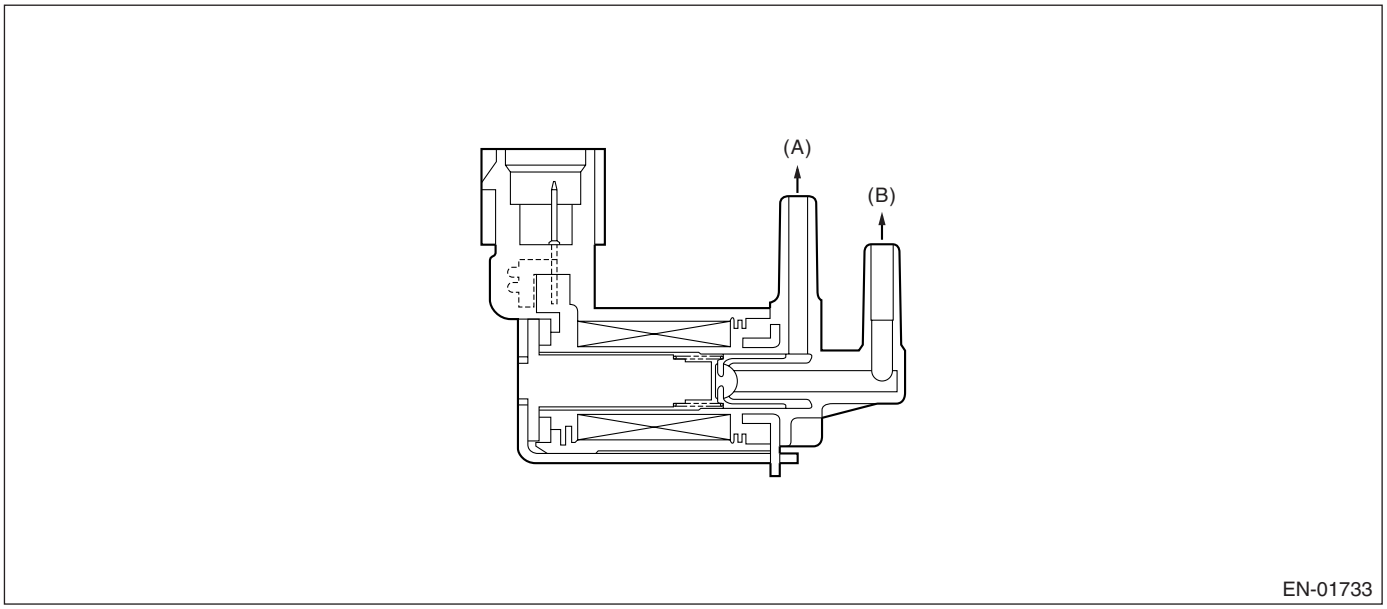

(A) To canister (B) To intake manifold

3. ENABLE CONDITION

Secondary Parameters	Enable Conditions
Ignition switch	ON
Battery voltage	≥ 10.9 V
After starting engine	1 second or more

4. GENERAL DRIVING CYCLE

Always perform the diagnosis after starting the engine.

5. DIAGNOSTIC METHOD

• Abnormality Judgment

Judge NG when the malfunction criteria below are completed.
Judgment Value

Malfunction Criteria	Threshold Value
Continuous time of completing criteria below.	≥ 2.5 seconds
Duty ratio of 'ON'	< 75%
Terminal output voltage	Low

Time Needed for Diagnosis: 2.5 seconds
Malfunction Indicator Light Illumination: Illuminates as soon as malfunction occurs.
• Normality Judgment

Judge OK and clear NG when the malfunction criterion below is completed.

Judgment Value

Malfunction Criteria	Threshold Value
Terminal output voltage	High

6. DTC CLEAR CONDITION

- When the OK idling cycle was completed 40 times in a row
- When “Clear Memory” was performed

7. MALFUNCTION INDICATOR LIGHT CLEAR CONDITION

- When the OK driving cycle was completed 3 times in a row
- When “Clear Memory” was performed

8. FAIL SAFE

None

9. ECM OPERATION AT DTC SETTING

Memorize the freeze frame data. (For test mode $02)

BJ:DTC P0459 EVAPORATIVE EMISSION CONTROL SYSTEM PURGE CONTROL VALVE CIRCUIT HIGH

1. OUTLINE OF DIAGNOSIS

Detect open or short circuit of purge control solenoid valve.
Judge NG when ECM output level is different from actual terminal level.

2. COMPONENT DESCRIPTION

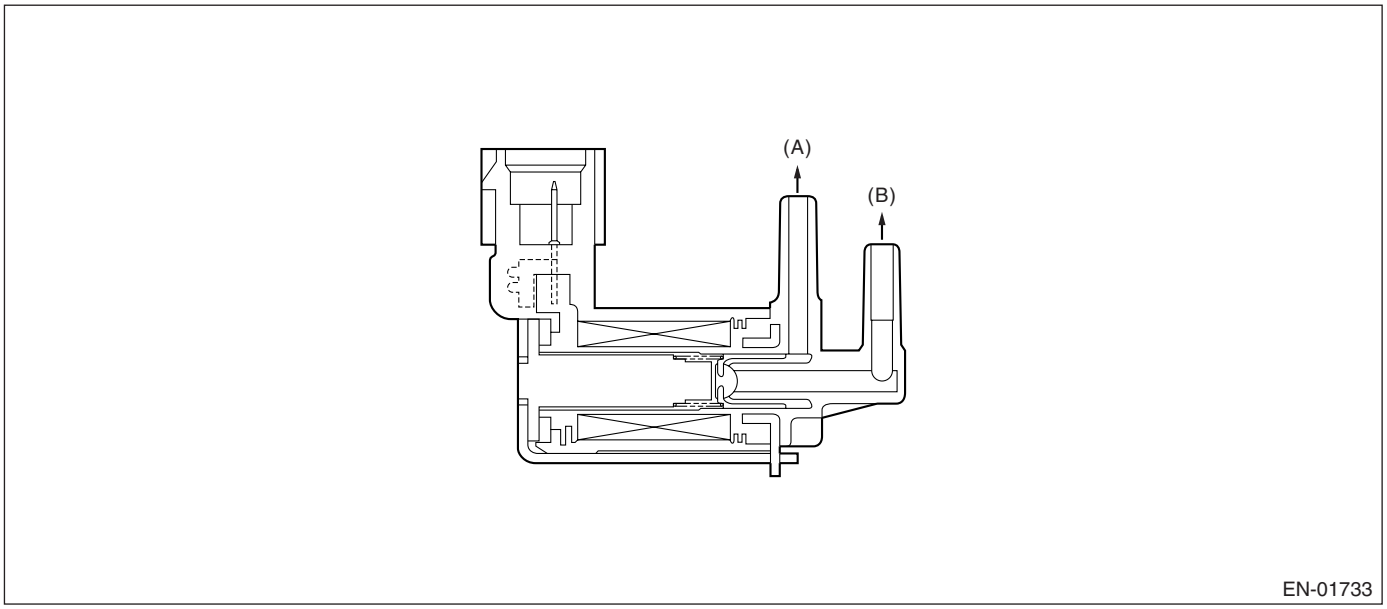

(A) To canister (B) To intake manifold

3. ENABLE CONDITION

Secondary Parameters	Enable Conditions
Ignition switch	ON
Battery voltage	≥ 10.9 V
After starting engine	1 second or more

4. GENERAL DRIVING CYCLE

Always perform the diagnosis after starting the engine.

5. DIAGNOSTIC METHOD

• Abnormality Judgment

Judge NG when the malfunction criteria below are completed.
Judgment Value

Malfunction Criteria	Threshold Value
Continuous time of completing criteria below.	≥ 2.5 seconds
Duty ratio of 'ON'	≥ 25%
Terminal output voltage	High

Time Needed for Diagnosis: 2.5 seconds
Malfunction Indicator Light Illumination: Illuminates when malfunction occurs in 2 continuous driving cycles.

• Normality Judgment

Judge OK and clear NG when the malfunction criterion below is completed.

Judgment Value

Malfunction Criteria	Threshold Value
Terminal output voltage	Low

6. DTC CLEAR CONDITION

- When the OK idling cycle was completed 40 times in a row
- When “Clear Memory” was performed

7. MALFUNCTION INDICATOR LIGHT CLEAR CONDITION

- When the OK driving cycle was completed 3 times in a row
- When “Clear Memory” was performed

8. FAIL SAFE

None

9. ECM OPERATION AT DTC SETTING

Memorize the freeze frame data. (For test mode $02)

BK:DTC P0461 FUEL LEVEL SENSOR CIRCUIT RANGE/PERFORMANCE

1. OUTLINE OF DIAGNOSIS

Detect the malfunction of fuel level sensor output property.
Judge NG when the fuel level does not vary whereas it seemed to vary be in a usual driving speed.

2. COMPONENT DESCRIPTION

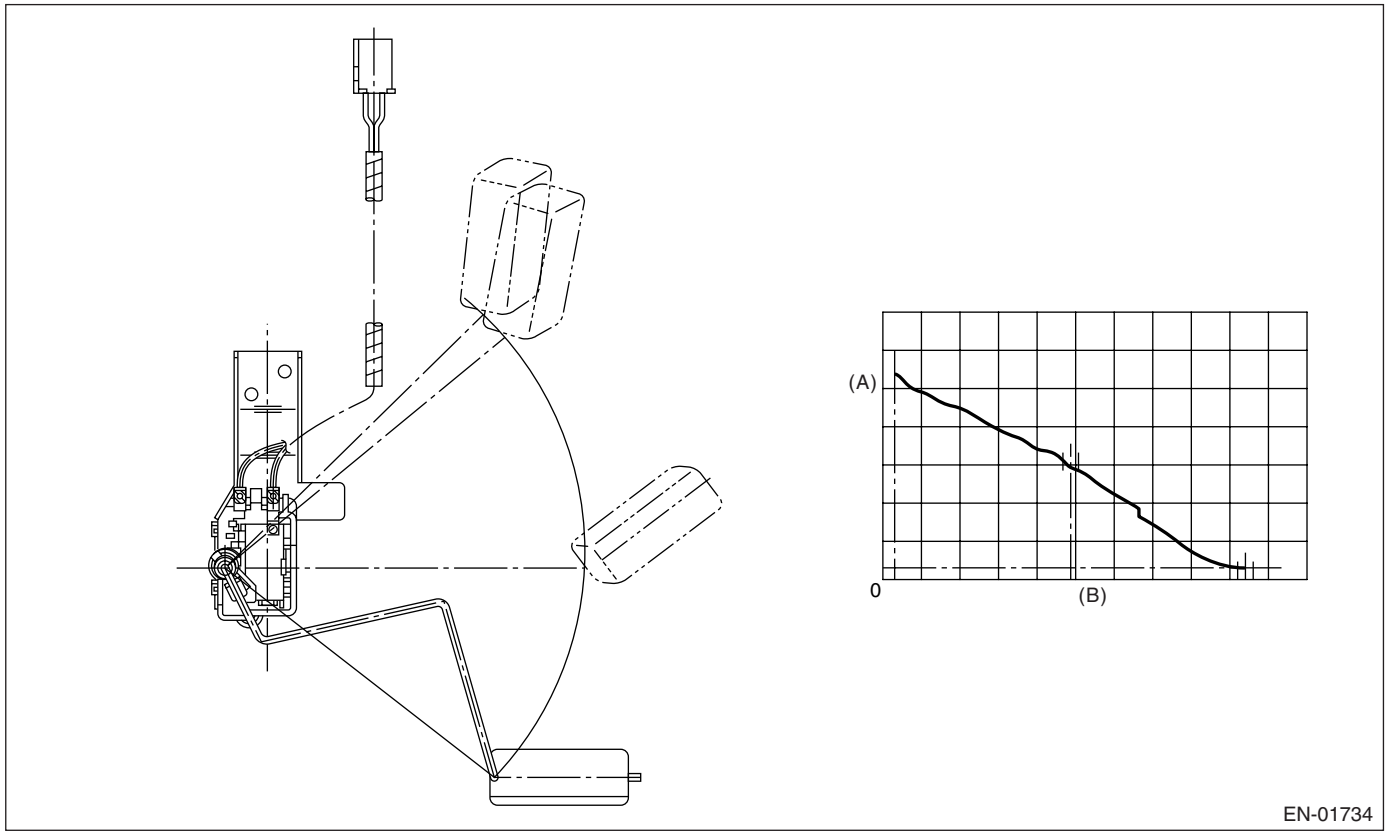

(A) Fuel level (L)
(B) Resistance value (Ω)

3. ENABLE CONDITION

Secondary Parameters	Enable Conditions
None	

4. GENERAL DRIVING CYCLE

Always perform the diagnosis continuously.

5. DIAGNOSTIC METHOD

• Abnormality Judgment

Judge NG when the malfunction criteria below are completed.
Judgment Value

Malfunction Criteria	Threshold Value
Accumulated amount of intake air	〉331 kg (729.7 lb)
Max.– Min. fuel level output	〈 2.6 ℓ (0.69 US gal, 0.57 Imp gal)
Battery voltage	≥ 10.9 V
Engine speed	〈 6500 rpm
After starting engine	More than 10 seconds

Time Needed for Diagnosis: To be determined.
Malfunction Indicator Light Illumination: Illuminates when malfunction occurs in 2 continuous driving cycles.
• Normality Judgment

Judge OK and clear the NG when the malfunction criteria below are completed.
Judgment Value

Malfunction Criteria	Threshold Value
Accumulated amount of intake air	〉331 kg (729.7 lb)
Max. − Min. fuel level output	≥ 2.6 ℓ (0.69 US gal, 0.57 Imp gal)
Battery voltage	≥ 10.9 V
After starting engine	More than 10 seconds

6. DTC CLEAR CONDITION

- When the OK idling cycle was completed 40 times in a row
- When “Clear Memory” was performed

7. MALFUNCTION INDICATOR LIGHT CLEAR CONDITION

- When the OK driving cycle was completed 3 times in a row
- When “Clear Memory” was performed

8. FAIL SAFE

None

9. ECM OPERATION AT DTC SETTING

Memorize the freeze frame data. (For test mode $02)

BL:DTC P0462 FUEL LEVEL SENSOR CIRCUIT LOW INPUT

1. OUTLINE OF DIAGNOSIS

Detect the open or short circuit of fuel level sensor. Judge NG when out of the standard value.

2. COMPONENT DESCRIPTION

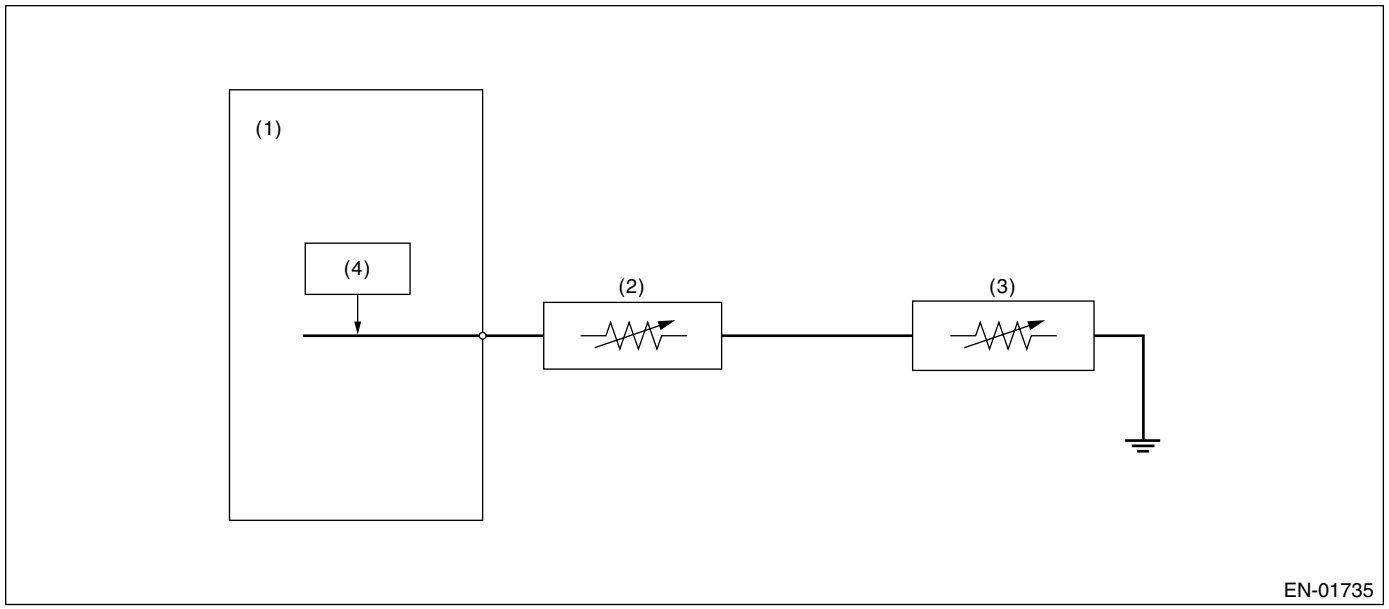

(1) Engine control module (ECM)
(2) Fuel level sensor
(3) Fuel sub level sensor
(4) Detecting circuit

3. ENABLE CONDITION

Secondary Parameters	Enable Conditions
None	

4. GENERAL DRIVING CYCLE

Always perform the diagnosis continuously

5. DIAGNOSTIC METHOD

• Abnormality Judgment

Judge NG when the continuous time of completing the malfunction criteria below becomes more than the time needed for diagnosis (2.5 seconds).

Judgment Value

Malfunction Criteria	Threshold Value
Ignition switch	ON
Battery voltage	≥ 10.9 V
After starting engine	3 seconds or more
Output voltage	< 0.173 V

Time Needed for Diagnosis: 2.5 seconds

Malfunction Indicator Light Illumination: Illuminates when malfunction occurs in 2 continuous driving cycles.

• Normality Judgment

Judge OK and clear the NG when the malfunction criteria below are completed.

Judgment Value

Malfunction Criteria	Threshold Value
Ignition switch	ON
Battery voltage	≥ 10.9 V
After starting engine	3 seconds or more
Output voltage	≥ 0.173 V

6. DTC CLEAR CONDITION

- When the OK idling cycle was completed 40 times in a row
- When “Clear Memory” was performed

7. MALFUNCTION INDICATOR LIGHT CLEAR CONDITION

- When the OK driving cycle was completed 3 times in a row
- When “Clear Memory” was performed

8. FAIL SAFE

None

9. ECM OPERATION AT DTC SETTING

Memorize the freeze frame data. (For test mode $02)

BM:DTC P0463 FUEL LEVEL SENSOR CIRCUIT HIGH INPUT

1. OUTLINE OF DIAGNOSIS

Detect the open or short circuit of fuel level sensor. Judge NG when out of the standard value.

2. COMPONENT DESCRIPTION

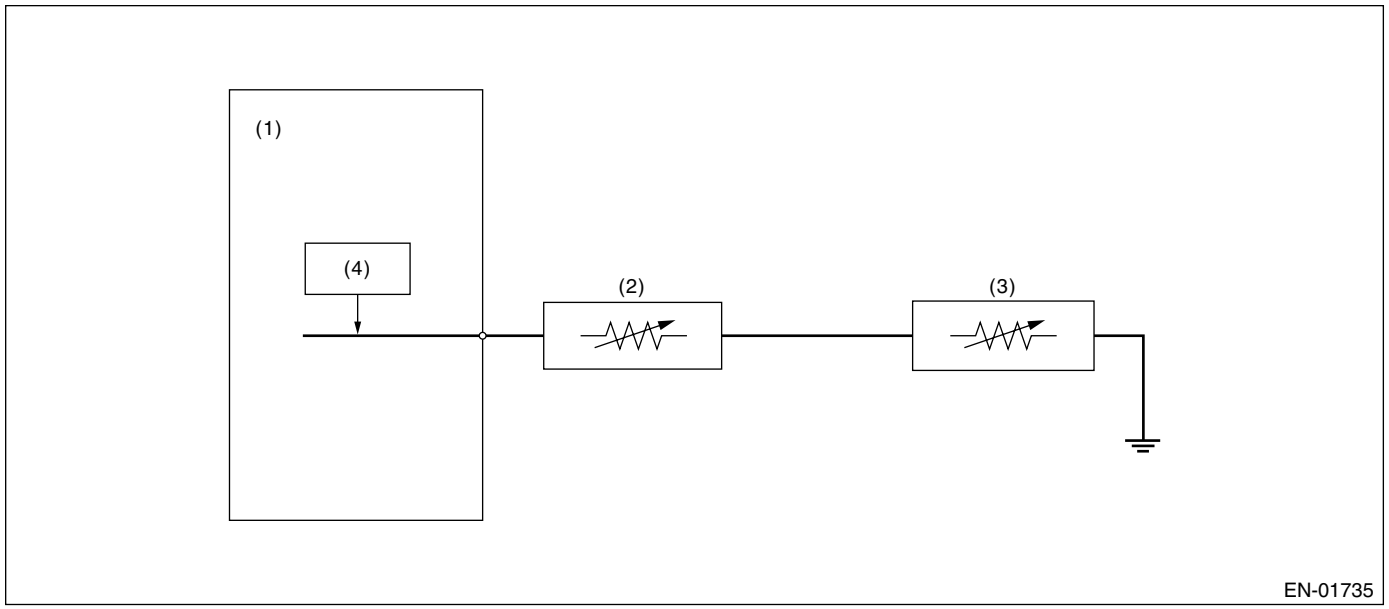

(1) Engine control module (ECM)
(2) Fuel level sensor
(3) Fuel sub level sensor
(4) Detecting circuit

3. ENABLE CONDITION

Secondary Parameters	Enable Conditions
None	

4. GENERAL DRIVING CYCLE

Always perform the diagnosis continuously.

5. DIAGNOSTIC METHOD

• Abnormality Judgment

Judge NG when the continuous time of completing the malfunction criteria below becomes more than the time needed for diagnosis (1 second).

Judgment Value

Malfunction Criteria	Threshold Value
Ignition switch	ON
Battery voltage	≥ 10.9 V
After starting engine	3 seconds or more
Output voltage	≥ 7.212 V

Time Needed for Diagnosis: 1 second

Malfunction Indicator Light Illumination: Illuminates when malfunction occurs in 2 continuous driving cycles.

• Normality Judgment

Judge OK and clear the NG when the malfunction criteria below are completed.

Judgment Value

Malfunction Criteria	Threshold Value
Ignition switch	ON
Battery voltage	≥ 10.9 V
After starting engine	3 seconds or more
Output voltage	< 7.212 V

6. DTC CLEAR CONDITION

- When the OK idling cycle was completed 40 times in a row
- When “Clear Memory” was performed

7. MALFUNCTION INDICATOR LIGHT CLEAR CONDITION

- When the OK driving cycle was completed 3 times in a row
- When “Clear Memory” was performed

8. FAIL SAFE

None

9. ECM OPERATION AT DTC SETTING

Memorize the freeze frame data. (For test mode $02)

BN:DTC P0464 FUEL LEVEL SENSOR CIRCUIT INTERMITTENT

1. OUTLINE OF DIAGNOSIS

Detect the malfunction of unstable output from fuel level sensor caused by noise.
Judge NG when the max. value and cumulative value of output voltage variation of fuel level sensor is larger than the threshold value.

2. ENABLE CONDITION

Secondary Parameters	Enable Conditions
Engine speed	≥ 500 rpm
After starting engine	1 second or more
Ignition switch	ON
Battery voltage	〉10.9 V
Idle switch	ON
Fuel level	9.6 ←→ 54.4 ℓ (2.54 ←→ 14.37 US gal, 2.11 ←→ 11.97 Imp gal)
Vehicle speed = 0 km/h (0 MPH)	10 seconds or more

3. GENERAL DRIVING CYCLE

- Perform the diagnosis continuously in idling condition.
- Pay attention to the fuel level.

4. DIAGNOSTIC METHOD

Calculate the Max. value (delflmax) and cumulative value (sumfl) of output voltage variation of fuel level sensor during 12.8 seconds. Judge it normal when both max. and cumulative values are not over the threshold

value. Otherwise, when either of them is over the threshold value, count the diagnosis counter up. And judge NG if the counter indicated 6 counts.

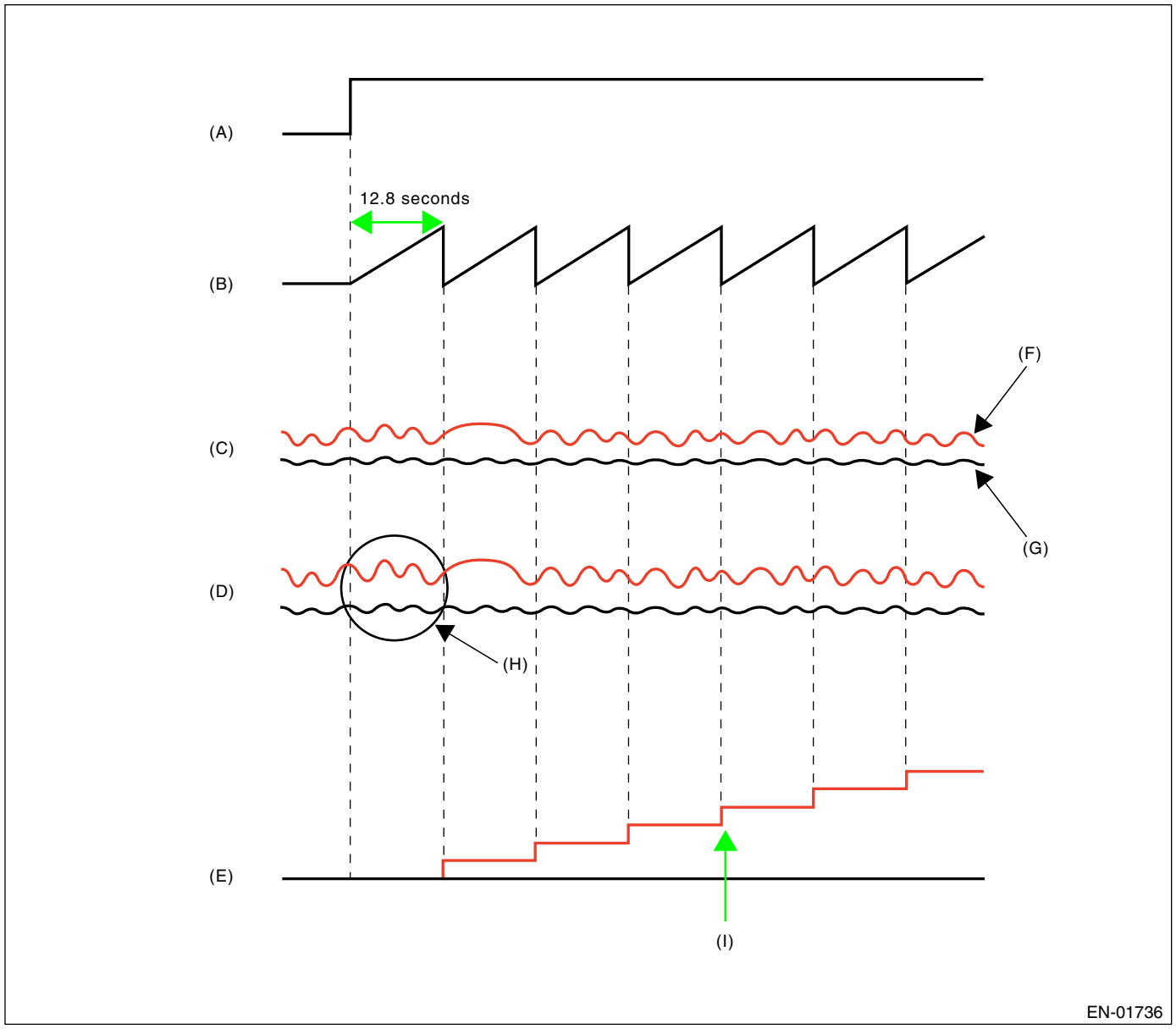

(A) Diagnosis condition
(B) Diagnosis time
(C) Fuel level sensor at idle
(D) Amount of fuel level output voltage variation
(E) Diagnosis counter
(F) Malfunction
(G) Normal
(H) Calculate the Max. value (delvfmx) and the cumulative value (sumvfl)
(I) NG at 4 counts

• Abnormality Judgment

Judge NG when the malfunction criteria below are completed.
Judgment Value

Malfunction Criteria	Threshold Value
Integrated times of the condition reaching follows, DELFLMAX ≥ 0.609 V or SUMFL ≥ 25.92 V where, DELFLMAX is Max. deviation of sensor output during 12.8 seconds. SUMFL is integrated value of sensor output deviation during 12.8 seconds.	≥ 4 times

Do not count the diagnosis counter up when the following conditions are completed during 12.8 seconds.

Max − Min of tank pressure during 12.8 seconds	≥ 0.05 kPa (0.375 mmHg, 0.02 inHg)
Max − Min of battery voltage during 12.8 seconds	≥ 0.4 V

Time Needed for Diagnosis: 12.8 seconds × 4 times
Malfunction Indicator Light Illumination: Illuminates when malfunction occurs in 2 continuous driving cycles.

• Normality Judgment

Judge OK and clear the NG when the malfunction criteria below are completed.
Judgment Value

Malfunction Criteria	Threshold Value
DELFLMAX	< 0.609 V
SUMFL Where, DELFLMAX is Max. deviation of sensor output during 12.8 seconds. SUMFL is integrated value of sensor output deviation during 12.8 seconds.	< 25.92 V

5. DTC CLEAR CONDITION

- When the OK idling cycle was completed 40 times in a row
- When “Clear Memory” was performed

6. MALFUNCTION INDICATOR LIGHT CLEAR CONDITION

- When the OK driving cycle was completed 3 times in a row
- When “Clear Memory” was performed

7. FAIL SAFE

None

8. ECM OPERATION AT DTC SETTING

Memorize the freeze frame data. (For test mode $02)

BO:DTC P0483 COOLING FAN RATIONALITY CHECK

1. OUTLINE OF DIAGNOSIS

Detect the function abnormality of the radiator fan.
Judge NG when the engine coolant temperature slowly decreases even when the radiator fan is rotating.

2. ENABLE CONDITION

Diagnostic enable condition is completed if the radiator fan changes from OFF to ON when all of the conditions below are completed. When one of the conditions below is not completed, the diagnostic enable condition is not completed.

Secondary Parameters	Enable Conditions
Engine Speed	500 — 900 rpm
Idle switch	ON
Vehicle speed	0 km/h (0 MPH)
Battery voltage	≥ 10.9 V

3. GENERAL DRIVING CYCLE

Perform the diagnosis continuously when idling.

4. DIAGNOSTIC METHOD

• Abnormality Judgment

Judge NG when the continuous time of completing the malfunction criteria below becomes more than 5 minutes.
Judgment Value

Malfunction Criteria	Threshold Value
Engine coolant temperature	≥ 98°C (208°F)
Radiator fan	OFF → ON
Engine coolant temperature	Not reduce

Time Needed for Diagnosis: 5 minutes
Malfunction Indicator Light Illumination: Illuminates when malfunction occurs in 2 continuous driving cycles.
• Normality Judgment

Judge OK and clear NG when the malfunction criteria below are completed.
Judgment Value

Malfunction Criteria	Threshold Value
Radiator fan	OFF → ON
Engine coolant temperature	Reduce

5. DTC CLEAR CONDITION

- When the OK idling cycle was completed 40 times in a row
- When “Clear Memory” was performed

6. MALFUNCTION INDICATOR LIGHT CLEAR CONDITION

- When the OK driving cycle was completed 3 times in a row
- When “Clear Memory” was performed

7. FAIL SAFE

None

8. ECM OPERATION AT DTC SETTING

Memorize the freeze frame data. (For test mode $02)

BP:DTC P0500 VEHICLE SPEED SENSOR

1. OUTLINE OF DIAGNOSIS

Judge NG when out of standard value.
Judge NG when the received data from ABSCM&H/U is abnormal, and the vehicle speed data is impossible.

2. COMPONENT DISCRIPTION

The vehicle speed signal is transmitted to ABSCM&H/U. Then the OK/NG data of ABS wheel speed sensor is transmitted from ABSCM&H/U through CAN communication.

3. ENABLE CONDITION (USED WITH ABNORMAL JUDGMENT)

Secondary Parameters	Enable Conditions
Battery voltage	≥ 10.9 V
After engine starting	≥ 2 seconds

4. GENERAL DRIVING CYCLE

Perform the diagnosis continuously in 2 seconds or more after starting the engine.

5. DIAGNOSTIC METHOD

• Abnormality Judgment

Judge NG when the continuous time of completing the malfunction criteria below becomes more than 2.5 seconds.

Judgment Value

Malfunction Criteria	Threshold Value
Front ABS wheel speed sensor	Abnormal
When either of the following is completed	
Front left wheel speed	≥ 300 km/h (186 MPH)
Front right wheel speed	≥ 300 km/h (186 MPH)

Time Needed for Diagnosis: 2.5 seconds
Malfunction Indicator Light Illumination: Illuminates as soon as the malfunction occurs.

• Normality Judgment

Judge OK and clear the NG when all malfunction criteria below are completed.

Judgment Value

Malfunction Criteria	Threshold Value
Front left wheel speed	> 0 km/h (0 MPH) and < 300 km/h (186 MPH)
Front right wheel speed	> 0 km/h (0 MPH) and < 300 km/h (186 MPH)

6. DTC CLEAR CONDITION

- When the OK idling cycle was completed 40 times in a row
- When “Clear Memory” was performed

7. MALFUNCTION INDICATOR LIGHT CLEAR CONDITION

- When the OK driving cycle was completed 3 times in a row
- When “Clear Memory” was performed

8. FAIL SAFE

- Accelerator sensor signal process: Not allowed all closed points learning.
- Vehicle speed sensor signal process: Vehicle speed = 10 km/h (6 MPH)
- Fuel cut control: Not allowed vehicle speed 0 km/h (0 MPH) fuel cut. Normally the high vehicle speed fuel cut performs on vehicle speed condition and engine speed, but perform the fuel cut only on engine speed condition (4,400 rpm or more).

- ISC control: Set the open loop compensation to specified value (1 g (0.04 oz)/s). Not allowed ISC feedback volume calculation.
- Air conditioner control: Not allowed air conditioner cut at accelerating.
- Radiator fan control: ON both main/sub.
- Judge gear ratio: Control as gear fixed on 6th.
- Tumble generator valve control: Open the tumble generator valve.

9. ECM OPERATION AT DTC SETTING

Memorize the freeze frame data. (For test mode $02)

BQ:DTC P0506 IDLE CONTROL SYSTEM RPM LOWER THAN EXPECTED

1. OUTLINE OF DIAGNOSIS

Detect the malfunction that actual engine speed is not close to target engine speed during idling.
Judge NG when actual engine speed is not close to target engine speed during idling.

2. ENABLE CONDITION

Secondary Parameters	Enable Conditions
Engine coolant temperature	≥ 75°C (167°F)
Battery voltage	≥ 10.9 V
Atmospheric pressure	> 75.1 kPa (563 mmHg, 22.2 inHg)
Fuel level	≥ 9 ℓ (2.38 US gal, 1.98 Imp gal)
After starting engine	10 seconds or more
Feedback in ISC	In operation
Measured lambda	0.9 ←→ 1.1
After air condition switching ON-OFF, OFF-ON	5 seconds or more
After in-manifold pressure change more than 4 kPa (30 mmHg, 1.2 inHg)	> 5 seconds
After neutral switch ON-OFF event	> 5.1 seconds
Vehicle speed	0 km/h (0 MPH)
Throttle opening angle	< 0.25°

3. GENERAL DRIVING CYCLE

Perform the diagnosis continuously during idling.

4. DIAGNOSTIC METHOD

• Abnormality Judgment

Judge NG when the cumulative time of completing the malfunction criterion below becomes more than the time needed for diagnosis (10 seconds × 3 times).

Judgment Value

Malfunction Criteria	Threshold Value
Actual – target engine speed	< –100 rpm
Feedback correction for idle air control solenoid valve	Max.

Time Needed for Diagnosis: 10 seconds × 3 times
Malfunction Indicator Light Illumination: Illuminates when malfunction occurs in 2 continuous driving cycles.

• Normality Judgment

Judge OK and clear NG when the continuous time of completing the malfunction criterion below becomes more than the time needed for diagnosis (10 seconds).

Judgment Value

Malfunction Criteria	Threshold Value
Actual – target engine speed	≥ –100 rpm

5. DTC CLEAR CONDITION

- When the OK idling cycle was completed 40 times in a row
- When “Clear Memory” was performed

6. MALFUNCTION INDICATOR LIGHT CLEAR CONDITION

- When the OK driving cycle was completed 3 times in a row
- When “Clear Memory” was performed

7. FAIL SAFE

None

8. ECM OPERATION AT DTC SETTING

Memorize the freeze frame data. (For test mode $02)

BR:DTC P0507 IDLE CONTROL SYSTEM RPM HIGHER THAN EXPECTED

1. OUTLINE OF DIAGNOSIS

Detect the malfunction that actual engine speed is not close to target engine speed during idling.
Judge NG when actual engine speed is not close to target engine speed during idling.

2. ENABLE CONDITION

Secondary Parameters	Enable Conditions
Engine coolant temperature	≥ 75°C (167°F)
Battery voltage	≥ 10.9 V
Atmospheric pressure	> 75.1 kPa (563 mmHg, 22.2 inHg)
Fuel level	≥ 9 ℓ (2.38 US gal, 1.98 Imp gal)
After starting engine	10 seconds or more
Feedback in ISC	In operation
Lambda	0.9 ←→ 1.1
After air condition switching ON-OFF, OFF-ON	5 seconds or more
After in-manifold pressure change more than 4 kPa (30 mmHg, 1.2 inHg)	> 5 seconds
After neutral switch ON-OFF event	> 5 seconds
Vehicle speed	0 km/h (0 MPH)
Throttle opening angle	< 0.25°

3. GENERAL DRIVING CYCLE

Perform the diagnosis continuously during idling.

4. DIAGNOSTIC METHOD

• Abnormality Judgment

Judge NG when the continuous time of completing the malfunction criterion below becomes more than the time needed for diagnosis (10 seconds × 3 times).

Judgment Value

Malfunction Criteria	Threshold Value
Actual – target eng. speed	≥ 200 rpm
Feedback correction for idle air control solenoid valve	Min.

Time Needed for Diagnosis: 10 seconds × 3 times
Malfunction Indicator Light Illumination: Illuminates when malfunction occurs in 2 continuous driving cycles.

• Normality Judgment

Judge OK and clear NG when the continuous time of completing the malfunction criterion below becomes more than the time needed for diagnosis (10 seconds).

Judgment Value

Malfunction Criteria	Threshold Value
Actual – target eng. speed	< 200 rpm

5. DTC CLEAR CONDITION

- When the OK idling cycle was completed 40 times in a row
- When “Clear Memory” was performed

6. MALFUNCTION INDICATOR LIGHT CLEAR CONDITION

- When the OK driving cycle was completed 3 times in a row
- When “Clear Memory” was performed

7. FAIL SAFE

None

8. ECM OPERATION AT DTC SETTING

Memorize the freeze frame data. (For test mode $02)

BS:DTC P0512 STARTER REQUEST CIRCUIT

1. OUTLINE OF DIAGNOSIS

Detect the open or short circuit of starter SW.
Judge ON NG when the starter SW signal remains on.
Judge OFF NG when the engine starts without starter experience.

2. ENABLE CONDITION

Secondary Parameters	Enable Conditions
None	

3. GENERAL DRIVING CYCLE

Always perform the diagnosis continuously.

4. DIAGNOSTIC METHOD

• Abnormality Judgment

Judge NG when the continuous time of completing the malfunction criteria below becomes more than 3 minutes.

Judgment Value

Malfunction Criteria	Threshold Value
Engine speed	> 500 rpm
Starter OFF signal	Not detected
Battery voltage	> 8 V

Time Needed for Diagnosis: 180 seconds
Malfunction Indicator Light Illumination: Illuminates when malfunction occurs in 2 continuous driving cycles.

• Normality Judgment

Judge ON OK and clear the NG when the malfunction criteria below are completed.

Judgment Value

Malfunction Criteria	Threshold Value
Starter SW	OFF
Battery voltage	> 8 V

5. DTC CLEAR CONDITION

- When the OK idling cycle was completed 40 times in a row
- When “Clear Memory” was performed

6. MALFUNCTION INDICATOR LIGHT CLEAR CONDITION

- When the OK driving cycle was completed 3 times in a row
- When “Clear Memory” was performed

7. FAIL SAFE

None

8. ECM OPERATION AT DTC SETTING

Memorize the freeze frame data. (For test mode $02)

BT:DTC P0513 INCORRECT IMMOBILIZER KEY

1. OUTLINE OF DIAGNOSIS

DTC	ITEM	OUTLINE OF DIAGNOSIS
P0513	Incorrect Immobilizer Key	Incorrect immobilizer key (Use of key not registered in body integrated unit)
P1570	Antenna	Improper antenna
P1571	Reference Code Incompatibility	Unmatched reference code between body integrated unit and ECM
P1572	IMM Circuit Failure (Except Antenna Circuit)	Communication malfunction between body integrated unit and ECM
P1574	Key Communication Failure	Malfunction of body integrated unit that check the key (transponder) ID or transponder failure.
P1576	EGI Control Module EEPROM	Abnormality of ECM
P1577	IMM Control Module EEPROM	Malfunction of body integrated unit.
P1578	Meter Failure	Unmatched reference code between body integrated unit and combination meter.

2. ENABLE CONDITION

When the engine is started.

3. GENERAL DRIVING CYCLE

Perform the diagnosis only when the engine is started.

4. DIAGNOSTIC METHOD

Jude NG when the outline diagnosis above was completed.

BU:DTC P0519 IDLE CONTROL SYSTEM MALFUNCTION (FAIL-SAFE)

1. OUTLINE OF DIAGNOSIS

Detect the malfunction that engine speed increases more than that in normal condition during idling.

2. ENABLE CONDITION

Secondary Parameters	Enable Conditions
Battery voltage	≥ 10.9 V
Feedback in ISC	In operation
Vehicle speed	< 4 km/h (2.49 MPH)
After engine starting	1 second or more

3. GENERAL DRIVING CYCLE

Always perform diagnosis at less than 4 km/h (2.49 MPH) of vehicle speed.

4. DIAGNOSTIC METHOD

• Abnormality Judgment

Judge NG when the continuous time until completing the all malfunction criteria below becomes more than the time needed for diagnosis (2 seconds).

Judgment Value

Malfunction Criteria	Threshold Value
Engine speed – target eng. speed	≥ 1000 rpm
Feedback value for ISC	≤ 0
Engine speed change every 180 degree engine rev.	≥ –5 rpm

Time Needed for Diagnosis: 2 seconds

Malfunction Indicator Light Illumination: Illuminates as soon as malfunction occurs.

Judge OK and clear NG when the continuous time until completing the malfunction criteria below becomes more than the time needed for diagnosis (5 seconds).

• Normality Judgment

Judge OK and clear NG when the continuous time until completing the malfunction criteria below becomes more than the time needed for diagnosis (5 seconds).

Judgment Value

Malfunction Criteria	Threshold Value
Engine speed – target eng. speed	< 200 rpm

5. DTC CLEAR CONDITION

- When the OK idling cycle was completed 40 times in a row
- When “Clear Memory” was performed

6. MALFUNCTION INDICATOR LIGHT CLEAR CONDITION

- When the OK driving cycle was completed 3 times in a row
- When “Clear Memory” was performed

7. FAIL SAFE

Fuel shut-off: Shut-off fuel for only #1 and #2 cylinder, or for all cylinder in accordance with vehicle speed, engine speed, throttle position

8. ECM OPERATION AT DTC SETTING

Memorize the freeze frame data. (For test mode $02)

BV:DTC P0545 EXHAUST GAS TEMPERATURE SENSOR CIRCUIT LOW-BANK 1

1. OUTLINE OF DIAGNOSIS

Detect the open or short circuit of exhaust temperature sensor.
Judge NG when out of the standard value.

2. COMPONENT DESCRIPTION

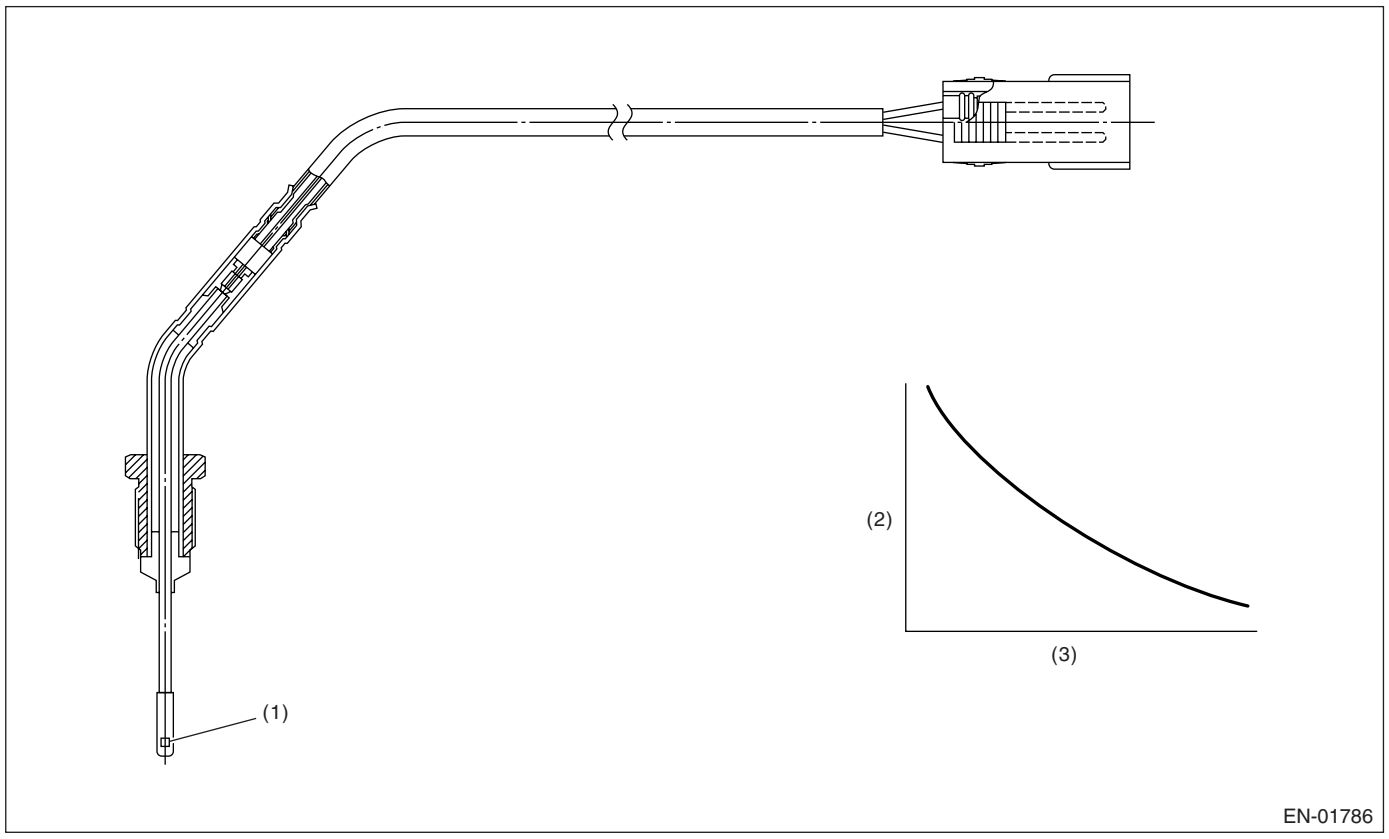

(1) Thermistor (2) Resistance value (kΩ) (3) Exhaust temperature °C (°F)

3. ENABLE CONDITION

Secondary Parameters	Enable Conditions
None	

4. GENERAL DRIVING CYCLE

Always perform the diagnosis continuously.

5. DIAGNOSTIC METHOD

• Abnormality Judgment

Judge NG when the continuous time of completing the malfunction criteria below becomes more than the time needed for diagnosis (5 seconds).

Judgment Value

Malfunction Criteria	Threshold Value
Sensor output voltage	< 0.15 V
Amount of intake air	< 100 g (3.53 oz)/s

Time Needed for Diagnosis: 5 seconds
Malfunction Indicator Light Illumination: Illuminates as soon as the malfunction occurs.

• Normality Judgment

Judge OK and clear the NG when the malfunction criteria below are completed.
Judgment Value

Malfunction Criteria	Threshold Value
Sensor output voltage	≥ 0.15 V

6. DTC CLEAR CONDITION

- When the OK idling cycle was completed 40 times in a row
- When “Clear Memory” was performed

7. MALFUNCTION INDICATOR LIGHT CLEAR CONDITION

- When the OK driving cycle was completed 3 times in a row
- When “Clear Memory” was performed

8. FAIL SAFE

None

9. ECM OPERATION AT DTC SETTING

Memorize the freeze frame data. (For test mode $02)

BW:DTC P0546 EXHAUST GAS TEMPERATURE SENSOR CIRCUIT HIGH-BANK 1

1. OUTLINE OF DIAGNOSIS

Detect the open or short circuit of exhaust temperature sensor.
Judge NG when out of the standard value.

2. COMPONENT DESCRIPTION

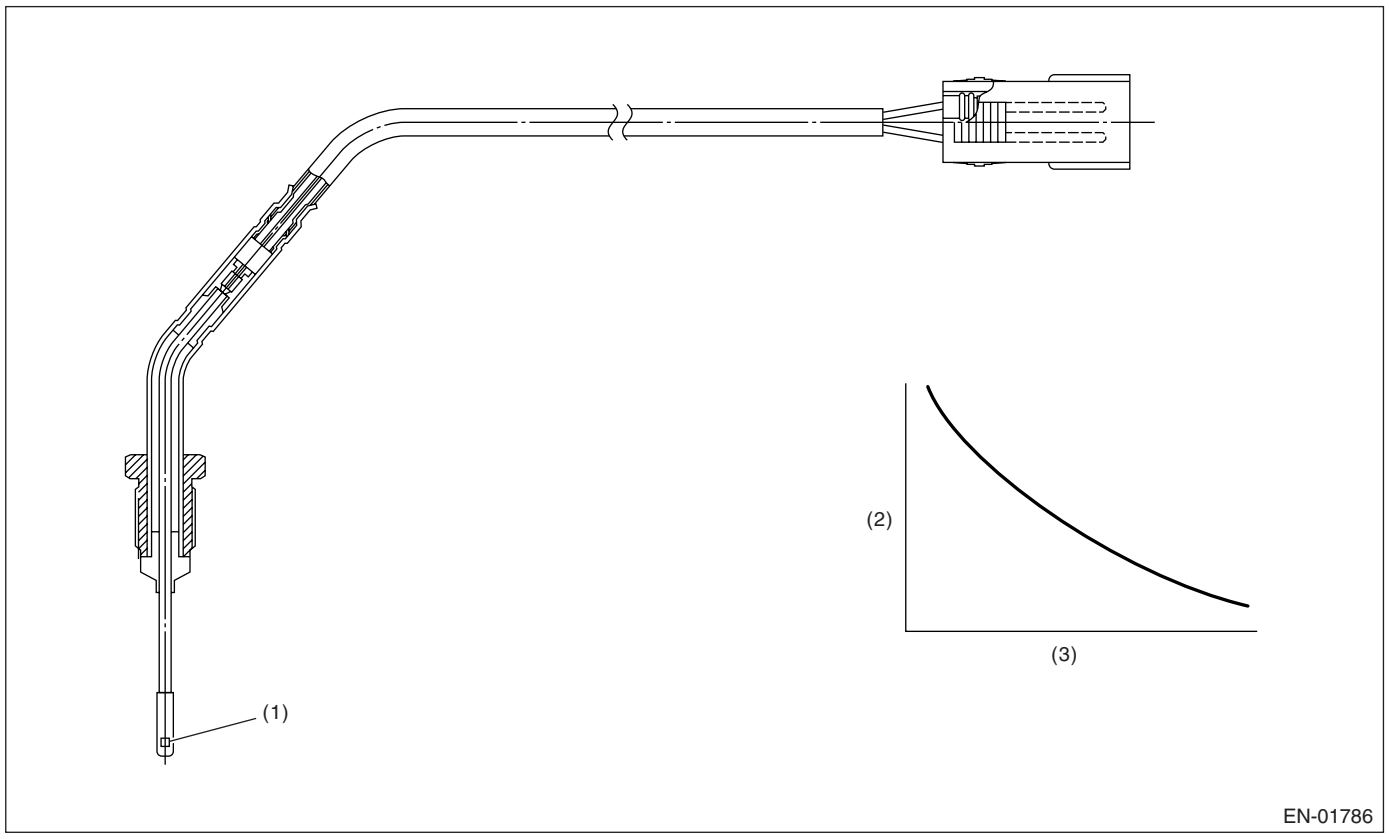

(1) Thermistor (2) Resistance value (kΩ) (3) Exhaust temperature °C (°F)

3. ENABLE CONDITION

Secondary Parameters	Enable Conditions
None	

4. GENERAL DRIVING CYCLE

Always perform the diagnosis continuously.

5. DIAGNOSTIC METHOD

• Abnormality Judgment

Judge NG when the cumulative time of completing the malfunction criteria below becomes more than the time needed for diagnosis (30 seconds).

Judgment Value

Malfunction Criteria	Threshold Value
After starting engine	240 seconds or more
Engine coolant temperature	≥ 70°C (158°F)
Vehicle speed	≥ 65 km/h (40.4 MPH)
Engine speed	≥ 1800 rpm
Engine load (gn)	≥ 0.6 g (0.021 oz)/rev
Fuel cut event	Not in operation
After the recovery from fuel cut event	30 seconds or more
Sensor output voltage	≥ 4.72 V

Time Needed for Diagnosis: 30 seconds
Malfunction Indicator Light Illumination: Illuminates as soon as the malfunction occurs.
• Normality Judgment

Judge OK and clear the NG when the malfunction criteria below are completed.
Judgment Value

Malfunction Criteria	Threshold Value
Sensor output voltage	< 4.72 V

6. DTC CLEAR CONDITION

- When the OK idling cycle was completed 40 times in a row
- When “Clear Memory” was performed

7. MALFUNCTION INDICATOR LIGHT CLEAR CONDITION

- When the OK driving cycle was completed 3 times in a row
- When “Clear Memory” was performed

8. FAIL SAFE

None

9. ECM OPERATION AT DTC SETTING

Memorize the freeze frame data. (For test mode $02)

BX:DTC P0600 SERIAL COMMUNICATION LINK

1. OUTLINE OF DIAGNOSIS

Detect the malfunction of CAN communication.
Judge NG when CAN communication becomes impossible, the CAN communication with Body integrated unit becomes impossible, and the data from Body integrated unit is not normal.

2. COMPONENT DESCRIPTION

CAN connects between ECM and Body integrated unit with high speed.

(Common Specification)
CAN PROTCOL 2.0B (active)
Frame format: 11 bit ID Frame (Standard frame)
(High Speed CAN)
ISO 11898 compliance
Communication Speed: 500 kbps

3. ENABLE CONDITION

Secondary Parameters	Enable Conditions
Battery Voltages	≥ 10.9 V
Starter switch	OFF
Engine	Run

4. GENERAL DRIVING CYCLE

Perform the diagnosis continuously after starting the engine.

5. DIAGNOSTIC METHOD

• JUDGMENT OF MALFUNCTION

It judges as NG if any of the following conditions are judged as NG. It judges as OK if all of the following conditions are judged as OK within 1s, and the NG memory is cleared.

Judgement Value

Malfunction Criteria	Threshold Value
Buss off flag or warning flag	Set
ID cannot be received from body integrated unit	= 500 milliseconds
Data from body integrated unit is not renewed	= 500 milliseconds

Time needed for Diagnosis: 1 time
Malfunction Indicator Light Illumination: Illuminates simultaneously when malfunction is detected.

6. DTC CLEAR CONDITION

When the OK driving cycle was completed 40 consecutive times.
When “Clear Memory” was performed.

7. MALFUNCTION INDICATOR LIGHT CLEAR CONDITION

- When the OK driving cycle was completed 3 consecutive times.
- When “Clear Memory” was performed.

8. FAIL-SAFE

The angle operation of accelerator position sensor demand target throttle opening calculation

9. ECM OPERATION AT DTC SETTING

Store the freeze frame data. (For test mode $02)

BY:DTC P0604 INTERNAL CONTROL MODULE RANDOM ACCESS MEMORY (RAM) ERROR

1. OUTLINE OF DIAGNOSIS

Detect the function abnormality of the micro-computer (RAM).
Write zero to all area of RAM. After the zero initialization, judge NG when the result of addition of all values in area of RAM is not zero.

2. ENABLE CONDITION

Secondary Parameters	Enable Conditions
Ignition switch	OFF → ON

Perform the diagnosis in the initial routine.

3. GENERAL DRIVING CYCLE

Perform the diagnosis immediately after IG key SW is turned ON.

4. DIAGNOSTIC METHOD

Judge NG when the malfunction criteria below is completed, and judge OK when it is not completed.
Judgment Value

Malfunction Criteria	Threshold Value
Result of RAM data addition, after zero initialization	Not 0

Time Needed for Diagnosis: To be determined.
Malfunction Indicator Light Illumination: Illuminates as soon as malfunction occurs.

5. DTC CLEAR CONDITION

- When the OK idling cycle was completed 40 times in a row
- When “Clear Memory” was performed

6. MALFUNCTION INDICATOR LIGHT CLEAR CONDITION

- When the OK driving cycle was completed 3 times in a row
- When “Clear Memory” was performed

7. FAIL SAFE

None

8. ECM OPERATION AT DTC SETTING

Memorize the freeze frame data. (For test mode $02)

BZ:DTC P0605 INTERNAL CONTROL MODULE READ ONLY MEMORY (ROM) ERROR

1. OUTLINE OF DIAGNOSIS

Judge NG when SUM value of ROM is out of the standard value.

2. ENABLE CONDITION

Secondary Parameters	Enable Conditions
Ignition switch	ON

3. GENERAL DRIVING CYCLE

Always perform the diagnosis continuously.

4. DIAGNOSTIC METHOD

• Abnormality Judgment

Judge NG when the continuous time of completing the malfunction criteria below becomes more than 0.5 seconds.

Judgment Value

Malfunction Criteria	Threshold Value
SUM value of ROM	Standard value

Time Needed for Diagnosis: To be determined.
Malfunction Indicator Light Illumination: Illuminates as soon as malfunction occurs.

5. DTC CLEAR CONDITION

- When the OK idling cycle was completed 40 times in a row
- When “Clear Memory” was performed (Only at engine stop)

6. MALFUNCTION INDICATOR LIGHT CLEAR CONDITION

- When the OK driving cycle was completed 3 times in a row
- When “Clear Memory” was performed

7. FAIL SAFE

Stop the current to electronic throttle control motor. (Fix the throttle opening angle to 6°.)

8. ECM OPERATION AT DTC SETTING

Memorize the freeze frame data. (For test mode $02)

CA:DTC P0607 CONTROL MODULE PERFORMANCE

1. OUTLINE OF DIAGNOSIS

Judge NG when either the following is completed.
- When the read value of throttle position sensor 1 signal is mismatched between main CPU and sub CPU.
- When the read value of accelerator position sensor 1 signal is mismatched between main CPU and sub CPU.
- When the sub CPU operates abnormally.
- When the communication between main CPU and sub CPU is abnormal.
- When the input amplifier circuit of throttle position sensor 1 is abnormal.
- When the cruise control cannot be canceled correctly.
- When the signal of brake SW1 and 2 is mismatched.
- When the directed angle from main CPU is abnormal.

2. COMPONENT DESCRIPTION

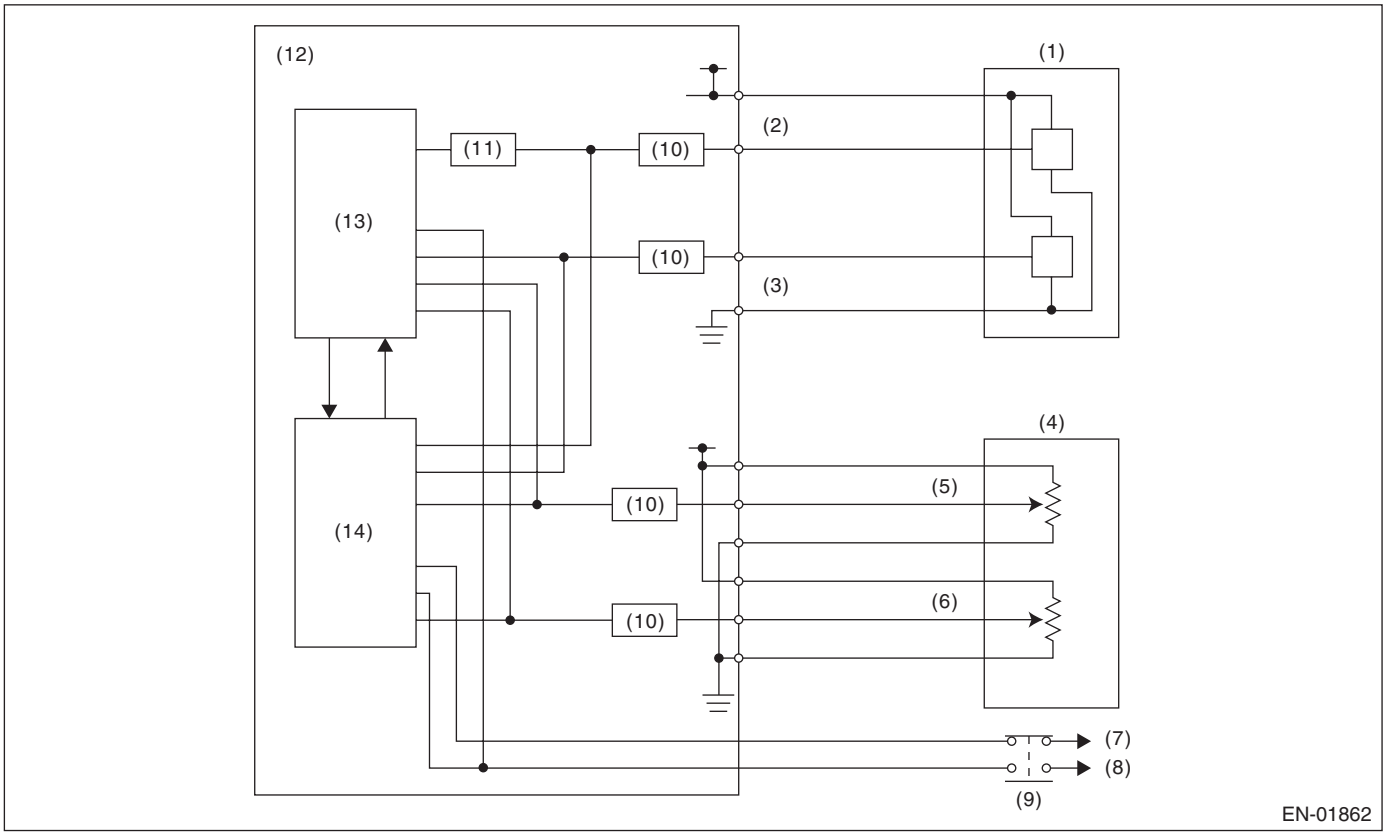

(1) Throttle position sensor
(2) Throttle position sensor 1
(3) Throttle position sensor 2
(4) Accelerator pedal position sensor
(5) Accelerator pedal position sensor 1
(6) Accelerator pedal position sensor 2
(7) Battery
(8) Stop light
(9) Brake switch
(10) I/F circuit
(11) Amplifier circuit
(12) Engine control module (ECM)
(13) Sub CPU
(14) Main CPU

3. ENABLE CONDITION

Secondary Parameters	Enable Conditions
(1) Ignition switch	ON
(2) Ignition switch	ON
(3) None	—
(4) None	—
(5) Throttle opening angle	
(6) Brake SW (with cruise control)	ON
(7) None	—
(8) Cruise control	OFF

4. GENERAL DRIVING CYCLE

(1) — (4): Always perform the diagnosis continuously.
(5): Always perform the diagnosis continuously on idling.
(6): Perform the diagnosis when the brake pedal is depressed.
(7): Always perform the diagnosis continuously.
(8): Always perform the diagnosis continuously when the cruise control pedal is not operating.

5. DIAGNOSTIC METHOD

Judge OK and clear NG when the malfunction criteria below are completed.

Judgment Value

Malfunction Criteria	Threshold Value
(1) Difference of CPU on reading value of throttle position sensor signal	Within 0.116 V
(2) Difference of CPU on reading value of accelerator position sensor signal	Within 0.615 V
(3) WD pulse from sub CPU	WD pulse occur
(4) Communication between CPU	Possible to communicate
(5) Difference of signal on connection of amplifier	Within × 4±0.56 V
(6) Cruise control cancel signal at brake ON	Cruise control cancel signal ON
(7) Brake switch 1, 2 signal	SW 1 and 2 are matched
(8) Throttle opening angle directing value	Within the opening angle +3.4° which calculated from accelerator opening angle coefficient

Time Needed for Diagnosis:
(1) 200 milliseconds
(2) 250 milliseconds
(3) 200 milliseconds
(4) 200 milliseconds
(5) 24 milliseconds
(6) 250 milliseconds
(7) 200 milliseconds
(8) 250 milliseconds

Malfunction Indicator Light Illumination: Illuminates as soon as malfunction occurs.

6. DTC CLEAR CONDITION

- When the OK idling cycle was completed 40 times in a row
- When “Clear Memory” was performed

7. MALFUNCTION INDICATOR LIGHT CLEAR CONDITION

- When the OK driving cycle was completed 3 times in a row
- When “Clear Memory” was performed

8. FAIL SAFE

Stop the current to electronic throttle control motor. (Fix the throttle opening angle to 6°.)

9. ECM OPERATION AT DTC SETTING

Memorize the freeze frame data. (For test mode $02)

CB:DTC P0638 THROTTLE ACTUATOR CONTROL RANGE/PERFORMANCE (BANK 1)

1. OUTLINE OF DIAGNOSIS

Judge NG when the target opening angle and actual opening angle is mismatched or the current to motor is more than specified duty for specified time continuously.

2. COMPONENT DESCRIPTION

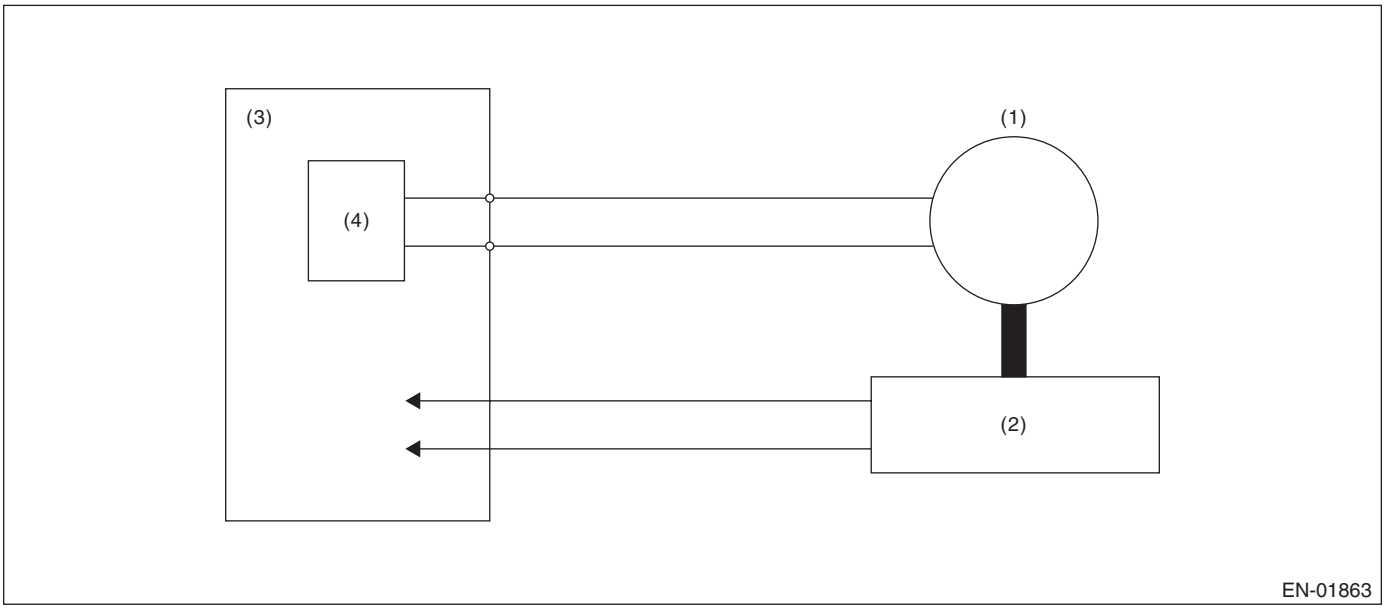

(1) Motor
(2) Throttle position sensor
(3) Engine control module (ECM)
(4) Drive circuit

3. ENABLE CONDITION

Secondary Parameters	Enable Conditions
Ignition switch	ON
Normal operation of electronic throttle control	ON

4. GENERAL DRIVING CYCLE

Always perform the diagnosis continuously when the electronic throttle control is operating.

5. DIAGNOSTIC METHOD

Judge OK and clear NG when the malfunction criteria below are completed.

Judgment Value

Malfunction Criteria	Threshold Value
Difference between target opening angle and actual opening angle	Less than 3.5°
Output duty to drive circuit	Less than 95%

Time Needed for Diagnosis:

Target opening angle and actual opening angle: 250 milliseconds (For NG) 2000 milliseconds (For OK)
Output duty to drive circuit: 2000 milliseconds

Details of Judgment

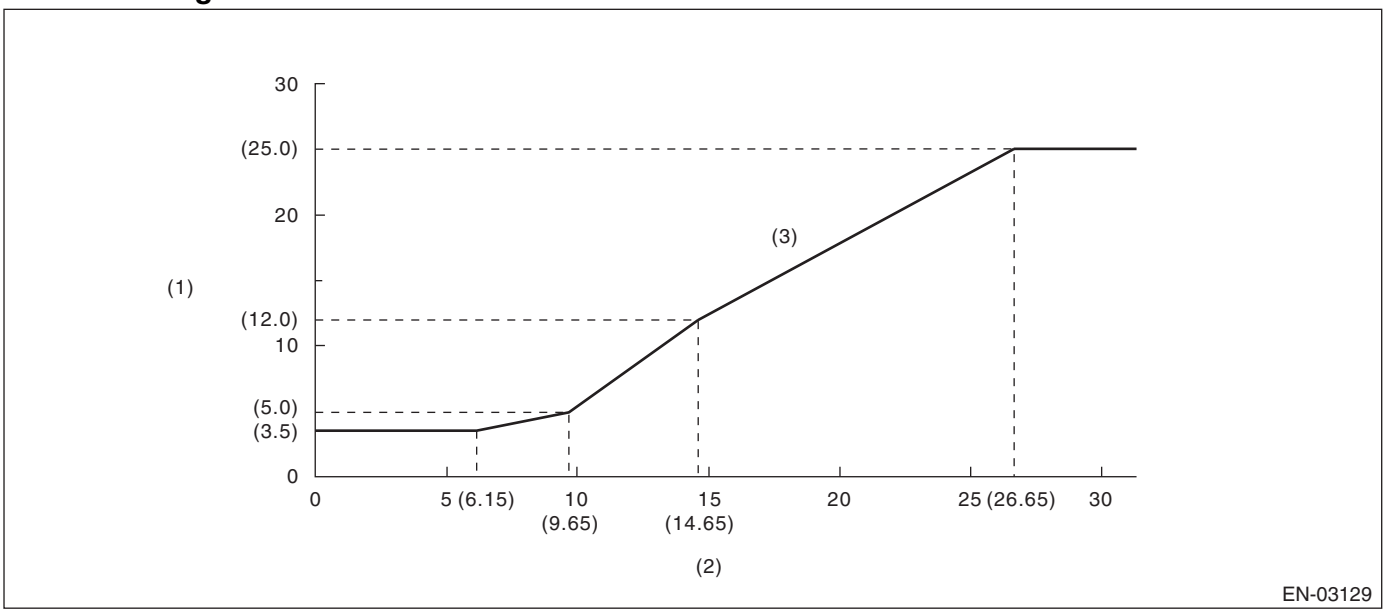

(1) Difference between target opening angle and actual opening angle (°)
(2) Target throttle opening angle (°)
(3) NG area

Details of Judgment (Always 1000 milliseconds when the actual opening angle ≤ target opening angle)

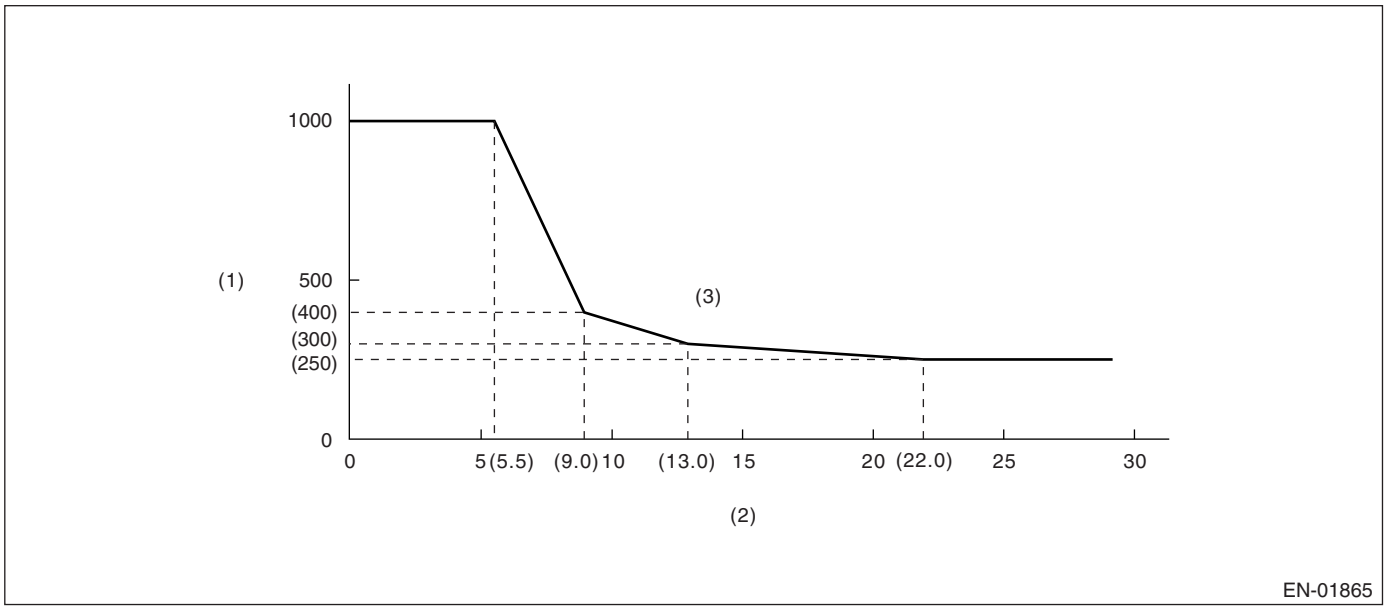

(1) Judgment time (milliseconds)
(2) Throttle position sensor 1 opening angle
(3) NG area

Malfunction Indicator Light Illumination: Illuminates as soon as malfunction occurs.

6. DTC CLEAR CONDITION

- When the OK idling cycle was completed 40 times in a row
- When “Clear Memory” was performed (Only with engine stoppedped)

7. MALFUNCTION INDICATOR LIGHT CLEAR CONDITION

- When the OK driving cycle was completed 3 times in a row

- When “Clear Memory” was performed (Only with engine stoppedped)

8. FAIL SAFE

Stop the current to electronic throttle control motor. (Fix the throttle opening angle to 6°.)

9. ECM OPERATION AT DTC SETTING

Memorize the freeze frame data. (For test mode $02)

CC:DTC P0691 COOLING FAN 1 CONTROL CIRCUIT LOW

1. OUTLINE OF DIAGNOSIS

Detect the open or short circuit of the radiator fan circuit.
Judge NG when the ECM output level differs from the actual terminal level.

2. ENABLE CONDITION

Secondary Parameters	Enable Conditions
None	

3. GENERAL DRIVING CYCLE

Always perform the diagnosis continuously.

4. DIAGNOSTIC METHOD

• Abnormality Judgment

Judge NG when the cumulative time of completing the malfunction criteria below becomes more than 2.5 seconds.

Judgment Value

Malfunction Criteria	Threshold Value
After starting engine	1 second or more
Engine speed	≥ 500 rpm
Ignition switch	ON
Battery voltage	≥ 10.9 V
Terminal voltage level when ECM transmits OFF signal	Low level

Time Needed for Diagnosis: 2.5 seconds
Malfunction Indicator Light Illumination: Illuminates when malfunction occurs in 2 continuous driving cycles.

• Normality Judgment

Judge OK and clear NG when the malfunction criteria below are completed.

Judgment Value

Malfunction Criteria	Threshold Value
After starting engine	1 second or more
Engine speed	≥ 500 rpm
Ignition switch	ON
Battery voltage	≥ 10.9 V
Terminal voltage level when ECM transmits OFF signal	High level

5. DTC CLEAR CONDITION

- When the OK idling cycle was completed 40 times in a row
- When “Clear Memory” was performed

6. MALFUNCTION INDICATOR LIGHT CLEAR CONDITION

- When the OK driving cycle was completed 3 times in a row
- When “Clear Memory” was performed

7. FAIL SAFE

None

8. ECM OPERATION AT DTC SETTING

Memorize the freeze frame data. (For test mode $02)

CD:DTC P0692 COOLING FAN 1 CONTROL CIRCUIT HIGH

1. OUTLINE OF DIAGNOSIS

Detect the open or short circuit of the radiator fan circuit.
Judge NG when the ECM output level differs from the actual terminal level.

2. ENABLE CONDITION

Secondary Parameters	Enable Conditions
None	

3. GENERAL DRIVING CYCLE

Always perform the diagnosis continuously.

4. DIAGNOSTIC METHOD

• Abnormality Judgment

Judge NG when the cumulative time of completing the malfunction criteria below becomes more than 2.5 seconds.

Judgment Valueg

Malfunction Criteria	Threshold Value
After starting engine	1 second or more
Engine speed	≥ 500 rpm
Ignition switch	ON
Battery voltage	≥ 10.9 V
Terminal voltage level when ECM transmits ON signal	High level

Time Needed for Diagnosis: 2.5 seconds
Malfunction Indicator Light Illumination: Illuminates when malfunction occurs in 2 continuous driving cycles.

• Normality Judgment

Judge OK and clear NG when the malfunction criteria below are completed.

Judgment Value

Malfunction Criteria	Threshold Value
After starting engine	1 second or more
Engine speed	≥ 500 rpm
Ignition switch	ON
Battery voltage	≥ 10.9 V
Terminal voltage level when ECM transmits ON signal	Low level

5. DTC CLEAR CONDITION

- When the OK idling cycle was completed 40 times in a row
- When “Clear Memory” was performed

6. MALFUNCTION INDICATOR LIGHT CLEAR CONDITION

- When the OK driving cycle was completed 3 times in a row
- When “Clear Memory” was performed

7. FAIL SAFE

None

8. ECM OPERATION AT DTC SETTING

Memorize the freeze frame data. (For test mode $02)

CE:DTC P0700 TRANSMISSION CONTROL SYSTEM (MIL REQUEST)

1. OUTLINE OF DIAGNOSIS

AT C/U performs CAN communication. It judges as NG if malfunction is detected.

2. ENABLE CONDITION

Secondary Parameters	Enable Conditions
Batery Voltage	≥ 10.9 V

3. GENERAL DRIVING CYCLE

Always perform diagnosis continously.

4. DIAGNOSTIC METHOD

It judges as NG if the following condition malfunctions more than the predetermined time (2.5 seconds). It judges as OK if the following condition does not malfunction, and the NG memory is cleared.
Judgement Value

Malfunction Criteria	Threshold Value
MIL light up request from TCM	Set

Time needed for diagnosis: 2.5 seconds
Malfunction Indicator Light Illumination: Illuminates simultaneously when malfunction is detected.

5. DTC CLEAR CONDITION

- When the OK driving cycle was completed 40 consecutive times.
- When “Clear Memory” was performed.

6. MALFUNCTION INDICATOR LIGHT CLEAR CONDITION

- When the OK driving cycle was completed 3 consecutive times.
- When “Clear Memory” was performed.

7. FAIL-SAFE

None

8. ECM OPERATION AT DTC SETTING

Store the freeze frame data. (For test mode $02)

CF:DTC P0851 NEUTRAL SWITCH INPUT CIRCUIT LOW (AT MODEL)

1. OUTLINE OF DIAGNOSIS

Detect the open or short circuit of the neutral SW.
Judge NG when the ECM neutral terminal input differs from the reception data from TCM.

2. ENABLE CONDITION

Secondary Parameters	Enable Conditions
Ignition switch	ON
Battery voltage	≥ 10.9 V
After starting engine	2 seconds or more
Starter switch	OFF

3. GENERAL DRIVING CYCLE

Perform the diagnosis continuously in 2 seconds or more after starting the engine.

4. DIAGNOSTIC METHOD

Judge NG when the continuous time of completing the malfunction criteria below becomes more than 6.5 seconds. Judge OK and clear NG when the malfunction criteria below are not completed.
Judgment Value

Malfunction Criteria	Threshold Value
Neutral switch signal when park/neutral = “OFF” & other switches = “ON” on AT	Low (ON)

Time Needed for Diagnosis: 6.5 seconds
Malfunction Indicator Light Illumination: Illuminates when malfunction occurs in 2 continuous driving cycles.

5. DTC CLEAR CONDITION

- When the OK idling cycle was completed 40 times in a row
- When “Clear Memory” was performed

6. MALFUNCTION INDICATOR LIGHT CLEAR CONDITION

- When the OK driving cycle was completed 3 times in a row
- When “Clear Memory” was performed

7. FAIL SAFE

None

8. ECM OPERATION AT DTC SETTING

Memorize the freeze frame data. (For test mode $02)

CG:DTC P0851 NEUTRAL SWITCH INPUT CIRCUIT LOW (MT MODEL)

1. OUTLINE OF DIAGNOSIS

Judge the open or short circuit of the neutral SW.
Judge NG when there is no change in the neutral SW even if the driving shift was applied. (There is neutral SW ON/OFF inversion from the vehicle speed and engine speed.)

2. ENABLE CONDITION

Secondary Parameters	Enable Conditions
Ignition switch	ON
Battery voltage	≥ 10.9 V
After starting engine	2 seconds or more
Starter switch	OFF

3. GENERAL DRIVING CYCLE

Perform the diagnosis continuously in 2 seconds or more after starting the engine.

4. DIAGNOSTIC METHOD

Judge NG when the malfunction criteria below are completed 3 time or more after the neutral SW change.
Judge OK and clear NG if there is change in the neutral SW.

Judgment Value

Malfunction Criteria	Threshold Value
Neutral switch signal (while changing from a to b below)	Low (OFF)
Driving condition change	a) to b)
a) Vehicle speed = 0 km/h (0 MPH) & engine speed 600 — 900 rpm	
b) Vehicle speed ≥ 64 km/h (40 MPH) & engine speed 1600 — 2550 rpm	

Time Needed for Diagnosis: 3 monitoring
Malfunction Indicator Light Illumination: Illuminates when malfunction occurs in 2 continuous driving cycles.

5. DTC CLEAR CONDITION

- When the OK idling cycle was completed 40 times in a row
- When “Clear Memory” was performed

6. MALFUNCTION INDICATOR LIGHT CLEAR CONDITION

- When the OK driving cycle was completed 3 times in a row
- When “Clear Memory” was performed

7. FAIL SAFE

Cruise control: Not allowed to command cruise control

8. ECM OPERATION AT DTC SETTING

Memorize the freeze frame data. (For test mode $02)

CH:DTC P0852 NEUTRAL SWITCH INPUT CIRCUIT HIGH (AT MODEL)

1. OUTLINE OF DIAGNOSIS

Detect the open or short circuit of the neutral SW.
Judge NG when the ECM neutral terminal input differs from the reception data from TCM.

2. ENABLE CONDITION

Secondary Parameters	Enable Conditions
Ignition switch	ON
Battery voltage	≥ 10.9 V
After starting engine	2 seconds or more
Starter switch	OFF

3. GENERAL DRIVING CYCLE

Perform the diagnosis continuously in 2 seconds or more after starting the engine.

4. DIAGNOSTIC METHOD

Judge NG when the continuous time until completing the malfunction criteria below becomes more than 6.5 seconds. Judge OK and clear NG when the malfunction criteria below are not completed.
Judgment Value

Malfunction Criteria	Threshold Value
Neutral switch signal when park/neutral = “ON” & other switches = “OFF” on AT	High (OFF)

Time Needed for Diagnosis: 6.5 seconds
Malfunction Indicator Light Illumination: Illuminates when malfunction occurs in 2 continuous driving cycles.

5. DTC CLEAR CONDITION

- When the OK idling cycle was completed 40 times in a row
- When “Clear Memory” was performed

6. MALFUNCTION INDICATOR LIGHT CLEAR CONDITION

- When the OK driving cycle was completed 3 times in a row
- When “Clear Memory” was performed

7. FAIL SAFE

None

8. ECM OPERATION AT DTC SETTING

Memorize the freeze frame data. (For test mode $02)

CI: DTC P0852 NEUTRAL SWITCH INPUT CIRCUIT HIGH (MT MODEL)

1. OUTLINE OF DIAGNOSIS

Judge the open or short circuit of the neutral SW.
Judge NG when there is no change in the neutral SW even if the driving shift was applied. (There is neutral SW ON/OFF inversion from the vehicle speed and engine speed.)

2. ENABLE CONDITION

Secondary Parameters	Enable Conditions
Ignition switch	ON
Battery voltage	≥ 10.9 V
After starting engine	2 seconds or more
Starter switch	OFF

3. GENERAL DRIVING CYCLE

Perform the diagnosis continuously in 2 seconds or more after starting the engine.

4. DIAGNOSTIC METHOD

Judge NG when the malfunction criteria below are completed 3 time or more after the neutral SW change.
Judge OK and clear NG if there is change in the neutral SW.

Judgment Value

Malfunction Criteria	Threshold Value
Neutral switch signal (while changing from a to b below)	High (ON)
Driving condition change	a) to b)
a) Vehicle speed = 0 km/h (0 MPH) & engine speed 600 — 900 rpm	
b) Vehicle speed ≥ 64 km/h (40 MPH) & engine speed 1600 — 2550 rpm	

Time Needed for Diagnosis: 3 monitoring
Malfunction Indicator Light Illumination: Illuminates when malfunction occurs in 2 continuous driving cycles.

5. DTC CLEAR CONDITION

- When the OK idling cycle was completed 40 times in a row
- When “Clear Memory” was performed

6. MALFUNCTION INDICATOR LIGHT CLEAR CONDITION

- When the OK driving cycle was completed 3 times in a row
- When “Clear Memory” was performed

7. FAIL SAFE

None

8. ECM OPERATION AT DTC SETTING

Memorize the freeze frame data. (For test mode $02)

CJ:DTC P1152 O2 SENSOR CIRCUIT RANGE/PERFORMANCE (LOW) (BANK1 SENSOR1)

1. OUTLINE OF DIAGNOSIS

Detect that lambda value remains Low.
Judge NG when lambda value is abnormal in accordance with lambda value of front oxygen (A/F) sensor and running condition that is vehicle speed, amount of intake air engine coolant temperature, sub feedback control, etc.
Lambda value = Actual air fuel ratio/Theoretical air fuel ratio
Lambda > 1: Lean
Lambda < 1: Rich

2. COMPONENT DESCRIPTION

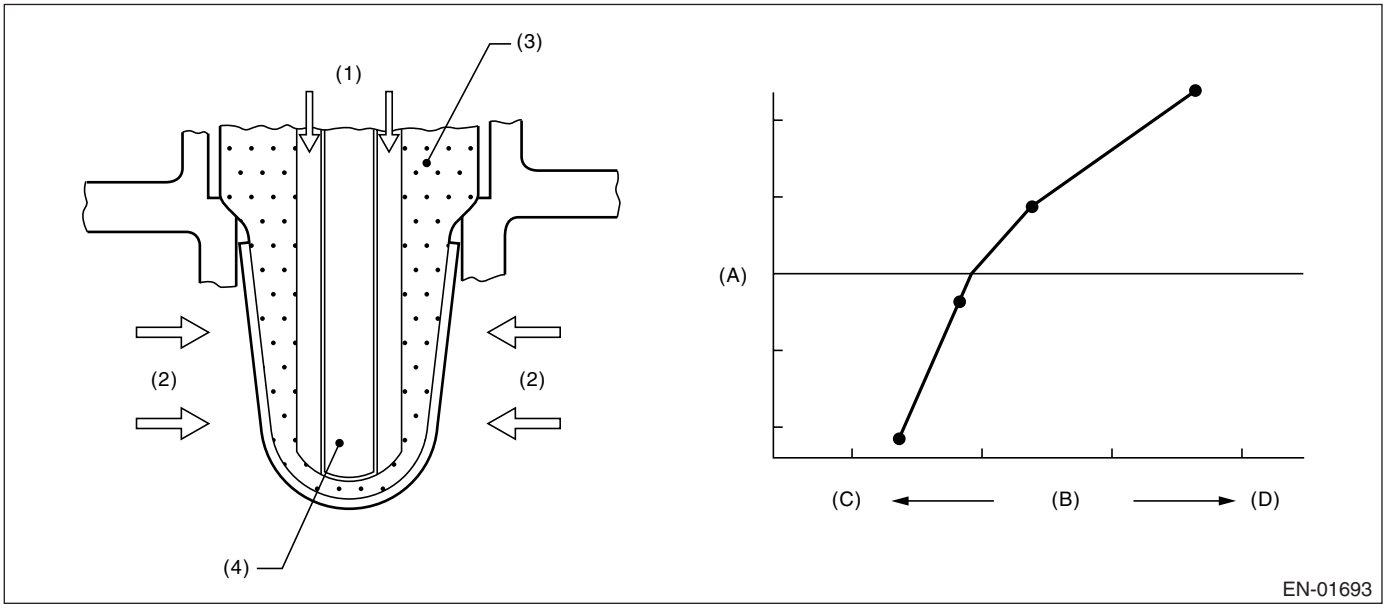

(1) Atmosphere
(2) Exhaust
(3) ZrO2
(4) Ceramic heater
(A) Electromotive force
(B) Air fuel ratio
(C) Lean
(D) Rich

3. ENABLE CONDITION

Secondary Parameters	Enable Conditions
All secondary parameters to be in enable conditions	4 seconds or more
Battery voltage	〉10.9 V
Atmospheric pressure	〉75.1 kPa (563 mmHg, 22.2 inHg)
Rear oxygen sensor sub feedback	In operation
Rear oxygen sensor output voltage – feedback target voltage	–0.2 V ←→ 0.1 V
or	
Rear oxygen sensor sub feedback compensation coefficient	On Min.
or	
Rear oxygen sensor sub feedback compensation coefficient	On Max.
After engine starting	60 seconds or more
Engine coolant temperature	≥ 70°C (158°F)
Vehicle speed	≥ 20 km/h (12 MPH)
Amount of intake air	≥ 6 g (0.21 oz)/s
Load change during 0.5 engine rev.	≤ 0.01 g (0.0003 oz)/rev
Impedance of front oxygen (A/F) sensor	0 ←→ 50 Ω
Learning value of evaporation gas density	≤ 0.2
Accumulated time of operating canister purge	20 seconds or more

4. GENERAL DRIVING CYCLE

Perform diagnosis continuously at a constant speed of 20 km/h (12 MPH) or more since 60 seconds after starting the engine.

5. DIAGNOSTIC METHOD

Judge NG when the continuous time of completing the malfunction criteria below becomes more than the time needed for diagnosis (10 seconds). Judge OK and clear NG when the malfunction criteria below are not completed.

Judgment Value

Malfunction Criteria	Threshold Value
Output lambda when rear oxygen sensor sub feedback compensation coefficient being at not high limit	≤ 0.85

Time Needed for Diagnosis: 10 seconds

Malfunction Indicator Light Illumination: Illuminates when malfunction occurs in 2 continuous driving cycles.

6. DTC CLEAR CONDITION

- When the OK idling cycle was completed 40 times in a row
- When “Clear Memory” was performed

7. MALFUNCTION INDICATOR LIGHT CLEAR CONDITION

- When the OK driving cycle was completed 3 times in a row
- When “Clear Memory” was performed

8. FAIL SAFE

- Front oxygen (A/F) sensor main learning compensation: Not allowed to calculate
- Correction when re-starting at high temperature: Normally minimum value 0.3 → 0
- Purge control: Not allowed to purge

9. ECM OPERATION AT DTC SETTING

Memorize the freeze frame data. (For test mode $02)

CK:DTC P1153 O2 SENSOR CIRCUIT RANGE/PERFORMANCE (HIGH) (BANK1 SENSOR1)

1. OUTLINE OF DIAGNOSIS

Detect that lambda value remains High.
Judge NG when lambda value is abnormal in accordance with lambda value of front oxygen (A/F) sensor and running condition that is vehicle speed, amount of intake air engine coolant temperature, sub feedback control, etc.

Lambda value = Actual air fuel ratio/Theoretical air fuel ratio

Lambda > 1: Lean
Lambda < 1: Rich

2. COMPONENT DESCRIPTION

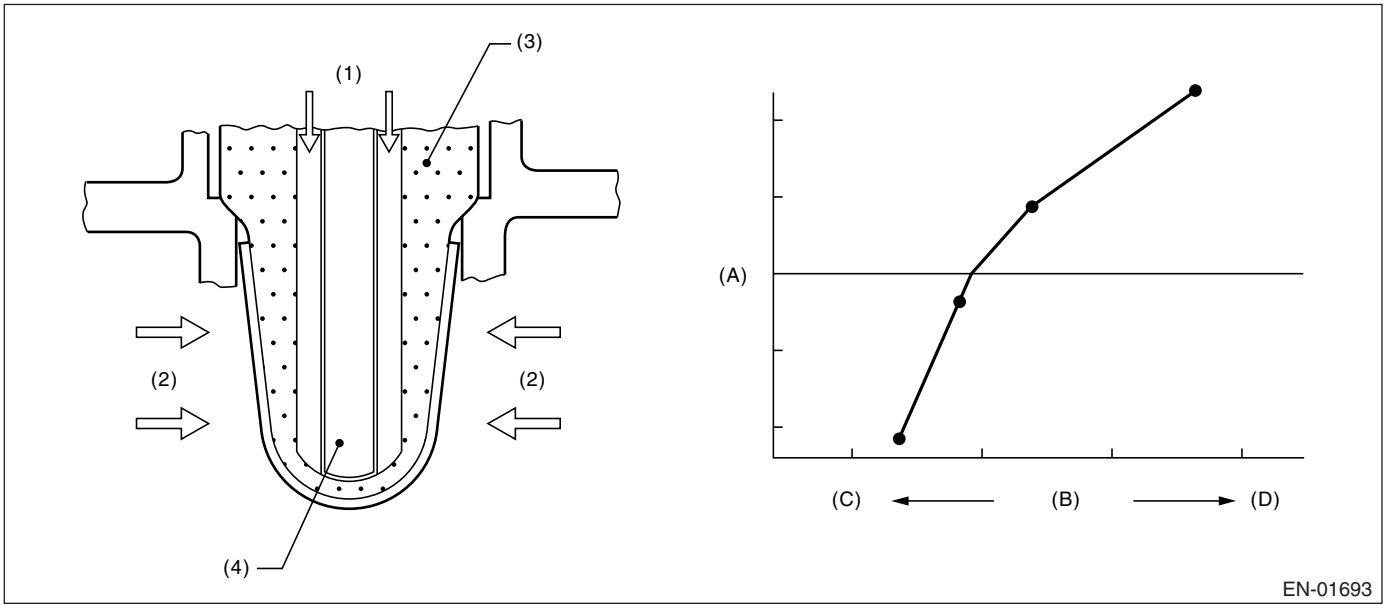

(1) Atmosphere
(2) Exhaust
(3) ZrO2
(4) Ceramic heater
(A) Electromotive force
(B) Air fuel ratio
(C) Lean
(D) Rich

3. ENABLE CONDITION

Secondary Parameters	Enable Conditions
All secondary parameters to be in enable conditions	4 seconds or more
Battery voltage	> 10.9 V
Atmospheric pressure	> 75.1 kPa (563 mmHg, 22.2 inHg)
Rear oxygen sensor sub feedback	In operation
Rear oxygen sensor output voltage – feedback target voltage	–0.2 V ←→ 0.1 V
or	
Rear oxygen sensor sub feedback compensation coefficient	On Min.
or	
Rear oxygen sensor sub feedback compensation coefficient	On Max.
After engine starting	60 seconds or more
Engine coolant temperature	≥ 70°C (158°F)
Vehicle speed	≥ 20 km/h (12 MPH)
Amount of intake air	≥ 6 g (0.21 oz)/s
Load change during 0.5 engine rev.	≤ 0.01 g (0.0003 oz)/rev
Impedance of front oxygen (A/F) sensor	0 ←→ 50 Ω
Learning value of evaporation gas density	≤ 0.2
Accumulated time of operating canister purge	20 seconds or more

4. GENERAL DRIVING CYCLE

Perform diagnosis continuously at a constant speed of 20 km/h (12 MPH) or more since 60 seconds after starting the engine.

5. DIAGNOSTIC METHOD

Judge NG when the continuous time of completing the malfunction criteria below becomes more than the time needed for diagnosis (10 seconds). Judge OK and clear NG when the malfunction criteria below are not completed.

Judgment Value

Malfunction Criteria	Threshold Value
Output lambda when rear oxygen sensor sub feedback compensation coefficient value being at not low limit	≥ 1.15

Time Needed for Diagnosis: 10 seconds
Malfunction Indicator Light Illumination: Illuminates when malfunction occurs in 2 continuous driving cycles.

6. DTC CLEAR CONDITION

- When the OK idling cycle was completed 40 times in a row
- When “Clear Memory” was performed

7. MALFUNCTION INDICATOR LIGHT CLEAR CONDITION

- When the OK driving cycle was completed 3 times in a row
- When “Clear Memory” was performed

8. FAIL SAFE

- Front oxygen (A/F) sensor main learning compensation: Not allowed to calculate
- Correction when re-starting at high temperature: Normally minimum value 0.3 → 0
- Purge control: Not allowed to purge

9. ECM OPERATION AT DTC SETTING

Memorize the freeze frame data. (For test mode $02)

CL:DTC P1160 RETURN SPRING FAILURE

1. OUTLINE OF DIAGNOSIS

Judge NG when the valve does not move to the close direction with the motor power stopped and the valve open more than the default opening.

2. COMPONENT DESCRIPTION

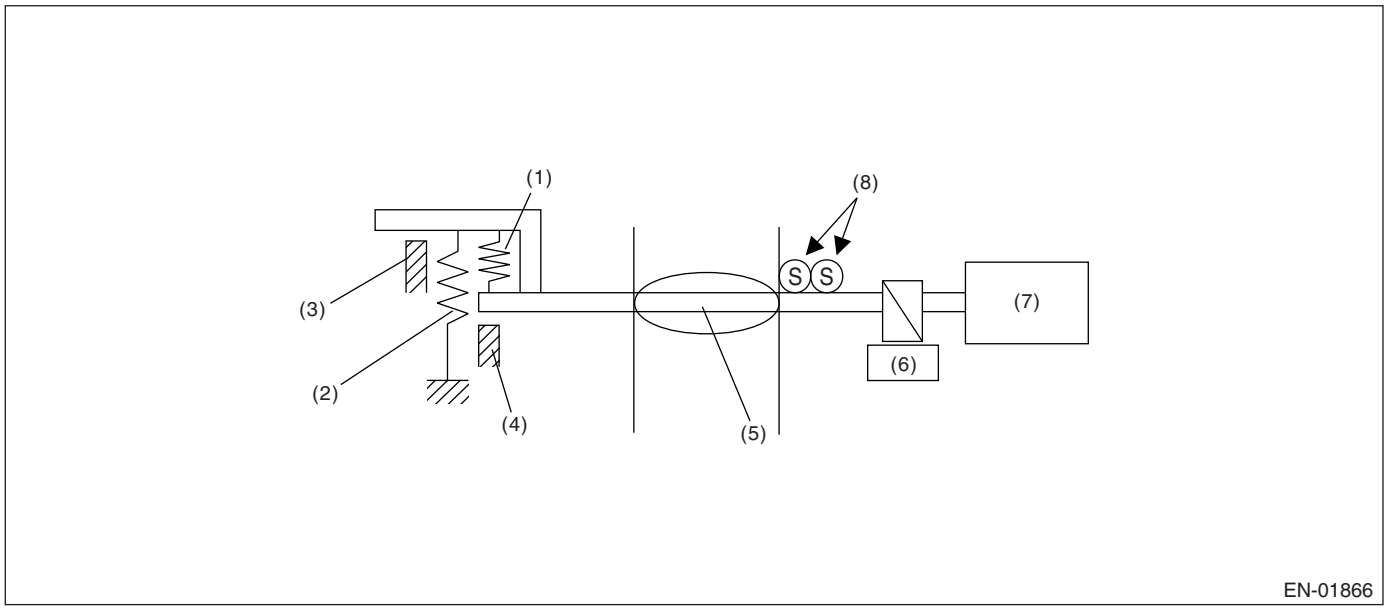

(1) Opener spring
(2) Return spring
(3) Intermediate stopper
(4) Full closed stopper
(5) Throttle valve
(6) Gear
(7) DC motor
(8) Main and sub throttle sensor

3. ENABLE CONDITION

Secondary Parameters	Enable Conditions
Motor continuity	OFF

4. GENERAL DRIVING CYCLE

- Ignition switch ON → OFF
- Ignition switch OFF → ON (After clear memory only)

5. DIAGNOSTIC METHOD

• Abnormality Judgment

Judge NG when the continuous time of completing the malfunction criteria below becomes more than 0.5 seconds.

Judgment Value

Malfunction Criteria	Threshold Value
Opening variation after continuity is set to OFF	〈 2°

Time Needed for Diagnosis: 600 milliseconds
Malfunction Indicator Light Illumination: Illuminates as soon as malfunction occurs.

6. DTC CLEAR CONDITION

- When the OK idling cycle was completed 40 times in a row
- When “Clear Memory” was performed (Only with engine stopped)

7. MALFUNCTION INDICATOR LIGHT CLEAR CONDITION

- When the OK driving cycle was completed 3 times in a row
- When “Clear Memory” was performed (Only with engine stopped)

8. FAIL SAFE

Fix the throttle opening to 6°.

9. ECM OPERATION AT DTC SETTING

Memorize the freeze frame data. (For test mode $02)

CM:DTC P1301 MISFIRE DETECTED (HIGH TEMPERATURE EXHAUST GAS)

1. OUTLINE OF DIAGNOSIS

Detect whether the misfire occurred or not. (Exhaust temperature method)
Judge NG when the exhaust temperature is high.

2. ENABLE CONDITION

Secondary Parameters	Enable Conditions
All secondary parameters approval continuation time	1 second or more
Intake manifold pressure change during 0.5 engine rev.	< 16.0 kPa (120 mmHg, 4.72 inHg) (MT) < 14.7 kPa (110 mmHg, 4.33 inHg) (AT)
Engine speed change	< 1000 rpm/32 milliseconds
Throttle position change during 16 milliseconds	< 14°
Fuel shut-off function	Not in operation
Atmospheric pressure	≥ 75.1 kPa (563 mmHg, 22.2 inHg)
Fuel level	≥ 9.6 ℓ (2.54 US gal, 2.11 Imp gal)
Evaporative system leak check	Not in operation
Engine speed	450 — 6700 rpm
Intake manifold pressure	> Map3 or more
Battery voltage	≥ 8 V

Map3

- MT

Vehicle Speed < 64.4 km/h (40 MPH)

rpm	700	1000	1500	2000	2500	3000	3500	4000	4500	5000	5500	6000	6500	6700
kPa (mmHg, inHg)	25.1 (188, 7.40)	24.8 (186, 7.32)	25.6 (192, 7.56)	23.3 (175, 6.89)	26.3 (197, 7.76)	25.9 (194, 7.64)	28.9 (216.5, 8.52)	30.0 (225, 8.86)	31.7 (237.5, 9.35)	33.0 (248, 9.76)	37.1 (278.5, 11.0)	41.9 (314, 12.4)	47.0 (352.5, 13.9)	51.1 (383, 15.1)

Vehicle Speed ≥ 64.4 km/h (40 MPH)

rpm	700	1000	1500	2000	2500	3000	3500	4000	4500	5000	5500	6000	6500	6700
kPa (mmHg, inHg)	25.5 (191, 7.52)	25.1 (188, 7.40)	30.4 (227.7, 8.96)	35.6 (267.4, 10.5)	38.5 (288.9, 11.4)	40.4 (302.9, 11.9)	41.1 (308.6, 12.1)	40.8 (306, 12.0)	44.8 (335.8, 13.2)	47.3 (354.5, 14.0)	49.1 (368.2, 14.5)	50.9 (381.9, 15.0)	52.8 (396, 15.6)	52.8 (396, 15.6)

- AT

Vehicle Speed < 64.4 km/h (40 MPH)

rpm	700	1000	1500	2000	2500	3000	3500	4000	4500	5000	5500	6000	6500	6700
kPa (mmHg, inHg)	26.3 (197, 7.76)	24.8 (186, 7.32)	23.6 (177, 6.97)	25.5 (191, 7.52)	27.3 (205, 8.07)	26.1 (196, 7.72)	29.5 (221.5, 8.72)	31.3 (235, 9.25)	32.7 (245.5, 9.67)	34.1 (256, 10.08)	38.2 (286.5, 11.3)	33.6 (252.3, 9.93)	49.5 (371.5, 14.62)	51.5 (386, 15.20)

3. GENERAL DRIVING CYCLE

- Detecting misfire is able to be carried out in the condition between idling and high revolution.
- Always perform the diagnosis continuously.

4. DIAGNOSTIC METHOD

Judge NG when the malfunction criteria below continue 200 engine revs. (400 ignitions) in a row.

Judgment Value

Malfunction Criteria	Threshold Value
Exhaust temperature	> 1050°C (1922°F)

Time Needed for Diagnosis: 200 engine revs.
Malfunction Indicator Light Illumination: Illuminates as soon as malfunction occurs.

5. DTC CLEAR CONDITION

- When the OK idling cycle was completed 40 times in a row
- When “Clear Memory” was performed

6. MALFUNCTION INDICATOR LIGHT CLEAR CONDITION

- When the OK driving cycle was completed 3 times in a row
- When “Clear Memory” was performed

7. FAIL SAFE

None

8. ECM OPERATION AT DTC SETTING

Memorize the freeze frame data. (For test mode $02)

CN:DTC P1312 EXHAUST GAS TEMPERATURE SENSOR MALFUNCTION

1. OUTLINE OF DIAGNOSIS

Detect the malfunction of exhaust temperature sensor output property.
Judge NG when the exhaust temperature remains high or low whereas it seemed to vary from the viewpoint of driving condition.

2. ENABLE CONDITION

Secondary Parameters	Enable Conditions
After starting engine	240 seconds or more
Engine coolant temperature at engine start	≤ 40°C (104°F)
Engine coolant temperature	≥ 75°C (167°F)
Intake air temperature at engine start	≥ 0°C (32°F)
Estimate ambient temperature	≥ 0°C (32°F)
Vehicle speed	65 km/h (40 MPH)
Engine speed	≥ 2400 rpm
Engine load	≥ 0.85 g (0.030 oz)/rev
Lambda value	0.75 ←→ 1.25

3. GENERAL DRIVING CYCLE

Perform the diagnosis continuously at more than 2400 rpm of engine speed in 240 seconds and more after starting the engine in cool condition.
Pay attention to the engine coolant temperature at engine starting.

4. DIAGNOSTIC METHOD

Judge NG when one of the malfunction criteria below is completed, and judge OK and clear the NG when all of the malfunction criteria below are not completed.

Judgment Value

Malfunction Criteria	Threshold Value
Min. exhaust temperature from engine starting	≥ 700°C (1292°F)
Max. exhaust temperature from engine starting	< 500°C (932°F)

Time Needed for Diagnosis: 0 seconds
Malfunction Indicator Light Illumination: Illuminates as soon as malfunction occurs.

5. DTC CLEAR CONDITION

- When the OK idling cycle was completed 40 times in a row
- When “Clear Memory” was performed

6. MALFUNCTION INDICATOR LIGHT CLEAR CONDITION

- When the OK driving cycle was completed 3 times in a row
- When “Clear Memory” was performed

7. FAIL SAFE

None

8. ECM OPERATION AT DTC SETTING

Memorize the freeze frame data. (For test mode $02)

CO:DTC P1400 FUEL TANK PRESSURE CONTROL SOLENOID VALVE CIRCUIT LOW

1. OUTLINE OF DIAGNOSIS

Detect open or short circuit of pressure control solenoid valve. Judge NG when ECM output level is different from actual terminal level.

2. COMPONENT DESCRIPTION

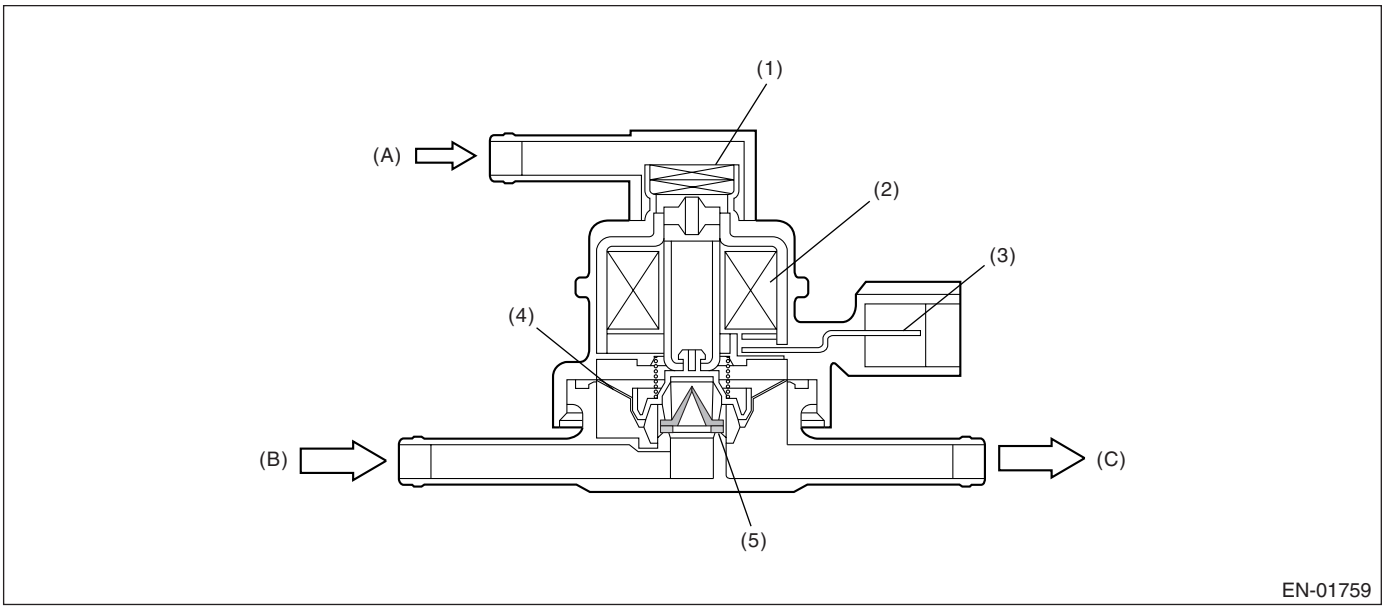

(1) Filter
(2) Coil
(3) Connector terminal
(4) Diaphragm
(5) Valve
(A) Atmospheric pressure
(B) Shut off valve
(C) To fuel tank

3. ENABLE CONDITION

Secondary Parameters	Enable Conditions
Ignition switch	ON
Battery voltage	≥ 10.9 V
After starting engine	1 second or more

4. GENERAL DRIVING CYCLE

Always perform the diagnosis after starting the engine.

5. DIAGNOSTIC METHOD

Judge NG when the continuous time of completing the malfunction criteria below becomes more than time needed for diagnosis (2.5 seconds). Judge OK and clear the NG when the malfunction criteria below are not completed.

Judgment Value

Malfunction Criteria	Threshold Value
Terminal voltage when ECM outputs OFF signal	Low

Time Needed for Diagnosis: 2.5 seconds

Malfunction Indicator Light Illumination: Illuminates when malfunction occurs in two continuous drive cycles.

6. DTC CLEAR CONDITION

- When the OK idling cycle was completed 40 times in a row
- When “Clear Memory” was performed

7. MALFUNCTION INDICATOR LIGHT CLEAR CONDITION

- When the OK driving cycle was completed 3 times in a row
- When “Clear Memory” was performed

8. FAIL SAFE

None

9. ECM OPERATION AT DTC SETTING

Memorize the freeze frame data. (For test mode $02)

CP:DTC P1420 FUEL TANK PRESSURE CONTROL SOL. VALVE CIRCUIT HIGH

1. OUTLINE OF DIAGNOSIS

Detect open or short circuit of pressure control solenoid valve.
Judge NG when ECM output level is different from actual terminal level.

2. COMPONENT DESCRIPTION

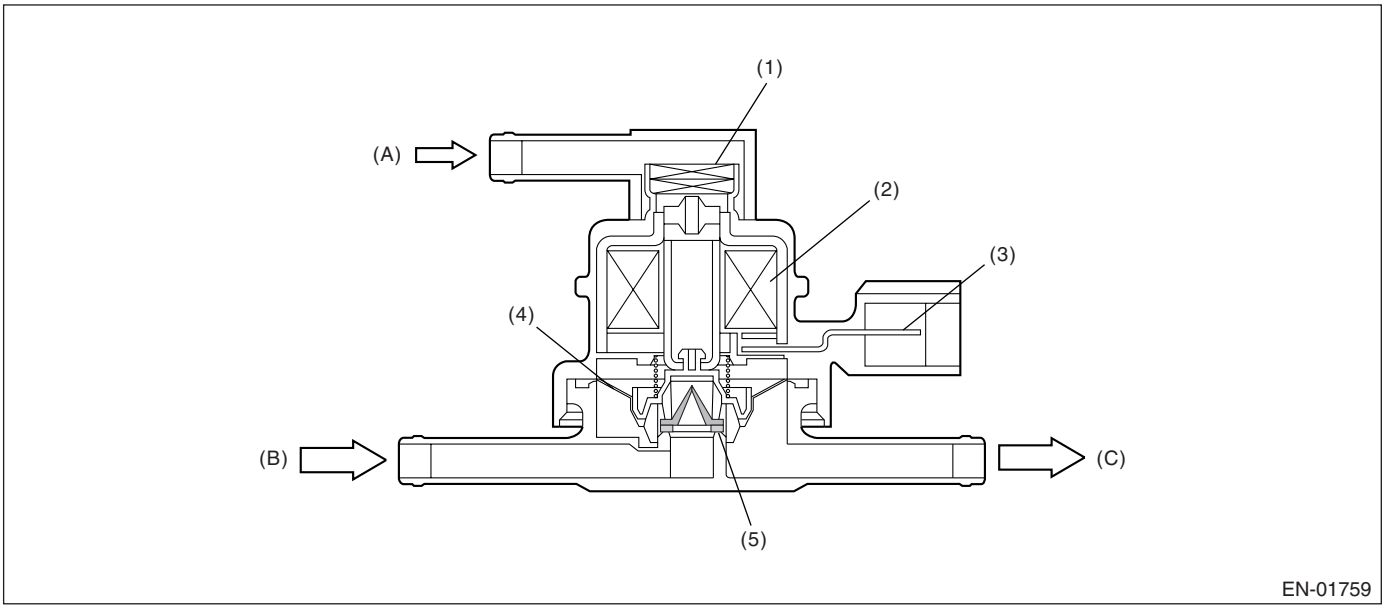

(1) Filter
(2) Coil
(3) Connector terminal
(4) Diaphragm
(5) Valve
(A) Atmospheric pressure
(B) Shut off valve
(C) To fuel tank

3. ENABLE CONDITION

Secondary Parameters	Enable Conditions
Ignition switch	ON
Battery voltage	≥ 10.9 V
After engine starting	1 second or more

4. GENERAL DRIVING CYCLE

Always perform the diagnosis after starting the engine.

5. DIAGNOSTIC METHOD

Judge NG when the continuous time of completing the malfunction criteria below becomes more than time needed for diagnosis (2.5 seconds). Judge OK and clear the NG when the malfunction criteria below are not completed.

Judgment Value

Malfunction Criteria	Threshold Value
Terminal voltage when ECM outputs ON signal	High

Time Needed for Diagnosis: 2.5 seconds
Malfunction Indicator Light Illumination: Illuminates when malfunction occurs in two continuous drive cycles.

6. DTC CLEAR CONDITION

- When the OK idling cycle was completed 40 times in a row
- When “Clear Memory” was performed

7. MALFUNCTION INDICATOR LIGHT CLEAR CONDITION

- When the OK driving cycle was completed 3 times in a row
- When “Clear Memory” was performed

8. FAIL SAFE

None

9. ECM OPERATION AT DTC SETTING

Memorize the freeze frame data. (For test mode $02)

CQ:DTC P1443 VENT CONTROL SOLENOID VALVE FUNCTION PROBLEM

1. OUTLINE OF DIAGNOSIS

Detect malfunction of drain valve (close fixing).
Judge NG when the fuel tank pressure is small.

2. COMPONENT DESCRIPTION

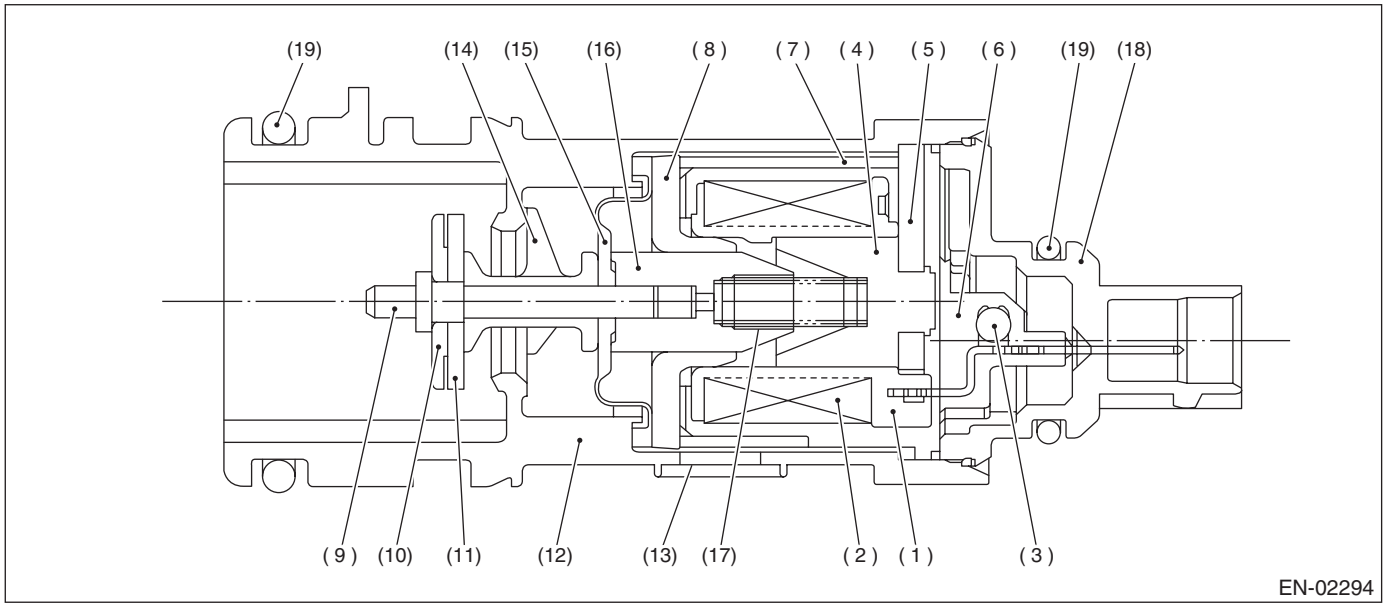

(1) Bobbin
(2) Coil
(3) Diode
(4) Stator core
(5) End plate
(6) Body
(7) Yoke
(8) Magnetic plate
(9) Shaft
(10) Plate
(11) Valve
(12) Housing
(13) Filter
(14) Retainer
(15) Diaphragm
(16) Movable core
(17) Spring
(18) Cover
(19) O-ring

3. ENABLE CONDITION

Secondary Parameter	Enable Condition
Drain valve	Open
Battery voltage	≥ 10.9 V
Atmospheric pressure	≥ 75.0 kPa (563 mmHg, 22.17 inHg)
Tank pressure when starter ON → OFF	−0.43 ←→ 1.43 kPa (−3.2 ←→ 10.7 mmHg, −0.13 ←→ 0.42 inHg)

4. GENERAL DRIVING CYCLE

Always perform the diagnosis continuously.

5. DIAGNOSTIC METHOD

• Abnormality Judgment

Judge NG when the continuous time of completing the malfunction criteria below becomes more than 3 seconds.

Judgment Value

Malfunction Criteria	Threshold Value
Tank pressure	≤ –4.0 kPa (–30 mmHg, –1.18 inHg)

Time Needed for Diagnosis: 3 seconds
Malfunction Indicator Light Illumination: Illuminates as soon as the malfunction occurs.
• Normality Judgment

Judge OK and clear the NG when the malfunction criteria below are completed.
Judgment Value

Malfunction Criteria	Threshold Value
Tank pressure	> –4.0 kPa (–30 mmHg, –1.18 inHg)
Cumulative time for completing the malfunction criteria below	≥ 30 seconds
Purge control solenoid valve duty ratio	Except 0
Fuel temperature	–10 ←→ 45°C (14 ←→ 113°F)
Intake manifold relative pressure	≤ –26.7 kPa (–200 mmHg, –7.87 inHg)

6. DTC CLEAR CONDITION

- When the OK idling cycle was completed 40 times in a row
- When “Clear Memory” was performed

7. MALFUNCTION INDICATOR LIGHT CLEAR CONDITION

- When the OK driving cycle was completed 3 times in a row
- When “Clear Memory” was performed

8. FAIL SAFE

PCV control: Open the PCV solenoid.

9. ECM OPERATION AT DTC SETTING

Memorize the freeze frame data. (For test mode $02)

CR:DTC P1446 FUEL TANK SENSOR CONTROL VALVE CIRCUIT LOW

1. OUTLINE OF DIAGNOSIS

Detect the open or short circuit of fuel tank sensor control valve.
Judge NG when the ECM output level is different from actual terminal level.

2. COMPONENT DESCRIPTION

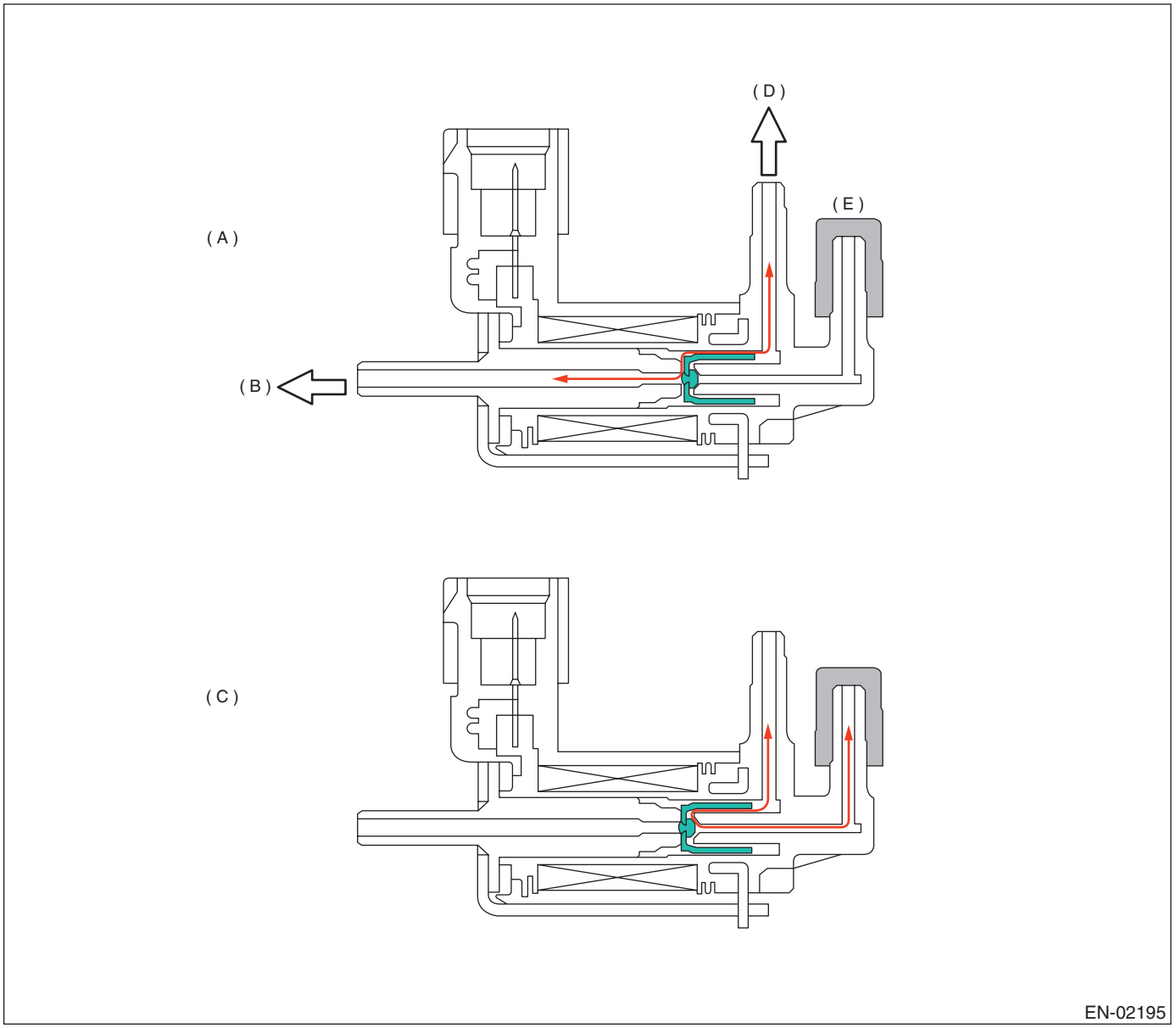

(A) Released to atmosphere (Solenoid OFF)
(B) Ambient air
(C) During diagnostics (Solenoid ON)
(D) To Pressure sensor
(E) Plug

3. ENABLE CONDITION

Secondary Parameters	Enable Conditions
None	

4. GENERAL DRIVING CYCLE

Always perform the diagnosis continuously.

5. DIAGNOSTIC METHOD

• Abnormality Judgment

Judge NG when the continuous time of completing the malfunction criteria below becomes more than 2.5 seconds.

Judgment Value

Malfunction Criteria	Threshold Value
Battery voltage	≥ 10.9 V
After starting engine	1 second or more
Terminal output voltage when ECM output OFF signals	Low
Ignition switch	ON

Time Needed for Diagnosis: 2.5 seconds
Malfunction Indicator Light Illumination: Illuminates when malfunction occurs in 2 continuous driving cycles.

• Normality Judgment

Judge OK when the malfunction criteria below are completed.

Judgment Value

Malfunction Criteria	Threshold Value
Battery voltage	≥ 10.9 V
After engine starting	1 second or more
Terminal output voltage when ECM output OFF signals	High
Ignition switch	ON

6. DTC CLEAR CONDITION

- When the OK idling cycle is completed 40 times in a row
- When “Clear Memory” was performed

7. MALFUNCTION INDICATOR LIGHT CLEAR CONDITION

- When the OK driving cycle is completed 3 times in a row
- When “Clear Memory” was performed

8. FAIL SAFE

None

9. ECM OPERATION AT DTC SETTING

Memorize the freeze frame data. (For test mode $02)

CS:DTC P1447 FUEL TANK SENSOR CONTROL VALVE CIRCUIT HIGH

1. OUTLINE OF DIAGNOSIS

Detect the open or short circuit of fuel tank sensor control valve.
Judge NG when the ECM output level is different from actual terminal level.

2. COMPONENT DESCRIPTION

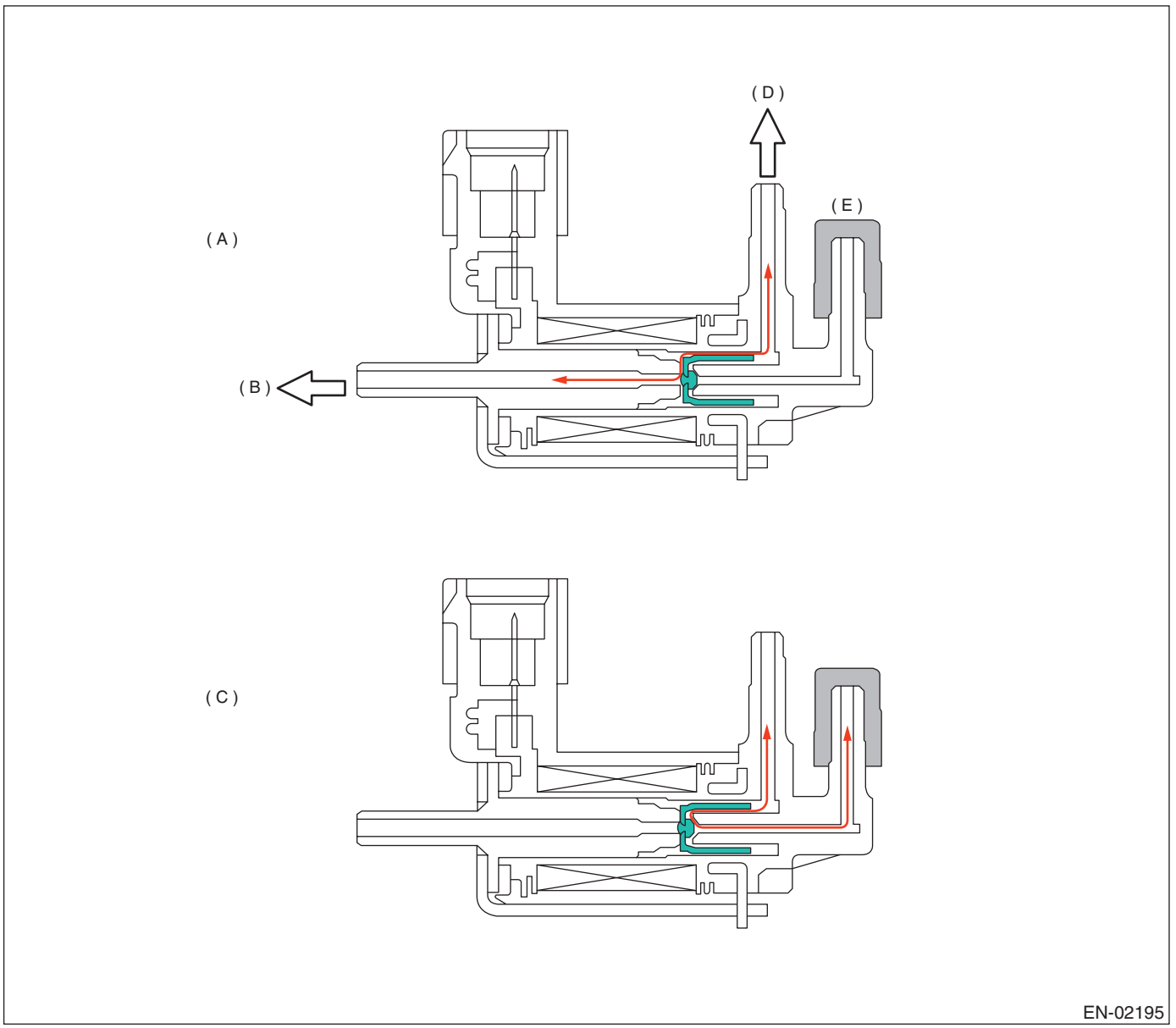

(A) Released to atmosphere (Solenoid OFF)
(B) Ambient air
(C) During diagnostics (Solenoid ON)
(D) To Pressure sensor
(E) Plug

3. ENABLE CONDITION

Secondary Parameters	Enable Conditions
None	

4. GENERAL DRIVING CYCLE

Always perform the diagnosis continuously.

5. DIAGNOSTIC METHOD

• Abnormality Judgment

Judge NG when the cumulative time of completing the malfunction criteria below becomes more than 2.5 seconds.

Judgment Value

Malfunction Criteria	Threshold Value
Battery voltage	≥ 10.9 V
After starting engine	1 second or more
Terminal output voltage when ECM output ON signals	High
Ignition switch	ON

Time Needed for Diagnosis: 2.5 seconds
Malfunction Indicator Light Illumination: Illuminates when malfunction occurs in two continuous drive cycles.

• Normality Judgment

Judge OK when the malfunction criteria below are completed.

Judgment Value

Malfunction Criteria	Threshold Value
Battery voltage	≥ 10.9 V
After engine starting	1 second or more
Terminal output voltage when ECM output OFF signals	Low
Ignition switch	ON

6. DTC CLEAR CONDITION

- When the OK idling cycle is completed 40 times in a row
- When “Clear Memory” was performed

7. MALFUNCTION INDICATOR LIGHT CLEAR CONDITION

- When the OK driving cycle is completed 3 times in a row
- When “Clear Memory” was performed

8. FAIL SAFE

None

9. ECM OPERATION AT DTC SETTING

Memorize the freeze frame data. (For test mode $02)

CT:DTC P1491 POSITIVE CRANKCASE VENTILATION (BLOW-BY) FUNCTION PROBLEM

1. OUTLINE OF DIAGNOSIS

Detect the blow-by hose release abnormality.
Judge NG when the diagnosis terminal voltage is high.

2. COMPONENT DESCRIPTION

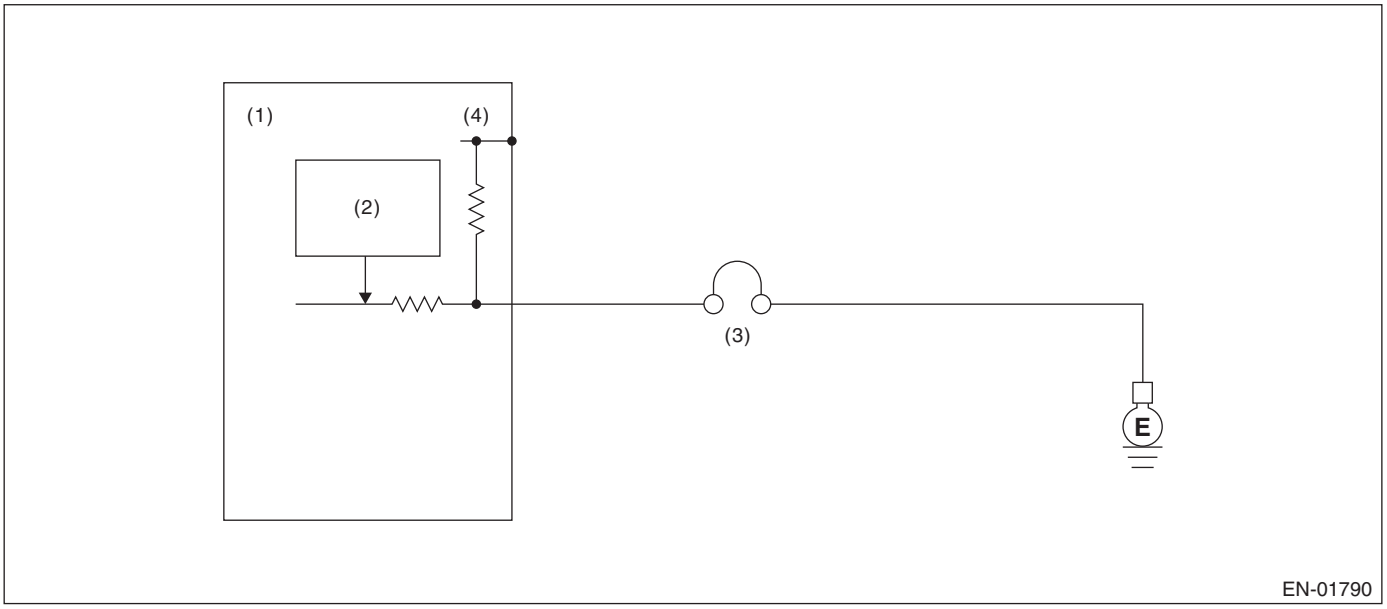

(1) Engine control module (ECM)
(2) Detecting circuit
(3) PCV diagnosis connector
(4) 5 V

3. ENABLE CONDITION

Secondary Parameter	Enable Condition
None	

4. GENERAL DRIVING CYCLE

Always perform the diagnosis continuously.

5. DIAGNOSIS METHOD

• Abnormality Judgment

Judge NG when the continuous time until completing the malfunction criteria below becomes more than 2.5 seconds.

Judgment Value

Malfunction Criteria	Threshold Value
Battery voltage	〉10.9 V
Engine speed	≥ 500 rpm
Positive crankcase ventilation diagnosis voltage	High

Time Needed for Diagnosis: 2.5 seconds
Malfunction Indicator Light Illumination: Illuminates as soon as malfunction occurs.

• Normality Judgment

Judge OK and clear NG when the malfunction criteria below is completed.

Judgment Value

Malfunction Criteria	Threshold Value
Battery voltage	〉10.9 V
Engine speed	≥ 500 rpm
Positive crankcase ventilation diagnosis voltage	Low

6. DTC CLEAR CONDITION

- When the OK idling cycle was completed 40 times in a row
- When “Clear Memory” was performed

7. MALFUNCTION INDICATOR LIGHT CLEAR CONDITION

- When the OK driving cycle was performed 3 times in a row
- When “Clear Memory” was performed

8. FAIL SAFE

None

9. ECM OPERATION AT DTC SETTING

Memorize the freeze frame data. (For test mode $02)

CU:DTC P1518 STARTER SWITCH CIRCUIT LOW INPUT

1. OUTLINE OF DIAGNOSIS

Detect the open or short circuit of starter SW.
Judge OFF NG when the engine starts without starter ON experience.

2. ENABLE CONDITION

Secondary Parameters	Enable Conditions
None	

3. GENERAL DRIVING CYCLE

Always perform the diagnosis continuously.

4. DIAGNOSTIC METHOD

• Abnormality Judgment

Judge OFF NG when the malfunction criteria below are completed.
Judgment Value

Malfunction Criteria	Threshold Value
Vehicle speed	< 1 km/h (0.62 MPH)
It took more than 0.8 seconds at engine starting, and then it turned after engine starting.	
Starter ON signal	Not detected
Engine speed after the engine speed of 500 rpm or less has continued for 0.8 seconds or more	≥ 500 rpm
Battery voltage	> 8 V

Time Needed for Diagnosis: 1 second
Malfunction Indicator Light Illumination: Illuminates when malfunction occurs in 2 continuous driving cycles.

• Normality Judgment

Judge OFF OK and clear the NG when the malfunction criteria below are completed.
Judgment Value

Malfunction Criteria	Threshold Value
Starter ON	Experienced
Starter ON diagnosis	Not diagnosis
Battery voltage	> 8 V

5. DTC CLEAR CONDITION

- When the OK idling cycle was completed 40 times in a row
- When “Clear Memory” was performed

6. MALFUNCTION INDICATOR LIGHT CLEAR CONDITION

- When the OK driving cycle was completed 3 times in a row
- When “Clear Memory” was performed

7. FAIL SAFE

None

8. ECM OPERATION AT DTC SETTING

Memorize the freeze frame data. (For test mode $02)

CV:DTC P1544 EXHAUST GAS TEMPERATURE TOO HIGH

1. OUTLINE OF DIAGNOSIS

Detect the malfunction of high exhaust gas temperature.
Judge NG when the exhaust gas becomes too high.

2. ENABLE CONDITION

Secondary Parameters	Enable Conditions
Battery voltage	〉10.9 V

3. GENERAL DRIVING CYCLE

Always perform the diagnosis continuously.

4. DIAGNOSTIC METHOD

• Abnormality Judgment

Judge NG when the continuous time of completing the malfunction criteria below becomes more than 8.2 seconds.

Judgment Value

Malfunction Criteria	Threshold Value
Fuel cut event	Not in operation
After fuel cut	≥ 1 millisecond
Exhaust temperature	≥ 1050°C (1922°F)

Time Needed for Diagnosis: 8.2 seconds
Malfunction Indicator Light Illumination: Illuminates as soon as the malfunction occurs.

• Normality Judgment

Judge OK and clear the NG when the continuous time of completing the malfunction criteria below becomes more than 8.2 seconds.

Judgment Value

Malfunction Criteria	Threshold Value
Exhaust temperature	〈 550°C (1022°F)

5. DTC CLEAR CONDITION

- When the OK idling cycle was completed 40 times in a row
- When “Clear Memory” was performed

6. MALFUNCTION INDICATOR LIGHT CLEAR CONDITION

- When the OK driving cycle was completed 3 times in a row
- When “Clear Memory” was performed

7. FAIL SAFE

None

8. ECM OPERATION AT DTC SETTING

Memorize the freeze frame data. (For test mode $02)

CW:DTC P1560 BACK-UP VOLTAGE CIRCUIT MALFUNCTION

1. OUTLINE OF DIAGNOSIS

Detect open or short circuit of the back-up voltage circuit.
Judge NG when the back-up voltage becomes smaller than the battery voltage.

2. ENABLE CONDITION

Secondary Parameter	Enable Condition
None	

3. GENERAL DRIVING CYCLE

Always perform the diagnosis continuously.

4. DIAGNOSTIC METHOD

• Abnormality Judgment

Judge NG when the continuous time of completing the malfunction criteria below becomes more than 2.5 seconds.

Judgment Value

Malfunction Criteria	Threshold Value
Voltage of back-up power	< Battery voltage × 0.7
Battery voltage	≥ 10.9 V
Engine speed	≥ 500 rpm

Time Needed for Diagnosis: 2.5 seconds
Malfunction Indicator Light Illumination: Illuminates as soon as malfunction occurs.

• Normality Judgment

Judge OK and clear NG when the malfunction criteria below is completed.

Judgment Value

Malfunction Criteria	Threshold Value
Voltage of back-up power supply	≥ Battery voltage × 0.7
Battery voltage	≥ 10.9 V
Engine speed	≥ 500 rpm

5. DTC CLEAR CONDITION

- When the OK idling cycle was completed 40 times in a row
- When “Clear Memory” was performed

6. MALFUNCTION INDICATOR LIGHT CLEAR CONDITION

- When the OK driving cycle was completed 3 times in a row
- When “Clear Memory” was performed

7. FAIL SAFE

None

8. ECM OPERATION AT DTC SETTING

Memorize the freeze frame data. (For test mode $02)

CX:DTC P1570 ANTENNA

1. OUTLINE OF DIAGNOSIS

For the detecting criteria, refer to P0513.
<Ref. to GD(H4DOTC)-162, DTC P0513 INCORRECT IMMOBILIZER KEY, Diagnostic Trouble Code (DTC) Detecting Criteria.>

CY:DTC P1571 REFERENCE CODE INCOMPATIBILITY

1. OUTLINE OF DIAGNOSIS

For the detecting criteria, refer to P0513.
<Ref. to GD(H4DOTC)-162, DTC P0513 INCORRECT IMMOBILIZER KEY, Diagnostic Trouble Code (DTC) Detecting Criteria.>

CZ:DTC P1572 IMM CIRCUIT FAILURE (EXCEPT ANTENNA CIRCUIT)

1. OUTLINE OF DIAGNOSIS

For the detecting criteria, refer to P0513.
<Ref. to GD(H4DOTC)-162, DTC P0513 INCORRECT IMMOBILIZER KEY, Diagnostic Trouble Code (DTC) Detecting Criteria.>

DA:DTC P1574 KEY COMMUNICATION FAILURE

1. OUTLINE OF DIAGNOSIS

For the detecting criteria, refer to P0513.
<Ref. to GD(H4DOTC)-162, DTC P0513 INCORRECT IMMOBILIZER KEY, Diagnostic Trouble Code (DTC) Detecting Criteria.>

DB:DTC P1576 EGI CONTROL MODULE EEPROM

1. OUTLINE OF DIAGNOSIS

For the detecting criteria, refer to P0513.
<Ref. to GD(H4DOTC)-162, DTC P0513 INCORRECT IMMOBILIZER KEY, Diagnostic Trouble Code (DTC) Detecting Criteria.>

DC:DTC P1577 IMM CONTROL MODULE EEPROM

1. OUTLINE OF DIAGNOSIS

For the detecting criteria, refer to P0513.
<Ref. to GD(H4DOTC)-162, DTC P0513 INCORRECT IMMOBILIZER KEY, Diagnostic Trouble Code (DTC) Detecting Criteria.>

DD:DTC P1578 METER FAILURE

1. OUTLINE OF DIAGNOSIS

For the detecting criteria, refer to P0513.
<Ref. to GD(H4DOTC)-162, DTC P0513 INCORRECT IMMOBILIZER KEY, Diagnostic Trouble Code (DTC) Detecting Criteria.>

DE:DTC P2004 INTAKE MANIFOLD RUNNER CONTROL STUCK OPEN (BANK 1)

1. OUTLINE OF DIAGNOSIS

Detect the malfunction of tumble generator valve motor function.
Judge open fixing malfunction when the opening degree is large even after finishing the tumble generator valve close driving.

2. ENABLE CONDITION

Secondary Parameters	Enable Conditions
Battery voltage	≥ 10.9 V
Engine coolant temperature	≥ 0°C (32°F)
Ambient temperature	≥ 0°C (32°F)

3. GENERAL DRIVING CYCLE

Always perform the diagnosis continuously.

4. DIAGNOSTIC METHOD

• Abnormality Judgment

Judge NG when the continuous time of completing the malfunction criteria below becomes more than 3 seconds.

Judgment Value

Malfunction Criteria	Threshold Value
Tumble generator valve angle	≥ 67.4°
Tumble generator valve “close” signal output	2.2 seconds or more

Time Needed for Diagnosis: 3 seconds
Malfunction Indicator Light Illumination: Illuminates as soon as malfunction occurs.

• Normality Judgment

Judge OK and clear the NG when the malfunction criteria below are completed.

Judgment Value

Malfunction Criteria	Threshold Value
Tumble generator valve angle	< 67.4°
Tumble generator valve “close” signal output	2.2 seconds or more

5. DTC CLEAR CONDITION

- When the OK idling cycle was completed 40 times in a row
- When “Clear Memory” was performed

6. MALFUNCTION INDICATOR LIGHT CLEAR CONDITION

- When the OK driving cycle was completed 3 times in a row
- When “Clear Memory” was performed

7. FAIL SAFE

Tumble generator valve opening
- For tumble generator valve all closing points learning, not allowed to update to the closing side.
- For tumble generator valve all opening points learning, not allowed to update to the opening side.

Tumble generator valve control
- Output the open signal.

8. ECM OPERATION AT DTC SETTING

Memorize the freeze frame data. (For test mode $02)

DF:DTC P2005 INTAKE MANIFOLD RUNNER CONTROL STUCK OPEN (BANK 2)

1. OUTLINE OF DIAGNOSIS

Detect the malfunction of tumble generator valve motor function.
Judge open fixing malfunction when the opening degree is large even after finishing the tumble generator valve closing driving.

2. ENABLE CONDITION

Secondary Parameters	Enable Conditions
Battery voltage	≥ 10.9 V
Engine coolant temperature	≥ 0°C (32°F)
Ambient temperature	≥ 0°C (32°F)

3. GENERAL DRIVING CYCLE

Always perform the diagnosis continuously.

4. DIAGNOSTIC METHOD

• Abnormality Judgment

Judge NG when the continuous time of completing the malfunction criteria below becomes more than 3 seconds.

Judgment Value

Malfunction Criteria	Threshold Value
Tumble generator valve angle	≥ 67.4°
Tumble generator valve “close” signal output	2.2 seconds or more

Time Needed for Diagnosis: 3 seconds
Malfunction Indicator Light Illumination: Illuminates as soon as malfunction occurs.

• Normality Judgment

Judge OK and clear the NG when the malfunction criteria below are completed.

Judgment Value

Malfunction Criteria	Threshold Value
Tumble generator valve angle	< 67.4°
Tumble generator valve “close” signal output	2.2 seconds or more

5. DTC CLEAR CONDITION

- When the OK idling cycle was completed 40 times in a row
- When “Clear Memory” was performed

6. MALFUNCTION INDICATOR LIGHT CLEAR CONDITION

- When the OK driving cycle was completed 3 times in a row
- When “Clear Memory” was performed

7. FAIL SAFE

Tumble generator valve opening
- For tumble generator valve all closing points learning, not allowed to update to the closing side.
- For tumble generator valve all opening points learning, not allowed to update to the opening side.

Tumble generator valve control
- Output the open signal.

8. ECM OPERATION AT DTC SETTING

Memorize the freeze frame data. (For test mode $02)

DG:DTC P2006 INTAKE MANIFOLD RUNNER CONTROL STUCK CLOSED (BANK 1)

1. OUTLINE OF DIAGNOSIS

Detect the malfunction of tumble generator valve motor function.
Judge close fixing malfunction when the opening degree is small even after finishing the tumble generator valve open driving.

2. ENABLE CONDITION

Secondary Parameters	Enable Conditions
Battery voltage	≥ 10.9 V
Engine coolant temperature	≥ 0°C (32°F)
Ambient temperature	≥ 0°C (32°F)

3. GENERAL DRIVING CYCLE

Always perform the diagnosis continuously.

4. DIAGNOSTIC METHOD

• Abnormality Judgment

Judge NG when the continuous time of completing the malfunction criteria below becomes more than 3 seconds.

Judgment Value

Malfunction Criteria	Threshold Value
Tumble generator valve angle	< 67.4°
Tumble generator valve “open” signal output	2.4 seconds or more

Time Needed for Diagnosis: 3 seconds
Malfunction Indicator Light Illumination: Illuminates as soon as malfunction occurs.

• Normality Judgment

Judge OK and clear the NG when the malfunction criteria below are completed.

Judgment Value

Malfunction Criteria	Threshold Value
Tumble generator valve angle	≥ 67.4°
Tumble generator valve “open” signal output	2.4 seconds or more

5. DTC CLEAR CONDITION

- When the OK idling cycle was completed 40 times in a row
- When “Clear Memory” was performed

6. MALFUNCTION INDICATOR LIGHT CLEAR CONDITION

- When the OK driving cycle was completed 3 times in a row
- When “Clear Memory” was performed

7. FAIL SAFE

Tumble generator valve opening
- For tumble generator valve all closing points learning, not allowed to update to the closing side.
- For tumble generator valve all opening points learning, not allowed to update to the opening side.

Tumble generator valve control
- Output the close signal.

8. ECM OPERATION AT DTC SETTING

Memorize the freeze frame data. (For test mode $02)

DH:DTC P2007 INTAKE MANIFOLD RUNNER CONTROL STUCK CLOSED (BANK 2)

1. OUTLINE OF DIAGNOSIS

Detect the malfunction of tumble generator valve motor function.
Judge close fixing malfunction when the opening degree is small even after finishing the tumble generator valve open driving.

2. ENABLE CONDITION

Secondary Parameters	Enable Conditions
Battery voltage	≥ 10.9 V
Engine coolant temperature	≥ 0°C (32°F)
Ambient temperature	≥ 0°C (32°F)

3. GENERAL DRIVING CYCLE

Always perform the diagnosis continuously.

4. DIAGNOSTIC METHOD

• Abnormality Judgment

Judge NG when the continuous time of completing the malfunction criteria below becomes more than 3 seconds.

Judgment Value

Malfunction Criteria	Threshold Value
Tumble generator valve angle	< 67.4°
Tumble generator valve “open” signal output	2.4 seconds or more

Time Needed for Diagnosis: 3 seconds
Malfunction Indicator Light Illumination: Illuminates as soon as malfunction occurs.

• Normality Judgment

Judge OK and clear the NG when the malfunction criteria below are completed.

Judgment Value

Malfunction Criteria	Threshold Value
Tumble generator valve angle	≥ 67.4°
Tumble generator valve “open” signal output	2.4 seconds or more

5. DTC CLEAR CONDITION

- When the OK idling cycle was completed 40 times in a row
- When “Clear Memory” was performed

6. MALFUNCTION INDICATOR LIGHT CLEAR CONDITION

- When the OK driving cycle was completed 3 times in a row
- When “Clear Memory” was performed

7. FAIL SAFE

Tumble generator valve opening
- For tumble generator valve all closing points learning, not allowed to update to the closing side.
- For tumble generator valve all opening points learning, not allowed to update to the opening side.

Tumble generator valve control
- Output the close signal.

8. ECM OPERATION AT DTC SETTING

Memorize the freeze frame data. (For test mode $02)

DI: DTC P2008 INTAKE MANIFOLD RUNNER CONTROL CIRCUIT / OPEN (BANK 1)

1. OUTLINE OF DIAGNOSIS

Detect the open or short circuit of tumble generator valve motor.
Judge NG when the open signal is sent from IC after tumble generator valve driving IC diagnosis.

2. COMPONENT DESCRIPTION

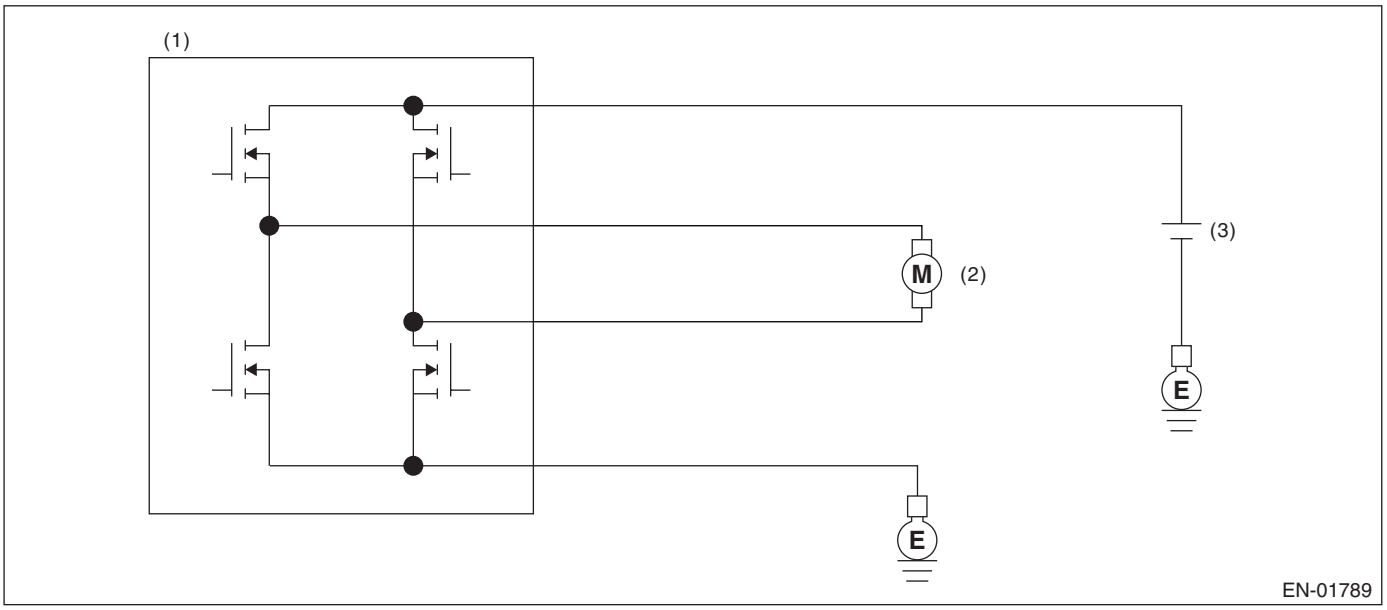

(1) Engine control module (ECM) (2) Tumble generator valve (3) Battery

3. ENABLE CONDITION

Secondary Parameters	Enable Conditions
Battery voltage	≥ 10.9 V
ECM output signal	before set ON → OFF
Tumble generator valve ON signal output	20 milliseconds or more

4. GENERAL DRIVING CYCLE

Always perform the diagnosis continuously.

5. DIAGNOSTIC METHOD

At the main IC, check the sent signal at each timing which occurs just before the tumble generator valve output is set to ON and OFF, and judge open NG when the open NG signal is sent during 2 seconds in a row. Judge OK and clear the NG when the OK signal is sent.

Judgment Value

Malfunction Criteria	Threshold Value
Open NG signal input	Low
Overcurrent NG signal input	High

Time Needed for Diagnosis: 2 seconds
Malfunction Indicator Light Illumination: Illuminates as soon as malfunction occurs.

6. DTC CLEAR CONDITION

- When the OK idling cycle was completed 40 times in a row
- When “Clear Memory” was performed

7. MALFUNCTION INDICATOR LIGHT CLEAR CONDITION

- When the OK driving cycle was completed 3 times in a row
- When “Clear Memory” was performed

8. FAIL SAFE

Tumble generator valve control: Not allowed to move tumble generator valve.

9. ECM OPERATION AT DTC SETTING

Memorize the freeze frame data. (For test mode $02)

DJ:DTC P2009 INTAKE MANIFOLD RUNNER CONTROL CIRCUIT LOW (BANK 1)

1. OUTLINE OF DIAGNOSIS

Detect the open or short circuit of tumble generator valve motor.
Judge NG when the overcurrent signal is sent from IC after tumble generator valve driving IC diagnosis.

2. COMPONENT DESCRIPTION

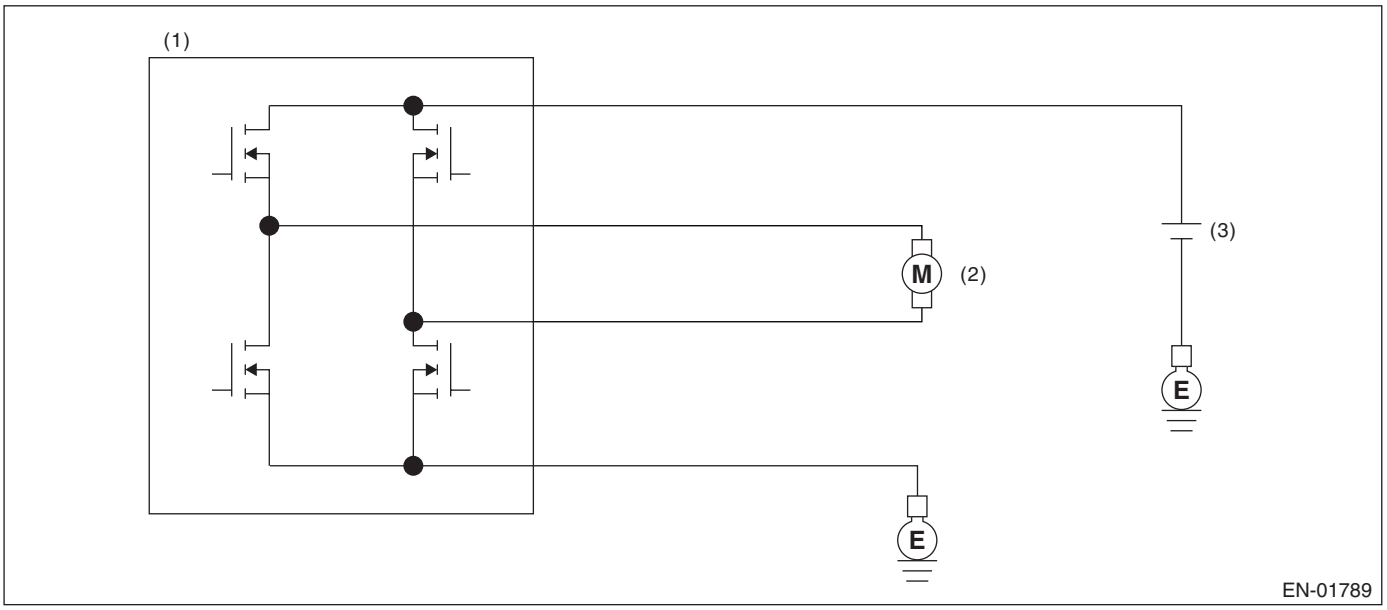

(1) Engine control module (ECM) (2) Tumble generator valve (3) Battery

3. ENABLE CONDITION

Secondary Parameters	Enable Conditions
Battery voltage	≥ 10.9 V
ECM output signal	Before set ON → OFF
Tumble generator valve ON signal output	20 milliseconds or more

4. GENERAL DRIVING CYCLE

Always perform the diagnosis continuously.

5. DIAGNOSTIC METHOD

NG signal is sent to main IC. At the main IC, check the sent signal at each timing which occurs just before the tumble generator valve output is set to ON and OFF, and judge overcurrent NG when the overcurrent NG signal is sent during 1 second in a row. Judge OK and clear the NG when the OK signal is sent.
Judgment Value

Malfunction Criteria	Threshold Value
Open NG signal input	High
Overcurrent NG signal input	Low

Time Needed for Diagnosis: 1 second
Malfunction Indicator Light Illumination: Illuminates as soon as malfunction occurs.

6. DTC CLEAR CONDITION

- When the OK idling cycle was completed 40 times in a row
- When “Clear Memory” was performed

7. MALFUNCTION INDICATOR LIGHT CLEAR CONDITION

- When the OK driving cycle was completed 3 times in a row
- When “Clear Memory” was performed

8. FAIL SAFE

Tumble generator valve control: Not allowed to move tumble generator valve.

9. ECM OPERATION AT DTC SETTING

Memorize the freeze frame data. (For test mode $02)

DK:DTC P2011 INTAKE MANIFOLD RUNNER CONTROL CIRCUIT / OPEN (BANK 2)

1. OUTLINE OF DIAGNOSIS

Detect the open or short circuit of tumble generator valve motor.
Judge NG when the open signal is sent from IC after tumble generator valve driving IC diagnosis.

2. COMPONENT DESCRIPTION

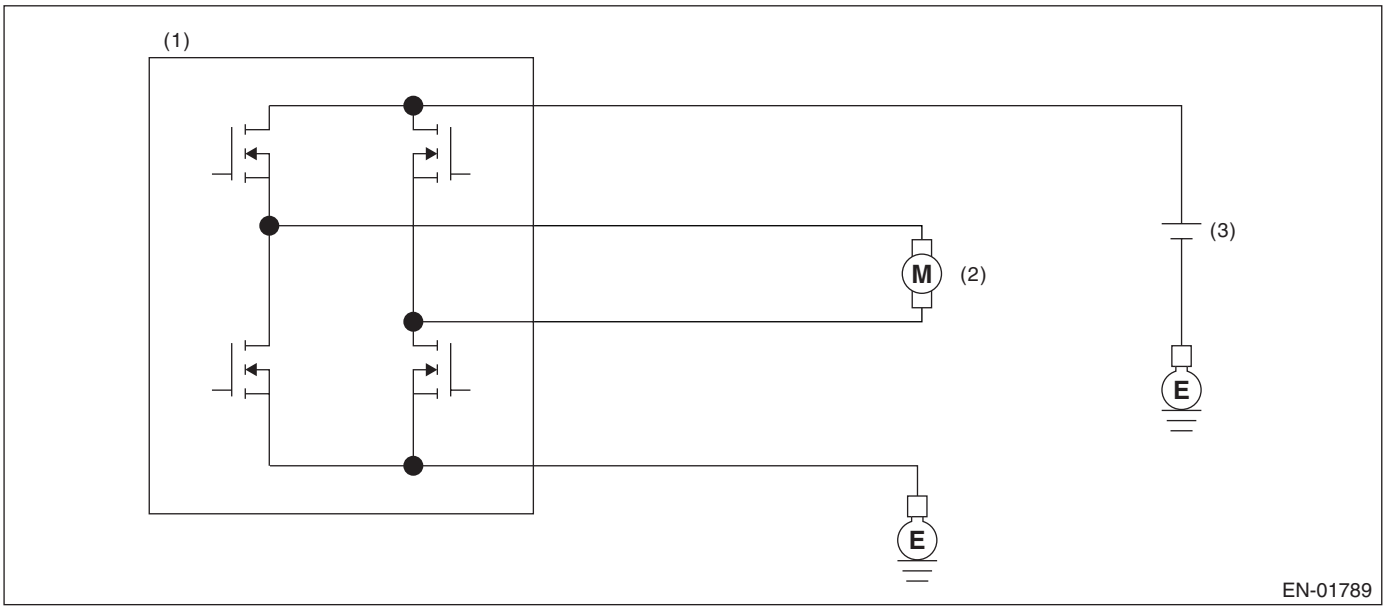

(1) Engine control module (ECM) (2) Tumble generator valve (3) Battery

3. ENABLE CONDITION

Secondary Parameters	Enable Conditions
Battery voltage	≥ 10.9 V
ECM output signal	Before set ON → OFF
Tumble generator valve ON signal output	20 milliseconds or more

4. GENERAL DRIVING CYCLE

Always perform the diagnosis continuously.

5. DIAGNOSTIC METHOD

Judge NG when the malfunction criteria below are completed by tumble generator valve driving IC, and then NG signal is sent to main IC. At the main IC, check the sent signal at each timing which occurs just before the tumble generator valve output is set to ON and OFF, and judge open NG when the open NG signal is sent during 2 seconds in a row. Judge OK and clear the NG when the OK signal is sent.

Judgment Value

Malfunction Criteria	Threshold Value
Open NG signal input	Low
Overcurrent NG signal input	High

Time Needed for Diagnosis: 2 seconds
Malfunction Indicator Light Illumination: Illuminates as soon as malfunction occurs.

6. DTC CLEAR CONDITION

- When the OK idling cycle was completed 40 times in a row
- When “Clear Memory” was performed

7. MALFUNCTION INDICATOR LIGHT CLEAR CONDITION

- When the OK driving cycle was completed 3 times in a row
- When “Clear Memory” was performed

8. FAIL SAFE

Tumble generator valve control: Not allowed to move tumble generator valve.

9. ECM OPERATION AT DTC SETTING

Memorize the freeze frame data. (For test mode $02)

DL:DTC P2012 INTAKE MANIFOLD RUNNER CONTROL CIRCUIT LOW (BANK 2)

1. OUTLINE OF DIAGNOSIS

Detect the open or short circuit of tumble generator valve motor.
Judge NG when the overcurrent signal is sent from IC after tumble generator valve driving IC diagnosis.

2. COMPONENT DESCRIPTION

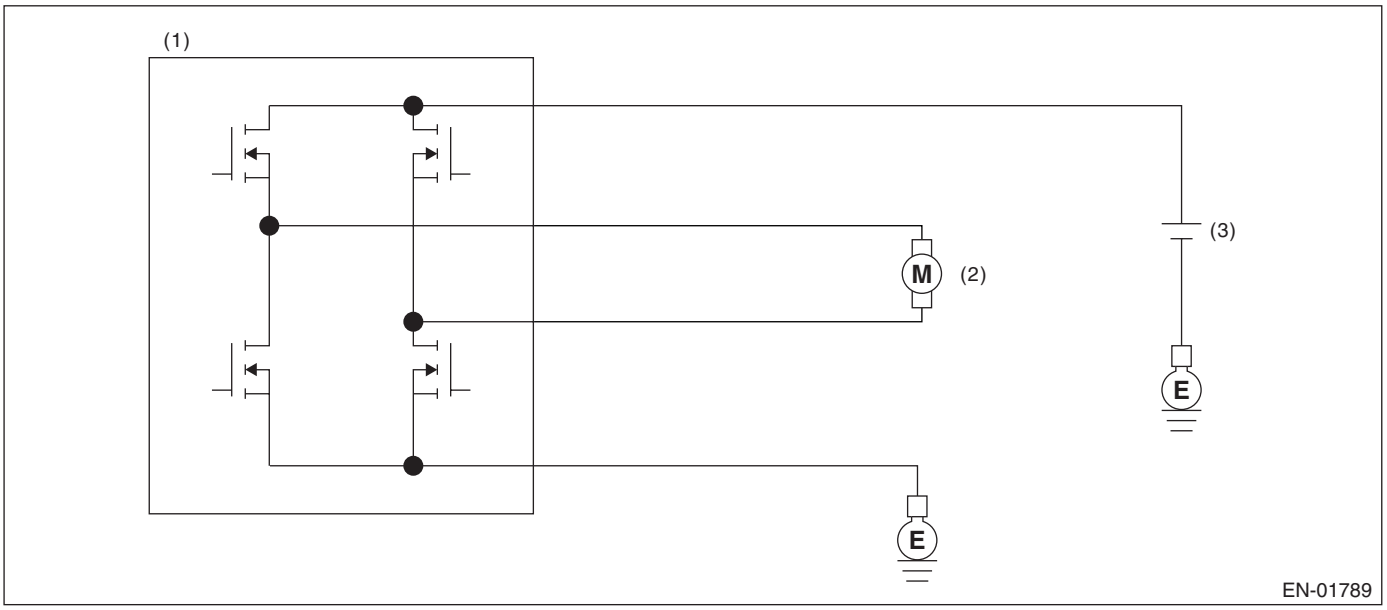

(1) Engine control module (ECM) (2) Tumble generator valve (3) Battery

3. ENABLE CONDITION

Secondary Parameters	Enable Conditions
Battery voltage	≥ 10.9 V
ECM output signal	Before set ON → OFF
Tumble generator valve ON signal output	20 milliseconds or more

4. GENERAL DRIVING CYCLE

Always perform the diagnosis continuously.

5. DIAGNOSTIC METHOD

Judge NG when the malfunction criteria below are completed by tumble generator valve driving IC, and then NG signal is sent to main IC. At the main IC, check the sent signal at each timing which occurs just before the tumble generator valve output is set to ON and OFF, and judge overcurrent NG when the overcurrent NG signal is sent during 1 second in a row.
Judge OK and clear the NG when the OK signal is sent.

Judgment Value

Malfunction Criteria	Threshold Value
Open NG signal input	High
Overcurrent NG signal input	Low

Time Needed for Diagnosis: 1 second
Malfunction Indicator Light Illumination: Illuminates as soon as malfunction occurs.

6. DTC CLEAR CONDITION

- When the OK idling cycle was completed 40 times in a row
- When “Clear Memory” was performed

7. MALFUNCTION INDICATOR LIGHT CLEAR CONDITION

- When the OK driving cycle was completed 3 times in a row
- When “Clear Memory” was performed

8. FAIL SAFE

Tumble generator valve control: Not allowed to move tumble generator valve.

9. ECM OPERATION AT DTC SETTING

Memorize the freeze frame data. (For test mode $02)

DM:DTC P2016 INTAKE MANIFOLD RUNNER POSITION SENSOR / SWITCH CIRCUIT LOW (BANK 1)

1. OUTLINE OF DIAGNOSIS

Detect open or short circuit of tumble generator valve position sensor.
Judge NG when the value is out of standard range.

2. COMPONENT DESCRIPTION

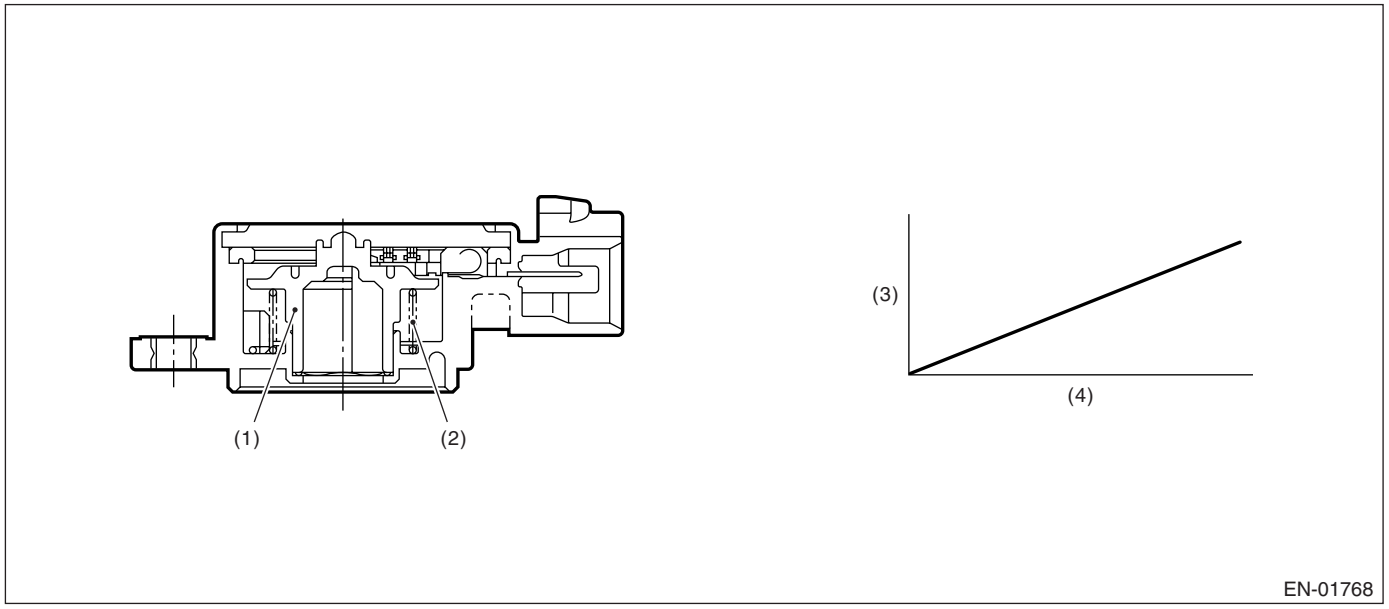

(1) Rotor
(2) Return spring
(3) Voltage (V)
(4) Tumble generator valve angle (°)

3. ENABLE CONDITION

Secondary Parameters	Enable Conditions
None	

4. GENERAL DRIVING CYCLE

Always perform diagnosis.

5. DIAGNOSTIC METHOD

Judge NG when the continuous time of completing the malfunction criteria below becomes more than the time needed for diagnosis (0.5 seconds). Judge OK and clear NG when the malfunction criteria below are not completed.

Judgment Value

Malfunction Criteria	Threshold Value
Output voltage	< 0.167 V

Time Needed for Diagnosis: 0.5 seconds
Malfunction Indicator Light Illumination: Illuminates as soon as malfunction occurs.

6. DTC CLEAR CONDITION

- When the OK idling cycle was completed 40 times in a row
- When “Clear Memory” was performed

7. MALFUNCTION INDICATOR LIGHT CLEAR CONDITION

- When the OK driving cycle was completed 3 times in a row
- When “Clear Memory” was performed

8. FAIL SAFE

Tumble generator valve position
- Learning of tumble generator valve position fully closed and date renewed to close side.
- Learning of tumble generator valve position fully opened and date renewed to open side.

9. ECM OPERATION AT DTC SETTING

Memorize the freeze frame data. (For test mode $02)

DN:DTC P2017 INTAKE MANIFOLD RUNNER POSITION SENSOR / SWITCH CIRCUIT HIGH (BANK 1)

1. OUTLINE OF DIAGNOSIS

Detect open or short circuit of tumble generator valve position sensor.
Judge NG when the value is out of standard range.

2. COMPONENT DESCRIPTION

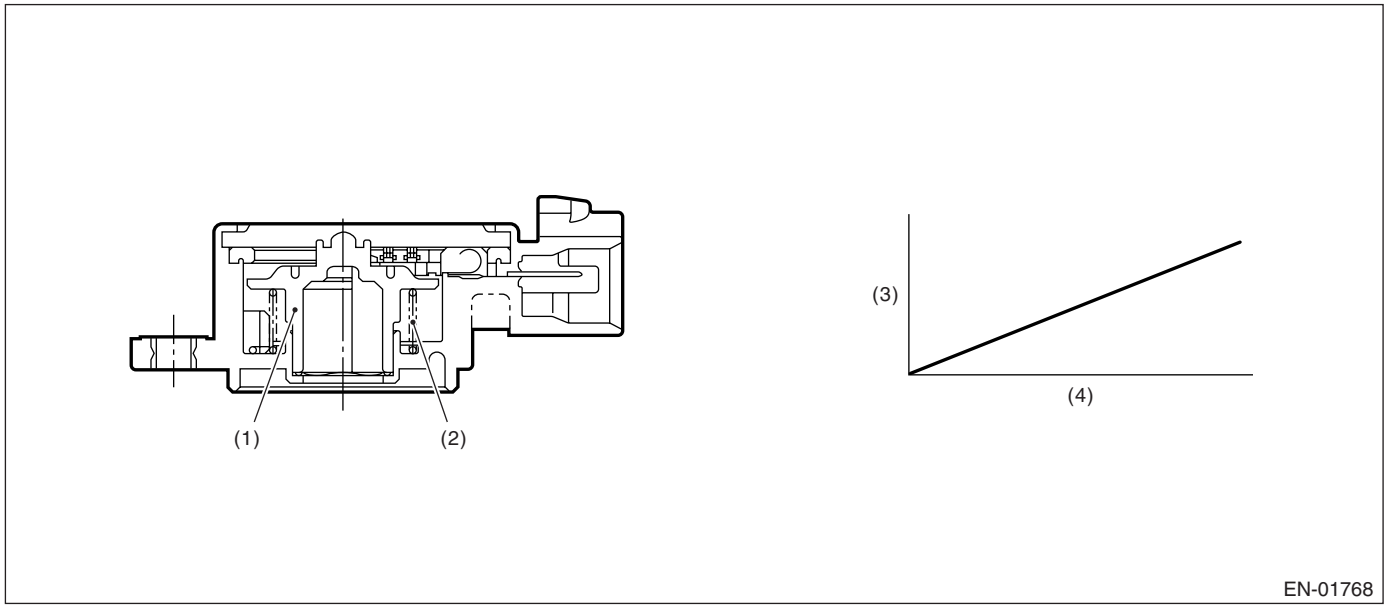

(1) Rotor
(2) Return spring
(3) Voltage (V)
(4) Tumble generator valve angle (°)

3. ENABLE CONDITION

Secondary Parameters	Enable Conditions
None	

4. GENERAL DRIVING CYCLE

Always perform diagnosis.

5. DIAGNOSTIC METHOD

Judge NG when the continuous time of completing the malfunction criteria below becomes more than the time needed for diagnosis (0.5 seconds). Judge OK and clear NG when the malfunction criteria below are not completed.

Judgment Value

Malfunction Criteria	Threshold Value
Output voltage	≥ 4.843 V

Time Needed for Diagnosis: 0.5 seconds
Malfunction Indicator Light Illumination: Illuminates as soon as malfunction occurs.

6. DTC CLEAR CONDITION

- When the OK idling cycle was completed 40 times in a row
- When “Clear Memory” was performed

7. MALFUNCTION INDICATOR LIGHT CLEAR CONDITION

- When the OK driving cycle was completed 3 times in a row
- When “Clear Memory” was performed

8. FAIL SAFE

Tumble generator valve position
- Learning of tumble generator valve position fully closed and date renewed to close side.
- Learning of tumble generator valve position fully opened and date renewed to open side.

9. ECM OPERATION AT DTC SETTING

Memorize the freeze frame data. (For test mode $02)

DO:DTC P2021 INTAKE MANIFOLD RUNNER POSITION SENSOR / SWITCH CIRCUIT LOW (BANK 2)

1. OUTLINE OF DIAGNOSIS

Detect open or short circuit of tumble generator valve position sensor.
Judge NG when the value is out of standard range.

2. COMPONENT DESCRIPTION

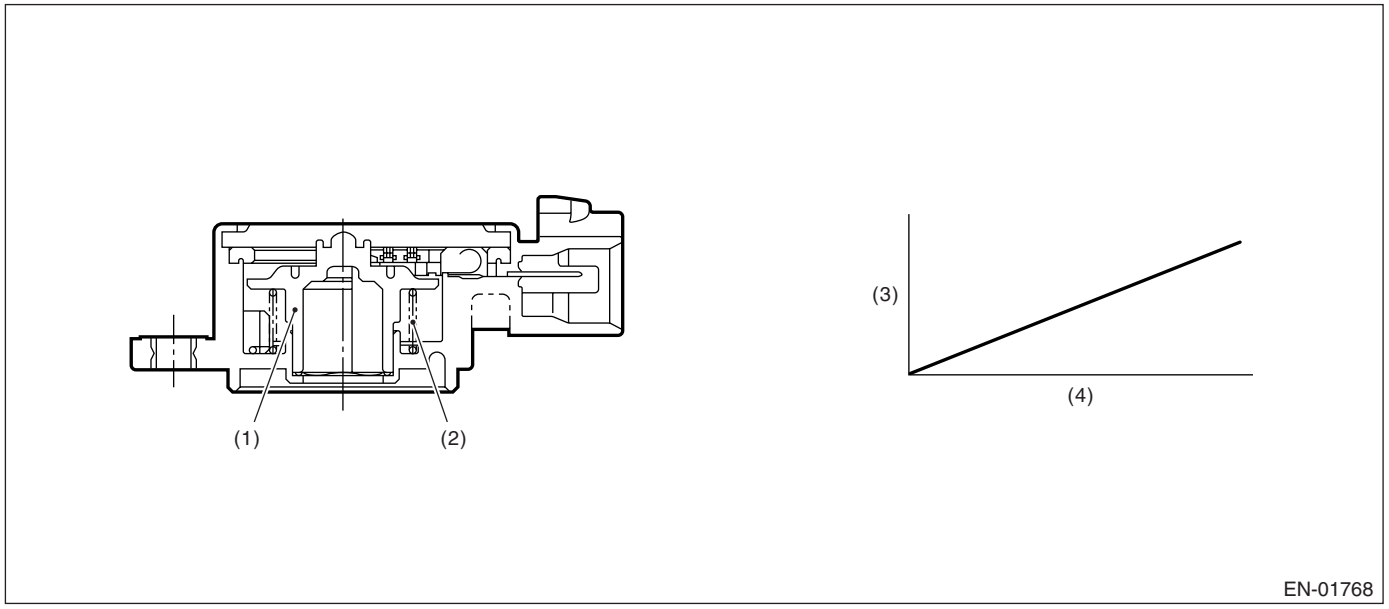

(1) Rotor
(2) Return spring
(3) Voltage (V)
(4) Tumble generator valve angle (°)

3. ENABLE CONDITION

Secondary Parameters	Enable Conditions
None	

4. GENERAL DRIVING CYCLE

Always perform diagnosis.

5. DIAGNOSTIC METHOD

Judge NG when the continuous time of completing the malfunction criteria below becomes more than the time needed for diagnosis (0.5 seconds). Judge OK and clear NG when the malfunction criteria below are not completed.

Judgment Value

Malfunction Criteria	Threshold Value
Output voltage	< 0.167 V

Time Needed for Diagnosis: 0.5 seconds
Malfunction Indicator Light Illumination: Illuminates as soon as malfunction occurs.

6. DTC CLEAR CONDITION

- When the OK idling cycle was completed 40 times in a row
- When “Clear Memory” was performed

7. MALFUNCTION INDICATOR LIGHT CLEAR CONDITION

- When the OK driving cycle was completed 3 times in a row
- When “Clear Memory” was performed

8. FAIL SAFE

Tumble generator valve position
- Learning of tumble generator valve position fully closed and date renewed to close side.
- Learning of tumble generator valve position fully opened and date renewed to open side.

9. ECM OPERATION AT DTC SETTING

Memorize the freeze frame data. (For test mode $02)

DP:DTC P2022 INTAKE MANIFOLD RUNNER POSITION SENSOR / SWITCH CIRCUIT HIGH (BANK 2)

1. OUTLINE OF DIAGNOSIS

Detect open or short circuit of tumble generator valve position sensor.
Judge NG when the value is out of standard range.

2. COMPONENT DESCRIPTION

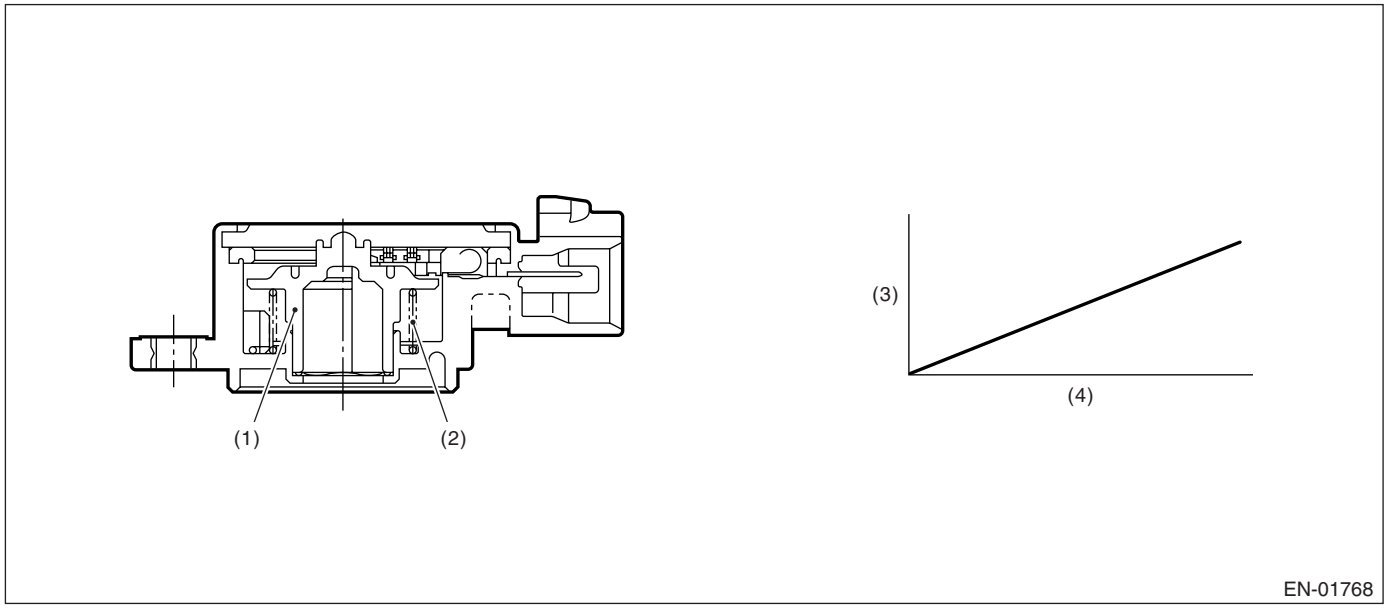

(1) Rotor
(2) Return spring
(3) Voltage (V)
(4) Tumble generator valve angle (°)

3. ENABLE CONDITION

Secondary Parameters	Enable Conditions
None	

4. GENERAL DRIVING CYCLE

Always perform diagnosis.

5. DIAGNOSTIC METHOD

Judge NG when the continuous time of completing the malfunction criteria below becomes more than the time needed for diagnosis (0.5 seconds). Judge OK and clear NG when the malfunction criteria below are not completed.

Judgment Value

Malfunction Criteria	Threshold Value
Output voltage	≥ 4.843 V

Time Needed for Diagnosis: 0.5 seconds
Malfunction Indicator Light Illumination: Illuminates as soon as malfunction occurs.

6. DTC CLEAR CONDITION

- When the OK idling cycle was completed 40 times in a row
- When “Clear Memory” was performed

7. MALFUNCTION INDICATOR LIGHT CLEAR CONDITION

- When the OK driving cycle was completed 3 times in a row
- When “Clear Memory” was performed

8. FAIL SAFE

Tumble generator valve position
- Learning of tumble generator valve position fully closed and date renewed to close side.
- Learning of tumble generator valve position fully opened and date renewed to open side.

9. ECM OPERATION AT DTC SETTING

Memorize the freeze frame data. (For test mode $02)

DQ:DTC P2088 OCV SOLENOID VALVE SIGNAL A CIRCUIT OPEN (BANK 1)

1. OUTLINE OF DIAGNOSIS

Detect open or short circuit of oil flow control solenoid valve.
Judge open NG when the current flow is small whereas duty signal is large, and judge short NG when the current flow is large whereas duty signal is small.

2. ENABLE CONDITION

Secondary Parameter	Enable Condition
Battery voltage	≥ 10.9 V

3. GENERAL DRIVING CYCLE

Always perform the diagnosis continuously.

4. DIAGNOSTIC METHOD

• Abnormality Judgment

Judge NG when the continuous time of completing the malfunction criteria below becomes more than 2 seconds.

Judgment Value

Malfunction Criteria	Threshold Value
OCV solenoid valve duty	≥ 99.61%
OCV solenoid valve present current	< 0.306 A

Time Needed for Diagnosis: 2000 milliseconds
Malfunction Indicator Light Illumination: Illuminates as soon as malfunction occurs.

• Normality Judgment

Judge OK and clear NG when the continuous time of completing the malfunction criteria below becomes more than 2 seconds.

Judgment Value

Malfunction Criteria	Threshold Value
Target current value of OCV solenoid valve	≥ 0.14%
| Target current value of OCV solenoid valve − Control current value of OCV solenoid valve |	≥ 0.08 A

5. DTC CLEAR CONDITION

- When the OK idling cycle was completed 40 times in a row
- When “Clear Memory” was performed

6. MALFUNCTION INDICATOR LIGHT CLEAR CONDITION

- When the OK driving cycle was completed 3 times in a row
- When “Clear Memory” was performed

7. FAIL SAFE

- Ignition timing whole learning compensation:
  – Enter the initial value (whole learning compensation factor = 0.5, Variable amount of whole learning compensation factor = 0.25) to the whole learning compensation factor and variable amount of whole learning compensation factor when IG OFF, and then make the whole learning incomplete.
  – Enter the initial value (whole learning compensation factor = 0.5, Variable amount of whole learning compensation factor = 0.25) to the whole learning compensation factor and variable amount of whole learning compensation factor when making a normality judgment from abnormality judgment, and then make the whole learning incomplete.
- Ignition timing partial learning compensation:
  – Enter the initial value (0°CA) to the compensation value of partial learning zone when IG OFF.

– Enter the initial value (0°CA) to the compensation value of partial learning zone when making a normality judgment from abnormality judgment.

- AVCS control:
  – Most timing retard learning is not complete or most timing retard learning completion is not experienced.
  – ISC feedback compensation: Do not perform the AVCS actual timing advance compensation.
  – Make the OCV driving Duty to be the given value (9.36%).

8. ECM OPERATION AT DTC SETTING

Memorize the freeze frame data. (For test mode $02)

DR:DTC P2089 OCV SOLENOID VALVE SIGNAL A CIRCUIT SHORT (BANK 1)

1. OUTLINE OF DIAGNOSIS

Detect open or short circuit of oil flow control solenoid valve.
Judge open NG when the current flow is small whereas duty signal is large, and judge short NG when the current flow is large whereas duty signal is small.

2. ENABLE CONDITION

Secondary Parameter	Enable Condition
Battery voltage	≥ 10.9 V

3. GENERAL DRIVING CYCLE

Always perform the diagnosis continuously.

4. DIAGNOSTIC METHOD

• Abnormality Judgment

Judge NG when the continuous time of completing the malfunction criteria below becomes more than 2 seconds.

Judgment Value

Malfunction Criteria	Threshold Value
OCV solenoid valve duty	< 0.39%
OCV solenoid valve present current	≥ 0.306 A

Time Needed for Diagnosis: 2000 milliseconds
Malfunction Indicator Light Illumination: Illuminates as soon as malfunction occurs.

• Normality Judgment

Judge OK and clear NG when the continuous time of completing the malfunction criteria below becomes more than 2 seconds.

Judgment Value

Malfunction Criteria	Threshold Value
| Target current value of OCV solenoid valve − Control current value of OCV solenoid valve |	< 0.08 A

5. DTC CLEAR CONDITION

- When the OK idling cycle was completed 40 times in a row
- When “Clear Memory” was performed

6. MALFUNCTION INDICATOR LIGHT CLEAR CONDITION

- When the OK driving cycle was completed 3 times in a row
- When “Clear Memory” was performed

7. FAIL SAFE

- Ignition timing whole learning compensation:
  – Enter the initial value (whole learning compensation factor = 0.5, Variable amount of whole learning compensation factor = 0.25) to the whole learning compensation factor and variable amount of whole learning compensation factor when IG OFF, and then make the whole learning incomplete.
  – Enter the initial value (whole learning compensation factor = 0.5, Variable amount of whole learning compensation factor = 0.25) to the whole learning compensation factor and variable amount of whole learning compensation factor when making a normality judgment from abnormality judgment, and then make the whole learning incomplete.
- Ignition timing partial learning compensation:
  – Enter the initial value (0°CA) to the compensation value of partial learning zone when IG OFF.

– Enter the initial value (0°CA) to the compensation value of partial learning zone when making a normality judgment from abnormality judgment.

- AVCS control:
  – Most timing retard learning is not complete or most timing retard learning completion is not experienced.
  – ISC feedback compensation: Do not perform the AVCS actual timing advance compensation.
  – Make the OCV driving Duty to be the given value (9.36%).

8. ECM OPERATION AT DTC SETTING

Memorize the freeze frame data. (For test mode $02)

DS:DTC P2092 OCV SOLENOID VALVE SIGNAL A CIRCUIT OPEN (BANK 2)

1. OUTLINE OF DIAGNOSIS

For the detecting criteria, refer to DTC P2088. <Ref. to GD(H4DOTC)-231, DTC P2088 OCV SOLENOID VALVE SIGNAL A CIRCUIT OPEN (BANK 1), Diagnostic Trouble Code (DTC) Detecting Criteria.>

DT:DTC P2093 OCV SOLENOID VALVE SIGNAL A CIRCUIT SHORT (BANK 2)

1. OUTLINE OF DIAGNOSIS

For the detecting criteria, refer to DTC P2089. <Ref. to GD(H4DOTC)-233, DTC P2089 OCV SOLENOID VALVE SIGNAL A CIRCUIT SHORT (BANK 1), Diagnostic Trouble Code (DTC) Detecting Criteria.>

DU:DTC P2096 POST CATALYST FUEL TRIM SYSTEM TOO LEAN BANK 1

1. OUTLINE OF DIAGNOSIS

Detect the malfunction of fuel system from the amount of sub feedback learning value.
Judge NG when the sub feedback learning value sticks to lean sides during sub feedback learning control.

2. COMPONENT DESCRIPTION

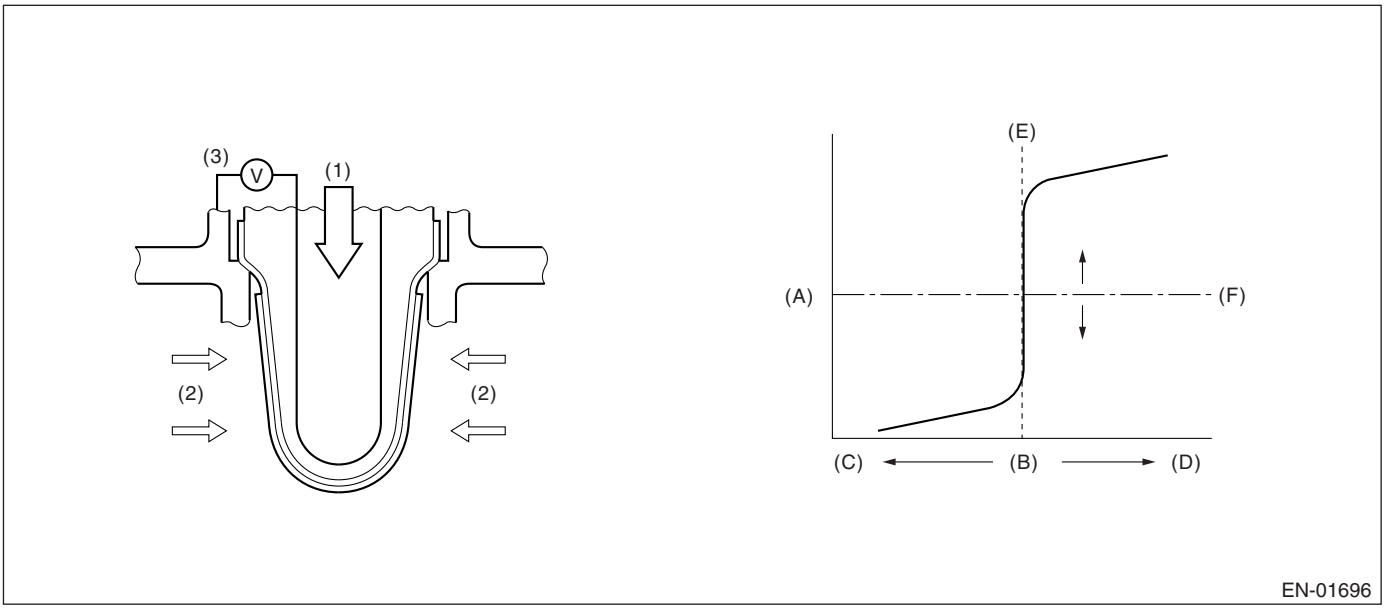

(1) Atmosphere
(2) Exhaust gas
(3) Electromotive force
(A) Electromotive force
(B) Air fuel ratio
(C) Rich
(D) Lean
(E) Theoretical air fuel ratio
(F) Comparative voltage

3. ENABLE CONDITION

Secondary Parameters	Enable Conditions
Continuous time of completing all conditions	≥ 1 second
Sub feedback learning enable condition	Completed

4. GENERAL DRIVING CYCLE

Perform the diagnosis continuously at an idling or a constant speed of 80 km/h (50 MPH).

5. DIAGNOSTIC METHOD

Judge NG when the continuous time of completing the malfunction criteria becomes more than 5 seconds.
Judge OK and clear NG when the continuous time of incompleting the malfunction criteria becomes more than 5 seconds.

Judgment Value

Malfunction Criteria	Threshold Value
Sub feedback learning value	−0.015

Time Needed for Diagnosis: 5 seconds × 1 time
Malfunction Indicator Light Illumination: Illuminates when malfunction occurs in 2 continuous driving cycles.

6. DTC CLEAR CONDITION

- When the OK idling cycle was completed 40 times in a row
- When “Clear Memory” was performed

7. MALFUNCTION INDICATOR LIGHT CLEAR CONDITION

- When OK with similar drive in 3 drive cycles
- When “Clear Memory” was performed

8. FAIL SAFE

None

9. ECM OPERATION AT DTC SETTING

Memorize the freeze frame data. (For test mode $02)

DV:DTC P2097 POST CATALYST FUEL TRIM SYSTEM TOO RICH BANK 1

1. OUTLINE OF DIAGNOSIS

Detect the malfunction of fuel system from the amount of sub feedback learning value.
Judge NG when the sub feedback learning value sticks to rich sides during sub feedback learning control.

2. COMPONENT DESCRIPTION

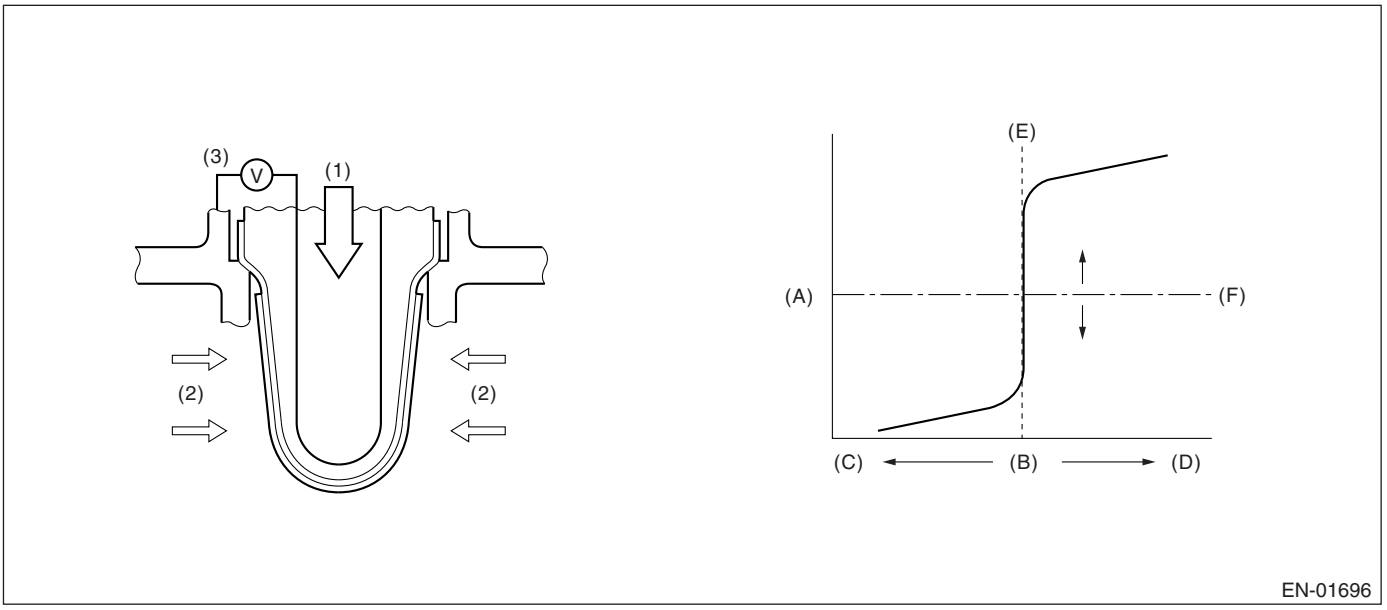

(1) Atmosphere
(2) Exhaust gas
(3) Electromotive force
(A) Electromotive force
(B) Air fuel ratio
(C) Rich
(D) Lean
(E) Theoretical air fuel ratio
(F) Comparative voltage

3. ENABLE CONDITION

Secondary Parameters	Enable Conditions
Continuous time of completing the all conditions	≥ 1 second
Sub feedback learning enable condition	Completed

4. GENERAL DRIVING CYCLE

Perform the diagnosis continuously at an idling or a constant speed of 80 km/h (50 MPH).

5. DIAGNOSTIC METHOD

Judge NG when the continuous time of completing the malfunction criteria below becomes more than 5 seconds.
Judge OK and clear NG when the continuous time of incompleting the malfunction criteria below becomes more than 5 seconds.

Judgment Value

Malfunction Criteria	Threshold Value
Sub feedback learning value	≥ 0.015

Time Needed for Diagnosis: 5 seconds × 1 time
Malfunction Indicator Light Illumination: Illuminates when malfunction occurs in 2 continuous drive cycles.

6. DTC CLEAR CONDITION

- When the OK idling cycle was completed 40 times in a row
- When “Clear Memory” was performed

7. MALFUNCTION INDICATOR LIGHT CLEAR CONDITION

- When OK with similar drive in 3 drive cycles.
- When “Clear Memory” was performed

8. FAIL SAFE

None

9. ECM OPERATION AT DTC SETTING

Memorize the freeze frame data. (For test mode $02)

DW:DTC P2101 THROTTLE ACTUATOR CONTROL MOTOR CIRCUIT RANGE/ PERFORMANCE

1. OUTLINE OF DIAGNOSIS

Judge NG when the motor current becomes large or drive circuit is heated.

2. COMPONENT DESCRIPTION

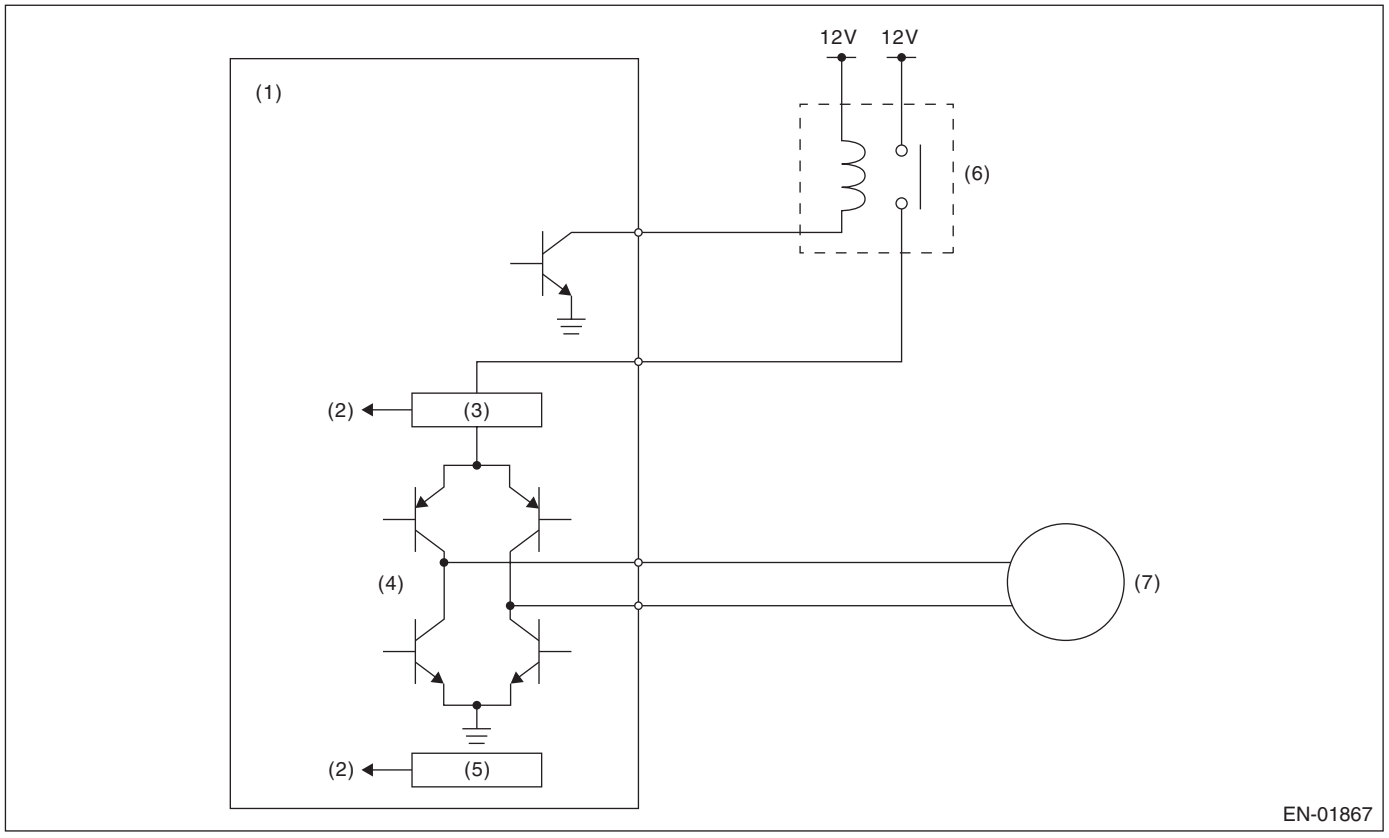

(1) Engine control unit (ECM)
(2) Detection circuit
(3) Overcurrent detection circuit
(4) Drive circuit
(5) Temperature detection circuit
(6) Electronic control throttle relay
(7) Motor

3. ENABLE CONDITION

Secondary Parameters	Enable Conditions
Under control of electronic control throttle	ON

4. GENERAL DRIVING CYCLE

Always perform the diagnosis continuously.

5. DIAGNOSTIC METHOD

• Abnormality Judgment

Judge OK and clear the NG when the malfunction criteria below are completed.

Judgment Value

Malfunction Criteria	Threshold Value
Motor current	≤ 8 A
Drive circuit inner temperature	≤ 175°C (347°F)

Time Needed for Diagnosis:

- 500 milliseconds (NG judgment)
- 2000 milliseconds (OK judgment)

Malfunction Indicator Light Illumination: Illuminates as soon as malfunction occurs.

6. DTC CLEAR CONDITION

- When the OK idling cycle was completed 40 times in a row
- When “Clear Memory” was performed (Only with engine stopped)

7. MALFUNCTION INDICATOR LIGHT CLEAR CONDITION

- When the OK driving cycle was completed 3 times in a row
- When “Clear Memory” was performed (Only with engine stopped)

8. FAIL SAFE

Stop the continuity to the electronic control throttle motor. (Fix the throttle opening angle to 6°.)

9. ECM OPERATION AT DTC SETTING

Memorize the freeze frame data. (For test mode $02)

DX:DTC P2102 THROTTLE ACTUATOR CONTROL MOTOR CIRCUIT LOW

1. OUTLINE OF DIAGNOSIS

Judge NG when the electronic control throttle power is not supplied even when ECM sets the electronic throttle control relay to ON.

2. COMPONENT DESCRIPTION

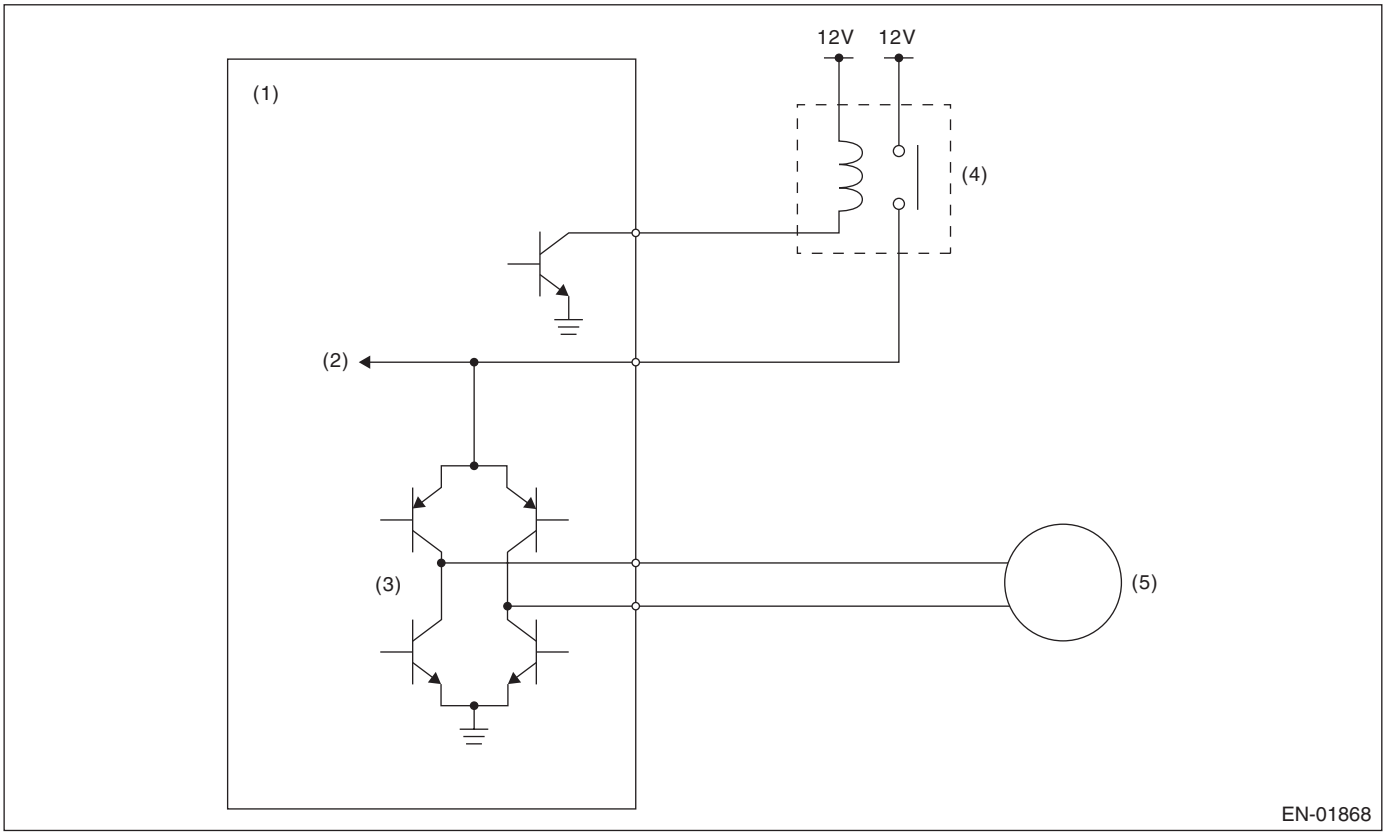

(1) Engine control module (ECM)
(2) Voltage detection circuit
(3) Drive circuit
(4) Electronic control throttle relay
(5) Motor

3. ENABLE CONDITION

Secondary Parameters	Enable Conditions
Electronic control throttle relay output	ON

4. GENERAL DRIVING CYCLE

Always perform the diagnosis continuously.

5. DIAGNOSTIC METHOD

• Abnormality Judgment

Judge NG when continuous time of completing the malfunction criteria below becomes more than 0.5 seconds.

Judgment Value

Malfunction Criteria	Threshold Value
Motor power voltage	≤ 5 V

Time Needed for Diagnosis:

- 400 milliseconds (For NG)
- 2000 milliseconds (For OK)

Malfunction Indicator Light Illumination: Illuminates as soon as malfunction occurs.

6. DTC CLEAR CONDITION

- When the OK idling cycle was completed 40 times in a row
- When “Clear Memory” was performed (Only with engine stopped)

7. MALFUNCTION INDICATOR LIGHT CLEAR CONDITION

- When the OK driving cycle was completed 3 times in a row
- When “Clear Memory” was performed (Only with engine stopped)

8. FAIL SAFE

Stop the continuity to the electronic control throttle motor. (Fix the throttle opening angle to 6°.)

9. ECM OPERATION AT DTC SETTING

Memorize the freeze frame data. (For test mode $02)

DY:DTC P2103 THROTTLE ACTUATOR CONTROL MOTOR CIRCUIT HIGH

1. OUTLINE OF DIAGNOSIS

Judge NG when the electronic control throttle power is not supplied even when ECM sets the electric throttle control relay to OFF.

2. COMPONENT DESCRIPTION

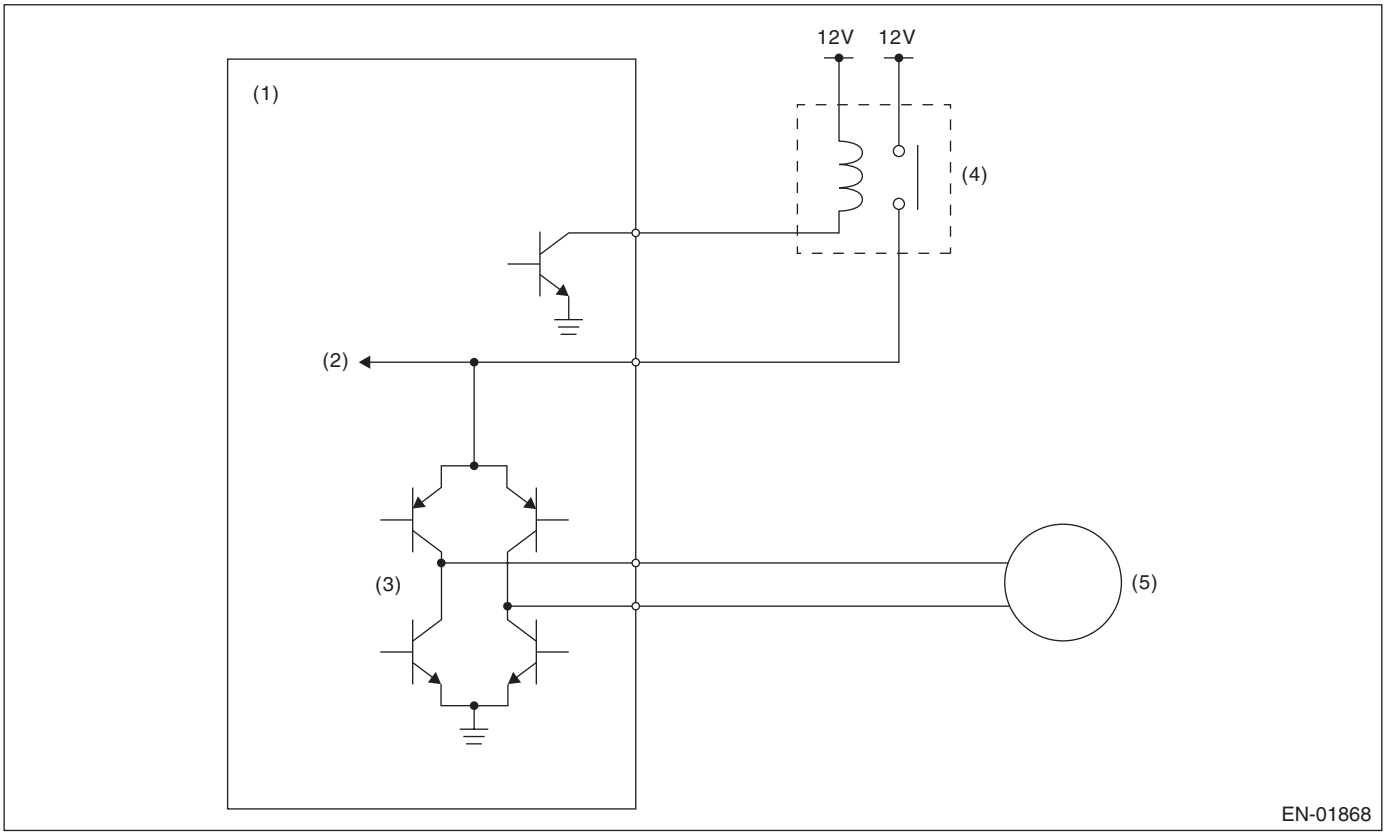

(1) Engine control module (ECM)
(2) Voltage detection circuit
(3) Drive circuit
(4) Electronic throttle control relay
(5) Motor

3. ENABLE CONDITION

Secondary Parameters	Enable Conditions
Electronic throttle control relay output	OFF

4. GENERAL DRIVING CYCLE

- Ignition switch ON → OFF
- Ignition switch OFF → ON (After clear memory only)

5. DIAGNOSTIC METHOD

Judge OK and clear the NG when the malfunction criteria below are completed.

Judgment Value

Malfunction Criteria	Threshold Value
Motor power voltage	≤ 5 V

Time Needed for Diagnosis:

- 600 milliseconds (For NG)
- 400 milliseconds (For OK)

Malfunction Indicator Light Illumination: Illuminates as soon as malfunction occurs.

6. DTC CLEAR CONDITION

- When the OK idling cycle was completed 40 times in a row
- When “Clear Memory” was performed (Only with engine stopped)

7. MALFUNCTION INDICATOR LIGHT CLEAR CONDITION

- When the OK driving cycle was completed 3 times in a row
- When “Clear Memory” was performed (Only with engine stopped)

8. FAIL SAFE

Stop the continuity to the electronic control throttle motor. (Fix the throttle opening angle to 6°.)

9. ECM OPERATION AT DTC SETTING

Memorize the freeze frame data. (For test mode $02)

DZ:DTC P2109 THROTTLE/PEDAL POSITION SENSOR A MINIMUM STOP PERFORMANCE

1. OUTLINE OF DIAGNOSIS

Judge NG when all close point learning cannot conducted or abnormal value is detected.

2. COMPONENT DESCRIPTION

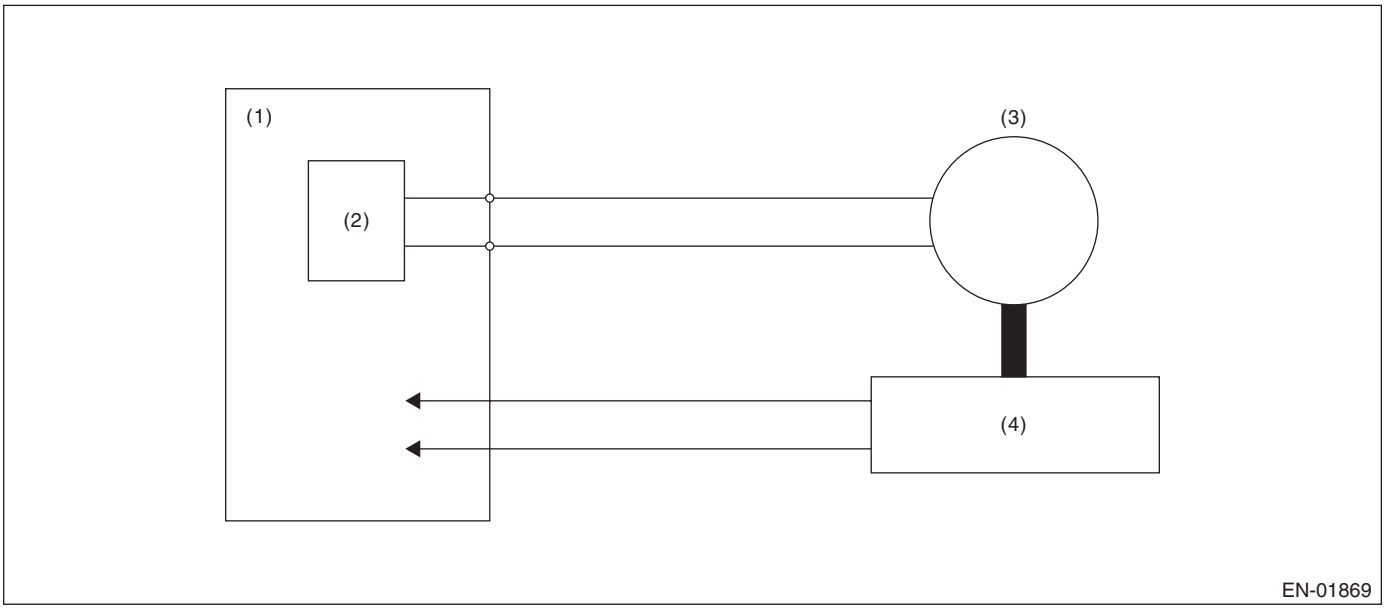

(1) Engine control module (ECM)
(2) Drive circuit
(3) Motor
(4) Throttle position sensor

3. ENABLE CONDITION

Secondary Parameters	Enable Conditions
Ignition switch	ON → OFF
Ignition switch (after clear memory only)	OFF → ON

4. GENERAL DRIVING CYCLE

Perform the diagnosis at all close point learning.

5. DIAGNOSTIC METHOD

Judge OK and clear the NG when the malfunction criteria below are completed.

Judgment Value

Malfunction Criteria	Threshold Value
Throttle sensor voltage at all close point learning	0.41 — 0.79 V
Time for all close point learning completion	Within 80 milliseconds

Time Needed for Diagnosis: None

Malfunction Indicator Light Illumination: Illuminates as soon as malfunction occurs.

6. DTC CLEAR CONDITION

- When the OK idling cycle was completed 40 times in a row
- When “Clear Memory” was performed (Only with engine stopped)

7. MALFUNCTION INDICATOR LIGHT CLEAR CONDITION

- When the OK driving cycle was completed 3 times in a row
- When “Clear Memory” was performed (Only with engine stopped)

8. FAIL SAFE

Stop the continuity to the electronic control throttle motor. (Fix the throttle opening angle to 6°.)

9. ECM OPERATION AT DTC SETTING

Memorize the freeze frame data. (For test mode $02)

EA:DTC P2122 THROTTLE/PEDAL POSITION SENSOR/SWITCH “D” CIRCUIT LOW INPUT

1. OUTLINE OF DIAGNOSIS

Detect the open or short circuit of accelerator pedal position sensor 1.
Judge NG when out of the standard value.

2. COMPONENT DESCRIPTION

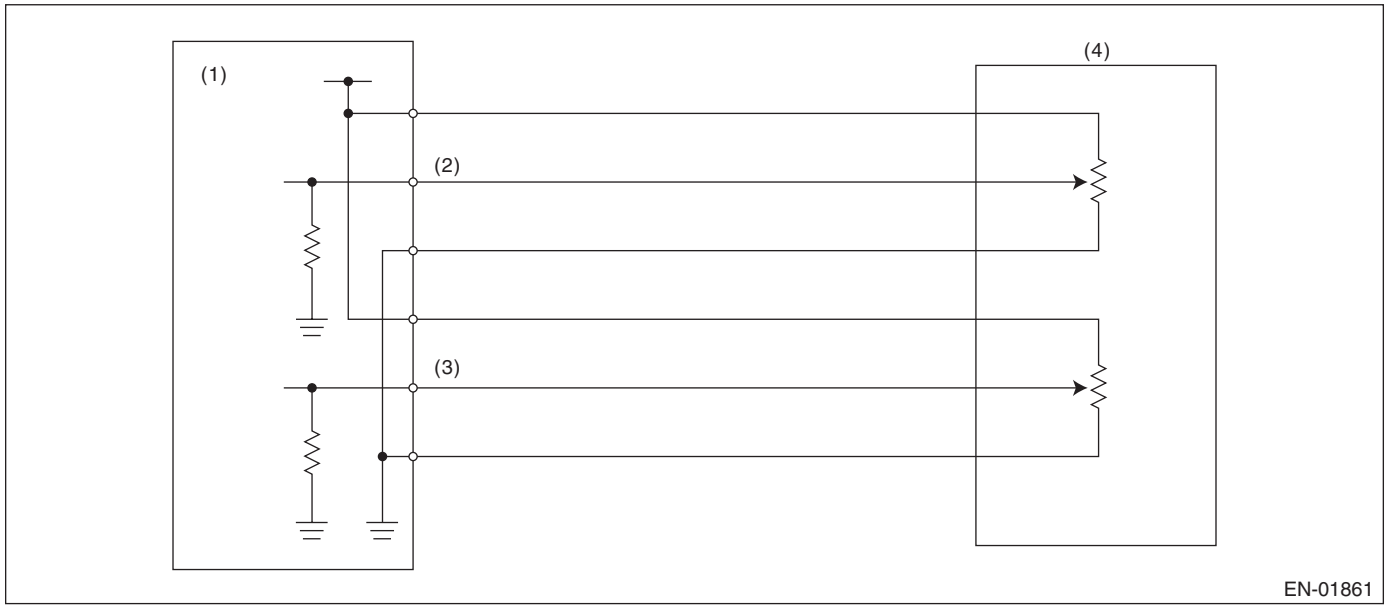

(1) Engine control module (ECM)
(2) Accelerator pedal position sensor 1 signal
(3) Accelerator pedal position sensor 2 signal
(4) Accelerator pedal position sensor

3. ENABLE CONDITION

Secondary Parameters	Enable Conditions
Ignition switch	ON

4. GENERAL DRIVING CYCLE

Always perform the diagnosis continuously.

5. DIAGNOSTIC METHOD

Judge OK and clear the NG when the malfunction criteria below are completed.
Judgment Value

Malfunction Criteria	Threshold Value
Sensor 1 input voltage	≥ 0.308 V

Time Needed for Diagnosis: 100 milliseconds
Malfunction Indicator Light Illumination: Illuminates as soon as malfunction occurs.

6. DTC CLEAR CONDITION

- When the OK idling cycle was completed 40 times in a row
- When “Clear Memory” was performed (Only with engine stopped)

7. MALFUNCTION INDICATOR LIGHT CLEAR CONDITION

- When the OK driving cycle was completed 3 times in a row
- When “Clear Memory” was performed (Only with engine stopped)

8. FAIL SAFE

- Single malfunction: Control with normal sensor
- Multi malfunction: Fix the throttle opening angle to 6°.

9. ECM OPERATION AT DTC SETTING

Memorize the freeze frame data. (For test mode $02)

EB:DTC P2123 THROTTLE/PEDAL POSITION SENSOR/SWITCH “D” CIRCUIT HIGH INPUT

1. OUTLINE OF DIAGNOSIS

Detect the open or short circuit of accelerator pedal position sensor 1.
Judge NG when out of the standard value.

2. COMPONENT DESCRIPTION

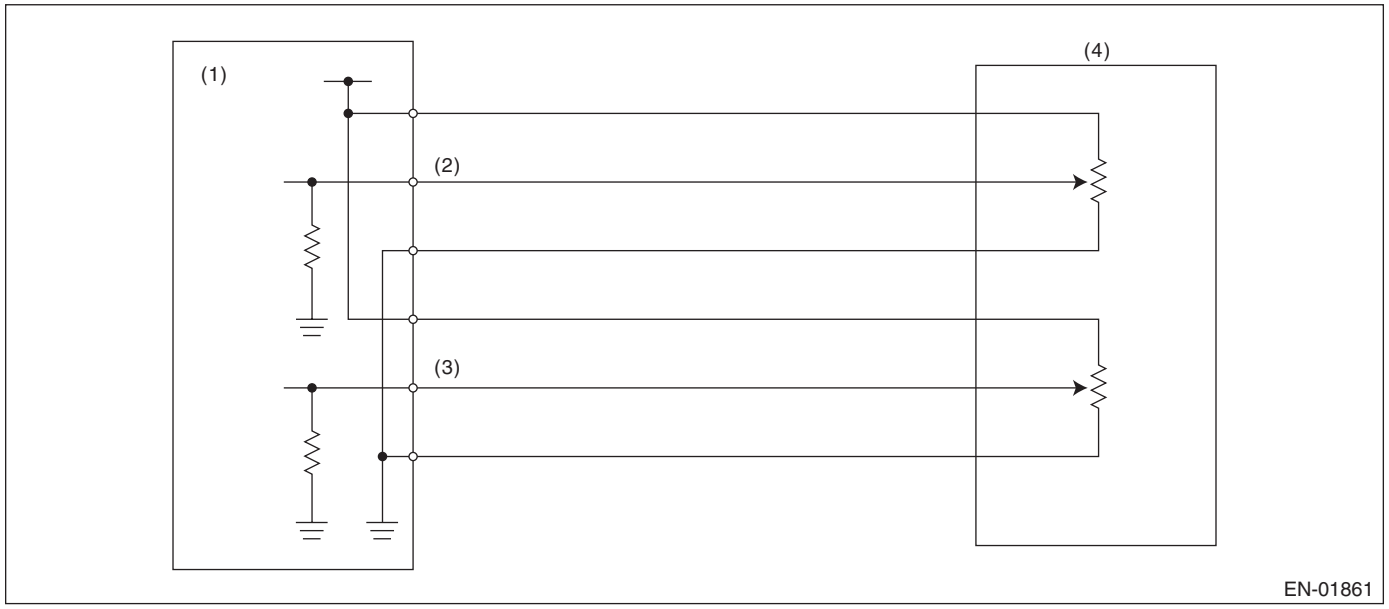

(1) Engine control module (ECM)
(2) Accelerator pedal position sensor 1 signal
(3) Accelerator pedal position sensor 2 signal
(4) Accelerator pedal position sensor

3. ENABLE CONDITION

Secondary Parameters	Enable Conditions
Ignition switch	ON

4. GENERAL DRIVING CYCLE

Always perform the diagnosis continuously.

5. DIAGNOSTIC METHOD

Judge OK and clear the NG when the malfunction criteria below are completed.
Judgment Value

Malfunction Criteria	Threshold Value
Sensor 1 input voltage	≤ 4.856 V

Time Needed for Diagnosis: 80 milliseconds
Malfunction Indicator Light Illumination: Illuminates as soon as malfunction occurs.

6. DTC CLEAR CONDITION

- When the OK idling cycle was completed 40 times in a row
- When “Clear Memory” was performed (Only with engine stopped)

7. MALFUNCTION INDICATOR LIGHT CLEAR CONDITION

- When the OK driving cycle was completed 3 times in a row
- When “Clear Memory” was performed (Only with engine stopped)

8. FAIL SAFE

- Single malfunction: Control with normal sensor
- Multi malfunction: Fix the throttle opening angle to 6°.

9. ECM OPERATION AT DTC SETTING

Memorize the freeze frame data. (For test mode $02)

EC:DTC P2127 THROTTLE/PEDAL POSITION SENSOR/SWITCH “E” CIRCUIT LOW INPUT

1. OUTLINE OF DIAGNOSIS

Detect the open or short circuit of accelerator pedal position sensor 2.
Judge NG when out of the standard value.

2. COMPONENT DESCRIPTION

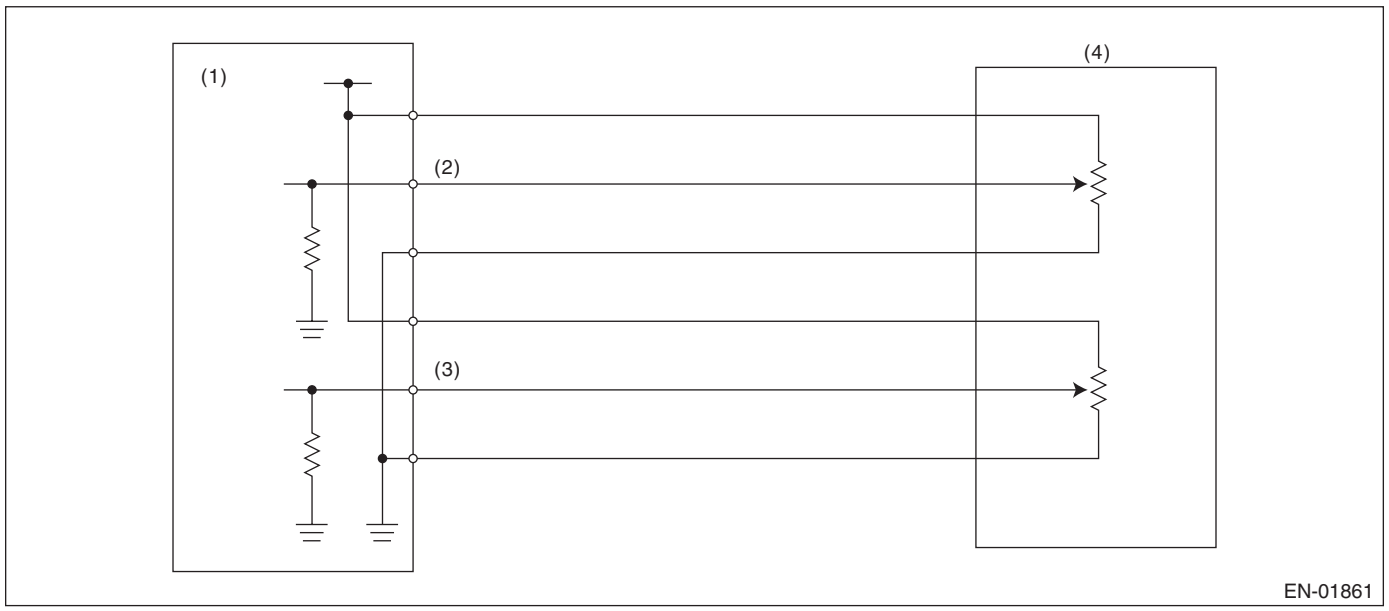

(1) Engine control module (ECM)
(2) Accelerator pedal position sensor 1 signal
(3) Accelerator pedal position sensor 2 signal
(4) Accelerator pedal position sensor

3. ENABLE CONDITION

Secondary Parameters	Enable Conditions
Ignition switch	ON

4. GENERAL DRIVING CYCLE

Always perform the diagnosis continuously.

5. DIAGNOSTIC METHOD

Judge OK and clear the NG when the malfunction criteria below are completed.
Judgment Value

Malfunction Criteria	Threshold Value
Sensor 1 input voltage	≥ 0.308 V

Time Needed for Diagnosis: 100 milliseconds
Malfunction Indicator Light Illumination: Illuminates as soon as malfunction occurs.

6. DTC CLEAR CONDITION

- When the OK idling cycle was completed 40 times in a row
- When “Clear Memory” was performed (Only with engine stopped)

7. MALFUNCTION INDICATOR LIGHT CLEAR CONDITION

- When the OK driving cycle was completed 3 times in a row
- When “Clear Memory” was performed (Only with engine stopped)

8. FAIL SAFE

- Single malfunction: Control with normal sensor
- Multi malfunction: Fix the throttle opening angle to 6°.

9. ECM OPERATION AT DTC SETTING

Memorize the freeze frame data. (For test mode $02)

ED:DTC P2128 THROTTLE/PEDAL POSITION SENSOR/SWITCH “E” CIRCUIT HIGH INPUT

1. OUTLINE OF DIAGNOSIS

Detect the open or short circuit of accelerator pedal position sensor 2.
Judge NG when out of the standard value.

2. COMPONENT DESCRIPTION

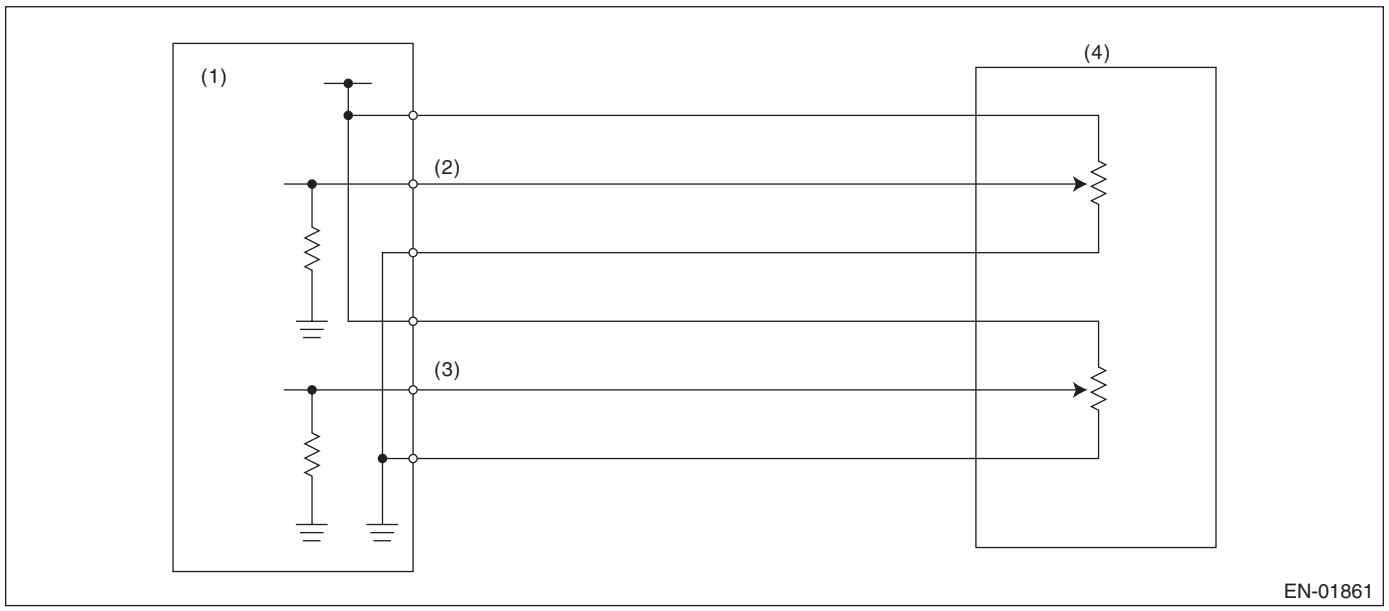

(1) Engine control module (ECM)
(2) Accelerator pedal position sensor 1 signal
(3) Accelerator pedal position sensor 2 signal
(4) Accelerator pedal position sensor

3. ENABLE CONDITION

Secondary Parameters	Enable Conditions
Ignition switch	ON

4. GENERAL DRIVING CYCLE

Always perform the diagnosis continuously.

5. DIAGNOSTIC METHOD

Judge OK and clear the NG when the malfunction criteria below are completed.
Judgment Value

Malfunction Criteria	Threshold Value
Sensor 1 input voltage	〈 4.865 V

Time Needed for Diagnosis: 80 milliseconds
Malfunction Indicator Light Illumination: Illuminates as soon as malfunction occurs.

6. DTC CLEAR CONDITION

- When the OK idling cycle was completed 40 times in a row
- When “Clear Memory” was performed (Only with engine stopped)

7. MALFUNCTION INDICATOR LIGHT CLEAR CONDITION

- When the OK driving cycle was completed 3 times in a row
- When “Clear Memory” was performed (Only with engine stopped)

8. FAIL SAFE

- Single malfunction: Control with normal sensor
- Multi malfunction: Fix the throttle opening angle to 6°.

9. ECM OPERATION AT DTC SETTING

Memorize the freeze frame data. (For test mode $02)

EE:DTC P2135 THROTTLE/PEDAL POSITION SENSOR/SWITCH “A”/“B” VOLTAGE RATIONALITY

1. OUTLINE OF DIAGNOSIS

Judge NG when the signal level of throttle position sensor 1 is different from the throttle position sensor 2.

2. COMPONENT DESCRIPTION

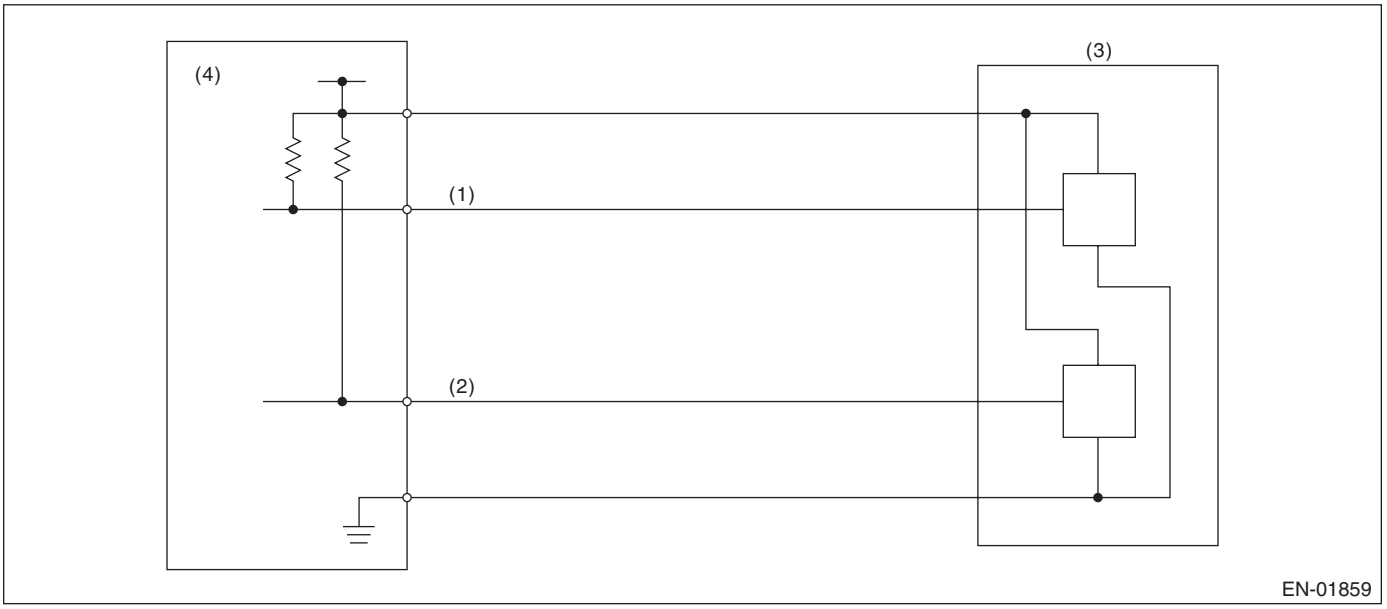

(1) Throttle position sensor 1 signal
(2) Throttle position sensor 2 signal
(3) Throttle position sensor
(4) Engine control module (ECM)

3. ENABLE CONDITION

Secondary Parameters	Enable Conditions
Ignition switch	ON

4. GENERAL DRIVING CYCLE

Always perform the diagnosis continuously.

5. DIAGNOSTIC METHOD

Judge OK and clear the NG when the malfunction criteria below are completed.

Judgment Value

Malfunction Criteria	Threshold Value
Signal difference between two sensors	≤ 4.25

Details of Judgment Value

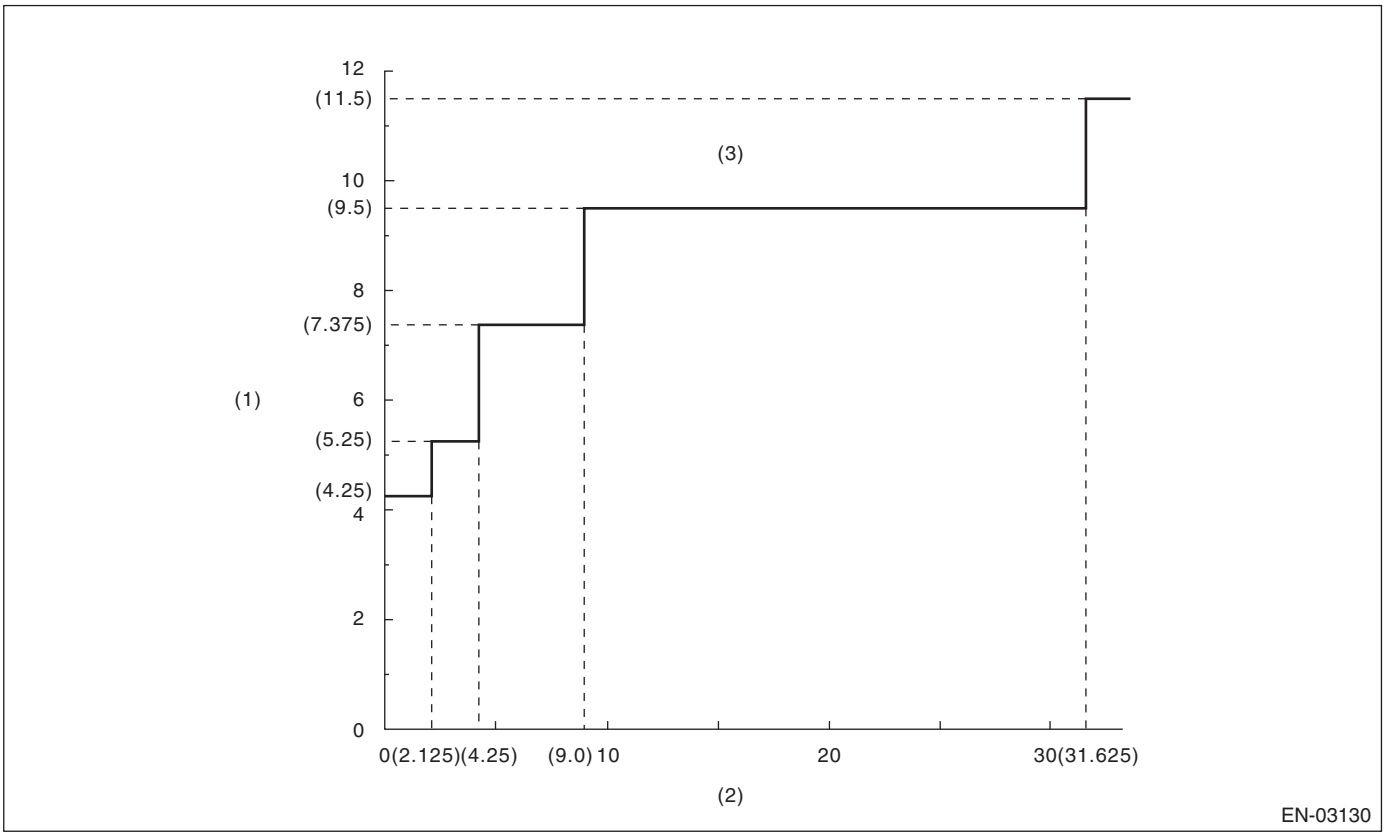

(1) Sensor output difference (°)
(2) Throttle position sensor 1 opening angle (°)
(3) NG area

Time Needed for Diagnosis: 212 milliseconds
Malfunction Indicator Light Illumination: Illuminates as soon as malfunction occurs.

6. DTC CLEAR CONDITION

- When the OK idling cycle was completed 40 times in a row
- When “Clear Memory” was performed (Only with engine stopped)

7. MALFUNCTION INDICATOR LIGHT CLEAR CONDITION

- When the OK driving cycle was completed 3 times in a row
- When “Clear Memory” was performed (Only with engine stopped)

8. FAIL SAFE

Stop the continuity to ETC motor. (Fix the throttle opening angle to 6°.)

9. ECM OPERATION AT DTC SETTING

Memorize the freeze frame data. (For test mode $02)

EF:DTC P2138 THROTTLE/PEDAL POSITION SENSOR/SWITCH “D”/“E” VOLTAGE RATIONALITY

1. OUTLINE OF DIAGNOSIS

Judge NG when the signal level of throttle position sensor 1 is different from the throttle position sensor 2.

2. COMPONENT DESCRIPTION

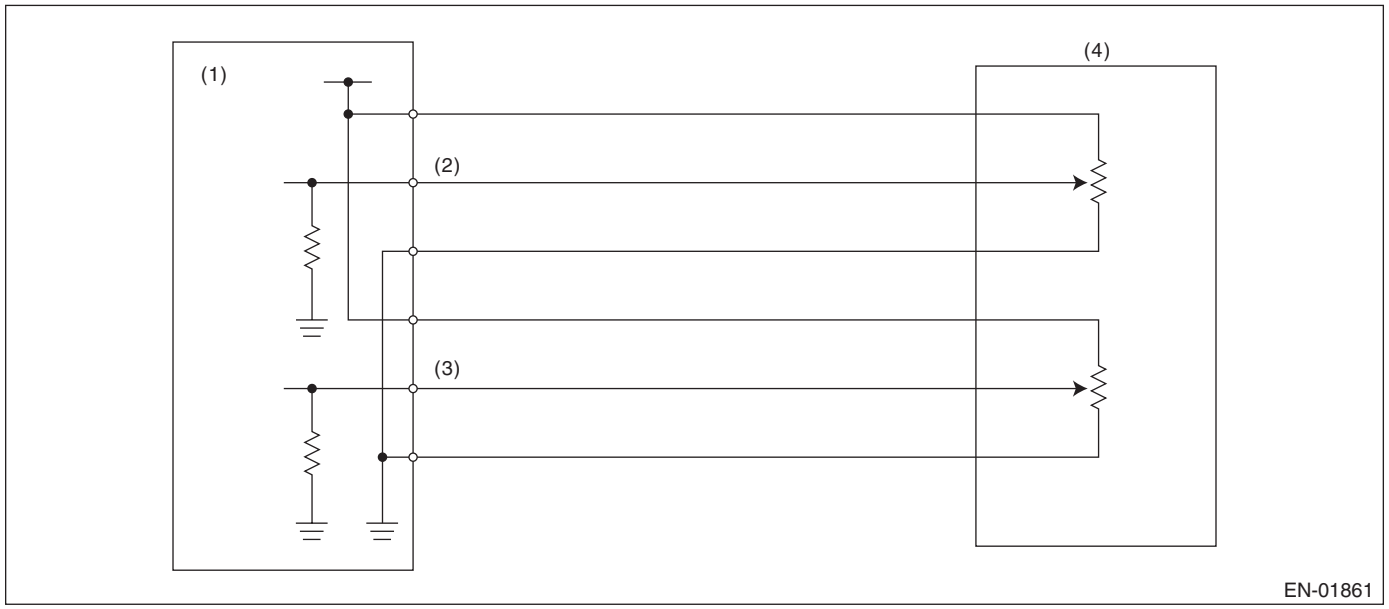

(1) Engine control module (ECM)
(2) Accelerator pedal position sensor 1 signal
(3) Accelerator pedal position sensor 2 signal
(4) Accelerator pedal position sensor

3. ENABLE CONDITION

Secondary Parameters	Enable Conditions
Ignition switch	ON

4. GENERAL DRIVING CYCLE

Always perform the diagnosis continuously.

5. DIAGNOSTIC METHOD

Judge NG when the continuous time of completing the malfunction criteria below becomes more than 0.5 seconds.

Judgment Value

Malfunction Criteria	Threshold Value
Signal difference between two sensors	≥ 1.616°

Details of Judgment Value

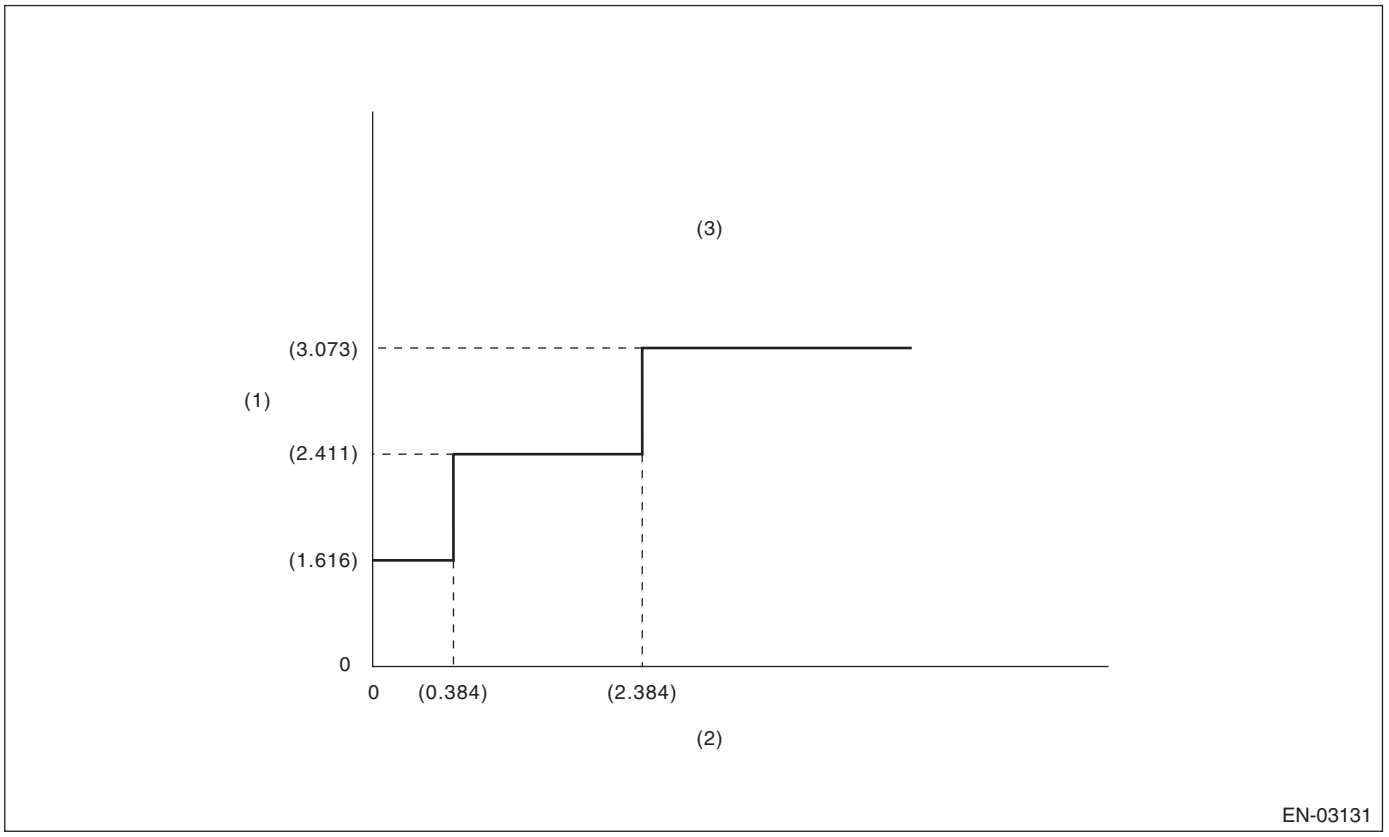

(1) Sensor output difference (°)
(2) Accelerator pedal position sensor 2 opening angle (°)
(3) NG area

Time Needed for Diagnosis:
- 116 milliseconds (For NG)
- 1000 milliseconds (For OK)

Malfunction Indicator Light Illumination: Illuminates as soon as malfunction occurs.

6. DTC CLEAR CONDITION

- When the OK idling cycle was completed 40 times in a row
- When “Clear Memory” was performed

7. MALFUNCTION INDICATOR LIGHT CLEAR CONDITION

- When the OK driving cycle was completed 3 times in a row
- When “Clear Memory” was performed

8. FAIL SAFE

Fix the throttle opening angle to 6°.

9. ECM OPERATION AT DTC SETTING

Memorize the freeze frame data. (For test mode $02)

EG:DTC P2227 BAROMETRIC PRESSURE CIRCUIT RANGE/PERFORMANCE

1. OUTLINE OF DIAGNOSIS

Detect the malfunction of atmospheric pressure sensor output property. Judge NG when the atmospheric pressure sensor output is largely different from the intake manifold pressure at engine starting.

2. COMPONENT DESCRIPTION

Atmospheric pressure sensor is built in ECM.

3. ENABLE CONDITION

Secondary Parameters	Enable Conditions
Engine speed	< 300 rpm
Vehicle speed	< 1 km/h (0.62 MPH)

4. GENERAL DRIVING CYCLE

Perform the diagnosis once before engine starting with the ignition switch ON.

5. DIAGNOSTIC METHOD

• Abnormality Judgment

Judge NG when the continuous time of completing the malfunction criteria below becomes more than 0.3 seconds.

Judgment Value

Malfunction Criteria	Threshold Value
|Atmospheric – manifold absolute pressure|	≥ 26.7 kPa (200 mmHg, 7.88 inHg)
|Intake manifold pressure at engine starting – manifold absolute pressure|	< 1.33 kPa (10 mmHg, 2.95 inHg)

Time Needed for Diagnosis: 0.3 seconds
Malfunction Indicator Light Illumination: Detect when malfunction occurs in 2 continuous driving cycles.

• Normality Judgment

Judge OK and clear the NG when the continuous time of completing the malfunction criteria below becomes more than 0.26 seconds.

Judgment Value

Malfunction Criteria	Threshold Value
Atmospheric – manifold absolute pressure	< 26.7 kPa (200 mmHg, 7.88 inHg)

6. DTC CLEAR CONDITION

- When the OK idling cycle was completed 40 times in a row
- When “Clear Memory” was performed

7. MALFUNCTION INDICATOR LIGHT CLEAR CONDITION

- When the OK driving cycle was completed 3 times in a row
- When “Clear Memory” was performed

8. FAIL SAFE

Atmospheric pressure sensor process: Fix the atmospheric pressure to 101 kPa (760 mmHg, 29.8 inHg).

9. ECM OPERATION AT DTC SETTING

Memorize the freeze frame data. (For test mode $02)

EH:DTC P2228 BAROMETRIC PRESSURE CIRCUIT LOW INPUT

1. OUTLINE OF DIAGNOSIS

Detect the open or short circuit of atmospheric pressure sensor.
Judge NG when out of the standard value.

2. COMPONENT DESCRIPTION

Atmospheric pressure sensor is built in ECM.

3. ENABLE CONDITION

Secondary Parameters	Enable Conditions
None	

4. GENERAL DRIVING CYCLE

Always perform the diagnosis continuously.

5. DIAGNOSTIC METHOD

• Abnormality Judgment

Judge NG when the continuous time of completing the malfunction criteria below becomes more than 0.5 seconds.

Judgment Value

Malfunction Criteria	Threshold Value
Ignition switch	ON
Output voltage	$<$ 0.118 V

Time Needed for Diagnosis: 0.5 seconds
Malfunction Indicator Light Illumination: Illuminates as soon as malfunction occurs.

• Normality Judgment

Judge OK and clear the NG when the malfunction criteria below are completed.

Judgment Value

Malfunction Criteria	Threshold Value
Ignition switch	ON
Output voltage	$\geq$ 0.118 V

6. DTC CLEAR CONDITION

- When the OK idling cycle was completed 40 times in a row
- When “Clear Memory” was performed

7. MALFUNCTION INDICATOR LIGHT CLEAR CONDITION

- When the OK driving cycle was completed 3 times in a row
- When “Clear Memory” was performed

8. FAIL SAFE

Atmospheric pressure sensor process: Fix the atmospheric pressure to 101.3 kPa (760 mmHg, 29.9 inHg).

9. ECM OPERATION AT DTC SETTING

Memorize the freeze frame data. (For test mode $02)

EI: DTC P2229 BAROMETRIC PRESSURE CIRCUIT HIGH INPUT

1. OUTLINE OF DIAGNOSIS

Detect the open or short circuit of atmospheric pressure sensor.
Judge NG when out of the standard value.

2. COMPONENT DESCRIPTION

Atmospheric pressure sensor is built in ECM.

3. ENABLE CONDITION

Secondary Parameters	Enable Conditions
None	

4. GENERAL DRIVING CYCLE

Always perform the diagnosis continuously.

5. DIAGNOSTIC METHOD

• Abnormality Judgment

Judge NG when the continuous time of completing the malfunction criteria below becomes more than 0.5 seconds.

Judgment Value

Malfunction Criteria	Threshold Value
Ignition switch	ON
Output voltage	≥ 4.936 V

Time Needed for Diagnosis: 0.5 seconds
Malfunction Indicator Light Illumination: Illuminates as soon as malfunction occurs.

• Normality Judgment

Judge OK and clear the NG when the malfunction criteria below are completed.

Judgment Value

Malfunction Criteria	Threshold Value
Ignition switch	ON
Output voltage	< 4.936 V

6. DTC CLEAR CONDITION

- When the OK idling cycle was completed 40 times in a row
- When “Clear Memory” was performed

7. MALFUNCTION INDICATOR LIGHT CLEAR CONDITION

- When the OK driving cycle was completed 3 times in a row
- When “Clear Memory” was performed

8. FAIL SAFE

Atmospheric pressure sensor process: Fix the atmospheric pressure to 101.3 kPa (760 mmHg, 29.9 inHg).

9. ECM OPERATION AT DTC SETTING

Memorize the freeze frame data. (For test mode $02)

FUEL INJECTION (FUEL SYSTEMS)

FU(H6DO)

		Page
1.	General Description	2
2.	Throttle Body	12
3.	Intake Manifold	13
4.	Engine Coolant Temperature Sensor	19
5.	Crankshaft Position Sensor	20
6.	Camshaft Position Sensor	21
7.	Knock Sensor	22
8.	Throttle Position Sensor	23
9.	Manifold Absolute Pressure Sensor	24
10.	Mass Air Flow and Intake Air Temperature Sensor	25
11.	Fuel Injector	26
12.	Variable Valve Lift Diagnosis Oil Pressure Switch	28
13.	Oil Temperature Sensor	29
14.	Front Oxygen (A/F) Sensor	30
15.	Rear Oxygen Sensor	32
16.	Engine Control Module (ECM)	34
17.	Main Relay	35
18.	Fuel Pump Relay	36
19.	Electronic Throttle Control Relay	37
20.	Fuel Pump Control Unit	38
21.	Fuel	39
22.	Fuel Tank	40
23.	Fuel Filler Pipe	46
24.	Fuel Pump	49
25.	Fuel Level Sensor	51
26.	Fuel Sub Level Sensor	52
27.	Fuel Filter	53
28.	Fuel Bypass Valve	54
29.	Fuel Delivery, Return and Evaporation Lines	55
30.	Fuel System Trouble in General	58

1. General Description

A: SPECIFICATION

Fuel tank	Capacity	64 ℓ (16.9 US gal, 14.1 Imp gal)
	Location	Under rear seat
Fuel pump	Type	Impeller
	Shutoff discharge pressure	550 — 850 kPa (5.61 — 8.67 kg/cm^2, 79.8 — 123.3 psi)
	Discharge	125 ℓ (33 US gal, 27.5 Imp gal)/h or more [12 V at 300 kPa (3.06 kg/cm^2, 43.5 psi)]
Fuel filter		In-tank type

B: COMPONENT

1. INTAKE MANIFOLD

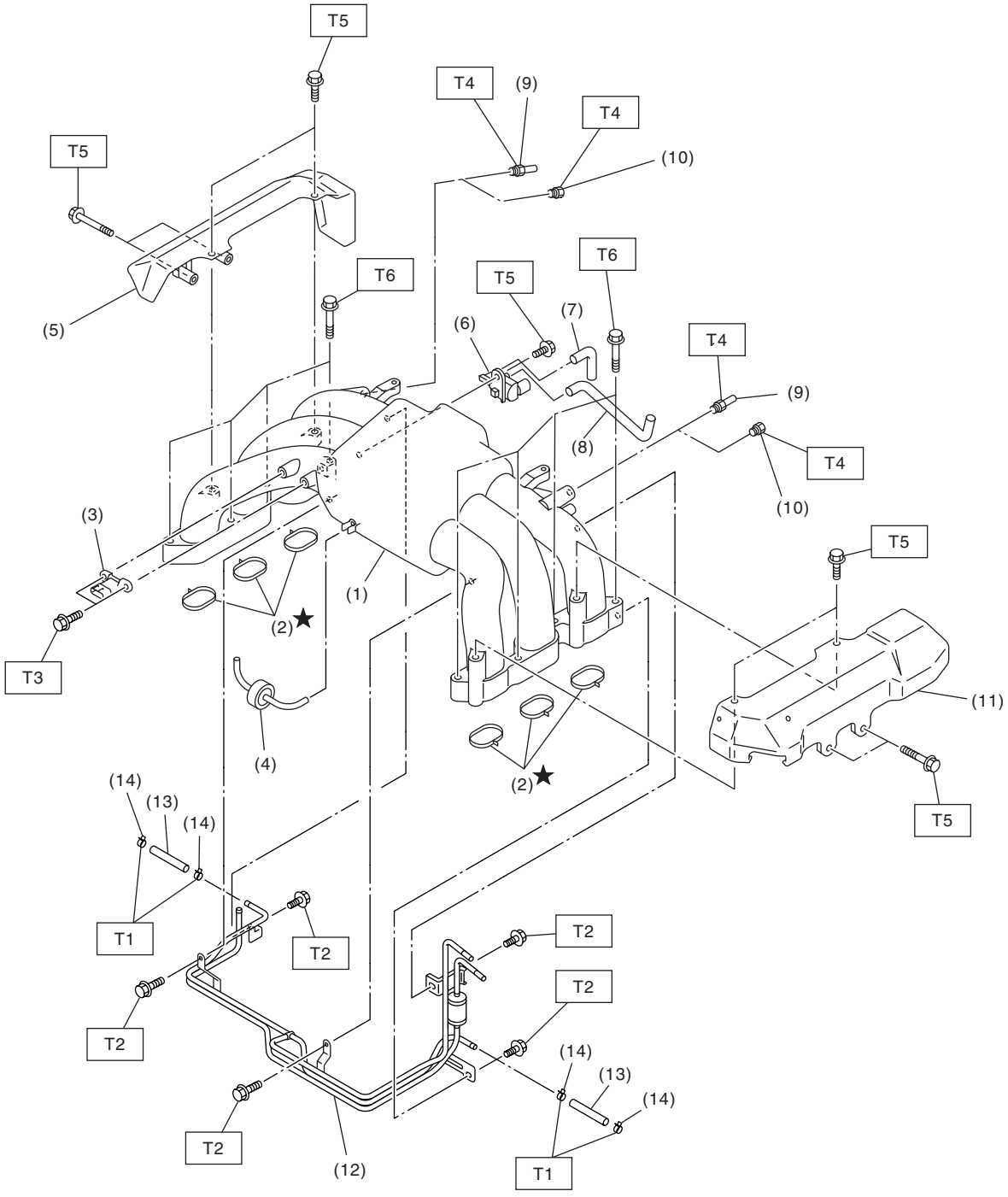

FU-02428

(1) Intake manifold
(2) O-ring
(3) Manifold pressure sensor
(4) Filter
(5) Fuel pipe protector RH
(6) Purge control solenoid valve
(7) Hose
(8) Hose
(9) Nipple
(10) Plug
(11) Fuel pipe protector LH
(12) Fuel pipe ASSY
(13) Hose
(14) Clamp

Tightening torque: N·m (kgf-m, ft-lb)
T1: 1.5 (0.15, 1.1)
T2: 5 (0.5, 3.6)
T3: 6.4 (0.65, 4.7)
T4: 17 (1.7, 12.5)
T5: 19 (1.9, 14)
T6: 25 (2.5, 18)

2. FUEL INJECTOR

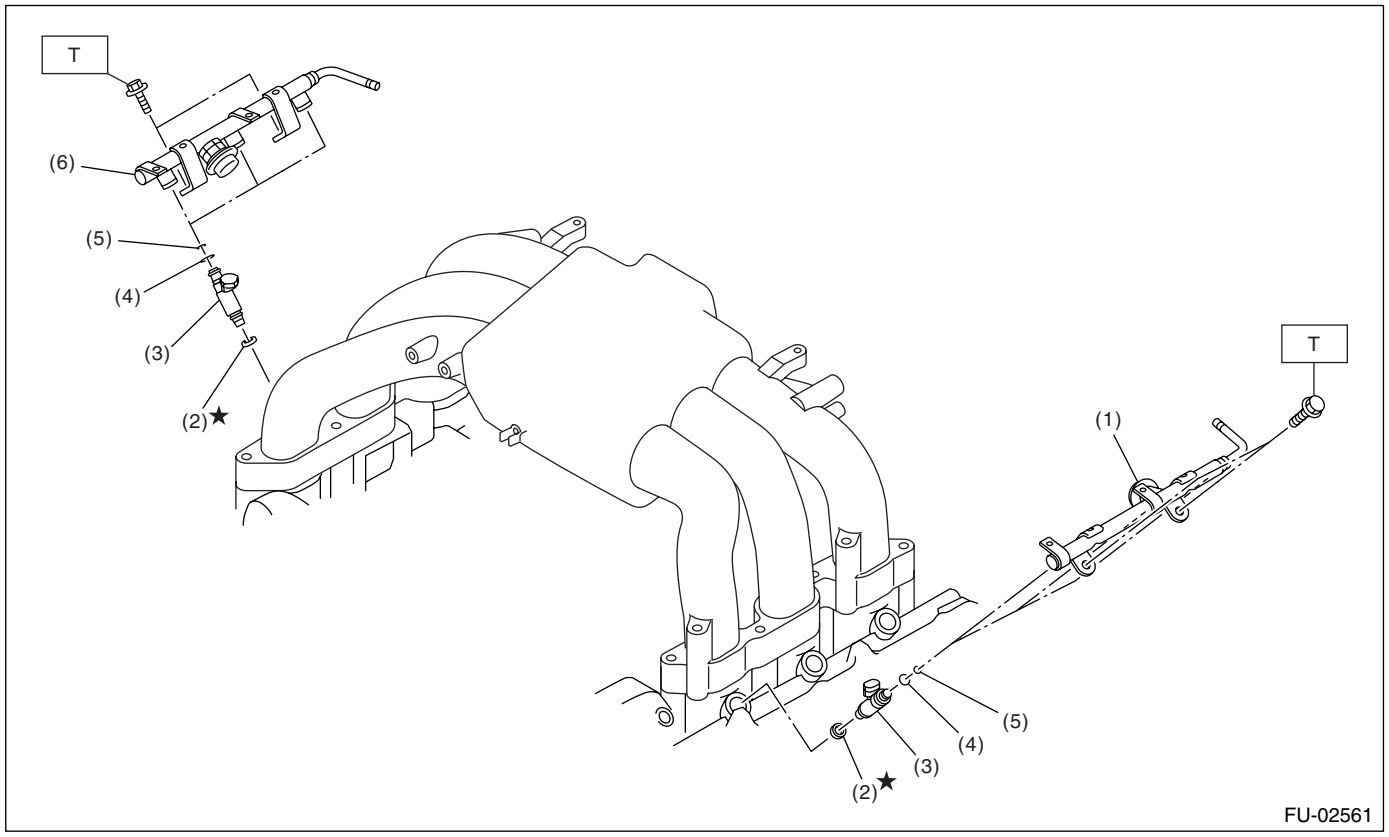

(1) Fuel injector pipe LH
(2) Insulator
(3) Fuel injector
(4) Injection rubber
(5) O-ring
(6) Fuel injector pipe RH

Tightening torque: N·m (kgf-m, ft-lb)
T: 19 (1.9, 14)

3. AIR INTAKE SYSTEM

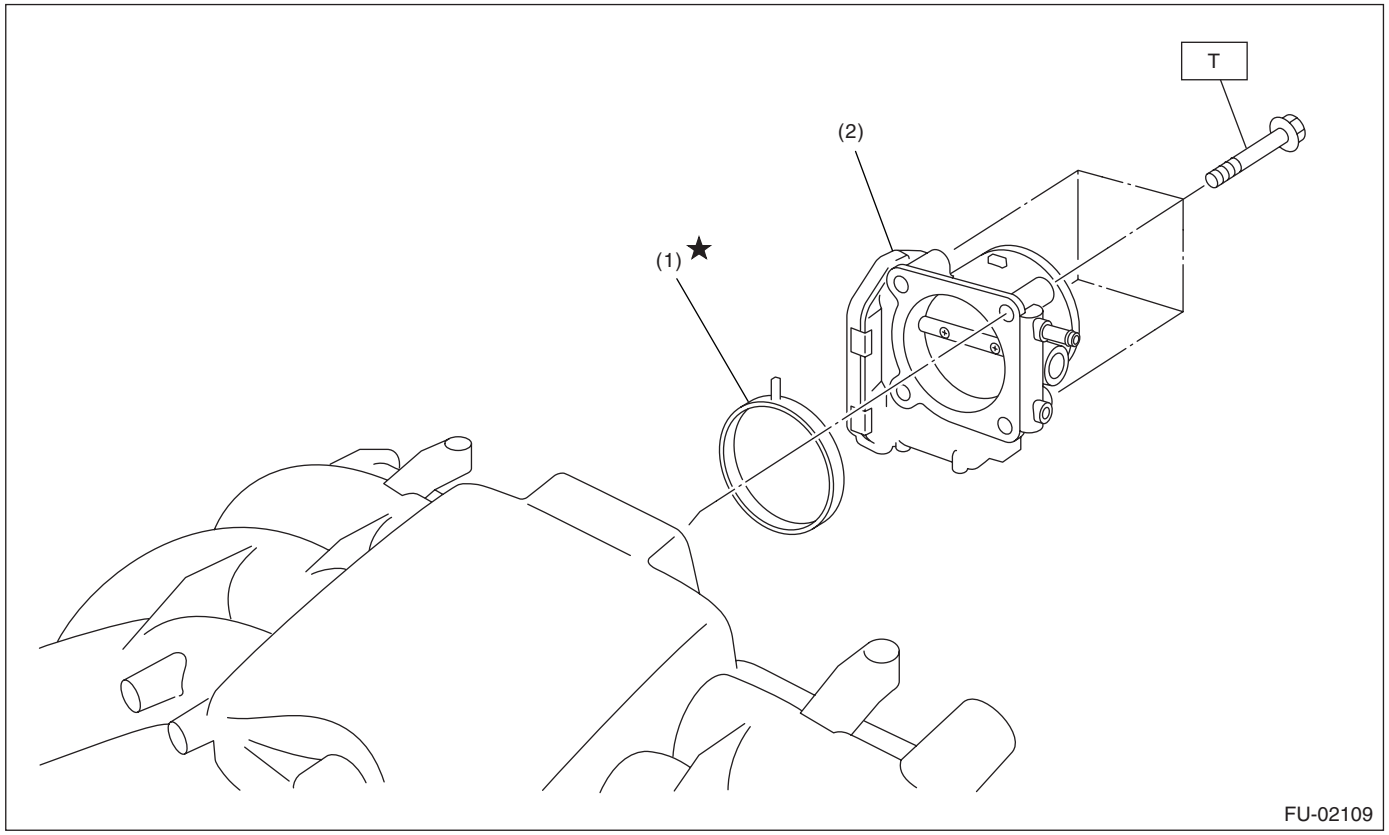

(1) O-ring
(2) Throttle body

Tightening torque: N·m (kgf-m, ft-lb)
T: 8 (0.8, 5.9)

4. CRANKSHAFT POSITION, CAMSHAFT POSITION AND KNOCK SENSORS

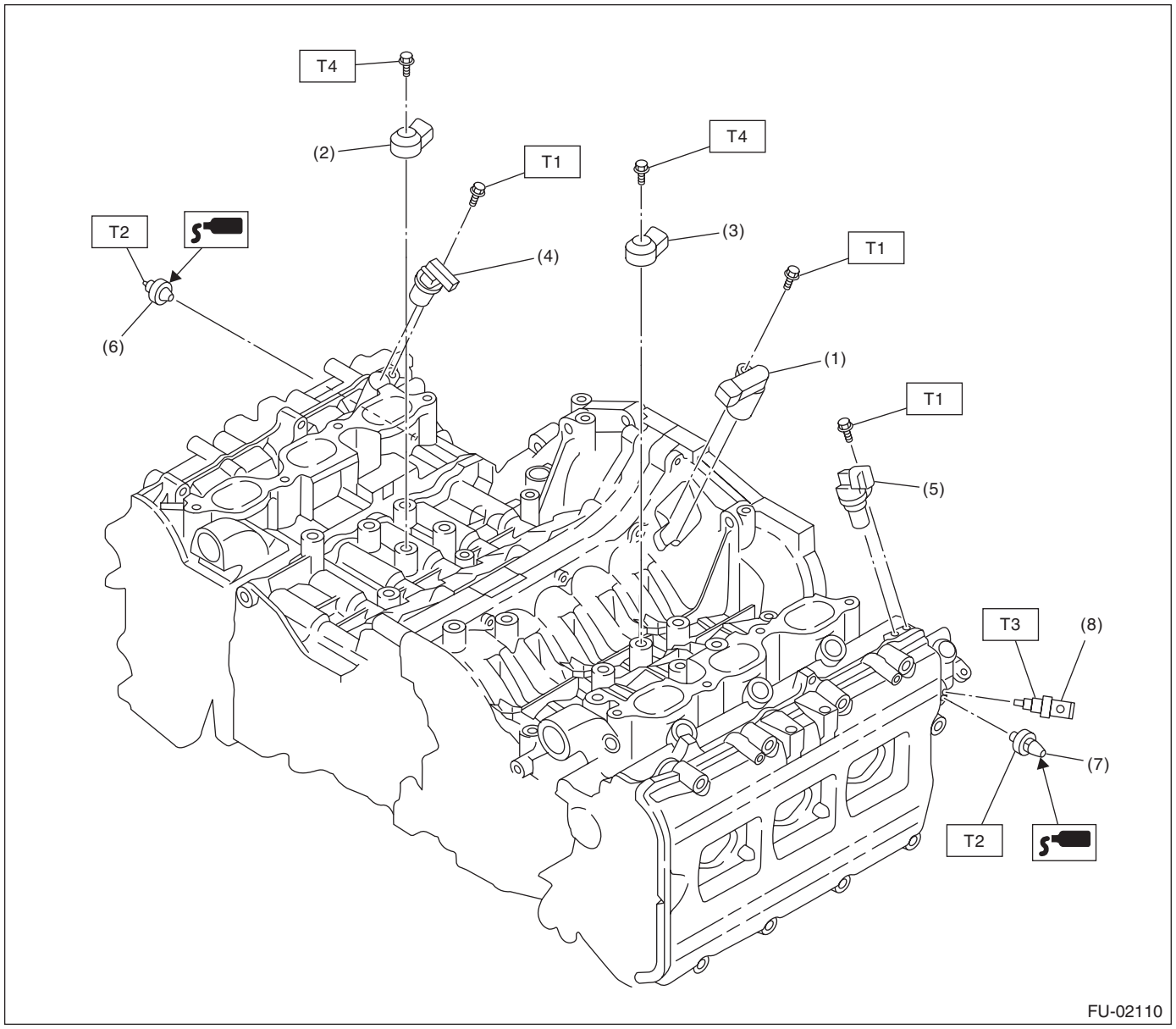

FU-02110

(1) Crankshaft position sensor
(2) Knock sensor RH
(3) Knock sensor LH
(4) Camshaft position sensor RH
(5) Camshaft position sensor LH
(6) Variable valve lift diagnosis oil pressure switch RH
(7) Variable valve lift diagnosis oil pressure switch LH
(8) Oil temperature sensor

Tightening torque: N·m (kgf-m, ft-lb)
T1: 6.4 (0.65, 4.7)
T2: 17 (1.7, 12.5)
T3: 18 (1.8, 13.3)
T4: 25 (2.5, 18)

5. FUEL TANK

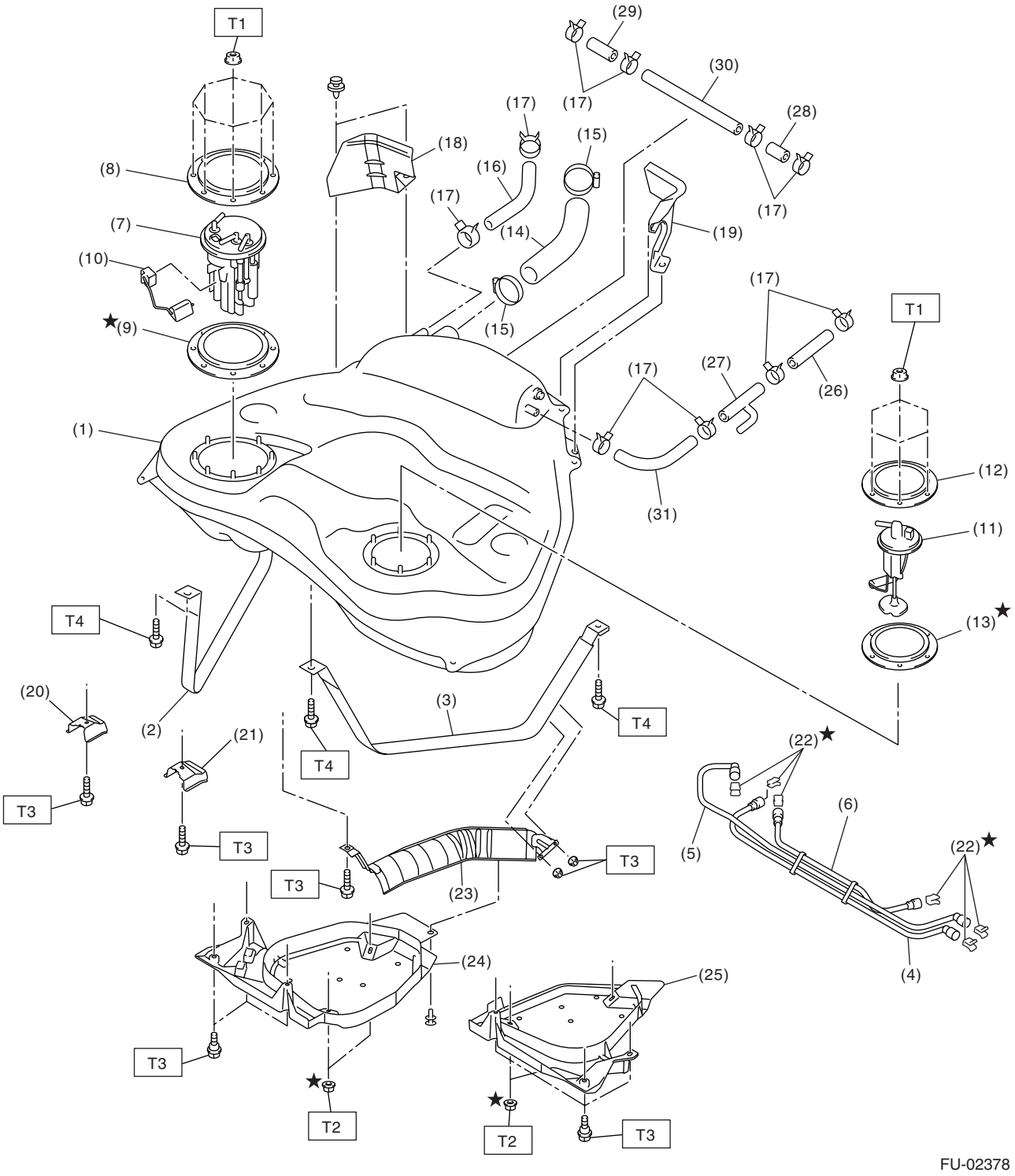

FU-02378

(1) Fuel tank
(2) Fuel tank band RH
(3) Fuel tank band LH
(4) Delivery tube
(5) Return tube
(6) Jet pump tube
(7) Fuel pump ASSY
(8) Fuel pump upper plate
(9) Fuel pump gasket
(10) Fuel level sensor
(11) Fuel sub level sensor
(12) Fuel sub level sensor upper plate
(13) Fuel sub level sensor gasket
(14) Fuel filler hose
(15) Clamp
(16) Evaporation hose A
(17) Clip
(18) Fuel tank protector RH (Rear)
(19) Fuel tank protector LH (Rear)
(20) Stopper RH
(21) Stopper LH
(22) Retainer
(23) Heat shield cover
(24) Fuel tank protector RH (Front)
(25) Fuel tank protector LH (Front)
(26) Evaporation hose B
(27) Connector
(28) Evaporation hose C
(29) Evaporation hose D
(30) Evaporation pipe
(31) Evaporation hose E

Tightening torque: N·m (kgf-m, ft-lb)
T1: 4.4 (0.45, 3.2)
T2: 9 (0.9, 6.6)
T3: 17.5 (1.78, 12.9)
T4: 33 (3.4, 25)

6. FUEL LINE

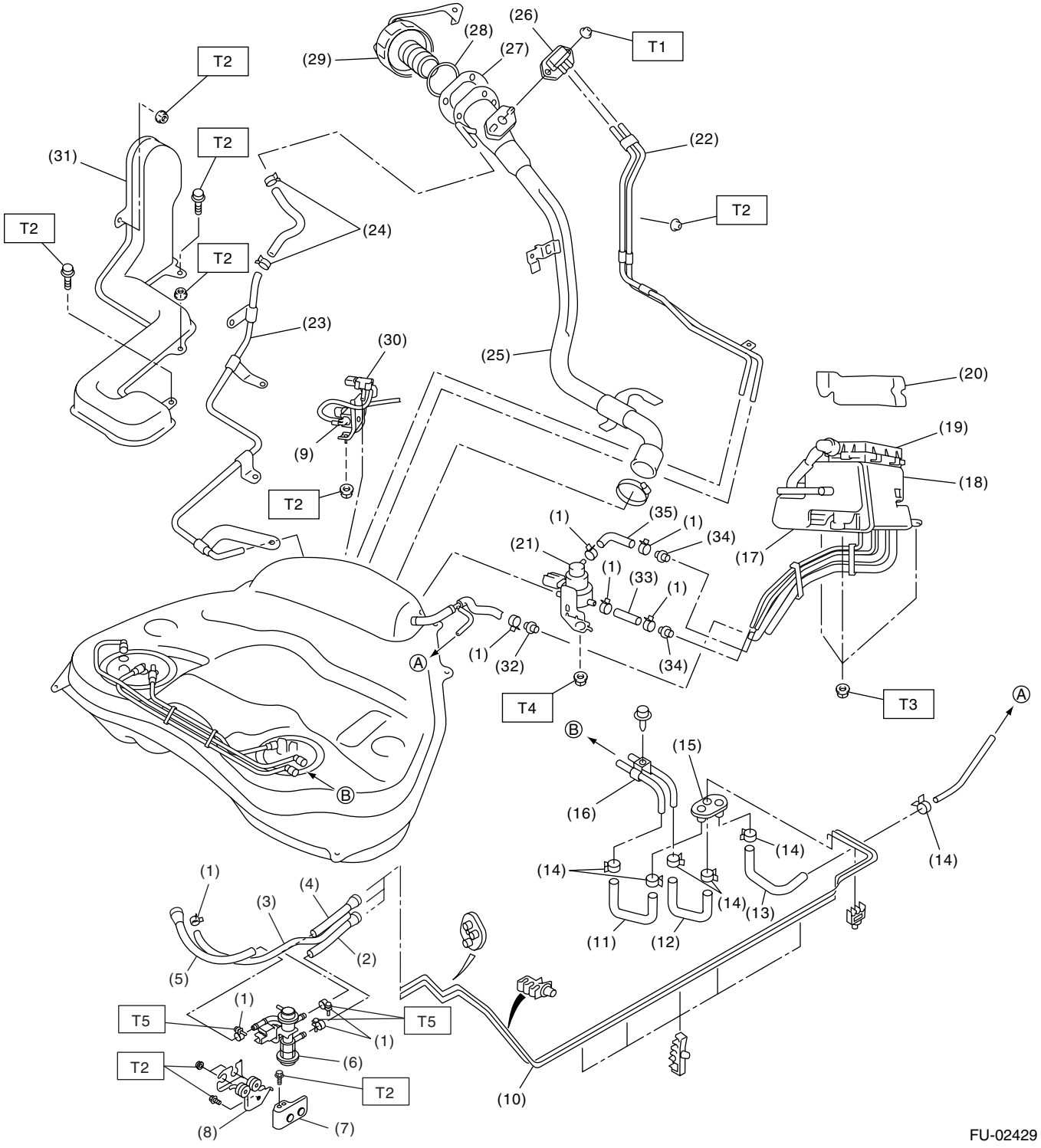
(26)
(28)
(27)
(29)
T1
T2
T2
(22)
(31)
T2
T2
(24)
T2
(23)
(30)
(25)
(20)
(9)
(19)
(18)
T2
(1)
(35)
(1)
(34)
(21)
(17)
(1)
(33)
(1)
(1)
(32)
(34)
T4
T3
Ⓐ
Ⓑ
(15)
(16)
(14)
(14)
(14)
(14)
(13)
(11)
(12)
(1)
(4)
(3)
(2)
(5)
(1)
T5
T5
(1)
T2
(6)
T2
(8)
(7)
(10)
FU-02429

(1) Clamp
(2) Fuel return hose A
(3) Evaporation hose A
(4) Fuel delivery hose A
(5) Fuel delivery hose B
(6) Fuel bypass valve
(7) Bracket
(8) Bracket
(9) Fuel tank sensor control valve
(10) Fuel pipe ASSY
(11) Fuel delivery hose C
(12) Fuel return hose B
(13) Evaporation hose B
(14) Clamp
(15) Grommet
(16) Fuel pipe ASSY
(17) Canister
(18) Drain valve
(19) Drain filter
(20) Canister protector
(21) Pressure control solenoid valve
(22) Evaporation pipe A
(23) Evaporation pipe B
(24) Clip
(25) Fuel filler pipe
(26) Shut valve
(27) Packing
(28) Ring
(29) Fuel filler cap
(30) Fuel tank pressure sensor
(31) Evaporation pipe protector
(32) Connector A
(33) Canister hose A
(34) Connector B
(35) Canister hose B

Tightening torque: N·m (kgf-m, ft-lb)
T1: 4.4 (0.45, 3.2)
T2: 7.5 (0.76, 5.5)
T3: 8 (0.8, 5.9)
T4: 17.6 (1.8, 13)
T5: 1.25 (0.13, 0.94)

C: CAUTION

• Wear work clothing, including a cap, protective goggles and protective shoes during operation.
• Remove contamination including dirt and corrosion before removal, installation or disassembly.
• Keep the disassembled parts in order and protect them from dust and dirt.
• Before removal, installation or disassembly, be sure to clarify the failure. Avoid unnecessary removal, installation, disassembly and replacement.
• Be careful not to burn yourself, because each part on the vehicle is hot after running.
• Be sure to tighten fasteners including bolts and nuts to the specified torque.
• Place shop jacks or rigid racks at the specified points.
• Before disconnecting electrical connectors of sensors or units, be sure to disconnect the ground cable from battery.
• Place “NO FIRE” signs near the working area.
• Be careful not to spill fuel on the floor.

D: PREPARATION TOOL

ILLUSTRATION	TOOL NUMBER	DESCRIPTION	REMARKS
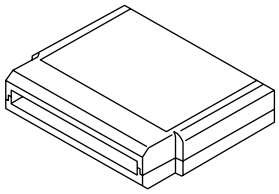 ST24082AA260	24082AA260	CARTRIDGE	Troubleshooting for electrical system.
ST22771AA030	22771AA030	SUBARU SELECT MONITOR KIT	Troubleshooting for electrical system.
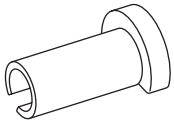 ST42099AE000	42099AE000	CONNECTOR REMOVER	Used for disconnecting quick connector.

2. Throttle Body

A: REMOVAL

1) Remove the collector cover.
2) Disconnect the ground cable from battery.

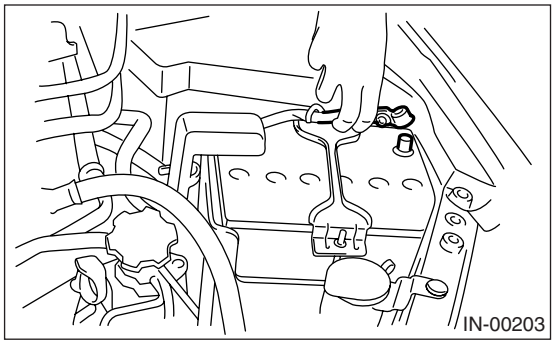

3) Remove the air intake chamber. <Ref. to IN(H6DO)-7, REMOVAL, Air Intake Chamber.>
4) Disconnect the connectors from throttle position sensor.

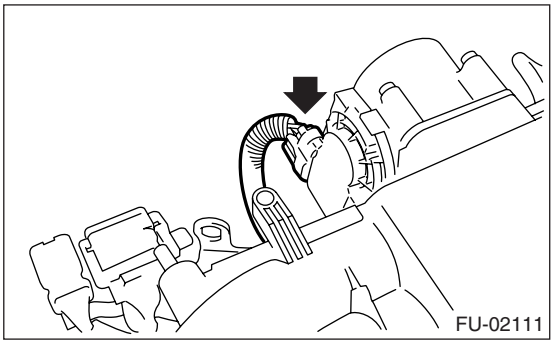

5) Disconnect the engine coolant hoses (A) from throttle body.
6) Remove the bolts (B) which secure throttle body to intake manifold.

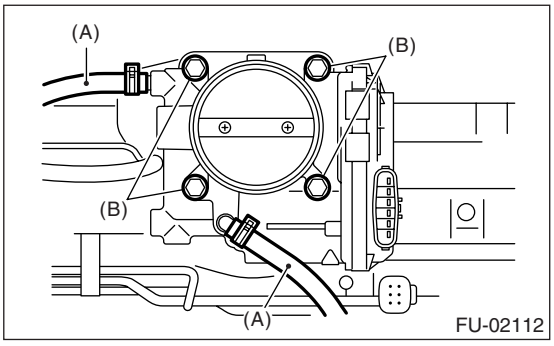

B: INSTALLATION

Install in the reverse order of removal.

NOTE:
Use a new O-ring.

Tightening torque:
8 N·m (0.8 kgf-m, 5.9 ft-lb)

3. Intake Manifold

A: REMOVAL

1) Remove the collector cover.
2) Release the fuel pressure. <Ref. to FU(H6DO)-39, RELEASING OF FUEL PRESSURE, PROCEDURE, Fuel.>
3) Open the fuel filler flap lid, and remove the fuel filler cap.
4) Disconnect the ground cable from battery.

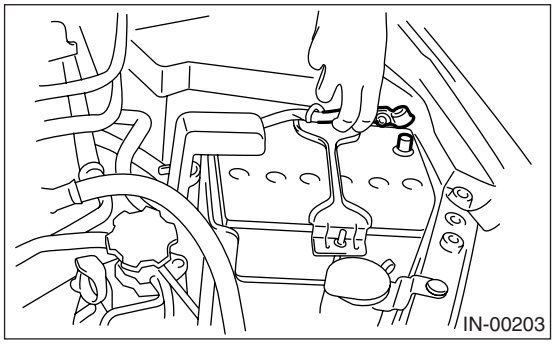

5) Remove the air cleaner case and air intake chamber. <Ref. to IN(H6DO)-5, REMOVAL, Air Cleaner Case.> <Ref. to IN(H6DO)-7, REMOVAL, Air Intake Chamber.>
6) Remove the generator. <Ref. to SC(H4SO)-20, REMOVAL, Generator.>
7) Disconnect the connector from throttle body.

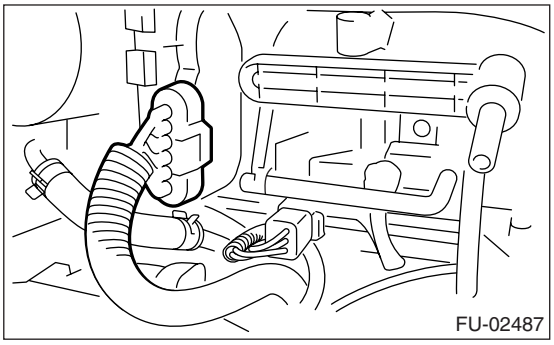

8) Disconnect the engine coolant hoses from throttle body.

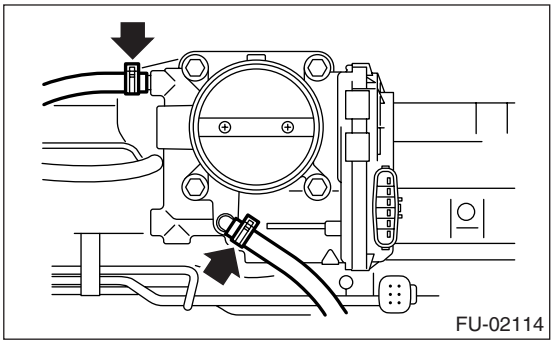

9) Disconnect the PCV hose.

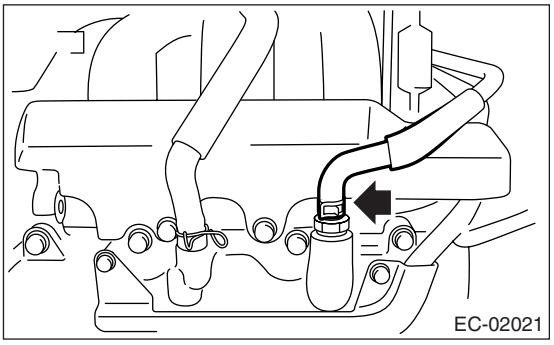

10) Disconnect the brake booster hose.

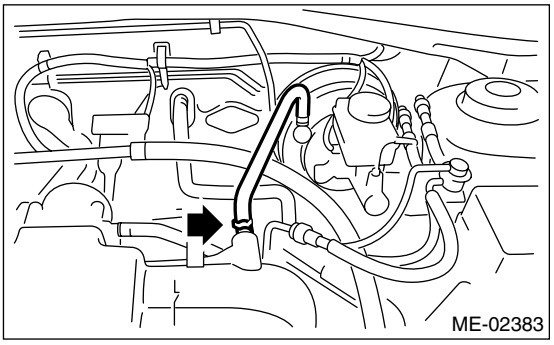

11) Disconnect the fuel hoses from fuel pipe.
(1) Disconnect the connector of fuel pipe by pushing the ST in the direction of arrow.

ST 42099AE000 CONNECTOR REMOVER

(2) Remove the clip, and disconnect the evaporation hose from the pipe.

WARNING:
- **Be careful not to spill fuel.**
- **Catch the fuel from hoses using a container or cloth.**

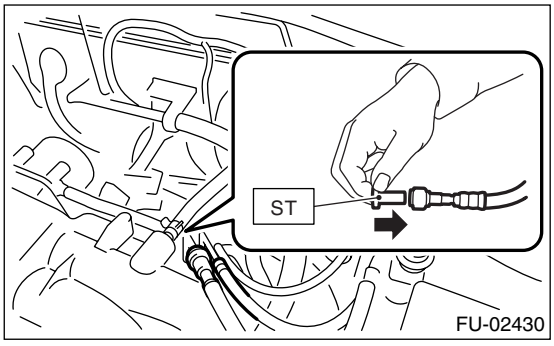

12) Remove the fuel pipe protector LH.

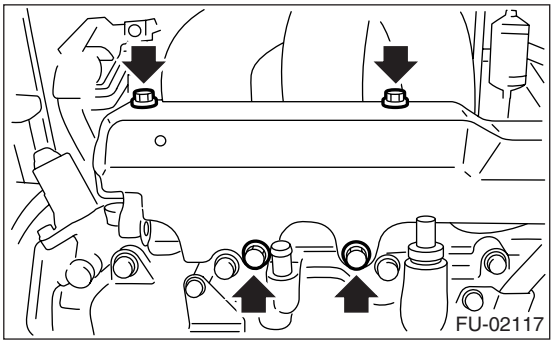

13) Remove the engine harness from fuel injector pipe LH.
14) Remove the bolts, which hold fuel injector pipe LH onto cylinder head.

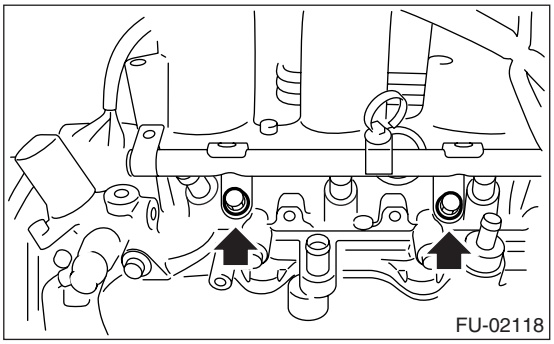

15) Remove the fuel pipe protector RH.

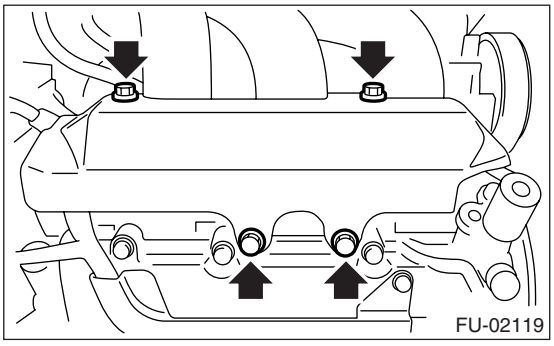

16) Remove the engine harness from fuel injector pipe RH.
17) Remove the bolts, which hold fuel injector pipe RH onto cylinder head.

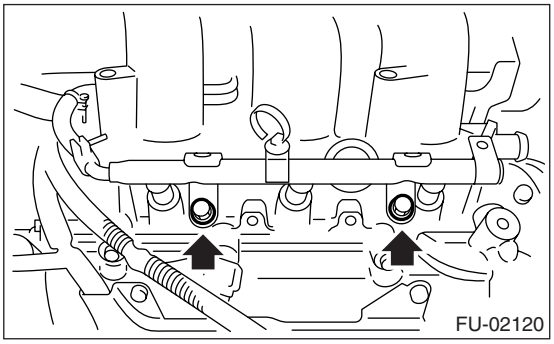

18) Remove bolts which hold intake manifold onto cylinder heads.
- LH side

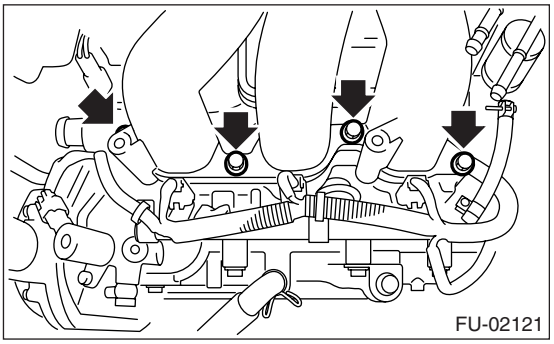

- RH side

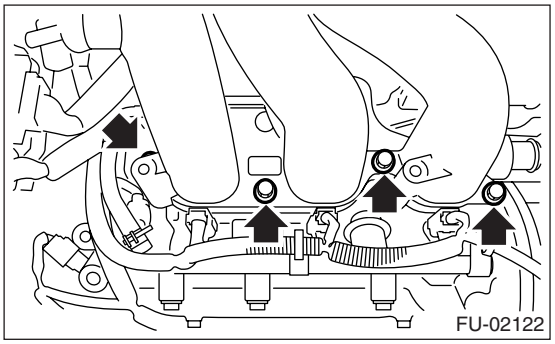

19) Remove the intake manifold.

B: INSTALLATION

1) Install the intake manifold onto cylinder heads.

NOTE:
Use a new O-ring.

Tightening torque:
25 N·m (2.5 kgf-m, 18 ft-lb)

- RH side

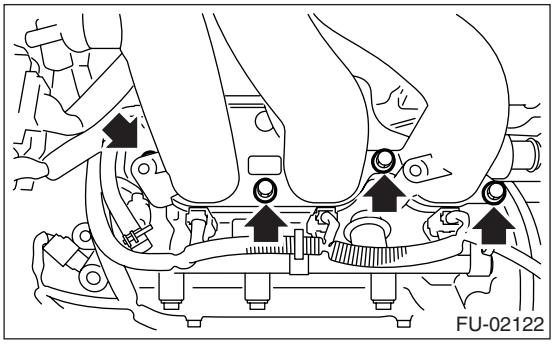

- LH side

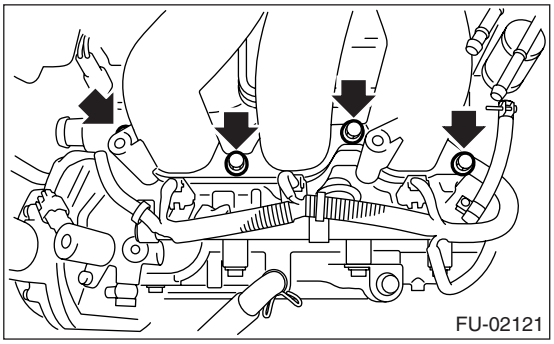

2) Install the bolts, which hold fuel injector pipe RH onto cylinder head.

Tightening torque:
19 N·m (1.9 kgf-m, 14 ft-lb)

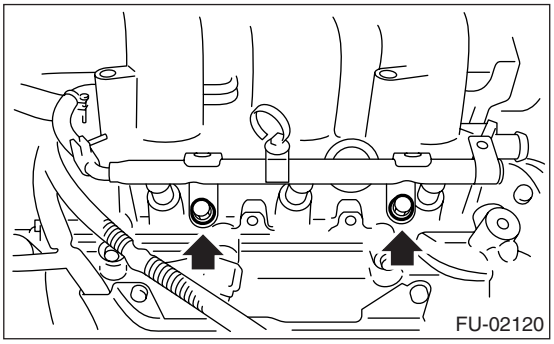

3) Install the engine harness to fuel injector pipe RH.
4) Install the fuel pipe protector RH.

Tightening torque:
19 N·m (1.9 kgf-m, 14 ft-lb)

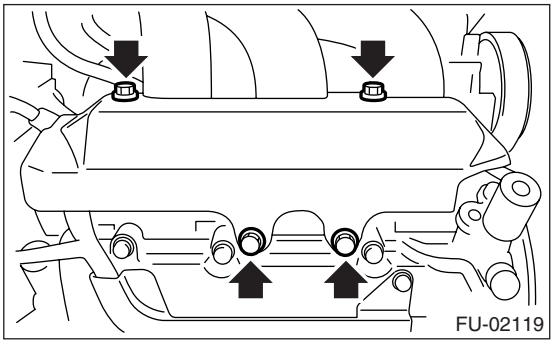

5) Install the bolts which hold fuel injector pipe LH onto cylinder head.

Tightening torque:
19 N·m (1.9 kgf-m, 14 ft-lb)

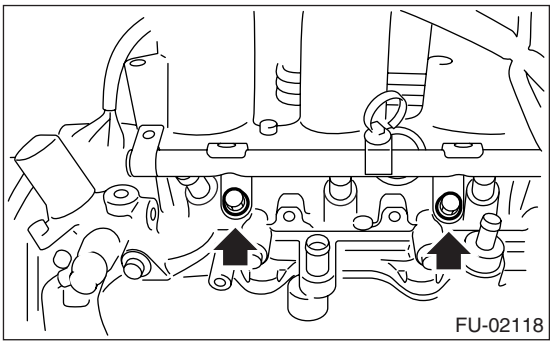

6) Install the engine harness to fuel injector pipe LH.
7) Install the fuel pipe protector LH.

Tightening torque:
19 N·m (1.9 kgf-m, 14 ft-lb)

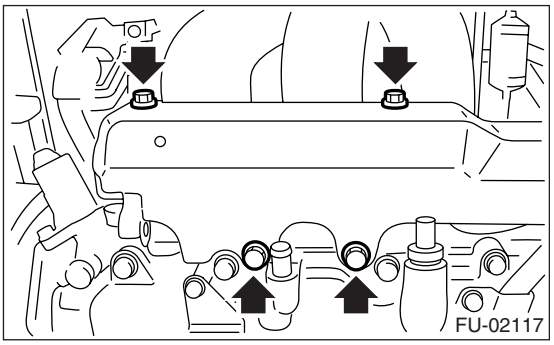

8) Connect the fuel hoses to fuel pipe.

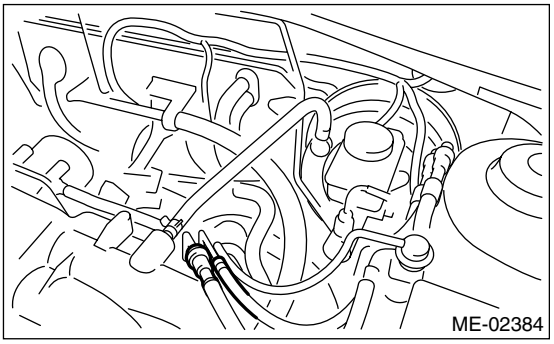

9) Connect the brake booster hose.

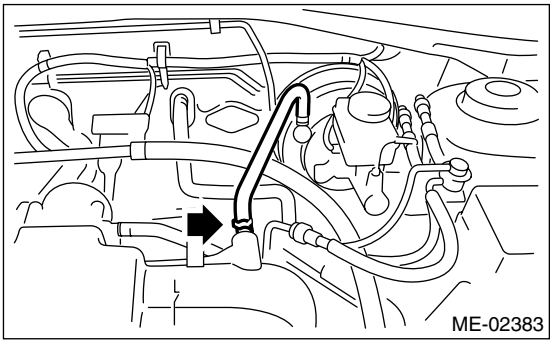

10) Connect the PCV hose.

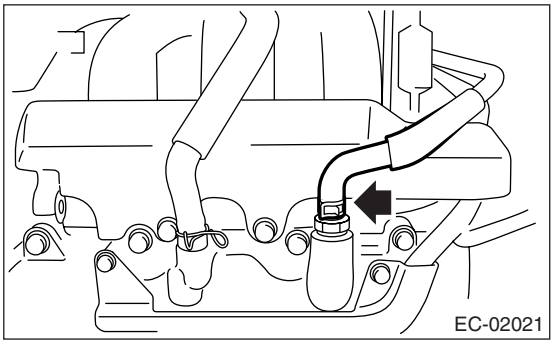

11) Connect the engine coolant hoses to throttle body.

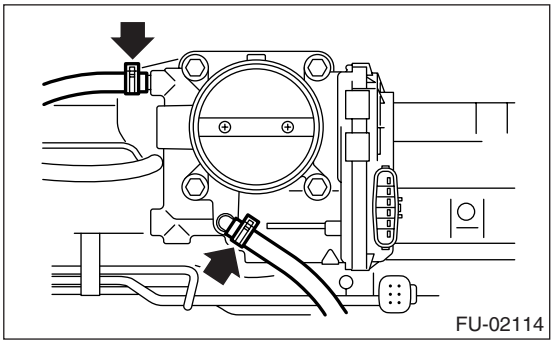

12) Connect the connector to throttle body.

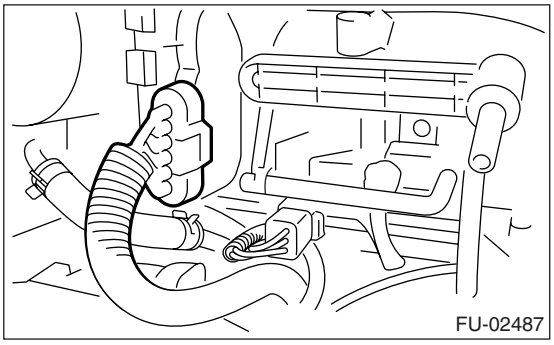

13) Install the generator. <Ref. to SC(H4SO)-20, INSTALLATION, Generator.>
14) Install the air cleaner case and air intake chamber. <Ref. to IN(H6DO)-5, INSTALLATION, Air Cleaner Case.> <Ref. to IN(H6DO)-7, INSTALLATION, Air Intake Chamber.>
15) Install the fuse of fuel pump to main fuse box.
16) Connect the battery ground cable to battery.

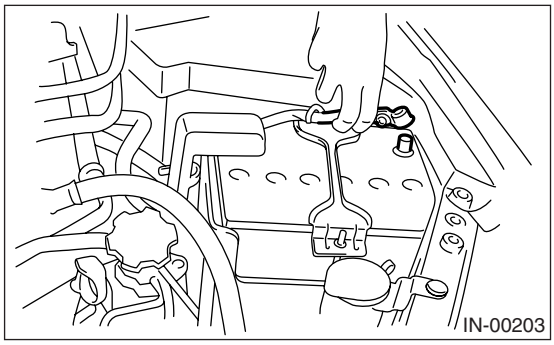

17) Install the collector cover.

C: DISASSEMBLY

1) Remove the engine harness from intake manifold.
2) Remove the throttle body. <Ref. to FU(H6DO)-12, REMOVAL, Throttle Body.>
3) Disconnect the pressure regulator vacuum hose from intake manifold.

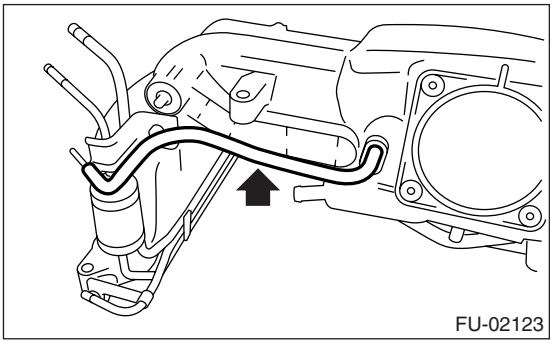

4) Remove the manifold absolute pressure sensor. <Ref. to FU(H6DO)-24, REMOVAL, Manifold Absolute Pressure Sensor.>
5) Remove the purge control solenoid valve. <Ref. to EC(H6DO)-6, REMOVAL, Purge Control Solenoid Valve.>
6) Loosen the clamp which holds fuel injector pipe to fuel hose, and then disconnect the pipe from fuel hose.

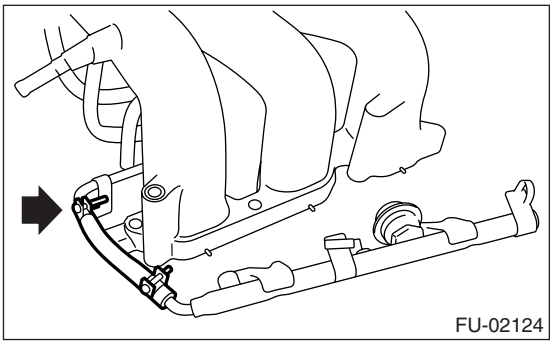

7) Remove the bolts which install fuel pipes on intake manifold.

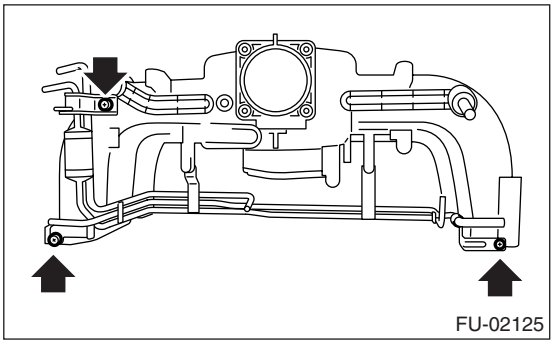
FU-02125

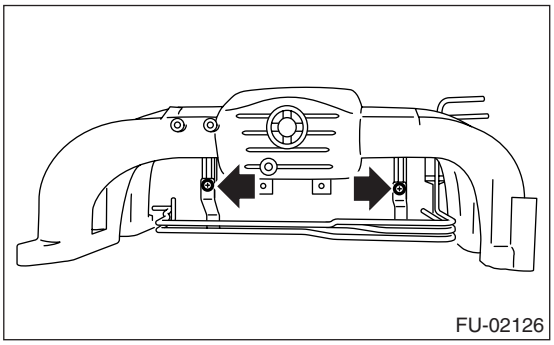
FU-02126

D: ASSEMBLY

NOTE:
When assembling the nipple, apply liquid gasket.

Liquid gasket:
THREE BOND 1105 (Part No. 004403010)

1) Tighten the bolts which install fuel pipes on intake manifold.

Tightening torque:
5 N·m (0.5 kgf-m, 3.6 ft-lb)

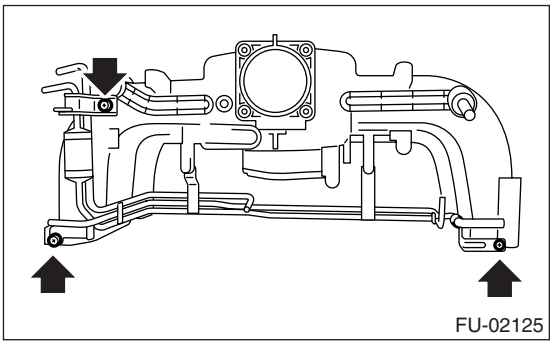
FU-02125

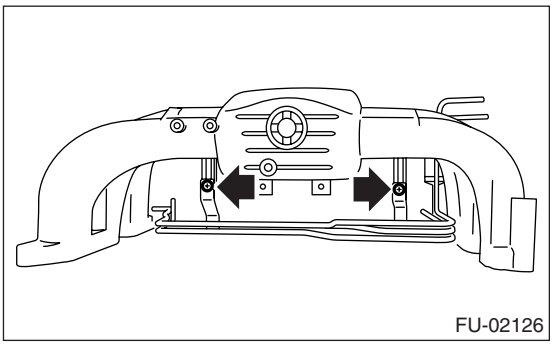
FU-02126

2) Connect the fuel injector pipe to fuel hose, and tighten the clamp screw.

Tightening torque:
1.5 N·m (0.15 kgf-m, 1.1 ft-lb)

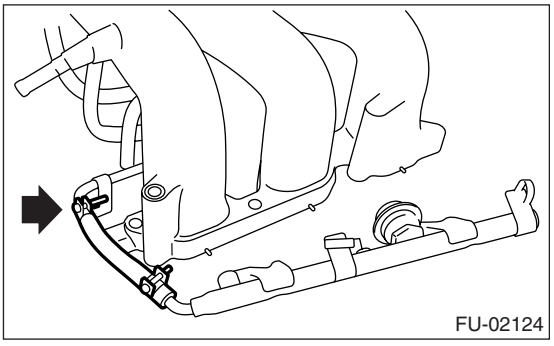
FU-02124

3) Install the purge control solenoid valve. <Ref. to EC(H6DO)-6, INSTALLATION, Purge Control Solenoid Valve.>
4) Install the manifold absolute pressure sensor. <Ref. to FU(H6DO)-24, INSTALLATION, Manifold Absolute Pressure Sensor.>

5) Connect the pressure regulator vacuum hose to intake manifold.

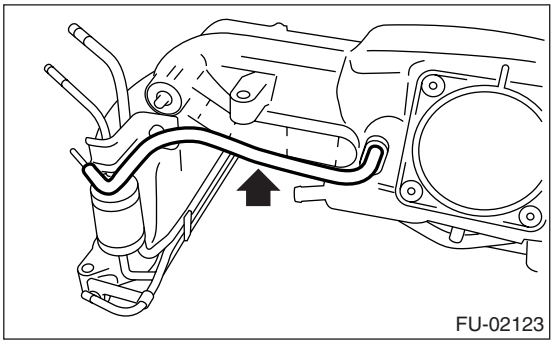

6) Install the throttle body to intake manifold. <Ref. to FU(H6DO)-12, INSTALLATION, Throttle Body.>
7) Install the engine harness to intake manifold.

E: INSPECTION

Make sure the fuel pipe and fuel hoses are not damaged and the connections are tightened firmly.

4. Engine Coolant Temperature Sensor

A: REMOVAL

1) Remove the collector cover.
2) Disconnect the ground cable from battery.

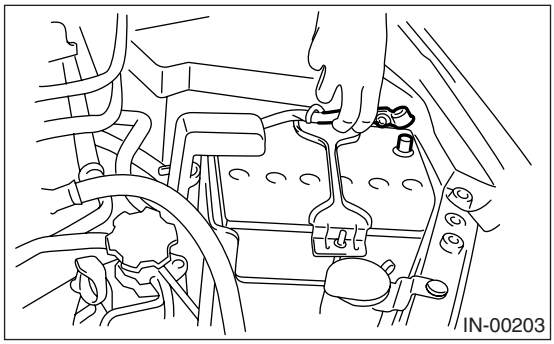

3) Disconnect the connector from engine coolant temperature sensor.
4) Remove the engine coolant temperature sensor.

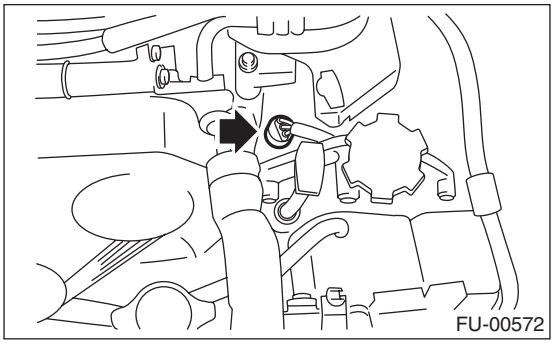

B: INSTALLATION

Install in the reverse order of removal.

Tightening torque:
18 N·m (1.8 kgf-m, 13.3 ft-lb)

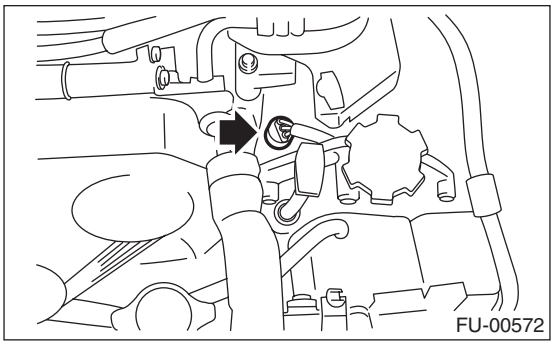

5. Crankshaft Position Sensor

A: REMOVAL

1) Remove the collector cover.
2) Disconnect the ground cable from battery.

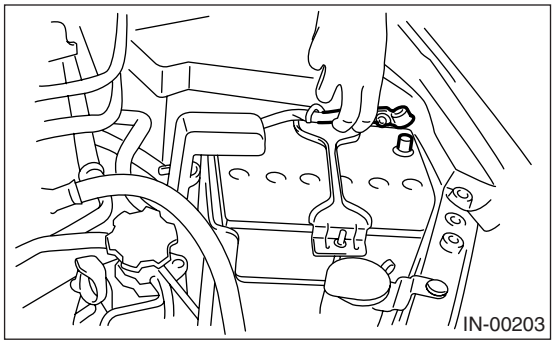

3) Remove the air intake chamber. <Ref. to IN(H6DO)-7, REMOVAL, Air Intake Chamber.>
4) Remove the service hole cover.

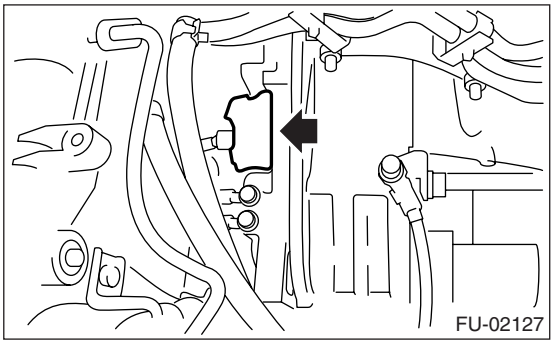

5) Remove the crankshaft position sensor.

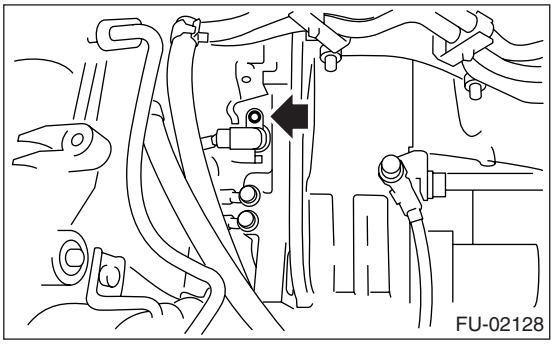

6) Disconnect the connector from crankshaft position sensor.

B: INSTALLATION

Install in the reverse order of removal.

Tightening torque:
6.4 N·m (0.65 kgf-m, 4.7 ft-lb)

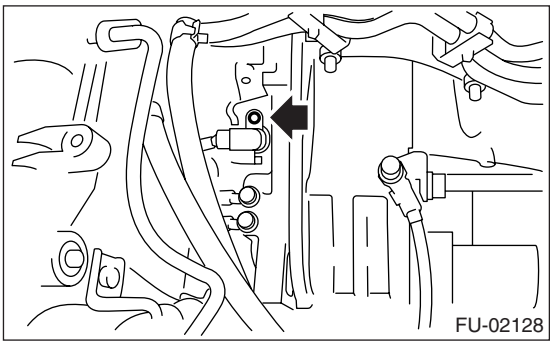

6. Camshaft Position Sensor

A: REMOVAL

1) Remove the collector cover.
2) Disconnect the ground cable from battery.

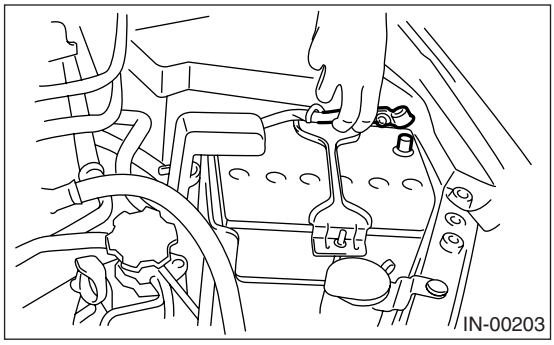

3) Remove the generator harness from fuel pipe protector LH.
4) Remove the fuel pipe protector LH.

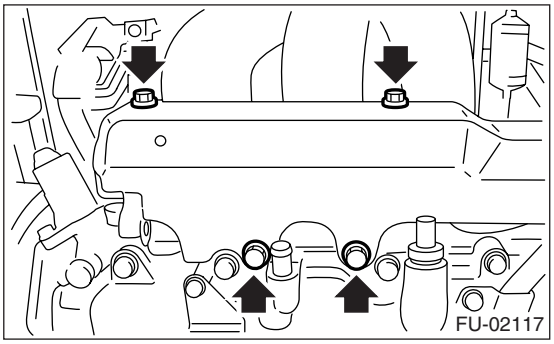

5) Disconnect the connector from camshaft position sensor LH.

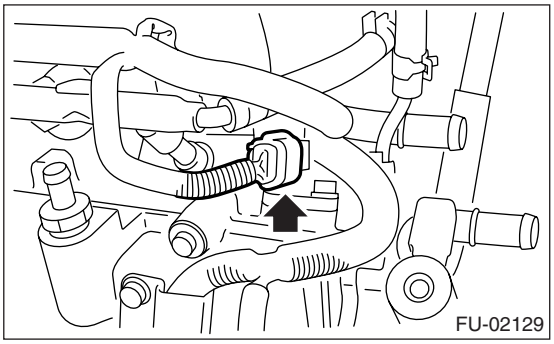

6) Remove the camshaft position sensor LH.

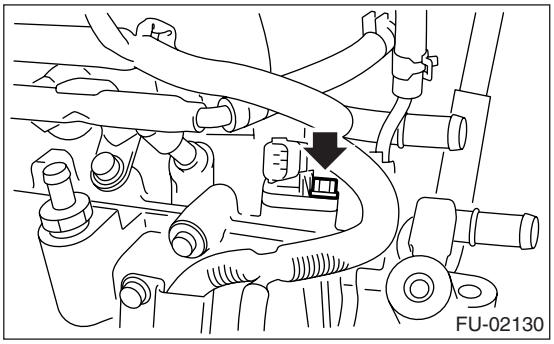

7) Remove the camshaft position sensor RH in the same procedure as LH.

B: INSTALLATION

Install in the reverse order of removal.

Tightening torque:
Camshaft position sensor
6.4 N·m (0.65 kgf-m, 4.7 ft-lb)
Fuel pipe protector
19 N·m (1.9 kgf-m, 14 ft-lb)

7. Knock Sensor

A: REMOVAL

1) Remove the collector cover.
2) Disconnect the ground cable from battery.

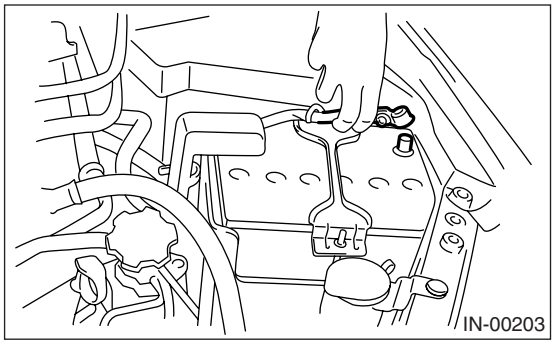

3) Remove the intake manifold.
<Ref. to FU(H6DO)-13, REMOVAL, Intake Manifold.>
4) Disconnect the knock sensor connector.
5) Remove the knock sensor from cylinder block.

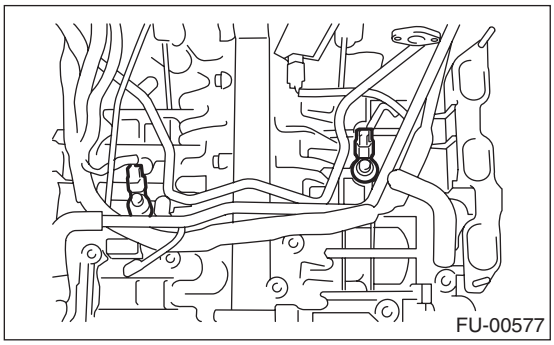

B: INSTALLATION

1) Install the knock sensor to cylinder block.

Tightening torque:
25 N·m (2.5 kgf-m, 18 ft-lb)

NOTE:
For the knock sensor's installation angle, refer to the figure below.

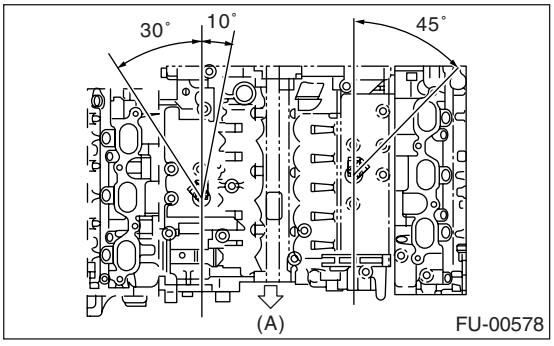

(A) Front side

2) Connect the knock sensor connector.
3) Install the intake manifold. <Ref. to FU(H6DO)-14, INSTALLATION, Intake Manifold.>
4) Connect the battery ground cable to battery.

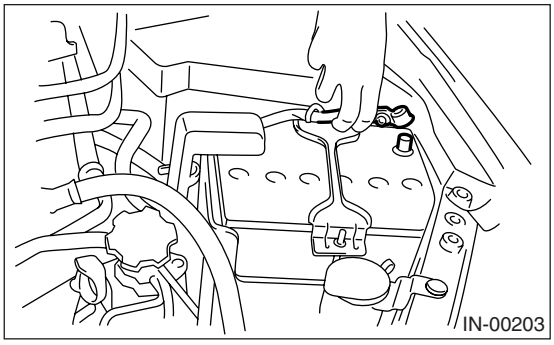

5) Install the collector cover.

8. Throttle Position Sensor

A: SPECIFICATION

Throttle body is a non-disassembled part, so do not remove the throttle position sensor from throttle body.
Refer to “Throttle Body” for removal and installation procedure. <Ref. to FU(H6DO)-12, REMOVAL, Throttle Body.> <Ref. to FU(H6DO)-12, INSTALLATION, Throttle Body.>

9. Manifold Absolute Pressure Sensor

A: REMOVAL

1) Remove the collector cover.
2) Disconnect the ground cable from battery.

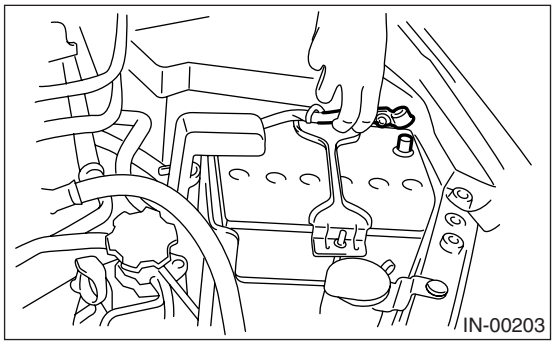

3) Disconnect the connector from manifold absolute pressure sensor (A), and remove the filter assembly (B) from intake manifold.

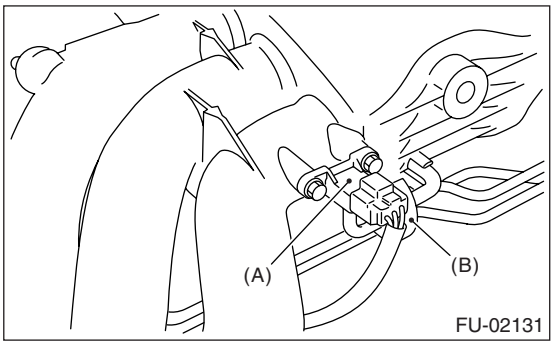

4) Remove the manifold absolute pressure sensor from intake manifold.

B: INSTALLATION

Install in the reverse order of removal.

Tightening torque:
6.4 N·m (0.65 kgf-m, 4.7 ft-lb)

10.Mass Air Flow and Intake Air Temperature Sensor

A: REMOVAL

1) Disconnect the ground cable from battery.

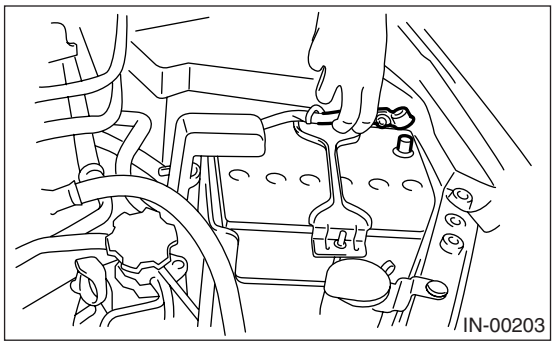

2) Disconnect the connector from mass air flow and intake air temperature sensor.

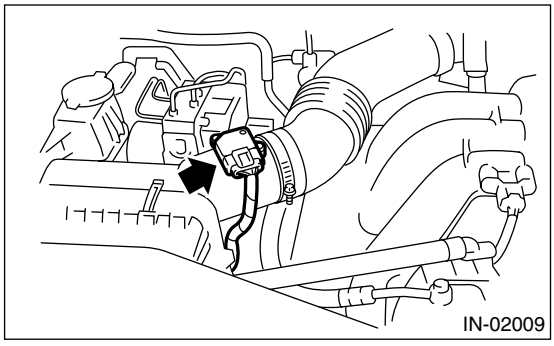

3) Remove the mass air flow and intake air temperature sensor.

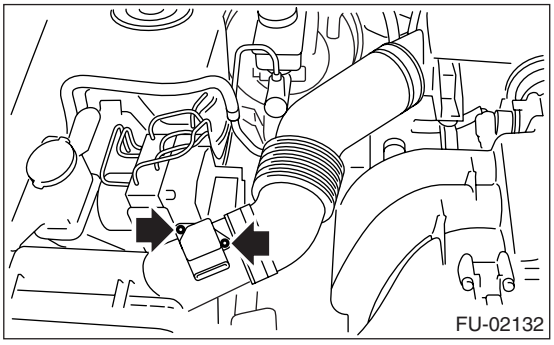

B: INSTALLATION

Install in the reverse order of removal.

Tightening torque:
1 N·m (0.1 kgf-m, 0.7 ft-lb)

11.Fuel Injector

A: REMOVAL

1. RH SIDE

1) Remove the collector cover.
2) Release the fuel pressure. <Ref. to FU(H6DO)-39, RELEASING OF FUEL PRESSURE, PROCEDURE, Fuel.>
3) Open the fuel filler flap lid, and remove the fuel filler cap.
4) Disconnect the ground cable from battery.

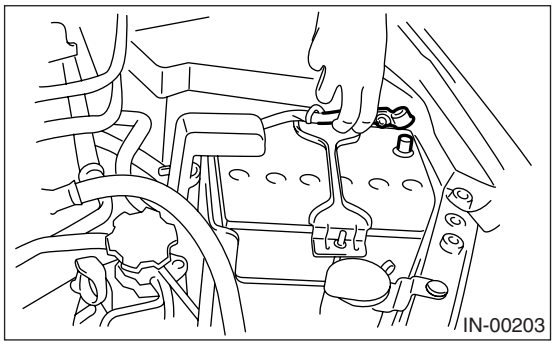

5) Remove the air cleaner case. <Ref. to IN(H6DO)-5, REMOVAL, Air Cleaner Case.>
6) Remove the fuel pipe protector RH.

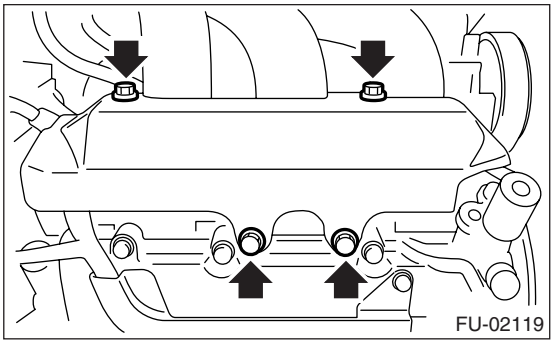

7) Disconnect the connectors from fuel injector.

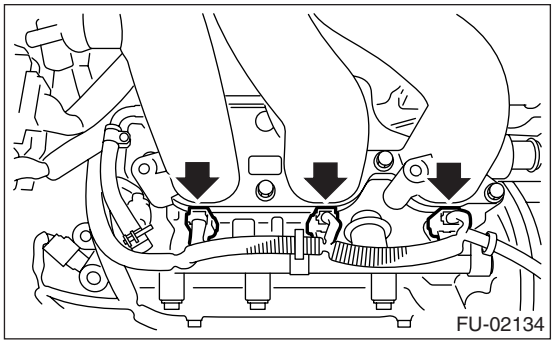

8) Remove the engine harness from fuel injector pipe RH.
9) Remove the bolts which hold fuel injector pipe onto intake manifold.

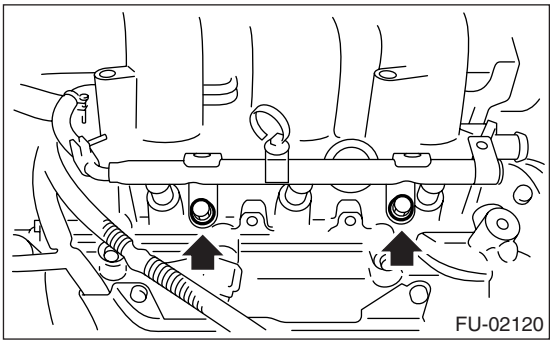

10) Remove the fuel injector while lifting up the fuel injector pipe.

2. LH SIDE

1) Remove the collector cover.
2) Release the fuel pressure. <Ref. to FU(H6DO)-39, RELEASING OF FUEL PRESSURE, PROCEDURE, Fuel.>
3) Open the fuel filler flap lid, and remove the fuel filler cap.
4) Remove the battery.
5) Remove the generator harness from fuel pipe protector LH.
6) Remove the fuel pipe protector LH.

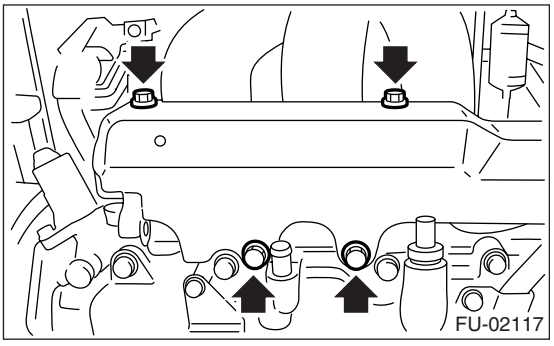

7) Disconnect the connectors from fuel injector.

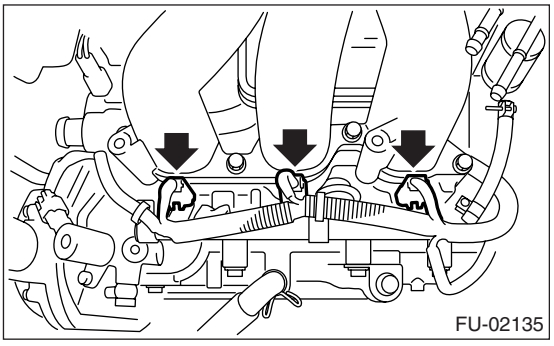

8) Remove the engine harness from fuel injector pipe LH.

9) Remove the bolts which hold fuel injector pipe onto intake manifold.

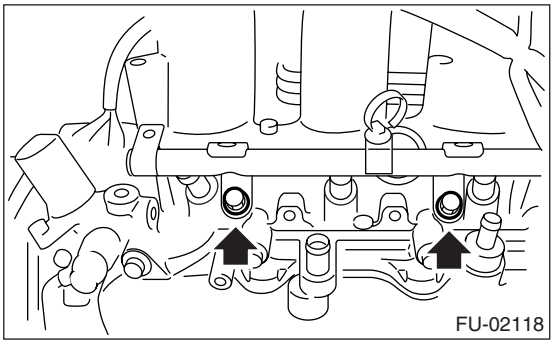

10) Remove the fuel injector while lifting up the fuel injector pipe.

B: INSTALLATION

1. RH SIDE

Install in the reverse order of removal.

NOTE:
Use new O-rings.

Tightening torque:
19 N·m (1.9 kgf-m, 14 ft-lb)

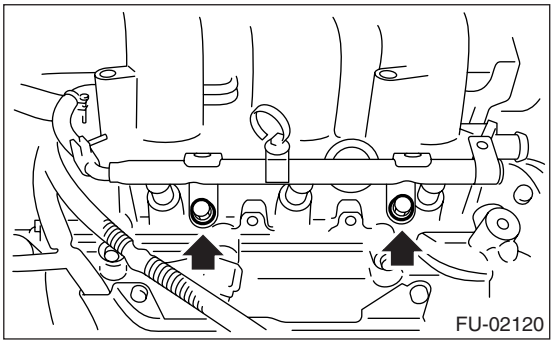

Tightening torque:
19 N·m (1.9 kgf-m, 14 ft-lb)

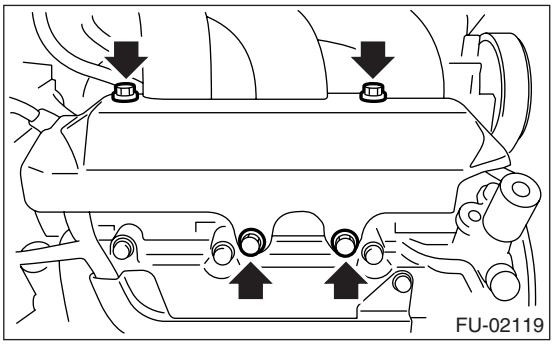

2. LH SIDE

Install in the reverse order of removal.

NOTE:
Use new O-rings.

Tightening torque:
19 N·m (1.9 kgf-m, 14 ft-lb)

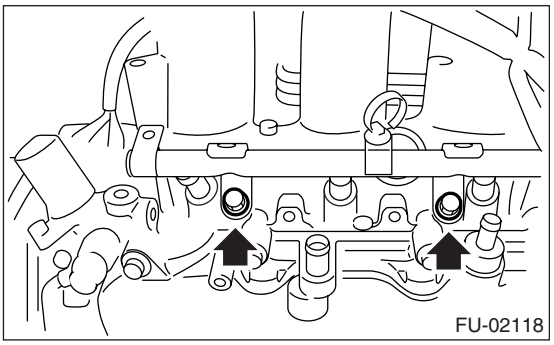

Tightening torque:
19 N·m (1.9 kgf-m, 14 ft-lb)

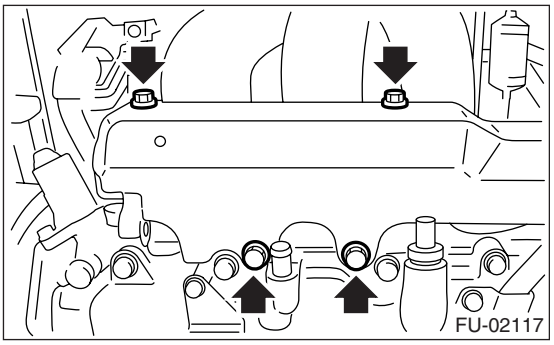

12.Variable Valve Lift Diagnosis Oil Pressure Switch

A: REMOVAL

1) Remove the collector cover.
2) Disconnect the ground cable from battery.

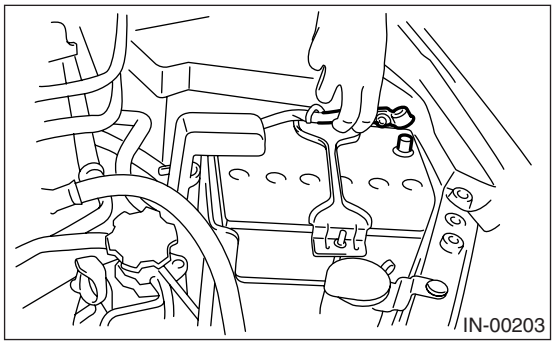

3) Remove the air intake chamber. <Ref. to IN(H6DO)-7, REMOVAL, Air Intake Chamber.>
4) Disconnect the connector from variable valve lift diagnosis oil pressure switch.
5) Remove the variable valve lift diagnosis oil pressure switch.

- LH side

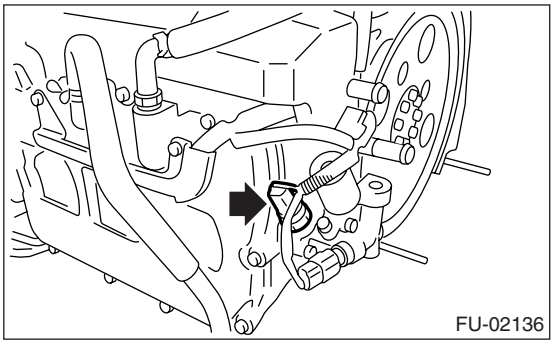

- RH side

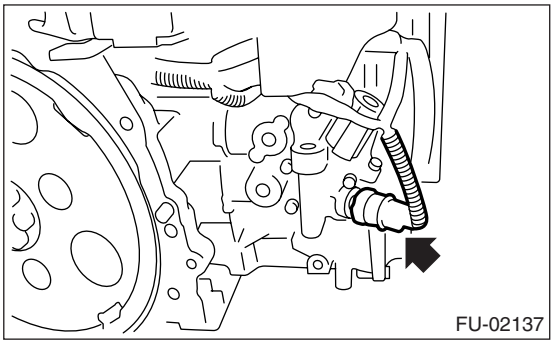

B: INSTALLATION

Install in the reverse order of removal.

NOTE:
Apply liquid gasket to the thread of variable valve lift diagnosis oil pressure switch.

Liquid gasket:
THREE BOND 1324 (Part No. 004403042) or equivalent

Tightening torque:
17 N·m (1.7 kgf-m, 12.5 ft-lb)

13.Oil Temperature Sensor

A: REMOVAL

1) Remove the collector cover.
2) Disconnect the ground cable from battery.

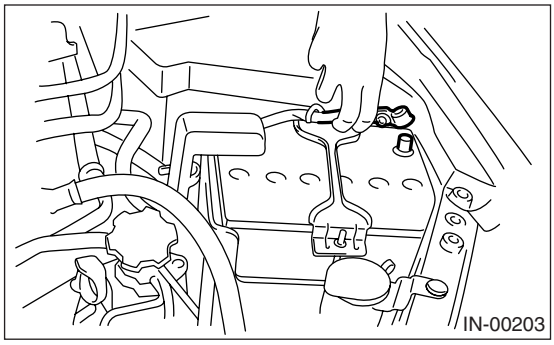

3) Remove the air intake chamber. <Ref. to IN(H6DO)-7, REMOVAL, Air Intake Chamber.>
4) Disconnect the connector from oil temperature sensor.
5) Remove the oil temperature sensor.

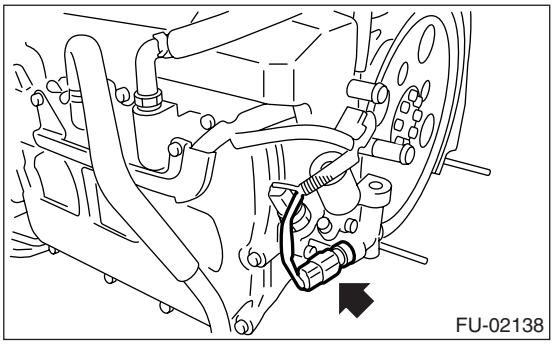

B: INSTALLATION

Install in the reverse order of removal.

Tightening torque:
18 N·m (1.8 kgf-m, 13.3 ft-lb)

14.Front Oxygen (A/F) Sensor

A: REMOVAL

1) Set the vehicle on a lift.
2) Disconnect the ground cable from battery.

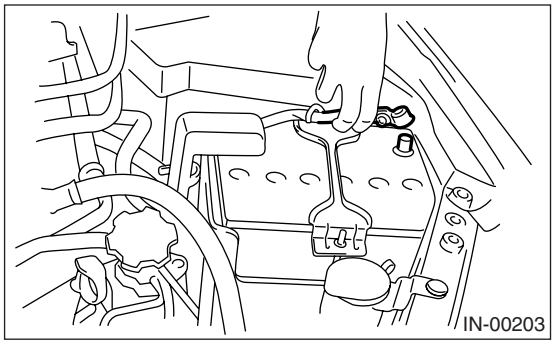

3) Lift-up the vehicle.
4) Disconnect the connector of front oxygen (A/F) sensor.

- LH side

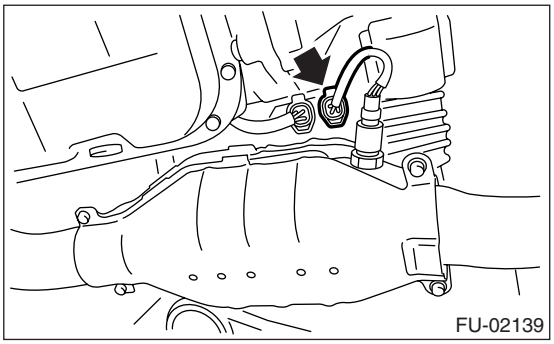

- RH side

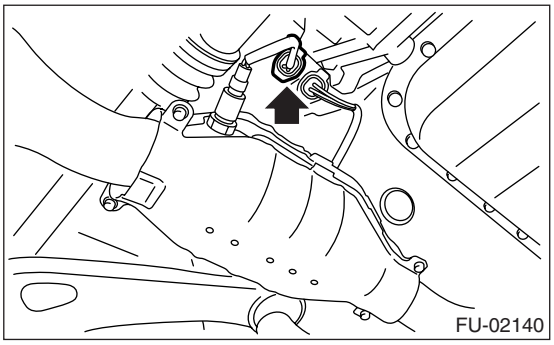

5) Apply spray-type lubricant to the threaded portion of front oxygen (A/F) sensor, and leave it for one minute or more.
6) Remove the front oxygen (A/F) sensor.

CAUTION:
When removing the front oxygen (A/F) sensor, wait until exhaust pipe cools, otherwise it will damage the exhaust pipe.

- LH side

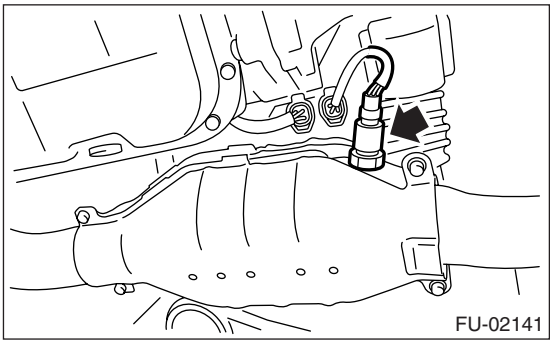

- RH side

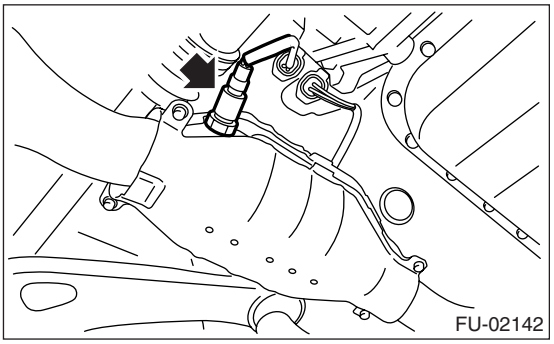

B: INSTALLATION

1) Before installing front oxygen (A/F) sensor, apply anti-seize compound only to the threaded portion of front oxygen (A/F) sensor to make the next removal easier.

Anti-seize compound:
SS-30 JET LUBE

CAUTION:
Never apply anti-seize compound to the protector of front oxygen (A/F) sensor.

2) Install the front oxygen (A/F) sensor.

Tightening torque:
21 N·m (2.1 kgf-m, 15.2 ft-lb)

- LH side

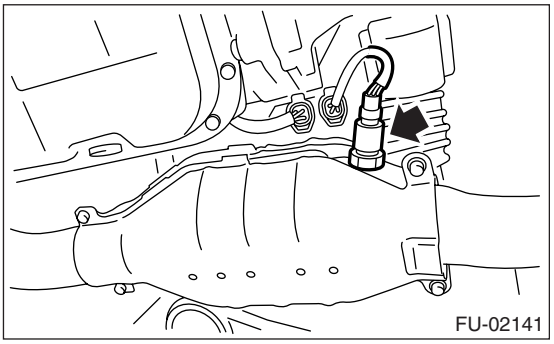

• RH side

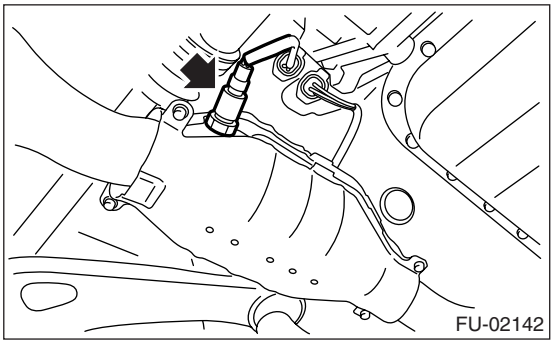

3) Connect the connector of front oxygen (A/F) sensor.

• LH side

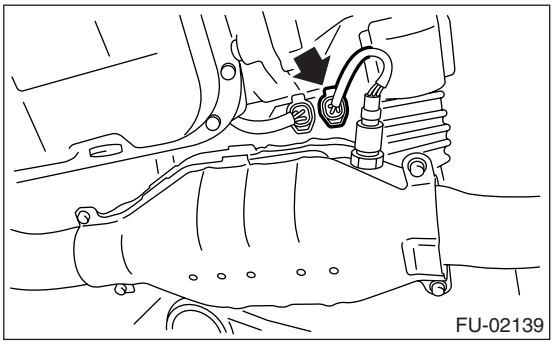

• RH side

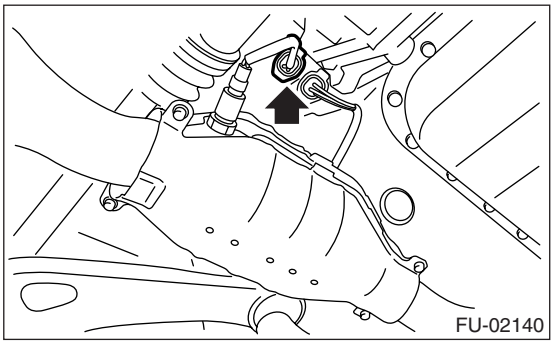

4) Lower the vehicle.

5) Connect the battery ground cable to battery.

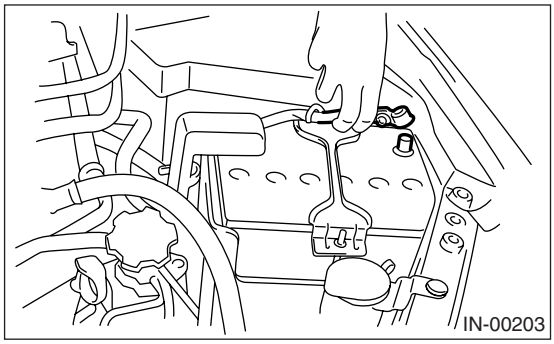

15.Rear Oxygen Sensor

A: REMOVAL

1) Set the vehicle on a lift.
2) Disconnect the ground cable from battery.

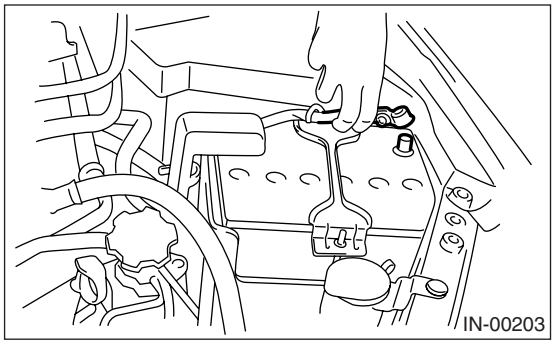

3) Lift-up the vehicle.
4) Disconnect the connector from rear oxygen sensor.

- LH side

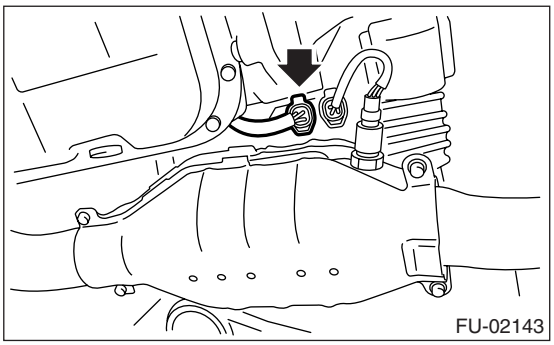

- RH side

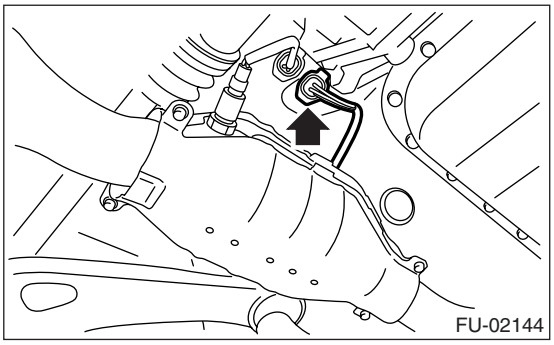

5) Remove the clip holding harness.
6) Apply spray-type lubricant to the threaded portion of rear oxygen sensor, and leave it for one minute or more.
7) Remove the rear oxygen sensor.

CAUTION:
When removing the rear oxygen sensor, wait until exhaust pipe cools, otherwise it will damage the exhaust pipe.

- LH side

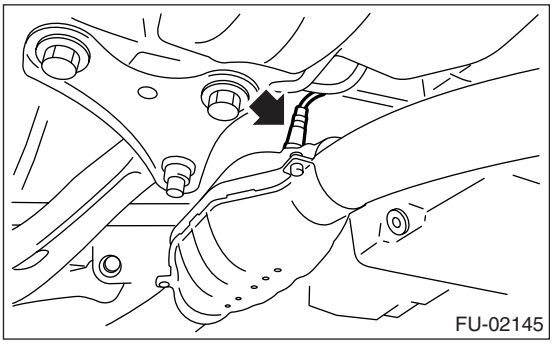

- RH side

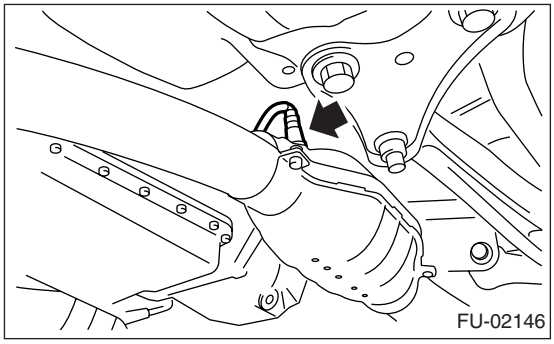

B: INSTALLATION

1) Before installing rear oxygen sensor, apply anti-seize compound only to the threaded portion of rear oxygen sensor to make the next removal easier.

Anti-seize compound:
SS-30 JET LUBE

CAUTION:
Never apply anti-seize compound to the protector of rear oxygen sensor.

2) Install the rear oxygen sensor.

Tightening torque:
21 N·m (2.1 kgf-m, 15.2 ft-lb)

- LH side

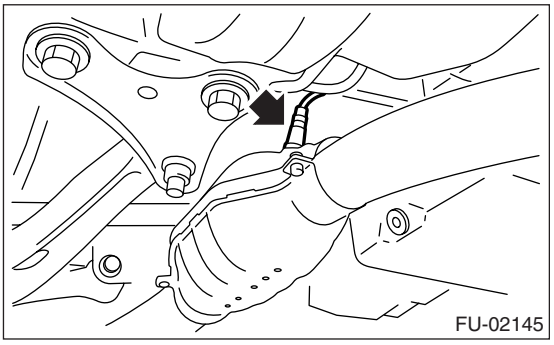

- RH side

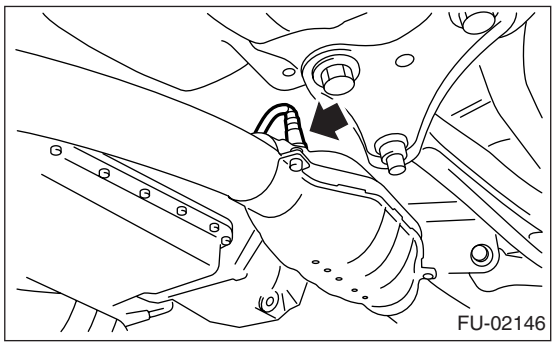

3) Hold the harness with clip.
4) Connect the connector to rear oxygen sensor.

- LH side

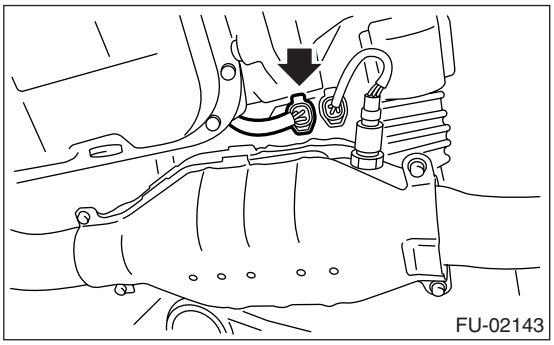

- RH side

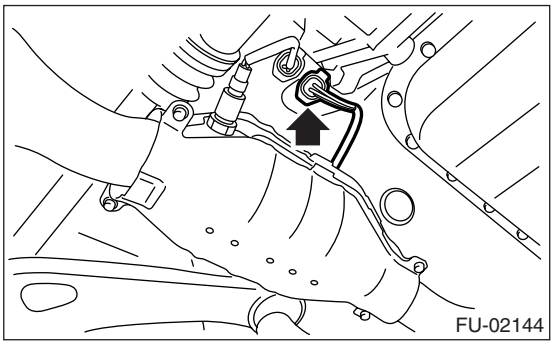

5) Lower the vehicle.
6) Connect the battery ground cable to battery.

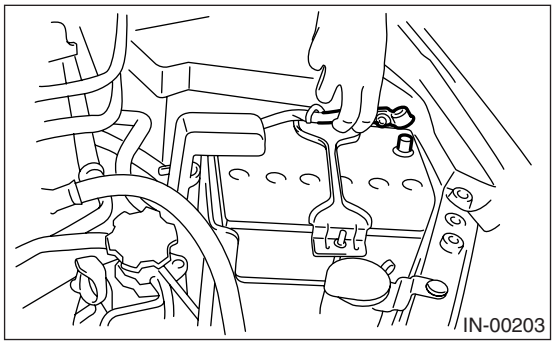

16.Engine Control Module (ECM)

A: REMOVAL

1) Disconnect the ground cable from battery.

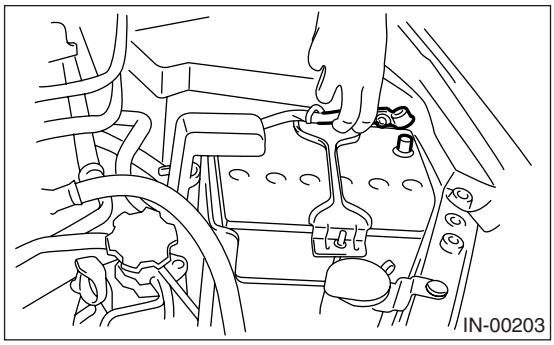

2) Remove the lower inner trim of passenger's side. <Ref. to EI-60, REMOVAL, Lower Inner Trim.>
3) Detach the floor mat of front passenger seat.
4) Remove the protect cover.

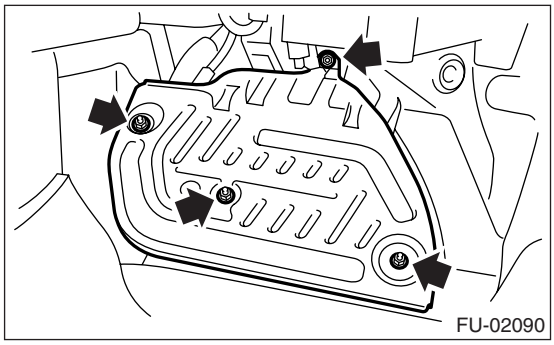

5) Remove the nuts and bolts which hold ECM to bracket.
6) Remove the clip (A) from bracket.

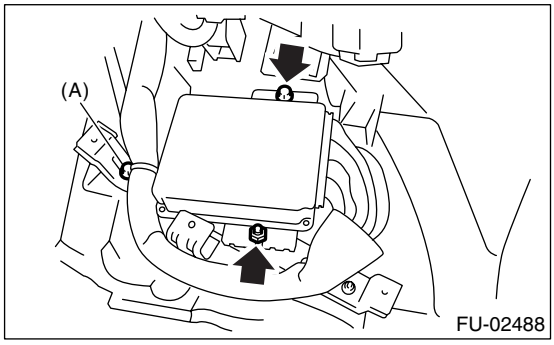

7) Disconnect the ECM connectors, and take out the ECM.

B: INSTALLATION

Install in the reverse order of removal.

CAUTION:
• When replacing the ECM, be careful not to use the wrong spec. ECM to avoid any damage to fuel injection system.
• When replacing the ECM, be careful not to damage the harnesses and connectors.
• When replacing the ECM, immobilizer system must be registered. For doing so, all ignition keys and ID cards should be prepared. Refer to "REGISTRATION MANUAL FOR IMMOBILIZER".

Tightening torque:
5 N·m (0.5 kgf-m, 3.6 ft-lb)

17.Main Relay

A: REMOVAL

1) Disconnect the ground cable from battery.

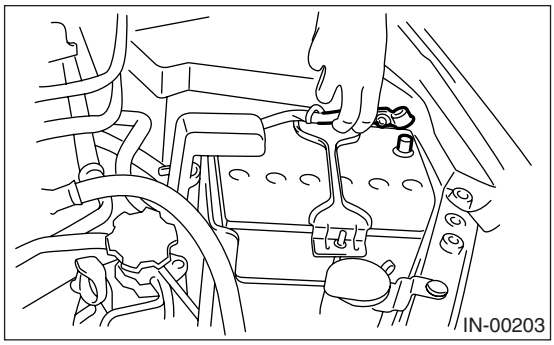

2) Remove the glove box. <Ref. to EI-51, REMOVAL, Glove Box.>
3) Remove the harness cover (A).

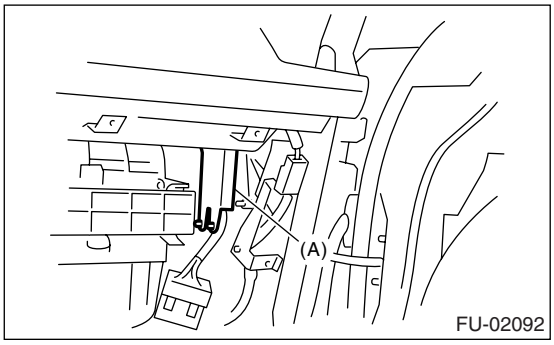

4) Disconnect the connector from main relay.

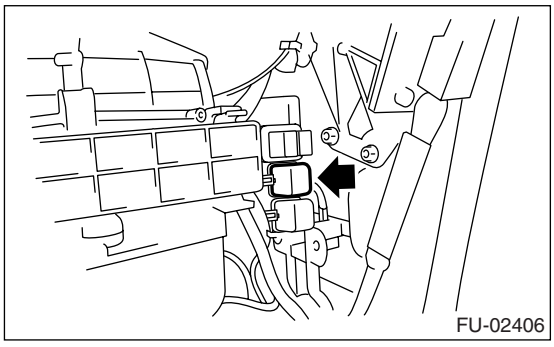

B: INSTALLATION

Install in the reverse order of removal.

18.Fuel Pump Relay

A: REMOVAL

1) Disconnect the ground cable from battery.

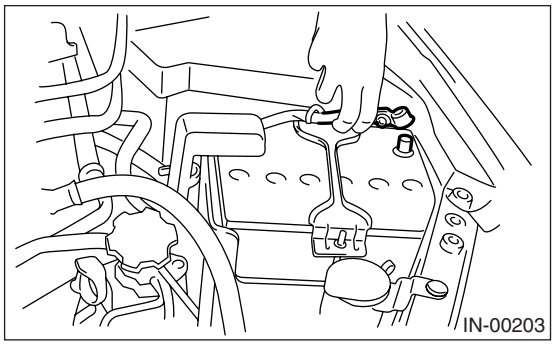

2) Remove the glove box. <Ref. to EI-51, REMOVAL, Glove Box.>
3) Remove the harness cover (A).

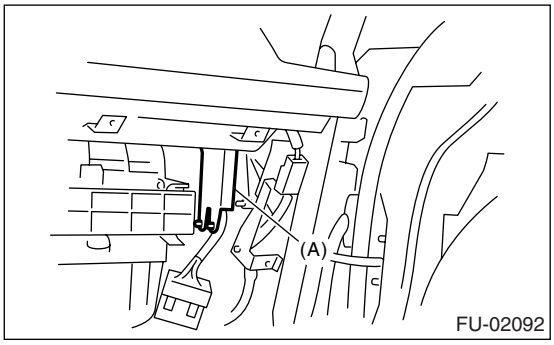

4) Disconnect the connector from fuel pump relay.

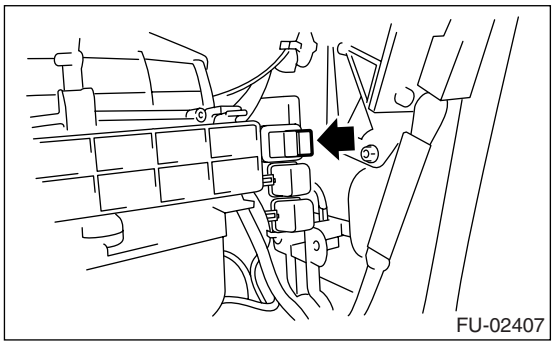

B: INSTALLATION

Install in the reverse order of removal.

19. Electronic Throttle Control Relay

A: REMOVAL

1) Disconnect the ground cable from battery.

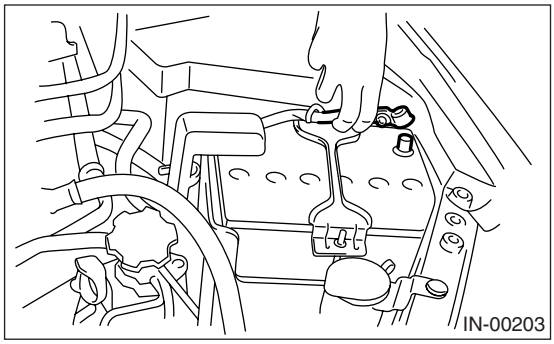

2) Remove the glove box. <Ref. to EI-51, REMOVAL, Glove Box.>

3) Remove the harness cover (A).

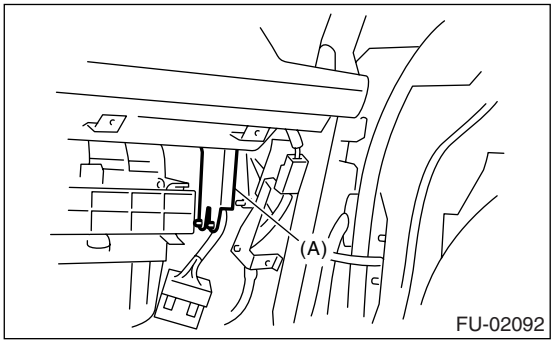

4) Disconnect the connector from electronic throttle control relay.

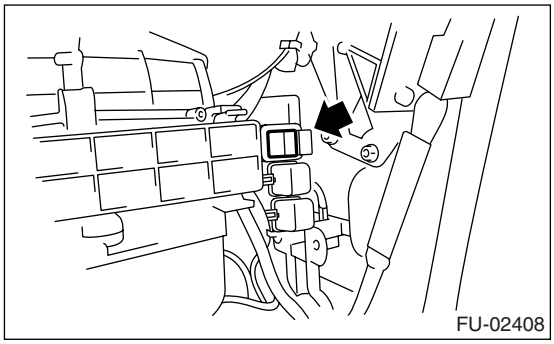

B: INSTALLATION

Install in the reverse order of removal.

20.Fuel Pump Control Unit

A: REMOVAL

1) Disconnect the ground cable from battery.

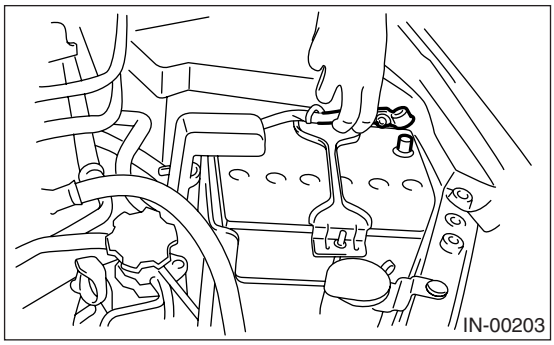

2) Remove the rear quarter trim. <Ref. to EI-62, REMOVAL, Rear Quarter Trim.>
3) Remove the fuel pump control unit.

- Wagon model

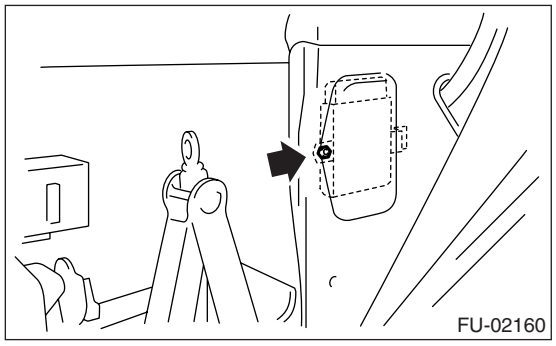

- Sedan model

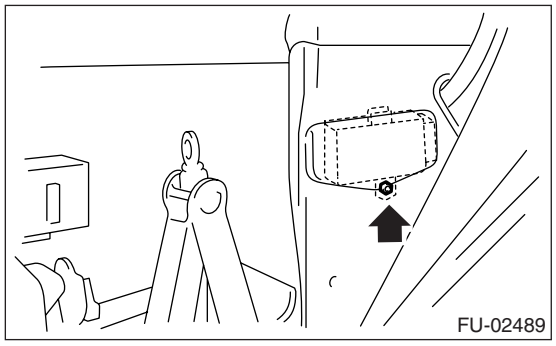

4) Disconnect the connector from fuel pump control unit.

B: INSTALLATION

Install in the reverse order of removal.

21.Fuel

A: PROCEDURE

1. RELEASING OF FUEL PRESSURE

WARNING:
- **Place "NO FIRE" signs near the working area.**
- **Be careful not to spill fuel on the floor.**

1) Remove the fuse of fuel pump from main fuse box.

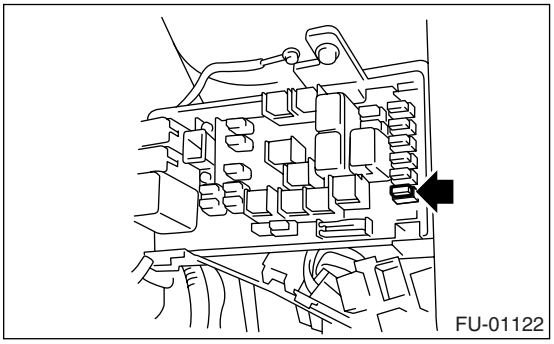

2) Start the engine and run until it stalls.
3) After the engine stalls, crank it for five more seconds.
4) Turn the ignition switch to OFF.

2. DRAINING FUEL

WARNING:
- **Place "NO FIRE" signs near the working area.**
- **Be careful not to spill fuel on the floor.**

1) Set the vehicle on a lift.
2) Disconnect the ground cable from battery.

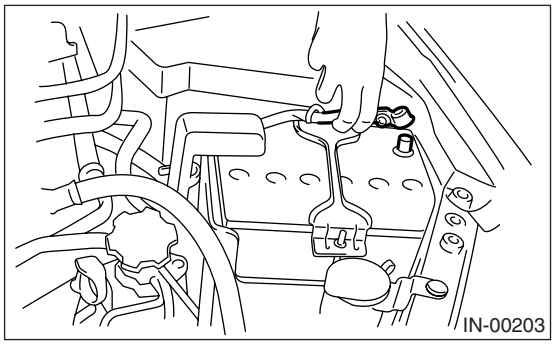

3) Open the fuel filler flap lid, and remove the fuel filler cap.
4) Lift-up the vehicle.
5) Remove the fuel tank protector.
6) Set a container under the vehicle, and remove the drain plugs from fuel tank to drain the fuel from fuel tank.

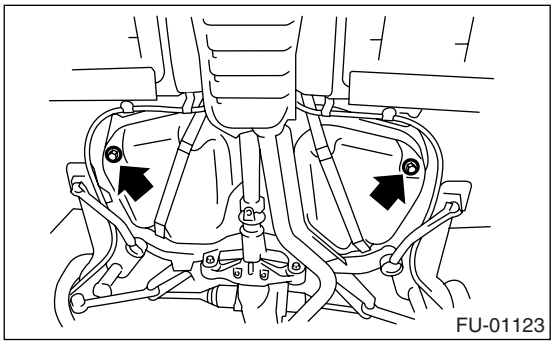

7) Tighten the fuel drain plug.

NOTE:
Use a new gasket.

Tightening torque:
26 N·m (2.65 kgf-m, 19.2 ft-lb)

8) Install the fuel tank protector.

NOTE:
Use a new nut.

Tightening torque:
Nut
9 N·m (0.9 kgf-m, 6.6 ft-lb)
Bolt
17.5 N·m (1.78 kgf-m, 12.9 ft-lb)

22.Fuel Tank

A: REMOVAL

WARNING:
- **Place "NO FIRE" signs near the working area.**
- **Be careful not to spill fuel on the floor.**

1) Set the vehicle on a lift.
2) Release the fuel pressure.
<Ref. to FU(H6DO)-39, RELEASING OF FUEL PRESSURE, PROCEDURE, Fuel.>
3) Drain fuel from the fuel tank.
<Ref. to FU(H6DO)-39, DRAINING FUEL, PROCEDURE, Fuel.>
4) Remove the rear seat.
5) Remove the service hole cover from fuel pump.

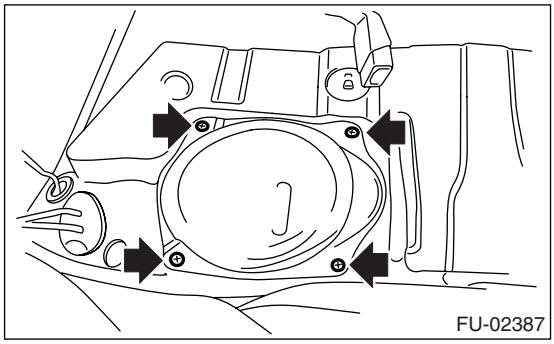
FU-02387

6) Disconnect the connector from fuel pump.

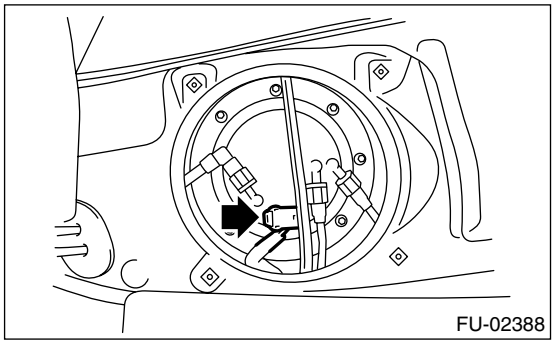
FU-02388

7) Remove the connectors (A) and clips (B).

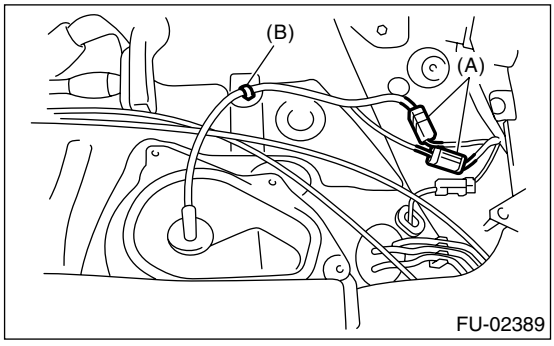

FU-02389

8) Remove the service hole cover from fuel sub level sensor.
(1) Remove the bolts (A).
(2) Push the grommet (B) down under the body and remove service hole cover.

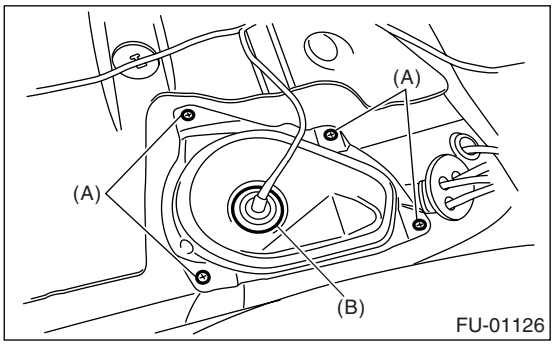

FU-01126

9) Disconnect the connector (A) from fuel sub level sensor.
10) Disconnect the quick connector from the fuel delivery (B) and return hose (C). <Ref. to FU(H6DO)-55, REMOVAL, Fuel Delivery, Return and Evaporation Lines.>

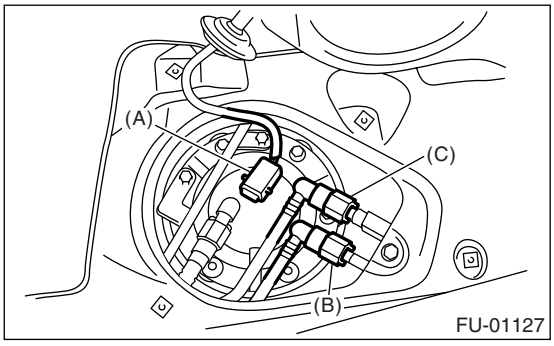

FU-01127

11) Remove the trunk room trim. (Sedan model)
<Ref. to EI-70, REMOVAL, Trunk Room Trim.>
12) Remove the rear quarter trim. (Wagon model)
<Ref. to EI-62, WAGON MODEL, REMOVAL, Rear Quarter Trim.>
13) Remove the pipe protector.

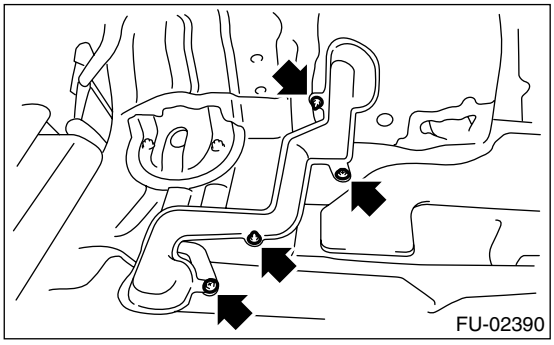
FU-02390

14) Remove the grommet and disconnect the quick connector of evaporation pipe. <Ref. to FU(H6DO)-55, REMOVAL, Fuel Delivery, Return and Evaporation Lines.>

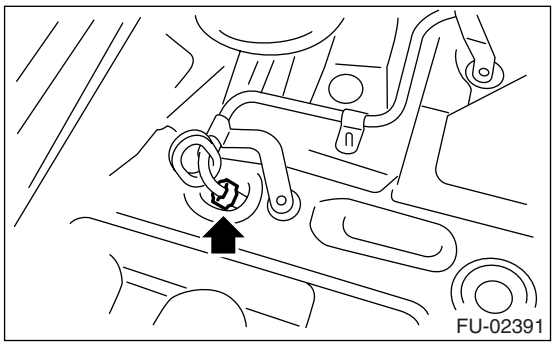

15) Remove the rear wheels.
16) Remove the bolts which secure the rear brake hose installation bracket.

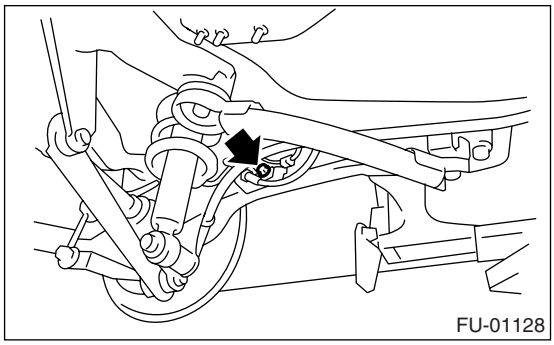

17) Remove the rear brake caliper and tie it to the vehicle body side.

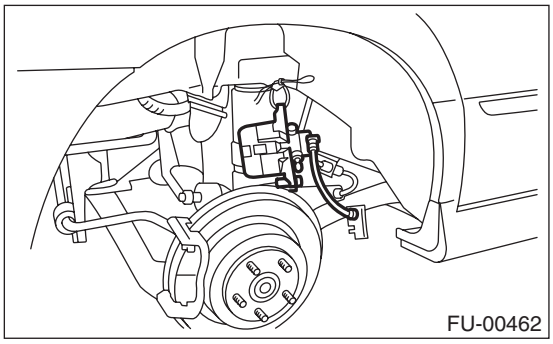

18) Remove the parking brake cable from parking brake assembly. <Ref. to PB-6, REMOVAL, Parking Brake Assembly (Rear Disc Brake).>
19) Lift-up the vehicle.
20) Remove the rear exhaust pipe.
<Ref. to EX(H6DO)-7, REMOVAL, Rear Exhaust Pipe.>
21) Remove the propeller shaft. <Ref. to DS-10, REMOVAL, Propeller Shaft.>
22) Remove the heat shield cover.

23) Disconnect the connector from rear ABS wheel speed sensor.

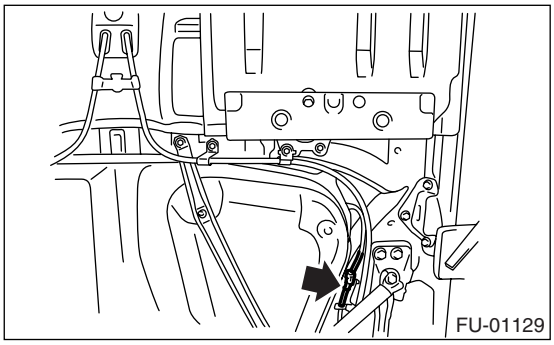

24) Remove the bolts which install the parking brake cable clamp.

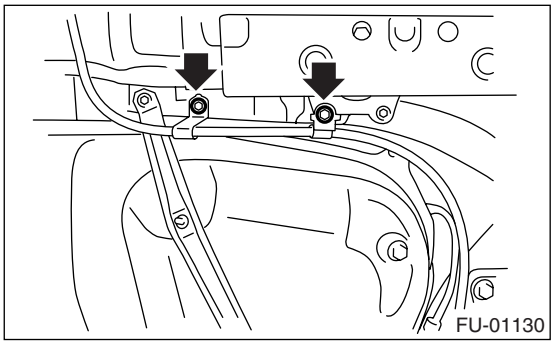

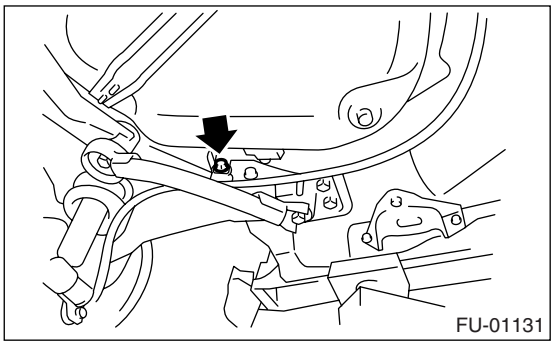

25) Remove the rear suspension assembly.

CAUTION:
A helper is required to perform this work.

(1) Support the rear differential with transmission jack.
(2) Remove the bolt which installs the rear shock absorber to rear suspension arm.

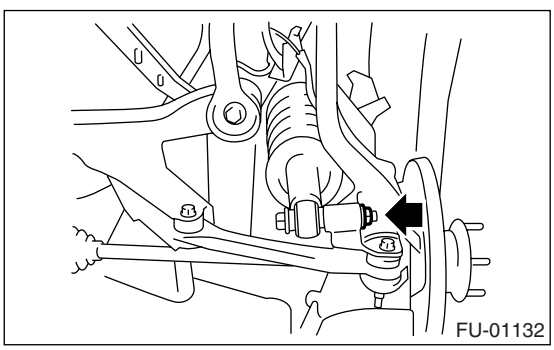

(3) Remove the bolts which secure the rear suspension assembly to body.

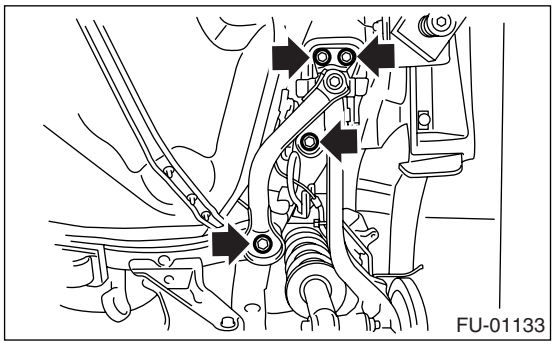

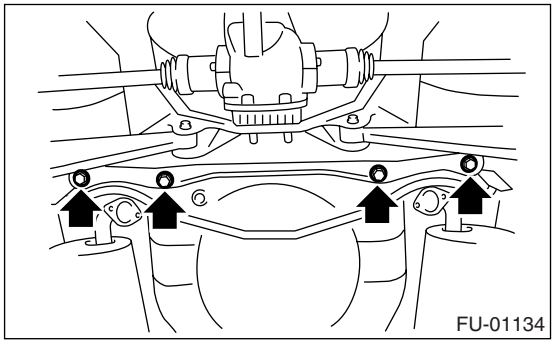

(4) Remove the rear suspension assembly.

26) Disconnect the connector.

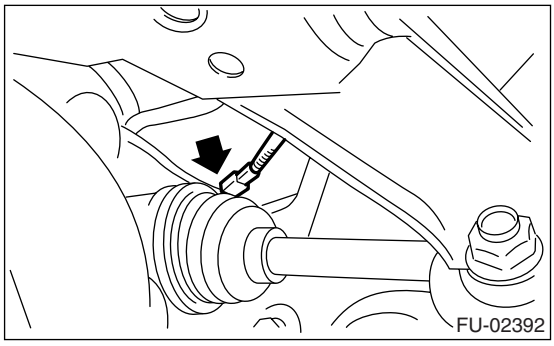

27) Disconnect the evaporation hose.

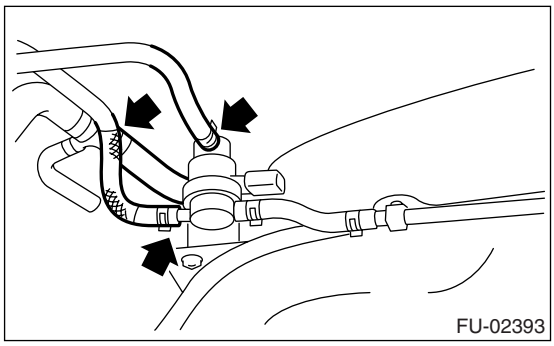

28) Disconnect the fuel filler hoses (A) and evaporation hoses (B).

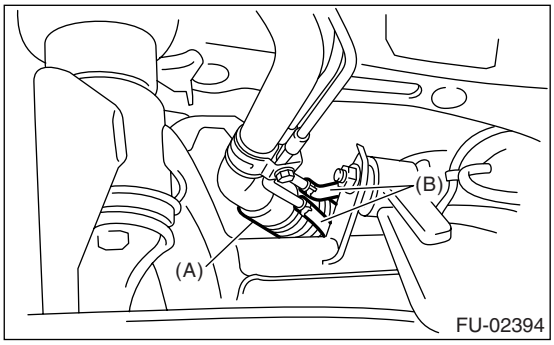

29) Support the fuel tank with transmission jack, remove the bolts from fuel tank bands, and dismount the fuel tank from vehicle.

WARNING:
A helper is required to perform this work.

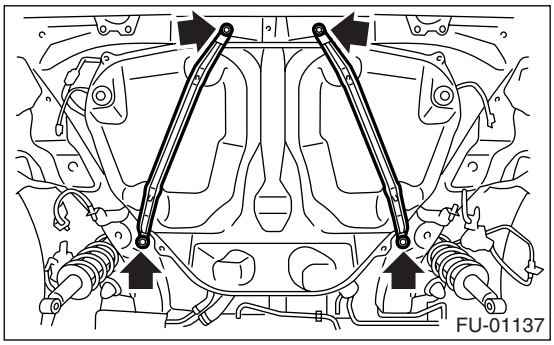

B: INSTALLATION

1) Support the fuel tank with transmission jack, set the fuel tank, and then temporarily tighten the bolts of fuel tank band.

WARNING:
A helper is required to perform this work.

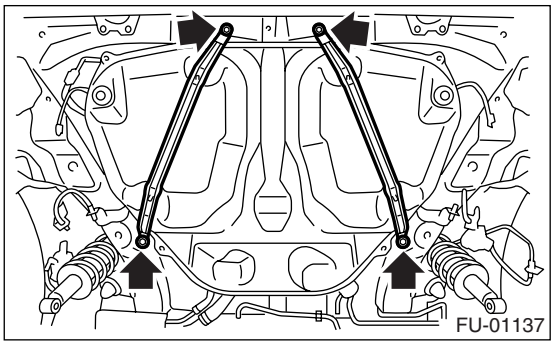

2) Correctly insert the fuel filler hose (A) and evaporation hose (B) to specified position, and then tighten the clamp.

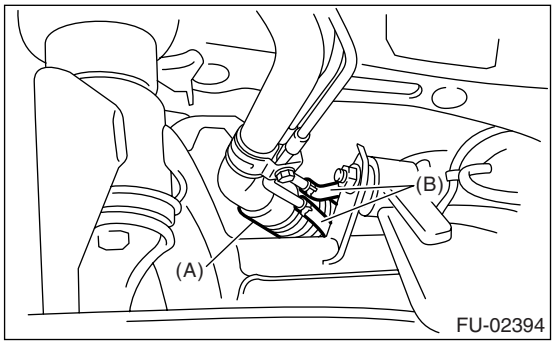

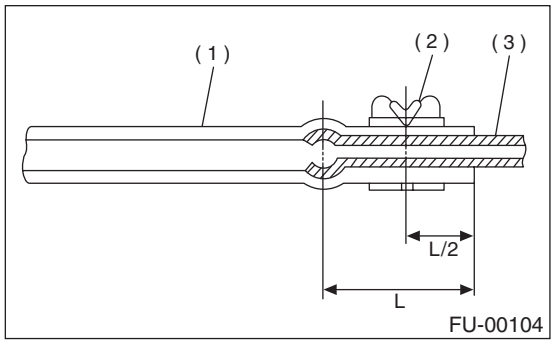

(1) Hose
(2) Clip or clamp
(3) Pipe

3) Connect the evaporation hose.

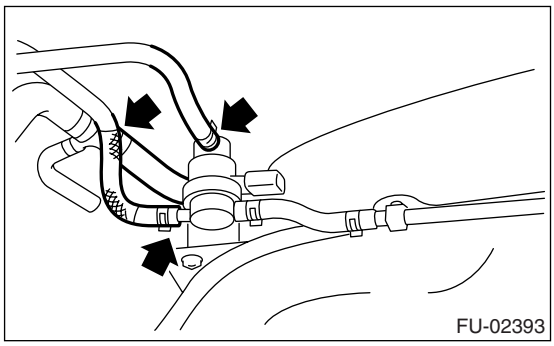

4) Tighten the bolts of fuel tank band.

Tightening torque:
33 N·m (3.4 kgf-m, 25 ft-lb)

5) Connect the connector.

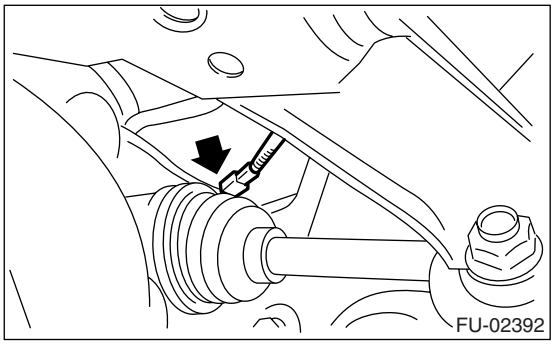

6) Install the rear suspension assembly.

CAUTION:
A helper is required to perform this work.

(1) Support the rear differential with transmission jack.
(2) Support the rear suspension assembly, and then tighten the bolts which secure the rear suspension assembly to body.

Tightening torque:
T1: 125 N·m (12.7 kgf-m, 92.2 ft-lb)
T2: 65 N·m (6.2 kgf-m, 48 ft-lb)
T3: 175 N·m (17.8 kgf-m, 129 ft-lb)

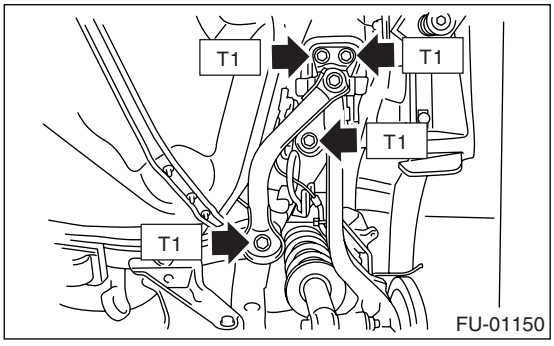

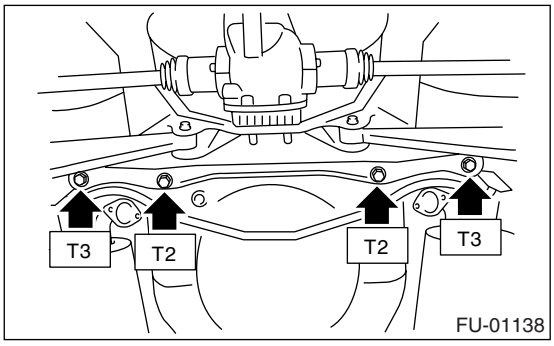

(3) Tighten the bolts which install the rear shock absorber to rear suspension arm. <Ref. to RS-11, INSTALLATION, Rear Arm.>

Tightening torque:
62 N·m (6.3 kgf-m, 46 ft-lb)

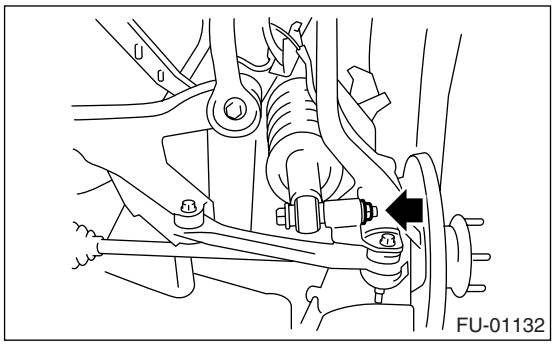

7) Tighten the bolts which install the parking brake cable clamp.

Tightening torque:
18 N·m (1.8 kgf-m, 13.3 ft-lb)

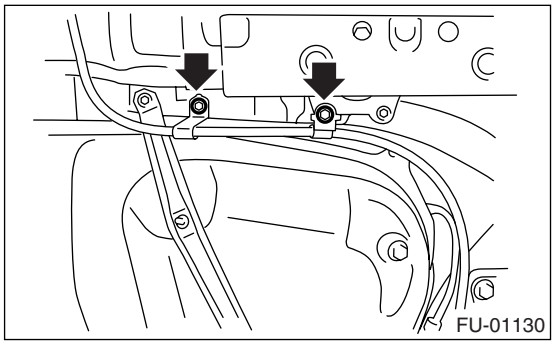

Tightening torque:
32 N·m (3.3 kgf-m, 23.9 ft-lb)

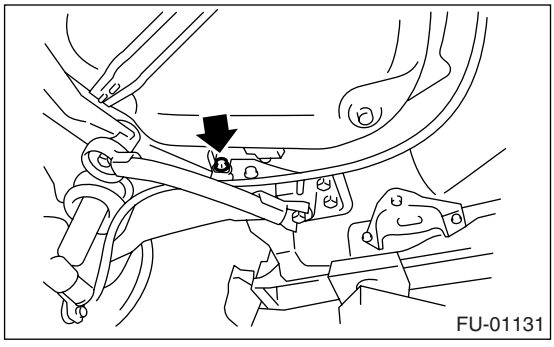

8) Connect the connector to rear ABS wheel speed sensor.

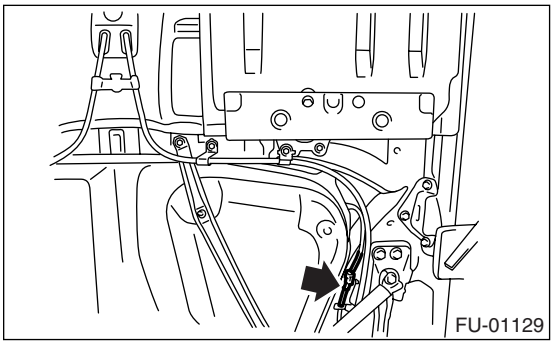

9) Install the heat shield cover.

10) Install the propeller shaft. <Ref. to DS-11, INSTALLATION, Propeller Shaft.>
11) Install the rear exhaust pipe. <Ref. to EX(H6DO)-7, INSTALLATION, Rear Exhaust Pipe.>
12) Lower the vehicle.
13) Connect the parking brake cable to parking brake assembly. <Ref. to PB-7, INSTALLATION, Parking Brake Assembly (Rear Disc Brake).>
14) Install the rear brake caliper.
15) Tighten the bolt which secures rear brake hose installation bracket.

Tightening torque:
33 N·m (3.4 kgf-m, 25 ft-lb)

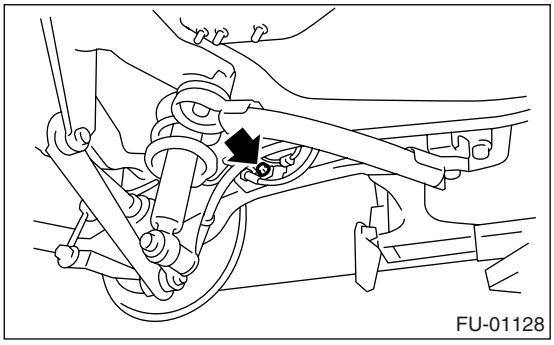

16) Install the rear wheels.
17) Lower the vehicle.
18) Connect the quick connector of evaporation pipe. <Ref. to FU(H6DO)-56, INSTALLATION, Fuel Delivery, Return and Evaporation Lines.>

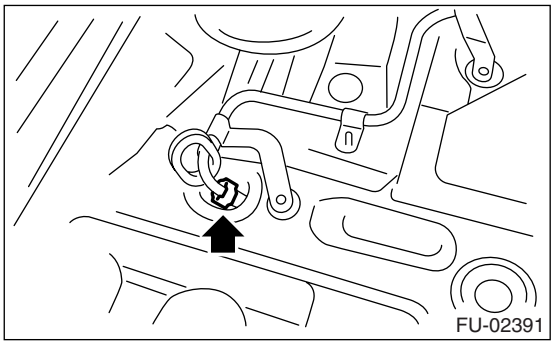

19) Install pipe protector.

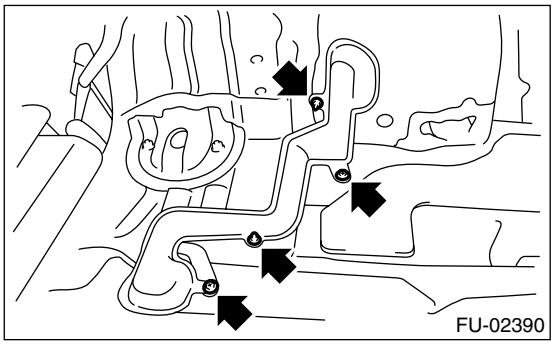

20) Install trunk room trim. (Sedan model) <Ref. to EI-71, INSTALLATION, Trunk Room Trim.>

21) Install the rear quarter trim. (Wagon model) <Ref. to EI-63, WAGON MODEL, INSTALLATION, Rear Quarter Trim.>
22) Connect the connector (A) to fuel sub level sensor.
23) Connect the quick connector to the fuel delivery (B) and return hose (C). <Ref. to FU(H6DO)-56, INSTALLATION, Fuel Delivery, Return and Evaporation Lines.>

NOTE:
Be careful not to misconnect the delivery side and return side.

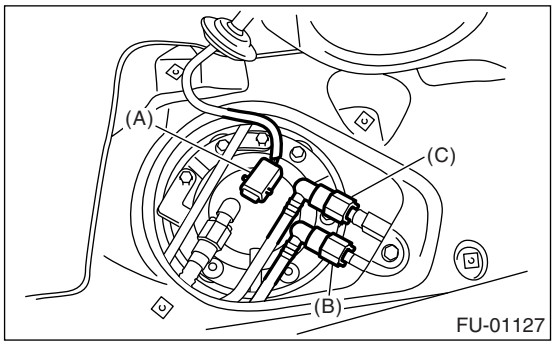

24) Install the service hole cover of fuel sub level sensor.

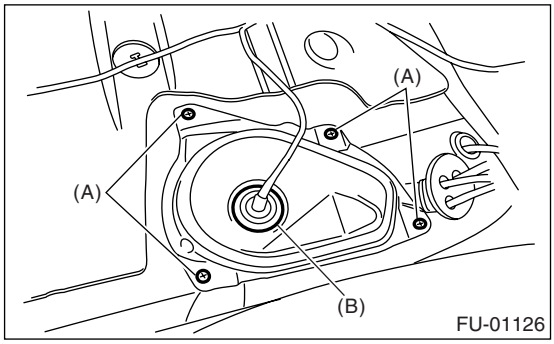

(A) Bolt
(B) Grommet

25) Connect the connector (A) and remove the clips (B).

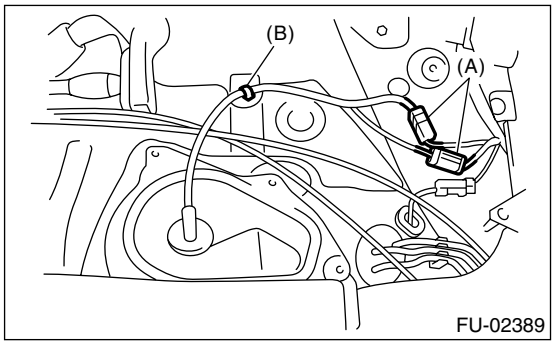

26) Connect the connector to fuel pump.

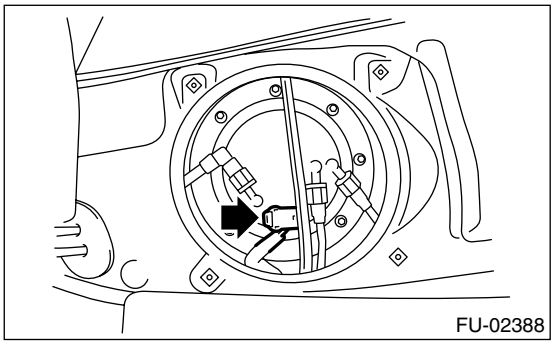

27) Install the service hole cover of fuel pump.

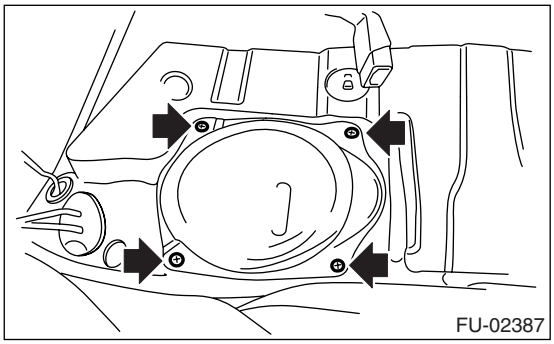

28) Install the rear seat.
29) Install the fuse of fuel pump to main fuse box.

C: INSPECTION

1) Check that the fuel tank is not holed, cracked or otherwise damaged.
2) Make sure that the fuel hoses and fuel pipes are not cracked and those connections are tight.

23.Fuel Filler Pipe

A: REMOVAL

WARNING:
- **Place "NO FIRE" signs near the working area.**
- **Be careful not to spill fuel on the floor.**

1) Disconnect the ground cable from battery.

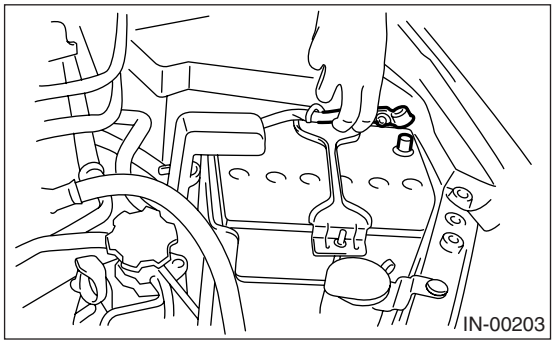

2) Open the fuel filler flap lid, and remove the filler cap.
3) Remove the screws which secure the packing.

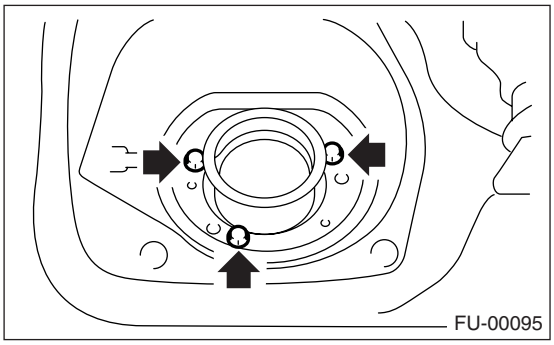

4) Lift-up the vehicle.
5) Remove the rear wheel RH.

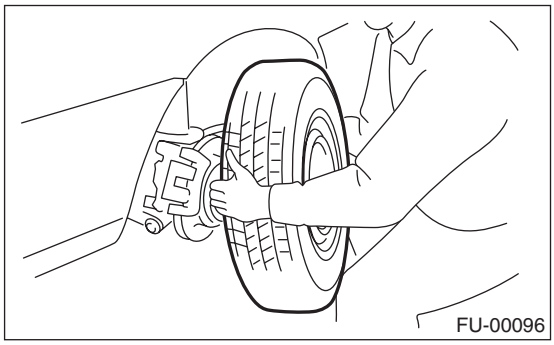

6) Drain fuel from fuel tank. <Ref. to FU(H6DO)-39, DRAINING FUEL, PROCEDURE, Fuel.>
7) Remove the mud guard. <Ref. to EI-29, REMOVAL, Mud Guard.>
8) Remove the rear sub frame. <Ref. to RS-23, REMOVAL, Rear Sub Frame.>
9) Remove the bolts which hold the fuel filler pipe bracket on the body.

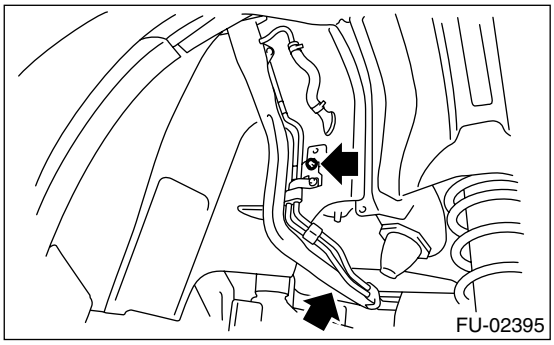

10) Loosen the clamp and disconnect the fuel filler hose (A) and evaporation hose (B).

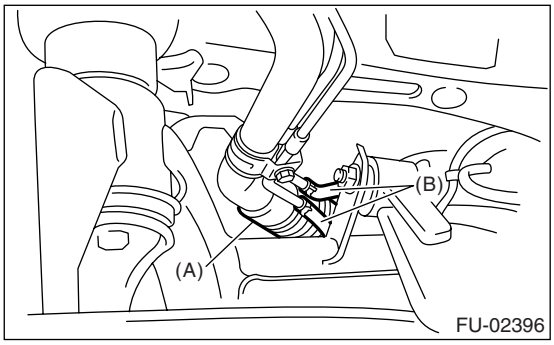

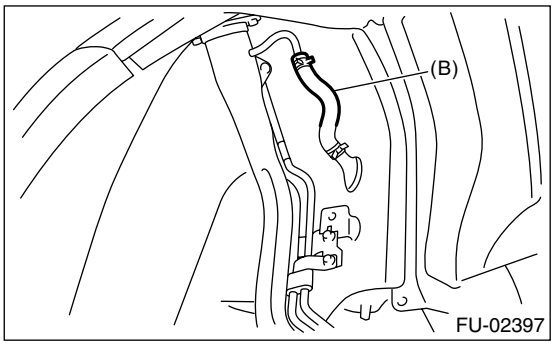

11) Remove the fuel filler pipe to under side of the vehicle.

B: INSTALLATION

1) Open the fuel filler flap lid.
2) Set the fuel saucer (A) with rubber packing (C) and insert the fuel filler pipe into hole from the inner side of apron.
3) Align the holes in fuel filler pipe neck and set the cup (B), and tighten the screws.

NOTE:
If the edges of rubber packing are folded toward the inside, straighten it with a flat tip screwdriver.

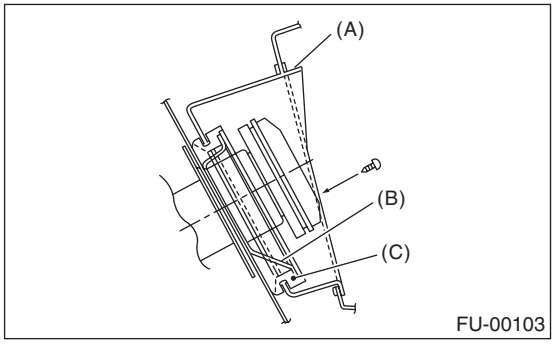

4) Correctly insert the fuel filler hose (A) and evaporation hose (B) to specified position, and then tighten the clamp.

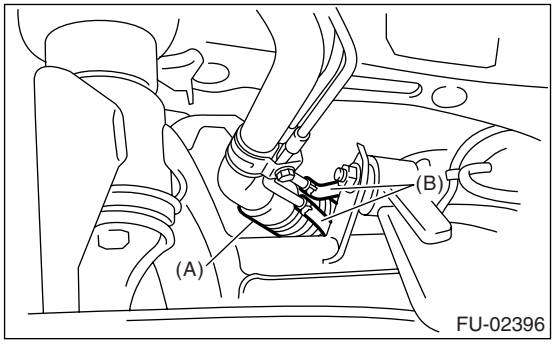

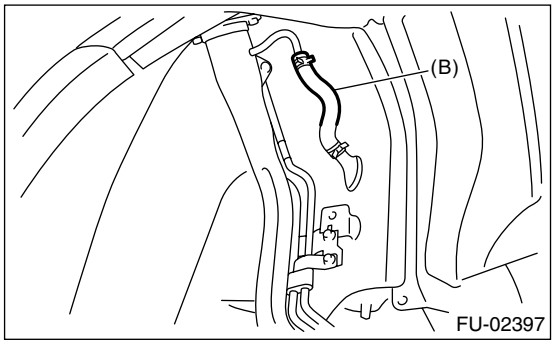

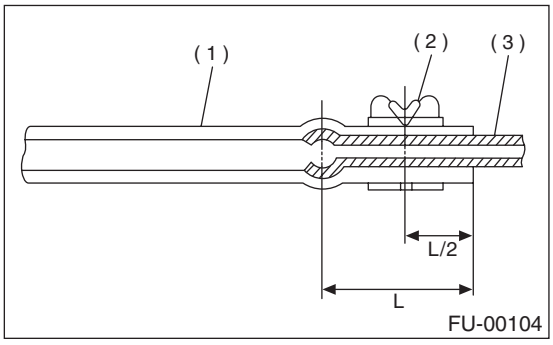

(1) Hose
(2) Clip or clamp
(3) Pipe

5) Tighten the bolts which hold the fuel filler pipe bracket on the body.

Tightening torque:
7.5 N·m (0.76 kgf-m, 5.5 ft-lb)

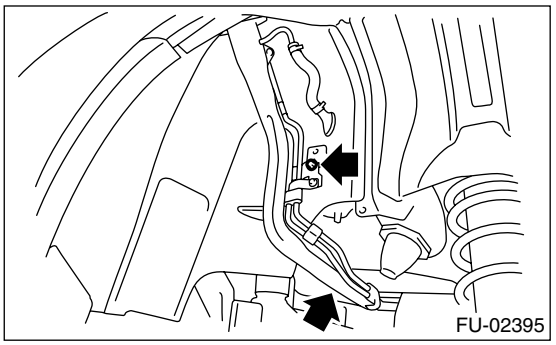

6) Install the rear sub frame. <Ref. to RS-23, INSTALLATION, Rear Sub Frame.>
7) Install the mud guard. <Ref. to EI-29, INSTALLATION, Mud Guard.>
8) Install the rear wheel RH.

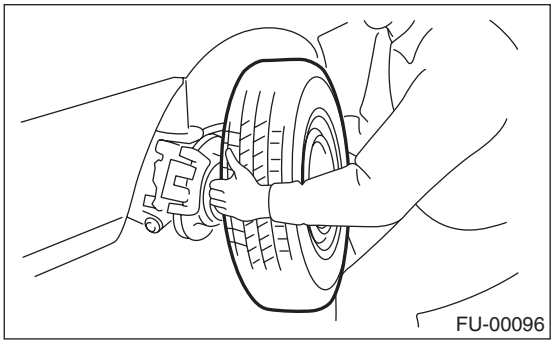

9) Lower the vehicle.
10) Connect the battery ground cable to battery.

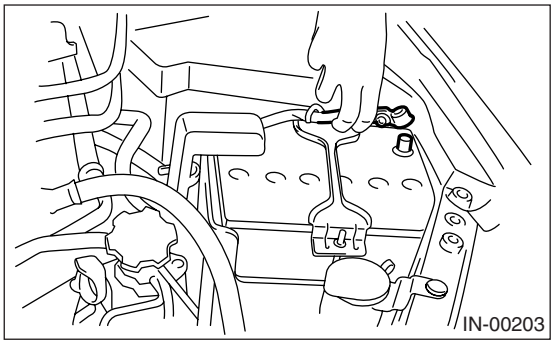

C: DISASSEMBLY

1) Move the clamp, and disconnect the evaporation hose from shut valve.

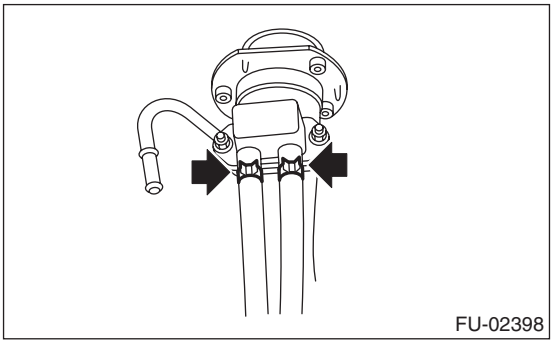

2) Remove the nut which holds the evaporation pipe assembly to fuel filler pipe.

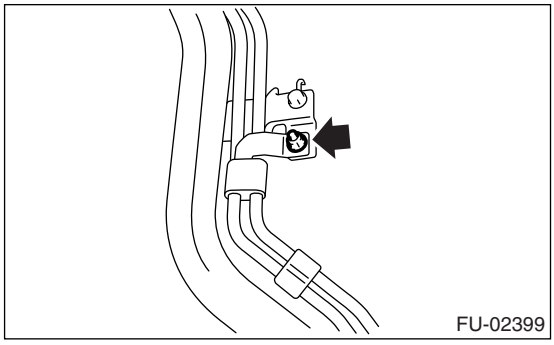

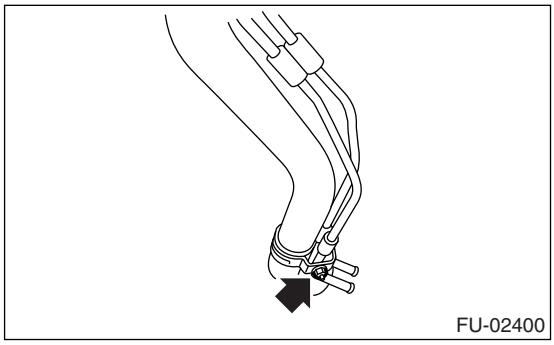

3) Remove the shut valve from fuel filler pipe. <Ref. to EC(H4SO)-15, REMOVAL, Shut Valve.>

D: ASSEMBLY

1) Install the shut valve to fuel filler pipe. <Ref. to EC(H4SO)-15, INSTALLATION, Shut Valve.>
2) Tighten the nut which holds the evaporation pipe assembly to fuel filler pipe.

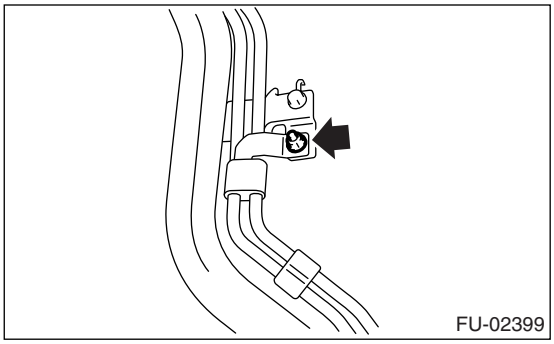

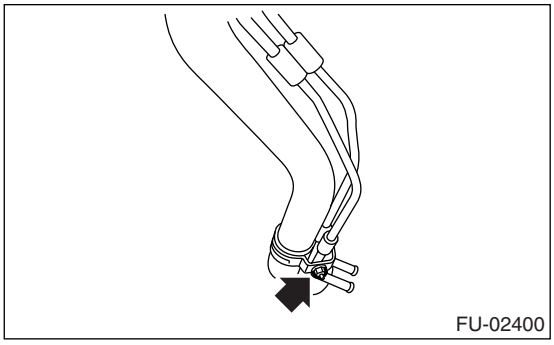

3) Connect the evaporation hose to shut valve.

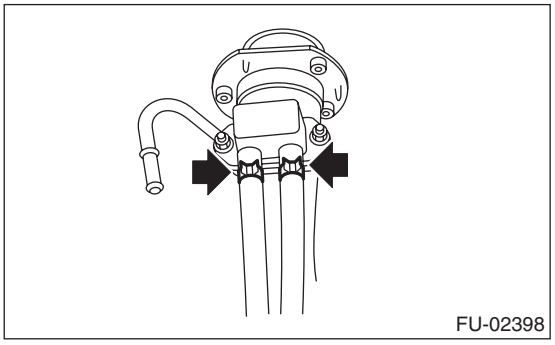

24.Fuel Pump

A: REMOVAL

WARNING:
- **Place "NO FIRE" signs near the working area.**
- **Be careful not to spill fuel on the floor.**

NOTE:
Fuel pump assembly consists of fuel pump and fuel level sensor.

1) Release the fuel pressure.
<Ref. to FU(H6DO)-39, RELEASING OF FUEL PRESSURE, PROCEDURE, Fuel.>
2) Drain the fuel. <Ref. to FU(H6DO)-39, DRAINING FUEL, PROCEDURE, Fuel.>
3) Remove the rear seat.
4) Remove the service hole cover.

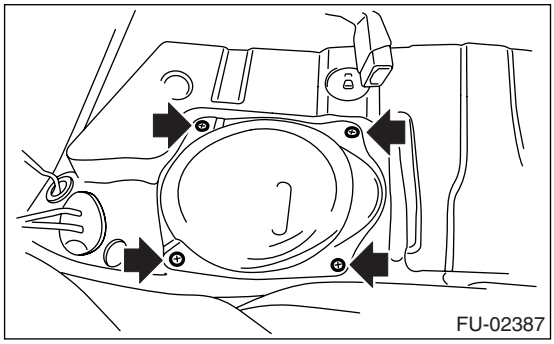
FU-02387

5) Disconnect the connector from fuel pump.

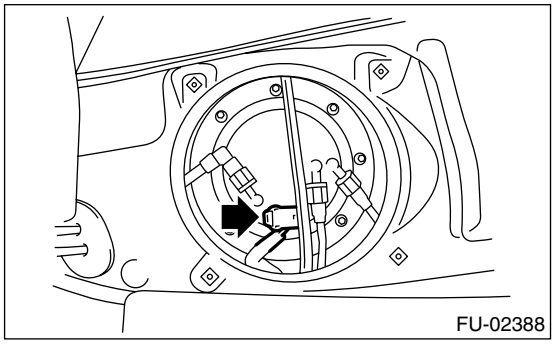
FU-02388

6) Disconnect the quick connector and then disconnect the fuel delivery hose, return hose and jet pump hose. <Ref. to FU(H6DO)-55, REMOVAL, Fuel Delivery, Return and Evaporation Lines.>

7) Remove the nuts which install the fuel pump assembly onto fuel tank.

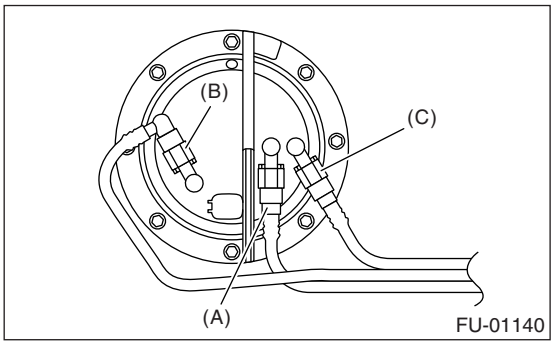

FU-01140

(A) Delivery hose
(B) Return hose
(C) Jet pump hose

8) Take off the fuel pump assembly from fuel tank.

B: INSTALLATION

Install in the reverse order of removal.

NOTE:
Use a new gasket.
(1) Ensure the sealing portion is free from fuel or foreign particles before installation.
(2) Tighten the nuts to specified torque in the order as shown in the figure.

Tightening torque:
4.4 N·m (0.45 kgf-m, 3.2 ft-lb)

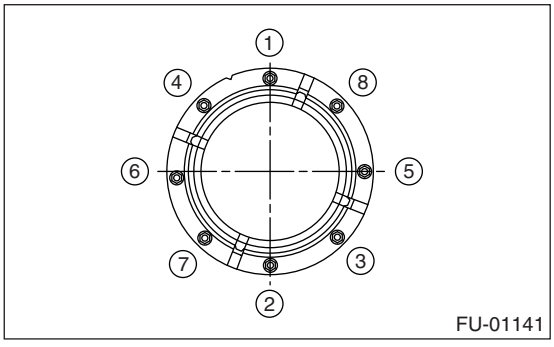

FU-01141

C: INSPECTION

Connect the lead harness to the connector terminal of fuel pump and apply the battery power supply to check whether the pump operates.

WARNING:
- **Wipe off the fuel completely.**
- **Keep battery as far apart from fuel pump as possible.**
- **Be sure to turn the battery supply to ON and OFF on the battery side.**

• Do not run fuel pump for a long time under non-load condition.

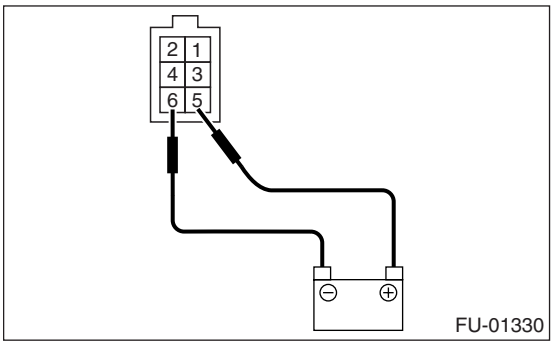

25.Fuel Level Sensor

A: REMOVAL

WARNING:
- **Place “NO FIRE” signs near the working area.**
- **Be careful not to spill fuel on the floor.**

NOTE:
Fuel level sensor is built in fuel pump assembly.

1) Remove the fuel pump assembly. <Ref. to FU(H6DO)-49, REMOVAL, Fuel Pump.>
2) Disconnect the connector from fuel pump bracket.
3) Remove the fuel temperature sensor.
4) Remove the fuel level sensor.

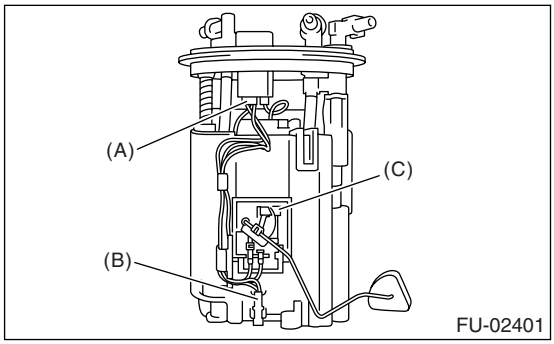

(A) Connector
(B) Fuel temperature sensor
(C) Fuel level sensor

B: INSTALLATION

Install in the reverse order of removal.

26.Fuel Sub Level Sensor

A: REMOVAL

WARNING:
- **Place "NO FIRE" signs near the working area.**
- **Be careful not to spill fuel on the floor.**

1) Drain fuel. <Ref. to FU(H6DO)-39, DRAINING FUEL, PROCEDURE, Fuel.>
2) Remove the rear seat.
3) Remove the service hole cover.
   (1) Remove the bolts (A).
   (2) Push the grommet (B) down under the body and remove the service hole cover.

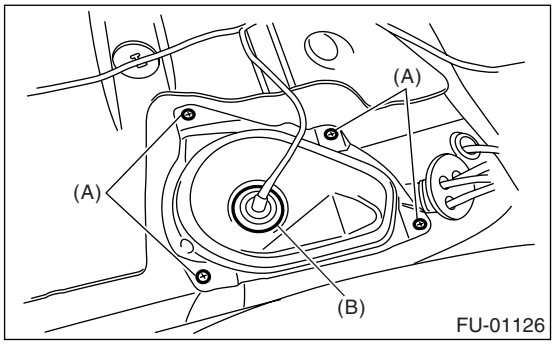

4) Disconnect the connector from fuel sub level sensor.

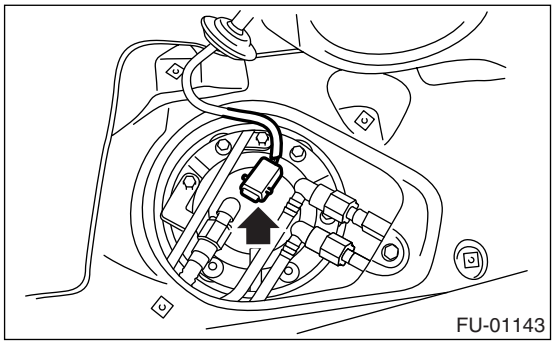

5) Disconnect the quick connector and then disconnect the fuel delivery hose, return hose and jet pump hose. <Ref. to FU(H6DO)-55, REMOVAL, Fuel Delivery, Return and Evaporation Lines.>

6) Remove the nuts and bolts which install the fuel sub level sensor on fuel tank.

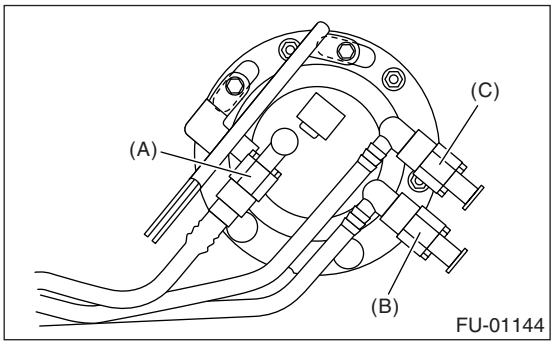

(A) Jet pump hose
(B) Delivery hose
(C) Return hose

7) Remove the fuel sub level sensor.

B: INSTALLATION

Install in the reverse order of removal.

NOTE:
Use a new gasket.
(1) Ensure the sealing portion is free from fuel or foreign particles before installation.
(2) Tighten the nuts and bolts to specified torque in the order as shown in the figure.

Tightening torque:
4.4 N·m (0.45 kgf-m, 3.2 ft-lb)

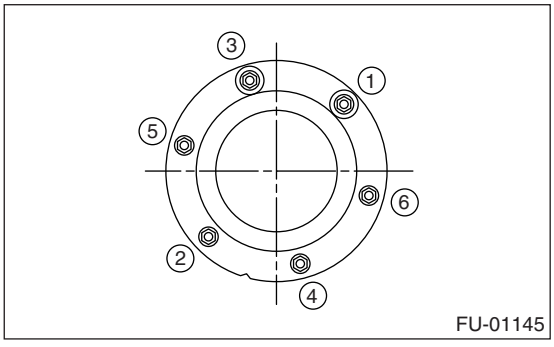

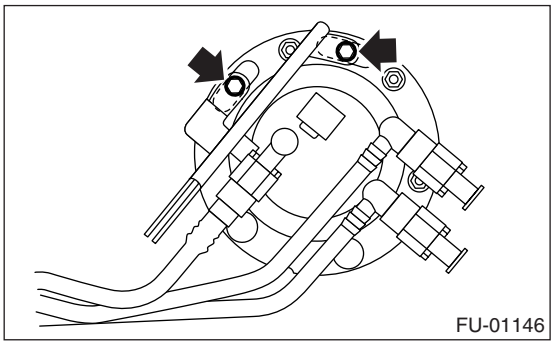

27.Fuel Filter

A: SPECIFICATION

Fuel filter forms a unit with fuel pump.
Refer to Fuel Pump for removal and installation procedures.
<Ref. to FU(H6DO)-49, REMOVAL, Fuel Pump.>
<Ref. to FU(H6DO)-49, INSTALLATION, Fuel Pump.>

28.Fuel Bypass Valve

A: REMOVAL

1) Release the fuel pressure. <Ref. to FU(H6DO)-39, RELEASING OF FUEL PRESSURE, PROCEDURE, Fuel.>
2) Disconnect the pressure regulator vacuum hose.
3) Disconnect the fuel delivery line and return line from fuel bypass valve.
4) Remove the fuel bypass valve from vehicle body.
5) Disconnect the fuel delivery hose and fuel return hose from fuel bypass valve.

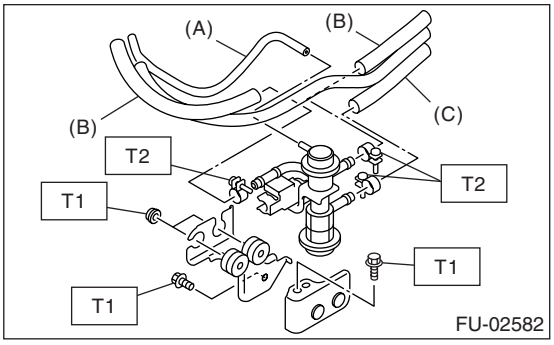

(A) Pressure regulator vacuum hose
(B) Fuel delivery line
(C) Fuel return line

B: INSTALLATION

Install in the reverse order of removal.

Tightening torque:
T1: 7.5 N·m (0.76 kgf-m, 5.5 ft-lb)
T2: 1.25 N·m (0.13 kgf-m, 0.94 ft-lb)

29.Fuel Delivery, Return and Evaporation Lines

A: REMOVAL

1) Set the vehicle on a lift.
2) Release the fuel pressure. <Ref. to FU(H6DO)-39, RELEASING OF FUEL PRESSURE, PROCEDURE, Fuel.>
3) Open the fuel filler flap lid, and remove the fuel filler cap.
4) Remove the floor mat. <Ref. to EI-72, REMOVAL, Floor Mat.>
5) Disconnect the fuel delivery pipes and hoses, and then disconnect the fuel return pipes and hoses, evaporation pipes and hoses.

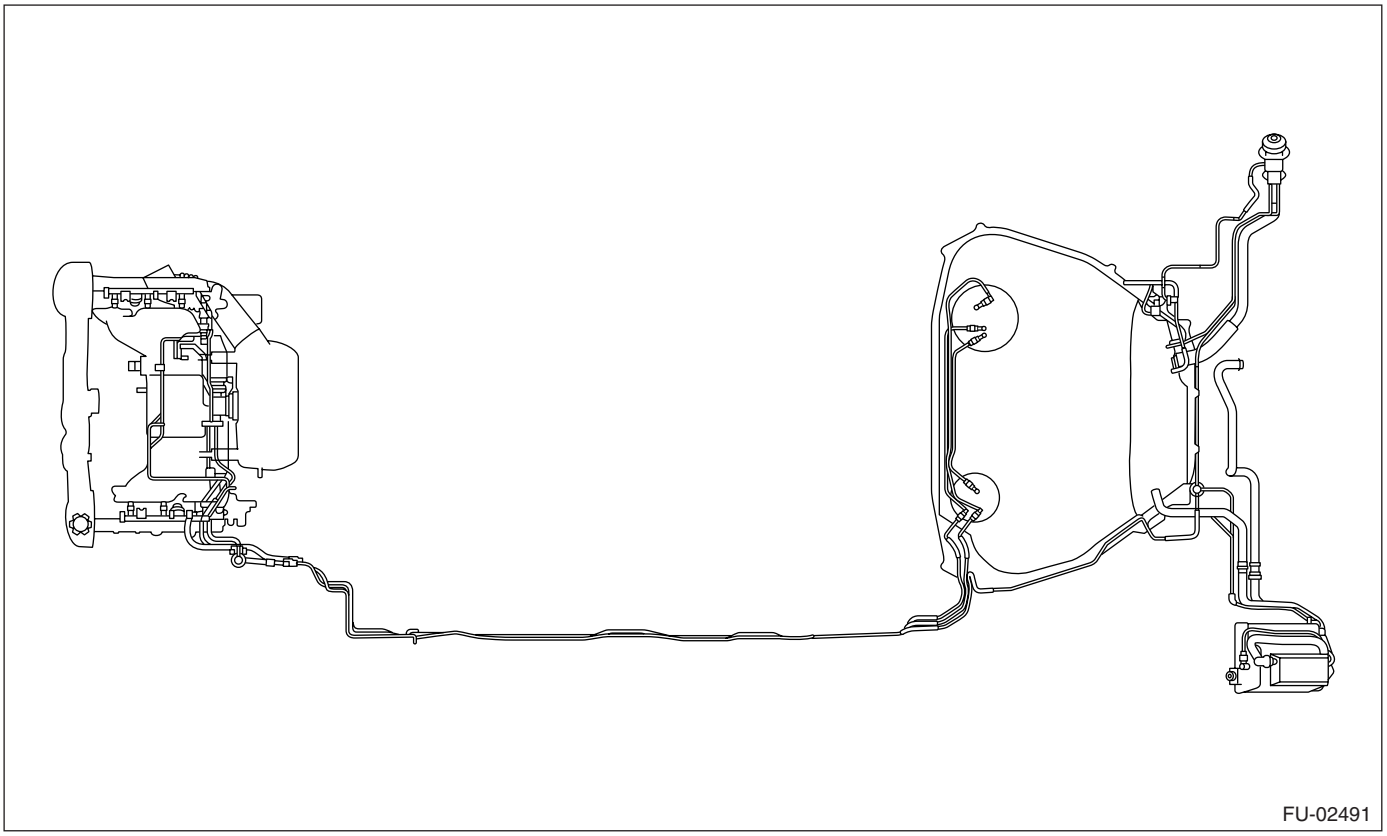
FU-02491

6) In the engine compartment, disconnect the fuel delivery hoses and evaporation hose.
   (1) Disconnect the quick connector of fuel delivery line and return line by pushing the ST in the direction of arrow.

ST 42099AE000 CONNECTOR REMOVER

   (2) Remove the clip and disconnect the evaporation hose from pipe.

WARNING:
- **Be careful not to spill fuel.**
- **Catch the fuel from hoses using a container or cloth.**

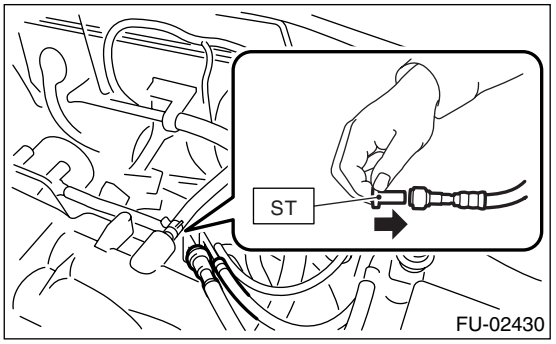

FU-02430

(A) Fuel delivery hose
(B) Return hose
(C) Evaporation hose

7) Lift-up the vehicle.

8) Remove the fuel tank. <Ref. to FU(H6DO)-40, REMOVAL, Fuel Tank.>
9) Separate the quick connector on fuel line.
(1) Clean the pipe and connector, if they are covered with dust.
(2) To prevent from damaging or entering foreign matter, wrap the pipes and connectors with plastic bag, etc.

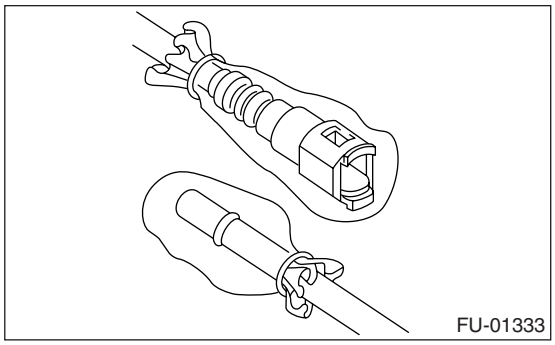

(3) Hold the connector (A) and push retainer (B) down.
(4) Pull out the connector (A) from retainer (B).

CAUTION:
Always use a new retainer except in use of engine compartment.

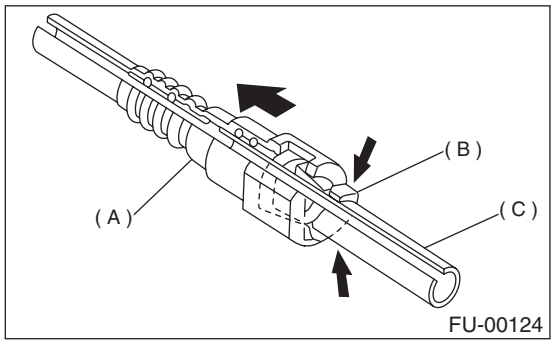

(A) Connector
(B) Retainer
(C) Pipe

B: INSTALLATION

1) Connect the quick connector on fuel line.

CAUTION:
• Always use a new retainer except in use of engine compartment.
• Make sure that the connected portion is not damaged or dust-covered. If necessary, clean the seal surface of pipe.

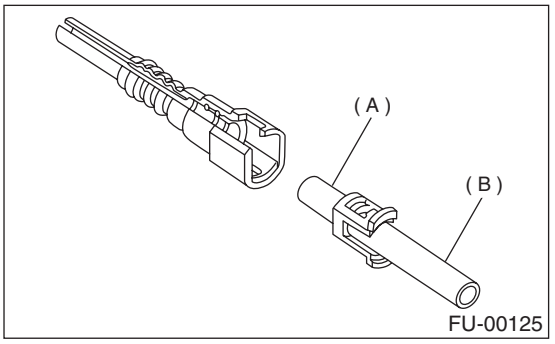

(A) Seal surface
(B) Pipe

(1) Set the new retainer (B) to connector (A).
(2) Push the pipe into the connector completely.

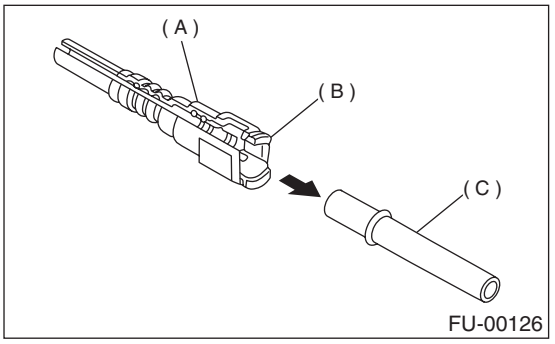

(A) Connector
(B) Retainer
(C) Pipe

CAUTION:
• Pull the connector to ensure it is connected securely.
• Ensure the two retainer pawls are engaged in their mating positions in the connector.

• Be sure to inspect the hoses and their connections for fuel leakage.

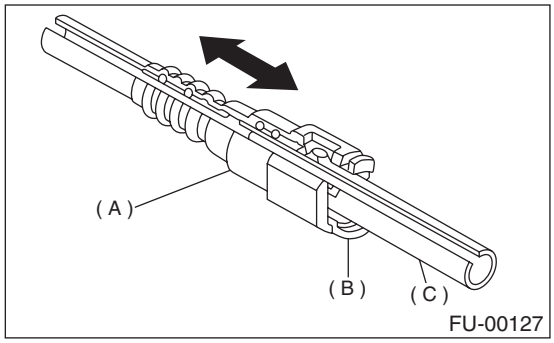

(A) Connector
(B) Retainer
(C) Pipe

2) Connect the fuel delivery hose to the pipe with an overlap of 20 to 25 mm (0.79 to 0.98 in).
Type A: When the amount to be inserted is specified.
Type B: When the amount to be inserted is not specified.

ℓ : 2.5±1.5 mm (0.098±0.059 in)

L: 22.5±2.5 mm (0.886±0.098 in)

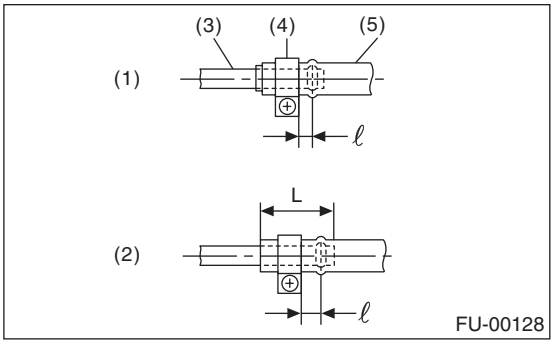

(1) Type A
(2) Type B
(3) Pipe
(4) Clamp
(5) Hose

3) Connect the return hose and evaporation hose to the pipe by approx. 15 mm (0.59 in) from hose end.

Fuel return hose:
L = 22.5±2.5 mm (0.886±0.098 in)
Fuel evaporation hose:
L = 17.5±2.5 mm (0.689±0.098 in)

CAUTION:
Be sure to inspect the hoses and their connections for fuel leakage.

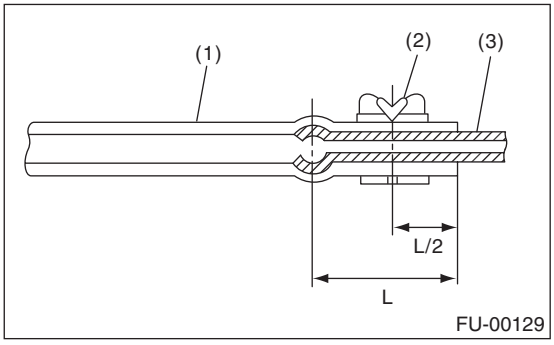

(1) Hose
(2) Clip
(3) Pipe

C: INSPECTION

1) Make sure that there are no cracks on the fuel pipes and fuel hoses.
2) Make sure the fuel pipe and fuel hose connections are tightened firmly.

30.Fuel System Trouble in General

A: INSPECTION

Trouble and possible cause		Corrective action
1. Insufficient fuel supply to injector		
1)	Fuel pump does not operate.	
	❍ Defective terminal contact	Inspect contact, especially ground, and tighten it securely.
	❍ Trouble in electromagnetic or electronic circuit parts	Replace the faulty parts.
2)	Decline of fuel pump function	Replace the fuel pump.
3)	Clogged dust or water in the fuel filter	Replace fuel filter, clean or replace fuel tank.
4)	Clogged or bent fuel pipe or hose	Clean, correct or replace the fuel pipe or hose.
5)	Air mixed in the fuel system	Inspect or retighten each connection part.
6)	Clogged or bent air breather tube or pipe	Clean, correct or replace air breather tube or pipe.
7)	Damaged diaphragm of pressure regulator	Replace.
2. Leakage or blow out of fuel		
1)	Loosened joints of the fuel pipe	Retighten.
2)	Cracked fuel pipe, hose, and fuel tank	Replace.
3)	Defective welding part on the fuel tank	Replace.
4)	Defective drain packing of the fuel tank	Replace.
5)	Clogged or bent air breather tube or air vent tube	Clean, correct or replace air breather tube or air vent tube.
3. Gasoline smell inside of compartment		
1)	Loose joints at air breather tube, air vent tube, and fuel filler pipe	Retighten.
2)	Defective packing air tightness on the fuel saucer	Correct or replace the packing.
3)	Inoperative fuel pump modulator or circuit	Replace.
4. Defective fuel meter indicator		
1)	Defective operation of fuel level sensor	Replace.
2)	Defective operation of fuel meter	Replace.
5. Noise		
1)	Large operation noise or vibration of fuel pump	Replace.

NOTE:
• When the vehicle is left unused for an extended period of time, water may accumulate in the fuel tank. Fill fuel fully to prevent those problem. And also drain the water condensation from fuel filter.
• In snow-covered areas, mountainous areas, skiing areas, etc. where ambient temperatures drop below 0°C (32°F) throughout the winter season, use water removing agent in the fuel system to prevent freezing fuel system and accumulating water. Fill the water removing agent each time the fuel is reduced to half to maintain the advantage.
• When water condensation is noticed in the fuel filter, drain the water from both the fuel filter and fuel tank or use water removing agent in the fuel tank.
• Before using water removing agent, follow the cautions noted on the bottle.

EMISSION CONTROL (AUX. EMISSION CONTROL DEVICES)

EC(H6DO)

		Page
1.	General Description	2
2.	Front Catalytic Converter	3
3.	Rear Catalytic Converter	4
4.	Canister	5
5.	Purge Control Solenoid Valve	6
6.	Fuel Level Sensor	7
7.	Fuel Temperature Sensor	8
8.	Fuel Sub Level Sensor	9
9.	Fuel Tank Pressure Sensor	10
10.	Fuel Tank Sensor Control Valve	11
11.	Pressure Control Solenoid Valve	12
12.	Drain Filter	13
13.	Shut Valve	14
14.	Drain Valve	15
15.	PCV Valve	16

1. General Description

A: CAUTION

• Wear work clothing, including a cap, protective goggles, and protective shoes during operation.
• Remove contamination including dirt and corrosion before removal, installation or disassembly.
• Keep the disassembled parts in order and protect them from dust and dirt.
• Before removal, installation or disassembly, be sure to clarify the failure. Avoid unnecessary removal, installation, disassembly and replacement.
• Be careful not to burn yourself, because each part on the vehicle is hot after running.
• Be sure to tighten fasteners including bolts and nuts to the specified torque.
• Place shop jacks or rigid racks at the specified points.
• Before disconnecting electrical connectors of sensors or units, be sure to disconnect the ground cable from battery.

2. Front Catalytic Converter

A: REMOVAL

The front and rear catalytic converters are integrated into front exhaust pipe as one unit; therefore, refer to “Front Exhaust Pipe” for removal procedure. <Ref. to EX(H6DO)-4, REMOVAL, Front Exhaust Pipe.>

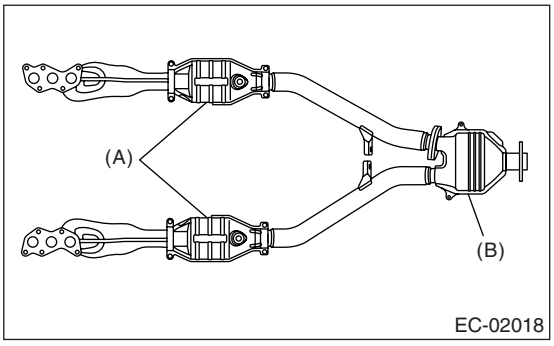

(A) Front catalytic converter
(B) Rear catalytic converter

B: INSTALLATION

The front and rear catalytic converters are integrated into front exhaust pipe as one unit; therefore, refer to “Front Exhaust Pipe” for installation procedure. <Ref. to EX(H6DO)-5, INSTALLATION, Front Exhaust Pipe.>

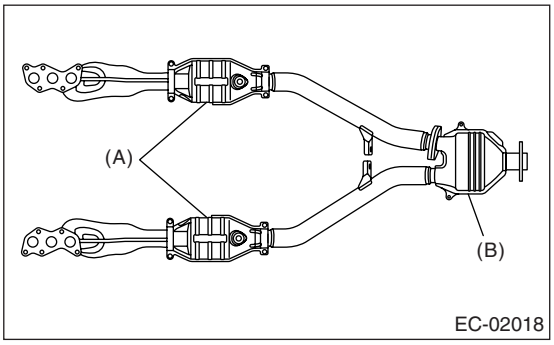

(A) Front catalytic converter
(B) Rear catalytic converter

C: INSPECTION

1) Make sure there are no exhaust leaks from connections and welds.
2) Make sure there are no holes or rusting.

3. Rear Catalytic Converter

A: REMOVAL

The front and rear catalytic converters are integrated into front exhaust pipe as one unit; therefore, refer to “Front Exhaust Pipe” for removal procedure. <Ref. to EX(H6DO)-4, REMOVAL, Front Exhaust Pipe.>

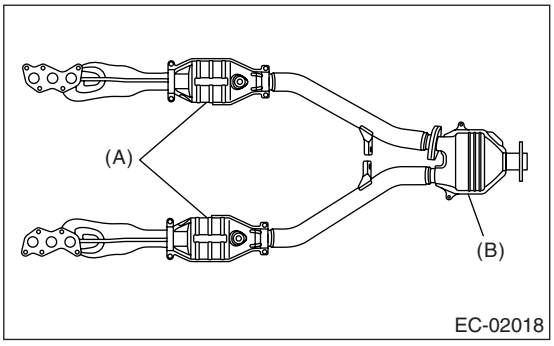

(A) Front catalytic converter
(B) Rear catalytic converter

B: INSTALLATION

The front and rear catalytic converters are integrated into front exhaust pipe as one unit; therefore, refer to “Front Exhaust Pipe” for installation procedure. <Ref. to EX(H6DO)-5, INSTALLATION, Front Exhaust Pipe.>

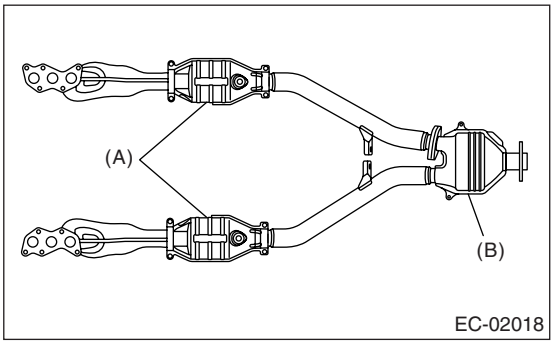

(A) Front catalytic converter
(B) Rear catalytic converter

C: INSPECTION

1) Make sure there are no exhaust leaks from connections and welds.
2) Make sure there are no holes or rusting.

4. Canister

A: REMOVAL

1) Disconnect the ground cable from battery.

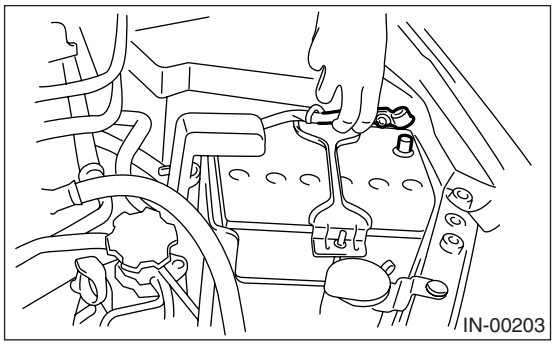

2) Lift-up the vehicle.
3) Remove the rear wheel LH.
4) Remove the mud guard LH.
5) Disconnect the quick connector (A).
6) Disconnect the drain valve connector (B).
7) Remove the clip (C).

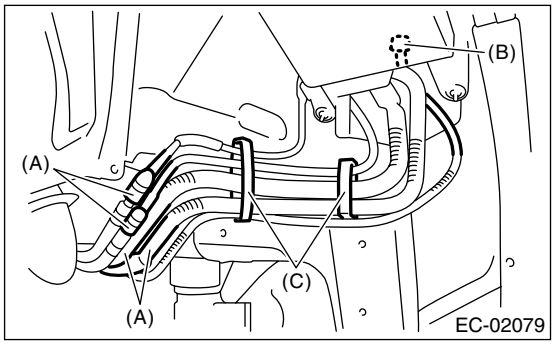

8) Remove the canister from body.

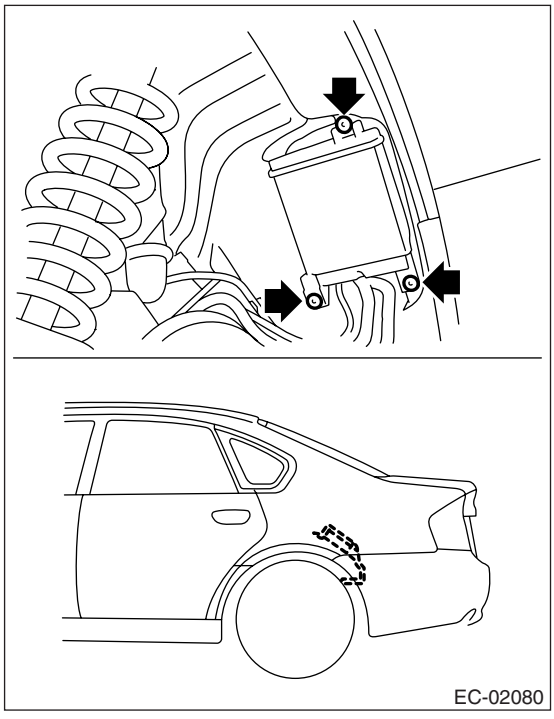

B: INSTALLATION

Install in the reverse order of removal.

NOTE:
Make sure there are no damage or dust on connection of quick connector. If necessary, clean the seal surface of pipe.

Tightening torque:
8.0 N·m (0.82 kgf-m, 5.9 ft-lb)

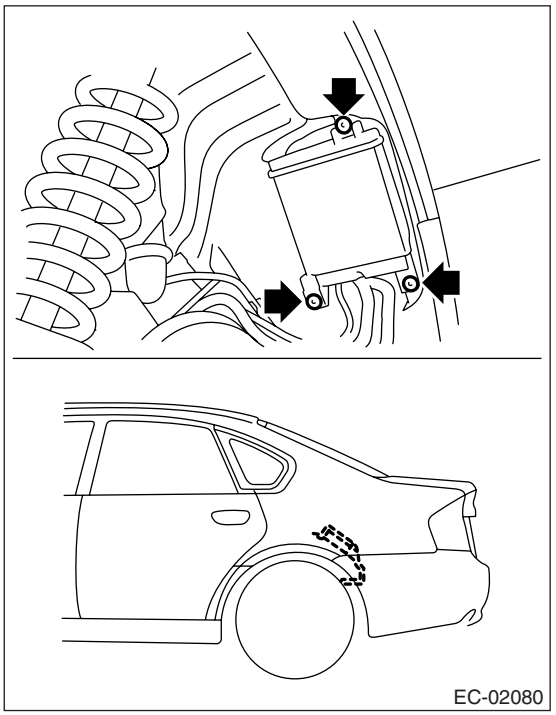

C: INSPECTION

Make sure the canister and canister hoses are not cracked or loose.

5. Purge Control Solenoid Valve

A: REMOVAL

1) Remove the collector cover.
2) Disconnect the ground cable from battery.

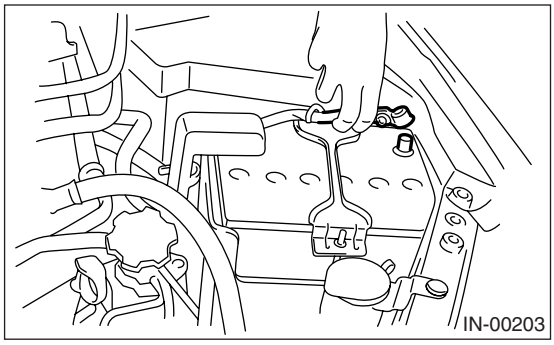

3) Remove the air intake chamber. <Ref. to IN(H6DO)-7, REMOVAL, Air Intake Chamber.>
4) Disconnect the connector and hoses of purge control solenoid valve, and then remove the purge control solenoid valve.

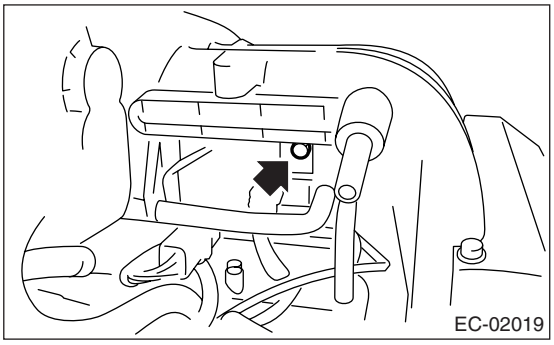

B: INSTALLATION

Install in the reverse order of removal.

Tightening torque:
19 N·m (1.9 kgf-m, 14.0 ft-lb)

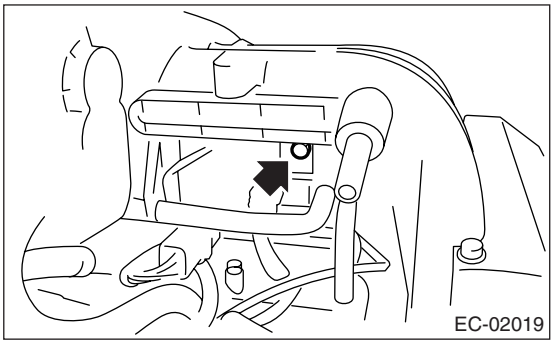

NOTE:
Connect the evaporation hose as shown in the figure.

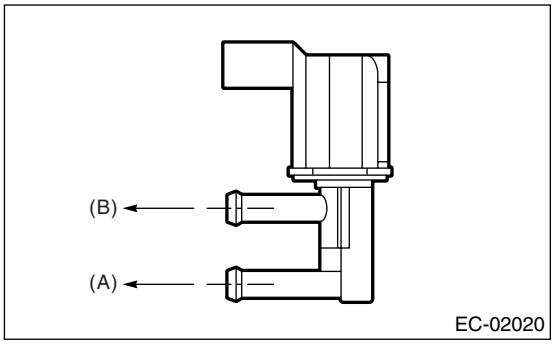

(A) To fuel pipe (Evaporation line)
(B) To intake manifold

C: INSPECTION

Make sure the hoses are not cracked or loose.

6. Fuel Level Sensor

A: REMOVAL

For removal procedure, refer to “FU(H6DO)” section. <Ref. to FU(H6DO)-51, REMOVAL, Fuel Level Sensor.>

B: INSTALLATION

For installation procedure, refer to “FU(H6DO)” section. <Ref. to FU(H6DO)-51, INSTALLATION, Fuel Level Sensor.>

7. Fuel Temperature Sensor

A: REMOVAL

The fuel temperature sensor and fuel level sensor are integrated into one unit; therefore, refer to “Fuel Level Sensor” for removal procedure. <Ref. to FU(H6DO)-51, REMOVAL, Fuel Level Sensor.>

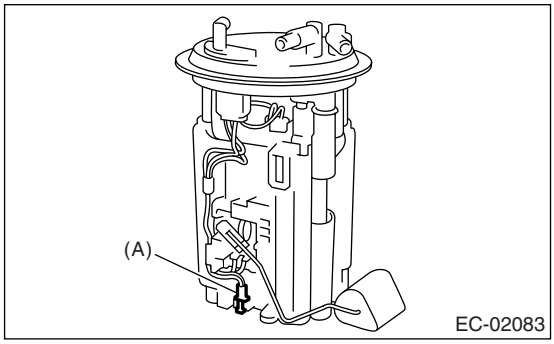

(A) Fuel temperature sensor

B: INSTALLATION

The fuel temperature sensor and fuel level sensor are integrated into one unit; therefore, refer to “Fuel Level Sensor” for installation procedure. <Ref. to FU(H6DO)-51, INSTALLATION, Fuel Level Sensor.>

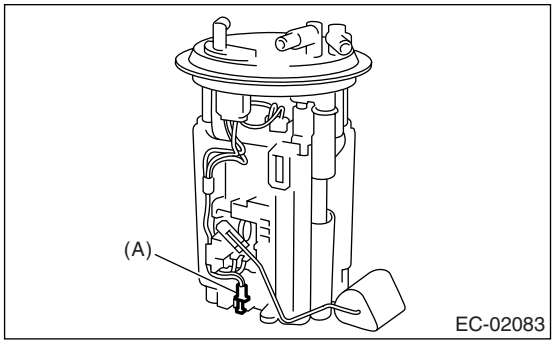

(A) Fuel temperature sensor

8. Fuel Sub Level Sensor

A: REMOVAL

For removal procedure, refer to “FU(H6DO)” section. <Ref. to FU(H6DO)-52, REMOVAL, Fuel Sub Level Sensor.>

B: INSTALLATION

For installation procedure, refer to “FU(H6DO)” section. <Ref. to FU(H6DO)-52, INSTALLATION, Fuel Sub Level Sensor.>

9. Fuel Tank Pressure Sensor

A: REMOVAL

1) Set the vehicle on the lift.
2) Open the fuel filler flap lid, and remove fuel filler cap.
3) Disconnect the battery ground cable.

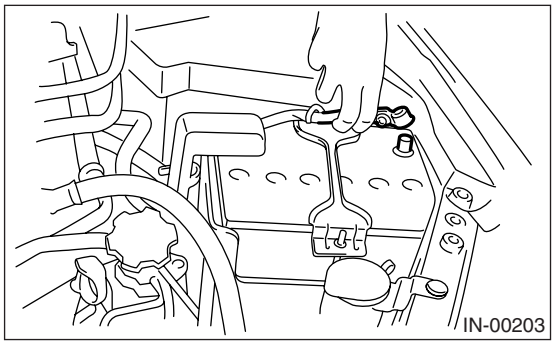

4) Lift-up the vehicle.
5) Disconnect the connector from fuel tank pressure sensor and fuel tank sensor control valve.
6) Disconnect the pressure hose from fuel tank pressure sensor.
7) Remove the fuel tank pressure sensor and fuel tank sensor control valve with bracket.

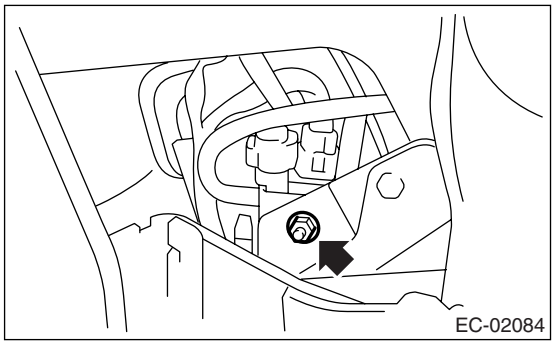

NOTE:
Replace the fuel tank pressure sensor and fuel tank sensor control valve as a unit.

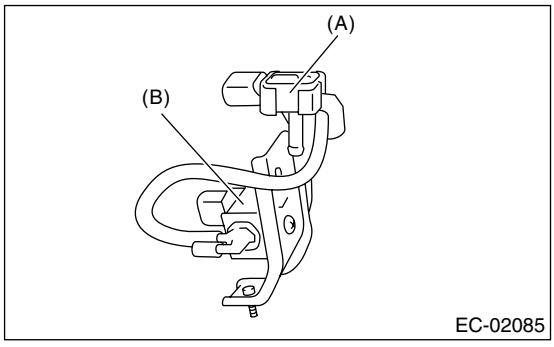

(A) Fuel tank pressure sensor
(B) Fuel tank sensor control valve

B: INSTALLATION

Install in the reverse order of removal.

Tightening torque:
7.4 N·m (0.75 kgf-m, 5.4 ft-lb)

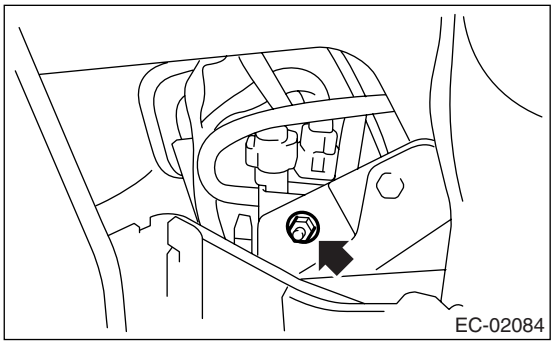

C: INSPECTION

Make sure the hoses are not cracked or loose.

10.Fuel Tank Sensor Control Valve

A: REMOVAL

The fuel tank sensor control valve and fuel tank pressure sensor are integrated into one unit; therefore, refer to “Fuel Tank Pressure Sensor” for removal procedure. <Ref. to EC(H6DO)-10, REMOVAL, Fuel Tank Pressure Sensor.>

B: INSTALLATION

The fuel tank sensor control valve and fuel tank pressure sensor are integrated into one unit; therefore, refer to “Fuel Tank Pressure Sensor” for installation procedure. <Ref. to EC(H6DO)-10, INSTALLATION, Fuel Tank Pressure Sensor.>

C: INSPECTION

Make sure the hoses are not cracked or loose.

11.Pressure Control Solenoid Valve

A: REMOVAL

1) Set the vehicle on the lift.
2) Disconnect the battery ground cable.

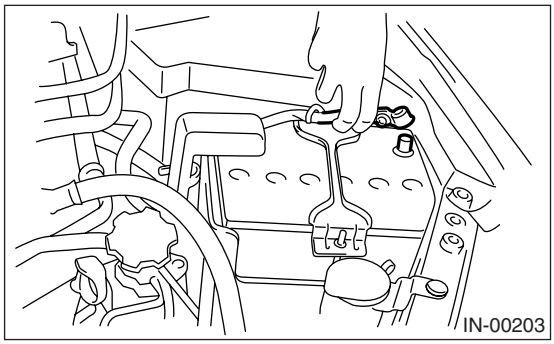

3) Lift-up the vehicle.
4) Disconnect the connector from pressure control solenoid valve.
5) Disconnect the two evaporation hoses (B) from pressure control solenoid valve.
6) Remove the bolt (C) which holds the bracket to fuel tank.

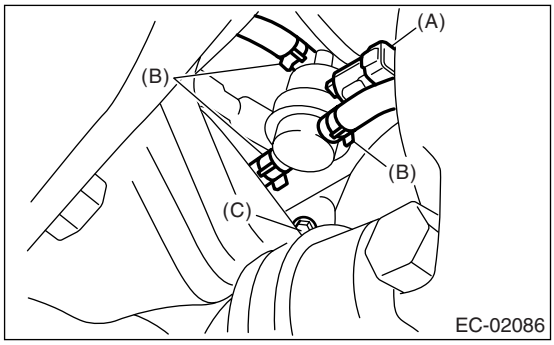

7) Remove the pressure control solenoid valve from bracket.

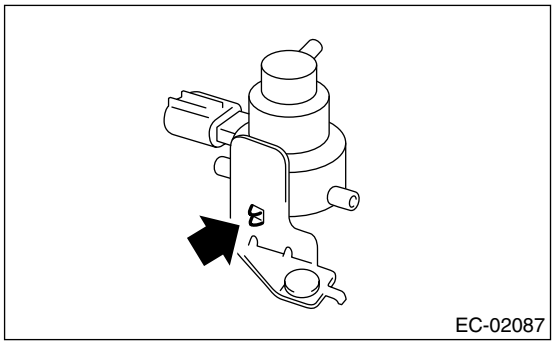

B: INSTALLATION

Install in the reverse order of removal.

Tightening torque:
17.6 N·m (1.8 kgf-m, 13.0 ft-lb)

C: INSPECTION

Make sure the hoses are not cracked or loose.

12.Drain Filter

A: SPECIFICATION

Canister is a non-disassembled part, so do not remove the drain filter from canister.
Refer to “Canister” for removal and installation procedure. <Ref. to EC(H6DO)-5, REMOVAL, Canister.> <Ref. to EC(H6DO)-5, INSTALLATION, Canister.>

13.Shut Valve

A: REMOVAL

1) Remove the fuel filler pipe.
<Ref. to FU(H6DO)-46, REMOVAL, Fuel Filler Pipe.>
2) Disconnect the evaporation hoses from shut valve.

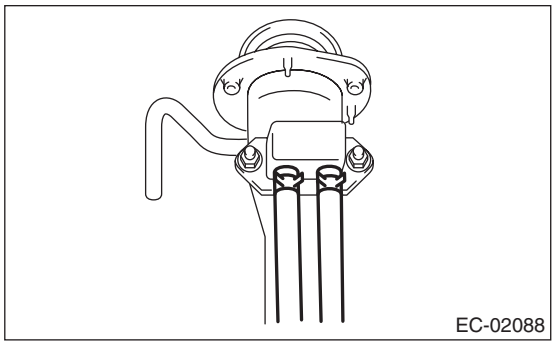

3) Remove the shut valve from fuel filler pipe.

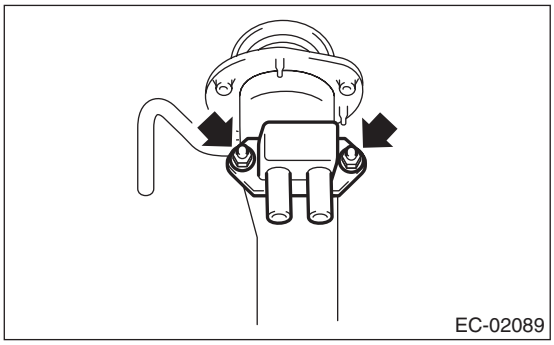

B: INSTALLATION

Install in the reverse order of removal.

Tightening torque:
4.5 N·m (0.46 kgf-m, 3.3 ft-lb)

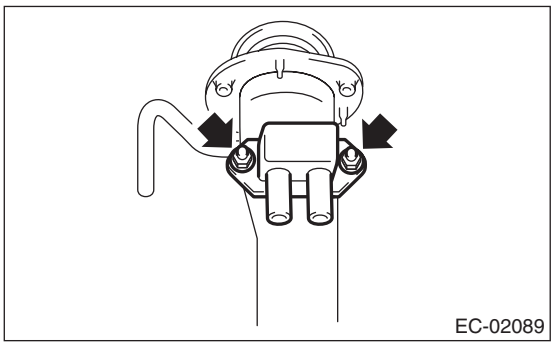

C: INSPECTION

Make sure the hoses are not cracked or loose.

14.Drain Valve

A: SPECIFICATION

Canister is a non-disassembled part, so do not remove the drain valve from canister.
Refer to “Canister” for removal and installation procedure. <Ref. to EC(H6DO)-5, REMOVAL, Canister.> <Ref. to EC(H6DO)-5, INSTALLATION, Canister.>

15.PCV Valve

A: REMOVAL

1) Disconnect the PCV hose.

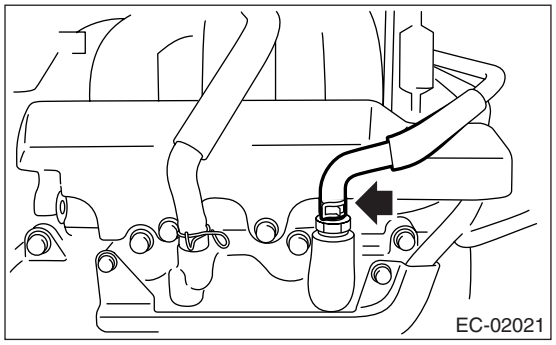

2) Remove the PCV valve from rocker cover.

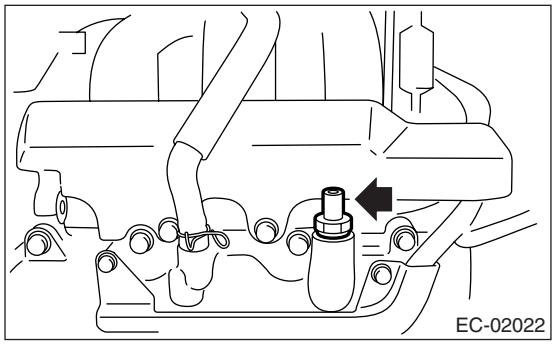

B: INSTALLATION

Install in the reverse order of removal.

NOTE:
Apply liquid gasket to the bolt threads of PCV valve.

Liquid gasket:
THREE BOND 1105 (Part No. 004403010)

Tightening torque:
25 N·m (2.5 kgf-m, 18 ft-lb)

INTAKE (INDUCTION)

IN(H6DO)

Page

1. General Description 2
2. Air Cleaner Element 4
3. Air Cleaner Case 5
4. Air Intake Chamber 7
5. Air Intake Duct 8
6. Resonator Chamber 9

1. General Description

A: COMPONENT

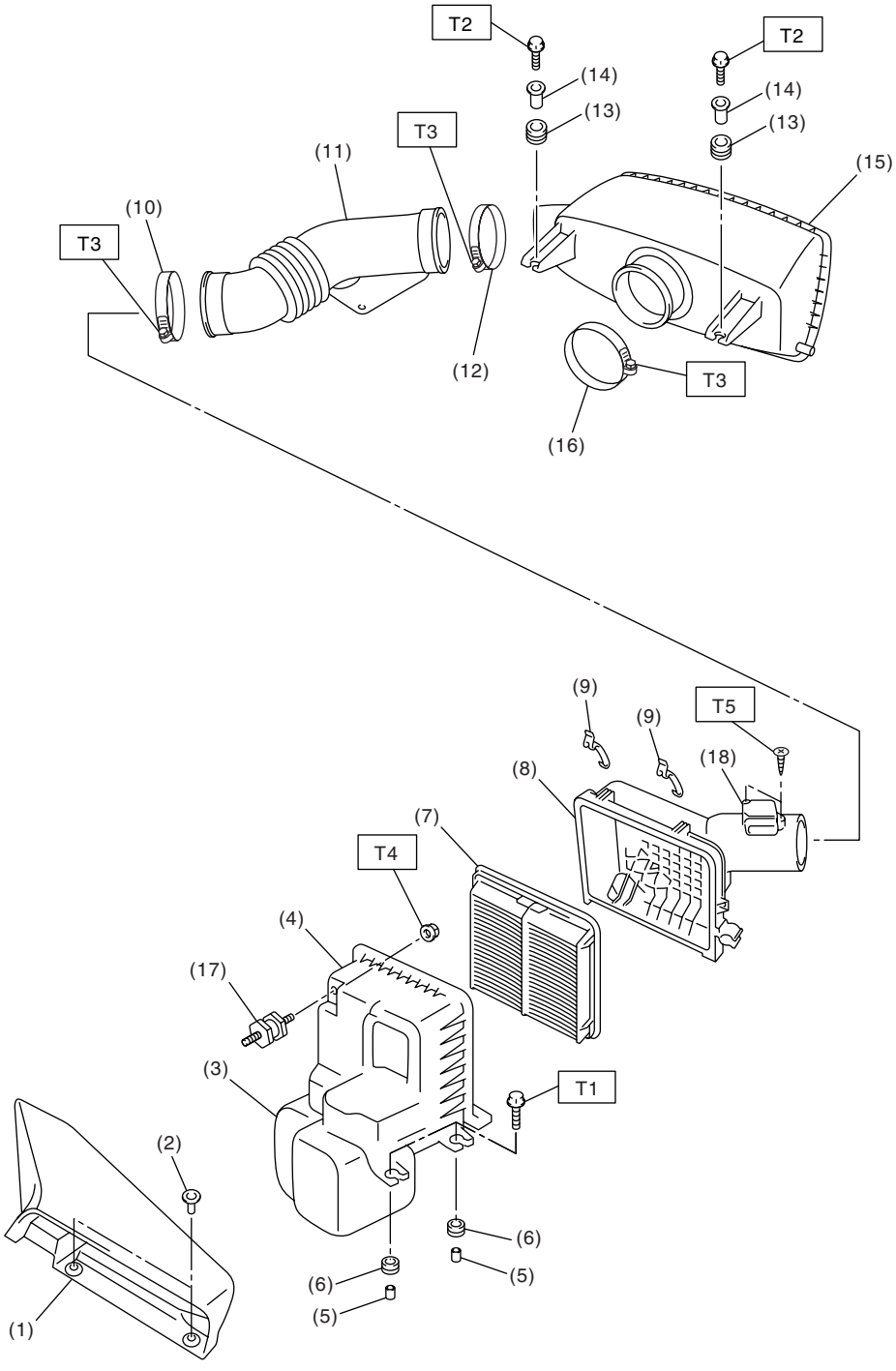

IN-02008

(1) Air intake duct
(2) Clip
(3) Resonator chamber
(4) Air cleaner case (front)
(5) Spacer
(6) Cushion
(7) Air cleaner element
(8) Air cleaner case (rear)
(9) Clip
(10) Clamp
(11) Intake duct
(12) Clamp
(13) Cushion
(14) Spacer
(15) Air intake chamber
(16) Clamp
(17) Cushion
(18) Mass air flow and intake air temperature sensor

Tightening torque: N·m (kgf-m, ft-lb)
T1: 6.0 (0.6, 4.4)
T2: 6.4 (0.65, 4.7)
T3: 3.0 (0.3, 2.2)
T4: 7.5 (0.76, 5.5)
T5: 1.0 (0.10, 0.7)

B: CAUTION

• Wear work clothing, including a cap, protective goggles and protective shoes during operation.
• Remove contamination including dirt and corrosion before removal, installation or disassembly.
• Keep the disassembled parts in order and protect them from dust and dirt.
• Before removal, installation or disassembly, be sure to clarify the failure. Avoid unnecessary removal, installation, disassembly and replacement.
• Be careful not to burn yourself, because each part on the vehicle is hot after running.
• Be sure to tighten fasteners including bolts and nuts to the specified torque.
• Place shop jacks or rigid racks at the specified points.
• Before disconnecting electrical connectors of sensors or units, be sure to disconnect the ground cable from battery.

2. Air Cleaner Element

A: REMOVAL

1) Disconnect the ground cable from battery.

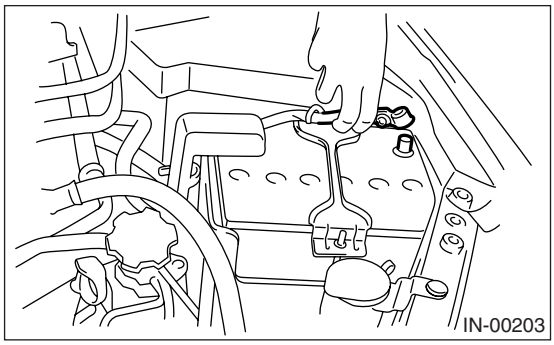

2) Disconnect the connector from mass air flow and intake air temperature sensor.

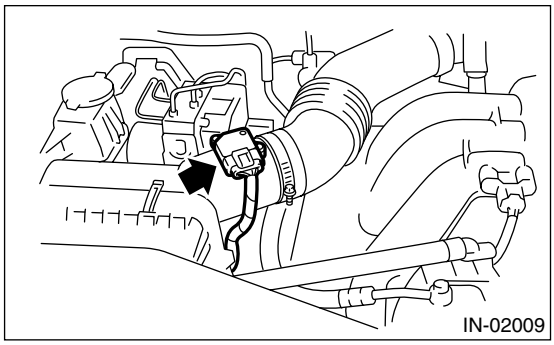

3) Remove the clip (A) from the upper side of air cleaner case.

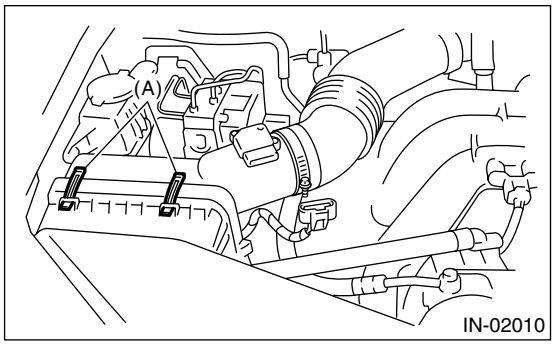

4) Pull the air cleaner case (rear) to the rearward of vehicle, and then remove the air cleaner element.

NOTE:
Be careful that the power steering hose is secured to the under side of air cleaner case (rear).

B: INSTALLATION

Install in the reverse order of removal.

NOTE:
Fasten with a clip after inserting the lower tab of the case.

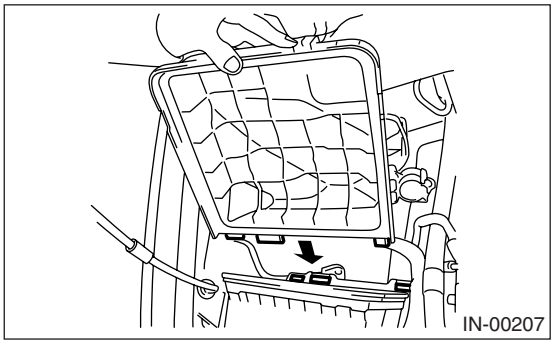

C: INSPECTION

Replace if excessively damaged or dirty.

3. Air Cleaner Case

A: REMOVAL

1) Disconnect the ground cable from battery.

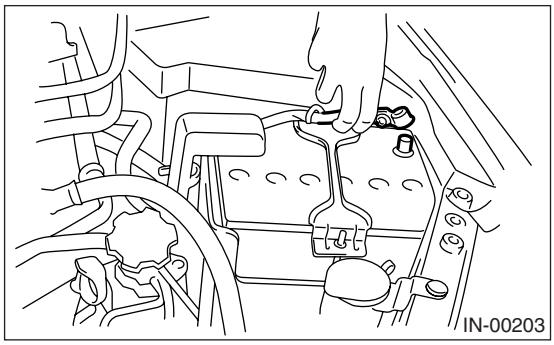

2) Remove the air intake duct. <Ref. to IN(H6DO)-8, REMOVAL, Air Intake Duct.>
3) Disconnect the connector from mass air flow and intake air temperature sensor.

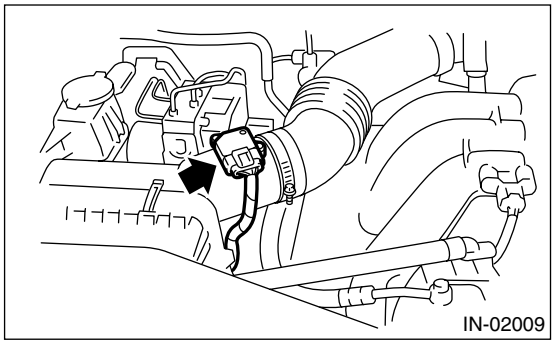

4) Loosen the clamp (A) which connects air cleaner case to intake duct.
5) Remove the clip (B) from the upper side of air cleaner case.

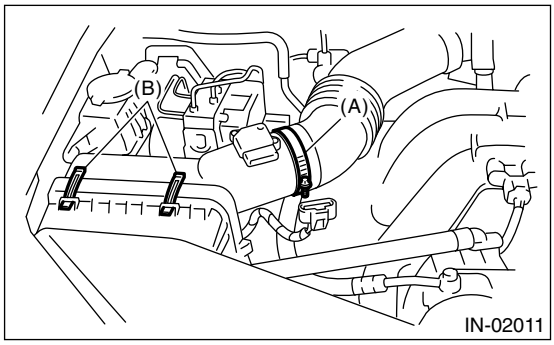

6) Remove the air cleaner case (rear) and air cleaner element.

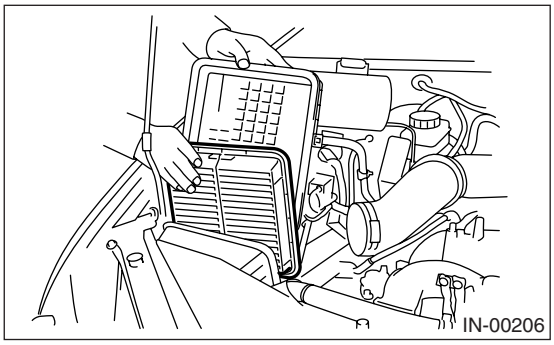

7) Remove the bolt (A) and nut (B) which hold air cleaner case on the body.

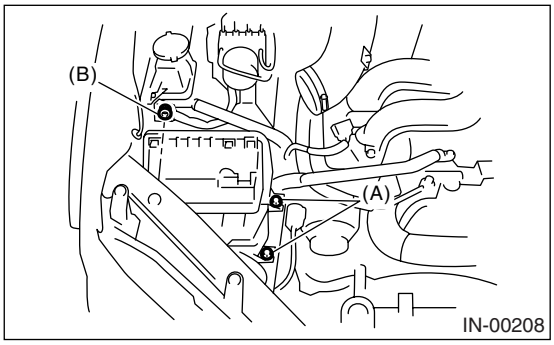

8) Remove the air cleaner case (front).

B: INSTALLATION

Install in the reverse order of removal.

Tightening torque:
Bolt (A): 6.0 N·m (0.6 kgf-m, 4.4 ft-lb)
Nut (B): 7.5 N·m (0.76 kgf-m, 5.5 ft-lb)

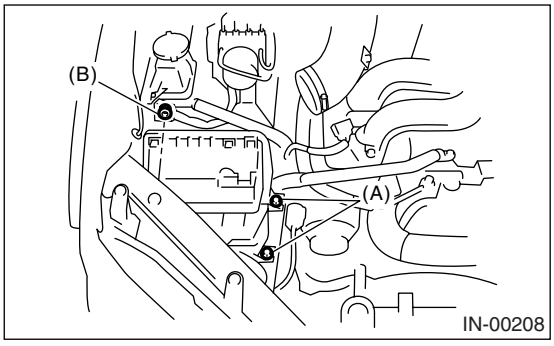

NOTE:
Fasten with a clip after inserting the lower tab of the case.

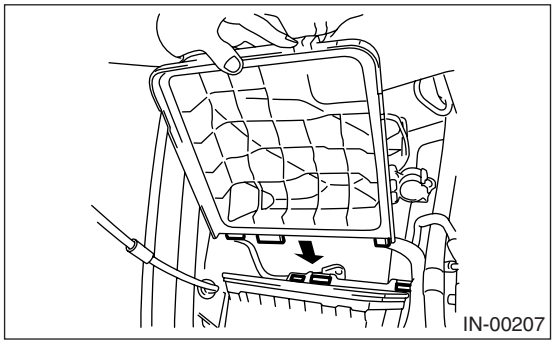

C: INSPECTION

Check for cracks or loose connection.

4. Air Intake Chamber

A: REMOVAL

1) Remove the collector cover.
2) Loosen the clamp (A) which connects air intake chamber to throttle body.
3) Loosen the clamp (B) which connects intake duct to air intake chamber.
4) Remove the bolt (C) which secures air intake chamber to the stay.

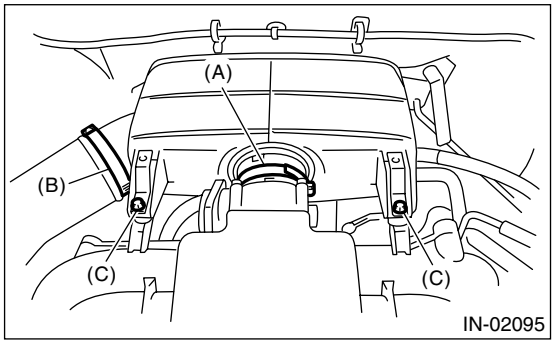

5) Disconnect one part of the blow-by hose, and remove the air intake chamber.

B: INSTALLATION

Install in the reverse order of removal.

Tightening torque:
Clamp (A), (B)
3.0 N·m (0.3 kgf-m, 2.2 ft-lb)
Bolt (C)
6.4 N·m (0.65 kgf-m, 4.7 ft-lb)

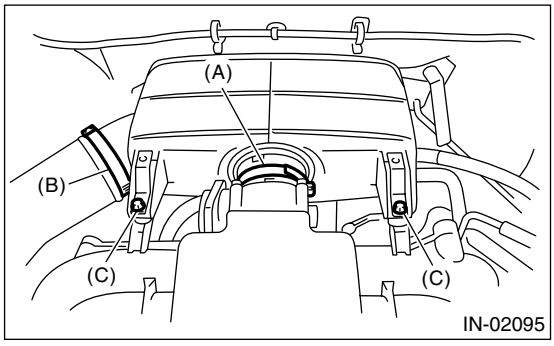

C: INSPECTION

1) Check for cracks or loose connections.
2) Inspect that no foreign objects in the air intake chamber.

5. Air Intake Duct

A: REMOVAL

1) Remove the clips which install air intake duct on the front side of body.
2) Remove the air intake duct.

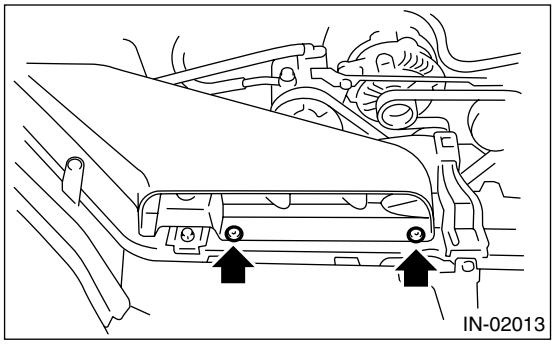

B: INSTALLATION

Install in the reverse order of removal.

C: INSPECTION

1) Check for cracks or loose connections.
2) Inspect that no foreign objects in the air intake duct.

6. Resonator Chamber

A: REMOVAL

Refer to “Air Cleaner Case” for removal procedure because the resonator chamber forms a single unit with air cleaner case. <Ref. to IN(H6DO)-5, REMOVAL, Air Cleaner Case.>

B: INSTALLATION

Refer to “Air Cleaner Case” for installation procedure because the resonator chamber forms a single unit with air cleaner case. <Ref. to IN(H6DO)-5, INSTALLATION, Air Cleaner Case.>

C: INSPECTION

Check for cracks or loose connections.

MECHANICAL

ME(H6DO)

		Page
1.	General Description	2
2.	Compression	22
3.	Idle Speed	23
4.	Ignition Timing	24
5.	Intake Manifold Vacuum	25
6.	Engine Oil Pressure	26
7.	Fuel Pressure	27
8.	Valve Clearance	28
9.	V-belt	32
10.	Engine Assembly	33
11.	Engine Mounting	39
12.	Preparation for Overhaul	40
13.	Crank Pulley	41
14.	Front Chain Cover	42
15.	Timing Chain Assembly	44
16.	Cam Sprocket	49
17.	Crank Sprocket	50
18.	Rear Chain Cover	51
19.	Camshaft	53
20.	Cylinder Head	57
21.	Cylinder Block	62
22.	Oil Flow Control Solenoid Valve	76
23.	Oil Switching Solenoid Valve	77
24.	Intake and Exhaust Valve	78
25.	Piston	79
26.	Connecting Rod	80
27.	Crankshaft	81
28.	Engine Trouble in General	82
29.	Engine Noise	89

1. General Description

A: SPECIFICATION

Engine	Cylinder arrangement			Horizontally opposed, liquid cooled, 6-cylinder, 4-stroke gasoline engine
	Valve system mechanism			Chain driven, double overhead camshaft, 4-valve/cylinder
	Bore × Stroke mm (in)			89.2 × 80 (3.512 × 3.150)
	Displacement cm^3 (cu in)			3,000 (183)
	Compression ratio			10.7
	Compression pressure (350 rpm and fully open throttle): kPa (kg/cm^2, psi)			1,275 — 1,471 (13.0 — 15.0, 185 — 213)
	Number of piston rings			Pressure ring: 2, Oil ring: 1
	Intake valve timing	Min. advance	Open	BTDC 47°
			Close	ABDC 23°
		Max. retard	Open	ATDC 3°
			Close	ABDC 73°
	Exhaust valve timing		Open	BBDC 60°
			Close	ATDC 6°
	Valve clearance mm (in)	Intake		$0.20^{+0.04}_{-0.06}$ ($0.0079^{+0.0016}_{-0.0024}$)
		Exhaust		0.35±0.05 (0.0138±0.020)
	Idling speed [“P” or “N” range] rpm		No load	650±50
			A/C ON	770±50
	Ignition order			1 → 6 → 3 → 2 → 5 → 4
	Ignition timing BTDC/rpm			15°±8°/650

NOTE:
OS: Oversize US: Undersize

Camshaft	Side clearance mm (in)	Intake		Standard	0.075 — 0.135 (0.0030 — 0.0053)
		Exhaust		Standard	0.030 — 0.090 (0.0012 — 0.0035)
	Cam lobe height mm (in)	Intake	HIGH	Standard	42.09 — 42.19 (1.6571 — 1.6610)
			LOW1	Standard	38.14 — 38.24 (1.5016 — 1.5055)
			LOW2	Standard	34.94 — 35.04 (1.3756 — 1.3795)
		Exhaust		Standard	41.65 — 41.75 (1.6398 — 1.6437)
	Cam base circle diameter mm (in)	Intake	HIGH	Standard	32.00 (1.2598)
			LOW1	Standard	31.84 (1.2535)
			LOW2	Standard	31.84 (1.2535)
		Exhaust		Standard	32.00 (1.2598)
	Journal O.D. mm (in)	Front:		Standard	37.946 — 37.963 (1.4939 — 1.4946)
		Except for front		Standard	25.946 — 25.963 (1.0215 — 1.0222)
	Oil clearance mm (in)			Standard	0.037 — 0.072 (0.0015 — 0.0028)
Cylinder head	Warping limit (Mating with cylinder block) mm (in)			Standard	0.02 (0.0008)
	Inner diameter of valve lifter hole mm (in)				32.994 — 33.016 (1.2990 — 1.2998)
	Standard height mm (in)				124±0.05 (4.88±0.0020)
Valve seat	Refacing angle				90°
	Contacting width mm (in)	Intake		Standard	1.0 (0.039)
		Exhaust		Standard	1.5 (0.059)
Valve guide	Inside diameter mm (in)				5.500 — 5.512 (0.2165 — 0.2170)
	Protrusion above head mm (in)				11.4 — 11.8 (0.449 — 0.465)

Valve	Head edge thickness mm (in)	Intake		Standard	1.0 (0.039)
		Exhaust		Standard	1.2 (0.047)
	Stem outer diameter mm (in)	Intake			5.455 — 5.470 (0.2148 — 0.2154)
		Exhaust			5.445 — 5.460 (0.2144 — 0.2150)
	Stem oil clearance	Intake		Standard	0.030 — 0.057 (0.0012 — 0.0022)
		Exhaust		Standard	0.040 — 0.067 (0.0016 — 0.0026)
	Overall length mm (in)	Intake			99.7 (3.925)
		Exhaust			105.2 (4.142)
	Outer diameter of valve lifter mm (in)				32.959 — 32.975 (1.2976 — 1.2982)
Valve spring	Free length mm (in)	Intake		Inner	39.55 (1.5571)
				Outer	41.18 (1.6213)
		Exhaust			46.32 (1.8236)
	Squareness	Intake		Inner	2.5°, 1.7 mm (0.067 in)
				Outer	2.5°, 1.8 mm (0.071 in)
		Exhaust			2.5°, 2.0 mm (0.079 in)
Cylinder block	Standard height mm (in)				202 (7.95)
	Warping limit (Mating with cylinder head) mm (in)			Standard	0.02 (0.0008)
	Cylinder inner diameter mm (in)		Standard	A	89.205 — 89.215 (3.5120 — 3.5124)
				B	89.195 — 89.205 (3.5116 — 3.5120)
	Cylindricality mm (in)			Standard	0.030 (0.0012)
	Out-of-roundness mm (in)			Standard	0.010 (0.0004)
	Piston clearance mm (in)			Standard	–0.010 — 0.010 (–0.0004 — 0.0004)
	Cylinder inner diameter boring limit (diameter) mm (in)				To 89.715 (3.5321)
Piston	Outer diameter mm (in)	Standard		A	89.205 — 89.215 (3.5120 — 3.5124)
				B	89.195 — 89.205 (3.5116 — 3.5120)
		0.25 (0.0098) OS			89.445 — 89.465 (3.5215 — 3.5222)
		0.50 (0.0197) OS			89.695 — 89.715 (3.5313 — 3.5321)
	Inner diameter of piston pin hole			Standard	22.000 — 22.006 (0.8661 — 0.8664)
Piston pin	Outer diameter mm (in)			Standard	21.994 — 22.000 (0.8659 — 0.8661)
	Standard clearance between piston and piston pin mm (in)			Standard	0.004 — 0.008 (0.0002 — 0.0003)
Piston ring	Ring closed gap mm (in)	Top ring		Standard	0.20 — 0.35 (0.0079 — 0.0138)
		Second ring		Standard	0.35 — 0.50 (0.0138 — 0.0197)
		Oil ring		Standard	0.20 — 0.60 (0.0079 — 0.0236)
	Ring groove gap mm (in)	Top ring		Standard	0.040 — 0.080 (0.0016 — 0.0031)
		Second ring		Standard	0.030 — 0.070 (0.0012 — 0.0028)
		Oil ring		Standard	0.045 — 0.125 (0.0018 — 0.0049)
Connecting rod	Side clearance of large end mm (in)			Standard	0.070 — 0.330 (0.0028 — 0.0130)
Bearing of large end	Oil clearance mm (in)			Standard	0.016 — 0.043 (0.0006 — 0.0017)
	Bearing size (Thickness at center) mm (in)		Standard		1.490 — 1.506 (0.0587 — 0.0593)
			0.03 (0.0012) US		1.509 — 1.513 (0.0594 — 0.0596)
			0.05 (0.0020) US		1.519 — 1.523 (0.0598 — 0.0600)
			0.25 (0.0098) US		1.619 — 1.623 (0.0637 — 0.0639)
Bushing of small end	Clearance between piston pin and bushing mm (in)			Standard	0 — 0.022 (0 — 0.0009)

Crankshaft	Crank pin and crank journal	Out-of-roundness mm (in)		0.005 (0.0002)
		Cylindricality mm (in)		0.006 (0.0002)
	Crank pin outer diameter mm (in)		Standard	51.984 — 52.000 (2.0466 — 2.0472)
			0.03 (0.0012) US	51.954 — 51.970 (2.0454 — 2.0461)
			0.05 (0.0020) US	51.934 — 51.950 (2.0446 — 2.0453)
			0.25 (0.0098) US	51.734 — 51.750 (2.0368 — 2.0374)
	Crank journal outer diameter mm (in)	#1, #3, #5, #7	Standard	63.992 — 64.008 (2.5194 — 2.5200)
			0.03 (0.0012) US	63.962 — 63.978 (2.5182 — 2.5188)
			0.05 (0.0020) US	63.942 — 63.958 (2.5174 — 2.5180)
			0.25 (0.0098) US	63.742 — 63.758 (2.5095 — 2.5102)
		#2, #4, #6	Standard	63.992 — 64.008 (2.5194 — 2.5200)
			0.03 (0.0012) US	63.962 — 63.978 (2.5182 — 2.5188)
			0.05 (0.0020) US	63.942 — 63.958 (2.5174 — 2.5180)
			0.25 (0.0098) US	63.742 — 63.758 (2.5095 — 2.5102)
	Thrust clearance mm (in)		Standard	0.030 — 0.115 (0.0012 — 0.0045)
	Oil clearance mm (in)		Standard	0.010 — 0.030 (0.0004 — 0.0012)
Main bearing	Bearing size (Thickness at center) mm (in)	#1, #3, #5, #7	Standard	1.992 — 2.005 (0.0784 — 0.0789)
			0.03 (0.0012) US	2.011 — 2.014 (0.0792 — 0.0793)
			0.05 (0.0020) US	2.021 — 2.024 (0.0796 — 0.0797)
			0.25 (0.0098) US	2.121 — 2.124 (0.0835 — 0.0836)
		#2, #4, #6	Standard	1.996 — 2.009 (0.0786 — 0.0791)
			0.03 (0.0012) US	2.015 — 2.018 (0.0793 — 0.0794)
			0.05 (0.0020) US	2.025 — 2.028 (0.0797 — 0.0798)
			0.25 (0.0098) US	2.125 — 2.128 (0.0837 — 0.0838)

B: COMPONENT

1. V-BELT

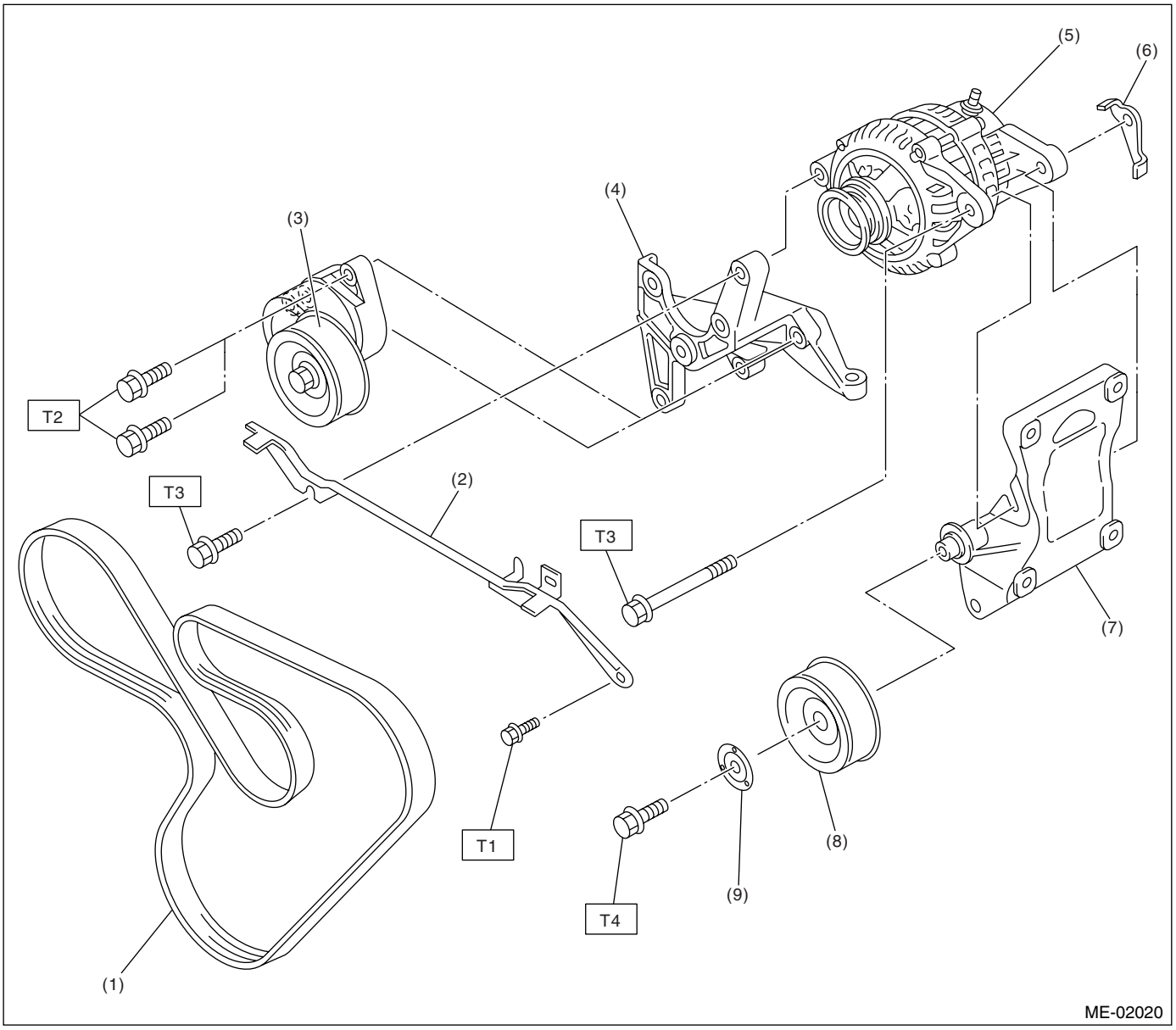

(1)	V-belt	(6)	Generator plate
(2)	Collector cover bracket	(7)	A/C compressor stay
(3)	Belt tension adjuster ASSY	(8)	Idler pulley
(4)	Power steering pump bracket	(9)	Idler pulley cover
(5)	Generator		

Tightening torque: N·m (kgf-m, ft-lb)
T1: 6.4 (0.65, 4.7)
T2: 20 (2.0, 14)
T3: 25 (2.5, 18)
T4: 33 (3.4, 25)

2. TIMING CHAIN COVER

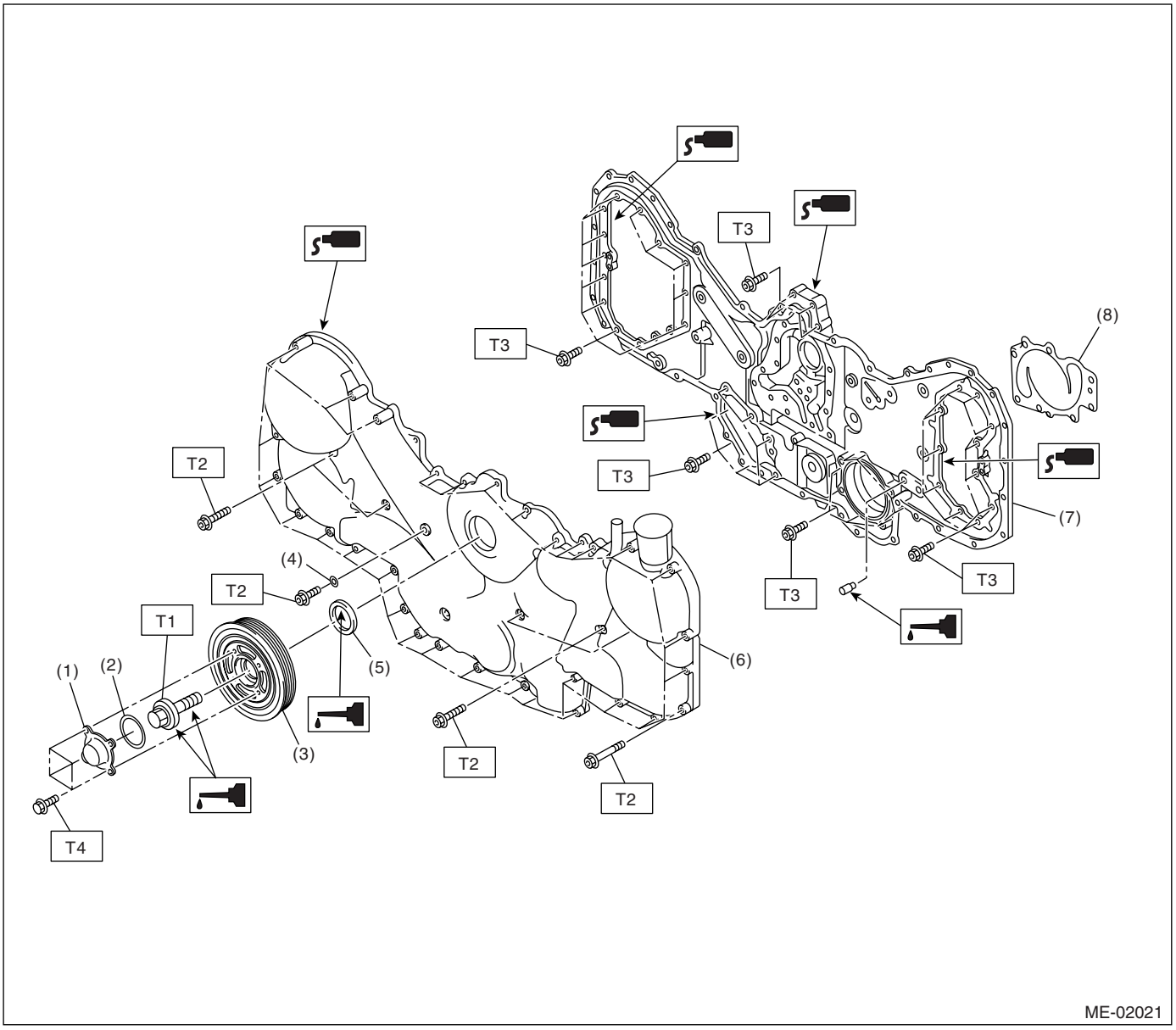

(1) Crank pulley cover
(2) O-ring
(3) Crank pulley
(4) Sealing washer
(5) Oil seal
(6) Front chain cover
(7) Rear chain cover
(8) Water pump gasket

Tightening torque: N·m (kgf-m, ft-lb)

T1: <Ref. to ME(H6DO)-41, Crank Pulley.>

T2: <Ref. to ME(H6DO)-42, Front Chain Cover.>

T3: <Ref. to ME(H6DO)-51, Rear Chain Cover.>

T4: 6.4 (0.65, 4.7)

3. TIMING CHAIN

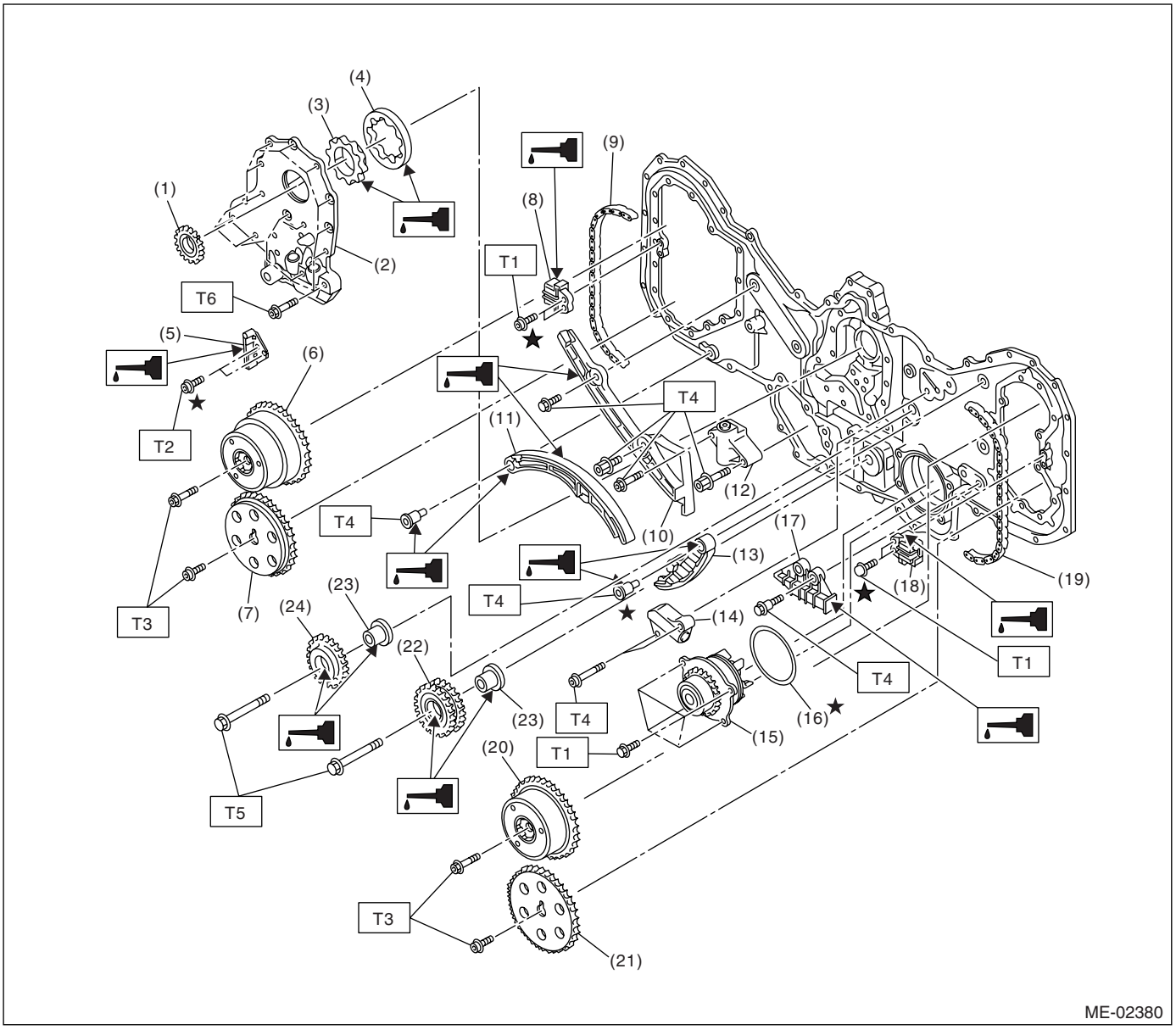

(1) Crank sprocket
(2) Oil relief case
(3) Inner rotor
(4) Outer rotor
(5) Chain guide (center)
(6) Intake cam sprocket (RH)
(7) Exhaust cam sprocket (RH)
(8) Chain guide (RH: between cams)
(9) Timing chain (RH)
(10) Chain guide (RH)
(11) Chain tensioner lever (RH)
(12) Chain tensioner (RH)
(13) Chain tensioner lever (LH)
(14) Chain tensioner (LH)
(15) Water pump
(16) O-ring
(17) Chain guide (LH)
(18) Chain guide (LH: between cams)
(19) Timing chain (LH)
(20) Intake cam sprocket (LH)
(21) Exhaust cam sprocket (LH)
(22) Idler sprocket (lower)
(23) Idler sprocket collar
(24) Idler sprocket (upper)

Tightening torque: N·m (kgf-m, ft-lb)

T1*: *6.4 (0.65, 4.7)
T2: 7.8 (0.8, 5.8)
T3: <Ref. to ME(H6DO)-49, Cam Sprocket.>
T4: 16 (1.6, 12)
T5: 69 (7.0, 50.6)
T6: <Ref. to LU(H6DO)-8, Oil Pump.>

4. CYLINDER HEAD AND CAMSHAFT

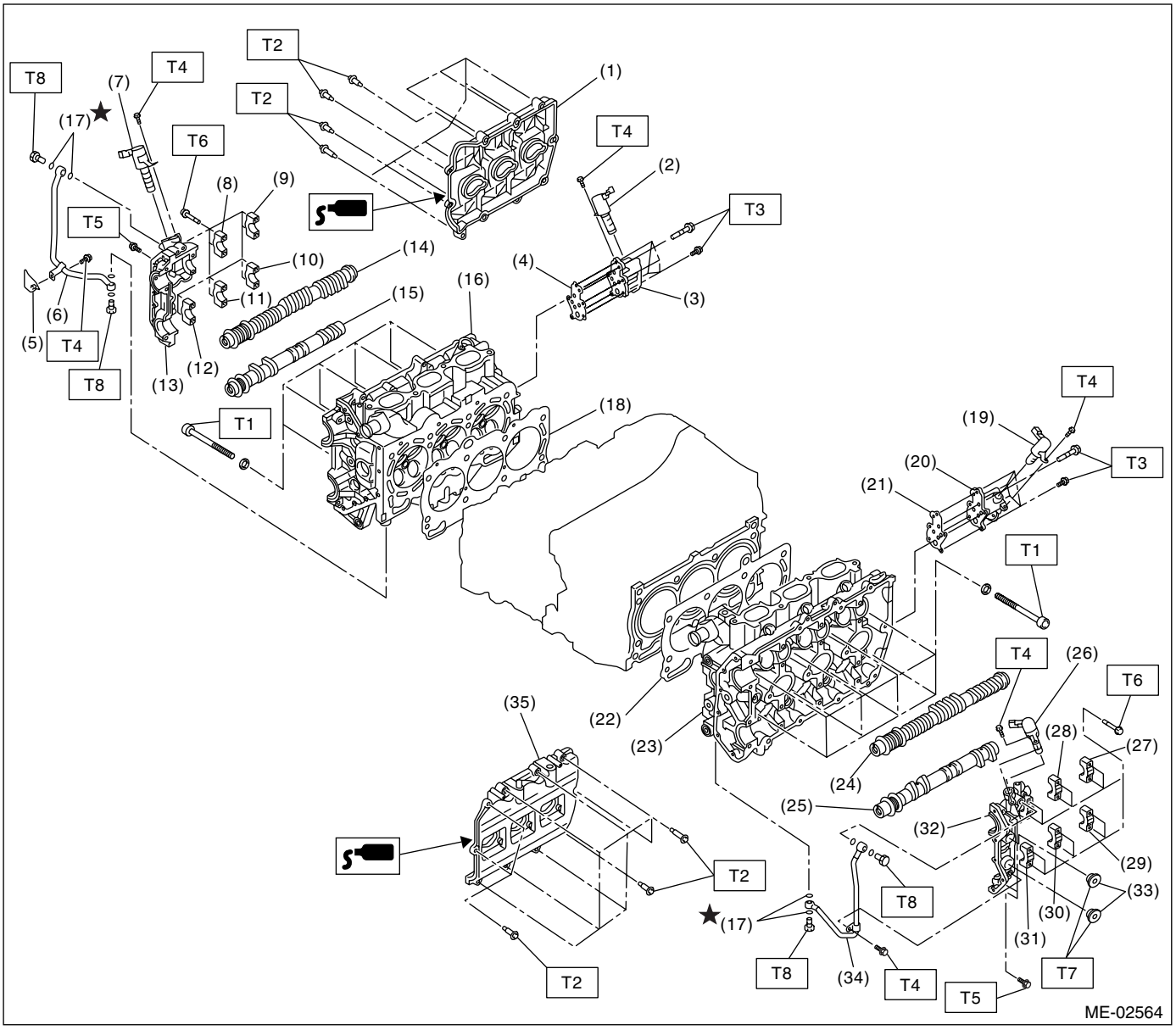

(1) Rocker cover (RH)
(2) Oil switching solenoid valve (RH)
(3) Oil switching solenoid valve holder (RH)
(4) Oil switching solenoid valve gasket
(5) Rear chain cover
(6) Oil pipe (RH)
(7) Oil flow control solenoid valve (RH)
(8) Intake camshaft cap (Center RH)
(9) Intake camshaft cap (Rear RH)
(10) Exhaust camshaft cap (Rear RH)
(11) Exhaust camshaft cap (Center RH)
(12) Exhaust camshaft cap (Front RH)
(13) Front camshaft cap (RH)
(14) Intake camshaft (RH)
(15) Exhaust camshaft (RH)
(16) Cylinder head (RH)
(17) Gasket
(18) Cylinder head gasket (RH)
(19) Oil switching solenoid valve (LH)
(20) Oil switching solenoid valve holder (LH)
(21) Oil switching solenoid valve gasket
(22) Cylinder head gasket (LH)
(23) Cylinder head (LH)
(24) Intake camshaft (LH)
(25) Exhaust camshaft (LH)
(26) Oil flow control solenoid valve (LH)
(27) Intake camshaft cap (Rear LH)
(28) Intake camshaft cap (Center LH)
(29) Exhaust camshaft cap (Rear LH)
(30) Exhaust camshaft cap (Center LH)
(31) Exhaust camshaft cap (Front LH)
(32) Front camshaft cap (LH)
(33) Plug
(34) Oil pipe (LH)
(35) Rocker cover (LH)

Tightening torque: N·m (kgf-m, ft-lb)

T1:	***<Ref. to ME(H6DO)-57, Cylinder Head.>***
T2:	***<Ref. to ME(H6DO)-53, Camshaft.>***
T3:	***<Ref. to ME(H6DO)-77, Oil Switching Solenoid Valve.>***
T4:	***6.4 (0.65, 4.7)***
T5:	***9.75 (1.0, 7.2)***
T6:	***16 (1.6, 12)***
T7:	***60 (6.1, 44)***
T8:	***29 (3.0, 21.4)***

5. CYLINDER HEAD AND VALVE ASSEMBLY

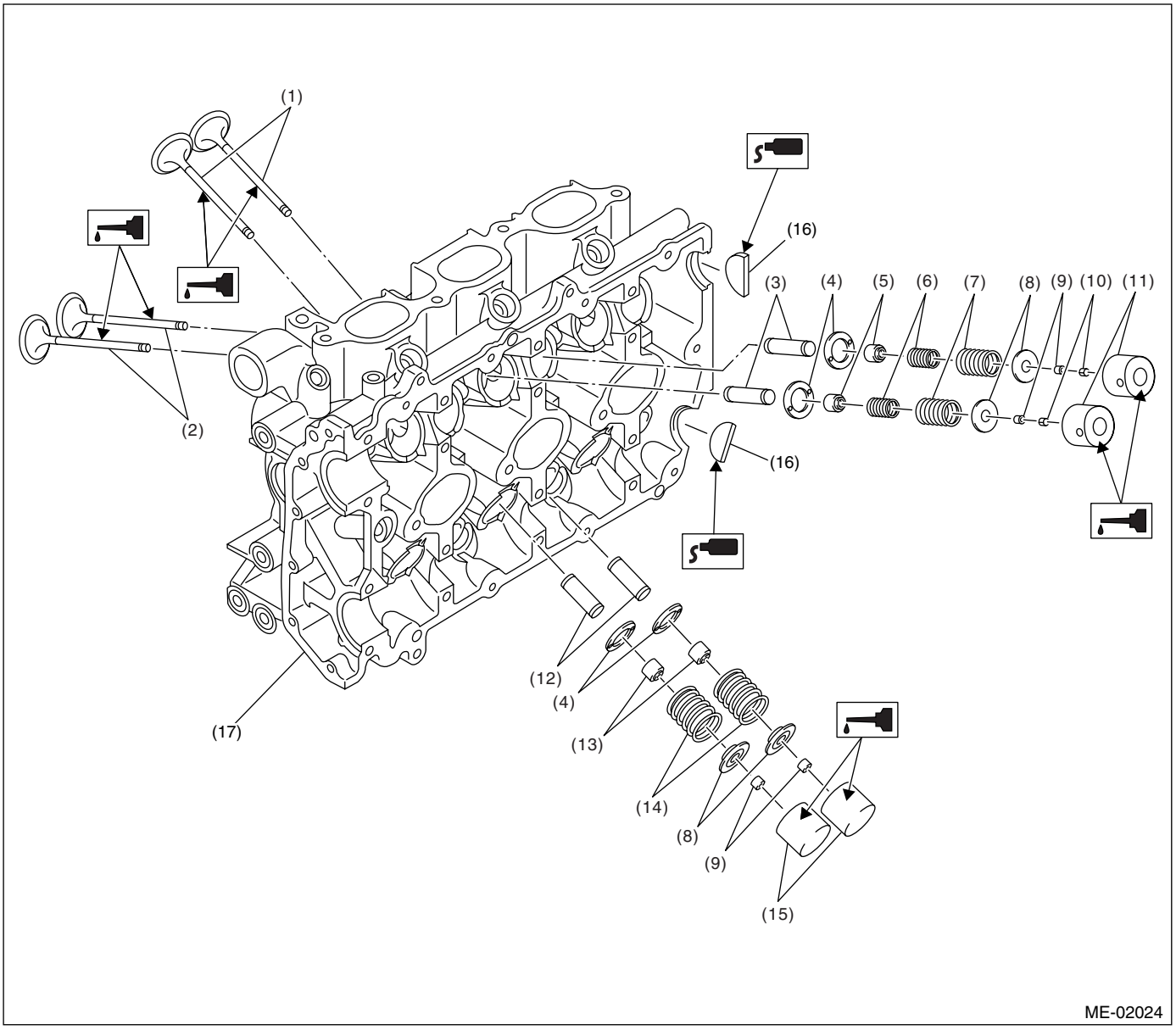

(1) Exhaust valve
(2) Intake valve
(3) Intake valve guide
(4) Valve spring seat
(5) Intake valve stem seal
(6) Valve spring (Inner)
(7) Valve spring (Outer)
(8) Retainer
(9) Retainer key
(10) Shim
(11) Valve lifter (Intake)
(12) Exhaust valve guide
(13) Exhaust valve stem seal
(14) Valve spring
(15) Valve lifter (Exhaust)
(16) Cylinder head plug
(17) Cylinder head

6. CYLINDER BLOCK

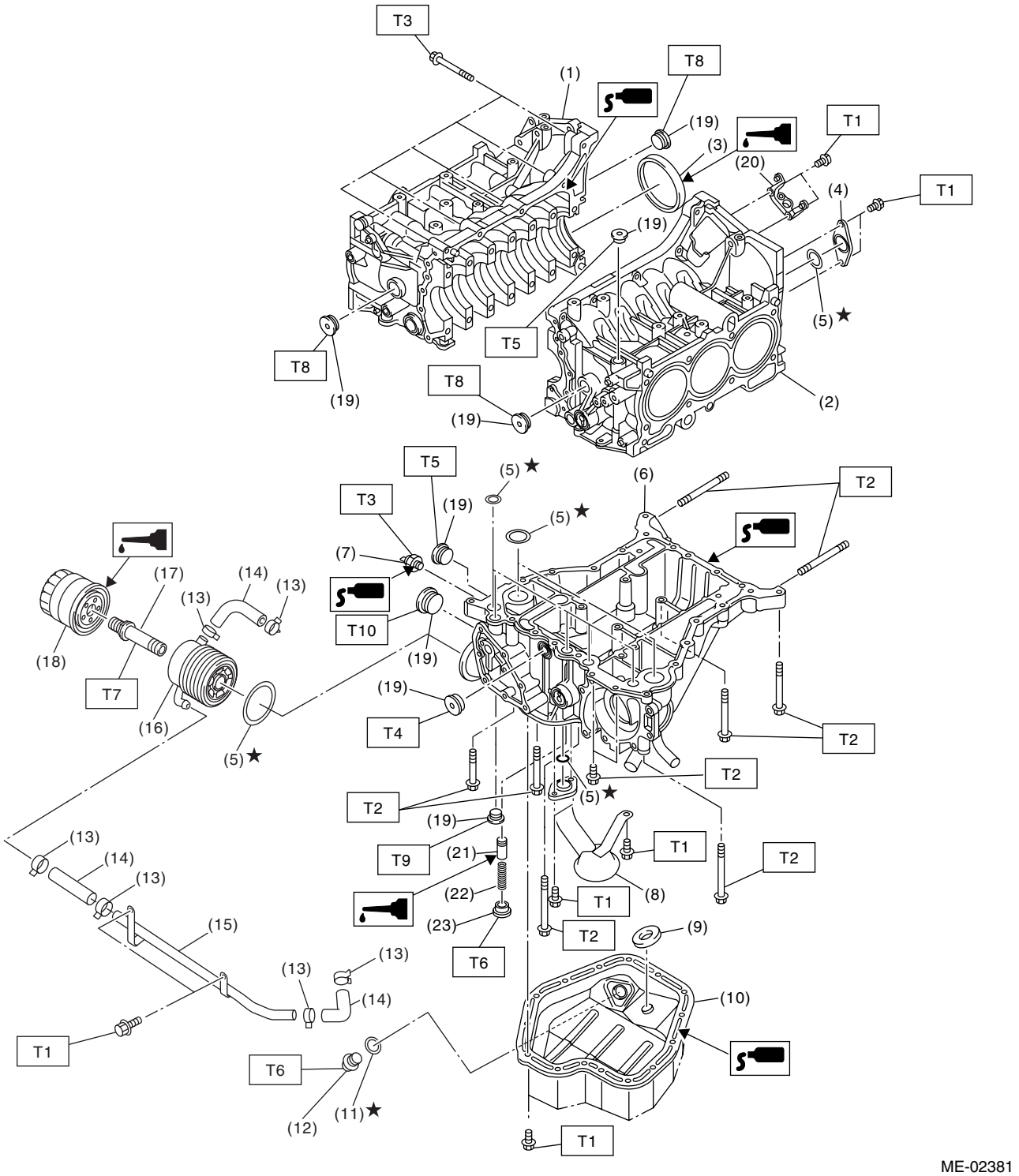

(1) Cylinder block (RH)
(2) Cylinder block (LH)
(3) Rear oil seal
(4) Service hole cover
(5) O-ring
(6) Oil pan upper
(7) Oil pressure switch
(8) Oil strainer
(9) Magnet
(10) Oil pan lower
(11) Metal gasket
(12) Drain plug
(13) Clamp
(14) Hose
(15) Oil cooler pipe
(16) Oil cooler
(17) Connector
(18) Oil filter
(19) Plug
(20) Crankshaft position sensor holder
(21) Relief valve
(22) Relief valve spring
(23) Plug

Tightening torque: N·m (kgf-m, ft-lb)	
T1:	*6.4 (0.65, 4.7)*
T2:	*18 (1.8, 13.3)*
T3:	*25 (2.5, 18)*
T4:	*16 (1.6, 12)*
T5:	*37 (3.8, 27)*
T6:	*44 (4.5, 33)*
T7:	*54 (5.5, 40)*
T8:	*70 (7.1, 52)*
T9:	*23 (2.3, 17)*
T10:	*90 (9.2, 67)*

7. CRANKSHAFT AND PISTON

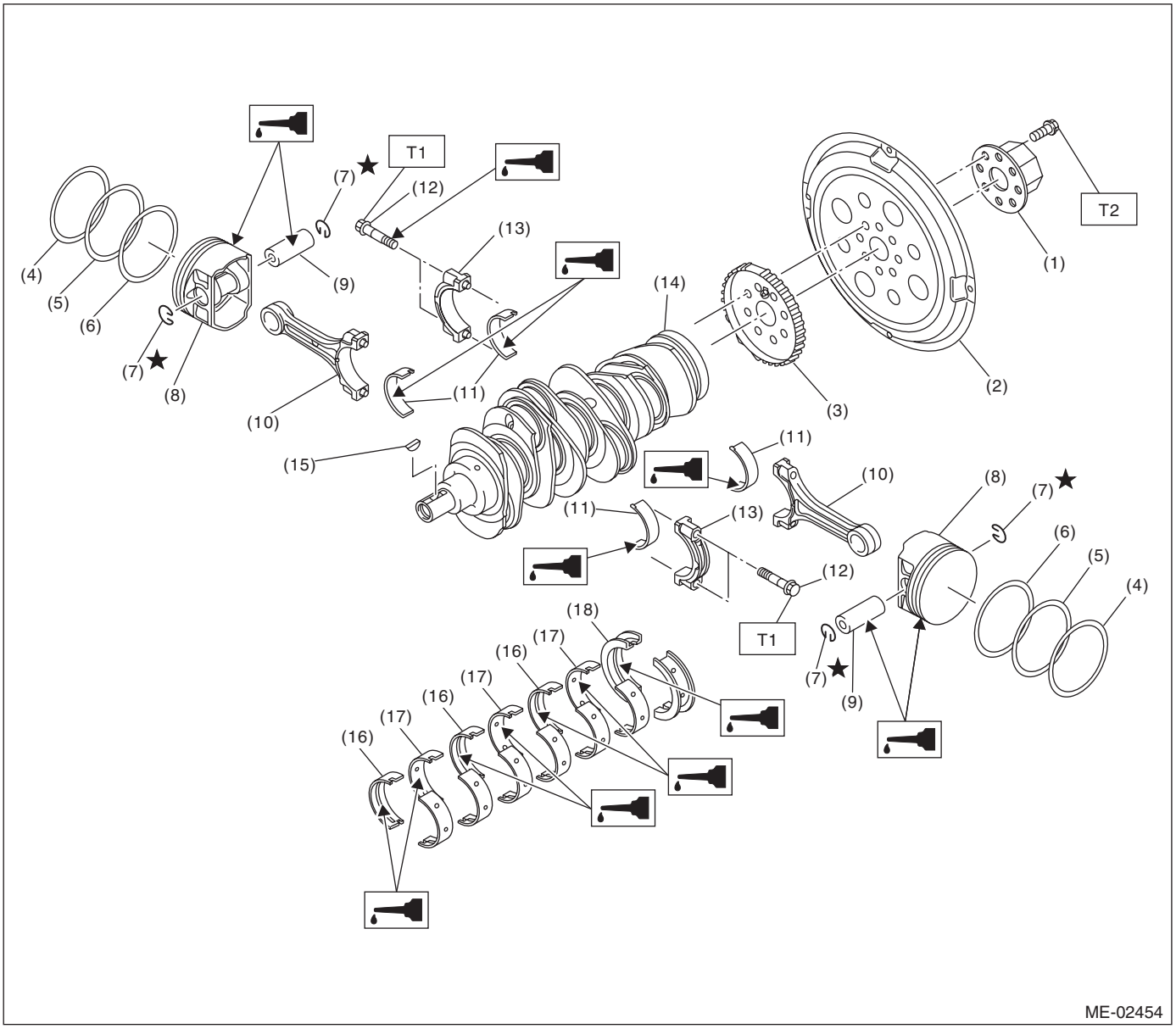

(1) Reinforcement
(2) Drive plate
(3) Crankshaft sensor plate
(4) Top ring
(5) Second ring
(6) Oil ring
(7) Snap ring
(8) Piston
(9) Piston pin
(10) Connecting Rod
(11) Connecting rod bearing
(12) Connecting rod bolt
(13) Connecting rod cap
(14) Crankshaft
(15) Woodruff key
(16) Crankshaft bearing #1, #3, #5
(17) Crankshaft bearing #2, #4, #6
(18) Crankshaft bearing #7

Tightening torque: N·m (kgf-m, ft-lb)
T1: 53 (5.4, 39)
T2: 81 (8.3, 60)

8. ENGINE MOUNTING

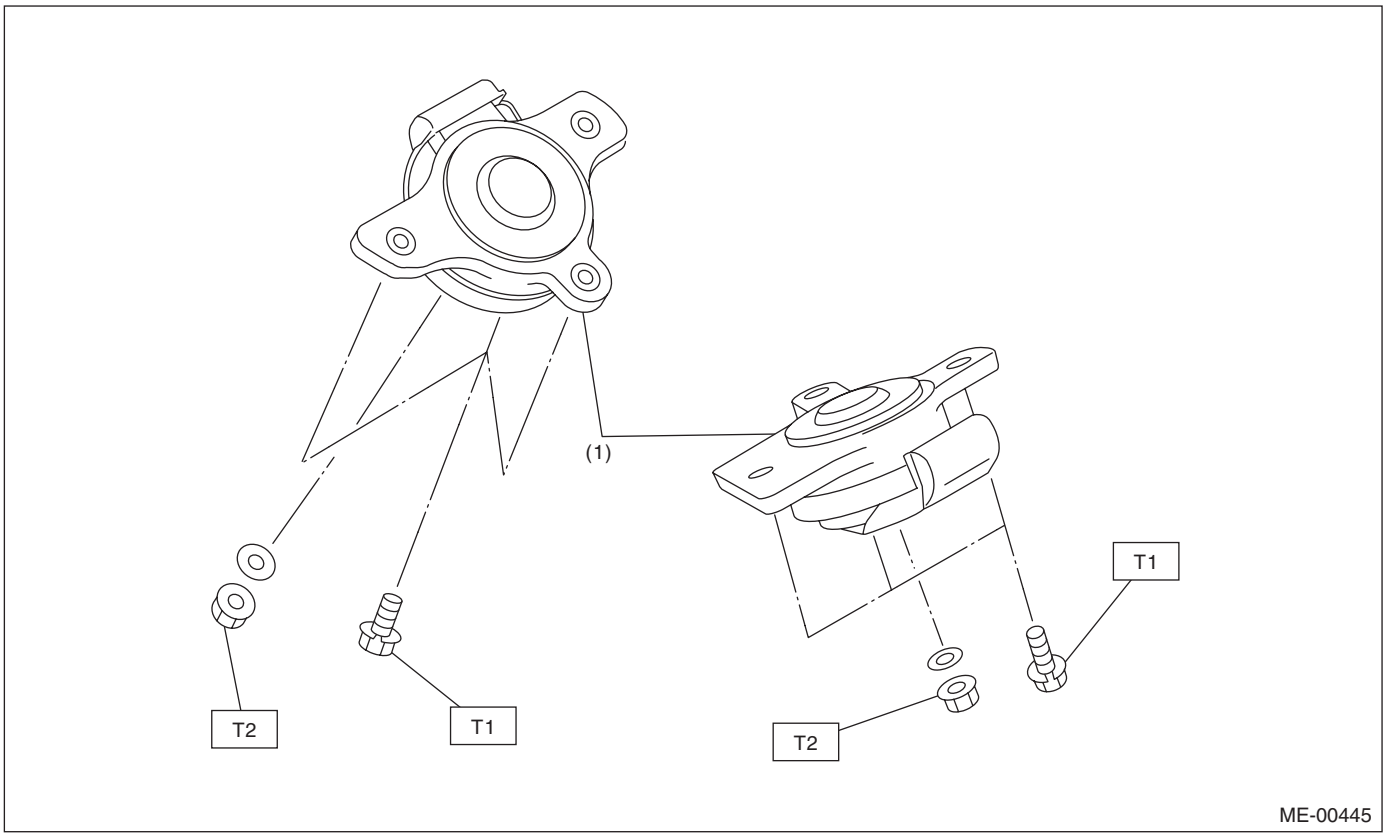

(1) Front cushion rubber

Tightening torque: N·m (kgf-m, ft-lb)
T1: 35 (3.6, 25.8)
T2: 85 (8.7, 62.7)

C: CAUTION

- Wear work clothing, including a cap, protective goggles and protective shoes during operation.
- Remove contamination including dirt and corrosion before removal, installation or disassembly.
- Keep the disassembled parts in order and protect them from dust and dirt.
- Before removal, installation or disassembly, be sure to clarify the failure. Avoid unnecessary removal, installation, disassembly and replacement.
- Be careful not to burn yourself, because each part on the vehicle is hot after running.
- Be sure to tighten fasteners including bolts and nuts to the specified torque.
- Place shop jacks or rigid racks at the specified points.
- Before disconnecting electrical connectors of sensors or units, be sure to disconnect the ground cable from battery.
- All parts should be thoroughly cleaned, paying special attention to the engine oil passages, pistons and bearings.
- Rotating parts and sliding parts such as piston, bearing and gear should be coated with oil prior to assembly.
- Be careful not to let oil, grease or coolant contact the timing belt, clutch disc and flywheel.
- All removed parts, if to be reused, should be reinstalled in the original positions and directions.
- Bolts, nuts and washers should be replaced with new ones as required.
- Even if necessary inspections have been made in advance, proceed with assembly work while making rechecks.
- Remove or install the engine in an area where chain hoists, lifting devices, etc. are available for ready use.
- Be sure not to damage coated surfaces of body panels with tools, or not to stain seats and windows with coolant or oil. Place a cover over fenders, as required, for protection.
- Prior to starting work, prepare the following:

Service tools, clean cloth, containers to catch coolant and oil, wire ropes, chain hoist, transmission jacks, etc.

- Lift-up or lower the vehicle when necessary. Make sure to support the correct positions.

D: PREPARATION TOOL

1. SPECIAL TOOL

ILLUSTRATION	TOOL NUMBER	DESCRIPTION	REMARKS
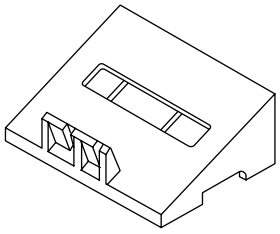 ST18250AA010	18250AA010	CYLINDER HEAD TABLE	• Used for replacing valve guides. • Used for removing and installing valve spring.
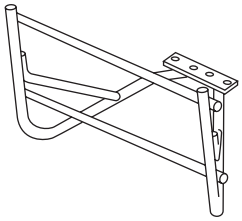 ST18232AA000	18232AA000	ENGINE STAND	Used for disassembling and assembling engine.
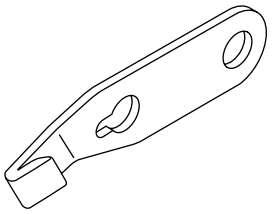 ST-498497100	498497100	CRANKSHAFT STOPPER	Used for stopping rotation of flywheel or drive plate when loosening/tightening crank pulley bolt.
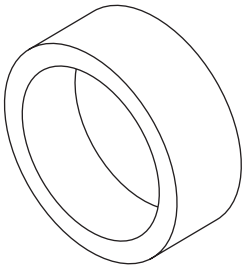 ST18254AA000	18254AA000	PISTON PIN GUIDE	Used for installing piston in cylinder.

ILLUSTRATION	TOOL NUMBER	DESCRIPTION	REMARKS
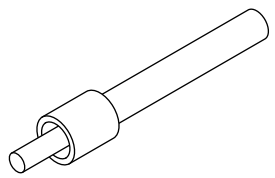 ST-499585500	499585500	VALVE OIL SEAL GUIDE	Used for press-fitting of intake and exhaust valve guide oil seals.
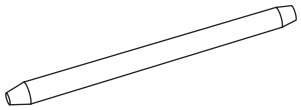 ST18253AA000	18253AA000	PISTON PIN GUIDE	Used for installing piston pin, piston and connecting rod.
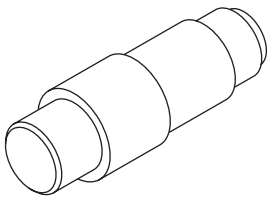 ST18350AA000	18350AA000	CONNECTING ROD BUSHING REMOVER AND INSTALLER	Used for removing and installing connecting rod bushing.
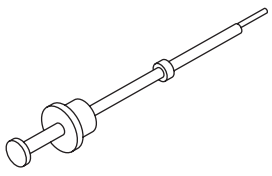 ST-499097500	499097500	PISTON PIN REMOVER ASSY	Used for removing piston pin.

ILLUSTRATION	TOOL NUMBER	DESCRIPTION	REMARKS
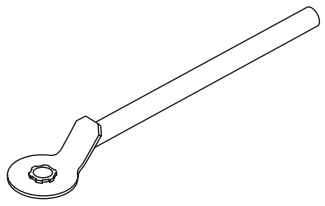 ST-499977500	499977500	CAM SPROCKET WRENCH	Used for removing and installing intake cam sprocket.
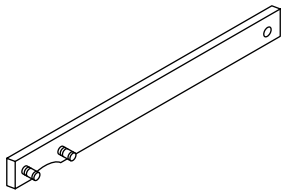 ST18231AA020	18231AA020	CAM SPROCKET WRENCH	Used for removing and installing exhaust cam sprocket.
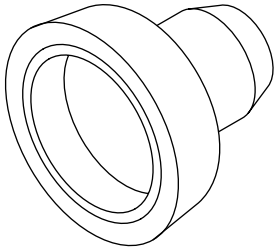 ST-499587200	499587200	CRANKSHAFT OIL SEAL INSTALLER	• Used for installing crankshaft oil seal. • Used with CRANKSHAFT OIL SEAL GUIDE (499597100).
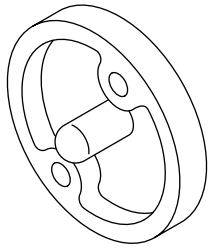 ST-499597100	499597100	CRANKSHAFT OIL SEAL GUIDE	• Used for installing crankshaft oil seal. • Used with CRANKSHAFT OIL SEAL INSTALLER (499587200).

ILLUSTRATION	TOOL NUMBER	DESCRIPTION	REMARKS
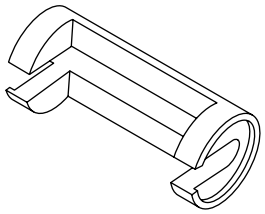 ST-499718000	499718000	VALVE SPRING REMOVER	Used for removing and installing valve spring.
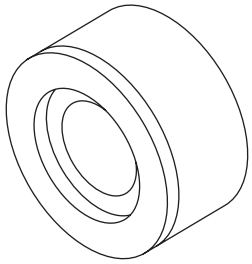 ST18251AA040	18251AA040	VALVE GUIDE ADJUSTER	Used for installing valve guides.
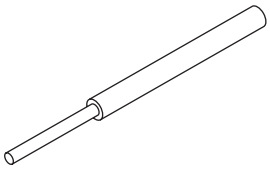 ST-499765700	499765700	VALVE GUIDE REMOVER	Used for removing valve guides.
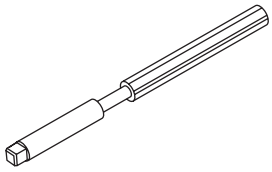 ST-499765900	499765900	VALVE GUIDE REAMER	Used for reaming valve guides.

ILLUSTRATION	TOOL NUMBER	DESCRIPTION	REMARKS
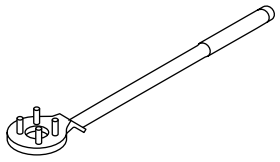 ST-499977100	499977100	CRANK PULLEY WRENCH	Used for stopping rotation of crank pulley when loosening/tightening crank pulley bolt.
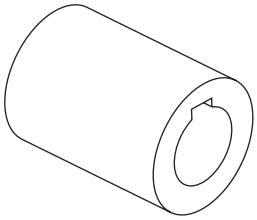 ST18252AA000	18252AA000	CRANKSHAFT SOCKET	Used for rotating crankshaft.
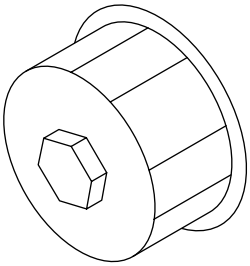 ST-498547000	498547000	OIL FILTER WRENCH	Used for removing and installing oil filter.
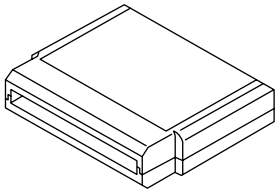 ST24082AA260	24082AA260	CARTRIDGE	Troubleshooting for electrical system.

ILLUSTRATION	TOOL NUMBER	DESCRIPTION	REMARKS
ST22771AA030	22771AA030	SUBARU SELECT MONITOR KIT	Troubleshooting for electrical system.
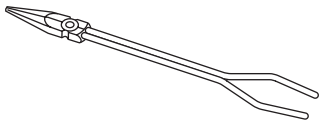 ST18233AA000	18233AA000	PISTON PIN SNAP RING PLIERS	Used for removing and installing snap ring of piston pin.
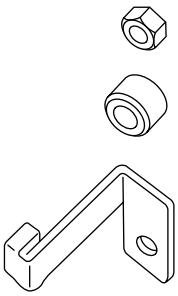 ST-498277200	498277200	STOPPER SET	Used for installing automatic transmission assembly to engine.
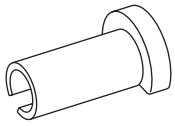 ST42099AE000	42099AE000	CONNECTOR REMOVER	Used for disconnecting quick connector.

ILLUSTRATION	TOOL NUMBER	DESCRIPTION	REMARKS
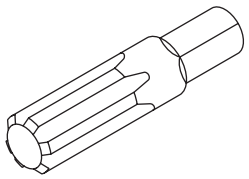 ST-499057000	499057000	TORX PLUS®	Used for removal and installation of the flywheel (dual mass flywheel type) and the drive plate.

2. GENERAL TOOL

TOOL NAME	REMARKS
Compression gauge	Used for measuring compression.

E: PROCEDURE

It is possible to conduct the following service procedures with engine on the vehicle, however, the procedures described in this section are based on the condition that the engine is removed from the vehicle.

- Camshaft
- Cylinder head

2. Compression

A: INSPECTION

CAUTION:
After warming-up, engine becomes very hot. Be careful not to burn yourself during measurement.

1) After warming-up the engine, turn the ignition switch to OFF.
2) Make sure that the battery is fully charged.
3) Release the fuel pressure.
<Ref. to FU(H6DO)-39, RELEASING OF FUEL PRESSURE, PROCEDURE, Fuel.>
4) Remove all the spark plugs. <Ref. to IG(H6DO)-4, REMOVAL, Spark Plug.>
5) Check the starter motor for satisfactory performance and operation.
6) Hold the compression gauge tight against the spark plug hole.

NOTE:
When using a screw-in type compression gauge, the screw (put into cylinder head spark plug hole) should be less than 18 mm (0.71 in) long.

7) Fully open the throttle valve.
8) Crank the engine by means of the starter motor, and read the maximum value on the gauge when the pointer is steady.

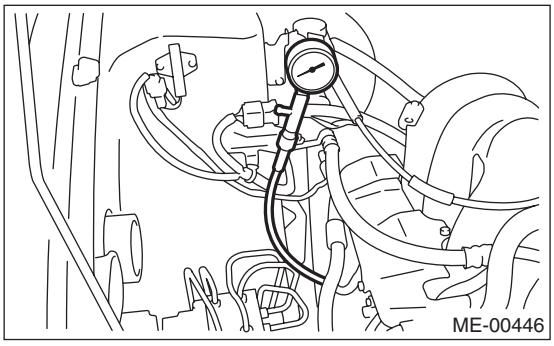

9) Perform at least two measurements per cylinder, and make sure that the values are correct.

Compression (350 rpm and fully open throttle):
Standard:
1,275 — 1,471 kPa (13.0 — 15.0 kg/cm^2 , 185 — 213 psi)
Service limit:
1,128 kPa (11.5 kgf/cm^2, 164 psi)

3. Idle Speed

A: INSPECTION

1) Before checking the idle speed, check the following:
   (1) Ensure the air cleaner element is free from clogging, ignition timing is correct, spark plugs are in good condition, and hoses are connected properly.
   (2) Ensure the malfunction indicator light does not illuminate.
2) Idle the engine.
3) Stop the engine, and turn the ignition switch to OFF.
4) Insert the cartridge to the Subaru Select Monitor.
5) Connect the Subaru Select Monitor to data link connector.
6) Turn the ignition switch to ON and Subaru Select Monitor switch to ON.
7) Select {Each System Check} in Main Menu.
8) Select {Engine} in Selection Menu.
9) Select {Current Data Display & Save} in Engine Control System Diagnosis.
10) Select {Data Display} in Data Display Menu.
11) Start the engine, and read engine idle speed.
12) Check the idle speed when no-loaded. (Headlight, heater fan, rear defroster, radiator fan, A/C, etc. are OFF.)

Idle speed [No load and gears in neutral]: 650±50 rpm

13) Check the idle speed when loaded. (Turn the air conditioning switch to “ON” and operate the compressor for at least one minute before measurement.)

Idle speed [A/C “ON”, and gears in neutral]: 770±50 rpm

NOTE:
Idle speed cannot be adjusted manually, because the idle speed is automatically adjusted. If the idle speed is out of specifications, refer to General Diagnosis Table under “Engine Control System”. <Ref. to EN(H6DO)(diag)-2, Basic Diagnostic Procedure.>

4. Ignition Timing

A: INSPECTION

CAUTION:
After warming-up, engine becomes very hot. Be careful not to burn yourself at measurement.

1) Before checking the ignition timing speed, check the following:
   (1) Ensure the air cleaner element is free from clogging, spark plugs are in good condition, and hoses are connected properly.
   (2) Ensure the malfunction indicator light does not illuminate.
2) Idle the engine.
3) Stop the engine, and turn the ignition switch to OFF.
4) Insert the cartridge to the Subaru Select Monitor.
5) Connect the Subaru Select Monitor to data link connector.
6) Turn the ignition switch to ON and Subaru Select Monitor switch to ON.
7) Select {Each System Check} in Main Menu.
8) Select {Engine} in Selection Menu.
9) Select {Current Data Display & Save} in Engine Control System Diagnosis.
10) Select {Data Display} in Data Display Menu.
11) Start the engine and check the ignition timing at the idle speed.

Ignition timing [BTDC/rpm]:
15°±8°/650

If the timing is not correct, check the ignition control system. Refer to “Engine Control System”. <Ref. to EN(H6DO)(diag)-2, Basic Diagnostic Procedure.>

5. Intake Manifold Vacuum

A: INSPECTION

1) Idle the engine.
2) Disconnect the brake vacuum hose from the intake manifold, and then install the vacuum gauge.
3) Keep the engine at the idle speed and read the vacuum gauge indication.

By observing the gauge needle movement, the internal condition of the engine can be diagnosed as described below.

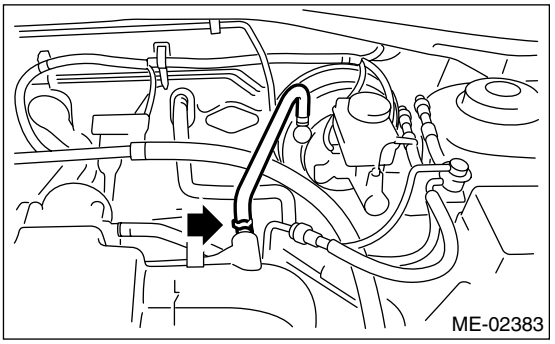

Vacuum pressure (at idling, A/C "OFF"):
–60.0 kPa (–450 mmHg, –17.72 inHg) or less

Diagnosis of engine condition by measurement of intake manifold vacuum	
Vacuum gauge indication	Possible engine condition
1. Needle is steady but lower than normal position. This tendency becomes more evident as engine temperature rises.	Leakage around intake manifold gasket, disconnection or damaged vacuum hose
2. Needle intermittently drops to position lower than normal position.	Leakage around cylinder
3. Needle drops suddenly and intermittently from normal position.	Valve anchoring
4. When engine speed is gradually increased, needle begins to vibrate rapidly at certain speed, and then vibration increases as engine speed increases.	Weak or broken valve springs
5. Needle vibrates above and below normal position in narrow range.	Defective ignition system or throttle chamber idle adjustment

6. Engine Oil Pressure

A: INSPECTION

1) Remove the oil pressure switch from cylinder block. <Ref. to LU(H6DO)-13, REMOVAL, Oil Pressure Switch.>
2) Connect the oil pressure gauge hose to cylinder block.
3) Connect the battery ground cable to battery.
4) Start the engine, and measure oil pressure.

OIL PRESSURE (at oil temperature of 80°C (176°F)):
Standard:
135 kPa (1.4 kg/cm^2, 20 psi) or more (at 600 rpm)
500 kPa (5.1 kg/cm^2, 73 psi) or more (at 5,000 rpm)

CAUTION:
• If the oil pressure is out of specification, check oil pump, oil filter and lubrication line. <Ref. to LU(H6DO)-17, INSPECTION, General Diagnostic Table.>
• If the oil pressure warning light come on and oil pressure is in specification, replace the oil pressure switch. <Ref. to LU(H6DO)-17, INSPECTION, General Diagnostic Table.>

5) After measuring the oil pressure, install the oil pressure switch. <Ref. to LU(H6DO)-13, INSTALLATION, Oil Pressure Switch.>

Tightening torque:
25 N·m (2.5 kgf-m, 18 ft-lb)

7. Fuel Pressure

A: INSPECTION

WARNING:
Before removing the fuel pressure gauge, release fuel pressure.

NOTE:
When the fuel pressure is out of specification, check or replace the pressure regulator and pressure regulator vacuum hose.

1) Release the fuel pressure.
<Ref. to FU(H6DO)-39, RELEASING OF FUEL PRESSURE, PROCEDURE, Fuel.>
2) Open the fuel filler flap lid, and remove the fuel filler cap.
3) Disconnect the fuel delivery hose and connect fuel pressure gauge.
4) Install the fuse of fuel pump to main fuse box.

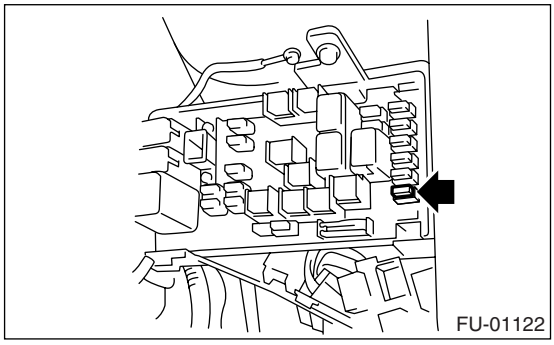

5) Start the engine.
6) Measure the fuel pressure while disconnecting pressure regulator vacuum hose from intake manifold.

Fuel pressure:
Standard: 333 — 363 kPa (3.4 — 3.7 kgf/cm^2, 48 — 53 psi)

7) After connecting the pressure regulator vacuum hose, measure the fuel pressure.

Fuel pressure:
Standard: 279 — 309 kPa (2.85 — 3.15 kgf/cm^2, 40 — 45 psi)

NOTE:
The fuel pressure gauge registers 10 to 20 kPa (0.1 to 0.2 kgf/cm^2, 1 to 3 psi) higher than standard values during high-altitude operations.

8. Valve Clearance

A: INSPECTION

Inspection and adjustment of valve clearance should be performed while engine is cold.

1) Set the vehicle on a lift.
2) Remove the collector cover.
3) Disconnect the ground cable from battery.

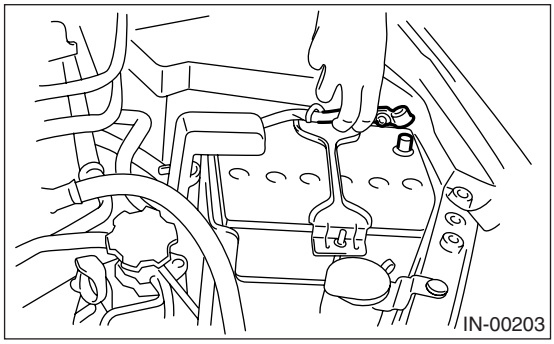

4) Lift-up the vehicle.
5) Remove the under cover.
6) Lower the vehicle.
7) When inspecting RH side cylinders:
   (1) Remove the air intake duct and air cleaner case. <Ref. to IN(H6DO)-8, REMOVAL, Air Intake Duct.> <Ref. to IN(H6DO)-5, REMOVAL, Air Cleaner Case.>
   (2) Remove the fuel tank protector (RH).

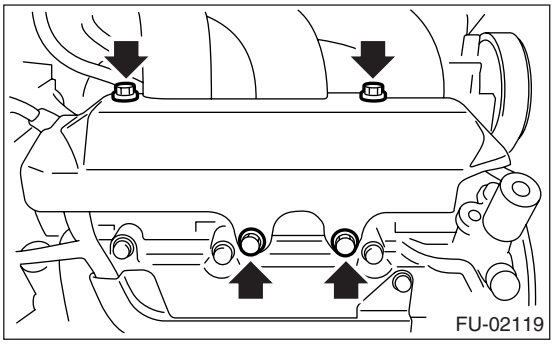

   (3) Disconnect the connector of oil pressure switch.
   (4) Remove the ignition coil. <Ref. to IG(H6DO)-7, REMOVAL, Ignition Coil and Ignitor Assembly.>
   (5) Remove the rocker cover (RH).
8) When inspecting LH side cylinders:
   (1) Disconnect the battery cable, and then remove the battery and battery carrier.
   (2) Disconnect the PCV hose and blow-by hose from rocker cover (LH).

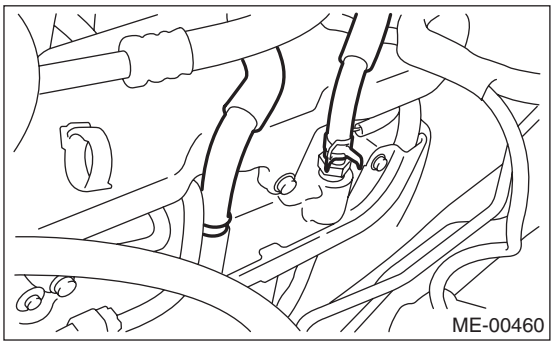

   (3) Remove the fuel pipe protector (LH).

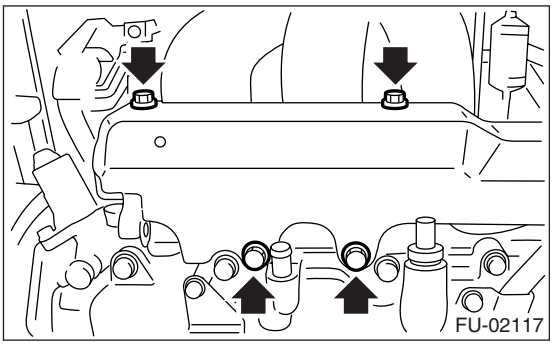

   (4) Remove the ignition coil. <Ref. to IG(H6DO)-7, REMOVAL, Ignition Coil and Ignitor Assembly.>
   (5) Remove the rocker cover (LH).

9) Turn the crankshaft clockwise until the cam is set to position shown in the figure.

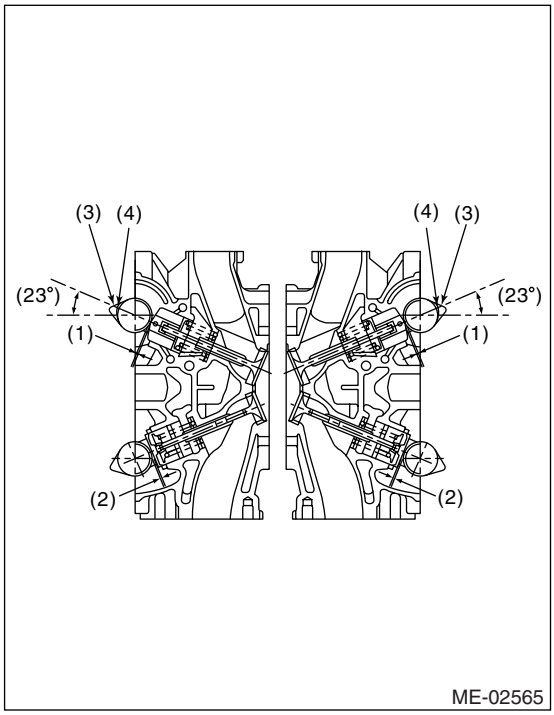

(1) Valve clearance (Intake side)
(2) Valve clearance (Exhaust side)
(3) High lift cam
(4) Low lift cam

10) Measure the clearance of intake valve and exhaust valve using thickness gauge (A).

NOTE:
• Measure it within the range of ±30° that shown in the figure.
• Measure it in low lift cam for intake side.
• Insert the thickness gauge in as horizontal a direction as possible with respect to the valve lifter.

Valve clearance
Intake:
$0.20^{+0.04}_{-0.06}$ mm ($0.0079^{+0.0016}_{-0.0024}$ in)
Exhaust:
0.35±0.05 mm (0.0138±0.0020 in)

• If the measured value is not within specification, take notes of the value in order to adjust the valve clearance later on.

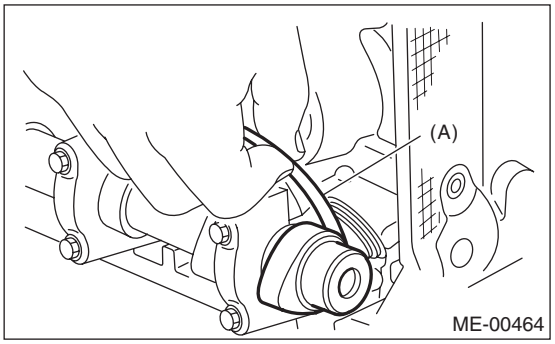

11) If necessary, adjust the valve clearance. <Ref. to ME(H6DO)-29, ADJUSTMENT, Valve Clearance.>
12) Further turn the crank pulley clockwise and then measure the valve clearances again.
13) After inspection, install the related parts in the reverse order of removal.

B: ADJUSTMENT

1. INTAKE SIDE

CAUTION:
• Adjustment of valve clearance should be performed while engine is cold.
• Do not wear gloves during removal and installation of valve lifter.
• Do not use a valve lifter which got high impact due to drop, etc.
• When installing the valve lifter, align the anti-rotation of valve lifter with groove on cylinder head, and then insert the valve lifter.

1) Measure all valve clearances.
<Ref. to ME(H6DO)-28, INSPECTION, Valve Clearance.>

NOTE:
Record each valve clearance after it has been measured.

2) Remove the camshaft. <Ref. to ME(H6DO)-53, REMOVAL, Camshaft.>
3) Remove the valve lifter.
4) Remove the shim from valve lifter.
5) Check the thickness of shim by stamped mark on the side of shim which is removed.
6) Select a shim of suitable thickness using measured valve clearance and shim thickness, by referring to the following table.

Unit: (mm)
S = (V + T) − 0.20
S: Required shim thickness V: Measured valve clearance T: Shim thickness to be used

Part No.	Thickness mm (in)
13218AK890	1.92 (0.0756)
13218AK900	1.94 (0.0764)
13218AK910	1.96 (0.0772)
13218AK920	1.98 (0.0780)
13218AK930	2.00 (0.0787)
13218AK940	2.02 (0.0795)
13218AK950	2.04 (0.0803)
13218AK960	2.06 (0.0811)
13218AK970	2.07 (0.0815)
13218AK980	2.08 (0.0819)
13218AK990	2.09 (0.0823)
13218AL000	2.10 (0.0827)
13218AL010	2.11 (0.0831)
13218AL020	2.12 (0.0835)
13218AL030	2.13 (0.0839)
13218AL040	2.14 (0.0843)
13218AL050	2.15 (0.0846)
13218AL060	2.16 (0.0850)
13218AL070	2.17 (0.0854)
13218AL080	2.18 (0.0858)
13218AL090	2.19 (0.0862)
13218AL100	2.20 (0.0866)
13218AL110	2.21 (0.0870)
13218AL120	2.22 (0.0874)
13218AL130	2.23 (0.0878)
13218AL140	2.24 (0.0882)
13218AL150	2.25 (0.0886)
13218AL160	2.26 (0.0890)
13218AL170	2.27 (0.0894)
13218AL180	2.28 (0.0898)
13218AL190	2.29 (0.0902)
13218AL200	2.30 (0.0906)
13218AL210	2.31 (0.0909)
13218AL220	2.32 (0.0913)
13218AL230	2.33 (0.0917)
13218AL240	2.34 (0.0921)
13218AL250	2.35 (0.0925)
13218AL260	2.36 (0.0929)
13218AL270	2.37 (0.0933)
13218AL280	2.38 (0.0937)
13218AL290	2.39 (0.0941)
13218AL300	2.40 (0.0945)
13218AL310	2.41 (0.0949)
13218AL320	2.42 (0.0953)
13218AL330	2.43 (0.0957)
13218AL340	2.44 (0.0961)
13218AL350	2.45 (0.0965)
13218AL360	2.46 (0.0969)
13218AL370	2.47 (0.0972)
13218AL380	2.48 (0.0976)
13218AL390	2.49 (0.0980)
13218AL400	2.50 (0.0984)
13218AL410	2.51 (0.0988)
13218AL420	2.52 (0.0992)
13218AL430	2.53 (0.0996)
13218AL440	2.54 (0.1000)
13218AL450	2.55 (0.1004)
13218AL460	2.56 (0.1008)
13218AL470	2.57 (0.1012)
13218AL480	2.58 (0.1016)
13218AL490	2.59 (0.1020)
13218AL500	2.60 (0.1024)
13218AL510	2.61 (0.1028)
13218AL520	2.62 (0.1032)
13218AL530	2.64 (0.1039)
13218AL540	2.66 (0.1047)
13218AL550	2.68 (0.1055)
13218AL560	2.70 (0.1063)
13218AL570	2.72 (0.1071)
13218AL580	2.74 (0.1079)
13218AL590	2.76 (0.1087)

2. EXHAUST SIDE

CAUTION:
• Adjustment of valve clearance should be performed while engine is cold.
• Do not wear gloves during removal and installation of valve lifter.
• Do not use a valve lifter which got high impact due to drop, etc.

1) Measure all valve clearances. <Ref. to ME(H6DO)-28, INSPECTION, Valve Clearance.>

NOTE:
Record each valve clearance after it has been measured.

2) Remove the camshaft. <Ref. to ME(H6DO)-53, REMOVAL, Camshaft.>
3) Remove the valve lifter.
4) Measure the thickness of valve lifter with a micrometer.

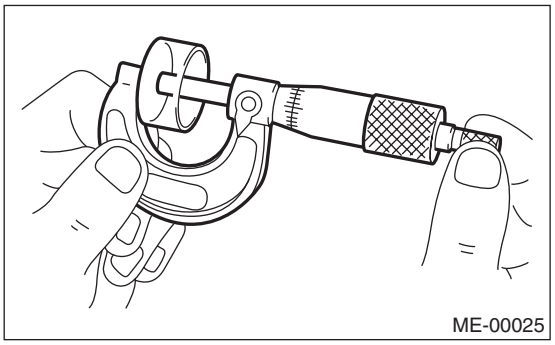

5) Select a valve lifter of suitable thickness using measured valve clearance and valve lifter thickness, by referring to the following table.

Valve Clearance

Unit: (mm)
S = (V + T) − 0.35
S: Valve lifter thickness required V: Measured valve clearance T: Valve lifter thickness to be used

Part No.	Thickness mm (in)
13228AD180	4.32 (0.1701)
13228AD190	4.34 (0.1709)
13228AD200	4.36 (0.1717)
13228AD210	4.38 (0.1724)
13228AD220	4.40 (0.1732)
13228AD230	4.42 (0.1740)
13228AD240	4.44 (0.1748)
13228AD250	4.46 (0.1756)
13228AD260	4.48 (0.1764)
13228AD270	4.50 (0.1772)
13228AD280	4.52 (0.1780)
13228AD290	4.54 (0.1787)
13228AD300	4.56 (0.1795)
13228AD310	4.58 (0.1803)
13228AD320	4.60 (0.1811)
13228AC580	4.62 (0.1819)
13228AC590	4.63 (0.1823)
13228AC600	4.64 (0.1827)
13228AC610	4.65 (0.1831)
13228AC620	4.66 (0.1835)
13228AC630	4.67 (0.1839)
13228AC640	4.68 (0.1843)
13228AC650	4.69 (0.1846)
13228AC660	4.70 (0.1850)
13228AC670	4.71 (0.1854)
13228AC680	4.72 (0.1858)
13228AC690	4.73 (0.1862)
13228AC700	4.74 (0.1866)
13228AC710	4.75 (0.1870)
13228AC720	4.76 (0.1874)
13228AC730	4.77 (0.1878)
13228AC740	4.78 (0.1882)
13228AC750	4.79 (0.1886)
13228AC760	4.80 (0.1890)
13228AC770	4.81 (0.1894)
13228AC780	4.82 (0.1898)
13228AC790	4.83 (0.1902)
13228AC800	4.84 (0.1906)
13228AC810	4.85 (0.1909)
13228AC820	4.86 (0.1913)
13228AC830	4.87 (0.1917)
13228AC840	4.88 (0.1921)
13228AC850	4.89 (0.1925)
13228AC860	4.90 (0.1929)
13228AC870	4.91 (0.1933)

Part No.	Thickness mm (in)
13228AC880	4.92 (0.1937)
13228AC890	4.93 (0.1941)
13228AC900	4.94 (0.1945)
13228AC910	4.95 (0.1949)
13228AC920	4.96 (0.1953)
13228AC930	4.97 (0.1957)
13228AC940	4.98 (0.1961)
13228AC950	4.99 (0.1965)
13228AC960	5.00 (0.1969)
13228AC970	5.01 (0.1972)
13228AC980	5.02 (0.1976)
13228AC990	5.03 (0.1980)
13228AD000	5.04 (0.1984)
13228AD010	5.05 (0.1988)
13228AD020	5.06 (0.1992)
13228AD030	5.07 (0.1996)
13228AD040	5.08 (0.2000)
13228AD050	5.09 (0.2004)
13228AD060	5.10 (0.2008)
13228AD070	5.11 (0.2012)
13228AD080	5.12 (0.2016)
13228AD090	5.13 (0.2020)
13228AD100	5.14 (0.2024)
13228AD110	5.15 (0.2028)
13228AD120	5.16 (0.2032)
13228AD130	5.17 (0.2035)
13228AD140	5.18 (0.2039)
13228AD150	5.19 (0.2043)
13228AD160	5.20 (0.2047)
13228AD170	5.21 (0.2051)
13228AD330	5.23 (0.2059)
13228AD340	5.25 (0.2067)
13228AD350	5.27 (0.2075)
13228AD360	5.29 (0.2083)
13228AD370	5.31 (0.2091)
13228AD380	5.33 (0.2098)
13228AD390	5.35 (0.2106)
13228AD400	5.37 (0.2114)
13228AD410	5.39 (0.2122)
13228AD420	5.41 (0.2130)
13228AD430	5.43 (0.2138)
13228AD440	5.45 (0.2146)
13228AD450	5.47 (0.2154)
13228AD460	5.49 (0.2161)
13228AD470	5.51 (0.2169)
13228AD480	5.53 (0.2177)
13228AD490	5.55 (0.2185)
13228AD500	5.57 (0.2193)
13228AD510	5.59 (0.2201)

9. V-belt

A: REMOVAL

1) Install the tool to belt tension adjuster assembly installation bolt.
2) Rotate the tool clockwise and loosen the V-belt to remove.

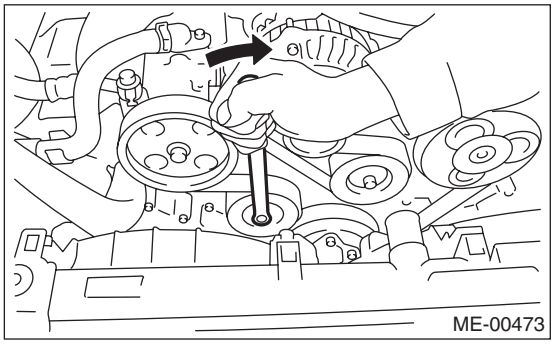

3) Remove the V-belt covers.

B: INSTALLATION

Install in the reverse order of removal.

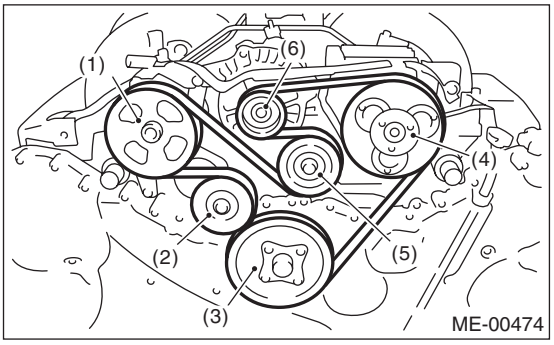

(1) Power steering oil pump pulley
(2) Belt tension adjuster ASSY
(3) Crank pulley
(4) A/C compressor
(5) Belt idler
(6) Generator

C: INSPECTION

1) Replace the V-belt, if cracks, fraying or wear is found.
2) Check that the V-belt automatic belt tension indicator (A) is within the range (D).

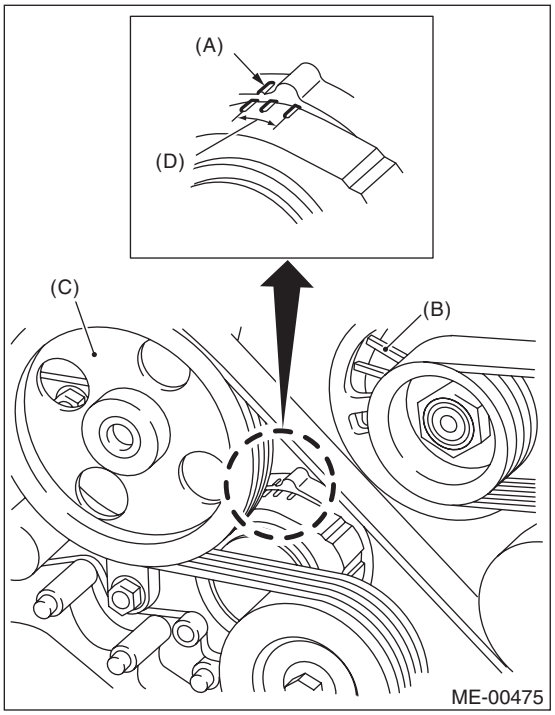

(A) Indicator
(B) Generator
(C) Power steering oil pump pulley
(D) Service limit

10.Engine Assembly

A: REMOVAL

1) Set the vehicle on a lift.
2) Open the front hood fully and support with the front food stay.
3) Remove the collector cover.
4) Collect the refrigerant from A/C system. <Ref. to AC-20, PROCEDURE, Refrigerant Recovery Procedure.>
5) Release the fuel pressure.
<Ref. to FU(H6DO)-39, RELEASING OF FUEL PRESSURE, PROCEDURE, Fuel.>
6) Remove the fuel filler cap.
7) Disconnect the ground cable from battery.

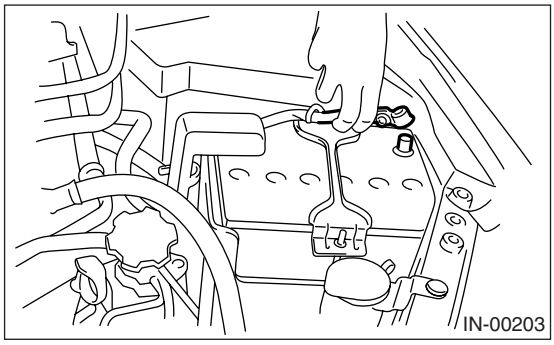
IN-00203

8) Remove the air intake duct, air cleaner case and air intake chamber.
<Ref. to IN(H6DO)-8, REMOVAL, Air Intake Duct.> <Ref. to IN(H6DO)-5, REMOVAL, Air Cleaner Case.> <Ref. to IN(H6DO)-7, REMOVAL, Air Intake Chamber.>
9) Remove the radiator from vehicle. <Ref. to CO(H6DO)-14, REMOVAL, Radiator.>
10) Remove the V-belts. <Ref. to ME(H6DO)-32, REMOVAL, V-belt.>
11) Disconnect the A/C pressure hoses from A/C compressor. <Ref. to AC-39, REMOVAL, Hose and Tube.>
12) Disconnect the following connectors:
(1) Engine ground terminals

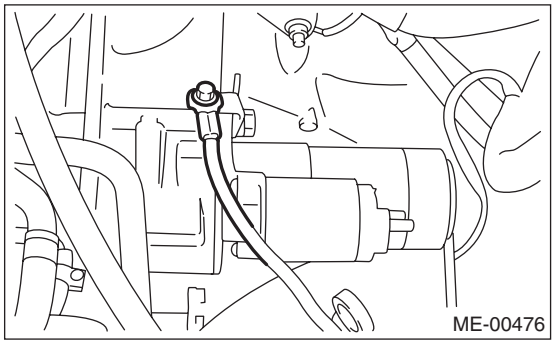
ME-00476

(2) Engine harness connectors

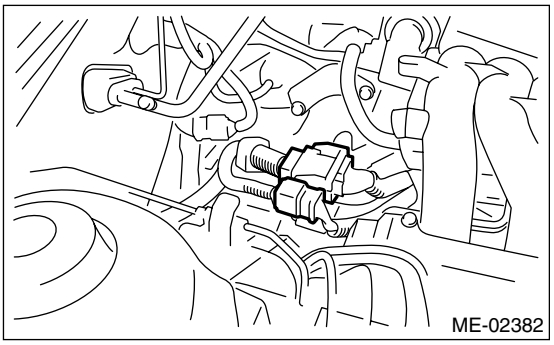
ME-02382

(3) Generator connector, terminal and A/C compressor connector
(4) Power steering switch connector
13) Disconnect the following hoses.
(1) Brake booster vacuum hose

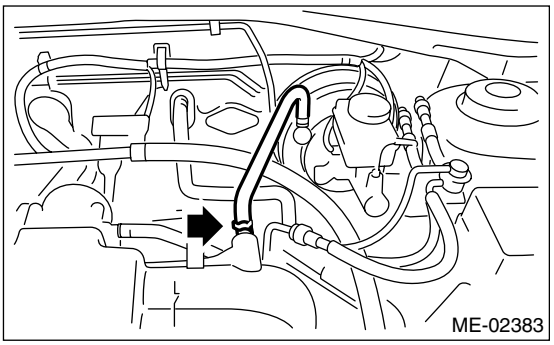
ME-02383

(2) Heater inlet and outlet hoses
(3) Pressure regulator vacuum hose
14) Remove the power steering pump from bracket.

NOTE:
Do not disconnect the hose and pipe from pump body.

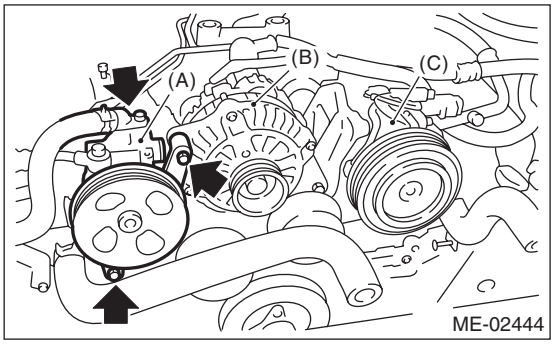

ME-02444

(A) Power steering pump
(B) Generator
(C) A/C compressor

(1) Place the power steering pump on the right side wheel apron.

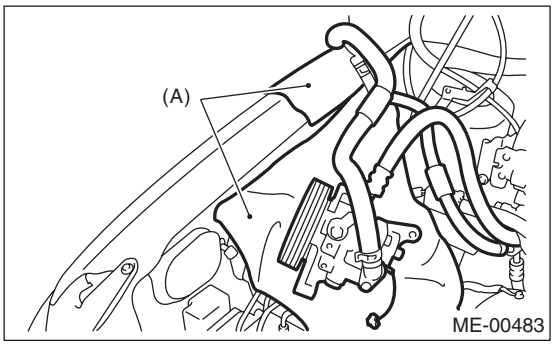

(A) Cloth

15) Lift-up the vehicle.
16) Remove the under cover.
17) Remove the front exhaust pipe.
<Ref. to EX(H6DO)-4, REMOVAL, Front Exhaust Pipe.>

NOTE:
Be careful not to let the front exhaust pipe interfere with water pipes on engine side.

18) Remove the ground cable.

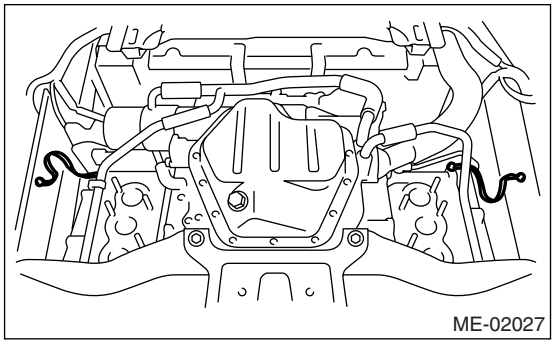

19) Remove the bolts and nuts which hold lower side of transmission to engine.

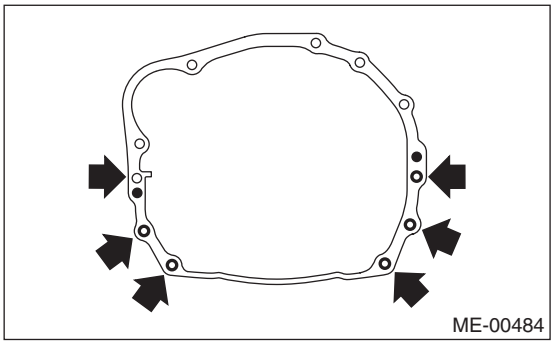

20) Remove the nuts which install front cushion rubber onto front crossmember.

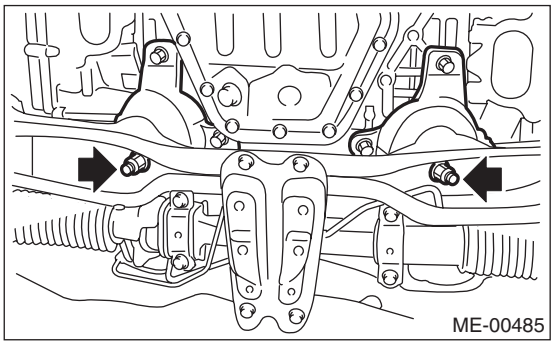

21) Separate the torque converter clutch from drive plate.
(1) Lower the vehicle.
(2) Remove the service hole plug (A).
(3) Remove the bolts which hold torque converter clutch to drive plate.
(4) Remove other bolts while rotating the engine using a socket wrench.

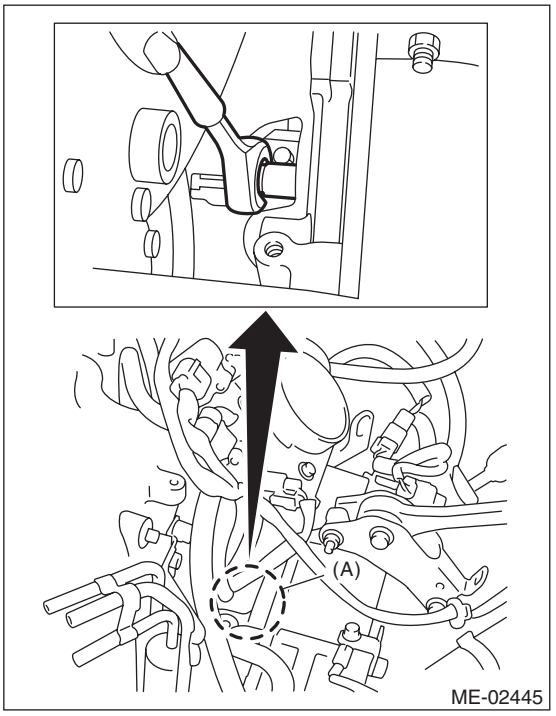

22) Remove the pitching stopper.

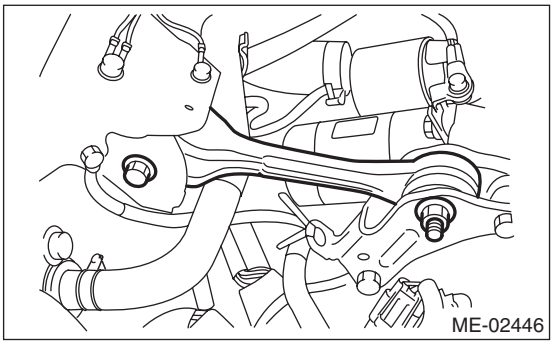

23) Disconnect the fuel delivery hose and evaporation hose.
(1) Disconnect the connector of fuel pipe by pushing the ST in the direction of the arrow.
ST 42099AE000 CONNECTOR REMOVER
(2) Remove the clip and disconnect the evaporation hose from pipe.

CAUTION:
• Catch fuel from the hose into container.
• Disconnect the hose with its end wrapped with cloth to prevent fuel from splashing.

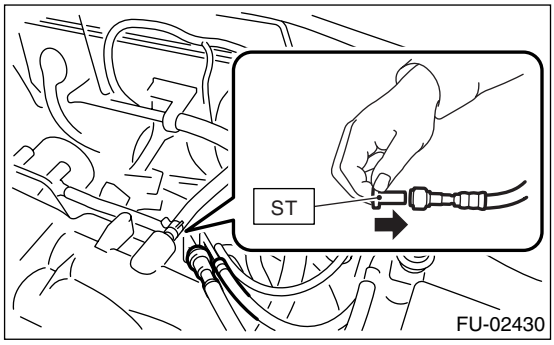

24) Support the engine with a lifting device and wire ropes.
25) Support the transmission with a garage jack.

CAUTION:
Doing this is very important because the transmission lowers for its own weight. This work is also of great importance for facilitating reinstallation.

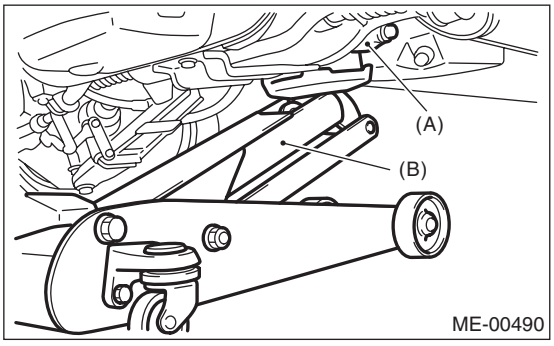

(A) Transmission
(B) Garage jack

CAUTION:
Before removing the engine away from transmission, check to be sure no work has been overlooked.

26) Separation of engine and transmission:
(1) Remove the starter. <Ref. to SC(H4SO)-6, REMOVAL, Starter.>
(2) Remove the bolts which hold upper side of transmission to engine.

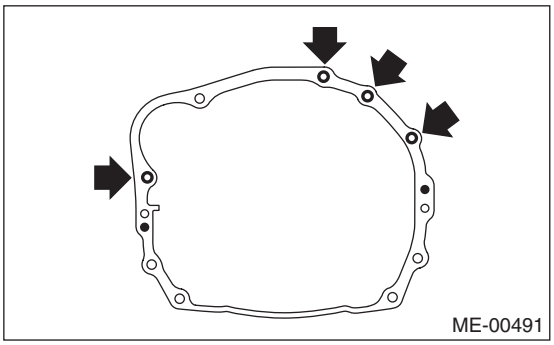

27) Set the ST to torque converter clutch case.
ST 498277200 STOPPER SET

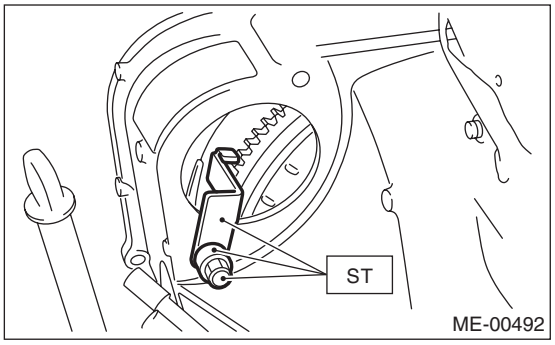

28) Remove the engine from vehicle.
(1) Slightly raise the engine.
(2) Raise the transmission with garage jack.
(3) Move the engine horizontally until main shaft is withdrawn from clutch cover.
(4) Slowly move the engine away from engine compartment.

NOTE:
Be careful not to damage adjacent parts or body panels with crank pulley, oil level gauge, etc.

29) Remove the front cushion rubbers.

B: INSTALLATION

1) Install the front cushion rubbers.

Tightening torque:
35 N·m (3.6 kgf-m, 25.8 ft-lb)

2) Position the engine in engine compartment and align it with transmission.

NOTE:
Be careful not to damage adjacent parts or body panels with crank pulley, oil level gauge, etc.

3) Tighten the bolts which hold upper side of transmission to engine.

Tightening torque:
50 N·m (5.1 kgf-m, 37 ft-lb)

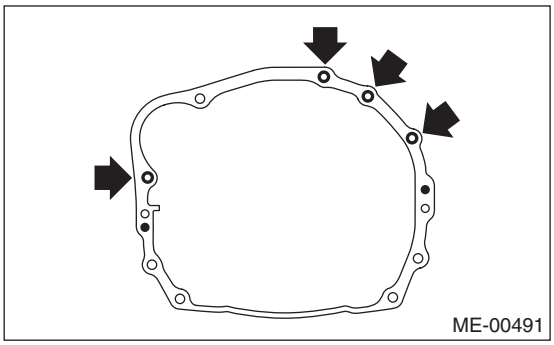

4) Remove the lifting device and wire ropes.
5) Remove the garage jack.
6) Install the pitching stopper.

Tightening torque:
T1: 50 N·m (5.1 kgf-m, 37 ft-lb)
T2: 58 N·m (5.9 kgf-m, 42.8 ft-lb)

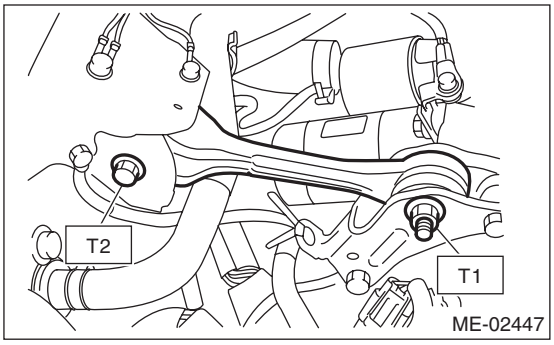

7) Remove the ST from torque converter clutch case.

NOTE:
Be careful not to drop the ST into the torque converter clutch case when removing the ST.

ST 498277200 STOPPER SET

8) Install the starter. <Ref. to SC(H4SO)-6, INSTALLATION, Starter.>
9) Install the torque converter clutch to drive plate.
(1) Tighten the bolts which hold torque converter clutch to drive plate.
(2) Tighten other bolts while rotating the engine using a socket wrench.

NOTE:
Be careful not to drop the ST into the torque converter clutch case when removing the ST.

Tightening torque:
25 N·m (2.5 kgf-m, 18 ft-lb)

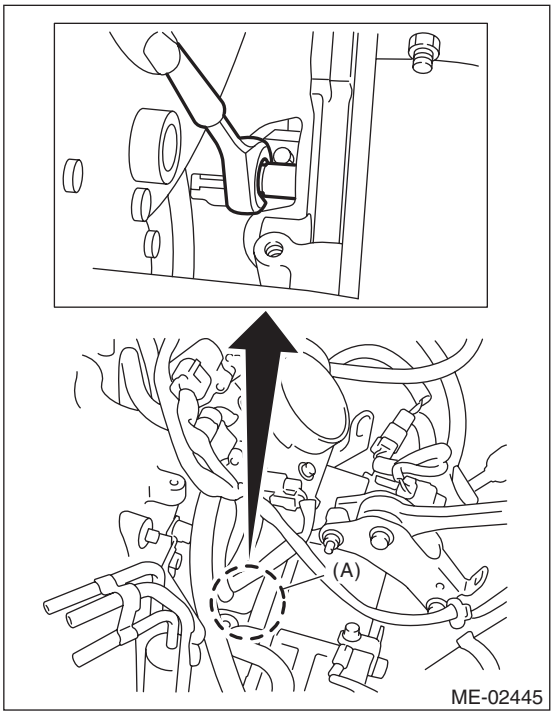

(3) Install the service hole plug (A) to prevent foreign matters from being mixed.

10) Install the power steering pump. <Ref. to PS-46, INSTALLATION, Oil Pump.>
11) Lift-up the vehicle.
12) Tighten the bolts and nuts which hold lower side of transmission to the engine.

Tightening torque:
50 N·m (5.1 kgf-m, 37 ft-lb)

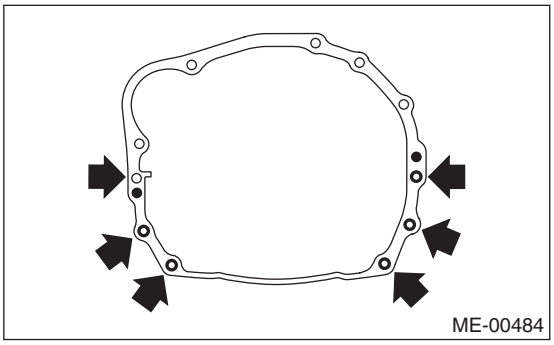

13) Tighten the nuts which install the front cushion rubber onto crossmember.

Tightening torque:
85 N·m (8.7 kgf-m, 62.7 ft-lb)

NOTE:
Make sure the front cushion rubber mounting bolts (A) and locator (B) are securely installed.

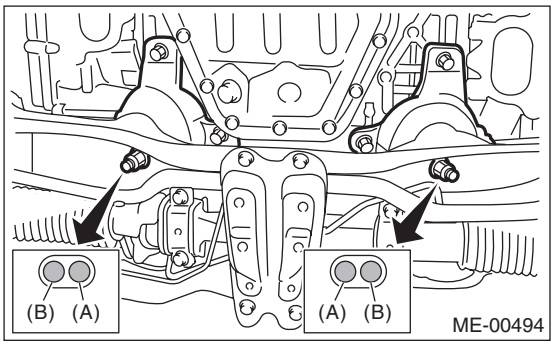

14) Install the front exhaust pipe.
<Ref. to EX(H6DO)-5, INSTALLATION, Front Exhaust Pipe.>

NOTE:
• Be care not to let the front exhaust pipe interfere with water pipes and crossmember on engine side.
• Be care not to scratch the flange surface of front exhaust pipe with stud bolt on engine.

15) Connect the ground cable.

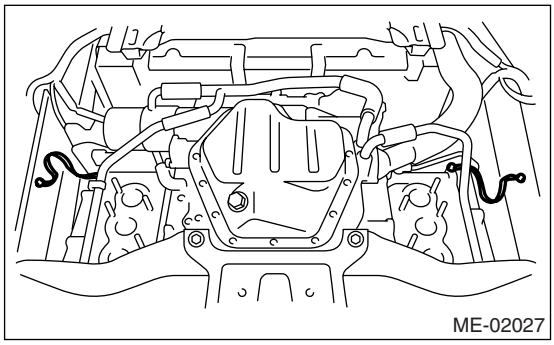

16) Install the under cover.
17) Lower the vehicle.
18) Connect the following hoses.
(1) Fuel delivery hose and evaporation hose
(2) Heater inlet and outlet hoses
(3) Brake booster vacuum hose
(4) Pressure regulator vacuum hose
19) Connect the following connectors:
(1) Engine ground terminals

Tightening torque:
14 N·m (1.4 kgf-m, 10.1 ft-lb)

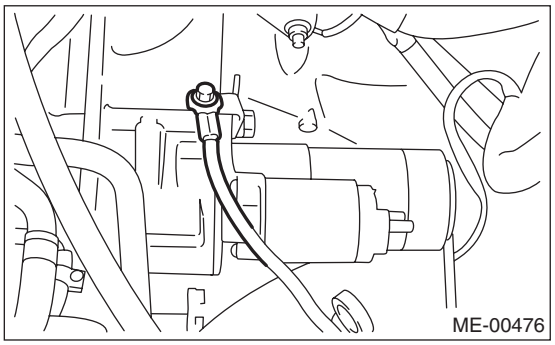

(2) Engine harness connectors

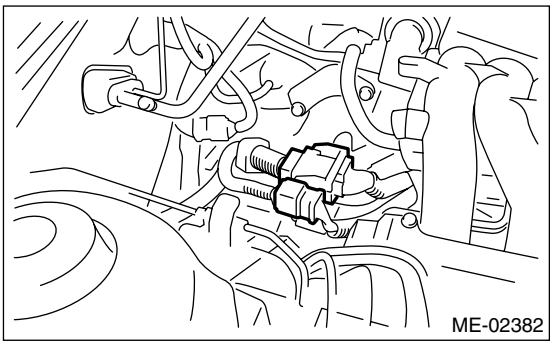

(3) Generator connector and terminal
(4) A/C compressor connector
(5) Power steering switch connector
20) Install the A/C pressure hoses.
<Ref. to AC-39, INSTALLATION, Hose and Tube.>
21) Install the V-belts. <Ref. to ME(H6DO)-32, INSTALLATION, V-belt.>
22) Install the radiator to vehicle. <Ref. to CO(H6DO)-15, INSTALLATION, Radiator.>
23) Install the air intake duct, air cleaner case and air intake chamber. <Ref. to IN(H6DO)-8, INSTALLATION, Air Intake Duct.> <Ref. to IN(H6DO)-5, INSTALLATION, Air Cleaner Case.> <Ref. to IN(H6DO)-7, INSTALLATION, Air Intake Chamber.>
24) Install the battery in the vehicle, and connect cables.
25) Fill engine coolant.
<Ref. to CO(H6DO)-10, FILLING OF ENGINE COOLANT, REPLACEMENT, Engine Coolant.>
26) Check the ATF level and replenish it if necessary.
<Ref. to 5AT-27, INSPECTION, Automatic Transmission Fluid.>
27) Charge the A/C system with refrigerant. <Ref. to AC-21, PROCEDURE, Refrigerant Charging Procedure.>
28) Install the collector cover.
29) Remove the front hood stay, and close the front hood.
30) Take off the vehicle from a lift.

C: INSPECTION

1) Check pipes and hoses are installed firmly.
2) Check the engine coolant and ATF are at specified levels.
3) Start the engine, and check for leaks of fuel, exhaust gas, engine coolant, etc, and noise and vibrations.

11.Engine Mounting

A: REMOVAL

1) Remove the engine assembly. <Ref. to ME(H6DO)-33, REMOVAL, Engine Assembly.>
2) Remove the engine mounting from engine assembly.

B: INSTALLATION

Install in the reverse order of removal.

Tightening torque:
Engine mounting:
35 N·m (3.6 kgf-m, 25.8 ft-lb)

C: INSPECTION

Make sure that there are no cracks or other damages.

12.Preparation for Overhaul

A: REMOVAL

1) Remove the engine assembly. <Ref. to ME(H6DO)-33, REMOVAL, Engine Assembly.>
2) Set the engine on ST1.
ST 18232AA000 ENGINE STAND

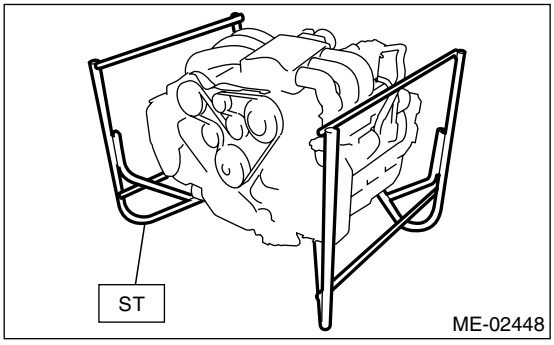

3) Before servicing overhaul, remove the sensor, pipe and hose that installed to engine.
(1) Remove the intake manifold.<Ref. to FU(H6DO)-13, REMOVAL, Intake Manifold.>
(2) Remove the generator. <Ref. to SC(H4SO)-20, REMOVAL, Generator.>
(3) Remove the A/C compressor. <Ref. to AC-34, REMOVAL, Compressor.>
(4) Disconnect the water pipe and hose.
(5) Disconnect the engine harness.
(6) Remove the spark plug. <Ref. to IG(H6DO)-4, REMOVAL, Spark Plug.>
(7) Remove the camshaft position sensor. <Ref. to FU(H6DO)-21, REMOVAL, Camshaft Position Sensor.>
(8) Remove the crankshaft position sensor. <Ref. to FU(H6DO)-20, REMOVAL, Crankshaft Position Sensor.>
(9) Remove the knock sensor. <Ref. to FU(H6DO)-22, REMOVAL, Knock Sensor.>
(10)Remove the engine coolant temperature sensor. <Ref. to FU(H6DO)-19, REMOVAL, Engine Coolant Temperature Sensor.>
(11)Remove the oil pressure switch. <Ref. to LU(H6DO)-13, REMOVAL, Oil Pressure Switch.>
(12)Remove the oil filter. <Ref. to LU(H6DO)-14, REMOVAL, Engine Oil Filter.>
(13)Remove the oil cooler. <Ref. to LU(H6DO)-15, REMOVAL, Oil Cooler.>

13.Crank Pulley

A: REMOVAL

1) Remove the crank pulley cover.

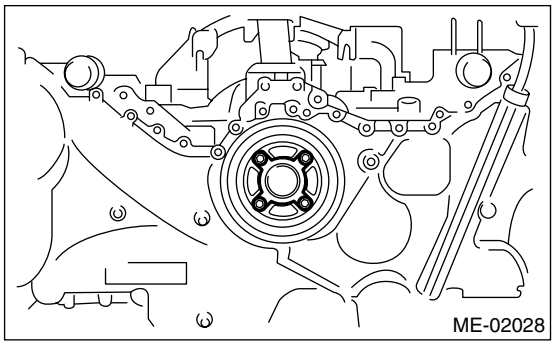

2) Remove the crank pulley bolt. To lock the crankshaft, use ST.

ST 499977100 CRANK PULLEY WRENCH

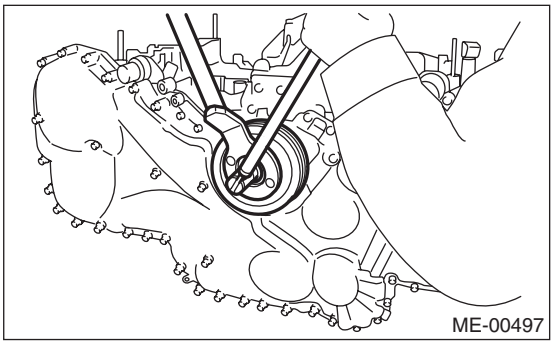

3) Remove the crank pulley.

B: INSTALLATION

1) Install the crank pulley.

2) Install the crank pulley bolt. To lock the crankshaft, use ST.

ST 499977100 CRANK PULLEY WRENCH

(1) Clean the crank pulley thread using compressed air.

(2) Apply engine oil to the crank pulley bolt seat and thread.

(3) Tighten the crank pulley bolts.

Tightening torque:
178 N·m (18.1 kgf-m, 131 ft-lb)

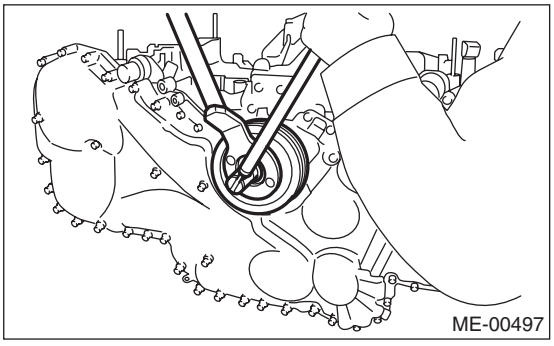

3) Install the crank pulley cover.

NOTE:
Attach the O-ring to crank pulley cover.

Tightening torque:
6.4 N·m (0.65 kgf-m, 4.7 ft-lb)

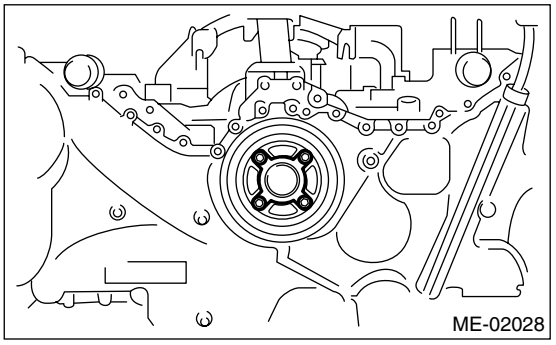

C: INSPECTION

1) Check the crank pulley cover for oil and air leakage.

2) Check crank pulley for looseness.

14.Front Chain Cover

A: REMOVAL

1) Remove the crank pulley. <Ref. to ME(H6DO)-41, REMOVAL, Crank Pulley.>
2) Remove the front chain cover.

NOTE:
Chain cover installation bolt has three different sizes. To prevent the confusion in installation, keep these bolts on container individually.

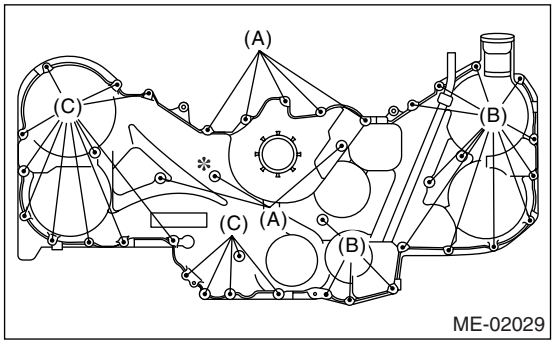

(A) M6 × 16
(B) M6 × 30
(C) M6 × 45
*: Sealing washer

B: INSTALLATION

1) Remove the used liquid gasket from mating surface, and degrease it.
2) Apply liquid gasket to the matching surface of front chain cover.

Liquid gasket:
THREE BOND 1280B (Part No. K0877YA018)

Applying liquid gasket diameter
2.5±0.5 mm (0.098±0.020 in)

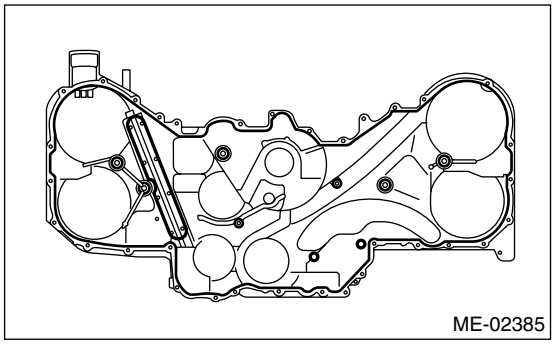

3) Install the front chain cover. Temporarily tighten the bolts.

CAUTION:
Do not install the bolts in wrong place.

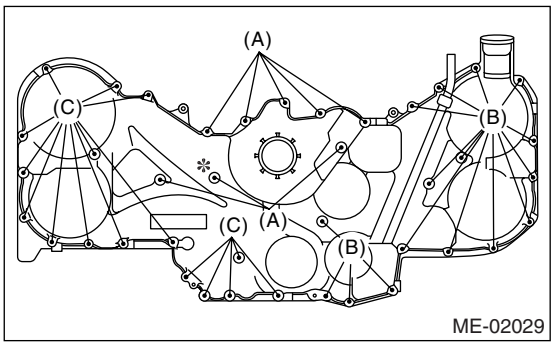

(A) M6 × 16
(B) M6 × 30
(C) M6 × 45
*: Sealing washer

4) Tighten the bolts in the numerical order as shown in the figure.

Tightening torque:
6.6 N·m (0.67 kgf-m, 4.8 ft-lb)

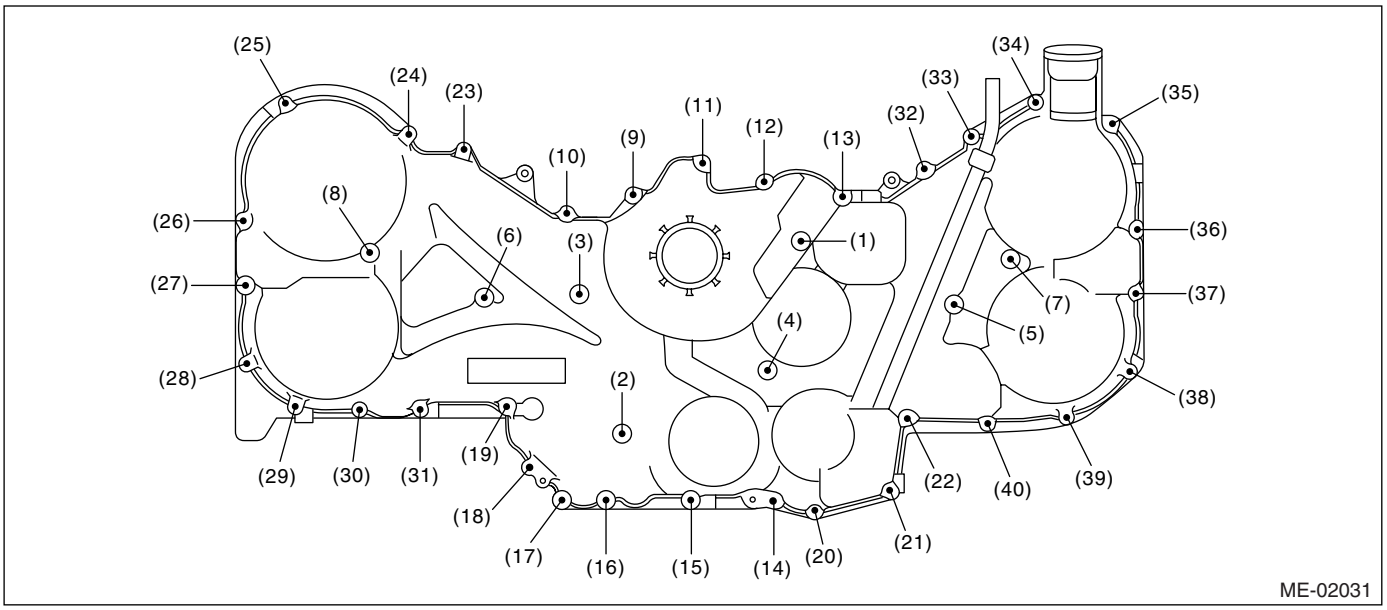

5) Install the crank pulley. <Ref. to ME(H6DO)-41, INSTALLATION, Crank Pulley.>

C: INSPECTION

Check the cover surface for scratch and damage.
Check for oil leakage on cover mating surface and installation part of crank pulley.

15.Timing Chain Assembly

A: REMOVAL

1) Remove the crank pulley. <Ref. to ME(H6DO)-41, REMOVAL, Crank Pulley.>
2) Remove the front chain cover. <Ref. to ME(H6DO)-42, REMOVAL, Front Chain Cover.>
3) Remove the chain tensioner (RH).

NOTE:
Be careful not to come out the plunger (A).

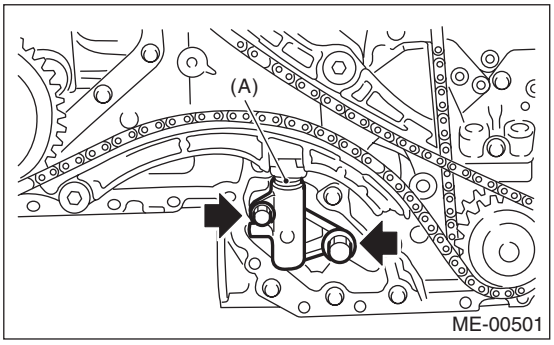

4) Remove the chain guide (RH: between cams).

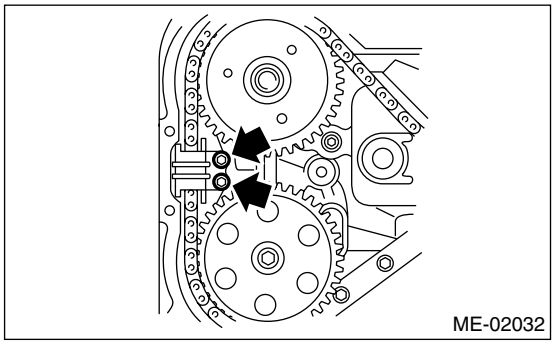

5) Remove the chain guide (RH).
6) Remove the chain tensioner lever (RH).

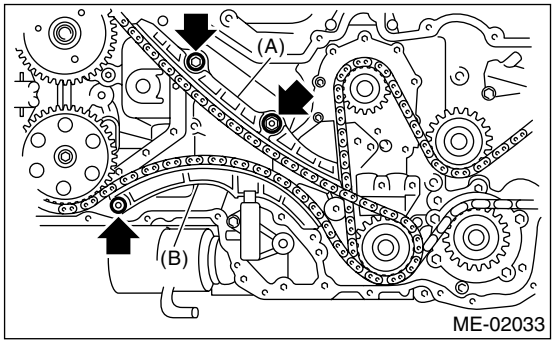

(A) Chain guide (RH)
(B) Chain tensioner lever (RH)

7) Remove the timing chain (RH).
8) Remove the chain tensioner (LH).

NOTE:
Be careful not to come out the plunger.

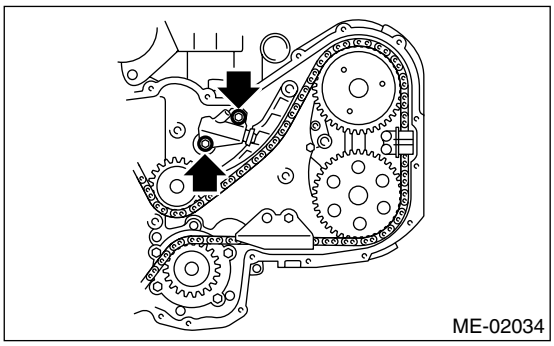

9) Remove the chain tensioner lever (LH).

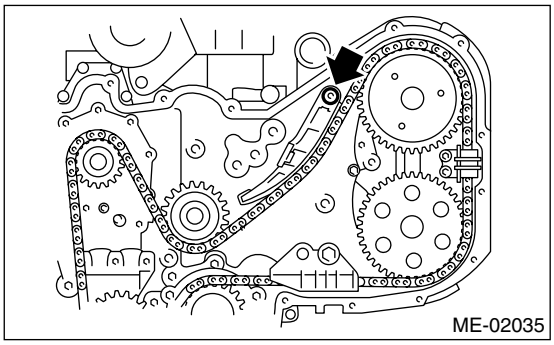

10) Remove the chain guide (LH: between cams).

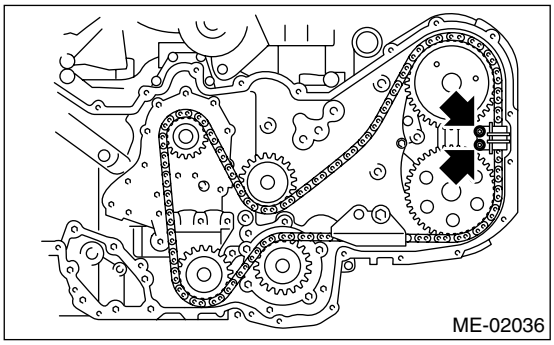

11) Remove the chain guide (LH).

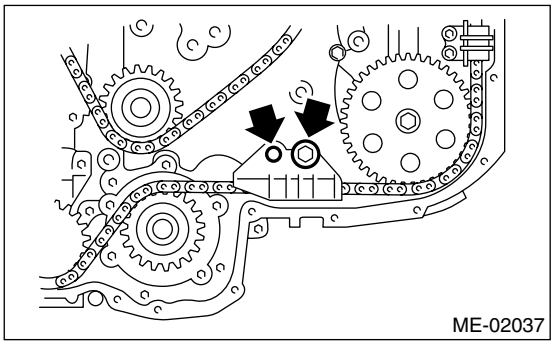

12) Remove the chain guide (center).

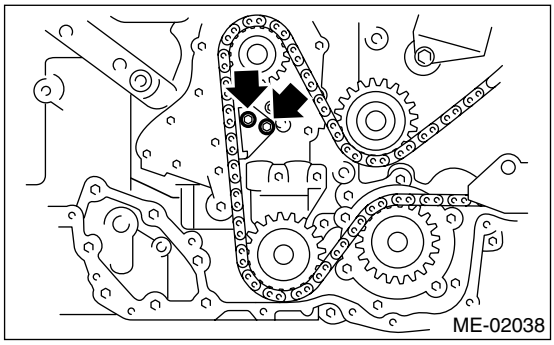

13) Remove the idler sprocket (upper).

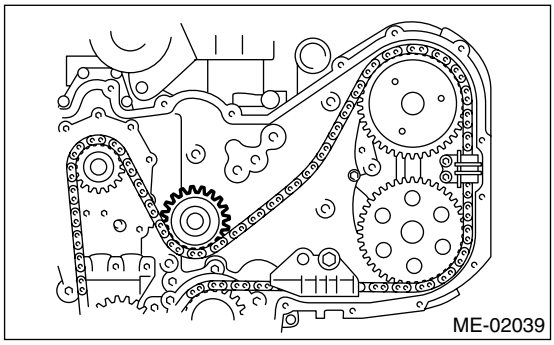

14) Remove the timing chain (LH).
15) Remove the idler sprocket (lower).

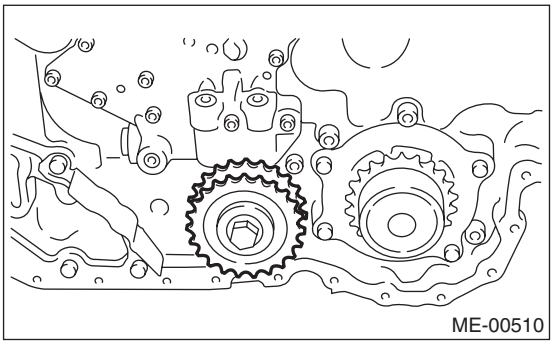

B: INSTALLATION

NOTE:
• Be careful that the foreign matter is not into or onto assembled component during installation.
• Apply engine oil to the chain guide, chain tensioner lever and idler sprocket when installing.

1) Preparation for chain tensioner installation
   (1) Insert the screw, spring pin and tension rod into tensioner body.
   (2) While depressing the tensioner onto rubber mat, twist it to shorten tension rod. Then insert the thin pin into the hole between tension rod and tension body to keep shortened.

NOTE:
Work on the rubber mat or other anti-skid materials.

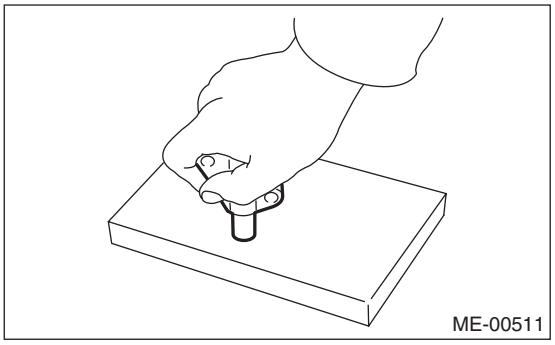

2) Using ST, align the “Top mark” on crank sprocket to 9 o’clock position as shown in the figure
ST 18252AA000 CRANKSHAFT SOCKET

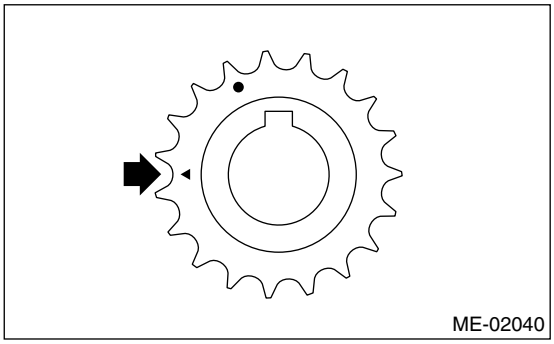

3) Using ST, align the key groove on exhaust cam sprocket to 12 o’clock position as shown in the figure

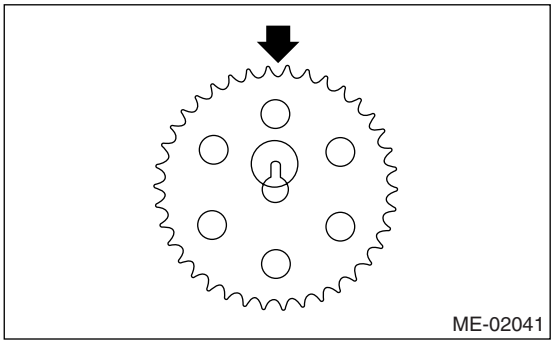

4) Align the intake cam sprocket as shown in the figure.

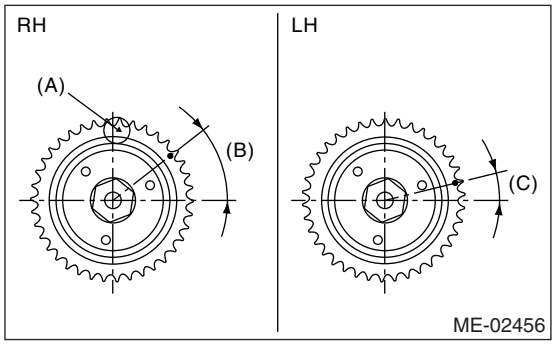

(A) Top mark
(B) 40°
(C) 15°

5) Turn the crank sprocket clockwise, align the "Top mark" to 12 o'clock position (Piston #1 is in TDC position)

NOTE:
Do not rotate the crank shaft and cam sprocket until the timing chain installing was completed.

6) Install the idler sprocket (lower).

Tightening torque:
69 N·m (7.0 kgf-m, 50.6 ft-lb)

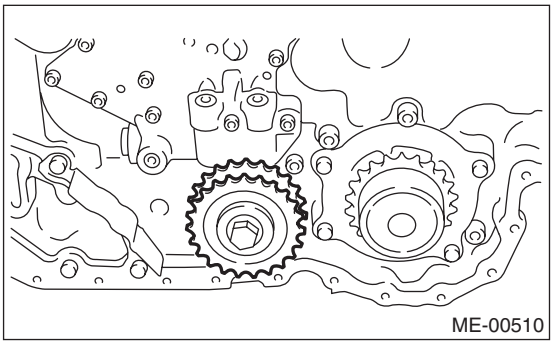

7) Install the timing chain (LH).
(1) Align the timing mark (B) on the crank sprocket with mark (A) on the timing chain (LH).

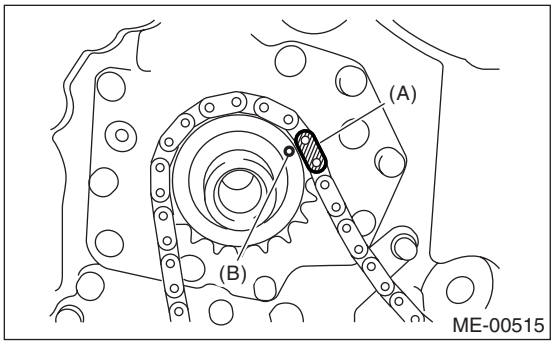

(A) Gold
(B) Mark

(2) Install the routing of timing chain (LH) on idler sprocket (lower), water pump, exhaust cam sprocket (LH) and intake cam sprocket (LH).

NOTE:
Check that the mark on timing chain (A) and cam sprocket (B) is aligned as same as aligned on crank sprocket.

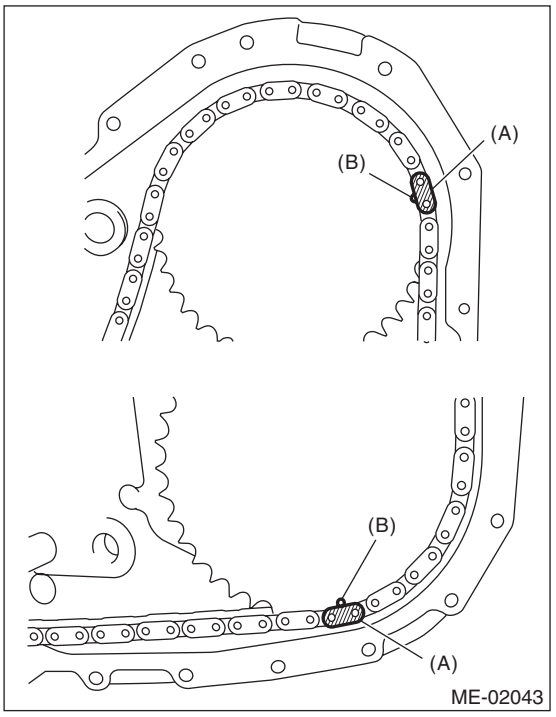

(A) Blue
(B) Mark

(3) Install the chain idler (upper).

Tightening torque:
69 N·m (7.0 kgf-m, 50.6 ft-lb)

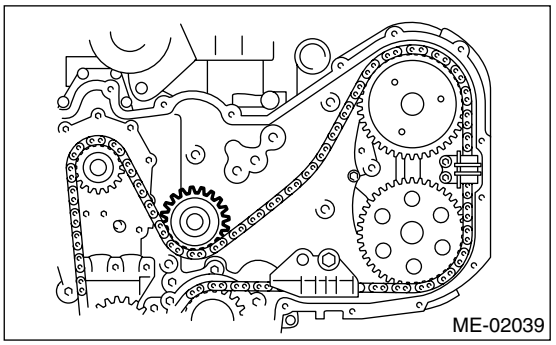

(4) Install the chain guide (LH: between cams).

Tightening torque:
6.4 N·m (0.65 kgf-m, 4.7 ft-lb)

NOTE:
Use a new installing bolt.

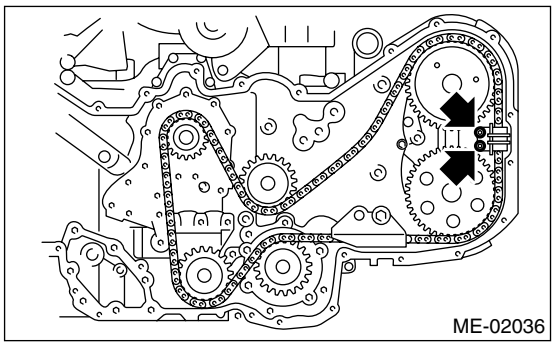

(5) Install the chain guide (LH).

Tightening torque:
16 N·m (1.6 kgf-m, 12 ft-lb)

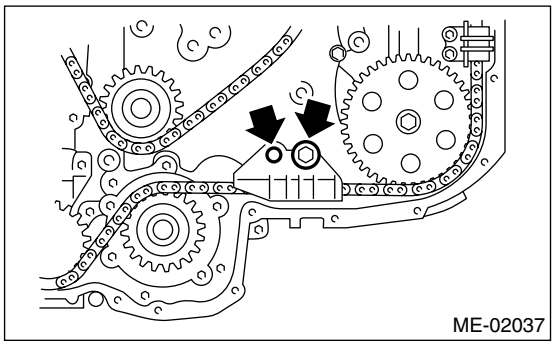

(6) Install the chain tensioner lever (LH).

Tightening torque:
16 N·m (1.6 kgf-m, 12 ft-lb)

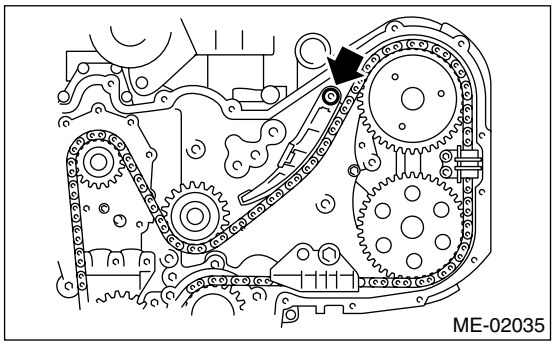

(7) Install the chain tensioner (LH).

Tightening torque:
16 N·m (1.6 kgf-m, 12 ft-lb)

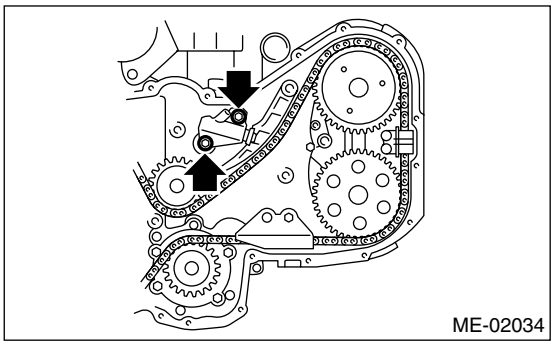

8) Install the timing chain (RH).
(1) Align the marks of timing chain LH and RH on the idler sprocket (lower).

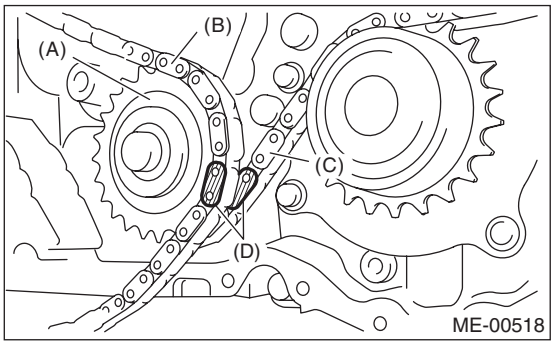

(A) Idler sprocket (lower)
(B) Timing chain (RH)
(C) Timing chain (LH)
(D) Blue

(2) Install the routing of timing chain (RH) on intake cam sprocket (RH), and then set the routing on exhaust cam sprocket.

NOTE:
Check that the mark on timing chain (A) and cam sprocket (B) is aligned as same as aligned on crank sprocket.

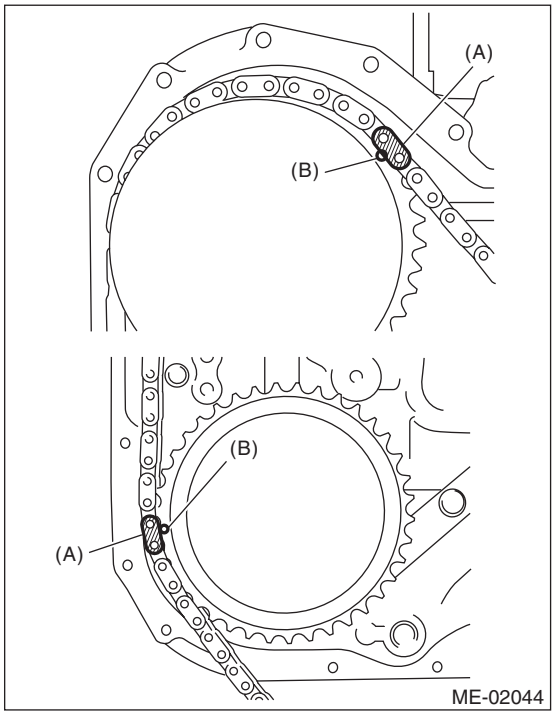

(A) Gold
(B) Mark

(3) Install the chain guide (RH).
(4) Install the chain tensioner lever (RH).

Tightening torque:
16 N·m (1.6 kgf-m, 12 ft-lb)

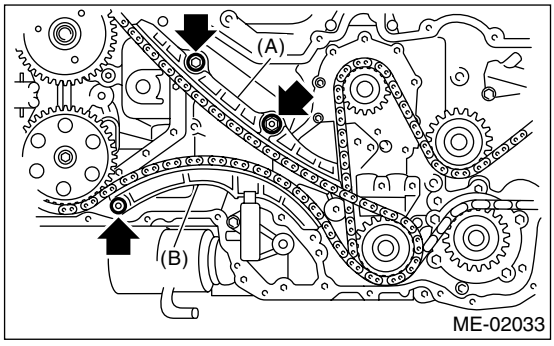

(A) Chain guide (RH)
(B) Chain tensioner lever (RH)

(5) Install the chain guide (RH: between cams).

Tightening torque:
6.4 N·m (0.65 kgf-m, 4.7 ft-lb)

NOTE:
Use a new installing bolt.

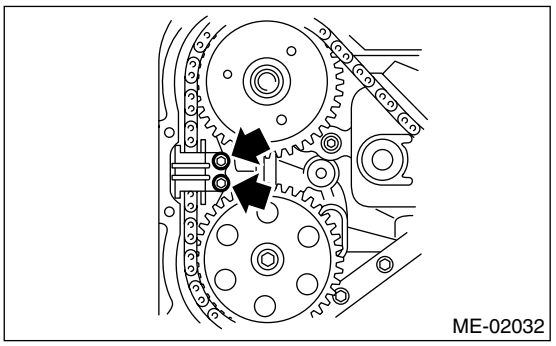

(6) Install the chain tensioner (RH).

Tightening torque:
16 N·m (1.6 kgf-m, 12 ft-lb)

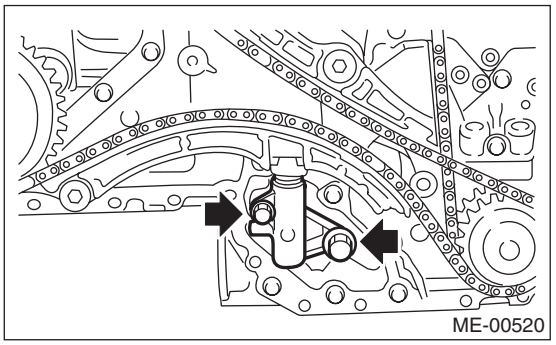

(7) Adjust the clearance between chain guide (RH) and chain guide (center) within 8.4 — 8.6 mm (0.331 — 0.339 in). Install the chain guide (center).

Tightening torque:
7.8 N·m (0.8 kgf-m, 5.8 ft-lb)

NOTE:
Use a new installing bolt.

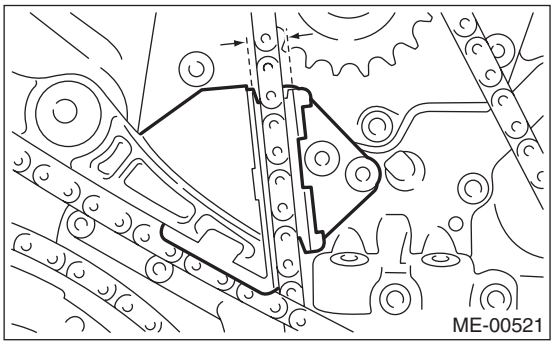

(8) Check that each mark on the sprocket and timing chain is matched, and then draw out the stopper pin from chain tensioner.

16.Cam Sprocket

A: REMOVAL

1) Remove the crank pulley. <Ref. to ME(H6DO)-41, REMOVAL, Crank Pulley.>
2) Remove the front chain cover. <Ref. to ME(H6DO)-42, REMOVAL, Front Chain Cover.>
3) Remove the timing chain assembly.
<Ref. to ME(H6DO)-44, REMOVAL, Timing Chain Assembly.>
4) Remove the cam sprocket. To lock the crankshaft, use the ST.

ST 499977500 CAM SPROCKET WRENCH

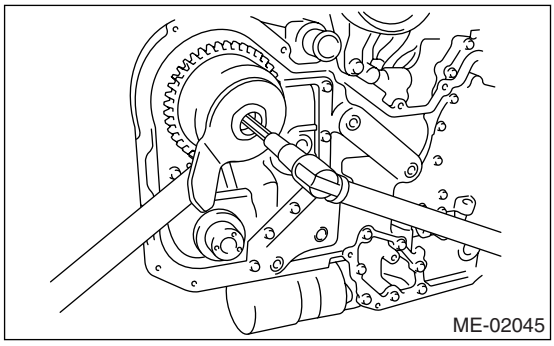

ST 18231AA020 CAM SPROCKET WRENCH

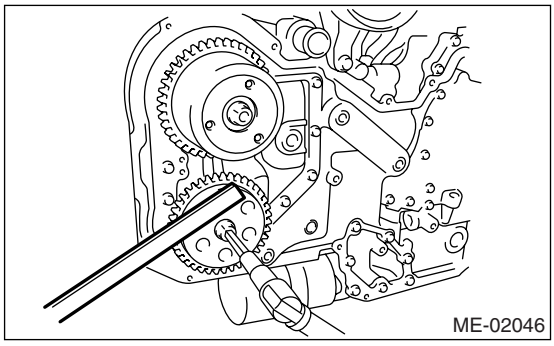

B: INSTALLATION

1) Install the cam sprocket. To lock the crankshaft, use the ST.

Tightening torque:
29.5 N·m (3.0 kgf-m, 21.8 ft-lb)

2) Further tighten the bolt.

Tightening angle:
Intake
45°±5°
Exhaust
25°±5°

ST 499977500 CAM SPROCKET WRENCH

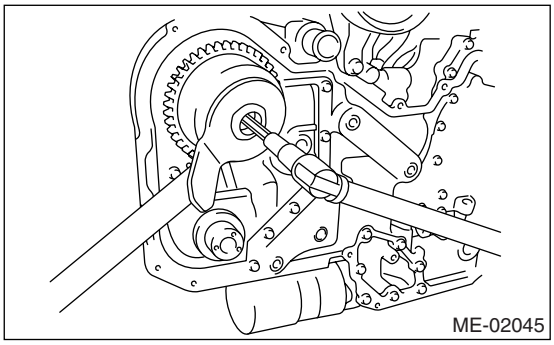

ST 18231AA020 CAM SPROCKET WRENCH

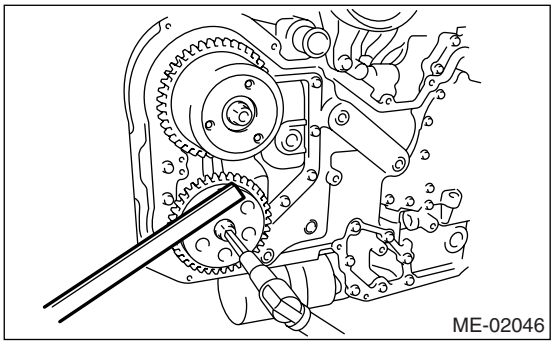

3) Install the timing chain assembly.
<Ref. to ME(H6DO)-45, INSTALLATION, Timing Chain Assembly.>
4) Install the front chain cover.
<Ref. to ME(H6DO)-42, INSTALLATION, Front Chain Cover.>
5) Install the crank pulley. <Ref. to ME(H6DO)-41, INSTALLATION, Crank Pulley.>

C: INSPECTION

1) Check the cam sprocket teeth for abnormal wear and scratches.
2) Make sure there is no free play between cam sprocket and key.

17.Crank Sprocket

A: REMOVAL

1) Remove the crank pulley. <Ref. to ME(H6DO)-41, REMOVAL, Crank Pulley.>
2) Remove the front chain cover. <Ref. to ME(H6DO)-42, REMOVAL, Front Chain Cover.>
3) Remove the timing chain assembly.
<Ref. to ME(H6DO)-44, REMOVAL, Timing Chain Assembly.>
4) Remove the cam sprocket. <Ref. to ME(H6DO)-49, REMOVAL, Cam Sprocket.>
5) Remove the crank sprocket (A).

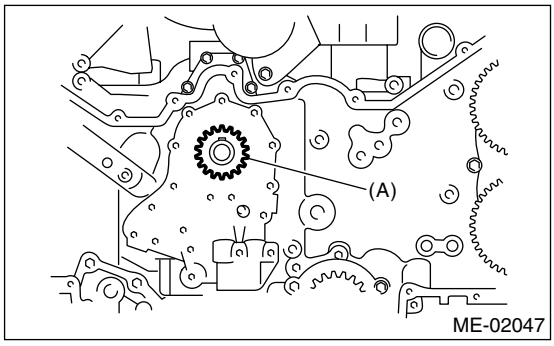

B: INSTALLATION

1) Install the crank sprocket (A).

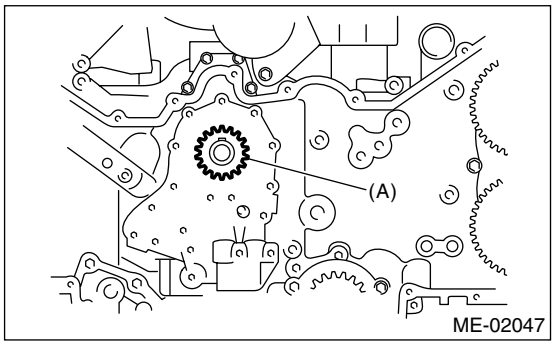

2) Install the cam sprocket. <Ref. to ME(H6DO)-49, INSTALLATION, Cam Sprocket.>
3) Install the timing chain assembly.
<Ref. to ME(H6DO)-45, INSTALLATION, Timing Chain Assembly.>
4) Install the front chain cover.
<Ref. to ME(H6DO)-42, INSTALLATION, Front Chain Cover.>
5) Install the crank pulley. <Ref. to ME(H6DO)-41, INSTALLATION, Crank Pulley.>

C: INSPECTION

1) Check the crank sprocket teeth for abnormal wear and scratches.
2) Make sure there is no free play between crank sprocket and key.

18.Rear Chain Cover

A: REMOVAL

1) Remove the crank pulley. <Ref. to ME(H6DO)-41, REMOVAL, Crank Pulley.>
2) Remove the front chain cover. <Ref. to ME(H6DO)-42, REMOVAL, Front Chain Cover.>
3) Remove the timing chain. <Ref. to ME(H6DO)-44, REMOVAL, Timing Chain Assembly.>
4) Remove the cam sprocket. <Ref. to ME(H6DO)-49, REMOVAL, Cam Sprocket.>
5) Remove the crank sprocket.
6) Remove the oil pump. <Ref. to LU(H6DO)-8, REMOVAL, Oil Pump.>
7) Remove the water pump. <Ref. to CO(H6DO)-12, REMOVAL, Water Pump.>
8) Remove the rear chain cover.

NOTE:
Installation bolt has seven different sizes. To prevent the confusion in installation, keep these bolts on container individually.

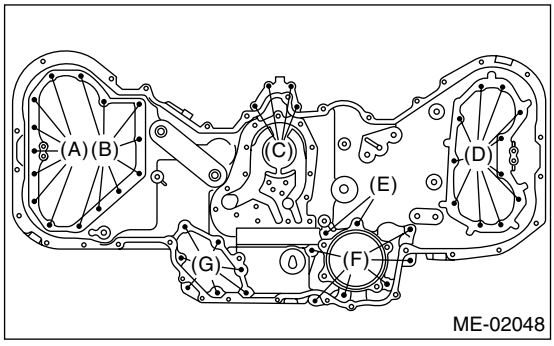

(A) M6 × 14
(B) M6 × 18 (Silver)
(C) M6 × 30
(D) M6 × 18
(E) M8 × 40
(F) M8 × 30
(G) M6 × 22

B: INSTALLATION

1) Remove the used liquid gasket from mating surface, and degrease it.
2) Apply liquid gasket to the matching surface of rear chain cover.

Liquid gasket:
THREE BOND 1280B (Part No. K0877A018)

Applying liquid gasket diameter
(A) 1.0±0.5 mm (0.039±0.020 in)
(B) 3.0±1.0 mm (0.118±0.039 in)

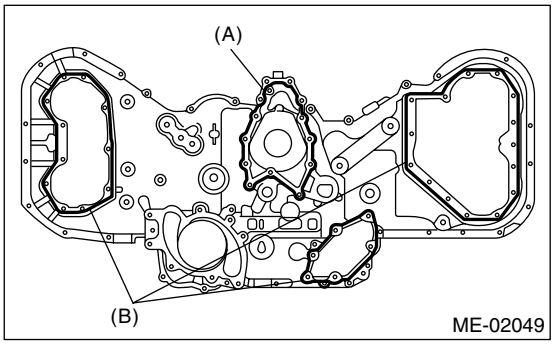

3) Install the O-ring.

NOTE:
- Do not reuse the O-ring.
- Do not install the O-ring in wrong place.

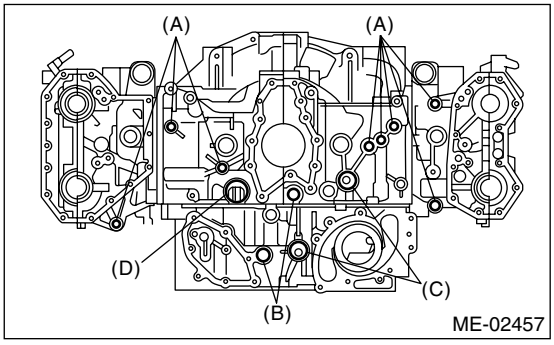

(A) 14.2 × 1.9
(B) 19.2 × 2.4
(C) 25 × 2
(D) 31.2 × 1.9

4) Temporarily tighten the rear chain cover.

NOTE:
Do not install the bolts in wrong place.

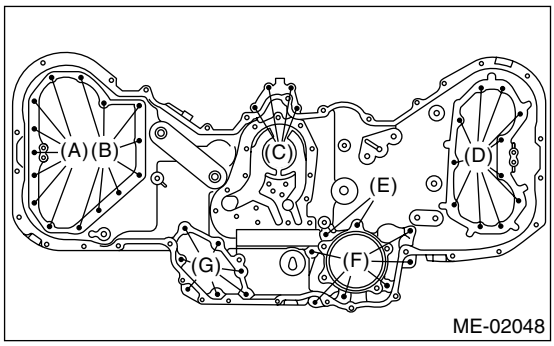

(A) M6 × 14
(B) M6 × 18 (Silver)
(C) M6 × 30
(D) M6 × 18
(E) M8 × 40
(F) M8 × 30
(G) M6 × 22

5) Tighten the bolts in the numerical order as shown in the figure.

Tightening torque:

(1) — (11)	9 N·m (0.9 kgf-m, 6.5 ft-lb)
(12) — (19)	20 N·m (2.0 kgf-m, 14 ft-lb)
(20) — (30)	9 N·m (0.9 kgf-m, 6.5 ft-lb)
(31) — (38)	12 N·m (1.2 kgf-m, 8.7 ft-lb)
(39) — (45)	9 N·m (0.9 kgf-m, 6.5 ft-lb)

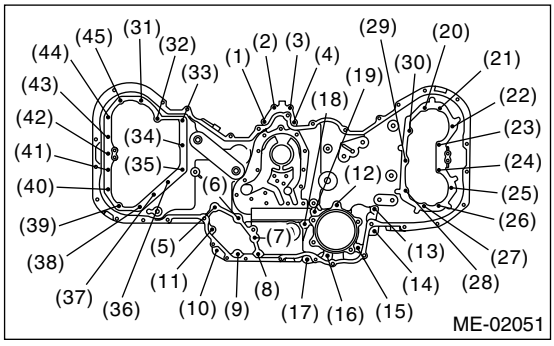

6) Install the water pump. <Ref. to CO(H6DO)-12, INSTALLATION, Water Pump.>
7) Install the oil pump. <Ref. to LU(H6DO)-8, INSTALLATION, Oil Pump.>
8) Install the crank sprocket.
9) Install the cam sprocket. <Ref. to ME(H6DO)-49, INSTALLATION, Cam Sprocket.>
10) Install the timing chain. <Ref. to ME(H6DO)-45, INSTALLATION, Timing Chain Assembly.>
11) Install the front chain cover.
<Ref. to ME(H6DO)-42, INSTALLATION, Front Chain Cover.>
12) Install the crank pulley. <Ref. to ME(H6DO)-41, INSTALLATION, Crank Pulley.>

19.Camshaft

A: REMOVAL

1) Remove the crank pulley. <Ref. to ME(H6DO)-41, REMOVAL, Crank Pulley.>
2) Remove the front chain cover. <Ref. to ME(H6DO)-42, REMOVAL, Front Chain Cover.>
3) Remove the timing chain assembly.
<Ref. to ME(H6DO)-44, REMOVAL, Timing Chain Assembly.>
4) Remove the cam sprocket.
<Ref. to ME(H6DO)-49, REMOVAL, Cam Sprocket.>
5) Remove the crank sprocket.
<Ref. to ME(H6DO)-50, REMOVAL, Crank Sprocket.>
6) Remove the rear chain cover.
<Ref. to ME(H6DO)-51, REMOVAL, Rear Chain Cover.>
7) Disconnect the oil pipe.

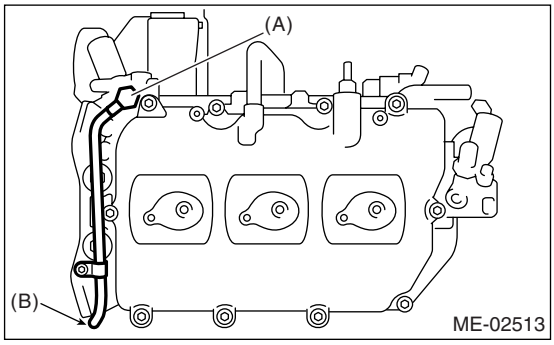

(A) Bolt without filter (with white mark)
(B) Bolt with filter (without white mark)

8) Remove the rocker cover (LH).

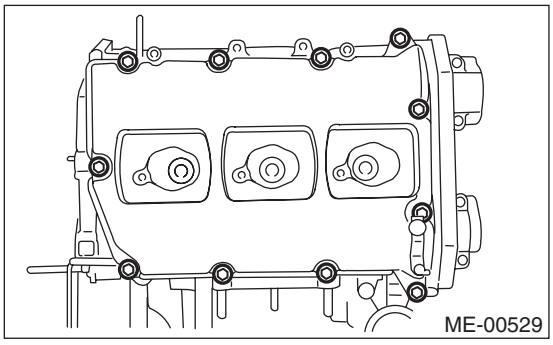

9) Remove the plugs (LH).

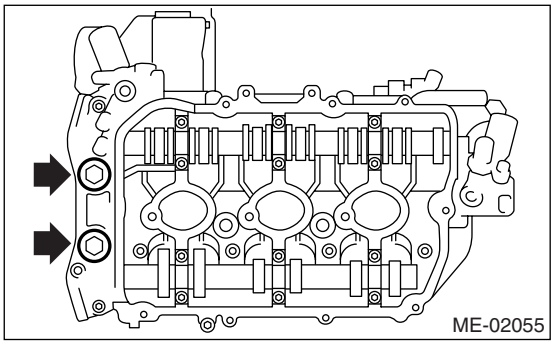

10) Loosen the camshaft cap bolts equally, a little at a time in alphabetical sequence shown in the figure.

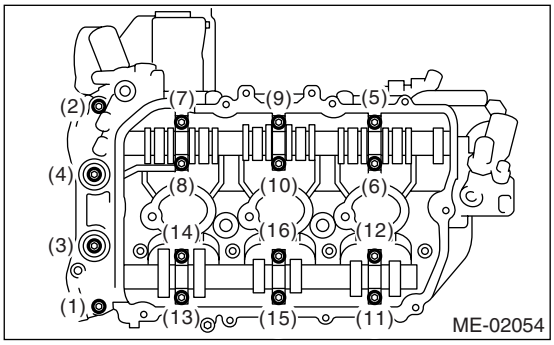

11) Remove the camshaft caps and camshaft (LH).

NOTE:
Arrange camshaft caps in order so that they can be installed in their original positions.

12) Similarly, remove the camshafts (RH) and related parts.

B: INSTALLATION

1) Apply engine oil to camshaft journals, and install the camshaft.
2) Install the camshaft cap.
   (1) Apply liquid gasket sparingly to back side of front camshaft cap as shown in the figure.

CAUTION:
Do not apply fluid packing excessively. Failure to do so may cause excess gasket to come out and flow toward cam journal, resulting in engine burnt.

Liquid gasket:
THREE BOND 1280B (Part No. K0877YA018)

Applying liquid gasket diameter:
2.0±0.5 mm (0.079±0.020 in)

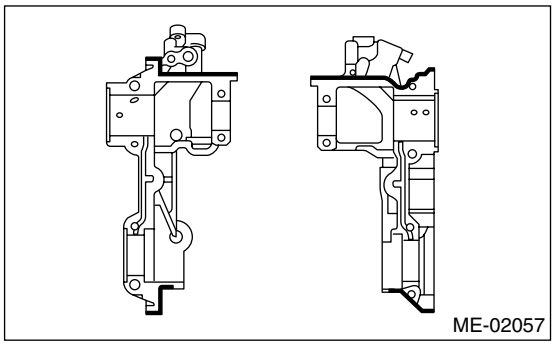

(2) Apply engine oil to cap bearing surface, and install the cap to camshaft.
(3) Tighten the rocker cover bolts in the numerical order as shown in the figure.

Tightening torque:
(1) — (12): 16 N·m (1.6 kgf-m, 12 ft-lb)
(13) — (16): 9.75 N·m (1.0 kgf-m, 7.2 ft-lb)

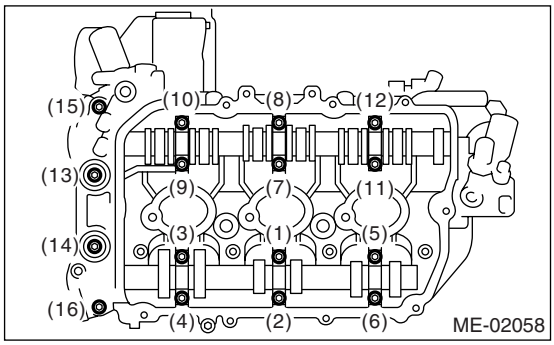

3) Install the plugs.

Tightening torque:
60 N·m (6.1 kgf-m, 44 ft-lb)

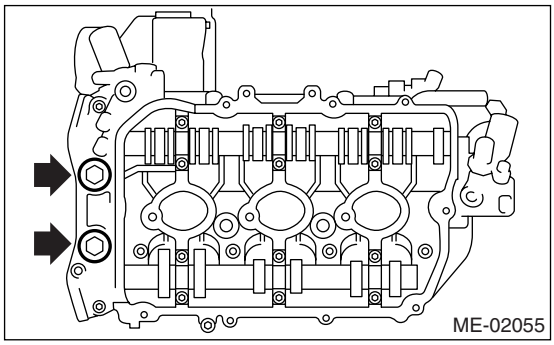

4) Install the rocker cover.
(1) Apply liquid gasket sparingly to the mating surface of cylinder head and rocker cover as shown in the figure.

CAUTION:
Do not apply fluid packing excessively. Failure to do so may cause excess gasket to come out and flow toward cam journal, resulting in engine burnt.

Liquid gasket:
THREE BOND 1280B (Part No. K0877YA018)

- LH side

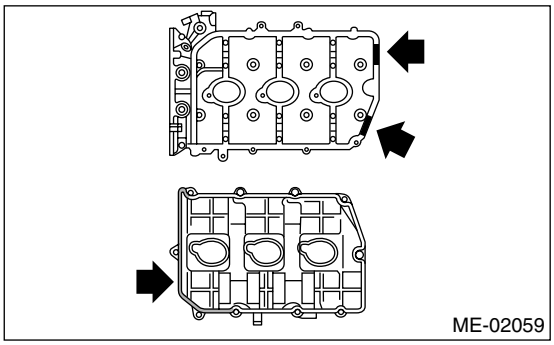

- RH side

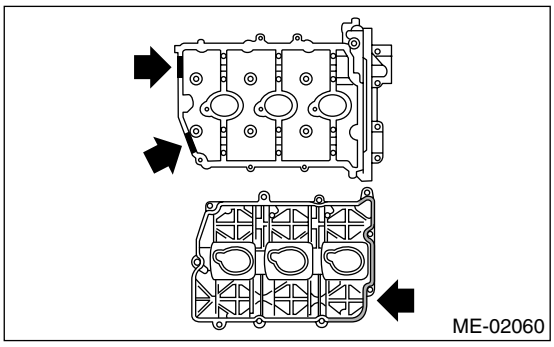

(2) Tighten the rocker cover bolts in the numerical order as shown in the figure.

Tightening torque:
6.4 N·m (0.65 kgf-m, 4.7 ft-lb)

- LH side

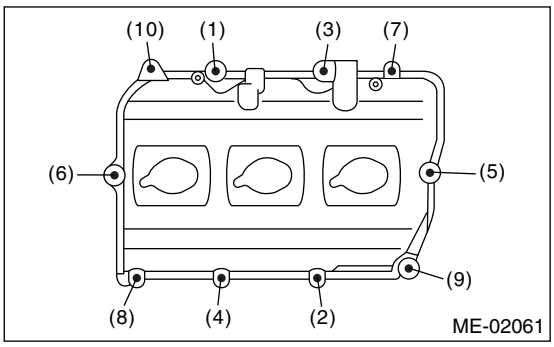

- RH side

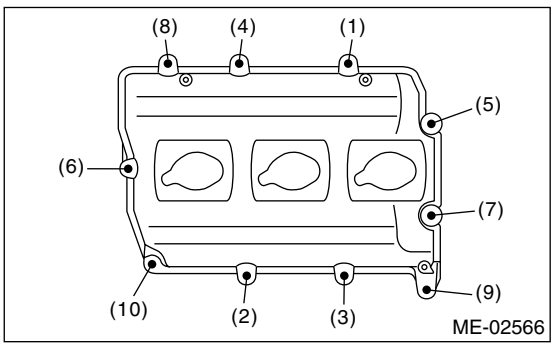

5) Connect the oil pipe.

CAUTION:
• Be careful not to mistake the location of the (A) and (B).
• Use a new gasket.

Tightening torque:
(A), (B)
29 N·m (3.0 kgf-m, 21.4 ft-lb)
(C)
6.4 N·m (0.65 kgf-m, 4.7 ft-lb)

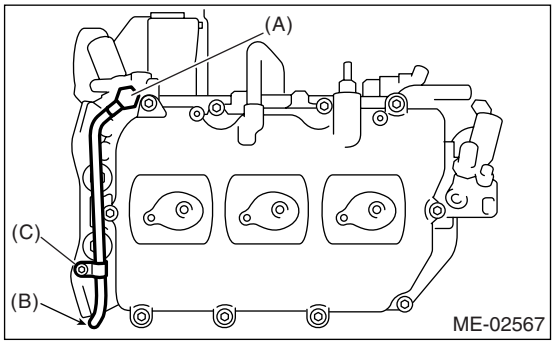

(A) Bolt without filter (with white mark)
(B) Bolt with filter (without white mark)
(C) Oil pipe bolt

6) Install the rear chain cover. <Ref. to ME(H6DO)-51, INSTALLATION, Rear Chain Cover.>
7) Install the crank sprocket.
<Ref. to ME(H6DO)-50, INSTALLATION, Crank Sprocket.>
8) Install the cam sprocket.
<Ref. to ME(H6DO)-49, INSTALLATION, Cam Sprocket.>
9) Install the timing chain assembly.
<Ref. to ME(H6DO)-45, INSTALLATION, Timing Chain Assembly.>
10) Install the front chain cover.
<Ref. to ME(H6DO)-42, INSTALLATION, Front Chain Cover.>
11) Install the crank pulley.
<Ref. to ME(H6DO)-41, INSTALLATION, Crank Pulley.>

C: INSPECTION

1) Check the camshaft for bend, and repair or replace if necessary.

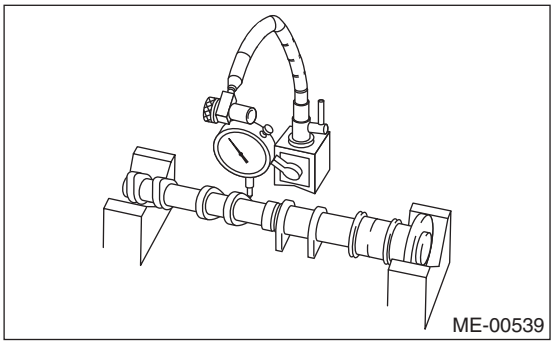

2) Check the journal for damage and wear. Replace if faulty.
3) Measure the outside diameter of camshaft journal. If the journal diameter is not within specifications, check the oil clearance.

	Camshaft journal	
	Front	Except for front
Standard value mm (in)	37.946 — 37.963 (1.4939 — 1.4946)	25.946 — 25.963 (1.0215 — 1.0222)

4) Measurement of the camshaft journal oil clearance:
(1) Clean the bearing caps and camshaft journals.
(2) Place the camshafts on the cylinder head. (Without installing the valve rocker.)
(3) Place a plastigauge across each of the camshaft journals.
(4) Install the bearing cap.

NOTE:
Do not turn the camshaft.

(5) Remove the bearing caps.
(6) Measure the widest point of the plastigauge on each journal. If oil clearance exceeds the limit, replace the camshaft. If necessary, replace the camshaft caps and cylinder head as a set.

Standard:
0.037 — 0.072 mm (0.0015 — 0.0028 in)

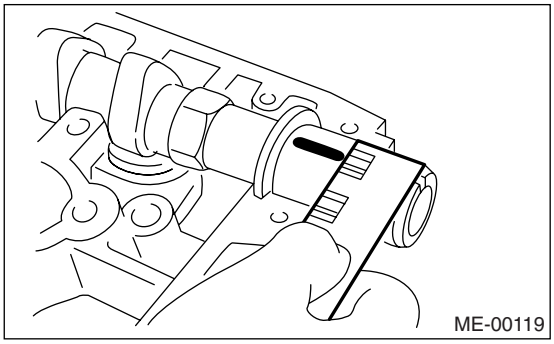

(7) Completely remove the plastigauge.

5) Check the cam face condition; remove the minor faults by grinding with oil stone. Measure the cam height H. If it exceeds the limit, replace it.

Cam height H:

Standard
Intake
HIGH: 42.09 — 42.19 mm (1.6571 — 1.6610 in)
LOW1: 38.14 — 38.24 mm (1.5016 — 1.5055 in)
LOW2: 34.94 — 35.04 mm (1.3756 — 1.3795 in)
Exhaust
41.65 — 41.75 mm (1.6398 — 1.6437 in)

Cam base circle diameter A:
Intake
HIGH: 32.0 mm (1.2598 in)
LOW1: 31.84 mm (1.2535 in)
LOW2: 31.84 mm (1.2535 in)
Exhaust
32.0 mm (1.2598 in)

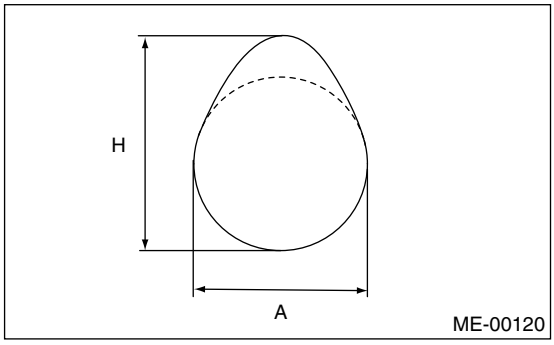

6) Measure the side clearance of camshaft with dial gauge. If the side clearance exceeds the limit or offset wearing is emitted, replace the caps and cylinder head as a set. If necessary, replace the camshaft.

Standard:
Intake
0.075 — 0.135 mm (0.0030 — 0.0053 in)
Exhaust
0.030 — 0.090 mm (0.0012 — 0.0035 in)

20.Cylinder Head

A: REMOVAL

1) Remove the crank pulley. <Ref. to ME(H6DO)-41, REMOVAL, Crank Pulley.>
2) Remove the front chain cover. <Ref. to ME(H6DO)-42, REMOVAL, Front Chain Cover.>
3) Remove the timing chain assembly.
<Ref. to ME(H6DO)-44, REMOVAL, Timing Chain Assembly.>
4) Remove the cam sprocket.
<Ref. to ME(H6DO)-49, REMOVAL, Cam Sprocket.>
5) Remove the crank sprocket.
<Ref. to ME(H6DO)-50, REMOVAL, Crank Sprocket.>
6) Remove the rear chain cover.
<Ref. to ME(H6DO)-51, REMOVAL, Rear Chain Cover.>
7) Remove the camshaft. <Ref. to ME(H6DO)-53, REMOVAL, Camshaft.>
8) Tighten the cylinder head bolts in the numerical order as shown in the figure.
Leave bolts (2) and (4) engaged by three or four threads to prevent the cylinder head from falling.

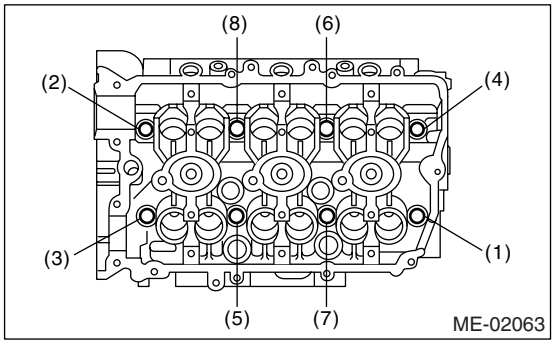

9) While tapping the cylinder head with a plastic hammer, separate it from cylinder block.
10) Remove the bolts (2) and (4) to remove the cylinder head.

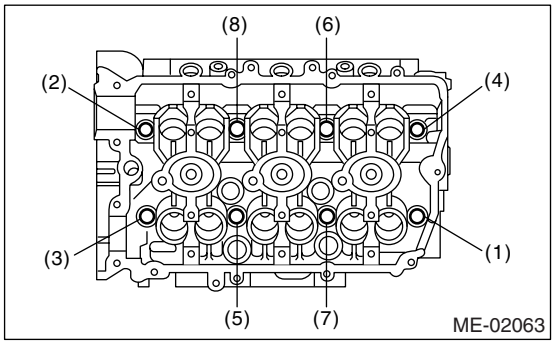

11) Remove the cylinder head gasket.

CAUTION:
Be careful not to scratch the mating surface of cylinder head and cylinder block.

12) Similarly, remove the cylinder head (RH).

B: INSTALLATION

1) Install the cylinder head and gaskets on cylinder block.

CAUTION:
- **Use new cylinder head gaskets.**
- **Be careful not to scratch the mating surface of cylinder head and cylinder block.**

2) Tighten the cylinder head bolts.
(1) Apply a coat of engine oil to washers and cylinder head bolt threads.
(2) Install the cylinder head to cylinder block, and then tighten the bolts with torque of 20 N·m (2.0 kgf-m, 14 ft-lb) in numerical sequence as shown in the figure.
(3) Tighten the bolts with torque of 50 N·m (5.1 kgf-m, 37 ft-lb) in numerical sequence as shown in the figure.
(4) Back off all bolts by 180° in reverse order of installation, and back them off again by 180°.
(5) Tighten the bolts with torque of 20 N·m (2.0 kgf-m, 14 ft-lb) in numerical sequence as shown in the figure.
(6) Tighten the bolts (1) — (4) with torque of 48 N·m (3.5 kgf-m, 35.4 ft-lb) in numerical sequence.
(7) Tighten the bolts (5) — (8) with torque of 44 N·m (4.5 kgf-m, 33 ft-lb) in numerical sequence.
(8) Tighten the bolts 90° in the numerical order as shown in the figure.
(9) Tighten the bolt (1) — (4) 45° in the numerical order.

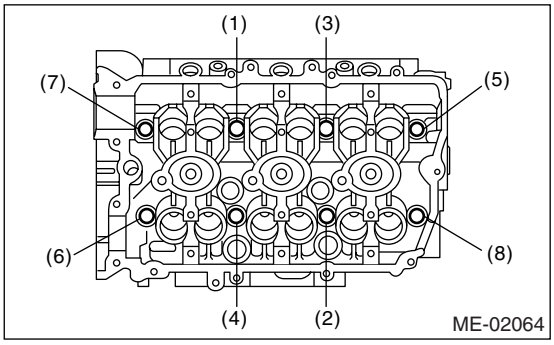

3) Install the camshaft. <Ref. to ME(H6DO)-53, INSTALLATION, Camshaft.>
4) Install the rear chain cover. <Ref. to ME(H6DO)-51, INSTALLATION, Rear Chain Cover.>
5) Install the crank sprocket.
<Ref. to ME(H6DO)-50, INSTALLATION, Crank Sprocket.>
6) Install the cam sprocket.
<Ref. to ME(H6DO)-49, INSTALLATION, Cam Sprocket.>

7) Install the timing chain assembly.
<Ref. to ME(H6DO)-45, INSTALLATION, Timing Chain Assembly.>
8) Install the front chain cover.
<Ref. to ME(H6DO)-42, INSTALLATION, Front Chain Cover.>
9) Install the crank pulley.
<Ref. to ME(H6DO)-41, INSTALLATION, Crank Pulley.>

C: DISASSEMBLY

1) Set the cylinder head on ST.
ST 18250AA010 CYLINDER HEAD TABLE
2) Remove the valve lifter.
3) Set the ST on valve spring retainer. Compress the valve spring and remove the valve spring retainer key. Remove each valve and valve spring.
ST 499718000 VALVE SPRING REMOVER

NOTE:
Keep all the removed parts in order for re-installing in their original positions.

CAUTION:
• Mark each valve to prevent confusion.
• Use extreme care not to damage the lips of the intake valve oil seals and exhaust valve oil seals.

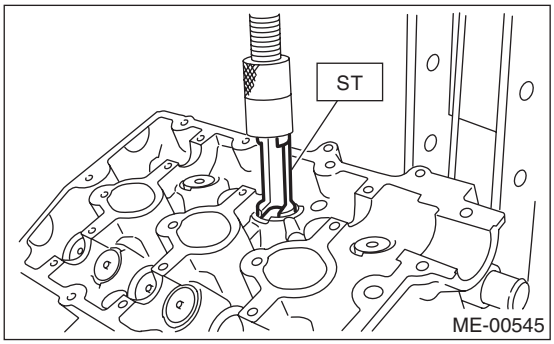

D: ASSEMBLY

1) Installation of valve spring and valve:
(1) Set the cylinder head on ST.
ST 18250AA010 CYLINDER HEAD TABLE
(2) Coat the stem of each valve with engine oil and insert the valve into valve guide.

NOTE:
When inserting the valve into valve guide, use special care not to damage the oil seal lip.

(3) Install the valve spring and retainer.

NOTE:
• Be sure to install the valve springs with their close-coiled end facing the seat on the cylinder head.
• Install the valve spring with the painted side facing to retainer.

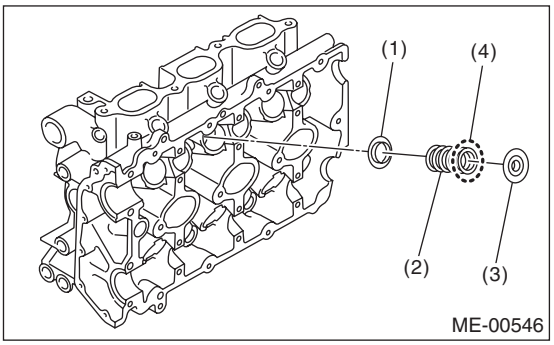

(1) Seat
(2) Valve spring
(3) Retainer
(4) Painted face

(4) Set the ST on valve spring.
ST 499718000 VALVE SPRING REMOVER

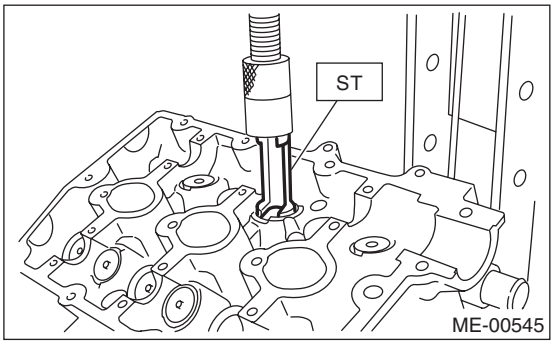

(5) Compress the valve spring and fit the valve spring retainer key.
(6) After installing, tap the valve spring retainers lightly with a wooden hammer for better seating.
2) Apply oil to the surface of the valve lifter and valve shim.
3) Install the valve lifter and valve shim.

E: INSPECTION

1. CYLINDER HEAD

1) Make sure that no crack or other damages do not exist. In addition to visual inspection, inspect important areas using liquid penetrant tester. Check that there are no marks of gas leaking or water leaking on gasket installing surface.
2) Set the cylinder head on ST.
ST 18250AA010 CYLINDER HEAD TABLE
3) Inspect the cylinder head surface that mates with cylinder block for warping by using a straight edge (A) and thickness gauge (B). If the warping exceeds the limit, replace the cylinder head.

Warping limit:
0.02 mm (0.0008 in)

Standard height of cylinder head:
124±0.05 mm (4.88±0.0020 in)

NOTE:
Uneven torque for the cylinder head nuts can cause warping. When reinstalling, pay special attention to the torque so as to tighten evenly.

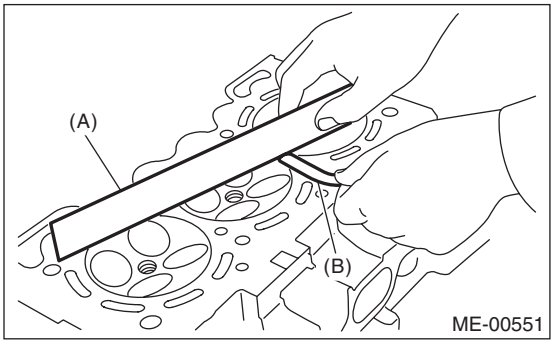

2. VALVE SEAT

Inspect the intake and exhaust valve seats, and correct the contact surfaces with a valve seat cutter if they are defective or when valve guides are replaced.

Valve seat width W:

Intake
Standard
1.0 mm (0.039 in)

Exhaust
Standard
1.5 mm (0.059 in)

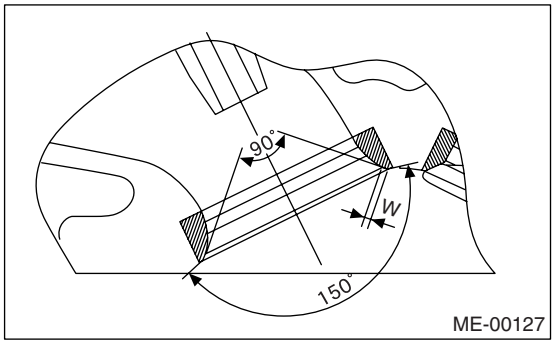

3. VALVE GUIDE

1) Check the clearance between valve guide and stem. The clearance can be checked by measuring respectively the outer diameter of valve stem and inner diameter of valve guide with a micrometer.

Clearance between the valve guide and valve stem:

Standard
Intake
0.030 — 0.057 mm (0.0012 — 0.0022 in)
Exhaust
0.040 — 0.067 mm (0.0016 — 0.0026 in)

2) If the clearance between valve guide and stem is out of standard, replace the valve guide or valve itself whichever shows greater amount of wear or damaged and etc. See the following procedure for valve guide replacement.

Valve guide inner diameter:
5.500 — 5.512 mm (0.2165 — 0.2170 in)

Valve stem outer diameters:
Intake
5.455 — 5.470 mm (0.2148 — 0.2154 in)
Exhaust
5.445 — 5.460 mm (0.2144 — 0.2150 in)

(1) Place the cylinder head on ST1 with the combustion chamber upward so that valve guides enter the holes in ST1.
(2) Insert ST2 into the valve guide and press it down to remove the valve guide.

ST1 18250AA010 CYLINDER HEAD TABLE
ST2 499765700 VALVE GUIDE REMOVER

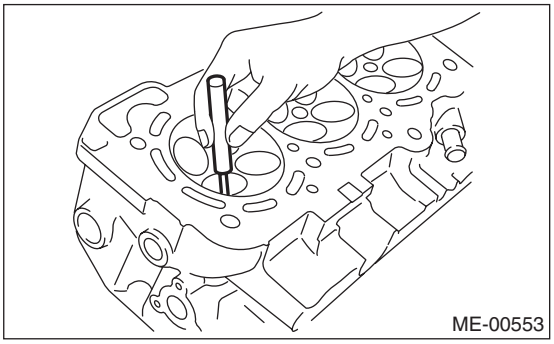

(3) Turn the cylinder head upside down and place the ST as shown in the figure.

ST 18251AA040 VALVE GUIDE ADJUSTER

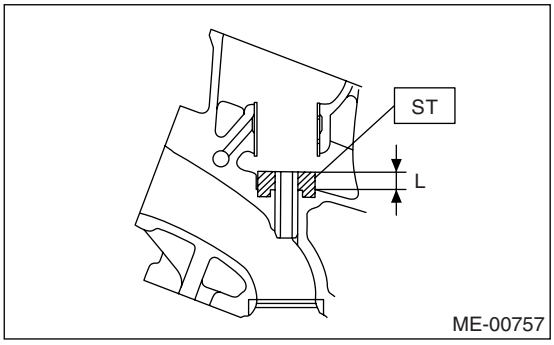

(4) Before installing a new valve guide, make sure that neither scratches nor damages exist on the inside surface of the valve guide holes in cylinder head.
(5) Put a new valve guide, coated with sufficient oil, in cylinder, and insert the ST1 into valve guide. Press in until the valve guide upper end is flush with the upper surface of ST2.

ST1 499765700 VALVE GUIDE REMOVER

ST2 18251AA040 VALVE GUIDE ADJUSTER

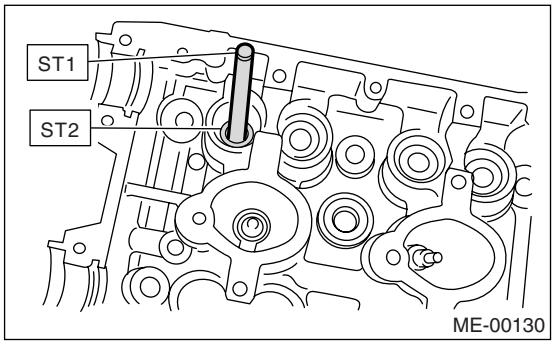

(6) Check the valve guide protrusion.

Valve guide protrusion L:
11.4 — 11.8 mm (0.449 — 0.465 in)

(7) Ream the inside of valve guide using ST. Put the reamer in valve guide, and rotate the reamer slowly clockwise while pushing it lightly. Bring the reamer back while rotating it clockwise. After reaming, clean the valve guide to remove chips.

ST 499765900 VALVE GUIDE REAMER

NOTE:
- Apply engine oil to the reamer when reaming.
- If the inner surface of the valve guide is torn, the edge of the reamer should be slightly ground with an oil stone.
- If the inner surface of the valve guide becomes lustrous and the reamer does not chip, use a new reamer or remedy the reamer.

(8) Recheck the contact condition between valve and valve seat after replacing the valve guide.

4. INTAKE AND EXHAUST VALVE

1) Inspect the flange and stem of valve, and replace if damaged, worn or deformed, or if "H" is exceed the standard value or offset wearing is emitted.

H:
Intake (A)
Standard
1.0 mm (0.039 in)
Exhaust (B)
Standard
1.2 mm (0.047 in)

Valve overall length:
Intake (A)
99.7 mm (3.925 in)
Exhaust (B)
105.2 mm (4.142 in)

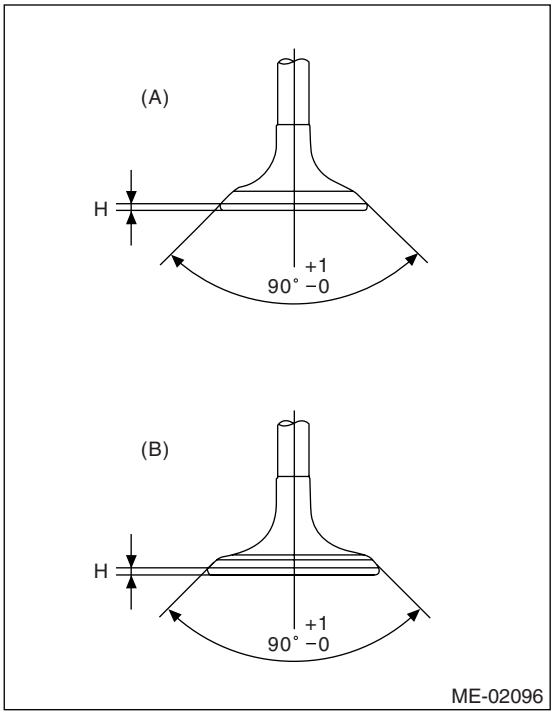

2) Put a small amount of grinding compound on the seat surface and lap the valve and seat surface. Install a new intake valve oil seal after lapping.

5. VALVE SPRING

1) Check the valve springs for damage, free length, and tension. Replace the valve spring if it is not within the standard value presented in the table.

Free length mm (in)	Intake	Inner	39.55 (1.5571)
		Outer	41.18 (1.6213)
	Exhaust		46.32 (1.8236)
Squareness	Intake	Inner	2.5°, 1.7 mm (0.067 in)
		Outer	2.5°, 1.8 mm (0.071 in)
	Exhaust		2.5°, 2.0 mm (0.079 in)

2) To measure the squareness of the valve spring, stand the spring on a surface plate and measure its deflection at the top of spring using a try square.

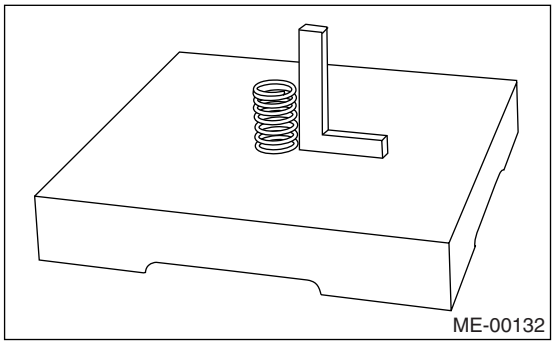

6. INTAKE AND EXHAUST VALVE OIL SEAL

In the following case, pinch and remove the oil seal from valve using pliers, and then replace it with a new one.

- When the lip is damaged.
- When the spring is out of the specified position.
- When readjusting the surfaces of intake valve and valve sheet.
- When replacing the intake valve guide.

1) Set the cylinder head on ST1.
2) Press-fit the oil seal to the specified dimension indicated in the figure using ST2.

ST1 18250AA010 CYLINDER HEAD TABLE
ST2 499585500 VALVE OIL SEAL GUIDE

NOTE:

- Apply engine oil to oil seal before force-fitting.
- When press-fitting the oil seal, do not use a hammer or strike in.

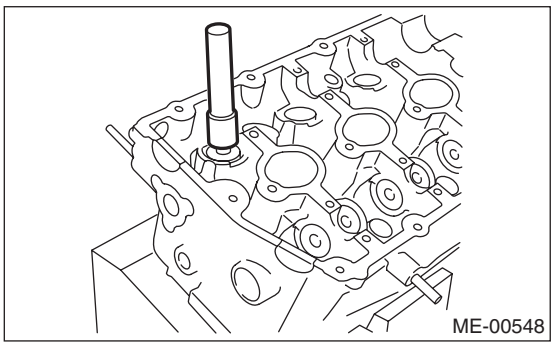

7. VALVE LIFTER

1) Check the valve lifter visually.
2) Measure the outer diameter of valve lifter.

Outer diameter:
32.959 — 32.975 mm (1.2976 — 1.2982 in)

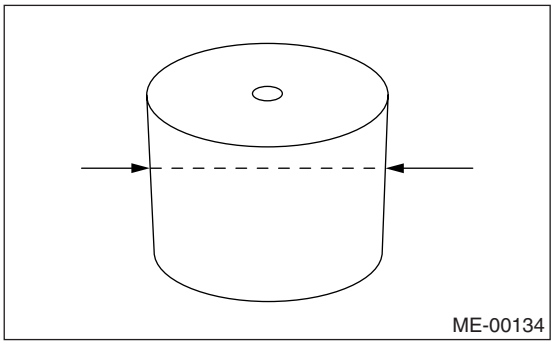

3) Measure the inner diameter of valve lifter hole of cylinder head.

Inner diameter:
32.994 — 33.016 mm (1.2990 — 1.2998 in)

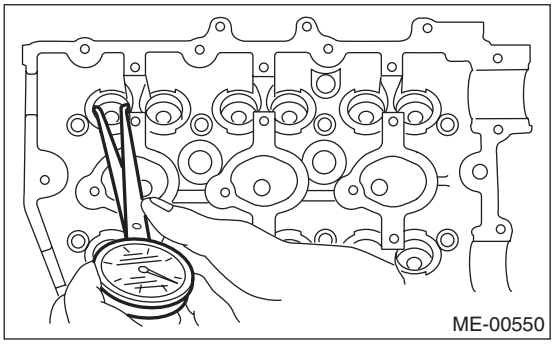

NOTE:
If difference between outer diameter of valve lifter and inner diameter of valve lifter hole is out of the standard or offset wearing is emitted, replace the cylinder head.

Standard:
0.019 — 0.057 mm (0.0007 — 0.0022 in)

21.Cylinder Block

A: REMOVAL

NOTE:
Before conducting this procedure, drain the engine oil completely.

1) Remove the crank pulley. <Ref. to ME(H6DO)-41, REMOVAL, Crank Pulley.>
2) Remove the front chain cover. <Ref. to ME(H6DO)-42, REMOVAL, Front Chain Cover.>
3) Remove the timing chain assembly.
<Ref. to ME(H6DO)-44, REMOVAL, Timing Chain Assembly.>
4) Remove the cam sprocket.
<Ref. to ME(H6DO)-49, REMOVAL, Cam Sprocket.>
5) Remove the crank sprocket.
<Ref. to ME(H6DO)-50, REMOVAL, Crank Sprocket.>
6) Remove the rear chain cover.
<Ref. to ME(H6DO)-51, REMOVAL, Rear Chain Cover.>
7) Remove the camshaft. <Ref. to ME(H6DO)-53, REMOVAL, Camshaft.>
8) Remove the cylinder head. <Ref. to ME(H6DO)-57, REMOVAL, Cylinder Head.>
9) Using ST, remove the drive plate.
ST1 498497100 CRANKSHAFT STOPPER
ST2 499057000 TORX PLUS®

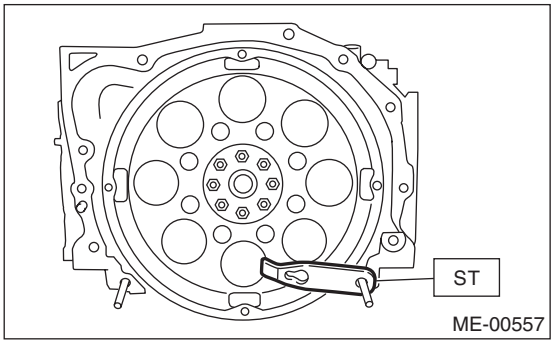

10) Remove the crankshaft position sensor plate.

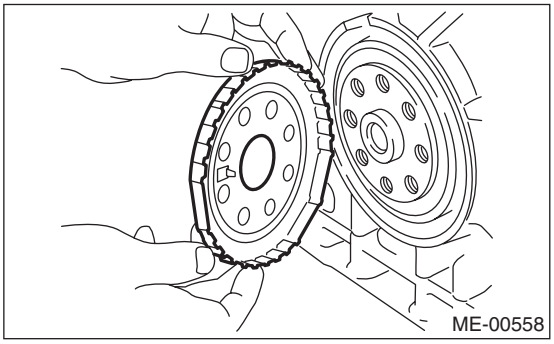

11) Remove the crankshaft position sensor bracket.

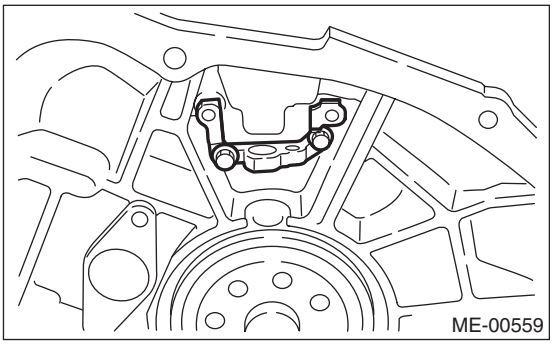

12) Rotate the engine to set oil pan upper.
13) Remove the bolts which secure oil pan lower to oil pan upper.

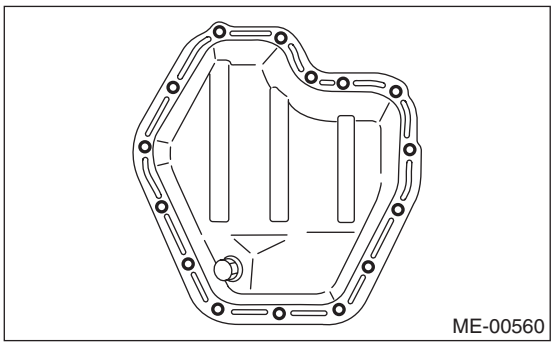

14) Insert a oil pan cutter blade between cylinder block-to-oil pan clearance and remove the oil pan.

CAUTION:
Do not use a screwdriver or similar tools in place of oil pan cutter.

15) Remove the oil strainer.

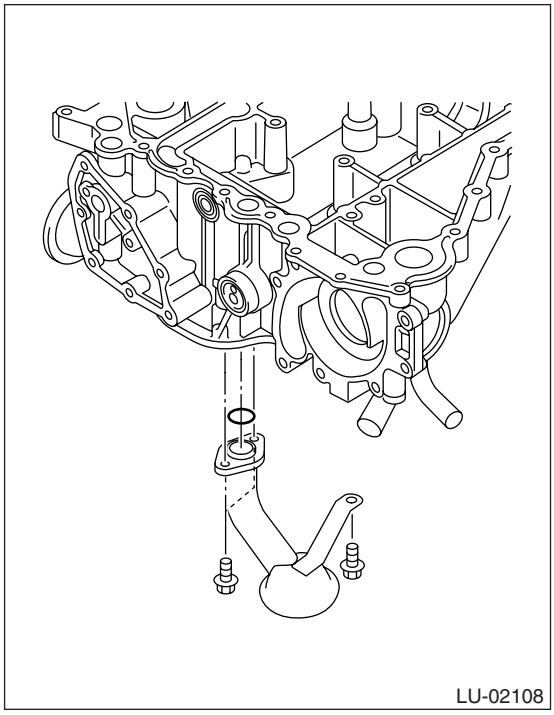

16) Remove the bolts which install oil pan upper onto cylinder block.

NOTE:
Installation bolts have five different sizes. To prevent the confusion in installation, keep these bolts on container individually.

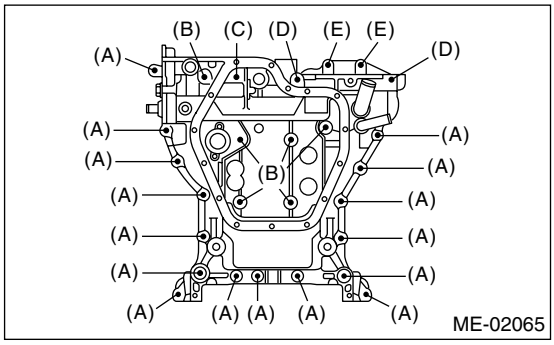

(A) M8 × 40
(B) M8 × 65
(C) M8 × 85
(D) M8 × 130
(E) M8 × 24

17) Remove the service hole cover and service hole plugs using a hexagon wrench.

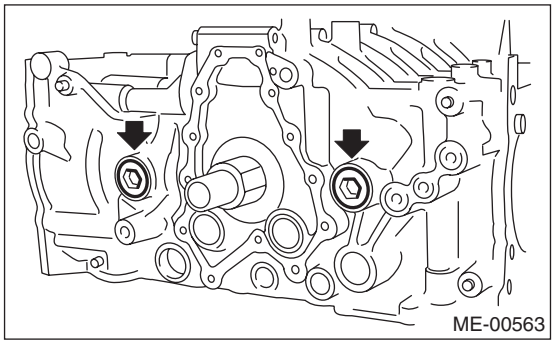

18) Rotate the crankshaft to bring #1 and #2 pistons to bottom dead center position, then remove the piston snap ring through service hole of #1 and #2 cylinders using ST.

ST 18233AA000 PISTON PIN SNAP RING PRIERS

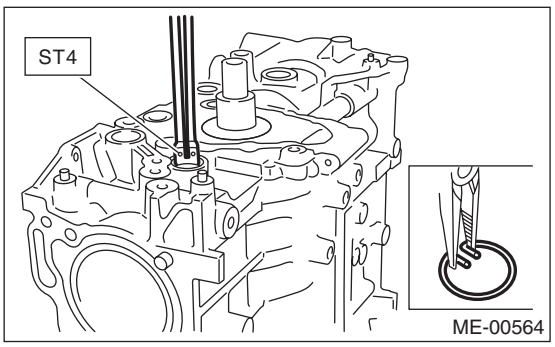

19) Draw out the piston pin from #1 and #2 pistons using ST.

ST 499097500 PISTON PIN REMOVER

NOTE:
Be careful not to confuse the original combination of piston, piston pin and cylinder.

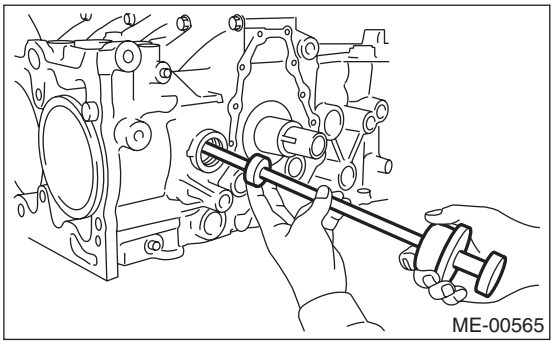

20) Similarly remove the piston pins from #3, #4, #5 and #6 pistons.

21) Remove the bolts which secure the cylinder block.

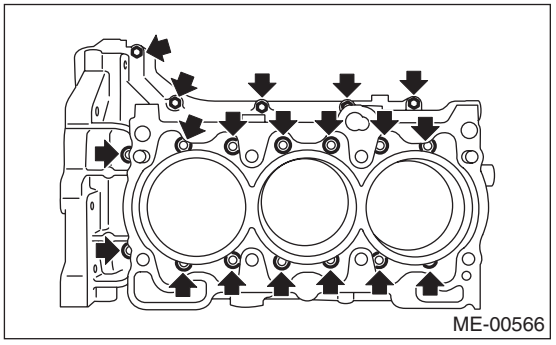

22) Separate the cylinder block (LH) and (RH).

NOTE:
When separating the cylinder block, do not allow the connecting rod to fall and damage the cylinder block.

23) Remove the rear oil seal.

24) Remove the crankshaft together with connecting rod.

25) Remove the crankshaft bearings from cylinder block using a hammer handle.

NOTE:
• Do not confuse the combination of crankshaft bearings.
• Press the bearing at the end opposite to locking lip.

26) Draw out each piston from cylinder block using a wooden bar or hammer handle.

NOTE:
Be careful not to confuse the original combination of piston and cylinder.

B: INSTALLATION

1) After setting the cylinder block to ST, install the crankshaft bearing.
ST 18232AA000 ENGINE STAND

NOTE:
Remove oil on the mating surface of bearing and cylinder block before installation. Apply a coat of engine oil to crankshaft pins.

2) Position the crankshaft and connecting rod on the #2, #4 and #6 cylinder block.

3) Apply liquid gasket to the mating surface of #1, #3 and #5 cylinder block, and position it on #2, #4 and #6 cylinder block.

Liquid gasket:
THREE BOND 1215B (Part No. 004403007)

NOTE:
Do not allow liquid gasket to jut into O-ring grooves, oil passages, bearing grooves, etc.

Applying liquid gasket diameter:
1.0±0.2 mm (0.039±0.008 in)

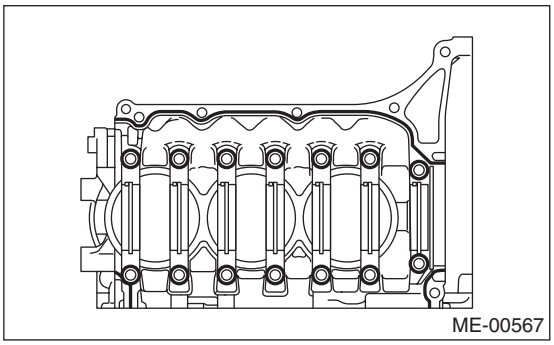

4) Apply a coat of engine oil to washers and bolt threads.

5) Tighten all bolts in the numerical order as shown in the figure.

Tightening torque:
(1) — (11), (13): 25 N·m (2.5 kgf-m, 18 ft-lb)
(12), (14): 20 N·m (2.0 kgf-m, 14 ft-lb)

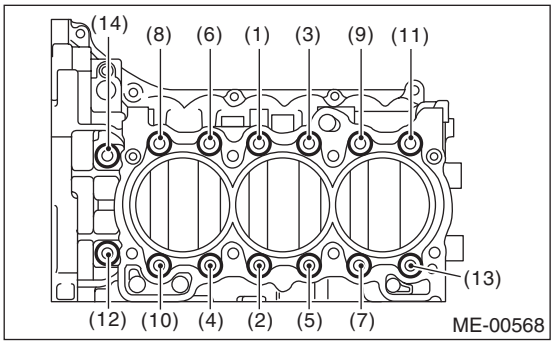

6) Retighten all bolts in the numerical order as shown in the figure.

Tightening torque:
(1) — (11), (13): 25 N·m (2.5 kgf-m, 18 ft-lb)
(12), (14): 20 N·m (2.0 kgf-m, 14 ft-lb)

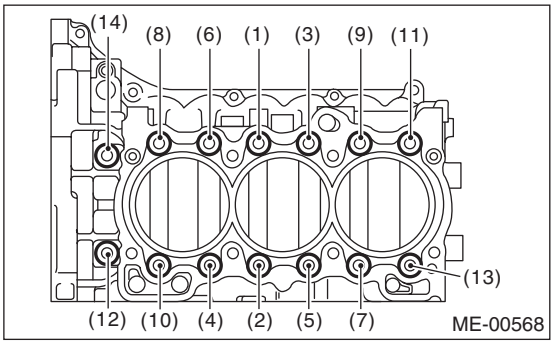

7) Tighten all bolts 90° in the numerical order as shown in the figure.

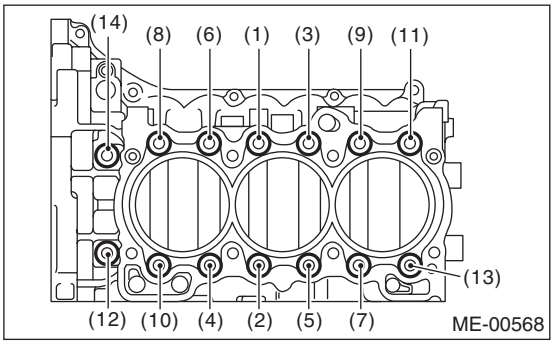

8) Install the upper bolt to cylinder block.

Tightening torque:
25 N·m (2.5 kgf-m, 18 ft-lb)

NOTE:
Remove the liquid gasket which is running over to sealing surface between cylinder block and rear chain cover, cylinder block and oil pan upper, after tightening the bolts which combine the cylinder block.

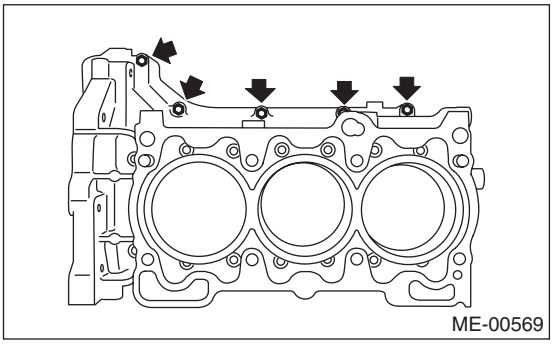

9) Install the rear oil seal using ST1 and ST2.

ST1	499597100	CRANKSHAFT OIL SEAL GUIDE
ST2	499587200	CRANKSHAFT OIL SEAL INSTALLER

NOTE:
Apply engine oil to the pressing-in portion.

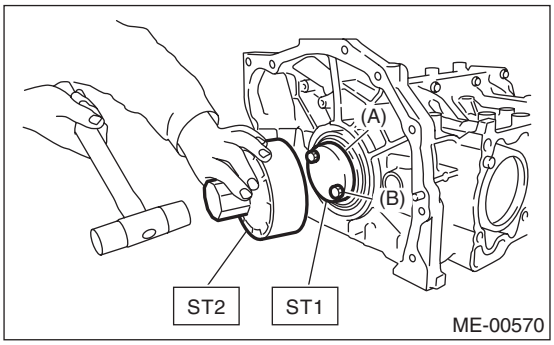

(A) Rear oil seal
(B) Drive plate installation bolt

10) Position the top ring gap at (A) in the figure.
11) Position the second ring gap at (B).

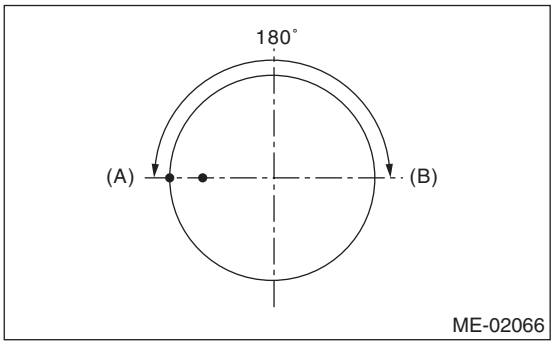

12) Position the upper rail gap at (C) in the figure.
13) Position the expander gap at (D) in the figure.
14) Position the lower rail gap at (E) in the figure.

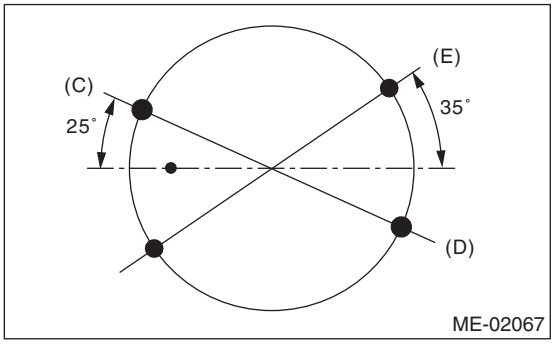

CAUTION:
• Ensure ring gaps do not face the same direction.
• Ensure ring gaps are not within the piston skirt area.
• Ensure R mark faces to top side of piston.

15) Install the snap ring.
Install snap rings in the piston holes located opposite to the service holes in cylinder block, when positioning all pistons in the corresponding cylinders.

NOTE:
Use new snap rings.

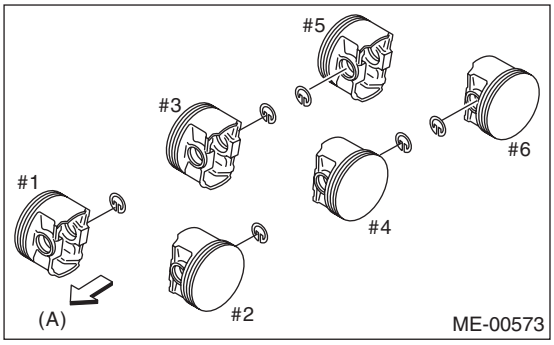

(A) Front side of vehicle

16) Installing the piston:
(1) Using ST1, turn the crankshaft so that #3 and #4 connecting rods small end are set on the service hole (A).
ST1 18252AA000 CRANKSHAFT SOCKET

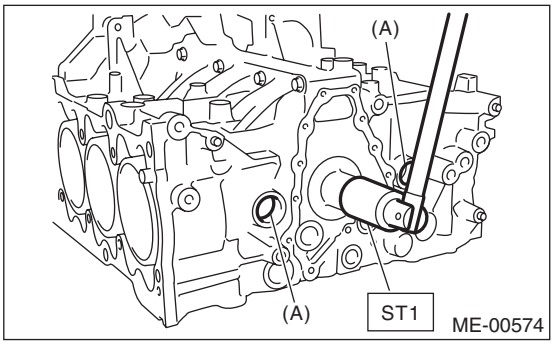

(2) Apply a thin coat of engine oil to piston and cylinder.
(3) Using ST2, press-fit the piston into cylinder.
ST2 18254AA000 PISTON GUIDE

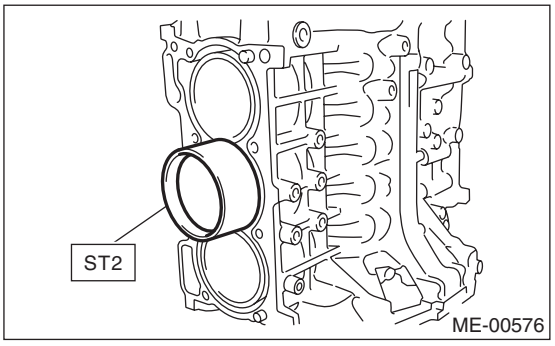

NOTE:
Piston front mark (A) faces towards the front of engine.

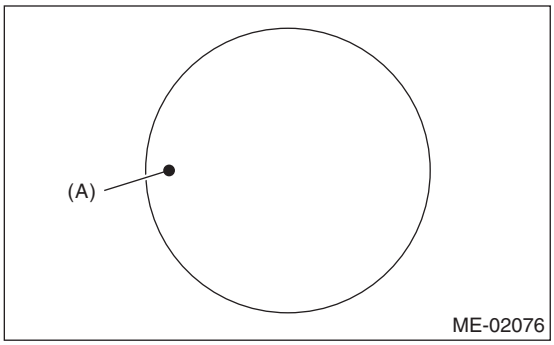

17) Installing piston pin:
(1) Apply a coat of engine oil to ST3 before insertion, and then insert it into the service hole to align piston pin hole with connecting rod small end.

ST3 18253AA000 PISTON GUIDE

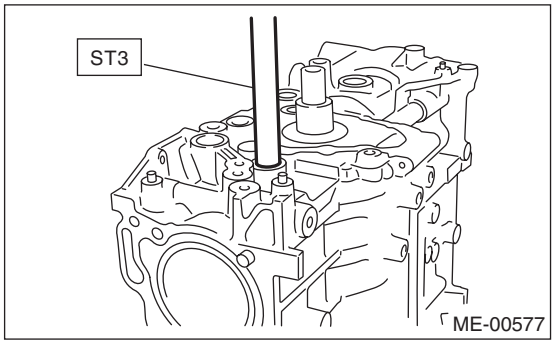

(2) Apply a coat of engine oil to piston pin, and insert the piston pin into piston and connecting rod through service hole.
(3) Using the ST4, install the snap ring.

ST4 18233AA000 PISTON PIN SNAP RING PRIERS

NOTE:
Use new snap rings.

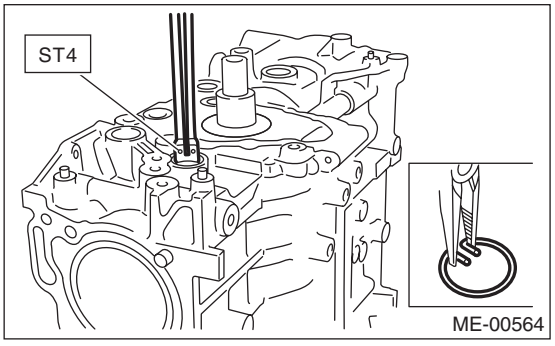

(4) Similarly install the #1, #2, #5 and #6 pistons.

18) Install the service hole plug and O-ring.

NOTE:
Use a new O-ring.

19) Apply liquid gasket to the matching surface of oil pan upper.

Liquid gasket:
THREE BOND 1280B (Part No. K0877YA018)

Applying liquid gasket diameter:
Full line part
3.0±1.0 mm (0.12±0.04 in)
Broken line part
1.0 mm (0.04 in)

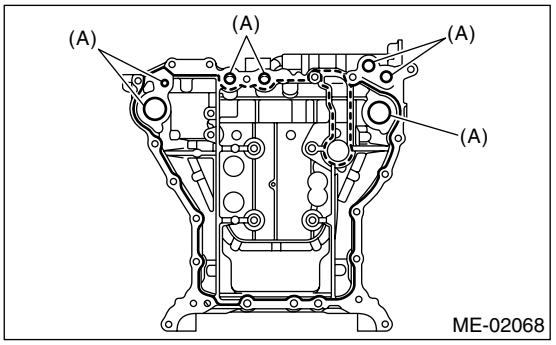

(A) O-ring

NOTE:
Use new O-rings.

20) Temporarily tighten the oil pan upper.

NOTE:
Do not install the bolts in wrong place.

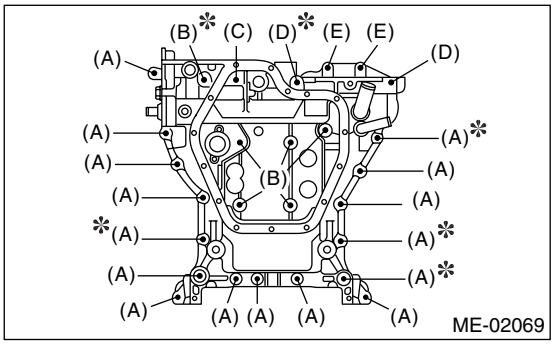

(A) M8 × 40
(B) M8 × 65
(C) M8 × 85
(D) M8 × 130
(E) M8 × 24
*: Coating

21) Tighten the oil pan upper installing bolts in the numerical order as shown in the figure.

Tightening torque:
18 N·m (1.8 kgf-m, 13.3 ft-lb)

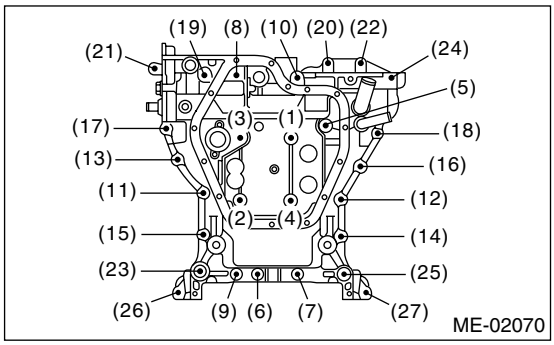

22) Install the oil strainer.

Tightening torque:
6.4 N·m (0.65 kgf-m, 4.7 ft-lb)

NOTE:
Use new O-rings.

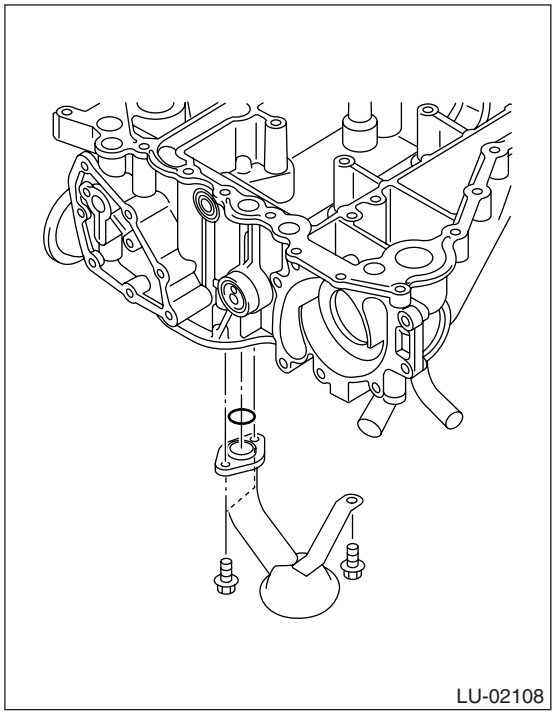

23) Apply liquid gasket to the matching surface of oil pan lower.

Liquid gasket:
THREE BOND 1280B (Part No. K0877YA018)

Applying liquid gasket diameter:
5.0±1.0 mm (0.20±0.04 in)

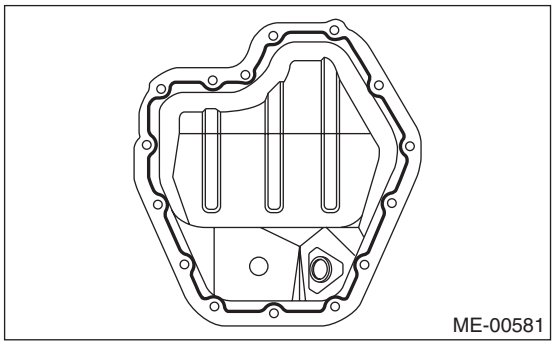

24) Tighten the oil pan lower installing bolts in the numerical order as shown in the figure.

Tightening torque:
6.4 N·m (0.65 kgf-m, 4.7 ft-lb)

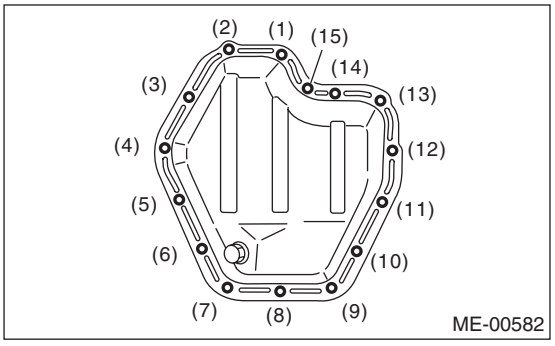

25) Install the crankshaft sensor bracket.

Tightening torque:
6.4 N·m (0.65 kgf-m, 4.7 ft-lb)

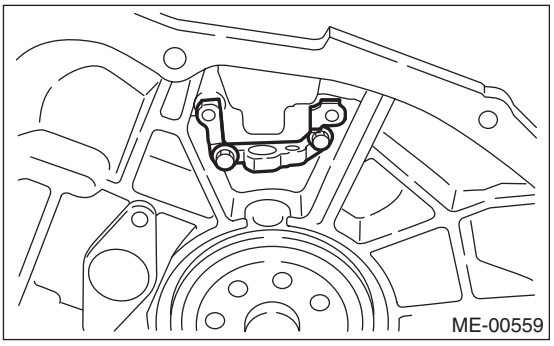

26) Install the crankshaft sensor plate.

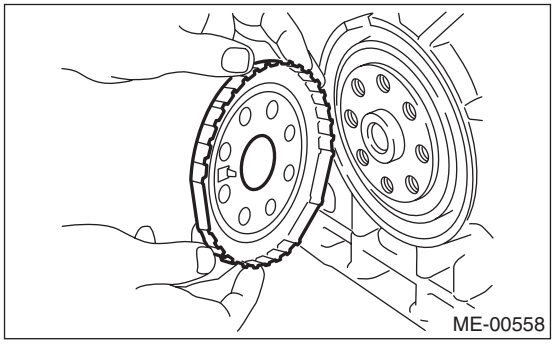

27) Using ST, install the drive plate.
ST1 498497100 CRANKSHAFT STOPPER
ST2 499057000 TORX PLUS®

Tightening torque:
81 N·m (8.3 kgf-m, 60 ft-lb)

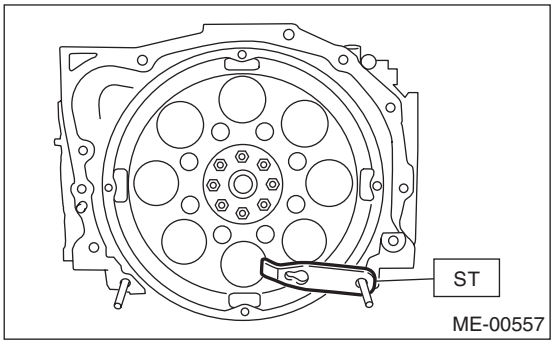

28) Install the cylinder head. <Ref. to ME(H6DO)-57, INSTALLATION, Cylinder Head.>
29) Install the camshaft. <Ref. to ME(H6DO)-53, INSTALLATION, Camshaft.>
30) Install the rear chain cover. <Ref. to ME(H6DO)-51, INSTALLATION, Rear Chain Cover.>
31) Install the crank sprocket.
<Ref. to ME(H6DO)-50, INSTALLATION, Crank Sprocket.>
32) Install the cam sprocket. <Ref. to ME(H6DO)-49, INSTALLATION, Cam Sprocket.>
33) Install the timing chain assembly.
<Ref. to ME(H6DO)-45, INSTALLATION, Timing Chain Assembly.>
34) Install the front chain cover.
<Ref. to ME(H6DO)-42, INSTALLATION, Front Chain Cover.>
35) Install the crank pulley.
<Ref. to ME(H6DO)-41, INSTALLATION, Crank Pulley.>

C: DISASSEMBLY

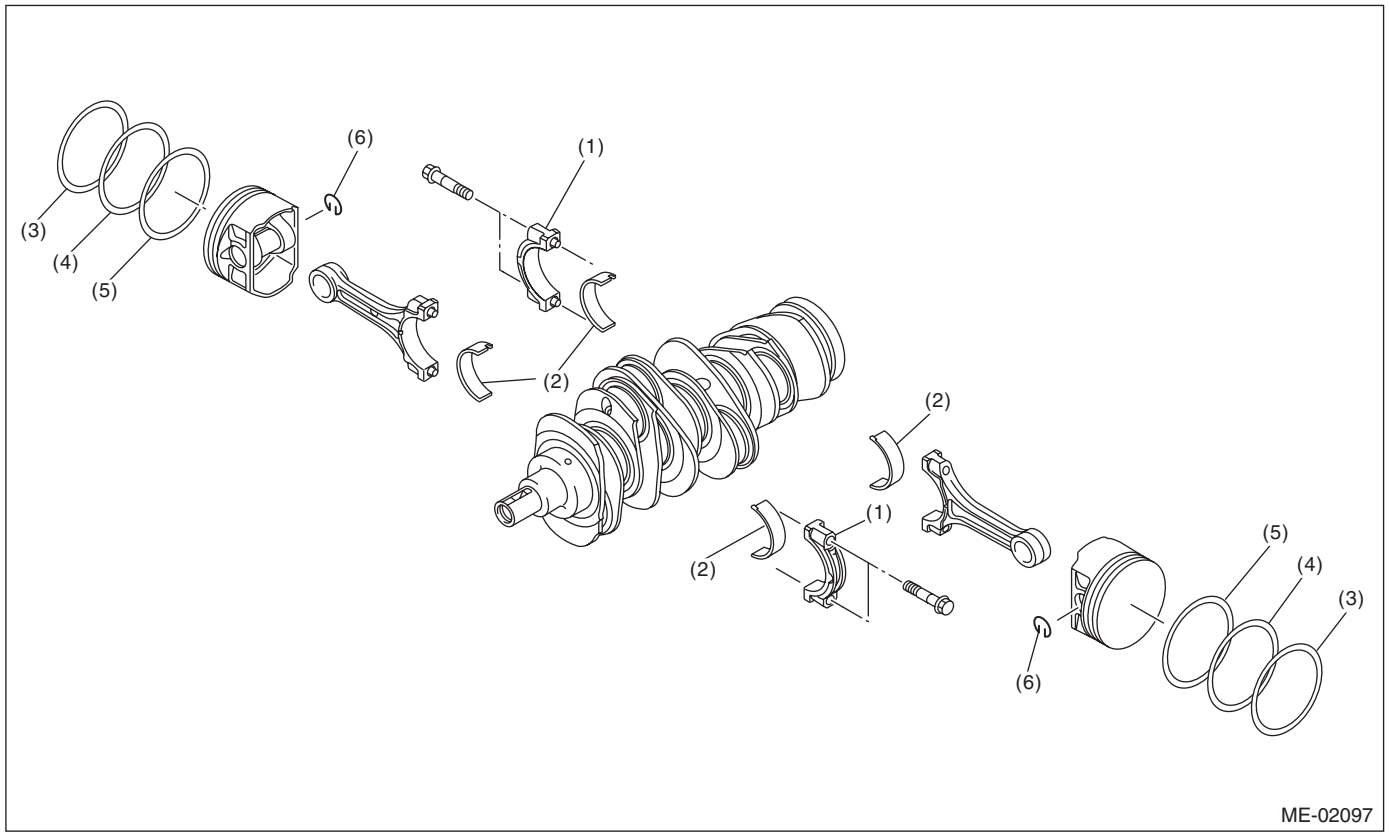

(1) Connecting rod cap
(2) Connecting rod bearing
(3) Top ring
(4) Second ring
(5) Oil ring
(6) Snap ring

1) Remove the connecting rod cap.
2) Remove the connecting rod bearing.

NOTE:
Arrange the removed connecting rod, connecting rod cap and bearing in order, to prevent confusion.

3) Remove the piston rings using the piston ring expander.
4) Remove the oil ring by hand.

NOTE:
Arrange the removed piston rings in proper order, to prevent confusion.

5) Remove the snap ring.

D: ASSEMBLY

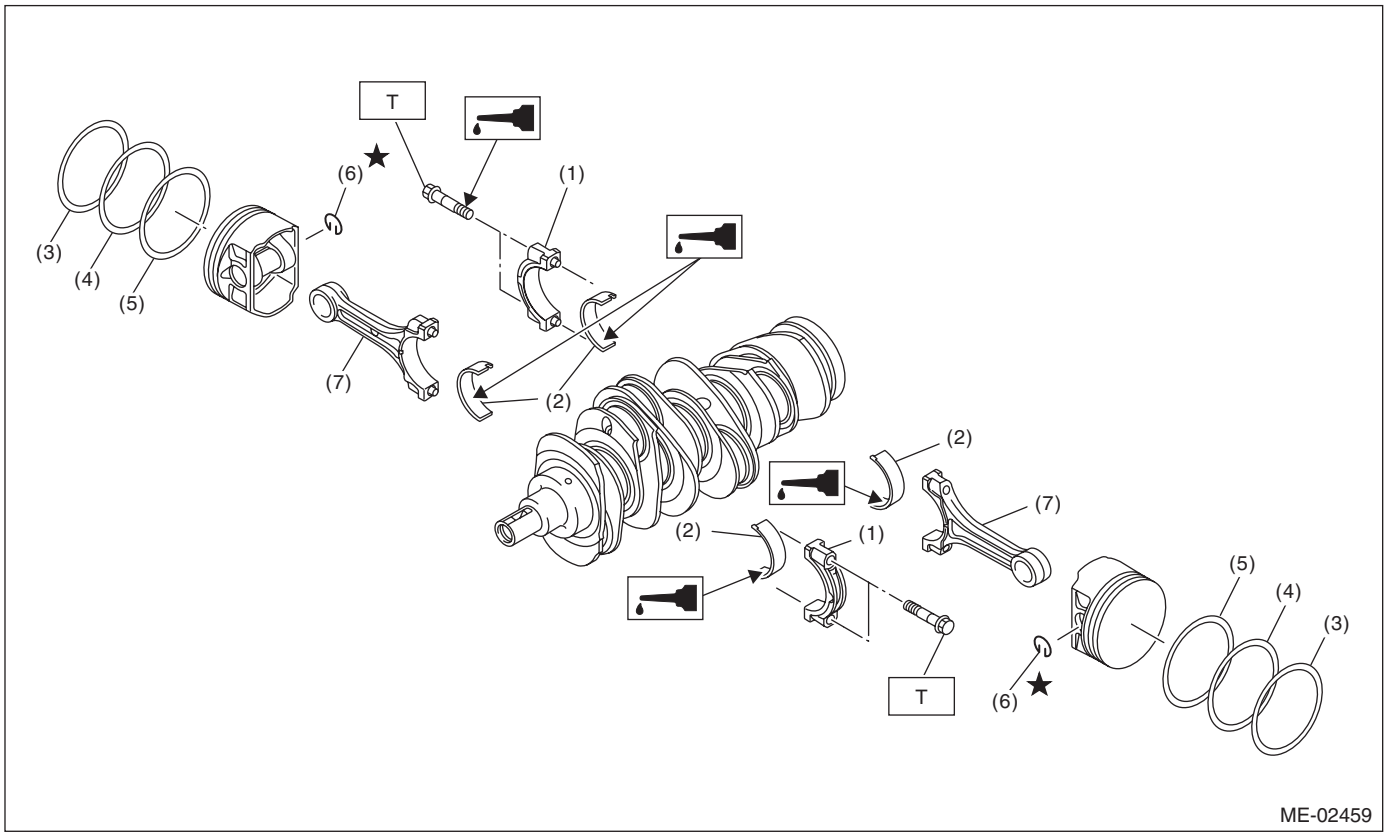

(1) Connecting rod cap
(2) Connecting rod bearing
(3) Top ring
(4) Second ring
(5) Oil ring
(6) Snap ring
(7) Connecting rod

Tightening torque: N·m (kgf-m, ft-lb)
T: 53 (5.4, 39)

1) Apply oil to the surfaces of the connecting rod bearings. Install the connecting rod bearings on connecting rods and connecting rod caps.
2) Install the connecting rod on crankshaft.

NOTE:
Position each connecting rod with the side marked facing forward.

3) Install the connecting rod cap.
Ensure the arrow on connecting rod cap faces the front during installation.

CAUTION:
• Each connecting rod has its own mating cap. Make sure that they are assembled correctly by checking their matching number.
• When tightening the connecting rod bolts, apply oil on the threads and flange end.

4) Install the oil ring spacer, upper rail and lower rail in this order by hand. Then install the second ring and top ring using a piston ring expander.

E: INSPECTION

1. CYLINDER BLOCK

1) Visually check for cracks and damage. Especially, inspect the important parts using liquid penetrant tester.
2) Check the oil passages for clogging.
3) Inspect the cylinder block surface that mates with cylinder head for warping by using a straight edge. If the warping exceeds the limit, replace the cylinder block.

Warping limit:
0.02 mm (0.0008 in)

Standard height of cylinder block:
202 mm (7.95 in)

2. CYLINDER AND PISTON

1) The cylinder bore size is stamped on the cylinder block's front upper surface.

NOTE:
• Measurement should be performed at a temperature of 20°C (68°F).
• Standard sized pistons are classified into two grades, "A" and "B". These grades should be used as guide lines in selecting a standard piston.

Standard diameter:
A: 89.205 — 89.215 mm (3.5120 — 3.5124 in)
B: 89.195 — 89.205 mm (3.5116 — 3.5120 in)

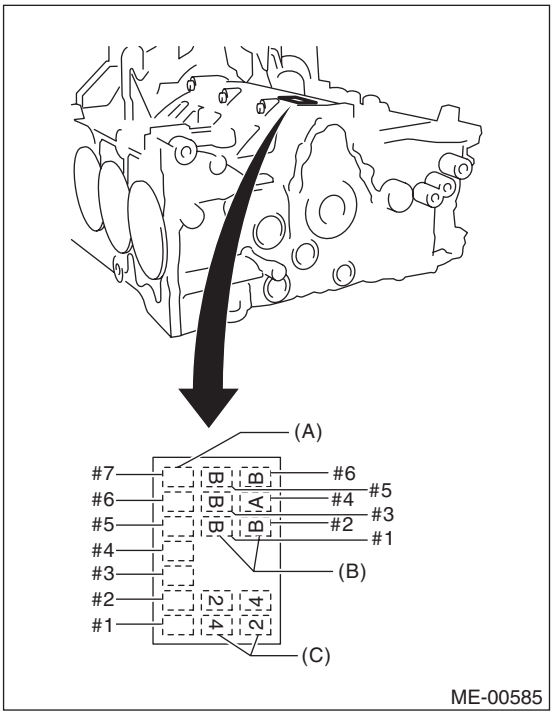

(A) Main journal size mark
(B) Cylinder bore size mark
(C) Cylinder block (RH) – (LH) combination mark

2) How to measure the inner diameter of each cylinder:
Measure the inner diameter of each cylinder in both the thrust and piston pin directions at the heights as shown in the figure, using a cylinder bore gauge.

NOTE:
Measurement should be performed at a temperature of 20°C (68°F).

Cylindricality:
Standard
0.030 mm (0.0012 in)

Out-of-roundness:
Standard
0.010 mm (0.0004 in)

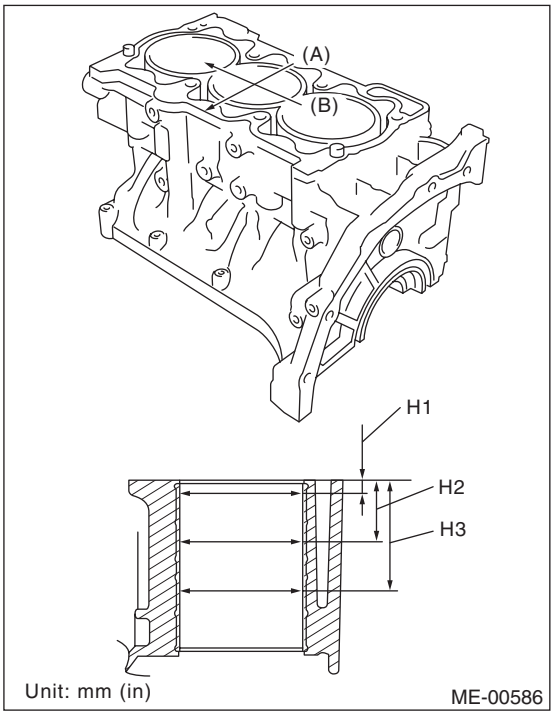

(A) Piston pin direction
(B) Thrust direction
H1: 10 mm (0.39 in)
H2: 45 mm (1.77 in)
H3: 80 mm (3.15 in)

3) When the piston is to be replaced due to general or cylinder wear, determine a suitable sized piston by measuring the piston clearance.
4) How to measure the outer diameter of each piston:
Measure the outer diameter of each piston at the height as shown in the figure. (Thrust direction)

NOTE:
Measurement should be performed at a temperature of 20°C (68°F).

Piston grade point H:
37.3 mm (1.4685 in)

Piston outer diameter:
Standard
A: 89.205 — 89.215 mm (3.5120 — 3.5124 in)
B: 89.195 — 89.205 mm (3.5116 — 3.5120 in)
0.25 mm (0.0098 in) oversize
89.445 — 89.465 mm (3.5215 — 3.5222 in)
0.50 mm (0.0197 in) oversize
89.695 — 89.715 mm (3.5313 — 3.5321 in)

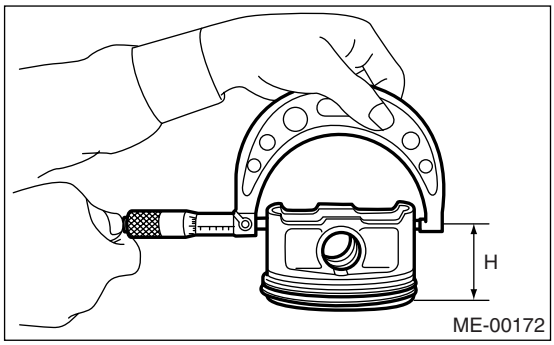

5) Calculate the clearance between cylinder and piston.

NOTE:
Measurement should be performed at a temperature of 20°C (68°F).

Cylinder to piston clearance at 20°C (68°F):
Standard
–0.010 — 0.010 mm (–0.00039 — 0.00039 in)

6) Boring and honing:
(1) If the value of cylindricality, out-of-roundness, or cylinder-to-piston clearance measured is out of standard or if there is any damage on the cylinder wall, rebore it to use an oversize piston.

CAUTION:
When any of the cylinders needs reboring, all other cylinders must be bored at the same time, and use oversize pistons. Do not perform boring on one cylinder only. Nor use an oversize piston for one cylinder only.

(2) If the cylinder inner diameter exceeds 89.715 mm (3.5321 in) after boring and honing, replace the crankcase.

NOTE:
Immediately after reboring, the cylinder diameter may differ from its real diameter due to temperature rise. Thus, pay attention to this when measuring the cylinder diameter.

3. PISTON AND PISTON PIN

1) Check the pistons and piston pins for damage, cracks and wear, and the piston ring grooves for wear and damage. Replace if defective.
2) Measure the piston-to-cylinder clearance at each cylinder. <Ref. to ME(H6DO)-70, CYLINDER AND PISTON, INSPECTION, Cylinder Block.> If any of the clearances is not within specification, replace the piston or bore the cylinder to use an oversize piston.
3) Make sure that the piston pin can be inserted into the piston pin hole with a thumb at 20°C (68°F). Replace if defective.

Standard clearance between piston pin and hole in piston:
Standard
0.004 — 0.008 mm (0.0002 — 0.0003 in)

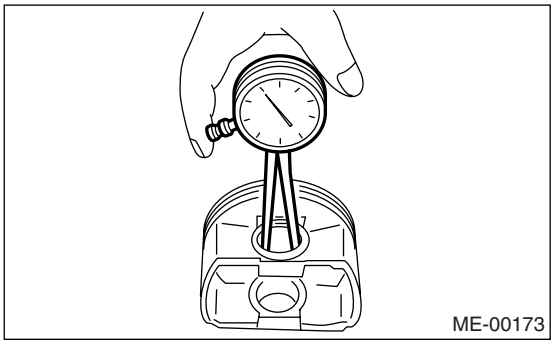

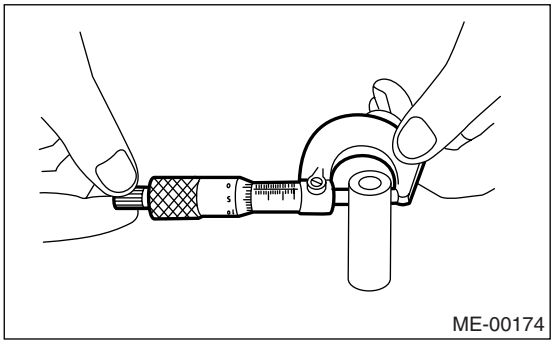

4) Check the snap ring installation groove (A) on the piston for burr. If necessary, remove burr from the groove so that the piston pin can lightly move.

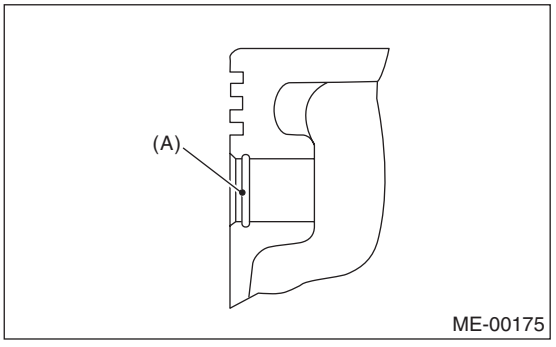

5) Check the piston pin snap ring for distortion, cracks and wear.

4. PISTON RING

1) If the piston ring is broken, damaged, or worn, or if its tension is insufficient, or when the piston is replaced, replace the piston ring with a new one of the same size as the piston.

CAUTION:
• Mark is displayed on the end of top and second rings. When installing the rings to the piston, face this mark upward.
• Oil ring consists of the upper rail, expander and lower rail. When installing on piston, be careful of each rail's direction.

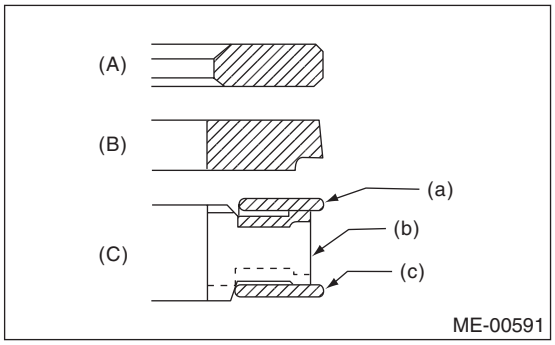

(A) Top ring
(B) Second ring
(C) Oil ring
(a) Upper rail
(b) Expander
(c) Lower rail

2) Squarely place the piston ring and oil ring in cylinder, and measure the piston ring gap with a thickness gauge.

		Standard mm (in)
Piston ring gap	Top ring	0.20 — 0.35 (0.0079 — 0.0138)
	Second ring	0.35 — 0.50 (0.0138 — 0.0197)
	Oil ring	0.20 — 0.60 (0.0079 — 0.0236)

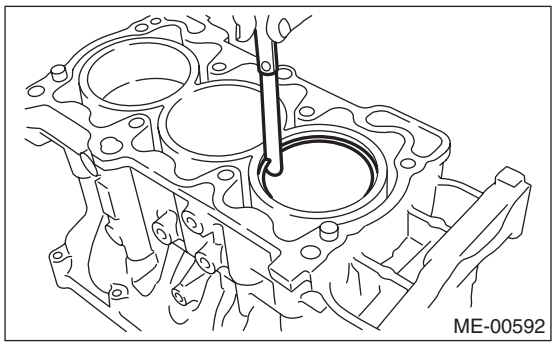

3) Measure the clearance between piston ring and piston ring groove with a thickness gauge.

NOTE:
Before measuring the clearance, clean the piston ring groove and piston ring.

		Standard mm (in)
Clearance between piston ring and piston ring groove	Top ring	0.040 — 0.080 (0.0016 — 0.0031)
	Second ring	0.030 — 0.070 (0.0012 — 0.0028)
Clearance between oil ring and oil ring groove		0.045 — 0.125 (0.0018 — 0.0049)

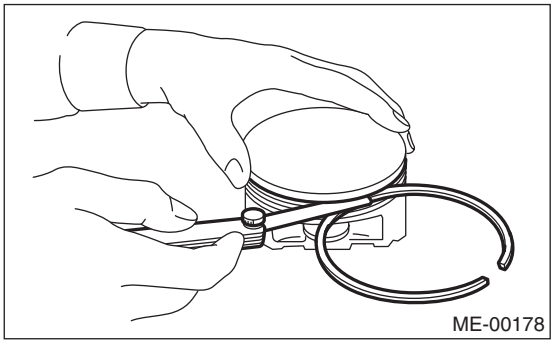

5. CONNECTING ROD

1) Replace the connecting rod, if the large or small end thrust surface is damaged.
2) Check for bend or twist using a connecting rod aligner. Replace the connecting rod if it has the bend or twist.

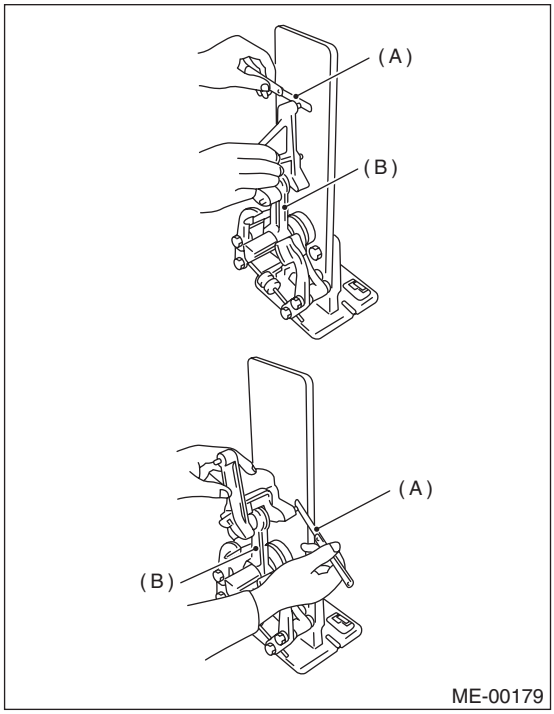

(A) Thickness gauge
(B) Connecting rod

3) Install the connecting rod fitted with bearing to crankshaft and measure the side clearance (thrust clearance). If side clearance exceeds the limit or offset wearing is emitted, replace the connecting rod.

Connecting rod side clearance:
Standard
0.070 — 0.330 mm (0.0028 — 0.0130 in)

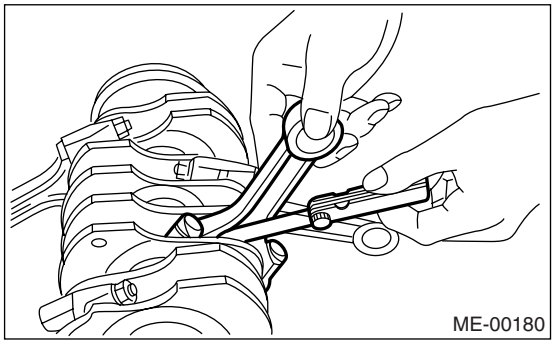

4) Inspect the connecting rod bearing for scar, peeling, seizure, melting, wear, etc.

5) Measure the oil clearance on individual connecting rod bearings by means of plastigauge. If any oil clearance is not within the specification, replace the defective bearing with a new one of standard size or undersize as necessary. (See the table below.)

Connecting rod oil clearance:
Standard
0.016 — 0.043 mm (0.0006 — 0.0017 in)

Unit: mm (in)

Bearings	Bearing size (Thickness at center)	Outer diameter of crank pin
Standard	1.490 — 1.506 (0.0587 — 0.0593)	51.984 — 52.000 (2.0466 — 2.0472)
0.03 (0.0012) undersize	1.509 — 1.513 (0.0594 — 0.0596)	51.954 — 51.970 (2.0454 — 2.0461)
0.05 (0.0020) undersize	1.519 — 1.523 (0.0598 — 0.0600)	51.934 — 51.950 (2.0446 — 2.0453)
0.25 (0.0098) undersize	1.619 — 1.623 (0.0637 — 0.0639)	51.734 — 51.750 (2.0368 — 2.0374)

6) Inspect the bushing at connecting rod small end, and replace if worn or damaged. Also measure the piston pin clearance at the connecting rod small end.

Clearance between piston pin and bushing:
Standard
0 — 0.022 mm (0 — 0.0009 in)

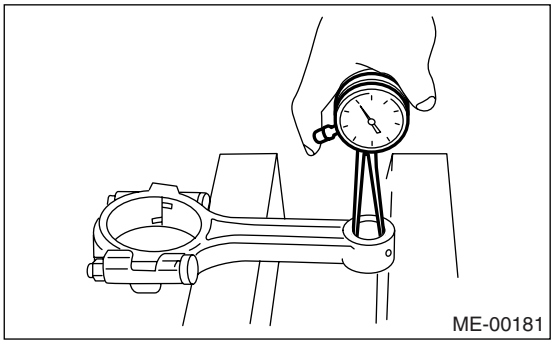

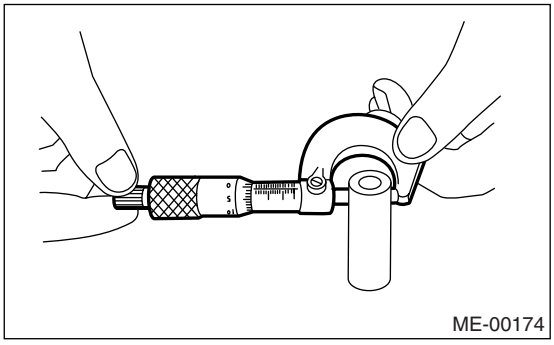

7) Replacement procedure is as follows.
(1) Remove the bushing from connecting rod with ST and press.
(2) Press the bushing with ST after applying oil on the periphery of bushing.

ST 18350AA000 CONNECTING ROD BUSHING REMOVER AND INSTALLER

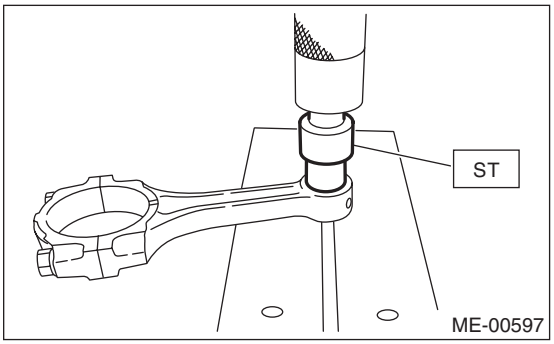

(3) Make two 3 mm (0.12 in) holes in bushing. Ream the inside of bushing.
(4) After completion of reaming, clean the bushing to remove chips.

6. CRANKSHAFT AND CRANKSHAFT BEARING

1) Clean the crankshaft completely, and check it for cracks using liquid penetrant tester. Replace if defective.
2) Check the crankshaft for bend, and repair or replace if needed.

NOTE:
If a suitable V-block is not available, install #1 and #5 crankshaft bearing on cylinder block, position the crankshaft on these bearings, and then check the crankshaft for bend using a dial gauge.

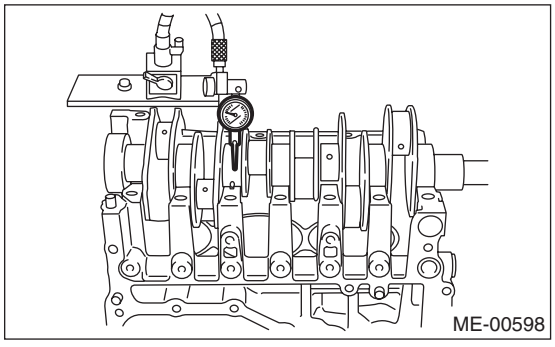

3) Inspect the crank journal and crank pin for wear. If they are not within the specifications, replace the bearing with a suitable (undersize) one, and replace or recondition crankshaft as necessary. When grinding the crank journal or crank pin, finish them to the specified dimensions according to the undersize bearing to be used.

Crank pin and crank journal:
Out-of-roundness
0.005 mm (0.0002 in)
Cylindricality
0.006 mm (0.0002 in)

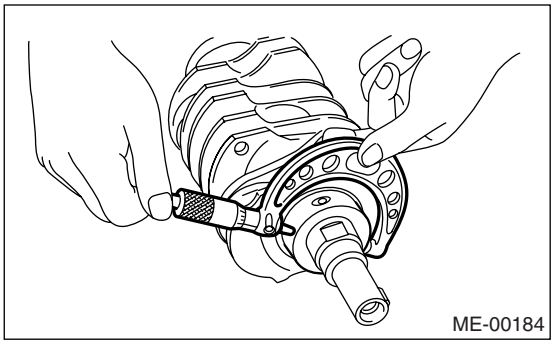

Unit: mm (in)

		Crank journal diameter		Crank pin outer diameter
		#1, #3, #5, #7	#2, #4, #6	
Standard:	Journal O.D.	63.992 — 64.008 (2.5194 — 2.5200)		51.984 — 52.000 (2.0466 — 2.0472)
	Bearing size (Thickness at center)	1.992 — 2.005 (0.0784 — 0.0789)	1.996 — 2.009 (0.0786 — 0.0791)	1.490 — 1.506 (0.0587 — 0.0593)
0.03 (0.0012) undersize	Journal O.D.	63.962 — 63.978 (2.5182 — 2.5188)		51.954 — 51.970 (2.0454 — 2.0461)
	Bearing size (Thickness at center)	2.011 — 2.014 (0.0792 — 0.0793)	2.015 — 2.018 (0.0793 — 0.0794)	1.509 — 1.513 (0.0594 — 0.0596)
0.05 (0.0020) undersize	Journal O.D.	63.942 — 63.958 (2.5174 — 2.5180)		51.934 — 51.950 (2.0446 — 2.0453)
	Bearing size (Thickness at center)	2.021 — 2.024 (0.0796 — 0.0797)	2.025 — 2.028 (0.0797 — 0.0798)	1.519 — 1.523 (0.0598 — 0.0600)
0.25 (0.0098) undersize	Journal O.D.	63.742 — 63.758 (2.5095 — 2.5102)		51.734 — 51.750 (2.0368 — 2.0374)
	Bearing size (Thickness at center)	2.121 — 2.124 (0.0835 — 0.0836)	2.125 — 2.128 (0.0837 — 0.0838)	1.619 — 1.623 (0.0637 — 0.0639)

4) Measure the thrust clearance of crankshaft at center bearing. If clearance exceeds the limit, replace the bearing.

Crankshaft side clearance:
Standard
0.030 — 0.115 mm (0.0012 — 0.0045 in)

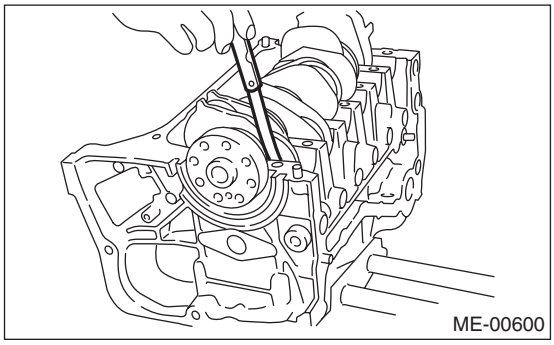

5) Inspect individual crankshaft bearings for signs of flaking, seizure, melting, and wear.
6) Measure the oil clearance on each crankshaft bearing by means of plastigauge. If the measurement is not within the specification, replace the defective bearing with an undersize one, and replace or recondition the crankshaft as necessary.

Crankshaft oil clearance:
Standard
0.010 — 0.030 mm (0.0004 — 0.0012 in)

22. Oil Flow Control Solenoid Valve

A: REMOVAL

Oil flow control solenoid valve is a unit with camshaft cap.
Refer to “Camshaft” for removal procedure. <Ref. to ME(H6DO)-53, REMOVAL, Camshaft.>

B: INSTALLATION

Install in the reverse order of removal.

23.Oil Switching Solenoid Valve

A: REMOVAL

1) Disconnect the ground cable from battery.

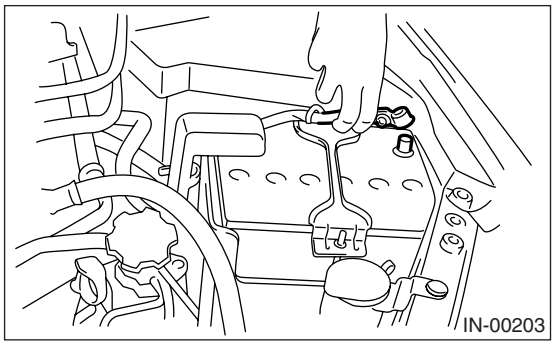

2) Remove the air intake chamber.
<Ref. to IN(H6DO)-7, REMOVAL, Air Intake Chamber.>
3) Disconnect the connector from oil switching solenoid valve.

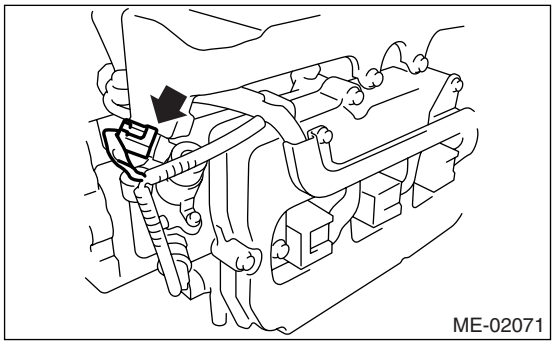

4) Remove the oil switching solenoid valve.
5) Remove the variable valve lift diagnosis oil pressure switch.
<Ref. to FU(H6DO)-28, REMOVAL, Variable Valve Lift Diagnosis Oil Pressure Switch.>
6) Remove the oil temperature sensor.
<Ref. to FU(H6DO)-29, REMOVAL, Oil Temperature Sensor.>
7) Remove the oil flow control solenoid valve holder from cylinder head.

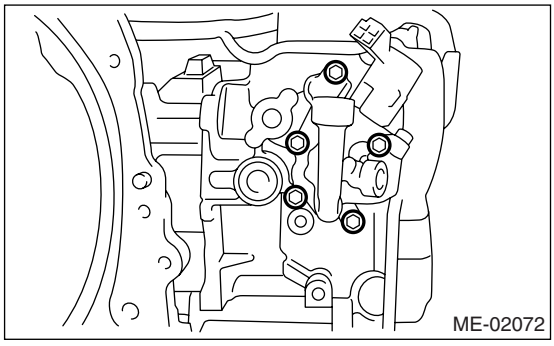

B: INSTALLATION

1) Install the oil switching solenoid valve holder.

NOTE:
Always use new gasket.

(1) Temporarily tighten the bolts by tightening torque of 5 — 10 N·m (0.5 — 1.0 kgf-m, 3.7 — 7.4 ft-lb) in order indicated in the figure.
(2) Tighten the bolts by tightening torque of 10±0.5 N·m (1.0±0.05 kgf-m, 7.4±0.37 ft-lb).

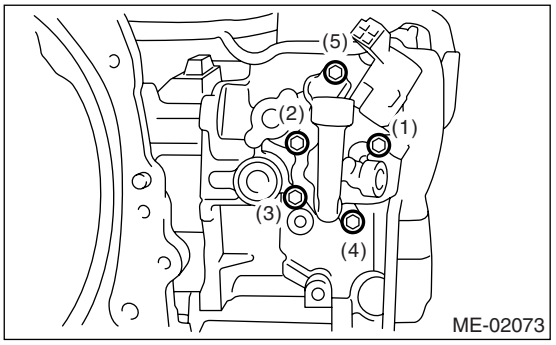

2) Install the oil temperature sensor.
<Ref. to FU(H6DO)-29, INSTALLATION, Oil Temperature Sensor.>
3) Install the variable valve lift diagnosis oil pressure switch.
<Ref. to FU(H6DO)-28, INSTALLATION, Variable Valve Lift Diagnosis Oil Pressure Switch.>
4) Install the oil switching solenoid valve.
5) Connect the connector to oil switching solenoid valve.

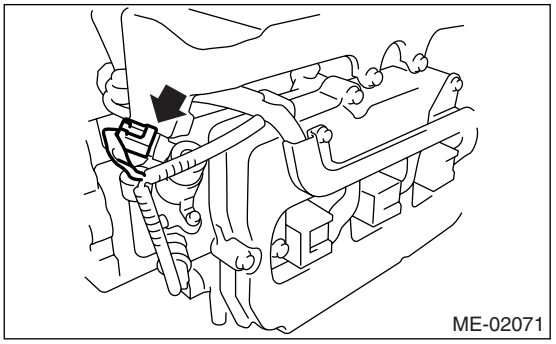

6) Install the air intake chamber.
<Ref. to IN(H6DO)-7, INSTALLATION, Air Intake Chamber.>

24.Intake and Exhaust Valve

A: SPECIFICATION

Refer to “Cylinder Head” for removal and installation procedures of intake and exhaust valves. <Ref. to ME(H6DO)-57, REMOVAL, Cylinder Head.> <Ref. to ME(H6DO)-57, INSTALLATION, Cylinder Head.>

25.Piston

A: SPECIFICATION

Refer to “Cylinder Block” for removal and installation procedures of pistons. <Ref. to ME(H6DO)-62, REMOVAL, Cylinder Block.> <Ref. to ME(H6DO)-64, INSTALLATION, Cylinder Block.>

26.Connecting Rod

A: SPECIFICATION

Refer to “Cylinder Block” for removal and installation procedures of connecting rod. <Ref. to ME(H6DO)-62, REMOVAL, Cylinder Block.> <Ref. to ME(H6DO)-64, INSTALLATION, Cylinder Block.>

27.Crankshaft

A: SPECIFICATION

Refer to “Cylinder Block” for removal and installation procedures of crankshaft. <Ref. to ME(H6DO)-62, REMOVAL, Cylinder Block.> <Ref. to ME(H6DO)-64, INSTALLATION, Cylinder Block.>

28.Engine Trouble in General

A: INSPECTION

NOTE:
"RANK" shown in the chart refers to the possibility of reason for the trouble in order ("Very often" to "Rarely")
A — Very often
B — Sometimes
C — Rarely

Symptom	Problem parts, etc.	Possible cause	RANK
1. Engine does not start.			
1) Starter does not turn.	Starter	Defective battery-to-starter harness	B
		Defective ignition starter switch	C
		Defective inhibitor switch or neutral switch	C
		Defective starter	B
	Battery	Poor terminal connection	A
		Run-down battery	A
		Defective charging system	B
	Friction	Seizure of crankshaft and connecting rod bearing	C
		Seized camshaft	C
		Seized or stuck piston and cylinder	C
2) Initial combustion does not occur.	Starter	Defective starter	C
	Engine control system <Ref. to EN(H6DO)(diag)-2, Basic Diagnostic Procedure.>		A
	Fuel line	Defective fuel pump and relay	A
		Lack of or insufficient fuel	B
	Chain	Trouble	B
		Defective timing	B
	Compression	Incorrect valve clearance	C
		Loosened spark plug or defective gasket	C
		Loosened cylinder head bolt or defective gasket	C
		Improper valve sealing	C
		Defective valve stem	C
		Worn or broken valve spring	B
		Worn or stuck piston rings, cylinder and piston	C
		Incorrect valve timing	B
		Improper engine oil (low viscosity)	B
		Trouble of tappet	C
		Trouble of tappet. In case noise occurs with valve moving. Or the harness involved to oil switching solenoid valve, variable valve lift diagnosis oil pressure switch and variable valve lift has trouble in a past.	B

Symptom	Problem parts, etc.	Possible cause	RANK
3) Initial combustion occurs.	Engine control system <Ref. to EN(H6DO)(diag)-2, Basic Diagnostic Procedure.>		A
	Intake system	Defective intake manifold gasket	B
		Defective throttle body gasket	B
	Fuel line	Defective fuel pump and relay	C
		Clogged fuel line	C
		Lack of or insufficient fuel	B
	Chain	Trouble	B
		Defective timing	B
	Compression	Incorrect valve clearance	C
		Loosened spark plug or defective gasket	C
		Loosened cylinder head bolt or defective gasket	C
		Improper valve sealing	C
		Defective valve stem	C
		Worn or broken valve spring	B
		Worn or stuck piston rings, cylinder and piston	C
		Incorrect valve timing	B
		Improper engine oil (low viscosity)	B
		Trouble of tappet	C
		Trouble of tappet. In case noise occurs with valve moving. Or the harness involved to oil switching solenoid valve, variable valve lift diagnosis oil pressure switch and variable valve lift has trouble in a past.	B
4) Engine stalls after initial combustion.	Engine control system <Ref. to EN(H6DO)(diag)-2, Basic Diagnostic Procedure.>		A
	Intake system	Loosened or cracked intake duct	B
		Loosened or cracked PCV hose	C
		Loosened or cracked vacuum hose	C
		Defective intake manifold gasket	B
		Defective throttle body gasket	B
		Dirty air cleaner element	C
	Fuel line	Clogged fuel line	C
		Lack of or insufficient fuel	B
	Chain	Trouble	B
		Defective timing	B
	Compression	Incorrect valve clearance	C
		Loosened spark plug or defective gasket	C
		Loosened cylinder head bolt or defective gasket	C
		Improper valve sealing	C
		Defective valve stem	C
		Worn or broken valve spring	B
		Worn or stuck piston rings, cylinder and piston	C
		Incorrect valve timing	B
		Improper engine oil (low viscosity)	B
		Trouble of tappet	C
		Trouble of tappet. In case noise occurs with valve moving. Or the harness involved to oil switching solenoid valve, variable valve lift diagnosis oil pressure switch and variable valve lift has trouble in a past.	B

Symptom	Problem parts, etc.	Possible cause	RANK
2. Rough idle and engine stall	Engine control system <Ref. to EN(H6DO)(diag)-2, Basic Diagnostic Procedure.>		A
	Intake system	Loosened or cracked intake duct	A
		Loosened or cracked PCV hose	A
		Loosened or cracked vacuum hose	A
		Defective intake manifold gasket	B
		Defective throttle body gasket	B
		Defective PCV valve	C
		Loosened oil filler cap	B
		Dirty air cleaner element	C
	Fuel line	Defective fuel pump and relay	C
		Clogged fuel line	C
		Lack of or insufficient fuel	B
	Chain	Defective timing	C
	Compression	Incorrect valve clearance	B
		Loosened spark plug or defective gasket	B
		Loosened cylinder head bolt or defective gasket	B
		Improper valve sealing	B
		Defective valve stem	C
		Worn or broken valve spring	B
		Worn or stuck piston rings, cylinder and piston	B
		Incorrect valve timing	A
		Improper engine oil (low viscosity)	B
		Trouble of tappet	C
		Trouble of tappet. In case noise occurs with valve moving. Or the harness involved to oil switching solenoid valve, variable valve lift diagnosis oil pressure switch and variable valve lift has trouble in a past.	B
	Lubrication system	Incorrect oil pressure	B
		Defective rocker cover gasket	C
	Cooling system	Over-heating	C
	Other	Evaporative emission control system malfunction	A
		Stuck or damaged throttle valve	B

Symptom	Problem parts, etc.	Possible cause	RANK
3. Low output, hesitation and poor acceleration	Engine control system <Ref. to EN(H6DO)(diag)-2, Basic Diagnostic Procedure.>		A
	Intake system	Loosened or cracked intake duct	A
		Loosened or cracked PCV hose	A
		Loosened or cracked vacuum hose	B
		Defective intake manifold gasket	B
		Defective throttle body gasket	B
		Defective PCV valve	B
		Loosened oil filler cap	B
		Dirty air cleaner element	A
	Fuel line	Defective fuel pump and relay	B
		Clogged fuel line	B
		Lack of or insufficient fuel	C
	Chain	Defective timing	B
	Compression	Incorrect valve clearance	B
		Loosened spark plug or defective gasket	B
		Loosened cylinder head bolt or defective gasket	B
		Improper valve sealing	B
		Defective valve stem	C
		Worn or broken valve spring	B
		Worn or stuck piston rings, cylinder and piston	C
		Incorrect valve timing	A
		Improper engine oil (low viscosity)	B
		Trouble of tappet	C
		Trouble of tappet. In case noise occurs with valve moving. Or the harness involved to oil switching solenoid valve, variable valve lift diagnosis oil pressure switch and variable valve lift has trouble in a past.	B
	Lubrication system	Incorrect oil pressure	B
	Cooling system	Over-heating	C
		Over-cooling	C
	Other	Evaporative emission control system malfunction	A

Symptom	Problem parts, etc.	Possible cause	RANK
4. Surging	Engine control system <Ref. to EN(H6DO)(diag)-2, Basic Diagnostic Procedure.>		A
	Intake system	Loosened or cracked intake duct	A
		Loosened or cracked PCV hose	A
		Loosened or cracked vacuum hose	A
		Defective intake manifold gasket	B
		Defective throttle body gasket	B
		Defective PCV valve	B
		Loosened oil filler cap	B
		Dirty air cleaner element	B
	Fuel line	Defective fuel pump and relay	B
		Clogged fuel line	B
		Lack of or insufficient fuel	C
	Chain	Defective timing	B
	Compression	Incorrect valve clearance	B
		Loosened spark plug or defective gasket	C
		Loosened cylinder head bolt or defective gasket	C
		Improper valve sealing	C
		Defective valve stem	C
		Worn or broken valve spring	C
		Worn or stuck piston rings, cylinder and piston	C
		Incorrect valve timing	A
		Improper engine oil (low viscosity)	B
		Trouble of tappet	C
		Trouble of tappet. In case noise occurs with valve moving. Or the harness involved to oil switching solenoid valve, variable valve lift diagnosis oil pressure switch and variable valve lift has trouble in a past.	B
	Cooling system	Over-heating	B
	Other	Evaporative emission control system malfunction	C
5. Engine does not return to idle.	Engine control system <Ref. to EN(H6DO)(diag)-2, Basic Diagnostic Procedure.>		A
	Intake system	Loosened or cracked vacuum hose	A
	Other	Stuck or damaged throttle valve	A
6. Dieseling (Run-on)	Engine control system <Ref. to EN(H6DO)(diag)-2, Basic Diagnostic Procedure.>		A
	Cooling system	Over-heating	B
	Other	Evaporative emission control system malfunction	B

Symptom	Problem parts, etc.	Possible cause	RANK
7. After burning in exhaust system	Engine control system <Ref. to EN(H6DO)(diag)-2, Basic Diagnostic Procedure.>		A
	Intake system	Loosened or cracked intake duct	C
		Loosened or cracked PCV hose	C
		Loosened or cracked vacuum hose	B
		Defective PCV valve	B
		Loosened oil filler cap	C
	Chain	Defective timing	B
	Compression	Incorrect valve clearance	B
		Loosened spark plug or defective gasket	C
		Loosened cylinder head bolt or defective gasket	C
		Improper valve sealing	B
		Defective valve stem	C
		Worn or broken valve spring	C
		Worn or stuck piston rings, cylinder and piston	C
		Incorrect valve timing	A
		Trouble of tappet	C
		Trouble of tappet. In case noise occurs with valve moving. Or the harness involved to oil switching solenoid valve, variable valve lift diagnosis oil pressure switch and variable valve lift has trouble in a past.	B
	Lubrication system	Incorrect oil pressure	C
	Cooling system	Over-cooling	C
	Other	Evaporative emission control system malfunction	C
8. Knocking	Engine control system <Ref. to EN(H6DO)(diag)-2, Basic Diagnostic Procedure.>		A
	Intake system	Loosened oil filler cap	B
	Chain	Defective timing	B
	Compression	Incorrect valve clearance	C
		Incorrect valve timing	B
		Trouble of tappet	C
		Trouble of tappet. In case noise occurs with valve moving. Or the harness involved to oil switching solenoid valve, variable valve lift diagnosis oil pressure switch and variable valve lift has trouble in a past.	B
	Cooling system	Over-heating	A
9. Excessive engine oil consumption	Intake system	Loosened or cracked PCV hose	A
		Defective PCV valve	B
		Loosened oil filler cap	C
	Compression	Defective valve stem	A
		Worn or stuck piston rings, cylinder and piston	A
	Lubrication system	Loosened oil pump attaching bolts and defective gasket	B
		Defective oil filter o-ring	B
		Defective crankshaft oil seal	B
		Defective rocker cover gasket	B
		Loosened oil drain plug or defective gasket	B
		Loosened oil pan fitting bolts or defective oil pan	B

Symptom	Problem parts, etc.	Possible cause	RANK
10. Excessive fuel consumption	Engine control system <Ref. to EN(H6DO)(diag)-2, Basic Diagnostic Procedure.>		A
	Intake system	Dirty air cleaner element	A
	Chain	Defective timing	B
	Compression	Incorrect valve clearance	B
		Loosened spark plug or defective gasket	C
		Loosened cylinder head bolt or defective gasket	C
		Improper valve sealing	B
		Defective valve stem	C
		Worn or broken valve spring	C
		Worn or stuck piston rings, cylinder and piston	B
		Incorrect valve timing	B
		Trouble of tappet	C
		Trouble of tappet. In case noise occurs with valve moving. Or the harness involved to oil switching solenoid valve, variable valve lift diagnosis oil pressure switch and variable valve lift has trouble in a past.	B
	Lubrication system	Incorrect oil pressure	C
	Cooling system	Over-cooling	C

29.Engine Noise

A: INSPECTION

Type of sound	Condition	Possible cause
Regular clicking sound	Sound increases as engine speed increases.	• Valve mechanism is defective. • Incorrect valve clearance • Worn valve rocker • Worn camshaft • Broken valve spring
Heavy and dull clank	Oil pressure is low.	• Worn camshaft main bearing • Worn connecting rod bearing (big end)
	Oil pressure is normal.	Damaged engine mounting
High-pitched clank	Sound is noticeable when accelerating with an overload.	• Ignition timing advanced • Accumulation of carbon inside combustion chamber • Wrong spark plug • Improper gasoline
Clank when engine speed is 1,000 to 2,000 rpm	Sound is reduced when fuel injector connector of noisy cylinder is disconnected. (NOTE*)	• Worn crankshaft main bearing • Worn bearing at crankshaft end of connecting rod
Knocking sound when engine is operating under idling speed and engine is warm	Sound is reduced when fuel injector connector of noisy cylinder is disconnected. (NOTE*)	• Worn cylinder liner and piston ring • Broken or stuck piston ring • Worn piston pin and hole at piston end of connecting rod
	Sound is not reduced if each fuel injector connector is disconnected in turn. (NOTE*)	• Unusually worn valve lifter • Worn cam gear • Worn camshaft journal bore in crankcase
Squeaky sound	—	• Insufficient generator lubrication
Rubbing sound	—	• Defective generator brush and rotor contact
Gear scream when starting engine	—	• Defective ignition starter switch • Worn gear and starter pinion
Sound like polishing glass with a dry cloth	—	• Loose drive belt • Defective water pump shaft
Hissing sound	—	• Loss of compression • Air leakage in air intake system, hoses, connections or manifolds
Timing belt noise	—	• Loose timing belt • Belt contacting with case/adjacent part
Valve tappet noise	—	• Incorrect valve clearance • Trouble of tappet

NOTE*:
When disconnecting the fuel injector connector, the malfunction indicator light illuminates and DTC is stored in ECM memory. Therefore, carry out the clear memory mode <Ref. to EN(H6DO)(diag)-44, OPERATION, Clear Memory Mode.> and inspection mode <Ref. to EN(H6DO)(diag)-35, PROCEDURE, Inspection Mode.> after connecting the fuel injector connector.

EXHAUST

EX(H6DO)

Page

1. General Description 2
2. Front Exhaust Pipe 4
3. Rear Exhaust Pipe 7
4. Muffler 9

1. General Description

A: COMPONENT

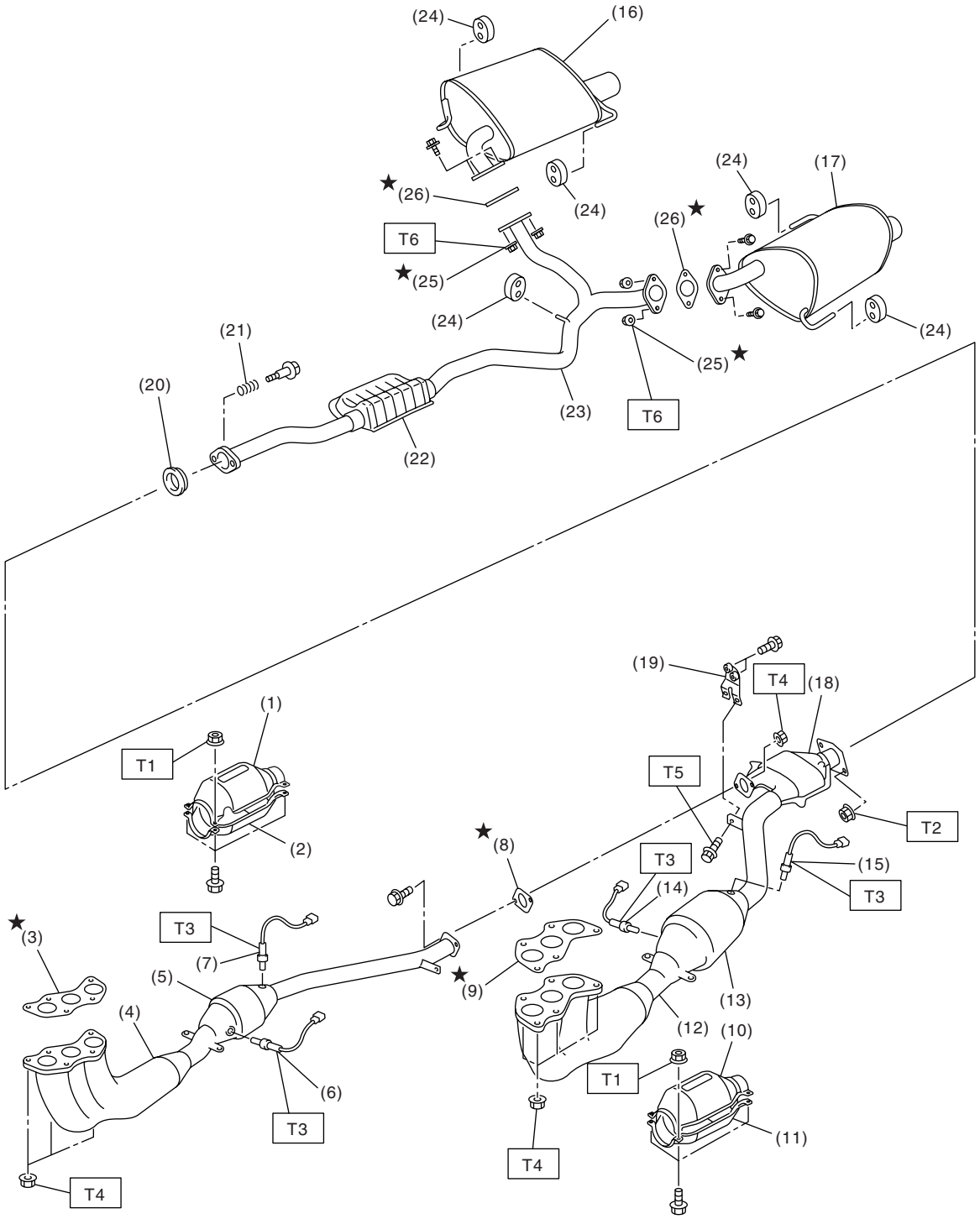

EX-02061

(1) Front catalytic converter upper cover (RH)
(2) Front catalytic converter lower cover (RH)
(3) Gasket
(4) Front exhaust pipe (RH)
(5) Front catalytic converter (RH)
(6) Front oxygen (A/F) sensor (RH)
(7) Rear oxygen sensor (RH)
(8) Gasket
(9) Gasket
(10) Front catalytic converter upper cover (LH)
(11) Front catalytic converter lower cover (LH)
(12) Front exhaust pipe (LH)
(13) Front catalytic converter (LH)
(14) Front oxygen (A/F) sensor (LH)
(15) Rear oxygen sensor (LH)
(16) Muffler (RH)
(17) Muffler (LH)
(18) Rear catalytic converter
(19) Bracket
(20) Gasket
(21) Spring
(22) Chamber
(23) Rear exhaust pipe
(24) Cushion rubber
(25) Self-locking nut
(26) Gasket

Tightening torque: N·m (kgf-m, ft-lb)
T1: 13 (1.3, 9.4)
T2: 18 (1.8, 13.0)
T3: 21 (2.1, 15.2)
T4: 30 (3.1, 22.4)
T5: 35 (3.6, 26.0)
T6: 48 (4.9, 35.4)

B: CAUTION

• Wear work clothing, including a cap, protective goggles, and protective shoes during operation.
• Remove contamination including dirt and corrosion before removal, installation or disassembly.
• Keep the disassembled parts in order and protect them from dust and dirt.
• Before removal, installation or disassembly, be sure to clarify the failure. Avoid unnecessary removal, installation, disassembly and replacement.
• Be careful not to burn yourself, because each part on the vehicle is hot after running.
• Be sure to tighten fasteners including bolts and nuts to the specified torque.
• Place shop jacks or rigid racks at the specified points.
• Before disconnecting electrical connectors of sensors or units, be sure to disconnect the ground cable from battery.

2. Front Exhaust Pipe

A: REMOVAL

1) Disconnect the ground cable from battery.

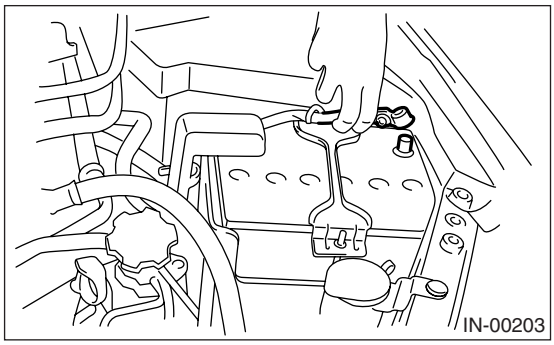

2) Lift-up the vehicle.
3) Remove the under cover.
4) Disconnect the front oxygen (A/F) sensor connector (A) and rear oxygen sensor connector (B).

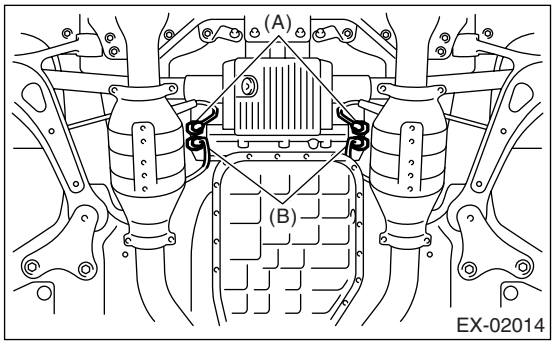

5) Separate the front exhaust pipe from rear exhaust pipe.

CAUTION:
Be careful, exhaust pipe is hot.

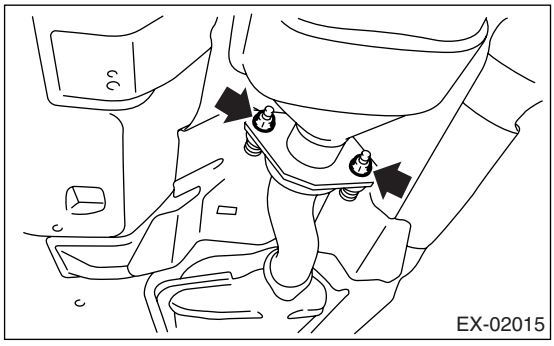

6) Remove the nuts which hold front exhaust pipe onto cylinder heads.

CAUTION:
Be careful not to pull down the front exhaust pipe assembly.

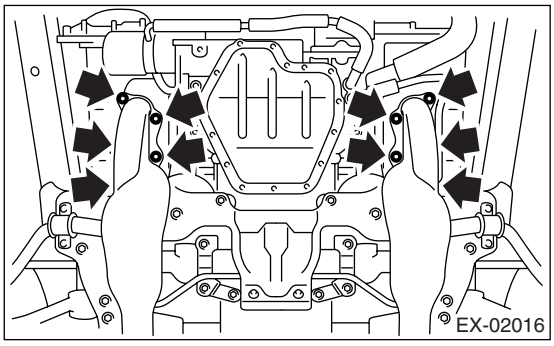

7) Remove the bolts which hold front exhaust pipe assembly to hanger bracket.

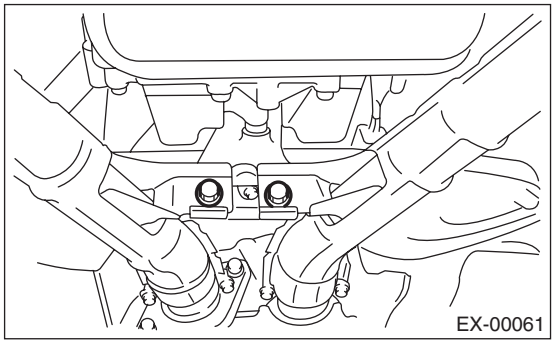

8) Remove the front exhaust pipe assembly from vehicle.

CAUTION:
• Be careful not to let the front exhaust pipe assembly fall off when removing, as it is quite heavy.
• After removing the front exhaust pipe assembly, do not apply excessive pulling force on the rear exhaust pipe.

9) Disconnect the front exhaust pipe (RH) from front exhaust pipe assembly.

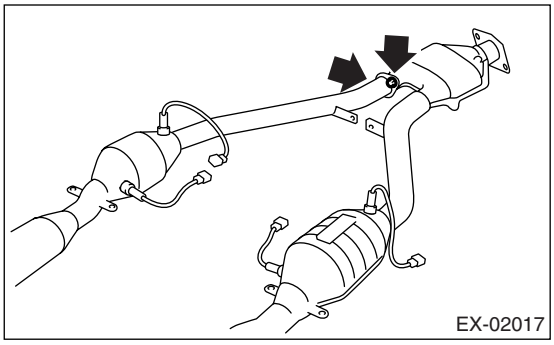

10) Remove the front oxygen (A/F) sensor and rear oxygen sensor. <Ref. to FU(H6DO)-30, REMOVAL, Front Oxygen (A/F) Sensor.> <Ref. to FU(H6DO)-32, REMOVAL, Rear Oxygen Sensor.>

B: INSTALLATION

1) Install the front oxygen (A/F) sensor and rear oxygen sensor. <Ref. to FU(H6DO)-30, INSTALLATION, Front Oxygen (A/F) Sensor.> <Ref. to FU(H6DO)-32, INSTALLATION, Rear Oxygen Sensor.>
2) Install the front exhaust pipe (RH) to front exhaust pipe assembly.

NOTE:
Use a new gasket.

Tightening torque:
30 N·m (3.1 kgf-m, 22.4 ft-lb)

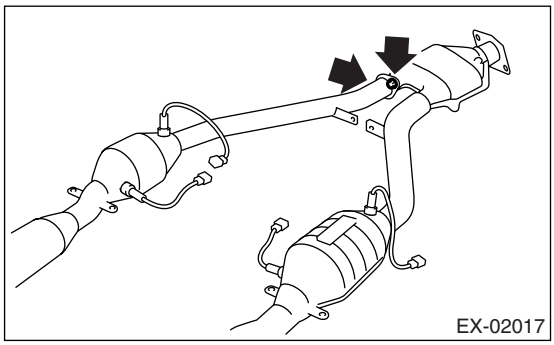
EX-02017

3) Install the front exhaust pipe assembly to vehicle.
4) Temporarily tighten the bolts which hold front exhaust pipe assembly to hanger bracket.

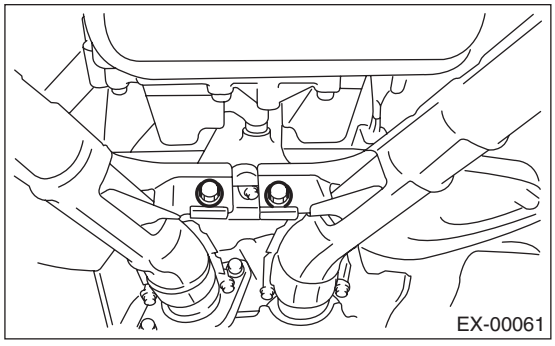
EX-00061

5) Install the nuts to cylinder head which hold front exhaust pipe.

Tightening torque:
30 N·m (3.1 kgf-m, 22.4 ft-lb)

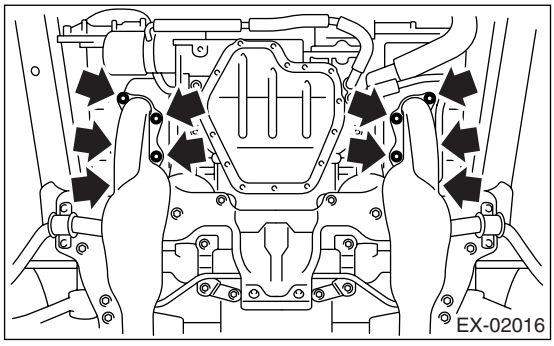
EX-02016

6) Install the under cover.
7) Tighten the bolts which install the front exhaust pipe to rear exhaust pipe.

Tightening torque:
18 N·m (1.8 kgf-m, 13.0 ft-lb)

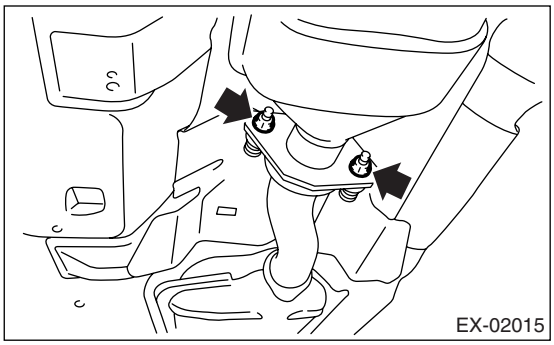
EX-02015

8) Tighten the bolts which hold the front exhaust pipe assembly to hanger bracket.

Tightening torque:
35 N·m (3.6 kgf-m, 26.0 ft-lb)

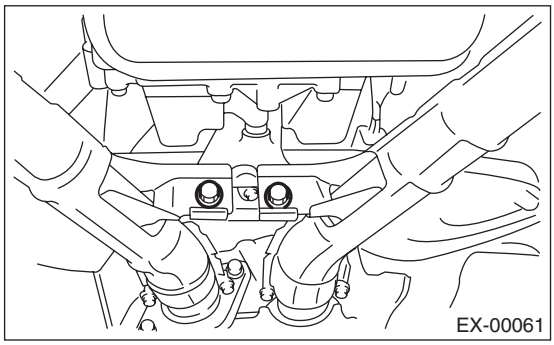
EX-00061

9) Connect the front oxygen (A/F) sensor connector (A) and rear oxygen sensor connector (B).

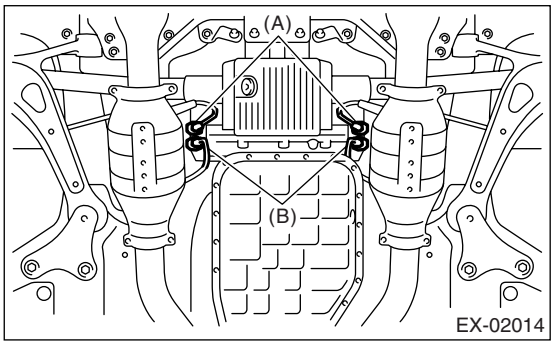

EX-02014

10) Lower the vehicle.

11) Connect the ground cable to battery.

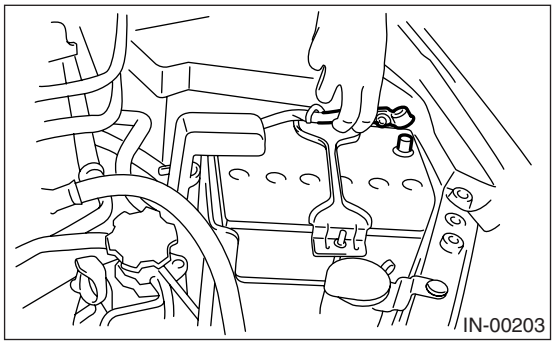

C: INSPECTION

1) Make sure there are no exhaust leaks from connections and welds.
2) Make sure there are no holes or rusting.

3. Rear Exhaust Pipe

A: REMOVAL

1) Separate the rear exhaust pipe from front exhaust pipe.

CAUTION:
Be careful, exhaust pipe is hot.

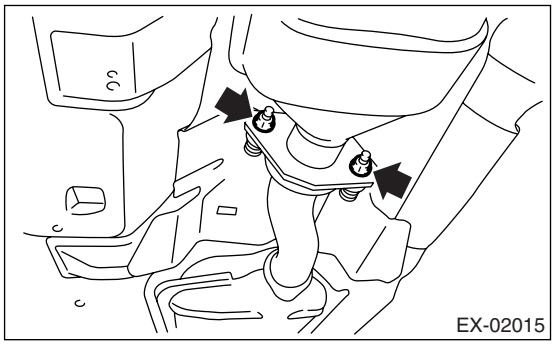

2) Separate the rear exhaust pipe from muffler.

CAUTION:
Be careful not to pull down the rear exhaust pipe.

- LH side

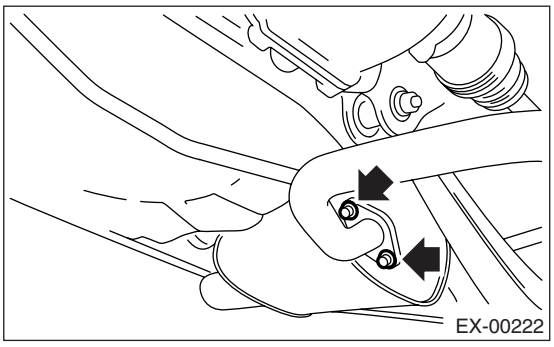

- RH side

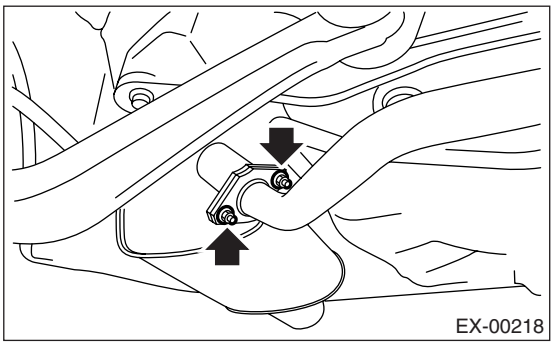

3) Apply a coat of spray type lubricant to the mating area of cushion rubber.

4) Remove the rear exhaust pipe bracket from cushion rubber.

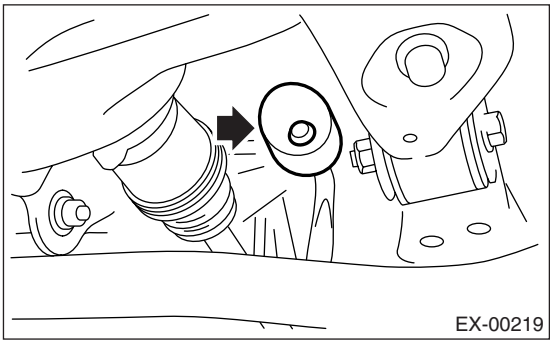

B: INSTALLATION

1) Apply a coat of spray type lubricant to the mating area of cushion rubber.
2) Install the rear exhaust pipe bracket to cushion rubber.

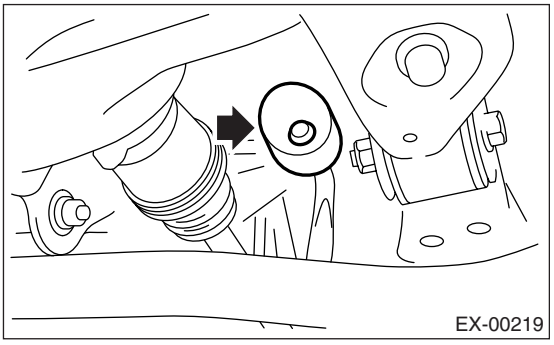

3) Install the rear exhaust pipe to muffler.

NOTE:
Use a new gasket and self-locking nut.

Tightening torque:
48 N·m (4.9 kgf-m, 35.4 ft-lb)

- LH side

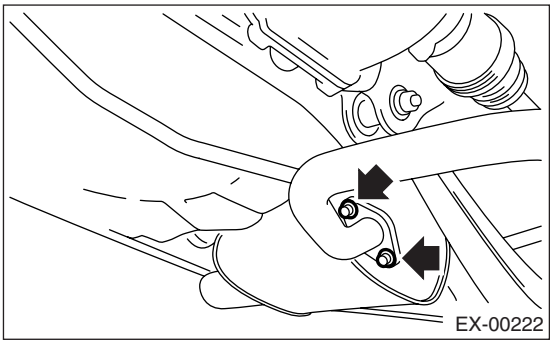

- RH side

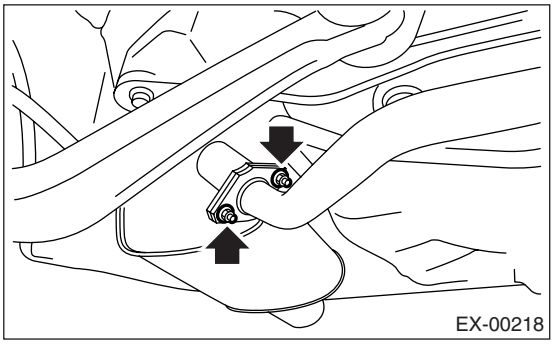

4) Install the rear exhaust pipe to center exhaust pipe.

Tightening torque:
18 N·m (1.8 kgf-m, 13.0 ft-lb)

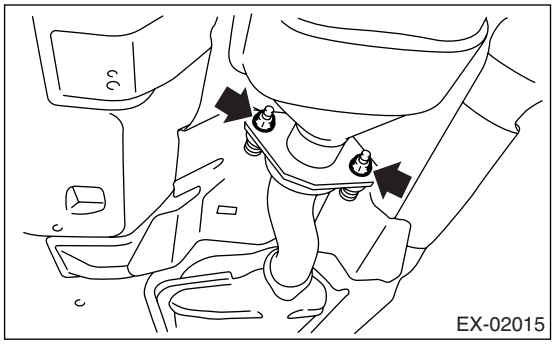

C: INSPECTION

1) Make sure there are no exhaust leaks from connections and welds.
2) Make sure there are no holes or rusting.
3) Make sure the cushion rubber is not worn or cracked.

4. Muffler

A: REMOVAL

1) Separate the muffler from rear exhaust pipe.

CAUTION:
Be careful, exhaust pipe is hot.

- LH side

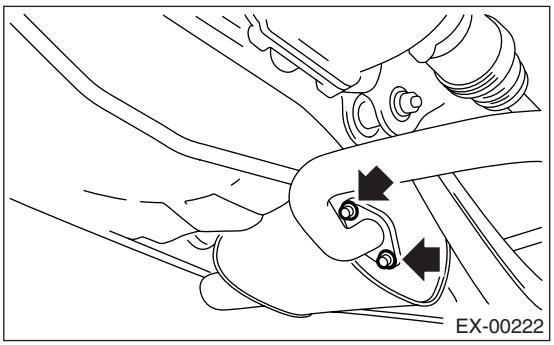

- RH side

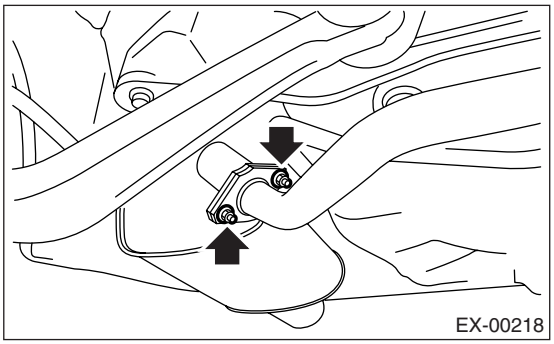

2) Apply a coat of spray type lubricant to the mating area of cushion rubber.

- LH side

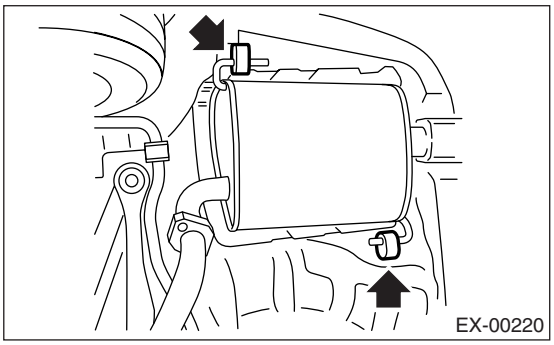

- RH side

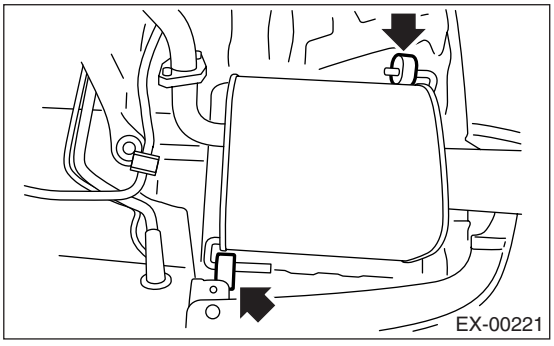

3) Remove the front and rear cushion rubber, and then remove the muffler.

B: INSTALLATION

Install in the reverse order of removal.

NOTE:
Use a new gasket and self-locking nut.

Tightening torque:
48 N·m (4.9 kgf-m, 35.4 ft-lb)

- LH side

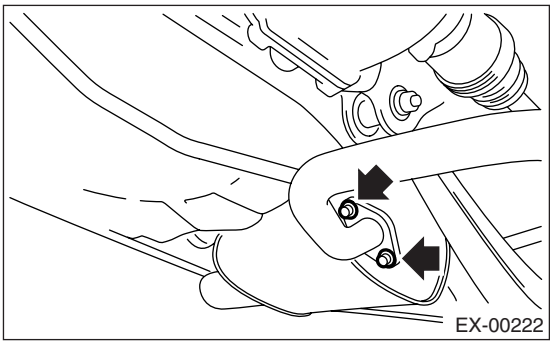

- RH side

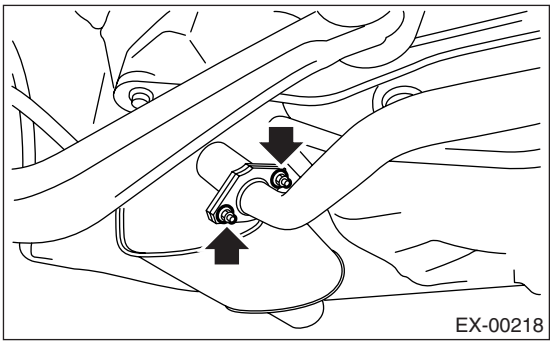

C: INSPECTION

1) Make sure there are no exhaust leaks from connections and welds.
2) Make sure there are no holes or rusting.
3) Make sure the cushion rubber is not worn or cracked.

COOLING

CO(H6DO)

		Page
1.	General Description	2
2.	Radiator Fan System	7
3.	Engine Coolant	10
4.	Water Pump	12
5.	Thermostat	13
6.	Radiator	14
7.	Radiator Cap	17
8.	Radiator Main Fan and Fan Motor	18
9.	Radiator Sub Fan and Fan Motor	21
10.	Reservoir Tank	23
11.	Radiator Fan Control Unit	24
12.	Engine Cooling System Trouble in General	25

1. General Description

A: SPECIFICATION

Cooling system			Electric fan + Forced engine coolant circulation system
Total engine coolant capacity ℓ (US qt, Imp qt)			Approx. 7.2 (7.6, 6.3)
Water pump	Type		Centrifugal impeller type
	Discharge performance I	Discharge amount ℓ (US gal, Imp gal)/min	320 (84.5, 70.4)
		Pump speed — Discharge pressure	5,500 rpm — 176.5 kPa (18 mAq)
		Engine coolant temperature	80°C (176°F)
	Impeller diameter mm (in)		73.2 (2.88)
	Number of impeller vanes		6
	Number of pump sprocket teeth		22
Thermostat	Type		Wax pellet type
	Starting temperature to open		80 — 84°C (176 — 183°F)
	Fully opens		95°C (203°F)
	Valve lift mm (in)		9.0 (0.354) or more
	Valve bore mm (in)		35 (1.38)
Radiator fan	Motor input	Main fan W	160
		Sub fan W	160
	Fan diameter / Blades	Main fan	320 mm (12.60 in) /5
		Sub fan	320 mm (12.6 in) /7
Radiator	Type		Down flow, pressure type
	Core dimensions	Width × Height × Thickness mm (in)	690 × 349 × 16 (27.17 × 13.74 × 0.63)
	Pressure range in which cap valve is open kPa (kg/cm^2, psi)		Above: 108±15 (1.1±0.15, 16±2) Below: The atmospheric pressure or less
	Fins		Corrugated fin type
Reservoir tank	Capacity ℓ (US qt, Imp qt)		0.45 (0.48, 0.40)

A/C compressor	A/C middle pressure switch	Coolant temperature		
		Increase: less than 95°C (203°F) Decrease: less than 93°C (199°F)	Increase: 95 — 101°C (203 — 214°F) Decrease: 93 — 99°C (199 — 210°F)	Increase: 102°C (216°F) or more Decrease: 100°C (212°F) or more
OFF		0%	Refer to Fig (1)	100%
ON	OFF	Refer to Fig (2)		100%
	ON	Refer to Fig (3)		100%

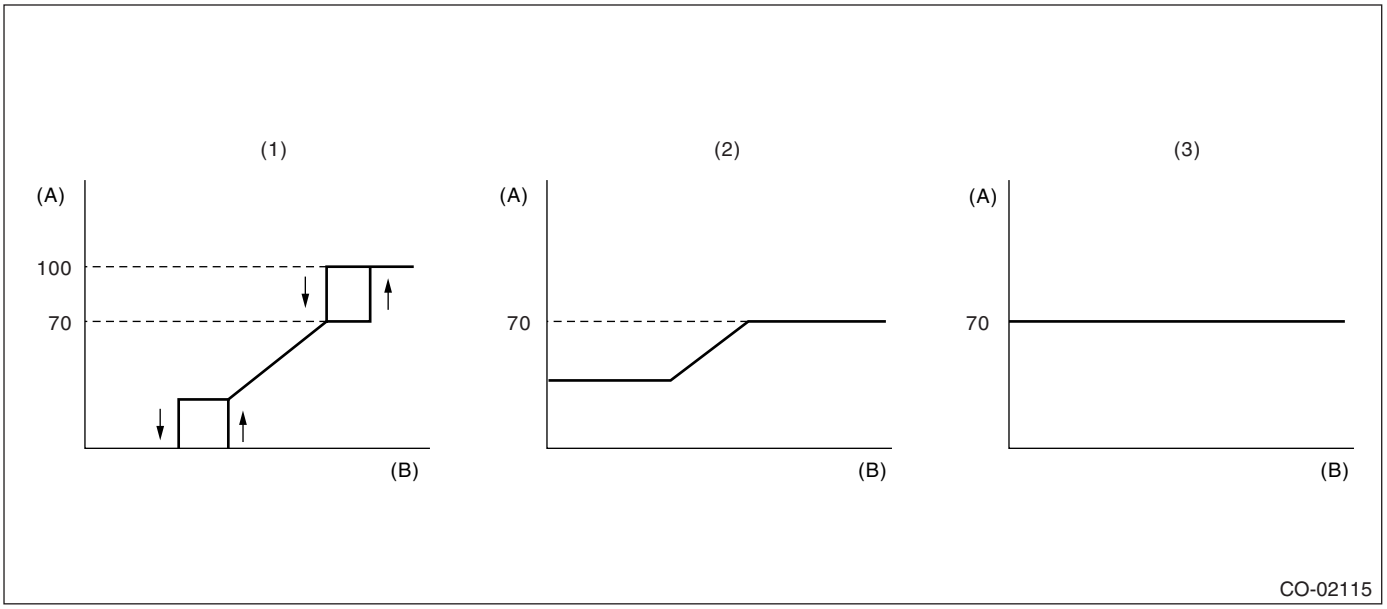

(1) A/C OFF control
(2) A/C ON control (A/C middle pressure switch OFF)
(3) A/C ON control (A/C middle pressure switch ON)
(A) Fan revolution (%)
(B) Coolant temperature

B: COMPONENT

1. WATER PUMP

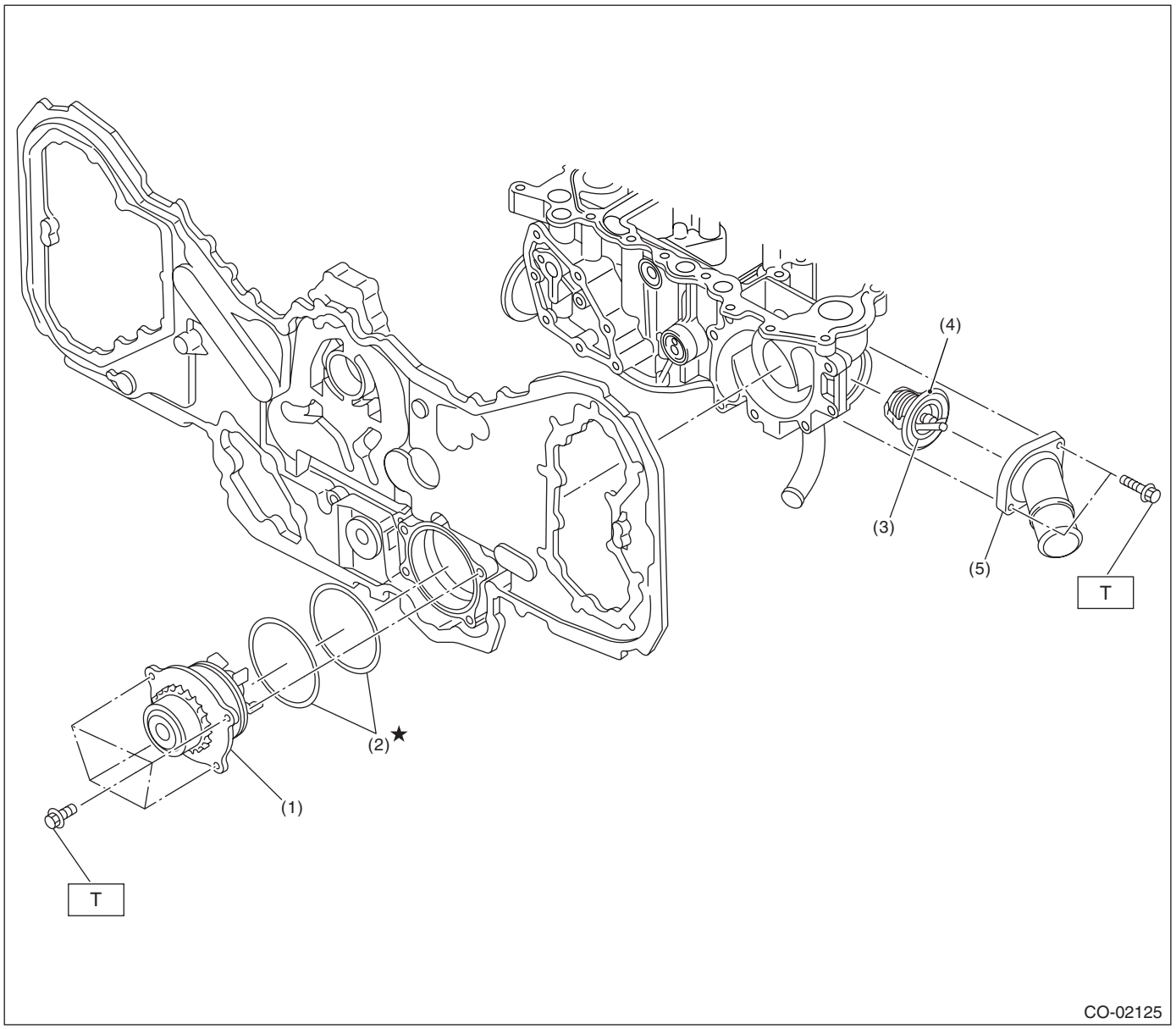

(1) Water pump ASSY
(2) O-ring
(3) Thermostat
(4) Gasket
(5) Thermostat cover

Tightening torque: N·m (kgf-m, ft-lb)
T: 6.4 (0.65, 4.7)

2. RADIATOR AND RADIATOR FAN

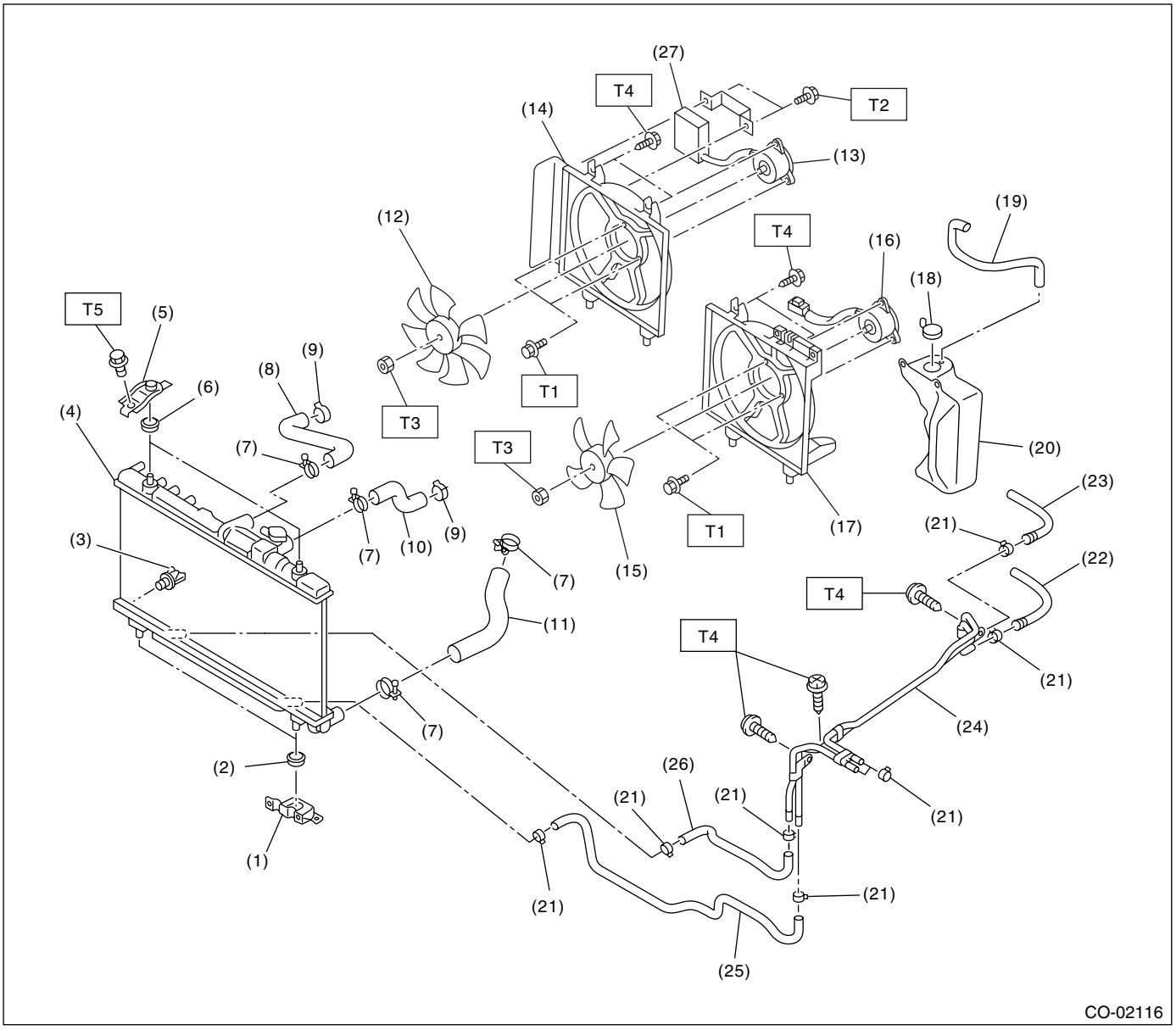

CO-02116

(1) Radiator lower bracket
(2) Radiator lower cushion
(3) Engine coolant drain cock
(4) Radiator
(5) Radiator upper bracket
(6) Radiator upper cushion
(7) Clamp
(8) Radiator hose A
(9) Clamp
(10) Radiator hose B
(11) Radiator hose C
(12) Radiator sub fan
(13) Radiator sub fan motor
(14) Radiator sub fan shroud
(15) Radiator main fan
(16) Radiator main fan motor
(17) Radiator main fan shroud
(18) Engine coolant reservoir tank cap
(19) Over flow hose
(20) Engine coolant reservoir tank
(21) ATF hose clamp
(22) ATF hose A
(23) ATF hose B
(24) ATF pipe
(25) ATF hose C
(26) ATF hose D
(27) Radiator fan control unit

Tightening torque: N·m (kgf-m, ft-lb)	
T1:	*3.8 (0.39, 2.8)*
T2:	*5.4 (0.55, 4.0)*
T3:	*6.2 (0.63, 4.6)*
T4:	*7.5 (0.76, 5.5)*
T5:	*12 (1.2, 8.9)*

C: CAUTION

• Wear work clothing, including a cap, protective goggles and protective shoes during operation.
• Remove contamination including dirt and corrosion before removal, installation or disassembly.
• Keep the disassembled parts in order and protect them from dust and dirt.
• Before removal, installation or disassembly, be sure to clarify the failure. Avoid unnecessary removal, installation, disassembly and replacement.
• Be careful not to burn yourself, because each part on the vehicle is hot after running.
• Be sure to tighten fasteners including bolts and nuts to the specified torque.
• Place shop jacks or rigid racks at the specified points.
• Before disconnecting electrical connectors of sensors or units, be sure to disconnect the ground cable from battery.

D: PREPARATION TOOL

1. SPECIAL TOOL

ILLUSTRATION	TOOL NUMBER	DESCRIPTION	REMARKS
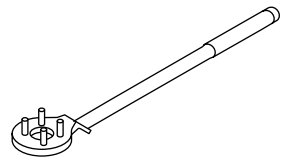 ST-499977100	499977100	CRANK PULLEY WRENCH	Used for stopping crank pulley when loosening and tightening crank pulley bolts.
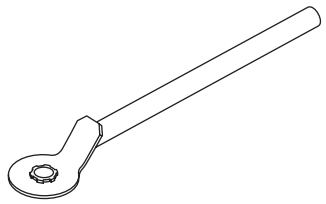 ST-499977500	499977500	CAM SPROCKET WRENCH	Used for removing and installing intake cam sprocket.
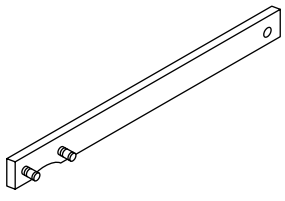 ST18231AA020	18231AA020	CAM SPROCKET WRENCH	Used for removing and installing exhaust cam sprocket.

2. GENERAL TOOL

TOOL NAME	REMARKS
Radiator cap tester	Used for measuring pressure.

2. Radiator Fan System

A: WIRING DIAGRAM

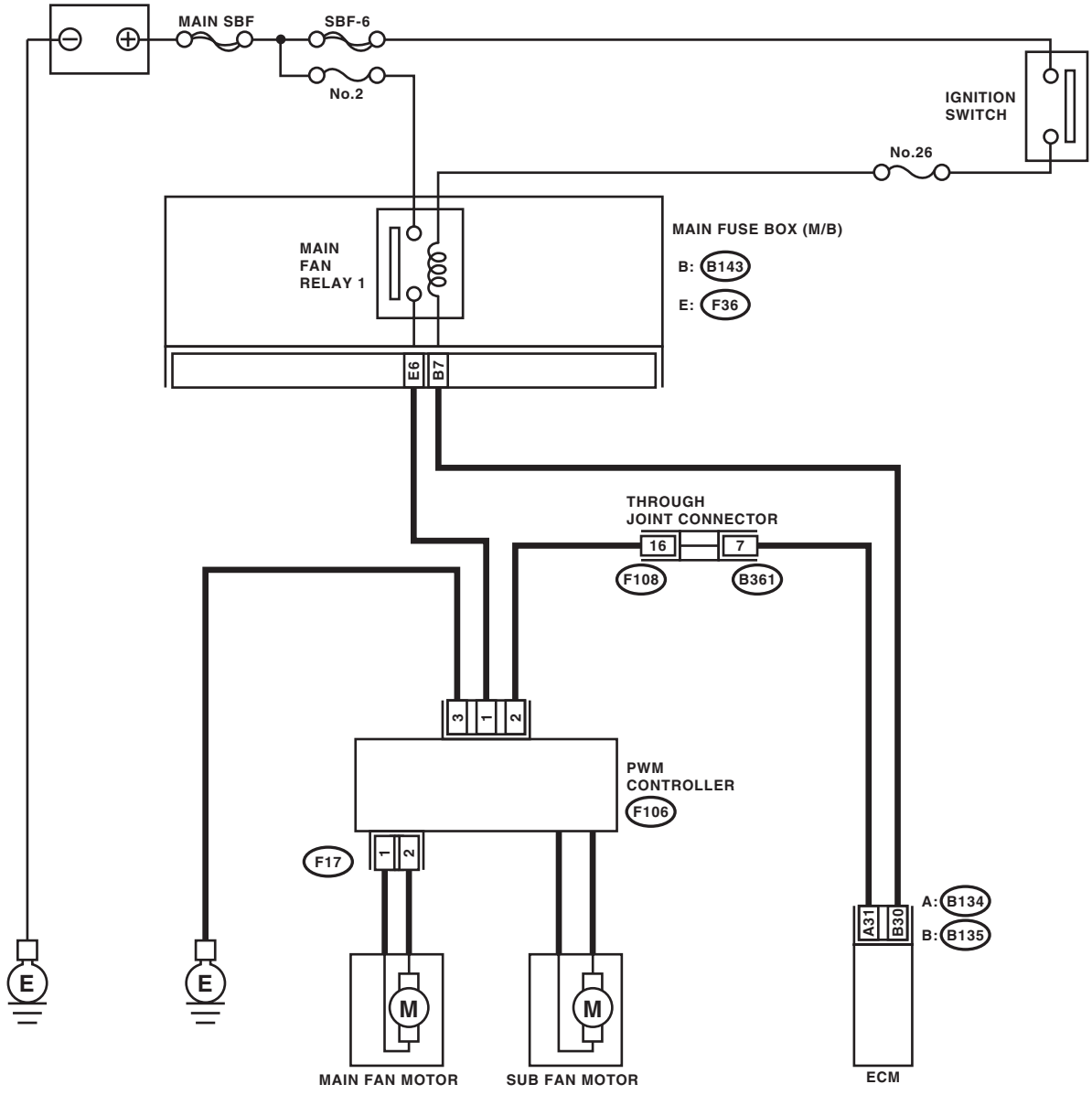

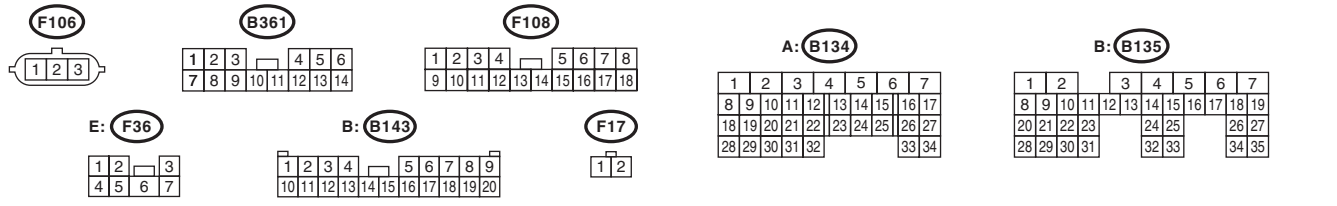

CO-02126

B: RADIATOR FAN CONTROL OUTPUT WAVEFORM

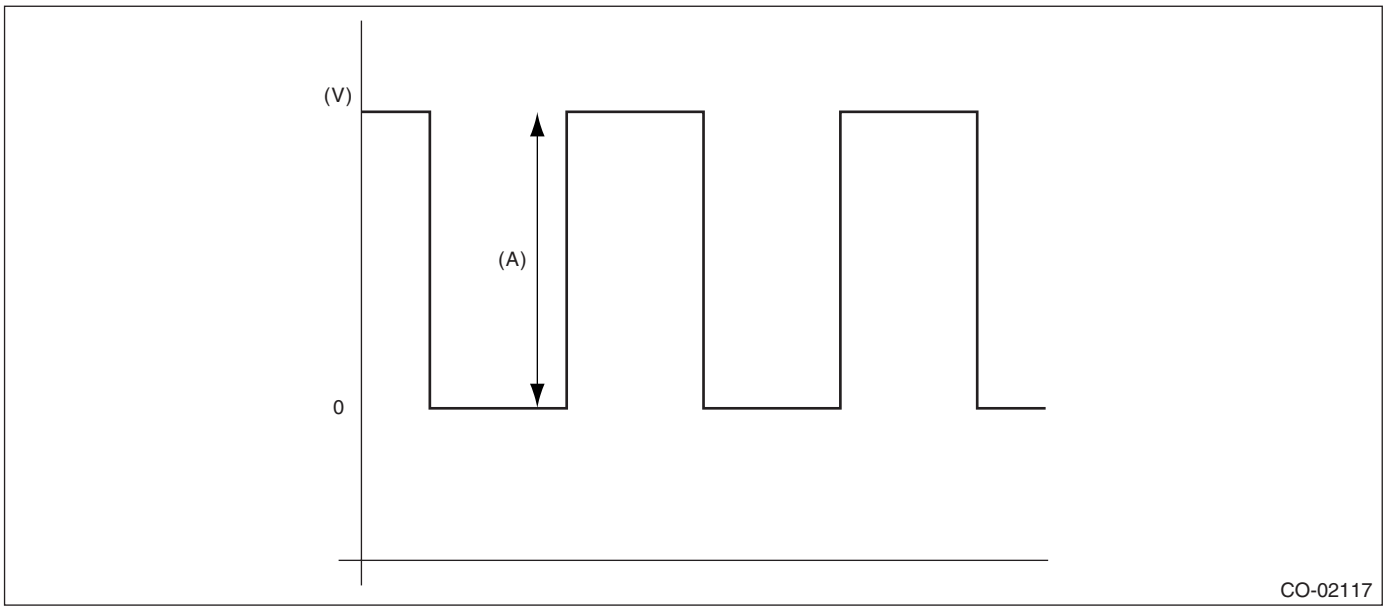

(A) 5 V

C: INSPECTION

DETECTING CONDITION:

- Engine coolant temperature is more than 93°C (199°F).
- A/C switch is OFF.
- Vehicle speed is below 19 km/h (12 MPH).

TROUBLE SYMPTOMS:

Radiator main fan and sub fan do not rotate under the above conditions.

	Step	Check	Yes	No
1	**CHECK MAIN FAN RELAY 1.** 1) Turn the ignition switch to OFF. 2) Remove the main fan relay 1 from A/C relay holder. 3) Measure the resistance of terminal in main fan relay 1 switch.	Is the resistance more than 1 MΩ?	Go to step **2.**	Replace the main fan relay 1.
2	**CHECK MAIN FAN RELAY 1.** 1) Connect the battery to terminal of main fan relay 1 coil. 2) Measure the resistance between terminals of main fan relay 1 switch.	Is the resistance less than 1 Ω?	Go to step **3.**	Replace the main fan relay 1.
3	**CHECK POWER SUPPLY TO ECM.** 1) Turn the ignition switch to OFF. 2) Disconnect the connector from ECM. 3) Turn the ignition switch to ON. 4) Measure the voltage between ECM terminal and chassis ground. ***Connector & terminal*** ***(B135) No. 30 (+) — Chassis ground (−):***	Is the voltage more than 10 V?	Go to step **4.**	Repair the power supply line.

	Step	Check	Yes	No
4	**CHECK POWER SUPPLY TO RADIATOR FAN CONTROL UNIT.** 1) Turn the ignition switch to OFF. 2) Connect the connector to ECM. 3) Disconnect the connector from radiator fan control unit. 4) Turn the ignition switch to ON. 5) Measure the voltage between radiator fan control unit terminal and chassis ground. ***Connector & terminal*** ***(F106) No. 1 (+) — Chassis ground (−):***	Is the voltage more than 10 V?	Go to step **5.**	Repair the power supply line.
5	**CHECK HARNESS BETWEEN ECM AND RADIATOR FAN CONTROL UNIT.** 1) Turn the ignition switch to OFF. 2) Disconnect the connector from ECM. 3) Measure the resistance between radiator fan control unit and ECM connector. ***Connector & terminal*** ***(B134) No. 31 — (F106) No. 2:***	Is the resistance less than 1 Ω?	Go to step **6.**	Repair the open circuit in harness between ECM and radiator fan control unit.
6	**CHECK RADIATOR FAN CONTROL UNIT AND GROUND CIRCUIT.** 1) Connect the connector to ECM and radiator fan control unit. 2) Measure the resistance between radiator fan control unit connector and chassis ground. ***Connector & terminal*** ***(F106) No. 3 — Chassis ground:***	Is the resistance less than 5 Ω?	Go to step **7.**	Repair the open circuit in harness between radiator fan control unit connector and chassis ground.
7	**CHECK FAN MOTOR.** 1) Disconnect the connector from radiator fan control unit. 2) Connect the battery positive (+) terminal to terminal No. 1, and the ground (−) terminal to terminal No. 3 of radiator fan control unit.	Does the fan motor rotate?	Go to step **8.**	Replace the fan motor which does not rotate.
8	**CHECK ECM OUTPUT SIGNAL.** 1) Turn the ignition switch to OFF. 2) Connect the test mode connector. 3) Turn the ignition switch to ON. 4) Using the oscilloscope, check the output signal. <Ref. to CO(H6DO)-8, RADIATOR FAN CONTROL OUTPUT WAVEFORM, Radiator Fan System.> ***Connector & terminal*** ***(B134) No. 31 (+) — Chassis ground (−):***	Is the waveform output?	Replace the radiator fan control unit. <Ref. to CO(H6DO)-24, Radiator Fan Control Unit.>	Replace the ECM. <Ref. to FU(H6DO)-34, Engine Control Module (ECM).>

3. Engine Coolant

A: REPLACEMENT

1. DRAINING OF ENGINE COOLANT

1) Lift-up the vehicle.
2) Remove the under cover.
3) Remove the drain plug to drain engine coolant into container.

NOTE:
Remove the radiator cap so that engine coolant will drain faster.

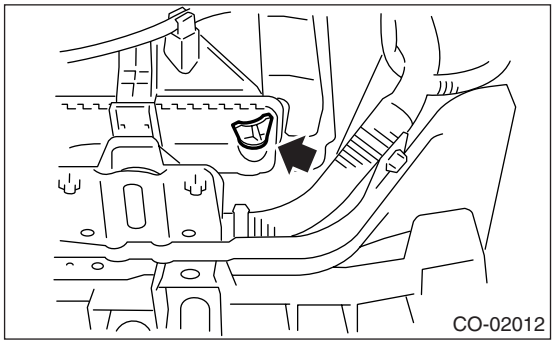

4) Install the drain plug.

2. FILLING OF ENGINE COOLANT

1) Pour cooling system conditioner through the filler neck.

Cooling system protective agent:
COOLING SYSTEM CONDITIONER (Part No. SOA635071)

2) Pour engine coolant into the radiator up to the filler neck position.

Coolant capacity (fill up to "FULL" level):
Approx. 7.2 ℓ (7.6 US qt, 6.3 Imp qt)

NOTE:
The SUBARU Genuine Coolant containing anti-freeze and anti-rust agents is especially made for SUBARU engine, which has an aluminum crankcase. Always use SUBARU Genuine Coolant, since other coolant may cause corrosion.

3) Fill engine coolant into the reservoir tank up to "FULL" level.

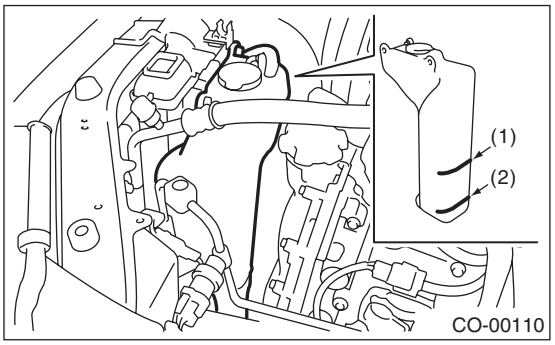

(1) FULL
(2) LOW

4) Close the radiator cap, and start the engine. Race 5 to 6 times at 3,000 rpm or less, then stop the engine. (Complete this operation within 40 seconds.)
5) Wait for one minute after the engine stops, open the radiator cap. If the engine coolant level drops, add engine coolant into radiator up to the filler neck position.
6) Perform the procedures 4) and 5) again.
7) Install the radiator cap and reservoir tank cap properly.
8) Start the engine and operate the heater at maximum hot position and the blower speed setting to "LO".
9) Run the engine at 2,000 rpm or less until radiator fan starts and stops.

NOTE:
• Be careful with the engine coolant temperature gauge to prevent overheating.
• If the radiator hose becomes harden by engine coolant pressure at this time, air purge seems to be mostly completed.

10) Stop the engine and wait until engine coolant temperature lowers to 30°C (86°F).
11) Open the radiator cap. If the engine coolant level drops, add engine coolant into radiator up to the filler neck position and reservoir tank to the "FULL" level.
12) Install the radiator cap and reservoir tank cap properly.
13) Set the heater setting to maximum hot position and the blower speed setting to "LO" and start the engine. Perform racing at less than 3,000 rpm. If the flowing sound is heard, perform the procedures from 9) again.

B: INSPECTION

1. RERATIONSHIP OF SUBARU COOLANT CONCENTRATION AND FREEZING TEMPERATURE

Concentration and safe operating temperature of SUBARU coolant is shown in the diagram. Measuring the temperature and specific gravity of the coolant will provide this information.
[Example]
If the coolant temperature is 25°C (77°F), its specific gravity is 1.054 and the concentration is 35% (point A), the safe operating temperature is –14°C (7°F) (point B), and the freezing temperature is –20°C (–4°F) (point C).

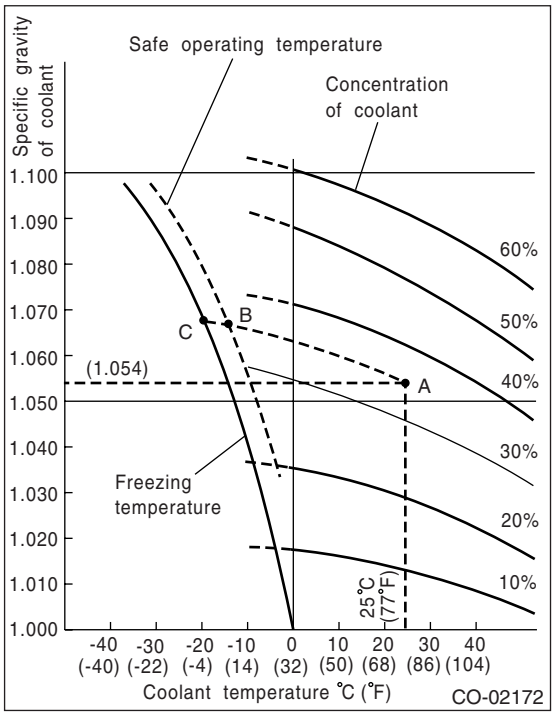

2. PROCEDURE TO ADJUST THE CONCENTRATION OF THE COOLANT

To adjust the concentration of coolant according to temperature, find the proper fluid concentration in the above diagram and replace the necessary amount of coolant with an undiluted solution of SUBARU genuine coolant (concentration 50%).
The amount of coolant that should be replaced can be determined using the diagram.
[Example]
Assume that the coolant concentration must be increased from 25% to 40%. Find point A, where the 25% line of coolant concentration intersects with the 40% curve of the necessary coolant concentration, and read the scale on the vertical axis of the graph at height A. The quantity of coolant to be drained is 2.1 ℓ (2.2 US qt, 1.8 Imp qt). Drain 2.1 ℓ (2.2 US qt, 1.8 Imp qt) of coolant from the cooling system and add 2.1 ℓ (2.2 US qt, 1.8 Imp qt) of the undiluted solution of SUBARU coolant.
If a coolant concentration of 50% is needed, drain all the coolant and refill with the undiluted solution only.

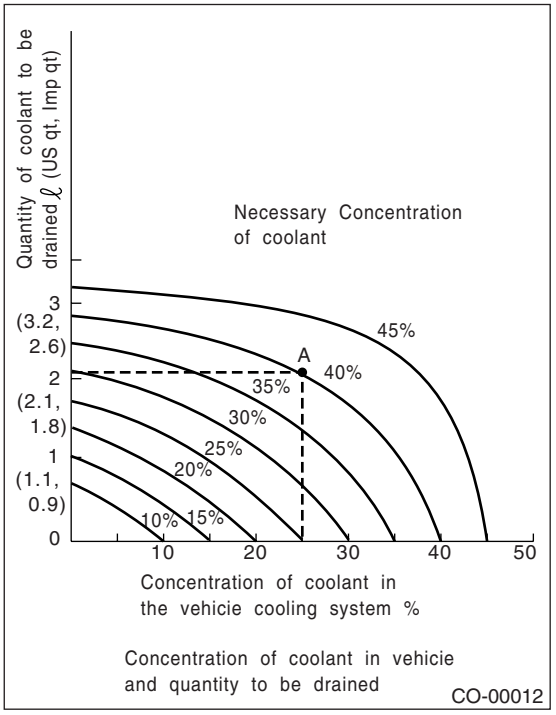

4. Water Pump

A: REMOVAL

1) Remove the radiator. <Ref. to CO(H6DO)-14, REMOVAL, Radiator.>
2) Remove the V-belts.
<Ref. to ME(H6DO)-32, REMOVAL, V-belt.>
3) Remove the front chain cover.
<Ref. to ME(H6DO)-42, REMOVAL, Front Chain Cover.>
4) Remove the timing chain assembly.
<Ref. to ME(H6DO)-44, REMOVAL, Timing Chain Assembly.>
5) Remove the water pump.

NOTE:
When the water pump cannot be removed easier, screw-in the bolts (A) to screw part to remove water pump.

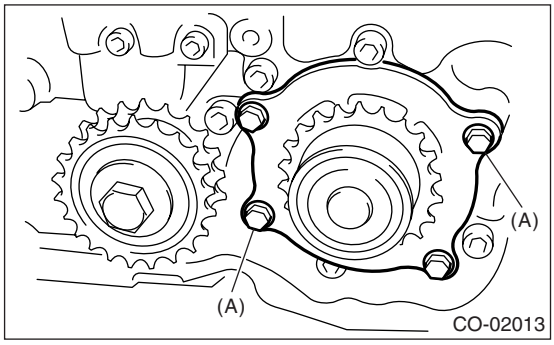

B: INSTALLATION

1) Install the water pump to rear chain cover.

NOTE:
Apply engine coolant to O-ring.

Tightening torque
6.4 N·m (0.65 kgf-m, 4.7 ft-lb)

NOTE:
- Use new O-rings.
- Apply engine coolant to O-ring to install water pump easier.

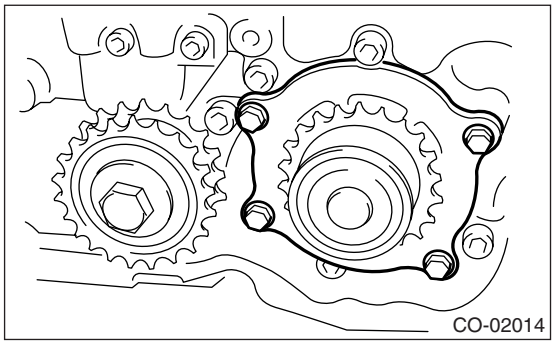

2) Install the timing chain assembly.
<Ref. to ME(H6DO)-45, INSTALLATION, Timing Chain Assembly.>
3) Install the front chain cover.
<Ref. to ME(H6DO)-42, INSTALLATION, Front Chain Cover.>
4) Install the V-belts.
<Ref. to ME(H6DO)-32, INSTALLATION, V-belt.>
5) Install the radiator. <Ref. to CO(H6DO)-15, INSTALLATION, Radiator.>
6) Fill with engine coolant. <Ref. to CO(H6DO)-10, FILLING OF ENGINE COOLANT, REPLACEMENT, Engine Coolant.>

C: INSPECTION

1) Check the water pump bearing for smooth rotation.
2) Check the water pump sprocket for abnormalities.

5. Thermostat

A: REMOVAL

1) Set the vehicle on a lift.
2) Lift-up the vehicle.
3) Remove the under cover.
4) Drain engine coolant completely.
<Ref. to CO(H6DO)-10, DRAINING OF ENGINE COOLANT, REPLACEMENT, Engine Coolant.>
5) Disconnect the radiator hose from thermostat cover.

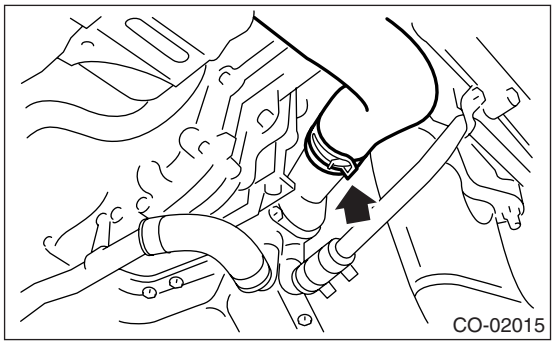

6) Remove the thermostat cover and then remove the thermostat.

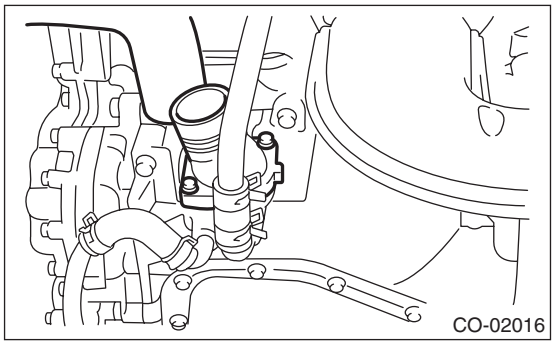

B: INSTALLATION

1) Install the gasket to thermostat.

NOTE:
Use a new gasket.

2) Install the thermostat and thermostat cover.

NOTE:
The thermostat must be installed with the jiggle pin facing upward.

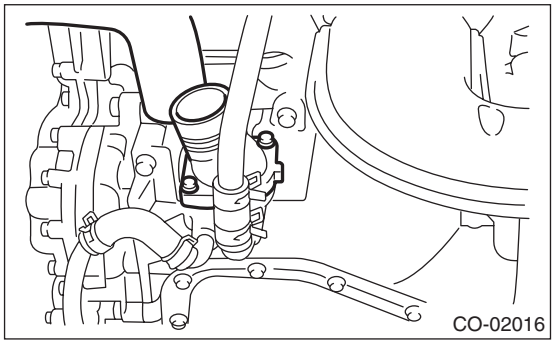

Tightening torque:
6.4 N·m (0.65 kgf-m, 4.7 ft-lb)

3) Connect the radiator hose to thermostat cover.
4) Install the under cover.
5) Lower the vehicle.
6) Fill with engine coolant. <Ref. to CO(H6DO)-10, FILLING OF ENGINE COOLANT, REPLACEMENT, Engine Coolant.>

C: INSPECTION

Replace the thermostat if the valve does not close completely at an ambient temperature or if the following test shows unsatisfactory results.

- Inspection method

Immerse the thermostat and a thermometer in water. Raise water temperature gradually, and measure the temperature and valve lift when the valve begins to open and when the valve is fully opened. During the test, agitate the water for even temperature distribution. The measurement should conform to the specification.

Starting temperature to open:
80 — 84°C (176 — 183°F)

Fully opens:
95°C (203°F)

NOTE:
- Leave the thermostat in the boiling water for more than five minutes before measuring the valve lift.
- Hold the thermostat with a wire or the like to avoid contacting with container bottom.

Valve lift:
9.0 mm (0.354 in) or more

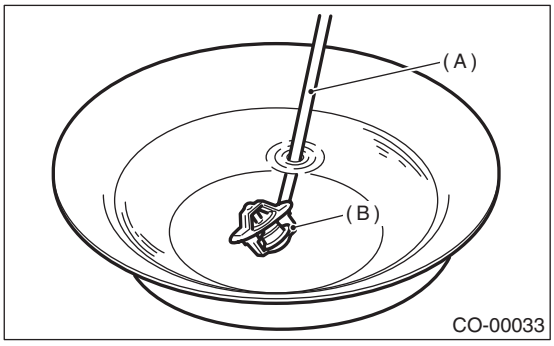

(A) Thermometer
(B) Thermostat

6. Radiator

A: REMOVAL

WARNING:
The radiator is pressurized. Wait until engine cools down before working on the radiator.

1) Set the vehicle on a lift.
2) Remove the collector cover.
3) Disconnect the ground cable from battery.

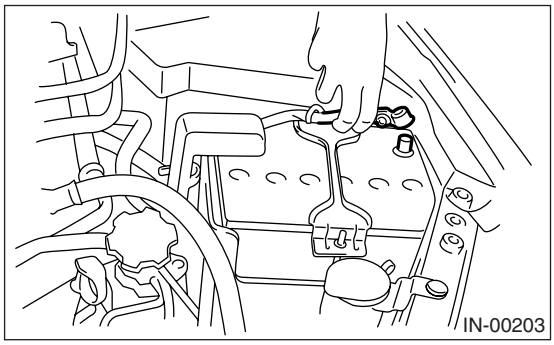

4) Lift-up the vehicle.
5) Remove the under cover.
6) Drain engine coolant completely.
<Ref. to CO(H6DO)-10, DRAINING OF ENGINE COOLANT, REPLACEMENT, Engine Coolant.>
7) Disconnect the radiator hose from radiator.

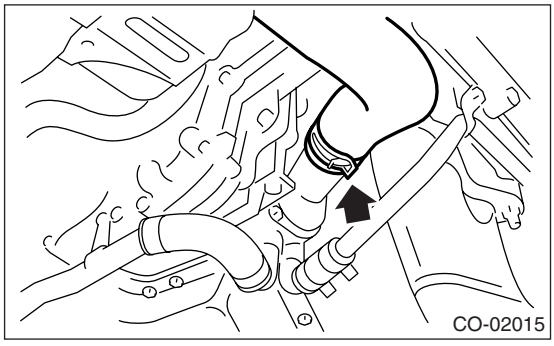

8) Disconnect the ATF cooler hose from radiator.

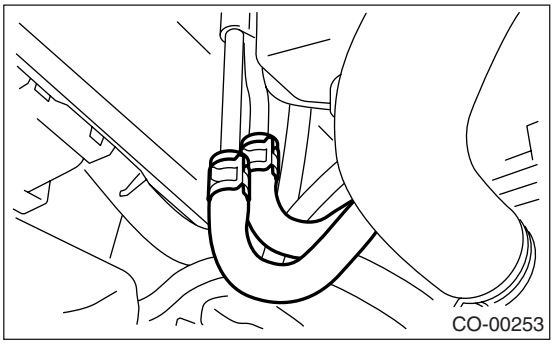

9) Lower the vehicle.
10) Remove the hood stay holder.

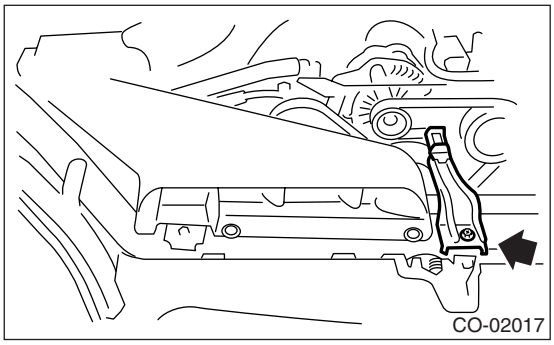

11) Remove the air intake duct. <Ref. to IN(H6DO)-8, REMOVAL, Air Intake Duct.>
12) Disconnect the connector from radiator fan control unit.

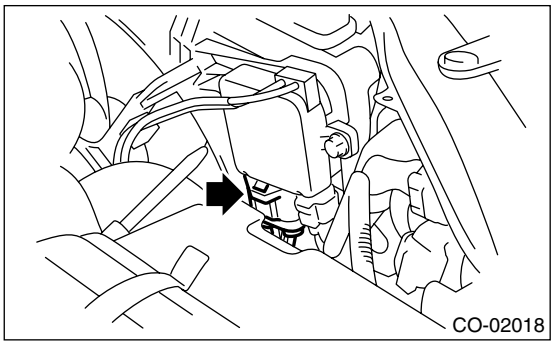

13) Remove the reservoir tank. <Ref. to CO(H6DO)-23, REMOVAL, Reservoir Tank.>
14) Disconnect the radiator hose from radiator.
15) Remove the radiator upper brackets.

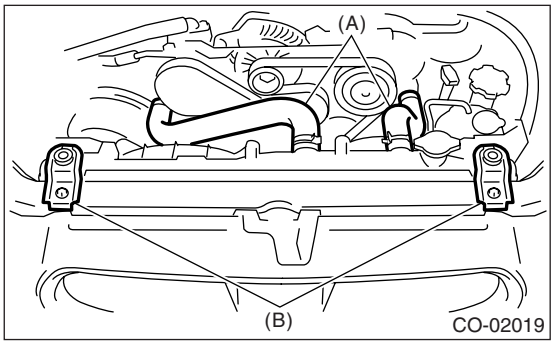

(A) Radiator hose
(B) Radiator upper bracket

16) Lift the radiator up and away from vehicle.

B: INSTALLATION

1) Attach the radiator lower cushions to holes on the vehicle.

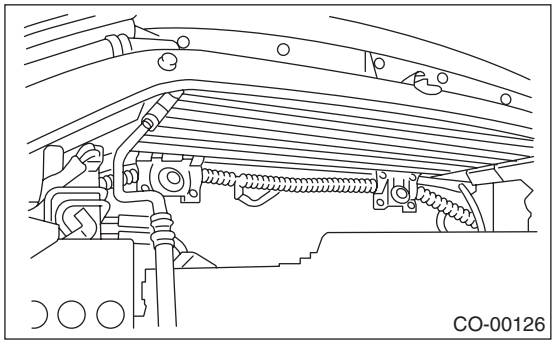

2) Install the radiator to vehicle.

NOTE:
Make pins on the lower side of radiator be fitted into the radiator lower cushions on body side.

3) Install the radiator upper brackets and tighten the bolts.

Tightening torque:
12 N·m (1.2 kgf-m, 8.9 ft-lb)

4) Connect the radiator hose.

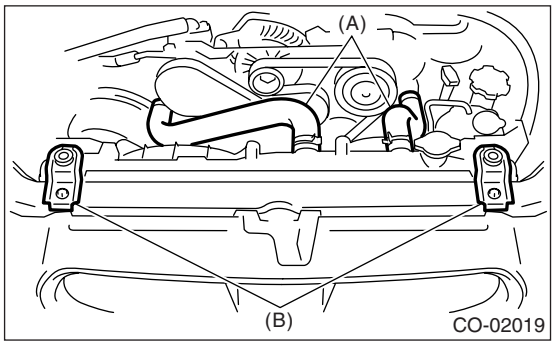

(A) Radiator hose
(B) Radiator upper bracket

5) Install the reservoir tank. <Ref. to CO(H6DO)-23, INSTALLATION, Reservoir Tank.>
6) Connect the connector to radiator fan control unit.

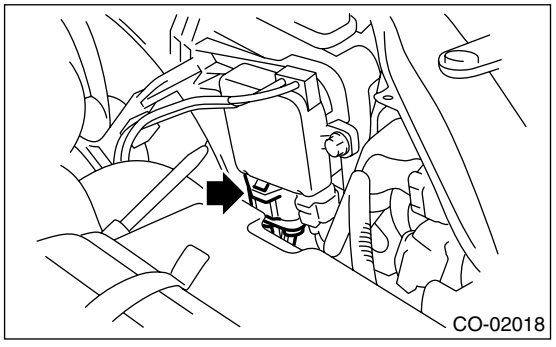

7) Install the air intake duct.
<Ref. to IN(H6DO)-8, INSTALLATION, Air Intake Duct.>
8) Install the hood stay holder.

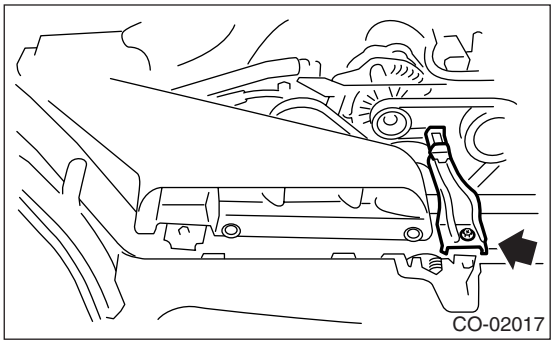

9) Lift-up the vehicle.
10) Connect the ATF cooler hoses.

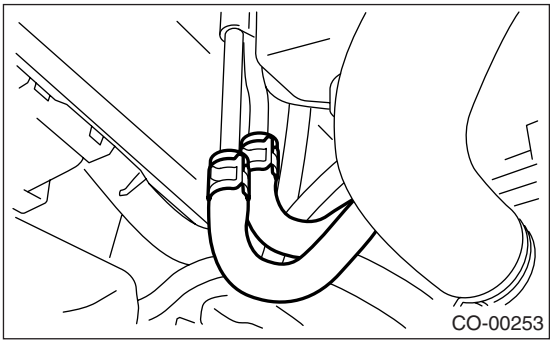

11) Connect the radiator hose.

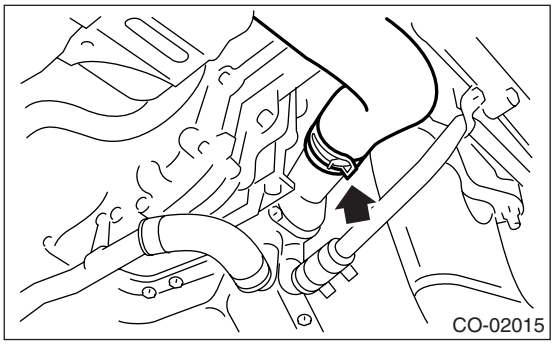

12) Install the under cover.
13) Lower the vehicle.
14) Connect the battery ground cable to battery.

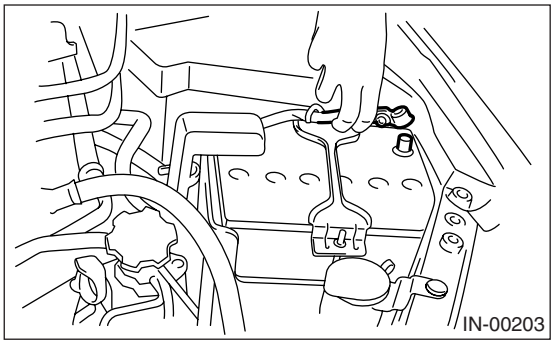

15) Fill with engine coolant.
<Ref. to CO(H6DO)-10, FILLING OF ENGINE COOLANT, REPLACEMENT, Engine Coolant.>
16) Check the ATF level.
<Ref. to 5AT-27, INSPECTION, Automatic Transmission Fluid.>
17) Install the collector cover.

C: INSPECTION

1) Remove the radiator cap, top off the radiator with coolant, and then attach the tester in place of cap.

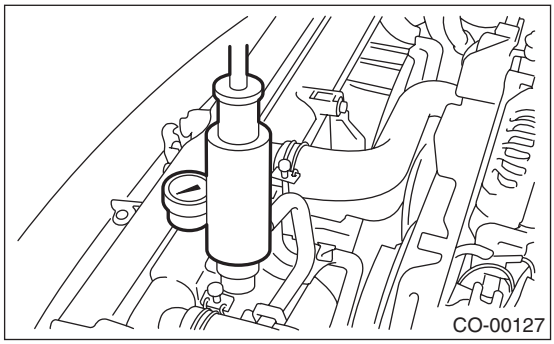

2) Apply a pressure of 157 kPa (1.6 kg/cm^2, 23 psi) to the radiator to check if:
- Engine coolant leaks at/around radiator.
- Engine coolant leaks at/around hoses or connections.

CAUTION:
- **Engine should be turned off.**
- **Wipe engine coolant from check points in advance.**
- **Be careful to prevent engine coolant from spurting out when removing tester.**
- **Be careful not to deform the filler neck of radiator when installing or removing the tester.**

7. Radiator Cap

A: INSPECTION

1) Attach the radiator cap to tester.

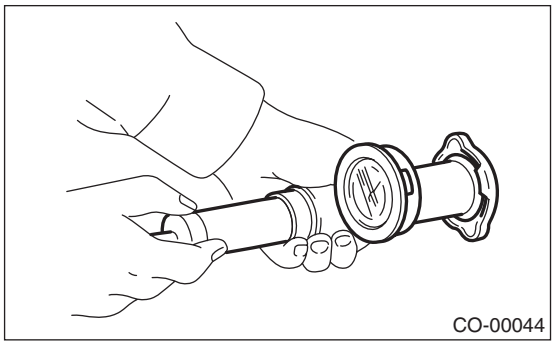

2) Increase pressure until the tester gauge pointer stops. Radiator cap is functioning properly if it holds the service limit pressure for five to six seconds.

Standard pressure:
93 — 123 kPa (0.95 — 1.25 kg/cm^2, 14 — 18 psi)

Service limit pressure:
83 kPa (0.85 kg/cm^2, 12 psi)

CAUTION:
Be sure to remove foreign matter and rust from the cap in advance, otherwise results of pressure test will be incorrect.

8. Radiator Main Fan and Fan Motor

A: REMOVAL

1) Set the vehicle on a lift.
2) Remove the collector cover.
3) Disconnect the ground cable from battery.

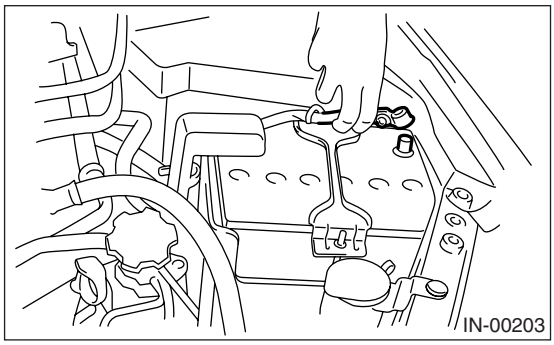

4) Remove the hood stay holder.

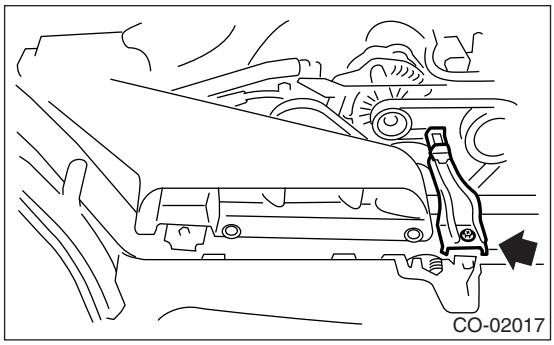

5) Remove the air intake duct. <Ref. to IN(H6DO)-8, REMOVAL, Air Intake Duct.>
6) Disconnect the connector from radiator fan control unit.

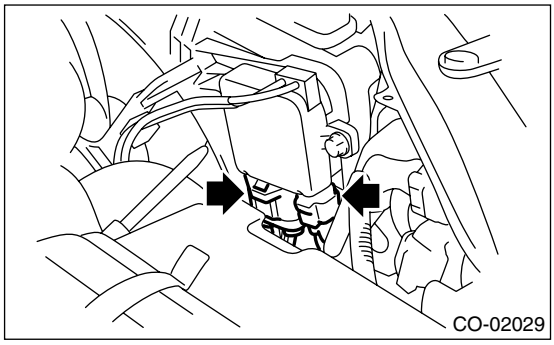

7) Lift-up the vehicle.
8) Remove the under cover.
9) Drain engine coolant completely.
<Ref. to CO(H6DO)-10, DRAINING OF ENGINE COOLANT, REPLACEMENT, Engine Coolant.>
10) Disconnect the ATF hose from the clip of radiator main fan shroud.
11) Remove the radiator main fan motor harness from clip.
12) Lower the vehicle.
13) Remove the reservoir tank. <Ref. to CO(H6DO)-23, REMOVAL, Reservoir Tank.>
14) Disconnect the inlet hose from radiator.

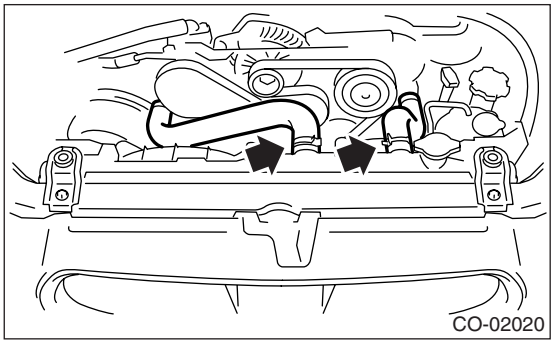

15) Remove the radiator sub fan motor assembly.

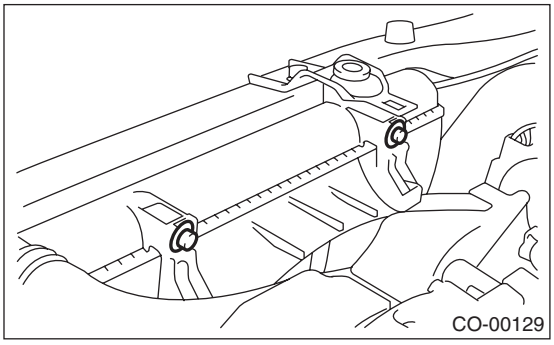

16) Remove the radiator main fan motor assembly.

NOTE:
When removing the main fan assembly with lifting it up, the main fan shroud contacts to inlet part of engine coolant. To avoid contacting it, move the main fan assembly to sub fan assembly side before removal.

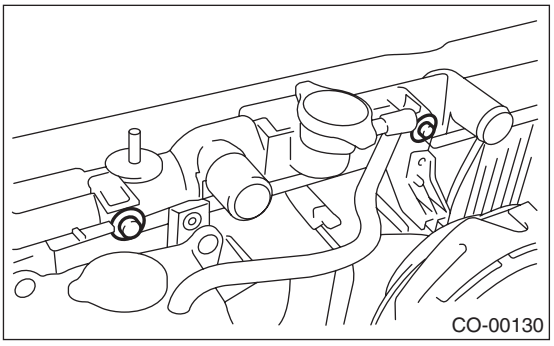

B: INSTALLATION

Install in the reverse order of removal.

Tightening torque:
7.5 N·m (0.76 kgf-m, 5.5 ft-lb)

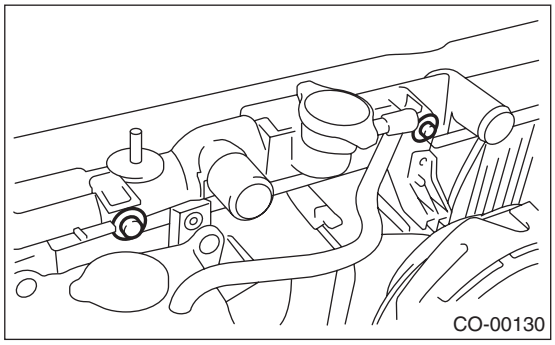

C: DISASSEMBLY

1) Remove the nut which holds fan itself onto fan motor and shroud assembly.

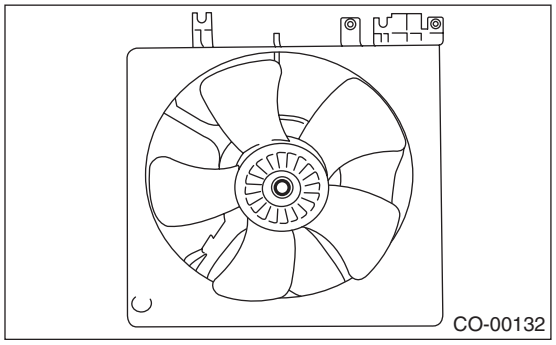

2) Remove the screws which hold the fan motor onto shroud.

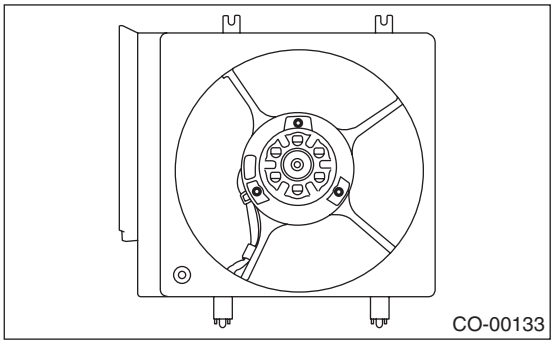

D: ASSEMBLY

Assemble in the reverse order of disassembly.

Tightening torque:
3.8 N·m (0.39 kgf-m, 2.8 ft-lb)

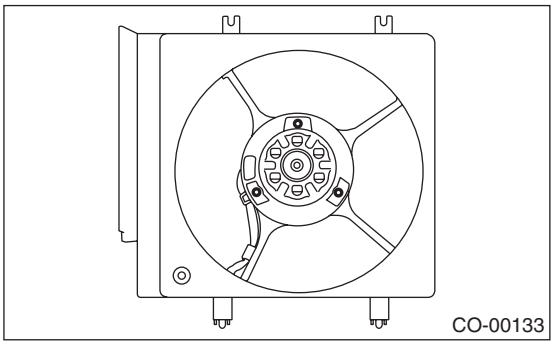

Tightening torque:
6.2 N·m (0.63 kgf-m, 4.6 ft-lb)

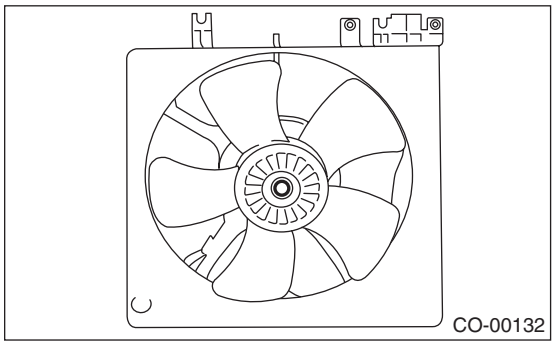

E: INSPECTION

1) Disconnect the connector from radiator fan control unit.

NOTE:
Do not remove the main fan motor harness connector.

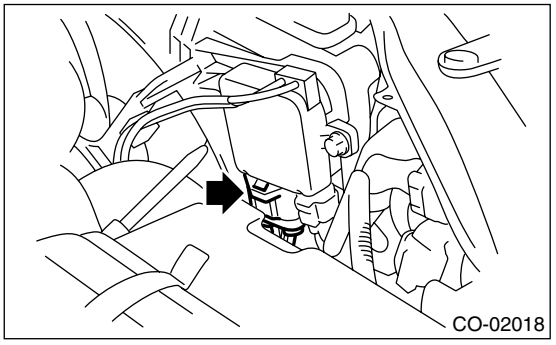

2) Connect the battery to radiator fan control unit as shown in the figure.

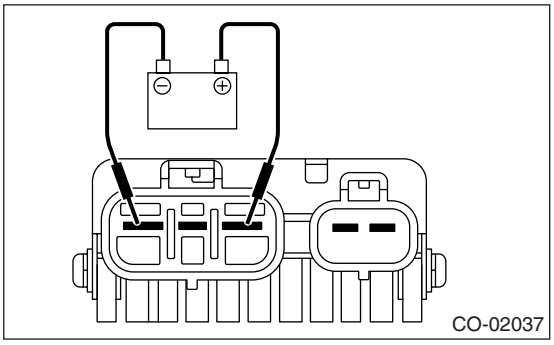

3) Check the fan motor for operations. If it does not operate, replace the fan motor.

9. Radiator Sub Fan and Fan Motor

A: REMOVAL

1) Set the vehicle on a lift.
2) Remove the collector cover.
3) Disconnect the ground cable from battery.

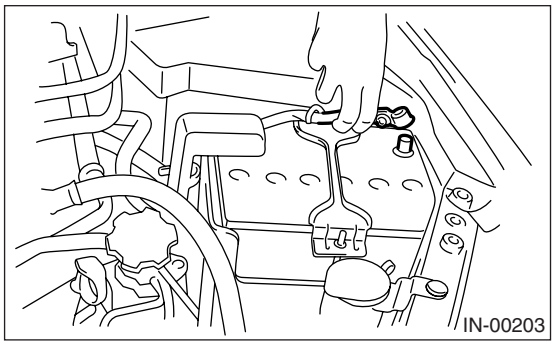

4) Remove the hood stay holder.

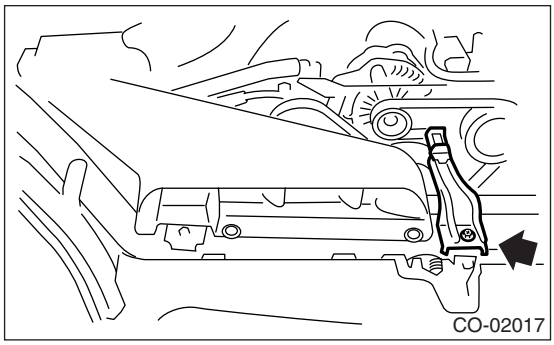

5) Remove the air intake duct. <Ref. to IN(H6DO)-8, REMOVAL, Air Intake Duct.>
6) Disconnect the connector from radiator fan control unit.

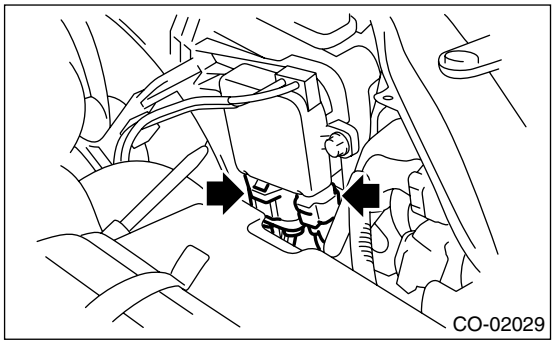

7) Remove the bolts which hold sub fan shroud to radiator.

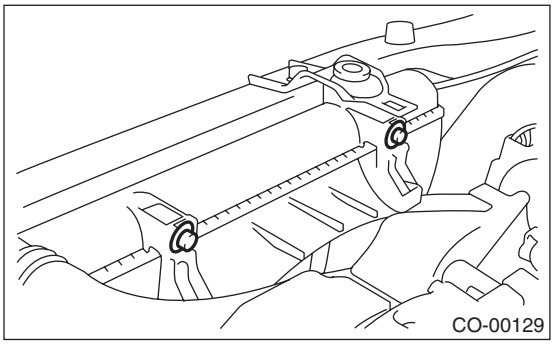

8) Lift-up the vehicle.
9) Remove the under cover.
10) Remove the radiator sub fan shroud through the under side of vehicle.

B: INSTALLATION

Install in the reverse order of removal.

Tightening torque:
7.5 N·m (0.76 kgf-m, 5.5 ft-lb)

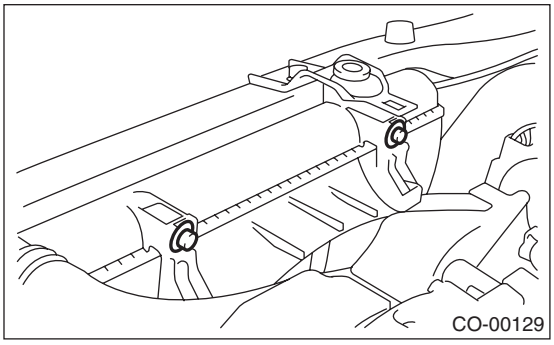

C: DISASSEMBLY

1) Remove the nut which holds fan itself onto fan motor and shroud assembly.

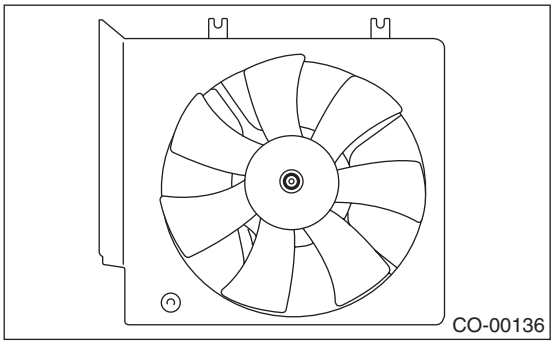

2) Remove the screws which hold the fan motor onto shroud.

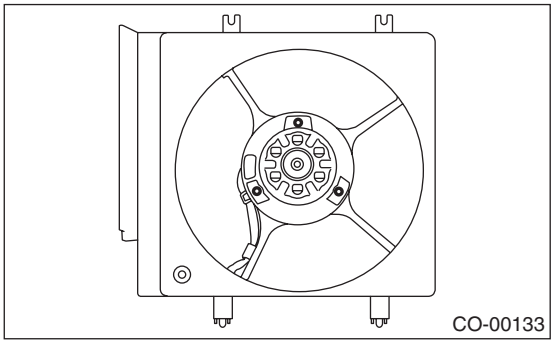
CO-00133

3) Remove the bolts which hold the radiator fan control unit onto shroud.

D: ASSEMBLY

Assemble in the reverse order of disassembly.

Radiator fan control unit bolt tightening torque:
5.4 N·m (0.55 kgf-m, 4.0 ft-lb)

Tightening torque:
3.8 N·m (0.39 kgf-m, 2.8 ft-lb)

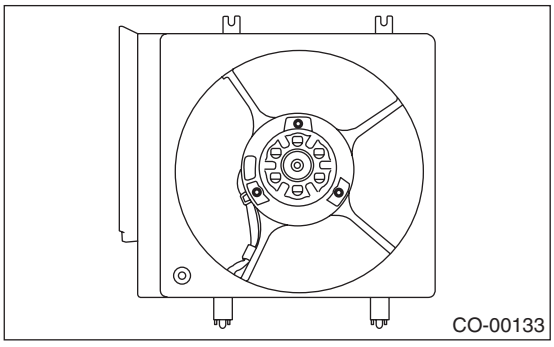
CO-00133

Tightening torque:
6.2 N·m (0.63 kgf-m, 4.6 ft-lb)

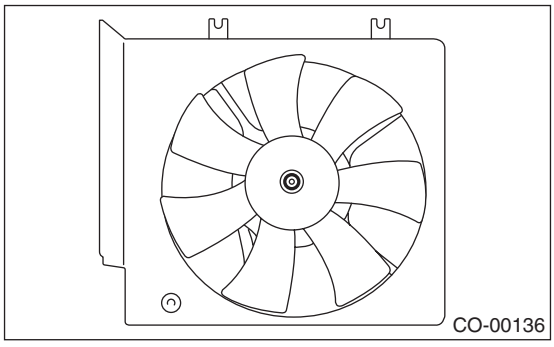
CO-00136

E: INSPECTION

1) Disconnect the connector from radiator fan control unit.

NOTE:
Do not remove the main fan motor harness connector.

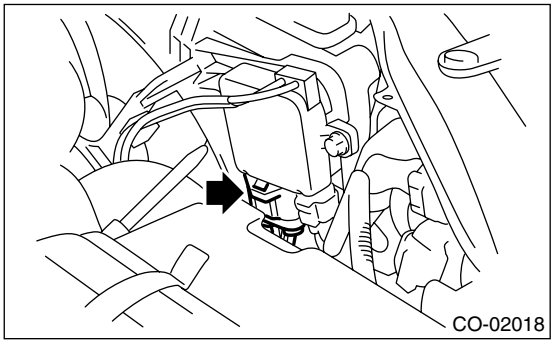
CO-02018

2) Connect the battery to radiator fan control unit as shown in the figure.

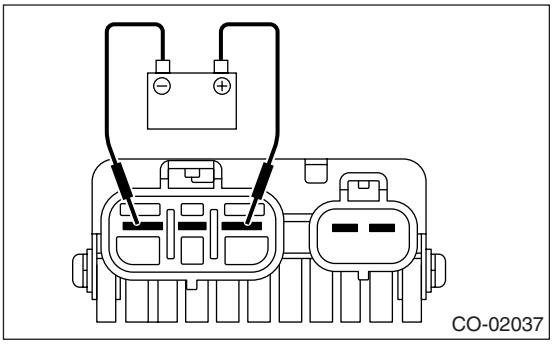
CO-02037

3) Check the fan motor for operations. If it does not operate, replace the fan motor.

10.Reservoir Tank

A: REMOVAL

1) Disconnect the over flow hose.
2) Pull out the reservoir tank to the direction of arrow while pushing the pawl (A).

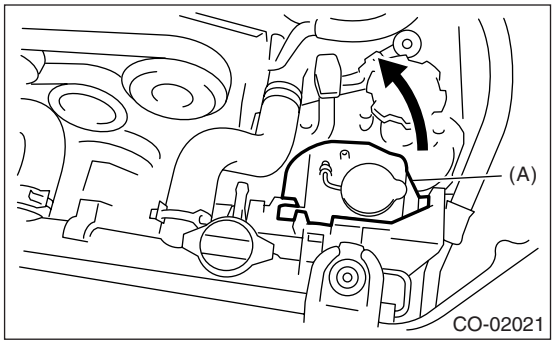

B: INSTALLATION

Install in the reverse order of removal.

C: INSPECTION

Make sure the engine coolant level is between “FULL” and “LOW”.

11.Radiator Fan Control Unit

A: SPECIFICATION

Radiator fan control unit forms a unit with radiator sub fan motor. Refer to “Radiator Sub Fan and Fan Motor” for removal and installation.
<Ref. to CO(H6DO)-21, REMOVAL, Radiator Sub Fan and Fan Motor.> <Ref. to CO(H6DO)-21, INSTALLATION, Radiator Sub Fan and Fan Motor.> <Ref. to CO(H6DO)-21, DISASSEMBLY, Radiator Sub Fan and Fan Motor.> <Ref. to CO(H6DO)-22, ASSEMBLY, Radiator Sub Fan and Fan Motor.>

12.Engine Cooling System Trouble in General

A: INSPECTION

Trouble	Possible cause	Corrective action
Over-heating	a. Insufficient engine coolant	Replenish engine coolant, inspect for leakage, and repair it if necessary.
	b. Defective thermostat	Replace.
	c. Malfunction of water pump	Replace.
	d. Clogged engine coolant passage	Clean.
	e. Improper ignition timing	Inspect and repair ignition control system. <Ref. to EN(H6DO)(diag)-2, PROCEDURE, Basic Diagnostic Procedure.>
	f. Clogged or leaking radiator	Clean, repair or replace.
	g. Improper engine oil in engine coolant	Replace engine coolant.
	h. Air/fuel mixture ratio too lean	Inspect and repair fuel injection system. <Ref. to EN(H6DO)(diag)-2, PROCEDURE, Basic Diagnostic Procedure.>
	i. Excessive back pressure in exhaust system	Clean or replace.
	j. Insufficient clearance between piston and cylinder	Adjust or replace.
	k. Slipping clutch	Correct or replace.
	l. Dragging brake	Adjust.
	m. Faulty transmission gear oil	Replace.
	n. Malfunction of radiator fan	Inspect radiator fan relay, engine coolant temperature sensor or fan motor, and replace them.
Over-cooling	a. Ambient temperature extremely low	Partly cover radiator front area.
	b. Defective thermostat	Replace.
Engine coolant leaks	a. Loosened or damaged connecting units on hoses	Correct or replace.
	b. Leakage from water pump	Replace.
	c. Leakage from water pipe	Correct or replace.
	d. Leakage around cylinder head gasket	Retighten cylinder head bolts or replace gasket.
	e. Damaged or cracked cylinder head and crankcase	Correct or replace.
	f. Damaged or cracked thermostat case	Correct or replace.
	g. Leakage from radiator	Correct or replace.
Noise	a. Defective drive belt	Replace.
	b. Defective radiator fan	Replace.
	c. Defective water pump bearing	Replace water pump.
	d. Defective water pump mechanical seal	Replace water pump.

LUBRICATION

LU(H6DO)

Page

1. General Description 2
2. Oil Pressure System 5
3. Engine Oil....7
4. Oil Pump 8
5. Oil Pump Relief Valve 10
6. Oil Pan and Strainer....11
7. Oil Pressure Switch....13
8. Engine Oil Filter....14
9. Oil Cooler 15
10. General Diagnostic Table....17

1. General Description

A: SPECIFICATION

Lubrication method				Forced lubrication
Oil pump	Pump type			Trochoid type
	Number of teeth	Inner rotor		7
		Outer rotor		8
	Outer rotor diameter × thickness		mm (in)	86 × 13 (3.39 × 0.51)
	Tip clearance between inner and outer rotors		mm (in)	0.04 — 0.14 (0.0016 — 0.0055)
	Side clearance between inner rotor and pump case		mm (in)	0.020 — 0.046 (0.0008 — 0.0018)
	Case clearance between outer rotor and pump case		mm (in)	0.110 — 0.175 (0.0043 — 0.0069)
Oil filter	Filter type			Full-flow filter type
	Filtration area		cm^2 (sq in)	1,300 (201.5)
	By-pass valve opening pressure		kPa (kg/cm^2, psi)	160 (1.63, 23.2)
	Outer diameter × width		mm (in)	80 × 75 (3.15 × 2.95)
	Installation screw specifications			M 20 × 1.5
Relief valve operation pressure			kPa (kg/cm^2, psi)	708 (7.2, 102.7)
Oil pressure switch	Type			Immersed contact point type
	Operating voltage — Power consumption			12 V — 3.4 W or less
	Warning light activation pressure		kPa (kg/cm^2, psi)	15 (0.15, 2.2)
	Proof pressure		kPa (kg/cm^2, psi)	980 (10.0, 142) or more
Oil capacity (at replacement)			ℓ (US qt, Imp qt)	5.5 (5.8, 4.8)

Recommended oil

For the API standard SL, use the logo mark with "Energy Conserving" (If the SL grade is not available, use SJ grade).
ILSAC standard GF-3 or new API specification mark (Star burst mark) label is on the container.

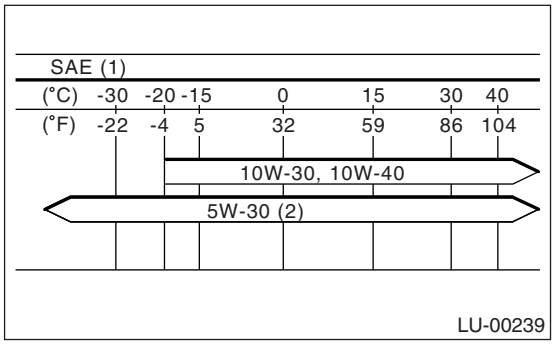

(1) SAE viscosity No. and applicable temperature
(2) Recommended

The proper viscosity helps vehicle get good cold and hot starting by reducing viscous friction and thus increasing cranking speed.

CAUTION:
When replenishing oil, it does not matter if the oil to be added is a different brand from that in the engine; however, use oil having the API standard and SAE viscosity No. designated by SUBARU.

NOTE:
If the vehicle is used in areas with very high temperatures or for other heavy duty applications, the following viscosity oils may be used: API standard: SL or SJ
SAE Viscosity No.: 30, 40, 10W-50, 20W-40, 20W-50.

B: COMPONENT

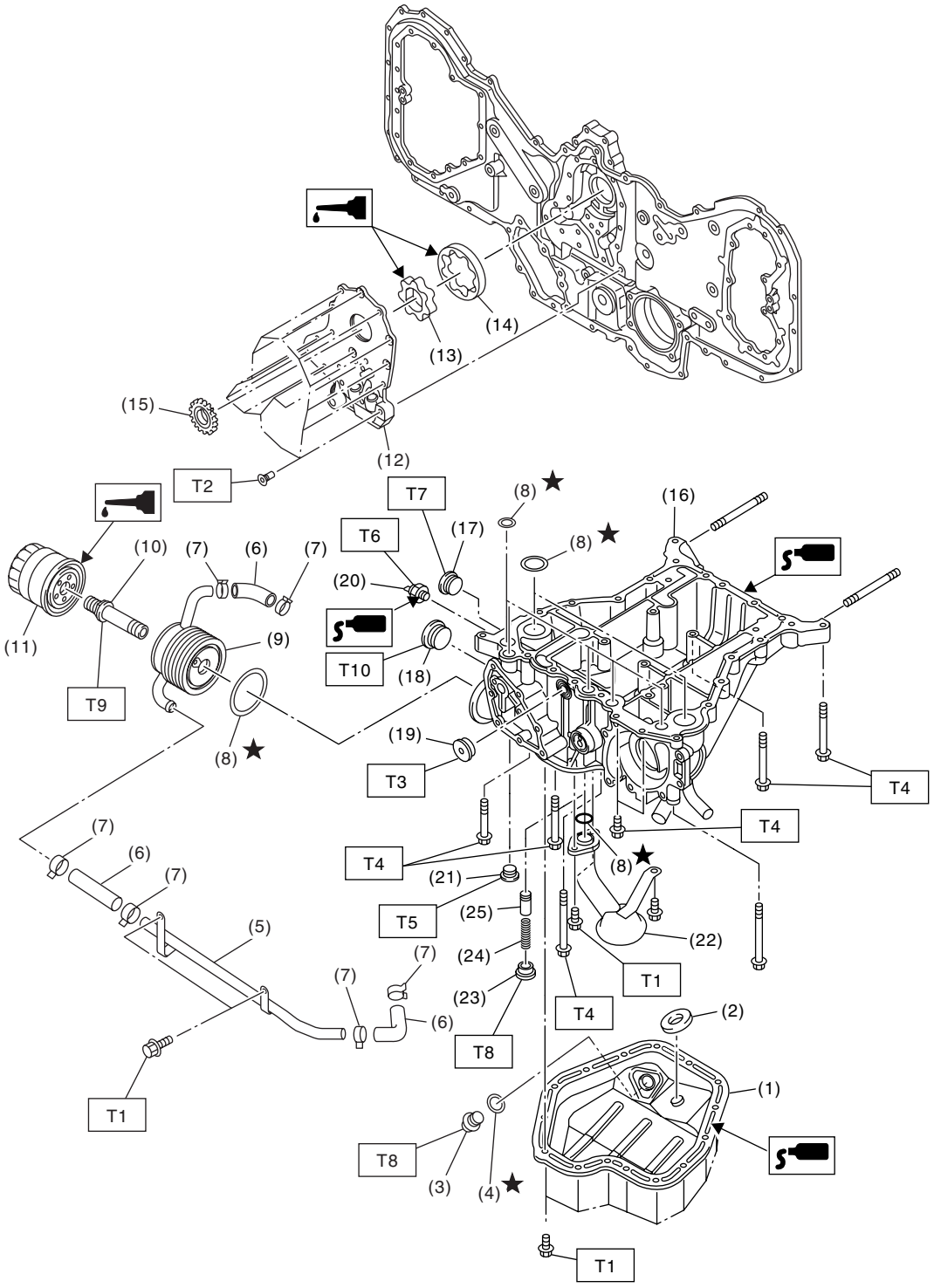

LU-02097

(1) Oil pan lower
(2) Magnet
(3) Drain plug
(4) Gasket
(5) Oil cooler pipe
(6) Hose
(7) Clamp
(8) O-ring
(9) Oil cooler
(10) Oil cooler connector
(11) Oil filter
(12) Oil pump cover
(13) Inner rotor
(14) Outer rotor
(15) Crank sprocket
(16) Oil pan upper
(17) Plug
(18) Plug
(19) Plug
(20) Oil pressure switch
(21) Plug
(22) Oil strainer
(23) Plug
(24) Relief valve spring
(25) Relief valve

Tightening torque: N·m (kgf-m, ft-lb)	
T1:	*6.4 (0.65, 4.7)*
T2:	*<Ref. to LU(H6DO)-8, INSTALLATION, Oil Pump.>*
T3:	*16 (1.6, 12)*
T4:	*18 (1.8, 13)*
T5:	*23 (2.3, 17)*
T6:	*25 (2.5, 18)*
T7:	*37 (3.8, 27)*
T8:	*44 (4.5, 33)*
T9:	*54 (5.5, 40)*
T10:	*90 (9.2, 66)*

C: CAUTION

• Wear work clothing, including a cap, protective goggles and protective shoes during operation.
• Remove contamination including dirt and corrosion before removal, installation or disassembly.
• Keep the disassembled parts in order and protect them from dust and dirt.
• Before removal, installation or disassembly, be sure to clarify the failure. Avoid unnecessary removal, installation, disassembly and replacement.
• Be careful not to burn yourself, because each part on the vehicle is hot after running.
• Be sure to tighten fasteners including bolts and nuts to the specified torque.
• Place shop jacks or rigid racks at the specified points.
• Before disconnecting electrical connectors of sensors or units, be sure to disconnect the ground cable from battery.

D: PREPARATION TOOL

1. SPECIAL TOOL

ILLUSTRATION	TOOL NUMBER	DESCRIPTION	REMARKS
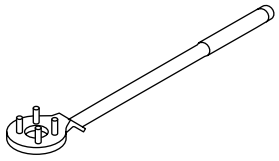 ST-499977100	499977100	CRANK PULLEY WRENCH	Used for stopping rotation of crank pulley when removing and tightening crank pulley bolt.
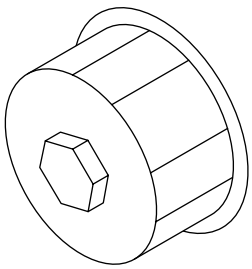 ST-498547000	498547000	OIL FILTER WRENCH	Used for removing and installing oil filter.

2. Oil Pressure System

A: WIRING DIAGRAM

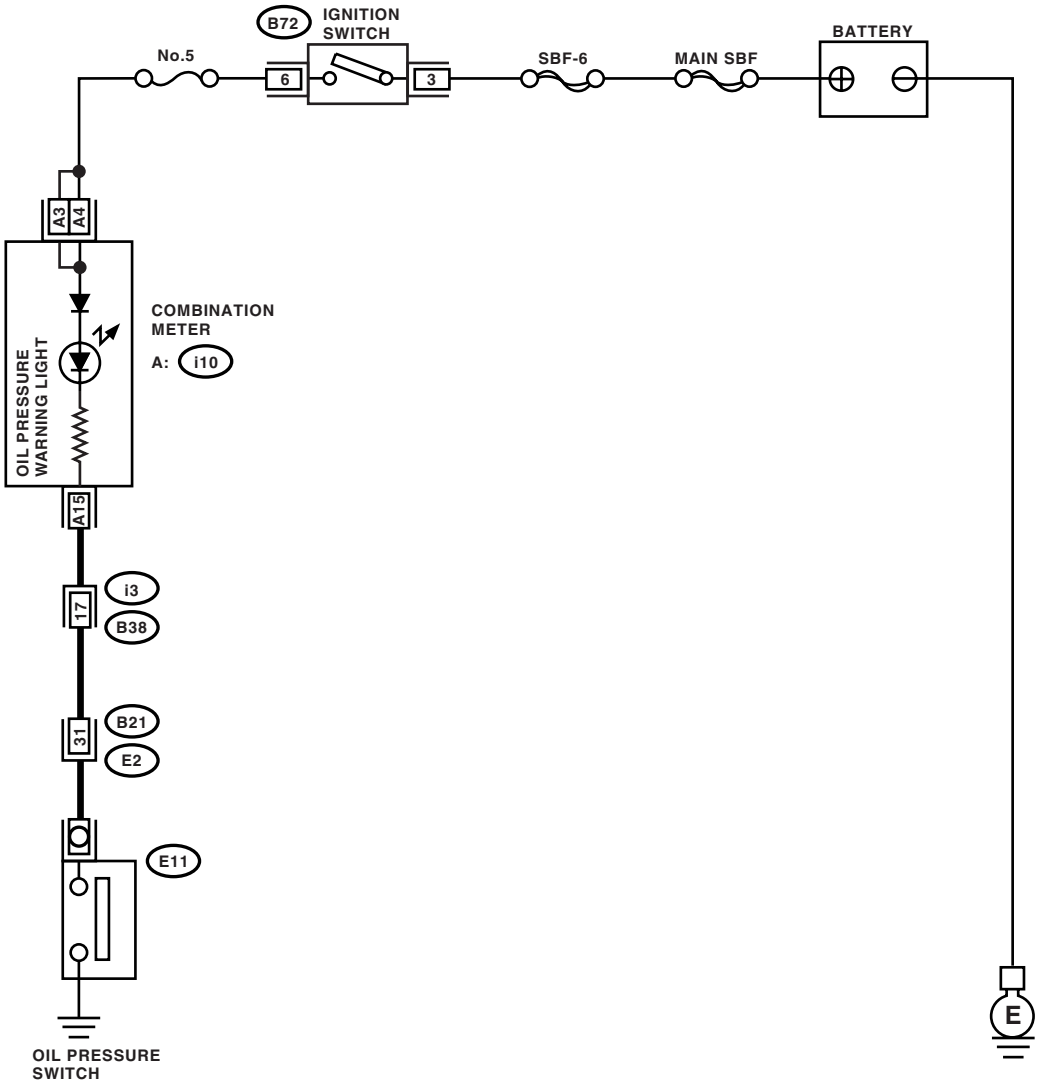

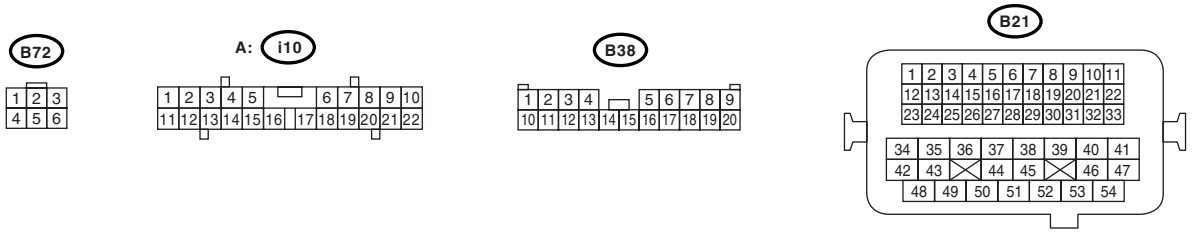

LU-02113

B: INSPECTION

	Step	Check	Yes	No
1	**CHECK COMBINATION METER.** 1) Turn the ignition switch to ON. (engine OFF) 2) Check the warning light of combination meter.	Does the warning light illuminate?	Go to step **2.**	Repair or replace the combination meter. <Ref. to IDI-3, INSPECTION, Combination Meter System.>
2	**CHECK HARNESS CONNECTOR BETWEEN COMBINATION METER AND OIL PRESSURE SWITCH.** 1) Turn the ignition switch to OFF. 2) Disconnect the connector from oil pressure switch. 3) Turn the ignition switch to ON. 4) Measure the voltage of harness between oil pressure switch connector and chassis ground. ***Connector & terminal*** ***(E11) No. 1 (+) — Chassis ground (–):***	Is the voltage more than 10 V?	Replace the oil pressure switch.	Go to step **3.**
3	**CHECK COMBINATION METER.** 1) Turn the ignition switch to OFF. 2) Remove the combination meter. 3) Measure the resistance of combination meter. ***Terminals*** ***(i10) No. 4 — (i10) No. 15:*** ***(i10) No. 3 — (i10) No. 15:***	Is the resistance less than 10 Ω?	Replace the harness connector between combination meter and oil pressure switch.	Repair or replace the combination meter. <Ref. to IDI-3, INSPECTION, Combination Meter System.>

3. Engine Oil

A: INSPECTION

1) Park the vehicle on a level surface.
2) Extract the oil level gauge and wipe it clean.
3) Reinsert the level gauge all the way. Be sure that the level gauge is correctly inserted and properly orientated.
4) Remove it again and check the reading. If the engine oil level is below "L" line, add oil to bring the level up to "F" line.
5) After turning off the engine, wait a few minutes for the oil to return to the oil pan before checking the level.

NOTE:
To prevent overfilling the engine oil, do not add oil above "F" line when the engine is cold.

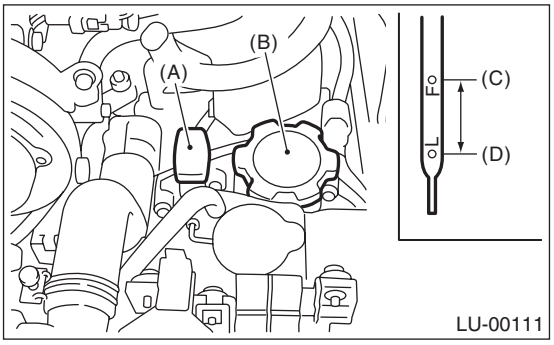

(A) Oil level gauge
(B) Engine oil filler cap
(C) Upper level
(D) Lower level

B: REPLACEMENT

1) Open the engine oil filler cap for quick draining of the engine oil.
2) Lift-up the vehicle.
3) Drain engine oil by loosening the engine oil drain plug.

NOTE:
Prepare a container for draining of engine oil.

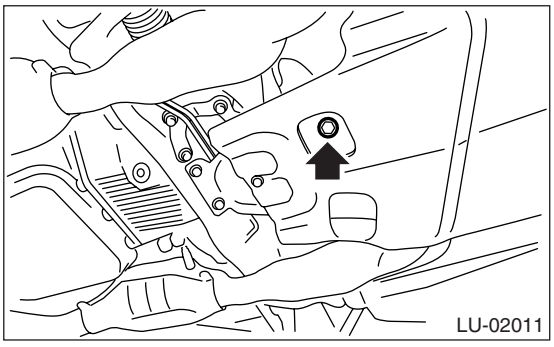

4) Tighten the engine oil drain plug after draining engine oil.

NOTE:
Use a new drain plug gasket.

Tightening torque:
44 N·m (4.5 kgf-m, 33 ft-lb)

5) Use the engine oil of proper quality and viscosity, fill engine oil through the oil filler duct to upper point on level gauge. Make sure that the vehicle is parked on a level surface when checking oil level.

Recommended oil:
Refer to "SPECIFICATION" for the recommended oil. <Ref. to LU(H6DO)-2, SPECIFICATION, General Description.>

Engine oil capacity (when replacing engine oil):
5.5 ℓ (5.8 US qt, 4.8 Imp qt)

6) Close the engine oil filler cap.
7) Start the engine and warm it up for a time.
8) After the engine stops, recheck the oil level. If necessary, add engine oil up to the upper level on level gauge.

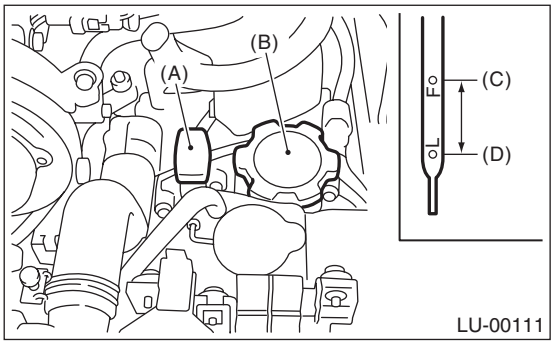

(A) Oil level gauge
(B) Engine oil filler cap
(C) Upper level
(D) Lower level

4. Oil Pump

A: REMOVAL

1) Remove the collector cover.
2) Disconnect the ground cable from battery.

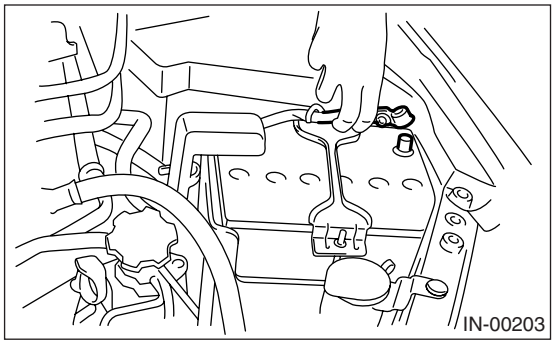

3) Lift-up the vehicle.
4) Remove the under cover.
5) Drain engine coolant. <Ref. to CO(H6DO)-10, DRAINING OF ENGINE COOLANT, REPLACEMENT, Engine Coolant.>
6) Lower the vehicle.
7) Remove the radiator. <Ref. to CO(H6DO)-14, REMOVAL, Radiator.>
8) Remove the V-belts. <Ref. to ME(H6DO)-32, REMOVAL, V-belt.>
9) Remove the front chain cover. <Ref. to ME(H6DO)-42, REMOVAL, Front Chain Cover.>
10) Remove the timing chain. <Ref. to ME(H6DO)-44, REMOVAL, Timing Chain Assembly.>
11) Remove the crank sprocket.
12) Remove the oil pump cover.

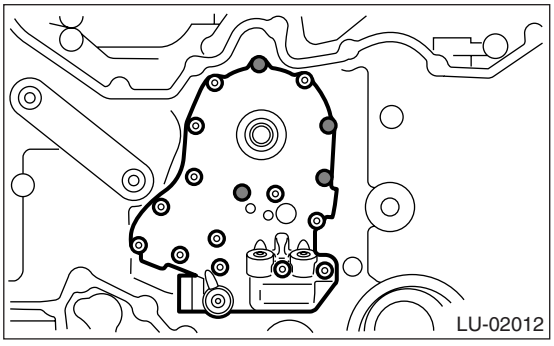

13) Remove the inner rotor and outer rotor.

B: INSTALLATION

1) Apply a coat of engine oil to the whole area of inner rotor and outer rotor.

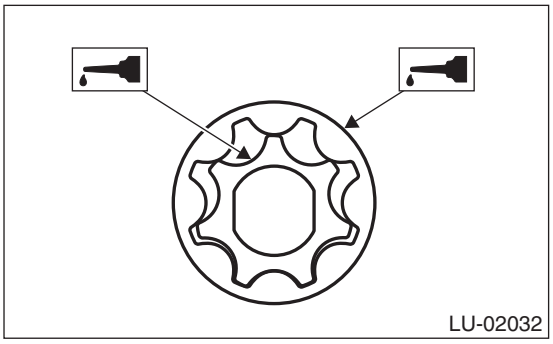

2) Set the inner rotor onto opening edge of crank shaft, and install the inner rotor, and then assemble the outer rotor.
3) Install the oil pump cover.
4) Tighten the bolts in the numerical order as shown in the figure.

CAUTION:
Ensure that the bolt is installed in correct position.

Tightening torque:
6.4 N·m (0.65 kgf-m, 4.7 ft-lb)

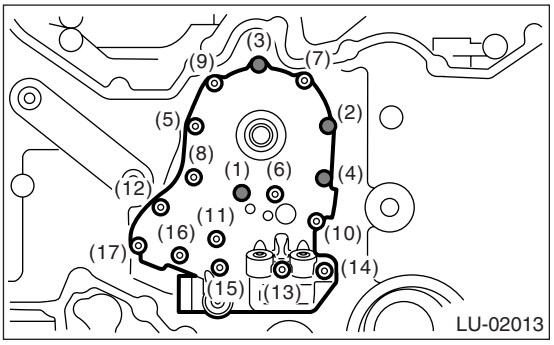

Bolt installing position	Bolt dimension
(1) and (3)	6 × 14 × 14
(2) and (4)	6 × 35 × 18
(5), (6), (7), (8), (9), (10) and (11)	6 × 35 × 15
(12), (15), (16) and (17)	6 × 16 × 16
(13) and (14)	6 × 26 × 15

5) Install the crank sprocket.
6) Install the timing chain. <Ref. to ME(H6DO)-45, INSTALLATION, Timing Chain Assembly.>
7) Install the front chain cover. <Ref. to ME(H6DO)-42, INSTALLATION, Front Chain Cover.>
8) Install the V-belts. <Ref. to ME(H6DO)-32, INSTALLATION, V-belt.>
9) Install the radiator. <Ref. to CO(H6DO)-15, INSTALLATION, Radiator.>
10) Install the under cover.

11) Fill engine coolant.
<Ref. to CO(H6DO)-10, FILLING OF ENGINE COOLANT, REPLACEMENT, Engine Coolant.>

C: INSPECTION

1. TIP CLEARANCE

Measure the tip clearance of rotors. If the clearance exceeds the standard value, replace the rotors as a matched set.

Tip clearance:
Standard value
0.04 — 0.14 mm (0.0016 — 0.0055 in)

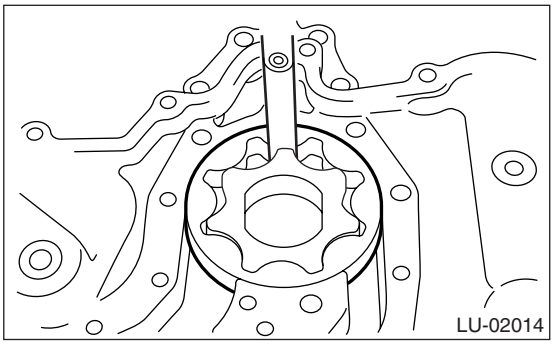

2. CASE CLEARANCE

Measure the clearance between the outer rotor and rear chain cover rotor housing. If the clearance exceeds the standard value, replace the outer rotor.

Case clearance:
Standard value
0.110 — 0.175 mm (0.0043 — 0.0069 in)

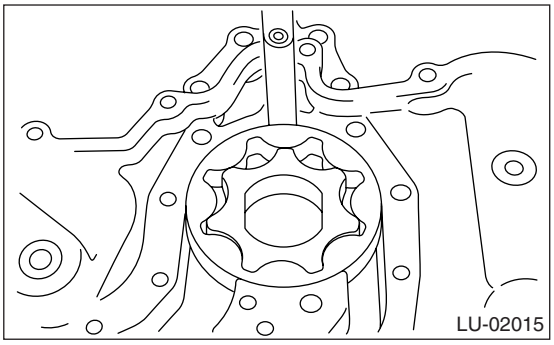

3. SIDE CLEARANCE

Measure the clearance between oil pump inner rotor and rear chain cover. If the clearance exceeds the standard value, replace rotors as a matched set.

Side clearance:
Standard value
0.020 — 0.046 mm (0.0008 — 0.0018 in)

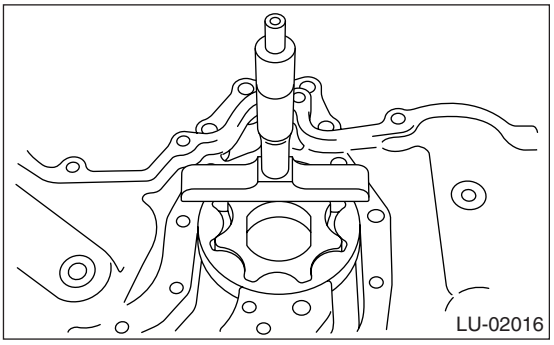

4. OIL PUMP CASE

Check the worn shaft hole, clogged oil passage, crank and other parts for faults.

5. Oil Pump Relief Valve

A: REMOVAL

1. REAR CHAIN COVER SIDE

Oil pump relief valve is integrated into oil pump cover as one unit; therefore, refer to “Oil Pump” for removal procedure. <Ref. to LU(H6DO)-8, REMOVAL, Oil Pump.>

2. OIL PAN UPPER SIDE

1) Remove the oil pan. <Ref. to LU(H6DO)-11, REMOVAL, Oil Pan and Strainer.>
2) Remove the plug, relief valve spring and relief valve.

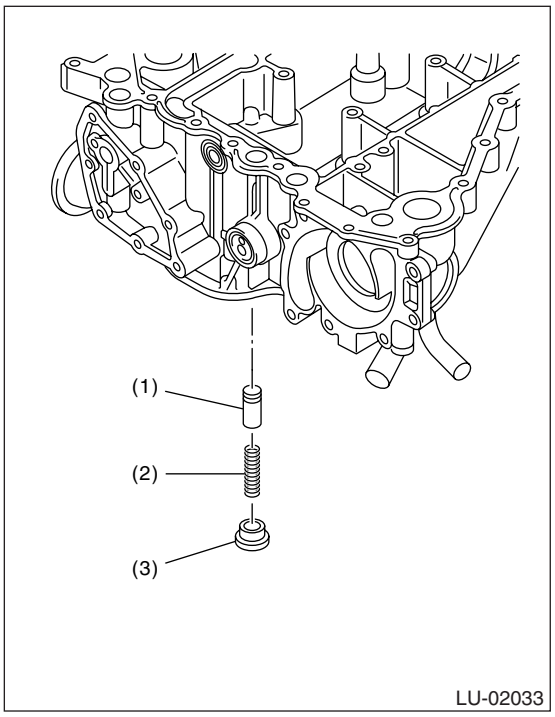

(1) Relief valve
(2) Relief valve spring
(3) Plug

B: INSTALLATION

1. REAR CHAIN COVER SIDE

Oil pump relief valve is integrated into oil pump cover as one unit; therefore, refer to “Oil Pump” for installation procedure. <Ref. to LU(H6DO)-8, INSTALLATION, Oil Pump.>

2. OIL PAN UPPER SIDE

1) Install the relief valve, relief valve spring and plug.

Tightening torque:
T: 44 N·m (4.5 kgf-m, 33 ft-lb)

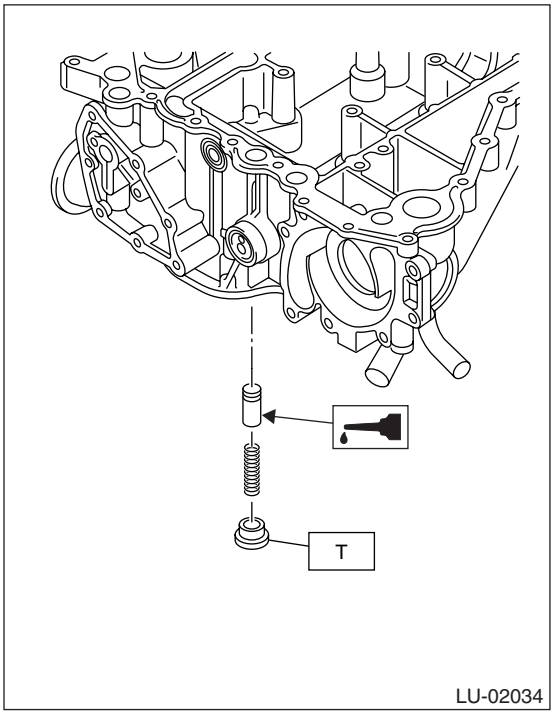

NOTE:
Apply the engine oil to relief valve.

2) Install the oil pan. <Ref. to LU(H6DO)-11, INSTALLATION, Oil Pan and Strainer.>

C: INSPECTION

Check the worn shaft hole of oil pump relief valve case, clogged oil passage, crank and other parts for faults.

6. Oil Pan and Strainer

A: REMOVAL

NOTE:
Before removing the oil pan upper, remove the engine from vehicle. <Ref. to ME(H6DO)-33, REMOVAL, Engine Assembly.> <Ref. to ME(H6DO)-62, REMOVAL, Cylinder Block.>

1) Set the vehicle on a lift.
2) Lift-up the vehicle.
3) Remove the under cover.
4) Drain the engine oil. <Ref. to LU(H6DO)-7, REPLACEMENT, Engine Oil.>
5) Insert the oil pan cutter blade between oil pan upper and oil pan lower.

CAUTION:
Do not use a screwdriver or similar tool in place of oil pan cutter.

6) Remove the oil pan lower.

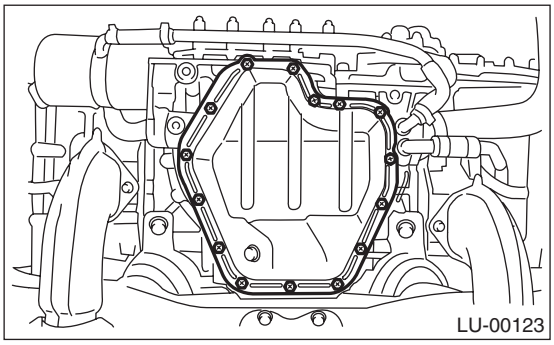
LU-00123

7) Remove the oil strainer.

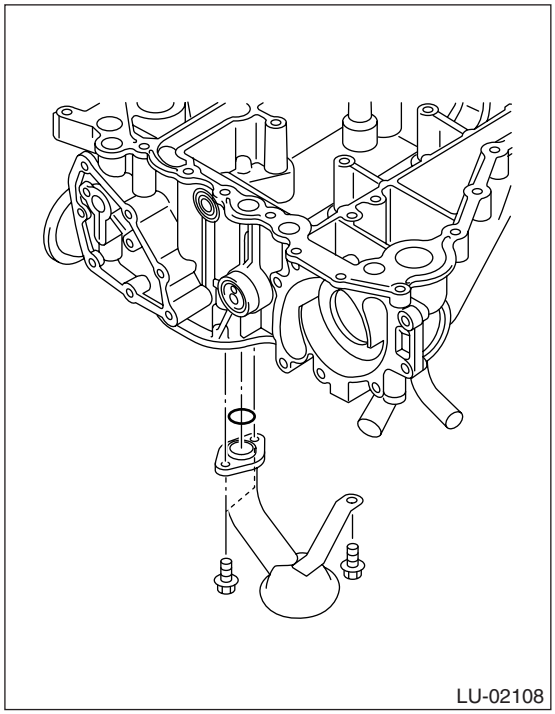
LU-02108

B: INSTALLATION

CAUTION:
Before installing the oil pan, wipe clean the mating surface of oil pan lower and oil pan upper.

1) Install the oil strainer to oil pan upper.

NOTE:
Replace O-ring with new one.

Tightening torque:
6.4 N·m (0.65 kgf-m, 4.7 ft-lb)

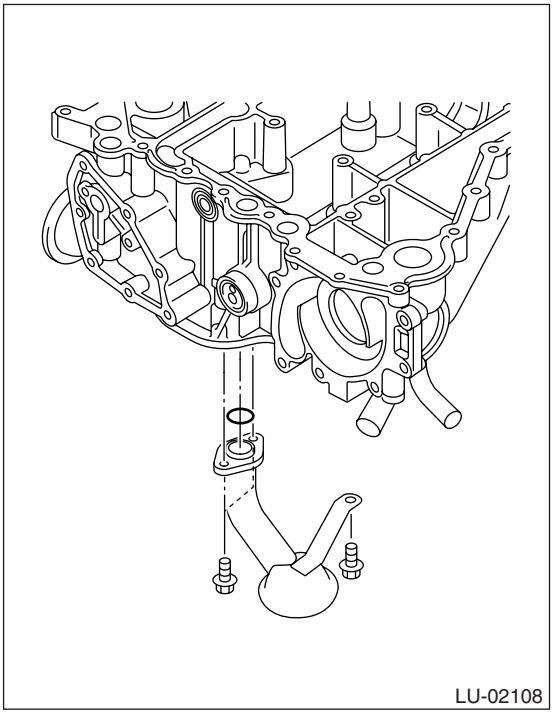
LU-02108

2) Apply liquid gasket to the mating surfaces and install the oil pan.

Liquid gasket
THREE BOND 1280B (Part No. K0877YA018)

Liquid gasket applying diameter
5.0±1.0 mm (0.197±0.039 in)

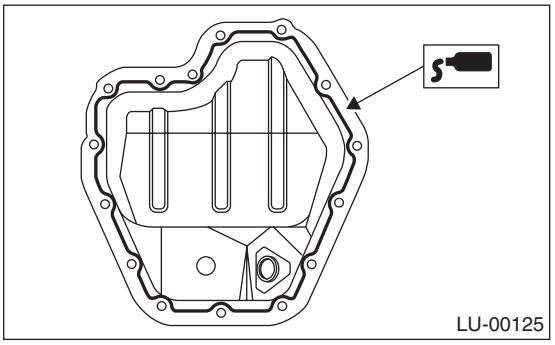

LU-00125

3) Tighten the oil pan lower installing bolts in the numerical order as shown in the figure.

Tightening torque:
6.4 N·m (0.65 kgf-m, 4.7 ft-lb)

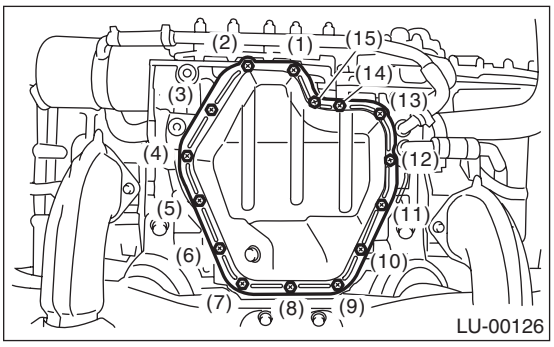

4) Install the under cover.
5) Fill engine oil. <Ref. to LU(H6DO)-7, INSPECTION, Engine Oil.>

C: INSPECTION

Visually check that the oil pan, oil strainer and oil strainer stay are not damaged.

7. Oil Pressure Switch

A: REMOVAL

1) Set the vehicle on a lift.
2) Disconnect the ground cable from battery.

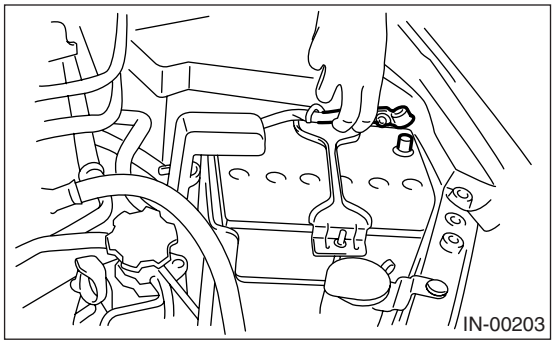

3) Lift-up the vehicle.
4) Remove the under cover.
5) Disconnect the terminal from oil pressure switch.

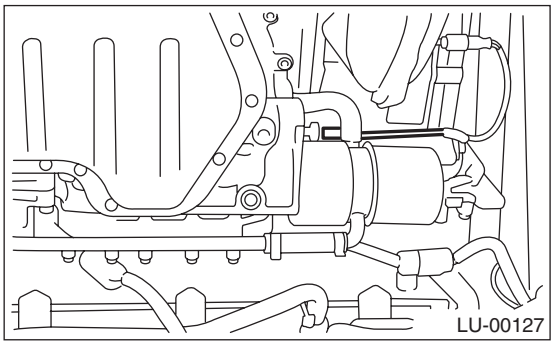

6) Remove the oil pressure switch.

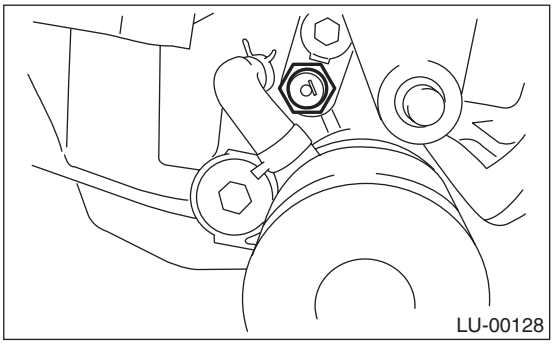

B: INSTALLATION

1) Apply liquid gasket to the oil pressure switch threads.

Liquid gasket
THREE BOND 1324 (Part No. 004403042) or equivalent

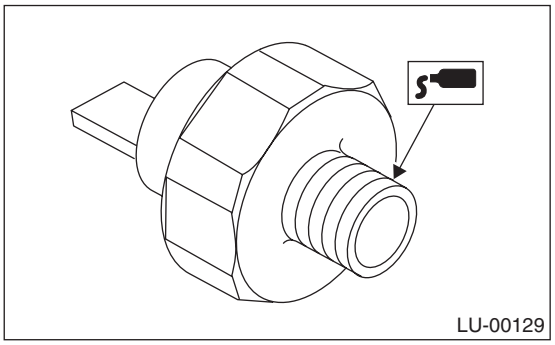

2) Install the oil pressure switch.

Tightening torque:
25 N·m (2.5 kgf-m, 18 ft-lb)

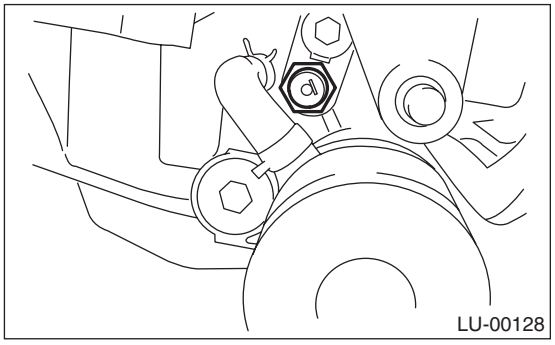

3) Connect the terminal of oil pressure switch.

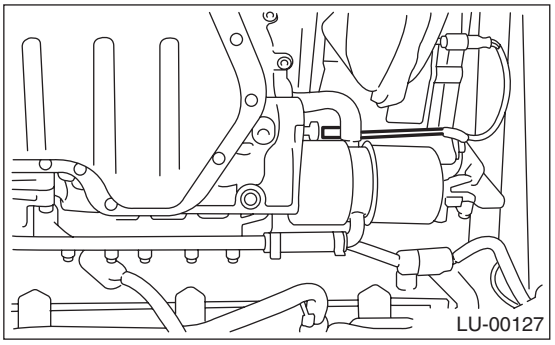

4) Install the under cover.

C: INSPECTION

Make sure oil does not leak or seep from where the oil pressure switch is installed.

8. Engine Oil Filter

A: REMOVAL

1) Lift-up the vehicle.
2) Drain the engine oil by removing engine oil drain plug.

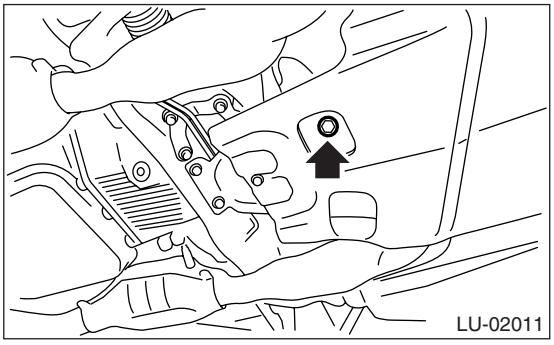

3) Remove the under cover.
4) Remove the oil filter using ST.
ST 4985447000 OIL FILTER WRENCH

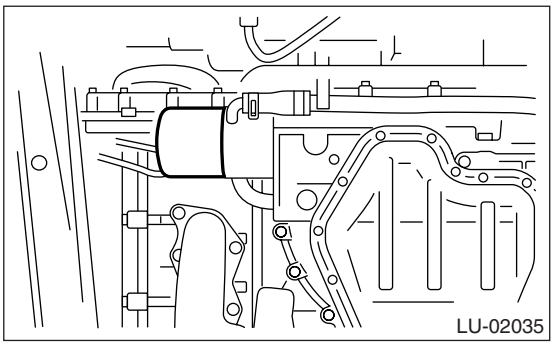

B: INSTALLATION

1) Clean the oil filter installing surface of oil cooler.
2) Obtain a new oil filter and apply a thin coat of engine oil to the seal rubber.
3) Install the oil filter turning it by hand, being careful not to damage seal rubber.
4) Tighten more (approx. 3/4 turn) after the seal rubber contacts the oil cooler. Do not tighten excessively, or oil may leak.
5) Install the under cover.
6) Lower the vehicle.
7) Fill engine oil. <Ref. to LU(H6DO)-7, INSPECTION, Engine Oil.>

C: INSPECTION

1) After installing the oil filter, run engine and make sure that no oil is leaking around seal rubber.

NOTE:
The filter element and filter case are permanently jointed; therefore, interior cleaning is not necessary.

2) Check the engine oil level. <Ref. to LU(H6DO)-7, INSPECTION, Engine Oil.>

9. Oil Cooler

A: REMOVAL

1) Lift-up the vehicle.
2) Remove the under cover.
3) Drain the engine coolant.
<Ref. to CO(H6DO)-10, DRAINING OF ENGINE COOLANT, Engine Coolant.>
4) Drain the engine oil. <Ref. to LU(H6DO)-7, REPLACEMENT, Engine Oil.>
5) Remove the bolts which hold the water pipe to engine.

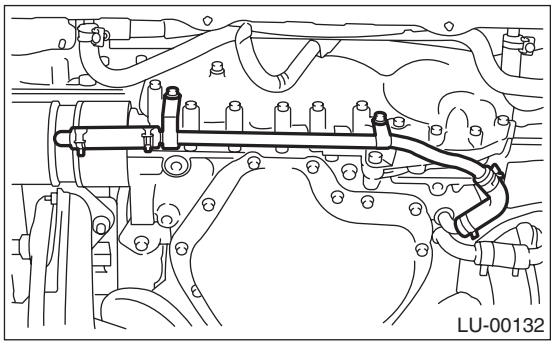

6) Disconnect the water hose from oil cooler.

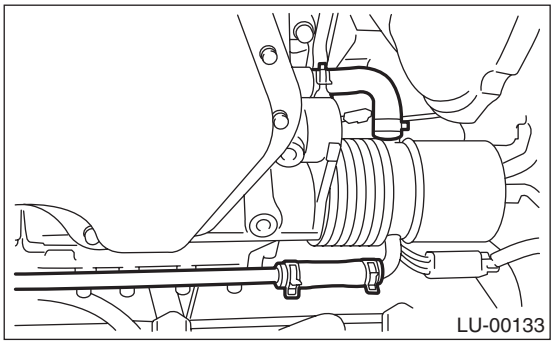

7) Remove the oil filter using ST. <Ref. to LU(H6DO)-14, REMOVAL, Engine Oil Filter.>
ST 498547000 OIL FILTER WRENCH

NOTE:
Set a container under the vehicle.

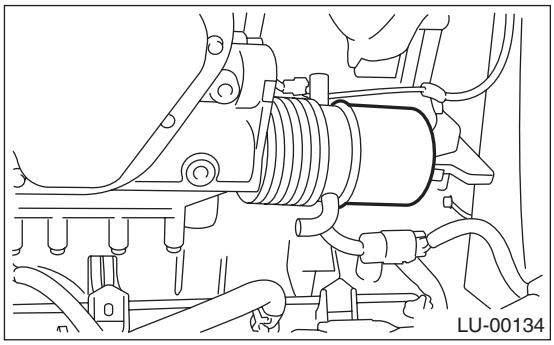

8) Remove the oil cooler connector and remove oil cooler.

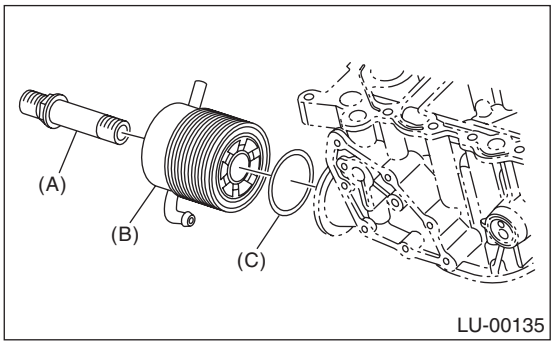

(A) Oil cooler connector
(B) Oil cooler
(C) O-ring

B: INSTALLATION

1) Install the oil cooler to oil pan upper with oil cooler connector.

Tightening torque:
T: 54 N·m (5.5 kgf-m, 40 ft-lb)

NOTE:
Use new O-rings.

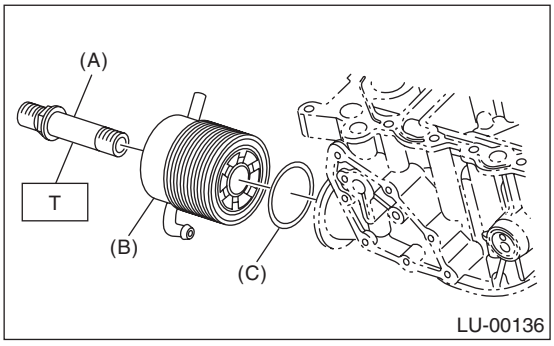

(A) Oil cooler connector
(B) Oil cooler
(C) O-ring

2) Install the oil filter turning it by hand. <Ref. to LU(H6DO)-14, INSTALLATION, Engine Oil Filter.>

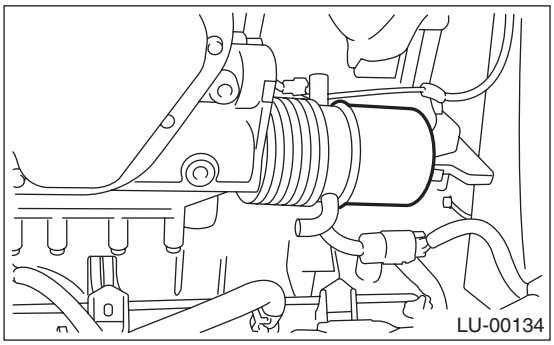

3) Connect the water hose.

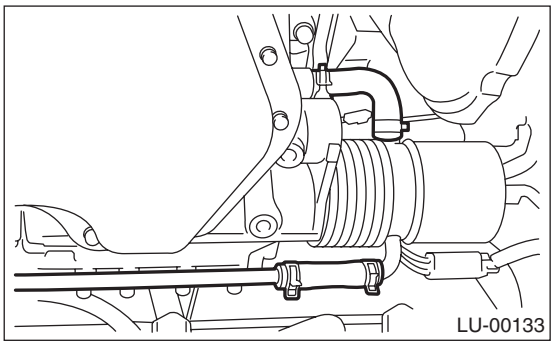

4) Install the water pipe to engine.

Tightening torque:
6.4 N·m (0.65 kgf-m, 4.7 ft-lb)

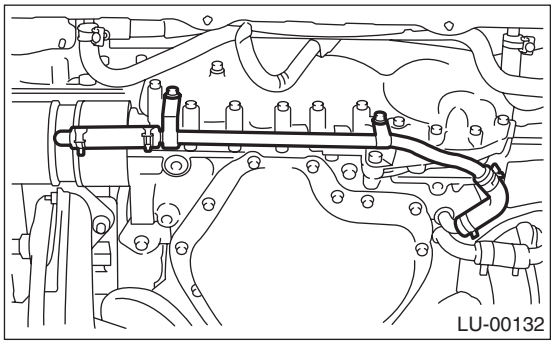

5) Fill engine oil. <Ref. to LU(H6DO)-7, REPLACEMENT, Engine Oil.>
6) Fill engine coolant. <Ref. to CO(H6DO)-10, FILLING OF ENGINE COOLANT, REPLACEMENT, Engine Coolant.>
7) Check the engine oil level. <Ref. to LU(H6DO)-7, INSPECTION, Engine Oil.>

C: INSPECTION

1) Check that engine coolant passages are not clogged using an compressed air.
2) Check that the oil pan upper and O-ring installing surface of oil filter are not damaged.

10.General Diagnostic Table

A: INSPECTION

Before performing diagnosis, make sure that the engine oil level is correct and no oil leakage exists.

Symptom	Possible cause		Corrective action
1. Warning light remains on.	1) Oil pressure switch failure	Cracked diaphragm or oil leakage within switch	Replace.
		Broken spring or seized contacts	Replace.
	2) Low oil pressure	Clogging of oil filter	Replace.
		Malfunction of oil by-pass valve in oil filter	Clean or replace.
		Malfunction of oil relief valve in oil pump	Clean or replace.
		Clogged oil passage	Clean.
		Excessive tip clearance and side clearance of oil pump rotor and gear	Replace.
		Clogged oil strainer or broken pipe	Clean or replace.
	3) No oil pressure	Insufficient engine oil	Replenish.
		Broken pipe of oil strainer	Replace.
		Stuck oil pump rotor	Replace.
2. Warning light does not come on.	1) Malfunction of combination meter		Replace.
	2) Poor contact of switch contact points		Replace.
	3) Disconnection of wiring		Repair.
3. Warning light flickers momentarily.	1) Poor contact at terminals		Repair.
	2) Defective wiring harness		Repair.
	3) Low oil pressure		Check for the same possible causes as listed in 1) — 2).

SPEED CONTROL SYSTEMS

SP(H6DO)

Page

1. General Description 2

1. General Description

A: SPECIFICATION

Specifications for 3.0 L DOHC Non-turbo model are the same as SOHC model. <Ref. to SP(H4SO)-2, General Description.>

IGNITION

IG(H6DO)

Page

1. General Description 2
2. Spark Plug.....4
3. Ignition Coil and Ignitor Assembly.....7

1. General Description

A: SPECIFICATION

Item		Specification
Ignition coil and ignitor assembly	Model	FK0140
	Ignition system	Independent ignition coil
	Manufacturer	Diamond Electric
Spark plug	Manufacturer and type	NGK: ILFR6B
	Thread size (diameter, pitch, length) mm	14, 1.25, 26.5
	Spark plug gap mm (in)	0.7 — 0.8 (0.028 — 0.031)
	Electrode	Iridium

B: COMPONENT

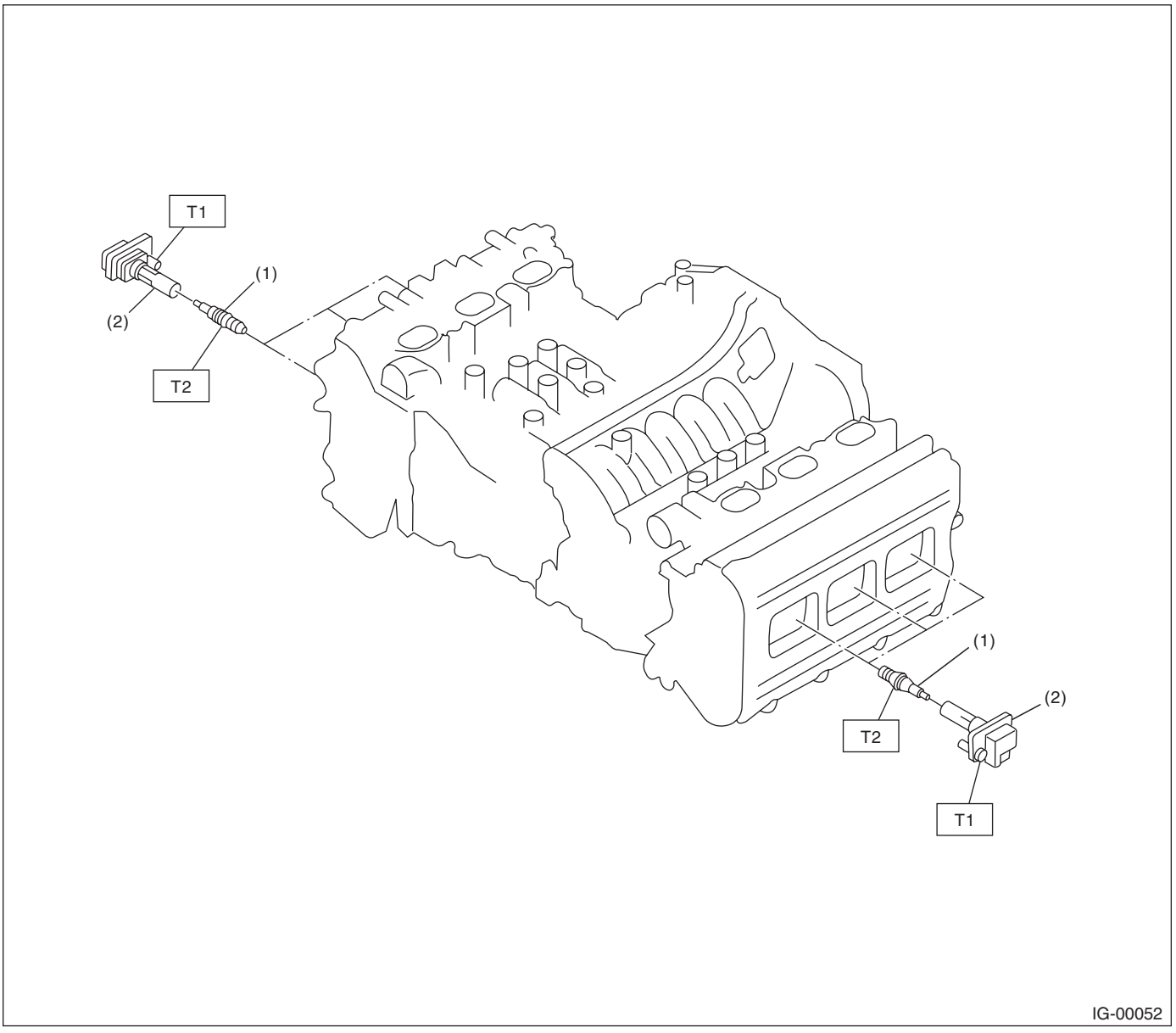

(1) Spark plug
(2) Ignition coil and ignitor ASSY

Tightening torque: N·m (kgf-m, ft-lb)
T1: 16 (1.6, 11.7)
T2: 21 (2.1, 15.2)

C: CAUTION

• Wear work clothing, including a cap, protective goggles and protective shoes during operation.
• Remove contamination including dirt and corrosion before removal, installation or disassembly.
• Keep the disassembled parts in order and protect them from dust and dirt.
• Before removal, installation or disassembly, be sure to clarify the failure. Avoid unnecessary removal, installation, disassembly and replacement.
• Be careful not to burn yourself, because each part on the vehicle is hot after running.
• Be sure to tighten fasteners including bolts and nuts to the specified torque.
• Place shop jacks or rigid racks at the specified points.
• Before disconnecting electrical connectors of sensors or units, be sure to disconnect the ground cable from battery.

2. Spark Plug

A: REMOVAL

CAUTION:
All spark plugs installed on an engine must be of the same heat range.

Spark plug:
<Ref. to IG(H6DO)-2, SPECIFICATION, General Description.>

1. RH SIDE

1) Remove the collector cover.
2) Disconnect the ground cable from battery.

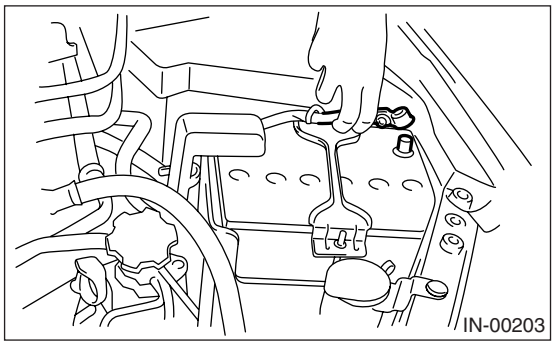

3) Remove the air cleaner case.
<Ref. to IN(H6DO)-5, REMOVAL, Air Cleaner Case.>
4) Remove the bracket.
5) Disconnect the connector from ignition coil.
6) Remove the ignition coil.

NOTE:
Turn the #5 ignition coil to remove it.

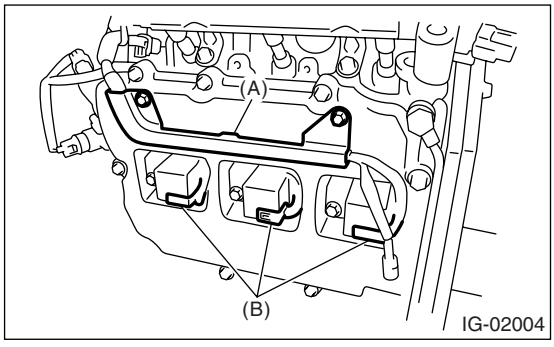

(A) Bracket
(B) Connector

7) Remove the spark plug with a spark plug socket.

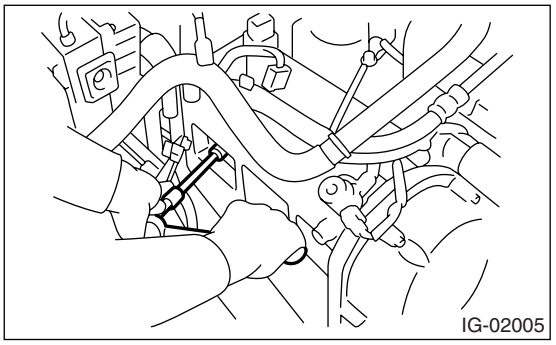

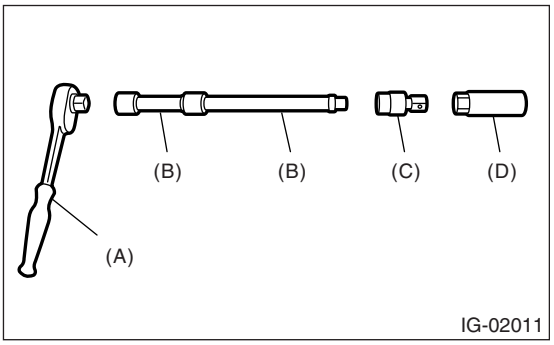

(A) Ratchet handle
(B) Extension bar
(C) Universal joint
(D) Spark plug socket

2. LH SIDE

1) Remove the collector cover.
2) Remove the battery and battery carrier.
3) Remove the bracket.
4) Disconnect the connector from ignition coil.
5) Remove the ignition coil.

NOTE:
Turn the #6 ignition coil to remove it.

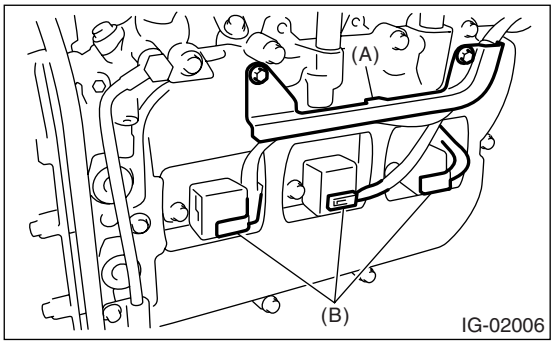

(A) Bracket
(B) Connector

6) Remove the spark plug with a spark plug socket.

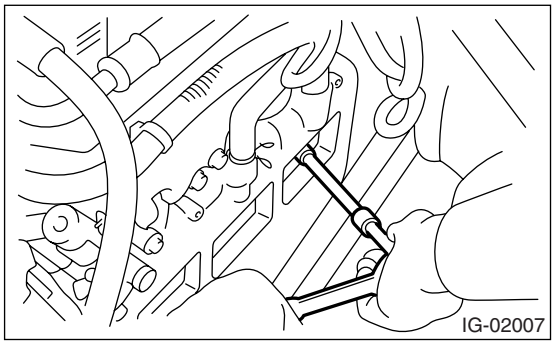

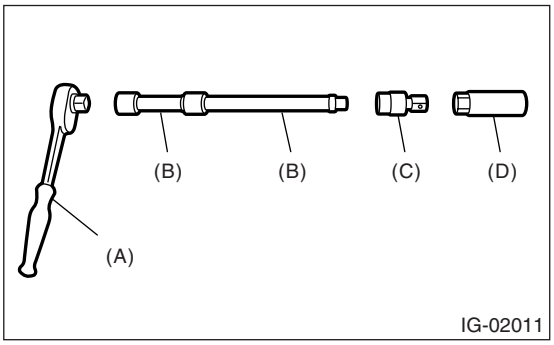

(A) Ratchet handle
(B) Extension bar
(C) Universal joint
(D) Spark plug socket

B: INSTALLATION

1. RH SIDE

Install in the reverse order of removal.

Tightening torque (Spark plug):
21 N·m (2.1 kgf-m, 15.2 ft-lb)

Tightening torque (Ignition coil):
16 N·m (1.6 kgf-m, 11.7 ft-lb)

NOTE:
The above torque should be only applied to new spark plugs without oil on their threads.
In case their threads are lubricated, the torque should be reduced by approx. 1/3 of the specified torque in order to avoid over-stressing.

2. LH SIDE

Install in the reverse order of removal.

Tightening torque (Spark plug):
21 N·m (2.1 kgf-m, 15.2 ft-lb)

Tightening torque (Ignition coil):
16 N·m (1.6 kgf-m, 11.7 ft-lb)

NOTE:
The above torque should be only applied to new spark plugs without oil on their threads.
In case their threads are lubricated, the torque should be reduced by approx. 1/3 of the specified torque in order to avoid over-stressing.

C: INSPECTION

Check the electrodes and inner and outer ceramic insulator of plugs, noting the type of deposits and the degree of electrode erosion.

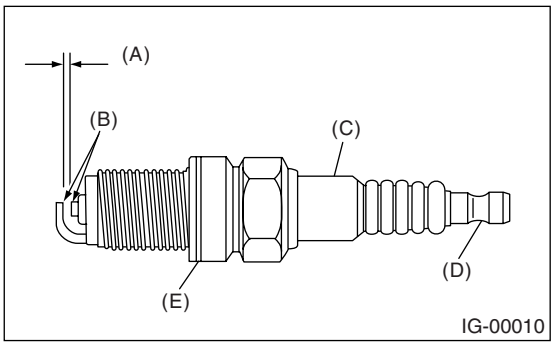

(A) Spark plug gap
(B) Carbon accumulation or wear
(C) Crack
(D) Damage
(E) Damaged gasket

1) Normal:
Brown to grayish-tan deposits and slight electrode wear indicate correct spark plug heat range.

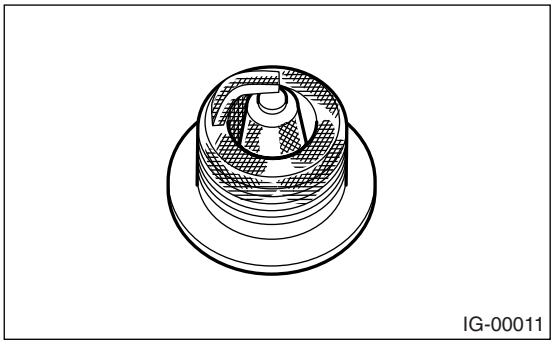

2) Carbon fouled:
Dry fluffy carbon deposits on insulator and electrode are mostly caused by slow speed driving in the city, weak ignition, too rich fuel mixture or dirty air cleaner.

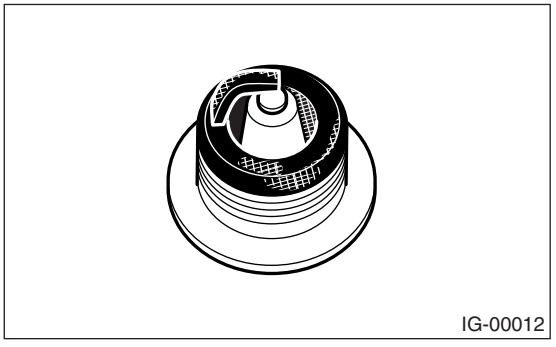

3) Oil fouled:
Wet black deposits show oil entrance into combustion chamber through worn rings and pistons or excessive clearance between valve guides and stems.

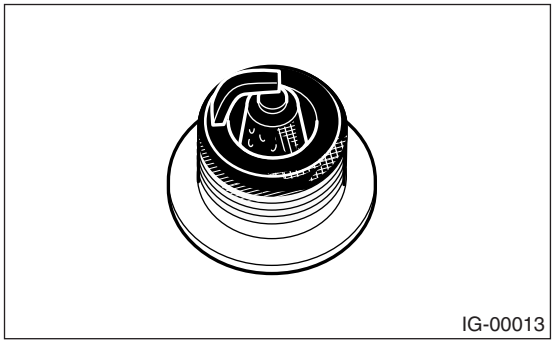
IG-00013

4) Overheating:
White or light gray insulator with black or brown spots and bluish burnt electrodes indicate engine overheating. Moreover, those appearance also results from incorrect ignition timing, loose spark plugs, wrong selection of fuel, hotter range plug, etc.

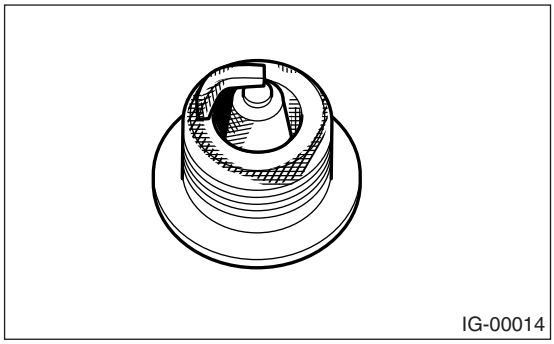
IG-00014

D: ADJUSTMENT

Clean the spark plugs using a wire brush.
Clean and remove the carbon or oxide deposits. But do not wear away ceramic insulator at this time. If deposits are too stubborn, replace the spark plugs.

NOTE:
Do not use a plug cleaner because the spark plugs are applied with iridium tip.

Spark plug gap L:
0.7 — 0.8 mm (0.028 — 0.031 in)

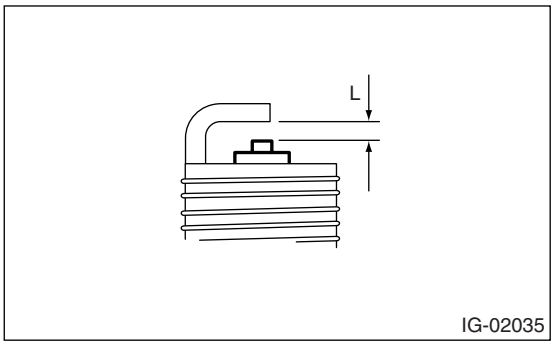

IG-02035

3. Ignition Coil and Ignitor Assembly

A: REMOVAL

Direct ignition type has been adopted. Refer to “Spark Plug” for removal procedure. <Ref. to IG(H6DO)-4, REMOVAL, Spark Plug.>

B: INSTALLATION

Install in the reverse order of removal.

Tightening torque:
16 N·m (1.6 kgf-m, 11.7 ft-lb)

C: INSPECTION

For inspection procedure, refer to “Diagnostics for Engine Starting Failure”. <Ref. to EN(H6DO)(diag)-63, IGNITION CONTROL SYSTEM, Diagnostics for Engine Starting Failure.>

Ignition Coil and Ignitor Assembly

STARTING/CHARGING SYSTEMS

SC(H6DO)

Page

1. General Description 2

1. General Description

A: SPECIFICATION

Specifications for 3.0 L DOHC Non-turbo model are included in SC(H4SO) section. <Ref. to SC(H4SO)-2, General Description.>

ENGINE (DIAGNOSTICS)

EN(H6DO)(diag)

		Page
1.	Basic Diagnostic Procedure	2
2.	Check List for Interview	3
3.	General Description	5
4.	Electrical Component Location	8
5.	Engine Control Module (ECM) I/O Signal	18
6.	Engine Condition Data	22
7.	Data Link Connector	23
8.	General Scan Tool	24
9.	Subaru Select Monitor	26
10.	Read Diagnostic Trouble Code (DTC)	34
11.	Inspection Mode	35
12.	Drive Cycle	40
13.	Clear Memory Mode	44
14.	Compulsory Valve Operation Check Mode	45
15.	Malfunction Indicator Light	47
16.	Diagnostics for Engine Starting Failure	56
17.	List of Diagnostic Trouble Code (DTC)	71
18.	Diagnostic Procedure with Diagnostic Trouble Code (DTC)	79
19.	General Diagnostic Table	372

1. Basic Diagnostic Procedure

A: PROCEDURE

1. ENGINE

	Step	Check	Yes	No
1	**CHECK ENGINE START FAILURE.** 1) Ask the customer when and how the trouble occurred using the interview check list. <Ref. to EN(H6DO)(diag)-3, CHECK, Check List for Interview.> 2) Start the engine.	Does the engine start?	Go to step **2.**	Inspection using "Diagnostics for Engine Start Failure". <Ref. to EN(H6DO)(diag)-56, Diagnostics for Engine Starting Failure.>
2	**CHECK ILLUMINATION OF MALFUNCTION INDICATOR LIGHT.**	Does check malfunction indicator light illuminate?	Go to step **3.**	Inspection using "General Diagnostic Table". <Ref. to EN(H6DO)(diag)-372, INSPECTION, General Diagnostic Table.>
3	**CHECK INDICATION OF DTC ON DISPLAY.** 1) Turn the ignition switch to OFF. 2) Connect the Subaru Select Monitor or general scan tool to data link connector. 3) Turn the ignition switch to ON, and the Subaru Select Monitor or general scan tool switch to ON. 4) Read DTC on Subaru Select Monitor.	Is DTC displayed on the Subaru Select Monitor or general scan tool?	Record the DTC. Repair the trouble cause. <Ref. to EN(H6DO)(diag)-71, List of Diagnostic Trouble Code (DTC).> Go to step **4.**	Repair the related parts. NOTE: If DTC is not shown on display although the malfunction indicator light illuminates, perform the diagnostics of malfunction indicator light circuit or combination meter. <Ref. to EN(H6DO)(diag)-47, Malfunction Indicator Light.>
4	**PERFORM THE DIAGNOSIS.** 1) Perform clear memory mode. <Ref. to EN(H6DO)(diag)-44, Clear Memory Mode.> 2) Perform the inspection mode. <Ref. to EN(H6DO)(diag)-35, Inspection Mode.>	Is DTC displayed on the Subaru Select Monitor or general scan tool?	Check on "Diagnostic Procedure with Diagnostic Trouble Code (DTC)" <Ref. to EN(H6DO)(diag)-79, Diagnostic Procedure with Diagnostic Trouble Code (DTC).>	Finish the diagnosis.

2. Check List for Interview

A: CHECK

1. CHECK LIST No. 1

Check the following items when problem has occurred.

NOTE:
Use copies of this page for interviewing customers.

Customer's name		Engine No.	
Date of sale		Fuel brand	
Date of repair		Odometer reading	km
V.I.N.			miles
Weather	❑ Fine ❑ Cloudy ❑ Rainy ❑ Snowy ❑ Various/Others:		
Ambient air temperature	°C (°F)		
	❑ Hot ❑ Warm ❑ Cool ❑ Cold		
Place	❑ Highway ❑ Suburbs ❑ Inner city ❑ Uphill ❑ Downhill ❑ Rough road ❑ Others:		
Engine temperature	❑ Cold ❑ Warming-up ❑ After warming-up ❑ Any temperature ❑ Others:		
Engine speed	rpm		
Vehicle speed	km/h (MPH)		
Driving conditions	❑ Not affected ❑ At starting ❑ While idling ❑ At racing ❑ While accelerating ❑ While cruising ❑ While decelerating ❑ While turning (RH/LH)		
Headlight	❑ ON / ❑ OFF	Rear defogger	❑ ON / ❑ OFF
Blower	❑ ON / ❑ OFF	Audio	❑ ON / ❑ OFF
A/C compressor	❑ ON / ❑ OFF	Car phone	❑ ON / ❑ OFF
Radiator fan	❑ ON / ❑ OFF		
Front wiper	❑ ON / ❑ OFF		
Rear wiper	❑ ON / ❑ OFF		

2. CHECK LIST No. 2

Check the following items about the vehicle's state when malfunction indicator light turns on.

NOTE:
Use copies of this page for interviewing customers.

a) Other warning lights or indicators turn on. ❑ Yes / ❑ No
❑ Low fuel warning light ❑ Charge indicator light ❑ AT diagnostic indicator light ❑ ABS warning light ❑ Oil pressure indicator light
b) Fuel level
• Lack of gasoline: ❑ Yes / ❑ No • Indicator position of fuel gauge: • Experienced running out of fuel: ❑ Yes / ❑ No
c) Intentional connecting or disconnecting of harness connectors or spark plug cords: ❑ Yes / ❑ No
• What:
d) Intentional connecting or disconnecting of hoses: ❑ Yes / ❑ No
• What:
e) Installing of other parts except genuine parts: ❑ Yes / ❑ No
• What: • Where:
f) Occurrence of noise: ❑ Yes / ❑ No
• From where: • What kind:
g) Occurrence of smell: ❑ Yes / ❑ No
• From where: • What kind:
h) Intrusion of water into engine compartment or passenger compartment: ❑ Yes / ❑ No
i) Troubles occurred
❑ Engine does not start. ❑ Engine stalls during idling. ❑ Engine stalls while driving. ❑ Engine speed decreases. ❑ Engine speed does not decrease. ❑ Rough idling ❑ Poor acceleration ❑ Back fire ❑ After fire ❑ Does not shift. ❑ Excessive shift shock

3. General Description

A: CAUTION

1) Airbag system wiring harness is routed near the ECM, main relay and fuel pump relay.

CAUTION:
• All air bag system wiring harnesses and connectors are yellow. Do not use the electrical test equipment on these circuits.
• Be careful not to damage the Airbag system wiring harness when servicing the ECM, TCM, main relay and fuel pump relay.

2) Never connect the battery in reverse polarity.
- The ECM will be destroyed instantly.
- The fuel injector and other part will be damaged.

3) Do not disconnect the battery terminals while the engine is running.
A large counter electromotive force will be generated in the generator, and this voltage may damage electronic parts such as ECM, etc.
4) Before disconnecting the connectors of each sensor and the ECM, be sure to turn the ignition switch to OFF. Perform the clear memory mode after connecting the connectors.
5) Poor contact has been identified as a primary cause of this problem. Measure the voltage or resistance of individual sensor or all electrical control modules using a tapered pin with a diameter of less than 0.64 mm (0.025 in). Do not insert the pin more than 5 mm (0.20 in) into the part.
6) Remove the ECM from the located position after disconnecting two cables on battery.
Otherwise, the ECM may be damaged.

CAUTION:
When replacing the ECM, be careful not to use the wrong spec. ECM to avoid any damage on the fuel injection system.

7) Connectors to each sensor in the engine compartment and the harness connectors on the engine side and body side are all designed to be waterproof. However, it is still necessary to take care not to allow water to get into the connectors when washing the vehicle, or when servicing the vehicle on a rainy day.

8) Use ECM mounting stud bolts as the grounding point to chassis when measuring voltage and resistance inside the passenger compartment.

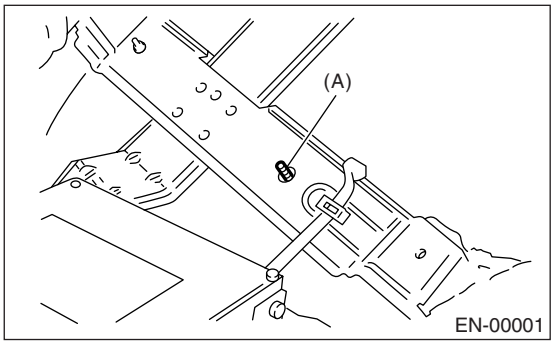

(A) Stud bolt

9) Use engine grounding terminal or engine proper as the grounding point to chassis when measuring voltage and resistance in the engine compartment.

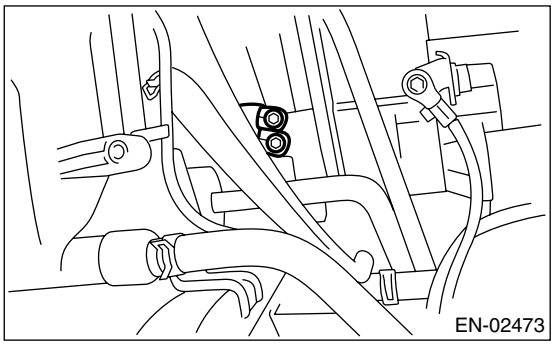

10) Use TCM mounting stud bolts as the body side grounding point to chassis when measuring voltage and resistance inside the passenger compartment.

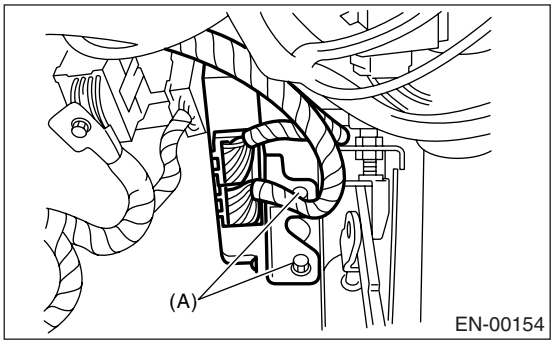

(A) Stud bolt

11) Every MFI-related part is a precision part. Do not drop them.
12) Observe the following cautions when installing a radio in MFI equipped models.

CAUTION:
• The antenna must be kept as far apart as possible from the control unit. (The ECM is located under the steering column, inside of the instrument panel lower trim panel.)

• The antenna feeder must be placed as far apart as possible from the ECM and MFI harness.
• Carefully adjust the antenna for correct matching.
• When mounting a large power type radio, pay special attention to the three items above mentioned.
• Incorrect installation of the radio may affect the operation of the ECM.

13) Before disconnecting the fuel hose, disconnect the fuel pump connector and crank the engine for more than five seconds to release pressure in the fuel system. If engine starts during this operation, run it until it stops.
14) Problems in the electronic-controlled automatic transmission may be caused by failure of the engine, the electronic control system, the transmission proper, or by a combination of these. These three causes (engine, electrical control system, transmission) must be distinguished clearly when performing diagnostics.
15) Diagnostics should be conducted by rotating with simple, easy operations and proceeding to complicated, difficult operations. The most important thing in diagnostics is to understand the customer's complaint, and distinguish between the three causes (engine, electrical control system, transmission).
16) In AT models, do not continue the stall for more than five seconds at a time. (from closed throttle, fully open throttle to stall speed reading, and then decrease engine speed.).
17) On the model with ABS, when performing driving test in jacked-up or lifted-up position, sometimes the warning light may be lit, but this is not a malfunction of the system. The reason for this is the speed difference between the front and rear wheels. After diagnosis of engine control system, perform the ABS memory clearance procedure of self-diagnosis system.

B: INSPECTION

Before performing diagnostics, check the following items which might affect engine problems:

1. BATTERY

1) Measure battery voltage and specific gravity of electrolyte.

Standard voltage: 12 V

Specific gravity: Above 1.260

2) Check the condition of the main and other fuses, and harnesses and connectors. Also check for proper grounding.

2. ENGINE GROUND

Make sure the engine grounding terminal is properly connected to the engine.

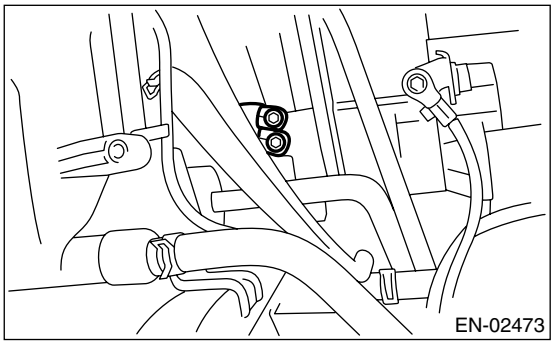

C: NOTE

1. DESCRIPTION

• The on-board diagnostics (OBD) system detects and indicates a fault in various inputs and outputs of the complex electronic control. Malfunction indicator light in the combination meter indicates occurrence of a fault or trouble.
• Further, against such a failure or sensors as may disable the drive, the fail-safe function is provided to ensure the minimal driveability.
• The OBD system incorporated with the vehicles within this engine family complies with OBD-II Regulations. The OBD system monitors the components and the system malfunction listed in Engine Section which affects on emissions.
• When the system decides that a malfunction occurs, malfunction indicator light illuminates. At the same time of the malfunction indicator light illumination or blinking, a DTC and a freeze frame engine conditions are stored into on-board computer.
• The OBD system stores freeze frame engine condition data (engine load, engine coolant temperature, fuel trim, engine speed and vehicle speed, etc.) into on-board computer when it detects a malfunction first.
• If the OBD system detects the various malfunctions including the fault of fuel trim or misfire, the OBD system first stores freeze frame engine conditions about the fuel trim or misfire.
• When the malfunction does not occur again for three consecutive driving cycles, malfunction indicator light is turned off, but DTC remains at on-board computer.
• When troubleshooting the vehicle which complies with OBD-II Regulations, connect the Subaru Select Monitor or general scan tool to the vehicle.

2. ENGINE AND EMISSION CONTROL SYSTEM

• The Multipoint Fuel Injection (MFI) system is a system that supplies the optimum air-fuel mixture to the engine for all the various operating conditions through the use of the latest electronic technology.
With this system fuel, which is pressurized at a constant pressure, is injected into the intake air passage of the cylinder head. The injection quantity of fuel is controlled by an intermittent injection system where the electro-magnetic injection valve (fuel injector) opens only for a short period of time, depending on the quantity of air required for one cycle of operation. In actual operation, the injection quantity is determined by the duration of an electric pulse applied to the fuel injector and this permits simple, yet highly precise metering of the fuel.

• Further, all the operating conditions of the engine are converted into electric signals, and this results in additional features of the system, such as large improved adaptability, easier addition of compensating element, etc.
The MFI system also has the following features:

- Reduced emission of harmful exhaust gases.
- Reduced in fuel consumption.
- Increased engine output.
- Superior acceleration and deceleration.
- Superior startability and warm-up performance in cold weather since compensation is made for coolant and intake air temperature.

D: PREPARATION TOOL

ILLUSTRATION	TOOL NUMBER	DESCRIPTION	REMARKS
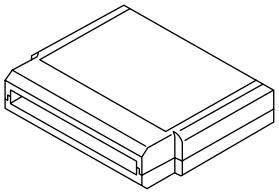 ST24082AA260	24082AA260	CARTRIDGE	Troubleshooting for electrical system.
ST22771AA030	22771AA030	SUBARU SELECT MONITOR KIT	Troubleshooting for electrical system.

4. Electrical Component Location

A: LOCATION

1. ENGINE

- Control module

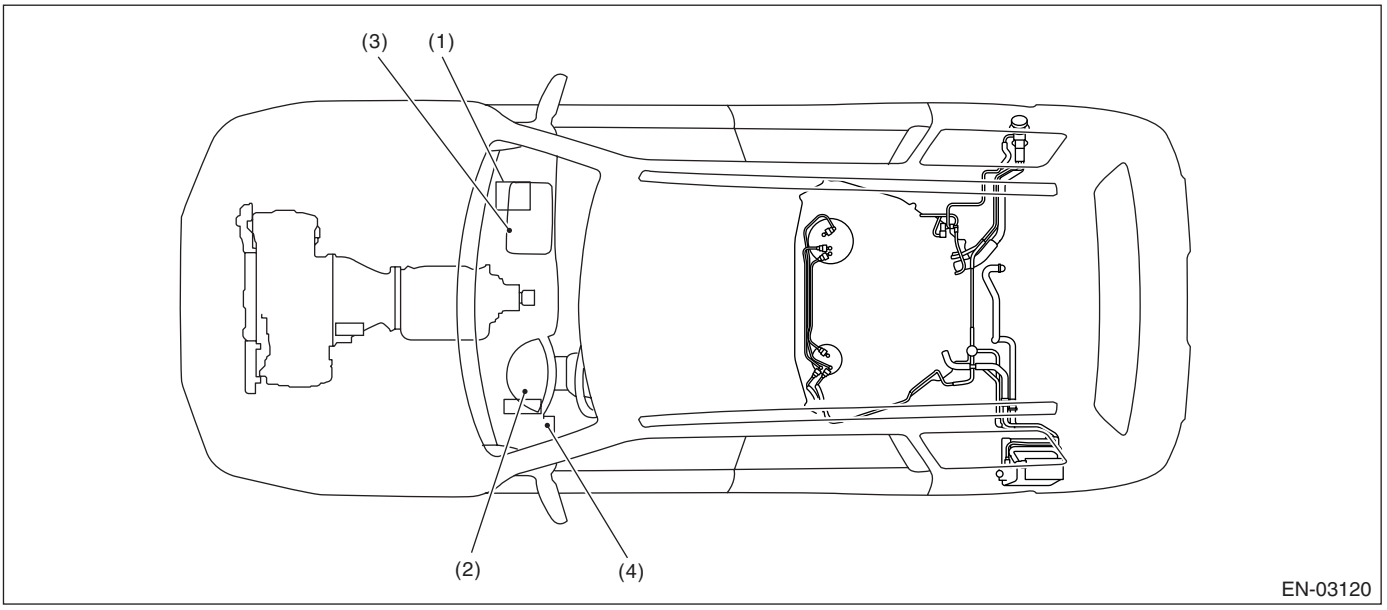

(1) Engine control module (ECM)
(2) Malfunction indicator light
(3) Test mode connector
(4) Data link connector

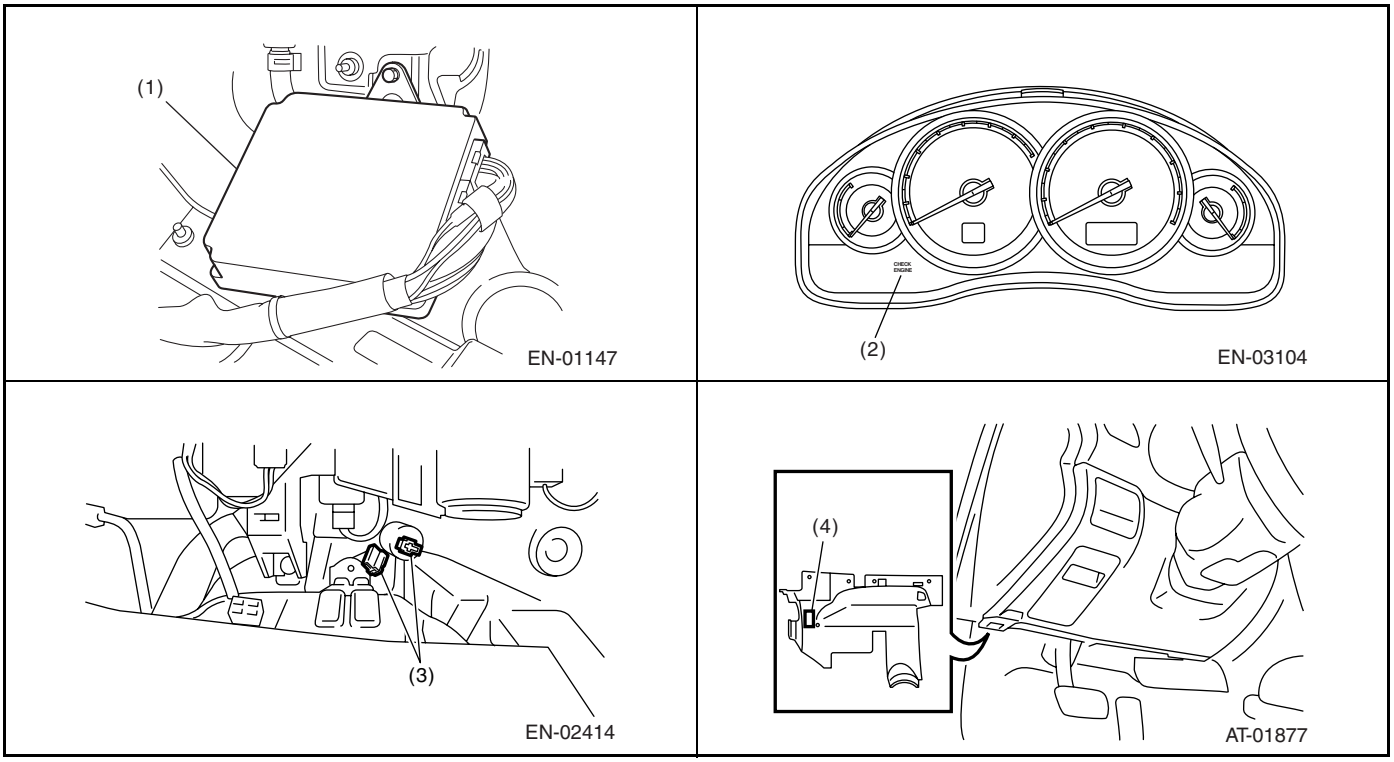

- Sensor

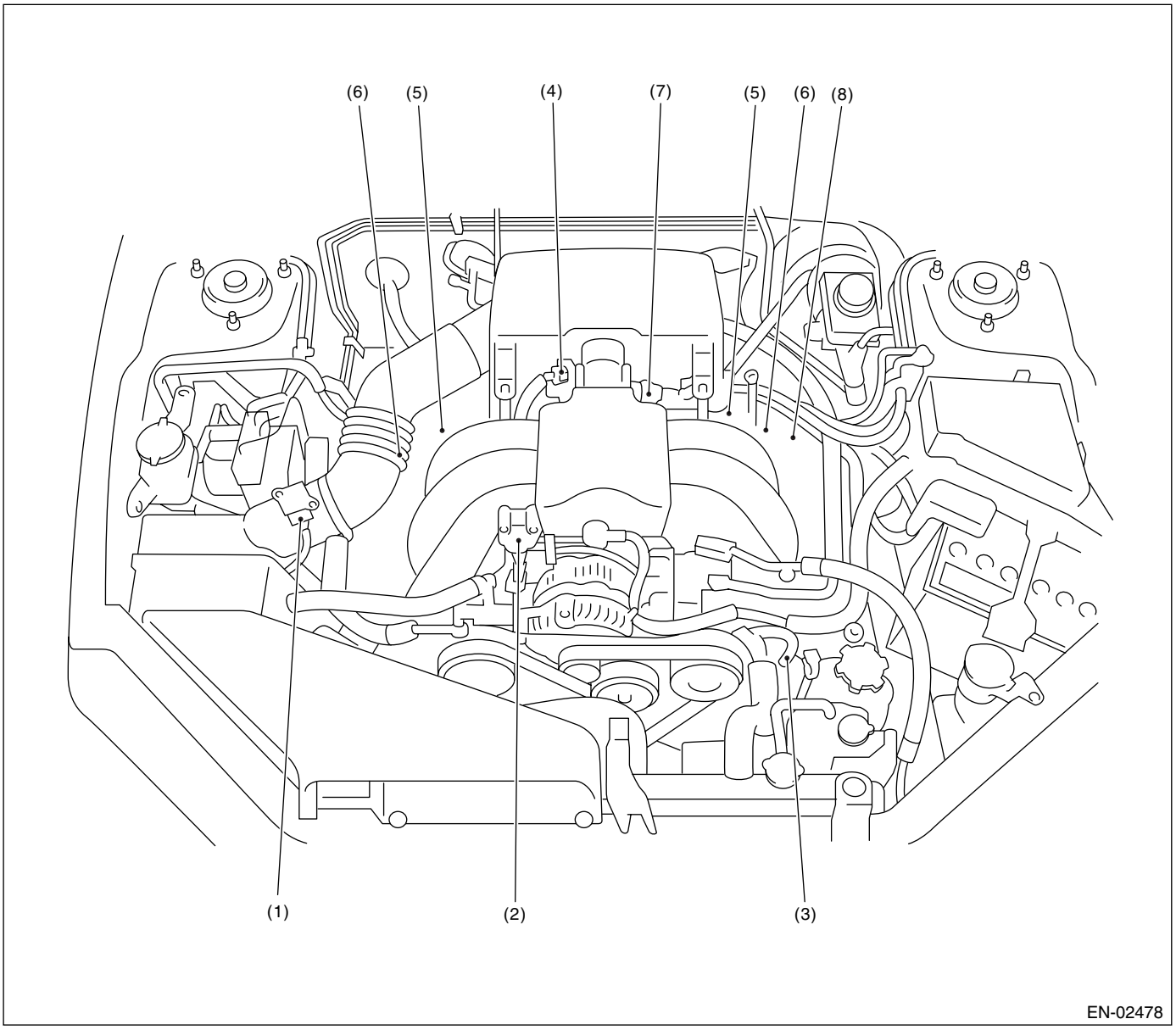

(1) Mass air flow and intake air temperature sensor
(2) Manifold absolute pressure sensor
(3) Engine coolant temperature sensor
(4) Electronic throttle control
(5) Knock sensor
(6) Camshaft position sensor
(7) Crankshaft position sensor
(8) Oil temperature sensor

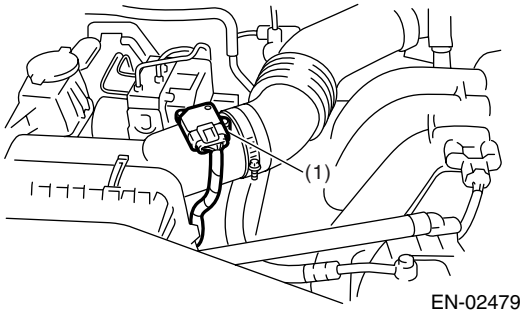

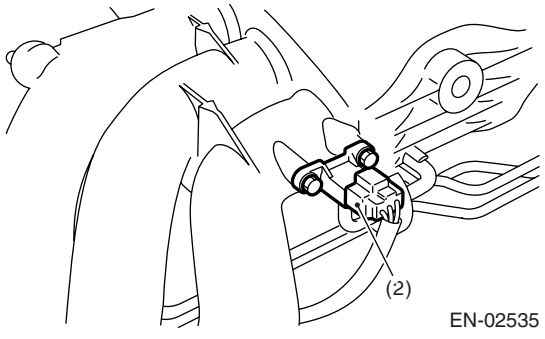

Electrical Component Location

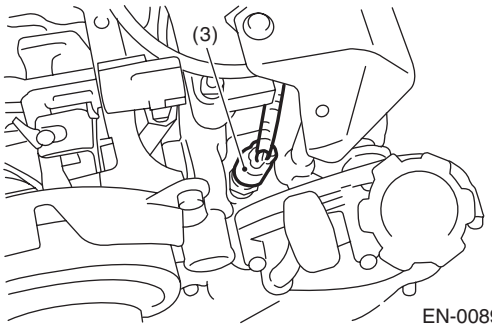

EN-00895

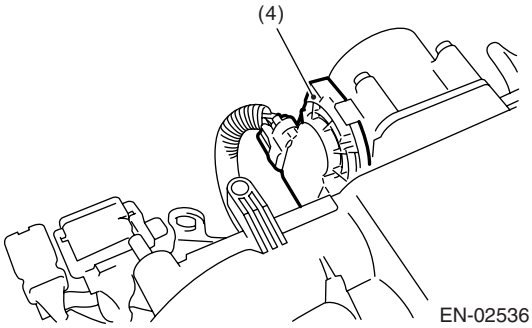

EN-02536

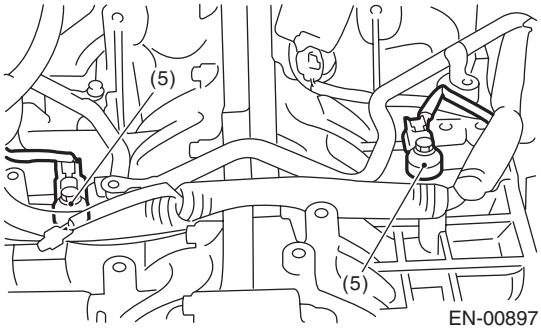

EN-00897

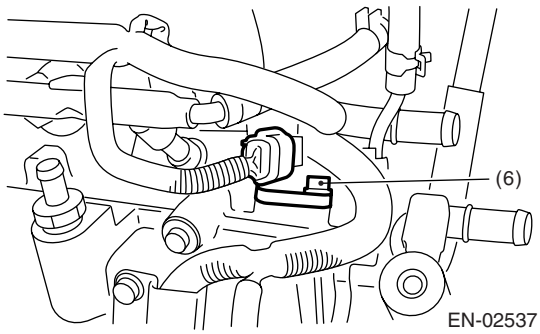

EN-02537

EN-00899

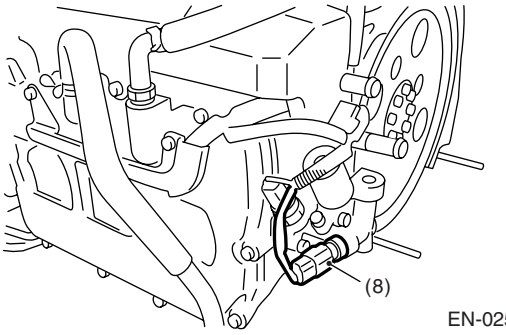

EN-02538

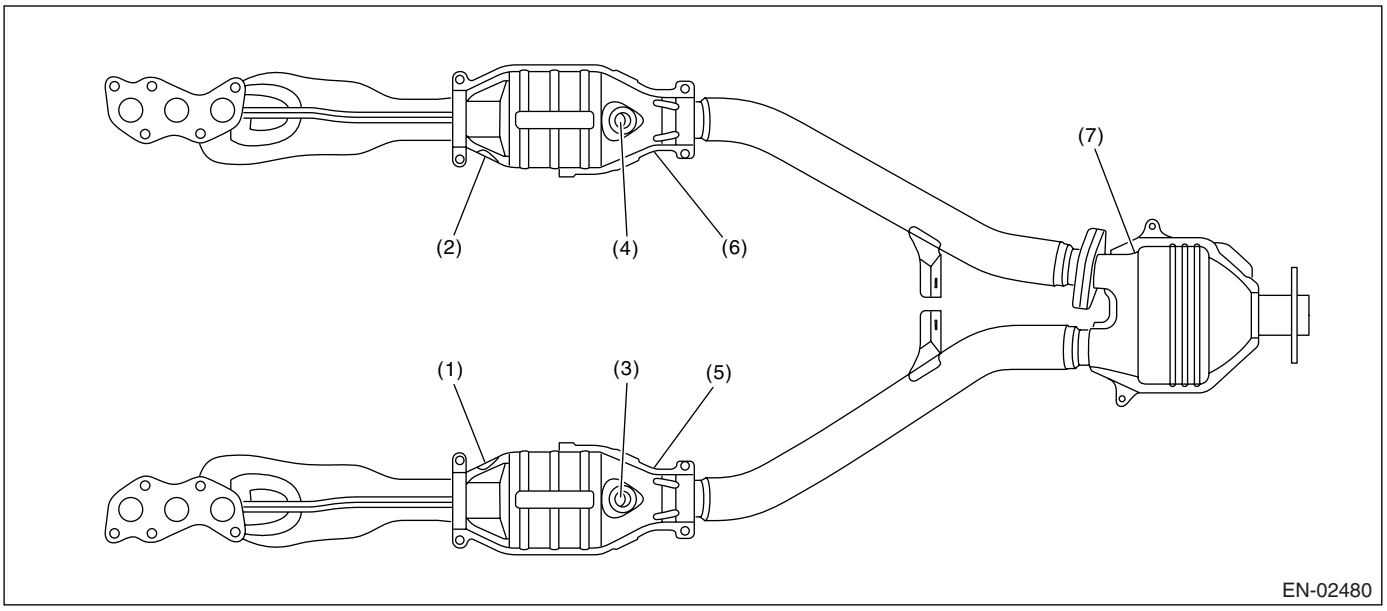

(1) Front oxygen (A/F) sensor LH
(2) Front oxygen (A/F) sensor RH
(3) Rear oxygen sensor LH
(4) Rear oxygen sensor RH
(5) Front catalytic converter LH
(6) Front catalytic converter RH
(7) Rear catalytic converter

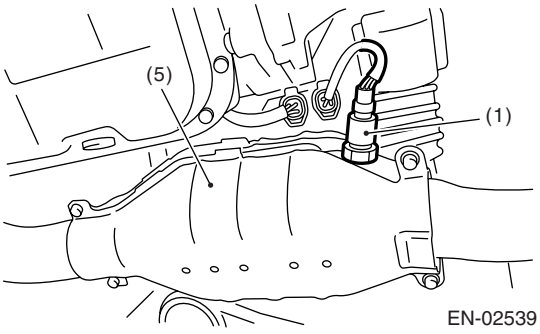

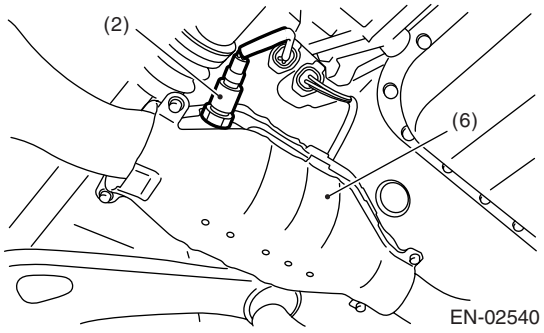

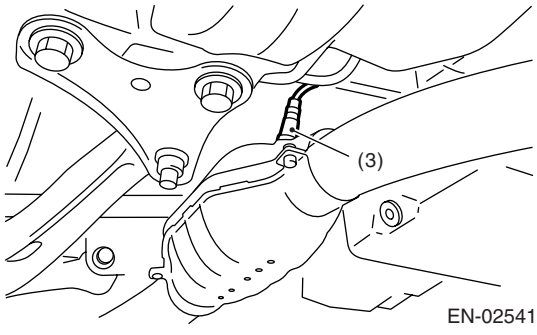

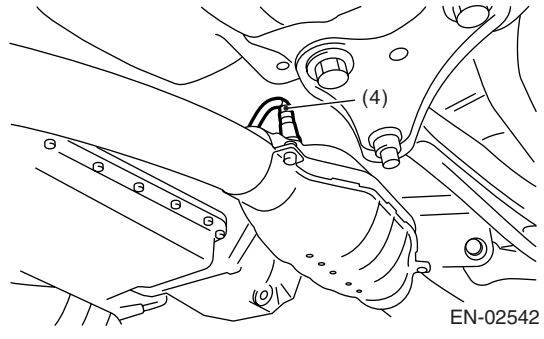

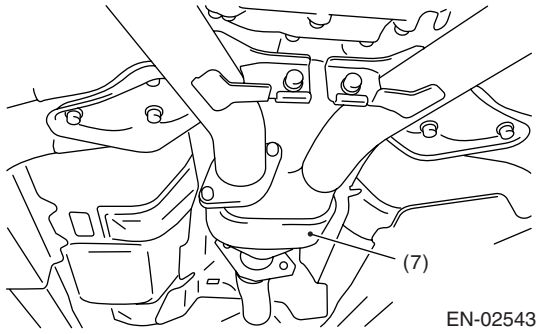

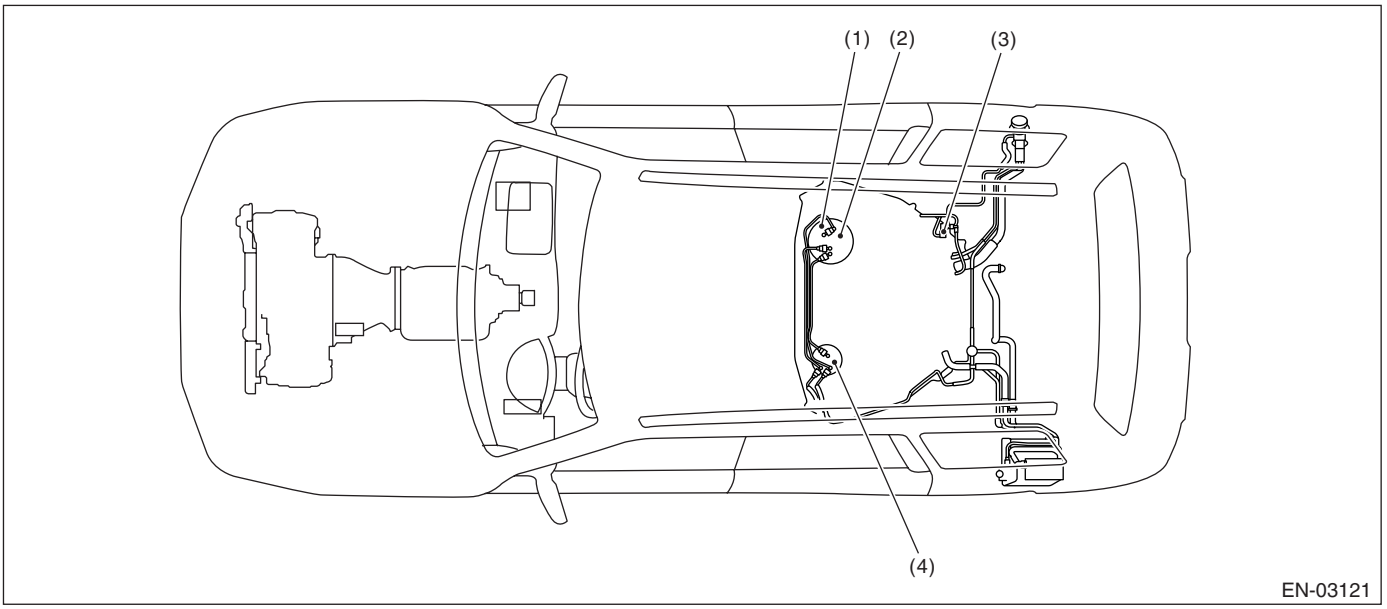

(1) Fuel level sensor
(2) Fuel temperature sensor
(3) Fuel tank pressure sensor
(4) Fuel sub level sensor

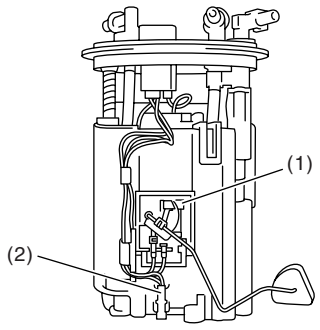

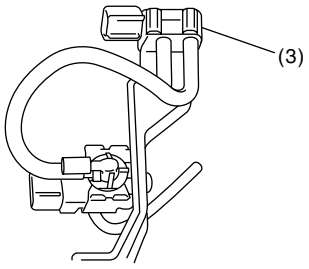

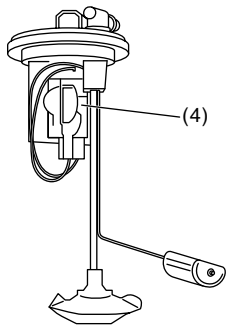

EN-03132

- Solenoid valve, actuator, emission control system parts and ignition system parts

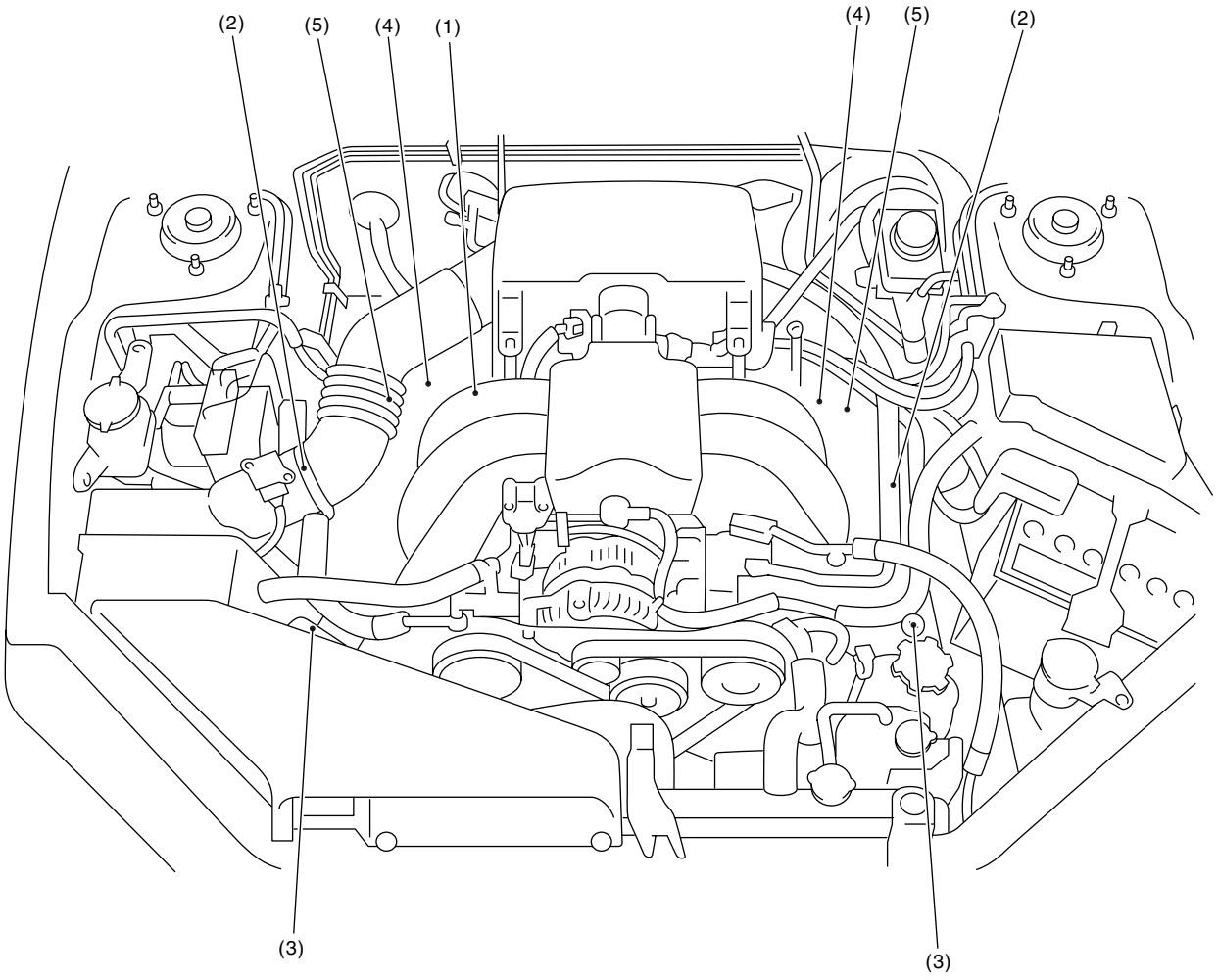

EN-02959

(1) Purge control solenoid valve
(2) Ignition coil and ignitor assembly
(3) Oil flow control solenoid valve
(4) Oil switching solenoid valve
(5) Variable valve lift diagnosis oil pressure switch

Electrical Component Location

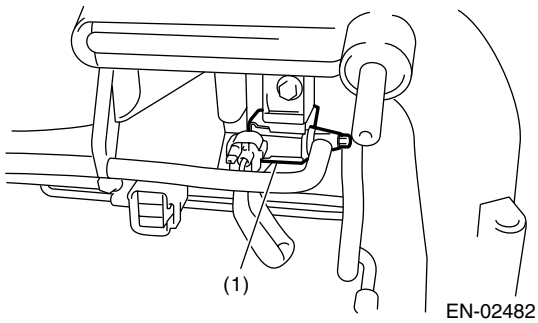

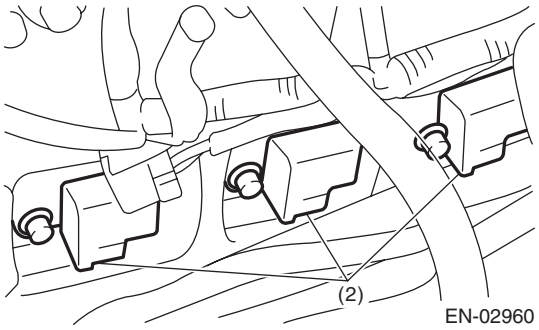

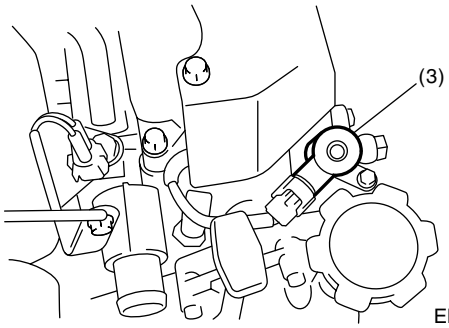

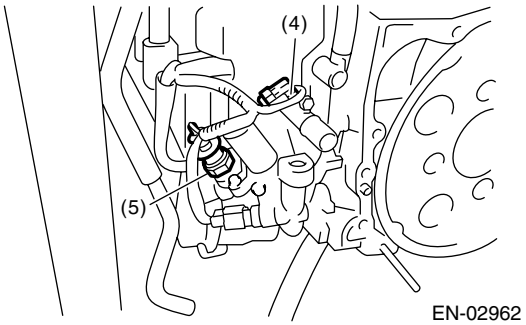

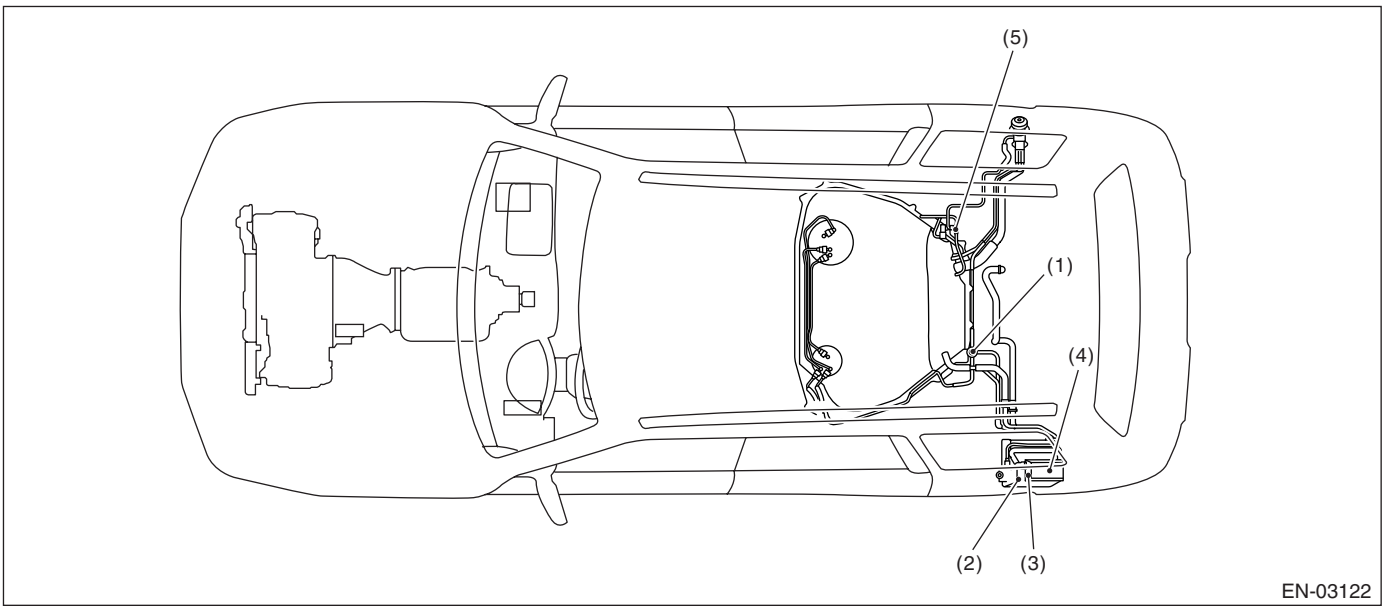

(1) Pressure control solenoid valve
(2) Canister
(3) Drain valve
(4) Drain filter
(5) Fuel tank sensor control valve

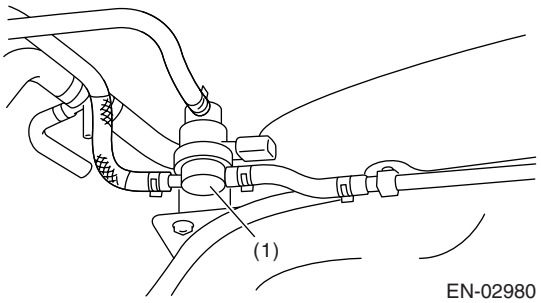

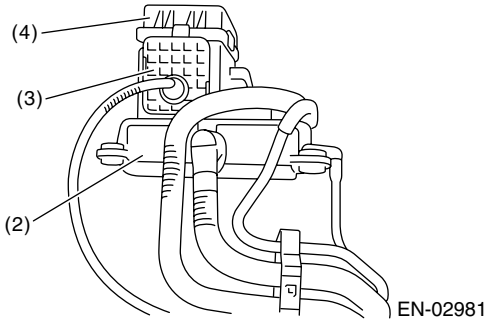

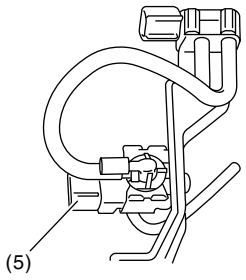

Electrical Component Location

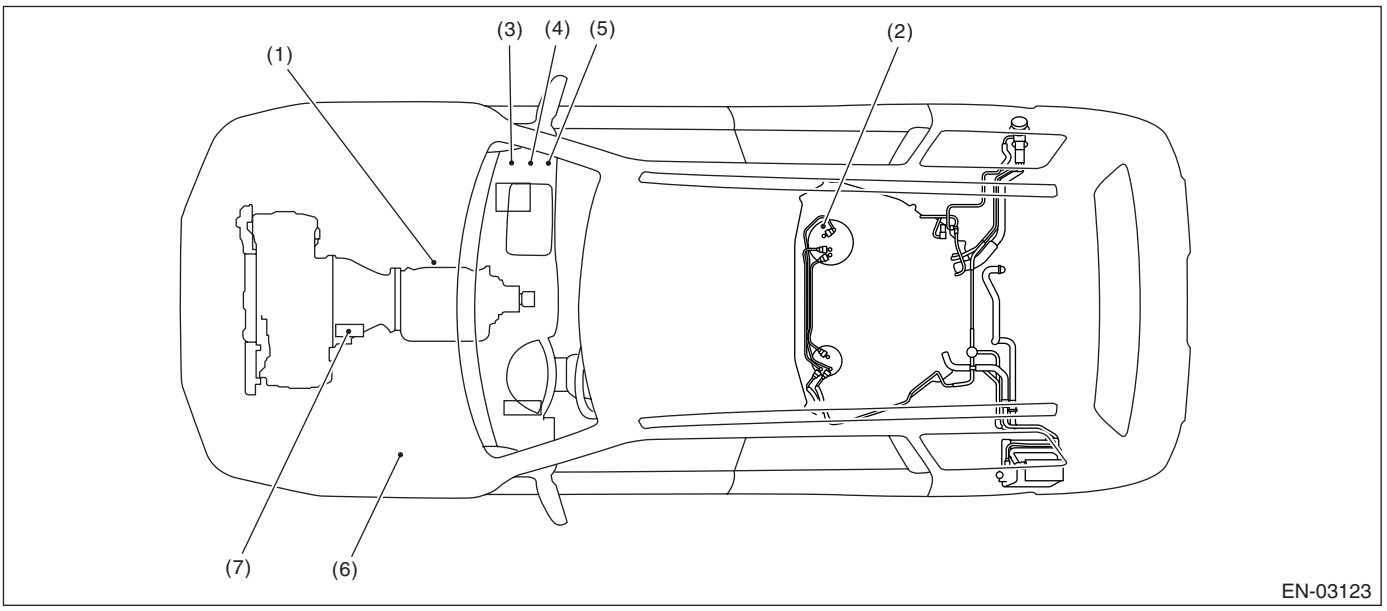

(1) Inhibitor switch
(2) Fuel pump
(3) Main relay
(4) Fuel pump relay
(5) Electronic throttle control relay
(6) Radiator fan relay
(7) Starter

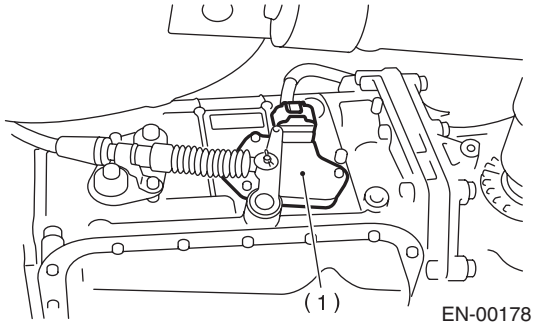

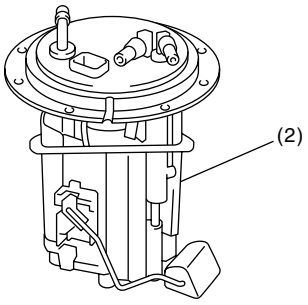

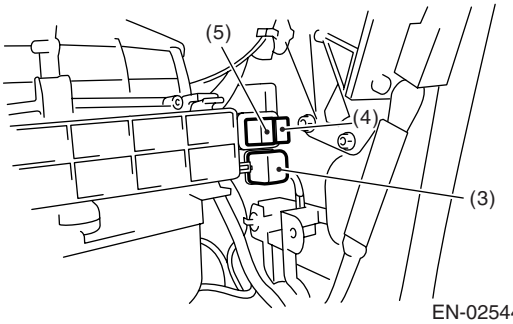

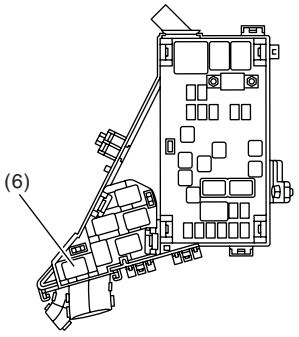

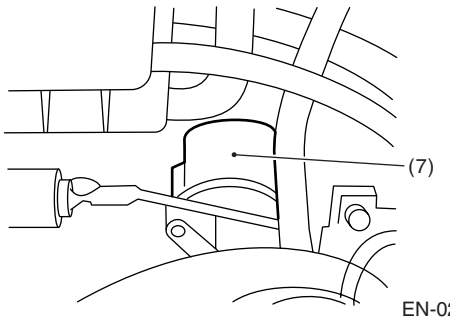
(7)
EN-02490

5. Engine Control Module (ECM) I/O Signal

A: ELECTRICAL SPECIFICATION

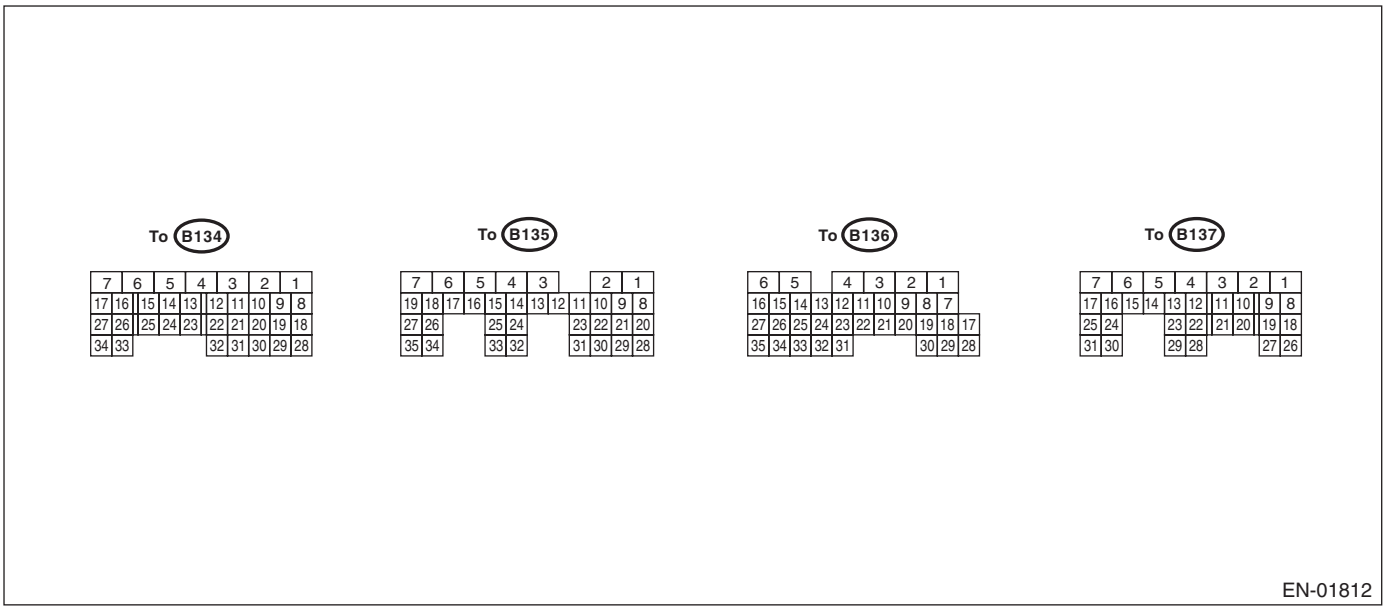

Description		Connector No.	Terminal No.	Signal (V)		Reference
				Ignition SW ON (engine OFF)	Engine ON (idling)	
Crankshaft position sensor	Signal (+)	B135	10	0	–7 — +7	Waveform
	Signal (–)	B135	22	0	0	—
	Shield	B135	31	0	0	—
Camshaft position sensor (LH)		B135	8	0.275	0 or 5	Waveform
Camshaft position sensor (RH)		B135	9	0.275	0 or 5	Waveform
Electronic throttle control	Main	B136	18	0.64 — 0.94 Fully opens: 4.01	0.64 — 0.72 (After engine is warmed-up.)	Fully closed: 0.6 Fully opened: 4.01
	Sub	B136	29	1.51 — 1.76 Fully opens: 4.23	1.51 — 1.58 (After engine is warmed-up.)	Fully closed: 1.48 Fully opens: 4.23
Electronic throttle control motor (+)		B137	5	Duty waveform	Duty waveform	Drive frequency: 500 Hz
Electronic throttle control motor (–)		B137	4	Duty waveform	Duty waveform	Drive frequency: 500 Hz
Electronic throttle control motor power supply		B137	6	10 — 13	12 — 14	—
Electronic throttle control motor relay		B135	35	ON: 0 OFF: 10 — 13	ON: 0 OFF: 13 — 14	When ignition switch is turned to ON: ON
Accelerator pedal position sensor	Main	B136	17	Fully closed: 1 Fully opens: 3.6	Fully closed: 1 Fully opens: 3.3	—
	Power supply	B136	15	5	5	—
	Ground	B136	34	0	0	—
	Sub	B136	28	Fully closed: 1 Fully opens: 3.7	Fully closed: 1 Fully opens: 3.3	—
Engine coolant temperature sensor		B136	14	1.0 — 1.4	1.0 — 1.4	After engine is warmed-up.
Starter switch		B137	8	0	0	Cranking: 8 — 14

Description		Connector No.	Terminal No.	Signal (V)		Reference
				Ignition SW ON (engine OFF)	Engine ON (idling)	
Starter relay		B135	32	ON: 0 OFF: 10 — 13	ON: 0 OFF: 13 — 14	—
A/C switch		B137	17	ON: 10 — 13 OFF: 0	ON: 13 — 14 OFF: 0	—
Ignition switch		B137	14	10 — 13	13 — 14	—
Neutral position switch		B137	9	ON: 0 OFF: 12±0.5		Switch is ON when select lever is shifted into “P” or “N” range.
Test mode connector		B137	15	12 — 14	12 — 14	When connected: 0
Knock sensor 1	Signal	B136	25	2.4	2.4	—
	Shield	B136	33	0	0	—
Knock sensor 2	Signal	B136	24	2.4	2.4	—
	Shield	B136	33	0	0	—
Back-up power supply		B135	19	10 — 13	13 — 14	Ignition switch “OFF”: 10 — 13
Control module power supply		B135	6	10 — 13	13 — 14	—
		B135	5	10 — 13	13 — 14	—
Sensor power supply		B136	16	5	5	—
Ignition control	#1	B135	18	0	13 — 14	Waveform
	#2	B135	17	0	13 — 14	Waveform
	#3	B135	16	0	13 — 14	Waveform
	#4	B135	15	0	13 — 14	Waveform
	#5	B135	14	0	13 — 14	Waveform
	#6	B135	13	0	13 — 14	Waveform
Fuel injector	#1	B136	6	10 — 13	1 — 14	Waveform
	#2	B136	5	10 — 13	1 — 14	Waveform
	#3	B136	4	10 — 13	1 — 14	Waveform
	#4	B136	3	10 — 13	1 — 14	Waveform
	#5	B136	2	10 — 13	1 — 14	Waveform
	#6	B136	1	10 — 13	1 — 14	Waveform
A/C relay control		B135	33	ON: 0.5, or less OFF: 10 — 13	ON: 0.5, or less OFF: 13 — 14	—
Radiator fan control		B134	31	ON: 0.5, or less OFF: 10 — 13	ON: 0.5, or less OFF: 13 — 14	—
Radiator fan control power supply		B135	30	ON: 0.5, or less OFF: 10 — 13	ON: 0.5, or less OFF: 13 — 14	—
Self-shutoff control		B137	16	0	0	—
Malfunction indicator light		B134	17	—	—	Light “ON”: 1, or less Light “OFF”: 10 — 14
Engine speed output		B134	23	—	0 — 13, or more	Waveform
Purge control solenoid valve		B134	14	ON: 1, or less OFF: 10 — 13	ON: 1, or less OFF: 13 — 14	—
Power steering switch		B137	10	ON: 1, or less OFF: 10 — 13	ON: 1, or less OFF: 13 — 14	—
Manifold absolute pressure sensor		B136	22	3.5 — 4.8	1.1 — 1.9	—
Air flow sensor	Signal	B136	23	0.74	0.3 — 4.5	—
	Shield	B136	32	0	0	—
	Ground	B136	31	0	0	—
Intake air temperature sensor		B136	13	3.15 — 3.33	3.15 — 3.33	intake air temperature:25°C (75°F)

Engine Control Module (ECM) I/O Signal

Description		Connector No.	Terminal No.	Signal (V)		Reference
				Ignition SW ON (engine OFF)	Engine ON (idling)	
Front oxygen (A/F) sensor RH	Signal (+)	B134	33	2.8 — 3.2	2.8 — 3.2	—
	Signal (–)	B134	26	2.4 — 2.7	2.4 — 2.7	—
	Shield	B134	25	0	0	—
Front oxygen (A/F) sensor heater RH	Signal 1	B134	3	12 — 14	—	Waveform
	Signal 2	B134	2	12 — 14	—	Waveform
Front oxygen (A/F) sensor LH	Signal (+)	B134	34	2.8 — 3.2	2.8 — 3.2	—
	Signal (–)	B134	27	2.4 — 2.7	2.4 — 2.7	—
	Shield	B134	25	0	0	—
Front oxygen (A/F) sensor heater LH	Signal 1	B134	1	12 — 14	—	Waveform
	Signal 2	B135	7	12 — 14	—	Waveform
Rear oxygen sensor RH	Signal	B137	24	0	0 — 0.9	—
	Shield	B137	31	0	0	—
Rear oxygen sensor heater RH signal		B135	2	12 — 14	—	Waveform
Rear oxygen sensor LH	Signal	B137	25	0	0 — 0.9	—
	Shield	B137	31	0	0	—
Rear oxygen sensor heater LH signal		B135	3	12 — 14	—	Waveform
Immobilizer communication 1		B137	19	10	10	—
Immobilizer communication 2		B137	27	10	10	—
Fuel pump control unit	Signal 1	B137	28	0	13 — 14	—
	Signal 2	B135	27	0	0 or 5	—
Brake switch 1		B136	9	When brake pedal is depressed: 0 When brake pedal is released: 10 — 13	When brake pedal is depressed: 0 When brake pedal is released: 13 — 14	—
Brake switch 2		B136	8	When brake pedal is depressed: 10 — 13 When brake pedal is released: 0	When brake pedal is depressed: 13 — 14 When brake pedal is released: 0	—
Cruise control command switch		B136	11	When operating nothing: 3.5 — 4.5 When operating RES/ACC: 2.5 — 3.5 When operating SET/COAST: 0.5 — 1.5 When operating CANCEL: 0 — 0.5	When operating nothing: 3.5 — 4.5 When operating RES/ACC: 2.5 — 3.5 When operating SET/COAST: 0.5 — 1.5 When operating CANCEL: 0 — 0.5	—
Cruise control main switch		B136	7	ON:0 OFF: 5	ON:0 OFF: 5	—
Oil flow control solenoid valve RH	Signal (+)	B134	18	0	0.6	—
	Signal (–)	B134	28	0	0	—
Oil flow control solenoid valve LH	Signal (+)	B134	19	0	0.6	—
	Signal (–)	B134	29	0	0	—
Oil switching solenoid valve RH	Signal (+)	B134	21	0	1.9	—
	Signal (–)	B134	20	0	0	—

Description		Connector No.	Terminal No.	Signal (V)		Reference
				Ignition SW ON (engine OFF)	Engine ON (idling)	
Oil switching solenoid valve LH	Signal (+)	B135	25	0	1.9	—
	Signal (–)	B135	24	0	0	—
Oil temperature sensor signal		B136	27	1.0 — 1.4	1.0 — 1.4	After engine is warmed-up.
Variable valve lift diagnosis oil pressure switch RH		B135	21	0	0	—
Variable valve lift diagnosis oil pressure switch LH		B135	29	0	0	—
Generator control		B134	22	0 — 6.5	0 — 6.5	—
SSM communication line		B137	20	Less than 1 ←→ More than 4	Less than 1 ←→ More than 4	—
GND (sensor)		B136	35	0	0	—
GND (injector)		B137	7	0	0	—
GND (ignition system)		B135	12	0	0	—
GND (power supply)		B135	4	0	0	—
		B135	1	0	0	—
GND (control system)		B137	2	0	0	—
		B137	1	0	0	—
GND (Front oxygen (A/F) sensor heater RH)		B134	7	0	0	—
GND (Front oxygen (A/F) sensor heater LH)		B134	5	0	0	—
GND (Electronic throttle control)		B137	3	0	0	—
Fuel tank pressure sensor		B136	21	2.3	2.7	—
Pressure control solenoid valve		B134	12	ON: 1 or less OFF: 10 — 13	ON: 1 or less OFF: 13 — 14	—
Drain valve		B134	13	ON: 1 or less OFF: 10 — 13	ON: 1 or less OFF: 13 — 14	—
Fuel tank sensor control valve		B134	24	ON: 1 or less OFF: 10 — 13	ON: 1 or less OFF: 13 — 14	—
Fuel temperature sensor signal		B136	12	2.5 — 3.8	2.5 — 3.8	Ambient temperature: 25°C (75°F)
CAN communication signal (+)		B137	18	—	—	—
CAN communication signal (–)		B137	26	—	—	—

6. Engine Condition Data

A: ELECTRICAL SPECIFICATION

Remarks	Specification
Engine load	2.2 — 3.6 (%): Idling
	5.7 — 11.5 (%): 2,500 rpm racing

Measuring condition:
- After engine is warmed-up.
- Gear position is in “N” or “P” range.
- Turn the A/C to OFF.
- Turn all accessory switches to OFF.

7. Data Link Connector

A: NOTE

This connector is used for Subaru Select Monitor.

CAUTION:
Do not connect any scan tools other than the Subaru Select Monitor and the general scan tools, because the circuit for the Subaru Select Monitor may be damaged.

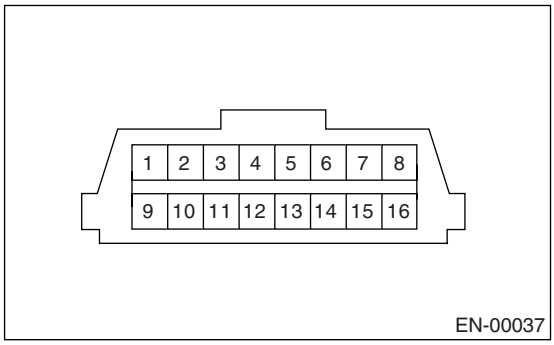

Terminal No.	Remarks	Terminal No.	Remarks
1	Power supply	9	Empty
2	Empty	10	Subaru Select Monitor signal
3	Empty	11	Empty
4	Empty	12	Ground
5	Empty	13	Ground
6	Empty	14	Empty
7	Empty	15	Empty
8	Empty	16	Empty

8. General Scan Tool

A: OPERATION

1. HOW TO USE GENERAL SCAN TOOL

1) Prepare a general scan tool required by SAE J1978.
2) Open the cover and connect the general scan tool to the data link connector located in the lower portion of the instrument panel (on the driver's side).

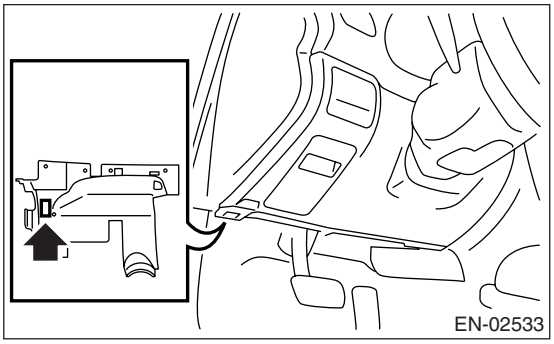

3) Using the general scan tool, call up DTC and freeze frame data.
General scan tool functions consist of:
(1) MODE $01: Current powertrain diagnostic data
(2) MODE $02: Powertrain freeze frame data
(3) MODE $03: Emission-related powertrain DTC
(4) MODE $04: Clear/Reset emission-related diagnostic information
Read out data according to repair procedures. (For detailed operation procedures, refer to the general scan tool instruction manual.)

NOTE:
For details concerning DTCs, refer to the List of Diagnostic Trouble Code (DTC). <Ref. to EN(H6DO)(diag)-71, List of Diagnostic Trouble Code (DTC).>

2. MODE $01 (CURRENT POWERTRAIN DIAGNOSTIC DATA)

Refers to data denoting the current operating condition of analog input/output, digital input/output and/or the powertrain system.
A list of the support data and PID (Parameter Identification) codes are shown in the following table.

PID	Data	Unit of measure
01	Number of emission-related powertrain DTC and malfunction indicator light status	ON/OFF
03	Fuel system control status	—
04	Calculated engine load value	%
05	Engine coolant temperature	°C
06	Short term fuel trim (bank 1)	%
07	Long term fuel trim (bank 1)	%
08	Short term fuel trim (bank 2)	%
09	Long term fuel trim (bank 2)	%
0B	Intake manifold absolute pressure	kPa
0C	Engine revolution	rpm
0D	Vehicle speed	km/h
0E	Ignition timing advance	°
10	Air flow rate of manifold absolute pressure sensor	g/sec
11	Throttle valve opening angle	%
13	Check whether oxygen sensor is installed.	—
24	Oxygen sensor output voltage and short term fuel trim associated with oxygen sensor (bank 1)	V and %
28	Oxygen sensor output voltage and short term fuel trim associated with oxygen sensor (bank 2)	V and %
1C	On-board diagnostic system	—

NOTE:
Refer to general scan tool manufacturer's instruction manual to access generic OBD-II PIDs (MODE $01).

3. MODE $02 (POWERTRAIN FREEZE FRAME DATA)

Refers to data denoting the operating condition when trouble is sensed by the on-board diagnosis system.
A list of the support data and PID (Parameter Identification) codes are shown in the following table.

PID	Data	Unit of measure
02	DTC that caused CARB required freeze frame data storage	—
03	Fuel system control status	—
04	Calculated engine load value	%
05	Engine coolant temperature	°C
06	Short term fuel trim (bank 1)	%
07	Long term fuel trim (bank 1)	%
08	Short term fuel trim (bank 2)	%
09	Long term fuel trim (bank 2)	%
0B	Intake manifold absolute pressure	kPa
0C	Engine speed	rpm
0D	Vehicle speed	km/h

NOTE:
Refer to general scan tool manufacturer's instruction manual to access freeze frame data (MODE $02).

4. MODE $03 (EMISSION-RELATED POWERTRAIN DTC)

Refer to "List of Diagnostic Trouble Code (DTC)" for information about data denoting emission-related powertrain DTC. <Ref. to EN(H6DO)(diag)-71, List of Diagnostic Trouble Code (DTC).>

5. MODE $04 (CLEAR/RESET EMISSION-RELATED DIAGNOSTIC INFORMATION)

Refers to the mode used to clear or reset emission-related diagnostic information (OBD-II trouble diagnostic information).

NOTE:
Refer to general scan tool manufacturer's instruction manual to clear or reset emission-related diagnostic information (MODE $04).

6. MODE $06

Refer to test value of troubleshooting and data of test limit on support data bit sequence table. List of support data is shown in the following table.

TID	CID	Test value
$81	$01	Catalyst system efficiency
$83	$01	Evaporative emission control system 0.04 inch leak
	$02	
	$03	
	$04	
	$05	Evaporative emission control system 0.02 inch leak
	$86	
$84	$01	A/F sensor circuit slow response (Bank 1 Sensor 1)
$85	$01	O_2 sensor circuit slow response (Bank 1 Sensor 2)(rich → lean)
	$02	O_2 sensor circuit slow response (Bank 1 Sensor 2)(lean → rich)
$87	$01	A/F sensor circuit slow response (Bank 2 Sensor 1)
$88	$01	O_2 sensor circuit slow response (Bank 2 Sensor 2)(rich → lean)
	$02	O_2 sensor circuit slow response (Bank 2 Sensor 2)(lean → rich)
$41	$81	O_2 sensor circuit (Bank 1 Sensor 2)
	$02	

7. MODE $07

Refer to the data of DTC (pending code) for troubleshooting result about emission in first time.

8. MODE $09

Refer to the data of vehicle specification (VIN, calibration ID, diagnosis frequency etc.).

9. Subaru Select Monitor

A: OPERATION

1. HOW TO USE SUBARU SELECT MONITOR

1) Prepare the Subaru Select Monitor kit. <Ref. to EN(H6DO)(diag)-7, PREPARATION TOOL, General Description.>

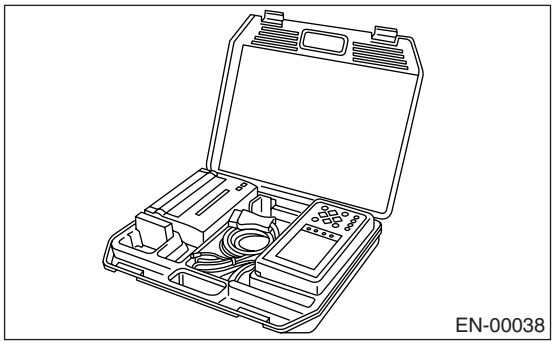

2) Connect the diagnosis cable to Subaru Select Monitor.
3) Insert the cartridge to Subaru Select Monitor. <Ref. to EN(H6DO)(diag)-7, PREPARATION TOOL, General Description.>

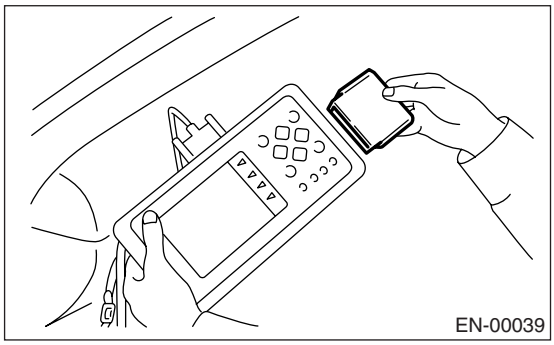

4) Connect the Subaru Select Monitor to data link connector.

(1) Data link connector located in the lower portion of the instrument panel (on the driver's side).

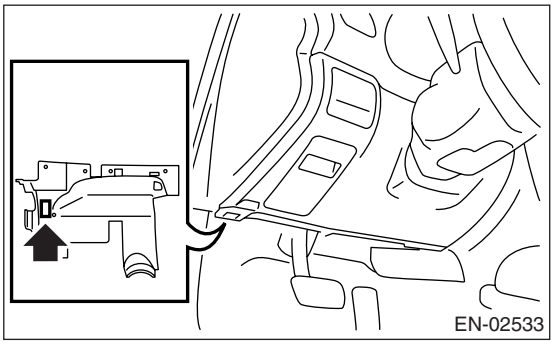

(2) Connect the diagnosis cable to data link connector.

CAUTION:
Do not connect the scan tools except for Subaru Select Monitor and general scan tool.

5) Turn the ignition switch to ON (engine OFF) and turn Subaru Select Monitor switch to ON.

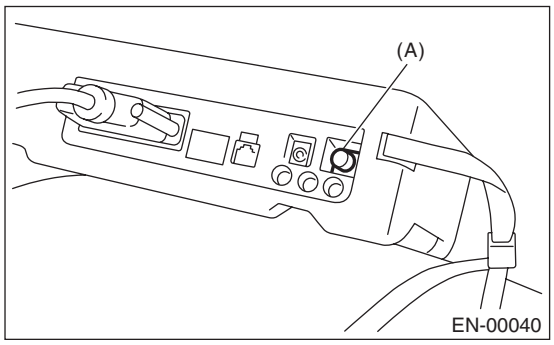

(A) Power switch

6) Using the Subaru Select Monitor, call up DTC and data, then record them.

2. READ DIAGNOSTIC TROUBLE CODE (DTC) FOR ENGINE (NORMAL MODE)

Refer to "Read Diagnostic Trouble Code (DTC)" for information about how to indicate DTC. <Ref. to EN(H6DO)(diag)-34, Read Diagnostic Trouble Code (DTC).>

3. READ DIAGNOSTIC TROUBLE CODE (DTC) FOR ENGINE (OBD MODE)

Refer to "Read Diagnostic Trouble Code (DTC)" for information about how to indicate DTC. <Ref. to EN(H6DO)(diag)-34, Read Diagnostic Trouble Code (DTC).>

4. READ CURRENT DATA FOR ENGINE. (NORMAL MODE)

1) On the «Main Menu» display screen, select the {Each System Check} and press the [YES] key.
2) On the «System Selection Menu» display screen, select the {Engine} and press the [YES] key.
3) Press the [YES] key after the information of engine type has been displayed.
4) On the «Engine Diagnosis» display screen, select the {Current Data Display/Save}, and then press the [YES] key.
5) On the «Data Display Menu» display screen, select the {Data Display} and press the [YES] key.
6) Using the scroll key, scroll the display screen up or down until the desired data is shown.

- A list of the support data is shown in the following table.

Remarks	Display	Unit of measure	Note (at idling)
Engine load	Engine load	%	3.5%
Engine coolant temperature signal	Engine coolant temperature	°C or °F	≥ 75°C or 167°F (After engine is warmed-up.)
A/F compensation 1	A/F Compensation 1	%	3.1%
A/F learning 1	A/F learning 1	%	0.0%
A/F compensation 2	A/F Compensation 2	%	4.7%
A/F learning 2	A/F learning 2	%	0.0%
Intake manifold absolute pressure	Intake manifold absolute pressure	mmHg, kPa, inHg or psig	200 — 300 mmHg, 26.7 — 40 kPa, 7.8 — 11.8 inHg or 3.8 — 5.8 psig
Engine speed signal	Engine speed	rpm	600 — 800 rpm
Meter vehicle speed signal	Meter vehicle speed	km/h or MPH	0 km/h or 0 MPH
Ignition timing signal	Ignition timing	deg	13 — 15 deg
Intake air temperature signal	Intake air temperature	°C or °F	(Ambient air temperature)
Amount of intake air	Amount of intake air	g/s or lb/m	3.8 g/s or 0.5 lb/m
Throttle opening angle signal	Throttle valve angle	%	1.2 — 1.6%
Front oxygen sensor voltage value 1	Front oxygen sensor voltage value 1	V	0.035 V
Front oxygen sensor voltage value 2	Front oxygen sensor voltage value 2	V	0.020 V
Battery voltage	Battery Voltage	V	12 — 14 V
Mass air flow voltage	Mass air flow voltage	V	1.1 — 1.2 V
Injection 1 pulse width	Injection 1 pulse width	ms	2.82 ms
Injection 2 pulse width	Injection 2 pulse width	ms	2.82 ms
Knock sensor compensation	Knock correction	deg	0 deg
Atmospheric pressure signal	Atmospheric pressure	mmHg, kPa, inHg or psig	(Atmospheric pressure)
Intake manifold relative pressure	Intake manifold relative pressure	mmHg, kPa, inHg or psig	(Intake manifold absolute pressure — Atmospheric pressure)
Acceleration opening angle signal	Acceleration opening angle	%	0%
Radiator fan output	Radiator fan output	%	0%
Purge control solenoid valve duty ratio	CPC duty	%	0 — 3%
Generator duty	ALT duty	%	0%
Fuel pump duty	Fuel pump duty	%	33%
Variable valve timing advance angle amount R	VVT advance angle amount R	deg	0 deg
Variable valve timing advance angle amount L	VVT advance angle amount L	deg	0 deg
Oil flow control solenoid valve duty R	OCV duty R	%	9.4%
Oil flow control solenoid valve duty L	OCV duty L	%	9.4%

Remarks	Display	Unit of measure	Note (at idling)
Oil flow control solenoid valve current R	OCV current R	mA	64 mA
Oil flow control solenoid valve current L	OCV current L	mA	64 mA
Front oxygen (A/F) sensor current value 1	A/F sensor current value 1	mA	0.0 mA
Front oxygen (A/F) sensor current value 2	A/F sensor current value 2	mA	0.0 mA
Front oxygen (A/F) sensor resistance value 1	A/F sensor resistance value 1	Ω	31 Ω
Front oxygen (A/F) sensor resistance value 2	A/F sensor resistance value 2	Ω	31 Ω
Front oxygen (A/F) sensor output lambda 1	A/F sensor output lambda 1	—	1.01
Front oxygen (A/F) sensor output lambda 2	A/F sensor output lambda 2	—	1.00
Fuel tank pressure signal	Fuel Tank Pressure	mmHg, kPa, inHg or psig	+8.8 mmHg, +1.2 kPa, +0.4 inHg or +0.17 psig
Fuel temperature signal	Fuel Temp.	°C or °F	+28°C or +82°F
Fuel level signal	Fuel Level	V	5.10 V
A/F compensation 3	A/F Compensation 3	%	–0.16%
A/F learning 3	A/F learning 3	%	0.0%
Throttle motor duty	Throttle motor duty	%	–27%
Throttle power supply voltage	Throttle power supply voltage	V	(Battery voltage)
Sub throttle sensor voltage	Sub throttle sensor voltage	V	1.50 V
Main throttle sensor voltage	Main throttle sensor voltage	V	0.64 V
Sub acceleration sensor voltage	Sub acceleration sensor voltage	V	1.10 V
Main acceleration sensor voltage	Main acceleration sensor voltage	V	0.98 V
Memory vehicle speed	Memory vehicle speed	km/h or MPH	0 km/h or 0 MPH
A/F compensation 4	A/F compensation 4	%	0.31%
A/F learning 4	A/F learning 4	%	0.0%
Fuel level sensor resistance	Fuel level resistance	W	4 — 96 W
Engine oil temperature	Oil Temperature	°C	≥ 85°C (After engine is warmed-up.)
Oil switching solenoid valve duty R	OSV duty R	%	17.3%
Oil switching solenoid valve duty L	OSV duty L	%	17.3%
Oil switching solenoid valve current R	OSV current R	mA	192 mA
Oil switching solenoid valve current L	OSV current L	mA	192 mA
Variable valve lift lift mode	VVL Lift Mode	—	1
#1 cylinder roughness monitor	#1 cylinder roughness monitor	—	0
#2 cylinder roughness monitor	#2 cylinder roughness monitor	—	0
#3 cylinder roughness monitor	#3 cylinder roughness monitor	—	0
#4 cylinder roughness monitor	#4 cylinder roughness monitor	—	0
#5 cylinder roughness monitor	#5 cylinder roughness monitor	—	0

Remarks	Display	Unit of measure	Note (at idling)
#6 cylinder roughness monitor	#6 cylinder roughness monitor	—	0
Test mode terminal	Test mode terminal	—	U check
Neutral position switch signal	Neutral SW	—	Neutral
Idle switch signal	Soft idle SW	—	In idle
Ignition switch signal	Ignition SW	—	ON input
Power steering switch signal	Power steering SW input signal	—	OFF input (when OFF)
Air conditioning switch signal	A/C SW	—	OFF input (when OFF)
Steering wheel switch signal	Steering wheel SW	—	Hi input
Starter switch signal	Starter SW	—	OFF input
Front oxygen monitor 1	Front oxygen monitor 1	—	Rich
Front oxygen monitor 2	Front oxygen monitor 2	—	Rich
Knocking signal	Knock signal	—	No
Crankshaft position sensor signal	Crankshaft angle signal	—	Yes
Camshaft position sensor signal	Camshaft angle signal	—	Yes
Pressure control solenoid valve signal	PCV Solenoid	—	OFF output (when OFF)
Drain valve signal	Vent Control Solenoid	—	OFF output (when OFF)
Fuel tank control solenoid valve signal	Tank Sensor Cntl Valve	—	OFF output (when OFF)
Rear defogger switch signal	Rear defogger SW	—	OFF input (when OFF)
Blower fan switch signal	Blower fan SW	—	OFF input (when OFF)
Light switch signal	Light SW	—	OFF input (when OFF)
Wiper switch signal	Wiper SW	—	OFF input (when OFF)
A/C lock signal	A/C lock signal	—	OFF input
A/C middle pressure switch signal	A/C middle pressure SW	—	OFF input
A/C compressor relay signal	A/C compressor relay output	—	OFF output
AT coordinate retard angle demand signal	AT coordinate retard angle demand	—	Yes
AT coordinate fuel cut demand signal	AT coordinate fuel cut demand	—	No
Vehicle dynamics control (VDC) torque down prohibition output	VDC torque down prohibition output	—	ON
Vehicle dynamics control (VDC) torque down demand	VDC torque down demand	—	OFF
AT coordinate permission signal	AT coordinate permission signal	—	ON
Electronic throttle control motor relay signal	ETC motor relay	—	ON
Stop light switch signal	Stop light SW	—	OFF
SET/COAST switch signal	SET/COAST SW	—	OFF
RESUME/ACCEL switch signal	RESUME/ACCEL SW	—	OFF
Brake switch signal	Brake SW	—	OFF
Main switch signal	Main SW	—	OFF
Body integrated unit data reception	Body Int. Unit Data	—	ON
Body integrated unit counter update	Body Int. Unit Count	—	ON
Cruise control cancel switch signal	CC Cancel SW	—	OFF
Variable valve lift diagnosis oil pressure switch signal 1	Oil Temperature SW1	—	ON
Variable valve lift diagnosis oil pressure switch signal 2	Oil Temperature SW2	—	ON

5. READ CURRENT DATA FOR ENGINE (OBD MODE)

1) On the «Main Menu» display screen, select the {Each System Check} and press the [YES] key.
2) On the «System Selection Menu» display screen, select the {Engine} and press the [YES] key.
3) Press the [YES] key after the information of engine type has been displayed.
4) On the «Engine Diagnosis» display screen, select the {OBD system} and press the [YES] key.
5) On the «OBD Menu» display screen, select the {Current Data Display/Save}, and press the [YES] key.
6) On the «Data Display Menu» display screen, select the {Data Display} and press the [YES] key.
7) Using the scroll key, scroll the display screen up or down until the desired data is shown.

• A list of the support data is shown in the following table.

DESCRIPTION	Display	Unit of measure
Number of diagnosis code	Number of Diag. Code:	0
Condition of malfunction indicator light	MI (MIL)	ON or OFF
Monitoring test of misfire	Misfire monitoring	No
Monitoring test of fuel system	Fuel system monitoring	Finish
Monitoring test of comprehensive component	Component monitoring	Finish
Test of catalyst	Catalyst Diagnosis	Finish or incomplete
Test of heating-type catalyst	Heated catalyst	No
Test of evaporative emission purge control system	Evaporative purge system	Finish or incomplete
Test of secondary air system	Secondary air system	No
Test of air conditioning system refrigerant	A/C system refrigerant	No
Test of oxygen sensor	Oxygen sensor	Finish or incomplete
Test of oxygen sensor heater	Oxygen sensor heater	Finish
Test of EGR system	EGR system	No support
A/F control #1	Fuel system for Bank 1	OPEN early period
A/F control #2	Fuel system for Bank 2	OPEN early period
Load	Calculated load valve	%
Engine coolant temperature	Coolant Temp.	°C
A/F compensation #1	Short term fuel trim B1	%
A/F learning #1	Long term fuel trim B1	%
A/F compensation #2	Short term fuel trim B2	%
A/F learning #2	Long term fuel trim B2	%
Intake manifold absolute pressure	Mani. Absolute Pressure	mmHg, kPa, inHg or psig
Engine speed	Engine Speed	rpm
Vehicle speed	Vehicle Speed	km/h or MPH
Ignition timing #1	Ignition timing adv. #1	°
Intake air temperature	Intake Air Temp.	°C
Amount of intake air	Mass Air Flow	g/s
Throttle valve angle	Throttle Opening Angle	%
Oxygen sensor #12	Oxygen sensor #12	V
A/F compensation #12	Short term fuel trim #12	%
Oxygen sensor #22	Oxygen sensor #22	%
A/F compensation #22	A/F compensation #22	%
OBD system	OBD System	—
Oxygen sensor #11	Oxygen sensor #11	Support
Oxygen sensor #12	Oxygen sensor #12	Support
Oxygen sensor #21	Oxygen sensor #21	Support
Oxygen sensor #22	Oxygen sensor #22	Support
A/F sensor #11	A/F sensor #11	—
A/F sensor #11	A/F sensor #11	V
A/F sensor #21	A/F sensor #21	—
A/F sensor #21	A/F sensor #21	V
A/F sensor #11	A/F sensor #11	—

DESCRIPTION	Display	Unit of measure
A/F sensor #11	A/F sensor #11	mA
A/F sensor #21	A/F sensor #21	—
A/F sensor #21	A/F sensor #21	mA

NOTE:
For detailed operation procedures, refer to the SUBARU SELECT MONITOR OPERATION MANUAL.

6. READ FREEZE FRAME DATA FOR ENGINE (OBD MODE)

1) On the «Main Menu» display screen, select the {Each System Check} and press the [YES] key.
2) On the «System Selection Menu» display screen, select the {Engine} and press the [YES] key.
3) Press the [YES] key after the information of engine type has been displayed.
4) On the «Engine Diagnosis» display screen, select the {OBD System} and press the [YES] key.
5) On the «OBD Menu» display screen, select the {Freeze Frame Data} and press the [YES] key.
• A list of the support data is shown in the following table.

DESCRIPTION	Display	Unit of measure
DTC of freeze frame data	Freeze frame data	DTC
Air fuel ratio control system for bank 1	Fuel system for Bank1	—
Air fuel ratio control system for bank 2	Fuel system for bank 2	—
Engine load data	Engine Load	%
Engine coolant temperature signal	Coolant Temp.	°C or °F
Short term fuel trim by front oxygen (A/F) sensor (bank 1)	Short term fuel trim B1	%
Long term fuel trim by front oxygen (A/F) sensor (bank 1)	Long term fuel trim B1	%
Short term fuel trim by front oxygen (A/F) sensor (bank 2)	Short term fuel trim B2	%
Long term fuel trim by front oxygen (A/F) sensor (bank 2)	Long term fuel trim B2	%
Intake manifold absolute pressure signal	Mani. Absolute Pressure	mmHg, kPa, inHg or psi
Engine speed signal	Engine Speed	rpm
Vehicle speed signal	Vehicle Speed	km/h or MPH
Ignition timing adv. #1	Ignition timing adv. #1	°
Intake Air Temp	Intake Air Temp.	°C
Mass Air Flow	Mass Air Flow	g/s
Throttle Opening Angle	Throttle Opening Angle	%
Oxygen sensor #12	Oxygen sensor #12	V
Short term fuel trim #12	Short term fuel trim #12	%
Oxygen sensor #22	Oxygen sensor #22	V
Short term fuel trim #12	Short term fuel trim #12	%
Oxygen sensor #11	Oxygen sensor #11	support
Oxygen sensor #12	Oxygen sensor #12	support
Oxygen sensor #21	Oxygen sensor #21	support
Oxygen sensor #22	Oxygen sensor #22	support

NOTE:
For detailed operation procedures, refer to the SUBARU SELECT MONITOR OPERATION MANUAL.

7. LED OPERATION MODE FOR ENGINE

1) On the «Main Menu» display screen, select the {Each System Check} and press the [YES] key.
2) On the «System Selection Menu» display screen, select the {Engine} and press the [YES] key.
3) Press the [YES] key after the information of engine type has been displayed.
4) On the «Engine Diagnosis» display screen, select the {Current Data Display/Save}, and then press the [YES] key.
5) On the «Data Display Menu» display screen, select the {Data & LED Display} and press the [YES] key.
6) Using the scroll key, scroll the display screen up or down until the desired data is shown.
• A list of the support data is shown in the following table.

Remarks	Display	Message	When LED "ON" required
Test mode signal	Test mode terminal	D check/U check	D check
Neutral position switch signal	Neutral SW	Neutral/Other than neutral	Neutral
Idle switch signal	Soft idle SW	Idle/Other than idle	In idle
Ignition switch signal	Ignition SW	ON Input/OFF Input	ON input
Power steering switch signal	Power steering SW	ON Input/OFF Input	ON input
Air conditioning switch signal	A/C SW	ON Input/OFF Input	ON input
Starter switch signal	Starter SW	ON Input/OFF Input	ON input
Front oxygen monitor 1	FtO2 monitor 1	Lean/Rich	Rich
Front oxygen monitor 2	FtO2 monitor 2	Lean/Rich	Rich
Knocking signal	Knock signal	Yes/No	Yes
Crankshaft position sensor signal	Crankshaft angle signal	Yes/No	Yes
Camshaft position sensor signal	Camshaft angle signal	Yes/No	Yes
Rear defogger switch signal	Rear defogger SW	ON Input/OFF Input	ON input
Blower fan switch signal	Blower fan SW	ON Input/OFF Input	ON input
Light switch signal	Light SW	ON Input/OFF Input	ON input
Air conditioning lock signal	A/C lock signal	ON Input/OFF Input	ON input
A/C middle pressure switch signal	A/C middle pressure SW	ON Input/OFF Input	ON input
Air conditioner compressor relay signal	Compressor relay	ON output/OFF output	ON output
Pressure control solenoid valve signal	PCV Solenoid	ON/OFF	When pressure control valve is ON.
Drain valve signal	Vent Control Solenoid	ON/OFF	When drain valve is ON.
Fuel tank sensor control valve signal	Tank Sensor Cntl Valve	ON/OFF	When fuel tank sensor control valve is ON.
AT retard angle demand signal	AT retard angle demand	Yes/No	Yes
AT fuel cut signal	AT fuel cut	Yes/No	Yes
VDC torque down prohibition output	Torque down output	ON/OFF	Prohibition
VDC torque down demand	Torque down demand	Yes/No	Yes
AT coordinate permission signal	AT coordinate permission signal	ON/OFF	Permission
Electronic throttle control motor relay signal	ETC motor relay	ON/OFF	ON
Stop light switch signal	Stop SW	ON Input/OFF Input	ON input
SET/COAST switch signal	SET/CST SW	ON Input/OFF Input	ON input
RESUME/ACCEL switch signal	RES/ACC SW	ON Input/OFF Input	ON input
Brake switch signal	Brake SW	ON Input/OFF Input	ON input
Main switch signal	Main SW	ON Input/OFF Input	ON input
Body integrated unit data reception	Body Int. Unit Data	Yes/No	Yes
Body integrated unit counter update	Body Int. Unit Count	Yes/No	Yes
Cruise control cancel switch signal	CC Cancel SW	ON Input/OFF Input	ON input

NOTE:
For detailed operation procedures, refer to the SUBARU SELECT MONITOR OPERATION MANUAL.

8. VIN REGISTRATION

1) On the «Main Menu» display screen, select the {Each System Check} and press the [YES] key.
2) On the «System Selection Menu» display screen, select the {Engine} and press the [YES] key.
3) Press the [YES] key after the information of engine type has been displayed.
4) On the «Engine Diagnosis» display screen, select the {VIN Registration} and press the [YES] key.
5) Perform the procedure shown on display screen.

NOTE:
For detailed operation procedures, refer to the SUBARU SELECT MONITOR OPERATION MANUAL.

10. Read Diagnostic Trouble Code (DTC)

A: OPERATION

1. SUBARU SELECT MONITOR (NORMAL MODE)

1) On the «Main Menu» display screen, select the {Each System Check} and press the [YES] key.
2) On the «System Selection Menu» display screen, select the {Engine} and press the [YES] key.
3) Press the [YES] key after the information of engine type has been displayed.
4) On the «Engine Diagnosis» screen, select the {DTC Display}, and then press the [YES] key.
5) On the «Diagnostic Code(s) Display» screen, select the {Current Diagnostic Code(s)} or {History Diagnostic Code(s)}, and then press the [YES] key.

NOTE:
• For detailed operation procedures, refer to the SUBARU SELECT MONITOR OPERATION MANUAL.
• For details concerning DTC, refer to the List of Diagnostic Trouble Code (DTC). <Ref. to EN(H6DO)(diag)-71, List of Diagnostic Trouble Code (DTC).>

2. SUBARU SELECT MONITOR (OBD MODE)

1) On the «Main Menu» display screen, select the {Each System Check} and press the [YES] key.
2) On the «System Selection Menu» display screen, select the {Engine} and press the [YES] key.
3) Press the [YES] key after the information of engine type was displayed.
4) On the «Engine Diagnosis» display screen, select the {OBD System} and press the [YES] key.
5) On the «OBD Menu» display screen, select the {DTC Display} and press the [YES] key.
6) Make sure DTC is shown on the screen.

NOTE:
• For detailed operation procedures, refer to the SUBARU SELECT MONITOR OPERATION MANUAL.
• For details concerning DTC, refer to the List of Diagnostic Trouble Code (DTC). <Ref. to EN(H6DO)(diag)-71, List of Diagnostic Trouble Code (DTC).>

3. GENERAL SCAN TOOL

Refers to data denoting emission-related power-train DTC.
For details concerning DTCs, refer to the List of Diagnostic Trouble Code (DTC). <Ref. to EN(H6DO)(diag)-71, List of Diagnostic Trouble Code (DTC).>

NOTE:
Refer to general scan tool manufacturer's instruction manual to access power train DTC (MODE $03).

11.Inspection Mode

A: PROCEDURE

When performing the diagnose without the “List of Diagnostic Trouble Code (DTC)”, refer the item of drive cycle. <Ref. to EN(H6DO)(diag)-40, Drive Cycle.>

DTC	Item	Condition
P0011	Intake Camshaft Position Timing - Over-Advanced (Bank 1)	—
P0021	Intake Camshaft Position Timing - Over-Advanced (Bank 2)	—
P0031	HO2S Heater Control Circuit Low (Bank 1 Sensor 1)	—
P0032	HO2S Heater Control Circuit High (Bank 1 Sensor 1)	—
P0037	HO2S Heater Control Circuit Low (Bank 1 Sensor 2)	—
P0038	HO2S Heater Control Circuit High (Bank 1 Sensor 2)	—
P0051	HO2S Heater Control Circuit Low (Bank 2 Sensor 1)	—
P0052	HO2S Heater Control Circuit High (Bank 2 Sensor 1)	—
P0057	HO2S Heater Control Circuit Low (Bank 2 Sensor 2)	—
P0058	HO2S Heater Control Circuit High (Bank 2 Sensor 2)	—
P0077	Intake Valve Control Circuit High (Bank 1)	—
P0083	Intake Valve Control Circuit High (Bank 2)	—
P0102	Mass or Volume Air Flow Circuit Low Input	—
P0103	Mass or Volume Air Flow Circuit High Input	—
P0107	Manifold Absolute Pressure/Barometric Pressure Circuit Low Input	—
P0108	Manifold Absolute Pressure/Barometric Pressure Circuit High Input	—
P0112	Intake Air Temperature Circuit Low Input	—
P0113	Intake Air Temperature Circuit High Input	—
P0117	Engine Coolant Temperature Circuit Low Input	—
P0118	Engine Coolant Temperature Circuit High Input	—
P0122	Throttle/Pedal Position Sensor/Switch “A” Circuit Low Input	—
P0123	Throttle/Pedal Position Sensor/Switch “A” Circuit High Input	—
P0131	O2 Sensor Circuit Low Voltage (Bank 1 Sensor 1)	—
P0132	O2 Sensor Circuit High Voltage (Bank 1 Sensor 1)	—
P0137	O2 Sensor Circuit Low Voltage (Bank 1 Sensor 2)	—
P0138	O2 Sensor Circuit High Voltage (Bank 1 Sensor 2)	—
P0151	O2 Sensor Circuit Low Voltage (Bank 2 Sensor 1)	—
P0152	O2 Sensor Circuit High Voltage (Bank 2 Sensor 1)	—
P0157	O2 Sensor Circuit Low Voltage (Bank 2 Sensor 2)	—
P0158	O2 Sensor Circuit High Voltage (Bank 2 Sensor 2)	—
P0182	Fuel Temperature Sensor “A” Circuit Low Input	—
P0183	Fuel Temperature Sensor “A” Circuit High Input	—
P0197	Engine Oil Temperature Sensor Circuit Low	—
P0198	Engine Oil Temperature Sensor Circuit High	—
P0222	Throttle/Pedal Position Sensor/Switch “B” Circuit Low Input	—
P0223	Throttle/Pedal Position Sensor/Switch “B” Circuit High Input	—
P0230	Fuel Pump Primary Circuit	—
P0327	Knock Sensor 1 Circuit Low Input (Bank 1 or Single Sensor)	—
P0328	Knock Sensor 1 Circuit High Input (Bank 1 or Single Sensor)	—
P0332	Knock Sensor 2 Circuit Low Input (Bank 2)	—
P0333	Knock Sensor 2 Circuit High Input (Bank 2)	—
P0335	Crankshaft Position Sensor “A” Circuit	—
P0336	Crankshaft Position Sensor “A” Circuit Range/Performance	—
P0340	Camshaft Position Sensor “A” Circuit (Bank 1 or Single Sensor)	—
P0345	Camshaft Position Sensor “A” Circuit (Bank 2)	—
P0447	Evaporative Emission Control System Vent Control Circuit Open	—

DTC	Item	Condition
P0448	Evaporative Emission Control System Vent Control Circuit Shorted	—
P0452	Evaporative Emission Control System Pressure Sensor Low Input	—
P0453	Evaporative Emission Control System Pressure Sensor High Input	—
P0458	Evaporative Emission Control System Purge Control Valve Circuit Low	—
P0462	Fuel Level Sensor Circuit Low Input	—
P0463	Fuel Level Sensor Circuit High Input	—
P0500	Vehicle Speed Sensor	—
P0512	Starter Request Circuit	—
P0513	Incorrect Immobilizer Key	—
P0519	Idle Control System Malfunction (Fail-Safe)	—
P0600	Serial Communication Link	—
P0604	Internal Control Module Random Access Memory (RAM) Error	—
P0605	Internal Control Module Read Only Memory (ROM) Error	—
P0607	Control Module Performance	—
P0638	Throttle Actuator Control Range/Performance (Bank 1)	—
P0691	Cooling Fan 1 Control Circuit Low	—
P0692	Cooling Fan 1 Control Circuit High	—
P0700	Transmission Control System (MIL Request)	—
P1152	O2 Sensor Circuit Range/Performance (Low) (Bank1 Sensor1)	—
P1153	O2 Sensor Circuit Range/Performance (High) (Bank1 Sensor1)	—
P1154	O2 Sensor Circuit Range/Performance (Low) (Bank 2 Sensor 1)	—
P1155	O2 Sensor Circuit Range/Performance (High) (Bank 2 Sensor 1)	—
P1160	Return Spring Failure	—
P1400	Fuel Tank Pressure Control Solenoid Valve Circuit Low	—
P1420	Fuel Tank Pressure Control Solenoid Valve Circuit High	—
P1446	Fuel Tank Sensor Control Valve Circuit Low	—
P1447	Fuel Tank Sensor Control Valve Circuit High	—
P1518	Starter Switch Circuit Low input	—
P1560	Back-up Voltage Circuit Malfunction	—
P1570	Antenna	—
P1571	Reference Code Incompatibility	—
P1572	IMM Circuit Failure (Except Antenna Circuit)	—
P1574	Key Communication Failure	—
P1576	EGI Control Module EEPROM	—
P1577	IMM Control Module EEPROM	—
P1578	Meter Failure	—
P2088	OCV Solenoid Valve Signal A Circuit Open (Bank 1)	—
P2089	OCV Solenoid Valve Signal A Circuit Short (Bank 1)	—
P2092	OCV Solenoid Valve Signal A Circuit Open (Bank 2)	—
P2093	OCV Solenoid Valve Signal A Circuit Short (Bank 2)	—
P2101	Throttle Actuator Control Motor Circuit Range/Performance	—
P2102	Throttle Actuator Control Motor Circuit Low	—
P2103	Throttle Actuator Control Motor Circuit High	—
P2109	Throttle/Pedal Position Sensor A Minimum Stop Performance	—
P2122	Throttle/Pedal Position Sensor/Switch “D” Circuit Low Input	—
P2123	Throttle/Pedal Position Sensor/Switch “D” Circuit High Input	—
P2127	Throttle/Pedal Position Sensor/Switch “E” Circuit Low Input	—
P2128	Throttle/Pedal Position Sensor/Switch “E” Circuit High Input	—
P2135	Throttle/Pedal Position Sensor/Switch “A”/“B” Voltage Rationality	—
P2138	Throttle/Pedal Position Sensor/Switch “D”/“E” Voltage Rationality	—
P2227	Barometric Pressure Circuit Range/Performance	—

DTC	Item	Condition
P2228	Barometric Pressure Circuit Low Input	—
P2229	Barometric Pressure Circuit High Input	—
P2503	Charging System Voltage Low	—

1. PREPARATION FOR THE INSPECTION MODE

1) Check battery voltage is more than 12 V and fuel remains half [20 — 40 ℓ (5.3 — 10.6 US gal, 4.4 — 8.8 Imp gal)].
2) Lift-up the vehicle using a garage jack and place it on rigid racks or drive the vehicle onto free rollers.

WARNING:
• Before lifting-up the vehicle, ensure parking brakes are applied.
• Do not use a pantograph jack in place of a rigid rack.
• Secure a rope or wire to the front or rear towing hooks to prevent the lateral runout of front wheels.
• Do not abruptly depress/release clutch pedal or accelerator pedal during works even when the engine is operating at low speeds since this may cause vehicle to jump off free rollers.
• In order to prevent the vehicle from slipping due to vibration, do not place any wooden blocks or similar items between the rigid racks and the vehicle.
• Since the rear wheels will also rotate, do not place anything near them. Also, make sure that nobody goes in front of the vehicle.

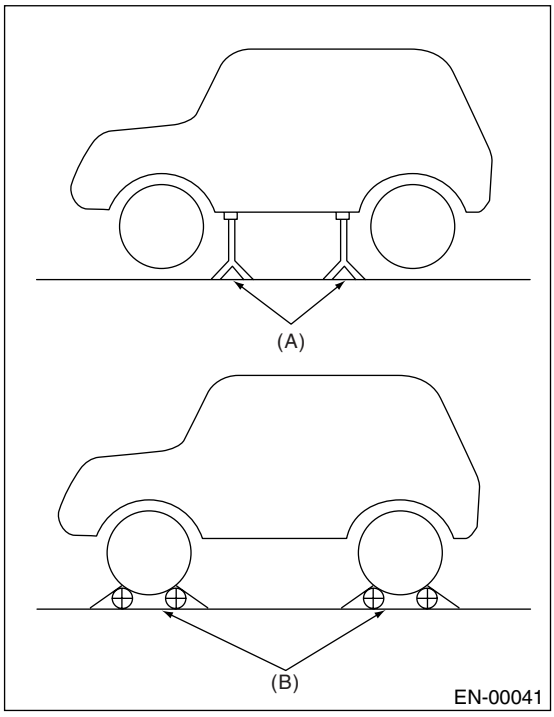

(A) Rigid racks
(B) Free rollers

2. SUBARU SELECT MONITOR

1) After clearing the memory, check for any remaining unresolved trouble data. <Ref. to EN(H6DO)(diag)-44, Clear Memory Mode.>
2) Idle the engine.
3) Prepare the Subaru Select Monitor kit. <Ref. to EN(H6DO)(diag)-7, PREPARATION TOOL, General Description.>

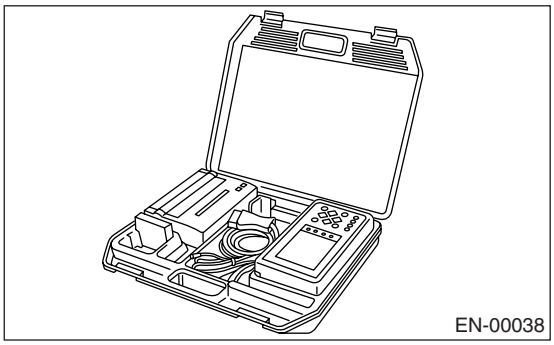

4) Connect the diagnosis cable to Subaru Select Monitor.
5) Insert the cartridge to Subaru Select Monitor. <Ref. to EN(H6DO)(diag)-7, PREPARATION TOOL, General Description.>

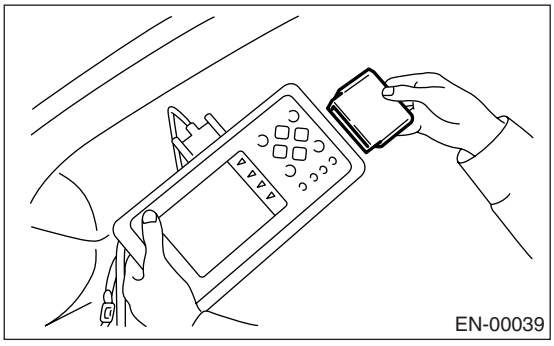

6) Connect the test mode connector (A) located at the lower portion of glove box.

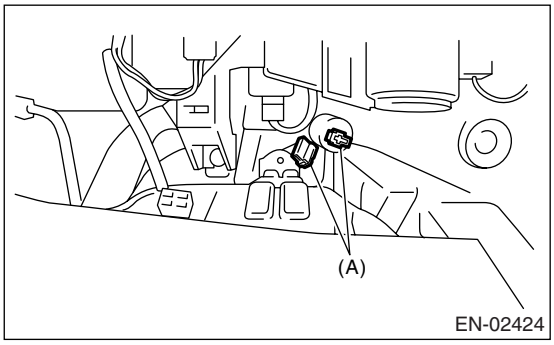

7) Connect the Subaru Select Monitor to data link connector located in the lower portion of the instrument panel (on the driver's side).

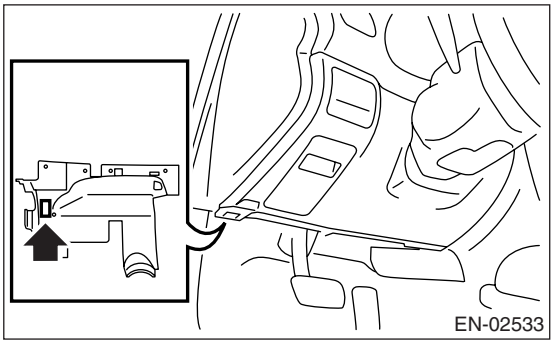

CAUTION:
Do not connect the scan tools except for Subaru Select Monitor or general scan tool.

8) Turn the ignition switch to ON (engine OFF) and turn Subaru Select Monitor switch to ON.

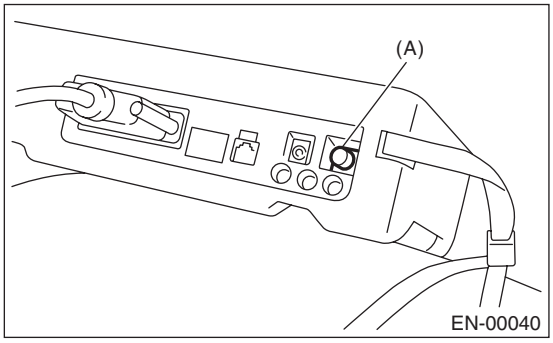

(A) Power switch

9) On the «Main Menu» display screen, select the {Each System Check} and press the [YES] key.
10) On the «System Selection Menu» display screen, select the {Engine} and press the [YES] key.
11) Press the [YES] key after the information of engine type was displayed.
12) On the «Engine Diagnosis» screen, select the {D Check} and press the [YES] key.
13) When the "Perform D Check?" is shown on the screen, press the [YES] key.
14) Perform subsequent procedures as instructed on the display screen.

- If trouble still remains in the memory, the corresponding DTC appears on the display screen.

NOTE:

- For detailed operation procedures, refer to the SUBARU SELECT MONITOR OPERATION MANUAL.
- For details concerning DTCs, refer to the List of Diagnostic Trouble Code (DTC).

<Ref. to EN(H6DO)(diag)-71, List of Diagnostic Trouble Code (DTC).>

- Release the parking brake.
- The speed difference between front and rear wheels may light either the ABS warning light, but this indicates no malfunctions. When engine control diagnosis is finished, perform the ABS memory clearance procedure of self-diagnosis system.

3. GENERAL SCAN TOOL

1) After performing the diagnostics and clearing the memory, check for any remaining unresolved trouble data: <Ref. to EN(H6DO)(diag)-44, Clear Memory Mode.>
2) Idle the engine.
3) Connect the test mode connector (A) located at the lower portion of glove box.

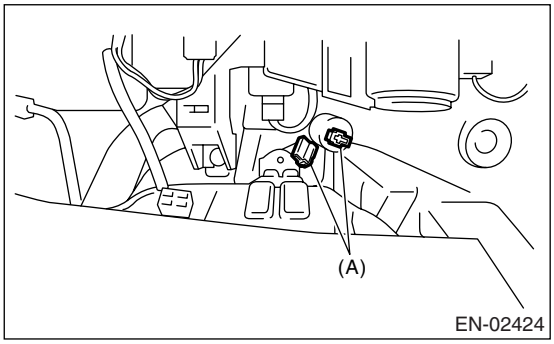

4) Connect the general scan tool to its data link connector in the lower portion of the instrument panel (on the driver's side).

CAUTION:
Do not connect the scan tools except for Subaru Select Monitor or general scan tool.

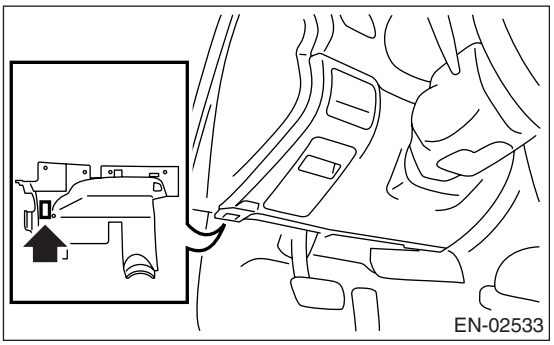

5) Start the engine.

NOTE:
Ensure the select lever is placed in the "P" position before starting.

6) Using the select lever, turn the "P" position switch and the "N" position switch to ON.
7) Depress the brake pedal to turn the brake switch ON.
8) Keep the engine speed in the 2,500 — 3,000 rpm range for 40 seconds.

9) Shift the select lever or shift lever in the “D” range and drive the vehicle at 5 to 10 km/h (3 to 6 MPH).

NOTE:
• On AWD model, release the parking brake.
• The speed difference between front and rear wheels may light either the ABS warning light, but this indicates no malfunctions. When engine control diagnosis is finished, perform the ABS memory clearance procedure of self-diagnosis system.

10) Using the general scan tool, check for DTC and record the result(s).

NOTE:
• For detailed operation procedures, refer to the general scan tool instruction manual.
• For details concerning DTCs, refer to the List of Diagnostic Trouble Code (DTC).
<Ref. to EN(H6DO)(diag)-71, List of Diagnostic Trouble Code (DTC).>

12.Drive Cycle

A: PROCEDURE

There are five drive patterns of drive cycles A — E for the trouble diagnosis. Performing the specified drive pattern allows to diagnose malfunctioning items listed below. After the malfunctioning items listed below are repaired, always check if they correctly resume their functions by performing the required drive pattern.

1. PREPARATION FOR DRIVE CYCLE

1) Make sure that the fuel remains approx. half amount [20 — 40 ℓ (5.3 — 10.6 US gal, 4.4 — 8.8 Imp gal)], and battery voltage is 12 V or more.
2) After performing the diagnostics and cleaning memory, check for any remaining unresolved trouble data. <Ref. to EN(H6DO)(diag)-44, Clear Memory Mode.>
3) Disconnect the test mode connector.

NOTE:
• Except for the engine coolant temperature specified items at starting, the diagnosis is carried out after engine warm up.
• Carry out the diagnosis which is marked * on DTC twice, then, after finishing first diagnosis, stop the engine and do second time at the same condition.

2. DRIVE CYCLE A (AFTER RUNNING 20 MINUTES AT 80 KM/H (50 MPH), IDLE ENGINE FOR 1 MINUTE.)

DTC	Item	Condition
*P0125	Insufficient Coolant Temperature For Closed Loop Fuel Control	Engine coolant temperature at engine start is 20°C (68°F) or less.
*P0126	Insufficient Coolant Temperature For Stable Operation	—
*P0128	Coolant Thermostat (Coolant Temperature Below Thermostat Regulating Temperature)	—
*P0133	O2 Sensor Circuit Slow Response (Bank 1 Sensor 1)	—
*P0153	O2 Sensor Circuit Slow Response (Bank 2 Sensor 1)	—
*P0171	System Too Lean (Bank 1)	Diagnosis completes in drive cycle B or C as well.
*P0172	System Too Rich (Bank 1)	Diagnosis completes in drive cycle B or C as well.
*P0174	System Too Lean (Bank 2)	Diagnosis completes in drive cycle B or C as well.
*P0175	System Too Rich (Bank 2)	Diagnosis completes in drive cycle B or C as well.
*P0196	Engine Oil Temperature Sensor Circuit Range/Performance	—
*P0301	Cylinder 1 Misfire Detected	Diagnosis completes in drive cycle B or C as well.
*P0302	Cylinder 2 Misfire Detected	Diagnosis completes in drive cycle B or C as well.
*P0303	Cylinder 3 Misfire Detected	Diagnosis completes in drive cycle B or C as well.
*P0304	Cylinder 4 Misfire Detected	Diagnosis completes in drive cycle B or C as well.
*P0305	Cylinder 5 Misfire Detected	Diagnosis completes in drive cycle B or C as well.
*P0306	Cylinder 6 Misfire Detected	Diagnosis completes in drive cycle B or C as well.
*P0420	Catalyst System Efficiency Below Threshold (Bank 1)	—
*P0442	Evaporative Emission Control System Leak Detected (Small Leak)	Coolant temperature at start is less than 25°C (77°F).
*P0451	Evaporative Emission Control System Pressure Sensor	—

DTC	Item	Condition
*P0456	Evaporative Emission Control System Leak Detected (Very Small Leak)	Coolant temperature at start is less than 25°C (77°F).
*P0457	Evaporative Emission Control System Leak Detected (Fuel Cap Loose/Off)	Coolant temperature at start is less than 25°C (77°F).
*P0464	Fuel Level Sensor Circuit Intermittent	—
P1443	Vent Control Solenoid Valve Function Problem	—
*P2096	Post Catalyst Fuel Trim System Too Lean Bank 1	Diagnosis completes in drive cycle B or C as well.
*P2097	Post Catalyst Fuel Trim System Too Rich Bank 1	Diagnosis completes in drive cycle B or C as well.
*P2098	Post Catalyst Fuel Trim System Too Lean Bank 2	Diagnosis completes in drive cycle B or C as well.
*P2099	Post Catalyst Fuel Trim System Too Rich Bank 2	Diagnosis completes in drive cycle B or C as well.

3. DRIVE CYCLE B (10 MINUTES IDLING)

NOTE:
Drive the vehicle in more than 10 km/h (6 MPH) before diagnosis.

DTC	Item	Condition
*P0050	HO2S Heater Control Circuit (Bank 2 Sensor 1)	—
*P0171	System Tool Lean (Bank 1)	Diagnosis completes in drive cycle A or C as well.
*P0172	System Tool Rich (Bank 1)	Diagnosis completes in drive cycle A or C as well.
*P0174	System Tool Lean (Bank 2)	Diagnosis completes in drive cycle A or C as well.
*P0175	System Tool Rich (Bank 2)	Diagnosis completes in drive cycle A or C as well.
*P0301	Cylinder 1 Misfire Detected	Diagnosis completes in drive cycle A or C as well.
*P0302	Cylinder 2 Misfire Detected	Diagnosis completes in drive cycle A or C as well.
*P0303	Cylinder 3 Misfire Detected	Diagnosis completes in drive cycle A or C as well.
*P0304	Cylinder 4 Misfire Detected	Diagnosis completes in drive cycle A or C as well.
*P0305	Cylinder 5 Misfire Detected	Diagnosis completes in drive cycle A or C as well.
*P0306	Cylinder 6 Misfire Detected	Diagnosis completes in drive cycle A or C as well.
*P0459	Evaporative Emission Control System Purge Control Valve Circuit High	—
*P0483	Cooling Fan Rationality Check	—
*P0506	Idle Control System RPM Lower Than Expected	—
*P0507	Idle Control System RPM Higher Than Expected	—
*P2096	Post Catalyst Fuel Trim System Too Lean (Bank 1)	Diagnosis completes in drive cycle A or C as well.
*P2097	Post Catalyst Fuel Trim System Too Rich (Bank 1)	Diagnosis completes in drive cycle A or C as well.
*P2098	Post Catalyst Fuel Trim System Too Lean (Bank 2)	Diagnosis completes in drive cycle A or C as well.
*P2099	Post Catalyst Fuel Trim System Too Rich (Bank 2)	Diagnosis completes in drive cycle A or C as well.

4. DRIVE CYCLE C (DRIVE THE VEHICLE WITH FOLLOWING DRIVE PATTERNS)

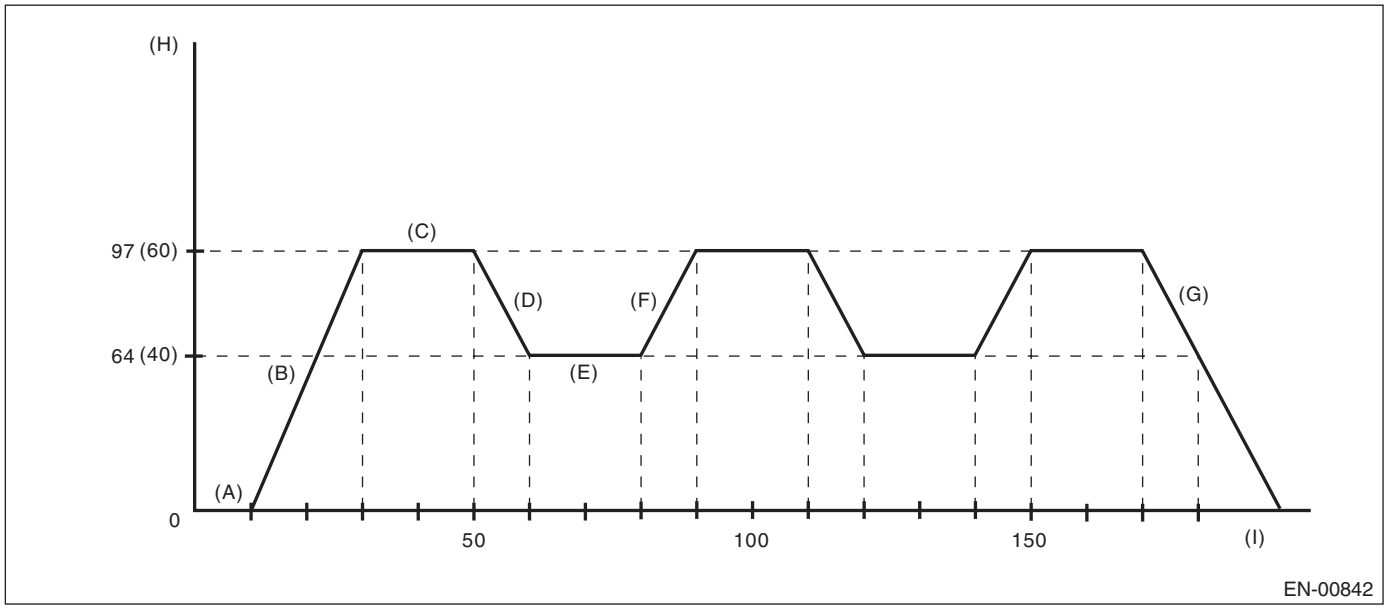

(A) Idle the engine for more than 10 seconds.
(B) Accelerate the vehicle to 97 km/h (60 MPH) within 20 seconds.
(C) Drive the vehicle at 97 km/h (60 MPH) for 20 seconds.
(D) Decelerate the vehicle to 64 km/h (40 MPH) with throttle fully closed.
(E) Drive the vehicle at 64 km/h (40 MPH) for 20 seconds.
(F) Accelerate the vehicle to 97 km/h (60 MPH) within 10 seconds.
(G) Stop the vehicle with throttle fully closed.
(H) Vehicle speed km/h (MPH)
(I) Sec.

DTC	Item	Condition
P0026	Intake Valve Control Solenoid Circuit Range/Performance (Bank 1)	—
P0028	Intake Valve Control Solenoid Circuit Range/Performance (Bank 2)	—
*P0030	HO2S Heater Control Circuit (Bank 1 Sensor 1)	—
*P0050	HO2S Heater Control Circuit (Bank 2 Sensor 1)	—
*P0068	Manifold Absolute Pressure/Performance	—
P0076	Intake Valve Control Circuit Low (Bank 1)	—
P0082	Intake Valve Control Circuit Low (Bank 2)	—
*P0101	Mass or Volume Air Flow Circuit Range/Performance	—
P0134	O2 Sensor Circuit No Activity Detected (Bank 1 Sensor 1)	—
*P0139	O2 Sensor Circuit Slow Response (Bank 1 Sensor 2)	—
P0154	O2 Sensor Circuit No Activity Detected (Bank 2 Sensor 1)	—
*P0159	O2 Sensor Circuit Slow Response (Bank 2 Sensor 2)	—
*P0171	System Too Lean (Bank 1)	Diagnosis completes in drive cycle A or B as well.
*P0172	System Too Rich (Bank 1)	Diagnosis completes in drive cycle A or B as well.
*P0174	System Too Lean (Bank 2)	Diagnosis completes in drive cycle A or B as well.
*P0175	System Too Rich (Bank 2)	Diagnosis completes in drive cycle A or B as well.
*P0301	Cylinder 1 Misfire Detected	Diagnosis completes in drive cycle A or B as well.
*P0302	Cylinder 2 Misfire Detected	Diagnosis completes in drive cycle A or B as well.
*P0303	Cylinder 3 Misfire Detected	Diagnosis completes in drive cycle A or B as well.

DTC	Item	Condition
*P0304	Cylinder 4 Misfire Detected	Diagnosis completes in drive cycle A or B as well.
*P0305	Cylinder 5 Misfire Detected	Diagnosis completes in drive cycle A or B as well.
*P0306	Cylinder 6 Misfire Detected	Diagnosis completes in drive cycle A or B as well.
P2504	Charging System Voltage LOW	—

5. DRIVE CYCLE D

• DRIFT DIAGNOSIS

1) Make sure that the engine coolant temperature at engine starting is less than 30°C (86°F).
2) Make sure that fuel of more than 9.6 ℓ (2.5 US gal, 2.1 Imp gal) remains and the battery voltage is more than 10.9 V.
3) Make sure that the engine coolant temperature rises for more than 10°C (50°F) from the level of engine starting and is also more than 75°C (167°F).
4) Idle the engine for more than 120 seconds in the condition of step 3.

• STUCK DIAGNOSIS

1) Make sure that the battery voltage is more than 10.9 V.
2) Perform the clear memory mode. <Ref. to EN(H6DO)(diag)-44, Clear Memory Mode.>
3) Drive the vehicle for the distance equal to fuel of 50 ℓ (13.2 US gal, 11 Imp gal).

NOTE:
• It is possible to drive intermittently.
• Do not disconnect the terminal of battery during diagnosis. (If disconnecting the terminal of battery, the data will be cleared.)

DTC	Item	Condition
P0181	Fuel Temperature Sensor “A” Circuit Range/Performance	—

6. DRIVE CYCLE E

1) Make sure that the battery voltage is more than 10.9 V.
2) Perform the clear memory mode. <Ref. to EN(H6DO)(diag)-44, Clear Memory Mode.>
3) Drive the vehicle for the distance equal to fuel of 30 ℓ (7.9 US gal, 6.6 Imp gal).

NOTE:
• It is possible to drive intermittently.
• Do not disconnect the terminal of battery during diagnosis. (If disconnecting the terminal of battery, the data will be cleared.)

DTC	Item	Condition
P0461	Fuel Level Sensor Circuit Range/Performance	—

13.Clear Memory Mode

A: OPERATION

1. SUBARU SELECT MONITOR (NORMAL MODE)

1) On the «Main Menu» display screen, select the {Each System Check} and press the [YES] key.
2) On the «System Selection Menu» display screen, select the {Engine} and press the [YES] key.
3) Press the [YES] key after the information of engine type was displayed.
4) On the «Engine Diagnosis» display screen, select the {Memory Clear} and press the [YES] key.
5) When the “Done” and “Turn Ignition Switch OFF” are shown on the display screen, turn the ignition switch to OFF and then Subaru Select Monitor switch to OFF.

NOTE:
• Initial diagnosis of electronic control throttle is performed after memory clearance. For this reason, start the engine after 10 seconds or more have elapsed since the ignition switch was turned to ON.
• For detailed operation procedures, refer to the SUBARU SELECT MONITOR OPERATION MANUAL.

2. SUBARU SELECT MONITOR (OBD MODE)

1) On the «Main Menu» display screen, select the {Each System Check} and press the [YES] key.
2) On the «System Selection Menu» display screen, select the {Engine} and press the [YES] key.
3) Press the [YES] key after the information of engine type was displayed.
4) On the «Engine Diagnosis» display screen, select the {OBD System} and press the [YES] key.
5) On the «OBD Menu» display screen, select the {DTC Clear} and press the [YES] key.
6) When the “Perform Diagnostic Code(s) Clear?” is shown on the screen, press the [YES] key.
7) Turn the ignition switch to OFF and then turn off the Subaru Select Monitor.

NOTE:
• Initial diagnosis of electronic control throttle is performed after memory clearance. For this reason, start the engine after 10 seconds or more have elapsed since the ignition switch was turned to ON.
• For detailed operation procedures, refer to the SUBARU SELECT MONITOR OPERATION MANUAL.

3. GENERAL SCAN TOOL

For clear memory procedures using the general scan tool, refer to the general scan tool instruction manual.

14. Compulsory Valve Operation Check Mode

A: OPERATION

1) Prepare the Subaru Select Monitor kit. <Ref. to EN(H6DO)(diag)-7, PREPARATION TOOL, General Description.>

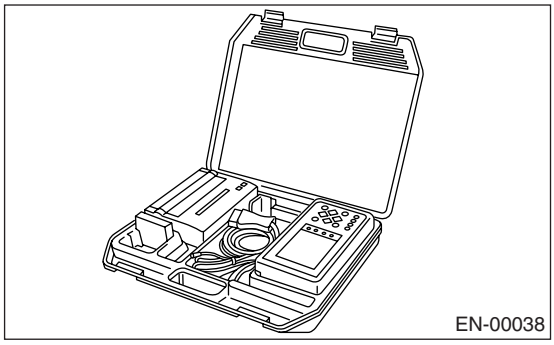

2) Connect the diagnosis cable to Subaru Select Monitor.
3) Insert the cartridge to Subaru Select Monitor. <Ref. to EN(H6DO)(diag)-7, PREPARATION TOOL, General Description.>

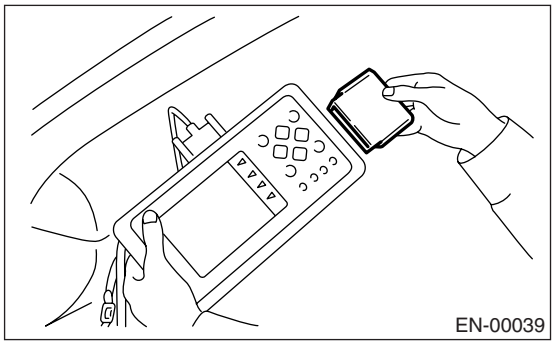

4) Connect the test mode connector (A) located at the lower portion of glove box.

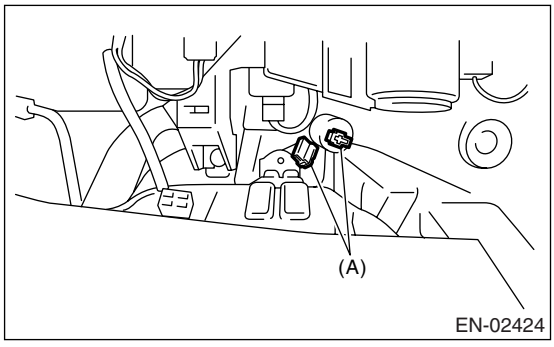

5) Connect the Subaru Select Monitor to data link connector located in the lower portion of the instrument panel (on the driver's side).

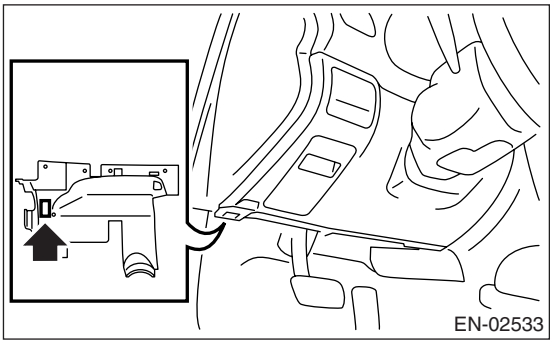

CAUTION:
Do not connect the scan tools except for Subaru Select Monitor or general scan tool.

6) Turn the ignition switch to ON (engine OFF) and turn on the Subaru Select Monitor switch.

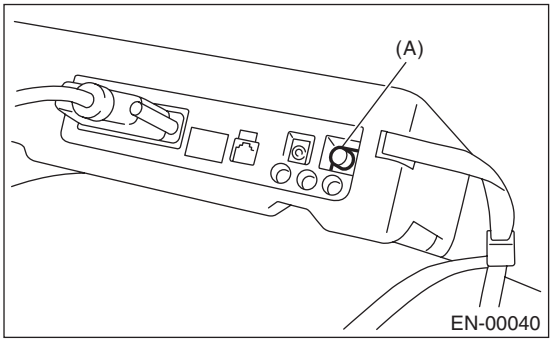

(A) Power switch

7) On the «Main Menu» display screen, select the {Each System Check} and press the [YES] key.
8) On the «System Selection Menu» display screen, select the {Engine} and press the [YES] key.
9) Press the [YES] key after the information of engine type was displayed.
10) On the «Engine Diagnosis» display screen, select the {System Operation Check Mode} and press the [YES] key.
11) On the «System Operation Check Mode» display screen, select the {Actuator ON/OFF Operation} and press the [YES] key.
12) Select the desired actuator on the «Actuator ON/OFF Operation» display screen and press the [YES] key.
13) Pressing the [NO] key completes the compulsory valve operation check mode. The display will then return to the «Actuator ON/OFF Operation» screen.

• A list of the support data is shown in the following table.

DESCRIPTION	Display
Compulsory fuel pump relay operation check	Fuel Pump
Compulsory radiator fan relay operation check	Radiator Fan Relay
Compulsory air conditioning relay operation check	A/C Compressor Relay
Compulsory purge control solenoid valve operation check	CPC Solenoid
Compulsory pressure control solenoid valve operation check	PCV Solenoid
Compulsory air assist vent control solenoid valve operation check	Vent Control Solenoid
Compulsory fuel tank sensor control valve operation check	Tank Sensor Cntl Valve

NOTE:
• The following parts will be displayed but not functional.

Display
EGR Solenoid
ASV Solenoid
FICD Solenoid
Pressure Switching Solenoid 1
Pressure Switching Solenoid 2
Supercharger Control Solenoid
AAI Solenoid
Exhaust Bypass Valve Control Permit Flag

• For detailed operation procedures, refer to the SUBARU SELECT MONITOR OPERATION MANUAL.

15.Malfunction Indicator Light

A: PROCEDURE

1. Activation of malfunction indicator light. <Ref. to EN(H6DO)(diag)-47, ACTIVATION OF MALFUNCTION INDICATOR LIGHT, Malfunction Indicator Light.>
↓
2. Malfunction indicator light does not come on. <Ref. to EN(H6DO)(diag)-49, MALFUNCTION INDICATOR LIGHT DOES NOT COME ON, Malfunction Indicator Light.>
↓
3. Malfunction indicator light does not go off. <Ref. to EN(H6DO)(diag)-51, MALFUNCTION INDICATOR LIGHT DOES NOT GO OFF., Malfunction Indicator Light.>
↓
4. Malfunction indicator light does not blink. <Ref. to EN(H6DO)(diag)-52, MALFUNCTION INDICATOR LIGHT DOES NOT BLINK., Malfunction Indicator Light.>
↓
5. Malfunction indicator light keep blinking. <Ref. to EN(H6DO)(diag)-54, MALFUNCTION INDICATOR LIGHT REMAINS BLINKING., Malfunction Indicator Light.>

B: ACTIVATION OF MALFUNCTION INDICATOR LIGHT

1) When the ignition switch is turned to ON (engine off), the malfunction indicator light (A) in the combination meter illuminates.

NOTE:
If the malfunction indicator light does not illuminate, perform the diagnosis of malfunction indicator light circuit or the combination meter circuit. <Ref. to EN(H6DO)(diag)-49, MALFUNCTION INDICATOR LIGHT DOES NOT COME ON, Malfunction Indicator Light.>

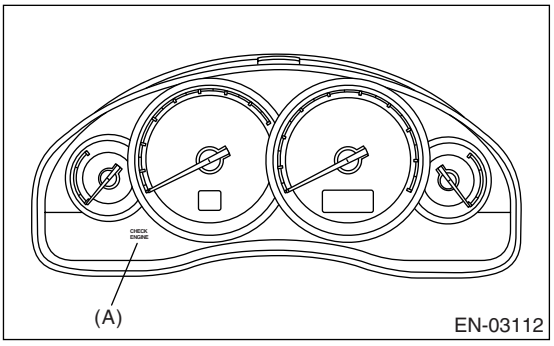

2) After starting the engine, the malfunction indicator light goes out. If it does not, either the engine or the emission control system is malfunctioning.

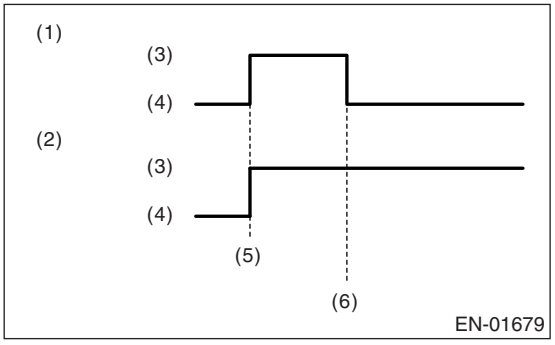

(1) No faulty
(2) Trouble occurs
(3) ON
(4) OFF
(5) Ignition switch ON
(6) Engine start

3) Turn the ignition switch to OFF and connect the test mode connector.
(1) When the ignition switch is turned to ON (engine OFF), the malfunction indicator light illuminates.
(2) After the engine starts, malfunction indicator light blinks in a cycle of 0.5 Hz. (During diagnosis)

(3) After the diagnosis is completed, malfunction indicator light does not blink at a cycle of 3 Hz if there is no fault. Malfunction indicator light illuminates when the trouble occurs.

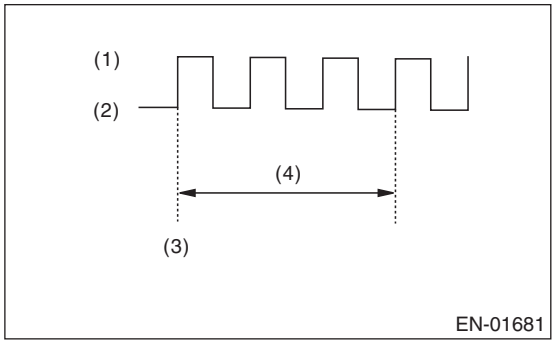

(1) ON
(2) OFF
(3) Ignition switch ON
(4) 1 second

C: MALFUNCTION INDICATOR LIGHT DOES NOT COME ON

DIAGNOSIS:

The malfunction indicator light circuit is open or shorted.

TROUBLE SYMPTOM:

When the ignition switch is turned to ON (engine OFF), malfunction indicator light does not come on.

WIRING DIAGRAM:

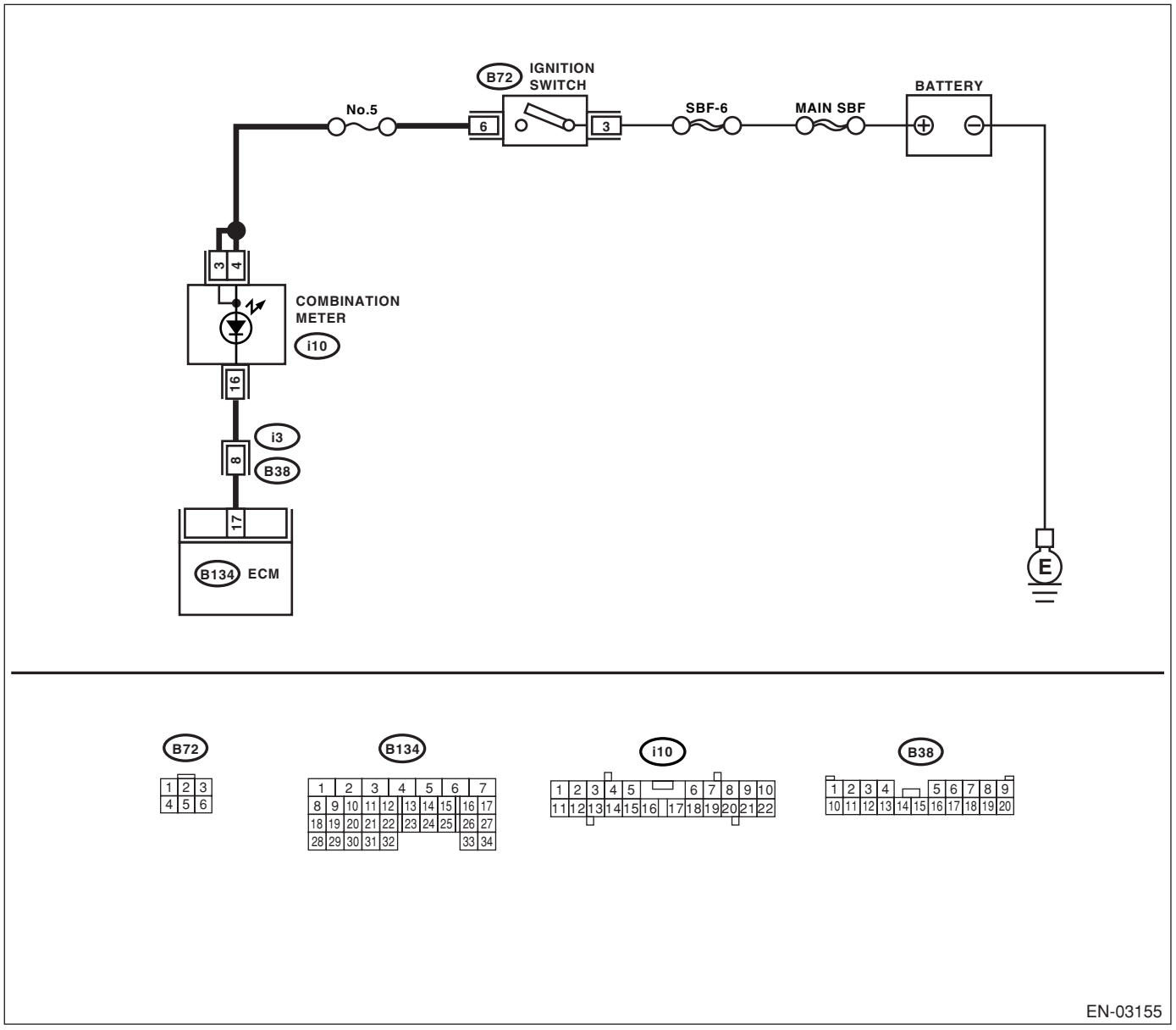

	Step	Check	Yes	No
1	**CHECK OUTPUT SIGNAL FROM ECM.** 1) Turn the ignition switch to ON. 2) Measure the voltage between ECM connector and chassis ground. ***Connector & terminal*** ***(B134) No. 17 (+) — Chassis ground (−):***	Is the voltage less than 1 V?	Go to step **4.**	Go to step **2.**
2	**CHECK POOR CONTACT.** Check for poor connection when shaking or pulling ECM connector and harness.	Does the malfunction indicator light illuminate?	Repair the poor contact in ECM connector.	Go to step **3.**
3	**CHECK ECM CONNECTOR.** Check the connection of ECM connector.	Is the ECM connector correctly connected?	Replace the ECM. <Ref. to FU(H6DO)-34, Engine Control Module (ECM).>	Repair the connection of ECM connector.
4	**CHECK HARNESS BETWEEN COMBINATION METER AND ECM CONNECTOR.** 1) Turn the ignition switch to OFF. 2) Remove the combination meter. <Ref. to IDI-15, Combination Meter.> 3) Disconnect the connector from ECM and combination meter. 4) Measure the resistance of harness between ECM and combination meter connector. ***Connector & terminal*** ***(B134) No. 17 — (i10) No. 16:***	Is the resistance less than 1 Ω?	Go to step **5.**	Repair the harness and connector. NOTE: In this case repair the following: • Open circuit in harness between ECM and combination meter connector • Poor contact in coupling connector
5	**CHECK POOR CONTACT.** Check poor contact in combination meter connector.	Is there poor contact in combination meter connector?	Repair the poor contact in combination meter connector.	Go to step **6.**
6	**CHECK HARNESS BETWEEN COMBINATION METER AND IGNITION SWITCH CONNECTOR.** 1) Turn the ignition switch to ON. 2) Measure the voltage between combination meter connector and chassis ground. ***Connector & terminal*** ***(i10) No. 3 (+) — Chassis ground (−):*** ***(i10) No. 4 (+) — Chassis ground (−):***	Is the voltage more than 10 V?	Replace the board of combination meter. <Ref. to IDI-15, Combination Meter.>	Check the following and repair if necessary. NOTE: • Brown out fuse (No. 5) • Open or short circuit in harness between fuse (No. 5) and battery terminal • Poor contact in ignition switch connector

D: MALFUNCTION INDICATOR LIGHT DOES NOT GO OFF.

DIAGNOSIS:
The malfunction indicator light circuit is shorted.

TROUBLE SYMPTOM:
Although malfunction indicator light comes on when the engine runs, DTC is not shown on the Subaru Select Monitor display.

WIRING DIAGRAM:

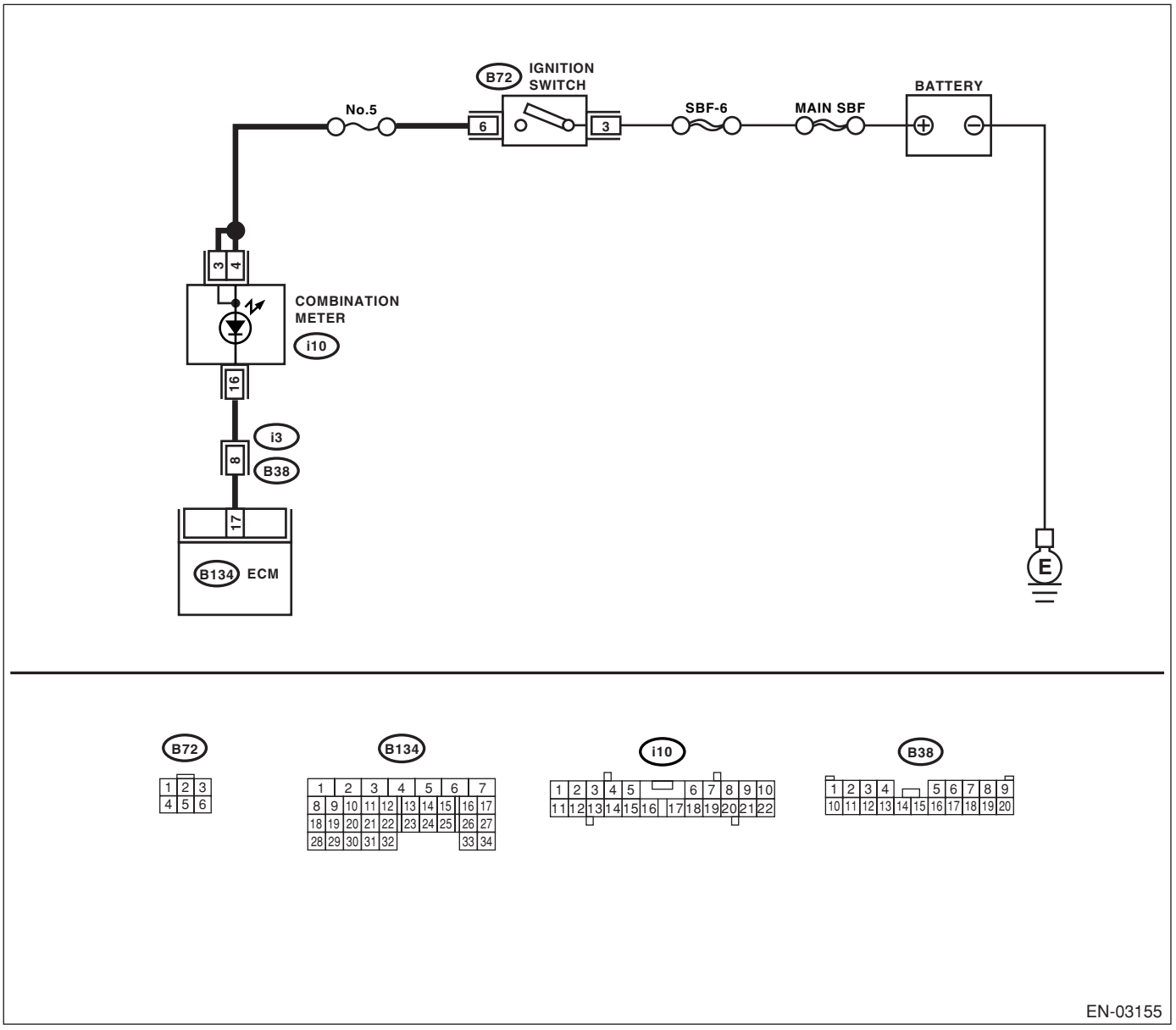

Step		Check	Yes	No
1	**CHECK HARNESS BETWEEN COMBINATION METER AND ECM CONNECTOR.** 1) Turn the ignition switch to OFF. 2) Disconnect the connector from ECM. 3) Turn the ignition switch to ON.	Does the malfunction indicator light illuminate?	Repair the short circuit in harness between combination meter and ECM connector.	Replace the ECM. <Ref. to FU(H6DO)-34, Engine Control Module (ECM).>

E: MALFUNCTION INDICATOR LIGHT DOES NOT BLINK.

DIAGNOSIS:

- The malfunction indicator light circuit is open or shorted.
- Test mode connector circuit is in open.

TROUBLE SYMPTOM:

Malfunction indicator light does not blink during inspection mode.

WIRING DIAGRAM:

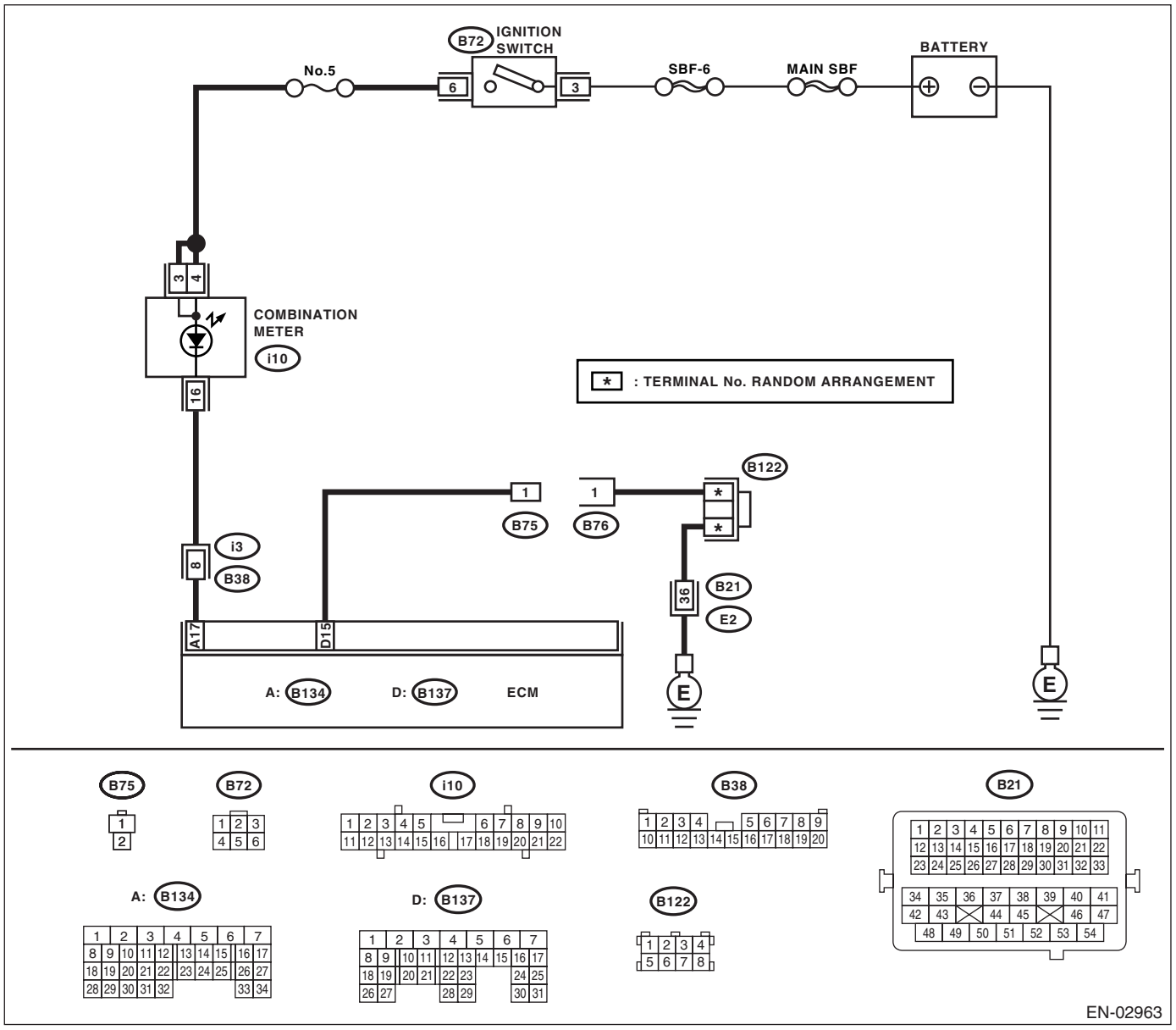

	Step	Check	Yes	No
1	**CHECK STATUS OF MALFUNCTION INDICATOR LIGHT.** 1) Turn the ignition switch to OFF. 2) Disconnect the test mode connector. 3) Turn the ignition switch to ON. (engine OFF)	Does the malfunction indicator light illuminate?	Go to step **2.**	Repair the malfunction indictor light circuit. <Ref. to EN(H6DO)(diag)-49, MALFUNCTION INDICATOR LIGHT DOES NOT COME ON, Malfunction Indicator Light.>
2	**CHECK HARNESS BETWEEN COMBINATION METER AND ECM CONNECTOR.** 1) Turn the ignition switch to OFF. 2) Disconnect the connector from ECM. 3) Turn the ignition switch to ON.	Does the malfunction indicator light illuminate?	Repair the short circuit in harness between combination meter and ECM connector.	Go to step **3.**
3	**CHECK HARNESS BETWEEN TEST MODE CONNECTOR AND CHASSIS GROUND.** 1) Turn the ignition switch to OFF. 2) Disconnect the connector from ECM. 3) Measure the resistance of harness between test mode connector and chassis ground. ***Connector & terminal*** ***(B76) No. 1 — Chassis ground:***	Is the resistance less than 1 Ω?	Go to step **4.**	Repair the harness and connector. NOTE: In this case repair the following: • Open circuit in harness between test mode connector and chassis ground
4	**CHECK POOR CONTACT.** Check poor contact in ECM connector.	Is the poor contact in ECM connector?	Repair the poor contact in ECM connector.	Go to step **5.**
5	**CHECK HARNESS BETWEEN ECM AND TEST MODE CONNECTOR.** 1) Connect the test mode connector. 2) Measure the resistance of harness between ECM and chassis ground. ***Connector & terminal*** ***(B137) No. 15 — Chassis ground:***	Is the resistance less than 1 Ω?	Go to step **6.**	Repair the open circuit in harness between ECM and test mode connector.
6	**CHECK POOR CONTACT.** Check poor contact in ECM connector.	Is the poor contact in ECM connector?	Repair the poor contact in ECM connector.	Replace the ECM. <Ref. to FU(H6DO)-34, Engine Control Module (ECM).>

F: MALFUNCTION INDICATOR LIGHT REMAINS BLINKING.

DIAGNOSIS:
Test mode connector circuit is shorted.
TROUBLE SYMPTOM:
Malfunction indicator light blinks without test mode connector connected.
WIRING DIAGRAM:

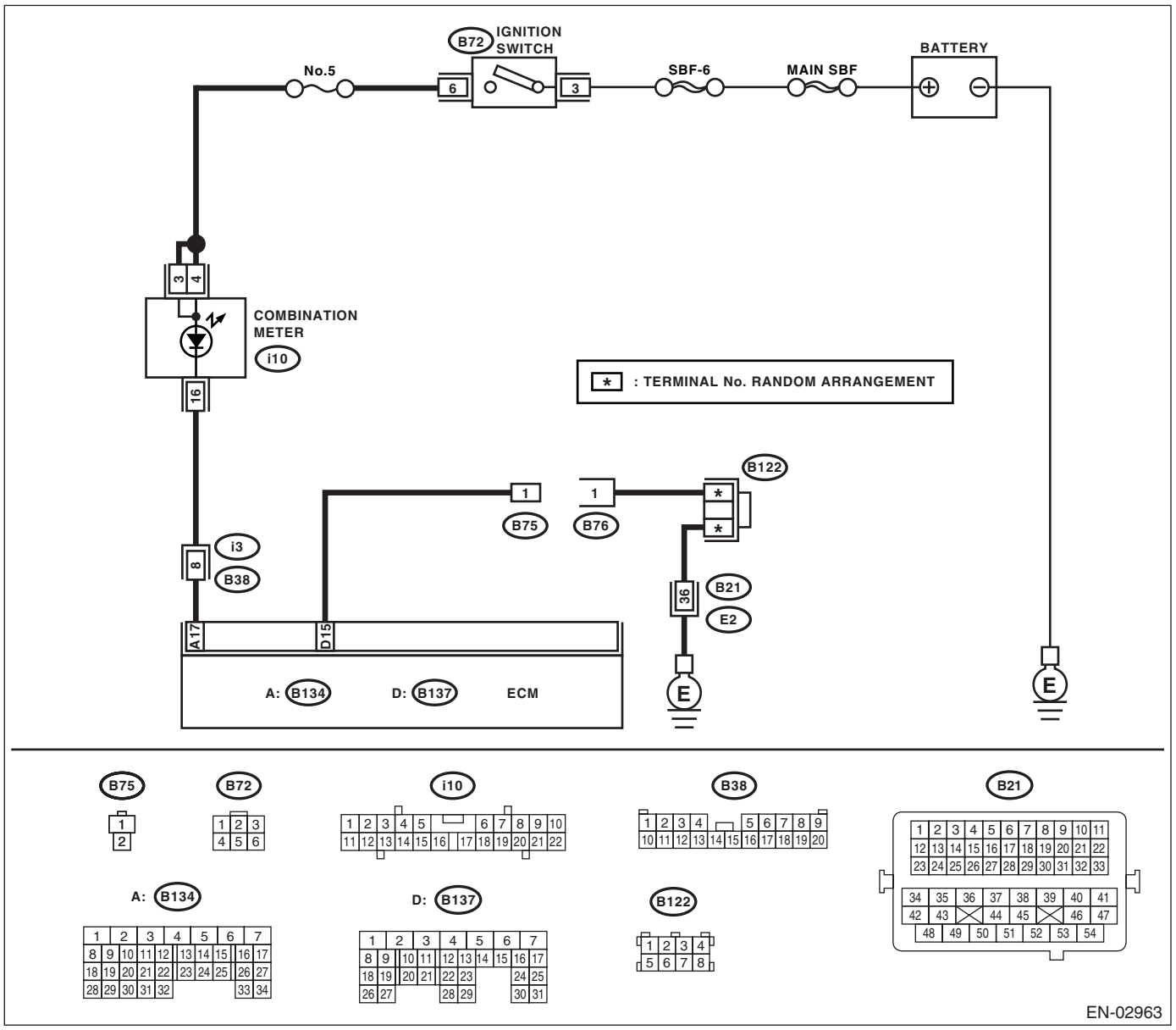

	Step	Check	Yes	No
1	**CHECK TEST MODE CONNECTOR.** 1) Disconnect the test mode connector. 2) Turn the ignition switch to ON.	Does the malfunction indicator light blink?	Go to step **2.**	System is in good order. NOTE: Malfunction indicator light blinks when test mode connector is connected.
2	**CHECK HARNESS BETWEEN ECM CONNECTOR AND CHASSIS GROUNDING TERMINAL.** 1) Turn the ignition switch to OFF. 2) Disconnect the connector from ECM. 3) Measure the resistance of harness between ECM connector and chassis ground. ***Connector & terminal*** ***(B137) No. 15 — Chassis ground:***	Is the resistance less than 5 Ω?	Repair the short circuit in harness between ECM and test mode connector.	Replace the ECM. <Ref. to FU(H6DO)-34, Engine Control Module (ECM).>

16.Diagnostics for Engine Starting Failure

A: PROCEDURE

1. Check for fuel amount.
↓
2. Inspection of starter motor circuit <Ref. to EN(H6DO)(diag)-57, STARTER MOTOR CIRCUIT, Diagnostics for Engine Starting Failure.>
↓
3. Inspection of ECM power supply and ground line. <Ref. to EN(H6DO)(diag)-60, CHECK POWER SUPPLY AND GROUND LINE OF ENGINE CONTROL MODULE (ECM), Diagnostics for Engine Starting Failure.>
↓
4. Inspection of ignition control system. <Ref. to EN(H6DO)(diag)-63, IGNITION CONTROL SYSTEM, Diagnostics for Engine Starting Failure.>
↓
5. Inspection of fuel pump circuit. <Ref. to EN(H6DO)(diag)-66, FUEL PUMP CIRCUIT, Diagnostics for Engine Starting Failure.>
↓
6. Inspection of fuel injector circuit. <Ref. to EN(H6DO)(diag)-68, FUEL INJECTOR CIRCUIT, Diagnostics for Engine Starting Failure.>

B: STARTER MOTOR CIRCUIT

CAUTION:
After repair or replacement of faulty parts, conduct Clear Memory Mode <Ref. to EN(H6DO)(diag)-44, OPERATION, Clear Memory Mode.> and Inspection Mode <Ref. to EN(H6DO)(diag)-35, PROCEDURE, Inspection Mode.>.

WIRING DIAGRAM:

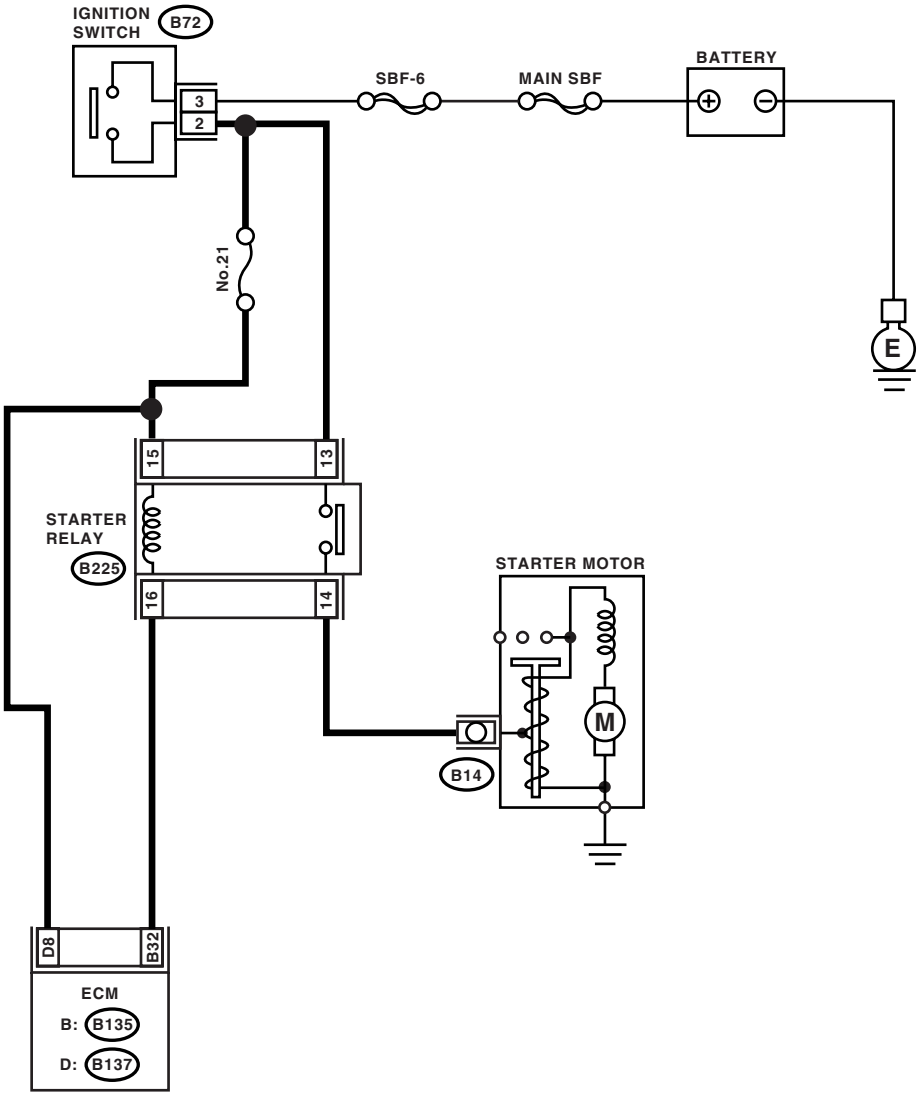

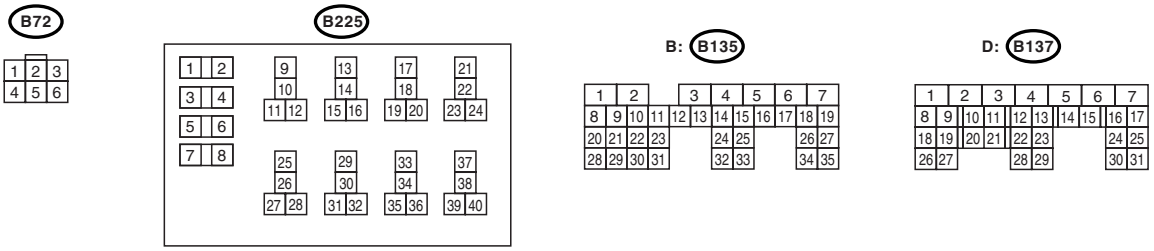

EN-02964

Diagnostics for Engine Starting Failure

	Step	Check	Yes	No
1	**CHECK BATTERY.** Check the battery voltage.	Is the voltage more than 12 V?	Go to step **2.**	Charge or replace the battery.
2	**CHECK OPERATION OF STARTER MOTOR.**	Does the starter motor operate?	Go to step **3.**	Go to step **4.**
3	**CHECK DTC.**	Is DTC displayed? <Ref. to EN(H6DO)(diag)-34, OPERATION, Read Diagnostic Trouble Code (DTC).>	Inspect the relevant DTC using List of Diagnostic Trouble Code (DTC). <Ref. to EN(H6DO)(diag)-71, List of Diagnostic Trouble Code (DTC).>	Repair the poor contact in ECM connector.
4	**CHECK INPUT SIGNAL FOR STARTER MOTOR.** 1) Turn the ignition switch to OFF. 2) Disconnect the connector from starter motor. 3) Turn the ignition switch to START. 4) Measure the power supply voltage between starter motor connector terminal and engine ground. ***Connector & terminal*** ***(B14) No. 1 (+) — Engine ground (−):*** NOTE: Shift the select lever to “P” or “N” range.	Is the voltage more than 10 V?	Check the starter motor. <Ref. to SC(H4SO)-6, Starter.>	Go to step **5.**
5	**CHECK HARNESS BETWEEN BATTERY AND IGNITION SWITCH CONNECTOR.** 1) Disconnect the connector from ignition switch. 2) Measure the power supply voltage between ignition switch connector and chassis ground. ***Connector & terminal*** ***(B72) No. 3 (+) — Chassis ground (−):***	Is the voltage more than 10 V?	Go to step **6.**	Repair the open circuit in harness between ignition switch and battery, and check fuse SBF No. 7 and SBF No. 1.
6	**CHECK IGNITION SWITCH.** 1) Disconnect the connector from ignition switch. 2) Measure the resistance between ignition switch terminals while turning the ignition switch to START position. ***Terminals*** ***No. 2 — No. 3:***	Is the resistance less than 5 Ω?	Go to step **7.**	Replace the ignition switch.
7	**CHECK INPUT VOLTAGE OF STARTER RELAY.** 1) Turn the ignition switch to OFF. 2) Disconnect the connector from starter relay. 3) Connect the connector to ignition switch. 4) Measure the input voltage between starter relay connector and chassis ground while turning the ignition switch to START position. ***Connector & terminal*** ***(B225) No. 13 (+) — Chassis ground (−):*** ***(B225) No. 15 (+) — Chassis ground (−):***	Is the voltage more than 10 V?	Go to step **8.**	Repair the open circuit in harness between starter relay and ignition switch.

	Step	Check	Yes	No
8	**CHECK STARTER RELAY.** 1) Connect the battery to starter relay terminals No. 15 and No. 16. 2) Measure the resistance between starter relay terminals. ***Terminals*** ***No. 13 — No. 14:***	Is the resistance less than 1 Ω?	Go to step **9.**	Replace the starter relay.
9	**CHECK INPUT VOLTAGE FROM ECM.** 1) Turn the ignition switch to OFF. 2) Connect the connector to starter relay. 3) Disconnect the connectors from ECM. 4) Measure the voltage between ECM and chassis ground. ***Connector & terminal*** ***(B135) No. 32 (+) — Chassis ground (−):*** ***(B137) No. 8 (+) — Chassis ground (−):***	Is the voltage more than 10 V?	Replace the ECM. <Ref. to FU(H6DO)-34, Engine Control Module (ECM).>	Repair the open or ground short circuit in harness between ECM and starter relay.

C: CHECK POWER SUPPLY AND GROUND LINE OF ENGINE CONTROL MODULE (ECM)

CAUTION:
After repair or replacement of faulty parts, conduct Clear Memory Mode <Ref. to EN(H6DO)(diag)-44, OPERATION, Clear Memory Mode.> and Inspection Mode <Ref. to EN(H6DO)(diag)-35, PROCEDURE, Inspection Mode.>.

WIRING DIAGRAM:

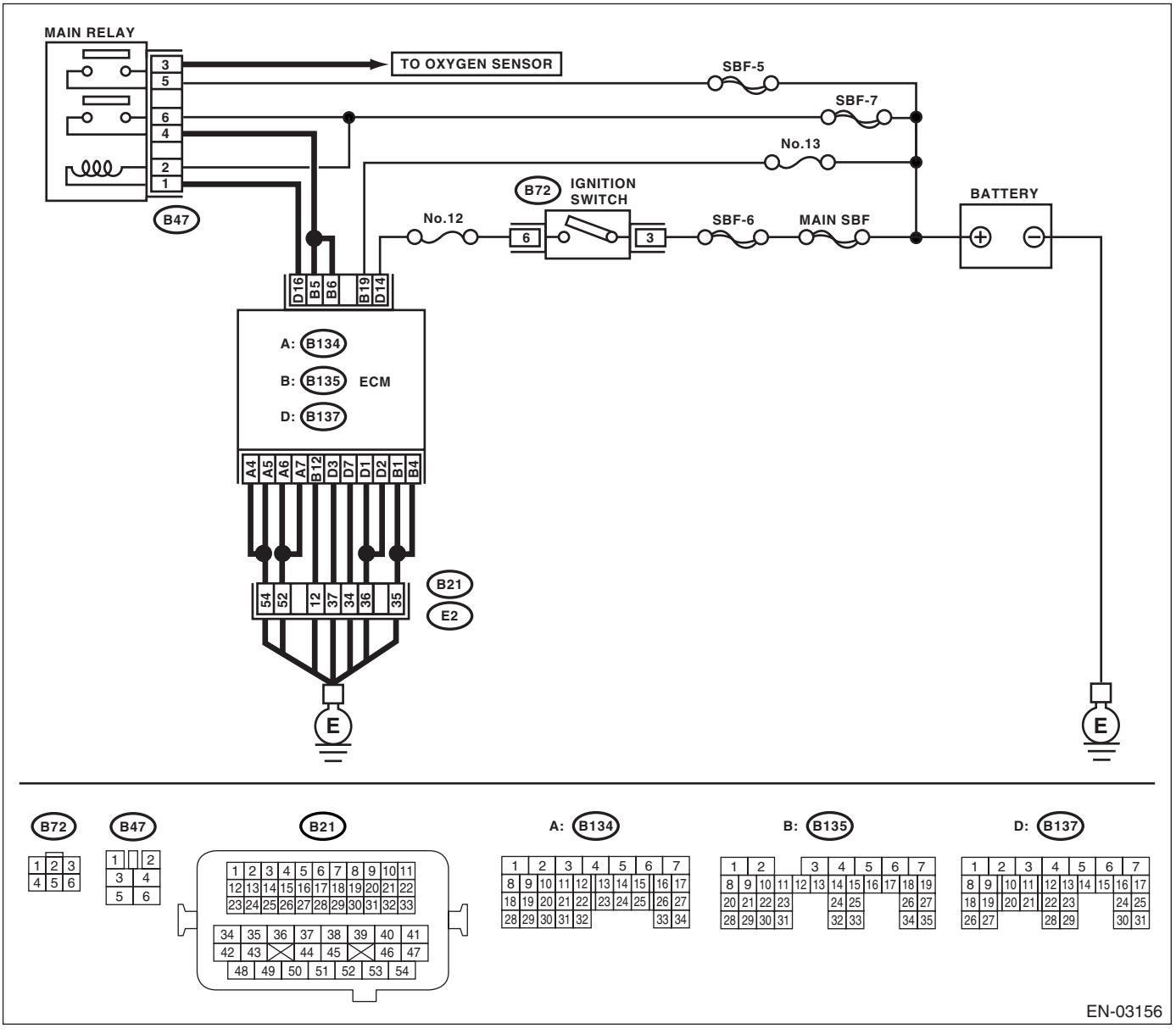

	Step	Check	Yes	No
1	**CHECK MAIN RELAY.** 1) Turn the ignition switch to OFF. 2) Remove the main relay. 3) Connect the battery to main relay terminals No. 1 and No. 2. 4) Measure the resistance between main relay terminals. ***Terminals*** ***No. 3 — No. 5:*** ***No. 4 — No. 6:***	Is the resistance less than 10 Ω?	Go to step **2.**	Replace the main relay.
2	**CHECK GROUND CIRCUIT FOR ECM.** 1) Disconnect the connector from ECM. 2) Measure the resistance of harness between ECM and chassis ground. ***Connector & terminal*** ***(B134) No. 4 — Chassis ground:*** ***(B134) No. 5 — Chassis ground:*** ***(B134) No. 6 — Chassis ground:*** ***(B134) No. 7 — Chassis ground:*** ***(B135) No. 1 — Chassis ground:*** ***(B135) No. 4 — Chassis ground:*** ***(B135) No. 12 — Chassis ground:*** ***(B137) No. 1 — Chassis ground:*** ***(B137) No. 2 — Chassis ground:*** ***(B137) No. 3 — Chassis ground:*** ***(B137) No. 7 — Chassis ground:***	Is the resistance less than 5 Ω?	Go to step **3.**	Repair the open circuit in harness between ECM connector and engine grounding terminal.
3	**CHECK INPUT VOLTAGE OF ECM.** Measure the voltage between ECM connector and chassis ground. ***Connector & terminal*** ***(B135) No. 19 (+) — Chassis ground (−):***	Is the voltage more than 10 V?	Go to step **4.**	Repair the open or ground short circuit of power supply circuit.
4	**CHECK INPUT VOLTAGE OF ECM.** 1) Turn the ignition switch to ON. 2) Measure the voltage between ECM connector and chassis ground. ***Connector & terminal*** ***(B137) No. 14 (+) — Chassis ground (−):***	Is the voltage more than 10 V?	Go to step **5.**	Repair the open or ground short circuit of power supply circuit.
5	**CHECK INPUT VOLTAGE OF MAIN RELAY.** Measure the voltage between main relay connector and chassis ground. ***Connector & terminal*** ***(B47) No. 2 (+) — Chassis ground (−):***	Is the voltage more than 10 V?	Go to step **6.**	Repair the open circuit in harness between ECM connector and main relay connector.
6	**CHECK INPUT VOLTAGE OF ECM.** 1) Connect the connectors to ECM and main relay. 2) Turn the ignition switch to ON. 3) Measure the voltage between ECM connector and chassis ground. ***Connector & terminal*** ***(B137) No. 16 (+) — Chassis ground (−):***	Is the voltage more than 10 V?	Go to step **7.**	Repair the open or ground short circuit in harness between ECM connector and main relay connector.
7	**CHECK INPUT VOLTAGE OF MAIN RELAY.** Measure the voltage between main relay connector and chassis ground. ***Connector & terminal*** ***(B47) No. 5 (+) — Chassis ground (−):*** ***(B47) No. 6 (+) — Chassis ground (−):***	Is the voltage more than 10 V?	Go to step **8.**	Repair the open or ground short circuit in harness of power supply circuit.

Step		Check	Yes	No
8	**CHECK INPUT VOLTAGE OF ECM.** 1) Turn the ignition switch to ON. 2) Measure the voltage between ECM connector and chassis ground. ***Connector & terminal*** ***(B135) No. 5 (+) — Chassis ground (−):*** ***(B135) No. 6 (+) — Chassis ground (−):***	Is the voltage more than 10 V?	Check ignition control system. <Ref. to EN(H6DO)(diag)-63, IGNITION CONTROL SYSTEM, Diagnostics for Engine Starting Failure.>	Repair the open or ground short circuit in harness between ECM connector and main relay connector.

D: IGNITION CONTROL SYSTEM

CAUTION:
After repair or replacement of faulty parts, conduct Clear Memory Mode <Ref. to EN(H6DO)(diag)-44, OPERATION, Clear Memory Mode.> and Inspection Mode <Ref. to EN(H6DO)(diag)-35, PROCEDURE, Inspection Mode.>.

WIRING DIAGRAM:

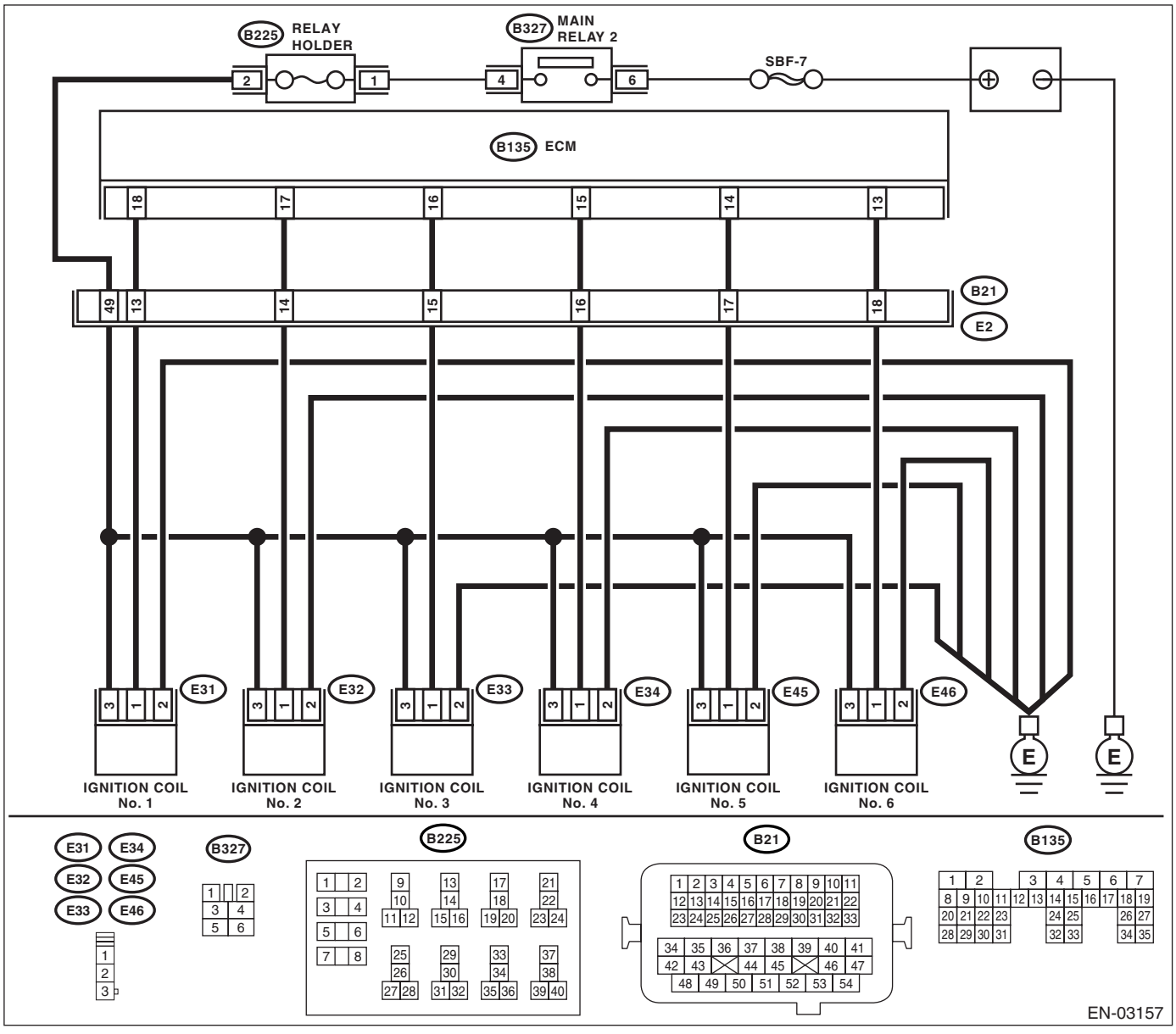

Diagnostics for Engine Starting Failure

	Step	Check	Yes	No
1	**CHECK SPARK PLUG CONDITION.** 1) Remove the spark plug. <Ref. to IG(H6DO)-4, REMOVAL, Spark Plug.> 2) Check the spark plug condition. <Ref. to IG(H6DO)-5, INSPECTION, Spark Plug.>	Is the spark plug's status OK?	Go to step **2.**	Replace the spark plug.
2	**CHECK IGNITION SYSTEM FOR SPARKS.** 1) Connect the spark plug to ignition coil. 2) Release the fuel pressure. 3) Contact the spark plug's thread portion on engine. 4) While opening the throttle valve fully, start the engine to check that spark occurs at each cylinder.	Does spark occur at each cylinder?	Check fuel pump system. <Ref. to EN(H6DO)(diag)-66, FUEL PUMP CIRCUIT, Diagnostics for Engine Starting Failure.>	Go to step **3.**
3	**CHECK POWER SUPPLY CIRCUIT FOR IGNITION COIL AND IGNITOR ASSEMBLY.** 1) Turn the ignition switch to OFF. 2) Disconnect the connector from ignition coil and ignitor assembly. 3) Turn the ignition switch to ON. 4) Measure the power supply voltage between ignition coil and ignitor assembly connector and engine ground. ***Connector & terminal*** ***(E31) No. 3 (+) — Engine ground (–):*** ***(E32) No. 3 (+) — Engine ground (–):*** ***(E33) No. 3 (+) — Engine ground (–):*** ***(E34) No. 3 (+) — Engine ground (–):*** ***(E45) No. 3 (+) — Engine ground (–):*** ***(E46) No. 3 (+) — Engine ground (–):***	Is the voltage more than 10 V?	Go to step **4.**	Repair the harness and connector. NOTE: In this case repair the following: • Open circuit in harness between ignition coil and ignitor assembly, and ignition switch connector • Poor contact in coupling connector
4	**CHECK HARNESS OF IGNITION COIL AND IGNITOR ASSEMBLY GROUND CIRCUIT.** 1) Turn the ignition switch to OFF. 2) Measure the resistance between ignition coil and ignitor assembly connector and engine ground. ***Connector & terminal*** ***(E31) No. 2 — Engine ground:*** ***(E32) No. 2 — Engine ground:*** ***(E33) No. 2 — Engine ground:*** ***(E34) No. 2 — Engine ground:*** ***(E45) No. 2 — Engine ground:*** ***(E46) No. 2 — Engine ground:***	Is the resistance less than 5 Ω?	Go to step **5.**	Repair the harness and connector. NOTE: In this case repair the following: • Open circuit in harness between ignition coil and ignitor assembly connector and engine grounding terminal
5	**CHECK HARNESS BETWEEN ECM AND IGNITION COIL AND IGNITOR ASSEMBLY CONNECTOR.** 1) Turn the ignition switch to OFF. 2) Disconnect the connector from ECM. 3) Disconnect the connector from ignition coil and ignitor assembly. 4) Measure the resistance of harness between ECM and ignition coil and ignitor assembly connector. ***Connector & terminal*** ***(B135) No. 18 — (E31) No. 1:*** ***(B135) No. 17 — (E32) No. 1:*** ***(B135) No. 16 — (E33) No. 1:*** ***(B135) No. 15 — (E34) No. 1:*** ***(B135) No. 14 — (E45) No. 1:*** ***(B135) No. 13 — (E46) No. 1:***	Is the resistance less than 1 Ω?	Go to step **6.**	Repair the harness and connector. NOTE: In this case repair the following: • Open circuit in harness between ECM and ignition coil and ignitor assembly connector. • Poor contact in coupling connector

	Step	Check	Yes	No
6	**CHECK HARNESS BETWEEN ECM AND IGNITION COIL AND IGNITOR ASSEMBLY CONNECTOR.** Measure the resistance of harness between ECM and engine ground. ***Connector & terminal:*** ***(B135) No. 18 — Engine ground:*** ***(B135) No. 17 — Engine ground:*** ***(B135) No. 16 — Engine ground:*** ***(B135) No. 15 — Engine ground:*** ***(B135) No. 14 — Engine ground:*** ***(B135) No. 13 — Engine ground:***	Is the resistance more than 1 MΩ?	Go to step **7.**	Repair the ground short circuit in harness between ECM and ignition coil and ignitor assembly connector.
7	**CHECK POOR CONTACT.** Check poor contact in ECM connector.	Is the poor contact in ECM connector?	Repair the poor contact in ECM connector.	Check fuel pump circuit. <Ref. to EN(H6DO)(diag)-66, FUEL PUMP CIRCUIT, Diagnostics for Engine Starting Failure.>

E: FUEL PUMP CIRCUIT

CAUTION:
After repair or replacement of faulty parts, conduct Clear Memory Mode <Ref. to EN(H6DO)(diag)-44, OPERATION, Clear Memory Mode.> and Inspection Mode <Ref. to EN(H6DO)(diag)-35, PROCEDURE, Inspection Mode.>.

WIRING DIAGRAM:

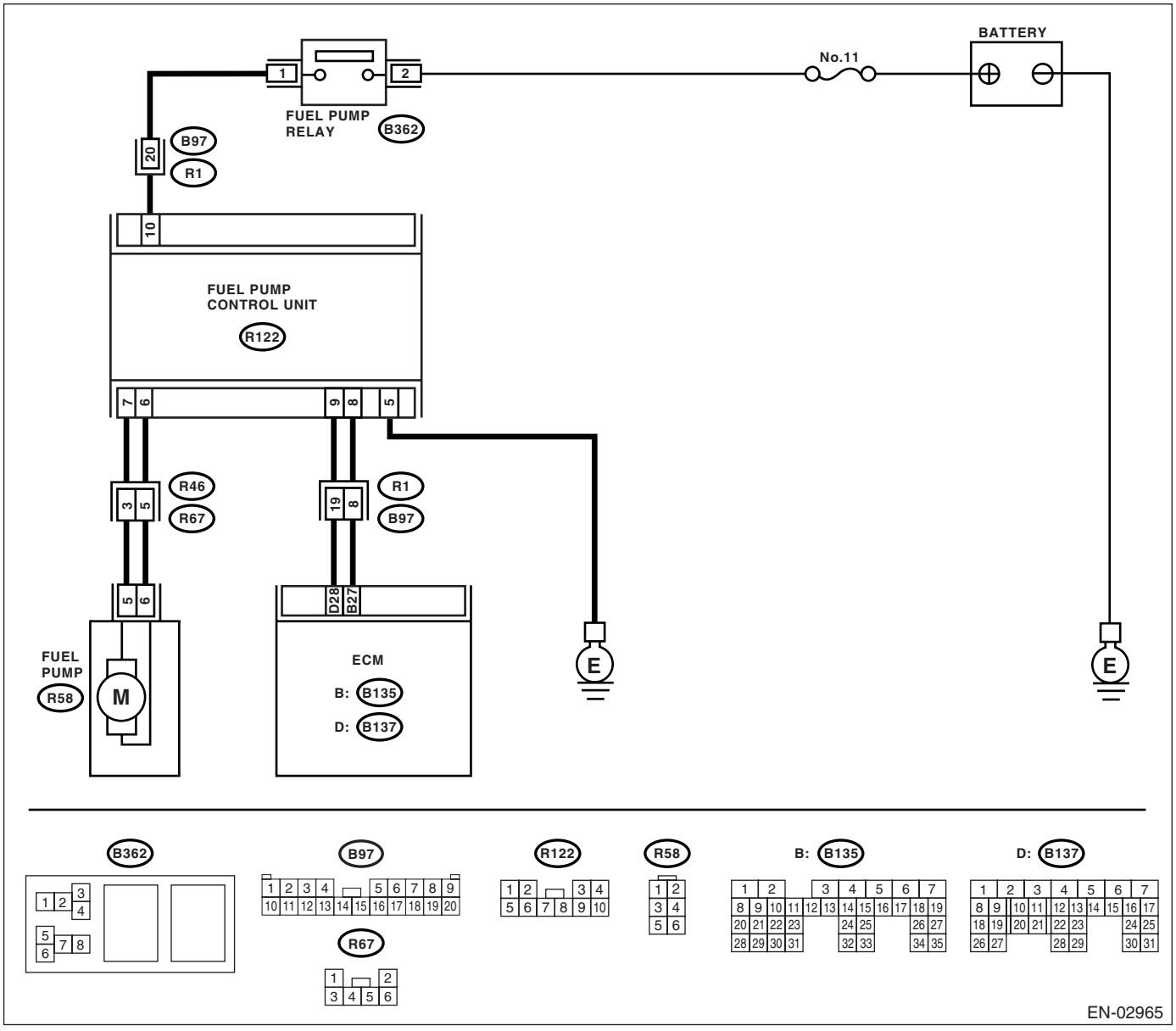

Step		Check	Yes	No
1	**CHECK OPERATING SOUND OF FUEL PUMP.** Make sure that fuel pump is in operation for two seconds when turning the ignition switch to ON. NOTE: Fuel pump operation can also be executed using Subaru Select Monitor. Refer to “Compulsory Valve Operation Check Mode” for procedures. <Ref. to EN(H6DO)(diag)-45, Compulsory Valve Operation Check Mode.>	Does the fuel pump produce operating sound?	Check the fuel injector circuit. <Ref. to EN(H6DO)(diag)-68, FUEL INJECTOR CIRCUIT, Diagnostics for Engine Starting Failure.>	Display DTC. <Ref. to EN(H6DO)(diag)-34, OPERATION, Read Diagnostic Trouble Code (DTC).>

F: FUEL INJECTOR CIRCUIT

CAUTION:
- **Check or repair only faulty parts.**
- **After repair or replacement of faulty parts, conduct Clear Memory Mode <Ref. to EN(H6DO)(diag)-44, OPERATION, Clear Memory Mode.> and Inspection Mode <Ref. to EN(H6DO)(diag)-35, PROCEDURE, Inspection Mode.>.**

WIRING DIAGRAM:

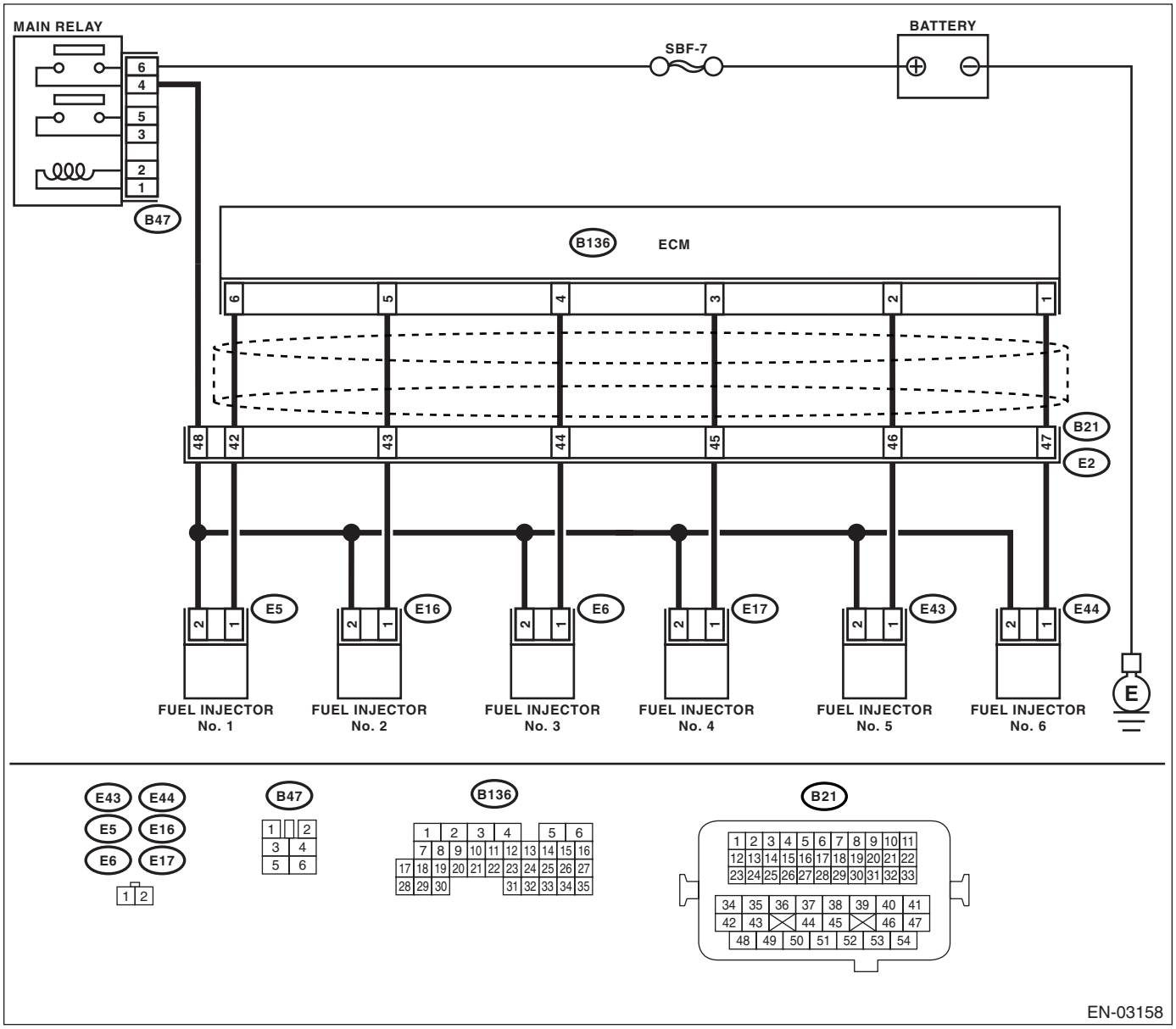

	Step	Check	Yes	No
1	**CHECK OPERATION OF EACH FUEL INJECTOR.** While cranking the engine, check that each fuel injector emits operating sound. Use a sound scope or apply a screwdriver to the injector for this check.	Does the fuel injector emit operating sound?	Check the fuel pressure. <Ref. to ME(H6DO)-27, INSPECTION, Fuel Pressure.>	Go to step **2.**
2	**CHECK POWER SUPPLY TO EACH FUEL INJECTOR.** 1) Turn the ignition switch to OFF. 2) Disconnect the connector from fuel injector. 3) Turn the ignition switch to ON. 4) Measure the power supply voltage between fuel injector terminal and engine ground. ***Connector & terminal*** ***#1 (E5) No. 2 (+) — Engine ground (−):*** ***#2 (E16) No. 2 (+) — Engine ground (−):*** ***#3 (E6) No. 2 (+) — Engine ground (−):*** ***#4 (E17) No. 2 (+) — Engine ground (−):*** ***#5 (E43) No. 2 (+) — Engine ground (−):*** ***#6 (E44) No. 2 (+) — Engine ground (−):***	Is the voltage more than 10 V?	Go to step **3.**	Repair the harness and connector. NOTE: In this case repair the following: • Open circuit in harness between main relay and fuel injector connector • Poor contact in main relay connector • Poor contact in coupling connector • Poor contact in fuel injector connector
3	**CHECK HARNESS BETWEEN ECM AND FUEL INJECTOR CONNECTOR.** 1) Disconnect the connector from ECM. 2) Measure the resistance of harness between ECM and fuel injector connector. ***Connector & terminal*** ***#1 (B136) No. 6 — (E5) No. 1:*** ***#2 (B136) No. 5 — (E16) No. 1:*** ***#3 (B136) No. 4 — (E6) No. 1:*** ***#4 (B136) No. 3 — (E17) No. 1:*** ***#5 (B136) No. 2 — (E43) No. 1:*** ***#6 (B136) No. 1 — (E44) No. 1:***	Is the resistance less than 1 Ω?	Go to step **4.**	Repair the harness and connector. NOTE: In this case repair the following: • Open circuit in harness between ECM and fuel injector connector • Poor contact in coupling connector
4	**CHECK HARNESS BETWEEN ECM AND FUEL INJECTOR CONNECTOR.** Measure the resistance of harness between ECM and fuel injector connector. ***Connector & terminal*** ***#1 (B136) No. 6 — Chassis ground:*** ***#2 (B136) No. 5 — Chassis ground:*** ***#3 (B136) No. 4 — Chassis ground:*** ***#4 (B136) No. 3 — Chassis ground:*** ***#5 (B136) No. 2 — Chassis ground:*** ***#6 (B136) No. 1 — Chassis ground:***	Is the resistance more than 1 MΩ?	Go to step **5.**	Repair the ground short circuit in harness between ECM and fuel injector connector.
5	**CHECK EACH FUEL INJECTOR.** 1) Turn the ignition switch to OFF. 2) Measure the resistance between each fuel injector terminals. ***Terminals*** ***No. 1 — No. 2:***	Is the resistance 5 — 20 Ω?	Go to step **6.**	Replace the faulty fuel injector.

	Step	Check	Yes	No
6	**CHECK POOR CONTACT.** Check poor contact in ECM connector.	Is the poor contact in ECM connector?	Repair the poor contact in ECM connector.	Inspection using “General Diagnostics Table”. <Ref. to EN(H6DO)(diag)-372, INSPECTION, General Diagnostic Table.>

17.List of Diagnostic Trouble Code (DTC)

A: LIST

DTC	Item	Reference
P0011	Intake Camshaft Position Timing - Over-Advanced (Bank 1)	<Ref. to EN(H6DO)(diag)-79, DTC P0011 INTAKE CAMSHAFT POSITION TIMING - OVER-ADVANCED (BANK 1), Diagnostic Procedure with Diagnostic Trouble Code (DTC).>
P0021	Intake Camshaft Position Timing - Over-Advanced (Bank 2)	<Ref. to EN(H6DO)(diag)-80, DTC P0021 INTAKE CAMSHAFT POSITION TIMING - OVER-ADVANCED (BANK 2), Diagnostic Procedure with Diagnostic Trouble Code (DTC).>
P0026	Intake Valve Control Solenoid Circuit Range/Performance (Bank 1)	<Ref. to EN(H6DO)(diag)-81, DTC P0026 INTAKE VALVE CONTROL SOLENOID CIRCUIT RANGE/PERFORMANCE (BANK 1), Diagnostic Procedure with Diagnostic Trouble Code (DTC).>
P0028	Intake Valve Control Solenoid Circuit Range/Performance (Bank 2)	<Ref. to EN(H6DO)(diag)-83, DTC P0028 INTAKE VALVE CONTROL SOLENOID CIRCUIT RANGE/PERFORMANCE (BANK 2), Diagnostic Procedure with Diagnostic Trouble Code (DTC).>
P0030	HO2S Heater Control Circuit (Bank 1 Sensor 1)	<Ref. to EN(H6DO)(diag)-84, DTC P0030 HO2S HEATER CONTROL CIRCUIT (BANK 1 SENSOR 1), Diagnostic Procedure with Diagnostic Trouble Code (DTC).>
P0031	HO2S Heater Control Circuit Low (Bank 1 Sensor 1)	<Ref. to EN(H6DO)(diag)-86, DTC P0031 HO2S HEATER CONTROL CIRCUIT LOW (BANK 1 SENSOR 1), Diagnostic Procedure with Diagnostic Trouble Code (DTC).>
P0032	HO2S Heater Control Circuit High (Bank 1 Sensor 1)	<Ref. to EN(H6DO)(diag)-89, DTC P0032 HO2S HEATER CONTROL CIRCUIT HIGH (BANK 1 SENSOR 1), Diagnostic Procedure with Diagnostic Trouble Code (DTC).>
P0037	HO2S Heater Control Circuit Low (Bank 1 Sensor 2)	<Ref. to EN(H6DO)(diag)-91, DTC P0037 HO2S HEATER CONTROL CIRCUIT LOW (BANK 1 SENSOR 2), Diagnostic Procedure with Diagnostic Trouble Code (DTC).>
P0038	HO2S Heater Control Circuit High (Bank 1 Sensor 2)	<Ref. to EN(H6DO)(diag)-94, DTC P0038 HO2S HEATER CONTROL CIRCUIT HIGH (BANK 1 SENSOR 2), Diagnostic Procedure with Diagnostic Trouble Code (DTC).>
P0050	HO2S Heater Control Circuit (Bank 2 Sensor 1)	<Ref. to EN(H6DO)(diag)-96, DTC P0050 HO2S HEATER CONTROL CIRCUIT (BANK 2 SENSOR 1), Diagnostic Procedure with Diagnostic Trouble Code (DTC).>
P0051	HO2S Heater Control Circuit Low (Bank 2 Sensor 1)	<Ref. to EN(H6DO)(diag)-98, DTC P0051 HO2S HEATER CONTROL CIRCUIT LOW (BANK 2 SENSOR 1), Diagnostic Procedure with Diagnostic Trouble Code (DTC).>
P0052	HO2S Heater Control Circuit High (Bank 2 Sensor 1)	<Ref. to EN(H6DO)(diag)-101, DTC P0052 HO2S HEATER CONTROL CIRCUIT HIGH (BANK 2 SENSOR 1), Diagnostic Procedure with Diagnostic Trouble Code (DTC).>
P0057	HO2S Heater Control Circuit Low (Bank 2 Sensor 2)	<Ref. to EN(H6DO)(diag)-103, DTC P0057 HO2S HEATER CONTROL CIRCUIT LOW (BANK 2 SENSOR 2), Diagnostic Procedure with Diagnostic Trouble Code (DTC).>
P0058	HO2S Heater Control Circuit High (Bank 2 Sensor 2)	<Ref. to EN(H6DO)(diag)-106, DTC P0058 HO2S HEATER CONTROL CIRCUIT HIGH (BANK 2 SENSOR 2), Diagnostic Procedure with Diagnostic Trouble Code (DTC).>
P0068	MAP/MAF - Throttle Position Correlation	<Ref. to EN(H6DO)(diag)-109, DTC P0068 MAP/MAF - THROTTLE POSITION CORRELATION, Diagnostic Procedure with Diagnostic Trouble Code (DTC).>
P0076	Intake Valve Control Circuit Low (Bank 1)	<Ref. to EN(H6DO)(diag)-111, DTC P0076 INTAKE VALVE CONTROL CIRCUIT LOW (BANK 1), Diagnostic Procedure with Diagnostic Trouble Code (DTC).>
P0077	Intake Valve Control Circuit High (Bank 1)	<Ref. to EN(H6DO)(diag)-113, DTC P0077 INTAKE VALVE CONTROL CIRCUIT HIGH (BANK 1), Diagnostic Procedure with Diagnostic Trouble Code (DTC).>
P0082	Intake Valve Control Circuit Low (Bank 2)	<Ref. to EN(H6DO)(diag)-115, DTC P0082 INTAKE VALVE CONTROL CIRCUIT LOW (BANK 2), Diagnostic Procedure with Diagnostic Trouble Code (DTC).>

List of Diagnostic Trouble Code (DTC)

DTC	Item	Reference
P0083	Intake Valve Control Circuit High (Bank 2)	<Ref. to EN(H6DO)(diag)-117, DTC P0083 INTAKE VALVE CONTROL CIRCUIT HIGH (BANK 2), Diagnostic Procedure with Diagnostic Trouble Code (DTC).>
P0101	Mass or Volume Air Flow Circuit Range/Performance	<Ref. to EN(H6DO)(diag)-119, DTC P0101 MASS OR VOLUME AIR FLOW CIRCUIT RANGE/PERFORMANCE, Diagnostic Procedure with Diagnostic Trouble Code (DTC).>
P0102	Mass or Volume Air Flow Circuit Low Input	<Ref. to EN(H6DO)(diag)-121, DTC P0102 MASS OR VOLUME AIR FLOW CIRCUIT LOW INPUT, Diagnostic Procedure with Diagnostic Trouble Code (DTC).>
P0103	Mass or Volume Air Flow Circuit High Input	<Ref. to EN(H6DO)(diag)-124, DTC P0103 MASS OR VOLUME AIR FLOW CIRCUIT HIGH INPUT, Diagnostic Procedure with Diagnostic Trouble Code (DTC).>
P0107	Manifold Absolute Pressure/Barometric Pressure Circuit Low Input	<Ref. to EN(H6DO)(diag)-126, DTC P0107 MANIFOLD ABSOLUTE PRESSURE/BAROMETRIC PRESSURE CIRCUIT LOW INPUT, Diagnostic Procedure with Diagnostic Trouble Code (DTC).>
P0108	Manifold Absolute Pressure/Barometric Pressure Circuit High Input	<Ref. to EN(H6DO)(diag)-129, DTC P0108 MANIFOLD ABSOLUTE PRESSURE/BAROMETRIC PRESSURE CIRCUIT HIGH INPUT, Diagnostic Procedure with Diagnostic Trouble Code (DTC).>
P0111	Intake Air Temperature Circuit Range/Performance	<Ref. to EN(H6DO)(diag)-132, DTC P0111 INTAKE AIR TEMPERATURE CIRCUIT RANGE/PERFORMANCE, Diagnostic Procedure with Diagnostic Trouble Code (DTC).>
P0112	Intake Air Temperature Circuit Low Input	<Ref. to EN(H6DO)(diag)-134, DTC P0112 INTAKE AIR TEMPERATURE CIRCUIT LOW INPUT, Diagnostic Procedure with Diagnostic Trouble Code (DTC).>
P0113	Intake Air Temperature Circuit High Input	<Ref. to EN(H6DO)(diag)-136, DTC P0113 INTAKE AIR TEMPERATURE CIRCUIT HIGH INPUT, Diagnostic Procedure with Diagnostic Trouble Code (DTC).>
P0117	Engine Coolant Temperature Circuit Low Input	<Ref. to EN(H6DO)(diag)-139, DTC P0117 ENGINE COOLANT TEMPERATURE CIRCUIT LOW INPUT, Diagnostic Procedure with Diagnostic Trouble Code (DTC).>
P0118	Engine Coolant Temperature Circuit High Input	<Ref. to EN(H6DO)(diag)-141, DTC P0118 ENGINE COOLANT TEMPERATURE CIRCUIT HIGH INPUT, Diagnostic Procedure with Diagnostic Trouble Code (DTC).>
P0122	Throttle/Pedal Position Sensor/ Switch “A” Circuit Low Input	<Ref. to EN(H6DO)(diag)-143, DTC P0122 THROTTLE/PEDAL POSITION SENSOR/SWITCH “A” CIRCUIT LOW INPUT, Diagnostic Procedure with Diagnostic Trouble Code (DTC).>
P0123	Throttle/Pedal Position Sensor/ Switch “A” Circuit High Input	<Ref. to EN(H6DO)(diag)-146, DTC P0123 THROTTLE/PEDAL POSITION SENSOR/SWITCH “A” CIRCUIT HIGH INPUT, Diagnostic Procedure with Diagnostic Trouble Code (DTC).>
P0125	Insufficient Coolant Temperature For Closed Loop Fuel Control	<Ref. to EN(H6DO)(diag)-149, DTC P0125 INSUFFICIENT ENGINE COOLANT TEMPERATURE FOR CLOSED LOOP FUEL CONTROL, Diagnostic Procedure with Diagnostic Trouble Code (DTC).>
P0126	Insufficient Coolant Temperature for Stable Operation	<Ref. to EN(H6DO)(diag)-150, DTC P0126 INSUFFICIENT ENGINE COOLANT TEMPERATURE FOR STABLE OPERATION, Diagnostic Procedure with Diagnostic Trouble Code (DTC).>
P0128	Coolant Thermostat (Coolant Temperature Below Thermostat Regulating Temperature)	<Ref. to EN(H6DO)(diag)-152, DTC P0128 COOLANT THERMOSTAT (ENGINE COOLANT TEMPERATURE BELOW THERMOSTAT REGULATING TEMPERATURE), Diagnostic Procedure with Diagnostic Trouble Code (DTC).>
P0131	O2 Sensor Circuit Low Voltage (Bank 1 Sensor 1)	<Ref. to EN(H6DO)(diag)-152, DTC P0131 O2 SENSOR CIRCUIT LOW VOLTAGE (BANK 1 SENSOR 1), Diagnostic Procedure with Diagnostic Trouble Code (DTC).>
P0132	O2 Sensor Circuit High Voltage (Bank 1 Sensor 1)	<Ref. to EN(H6DO)(diag)-154, DTC P0132 O2 SENSOR CIRCUIT HIGH VOLTAGE (BANK 1 SENSOR 1), Diagnostic Procedure with Diagnostic Trouble Code (DTC).>
P0133	O2 Sensor Circuit Slow Response (Bank 1 Sensor 1)	<Ref. to EN(H6DO)(diag)-156, DTC P0133 O2 SENSOR CIRCUIT SLOW RESPONSE (BANK 1 SENSOR 1), Diagnostic Procedure with Diagnostic Trouble Code (DTC).>

DTC	Item	Reference
P0134	O2 Sensor Circuit No Activity Detected (Bank 1 Sensor 1)	<Ref. to EN(H6DO)(diag)-158, DTC P0134 O2 SENSOR CIRCUIT NO ACTIVITY DETECTED (BANK 1 SENSOR 1), Diagnostic Procedure with Diagnostic Trouble Code (DTC).>
P0137	O2 Sensor Circuit Low Voltage (Bank 1 Sensor 2)	<Ref. to EN(H6DO)(diag)-160, DTC P0137 O2 SENSOR CIRCUIT LOW VOLTAGE (BANK 1 SENSOR 2), Diagnostic Procedure with Diagnostic Trouble Code (DTC).>
P0138	O2 Sensor Circuit High Voltage (Bank 1 Sensor 2)	<Ref. to EN(H6DO)(diag)-163, DTC P0138 O2 SENSOR CIRCUIT HIGH VOLTAGE (BANK 1 SENSOR 2), Diagnostic Procedure with Diagnostic Trouble Code (DTC).>
P0139	O2 Sensor Circuit Slow Response (Bank 1 Sensor 2)	<Ref. to EN(H6DO)(diag)-166, DTC P0139 O2 SENSOR CIRCUIT SLOW RESPONSE (BANK 1 SENSOR 2), Diagnostic Procedure with Diagnostic Trouble Code (DTC).>
P0151	O2 Sensor Circuit Low Voltage (Bank 2 Sensor 1)	<Ref. to EN(H6DO)(diag)-168, DTC P0151 O2 SENSOR CIRCUIT LOW VOLTAGE (BANK 2 SENSOR 1), Diagnostic Procedure with Diagnostic Trouble Code (DTC).>
P0152	O2 Sensor Circuit High Voltage (Bank 2 Sensor 1)	<Ref. to EN(H6DO)(diag)-170, DTC P0152 O2 SENSOR CIRCUIT HIGH VOLTAGE (BANK 2 SENSOR 1), Diagnostic Procedure with Diagnostic Trouble Code (DTC).>
P0153	O2 Sensor Circuit Slow Response (Bank 2 Sensor 1)	<Ref. to EN(H6DO)(diag)-172, DTC P0153 O2 SENSOR CIRCUIT SLOW RESPONSE (BANK 2 SENSOR 1), Diagnostic Procedure with Diagnostic Trouble Code (DTC).>
P0154	O2 Sensor Circuit No Activity Detected (Bank 2 Sensor 1)	<Ref. to EN(H6DO)(diag)-174, DTC P0154 O2 SENSOR CIRCUIT NO ACTIVITY DETECTED (BANK 2 SENSOR 1), Diagnostic Procedure with Diagnostic Trouble Code (DTC).>
P0157	O2 Sensor Circuit Low Voltage (Bank 2 Sensor 2)	<Ref. to EN(H6DO)(diag)-176, DTC P0157 O2 SENSOR CIRCUIT LOW VOLTAGE (BANK 2 SENSOR 2), Diagnostic Procedure with Diagnostic Trouble Code (DTC).>
P0158	O2 Sensor Circuit High Voltage (Bank 2 Sensor 2)	<Ref. to EN(H6DO)(diag)-179, DTC P0158 O2 SENSOR CIRCUIT HIGH VOLTAGE (BANK 2 SENSOR 2), Diagnostic Procedure with Diagnostic Trouble Code (DTC).>
P0159	O2 Sensor Circuit Slow Response (Bank 2 Sensor 2)	<Ref. to EN(H6DO)(diag)-182, DTC P0159 O2 SENSOR CIRCUIT SLOW RESPONSE (BANK 2 SENSOR 2), Diagnostic Procedure with Diagnostic Trouble Code (DTC).>
P0171	System Too Lean (Bank 1)	<Ref. to EN(H6DO)(diag)-184, DTC P0171 SYSTEM TOO LEAN (BANK 1), Diagnostic Procedure with Diagnostic Trouble Code (DTC).>
P0172	System Too Rich (Bank 1)	<Ref. to EN(H6DO)(diag)-184, DTC P0172 SYSTEM TOO RICH (BANK 1), Diagnostic Procedure with Diagnostic Trouble Code (DTC).>
P0174	System Too Lean (Bank 2)	<Ref. to EN(H6DO)(diag)-184, DTC P0174 SYSTEM TOO LEAN (BANK 2), Diagnostic Procedure with Diagnostic Trouble Code (DTC).>
P0175	System Too Rich (Bank 2)	<Ref. to EN(H6DO)(diag)-185, DTC P0175 SYSTEM TOO RICH (BANK 2), Diagnostic Procedure with Diagnostic Trouble Code (DTC).>
P0181	Fuel Temperature Sensor “A” Circuit Range/Performance	<Ref. to EN(H6DO)(diag)-187, DTC P0181 FUEL TEMPERATURE SENSOR “A” CIRCUIT RANGE/PERFORMANCE, Diagnostic Procedure with Diagnostic Trouble Code (DTC).>
P0182	Fuel Temperature Sensor “A” Circuit Low Input	<Ref. to EN(H6DO)(diag)-189, DTC P0182 FUEL TEMPERATURE SENSOR “A” CIRCUIT LOW INPUT, Diagnostic Procedure with Diagnostic Trouble Code (DTC).>
P0183	Fuel Temperature Sensor “A” Circuit High Input	<Ref. to EN(H6DO)(diag)-191, DTC P0183 FUEL TEMPERATURE SENSOR “A” CIRCUIT HIGH INPUT, Diagnostic Procedure with Diagnostic Trouble Code (DTC).>
P0196	Engine Oil Temperature Sensor Circuit Range/performance	<Ref. to EN(H6DO)(diag)-194, DTC P0196 ENGINE OIL TEMPERATURE SENSOR CIRCUIT RANGE/PERFORMANCE, Diagnostic Procedure with Diagnostic Trouble Code (DTC).>
P0197	Engine Oil Temperature Sensor Circuit Low	<Ref. to EN(H6DO)(diag)-196, DTC P0197 ENGINE OIL TEMPERATURE SENSOR CIRCUIT LOW, Diagnostic Procedure with Diagnostic Trouble Code (DTC).>

DTC	Item	Reference
P0198	Engine Oil Temperature Sensor Circuit High	<Ref. to EN(H6DO)(diag)-198, DTC P0198 ENGINE OIL TEMPERATURE SENSOR CIRCUIT HIGH, Diagnostic Procedure with Diagnostic Trouble Code (DTC).>
P0222	Throttle/Pedal Position Sensor/ Switch “B” Circuit Low Input	<Ref. to EN(H6DO)(diag)-200, DTC P0222 THROTTLE/PEDAL POSITION SENSOR/SWITCH “B” CIRCUIT LOW INPUT, Diagnostic Procedure with Diagnostic Trouble Code (DTC).>
P0223	Throttle/Pedal Position Sensor/ Switch “B” Circuit High Input	<Ref. to EN(H6DO)(diag)-203, DTC P0223 THROTTLE/PEDAL POSITION SENSOR/SWITCH “B” CIRCUIT HIGH INPUT, Diagnostic Procedure with Diagnostic Trouble Code (DTC).>
P0230	Fuel Pump Primary Circuit	<Ref. to EN(H6DO)(diag)-206, DTC P0230 FUEL PUMP PRIMARY CIRCUIT, Diagnostic Procedure with Diagnostic Trouble Code (DTC).>
P0301	Cylinder 1 Misfire Detected	<Ref. to EN(H6DO)(diag)-209, DTC P0301 CYLINDER 1 MISFIRE DETECTED, Diagnostic Procedure with Diagnostic Trouble Code (DTC).>
P0302	Cylinder 2 Misfire Detected	<Ref. to EN(H6DO)(diag)-209, DTC P0302 CYLINDER 2 MISFIRE DETECTED, Diagnostic Procedure with Diagnostic Trouble Code (DTC).>
P0303	Cylinder 3 Misfire Detected	<Ref. to EN(H6DO)(diag)-209, DTC P0303 CYLINDER 3 MISFIRE DETECTED, Diagnostic Procedure with Diagnostic Trouble Code (DTC).>
P0304	Cylinder 4 Misfire Detected	<Ref. to EN(H6DO)(diag)-209, DTC P0304 CYLINDER 4 MISFIRE DETECTED, Diagnostic Procedure with Diagnostic Trouble Code (DTC).>
P0305	Cylinder 5 Misfire Detected	<Ref. to EN(H6DO)(diag)-209, DTC P0305 CYLINDER 5 MISFIRE DETECTED, Diagnostic Procedure with Diagnostic Trouble Code (DTC).>
P0306	Cylinder 6 Misfire Detected	<Ref. to EN(H6DO)(diag)-210, DTC P0306 CYLINDER 6 MISFIRE DETECTED, Diagnostic Procedure with Diagnostic Trouble Code (DTC).>
P0327	Knock Sensor 1 Circuit Low Input (Bank 1 or Single Sensor)	<Ref. to EN(H6DO)(diag)-217, DTC P0327 KNOCK SENSOR 1 CIRCUIT LOW INPUT (BANK 1 OR SINGLE SENSOR), Diagnostic Procedure with Diagnostic Trouble Code (DTC).>
P0328	Knock Sensor 1 Circuit High Input (Bank 1 or Single Sensor)	<Ref. to EN(H6DO)(diag)-219, DTC P0328 KNOCK SENSOR 1 CIRCUIT HIGH INPUT (BANK 1 OR SINGLE SENSOR), Diagnostic Procedure with Diagnostic Trouble Code (DTC).>
P0332	Knock Sensor 2 Circuit Low Input (Bank 2)	<Ref. to EN(H6DO)(diag)-221, DTC P0332 KNOCK SENSOR 2 CIRCUIT LOW INPUT (BANK 2), Diagnostic Procedure with Diagnostic Trouble Code (DTC).>
P0333	Knock Sensor 2 Circuit High Input (Bank 2)	<Ref. to EN(H6DO)(diag)-223, DTC P0333 KNOCK SENSOR 2 CIRCUIT HIGH INPUT (BANK 2), Diagnostic Procedure with Diagnostic Trouble Code (DTC).>
P0335	Crankshaft Position Sensor “A” Circuit	<Ref. to EN(H6DO)(diag)-225, DTC P0335 CRANKSHAFT POSITION SENSOR “A” CIRCUIT, Diagnostic Procedure with Diagnostic Trouble Code (DTC).>
P0336	Crankshaft Position Sensor “A” Circuit Range/Performance	<Ref. to EN(H6DO)(diag)-227, DTC P0336 CRANKSHAFT POSITION SENSOR “A” CIRCUIT RANGE/PERFORMANCE, Diagnostic Procedure with Diagnostic Trouble Code (DTC).>
P0340	Camshaft Position Sensor “A” Circuit (Bank 1 or Single Sensor)	<Ref. to EN(H6DO)(diag)-229, DTC P0340 CAMSHAFT POSITION SENSOR “A” CIRCUIT (BANK 1 OR SINGLE SENSOR), Diagnostic Procedure with Diagnostic Trouble Code (DTC).>
P0345	Camshaft Position Sensor “A” Circuit (Bank 2)	<Ref. to EN(H6DO)(diag)-231, DTC P0345 CAMSHAFT POSITION SENSOR “A” CIRCUIT (BANK 2), Diagnostic Procedure with Diagnostic Trouble Code (DTC).>
P0420	Catalyst System Efficiency Below Threshold (Bank 1)	<Ref. to EN(H6DO)(diag)-233, DTC P0420 CATALYST SYSTEM EFFICIENCY BELOW THRESHOLD (BANK 1), Diagnostic Procedure with Diagnostic Trouble Code (DTC).>
P0442	Evaporative Emission Control System Leak Detected (Small Leak)	<Ref. to EN(H6DO)(diag)-238, DTC P0442 EVAPORATIVE EMISSION CONTROL SYSTEM LEAK DETECTED (SMALL LEAK), Diagnostic Procedure with Diagnostic Trouble Code (DTC).>
P0447	Evaporative Emission Control System Vent Control Circuit Open	<Ref. to EN(H6DO)(diag)-242, DTC P0447 EVAPORATIVE EMISSION CONTROL SYSTEM VENT CONTROL CIRCUIT OPEN, Diagnostic Procedure with Diagnostic Trouble Code (DTC).>

DTC	Item	Reference
P0448	Evaporative Emission Control System Vent Control Circuit Shorted	<Ref. to EN(H6DO)(diag)-245, DTC P0448 EVAPORATIVE EMISSION CONTROL SYSTEM VENT CONTROL CIRCUIT SHORTED, Diagnostic Procedure with Diagnostic Trouble Code (DTC).>
P0451	Evaporative Emission Control System Pressure Sensor	<Ref. to EN(H6DO)(diag)-247, DTC P0451 EVAPORATIVE EMISSION CONTROL SYSTEM PRESSURE SENSOR, Diagnostic Procedure with Diagnostic Trouble Code (DTC).>
P0452	Evaporative Emission Control System Pressure Sensor Low Input	<Ref. to EN(H6DO)(diag)-249, DTC P0452 EVAPORATIVE EMISSION CONTROL SYSTEM PRESSURE SENSOR LOW INPUT, Diagnostic Procedure with Diagnostic Trouble Code (DTC).>
P0453	Evaporative Emission Control System Pressure Sensor High Input	<Ref. to EN(H6DO)(diag)-252, DTC P0453 EVAPORATIVE EMISSION CONTROL SYSTEM PRESSURE SENSOR HIGH INPUT, Diagnostic Procedure with Diagnostic Trouble Code (DTC).>
P0456	Evaporative Emission Control System Leak Detected (Very Small Leak)	<Ref. to EN(H6DO)(diag)-255, DTC P0456 EVAPORATIVE EMISSION CONTROL SYSTEM LEAK DETECTED (VERY SMALL LEAK), Diagnostic Procedure with Diagnostic Trouble Code (DTC).>
P0457	Evaporative Emission Control System Leak Detected (Fuel Cap Loose/Off)	<Ref. to EN(H6DO)(diag)-258, DTC P0457 EVAPORATIVE EMISSION CONTROL SYSTEM LEAK DETECTED (FUEL CAP LOOSE/OFF), Diagnostic Procedure with Diagnostic Trouble Code (DTC).>
P0458	Evaporative Emission Control System Purge Control Valve Circuit Low	<Ref. to EN(H6DO)(diag)-262, DTC P0458 EVAPORATIVE EMISSION CONTROL SYSTEM PURGE CONTROL VALVE CIRCUIT LOW, Diagnostic Procedure with Diagnostic Trouble Code (DTC).>
P0459	Evaporative Emission Control System Purge Control Valve Circuit High	<Ref. to EN(H6DO)(diag)-264, DTC P0459 EVAPORATIVE EMISSION CONTROL SYSTEM PURGE CONTROL VALVE CIRCUIT HIGH, Diagnostic Procedure with Diagnostic Trouble Code (DTC).>
P0461	Fuel Level Sensor Circuit Range/Performance	<Ref. to EN(H6DO)(diag)-266, DTC P0461 FUEL LEVEL SENSOR CIRCUIT RANGE/PERFORMANCE, Diagnostic Procedure with Diagnostic Trouble Code (DTC).>
P0462	Fuel Level Sensor Circuit Low Input	<Ref. to EN(H6DO)(diag)-266, DTC P0462 FUEL LEVEL SENSOR CIRCUIT LOW INPUT, Diagnostic Procedure with Diagnostic Trouble Code (DTC).>
P0463	Fuel Level Sensor Circuit High Input	<Ref. to EN(H6DO)(diag)-266, DTC P0463 FUEL LEVEL SENSOR CIRCUIT HIGH INPUT, Diagnostic Procedure with Diagnostic Trouble Code (DTC).>
P0464	Fuel Level Sensor Circuit Intermittent	<Ref. to EN(H6DO)(diag)-267, DTC P0464 FUEL LEVEL SENSOR CIRCUIT INTERMITTENT, Diagnostic Procedure with Diagnostic Trouble Code (DTC).>
P0483	Cooling Fan Rationality Check	<Ref. to EN(H6DO)(diag)-267, DTC P0483 COOLING FAN RATIONALITY CHECK, Diagnostic Procedure with Diagnostic Trouble Code (DTC).>
P0500	Vehicle Speed Sensor	<Ref. to EN(H6DO)(diag)-268, DTC P0500 VEHICLE SPEED SENSOR, Diagnostic Procedure with Diagnostic Trouble Code (DTC).>
P0506	Idle Control System RPM Lower Than Expected	<Ref. to EN(H6DO)(diag)-268, DTC P0506 IDLE CONTROL SYSTEM RPM LOWER THAN EXPECTED, Diagnostic Procedure with Diagnostic Trouble Code (DTC).>
P0507	Idle Control System RPM Higher Than Expected	<Ref. to EN(H6DO)(diag)-270, DTC P0507 IDLE CONTROL SYSTEM RPM HIGHER THAN EXPECTED, Diagnostic Procedure with Diagnostic Trouble Code (DTC).>
P0512	Starter Request Circuit	<Ref. to EN(H6DO)(diag)-272, DTC P0512 STARTER REQUEST CIRCUIT, Diagnostic Procedure with Diagnostic Trouble Code (DTC).>
P0513	Incorrect Immobilizer Key	<Ref. to IM(diag)-17, DTC P0513 INCORRECT IMMOBILIZER KEY, Diagnostic Procedure with Diagnostic Trouble Code (DTC).>
P0519	Idle Control System Malfunction (Fail-Safe)	<Ref. to EN(H6DO)(diag)-274, DTC P0519 IDLE CONTROL SYSTEM MALFUNCTION (FAIL-SAFE), Diagnostic Procedure with Diagnostic Trouble Code (DTC).>
P0600	Serial Communication Link	<Ref. to EN(H6DO)(diag)-274, DTC P0600 SERIAL COMMUNICATION LINK, Diagnostic Procedure with Diagnostic Trouble Code (DTC).>

List of Diagnostic Trouble Code (DTC)

DTC	Item	Reference
P0604	Internal Control Module Random Access Memory (RAM) Error	<Ref. to EN(H6DO)(diag)-275, DTC P0604 INTERNAL CONTROL MODULE RANDOM ACCESS MEMORY (RAM) ERROR, Diagnostic Procedure with Diagnostic Trouble Code (DTC).>
P0605	Internal Control Module Read Only Memory (ROM) Error	<Ref. to EN(H6DO)(diag)-276, DTC P0605 INTERNAL CONTROL MODULE READ ONLY MEMORY (ROM) ERROR, Diagnostic Procedure with Diagnostic Trouble Code (DTC).>
P0607	Control Module Performance	<Ref. to EN(H6DO)(diag)-277, DTC P0607 CONTROL MODULE PERFORMANCE, Diagnostic Procedure with Diagnostic Trouble Code (DTC).>
P0638	Throttle Actuator Control Range/Performance (Bank 1)	<Ref. to EN(H6DO)(diag)-278, DTC P0638 THROTTLE ACTUATOR CONTROL RANGE/PERFORMANCE (BANK 1), Diagnostic Procedure with Diagnostic Trouble Code (DTC).>
P0691	Cooling Fan 1 Control Circuit Low	<Ref. to EN(H6DO)(diag)-278, DTC P0691 COOLING FAN 1 CONTROL CIRCUIT LOW, Diagnostic Procedure with Diagnostic Trouble Code (DTC).>
P0692	Cooling Fan 1 Control Circuit High	<Ref. to EN(H6DO)(diag)-279, DTC P0692 COOLING FAN 1 CONTROL CIRCUIT HIGH, Diagnostic Procedure with Diagnostic Trouble Code (DTC).>
P0700	Transmission Control System (MIL Request)	<Ref. to EN(H6DO)(diag)-279, DTC P0700 TRANSMISSION CONTROL SYSTEM (MIL REQUEST), Diagnostic Procedure with Diagnostic Trouble Code (DTC).>
P1152	O2 Sensor Circuit Range/Performance (Low) (Bank1 Sensor1)	<Ref. to EN(H6DO)(diag)-279, DTC P1152 O2 SENSOR CIRCUIT RANGE/PERFORMANCE (LOW) (BANK1 SENSOR1), Diagnostic Procedure with Diagnostic Trouble Code (DTC).>
P1153	O2 Sensor Circuit Range/Performance (High) (Bank1 Sensor1)	<Ref. to EN(H6DO)(diag)-279, DTC P1153 O2 SENSOR CIRCUIT RANGE/PERFORMANCE (HIGH) (BANK1 SENSOR1), Diagnostic Procedure with Diagnostic Trouble Code (DTC).>
P1154	O2 Sensor Circuit Range/Performance (Low) (Bank 2 Sensor 1)	<Ref. to EN(H6DO)(diag)-282, DTC P1154 O2 SENSOR CIRCUIT RANGE/PERFORMANCE (LOW) (BANK 2 SENSOR 1), Diagnostic Procedure with Diagnostic Trouble Code (DTC).>
P1155	O2 Sensor Circuit Range/Performance (High) (Bank 2 Sensor 1)	<Ref. to EN(H6DO)(diag)-282, DTC P1155 O2 SENSOR CIRCUIT RANGE/PERFORMANCE (HIGH) (BANK 2 SENSOR 1), Diagnostic Procedure with Diagnostic Trouble Code (DTC).>
P1160	Return Spring Failure	<Ref. to EN(H6DO)(diag)-285, DTC P1160 RETURN SPRING FAILURE, Diagnostic Procedure with Diagnostic Trouble Code (DTC).>
P1400	Fuel Tank Pressure Control Solenoid Valve Circuit Low	<Ref. to EN(H6DO)(diag)-285, DTC P1400 FUEL TANK PRESSURE CONTROL SOLENOID VALVE CIRCUIT LOW, Diagnostic Procedure with Diagnostic Trouble Code (DTC).>
P1420	Fuel Tank Pressure Control Solenoid Valve Circuit High	<Ref. to EN(H6DO)(diag)-287, DTC P1420 FUEL TANK PRESSURE CONTROL SOL. VALVE CIRCUIT HIGH, Diagnostic Procedure with Diagnostic Trouble Code (DTC).>
P1443	Vent Control Solenoid Valve Function Problem	<Ref. to EN(H6DO)(diag)-289, DTC P1443 VENT CONTROL SOLENOID VALVE FUNCTION PROBLEM, Diagnostic Procedure with Diagnostic Trouble Code (DTC).>
P1446	Fuel Tank Sensor Control Valve Circuit Low	<Ref. to EN(H6DO)(diag)-291, DTC P1446 FUEL TANK SENSOR CONTROL VALVE CIRCUIT LOW, Diagnostic Procedure with Diagnostic Trouble Code (DTC).>
P1447	Fuel Tank Sensor Control Valve Circuit High	<Ref. to EN(H6DO)(diag)-294, DTC P1447 FUEL TANK SENSOR CONTROL VALVE CIRCUIT HIGH, Diagnostic Procedure with Diagnostic Trouble Code (DTC).>
P1518	Starter Switch Circuit Low Input	<Ref. to EN(H6DO)(diag)-295, DTC P1518 STARTER SWITCH CIRCUIT LOW INPUT, Diagnostic Procedure with Diagnostic Trouble Code (DTC).>
P1560	Back-Up Voltage Circuit Malfunction	<Ref. to EN(H6DO)(diag)-298, DTC P1560 BACK-UP VOLTAGE CIRCUIT MALFUNCTION, Diagnostic Procedure with Diagnostic Trouble Code (DTC).>
P1570	Antenna	<Ref. to IM(diag)-18, DTC P1570 ANTENNA, Diagnostic Procedure with Diagnostic Trouble Code (DTC).>
P1571	Reference Code Incompatibility	<Ref. to IM(diag)-20, DTC P1571 REFERENCE CODE INCOMPATIBILITY, Diagnostic Procedure with Diagnostic Trouble Code (DTC).>

DTC	Item	Reference
P1572	IMM Circuit Failure (Except Antenna Circuit)	<Ref. to IM(diag)-21, DTC P1572 IMM CIRCUIT FAILURE (EXCEPT ANTENNA CIRCUIT), Diagnostic Procedure with Diagnostic Trouble Code (DTC).>
P1574	Key Communication Failure	<Ref. to IM(diag)-24, DTC P1574 KEY COMMUNICATION FAILURE, Diagnostic Procedure with Diagnostic Trouble Code (DTC).>
P1576	EGI Control Module EEPROM	<Ref. to IM(diag)-24, DTC P1576 EGI CONTROL MODULE EEPROM, Diagnostic Procedure with Diagnostic Trouble Code (DTC).>
P1577	IMM Control Module EEPROM	<Ref. to IM(diag)-24, DTC P1577 IMM CONTROL MODULE EEPROM, Diagnostic Procedure with Diagnostic Trouble Code (DTC).>
P1578	Meter Failure	<Ref. to IM(diag)-25, DTC P1578 METER FAILURE, Diagnostic Procedure with Diagnostic Trouble Code (DTC).>
P2088	OCV Solenoid Valve Signal A Circuit Open (Bank 1)	<Ref. to EN(H6DO)(diag)-300, DTC P2088 OCV SOLENOID VALVE SIGNAL A CIRCUIT OPEN (BANK 1), Diagnostic Procedure with Diagnostic Trouble Code (DTC).>
P2089	OCV Solenoid Valve Signal A Circuit Short (Bank 1)	<Ref. to EN(H6DO)(diag)-302, DTC P2089 OCV SOLENOID VALVE SIGNAL A CIRCUIT SHORT (BANK 1), Diagnostic Procedure with Diagnostic Trouble Code (DTC).>
P2092	OCV Solenoid Valve Signal A Circuit Open (Bank 2)	<Ref. to EN(H6DO)(diag)-304, DTC P2092 OCV SOLENOID VALVE SIGNAL A CIRCUIT OPEN (BANK 2), Diagnostic Procedure with Diagnostic Trouble Code (DTC).>
P2093	OCV Solenoid Valve Signal A Circuit Short (Bank 2)	<Ref. to EN(H6DO)(diag)-306, DTC P2093 OCV SOLENOID VALVE SIGNAL A CIRCUIT SHORT (BANK 2), Diagnostic Procedure with Diagnostic Trouble Code (DTC).>
P2096	Post Catalyst Fuel Trim System Too Lean Bank 1	<Ref. to EN(H6DO)(diag)-307, DTC P2096 POST CATALYST FUEL TRIM SYSTEM TOO LEAN BANK 1, Diagnostic Procedure with Diagnostic Trouble Code (DTC).>
P2097	Post Catalyst Fuel Trim System Too Rich Bank 1	<Ref. to EN(H6DO)(diag)-315, DTC P2097 POST CATALYST FUEL TRIM SYSTEM TOO RICH BANK 1, Diagnostic Procedure with Diagnostic Trouble Code (DTC).>
P2098	Post Catalyst Fuel Trim System Too Lean Bank 2	<Ref. to EN(H6DO)(diag)-323, DTC P2098 POST CATALYST FUEL TRIM SYSTEM TOO LEAN BANK 2, Diagnostic Procedure with Diagnostic Trouble Code (DTC).>
P2099	Post Catalyst Fuel Trim System Too Rich Bank 2	<Ref. to EN(H6DO)(diag)-331, DTC P2099 POST CATALYST FUEL TRIM SYSTEM TOO RICH BANK 2, Diagnostic Procedure with Diagnostic Trouble Code (DTC).>
P2101	Throttle Actuator Control Motor Circuit Range/Performance	<Ref. to EN(H6DO)(diag)-339, DTC P2101 THROTTLE ACTUATOR CONTROL MOTOR CIRCUIT RANGE/PERFORMANCE, Diagnostic Procedure with Diagnostic Trouble Code (DTC).>
P2102	Throttle Actuator Control Motor Circuit Low	<Ref. to EN(H6DO)(diag)-345, DTC P2102 THROTTLE ACTUATOR CONTROL MOTOR CIRCUIT LOW, Diagnostic Procedure with Diagnostic Trouble Code (DTC).>
P2103	Throttle Actuator Control Motor Circuit High	<Ref. to EN(H6DO)(diag)-348, DTC P2103 THROTTLE ACTUATOR CONTROL MOTOR CIRCUIT HIGH, Diagnostic Procedure with Diagnostic Trouble Code (DTC).>
P2109	Throttle/Pedal Position Sensor A Minimum Stop Performance	<Ref. to EN(H6DO)(diag)-349, DTC P2109 THROTTLE/PEDAL POSITION SENSOR A MINIMUM STOP PERFORMANCE, Diagnostic Procedure with Diagnostic Trouble Code (DTC).>
P2122	Throttle/Pedal Position Sensor/ Switch “D” Circuit Low Input	<Ref. to EN(H6DO)(diag)-350, DTC P2122 THROTTLE/PEDAL POSITION SENSOR/SWITCH “D” CIRCUIT LOW INPUT, Diagnostic Procedure with Diagnostic Trouble Code (DTC).>
P2123	Throttle/Pedal Position Sensor/ Switch “D” Circuit High Input	<Ref. to EN(H6DO)(diag)-353, DTC P2123 THROTTLE/PEDAL POSITION SENSOR/SWITCH “D” CIRCUIT HIGH INPUT, Diagnostic Procedure with Diagnostic Trouble Code (DTC).>
P2127	Throttle/Pedal Position Sensor/ Switch “E” Circuit Low Input	<Ref. to EN(H6DO)(diag)-355, DTC P2127 THROTTLE/PEDAL POSITION SENSOR/SWITCH “E” CIRCUIT LOW INPUT, Diagnostic Procedure with Diagnostic Trouble Code (DTC).>

DTC	Item	Reference
P2128	Throttle/Pedal Position Sensor/ Switch “E” Circuit High Input	<Ref. to EN(H6DO)(diag)-358, DTC P2128 THROTTLE/PEDAL POSITION SENSOR/SWITCH “E” CIRCUIT HIGH INPUT, Diagnostic Procedure with Diagnostic Trouble Code (DTC).>
P2135	Throttle/Pedal Position Sensor/ Switch “A”/“B” Voltage Rationality	<Ref. to EN(H6DO)(diag)-360, DTC P2135 THROTTLE/PEDAL POSITION SENSOR/SWITCH “A”/“B” VOLTAGE RATIONALITY, Diagnostic Procedure with Diagnostic Trouble Code (DTC).>
P2138	Throttle/Pedal Position Sensor/ Switch “D”/“E” Voltage Rationality	<Ref. to EN(H6DO)(diag)-364, DTC P2138 THROTTLE/PEDAL POSITION SENSOR/SWITCH “D”/“E” VOLTAGE RATIONALITY, Diagnostic Procedure with Diagnostic Trouble Code (DTC).>
P2227	Barometric Pressure Circuit Range/ Performance	<Ref. to EN(H6DO)(diag)-368, DTC P2227 BAROMETRIC PRESSURE CIRCUIT RANGE/PERFORMANCE, Diagnostic Procedure with Diagnostic Trouble Code (DTC).>
P2228	Barometric Pressure Circuit Low Input	<Ref. to EN(H6DO)(diag)-368, DTC P2228 BAROMETRIC PRESSURE CIRCUIT LOW INPUT, Diagnostic Procedure with Diagnostic Trouble Code (DTC).>
P2229	Barometric Pressure Circuit High Input	<Ref. to EN(H6DO)(diag)-369, DTC P2229 BAROMETRIC PRESSURE CIRCUIT HIGH INPUT, Diagnostic Procedure with Diagnostic Trouble Code (DTC).>
P2503	Charging System Voltage Low	<Ref. to EN(H6DO)(diag)-370, DTC P2503 CHARGING SYSTEM VOLTAGE LOW, Diagnostic Procedure with Diagnostic Trouble Code (DTC).>
P2504	Charging System Voltage High	<Ref. to EN(H6DO)(diag)-370, DTC P2504 CHARGING SYSTEM VOLTAGE HIGH, Diagnostic Procedure with Diagnostic Trouble Code (DTC).>

18.Diagnostic Procedure with Diagnostic Trouble Code (DTC)

A: DTC P0011 INTAKE CAMSHAFT POSITION TIMING - OVER-ADVANCED (BANK 1)

DTC DETECTING CONDITION:

- Two consecutive driving cycles with fault
- GENERAL DESCRIPTION <Ref. to GD(H6DO)-9, DTC P0011 INTAKE CAMSHAFT POSITION TIMING - OVER-ADVANCED (BANK 1), Diagnostic Trouble Code (DTC) Detecting Criteria.>

TROUBLE SYMPTOM:

- Engine stalls.
- Erroneous idling

CAUTION:
After repair or replacement of faulty parts, conduct Clear Memory Mode <Ref. to EN(H6DO)(diag)-44, OPERATION, Clear Memory Mode.> and Inspection Mode <Ref. to EN(H6DO)(diag)-35, PROCEDURE, Inspection Mode.>.

	Step	Check	Yes	No
1	**CHECK FOR ANY OTHER DTC ON DISPLAY.**	Is any other DTC displayed?	Inspect the relevant DTC using “List of Diagnostic Trouble Code (DTC)”. <Ref. to EN(H6DO)(diag)-71, List of Diagnostic Trouble Code (DTC).>	Go to step **2.**
2	**CHECK CURRENT DATA.** 1) Start the engine and let it idle. 2) Measure the AVCS system operating angle and oil flow control solenoid valve duty output using Subaru Select Monitor or general scan tool. NOTE: • Subaru Select Monitor For detailed operation procedure, refer to the “READ CURRENT DATA SHOWN ON DISPLAY FOR ENGINE”. <Ref. to EN(H6DO)(diag)-26, Subaru Select Monitor.> • General scan tool For detailed operation procedure, refer to the general scan tool instruction manual.	Is the AVCS system operating angle approx. 0 deg., and oil flow control solenoid valve duty output approx. 10%?	Check the following and repair or replace if necessary. • Oil pipe (clog) • Oil flow control solenoid valve (clog or dirt of oil routing, setting of spring, clog of valve) • Intake camshaft (dirt, damage of camshaft) • Timing chain (matching of timing mark)	A temporary malfunction. Perform the following, and clean the oil routing. Replace the engine oil and idle the engine for 5 minutes, and then replace the oil filter and engine oil.

B: DTC P0021 INTAKE CAMSHAFT POSITION TIMING - OVER-ADVANCED (BANK 2)

DTC DETECTING CONDITION:

- Two consecutive driving cycles with fault
- GENERAL DESCRIPTION <Ref. to GD(H6DO)-11, DTC P0021 INTAKE CAMSHAFT POSITION TIMING - OVER-ADVANCED (BANK 2), Diagnostic Trouble Code (DTC) Detecting Criteria.>

TROUBLE SYMPTOM:

- Engine stalls.
- Erroneous idling

CAUTION:
After repair or replacement of faulty parts, conduct Clear Memory Mode <Ref. to EN(H6DO)(diag)-44, OPERATION, Clear Memory Mode.> and Inspection Mode <Ref. to EN(H6DO)(diag)-35, PROCEDURE, Inspection Mode.>.

	Step	Check	Yes	No
1	**CHECK FOR ANY OTHER DTC ON DISPLAY.**	Is any other DTC displayed?	Inspect the relevant DTC using "List of Diagnostic Trouble Code (DTC)". <Ref. to EN(H6DO)(diag)-71, List of Diagnostic Trouble Code (DTC).>	Go to step **2.**
2	**CHECK CURRENT DATA.** 1) Start the engine and let it idle. 2) Measure the AVCS system operating angle and oil flow control solenoid valve duty output using Subaru Select Monitor or general scan tool. NOTE: • Subaru Select Monitor For detailed operation procedure, refer to the "READ CURRENT DATA SHOWN ON DISPLAY FOR ENGINE". <Ref. to EN(H6DO)(diag)-26, Subaru Select Monitor.> • General scan tool For detailed operation procedure, refer to the general scan tool instruction manual.	Is the AVCS system operating angle approx. 0 deg., and oil flow control solenoid valve duty output approx. 10%?	Check the following and repair or replace if necessary. • Engine oil (amount, dirt) • Oil pipe (clog) • Oil flow control solenoid valve (clog or dirt of oil routing, setting of spring, clog of valve) • Intake camshaft (dirt, damage of camshaft) • Timing chain (matching of timing mark)	A temporary malfunction. Perform the following, and clean the oil routing. Replace the engine oil and idle the engine for 5 minutes, and then replace the oil filter and engine oil.

C: DTC P0026 INTAKE VALVE CONTROL SOLENOID CIRCUIT RANGE/PERFORMANCE (BANK 1)

DTC DETECTING CONDITION:

- Detect as soon as malfunction occurs.
- GENERAL DESCRIPTION <Ref. to GD(H6DO)-11, DTC P0026 INTAKE VALVE CONTROL SOLENOID CIRCUIT RANGE/PERFORMANCE (BANK 1), Diagnostic Trouble Code (DTC) Detecting Criteria.>

TROUBLE SYMPTOM:

Erroneous idling

CAUTION:

After repair or replacement of faulty parts, conduct Clear Memory Mode <Ref. to EN(H6DO)(diag)-44, OPERATION, Clear Memory Mode.> and Inspection Mode <Ref. to EN(H6DO)(diag)-35, PROCEDURE, Inspection Mode.>.

WIRING DIAGRAM:

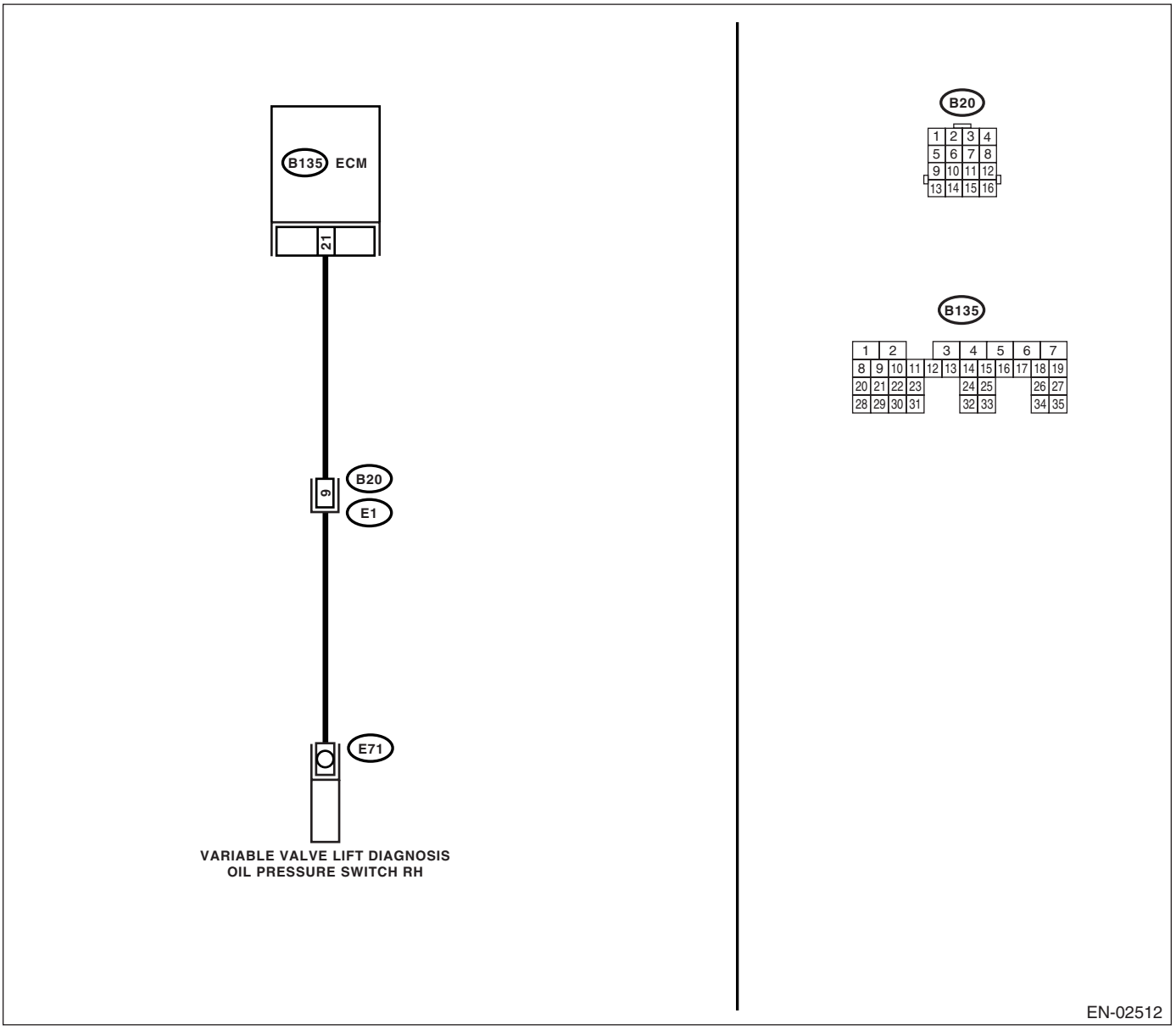

	Step	Check	Yes	No
1	**CHECK FOR ANY OTHER DTC ON DISPLAY.**	Is any other DTC displayed?	Inspect the DTC using “List of Diagnostic Trouble Code (DTC)”. <Ref. to EN(H6DO)(diag)-71, List of Diagnostic Trouble Code (DTC).>	Go to step **2.**
2	**CHECK HARNESS BETWEEN ECM AND VARIABLE VALVE LIFT DIAGNOSIS OIL PRESSURE SWITCH CONNECTOR.** 1) Idle the engine. 2) Turn the ignition switch to OFF. 3) Disconnect the connectors from ECM and variable valve lift diagnosis oil pressure switch connector. 4) Measure the resistance of harness between variable valve lift diagnosis oil pressure switch connector and engine ground. ***Connector & terminal*** ***(E71) No. 1 — Engine ground:***	Is the resistance more than 1 MΩ?	Go to step **3.**	Repair the ground short circuit in harness between ECM and variable valve lift diagnosis oil pressure switch connector.
3	**CHECK HARNESS BETWEEN ECM AND VARIABLE VALVE LIFT DIAGNOSIS OIL PRESSURE SWITCH CONNECTOR.** Measure the resistance in harness between ECM and variable valve lift diagnosis oil pressure switch connector. ***Connector & terminal*** ***(B135) No. 21 — (E71) No. 1:***	Is the resistance less than 1 Ω?	Replace the variable valve lift oil pressure switch. <Ref. to FU(H6DO)-28, Variable Valve Lift Diagnosis Oil Pressure Switch.> Go to step **4.**	Repair the open circuit in harness between ECM and variable valve lift diagnosis oil pressure switch connector.
4	**CHECK DTC.** 1) Erase the memory. <Ref. to EN(H6DO)(diag)-44, Clear Memory Mode.> 2) Check the DTC after idle the engine.	Is DTC displayed?	Replace the oil switching solenoid valve. <Ref. to ME(H6DO)-77, Oil Switching Solenoid Valve.> Go to step **5.**	END.
5	**CHECK DTC.** 1) Erase the memory. <Ref. to EN(H6DO)(diag)-44, Clear Memory Mode.> 2) Check the DTC after idle the engine.	Is DTC displayed?	Check for oil routing. Contact with SOA Service Center.	END.

D: DTC P0028 INTAKE VALVE CONTROL SOLENOID CIRCUIT RANGE/PERFORMANCE (BANK 2)

DTC DETECTING CONDITION:

- Detect as soon as malfunction occurs.
- GENERAL DESCRIPTION <Ref. to GD(H6DO)-13, DTC P0028 INTAKE VALVE CONTROL SOLENOID CIRCUIT RANGE/PERFORMANCE (BANK 2), Diagnostic Trouble Code (DTC) Detecting Criteria.>

TROUBLE SYMPTOM:

Erroneous idling

CAUTION:

After repair or replacement of faulty parts, conduct Clear Memory Mode <Ref. to EN(H6DO)(diag)-44, OPERATION, Clear Memory Mode.> and Inspection Mode. <Ref. to EN(H6DO)(diag)-35, PROCEDURE, Inspection Mode.>

WIRING DIAGRAM:

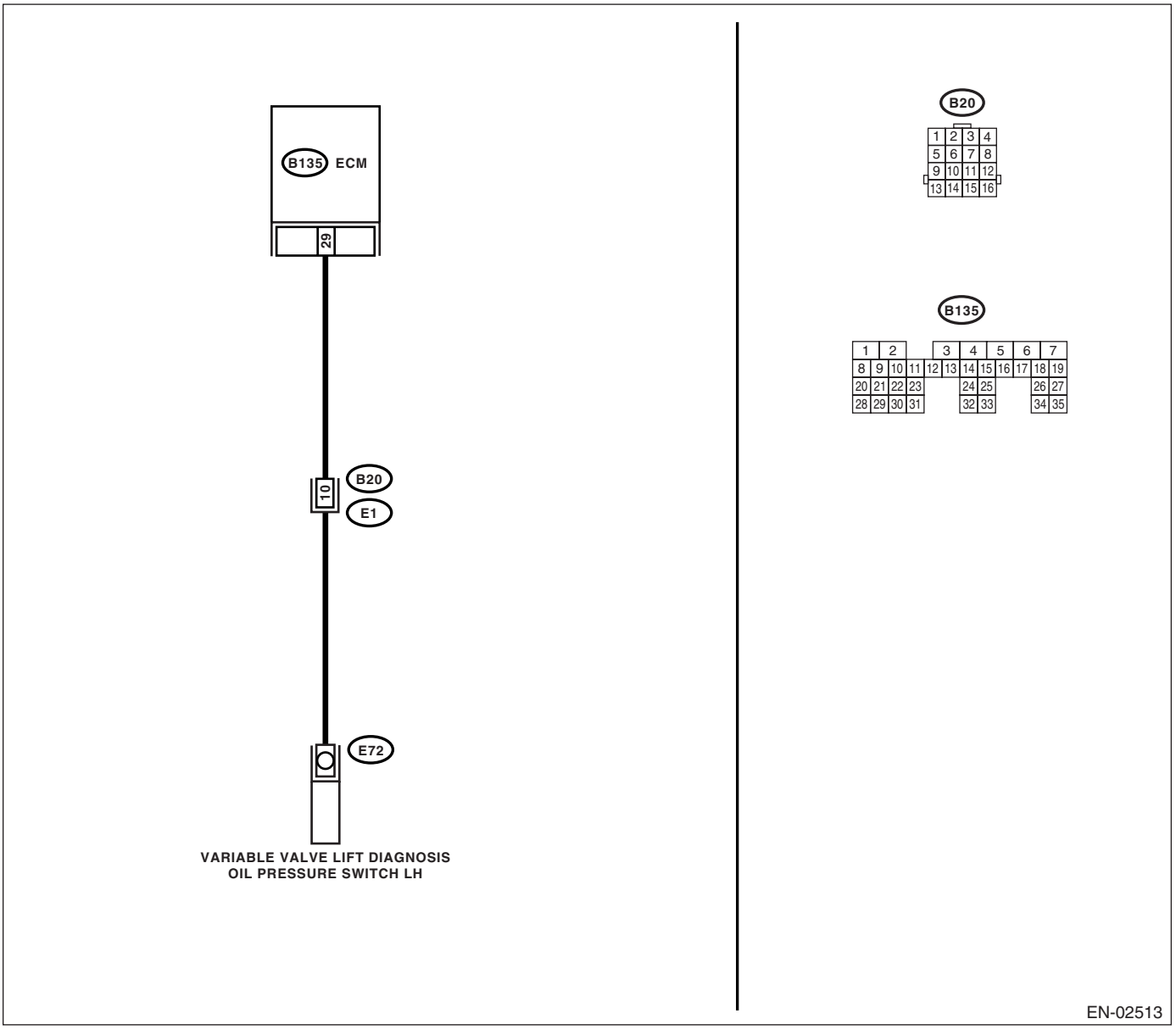

	Step	Check	Yes	No
1	**CHECK FOR ANY OTHER DTC ON DISPLAY.**	Is any other DTC displayed?	Inspect the DTC using "List of Diagnostic Trouble Code (DTC)". <Ref. to EN(H6DO)(diag)-71, List of Diagnostic Trouble Code (DTC).>	Go to step **2.**
2	**CHECK HARNESS BETWEEN ECM AND VARIABLE VALVE LIFT DIAGNOSIS OIL PRESSURE SWITCH CONNECTOR.** 1) Idle the engine. 2) Turn the ignition switch to OFF. 3) Disconnect the connectors from ECM and variable valve lift diagnosis oil pressure switch connector. 4) Measure the resistance of harness between variable valve lift diagnosis oil pressure switch connector and engine ground. ***Connector & terminal*** ***(E72) No. 1 — Engine ground:***	Is the resistance more than 1 MΩ?	Go to step **3.**	Repair the ground short circuit in harness between ECM and variable valve lift diagnosis oil pressure switch connector.
3	**CHECK HARNESS BETWEEN ECM AND VARIABLE VALVE LIFT DIAGNOSIS OIL PRESSURE SWITCH CONNECTOR.** Measure the resistance in harness between ECM and variable valve lift diagnosis oil pressure switch connector. ***Connector & terminal*** ***(B135) No. 29 — (E72) No. 1:***	Is the resistance less than 1 Ω?	Replace the variable valve lift oil pressure switch. <Ref. to FU(H6DO)-28, Variable Valve Lift Diagnosis Oil Pressure Switch.> Go to step **4.**	Repair the open circuit in harness between ECM and variable valve lift diagnosis oil pressure switch connector.
4	**CHECK DTC.** 1) Erase the memory. <Ref. to EN(H6DO)(diag)-44, Clear Memory Mode.> 2) Check the DTC after idle the engine.	Is DTC displayed?	Replace the oil switching solenoid valve. <Ref. to ME(H6DO)-77, Oil Switching Solenoid Valve.> Go to step **5.**	END.
5	**CHECK DTC.** 1) Erase the memory. <Ref. to EN(H6DO)(diag)-44, Clear Memory Mode.> 2) Check the DTC after idle the engine.	Is DTC displayed?	Check for oil routing. Contact with SOA Service Center.	END.

E: DTC P0030 HO2S HEATER CONTROL CIRCUIT (BANK 1 SENSOR 1)

DTC DETECTING CONDITION:

- Two consecutive driving cycles with fault
- GENERAL DESCRIPTION <Ref. to GD(H6DO)-14, DTC P0030 HO2S HEATER CONTROL CIRCUIT (BANK 1 SENSOR 1), Diagnostic Trouble Code (DTC) Detecting Criteria.>

CAUTION:

After repair or replacement of faulty parts, conduct Clear Memory Mode <Ref. to EN(H6DO)(diag)-44, OPERATION, Clear Memory Mode.> and Inspection Mode <Ref. to EN(H6DO)(diag)-35, PROCEDURE, Inspection Mode.>.

WIRING DIAGRAM:

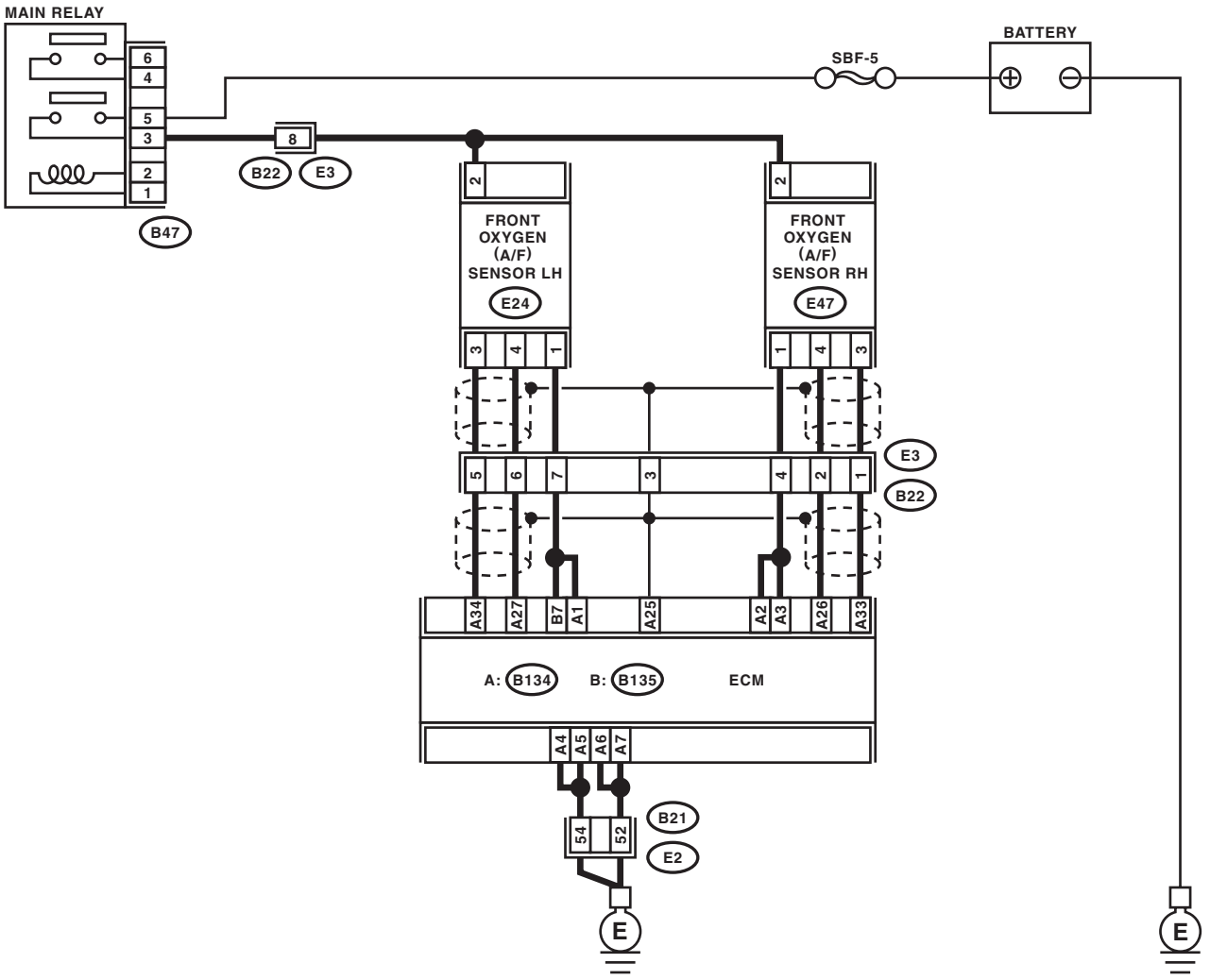

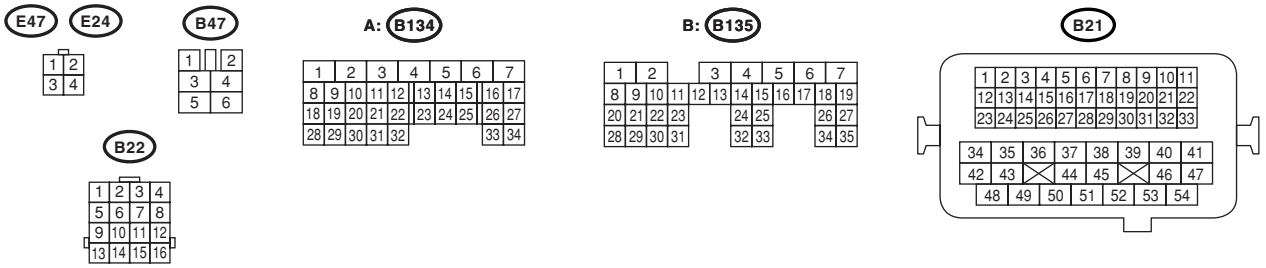

EN-03159

	Step	Check	Yes	No
1	**CHECK HARNESS BETWEEN ECM AND FRONT OXYGEN (A/F) SENSOR CONNECTOR.** 1) Start the engine, and warm-up the engine. 2) Turn the ignition switch to OFF. 3) Disconnect the connectors from ECM and front oxygen (A/F) sensor. 4) Measure the resistance of harness between ECM and front oxygen (A/F) sensor connector. ***Connector & terminal*** ***(B134) No. 2 — (E47) No. 1:*** ***(B134) No. 3 — (E47) No. 1:***	Is the resistance less than 1 Ω?	Go to step **2.**	Repair the open circuit in harness between ECM and front oxygen (A/F) sensor connector.
2	**CHECK HARNESS BETWEEN ECM AND FRONT OXYGEN (A/F) SENSOR CONNECTOR.** Measure the resistance of harness between ECM and front oxygen (A/F) sensor connector. ***Connector & terminal*** ***(B134) No. 26 — (E47) No. 4:*** ***(B134) No. 33 — (E47) No. 3:***	Is the resistance less than 1 Ω?	Go to step **3.**	Repair the open circuit in harness between ECM and front oxygen (A/F) sensor connector.
3	**CHECK HARNESS BETWEEN MAIN RELAY AND FRONT OXYGEN (A/F) SENSOR CONNECTOR.** Measure the resistance of harness between main relay and front oxygen (A/F) sensor connector. ***Connector & terminal*** ***(B47) No. 3 — (E47) No. 2:***	Is the resistance less than 1 Ω?	Go to step **4.**	Repair the open circuit in harness between main relay and front oxygen (A/F) sensor connector.
4	**CHECK FRONT OXYGEN (A/F) SENSOR.** Measure the resistance between front oxygen (A/F) sensor connector terminals. ***Terminals*** ***No. 2 — No. 1:***	Is the resistance less than 5 Ω?	Go to step **5.**	Replace the front oxygen (A/F) sensor. <Ref. to FU(H6DO)-30, Front Oxygen (A/F) Sensor.>
5	**CHECK POOR CONTACT.** Check poor contact in ECM and front oxygen (A/F) sensor connector.	Is there poor contact in ECM or front oxygen (A/F) sensor connector?	Repair the poor contact in ECM or front oxygen (A/F) sensor connector.	Replace the front oxygen (A/F) sensor. <Ref. to FU(H6DO)-30, Front Oxygen (A/F) Sensor.>

F: DTC P0031 HO2S HEATER CONTROL CIRCUIT LOW (BANK 1 SENSOR 1)

DTC DETECTING CONDITION:

- Detect as soon as malfunction occurs.
- GENERAL DESCRIPTION <Ref. to GD(H6DO)-16, DTC P0031 HO2S HEATER CONTROL CIRCUIT LOW (BANK 1 SENSOR 1), Diagnostic Trouble Code (DTC) Detecting Criteria.>

CAUTION:

After repair or replacement of faulty parts, conduct Clear Memory Mode <Ref. to EN(H6DO)(diag)-44, OPERATION, Clear Memory Mode.> and Inspection Mode <Ref. to EN(H6DO)(diag)-35, PROCEDURE, Inspection Mode.>.

WIRING DIAGRAM:

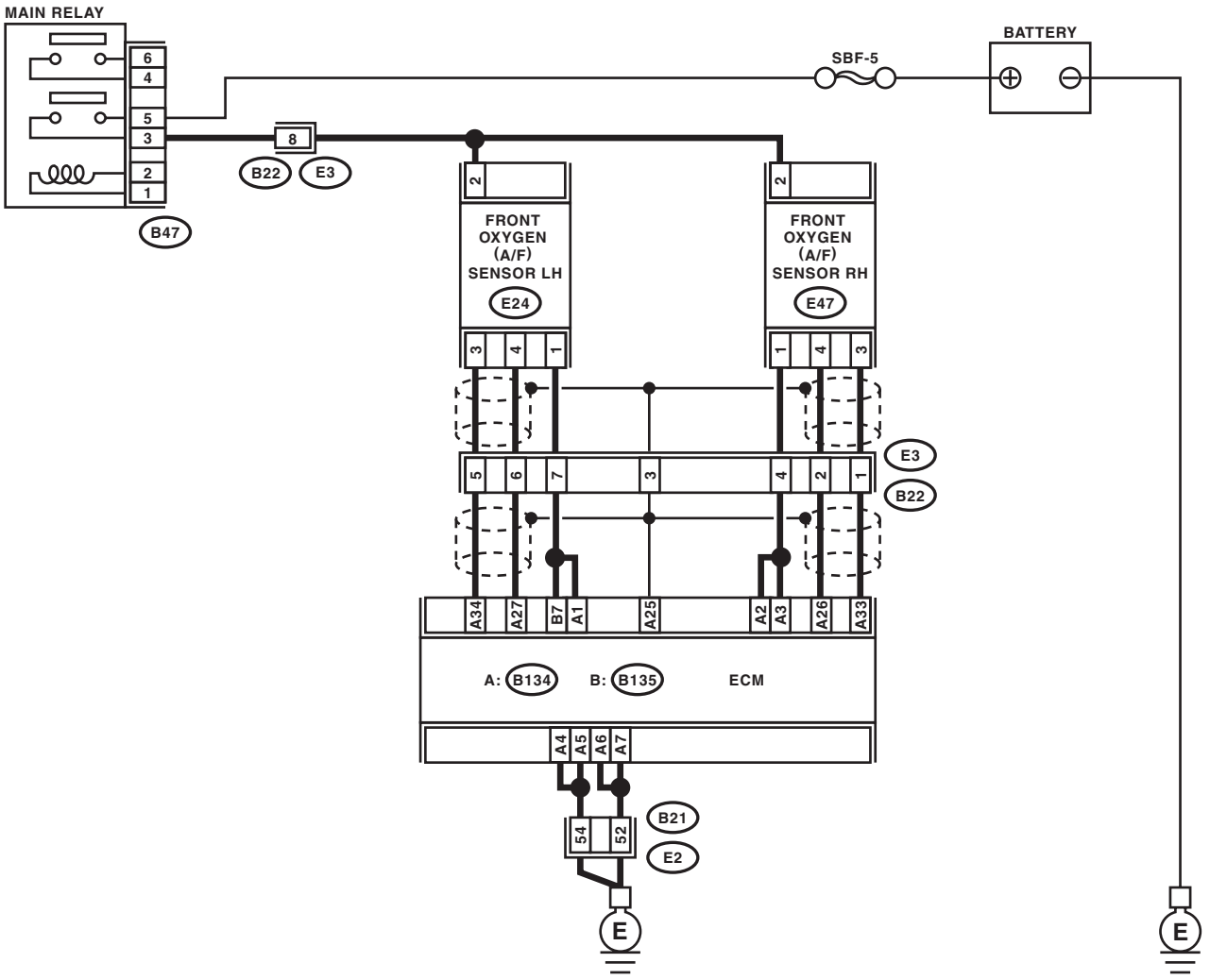

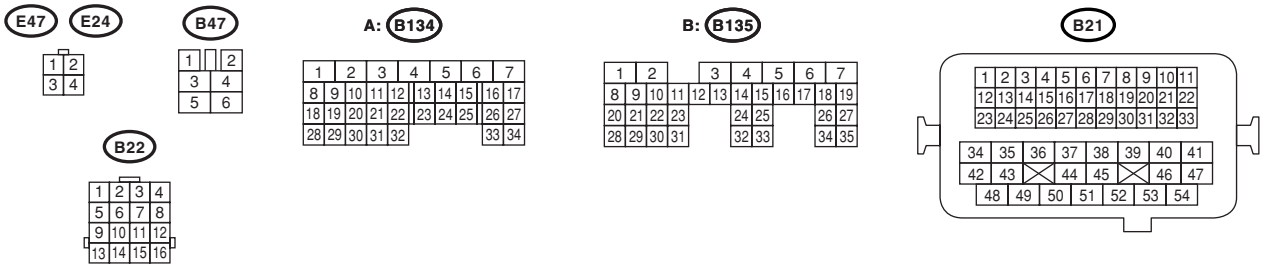

EN-03159

	Step	Check	Yes	No
1	**CHECK POWER SUPPLY TO FRONT OXYGEN (A/F) SENSOR.** 1) Turn the ignition switch to OFF. 2) Disconnect the connector from front oxygen (A/F) sensor. 3) Turn the ignition switch to ON. 4) Measure the voltage between front oxygen (A/F) sensor connector and engine ground. ***Connector & terminal*** ***(E47) No. 2 (+) — Engine ground (−):***	Is the voltage more than 10 V?	Go to step **2.**	Repair the power supply line. NOTE: In this case repair the following: • Open circuit in harness between main relay and front oxygen (A/F) sensor connector • Poor contact in main relay connector • Poor contact in coupling connector • Malfunction in main relay
2	**CHECK GROUND CIRCUIT FOR ECM.** Measure the resistance of harness between ECM connector and chassis ground. ***Connector & terminal*** ***(B134) No. 4 — Chassis ground:*** ***(B134) No. 5 — Chassis ground:*** ***(B134) No. 6 — Chassis ground:*** ***(B134) No. 7 — Chassis ground:***	Is the resistance less than 5 Ω?	Go to step **3.**	Repair the harness and connector. NOTE: In this case repair the following: • Open circuit in harness between ECM and engine ground terminal • Poor contact in ECM connector • Poor contact in coupling connector
3	**CHECK CURRENT DATA.** 1) Start the engine. 2) Read the data of front oxygen (A/F) sensor heater current using Subaru Select Monitor or general scan tool. NOTE: • Subaru Select Monitor For detailed operation procedures, refer to the “READ CURRENT DATA SHOWN ON DISPLAY FOR ENGINE”. <Ref. to EN(H6DO)(diag)-26, Subaru Select Monitor.> • General scan tool For detailed operation procedures, refer to the general scan tool instruction manual.	Is the current more than 0.2 A?	Repair the poor contact in connector. NOTE: In this case repair the following: • Poor contact in front oxygen (A/F) sensor connector • Poor contact in coupling connector • Poor contact in ECM connector	Go to step **4.**
4	**CHECK OUTPUT SIGNAL FROM ECM.** 1) Start and idle the engine. 2) Measure the voltage between ECM connector and chassis ground. ***Connector & terminal*** ***(B134) No. 2 (+) — Chassis ground (−):*** ***(B134) No. 3 (+) — Chassis ground (−):***	Is the voltage less than 1 V?	Go to step **6.**	Go to step **5.**
5	**CHECK OUTPUT SIGNAL FROM ECM.** Measure the voltage between ECM connector and chassis ground. ***Connector & terminal*** ***(B134) No. 2 (+) — Chassis ground (−):*** ***(B134) No. 3 (+) — Chassis ground (−):***	Does the voltage change by shaking the ECM harness and connector while monitoring the value of voltage meter?	Repair the poor contact in ECM connector.	Go to step **6.**

	Step	Check	Yes	No
6	**CHECK FRONT OXYGEN (A/F) SENSOR.** 1) Turn the ignition switch to OFF. 2) Measure the resistance between front oxygen (A/F) sensor connector terminals. ***Terminals*** ***No. 2 — No. 1:***	Is the resistance less than 10 Ω?	Repair the harness and connector. NOTE: In this case repair the following: • Open or ground short circuit in harness between front oxygen (A/F) sensor and ECM connector • Poor contact in front oxygen (A/F) sensor connector • Poor contact in ECM connector • Poor contact in coupling connector	Replace the front oxygen (A/F) sensor. <Ref. to FU(H6DO)-30, Front Oxygen (A/F) Sensor.>

G: DTC P0032 HO2S HEATER CONTROL CIRCUIT HIGH (BANK 1 SENSOR 1)

DTC DETECTING CONDITION:

- Detect as soon as malfunction occurs.
- GENERAL DESCRIPTION <Ref. to GD(H6DO)-18, DTC P0032 HO2S HEATER CONTROL CIRCUIT HIGH (BANK 1 SENSOR 1), Diagnostic Trouble Code (DTC) Detecting Criteria.>

CAUTION:

After repair or replacement of faulty parts, conduct Clear Memory Mode <Ref. to EN(H6DO)(diag)-44, OPERATION, Clear Memory Mode.> and Inspection Mode <Ref. to EN(H6DO)(diag)-35, PROCEDURE, Inspection Mode.>.

WIRING DIAGRAM:

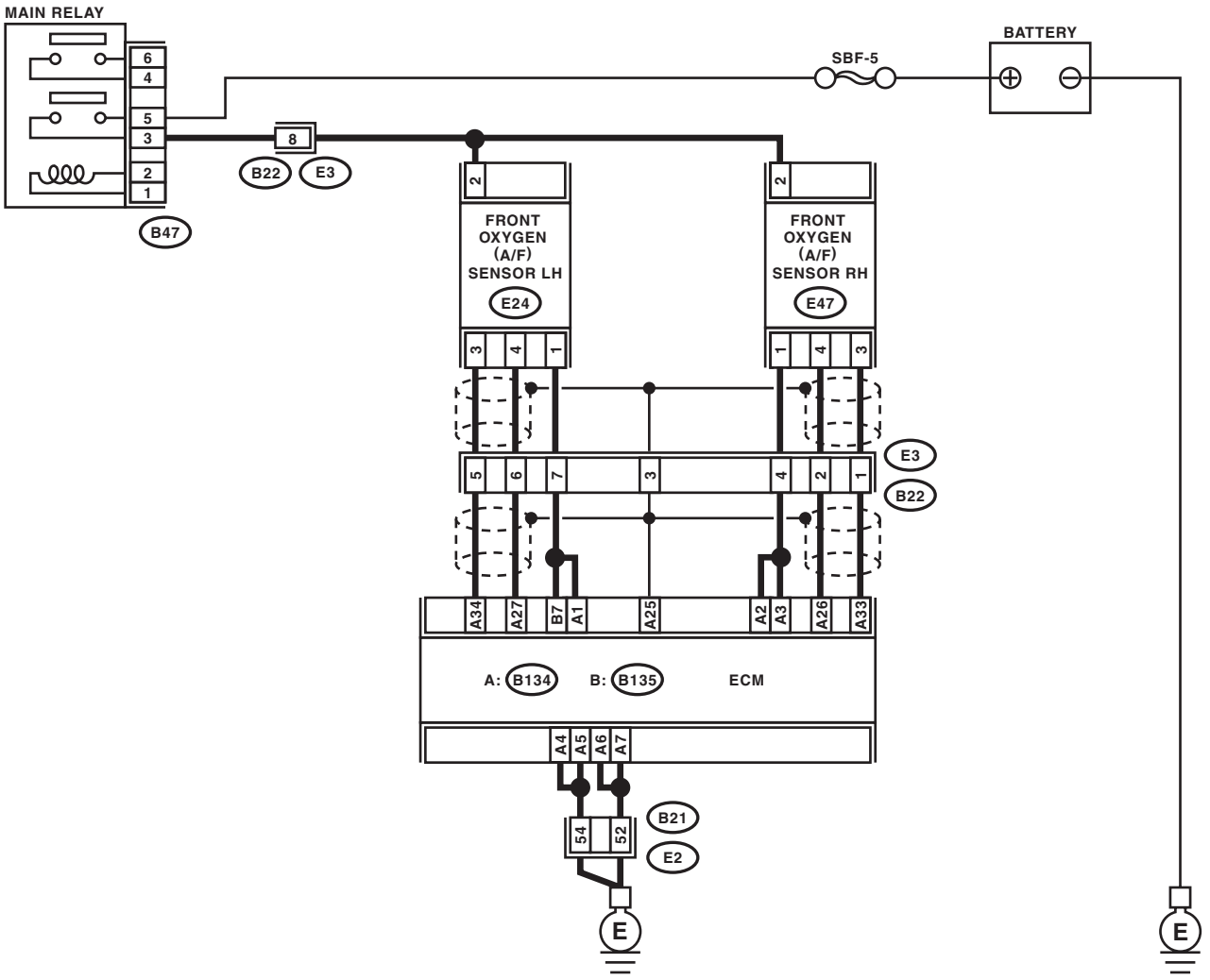

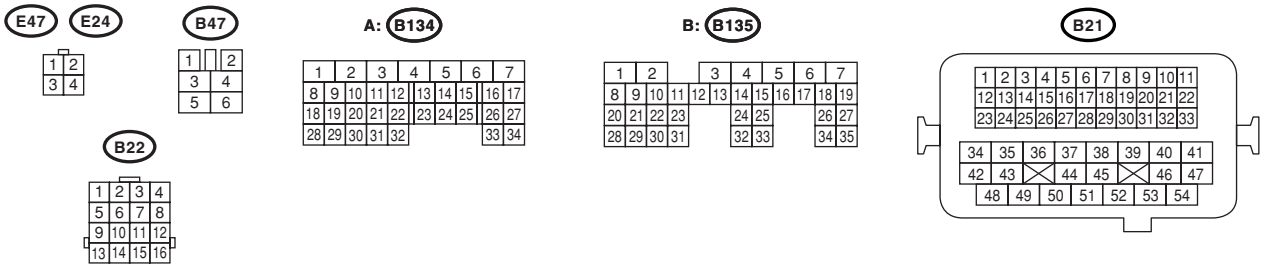

EN-03159

	Step	Check	Yes	No
1	**CHECK OUTPUT SIGNAL FROM ECM.** 1) Turn the ignition switch to ON. 2) Measure the voltage between ECM connector and chassis ground. ***Connector & terminal*** ***(B134) No. 2 (+) — Chassis ground (−):*** ***(B134) No. 3 (+) — Chassis ground (−):***	Is the voltage more than 8 V?	Go to step **2.**	Go to step **3.**
2	**CHECK FRONT OXYGEN (A/F) SENSOR HEATER CURRENT.** 1) Turn the ignition switch to OFF. 2) Repair the battery short circuit in harness between ECM and front oxygen (A/F) sensor connector. 3) Turn the ignition switch to ON. 4) Read the data of front oxygen (A/F) sensor heater current using Subaru Select Monitor or general scan tool. NOTE: • Subaru Select Monitor For detailed operation procedure, refer to the "READ CURRENT DATA SHOWN ON DISPLAY FOR ENGINE". <Ref. to EN(H6DO)(diag)-26, Subaru Select Monitor.> • General scan tool For detailed operation procedure, refer to the general scan tool instruction manual.	Is the current more than 2.3 A?	Replace the ECM. <Ref. to FU(H6DO)-34, Engine Control Module (ECM).>	END.
3	**CHECK OUTPUT SIGNAL FROM ECM.** Measure the voltage between ECM connector and chassis ground. ***Connector & terminal*** ***(B134) No. 2 (+) — Chassis ground (−):*** ***(B134) No. 3 (+) — Chassis ground (−):***	Does the voltage change by shaking the ECM harness and connector?	Repair the battery short circuit in harness between ECM and front oxygen (A/F) sensor connector.	END.

H: DTC P0037 HO2S HEATER CONTROL CIRCUIT LOW (BANK 1 SENSOR 2)

DTC DETECTING CONDITION:

- Two consecutive driving cycles with fault
- GENERAL DESCRIPTION <Ref. to GD(H6DO)-20, DTC P0037 HO2S HEATER CONTROL CIRCUIT LOW (BANK 1 SENSOR 2), Diagnostic Trouble Code (DTC) Detecting Criteria.>

CAUTION:

After repair or replacement of faulty parts, conduct Clear Memory Mode <Ref. to EN(H6DO)(diag)-44, OPERATION, Clear Memory Mode.> and Inspection Mode <Ref. to EN(H6DO)(diag)-35, PROCEDURE, Inspection Mode.>.

WIRING DIAGRAM:

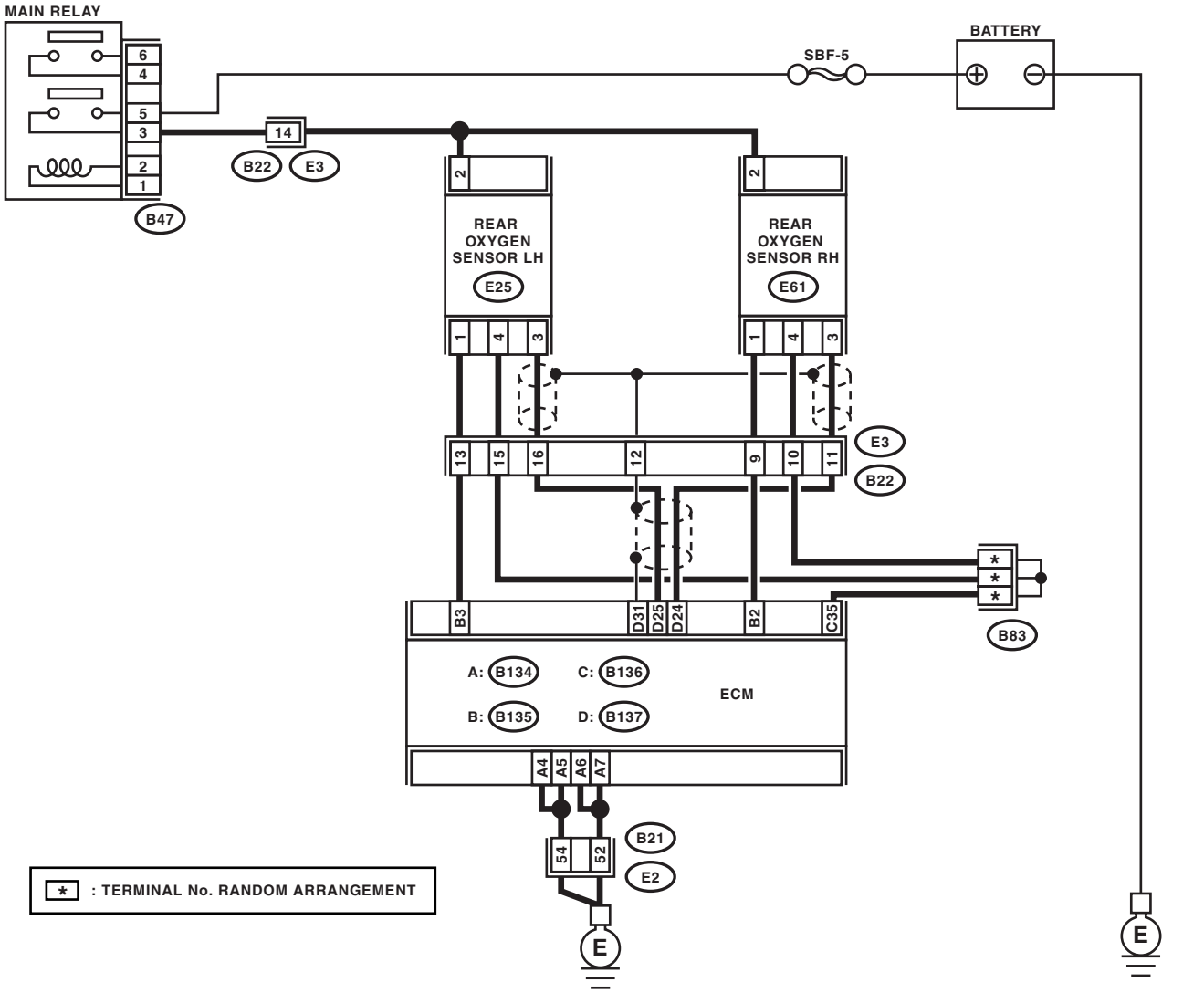

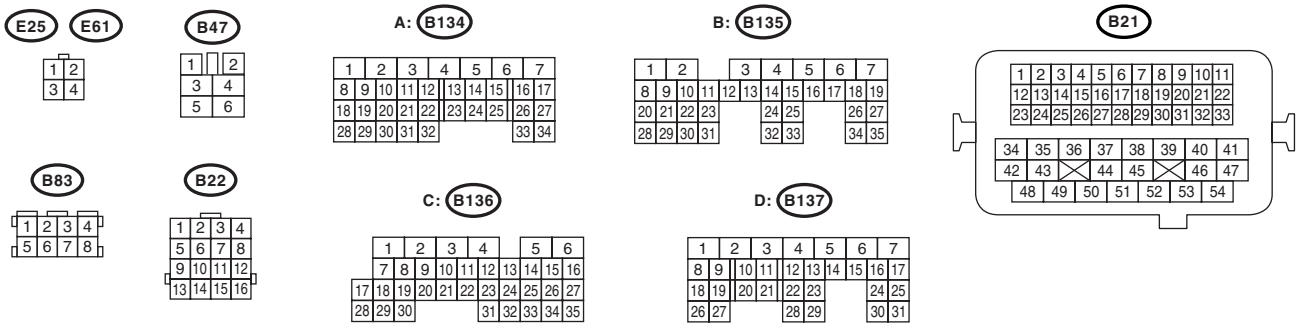

EN-02966

	Step	Check	Yes	No
1	**CHECK POWER SUPPLY TO REAR OXYGEN SENSOR.** 1) Turn the ignition switch to OFF. 2) Disconnect the connector from rear oxygen sensor. 3) Turn the ignition switch to ON. 4) Measure the voltage between rear oxygen sensor connector and chassis ground. ***Connector & terminal*** ***(E61) No. 2 (+) — Chassis ground (−):***	Is the voltage more than 10 V?	Go to step **2.**	Repair the power supply line. NOTE: In this case repair the following: • Open circuit in harness between main relay and rear oxygen sensor connector • Poor contact in main relay connector • Poor contact in coupling connector • Malfunction in main relay
2	**CHECK GROUND CIRCUIT FOR ECM.** 1) Turn the ignition switch to OFF. 2) Disconnect the connector from ECM. 3) Measure the resistance of harness between ECM connector and chassis ground. ***Connector & terminal*** ***(B134) No. 4 — Chassis ground:*** ***(B134) No. 5 — Chassis ground:*** ***(B134) No. 6 — Chassis ground:*** ***(B134) No. 7 — Chassis ground:***	Is the resistance less than 5 Ω?	Go to step **3.**	Repair the harness and connector. NOTE: In this case repair the following: • Open circuit in harness between ECM and engine ground terminal • Poor contact in ECM connector • Poor contact in coupling connector
3	**CHECK CURRENT DATA.** 1) Start the engine. 2) Read the data of rear oxygen sensor heater current using Subaru Select Monitor or general scan tool. NOTE: • Subaru Select Monitor For detailed operation procedure, refer to the “READ CURRENT DATA SHOWN ON DISPLAY FOR ENGINE”. <Ref. to EN(H6DO)(diag)-26, Subaru Select Monitor.> • General scan tool For detailed operation procedure, refer to the general scan tool instruction manual.	Is the current more than 0.2 A?	Repair the connector. NOTE: In this case repair the following: • Poor contact in rear oxygen sensor connector • Poor contact in coupling connector • Poor contact in ECM connector	Go to step **4.**
4	**CHECK OUTPUT SIGNAL FROM ECM.** 1) Start and idle the engine. 2) Measure the voltage between ECM connector and chassis ground. ***Connector & terminal*** ***(B135) No. 2 (+) — Chassis ground (−):***	Is the voltage less than 1 V?	Go to step **7.**	Go to step **5.**
5	**CHECK OUTPUT SIGNAL FROM ECM.** Measure the voltage between ECM connector and chassis ground. ***Connector & terminal*** ***(B135) No. 2 (+) — Chassis ground (−):***	Does the voltage change by shaking the ECM harness and connector while monitoring the value of voltage meter?	Repair the poor contact in ECM connector.	Go to step **6.**

	Step	Check	Yes	No
6	**CHECK OUTPUT SIGNAL FROM ECM.** 1) Disconnect the connector from rear oxygen sensor. 2) Measure the voltage between ECM connector and chassis ground. ***Connector & terminal*** ***(B135) No. 2 (+) — Chassis ground (−):***	Is the voltage less than 1 V?	Replace the ECM. <Ref. to FU(H6DO)-34, Engine Control Module (ECM).>	Repair the battery short circuit in harness between ECM and rear oxygen sensor connector. After repair, replace the ECM. <Ref. to FU(H6DO)-34, Engine Control Module (ECM).>
7	**CHECK REAR OXYGEN SENSOR.** 1) Turn the ignition switch to OFF. 2) Measure the resistance between rear oxygen sensor connector terminals. ***Terminals*** ***No. 1 — No. 2:***	Is the resistance less than 30 Ω?	Repair the harness and connector. NOTE: In this case repair the following: • Open circuit in harness between rear oxygen sensor and ECM connector • Poor contact in rear oxygen sensor connector • Poor contact in ECM connector • Poor contact in coupling connector	Replace the rear oxygen sensor. <Ref. to FU(H6DO)-32, Rear Oxygen Sensor.>

I: DTC P0038 HO2S HEATER CONTROL CIRCUIT HIGH (BANK 1 SENSOR 2)

DTC DETECTING CONDITION:

- Two consecutive driving cycles with fault
- GENERAL DESCRIPTION <Ref. to GD(H6DO)-22, DTC P0038 HO2S HEATER CONTROL CIRCUIT HIGH (BANK 1 SENSOR 2), Diagnostic Trouble Code (DTC) Detecting Criteria.>

CAUTION:

After repair or replacement of faulty parts, conduct Clear Memory Mode <Ref. to EN(H6DO)(diag)-44, OPERATION, Clear Memory Mode.> and Inspection Mode <Ref. to EN(H6DO)(diag)-35, PROCEDURE, Inspection Mode.>.

WIRING DIAGRAM:

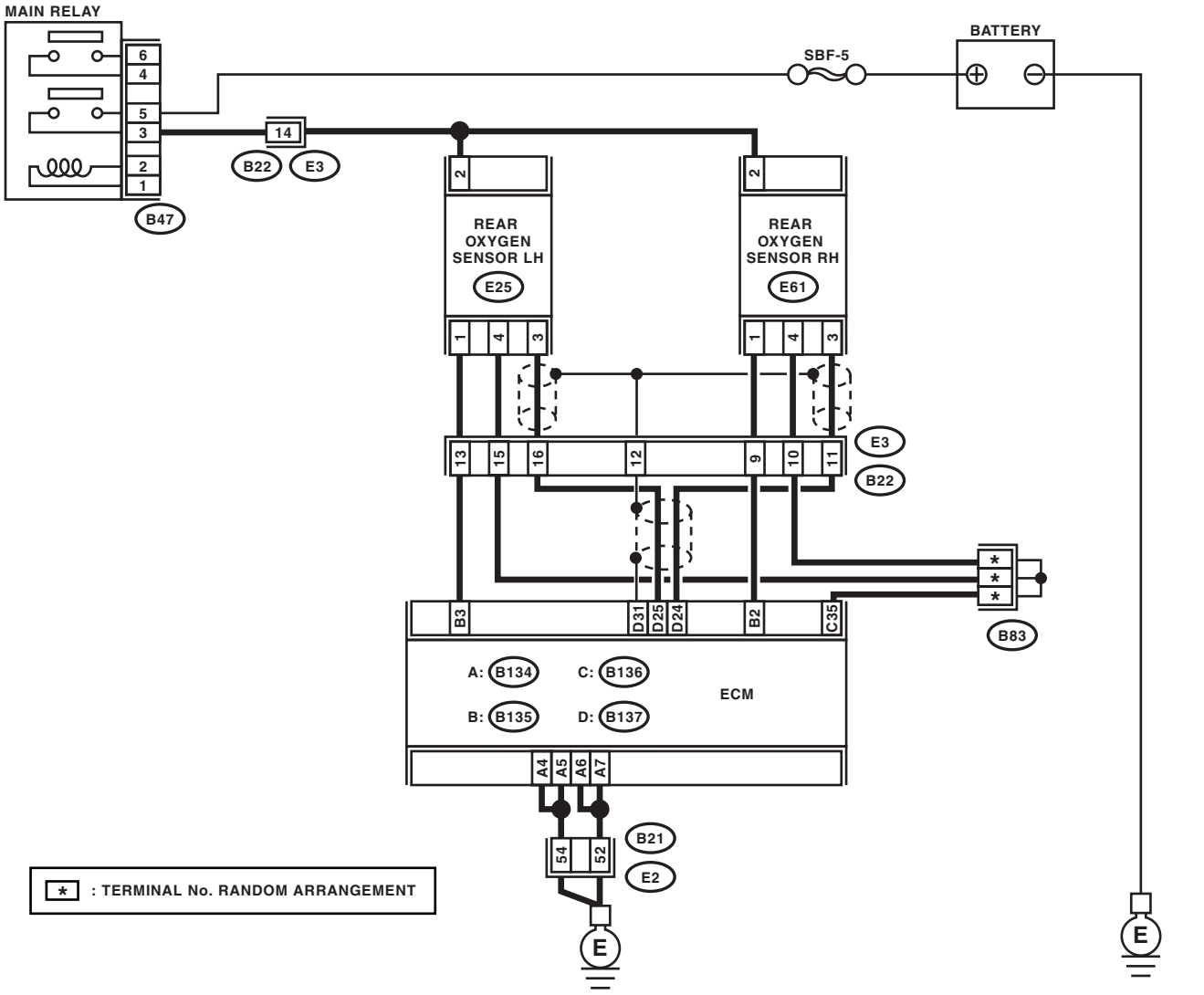

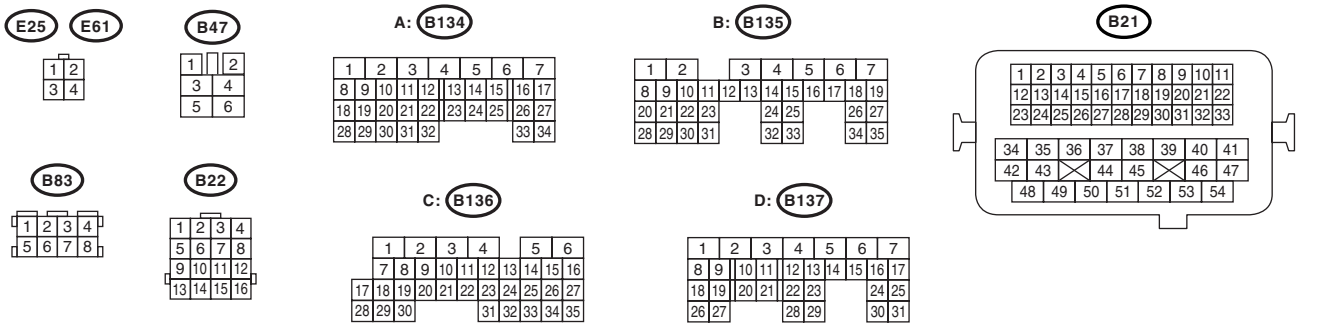

EN-02966

	Step	Check	Yes	No
1	**CHECK INPUT SIGNAL FROM ECM.** Measure the voltage between ECM connector and chassis ground. ***Connector & terminal*** ***(B135) No. 2 (+) — Chassis ground (−):***	Is the voltage more than 8 V?	Go to step **2.**	Go to step **3.**
2	**CHECK CURRENT DATA.** 1) Turn the ignition switch to OFF. 2) Repair the battery short circuit in harness between ECM and rear oxygen sensor connector. 3) Turn the ignition switch to ON. 4) Read the data of rear oxygen sensor heater current using Subaru Select Monitor or general scan tool. NOTE: • Subaru Select Monitor For detailed operation procedure, refer to the "READ CURRENT DATA SHOWN ON DISPLAY FOR ENGINE". <Ref. to EN(H6DO)(diag)-26, Subaru Select Monitor.> • General scan tool For detailed operation procedure, refer to the general scan tool instruction manual.	Is the current more than 7 A?	Replace the ECM. <Ref. to FU(H6DO)-34, Engine Control Module (ECM).>	END.
3	**CHECK POOR CONTACT.** Check poor contact in ECM connector.	Is the poor contact in ECM connector?	Repair the poor contact in ECM connector.	END.

J: DTC P0050 HO2S HEATER CONTROL CIRCUIT (BANK 2 SENSOR 1)

DTC DETECTING CONDITION:

- Two consecutive driving cycles with fault
- GENERAL DESCRIPTION <Ref. to GD(H6DO)-24, DTC P0050 HO2S HEATER CONTROL CIRCUIT (BANK 2 SENSOR 1), Diagnostic Trouble Code (DTC) Detecting Criteria.>

CAUTION:

After repair or replacement of faulty parts, conduct Clear Memory Mode <Ref. to EN(H6DO)(diag)-44, OPERATION, Clear Memory Mode.> and Inspection Mode <Ref. to EN(H6DO)(diag)-35, PROCEDURE, Inspection Mode.>.

WIRING DIAGRAM:

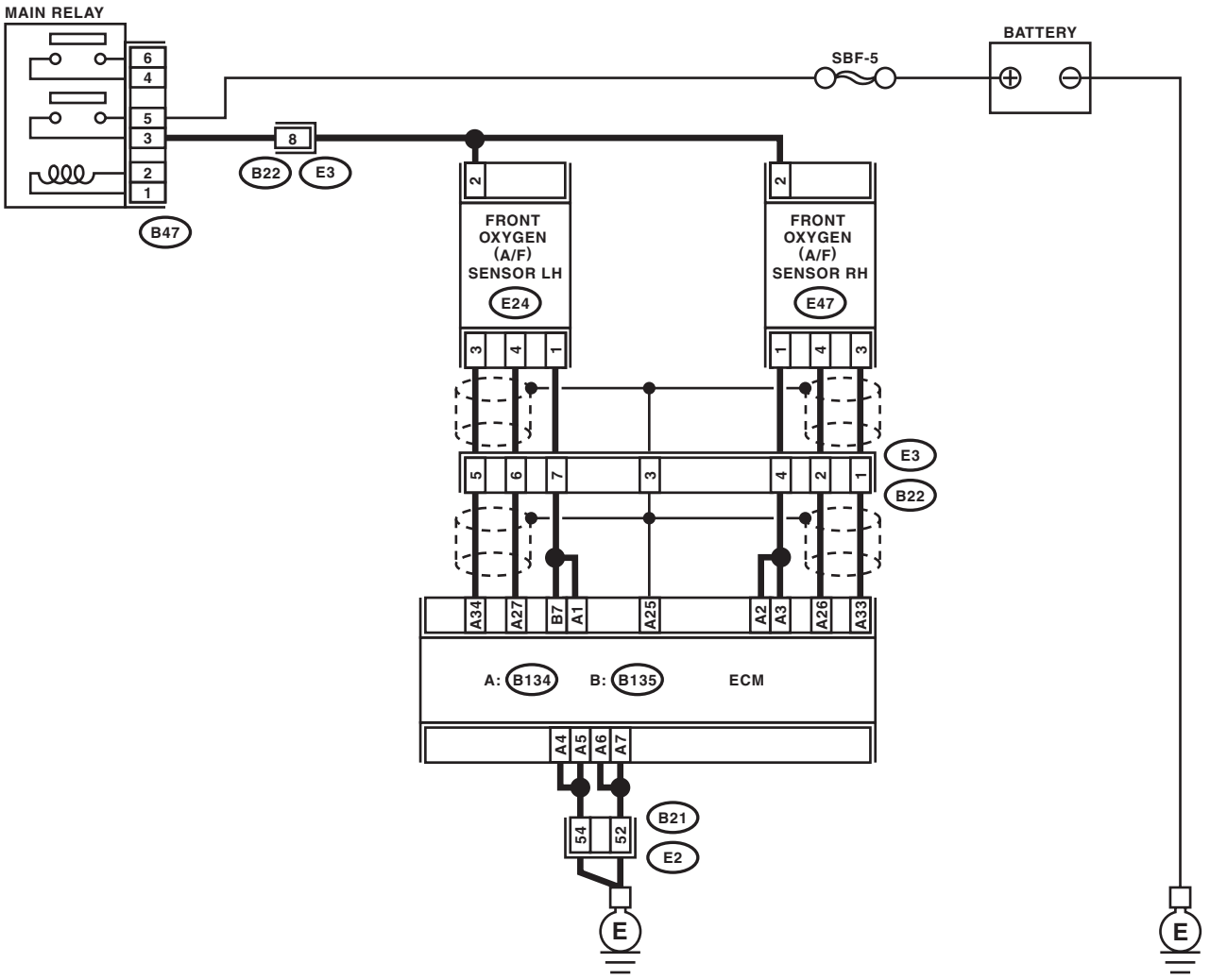

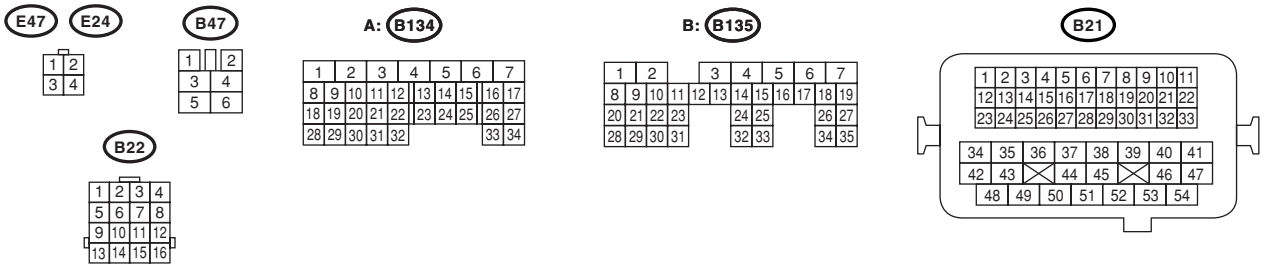

EN-03159

	Step	Check	Yes	No
1	**CHECK HARNESS BETWEEN ECM AND FRONT OXYGEN (A/F) SENSOR CONNECTOR.** 1) Start the engine, and warm-up the engine. 2) Turn the ignition switch to OFF. 3) Disconnect the connector from ECM and front oxygen (A/F) sensor. 4) Measure the resistance of harness between ECM and front oxygen (A/F) sensor connector. ***Connector & terminal*** ***(B134) No. 1 — (E24) No. 1:*** ***(B135) No. 7 — (E24) No. 1:***	Is the resistance less than 1 Ω?	Go to step **2.**	Repair the open circuit in harness between ECM and front oxygen (A/F) sensor connector.
2	**CHECK HARNESS BETWEEN ECM AND FRONT OXYGEN (A/F) SENSOR CONNECTOR.** Measure the resistance of harness between ECM and front oxygen (A/F) sensor connector. ***Connector & terminal*** ***(B134) No. 27 — (E24) No. 4:*** ***(B134) No. 34 — (E24) No. 3:***	Is the resistance less than 1 Ω?	Go to step **3.**	Repair the open circuit in harness between ECM and front oxygen (A/F) sensor connector.
3	**CHECK HARNESS BETWEEN MAIN RELAY AND FRONT OXYGEN (A/F) SENSOR CONNECTOR.** Measure the resistance of harness between main relay and front oxygen (A/F) sensor connector. ***Connector & terminal*** ***(B47) No. 3 — (E24) No. 2:***	Is the resistance less than 1 Ω?	Go to step **4.**	Repair the open circuit in harness between main relay and front oxygen (A/F) sensor connector.
4	**CHECK FRONT OXYGEN (A/F) SENSOR.** Measure the resistance between front oxygen (A/F) sensor connector terminals. ***Terminals*** ***No. 2 — No. 1:***	Is the resistance less than 5 Ω?	Go to step **5.**	Replace the front oxygen (A/F) sensor. <Ref. to FU(H6DO)-30, Front Oxygen (A/F) Sensor.>
5	**CHECK POOR CONTACT.** Check poor contact in ECM and front oxygen (A/F) sensor connector.	Is there poor contact in ECM or front oxygen (A/F) sensor connector?	Repair the poor contact in ECM or front oxygen (A/F) sensor connector.	Replace the front oxygen (A/F) sensor. <Ref. to FU(H6DO)-30, Front Oxygen (A/F) Sensor.>

K: DTC P0051 HO2S HEATER CONTROL CIRCUIT LOW (BANK 2 SENSOR 1)

DTC DETECTING CONDITION:

- Detect as soon as malfunction occurs.
- GENERAL DESCRIPTION <Ref. to GD(H6DO)-24, DTC P0051 HO2S HEATER CONTROL CIRCUIT LOW (BANK 2 SENSOR 1), Diagnostic Trouble Code (DTC) Detecting Criteria.>

CAUTION:

After repair or replacement of faulty parts, conduct Clear Memory Mode <Ref. to EN(H6DO)(diag)-44, OPERATION, Clear Memory Mode.> and Inspection Mode <Ref. to EN(H6DO)(diag)-35, PROCEDURE, Inspection Mode.>.

WIRING DIAGRAM:

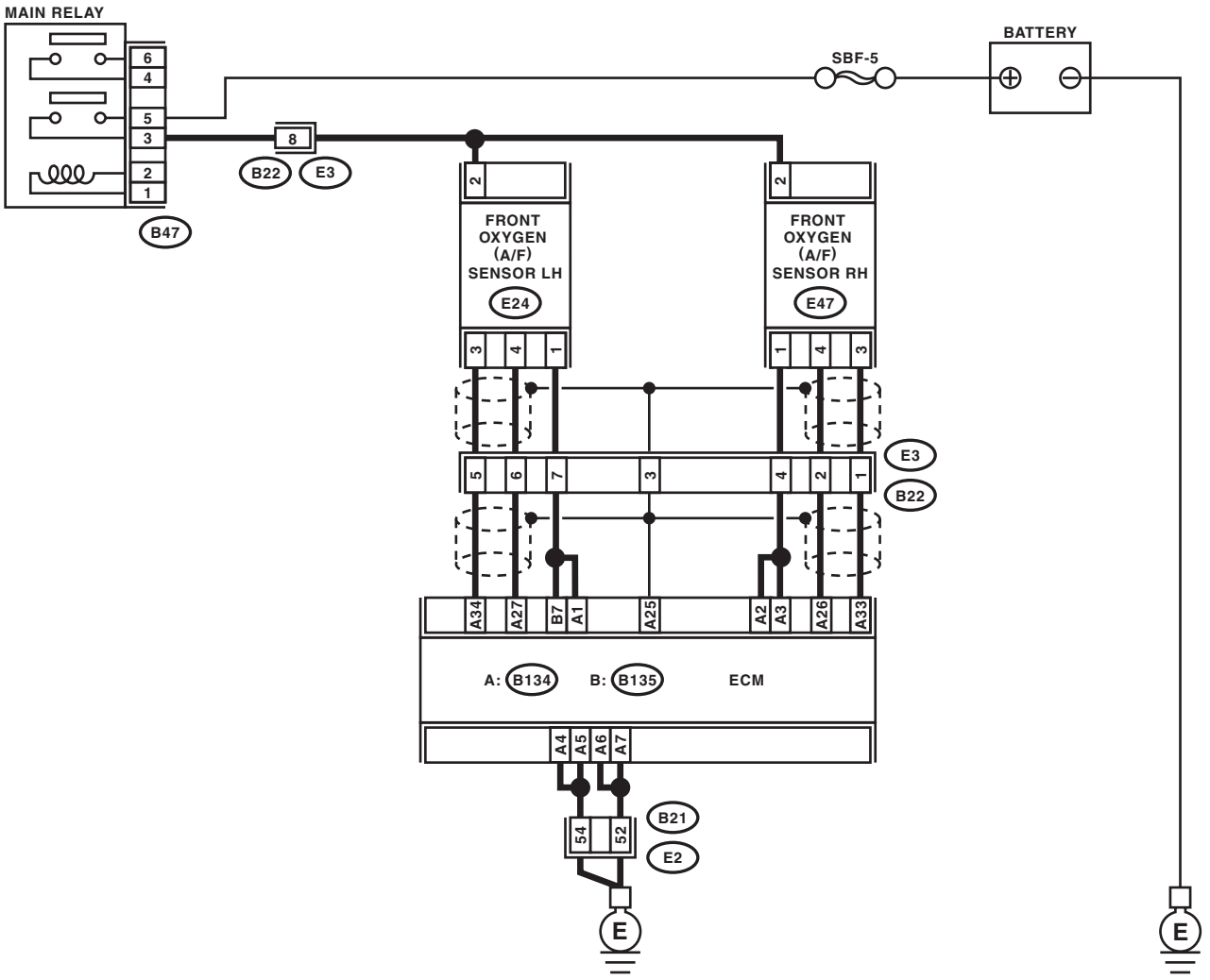

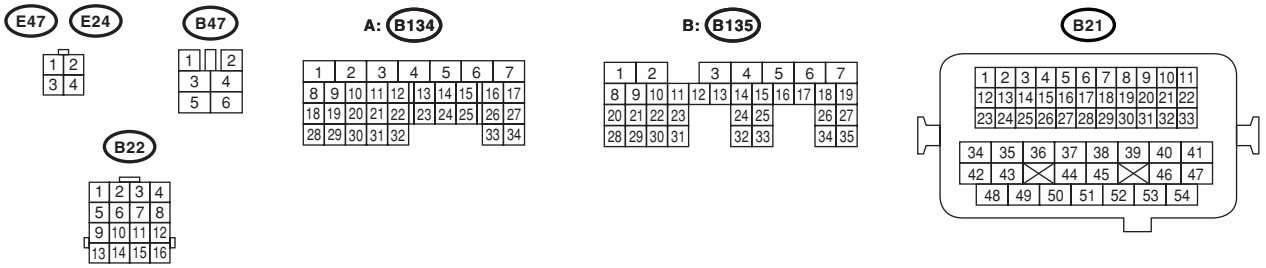

EN-03159

	Step	Check	Yes	No
1	**CHECK POWER SUPPLY TO FRONT OXYGEN (A/F) SENSOR.** 1) Turn the ignition switch to OFF. 2) Disconnect the connector from front oxygen (A/F) sensor. 3) Turn the ignition switch to ON. 4) Measure the voltage between front oxygen (A/F) sensor connector and engine ground. ***Connector & terminal*** ***(E24) No. 2 (+) — Engine ground (−):***	Is the voltage more than 10 V?	Go to step **2.**	Repair the power supply line. NOTE: In this case repair the following: • Open circuit in harness between main relay and front oxygen (A/F) sensor connector • Poor contact in main relay connector • Poor contact in coupling connector • Malfunction in main relay
2	**CHECK GROUND CIRCUIT FOR ECM.** Measure the resistance of harness between ECM connector and chassis ground. ***Connector & terminal*** ***(B134) No. 4 — Chassis ground:*** ***(B134) No. 5 — Chassis ground:*** ***(B134) No. 6 — Chassis ground:*** ***(B134) No. 7 — Chassis ground:***	Is the resistance less than 5 Ω?	Go to step **3.**	Repair the harness and connector. NOTE: In this case repair the following: • Open circuit in harness between ECM and engine ground terminal • Poor contact in ECM connector • Poor contact in coupling connector
3	**CHECK CURRENT DATA.** 1) Start the engine. 2) Read the data of front oxygen (A/F) sensor heater current using Subaru Select Monitor or general scan tool. NOTE: • Subaru Select Monitor For detailed operation procedure, refer to the “READ CURRENT DATA SHOWN ON DISPLAY FOR ENGINE”. <Ref. to EN(H6DO)(diag)-26, Subaru Select Monitor.> • General scan tool For detailed operation procedure, refer to the general scan tool instruction manual.	Is the current more than 0.2 A?	Repair the poor contact connector. NOTE: In this case repair the following: • Poor contact in front oxygen (A/F) sensor connector • Poor contact in coupling connector • Poor contact in ECM connector	Go to step **4.**
4	**CHECK OUTPUT SIGNAL FROM ECM.** 1) Start and idle the engine. 2) Measure the voltage between ECM connector and chassis ground. ***Connector & terminal*** ***(B134) No. 1 (+) — Chassis ground (−):*** ***(B135) No. 7 (+) — Chassis ground (−):***	Is the voltage less than 1 V?	Go to step **6.**	Go to step **5.**
5	**CHECK OUTPUT SIGNAL FROM ECM.** Measure the voltage between ECM connector and chassis ground. ***Connector & terminal*** ***(B134) No. 1 (+) — Chassis ground (−):*** ***(B135) No. 7 (+) — Chassis ground (−):***	Does the voltage change by shaking the ECM harness and connector while monitoring the value of voltage meter?	Repair the poor contact in ECM connector.	Go to step **6.**

	Step	Check	Yes	No
6	**CHECK FRONT OXYGEN (A/F) SENSOR.** 1) Turn the ignition switch to OFF. 2) Measure the resistance between front oxygen (A/F) sensor connector terminals. ***Terminals*** ***No. 2 — No. 1:***	Is the resistance less than 10 Ω?	Repair the harness and connector. NOTE: In this case repair the following: • Open or ground short circuit in harness between front oxygen (A/F) sensor and ECM connector • Poor contact in front oxygen (A/F) sensor connector • Poor contact in ECM connector • Poor contact in coupling connector	Replace the front oxygen (A/F) sensor. <Ref. to FU(H6DO)-30, Front Oxygen (A/F) Sensor.>

L: DTC P0052 HO2S HEATER CONTROL CIRCUIT HIGH (BANK 2 SENSOR 1)

DTC DETECTING CONDITION:

- Detect as soon as malfunction occurs.
- GENERAL DESCRIPTION <Ref. to GD(H6DO)-24, DTC P0052 HO2S HEATER CONTROL CIRCUIT HIGH (BANK 2 SENSOR 1), Diagnostic Trouble Code (DTC) Detecting Criteria.>

CAUTION:
After repair or replacement of faulty parts, conduct Clear Memory Mode <Ref. to EN(H6DO)(diag)-44, OPERATION, Clear Memory Mode.> and Inspection Mode <Ref. to EN(H6DO)(diag)-35, PROCEDURE, Inspection Mode.>.

WIRING DIAGRAM:

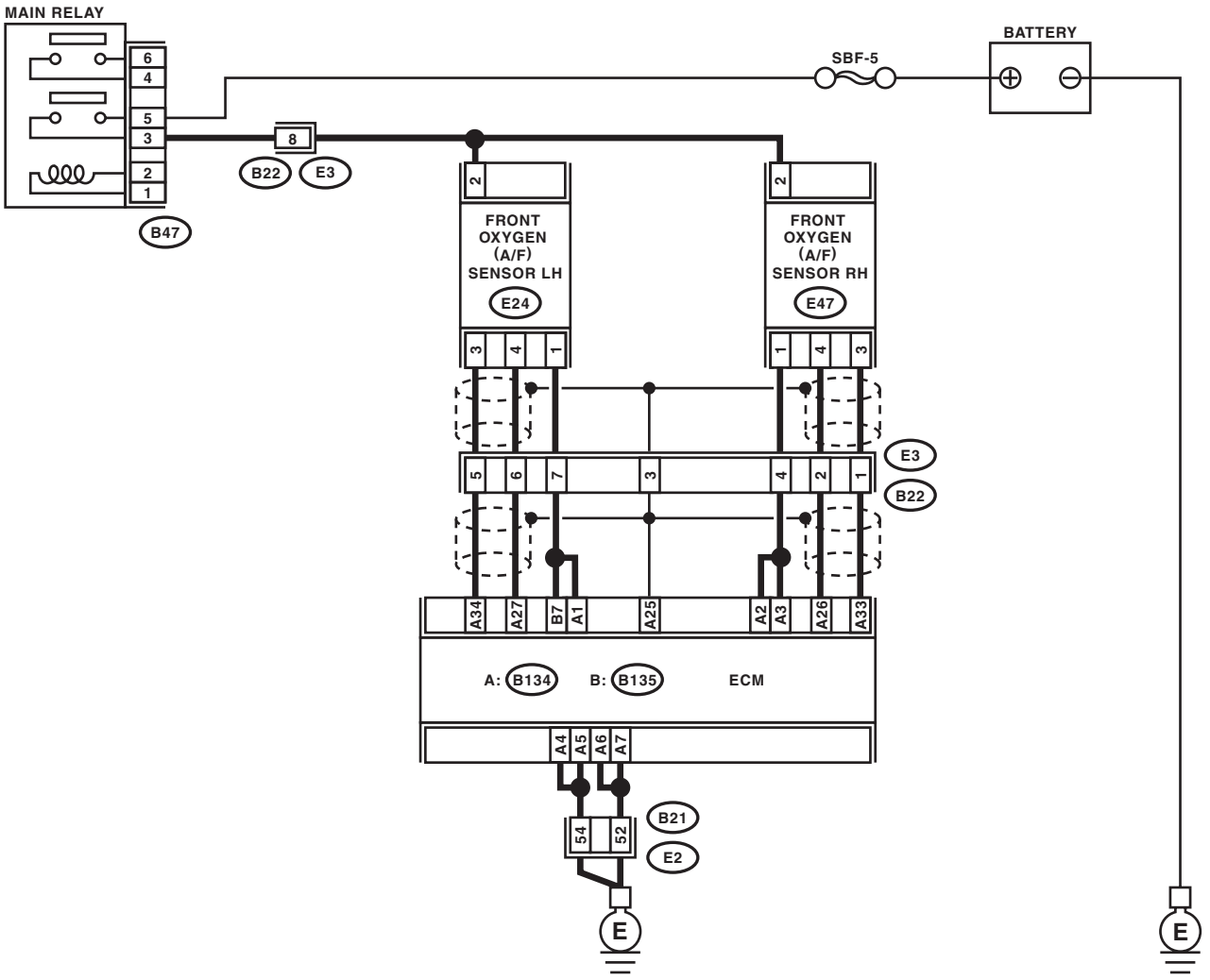

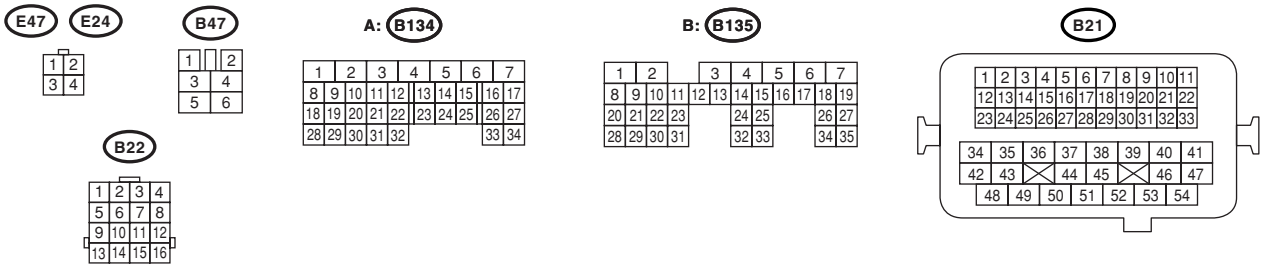

EN-03159

	Step	Check	Yes	No
1	**CHECK OUTPUT SIGNAL FROM ECM.** 1) Turn the ignition switch to ON. 2) Measure the voltage between ECM connector and chassis ground. ***Connector & terminal*** ***(B134) No. 1 (+) — Chassis ground (−):*** ***(B135) No. 7 (+) — Chassis ground (−):***	Is the voltage more than 8 V?	Go to step **2.**	Go to step **3.**
2	**CHECK FRONT OXYGEN (A/F) SENSOR HEATER CURRENT.** 1) Turn the ignition switch to OFF. 2) Repair the battery short circuit in harness between ECM and front oxygen (A/F) sensor connector. 3) Turn the ignition switch to ON. 4) Read the data of front oxygen (A/F) sensor heater current using Subaru Select Monitor or general scan tool. NOTE: • Subaru Select Monitor For detailed operation procedure, refer to the "READ CURRENT DATA SHOWN ON DISPLAY FOR ENGINE". <Ref. to EN(H6DO)(diag)-26, Subaru Select Monitor.> • General scan tool For detailed operation procedure, refer to the general scan tool instruction manual.	Is the current more than 2.3 A?	Replace the ECM. <Ref. to FU(H6DO)-34, Engine Control Module (ECM).>	END.
3	**CHECK OUTPUT SIGNAL FROM ECM.** Measure the voltage between ECM connector and chassis ground. ***Connector & terminal*** ***(B134) No. 1 (+) — Chassis ground (−):*** ***(B135) No. 7 (+) — Chassis ground (−):***	Does the voltage change by shaking the ECM harness and connector?	Repair the battery short circuit in harness between ECM and front oxygen (A/F) sensor connector.	END.

M: DTC P0057 HO2S HEATER CONTROL CIRCUIT LOW (BANK 2 SENSOR 2)

DTC DETECTING CONDITION:

- Two consecutive driving cycles with fault
- GENERAL DESCRIPTION <Ref. to GD(H6DO)-24, DTC P0057 HO2S HEATER CONTROL CIRCUIT LOW (BANK 2 SENSOR 2), Diagnostic Trouble Code (DTC) Detecting Criteria.>

CAUTION:

After repair or replacement of faulty parts, conduct Clear Memory Mode <Ref. to EN(H6DO)(diag)-44, OPERATION, Clear Memory Mode.> and Inspection Mode <Ref. to EN(H6DO)(diag)-35, PROCEDURE, Inspection Mode.>.

WIRING DIAGRAM:

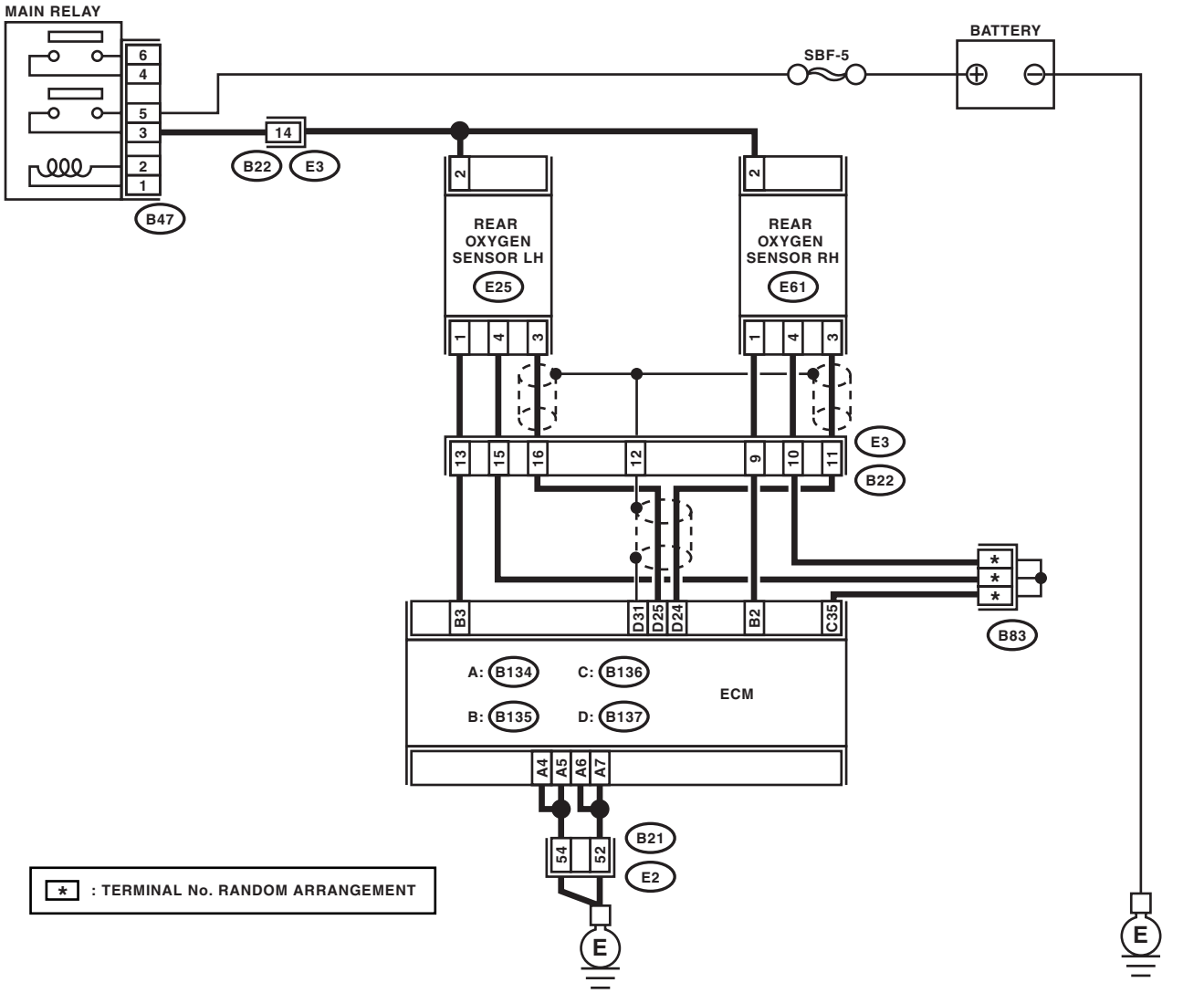

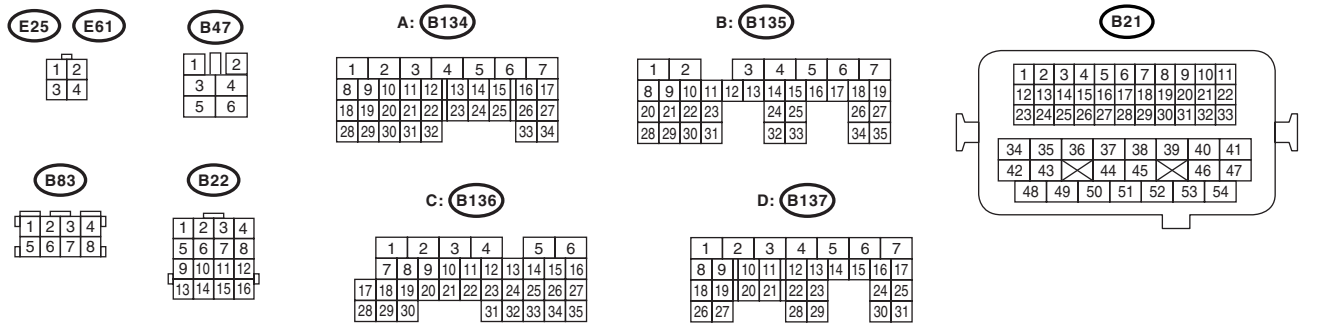

EN-02966

	Step	Check	Yes	No
1	**CHECK POWER SUPPLY TO REAR OXYGEN SENSOR.** 1) Turn the ignition switch to OFF. 2) Disconnect the connector from rear oxygen sensor. 3) Turn the ignition switch to ON. 4) Measure the voltage between rear oxygen sensor connector and chassis ground. ***Connector & terminal*** ***(E25) No. 2 (+) — Chassis ground (−):***	Is the voltage more than 10 V?	Go to step **2.**	Repair the power supply line. NOTE: In this case repair the following: • Open circuit in harness between main relay and rear oxygen sensor connector • Poor contact in main relay connector • Poor contact in coupling connector • Malfunction in main relay
2	**CHECK GROUND CIRCUIT FOR ECM.** 1) Turn the ignition switch to OFF. 2) Disconnect the connector from ECM. 3) Measure the resistance of harness between ECM connector and chassis ground. ***Connector & terminal*** ***(B134) No. 4 — Chassis ground:*** ***(B134) No. 5 — Chassis ground:*** ***(B134) No. 6 — Chassis ground:*** ***(B134) No. 7 — Chassis ground:***	Is the resistance less than 5 Ω?	Go to step **3.**	Repair the harness and connector. NOTE: In this case repair the following: • Open circuit in harness between ECM and engine ground terminal • Poor contact in ECM connector • Poor contact in coupling connector
3	**CHECK CURRENT DATA.** 1) Start the engine. 2) Read the data of rear oxygen sensor heater current using Subaru Select Monitor or general scan tool. NOTE: • Subaru Select Monitor For detailed operation procedure, refer to the “READ CURRENT DATA SHOWN ON DISPLAY FOR ENGINE”. <Ref. to EN(H6DO)(diag)-26, Subaru Select Monitor.> • General scan tool For detailed operation procedure, refer to the general scan tool instruction manual.	Is the current more than 0.2 A?	Repair the connector. NOTE: In this case repair the following: • Poor contact in rear oxygen sensor connector • Poor contact in coupling connector • Poor contact in ECM connector	Go to step **4.**
4	**CHECK OUTPUT SIGNAL FROM ECM.** 1) Start and idle the engine. 2) Measure the voltage between ECM connector and chassis ground. ***Connector & terminal*** ***(B135) No. 3 (+) — Chassis ground (−):***	Is the voltage less than 1 V?	Go to step **7.**	Go to step **5.**
5	**CHECK OUTPUT SIGNAL FROM ECM.** Measure the voltage between ECM connector and chassis ground. ***Connector & terminal*** ***(B135) No. 3 (+) — Chassis ground (−):***	Does the voltage change by shaking the ECM harness and connector while monitoring the value of voltage meter?	Repair the poor contact in ECM connector.	Go to step **6.**

	Step	Check	Yes	No
6	**CHECK OUTPUT SIGNAL FROM ECM.** 1) Disconnect the connector from rear oxygen sensor. 2) Measure the voltage between ECM connector and chassis ground. ***Connector & terminal*** ***(B135) No. 3 (+) — Chassis ground (−):***	Is the voltage less than 1 V?	Replace the ECM. <Ref. to FU(H6DO)-34, Engine Control Module (ECM).>	Repair the battery short circuit in harness between ECM and rear oxygen sensor connector. After repair, replace the ECM. <Ref. to FU(H6DO)-34, Engine Control Module (ECM).>
7	**CHECK REAR OXYGEN SENSOR.** 1) Turn the ignition switch to OFF. 2) Measure the resistance between rear oxygen sensor connector terminals. ***Terminals*** ***No. 1 — No. 2:***	Is the resistance less than 30 Ω?	Repair the harness and connector. NOTE: In this case repair the following: • Open circuit in harness between rear oxygen sensor and ECM connector • Poor contact in rear oxygen sensor connector • Poor contact in ECM connector • Poor contact in coupling connector	Replace the rear oxygen sensor. <Ref. to FU(H6DO)-32, Rear Oxygen Sensor.>

N: DTC P0058 HO2S HEATER CONTROL CIRCUIT HIGH (BANK 2 SENSOR 2)

DTC DETECTING CONDITION:

- Two consecutive driving cycles with fault
- GENERAL DESCRIPTION <Ref. to GD(H6DO)-24, DTC P0058 HO2S HEATER CONTROL CIRCUIT HIGH (BANK 2 SENSOR 2), Diagnostic Trouble Code (DTC) Detecting Criteria.>

CAUTION:

After repair or replacement of faulty parts, conduct Clear Memory Mode <Ref. to EN(H6DO)(diag)-44, OPERATION, Clear Memory Mode.> and Inspection Mode <Ref. to EN(H6DO)(diag)-35, PROCEDURE, Inspection Mode.>.

WIRING DIAGRAM:

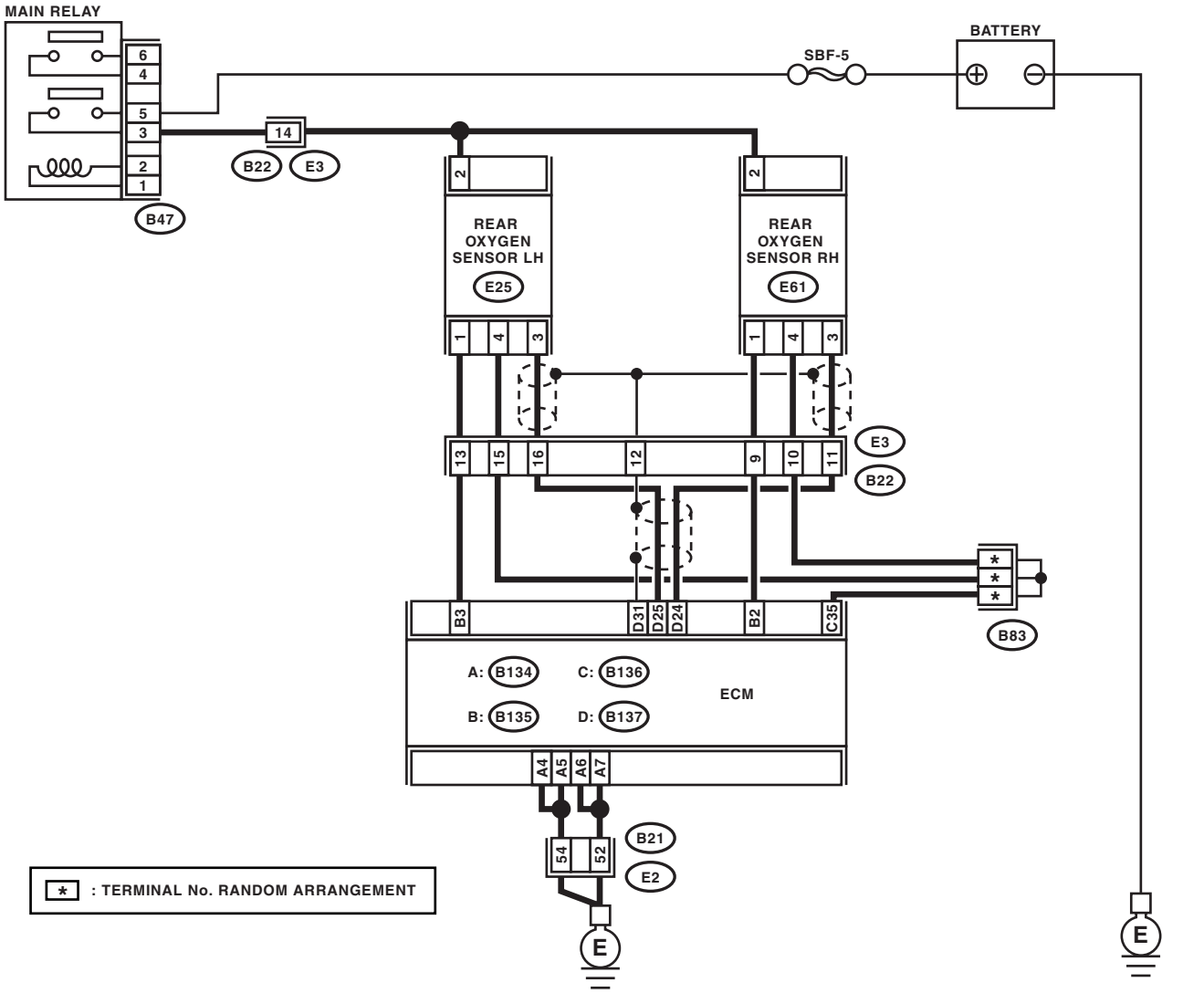

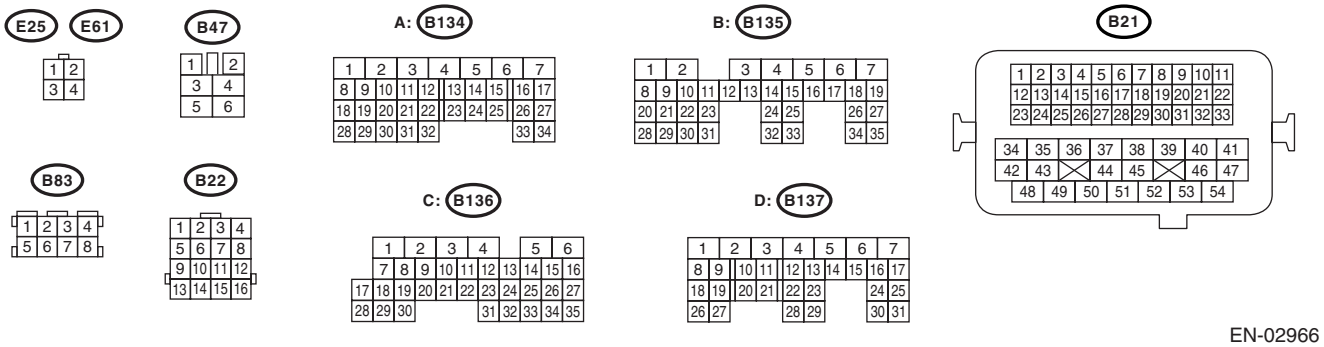

EN-02966

	Step	Check	Yes	No
1	**CHECK INPUT SIGNAL FROM ECM.** Measure the voltage between ECM connector and chassis ground. ***Connector & terminal*** ***(B135) No. 3 (+) — Chassis ground (−):***	Is the voltage more than 8 V?	Go to step **2.**	Go to step **3.**
2	**CHECK CURRENT DATA.** 1) Turn the ignition switch to OFF. 2) Repair the battery short circuit in harness between ECM and rear oxygen sensor connector. 3) Turn the ignition switch to ON. 4) Read the data of rear oxygen sensor heater current using Subaru Select Monitor or general scan tool. NOTE: • Subaru Select Monitor For detailed operation procedures, refer to the "READ CURRENT DATA SHOWN ON DISPLAY FOR ENGINE". <Ref. to EN(H6DO)(diag)-26, Subaru Select Monitor.> • General scan tool For detailed operation procedures, refer to the general scan tool instruction manual.	Is the current more than 7 A?	Replace the ECM. <Ref. to FU(H6DO)-34, Engine Control Module (ECM).>	END.
3	**CHECK POOR CONTACT.** Check poor contact in ECM connector.	Is the poor contact in ECM connector?	Repair the poor contact in ECM connector.	END.

O: DTC P0068 MAP/MAF - THROTTLE POSITION CORRELATION

DTC DETECTING CONDITION:

- Two consecutive driving cycles with fault
- GENERAL DESCRIPTION <Ref. to GD(H6DO)-25, DTC P0068 MAP/MAF - THROTTLE POSITION CORRELATION, Diagnostic Trouble Code (DTC) Detecting Criteria.>

TROUBLE SYMPTOM:

Failure of engine to start

CAUTION:

After repair or replacement of faulty parts, conduct Clear Memory Mode <Ref. to EN(H6DO)(diag)-44, OPERATION, Clear Memory Mode.> and Inspection Mode <Ref. to EN(H6DO)(diag)-35, PROCEDURE, Inspection Mode.>.

WIRING DIAGRAM:

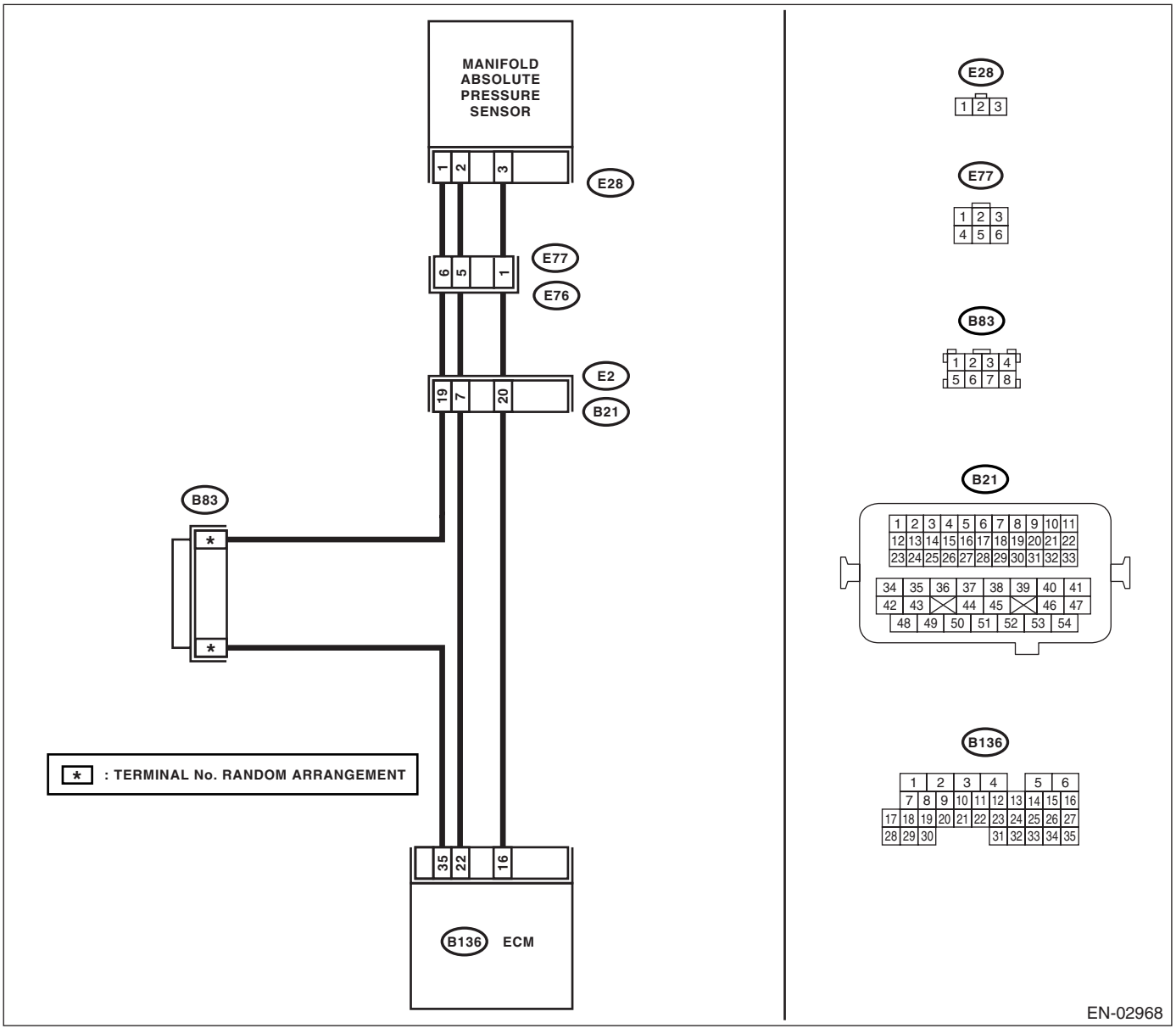

	Step	Check	Yes	No
1	**CHECK IDLE SWITCH SIGNAL.** 1) Turn the ignition switch to ON. 2) Operate the LED operation mode for engine using Subaru Select Monitor. NOTE: • Subaru Select Monitor For detailed operation procedure, refer to the "LED OPERATION MODE FOR ENGINE". <Ref. to EN(H6DO)(diag)-26, Subaru Select Monitor.>	Does the LED of {Idle Switch Signal} come on?	Go to step **2.**	Check the throttle position sensor circuit. <Ref. to EN(H6DO)(diag)-360, DTC P2135 THROTTLE/ PEDAL POSITION SENSOR/ SWITCH "A"/"B" VOLTAGE RATIONALITY, Diagnostic Procedure with Diagnostic Trouble Code (DTC).> NOTE: In this case, it is not necessary to inspect DTC P0106.
2	**CHECK FOR ANY OTHER DTC ON DISPLAY.**	Is any other DTC displayed?	Inspect the relevant DTC. "List of Diagnostic Trouble Code (DTC)". <Ref. to EN(H6DO)(diag)-71, List of Diagnostic Trouble Code (DTC).> NOTE: In this case, it is not necessary to inspect DTC P0106.	Go to step **3.**
3	**CHECK CONDITION OF MANIFOLD ABSOLUTE PRESSURE SENSOR.**	Is the manifold absolute pressure sensor installation bolt tightened securely?	Go to step **4.**	Tighten the manifold absolute pressure sensor installation bolt securely.
4	**CHECK CONDITION OF THROTTLE BODY.**	Is the throttle body installation bolt tightened securely?	Replace the manifold absolute pressure sensor. <Ref. to FU(H6DO)-24, Manifold Absolute Pressure Sensor.>	Tighten the throttle body installation bolt securely.

P: DTC P0076 INTAKE VALVE CONTROL CIRCUIT LOW (BANK 1)

DTC DETECTING CONDITION:

- Detect as soon as malfunction occurs.
- GENERAL DESCRIPTION <Ref. to GD(H6DO)-27, DTC P0076 INTAKE VALVE CONTROL CIRCUIT LOW (BANK 1), Diagnostic Trouble Code (DTC) Detecting Criteria.>

TROUBLE SYMPTOM:

Erroneous idling

CAUTION:

After repair or replacement of faulty parts, conduct Clear Memory Mode <Ref. to EN(H6DO)(diag)-44, OPERATION, Clear Memory Mode.> and Inspection Mode <Ref. to EN(H6DO)(diag)-35, PROCEDURE, Inspection Mode.>.

WIRING DIAGRAM:

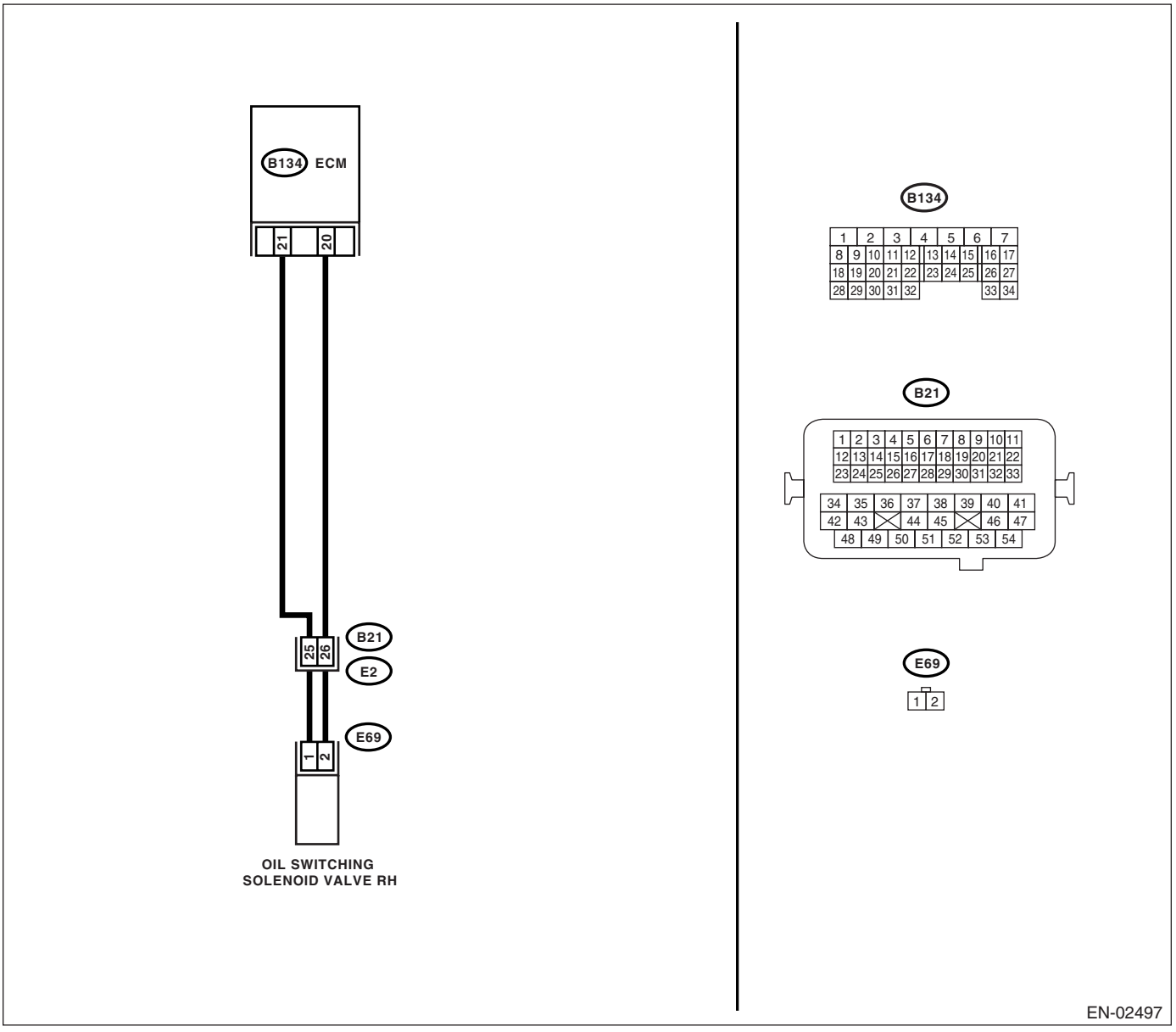

	Step	Check	Yes	No
1	**CHECK HARNESS BETWEEN ECM AND OIL SWITCHING SOLENOID VALVE.** 1) Turn the ignition switch to OFF. 2) Disconnect the connector from ECM and oil switching solenoid valve. 3) Measure the resistance between ECM and oil switching solenoid valve. ***Connector & terminal*** ***(B134) No. 21 — (E69) No. 1:*** ***(B134) No. 20 — (E69) No. 2:***	Is the resistance less than 1 Ω?	Go to step **2.**	Repair the open circuit in harness between ECM and oil switching solenoid valve connector. NOTE: In this case repair the following: • Open circuit in harness between ECM and oil switching solenoid valve connector • Poor contact in coupling connector
2	**CHECK OIL SWITCHING SOLENOID VALVE.** 1) Remove the oil switching solenoid valve connector. 2) Measure the resistance between oil switching solenoid valve terminals. ***Terminals*** ***No. 1 — No. 2:***	Is the resistance 6 — 12 Ω?	Repair the poor contact in ECM and oil switching solenoid valve.	Replace the oil switching solenoid valve. <Ref. to ME(H6DO)-77, Oil Switching Solenoid Valve.>

Q: DTC P0077 INTAKE VALVE CONTROL CIRCUIT HIGH (BANK 1)

DTC DETECTING CONDITION:

- Detect as soon as malfunction occurs.
- GENERAL DESCRIPTION <Ref. to GD(H6DO)-28, DTC P0077 INTAKE VALVE CONTROL CIRCUIT HIGH (BANK 1), Diagnostic Trouble Code (DTC) Detecting Criteria.>

TROUBLE SYMPTOM:

Erroneous idling

CAUTION:

After repair or replacement of faulty parts, conduct Clear Memory Mode <Ref. to EN(H6DO)(diag)-44, OPERATION, Clear Memory Mode.> and Inspection Mode <Ref. to EN(H6DO)(diag)-35, PROCEDURE, Inspection Mode.>.

WIRING DIAGRAM:

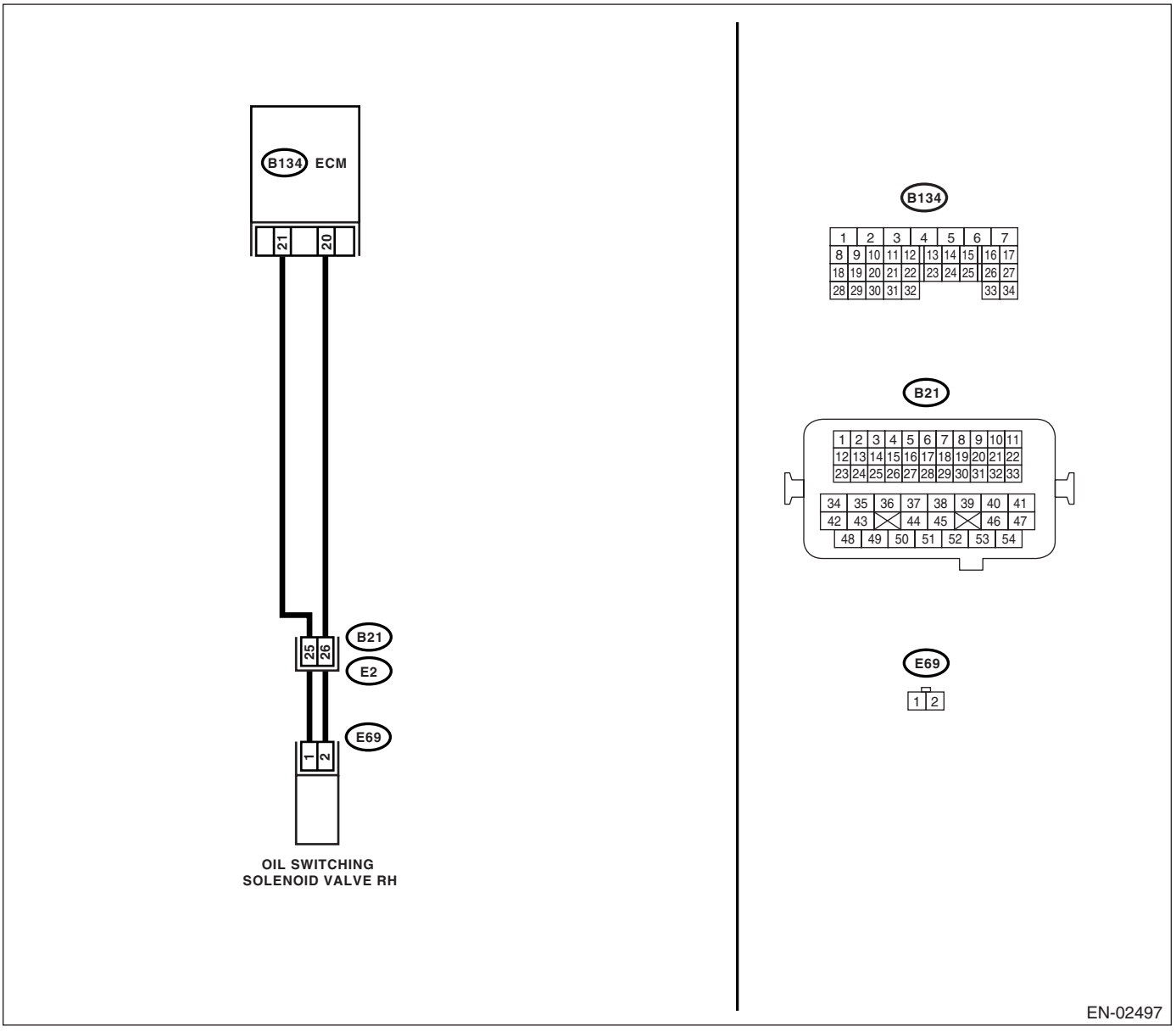

	Step	Check	Yes	No
1	**CHECK HARNESS BETWEEN ECM AND OIL SWITCHING SOLENOID VALVE.** 1) Turn the ignition switch to OFF. 2) Disconnect the connector from ECM and oil switching solenoid valve. 3) Measure the resistance between oil switching solenoid valve and engine ground. ***Connector & terminal*** ***(E69) No. 1 — Engine ground:*** ***(E69) No. 2 — Engine ground:***	Is the resistance more than 1 MΩ?	Go to step **2.**	Repair the short circuit between ECM and oil switching solenoid valve connector.
2	**CHECK OIL SWITCHING SOLENOID VALVE.** 1) Remove the oil switching solenoid valve connector. 2) Measure the resistance between oil switching solenoid valve terminals. ***Terminals*** ***No. 1 — No. 2:***	Is the resistance 6 — 12 Ω?	Repair the poor contact in ECM and oil switching solenoid valve.	Replace the oil switching solenoid valve. <Ref. to ME(H6DO)-77, Oil Switching Solenoid Valve.>

R: DTC P0082 INTAKE VALVE CONTROL CIRCUIT LOW (BANK 2)

DTC DETECTING CONDITION:

- Detect as soon as malfunction occurs.
- GENERAL DESCRIPTION <Ref. to GD(H6DO)-29, DTC P0082 INTAKE VALVE CONTROL CIRCUIT LOW (BANK 2), Diagnostic Trouble Code (DTC) Detecting Criteria.>

TROUBLE SYMPTOM:

Erroneous idling

CAUTION:

After repair or replacement of faulty parts, conduct Clear Memory Mode <Ref. to EN(H6DO)(diag)-44, OPERATION, Clear Memory Mode.> and Inspection Mode <Ref. to EN(H6DO)(diag)-35, PROCEDURE, Inspection Mode.>.

WIRING DIAGRAM:

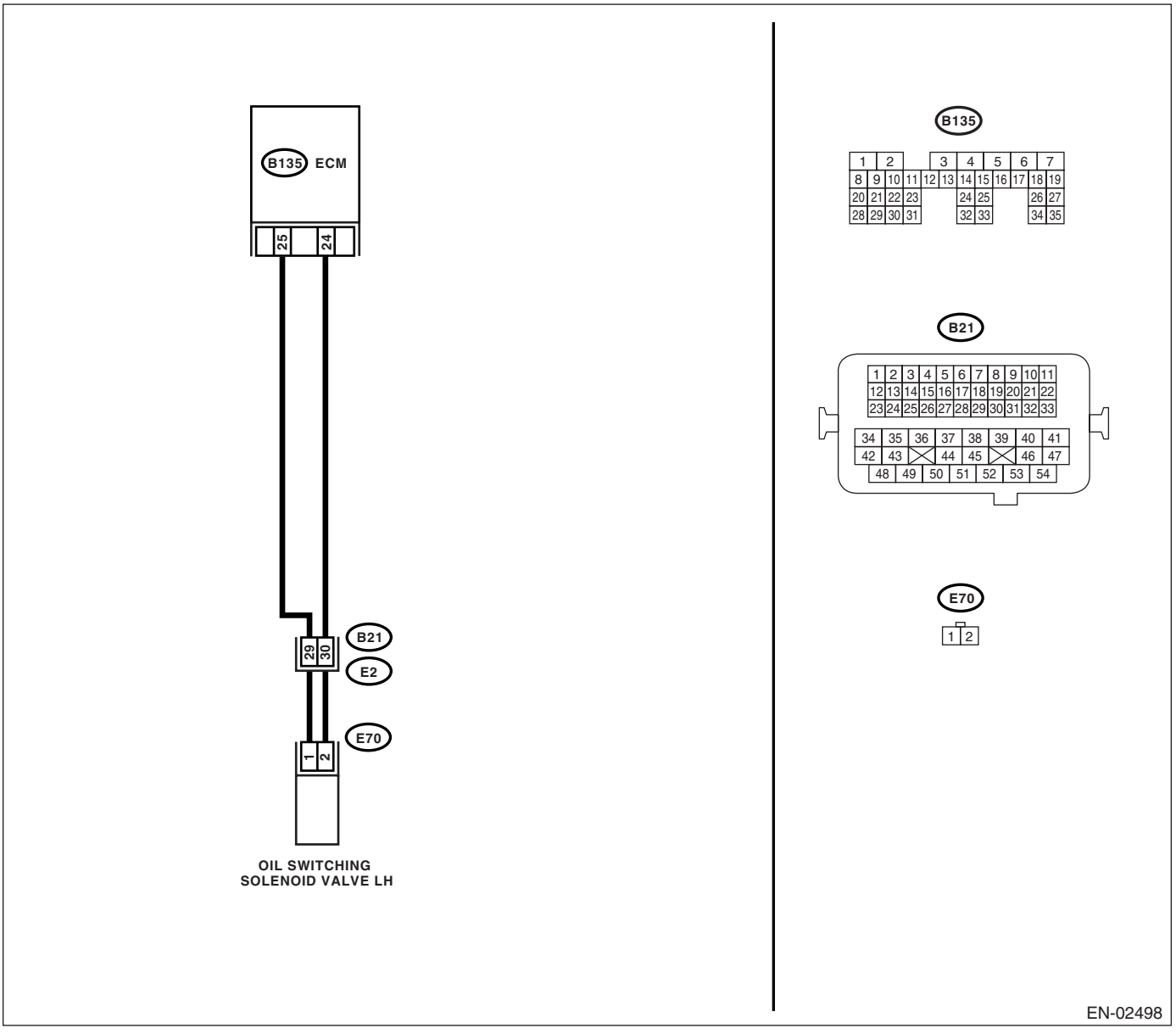

	Step	Check	Yes	No
1	**CHECK HARNESS BETWEEN ECM AND OIL SWITCHING SOLENOID VALVE.** 1) Turn the ignition switch to OFF. 2) Disconnect the connector from ECM and oil switching solenoid valve. 3) Measure the resistance between ECM and oil switching solenoid valve. ***Connector & terminal*** ***(B135) No. 25 — (E70) No. 1:*** ***(B135) No. 24 — (E70) No. 2:***	Is the resistance less than 1 Ω?	Go to step **2.**	Repair the open circuit in harness between ECM and oil switching solenoid valve connector. NOTE: In this case repair the following: • Open circuit in harness between ECM and oil switching solenoid valve connector • Poor contact in coupling connector
2	**CHECK OIL SWITCHING SOLENOID VALVE.** 1) Remove the oil switching solenoid valve connector. 2) Measure the resistance between oil switching solenoid valve terminals. ***Terminals*** ***No. 1 — No. 2:***	Is the resistance 6 — 12 Ω?	Repair the poor contact in ECM and oil switching solenoid valve.	Replace the oil switching solenoid valve. <Ref. to ME(H6DO)-77, Oil Switching Solenoid Valve.>

S: DTC P0083 INTAKE VALVE CONTROL CIRCUIT HIGH (BANK 2)

DTC DETECTING CONDITION:

- Detect as soon as malfunction occurs.
- GENERAL DESCRIPTION <Ref. to GD(H6DO)-29, DTC P0083 INTAKE VALVE CONTROL CIRCUIT HIGH (BANK 2), Diagnostic Trouble Code (DTC) Detecting Criteria.>

TROUBLE SYMPTOM:

Erroneous idling

CAUTION:

After repair or replacement of faulty parts, conduct Clear Memory Mode <Ref. to EN(H6DO)(diag)-44, OPERATION, Clear Memory Mode.> and Inspection Mode <Ref. to EN(H6DO)(diag)-35, PROCEDURE, Inspection Mode.>.

WIRING DIAGRAM:

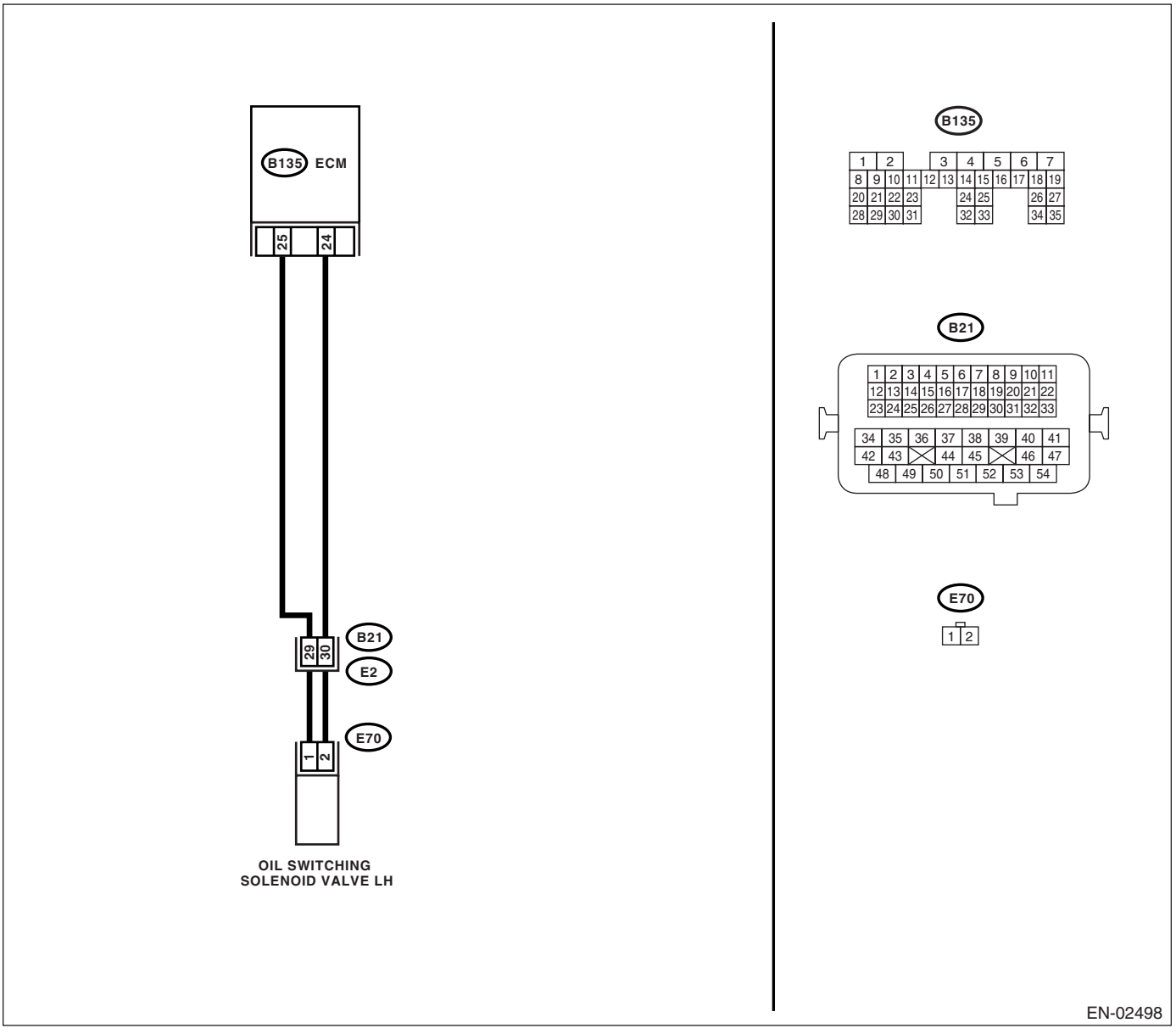

	Step	Check	Yes	No
1	**CHECK HARNESS BETWEEN ECM AND OIL SWITCHING SOLENOID VALVE.** 1) Turn the ignition switch to OFF. 2) Disconnect the connector from ECM and oil switching solenoid valve. 3) Measure the resistance between oil switching solenoid valve and engine ground. ***Connector & terminal*** ***(E70) No. 1 — Engine ground:*** ***(E70) No. 2 — Engine ground:***	Is the resistance more than 1 MΩ?	Go to step **2.**	Repair the short circuit between ECM and oil switching solenoid valve connector.
2	**CHECK OIL SWITCHING SOLENOID VALVE.** 1) Remove the oil switching solenoid valve connector. 2) Measure the resistance between oil switching solenoid valve terminals. ***Terminals*** ***No. 1 — No. 2:***	Is the resistance 6 — 12 Ω?	Repair the poor contact in ECM and oil switching solenoid valve.	Replace the oil switching solenoid valve. <Ref. to ME(H6DO)-77, Oil Switching Solenoid Valve.>

T: DTC P0101 MASS OR VOLUME AIR FLOW CIRCUIT RANGE/PERFORMANCE

DTC DETECTING CONDITION:

- Two consecutive driving cycles with fault
- GENERAL DESCRIPTION <Ref. to GD(H6DO)-29, DTC P0101 MASS OR VOLUME AIR FLOW CIRCUIT RANGE/PERFORMANCE, Diagnostic Trouble Code (DTC) Detecting Criteria.>

TROUBLE SYMPTOM:

- Erroneous idling
- Engine stalls.
- Poor driving performance

CAUTION:

After repair or replacement of faulty parts, conduct Clear Memory Mode <Ref. to EN(H6DO)(diag)-44, OPERATION, Clear Memory Mode.> and Inspection Mode <Ref. to EN(H6DO)(diag)-35, PROCEDURE, Inspection Mode.>.

WIRING DIAGRAM:

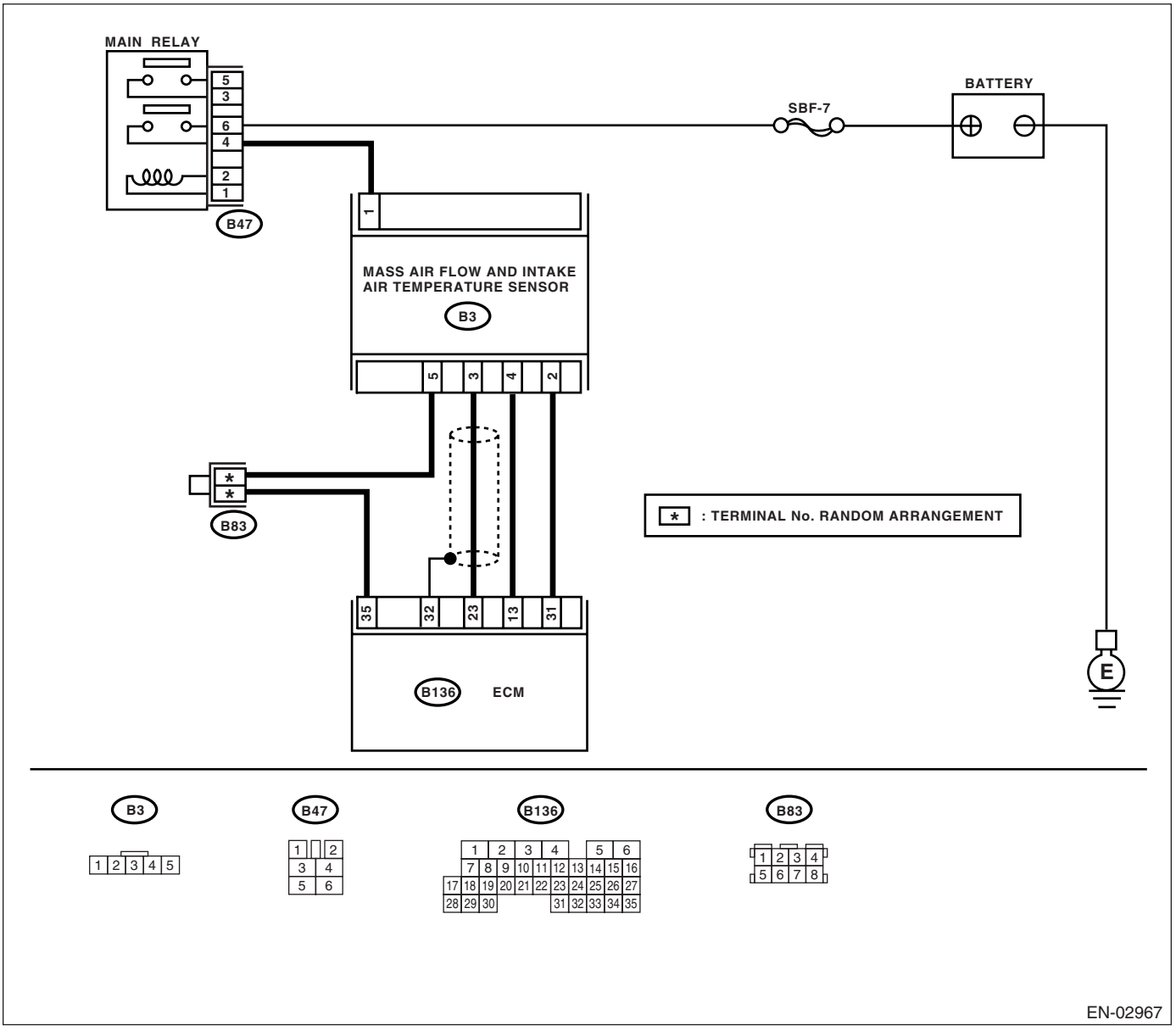

Step		Check	Yes	No
1	**CHECK FOR ANY OTHER DTC ON DISPLAY.**	Is any other DTC displayed?	Inspect the relevant DTC using "List of Diagnostic Trouble Code (DTC)". <Ref. to EN(H6DO)(diag)-71, List of Diagnostic Trouble Code (DTC).> NOTE: In this case, it is not necessary to inspect DTC P0101.	Replace the mass air flow and intake air temperature sensor. <Ref. to FU(H6DO)-25, Mass Air Flow and Intake Air Temperature Sensor.>

U: DTC P0102 MASS OR VOLUME AIR FLOW CIRCUIT LOW INPUT

DTC DETECTING CONDITION:

- Detect as soon as malfunction occurs.
- GENERAL DESCRIPTION <Ref. to GD(H6DO)-32, DTC P0102 MASS OR VOLUME AIR FLOW CIRCUIT LOW INPUT, Diagnostic Trouble Code (DTC) Detecting Criteria.>

TROUBLE SYMPTOM:

- Erroneous idling
- Engine stalls.
- Poor driving performance

CAUTION:

After repair or replacement of faulty parts, conduct Clear Memory Mode <Ref. to EN(H6DO)(diag)-44, OPERATION, Clear Memory Mode.> and Inspection Mode <Ref. to EN(H6DO)(diag)-35, PROCEDURE, Inspection Mode.>.

WIRING DIAGRAM:

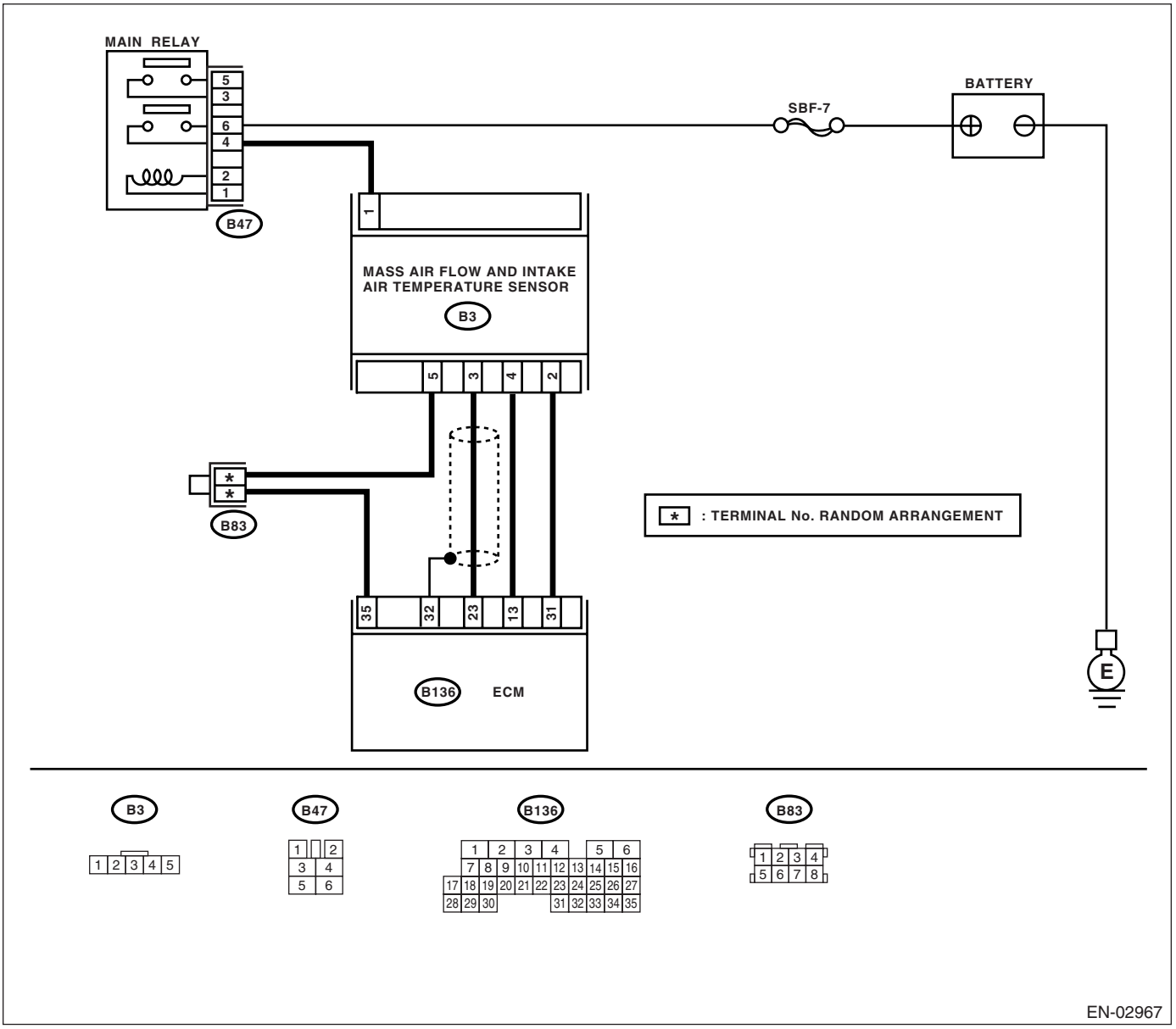

	Step	Check	Yes	No
1	**READ THE DATA CONNECTING SUBARU SELECT MONITOR or general scan tool.** 1) Turn the ignition switch to OFF. 2) Connect the Subaru Select Monitor or general scan tool to data link connector. 3) Turn the ignition switch to ON, and the Subaru Select Monitor or general scan tool switch to ON. 4) Start the engine. 5) Read the voltage of mass air flow sensor using Subaru Select Monitor or general scan tool. NOTE: • Subaru Select Monitor For detailed operation procedure, refer to the "READ CURRENT DATA SHOWN ON DISPLAY FOR ENGINE". <Ref. to EN(H6DO)(diag)-26, Subaru Select Monitor.> • General scan tool For detailed operation procedure, refer to the general scan tool instruction manual.	Is the voltage 0.2 — 4.7 V?	Even if the malfunction indicator light illuminates, the circuit has returned to a normal condition at this time. A temporary poor contact in the connector or harness may be the cause. Repair harness or connector in the mass air flow sensor. NOTE: In this case repair the following: • Open or ground short circuit in harness between mass air flow sensor and ECM connector • Poor contact in mass air flow sensor or ECM connector	Go to step **2.**
2	**CHECK INPUT SIGNAL FROM ECM.** Measure the voltage between ECM connector and chassis ground while engine is idling. ***Connector & terminal*** ***(B136) No. 23 (+) — Chassis ground (−):***	Is the voltage more than 0.2 V?	Go to step **4.**	Go to step **3.**
3	**CHECK INPUT SIGNAL FOR ECM (USING SUBARU SELECT MONITOR).** Measure the voltage between ECM connector and chassis ground while engine is idling.	Does the voltage change by shaking the harness and connector of ECM while monitoring the value with Subaru Select Monitor?	Repair the poor contact in ECM connector.	Replace the ECM. <Ref. to FU(H6DO)-34, Engine Control Module (ECM).>
4	**CHECK POWER SUPPLY TO MASS AIR FLOW SENSOR.** 1) Turn the ignition switch to OFF. 2) Disconnect the connector from mass air flow sensor. 3) Turn the ignition switch to ON. 4) Measure voltage between mass air flow sensor connector and chassis ground. ***Connector & terminal*** ***(B3) No. 1 (+) — Chassis ground (−):***	Is the voltage more than 5 V?	Go to step **5.**	Repair the open circuit between mass air flow sensor and main relay
5	**CHECK HARNESS BETWEEN ECM AND MASS AIR FLOW SENSOR CONNECTOR.** 1) Turn the ignition switch to OFF. 2) Disconnect the connector from ECM. 3) Measure the resistance of harness between ECM and mass air flow sensor connector. ***Connector & terminal*** ***(B136) No. 23 — (B3) No. 3:*** ***(B136) No. 31 — (B3) No. 2:*** ***(B136) No. 35 — (B3) No. 5:***	Is the resistance less than 1 Ω?	Go to step **6.**	Repair the open circuit between ECM and mass air flow sensor connector.

	Step	Check	Yes	No
6	**CHECK HARNESS BETWEEN ECM AND MASS AIR FLOW SENSOR CONNECTOR.** Measure the resistance of harness between ECM and chassis ground. ***Connector & terminal*** ***(B136) No. 23 — Chassis ground:*** ***(B136) No. 31 — Chassis ground:*** ***(B136) No. 35 — Chassis ground:***	Is the resistance more than 1 MΩ?	Go to step **7.**	Repair the ground short circuit between ECM and mass air flow sensor connector.
7	**CHECK POOR CONTACT.** Check poor contact in mass air flow sensor connector.	Is there poor contact in mass air flow sensor connector?	Repair the poor contact in mass air flow sensor connector.	Replace the mass air flow and intake air temperature sensor. <Ref. to FU(H6DO)-25, Mass Air Flow and Intake Air Temperature Sensor.>

V: DTC P0103 MASS OR VOLUME AIR FLOW CIRCUIT HIGH INPUT

DTC DETECTING CONDITION:

- Detect as soon as malfunction occurs.
- GENERAL DESCRIPTION <Ref. to GD(H6DO)-34, DTC P0103 MASS OR VOLUME AIR FLOW CIRCUIT HIGH INPUT, Diagnostic Trouble Code (DTC) Detecting Criteria.>

TROUBLE SYMPTOM:

- Erroneous idling
- Engine stalls.
- Poor driving performance

CAUTION:

After repair or replacement of faulty parts, conduct Clear Memory Mode <Ref. to EN(H6DO)(diag)-44, OPERATION, Clear Memory Mode.> and Inspection Mode <Ref. to EN(H6DO)(diag)-35, PROCEDURE, Inspection Mode.>.

WIRING DIAGRAM:

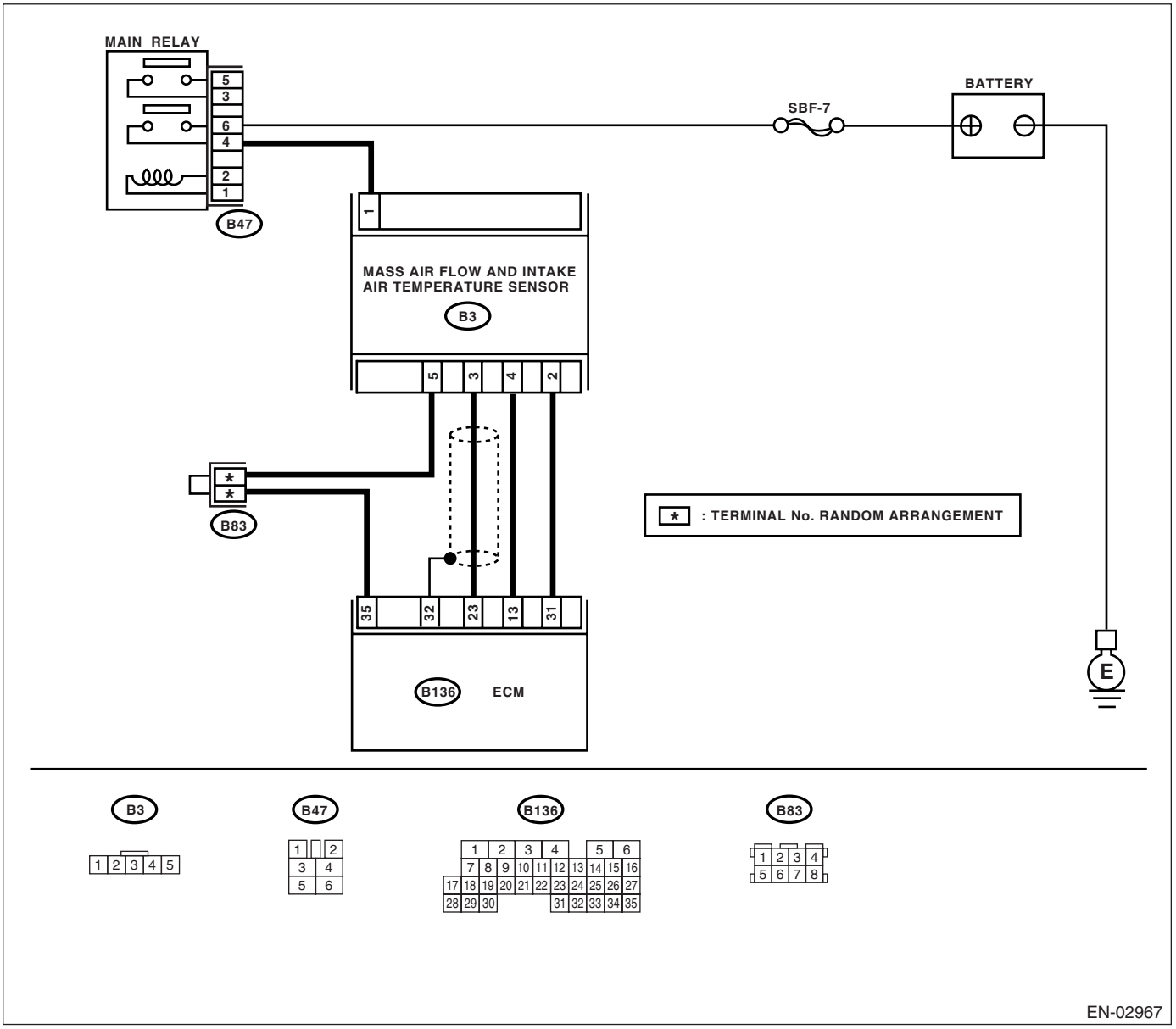

	Step	Check	Yes	No
1	**READ THE DATA CONNECTING SUBARU SELECT MONITOR or general scan tool.** 1) Turn the ignition switch to OFF. 2) Connect the Subaru Select Monitor or general scan tool to data link connector. 3) Turn the ignition switch to ON, and the Subaru Select Monitor or general scan tool switch to ON. 4) Start the engine. 5) Read the voltage of mass air flow sensor using Subaru Select Monitor or general scan tool. NOTE: • Subaru Select Monitor For detailed operation procedure, refer to the "READ CURRENT DATA SHOWN ON DISPLAY FOR ENGINE". <Ref. to EN(H6DO)(diag)-26, Subaru Select Monitor.> • General scan tool For detailed operation procedure, refer to the general scan tool instruction manual.	Is the voltage 0.2 — 4.7 V?	Even if the malfunction indicator light illuminates, the circuit has returned to a normal condition at this time.	Go to step **2.**
2	**CHECK HARNESS BETWEEN ECM AND MASS AIR FLOW SENSOR CONNECTOR.** 1) Turn the ignition switch to OFF. 2) Disconnect the connector from mass airflow sensor. 3) Turn the ignition switch to ON. 4) Measure voltage between mass air flow sensor connector and chassis ground. ***Connector & terminal*** ***(B3) No. 3 (+) — Chassis ground (−):***	Is the voltage more than 5 V?	Repair the battery short circuit in harness between mass air flow sensor connector and ECM connector.	Go to step **3.**
3	**CHECK HARNESS BETWEEN ECM AND MASS AIR FLOW SENSOR CONNECTOR.** 1) Turn the ignition switch to OFF. 2) Disconnect the connector from ECM. 3) Measure the resistance of harness between ECM connector and mass air flow sensor connector. ***Connector & terminal*** ***(B3) No. 2 — (B136) No. 31:***	Is the resistance less than 1 Ω?	Replace the mass air flow sensor. <Ref. to FU(H6DO)-25, Mass Air Flow and Intake Air Temperature Sensor.>	Repair the open circuit in harness between mass air flow sensor connector and ECM connector.

W: DTC P0107 MANIFOLD ABSOLUTE PRESSURE/BAROMETRIC PRESSURE CIRCUIT LOW INPUT

DTC DETECTING CONDITION:

- Detect as soon as malfunction occurs.
- GENERAL DESCRIPTION <Ref. to GD(H6DO)-36, DTC P0107 MANIFOLD ABSOLUTE PRESSURE/ BAROMETRIC PRESSURE CIRCUIT LOW INPUT, Diagnostic Trouble Code (DTC) Detecting Criteria.>

CAUTION:

After repair or replacement of faulty parts, conduct Clear Memory Mode <Ref. to EN(H6DO)(diag)-44, OPERATION, Clear Memory Mode.> and Inspection Mode <Ref. to EN(H6DO)(diag)-35, PROCEDURE, Inspection Mode.>.

WIRING DIAGRAM:

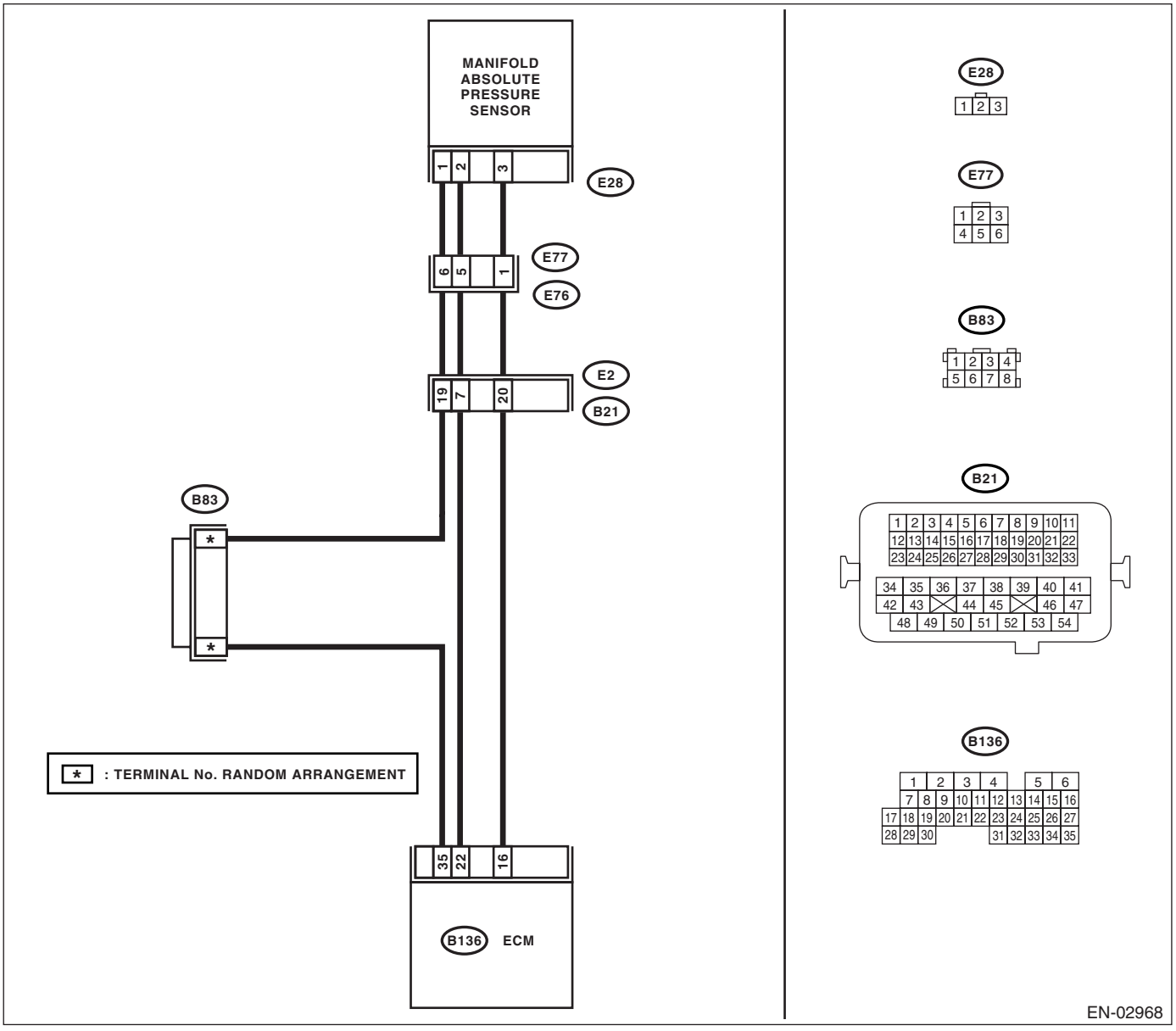

	Step	Check	Yes	No
1	**CHECK CURRENT DATA.** 1) Start the engine. 2) Read the data of intake manifold absolute pressure signal using Subaru Select Monitor or general scan tool. NOTE: • Subaru Select Monitor For detailed operation procedure, refer to the "READ CURRENT DATA SHOWN ON DISPLAY FOR ENGINE". <Ref. to EN(H6DO)(diag)-26, Subaru Select Monitor.> • General scan tool For detailed operation procedure, refer to the general scan tool instruction manual.	Is the measured value less than 13.3 kPa (100 mmHg, 3.94 inHg)?	Go to step **3.**	Go to step **2.**
2	**CHECK POOR CONTACT.** Check poor contact in ECM and manifold pressure sensor connector.	Is there poor contact in ECM or manifold pressure sensor connector?	Repair the poor contact in ECM or manifold pressure sensor connector.	Even if the malfunction indicator light illuminates, the circuit has returned to a normal condition at this time.
3	**CHECK OUTPUT SIGNAL FROM ECM.** Measure the voltage between ECM connector and chassis ground. ***Connector & terminal*** ***(B136) No. 16 (+) — Chassis ground (–):***	Is the voltage more than 4.5 V?	Go to step **5.**	Go to step **4.**
4	**CHECK OUTPUT SIGNAL FROM ECM.** Measure the voltage between ECM connector and chassis ground. ***Connector & terminal*** ***(B136) No. 16 (+) — Chassis ground (–):***	Does the voltage change by shaking the ECM harness and connector?	Repair the poor contact in ECM connector.	Replace the ECM. <Ref. to FU(H6DO)-34, Engine Control Module (ECM).>
5	**CHECK INPUT SIGNAL FROM ECM.** Measure the voltage between ECM and chassis ground. ***Connector & terminal*** ***(B136) No. 22 (+) — Chassis ground (–):***	Is the voltage less than 0.2 V?	Go to step **7.**	Go to step **6.**
6	**CHECK INPUT SIGNAL FOR ECM (USING SUBARU SELECT MONITOR).** Read the data of atmospheric absolute pressure signal using Subaru Select Monitor. NOTE: For detailed operation procedures, refer to the "READ CURRENT DATA SHOWN ON DISPLAY FOR ENGINE". <Ref. to EN(H6DO)(diag)-26, Subaru Select Monitor.>	Is the value more than 13.3 kPa (100 mmHg, 3.94 inHg) when shaking the ECM harness and connector?	Repair the poor contact in ECM connector.	Go to step **7.**
7	**CHECK HARNESS BETWEEN ECM AND MANIFOLD ABSOLUTE PRESSURE SENSOR CONNECTOR.** 1) Turn the ignition switch to OFF. 2) Disconnect the connector from manifold absolute pressure sensor. 3) Turn the ignition switch to ON. 4) Measure the voltage between manifold absolute pressure sensor connector and engine ground. ***Connector & terminal*** ***(E28) No. 3 (+) — Engine ground (–):***	Is the voltage more than 4.5 V?	Go to step **8.**	Repair the open circuit in harness between ECM and manifold absolute pressure sensor connector.

	Step	Check	Yes	No
8	**CHECK HARNESS BETWEEN ECM AND MANIFOLD ABSOLUTE PRESSURE SENSOR CONNECTOR.** 1) Turn the ignition switch to OFF. 2) Disconnect the connector from ECM. 3) Measure the resistance of harness between ECM and manifold absolute pressure sensor connector. ***Connector & terminal*** ***(B136) No. 35 — (E28) No. 1:***	Is the resistance less than 1 Ω?	Go to step **9.**	Repair the open circuit in harness between ECM and manifold absolute pressure sensor connector.
9	**CHECK POOR CONTACT.** Check poor contact in manifold absolute pressure sensor connector.	Is there poor contact in manifold absolute pressure sensor connector?	Repair the poor contact in manifold absolute pressure sensor connector.	Replace the manifold absolute pressure sensor. <Ref. to FU(H6DO)-24, Manifold Absolute Pressure Sensor.>

X: DTC P0108 MANIFOLD ABSOLUTE PRESSURE/BAROMETRIC PRESSURE CIRCUIT HIGH INPUT

DTC DETECTING CONDITION:

- Detect as soon as malfunction occurs.
- GENERAL DESCRIPTION <Ref. to GD(H6DO)-38, DTC P0108 MANIFOLD ABSOLUTE PRESSURE/ BAROMETRIC PRESSURE CIRCUIT HIGH INPUT, Diagnostic Trouble Code (DTC) Detecting Criteria.>

CAUTION:

After repair or replacement of faulty parts, conduct Clear Memory Mode <Ref. to EN(H6DO)(diag)-44, OPERATION, Clear Memory Mode.> and Inspection Mode <Ref. to EN(H6DO)(diag)-35, PROCEDURE, Inspection Mode.>.

WIRING DIAGRAM:

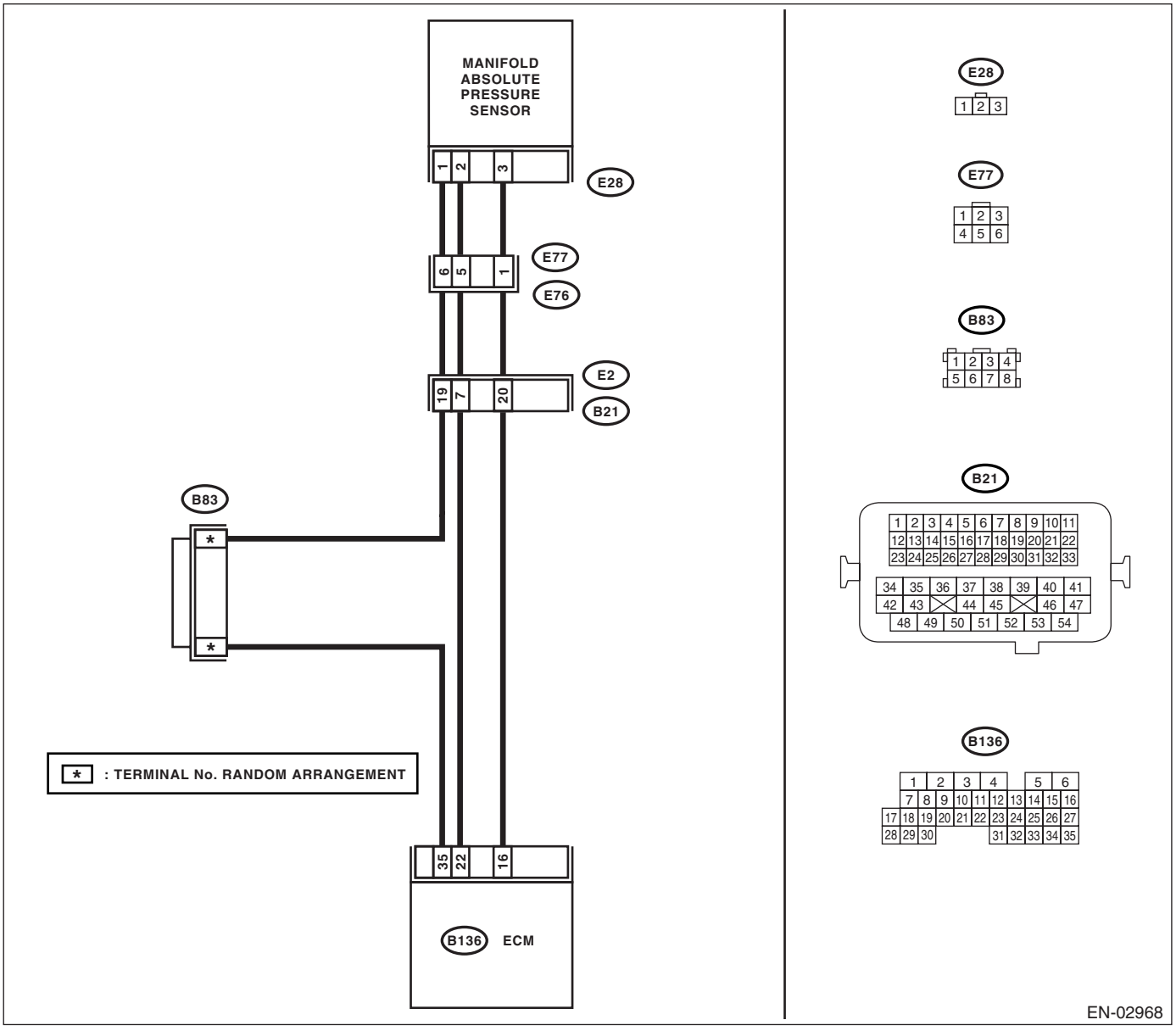

	Step	Check	Yes	No
1	**CHECK OUTPUT SIGNAL FROM ECM.** Measure the voltage between ECM connector and chassis ground. ***Connector & terminal*** ***(B136) No. 16 (+) — Chassis ground (−):***	Is the voltage more than 4.5 V?	Go to step **3.**	Go to step **2.**
2	**CHECK OUTPUT SIGNAL FROM ECM.** Measure the voltage between ECM connector and chassis ground. ***Connector & terminal*** ***(B136) No. 16 (+) — Chassis ground (−):***	Does the voltage change by shaking the ECM harness and connector?	Repair the poor contact in ECM connector.	Replace the ECM. <Ref. to FU(H6DO)-34, Engine Control Module (ECM).>
3	**CHECK INPUT SIGNAL OF ECM.** Measure the voltage between ECM connector and chassis ground. ***Connector & terminal*** ***(B136) No. 22 (+) — Chassis ground (−):***	Is the voltage more than 4.5 V?	Go to step **5.**	Go to step **4.**
4	**CHECK INPUT SIGNAL OF ECM (USING SUBARU SELECT MONITOR).** Read the data of atmospheric absolute pressure signal using Subaru Select Monitor. NOTE: For detailed operation procedure, refer to “READ CURRENT DATA FOR ENGINE”. <Ref. to EN(H6DO)(diag)-26, Subaru Select Monitor.>	Is the value more than 13.3 kPa (100 mmHg, 3.94 inHg) when shaking the ECM harness and connector?	Repair the poor contact in ECM connector.	Go to step **5.**
5	**CHECK HARNESS BETWEEN ECM AND MANIFOLD ABSOLUTE PRESSURE SENSOR CONNECTOR.** 1) Turn the ignition switch to OFF. 2) Disconnect the connector from manifold absolute pressure sensor. 3) Turn the ignition switch to ON. 4) Measure the voltage between manifold absolute pressure sensor connector and engine ground. ***Connector & terminal*** ***(E28) No. 3 (+) — Engine ground (−):***	Is the voltage more than 4.5 V?	Go to step **6.**	Repair the open circuit of harness between ECM and manifold absolute pressure sensor connector.
6	**CHECK HARNESS BETWEEN ECM AND MANIFOLD ABSOLUTE PRESSURE SENSOR CONNECTOR.** 1) Turn the ignition switch to OFF. 2) Disconnect the connector from ECM. 3) Measure the resistance of harness between ECM and manifold absolute pressure sensor connector. ***Connector & terminal*** ***(B136) No. 22 — (E28) No. 2:***	Is the resistance less than 1 Ω?	Go to step **7.**	Repair the open circuit of harness between ECM and manifold absolute pressure sensor connector.
7	**CHECK HARNESS BETWEEN MANIFOLD ABSOLUTE PRESSURE SENSOR CONNECTOR.** 1) Turn the ignition switch to ON. 2) Measure the voltage between ECM connector and chassis ground. ***Connector & terminal*** ***(B136) No. 22 (+) — Chassis ground (−):***	Is the voltage more than 4.5 V?	Repair the battery short of harness between ECM and manifold absolute pressure sensor connector.	Go to step **8.**

	Step	Check	Yes	No
8	**CHECK HARNESS BETWEEN ECM AND MANIFOLD ABSOLUTE PRESSURE SENSOR CONNECTOR.** 1) Turn the ignition switch to OFF. 2) Measure the resistance of harness between ECM and manifold absolute pressure sensor connector. ***Connector & terminal*** ***(B136) No. 35 — (E28) No. 1:***	Is the resistance less than 1 Ω?	Go to step **9.**	Repair the open circuit of harness between ECM and manifold absolute pressure sensor connector.
9	**CHECK POOR CONTACT.** Check poor contact in manifold absolute pressure sensor connector.	Is there poor contact in manifold absolute pressure sensor connector?	Repair the poor contact in manifold absolute pressure sensor connector.	Replace the manifold absolute pressure sensor. <Ref. to FU(H6DO)-24, Manifold Absolute Pressure Sensor.>

Y: DTC P0111 INTAKE AIR TEMPERATURE CIRCUIT RANGE/PERFORMANCE

DTC DETECTING CONDITION:

- Two consecutive driving cycles with fault
- GENERAL DESCRIPTION <Ref. to GD(H6DO)-40, DTC P0111 INTAKE AIR TEMPERATURE CIRCUIT RANGE/PERFORMANCE, Diagnostic Trouble Code (DTC) Detecting Criteria.>

TROUBLE SYMPTOM:

- Erroneous idling
- Poor driving performance

CAUTION:
After repair or replacement of faulty parts, conduct Clear Memory Mode <Ref. to EN(H6DO)(diag)-44, OPERATION, Clear Memory Mode.> and Inspection Mode <Ref. to EN(H6DO)(diag)-35, PROCEDURE, Inspection Mode.>.

WIRING DIAGRAM:

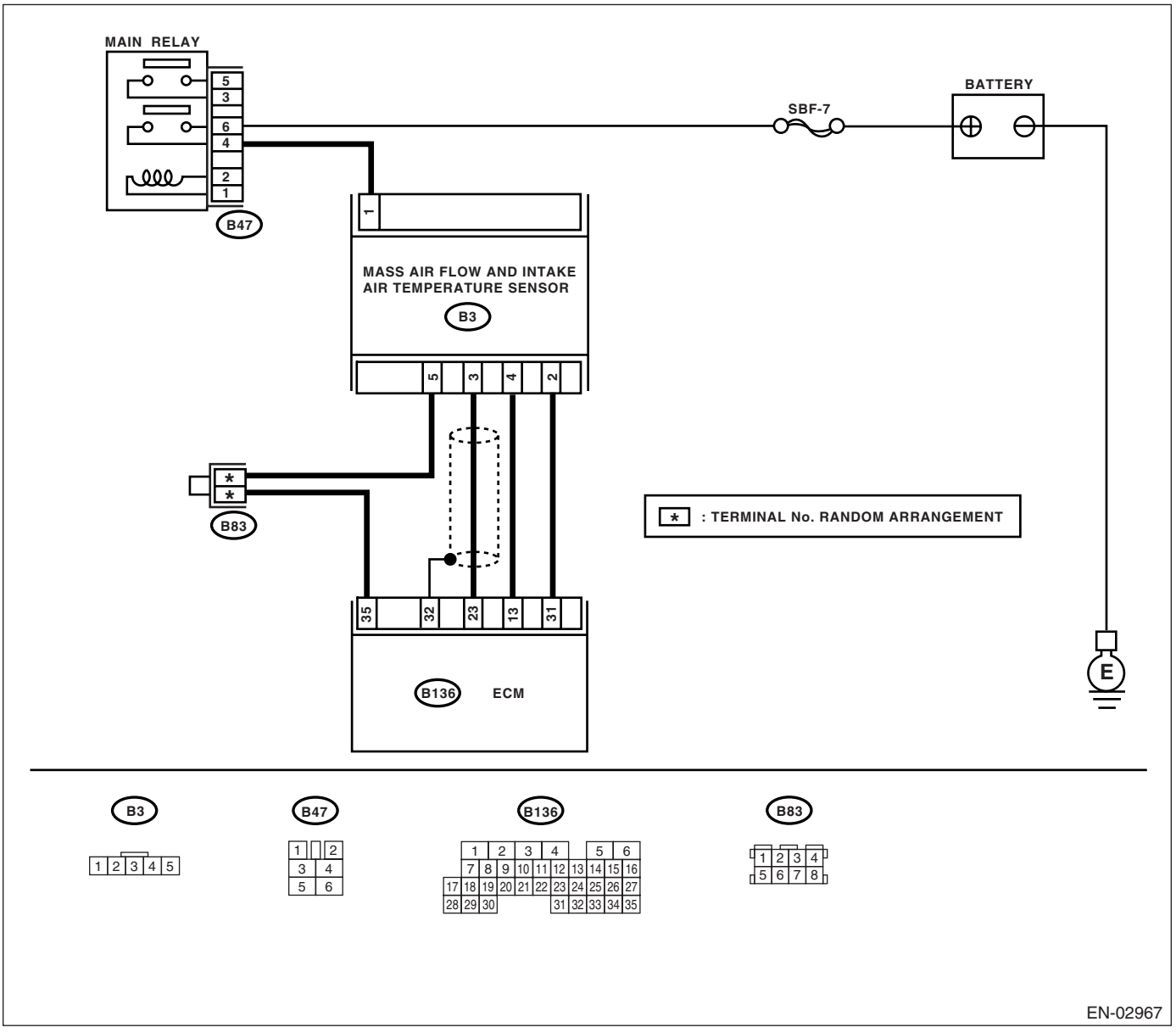

	Step	Check	Yes	No
1	**CHECK FOR ANY OTHER DTC ON DISPLAY.**	Is any other DTC displayed?	Inspect the relevant DTC using "List of Diagnostic Trouble Code (DTC)". <Ref. to EN(H6DO)(diag)-71, List of Diagnostic Trouble Code (DTC).> NOTE: In this case, it is not necessary to inspect DTC P0111.	Go to step **2.**
2	**CHECK ENGINE COOLANT TEMPERATURE.** 1) Start the engine and warm it up completely. 2) Measure the engine coolant temperature using Subaru Select Monitor or general scan tool. NOTE: • Subaru Select Monitor For detailed operation procedure, refer to the "READ CURRENT DATA SHOWN ON DISPLAY FOR ENGINE". <Ref. to EN(H6DO)(diag)-26, Subaru Select Monitor.> • General scan tool For detailed operation procedure, refer to the general scan tool instruction manual.	Is the engine coolant temperature 75°C (167°F) — 95°C (203°F)?	Replace the mass air flow and intake air temperature sensor. <Ref. to FU(H6DO)-25, Mass Air Flow and Intake Air Temperature Sensor.>	Inspect the DTC P0125 using "List of Diagnostic Trouble Code (DTC)". <Ref. to EN(H6DO)(diag)-71, List of Diagnostic Trouble Code (DTC).>

Z: DTC P0112 INTAKE AIR TEMPERATURE CIRCUIT LOW INPUT

DTC DETECTING CONDITION:

- Detect as soon as malfunction occurs.
- GENERAL DESCRIPTION <Ref. to GD(H6DO)-42, DTC P0112 INTAKE AIR TEMPERATURE CIRCUIT LOW INPUT, Diagnostic Trouble Code (DTC) Detecting Criteria.>

TROUBLE SYMPTOM:

- Erroneous idling
- Poor driving performance

CAUTION:
After repair or replacement of faulty parts, conduct Clear Memory Mode <Ref. to EN(H6DO)(diag)-44, OPERATION, Clear Memory Mode.> and Inspection Mode <Ref. to EN(H6DO)(diag)-35, PROCEDURE, Inspection Mode.>.

WIRING DIAGRAM:

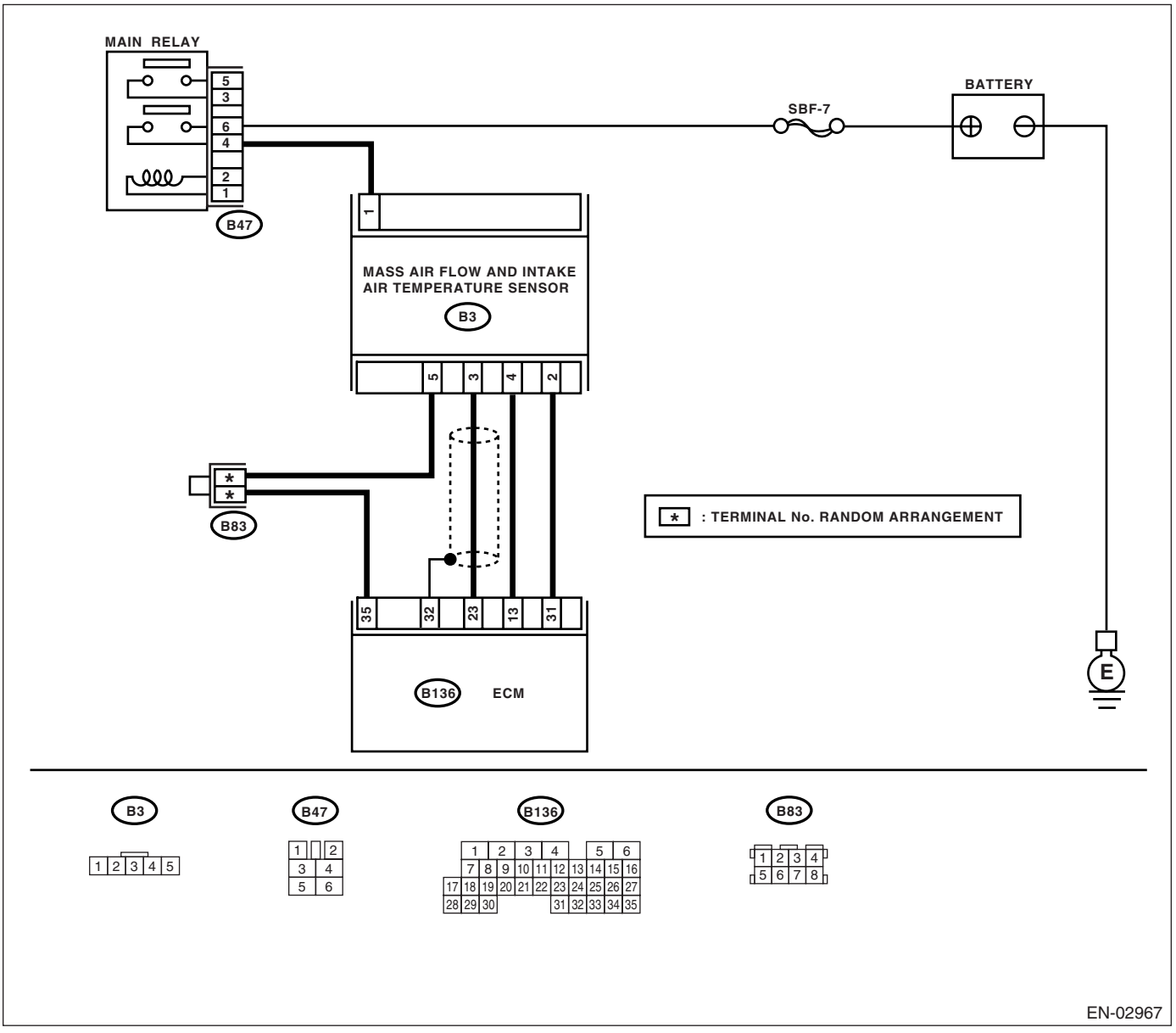

	Step	Check	Yes	No
1	**CHECK CURRENT DATA.** 1) Start the engine. 2) Read the data of mass air flow and intake air temperature sensor signal using Subaru Select Monitor or general scan tool. NOTE: • Subaru Select Monitor For detailed operation procedure, refer to the "READ CURRENT DATA SHOWN ON DISPLAY FOR ENGINE". <Ref. to EN(H6DO)(diag)-26, Subaru Select Monitor.> • General scan tool For detailed operation procedure, refer to the general scan tool instruction manual.	Is the intake air temperature more than 120°C (248°F)?	Go to step **2.**	Repair the poor contact. NOTE: In this case repair the following: • Poor contact in mass air flow and intake air temperature sensor • Poor contact in ECM • Poor contact in coupling connector • Poor contact in joint connector
2	**CHECK HARNESS BETWEEN MASS AIR FLOW AND INTAKE AIR TEMPERATURE SENSOR AND ECM CONNECTOR.** 1) Turn the ignition switch to OFF. 2) Disconnect the connector from mass air flow and intake air temperature sensor. 3) Turn the ignition switch to ON. 4) Read the data of mass air flow and intake air temperature sensor signal using Subaru Select Monitor or general scan tool. NOTE: • Subaru Select Monitor For detailed operation procedure, refer to the "READ CURRENT DATA SHOWN ON DISPLAY FOR ENGINE". <Ref. to EN(H6DO)(diag)-26, Subaru Select Monitor.> • General scan tool For detailed operation procedure, refer to the general scan tool instruction manual.	Is the intake air temperature less than −40°C (−40°F)?	Replace the mass air flow and intake air temperature sensor. <Ref. to FU(H6DO)-25, Mass Air Flow and Intake Air Temperature Sensor.>	Repair the ground short circuit in harness between mass air flow and intake air temperature sensor and ECM connector.

AA:DTC P0113 INTAKE AIR TEMPERATURE CIRCUIT HIGH INPUT

DTC DETECTING CONDITION:

- Detect as soon as malfunction occurs.
- GENERAL DESCRIPTION <Ref. to GD(H6DO)-44, DTC P0113 INTAKE AIR TEMPERATURE CIRCUIT HIGH INPUT, Diagnostic Trouble Code (DTC) Detecting Criteria.>

TROUBLE SYMPTOM:

- Erroneous idling
- Poor driving performance

CAUTION:
After repair or replacement of faulty parts, conduct Clear Memory Mode <Ref. to EN(H6DO)(diag)-44, OPERATION, Clear Memory Mode.> and Inspection Mode <Ref. to EN(H6DO)(diag)-35, PROCEDURE, Inspection Mode.>.

WIRING DIAGRAM:

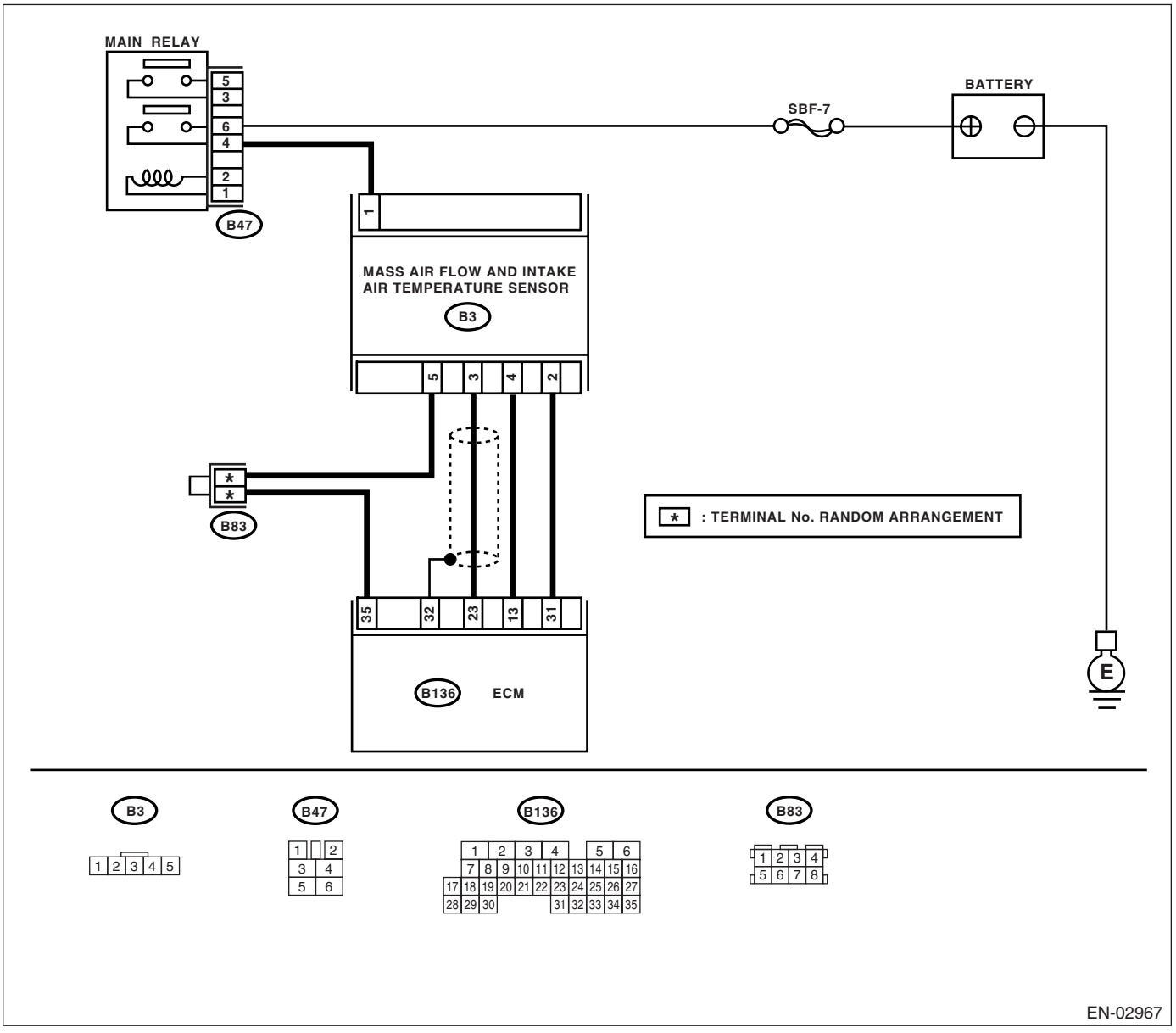

	Step	Check	Yes	No
1	**CHECK CURRENT DATA.** 1) Start the engine. 2) Read the data of mass air flow and intake air temperature sensor signal using Subaru Select Monitor or general scan tool. NOTE: • Subaru Select Monitor For detailed operation procedure, refer to the "READ CURRENT DATA SHOWN ON DISPLAY FOR ENGINE". <Ref. to EN(H6DO)(diag)-26, Subaru Select Monitor.> • General scan tool For detailed operation procedure, refer to the general scan tool instruction manual.	Is the intake air temperature less than −40°C (−40°F)?	Go to step **2.**	Repair the poor contact. NOTE: In this case repair the following: • Poor contact in mass air flow and intake air temperature sensor • Poor contact in ECM • Poor contact in coupling connector • Poor contact in joint connector
2	**CHECK HARNESS BETWEEN MASS AIR FLOW AND INTAKE AIR TEMPERATURE SENSOR AND ECM CONNECTOR.** 1) Turn the ignition switch to OFF. 2) Disconnect the connector from mass air flow and intake air temperature sensor. 3) Measure the voltage between mass air flow and intake air temperature sensor connector and engine ground. ***Connector & terminal*** ***(B3) No. 4 (+) — Engine ground (−):***	Is the voltage more than 10 V?	Repair the battery short circuit in harness between mass air flow and intake air temperature sensor and ECM connector.	Go to step **3.**
3	**CHECK HARNESS BETWEEN MASS AIR FLOW AND INTAKE AIR TEMPERATURE SENSOR AND ECM CONNECTOR.** 1) Turn the ignition switch to ON. 2) Measure the voltage between mass air flow and intake air temperature sensor connector and engine ground. ***Connector & terminal*** ***(B3) No. 4 (+) — Engine ground (−):***	Is the voltage more than 10 V?	Repair the battery short circuit in harness between mass air flow and intake air temperature sensor and ECM connector.	Go to step **4.**
4	**CHECK HARNESS BETWEEN MASS AIR FLOW AND INTAKE AIR TEMPERATURE SENSOR AND ECM CONNECTOR.** Measure the voltage between mass air flow and intake air temperature sensor connector and engine ground. ***Connector & terminal*** ***(B3) No. 4 (+) — Engine ground (−):***	Is the voltage more than 3 V?	Go to step **5.**	Repair the harness and connector. NOTE: In this case repair the following: • Open circuit in harness between mass air flow and intake air temperature sensor and ECM connector • Poor contact in mass air flow and intake air temperature sensor • Poor contact in ECM • Poor contact in coupling connector • Poor contact in joint connector

	Step	Check	Yes	No
5	**CHECK HARNESS BETWEEN MASS AIR FLOW AND INTAKE AIR TEMPERATURE SENSOR AND ECM CONNECTOR.** 1) Turn the ignition switch to OFF. 2) Measure the resistance of harness between mass air flow and intake air temperature sensor connector and engine ground. ***Connector & terminal*** ***(B3) No. 5 — Engine ground:***	Is the resistance less than 5 Ω?	Replace the mass air flow and intake air temperature sensor. <Ref. to FU(H6DO)-25, Mass Air Flow and Intake Air Temperature Sensor.>	Repair the harness and connector. NOTE: In this case repair the following: • Open circuit in harness between mass air flow and intake air temperature sensor and ECM connector • Poor contact in mass air flow and intake air temperature sensor • Poor contact in ECM • Poor contact in joint connector

AB:DTC P0117 ENGINE COOLANT TEMPERATURE CIRCUIT LOW INPUT

DTC DETECTING CONDITION:

- Detect as soon as malfunction occurs.
- GENERAL DESCRIPTION <Ref. to GD(H6DO)-46, DTC P0117 ENGINE COOLANT TEMPERATURE CIRCUIT LOW INPUT, Diagnostic Trouble Code (DTC) Detecting Criteria.>

TROUBLE SYMPTOM:

- Hard to start
- Erroneous idling
- Poor driving performance

CAUTION:

After repair or replacement of faulty parts, conduct Clear Memory Mode <Ref. to EN(H6DO)(diag)-44, OPERATION, Clear Memory Mode.> and Inspection Mode <Ref. to EN(H6DO)(diag)-35, PROCEDURE, Inspection Mode.>.

WIRING DIAGRAM:

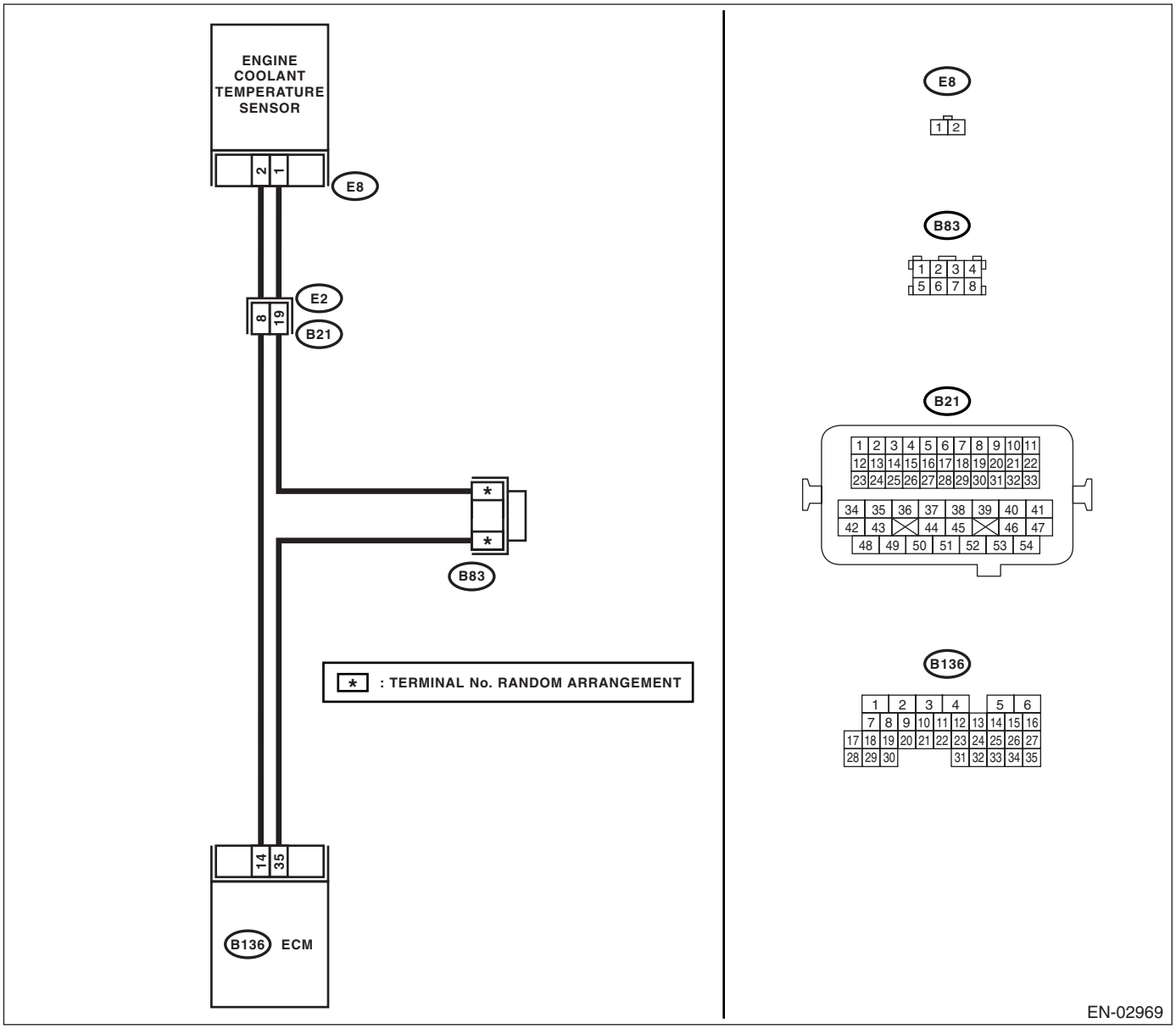

	Step	Check	Yes	No
1	**CHECK CURRENT DATA.** 1) Start the engine. 2) Read the data of engine coolant temperature sensor signal using Subaru Select Monitor or general scan tool. NOTE: • Subaru Select Monitor For detailed operation procedure, refer to the "READ CURRENT DATA SHOWN ON DISPLAY FOR ENGINE". <Ref. to EN(H6DO)(diag)-26, Subaru Select Monitor.> • General scan tool For detailed operation procedure, refer to the general scan tool instruction manual.	Is engine coolant temperature more than 150°C (302°F)?	Go to step **2.**	Repair the poor contact. NOTE: In this case repair the following: • Poor contact in engine coolant temperature sensor • Poor contact in ECM • Poor contact in coupling connector • Poor contact in joint connector
2	**CHECK HARNESS BETWEEN ENGINE COOLANT TEMPERATURE SENSOR AND ECM CONNECTOR.** 1) Turn the ignition switch to OFF. 2) Disconnect the connectors from the engine coolant temperature sensor. 3) Turn the ignition switch to ON. 4) Read the data of engine coolant temperature sensor signal using Subaru Select Monitor or general scan tool. NOTE: • Subaru Select Monitor For detailed operation procedure, refer to the "READ CURRENT DATA SHOWN ON DISPLAY FOR ENGINE". <Ref. to EN(H6DO)(diag)-26, Subaru Select Monitor.> • General scan tool For detailed operation procedure, refer to the general scan tool instruction manual.	Is engine coolant temperature less than −40°C (−40°F)?	Replace the engine coolant temperature sensor. <Ref. to FU(H6DO)-19, Engine Coolant Temperature Sensor.>	Repair the ground short circuit in harness between engine coolant temperature sensor and ECM connector.

AC:DTC P0118 ENGINE COOLANT TEMPERATURE CIRCUIT HIGH INPUT

DTC DETECTING CONDITION:

- Detect as soon as malfunction occurs.
- GENERAL DESCRIPTION <Ref. to GD(H6DO)-48, DTC P0118 ENGINE COOLANT TEMPERATURE CIRCUIT HIGH INPUT, Diagnostic Trouble Code (DTC) Detecting Criteria.>

TROUBLE SYMPTOM:

- Hard to start
- Erroneous idling
- Poor driving performance

CAUTION:

After repair or replacement of faulty parts, conduct Clear Memory Mode <Ref. to EN(H6DO)(diag)-44, OPERATION, Clear Memory Mode.> and Inspection Mode <Ref. to EN(H6DO)(diag)-35, PROCEDURE, Inspection Mode.>.

WIRING DIAGRAM:

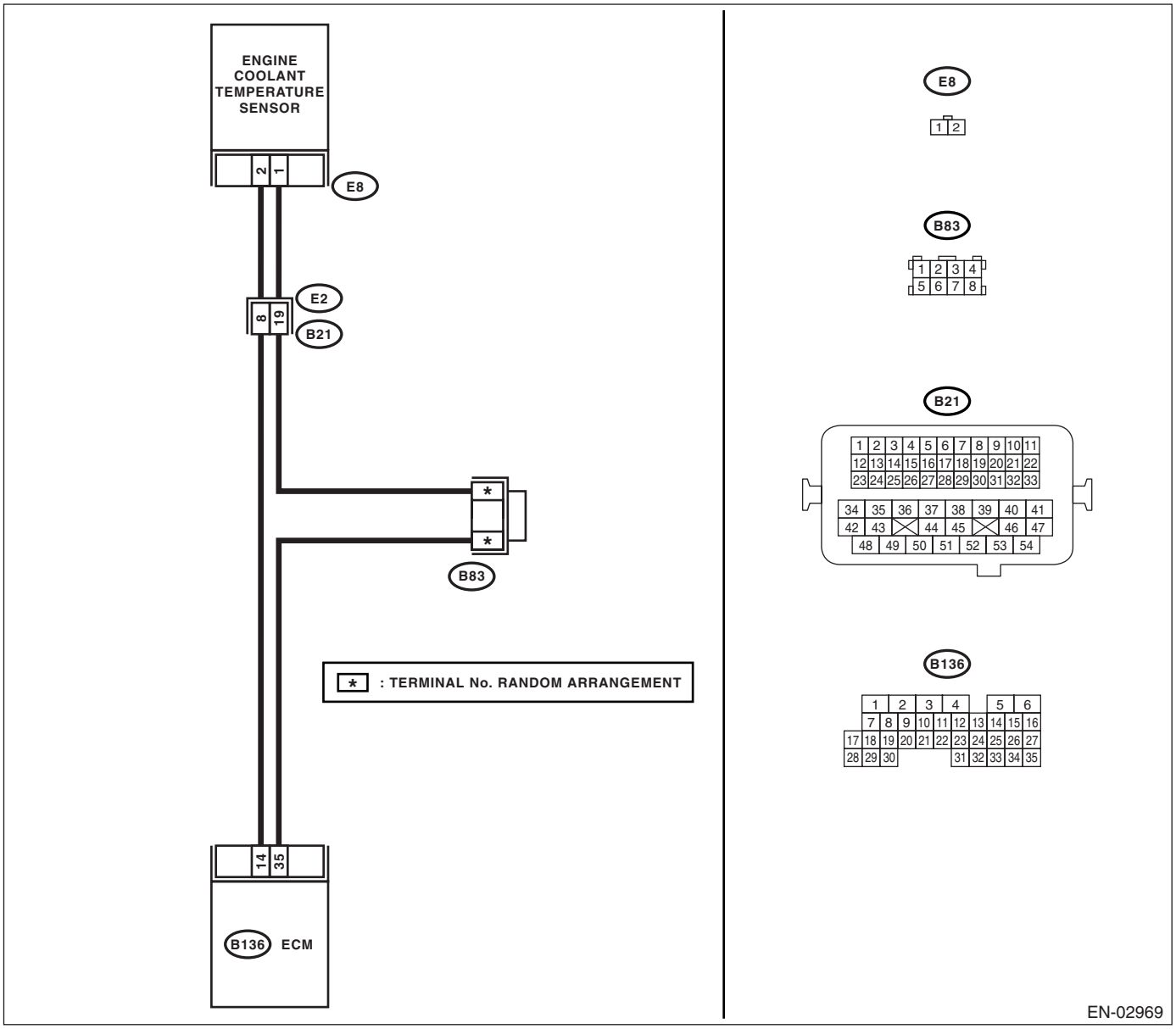

	Step	Check	Yes	No
1	**CHECK CURRENT DATA.** 1) Start the engine. 2) Read the data of engine coolant temperature sensor signal using Subaru Select Monitor or general scan tool. NOTE: • Subaru Select Monitor For detailed operation procedure, refer to the "READ CURRENT DATA SHOWN ON DISPLAY FOR ENGINE". <Ref. to EN(H6DO)(diag)-26, Subaru Select Monitor.> • General scan tool For detailed operation procedure, refer to the general scan tool instruction manual.	Is engine coolant temperature less than −40°C (−40°F)?	Go to step **2.**	Repair the poor contact. NOTE: In this case repair the following: • Poor contact in engine coolant temperature sensor • Poor contact in ECM • Poor contact in coupling connector • Poor contact in joint connector
2	**CHECK HARNESS BETWEEN ENGINE COOLANT TEMPERATURE SENSOR AND ECM CONNECTOR.** 1) Turn the ignition switch to OFF. 2) Disconnect the connectors from the engine coolant temperature sensor. 3) Measure the voltage between engine coolant temperature sensor connector and engine ground. ***Connector & terminal*** ***(E8) No. 2 (+) — Engine ground (−):***	Is the voltage more than 10 V?	Repair the battery short circuit in harness between ECM and engine coolant temperature sensor connector.	Go to step **3.**
3	**CHECK HARNESS BETWEEN ENGINE COOLANT TEMPERATURE SENSOR AND ECM CONNECTOR.** 1) Turn the ignition switch to ON. 2) Measure the voltage between engine coolant temperature sensor connector and engine ground. ***Connector & terminal*** ***(E8) No. 2 (+) — Engine ground (−):***	Is the voltage more than 10 V?	Repair the battery short circuit in harness between ECM and engine coolant temperature sensor connector.	Go to step **4.**
4	**CHECK HARNESS BETWEEN ENGINE COOLANT TEMPERATURE SENSOR AND ECM CONNECTOR.** Measure the voltage between engine coolant temperature sensor connector and engine ground. ***Connector & terminal*** ***(E8) No. 2 (+) — Engine ground (−):***	Is the voltage more than 4 V?	Go to step **5.**	Repair the harness and connector. NOTE: In this case repair the following: • Open circuit in harness between ECM and engine coolant temperature sensor connector • Poor contact in engine coolant temperature sensor connector • Poor contact in ECM connector • Poor contact in coupling connector • Poor contact in joint connector

	Step	Check	Yes	No
5	**CHECK HARNESS BETWEEN ENGINE COOLANT TEMPERATURE SENSOR AND ECM CONNECTOR.** 1) Turn the ignition switch to OFF. 2) Measure the resistance of harness between engine coolant temperature sensor connector and engine ground. ***Connector & terminal*** ***(E8) No. 1 — Engine ground:***	Is the resistance less than 5 Ω?	Replace the engine coolant temperature sensor. <Ref. to FU(H6DO)-19, Engine Coolant Temperature Sensor.>	Repair the harness and connector. NOTE: In this case repair the following: • Open circuit in harness between ECM and engine coolant temperature sensor connector • Poor contact in engine coolant temperature sensor connector • Poor contact in ECM connector • Poor contact in coupling connector • Poor contact in joint connector

AD:DTC P0122 THROTTLE/PEDAL POSITION SENSOR/SWITCH “A” CIRCUIT LOW INPUT

DTC DETECTING CONDITION:

- Detect as soon as malfunction occurs.
- GENERAL DESCRIPTION <Ref. to GD(H6DO)-50, DTC P0122 THROTTLE/PEDAL POSITION SENSOR/SWITCH “A” CIRCUIT LOW INPUT, Diagnostic Trouble Code (DTC) Detecting Criteria.>

TROUBLE SYMPTOM:

- Erroneous idling
- Engine stalls.
- Poor driving performance

WIRING DIAGRAM:

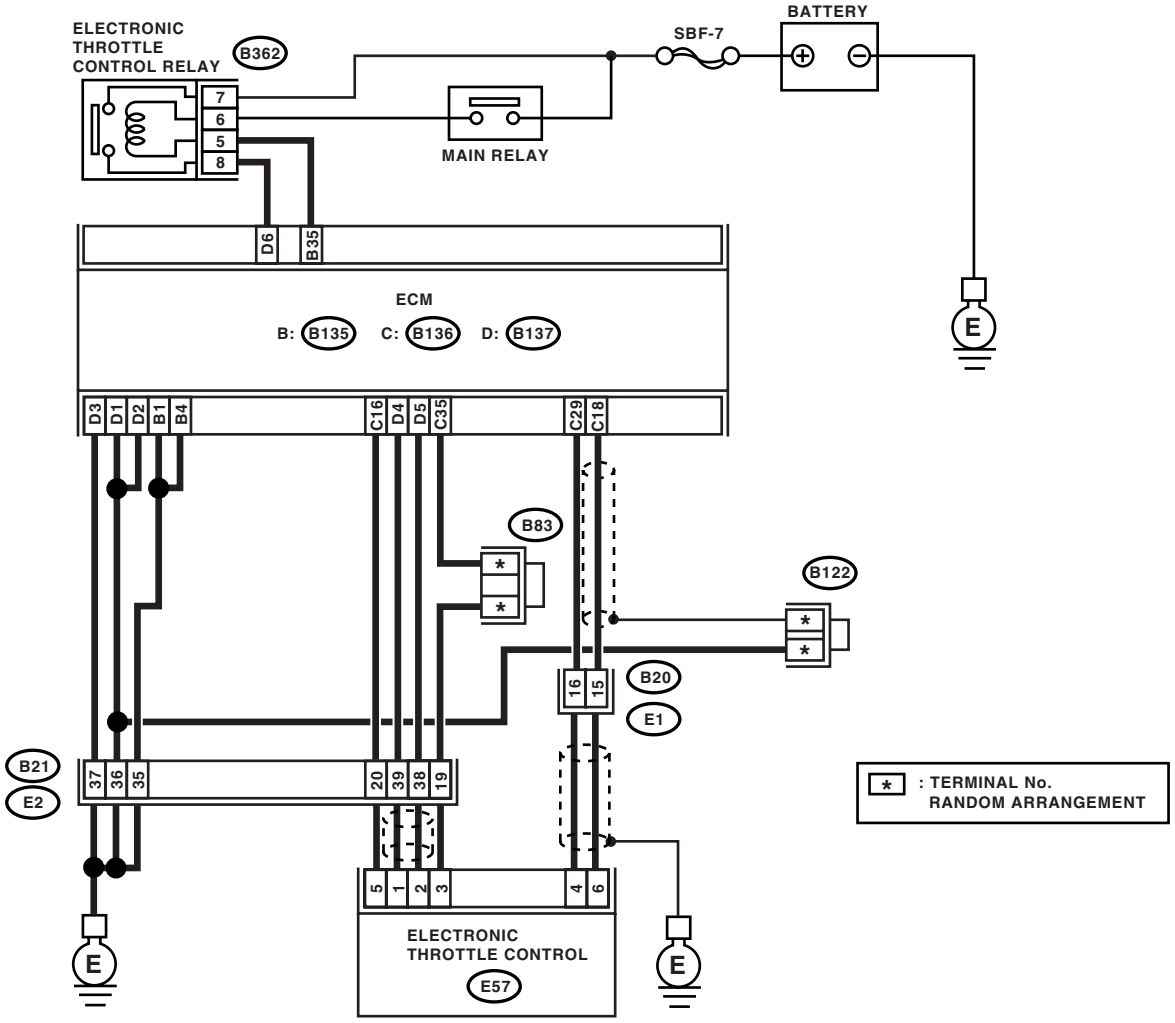

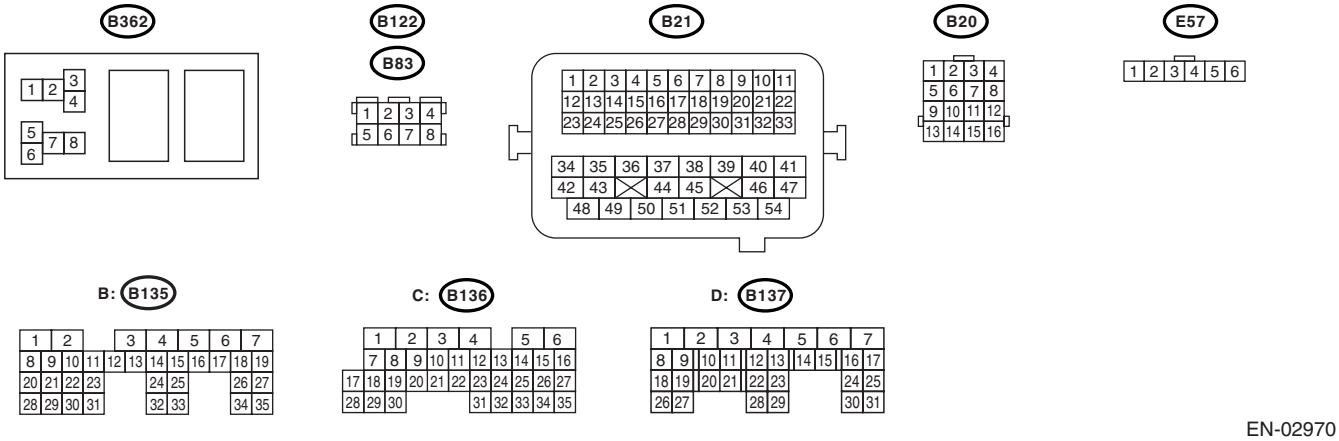

EN-02970

	Step	Check	Yes	No
1	**CHECK SENSOR OUTPUT.** 1) Turn the ignition switch to ON. 2) Read the data of main throttle sensor signal using Subaru Select Monitor. NOTE: • Subaru Select Monitor For detailed operation procedure, refer to the "READ CURRENT DATA FOR ENGINE". <Ref. to EN(H6DO)(diag)-26, Subaru Select Monitor.>	Is the voltage more than 0.4 V?	Go to step **2.**	Go to step **3.**
2	**CHECK POOR CONTACT.** Check the poor contact in connector between ECM and electronic throttle control.	Is there poor contact in connector between ECM and electronic throttle control?	Repair the poor contact.	Temporary poor contact occurred, but it is normal at present.
3	**CHECK HARNESS BETWEEN ECM AND ELECTRONIC THROTTLE CONTROL.** 1) Turn the ignition switch to OFF. 2) Disconnect the connector from ECM. 3) Disconnect the connector from the electronic throttle control. 4) Measure the resistance between ECM connector and electronic throttle control connector. ***Connector & terminal*** ***(E136) No. 18 — (E57) No. 6:*** ***(E136) No. 16 — (E57) No. 5:***	Is the resistance less than 1 Ω?	Go to step **4.**	Repair the open circuit of harness connector.
4	**CHECK HARNESS BETWEEN ECM AND ELECTRONIC THROTTLE CONTROL.** Measure the resistance between ECM connector and chassis ground. ***Connector & terminal*** ***(B136) No. 18 — Chassis ground:*** ***(B136) No. 16 — Chassis ground:***	Is the resistance more than 1 MΩ?	Go to step **5.**	Repair the chassis short circuit of harness.
5	**CHECK POWER SUPPLY OF ELECTRONIC THROTTLE CONTROL.** 1) Connect the ECM connector. 2) Turn the ignition switch to ON. 3) Measure the voltage between electronic throttle control connector and engine ground. ***Connector & terminal*** ***(E57) No. 5 (+) — Engine ground (−):***	Is the voltage 4.5 — 5.5 V?	Go to step **6.**	Repair the poor contact in ECM connector. Replace the ECM if defective. <Ref. to FU(H6DO)-34, Engine Control Module (ECM).>
6	**CHECK SHORT CIRCUIT IN ECM.** 1) Turn the ignition switch to OFF. 2) Measure the resistance between electronic throttle control connector and engine ground. ***Connector & terminal*** ***(E57) No. 6 — Engine ground:***	Is the resistance more than 10 Ω?	Repair the poor contact in electronic throttle control connector. Replace the accelerator pedal position sensor if defective.	Repair the poor contact in ECM connector. Replace the ECM if defective. <Ref. to FU(H6DO)-34, Engine Control Module (ECM).>

AE:DTC P0123 THROTTLE/PEDAL POSITION SENSOR/SWITCH “A” CIRCUIT HIGH INPUT

DTC DETECTING CONDITION:

- Detect as soon as malfunction occurs.
- GENERAL DESCRIPTION <Ref. to GD(H6DO)-52, DTC P0123 THROTTLE/PEDAL POSITION SENSOR/SWITCH “A” CIRCUIT HIGH INPUT, Diagnostic Trouble Code (DTC) Detecting Criteria.>

TROUBLE SYMPTOM:

- Erroneous idling
- Engine stalls.
- Poor driving performance

WIRING DIAGRAM:

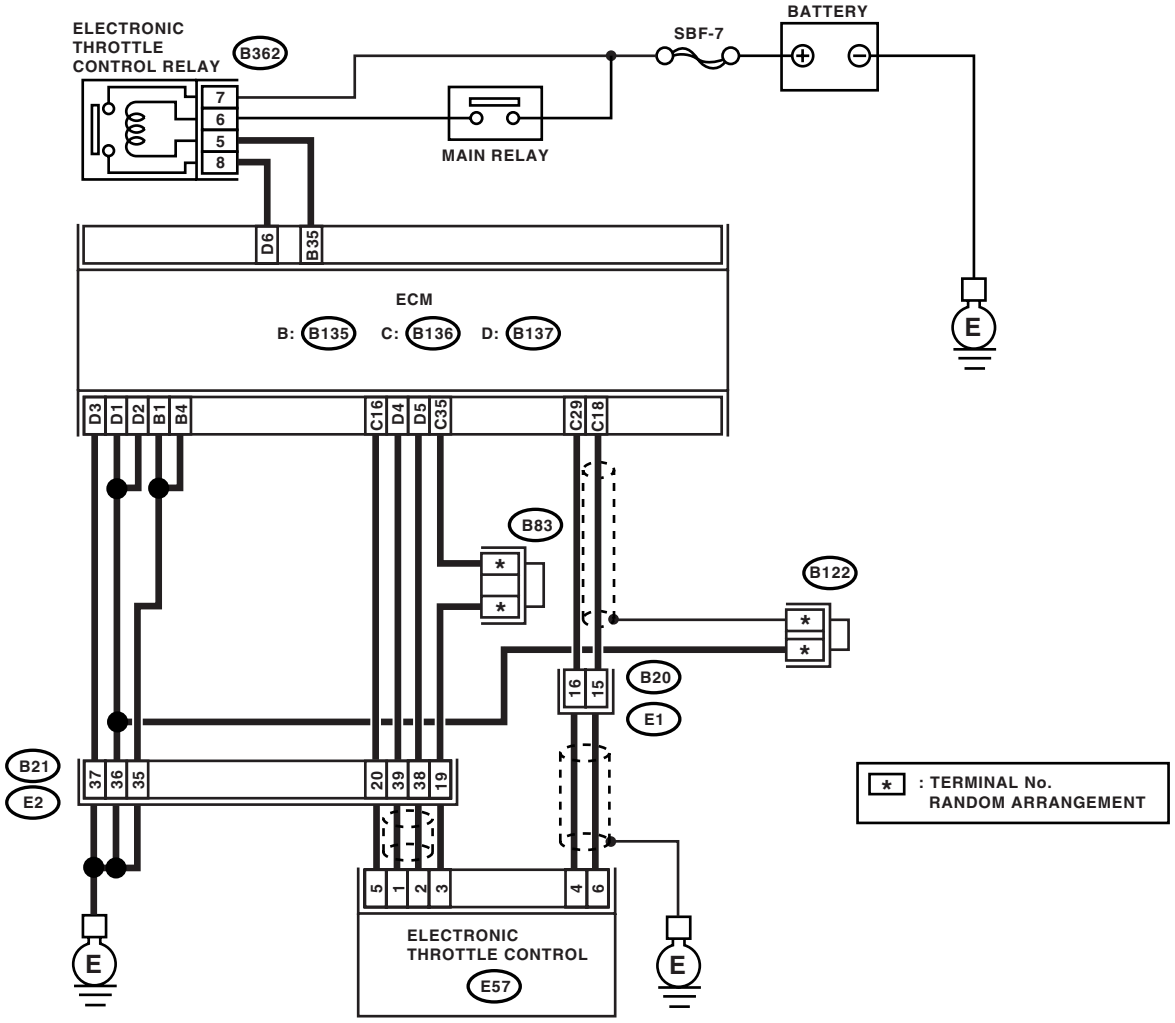

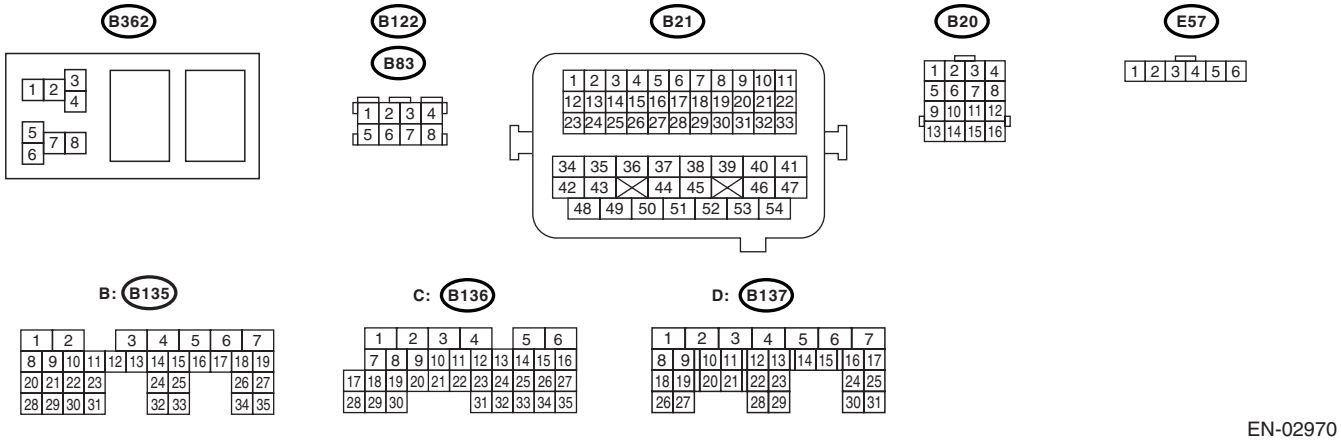

EN-02970

	Step	Check	Yes	No
1	**CHECK SENSOR OUTPUT.** 1) Turn the ignition switch to ON. 2) Read the data of main throttle sensor signal using Subaru Select Monitor. NOTE: • Subaru Select Monitor For detailed operation procedure, refer to the "READ CURRENT DATA FOR ENGINE". <Ref. to EN(H6DO)(diag)-26, Subaru Select Monitor.>	Is the voltage less than 4.63 V?	Go to step **2.**	Go to step **3.**
2	**CHECK POOR CONTACT.** Check the poor contact in connector between ECM and electronic throttle control.	Is there poor contact in connector between ECM and electronic throttle control?	Repair the poor contact.	Temporary poor contact occurred, but it is normal at present.
3	**CHECK HARNESS BETWEEN ECM AND ELECTRONIC THROTTLE CONTROL.** 1) Turn the ignition switch to OFF. 2) Disconnect the connector from ECM. 3) Disconnect the connector from the electronic throttle control. 4) Measure the resistance between ECM connector and electronic throttle control connector. ***Connector & terminal*** ***(B136) No. 18 — (E57) No. 6:*** ***(B136) No. 35 — (E57) No. 3:***	Is the resistance less than 1 Ω?	Go to step **4.**	Repair the open circuit of harness connector.
4	**CHECK HARNESS BETWEEN ECM AND ELECTRONIC THROTTLE CONTROL.** 1) Connect the ECM connector. 2) Measure the resistance between electronic throttle control connector and engine ground. ***Connector & terminal*** ***(E57) No. 3 — Engine ground:***	Is the resistance less than 1 Ω?	Go to step **5.**	Repair the poor contact in ECM connector. Replace the ECM if defective. <Ref. to FU(H6DO)-34, Engine Control Module (ECM).>
5	**CHECK SENSOR OUTPUT POWER SUPPLY.** Measure the voltage between electronic throttle control connector and engine ground. ***Connector & terminal*** ***(E57) No. 6 (+) — Engine ground (−):***	Is the voltage less than 10 V?	Go to step **6.**	Repair the battery short circuit in harness between ECM connector and electronic throttle control connector.
6	**CHECK HARNESS BETWEEN ECM AND ELECTRONIC THROTTLE CONTROL.** 1) Turn the ignition switch to OFF. 2) Disconnect the connector from ECM. 3) Measure the resistance between ECM connectors. ***Connector & terminal*** ***(B136) No. 18 — (B136) No. 16:***	Is the resistance more than 1 MΩ?	Repair the poor contact in harness. Repair the electronic throttle control.	Repair the short circuit to sensor power supply.

AF:DTC P0125 INSUFFICIENT ENGINE COOLANT TEMPERATURE FOR CLOSED LOOP FUEL CONTROL

DTC DETECTING CONDITION:

- Two consecutive driving cycles with fault
- GENERAL DESCRIPTION <Ref. to GD(H6DO)-54, DTC P0125 INSUFFICIENT ENGINE COOLANT TEMPERATURE FOR CLOSED LOOP FUEL CONTROL, Diagnostic Trouble Code (DTC) Detecting Criteria.>

TROUBLE SYMPTOM:

Engine would not return to idling.

CAUTION:

After repair or replacement of faulty parts, conduct Clear Memory Mode <Ref. to EN(H6DO)(diag)-44, OPERATION, Clear Memory Mode.> and Inspection Mode <Ref. to EN(H6DO)(diag)-35, PROCEDURE, Inspection Mode.>.

	Step	Check	Yes	No
1	**CHECK FOR ANY OTHER DTC ON DISPLAY.**	Is any other DTC displayed?	Inspect the relevant DTC using "List of Diagnostic Trouble Code (DTC)". <Ref. to EN(H6DO)(diag)-71, List of Diagnostic Trouble Code (DTC).> NOTE: In this case, it is not necessary to inspect DTC P0125.	Go to step **2.**
2	**CHECK TIRE SIZE.**	Is the tire same size as specified tire and one same size as other three wheels?	Go to step **3.**	Replace the tire.
3	**CHECK ENGINE COOLANT.** Check the following items: • Amount of engine coolant • Coolant freeze • Contamination of engine coolant	Is the engine coolant normal?	Go to step **4.**	Fill or replace the engine coolant. <Ref. to CO(H6DO)-11, INSPECTION, Engine Coolant.>
4	**CHECK THERMOSTAT.**	Does the thermostat remain opened?	Replace the thermostat. <Ref. to CO(H6DO)-13, Thermostat.>	Replace the engine coolant temperature sensor. <Ref. to FU(H6DO)-19, Engine Coolant Temperature Sensor.>

AG:DTC P0126 INSUFFICIENT ENGINE COOLANT TEMPERATURE FOR STABLE OPERATION

DTC DETECTING CONDITION:

- Two consecutive driving cycles with fault
- GENERAL DESCRIPTION <Ref. to GD(H6DO)-56, DTC P0126 INSUFFICIENT ENGINE COOLANT TEMPERATURE FOR STABLE OPERATION, Diagnostic Trouble Code (DTC) Detecting Criteria.>

TROUBLE SYMPTOM:

- Hard to start
- Erroneous idling
- Poor driving performance

CAUTION:

After repair or replacement of faulty parts, conduct Clear Memory Mode <Ref. to EN(H6DO)(diag)-44, OPERATION, Clear Memory Mode.> and Inspection Mode <Ref. to EN(H6DO)(diag)-35, PROCEDURE, Inspection Mode.>.

WIRING DIAGRAM:

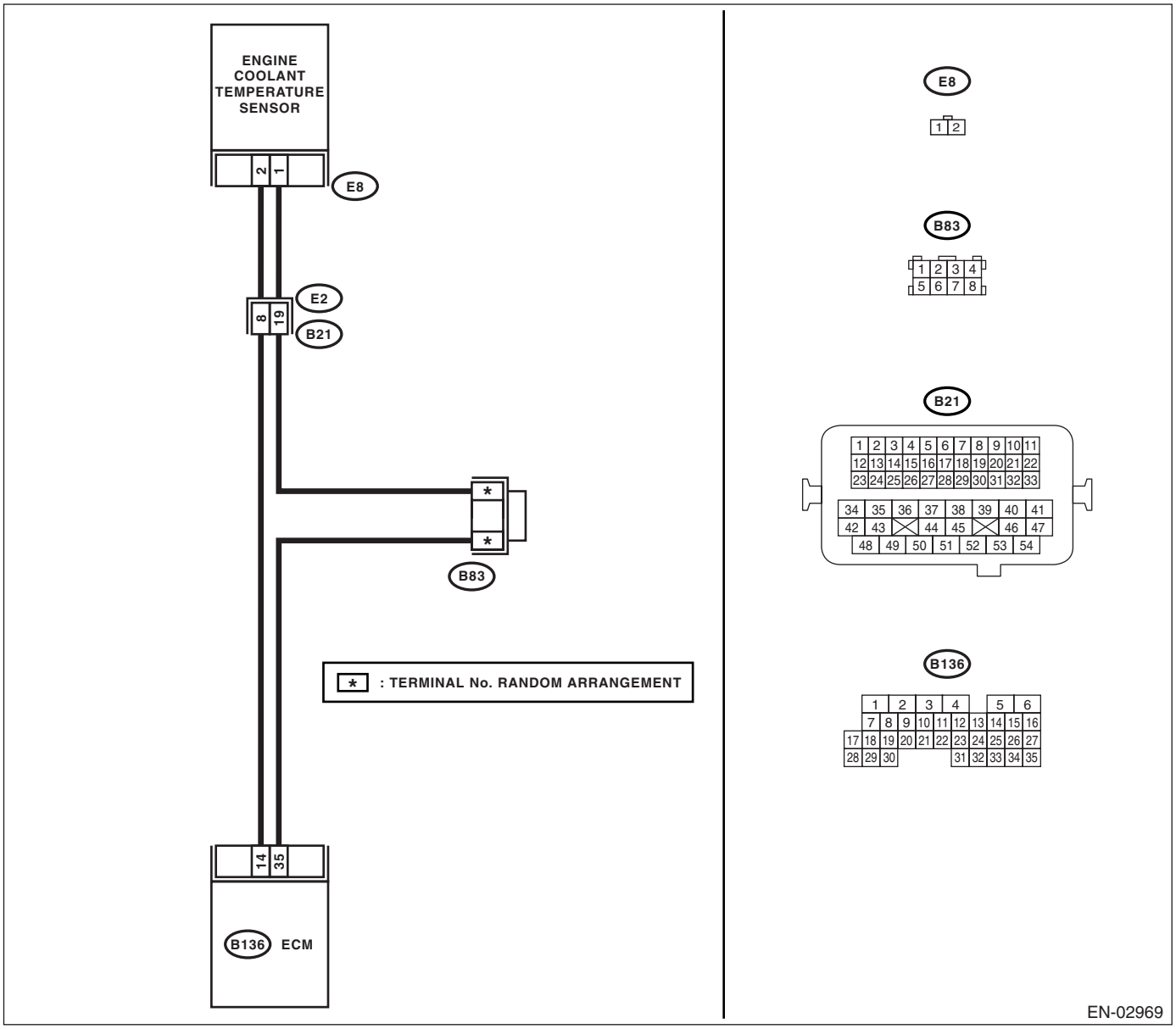

	Step	Check	Yes	No
1	**CHECK ANY OTHER DTC ON DISPLAY.**	Is any other DTC displayed?	Inspect the relevant DTC using "List of Diagnostic Trouble Code (DTC)". <Ref. to EN(H6DO)(diag)-71, List of Diagnostic Trouble Code (DTC).>	Go to step **2.**
2	**CHECK ENGINE COOLANT TEMPERATURE SENSOR.** Measure the resistance between engine coolant temperature sensor terminals when engine coolant is cold and after warmed-up. ***Terminals*** ***No. 1 — No. 2:***	Is the resistance of engine coolant temperature sensor different between when engine coolant is cold and after warmed-up?	Contact your SOA Service Center.	Replace the engine coolant temperature sensor. <Ref. to FU(H6DO)-19, Engine Coolant Temperature Sensor.>

AH:DTC P0128 COOLANT THERMOSTAT (ENGINE COOLANT TEMPERATURE BELOW THERMOSTAT REGULATING TEMPERATURE)

DTC DETECTING CONDITION:

- Two consecutive driving cycles with fault
- GENERAL DESCRIPTION <Ref. to GD(H6DO)-58, DTC P0128 COOLANT THERMOSTAT (ENGINE COOLANT TEMPERATURE BELOW THERMOSTAT REGULATING TEMPERATURE), Diagnostic Trouble Code (DTC) Detecting Criteria.>

TROUBLE SYMPTOM:

Thermostat remains open.

CAUTION:

After repair or replacement of faulty parts, conduct Clear Memory Mode <Ref. to EN(H6DO)(diag)-44, OPERATION, Clear Memory Mode.> and Inspection Mode <Ref. to EN(H6DO)(diag)-35, PROCEDURE, Inspection Mode.>.

	Step	Check	Yes	No
1	**CHECK VEHICLE CONDITION.**	Was the vehicle driven or idled with the engine partially submerged under water?	In this case, it is not necessary to inspect DTC P0128.	Go to step **2.**
2	**CHECK FOR ANY OTHER DTC ON DISPLAY.**	Is any other DTC displayed?	Inspect the relevant DTC using "List of Diagnostic Trouble Codes (DTC)". <Ref. to EN(H6DO)(diag)-71, List of Diagnostic Trouble Code (DTC).>	Go to step **3.**
3	**CHECK ENGINE COOLANT.**	Are coolant level and mixture ratio of cooling water to antifreeze solution correct?	Go to step **4.**	Replace the engine coolant. <Ref. to CO(H6DO)-10, REPLACEMENT, Engine Coolant.>
4	**CHECK RADIATOR FAN.** 1) Start the engine. 2) Check radiator fan operation.	Does the radiator fan continuously rotate for more than 3 minutes during idling?	Repair radiator fan circuit. <Ref. to CO(H6DO)-18, Radiator Main Fan and Fan Motor.> and <Ref. to CO(H6DO)-21, Radiator Sub Fan and Fan Motor.>.	Replace the thermostat. <Ref. to CO(H6DO)-13, Thermostat.>

AI: DTC P0131 O2 SENSOR CIRCUIT LOW VOLTAGE (BANK 1 SENSOR 1)

DTC DETECTING CONDITION:

- Detect as soon as malfunction occurs.
- GENERAL DESCRIPTION <Ref. to GD(H6DO)-60, DTC P0131 O2 SENSOR CIRCUIT LOW VOLTAGE (BANK 1 SENSOR 1), Diagnostic Trouble Code (DTC) Detecting Criteria.>

CAUTION:

After repair or replacement of faulty parts, conduct Clear Memory Mode <Ref. to EN(H6DO)(diag)-44, OPERATION, Clear Memory Mode.> and Inspection Mode <Ref. to EN(H6DO)(diag)-35, PROCEDURE, Inspection Mode.>.

WIRING DIAGRAM:

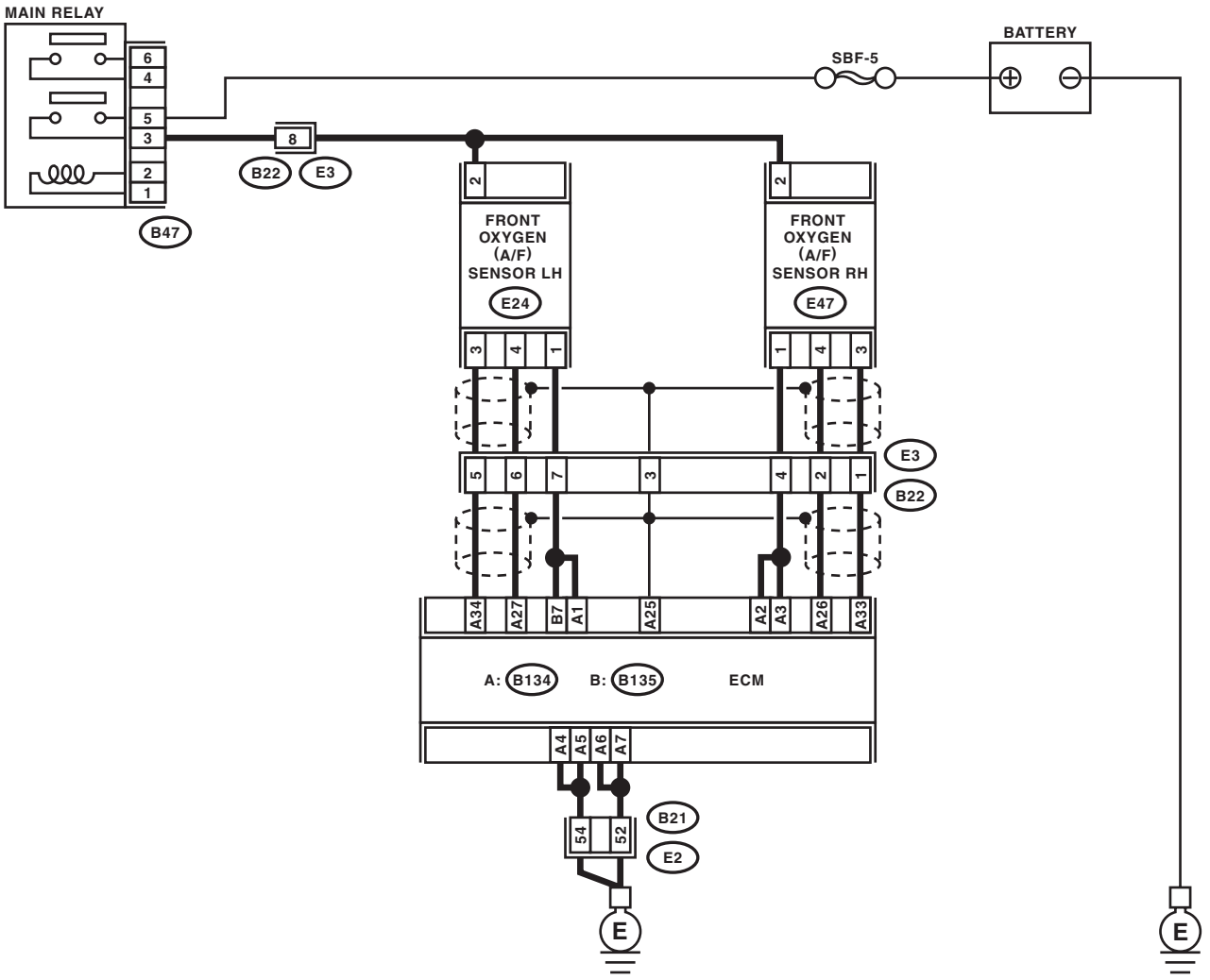

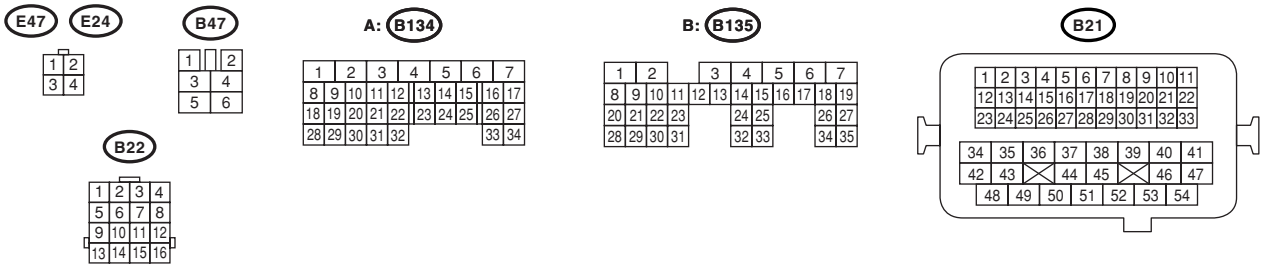

EN-03159

	Step	Check	Yes	No
1	**CHECK HARNESS BETWEEN ECM AND FRONT OXYGEN (A/F) SENSOR CONNECTOR.** 1) Turn the ignition switch to OFF. 2) Disconnect the connectors from ECM and front oxygen (A/F) sensor connector. 3) Measure the resistance of harness between ECM and chassis ground. ***Connector & terminal*** ***(B134) No. 26 — Chassis ground:*** ***(B134) No. 33 — Chassis ground:***	Is the resistance more than 1 MΩ?	Replace the front oxygen (A/F) sensor. <Ref. to FU(H6DO)-30, Front Oxygen (A/F) Sensor.>	Repair the ground short circuit in harness between ECM and front oxygen (A/F) sensor connector.

AJ:DTC P0132 O2 SENSOR CIRCUIT HIGH VOLTAGE (BANK 1 SENSOR 1)

DTC DETECTING CONDITION:

- Detect as soon as malfunction occurs.
- GENERAL DESCRIPTION <Ref. to GD(H6DO)-62, DTC P0132 O2 SENSOR CIRCUIT HIGH VOLTAGE (BANK 1 SENSOR 1), Diagnostic Trouble Code (DTC) Detecting Criteria.>

CAUTION:

After repair or replacement of faulty parts, conduct Clear Memory Mode <Ref. to EN(H6DO)(diag)-44, OPERATION, Clear Memory Mode.> and Inspection Mode <Ref. to EN(H6DO)(diag)-35, PROCEDURE, Inspection Mode.>.

WIRING DIAGRAM:

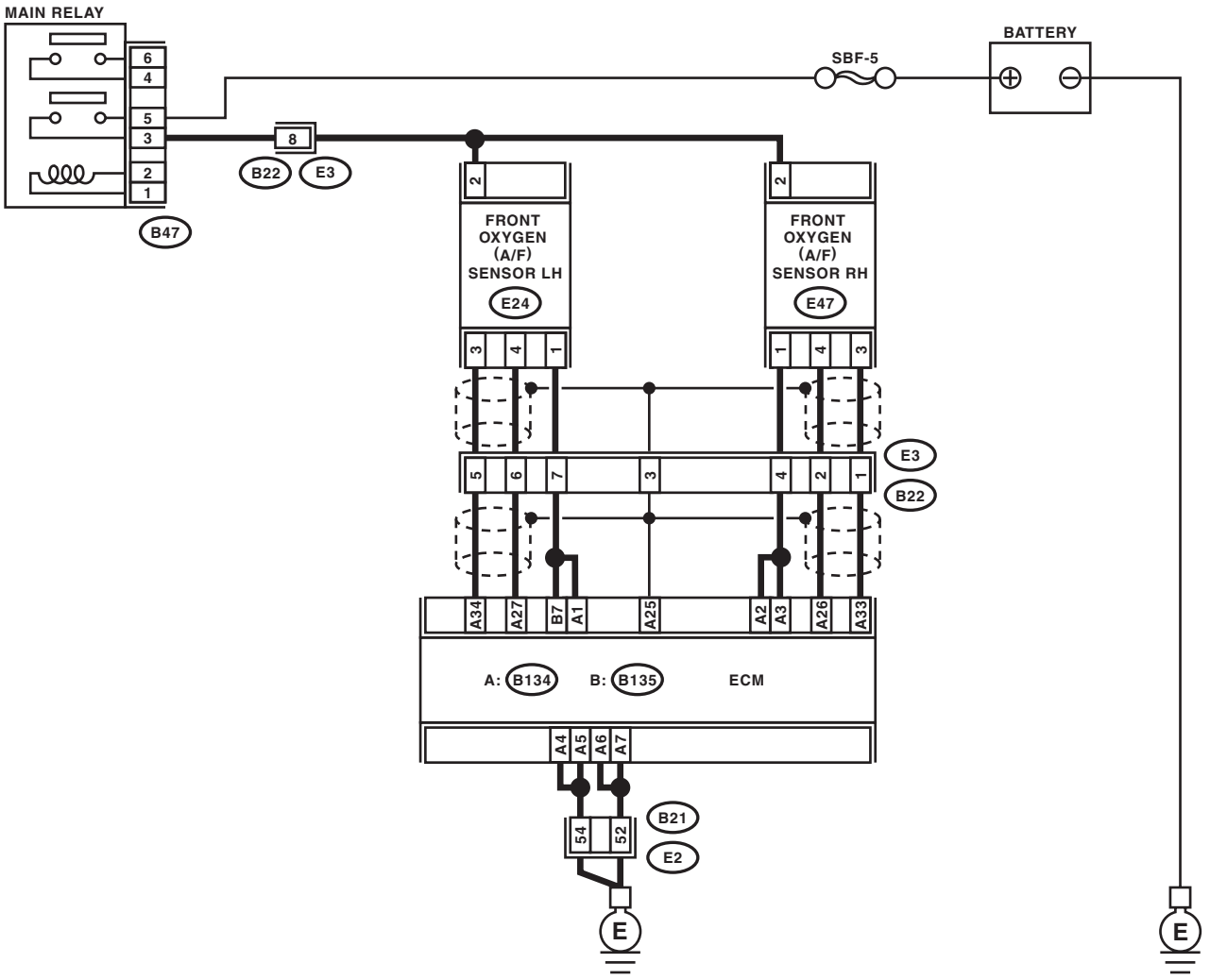

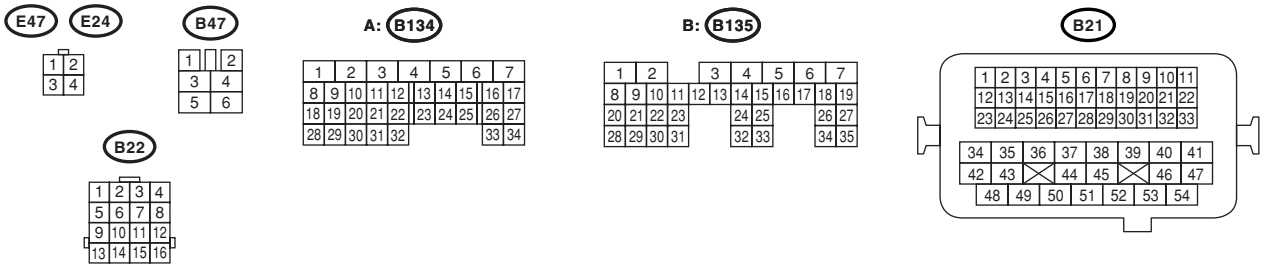

EN-03159

	Step	Check	Yes	No
1	**CHECK HARNESS BETWEEN ECM AND FRONT OXYGEN (A/F) SENSOR CONNECTOR.** 1) Turn the ignition switch to ON. 2) Disconnect the connector from front oxygen (A/F) sensor. 3) Measure the voltage of harness between ECM connector and chassis ground. ***Connector & terminal*** ***(B134) No. 26 (+) — Chassis ground (–):*** ***(B134) No. 33 (+) — Chassis ground (–):***	Is the voltage more than 8 V?	Replace the front oxygen (A/F) sensor. <Ref. to FU(H6DO)-30, Front Oxygen (A/F) Sensor.>	Repair the battery short circuit in harness between ECM and front oxygen (A/F) sensor connector.

AK:DTC P0133 O2 SENSOR CIRCUIT SLOW RESPONSE (BANK 1 SENSOR 1)

DTC DETECTING CONDITION:

- Two consecutive driving cycles with fault
- GENERAL DESCRIPTION <Ref. to GD(H6DO)-64, DTC P0133 O2 SENSOR CIRCUIT SLOW RESPONSE (BANK 1 SENSOR 1), Diagnostic Trouble Code (DTC) Detecting Criteria.>

CAUTION:

After repair or replacement of faulty parts, conduct Clear Memory Mode <Ref. to EN(H6DO)(diag)-44, OPERATION, Clear Memory Mode.> and Inspection Mode <Ref. to EN(H6DO)(diag)-35, PROCEDURE, Inspection Mode.>.

WIRING DIAGRAM:

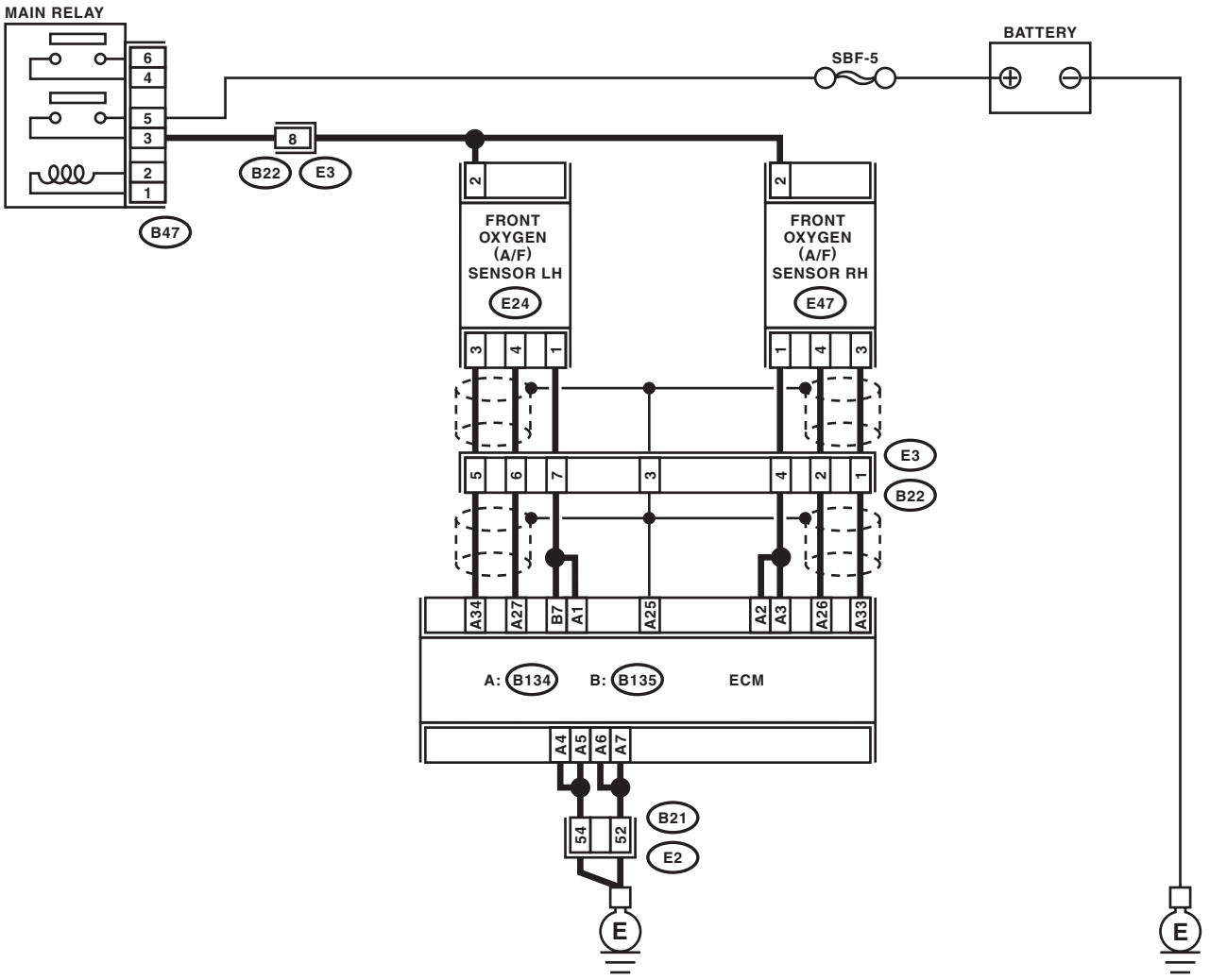

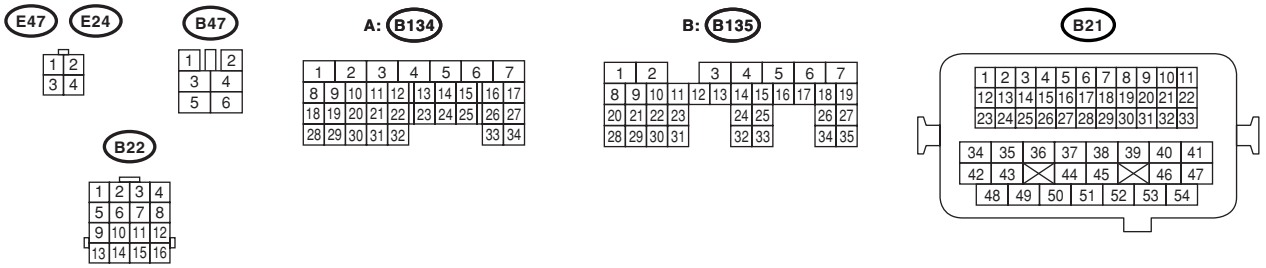

EN-03159

	Step	Check	Yes	No
1	**CHECK FOR ANY OTHER DTC ON DISPLAY.**	Is any other DTC displayed?	Inspect the DTC using “List of Diagnostic Trouble Code (DTC)”. <Ref. to EN(H6DO)(diag)-71, List of Diagnostic Trouble Code (DTC).> NOTE: In this case, it is not necessary to inspect DTC P0133.	Go to step **2.**
2	**CHECK EXHAUST SYSTEM.** NOTE: Check the following items: • Loose installation of front portion of exhaust pipe onto cylinder heads • Loose connection between front exhaust pipe and front catalytic converter • Damage of exhaust pipe resulting in a hole	Is there any fault in exhaust system?	Repair exhaust system.	Replace the front oxygen (A/F) sensor. <Ref. to FU(H6DO)-30, Front Oxygen (A/F) Sensor.>

AL:DTC P0134 O2 SENSOR CIRCUIT NO ACTIVITY DETECTED (BANK 1 SENSOR 1)

DTC DETECTING CONDITION:

- Detect as soon as malfunction occurs.
- GENERAL DESCRIPTION <Ref. to GD(H6DO)-67, DTC P0134 O2 SENSOR CIRCUIT NO ACTIVITY DETECTED (BANK 1 SENSOR 1), Diagnostic Trouble Code (DTC) Detecting Criteria.>

CAUTION:

After repair or replacement of faulty parts, conduct Clear Memory Mode <Ref. to EN(H6DO)(diag)-44, OPERATION, Clear Memory Mode.> and Inspection Mode <Ref. to EN(H6DO)(diag)-35, PROCEDURE, Inspection Mode.>.

WIRING DIAGRAM:

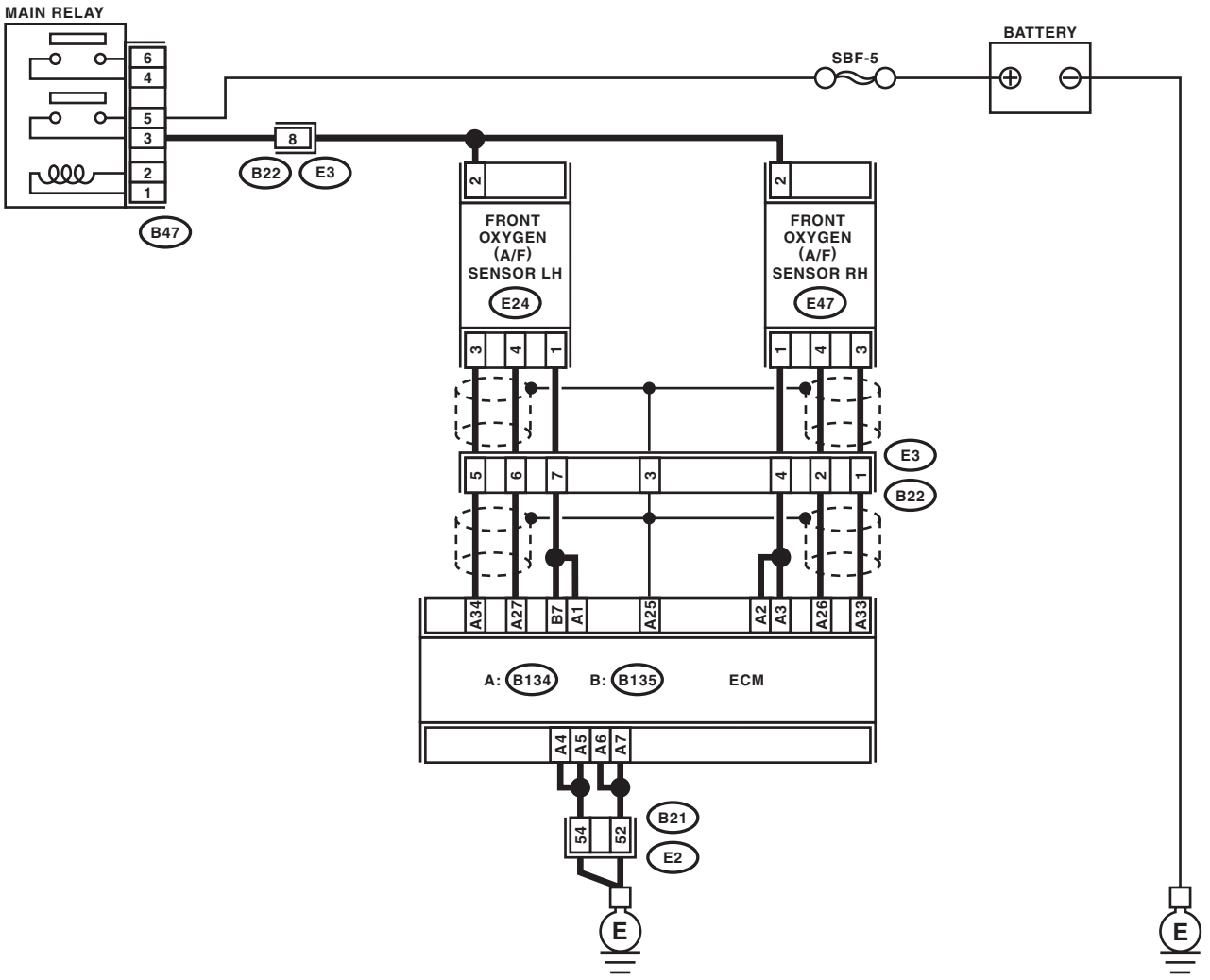

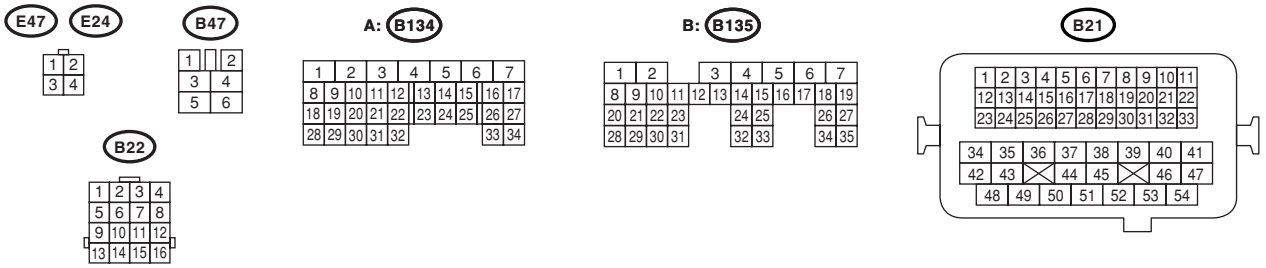

EN-03159

	Step	Check	Yes	No
1	**CHECK HARNESS BETWEEN ECM AND FRONT OXYGEN (A/F) SENSOR CONNECTOR.** 1) Turn the ignition switch to OFF. 2) Disconnect the connectors from ECM and front oxygen (A/F) sensor connector. 3) Measure the resistance of harness between ECM and front oxygen (A/F) sensor connector. ***Connector & terminal*** ***(B134) No. 26 — (E47) No. 4:*** ***(B134) No. 33 — (E47) No. 3:***	Is the resistance less than 1 Ω?	Go to step **2.**	Repair the harness and connector. NOTE: In this case repair the following: • Open circuit in harness between ECM and front oxygen (A/F) sensor connector • Poor contact in front oxygen (A/F) sensor connector • Poor contact in ECM connector
2	**CHECK POOR CONTACT.** Check poor contact in front oxygen (A/F) sensor connector.	Is there poor contact in front oxygen (A/F) sensor connector?	Repair the poor contact in front oxygen (A/F) sensor connector.	Replace the front oxygen (A/F) sensor. <Ref. to FU(H6DO)-30, Front Oxygen (A/F) Sensor.>

AM:DTC P0137 O2 SENSOR CIRCUIT LOW VOLTAGE (BANK 1 SENSOR 2)

DTC DETECTING CONDITION:

- Two consecutive driving cycles with fault
- GENERAL DESCRIPTION <Ref. to GD(H6DO)-69, DTC P0137 O2 SENSOR CIRCUIT LOW VOLTAGE (BANK 1 SENSOR 2), Diagnostic Trouble Code (DTC) Detecting Criteria.>

CAUTION:

After repair or replacement of faulty parts, conduct Clear Memory Mode <Ref. to EN(H6DO)(diag)-44, OPERATION, Clear Memory Mode.> and Inspection Mode <Ref. to EN(H6DO)(diag)-35, PROCEDURE, Inspection Mode.>.

WIRING DIAGRAM:

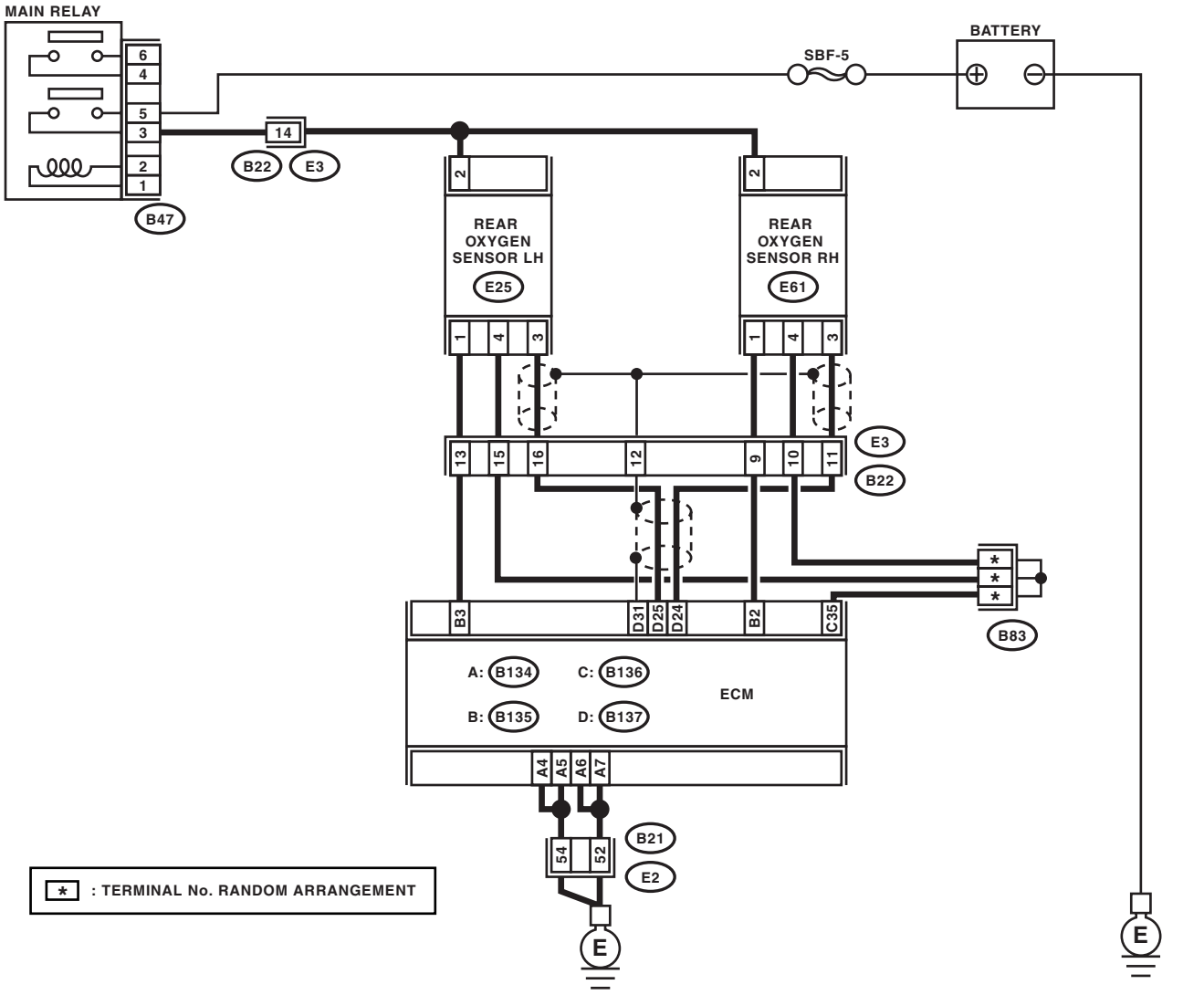

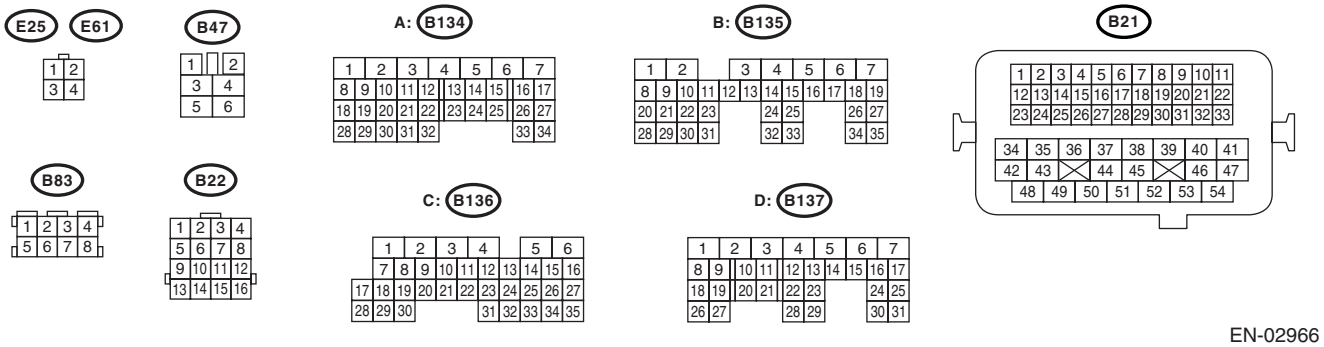

EN-02966

	Step	Check	Yes	No
1	**CHECK FOR ANY OTHER DTC ON DISPLAY.**	Is any other DTC displayed?	Inspect the DTC using “List of Diagnostic Trouble Code (DTC)”. <Ref. to EN(H6DO)(diag)-71, List of Diagnostic Trouble Code (DTC).> NOTE: In this case, it is not necessary to inspect DTC P0137.	Go to step **2.**
2	**CHECK REAR OXYGEN SENSOR DATA.** 1) Warm-up the engine until engine coolant temperature is above 70°C (158°F), and keep the engine speed at 5,000 rpm. 2) Read the data of rear oxygen sensor signal using Subaru Select Monitor or general scan tool. NOTE: • Subaru Select Monitor For detailed operation procedure, refer to the “READ CURRENT DATA SHOWN ON DISPLAY FOR ENGINE”. <Ref. to EN(H6DO)(diag)-26, Subaru Select Monitor.> • General scan tool For detailed operation procedure, refer to the general scan tool instruction manual.	Is the voltage more than 490 mV?	Go to step **5.**	Go to step **3.**
3	**CHECK HARNESS BETWEEN ECM AND REAR OXYGEN SENSOR CONNECTOR.** 1) Turn the ignition switch to OFF. 2) Disconnect the connector from ECM and rear oxygen sensor. 3) Measure the resistance in harness between ECM and rear oxygen sensor connector. ***Connector & terminal*** ***(B137) No. 24 — (E61) No. 3:*** ***(B136) No. 35 — (E61) No. 4:***	Is the resistance more than 3 Ω?	Repair the open circuit in harness between ECM and rear oxygen sensor connector.	Go to step **4.**
4	**CHECK HARNESS BETWEEN REAR OXYGEN SENSOR AND ECM CONNECTOR.** 1) Turn the ignition switch to OFF. 2) Disconnect the connector from rear oxygen sensor. 3) Turn the ignition switch to ON. 4) Measure the voltage between rear oxygen sensor harness connector and chassis ground. ***Connector & terminal*** ***(E61) No. 3 (+) — Chassis ground (−):***	Is the voltage 0.2 — 0.5 V?	Replace the rear oxygen sensor. <Ref. to FU(H6DO)-32, Rear Oxygen Sensor.>	Repair the harness and connector. NOTE: In this case repair the following: • Open circuit in harness between rear oxygen sensor and ECM connector • Poor contact in rear oxygen sensor connector • Poor contact in ECM connector

	Step	Check	Yes	No
5	**CHECK EXHAUST SYSTEM.** Check exhaust system parts. NOTE: Check the following items: • Loose part of exhaust system and incomplete installation • Damage (crack, hole etc.) of parts • Looseness and ill fitting of parts between front oxygen (A/F) sensor and rear oxygen sensor	Is there any fault in exhaust system?	Repair or replace the faulty part.	Replace the rear oxygen sensor. <Ref. to FU(H6DO)-32, Rear Oxygen Sensor.>

AN:DTC P0138 O2 SENSOR CIRCUIT HIGH VOLTAGE (BANK 1 SENSOR 2)

DTC DETECTING CONDITION:

- Two consecutive driving cycles with fault
- GENERAL DESCRIPTION <Ref. to GD(H6DO)-71, DTC P0138 O2 SENSOR CIRCUIT HIGH VOLTAGE (BANK 1 SENSOR 2), Diagnostic Trouble Code (DTC) Detecting Criteria.>

CAUTION:

After repair or replacement of faulty parts, conduct Clear Memory Mode <Ref. to EN(H6DO)(diag)-44, OPERATION, Clear Memory Mode.> and Inspection Mode <Ref. to EN(H6DO)(diag)-35, PROCEDURE, Inspection Mode.>.

WIRING DIAGRAM:

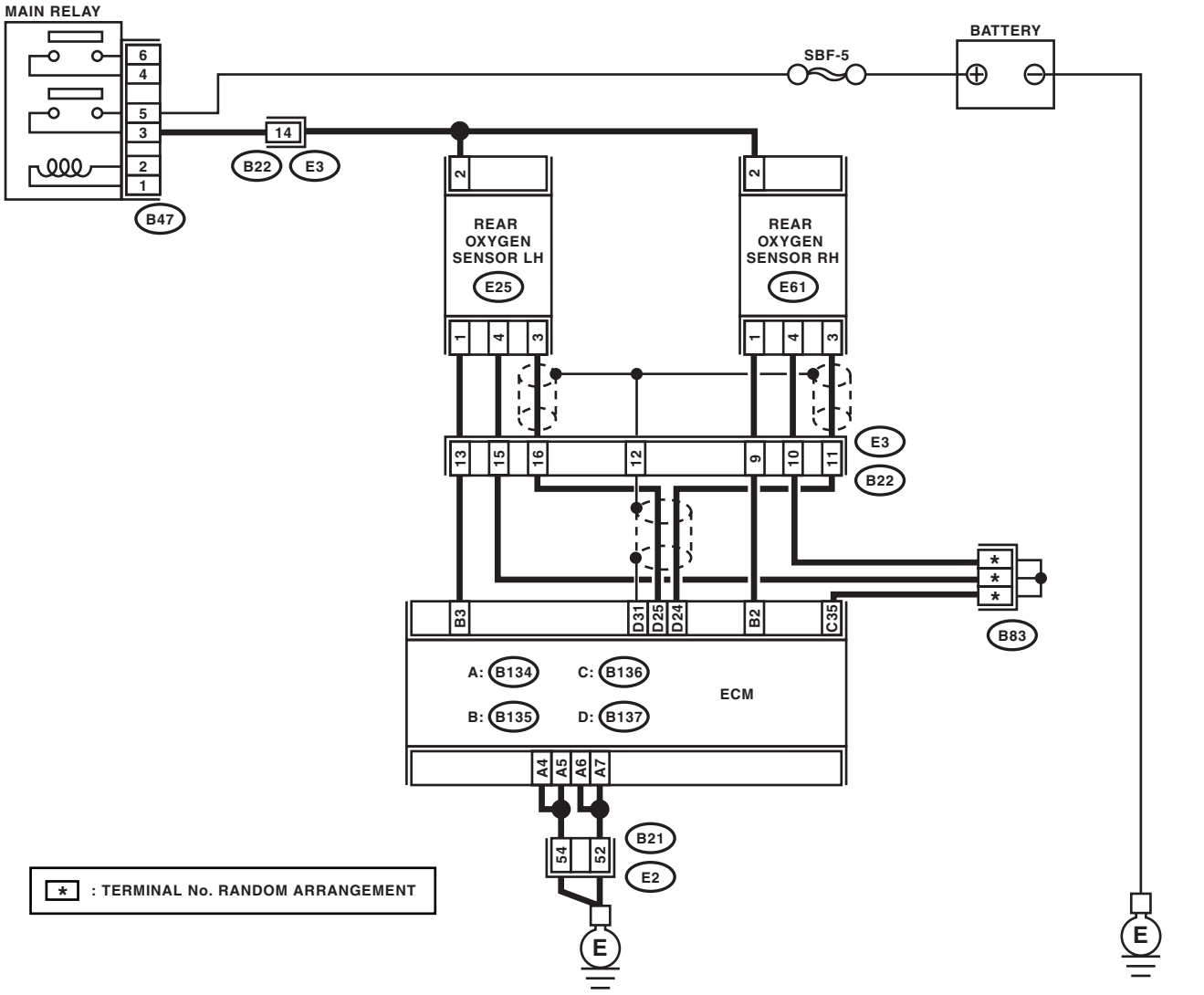

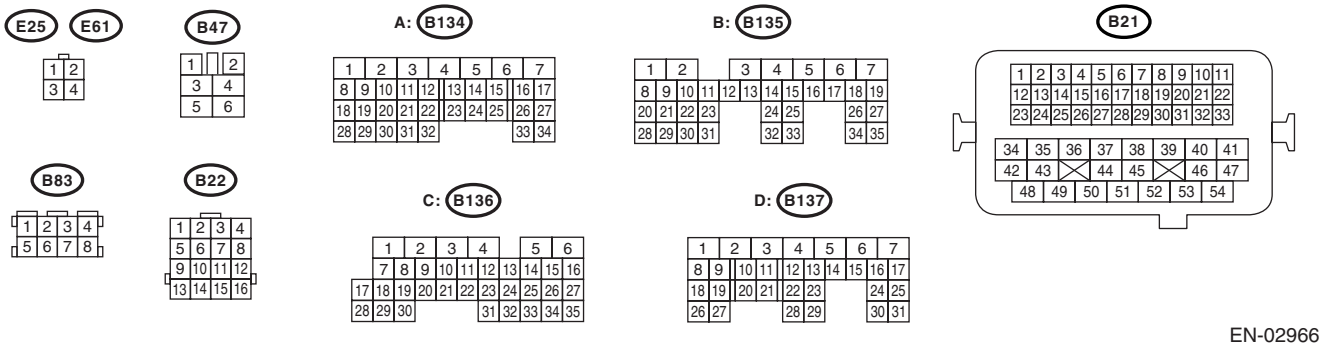

EN-02966

	Step	Check	Yes	No
1	**CHECK FOR ANY OTHER DTC ON DISPLAY.**	Is any other DTC displayed?	Inspect the DTC using “List of Diagnostic Trouble Code (DTC)”. <Ref. to EN(H6DO)(diag)-71, List of Diagnostic Trouble Code (DTC).> NOTE: In this case, it is not necessary to inspect DTC P0138.	Go to step **2.**
2	**CHECK REAR OXYGEN SENSOR DATA.** 1) Warm-up the engine until engine coolant temperature is above 70°C (158°F), and lower the engine speed rapidly from 5,000 rpm. 2) Read the data of rear oxygen sensor signal using Subaru Select Monitor or general scan tool. NOTE: • Subaru Select Monitor For detailed operation procedure, refer to the “READ CURRENT DATA SHOWN ON DISPLAY FOR ENGINE”. <Ref. to EN(H6DO)(diag)-26, Subaru Select Monitor.> • General scan tool For detailed operation procedure, refer to the general scan tool instruction manual.	Is the voltage less than 250 mV?	Go to step **5.**	Go to step **3.**
3	**CHECK HARNESS BETWEEN ECM AND REAR OXYGEN SENSOR CONNECTOR.** 1) Turn the ignition switch to OFF. 2) Disconnect the connector from ECM and rear oxygen sensor. 3) Measure the resistance in harness between ECM and rear oxygen sensor connector. ***Connector & terminal*** ***(B137) No. 24 — (E61) No. 3:*** ***(B136) No. 35 — (E61) No. 4:***	Is the resistance more than 3 Ω?	Repair the open circuit in harness between ECM and rear oxygen sensor connector.	Go to step **4.**
4	**CHECK HARNESS BETWEEN REAR OXYGEN SENSOR AND ECM CONNECTOR.** 1) Turn the ignition switch to OFF. 2) Disconnect the connector from rear oxygen sensor. 3) Turn the ignition switch to ON. 4) Measure the voltage between rear oxygen sensor harness connector and chassis ground. ***Connector & terminal*** ***(E61) No. 3 (+) — Chassis ground (−):***	Is the voltage 0.2 — 0.5 V?	Replace the rear oxygen sensor. <Ref. to FU(H6DO)-32, Rear Oxygen Sensor.>	Repair the harness and connector. NOTE: In this case repair the following: • Open circuit in harness between rear oxygen sensor and ECM connector • Poor contact in rear oxygen sensor connector • Poor contact in ECM connector

	Step	Check	Yes	No
5	**CHECK EXHAUST SYSTEM.** Check exhaust system parts. NOTE: Check the following items: • Loose part of exhaust system and incomplete installation • Damage (crack, hole etc.) of parts • Looseness and ill fitting of parts between front oxygen (A/F) sensor and rear oxygen sensor	Is there any fault in exhaust system?	Repair or replace the faulty part.	Replace the rear oxygen sensor. <Ref. to FU(H6DO)-32, Rear Oxygen Sensor.>

AO:DTC P0139 O2 SENSOR CIRCUIT SLOW RESPONSE (BANK 1 SENSOR 2)

DTC DETECTING CONDITION:

- Two consecutive driving cycles with fault
- GENERAL DESCRIPTION <Ref. to GD(H6DO)-73, DTC P0139 O2 SENSOR CIRCUIT SLOW RESPONSE (BANK 1 SENSOR 2), Diagnostic Trouble Code (DTC) Detecting Criteria.>

CAUTION:

After repair or replacement of faulty parts, conduct Clear Memory Mode <Ref. to EN(H6DO)(diag)-44, OPERATION, Clear Memory Mode.> and Inspection Mode <Ref. to EN(H6DO)(diag)-35, PROCEDURE, Inspection Mode.>.

WIRING DIAGRAM:

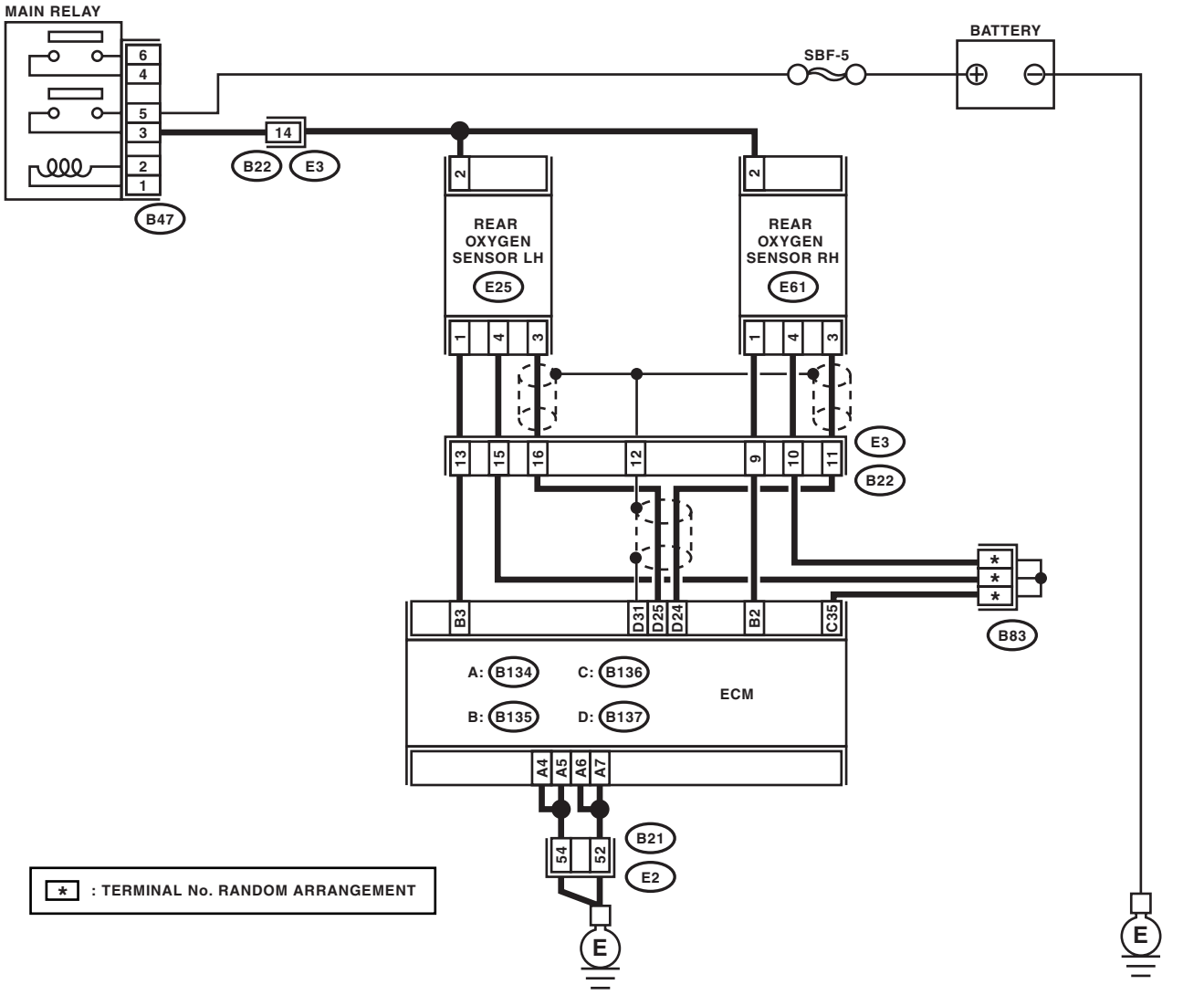

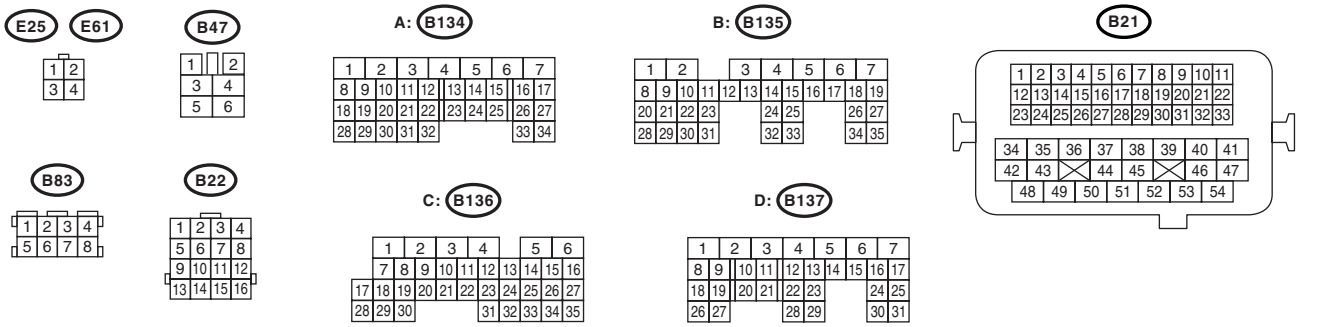

EN-02966

	Step	Check	Yes	No
1	**CHECK FOR ANY OTHER DTC ON DISPLAY.**	Is any other DTC displayed?	Check DTC using "List of Diagnostic Trouble Code (DTC)". <Ref. to EN(H6DO)(diag)-71, List of Diagnostic Trouble Code (DTC).> NOTE: In this case, it is not necessary to inspect DTC P0139.	Go to step **2.**
2	**CHECK HARNESS BETWEEN ECM AND REAR OXYGEN SENSOR CONNECTOR.** 1) Turn the ignition switch to OFF. 2) Disconnect the connectors from ECM and rear oxygen sensor. 3) Measure the resistance of harness between ECM and rear oxygen sensor connector. ***Connector & terminal*** ***(B137) No. 24 — (E61) No. 3:***	Is the resistance less than 1 Ω?	<Ref. to EN(H6DO)(diag)-168, .>	Repair harness and connector. NOTE: In this case, repair the following: • Open circuit in harness between rear oxygen sensor and ECM connector
3	**CHECK HARNESS BETWEEN REAR OXYGEN SENSOR AND ECM CONNECTOR.** Measure the resistance between rear oxygen sensor harness connector and chassis ground. ***Connector & terminal*** ***(E61) No. 3 — Chassis ground:***	Is the resistance more than 1 MΩ?	Go to step **4.**	Repair short circuit to ground in harness between rear oxygen sensor and ECM connector.
4	**CHECK REAR OXYGEN SENSOR DATA.** Measure the resistance between connector terminals of rear oxygen sensor. ***terminals*** ***No. 3 — No. 4:***	Is the resistance less than 1 Ω?	Replace the rear oxygen sensor. <Ref. to FU(H6DO)-32, Rear Oxygen Sensor.>	Repair connector. Poor contact in rear oxygen sensor connector.

AP:DTC P0151 O2 SENSOR CIRCUIT LOW VOLTAGE (BANK 2 SENSOR 1)

DTC DETECTING CONDITION:

- Detect as soon as malfunction occurs.
- GENERAL DESCRIPTION <Ref. to GD(H6DO)-79, DTC P0151 O2 SENSOR CIRCUIT LOW VOLTAGE (BANK 2 SENSOR 1), Diagnostic Trouble Code (DTC) Detecting Criteria.>

CAUTION:
After repair or replacement of faulty parts, conduct Clear Memory Mode <Ref. to EN(H6DO)(diag)-44, OPERATION, Clear Memory Mode.> and Inspection Mode <Ref. to EN(H6DO)(diag)-35, PROCEDURE, Inspection Mode.>.

WIRING DIAGRAM:

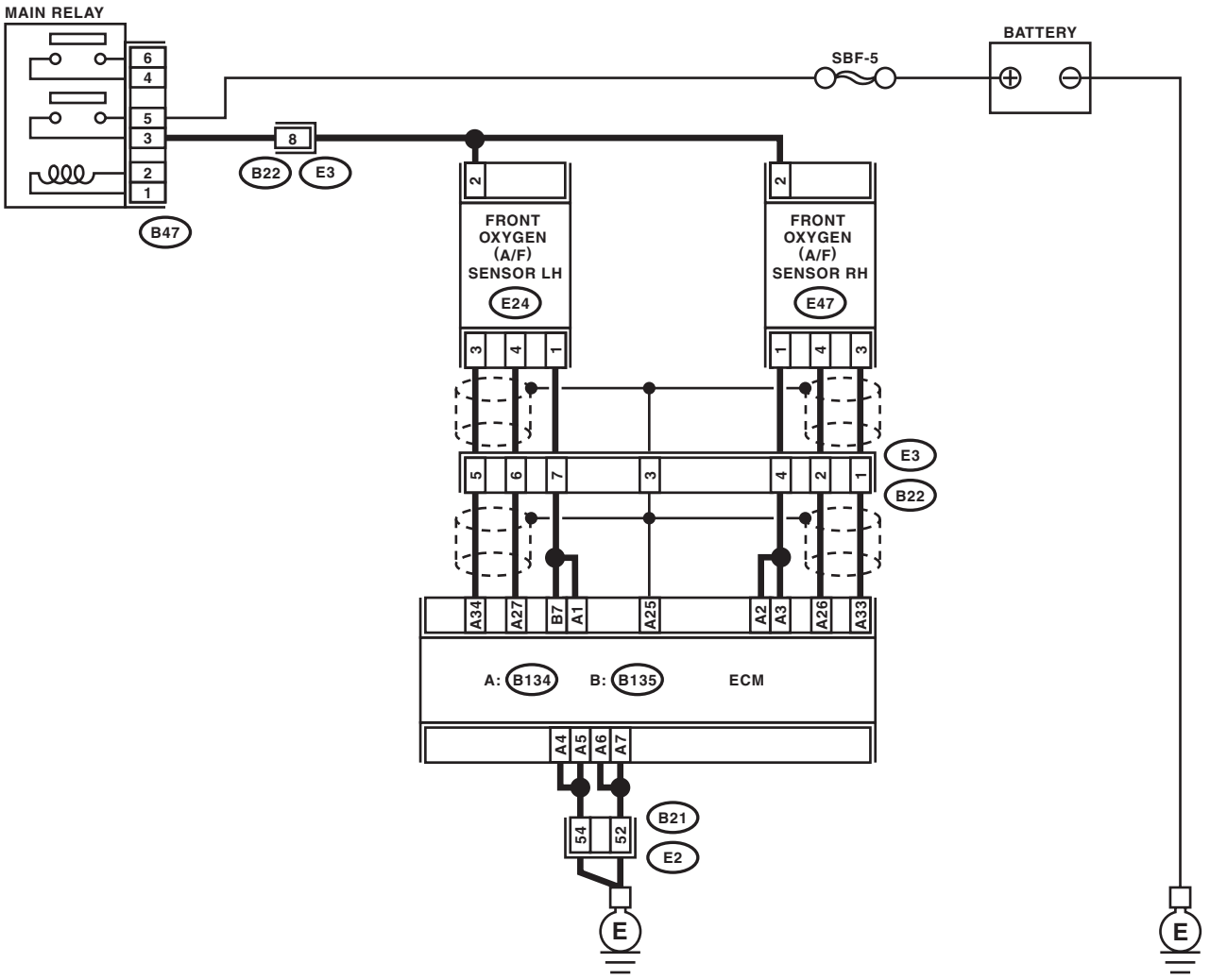

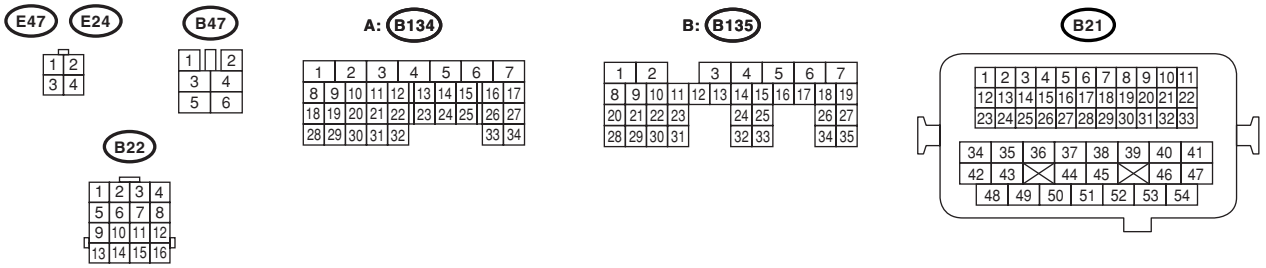

EN-03159

	Step	Check	Yes	No
1	**CHECK HARNESS BETWEEN ECM AND FRONT OXYGEN (A/F) SENSOR CONNECTOR.** 1) Turn the ignition switch to OFF. 2) Disconnect the connectors from ECM and front oxygen (A/F) sensor connector. 3) Measure the resistance of harness between ECM and chassis ground. ***Connector & terminal*** ***(B134) No. 27 — Chassis ground:*** ***(B134) No. 34 — Chassis ground:***	Is the resistance more than 1 MΩ?	Replace the front oxygen (A/F) sensor. <Ref. to FU(H6DO)-30, Front Oxygen (A/F) Sensor.>	Repair the ground short circuit in harness between ECM and front oxygen (A/F) sensor connector.

AQ:DTC P0152 O2 SENSOR CIRCUIT HIGH VOLTAGE (BANK 2 SENSOR 1)

DTC DETECTING CONDITION:

- Detect as soon as malfunction occurs.
- GENERAL DESCRIPTION <Ref. to GD(H6DO)-79, DTC P0152 O2 SENSOR CIRCUIT HIGH VOLTAGE (BANK 2 SENSOR 1), Diagnostic Trouble Code (DTC) Detecting Criteria.>

CAUTION:

After repair or replacement of faulty parts, conduct Clear Memory Mode <Ref. to EN(H6DO)(diag)-44, OPERATION, Clear Memory Mode.> and Inspection Mode <Ref. to EN(H6DO)(diag)-35, PROCEDURE, Inspection Mode.>.

WIRING DIAGRAM:

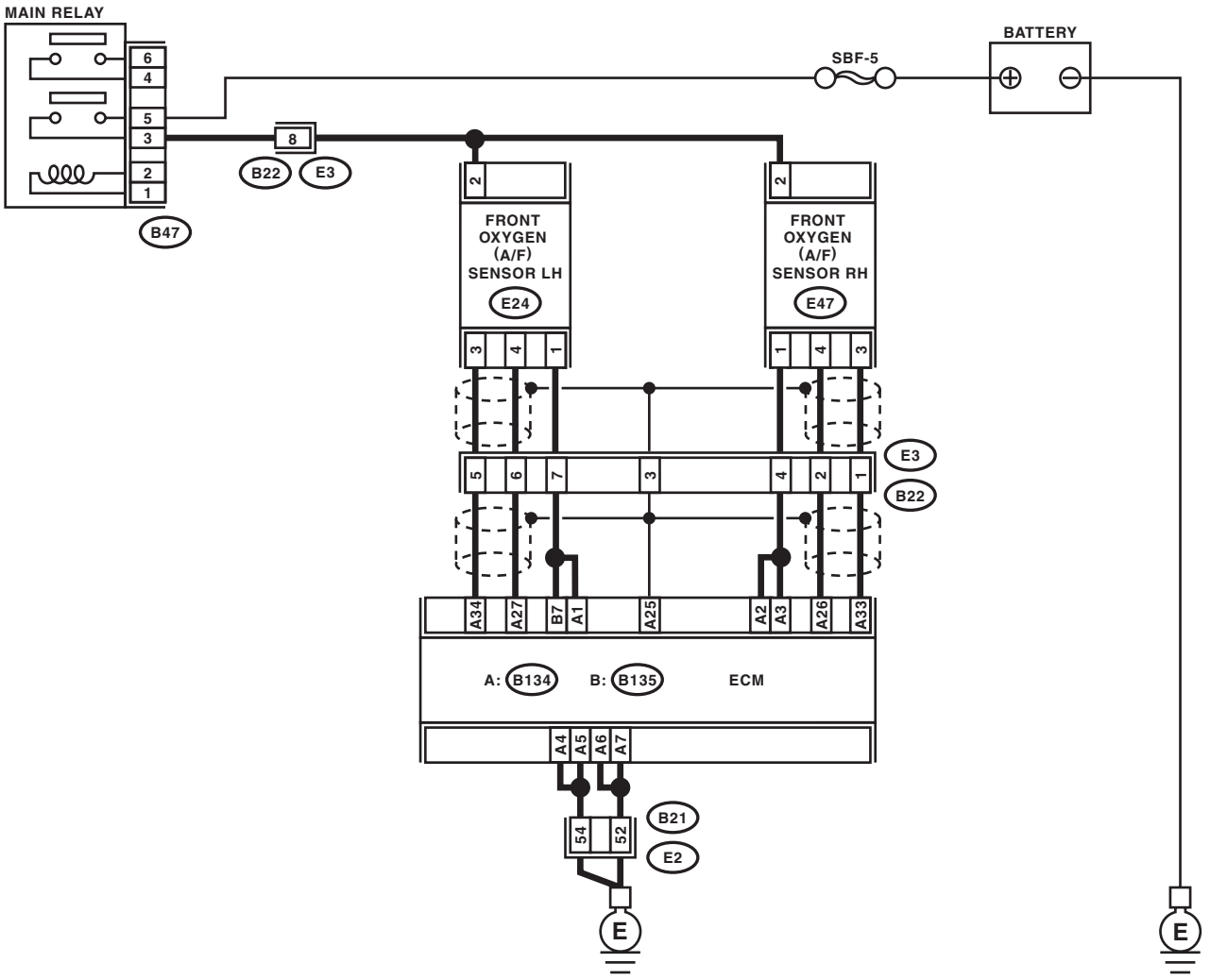

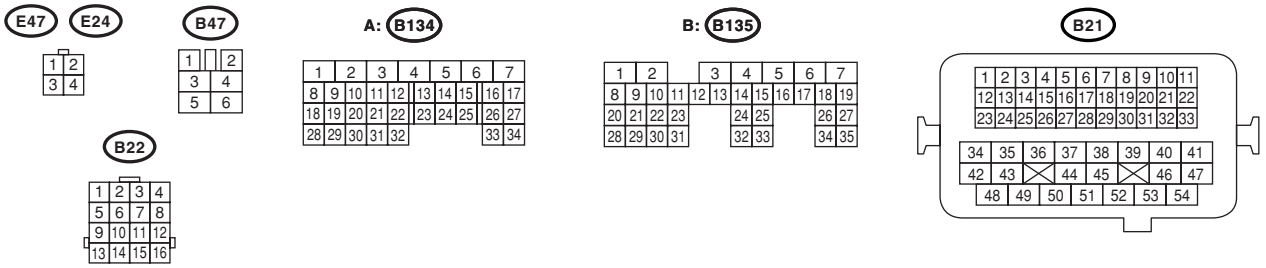

EN-03159

	Step	Check	Yes	No
1	**CHECK HARNESS BETWEEN ECM AND FRONT OXYGEN (A/F) SENSOR CONNECTOR.** 1) Turn the ignition switch to ON. 2) Disconnect the connector from front oxygen (A/F) sensor. 3) Measure the voltage of harness between ECM connector and chassis ground. ***Connector & terminal*** ***(B134) No. 27 (+) — Chassis ground (–):*** ***(B134) No. 34 (+) — Chassis ground (–):***	Is the voltage more than 8 V?	Replace the front oxygen (A/F) sensor. <Ref. to FU(H6DO)-30, Front Oxygen (A/F) Sensor.>	Repair the battery short circuit in harness between ECM and front oxygen (A/F) sensor connector.

AR:DTC P0153 O2 SENSOR CIRCUIT SLOW RESPONSE (BANK 2 SENSOR 1)

DTC DETECTING CONDITION:

- Two consecutive driving cycles with fault
- GENERAL DESCRIPTION <Ref. to GD(H6DO)-79, DTC P0153 O2 SENSOR CIRCUIT SLOW RESPONSE (BANK 2 SENSOR 1), Diagnostic Trouble Code (DTC) Detecting Criteria.>

CAUTION:

After repair or replacement of faulty parts, conduct Clear Memory Mode <Ref. to EN(H6DO)(diag)-44, OPERATION, Clear Memory Mode.> and Inspection Mode <Ref. to EN(H6DO)(diag)-35, PROCEDURE, Inspection Mode.>.

WIRING DIAGRAM:

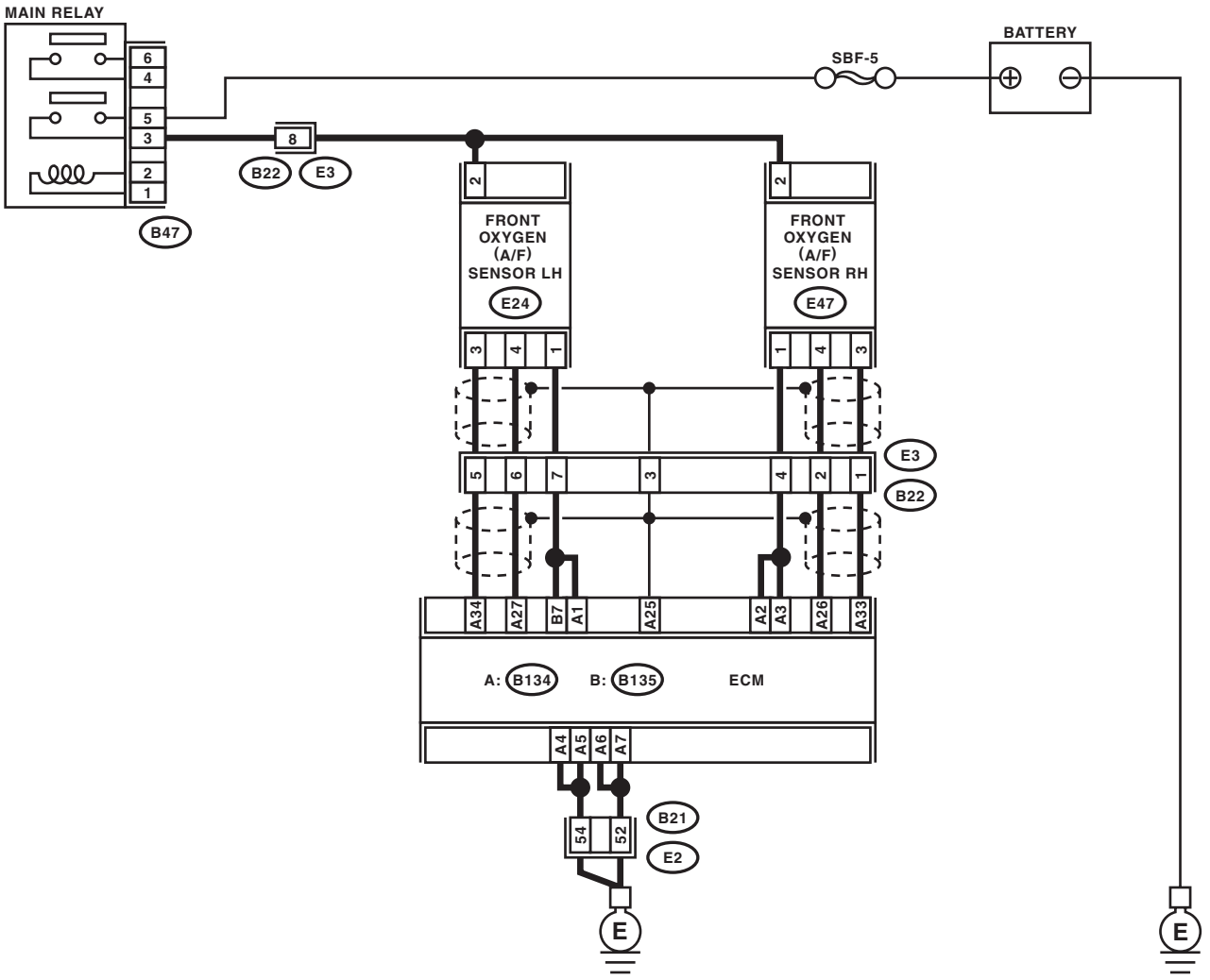

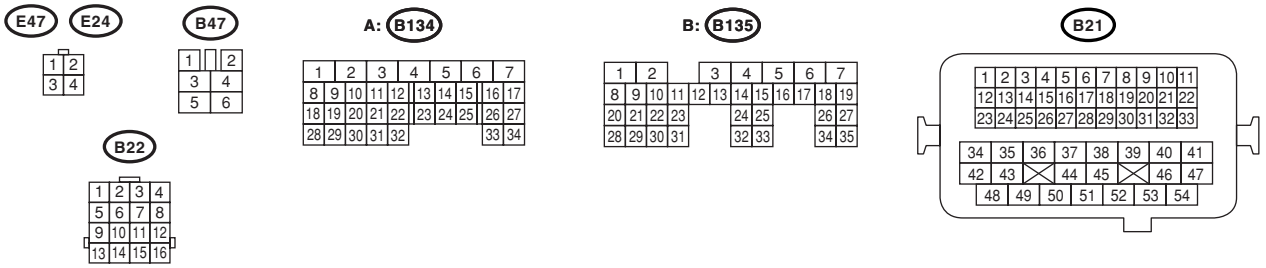

EN-03159

	Step	Check	Yes	No
1	**CHECK FOR ANY OTHER DTC ON DISPLAY.**	Is any other DTC displayed?	Inspect the DTC using “List of Diagnostic Trouble Code (DTC)”. <Ref. to EN(H6DO)(diag)-71, List of Diagnostic Trouble Code (DTC).> NOTE: In this case, it is not necessary to inspect DTC P0133.	Go to step **2.**
2	**CHECK EXHAUST SYSTEM.** NOTE: Check the following items: • Loose installation of front portion of exhaust pipe onto cylinder heads • Loose connection between front exhaust pipe and front catalytic converter • Damage of exhaust pipe resulting in a hole	Is there any fault in exhaust system?	Repair exhaust system.	Replace the front oxygen (A/F) sensor. <Ref. to FU(H6DO)-30, Front Oxygen (A/F) Sensor.>

AS:DTC P0154 O2 SENSOR CIRCUIT NO ACTIVITY DETECTED (BANK 2 SENSOR 1)

DTC DETECTING CONDITION:

- Detect as soon as malfunction occurs.
- GENERAL DESCRIPTION <Ref. to GD(H6DO)-79, DTC P0154 O2 SENSOR CIRCUIT NO ACTIVITY DETECTED (BANK 2 SENSOR 1), Diagnostic Trouble Code (DTC) Detecting Criteria.>

CAUTION:

After repair or replacement of faulty parts, conduct Clear Memory Mode <Ref. to EN(H6DO)(diag)-44, OPERATION, Clear Memory Mode.> and Inspection Mode <Ref. to EN(H6DO)(diag)-35, PROCEDURE, Inspection Mode.>.

WIRING DIAGRAM:

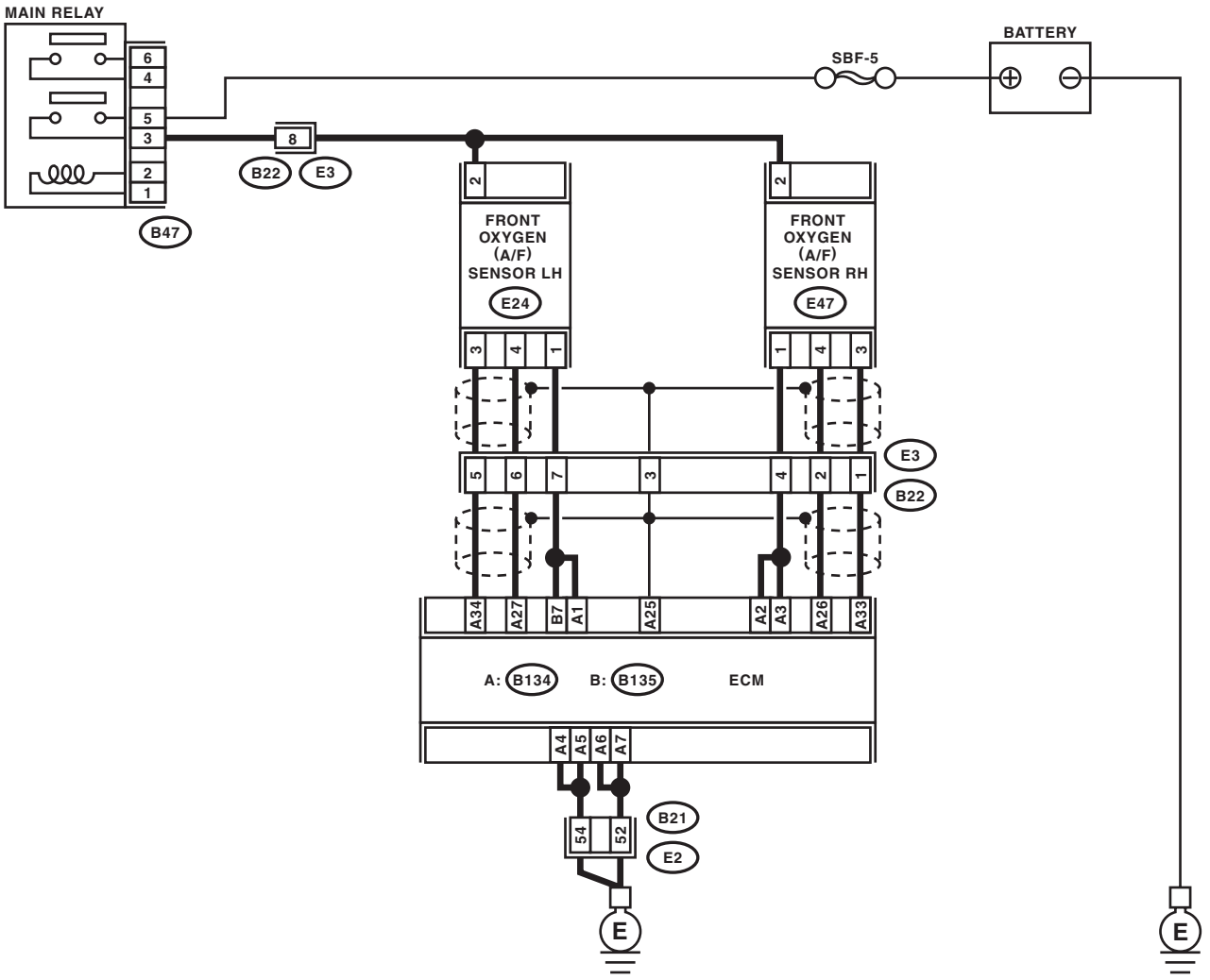

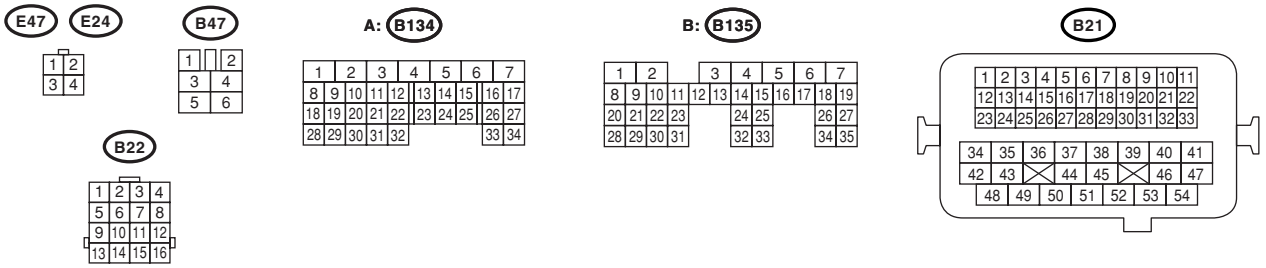

EN-03159

	Step	Check	Yes	No
1	**CHECK HARNESS BETWEEN ECM AND FRONT OXYGEN (A/F) SENSOR CONNECTOR.** 1) Turn the ignition switch to OFF. 2) Disconnect the connectors from ECM and front oxygen (A/F) sensor connector. 3) Measure the resistance of harness between ECM and front oxygen (A/F) sensor connector. ***Connector & terminal*** ***(B134) No. 27 — (E24) No. 4:*** ***(B134) No. 34 — (E24) No. 3:***	Is the resistance less than 1 Ω?	Go to step **2.**	Repair the harness and connector. NOTE: In this case repair the following: • Open circuit in harness between ECM and front oxygen (A/F) sensor connector • Poor contact in front oxygen (A/F) sensor connector • Poor contact in ECM connector
2	**CHECK POOR CONTACT.** Check poor contact in front oxygen (A/F) sensor connector.	Is there poor contact in front oxygen (A/F) sensor connector?	Repair the poor contact in front oxygen (A/F) sensor connector.	Replace the front oxygen (A/F) sensor. <Ref. to FU(H6DO)-30, Front Oxygen (A/F) Sensor.>

AT:DTC P0157 O2 SENSOR CIRCUIT LOW VOLTAGE (BANK 2 SENSOR 2)

DTC DETECTING CONDITION:

- Two consecutive driving cycles with fault
- GENERAL DESCRIPTION <Ref. to GD(H6DO)-79, DTC P0157 O2 SENSOR CIRCUIT LOW VOLTAGE (BANK 2 SENSOR 2), Diagnostic Trouble Code (DTC) Detecting Criteria.>

CAUTION:

After repair or replacement of faulty parts, conduct Clear Memory Mode <Ref. to EN(H6DO)(diag)-44, OPERATION, Clear Memory Mode.> and Inspection Mode <Ref. to EN(H6DO)(diag)-35, PROCEDURE, Inspection Mode.>.

WIRING DIAGRAM:

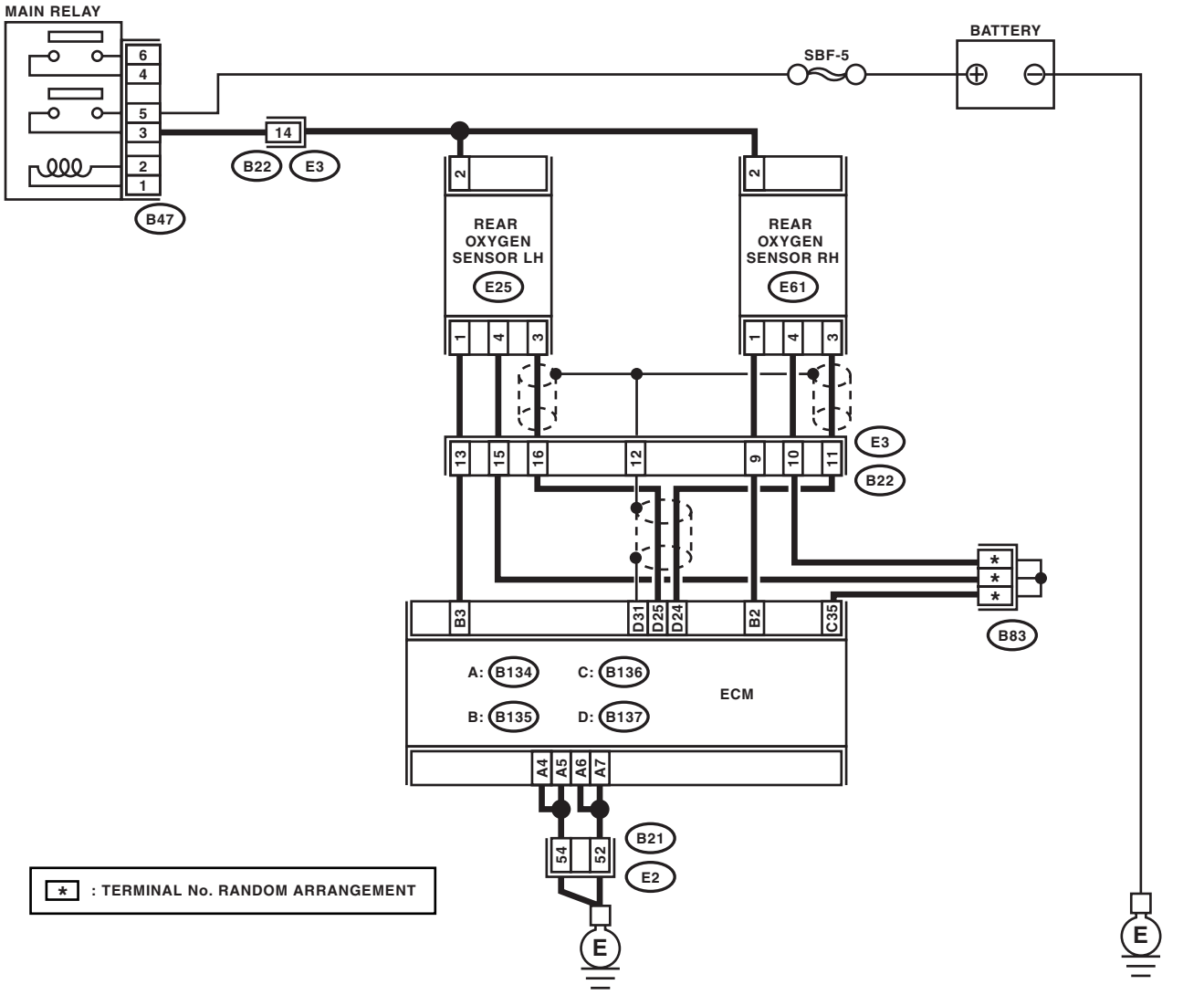

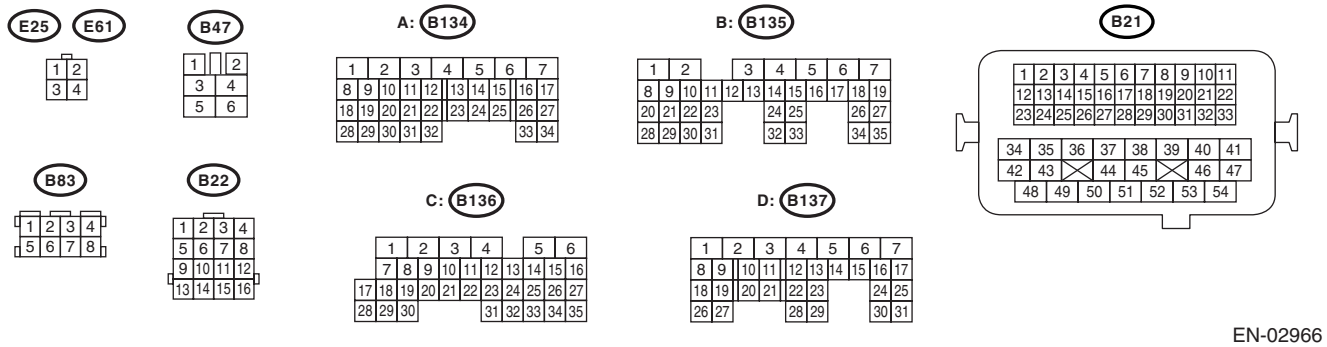

EN-02966

	Step	Check	Yes	No
1	**CHECK FOR ANY OTHER DTC ON DISPLAY.**	Is any other DTC displayed?	Inspect the DTC using “List of Diagnostic Trouble Code (DTC)”. <Ref. to EN(H6DO)(diag)-71, List of Diagnostic Trouble Code (DTC).> NOTE: In this case, it is not necessary to inspect DTC P0137.	Go to step **2.**
2	**CHECK REAR OXYGEN SENSOR DATA.** 1) Warm-up the engine until engine coolant temperature is above 70°C (158°F), and keep the engine speed at 5,000 rpm. 2) Read the data of rear oxygen sensor signal using Subaru Select Monitor or general scan tool. NOTE: • Subaru Select Monitor For detailed operation procedure, refer to the “READ CURRENT DATA SHOWN ON DISPLAY FOR ENGINE”. <Ref. to EN(H6DO)(diag)-26, Subaru Select Monitor.> • General scan tool For detailed operation procedure, refer to the general scan tool instruction manual.	Is the voltage more than 490 mV?	Go to step **5.**	Go to step **3.**
3	**CHECK HARNESS BETWEEN ECM AND REAR OXYGEN SENSOR CONNECTOR.** 1) Turn the ignition switch to OFF. 2) Disconnect the connector from ECM and rear oxygen sensor. 3) Measure the resistance in harness between ECM and rear oxygen sensor connector. ***Connector & terminal*** ***(B137) No. 25 — (E25) No. 3:*** ***(B136) No. 35 — (E25) No. 4:***	Is the resistance more than 3 Ω?	Repair the open circuit in harness between ECM and rear oxygen sensor connector.	Go to step **4.**
4	**CHECK HARNESS BETWEEN REAR OXYGEN SENSOR AND ECM CONNECTOR.** 1) Turn the ignition switch to OFF. 2) Disconnect the connector from rear oxygen sensor. 3) Turn the ignition switch to ON. 4) Measure the voltage between rear oxygen sensor harness connector and chassis ground. ***Connector & terminal*** ***(E25) No. 3 (+) — Chassis ground (−):***	Is the voltage 0.2 — 0.5 V?	Replace the rear oxygen sensor. <Ref. to FU(H6DO)-32, Rear Oxygen Sensor.>	Repair the harness and connector. NOTE: In this case repair the following: • Open circuit in harness between rear oxygen sensor and ECM connector • Poor contact in rear oxygen sensor connector • Poor contact in ECM connector

	Step	Check	Yes	No
5	**CHECK EXHAUST SYSTEM.** Check exhaust system parts. NOTE: Check the following items: • Loose part of exhaust system and incomplete installation • Damage (crack, hole etc.) of parts • Looseness and ill fitting of parts between front oxygen (A/F) sensor and rear oxygen sensor	Is there any fault in exhaust system?	Repair or replace the faulty part.	Replace the rear oxygen sensor. <Ref. to FU(H6DO)-32, Rear Oxygen Sensor.>

AU:DTC P0158 O2 SENSOR CIRCUIT HIGH VOLTAGE (BANK 2 SENSOR 2)

DTC DETECTING CONDITION:

- Two consecutive driving cycles with fault
- GENERAL DESCRIPTION <Ref. to GD(H6DO)-79, DTC P0158 O2 SENSOR CIRCUIT HIGH VOLTAGE (BANK 2 SENSOR 2), Diagnostic Trouble Code (DTC) Detecting Criteria.>

CAUTION:

After repair or replacement of faulty parts, conduct Clear Memory Mode <Ref. to EN(H6DO)(diag)-44, OPERATION, Clear Memory Mode.> and Inspection Mode <Ref. to EN(H6DO)(diag)-35, PROCEDURE, Inspection Mode.>.

WIRING DIAGRAM:

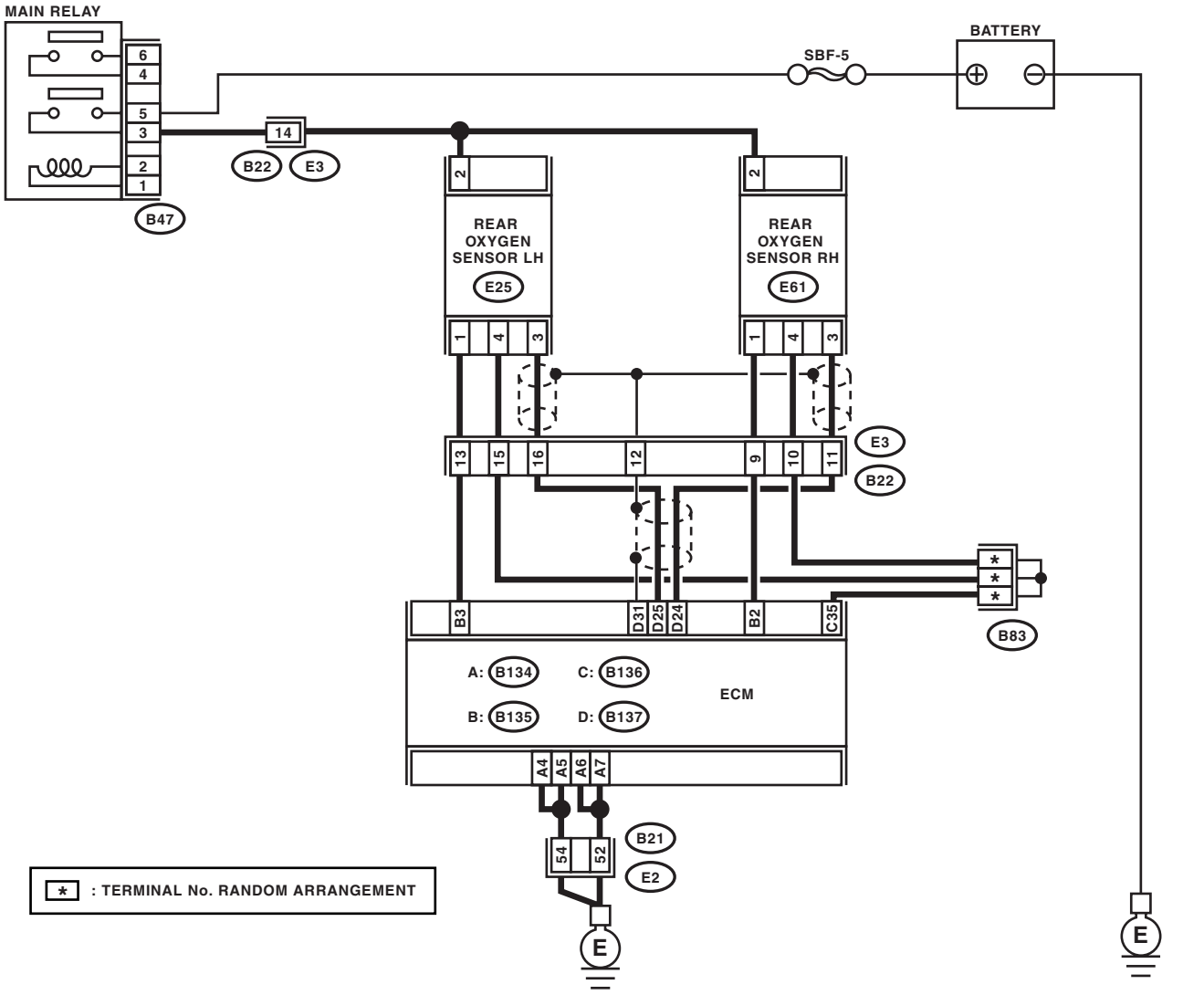

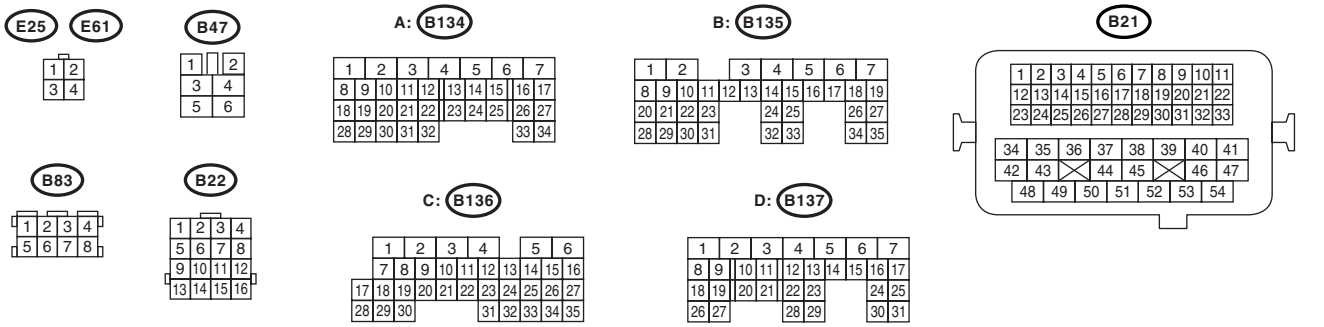

EN-02966

	Step	Check	Yes	No
1	**CHECK FOR ANY OTHER DTC ON DISPLAY.**	Is any other DTC displayed?	Inspect the DTC using “List of Diagnostic Trouble Code (DTC)”. <Ref. to EN(H6DO)(diag)-71, List of Diagnostic Trouble Code (DTC).> NOTE: In this case, it is not necessary to inspect DTC P0138.	Go to step **2.**
2	**CHECK REAR OXYGEN SENSOR DATA.** 1) Warm-up the engine until engine coolant temperature is above 70°C (158°F), and lower the engine speed rapidly from 5,000 rpm. 2) Read the data of rear oxygen sensor signal using Subaru Select Monitor or general scan tool. NOTE: • Subaru Select Monitor For detailed operation procedure, refer to the “READ CURRENT DATA SHOWN ON DISPLAY FOR ENGINE”. <Ref. to EN(H6DO)(diag)-26, Subaru Select Monitor.> • General scan tool For detailed operation procedure, refer to the general scan tool instruction manual.	Is the voltage less than 250 mV?	Go to step **5.**	Go to step **3.**
3	**CHECK HARNESS BETWEEN ECM AND REAR OXYGEN SENSOR CONNECTOR.** 1) Turn the ignition switch to OFF. 2) Disconnect the connector from ECM and rear oxygen sensor. 3) Measure the resistance in harness between ECM and rear oxygen sensor connector. ***Connector & terminal*** ***(B137) No. 25 — (E25) No. 3:*** ***(B136) No. 35 — (E25) No. 4:***	Is the resistance more than 3 Ω?	Repair the open circuit in harness between ECM and rear oxygen sensor connector.	Go to step **4.**
4	**CHECK HARNESS BETWEEN REAR OXYGEN SENSOR AND ECM CONNECTOR.** 1) Turn the ignition switch to OFF. 2) Disconnect the connector from rear oxygen sensor. 3) Turn the ignition switch to ON. 4) Measure the voltage between rear oxygen sensor harness connector and chassis ground. ***Connector & terminal*** ***(E25) No. 3 (+) — Chassis ground (−):***	Is the voltage 0.2 — 0.5 V?	Replace the rear oxygen sensor. <Ref. to FU(H6DO)-32, Rear Oxygen Sensor.>	Repair the harness and connector. NOTE: In this case repair the following: • Open circuit in harness between rear oxygen sensor and ECM connector • Poor contact in rear oxygen sensor connector • Poor contact in ECM connector

	Step	Check	Yes	No
5	**CHECK EXHAUST SYSTEM.** Check exhaust system parts. NOTE: Check the following items: • Loose part of exhaust system and incomplete installation • Damage (crack, hole etc.) of parts • Looseness and ill fitting of parts between front oxygen (A/F) sensor and rear oxygen sensor	Is there any fault in exhaust system?	Repair or replace the faulty part.	Replace the rear oxygen sensor. <Ref. to FU(H6DO)-32, Rear Oxygen Sensor.>

AV:DTC P0159 O2 SENSOR CIRCUIT SLOW RESPONSE (BANK 2 SENSOR 2)

DTC DETECTING CONDITION:

- Two consecutive driving cycles with fault
- GENERAL DESCRIPTION <Ref. to GD(H6DO)-79, DTC P0159 O2 SENSOR CIRCUIT SLOW RESPONSE (BANK 2 SENSOR 2), Diagnostic Trouble Code (DTC) Detecting Criteria.>

CAUTION:

After repair or replacement of faulty parts, conduct Clear Memory Mode <Ref. to EN(H6DO)(diag)-44, OPERATION, Clear Memory Mode.> and Inspection Mode <Ref. to EN(H6DO)(diag)-35, PROCEDURE, Inspection Mode.>.

WIRING DIAGRAM:

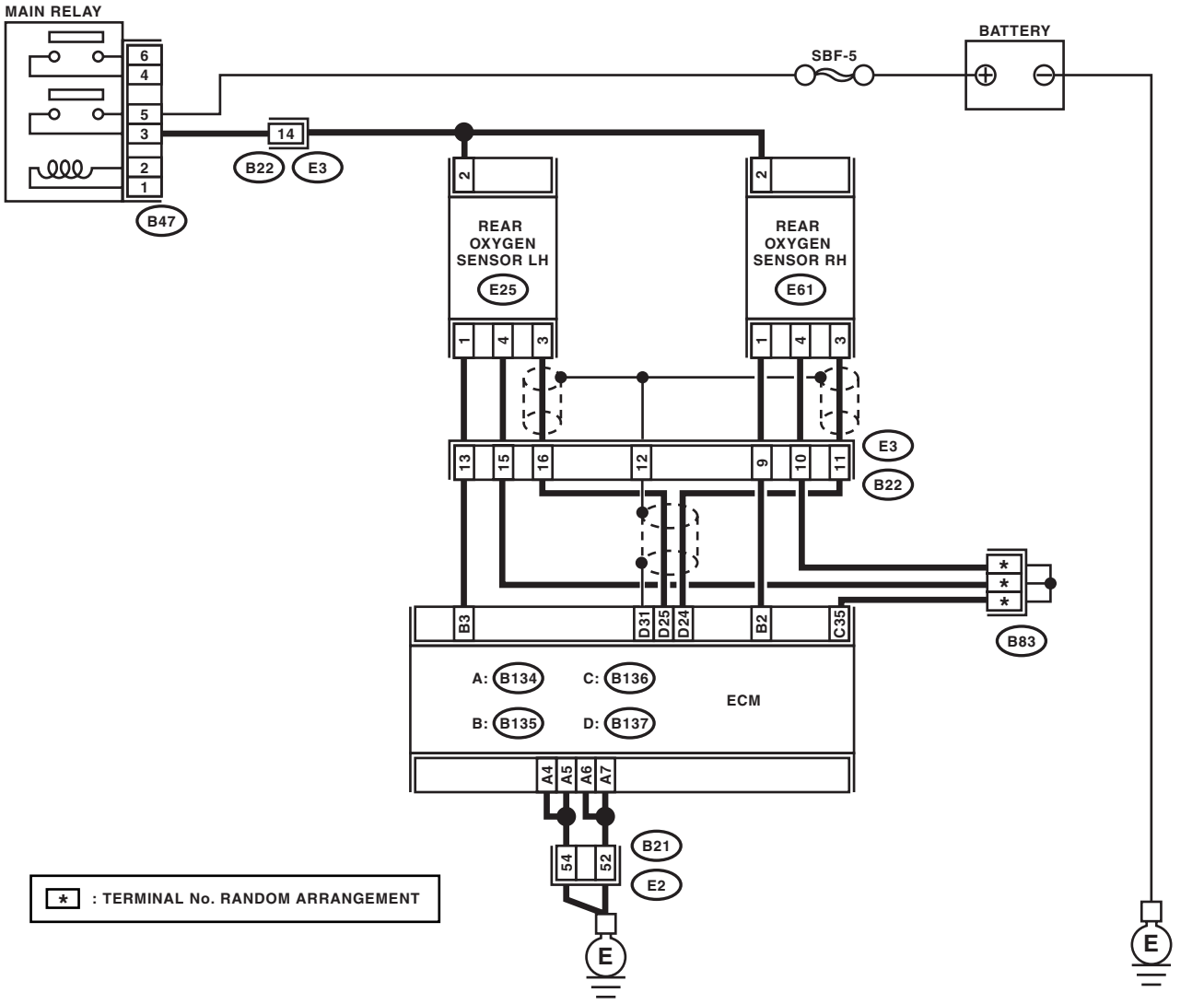

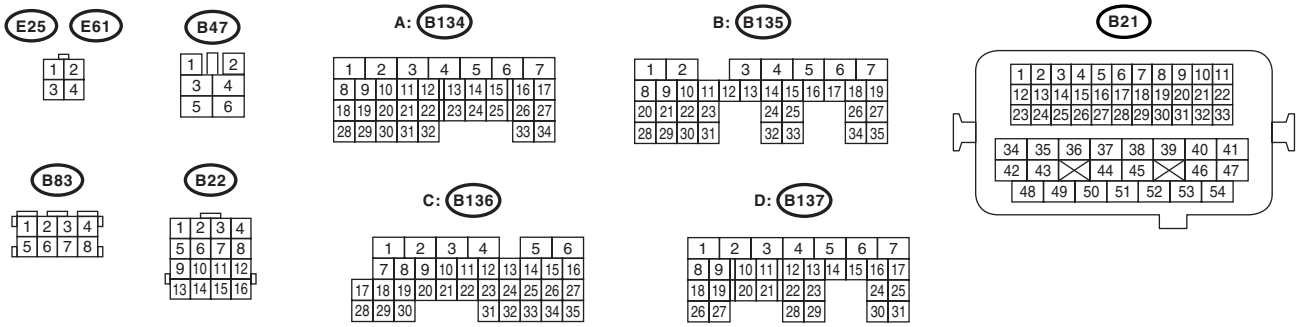

EN-02966

	Step	Check	Yes	No
1	**CHECK FOR ANY OTHER DTC ON DISPLAY.**	Is any other DTC displayed?	Check DTC using "List of Diagnostic Trouble Code (DTC)". <Ref. to EN(H6DO)(diag)-71, List of Diagnostic Trouble Code (DTC).> NOTE: In this case, it is not necessary to inspect DTC P0159.	Go to step **2.**
2	**CHECK HARNESS BETWEEN ECM AND REAR OXYGEN SENSOR CONNECTOR.** 1) Turn the ignition switch to OFF. 2) Disconnect the connectors from ECM and rear oxygen sensor. 3) Measure the resistance of harness between ECM and rear oxygen sensor connector. ***Connector & terminal*** ***(B137) No. 25 — (E25) No. 3:***	Is the resistance less than 1 Ω?	Go to step **3.**	Repair harness and connector. NOTE: In this case, repair the following: • Open circuit in harness between rear oxygen sensor and ECM connector
3	**CHECK HARNESS BETWEEN REAR OXYGEN SENSOR AND ECM CONNECTOR.** Measure the resistance between rear oxygen sensor harness connector and chassis ground. ***Connector & terminal*** ***(B19) No. 3 — Chassis ground:***	Is the resistance more than 1 MΩ?	Go to step **4.**	Repair short circuit to ground in harness between rear oxygen sensor and ECM connector.
4	**CHECK REAR OXYGEN SENSOR DATA.** Measure the resistance between connector terminals of rear oxygen sensor. ***terminals*** ***No. 3 — No. 4:***	Is the resistance less than 1 Ω?	Replace the rear oxygen sensor. <Ref. to FU(H6DO)-32, Rear Oxygen Sensor.>	Repair connector. Poor contact in rear oxygen sensor connector.

AW:DTC P0171 SYSTEM TOO LEAN (BANK 1)

Refer to DTC P0175 for diagnostic procedure. <Ref. to EN(H6DO)(diag)-185, DTC P0175 SYSTEM TOO RICH (BANK 2), Diagnostic Procedure with Diagnostic Trouble Code (DTC).>

AX:DTC P0172 SYSTEM TOO RICH (BANK 1)

Refer to DTC P0175 for diagnostic procedure. <Ref. to EN(H6DO)(diag)-185, DTC P0175 SYSTEM TOO RICH (BANK 2), Diagnostic Procedure with Diagnostic Trouble Code (DTC).>

AY:DTC P0174 SYSTEM TOO LEAN (BANK 2)

Refer to DTC P0175 for diagnostic procedure. <Ref. to EN(H6DO)(diag)-185, DTC P0175 SYSTEM TOO RICH (BANK 2), Diagnostic Procedure with Diagnostic Trouble Code (DTC).>

AZ:DTC P0175 SYSTEM TOO RICH (BANK 2)

DTC DETECTING CONDITION:

- Two consecutive driving cycles with fault
- GENERAL DESCRIPTION <Ref. to GD(H6DO)-83, DTC P0175 SYSTEM TOO RICH (BANK 2), Diagnostic Trouble Code (DTC) Detecting Criteria.>

TROUBLE SYMPTOM:

- Erroneous idling
- Engine stalls.
- Poor driving performance

CAUTION:
After repair or replacement of faulty parts, conduct Clear Memory Mode <Ref. to EN(H6DO)(diag)-44, OPERATION, Clear Memory Mode.> and Inspection Mode <Ref. to EN(H6DO)(diag)-35, PROCEDURE, Inspection Mode.>.

	Step	Check	Yes	No
1	**CHECK EXHAUST SYSTEM.**	Are there holes or loose bolts on exhaust system?	Repair exhaust system.	Go to step **2.**
2	**CHECK AIR INTAKE SYSTEM.**	Are there holes, loose bolts or disconnection of hose on air intake system?	Repair air intake system.	Go to step **3.**
3	**CHECK FUEL PRESSURE.** **Warning:** **• Place "NO FIRE" signs near the working area.** **• Be careful not to spill fuel.** Measure the fuel pressure while disconnecting pressure regulator vacuum hose from intake manifold. <Ref. to ME(H6DO)-27, INSPECTION, Fuel Pressure.> **Warning:** **Release fuel pressure before removing the fuel pressure gauge.**	Is fuel pressure 333 — 363 kPa (3.4 — 3.7 kg/cm^2, 48 — 53 psi)?	Go to step **4.**	Repair the following items. Fuel pressure is too high: • Clogged fuel line or bent hose Fuel pressure is too low: • Improper fuel pump discharge • Clogged fuel supply line
4	**CHECK FUEL PRESSURE.** After connecting the pressure regulator vacuum hose, measure fuel pressure. <Ref. to ME(H6DO)-27, INSPECTION, Fuel Pressure.> **Warning:** **Release fuel pressure before removing the fuel pressure gauge.** NOTE: If out of specification as measured at this step, check or replace pressure regulator and pressure regulator vacuum hose.	Is fuel pressure 279 — 309 kPa (2.85 — 3.15 kg/cm^2, 40 — 45 psi)?	Go to step **5.**	Repair the following items. Fuel pressure is too high: • Faulty pressure regulator • Clogged fuel line or bent hose Fuel pressure is too low: • Faulty pressure regulator • Improper fuel pump discharge • Clogged fuel supply line

	Step	Check	Yes	No
5	**CHECK ENGINE COOLANT TEMPERATURE SENSOR.** 1) Start the engine and warm-up completely. 2) Read the data of engine coolant temperature sensor signal using Subaru Select Monitor. NOTE: • Subaru Select Monitor For detailed operation procedure, refer to the "READ CURRENT DATA SHOWN ON DISPLAY FOR ENGINE". <Ref. to EN(H6DO)(diag)-26, Subaru Select Monitor.> • General scan tool For detailed operation procedure, refer to the general scan tool instruction manual.	Is the engine coolant temperature more than 60°C (140°F)?	Go to step **6.**	Replace the engine coolant temperature sensor. <Ref. to FU(H6DO)-19, Engine Coolant Temperature Sensor.>
6	**CHECK MASS AIR FLOW AND INTAKE AIR TEMPERATURE SENSOR SIGNAL.** 1) Start and warm-up the engine until engine coolant temperature is greater than 60°C (140°F). 2) Shift the select lever to "N" or "P" range. 3) Turn the A/C switch to OFF. 4) Turn all accessory switches to OFF. 5) Read the data of mass air flow and intake air temperature sensor signal using Subaru Select Monitor. NOTE: For detailed operation procedures, refer to the "READ CURRENT DATA SHOWN ON DISPLAY FOR ENGINE". <Ref. to EN(H6DO)(diag)-26, Subaru Select Monitor.>	Is the measurement value 3.1 — 4.3 g/s (0.41 — 0.57 lb/m)?	Go to step **7.**	Replace the mass air flow and intake air temperature sensor. <Ref. to FU(H6DO)-25, Mass Air Flow and Intake Air Temperature Sensor.>
7	**CHECK MASS AIR FLOW AND INTAKE AIR TEMPERATURE SENSOR.** 1) Start and warm-up the engine until engine coolant temperature is greater than 60°C (140°F). 2) Place the shift lever in neutral position. 3) Turn the A/C switch to OFF. 4) Turn all accessory switches to OFF. 5) Open the hood. 6) Measure the ambient temperature. 7) Read the data of mass air flow and intake air temperature sensor signal using Subaru Select Monitor or general scan tool. NOTE: • Subaru Select Monitor For detailed operation procedure, refer to the "READ CURRENT DATA SHOWN ON DISPLAY FOR ENGINE". <Ref. to EN(H6DO)(diag)-26, Subaru Select Monitor.> • General scan tool For detailed operation procedure, refer to the general scan tool instruction manual.	Subtract the ambient temperature from intake air temperature, and is the value from −10°C (14°F) to 50°C (122°F)?	Replace the ECM. <Ref. to FU(H6DO)-34, Engine Control Module (ECM).>	Check mass air flow and intake air temperature sensor. <Ref. to FU(H6DO)-25, Mass Air Flow and Intake Air Temperature Sensor.>

BA:DTC P0181 FUEL TEMPERATURE SENSOR “A” CIRCUIT RANGE/PERFORMANCE

DTC DETECTING CONDITION:

- Two consecutive driving cycles with fault
- GENERAL DESCRIPTION <Ref. to GD(H6DO)-84, DTC P0181 FUEL TEMPERATURE SENSOR “A” CIRCUIT RANGE/PERFORMANCE, Diagnostic Trouble Code (DTC) Detecting Criteria.>

CAUTION:

After repair or replacement of faulty parts, conduct Clear Memory Mode <Ref. to EN(H6DO)(diag)-44, OPERATION, Clear Memory Mode.> and Inspection Mode <Ref. to EN(H6DO)(diag)-35, PROCEDURE, Inspection Mode.>.

WIRING DIAGRAM:

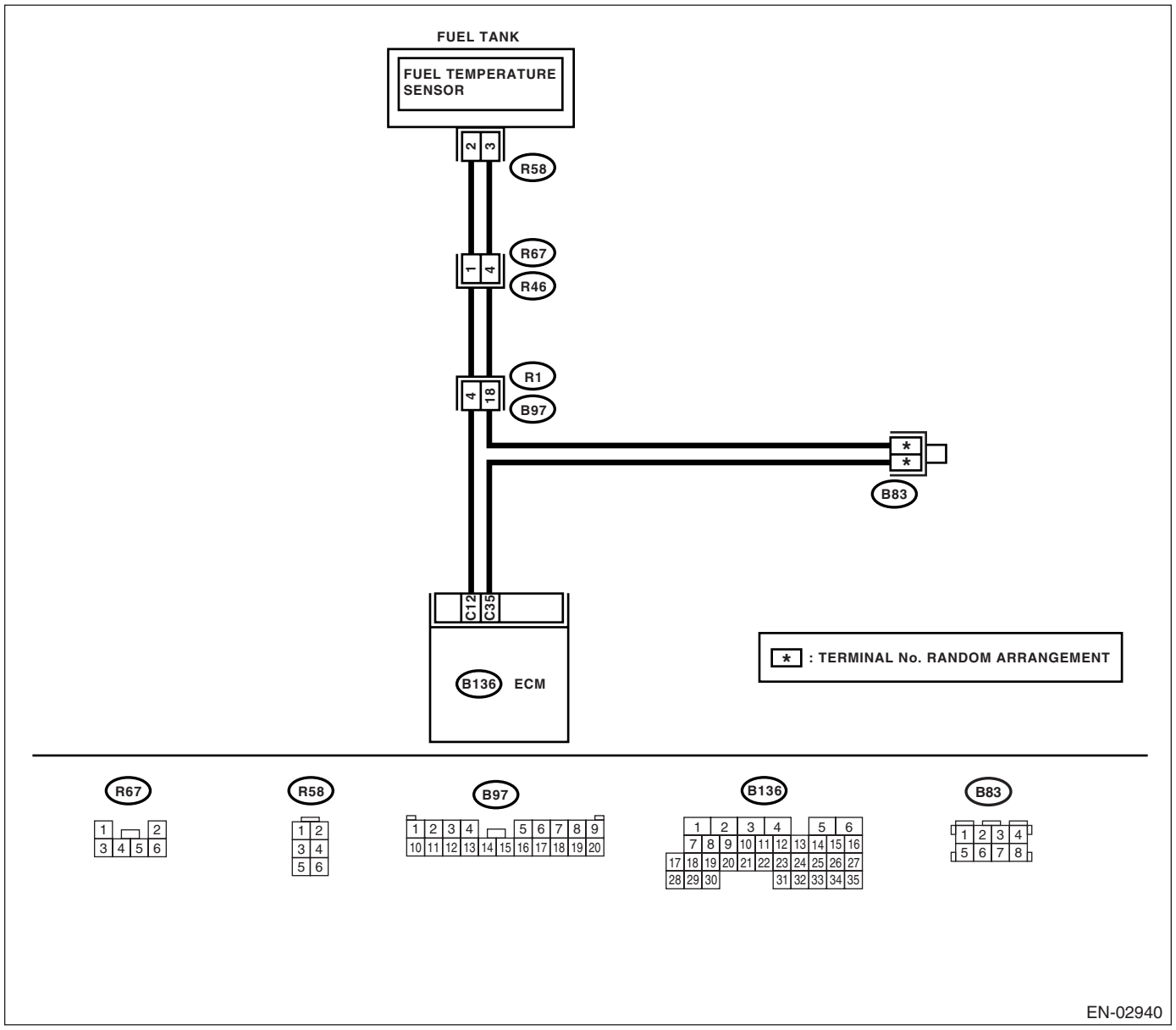

Step		Check	Yes	No
1	**CHECK FOR ANY OTHER DTC ON DISPLAY.**	Is any other DTC displayed?	Inspect the relevant DTC using "List of Diagnostic Trouble Codes (DTC)". <Ref. to EN(H6DO)(diag)-71, List of Diagnostic Trouble Code (DTC).> NOTE: In this case, it is not necessary to inspect DTC P0181.	Replace the fuel temperature sensor. <Ref. to EC(H6DO)-8, Fuel Temperature Sensor.>

BB:DTC P0182 FUEL TEMPERATURE SENSOR “A” CIRCUIT LOW INPUT

DTC DETECTING CONDITION:

- Detect as soon as malfunction occurs.
- GENERAL DESCRIPTION <Ref. to GD(H6DO)-87, DTC P0182 FUEL TEMPERATURE SENSOR “A” CIRCUIT LOW INPUT, Diagnostic Trouble Code (DTC) Detecting Criteria.>

CAUTION:
After repair or replacement of faulty parts, conduct Clear Memory Mode <Ref. to EN(H6DO)(diag)-44, OPERATION, Clear Memory Mode.> and Inspection Mode <Ref. to EN(H6DO)(diag)-35, PROCEDURE, Inspection Mode.>.

WIRING DIAGRAM:

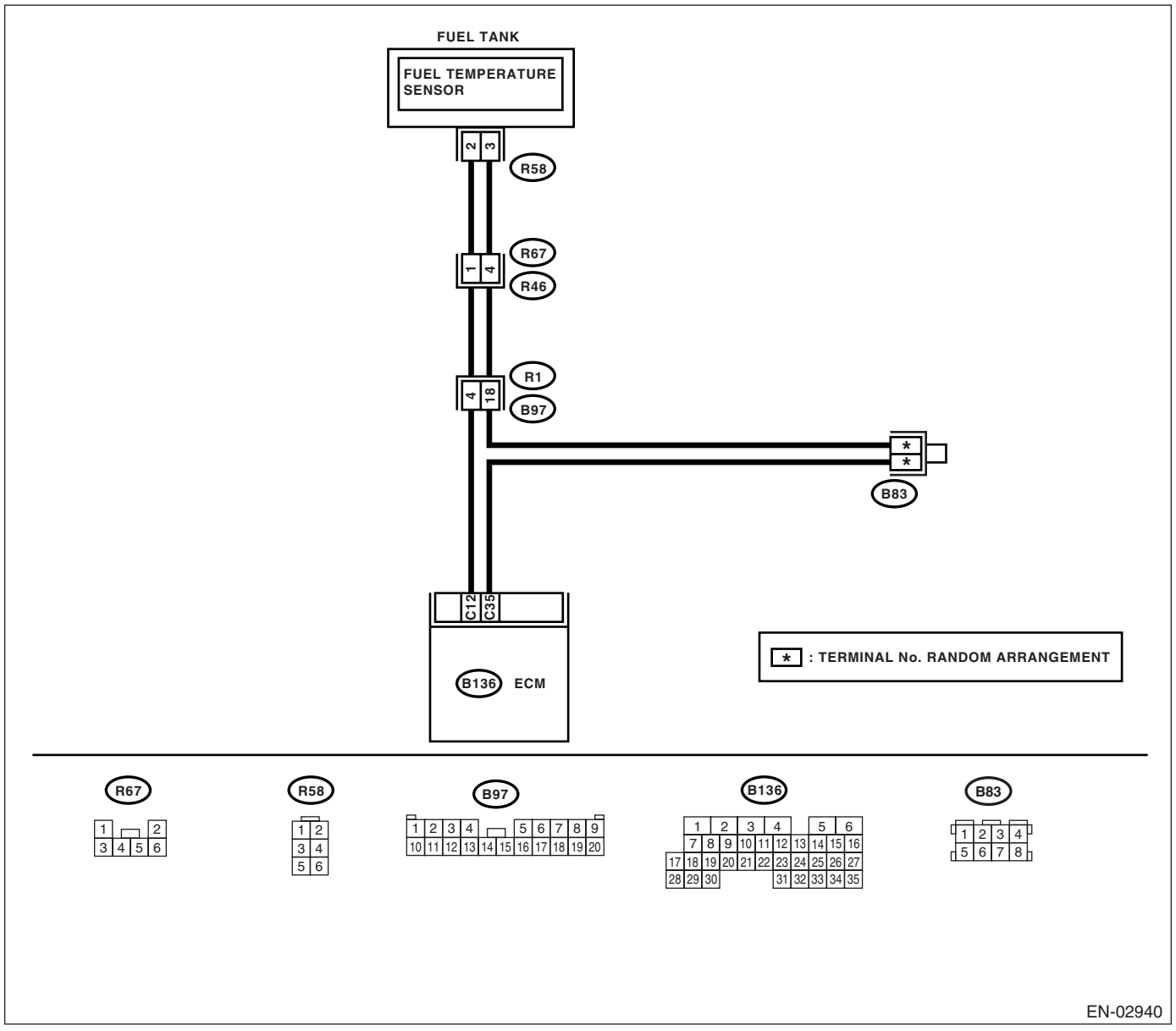

	Step	Check	Yes	No
1	**CHECK CURRENT DATA.** 1) Start the engine. 2) Read the data of fuel temperature sensor signal using Subaru Select Monitor. NOTE: • Subaru Select Monitor For detailed operation procedure, refer to "READ CURRENT DATA FOR ENGINE". <Ref. to EN(H6DO)(diag)-26, Subaru Select Monitor.>	Is the temperature more than 120°C (248°F)?	Go to step **2.**	The malfunction indicator light may light up, however, the circuit is returned to the normal status at the moment.
2	**CHECK CURRENT DATA.** 1) Turn the ignition switch to OFF. 2) Remove the access hole lid. 3) Disconnect the connector from fuel pump. 4) Turn the ignition switch to ON. 5) Read the data of fuel temperature sensor signal using Subaru Select Monitor. NOTE: • Subaru Select Monitor For detailed operation procedure, refer to "READ CURRENT DATA FOR ENGINE". <Ref. to EN(H6DO)(diag)-26, Subaru Select Monitor.>	Is the temperature less than −40°C (−40°F)?	Replace the fuel temperature sensor. <Ref. to EC(H6DO)-8, Fuel Temperature Sensor.>	Repair short circuit to ground in harness between fuel pump and ECM connector.

BC:DTC P0183 FUEL TEMPERATURE SENSOR “A” CIRCUIT HIGH INPUT

DTC DETECTING CONDITION:

- Detect as soon as malfunction occurs.
- GENERAL DESCRIPTION <Ref. to GD(H6DO)-89, DTC P0183 FUEL TEMPERATURE SENSOR “A” CIRCUIT HIGH INPUT, Diagnostic Trouble Code (DTC) Detecting Criteria.>

CAUTION:
After repair or replacement of faulty parts, conduct Clear Memory Mode <Ref. to EN(H6DO)(diag)-44, OPERATION, Clear Memory Mode.> and Inspection Mode <Ref. to EN(H6DO)(diag)-35, PROCEDURE, Inspection Mode.>.

WIRING DIAGRAM:

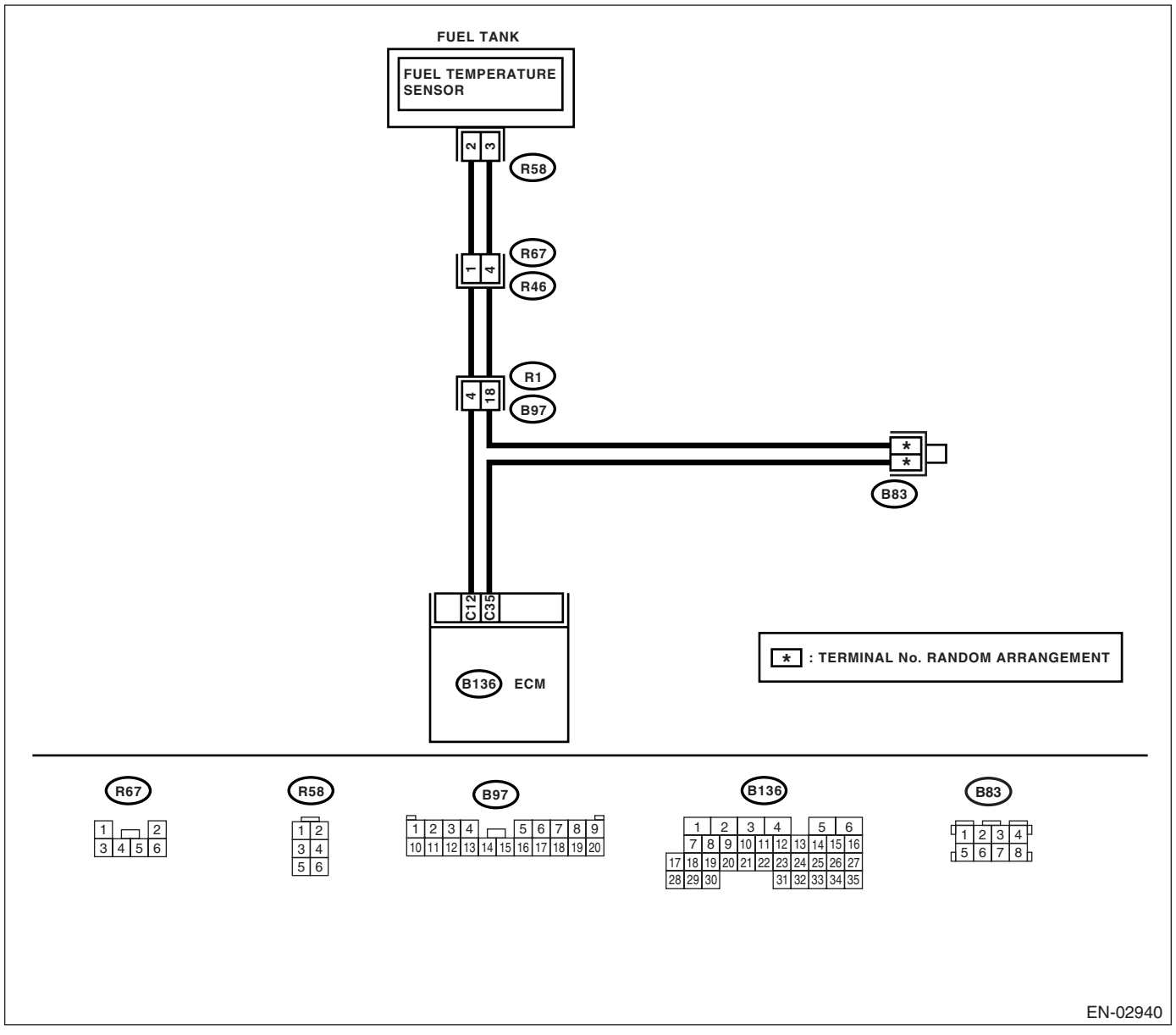

	Step	Check	Yes	No
1	**CHECK CURRENT DATA.** 1) Start the engine. 2) Read the data of fuel temperature sensor signal using Subaru Select Monitor. NOTE: • Subaru Select Monitor For detailed operation procedure, refer to "READ CURRENT DATA FOR ENGINE". <Ref. to EN(H6DO)(diag)-26, Subaru Select Monitor.>	Is the temperature less than –40°C (–40°F)?	Go to step **2.**	Repair poor contact. NOTE: In this case, repair the following: • Poor contact in fuel pump connector • Poor contact in ECM connector • Poor contact in coupling connector • Poor contact in joint connector
2	**CHECK HARNESS BETWEEN FUEL TEMPERATURE SENSOR AND ECM CONNECTOR.** 1) Turn the ignition switch to OFF. 2) Remove the access hole lid. 3) Disconnect the connector from fuel pump. 4) Measure the voltage between fuel pump connector and chassis ground. ***Connector & terminal*** ***(R58) No. 2 (+) — Chassis ground (–):***	Is the voltage more than 10 V?	Repair short circuit to battery in harness between ECM and fuel pump connector.	Go to step **3.**
3	**CHECK HARNESS BETWEEN FUEL TEMPERATURE SENSOR AND ECM CONNECTOR.** 1) Turn the ignition switch to ON. 2) Measure the voltage between fuel pump connector and chassis ground. ***Connector & terminal*** ***(R58) No. 2 (+) — Chassis ground (–):***	Is the voltage more than 10 V?	Repair short circuit to battery in harness between ECM and fuel pump connector.	Go to step **4.**
4	**CHECK HARNESS BETWEEN FUEL TEMPERATURE SENSOR AND ECM CONNECTOR.** Measure the voltage between fuel pump connector and chassis ground. ***Connector & terminal*** ***(R58) No. 2 (+) — Chassis ground (–):***	Is the voltage more than 4 V?	Go to step **5.**	Repair harness and connector. NOTE: In this case, repair the following: • Open circuit in harness between ECM and fuel pump connector • Poor contact in fuel pump connector • Poor contact in ECM connector • Poor contact in coupling connector

	Step	Check	Yes	No
5	**CHECK HARNESS BETWEEN FUEL TEMPERATURE SENSOR AND ECM CONNECTOR.** 1) Turn the ignition switch to OFF. 2) Disconnect the connector from ECM. 3) Measure the resistance of harness between fuel pump connector and ECM. ***Connector & terminal*** ***(R58) No. 3 — (B136) No. 35:***	Is the resistance less than 1 Ω?	Replace the fuel temperature sensor. <Ref. to EC(H6DO)-8, Fuel Temperature Sensor.>	Repair harness and connector. NOTE: In this case, repair the following: • Open circuit in harness between ECM and fuel pump connector • Poor contact in fuel pump connector • Poor contact in ECM connector • Poor contact in coupling connector • Poor contact in joint connector

BD:DTC P0196 ENGINE OIL TEMPERATURE SENSOR CIRCUIT RANGE/PERFORMANCE

DTC DETECTING CONDITION:

- Two consecutive driving cycles with fault
- GENERAL DESCRIPTION <Ref. to GD(H6DO)-91, DTC P0196 ENGINE OIL TEMPERATURE SENSOR CIRCUIT RANGE/PERFORMANCE, Diagnostic Trouble Code (DTC) Detecting Criteria.>

TROUBLE SYMPTOM:

- Hard to start
- Erroneous idling
- Poor driving performance

CAUTION:
After repair or replacement of faulty parts, conduct Clear Memory Mode <Ref. to EN(H6DO)(diag)-44, OPERATION, Clear Memory Mode.> and Inspection Mode <Ref. to EN(H6DO)(diag)-35, PROCEDURE, Inspection Mode.>.

WIRING DIAGRAM:

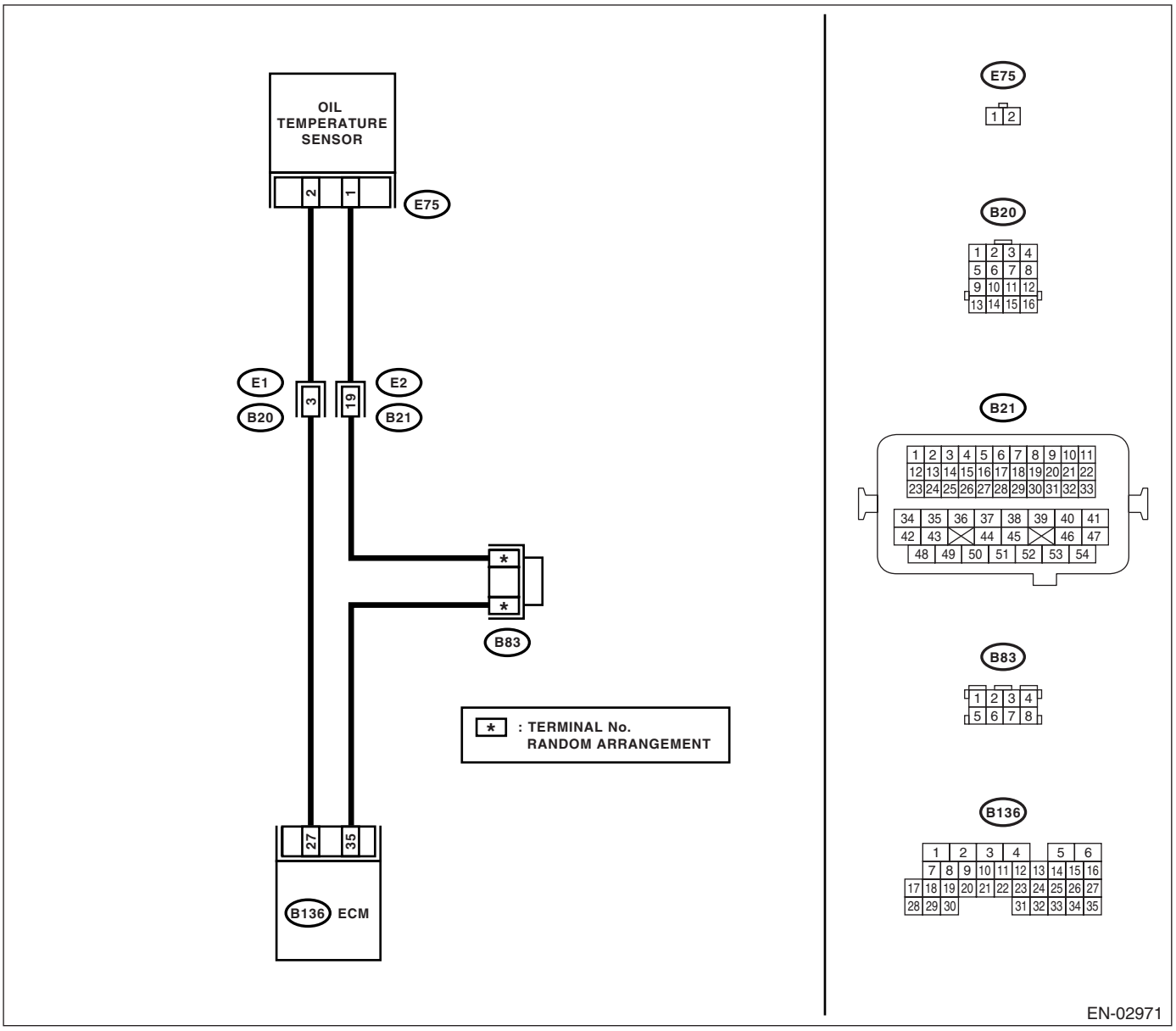

Step		Check	Yes	No
1	**CHECK FOR ANY OTHER DTC ON DISPLAY.**	Is any other DTC displayed?	Inspect the relevant DTC using "List of Diagnostic Trouble Code (DTC)". <Ref. to EN(H6DO)(diag)-71, List of Diagnostic Trouble Code (DTC).> NOTE: In this case, checking DTC P0196 is not necessary.	Replace the oil temperature sensor. <Ref. to FU(H6DO)-29, Oil Temperature Sensor.>

BE:DTC P0197 ENGINE OIL TEMPERATURE SENSOR CIRCUIT LOW

DTC DETECTING CONDITION:

- Detect as soon as malfunction occurs.
- GENERAL DESCRIPTION <Ref. to GD(H6DO)-93, DTC P0197 ENGINE OIL TEMPERATURE SENSOR CIRCUIT LOW, Diagnostic Trouble Code (DTC) Detecting Criteria.>

TROUBLE SYMPTOM:

- Hard to start
- Erroneous idling
- Poor driving performance

CAUTION:

After repair or replacement of faulty parts, conduct Clear Memory Mode <Ref. to EN(H6DO)(diag)-44, OPERATION, Clear Memory Mode.> and Inspection Mode <Ref. to EN(H6DO)(diag)-35, PROCEDURE, Inspection Mode.>.

WIRING DIAGRAM:

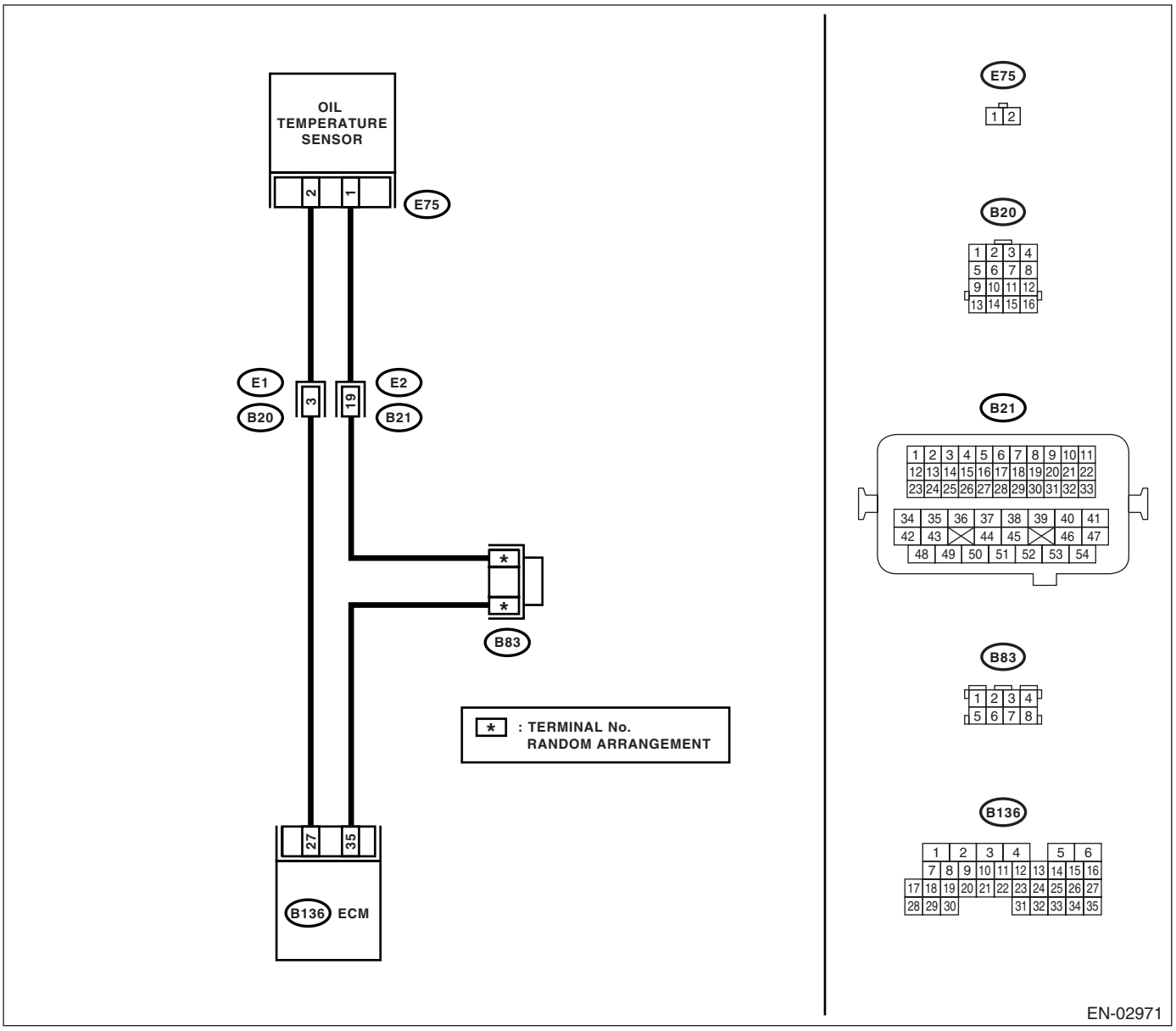

	Step	Check	Yes	No
1	**CHECK HARNESS BETWEEN OIL TEMPERATURE SENSOR AND ECM CONNECTOR.** 1) Disconnect the ECM connector and oil temperature sensor connector. 2) Measure the resistance of harness between oil temperature sensor connector and engine ground. ***Connector & terminal*** ***(B136) No. 27 — Engine ground:*** ***(B136) No. 35 — Engine ground:***	Is the resistance more than 1 MΩ?	Go to step **2.**	Repair the ground short circuit between ECM and oil temperature sensor connector.
2	**CHECK POOR CONTACT.** Check poor contact in oil temperature sensor connector.	Is there poor contact in oil temperature sensor connector?	Repair the poor contact.	Replace the oil temperature sensor. <Ref. to FU(H6DO)-29, Oil Temperature Sensor.>

BF:DTC P0198 ENGINE OIL TEMPERATURE SENSOR CIRCUIT HIGH

DTC DETECTING CONDITION:

- Detect as soon as malfunction occurs.
- GENERAL DESCRIPTION <Ref. to GD(H6DO)-94, DTC P0198 ENGINE OIL TEMPERATURE SENSOR CIRCUIT HIGH, Diagnostic Trouble Code (DTC) Detecting Criteria.>

TROUBLE SYMPTOM:

- Hard to start
- Erroneous idling
- Poor driving performance

CAUTION:

After repair or replacement of faulty parts, conduct Clear Memory Mode <Ref. to EN(H6DO)(diag)-44, OPERATION, Clear Memory Mode.> and Inspection Mode <Ref. to EN(H6DO)(diag)-35, PROCEDURE, Inspection Mode.>.

WIRING DIAGRAM:

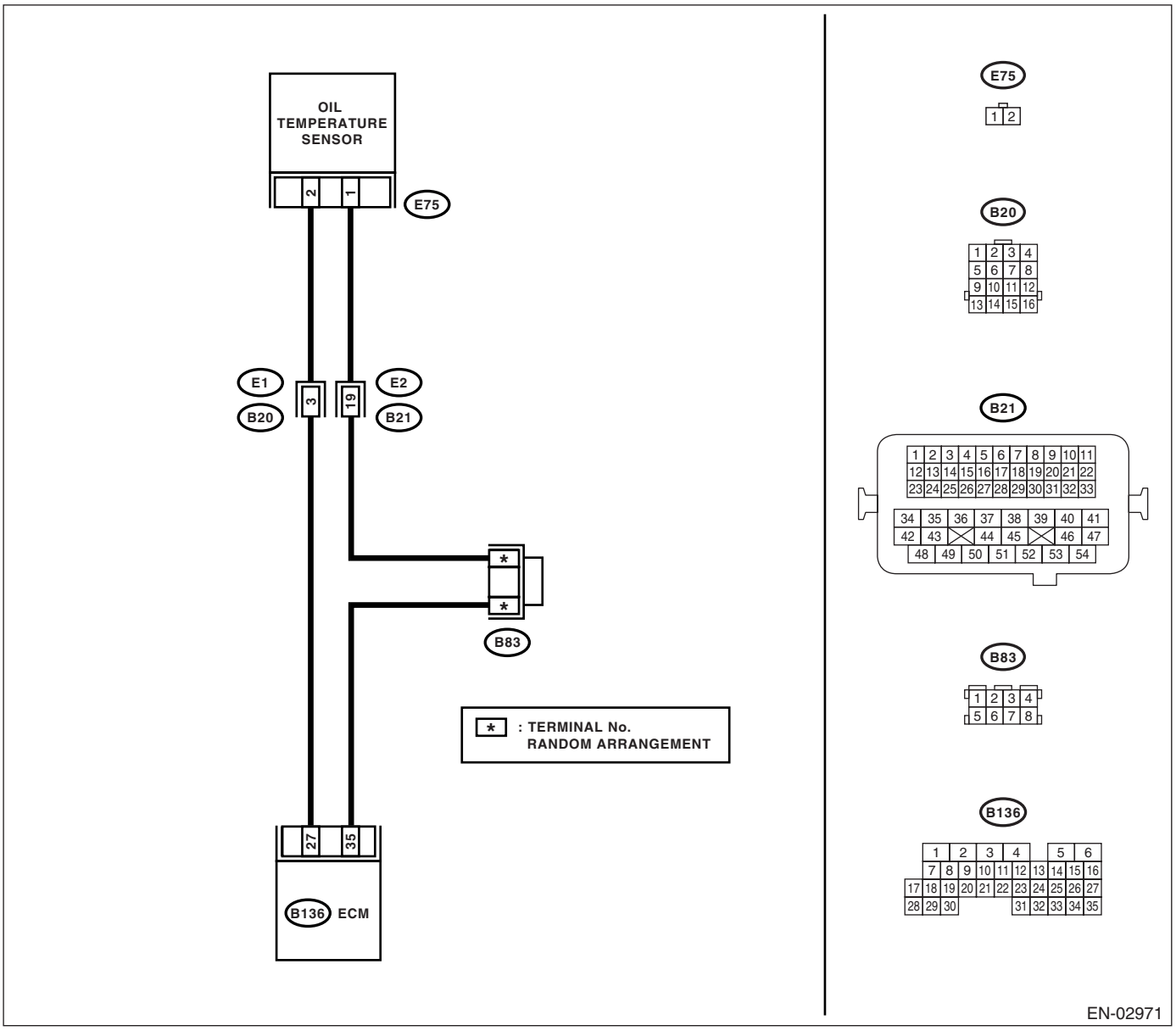

	Step	Check	Yes	No
1	**CHECK HARNESS BETWEEN OIL TEMPERATURE SENSOR AND ECM CONNECTOR.** 1) Turn the ignition switch to OFF. 2) Disconnect the connector from the oil temperature sensor. 3) Measure the voltage between oil temperature sensor connector and engine ground. ***Connector & terminal*** ***(E75) No. 2 (+) — Engine ground (−):***	Is the voltage more than 10 V?	Repair the battery short circuit in harness between ECM and oil temperature sensor connector.	Go to step **2.**
2	**CHECK HARNESS BETWEEN OIL TEMPERATURE SENSOR AND ECM CONNECTOR.** 1) Turn the ignition switch to ON. 2) Measure the voltage between oil temperature sensor connector and engine ground. ***Connector & terminal*** ***(E75) No. 2 (+) — Engine ground (−):***	Is the voltage more than 10 V?	Repair the battery short circuit in harness between ECM and oil temperature sensor connector.	Go to step **3.**
3	**CHECK HARNESS BETWEEN OIL TEMPERATURE SENSOR AND ECM CONNECTOR.** Measure the voltage between oil temperature sensor connector and engine ground. ***Connector & terminal*** ***(E75) No. 2 (+) — Engine ground (−):***	Is the voltage more than 4 V?	Go to step **4.**	Repair the harness and connector. NOTE: In this case repair the following: • Open circuit in harness between ECM and oil temperature sensor connector • Poor contact in oil temperature sensor connector • Poor contact in ECM connector • Poor contact in coupling connector
4	**CHECK HARNESS BETWEEN OIL TEMPERATURE SENSOR AND ECM CONNECTOR.** 1) Turn the ignition switch to OFF. 2) Measure the resistance of harness between oil temperature sensor connector and engine ground. ***Connector & terminal*** ***(E75) No. 1 — Engine ground:***	Is the resistance less than 5 Ω?	Replace the oil temperature sensor. <Ref. to FU(H6DO)-29, Oil Temperature Sensor.>	Repair the harness and connector. NOTE: In this case repair the following: • Open circuit in harness between ECM and oil temperature sensor connector • Poor contact in oil temperature sensor connector • Poor contact in ECM connector • Poor contact in coupling connector • Poor contact in joint connector

BG:DTC P0222 THROTTLE/PEDAL POSITION SENSOR/SWITCH “B” CIRCUIT LOW INPUT

DTC DETECTING CONDITION:

- Detect as soon as malfunction occurs.
- GENERAL DESCRIPTION <Ref. to GD(H6DO)-95, DTC P0222 THROTTLE/PEDAL POSITION SENSOR/SWITCH “B” CIRCUIT LOW INPUT, Diagnostic Trouble Code (DTC) Detecting Criteria.>

TROUBLE SYMPTOM:

- Erroneous idling
- Poor driving performance
- Engine stalls.

WIRING DIAGRAM:

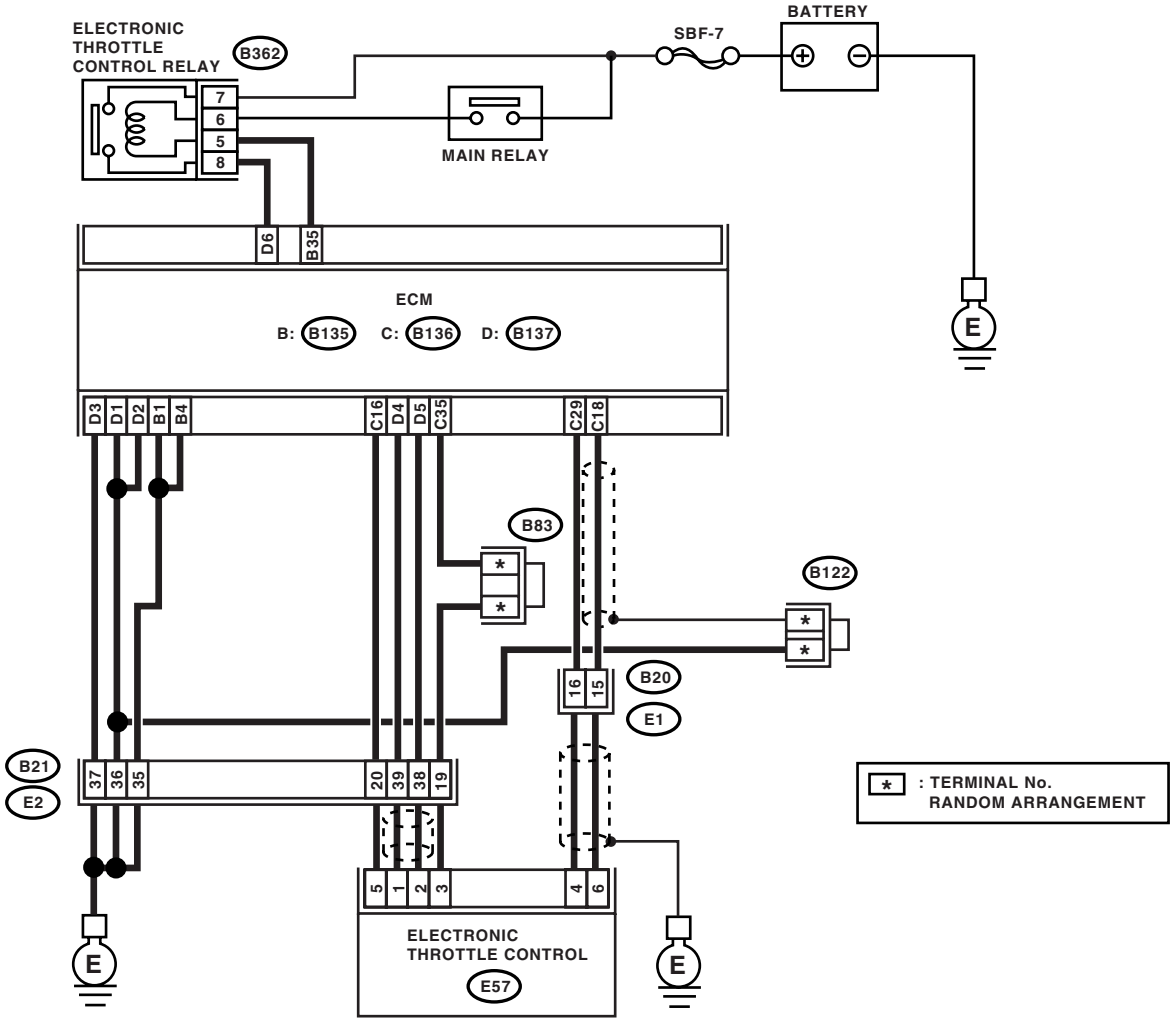

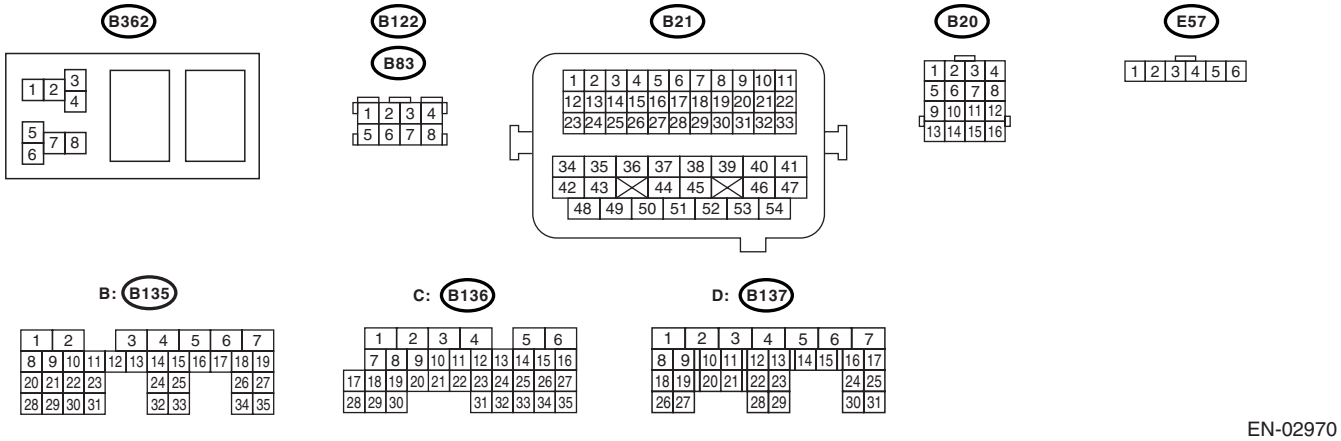

EN-02970

	Step	Check	Yes	No
1	**CHECK SENSOR OUTPUT.** 1) Turn the ignition switch to ON. 2) Read the data of sub throttle sensor signal using Subaru Select Monitor. NOTE: • Subaru Select Monitor For detailed operation procedure, refer to the "READ CURRENT DATA FOR ENGINE". <Ref. to EN(H6DO)(diag)-26, Subaru Select Monitor.>	Is the voltage more than 0.8 V?	Go to step **2.**	Go to step **3.**
2	**CHECK POOR CONTACT.** Check the poor contact in connector between ECM and electronic throttle control.	Is there poor contact?	Repair the poor contact.	Temporary poor contact occurred, but it is normal at present.
3	**CHECK HARNESS BETWEEN ECM AND ELECTRONIC THROTTLE CONTROL.** 1) Turn the ignition switch to OFF. 2) Disconnect the connector from ECM. 3) Disconnect the connector from the electronic throttle control. 4) Measure the resistance between ECM connector and electronic throttle control connector. ***Connector & terminal*** ***(B136) No. 29 — (E57) No. 4:*** ***(B136) No. 16 — (E57) No. 5:***	Is the resistance less than 1 Ω?	Go to step **4.**	Repair the open circuit of harness connector.
4	**CHECK HARNESS BETWEEN ECM AND ELECTRONIC THROTTLE CONTROL.** Measure the resistance between ECM connector and chassis ground. ***Connector & terminal*** ***(B136) No. 29 — Chassis ground:*** ***(B136) No. 16 — Chassis ground:***	Is the resistance more than 1 MΩ?	Go to step **5.**	Repair the chassis short circuit of harness.
5	**CHECK SENSOR POWER SUPPLY.** 1) Connect the ECM connector. 2) Turn the ignition switch to ON. 3) Measure the voltage between electronic throttle control connector and engine ground. ***Connector & terminal*** ***(E57) No. 5 (+) — Engine ground (−):***	Is the voltage 4.5 — 5.5 V?	Go to step **6.**	Repair the poor contactrepair the poor contact in ECM connector. Replace the ECM if defective. <Ref. to FU(H6DO)-34, Engine Control Module (ECM).>
6	**CHECK SHORT CIRCUIT IN ECM.** 1) Turn the ignition switch to OFF. 2) Measure the resistance between electronic throttle control connector and engine ground. ***Connector & terminal*** ***(E57) No. 4 — Engine ground:***	Is the resistance more than 10 Ω?	Repair the poor contact in electronic throttle control connector. Replace the electronic throttle control if defective.	Repair the poor contact in ECM connector. Replace the ECM if defective. <Ref. to FU(H6DO)-34, Engine Control Module (ECM).>

BH:DTC P0223 THROTTLE/PEDAL POSITION SENSOR/SWITCH “B” CIRCUIT HIGH INPUT

DTC DETECTING CONDITION:

- Detect as soon as malfunction occurs.
- GENERAL DESCRIPTION <Ref. to GD(H6DO)-97, DTC P0223 THROTTLE/PEDAL POSITION SENSOR/SWITCH “B” CIRCUIT HIGH INPUT, Diagnostic Trouble Code (DTC) Detecting Criteria.>

TROUBLE SYMPTOM:

- Erroneous idling
- Poor driving performance
- Engine stalls.

WIRING DIAGRAM:

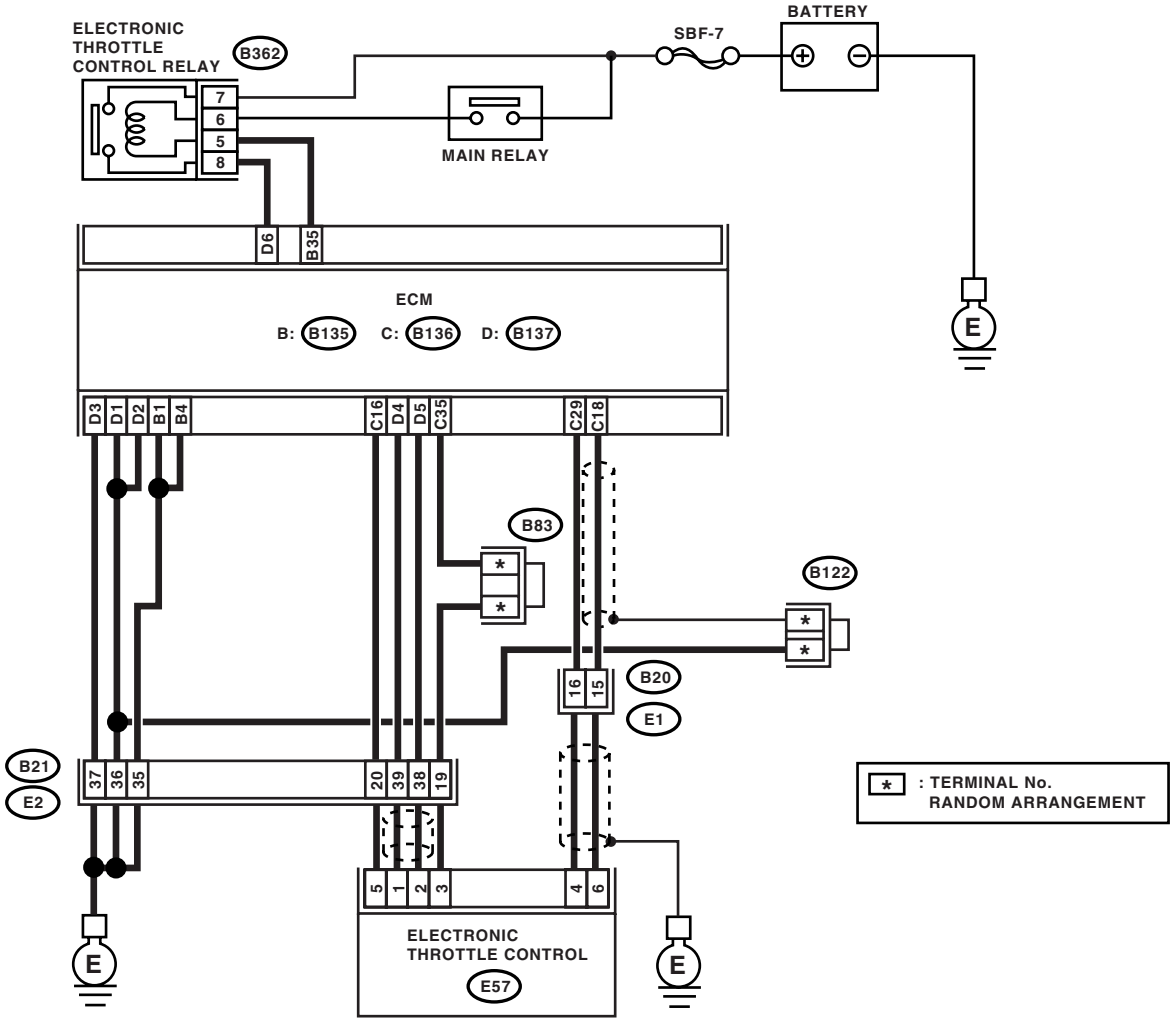

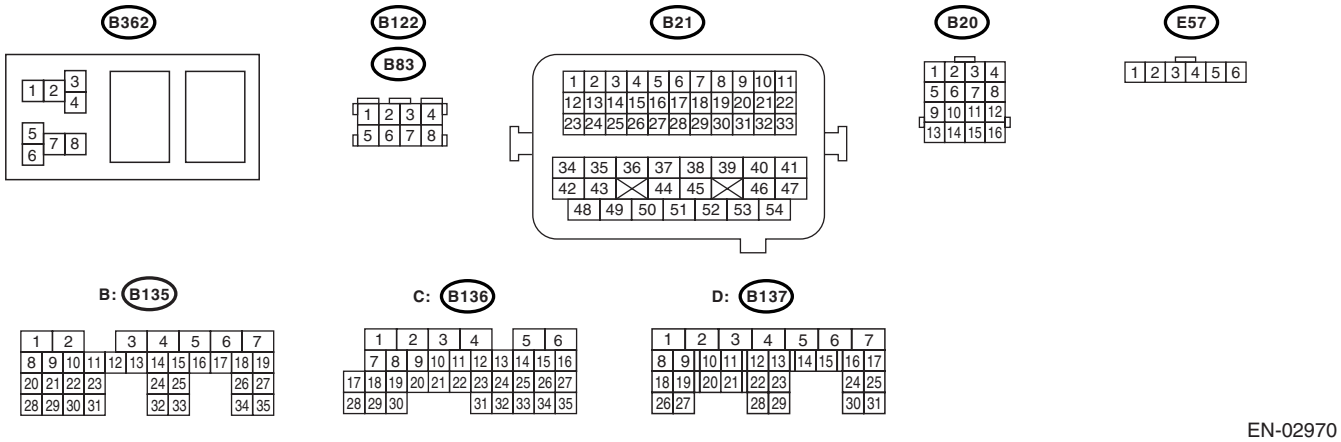

EN-02970

	Step	Check	Yes	No
1	**CHECK SENSOR OUTPUT.** 1) Turn the ignition switch to ON. 2) Read the data of sub throttle sensor signal using Subaru Select Monitor. NOTE: • Subaru Select Monitor For detailed operation procedure, refer to the "READ CURRENT DATA FOR ENGINE". <Ref. to EN(H6DO)(diag)-26, Subaru Select Monitor.>	Is the voltage less than 4.73 V?	Go to step **2.**	Go to step **3.**
2	**CHECK POOR CONTACT.** Check the poor contact in connector between ECM and electronic throttle control.	Is there poor contact in connector between ECM and electronic throttle control?	Repair the poor contact.	Temporary poor contact occurred, but it is normal at present.
3	**CHECK HARNESS BETWEEN ECM AND ELECTRONIC THROTTLE CONTROL.** 1) Turn the ignition switch to OFF. 2) Disconnect the connector from ECM. 3) Disconnect the connector from the electronic throttle control. 4) Measure the resistance between ECM connector and electronic throttle control connector. ***Connector & terminal*** ***(B136) No. 35 — (E57) No. 3:*** ***(B136) No. 29 — (E57) No. 4:***	Is the resistance less than 1 Ω?	Go to step **4.**	Repair the open circuit of harness connector.
4	**CHECK HARNESS BETWEEN ECM AND ELECTRONIC THROTTLE CONTROL.** 1) Connect the ECM connector. 2) Measure the resistance between electronic throttle control connector and engine ground. ***Connector & terminal*** ***(E57) No. 3 — Engine ground:***	Is the resistance less than 5 Ω?	Go to step **5.**	Repair the poor contact in ECM connector. Replace the ECM if defective. <Ref. to FU(H6DO)-34, Engine Control Module (ECM).>
5	**CHECK HARNESS BETWEEN ECM AND ELECTRONIC THROTTLE CONTROL.** Measure the voltage between electronic throttle control connector and engine ground. ***Connector & terminal*** ***(E57) No. 4 (+) — Engine ground (−):***	Is the voltage less than 10 V?	Go to step **6.**	Repair the battery short circuit in harness between ECM connector and electronic throttle control connector.
6	**CHECK HARNESS BETWEEN ECM AND ELECTRONIC THROTTLE CONTROL.** 1) Turn the ignition switch to OFF. 2) Disconnect the connector from ECM. 3) Measure the resistance between connector terminals. ***Connector & terminal*** ***(B136) No. 29 — (B136) No. 16:***	Is the resistance more than 1 MΩ?	Repair the poor contact. Repair the electronic throttle control.	Sensor power supply circuit may be shorted.

BI: DTC P0230 FUEL PUMP PRIMARY CIRCUIT

DTC DETECTING CONDITION:

- Two consecutive driving cycles with fault
- GENERAL DESCRIPTION <Ref. to GD(H6DO)-99, DTC P0230 FUEL PUMP PRIMARY CIRCUIT, Diagnostic Trouble Code (DTC) Detecting Criteria.>

CAUTION:
After repair or replacement of faulty parts, conduct Clear Memory Mode <Ref. to EN(H6DO)(diag)-44, OPERATION, Clear Memory Mode.> and Inspection Mode. <Ref. to EN(H6DO)(diag)-35, PROCEDURE, Inspection Mode.>

WIRING DIAGRAM:

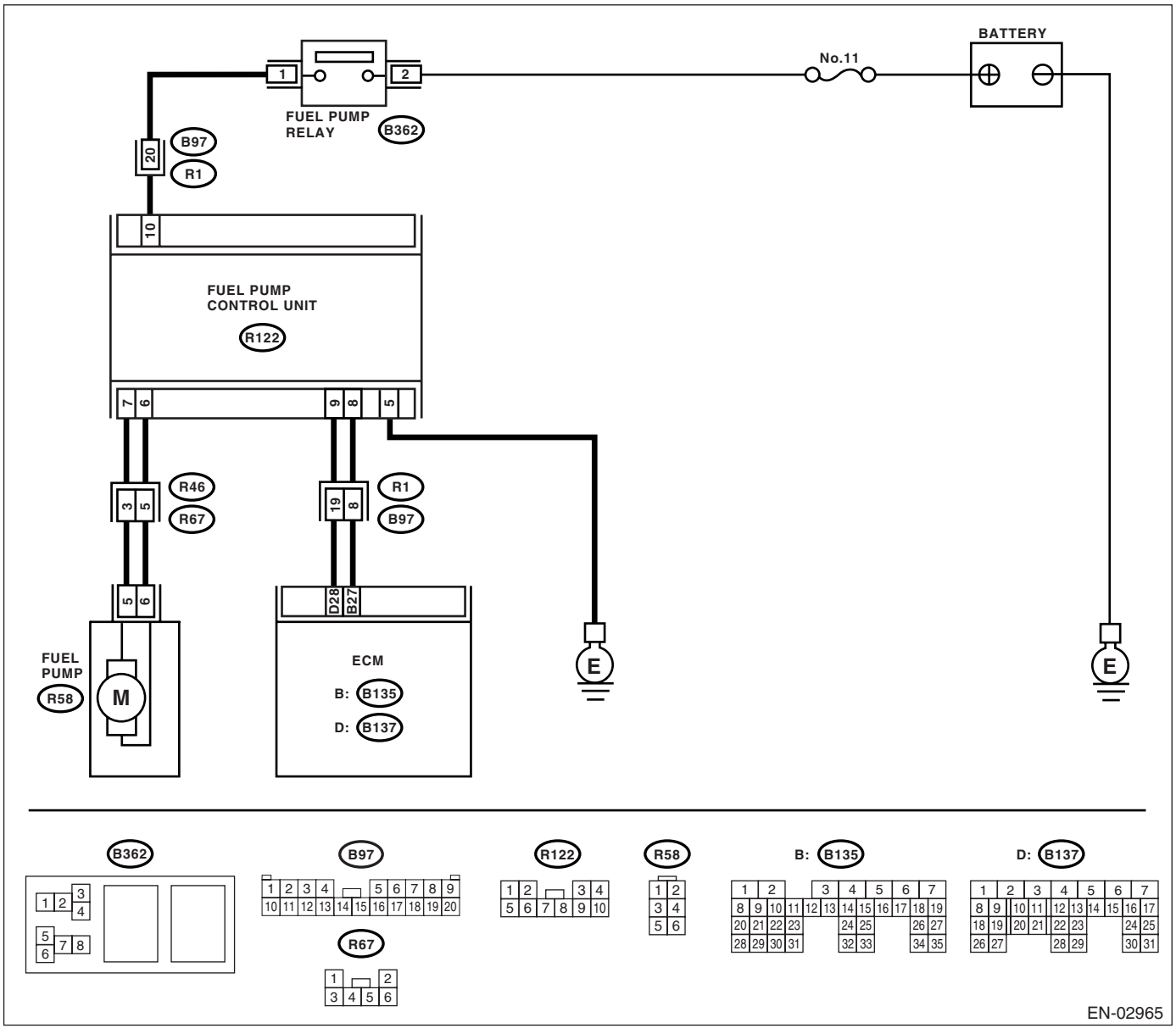

	Step	Check	Yes	No
1	**CHECK POWER SUPPLY CIRCUIT TO FUEL PUMP CONTROL UNIT.** 1) Turn the ignition switch to OFF. 2) Disconnect the connector from fuel pump control unit. 3) Turn the ignition switch to ON. 4) Measure the voltage between fuel pump control unit and chassis ground. ***Connector & terminal*** ***(R122) No. 10 (+) — Chassis ground (−):***	Is the voltage more than 10 V?	Go to step **2.**	Repair the power supply circuit. NOTE: In this case repair the following: • Open or ground short circuit in harness between fuel pump relay and fuel pump control unit. • Poor contact in fuel pump control unit connector. • Poor contact in fuel pump relay connector.
2	**CHECK GROUND CIRCUIT OF FUEL PUMP CONTROL UNIT.** 1) Turn the ignition switch to OFF. 2) Measure the resistance of harness between fuel pump control unit and chassis ground. ***Connector & terminal*** ***(R122) No. 5 — Chassis ground:***	Is the resistance less than 5 Ω?	Go to step **3.**	Repair the harness and connector. NOTE: In this case repair the following: • Open circuit between fuel pump control unit and chassis ground. • Poor contact in fuel pump control unit connector.
3	**CHECK HARNESS BETWEEN FUEL PUMP CONTROL UNIT AND FUEL PUMP CONNECTOR.** 1) Disconnect the connector from fuel pump. 2) Measure the resistance of harness between fuel pump control unit and fuel pump connector. ***Connector & terminal*** ***(R122) No. 7 — (R58) No. 5:*** ***(R122) No. 6 — (R58) No. 6:***	Is the resistance less than 1 Ω?	Go to step **4.**	Repair the open circuit between fuel pump control unit and fuel pump.
4	**CHECK HARNESS BETWEEN FUEL PUMP CONTROL UNIT AND FUEL PUMP CONNECTOR.** Measure the resistance of harness between fuel pump control unit and chassis ground. ***Connector & terminal*** ***(R122) No. 7 — Chassis ground:*** ***(R122) No. 6 — Chassis ground:***	Is the resistance more than 1 MΩ?	Go to step **5.**	Repair the ground short circuit between fuel pump control unit and fuel pump.

	Step	Check	Yes	No
5	**CHECK HARNESS BETWEEN FUEL PUMP CONTROL UNIT AND ECM CONNECTOR.** 1) Turn the ignition switch to OFF. 2) Disconnect the connector from ECM. 3) Measure the resistance in harness between fuel pump control unit and ECM connector. ***Connector & terminal*** ***(R122) No. 9 — (B137) No. 28:*** ***(R122) No. 8 — (B135) No. 27:***	Is the resistance less than 1 Ω?	Go to step **6.**	Repair the harness and connector. NOTE: In this case repair the following: • Open circuit between fuel pump control unit and ECM. • Poor contact in fuel pump control unit and ECM connector
6	**CHECK HARNESS BETWEEN FUEL PUMP CONTROL UNIT AND ECM CONNECTOR.** Measure the resistance of harness between fuel pump control unit and chassis ground. ***Connector & terminal*** ***(R122) No. 9 — Chassis ground:*** ***(R122) No. 8 — Chassis ground:***	Is the resistance more than 1 MΩ?	Go to step **7.**	Repair the ground short circuit between fuel pump control unit and ECM.
7	**CHECK POOR CONTACT.** Check poor contact in ECM and fuel pump control unit connector.	Is there poor contact in ECM and fuel pump control unit connector?	Repair the poor contactrepair the poor contact in ECM and fuel pump control unit connector.	Go to step **8.**
8	**CHECK EXPERIENCE OF RUNNING OUT OF FUEL.**	Did the vehicle experience running out of fuel?	Finish the diagnosis. NOTE: DTC record may be conducted as a result of fuel pump idling while running out of gas.	Replace the fuel pump control unit. <Ref. to FU(H6DO)-38, Fuel Pump Control Unit.>

BJ:DTC P0301 CYLINDER 1 MISFIRE DETECTED

NOTE:
For the diagnostic procedure, refer to DTC P0306. <Ref. to EN(H6DO)(diag)-210, DTC P0306 CYLINDER 6 MISFIRE DETECTED, Diagnostic Procedure with Diagnostic Trouble Code (DTC).>

BK:DTC P0302 CYLINDER 2 MISFIRE DETECTED

NOTE:
For the diagnostic procedure, refer to DTC P0306. <Ref. to EN(H6DO)(diag)-210, DTC P0306 CYLINDER 6 MISFIRE DETECTED, Diagnostic Procedure with Diagnostic Trouble Code (DTC).>

BL:DTC P0303 CYLINDER 3 MISFIRE DETECTED

NOTE:
For the diagnostic procedure, refer to DTC P0306. <Ref. to EN(H6DO)(diag)-210, DTC P0306 CYLINDER 6 MISFIRE DETECTED, Diagnostic Procedure with Diagnostic Trouble Code (DTC).>

BM:DTC P0304 CYLINDER 4 MISFIRE DETECTED

NOTE:
For the diagnostic procedure, refer to DTC P0306. <Ref. to EN(H6DO)(diag)-210, DTC P0306 CYLINDER 6 MISFIRE DETECTED, Diagnostic Procedure with Diagnostic Trouble Code (DTC).>

BN:DTC P0305 CYLINDER 5 MISFIRE DETECTED

NOTE:
For the diagnostic procedure, refer to DTC P0306. <Ref. to EN(H6DO)(diag)-210, DTC P0306 CYLINDER 6 MISFIRE DETECTED, Diagnostic Procedure with Diagnostic Trouble Code (DTC).>

BO:DTC P0306 CYLINDER 6 MISFIRE DETECTED

DTC DETECTING CONDITION:

- Two consecutive driving cycles with fault
- Detect as soon as malfunction occurs. (A misfire which could damage catalyst occurs.)
- GENERAL DESCRIPTION <Ref. to GD(H6DO)-106, DTC P0306 CYLINDER 6 MISFIRE DETECTED, Diagnostic Trouble Code (DTC) Detecting Criteria.>

TROUBLE SYMPTOM:

- Engine stalls.
- Erroneous idling
- Rough driving

CAUTION:
After repair or replacement of faulty parts, conduct Clear Memory Mode <Ref. to EN(H6DO)(diag)-44, OPERATION, Clear Memory Mode.> and Inspection Mode <Ref. to EN(H6DO)(diag)-35, PROCEDURE, Inspection Mode.>.

WIRING DIAGRAM:

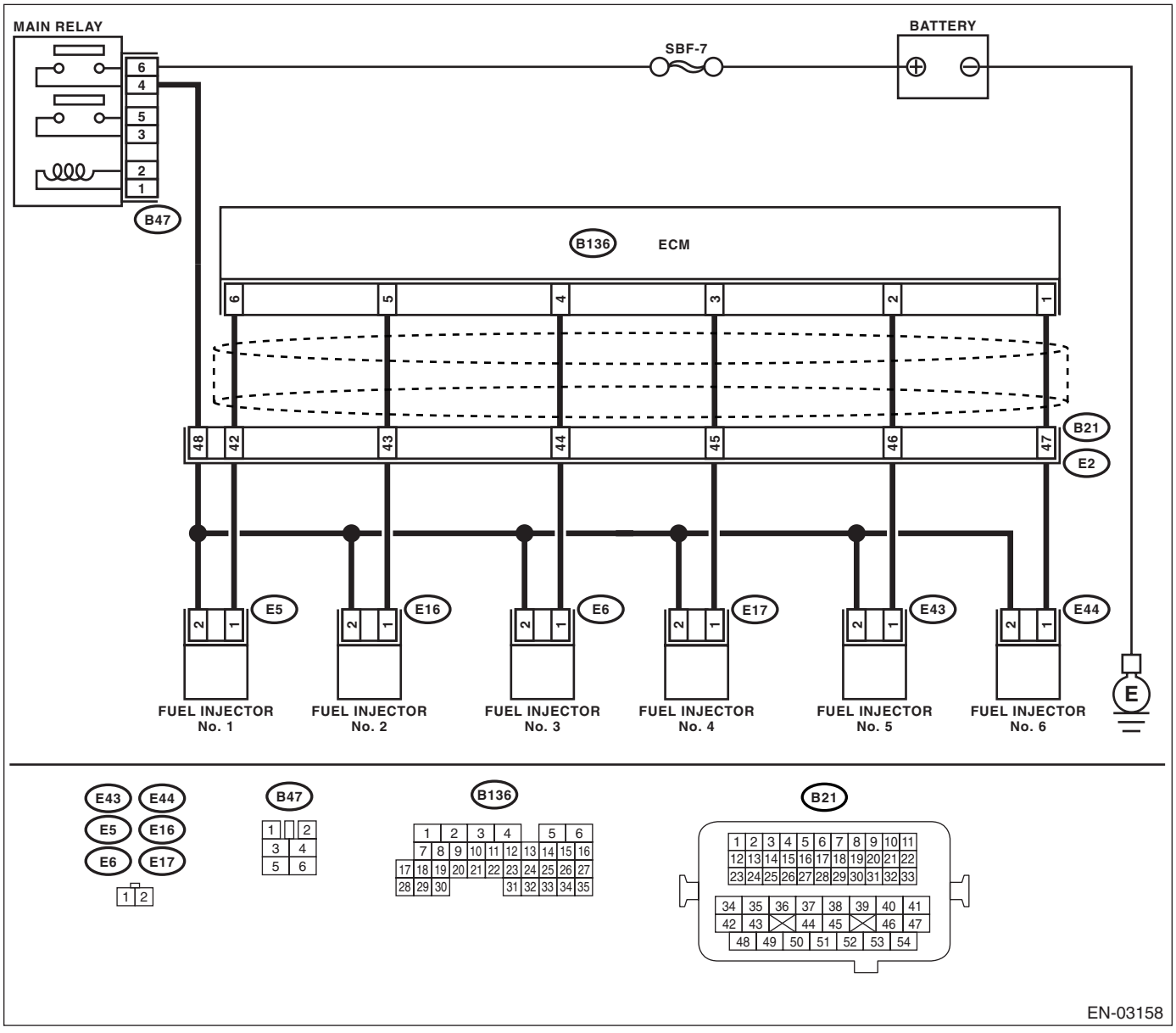

	Step	Check	Yes	No
1	**CHECK FOR ANY OTHER DTC ON DISPLAY.**	Is any other DTC displayed?	Inspect the DTC using "List of Diagnostic Trouble Code (DTC)". <Ref. to EN(H6DO)(diag)-71, List of Diagnostic Trouble Code (DTC).> NOTE: In this case, it is not necessary to inspect DTC P0301, P0302, P0304, P0305 and P0306.	Go to step **2.**
2	**CHECK OUTPUT SIGNAL FROM ECM.** 1) Turn the ignition switch to ON. 2) Measure the voltage between ECM connector and chassis ground on faulty cylinders. ***Connector & terminal*** ***#1 (B136) No. 6 (+) — Chassis ground (–):*** ***#2 (B136) No. 5 (+) — Chassis ground (–):*** ***#3 (B136) No. 4 (+) — Chassis ground (–):*** ***#4 (B136) No. 3 (+) — Chassis ground (–):*** ***#5 (B136) No. 2 (+) — Chassis ground (–):*** ***#6 (B136) No. 1 (+) — Chassis ground (–):***	Is the voltage more than 10 V?	Go to step **7.**	Go to step **3.**
3	**CHECK HARNESS BETWEEN FUEL INJECTOR AND ECM CONNECTOR.** 1) Turn the ignition switch to OFF. 2) Disconnect the connector from fuel injector on faulty cylinder. 3) Measure the resistance between ECM connector and engine ground on faulty cylinders. ***Connector & terminal*** ***#1 (E5) No. 1 — Engine ground:*** ***#2 (E16) No. 1 — Engine ground:*** ***#3 (E6) No. 1 — Engine ground:*** ***#4 (E17) No. 1 — Engine ground:*** ***#5 (E43) No. 1 — Engine ground:*** ***#6 (E44) No. 1 — Engine ground:***	Is the resistance more than 1 MΩ?	Go to step **4.**	Repair the ground short circuit in harness between fuel injector and ECM connector.
4	**CHECK HARNESS BETWEEN FUEL INJECTOR AND ECM CONNECTOR.** Measure the resistance of harness connector between ECM connector and fuel injector on faulty cylinders. ***Connector & terminal*** ***#1 (B136) No. 6 — (E5) No. 1:*** ***#2 (B136) No. 5 — (E16) No. 1:*** ***#3 (B136) No. 4 — (E6) No. 1:*** ***#4 (B136) No. 3 — (E17) No. 1:*** ***#5 (B136) No. 2 — (E43) No. 1:*** ***#6 (B136) No. 1 — (E44) No. 2:***	Is the resistance less than 1 Ω?	Go to step **5.**	Repair the harness and connector. NOTE: In this case repair the following: • Open circuit in harness between ECM and fuel injector connector • Poor contact in coupling connector
5	**CHECK FUEL INJECTOR.** Measure the resistance between fuel injector terminals on faulty cylinder. ***Terminals*** ***No. 1 — No. 2:***	Is the resistance 5 — 20 Ω?	Go to step **6.**	Replace the faulty fuel injector. <Ref. to FU(H6DO)-26, Fuel Injector.>

	Step	Check	Yes	No
6	**CHECK POWER SUPPLY LINE.** 1) Turn the ignition switch to ON. 2) Measure the voltage between fuel injector and engine ground on faulty cylinders. ***Connector & terminal*** ***#1 (E5) No. 2 (+) — Engine ground (−):*** ***#2 (E16) No. 2 (+) — Engine ground (−):*** ***#3 (E6) No. 2 (+) — Engine ground (−):*** ***#4 (E17) No. 2 (+) — Engine ground (−):*** ***#5 (E43) No. 2 (+) — Engine ground (−):*** ***#6 (E44) No. 2 (+) — Engine ground (−):***	Is the voltage more than 10 V?	Repair the poor contact in all connectors in fuel injector circuit.	Repair the harness and connector. NOTE: In this case repair the following: • Open circuit in harness between main relay and fuel injector on faulty cylinders • Poor contact in coupling connector • Poor contact in main relay connector • Poor contact in fuel injector connector on faulty cylinders
7	**CHECK HARNESS BETWEEN FUEL INJECTOR AND ECM CONNECTOR.** 1) Turn the ignition switch to OFF. 2) Disconnect the connector from fuel injector on faulty cylinder. 3) Turn the ignition switch to ON. 4) Measure the voltage between ECM connector and chassis ground on faulty cylinders. ***Connector & terminal*** ***#1 (B136) No. 6 (+) — Chassis ground (−):*** ***#2 (B136) No. 5 (+) — Chassis ground (−):*** ***#3 (B136) No. 4 (+) — Chassis ground (−):*** ***#4 (B136) No. 3 (+) — Chassis ground (−):*** ***#5 (B136) No. 2 (+) — Chassis ground (−):*** ***#6 (B136) No. 1 (+) — Chassis ground (−):***	Is the voltage more than 10 V?	Repair the battery short circuit in harness between ECM and fuel injector. After repair, replace the ECM. <Ref. to FU(H6DO)-34, Engine Control Module (ECM).>	Go to step **8.**
8	**CHECK FUEL INJECTOR.** 1) Turn the ignition switch to OFF. 2) Measure the resistance between fuel injector terminals on faulty cylinder. ***Terminals*** ***No. 1 — No. 2:***	Is the resistance less than 1 Ω?	Replace the faulty fuel injector and ECM. <Ref. to FU(H6DO)-26, Fuel Injector.> <Ref. to FU(H6DO)-34, Engine Control Module (ECM).>	Go to step **9.**
9	**CHECK INSTALLATION OF CAMSHAFT POSITION SENSOR/CRANKSHAFT POSITION SENSOR.**	Is the camshaft position sensor or crankshaft position sensor loosely installed?	Tighten camshaft position sensor or crankshaft position sensor.	Go to step **10.**
10	**CHECK CRANK PLATE.**	Is the crank sprocket rusted or the teeth of crank plate broken?	Replace the crank plate. <Ref. to ME(H6DO)-62, Cylinder Block.>	Go to step **11.**
11	**CHECK INSTALLATION CONDITION OF TIMING CHAIN.** Turn the crankshaft using ST, and align alignment mark on crank sprocket with alignment mark on cylinder block. ST 18252AA000 CRANKSHAFT SOCKET	Is the timing chain dislocated from its proper position?	Repair installation condition of timing chain. <Ref. to ME(H6DO)-44, Timing Chain Assembly.>	Go to step **12.**

	Step	Check	Yes	No
12	**CHECK FUEL LEVEL.**	Is the fuel meter indication lower than the “Lower” level?	Replenish fuel so fuel meter indication is higher than the “Lower” level. After replenishing fuel, Go to step **13.**	Go to step **13.**
13	**CHECK STATUS OF MALFUNCTION INDICATOR LIGHT.** 1) Clear the memory using Subaru Select Monitor or general scan tool. NOTE: • Subaru Select Monitor For detailed operation procedure, refer to the “READ CURRENT DATA SHOWN ON DISPLAY FOR ENGINE”. <Ref. to EN(H6DO)(diag)-26, Subaru Select Monitor.> • General scan tool For detailed operation procedure, refer to the general scan tool instruction manual. 2) Start the engine, and drive the vehicle more than 10 minutes.	Does the malfunction indicator light illuminate or blink?	Go to step **15.**	Go to step **14.**
14	**CHECK CAUSE OF MISFIRE DIAGNOSED.**	Was the cause of misfire detected when the engine is running?	Finish diagnostics operation, if the engine has no abnormality.	Repair the poor contact. NOTE: In this case repair the following: • Poor contact in ignition coil connector • Poor contact in fuel injector connector on faulty cylinders • Poor contact in ECM connector • Poor contact in coupling connector
15	**CHECK AIR INTAKE SYSTEM.**	Is there any fault in air intake system?	Repair air intake system. NOTE: Check the following items: • Are there air leaks or air suction caused by loose or dislocated nuts and bolts? • Are there cracks or any disconnection of hoses?	Go to step **16.**
16	**CHECK MISFIRE SYMPTOM.** 1) Turn the ignition switch to ON. 2) READ DTC. <Ref. to EN(H6DO)(diag)-34, Read Diagnostic Trouble Code (DTC).>	Does the Subaru Select Monitor or general scan tool indicate a DTC?	Go to step **22.**	Go to step **17.**
17	**CHECK FOR ANY OTHER DTC ON DISPLAY.**	Is DTC P0301 and P0302 displayed?	Go to step **23.**	Go to step **18.**
18	**CHECK DTC ON DISPLAY.**	Is DTC P0303 and P0304 displayed?	Go to step **24.**	Go to step **19.**

	Step	Check	Yes	No
19	**CHECK DTC ON DISPLAY.**	Is DTC P0305 and P0306 displayed?	Go to step **25.**	Go to step **20.**
20	**CHECK DTC ON DISPLAY.**	Is DTC P0301, P0303 and P0305 displayed?	Go to step **26.**	Go to step **21.**
21	**CHECK DTC ON DISPLAY.**	Is DTC P0302, P0304 and P0306 displayed?	Go to step **27.**	Go to step **28.**
22	**ONLY ONE CYLINDER.**	Is there any fault in that cylinder?	Repair or replace the faulty part. NOTE: Check the following items: • Spark plug • Fuel injector • Compression ratio	Inspect the DTC P0171, P0172, P0174 or P0175 using “List of Diagnostic Trouble Code (DTC)”. <Ref. to EN(H6DO)(diag)-71, List of Diagnostic Trouble Code (DTC).>

23	**GROUP OF #1 AND #2 CYLINDERS.**	Is there any fault in #1 and #2 cylinders?	Repair or replace the faulty part.
			NOTE:
			• Check the following items:
			  • Spark plug
			  • Fuel injector
			  • Ignition coil
			  • Compression ratio
			• If no abnormal is discovered, check for “IGNITION CONTROL SYSTEM” of #1 and #2 cylinders side. <Ref. to EN(H6DO)(diag)-63, IGNITION CONTROL SYSTEM, Diagnostics for Engine Starting Failure.>
				Inspect the DTC P0171, P0172, P0174 or P0175 using “List of Diagnostic Trouble Code (DTC)”. <Ref. to EN(H6DO)(diag)-71, List of Diagnostic Trouble Code (DTC).>

Step		Check	Yes	No
24	GROUP OF #3 AND #4 CYLINDERS.	Is there any fault in #3 and #4 cylinders?	Repair or replace the faulty part. NOTE: • Check the following items: • Spark plug • Fuel injector • Ignition coil • If no abnormal is discovered, check for “IGNITION CONTROL SYSTEM” of #3 and #4 cylinders side. <Ref. to EN(H6DO)(diag)-63, IGNITION CONTROL SYSTEM, Diagnostics for Engine Starting Failure.>	Inspect the DTC P0171, P0172, P0174 or P0175 using “List of Diagnostic Trouble Code (DTC)”. <Ref. to EN(H6DO)(diag)-71, List of Diagnostic Trouble Code (DTC).>
25	GROUP OF #5 AND #6 CYLINDERS.	Is there any fault in #5 and #6 cylinder?	Repair or replace the faulty part. NOTE: • Check the following items: • Spark plug • Fuel injector • Ignition coil • Compression ratio • If no abnormal is discovered, check for “IGNITION CONTROL SYSTEM” of #5 and #6 cylinders side. <Ref. to EN(H6DO)(diag)-63, IGNITION CONTROL SYSTEM, Diagnostics for Engine Starting Failure.>	Inspect the DTC P0171, P0172, P0174 or P0175 using “List of Diagnostic Trouble Code (DTC)”. <Ref. to EN(H6DO)(diag)-71, List of Diagnostic Trouble Code (DTC).>
26	GROUP OF #1, #3 AND #5 CYLINDERS.	Is there any fault in #1, #3 and #5 cylinders?	Repair or replace the faulty part. NOTE: Check the following items: • Spark plug • Fuel injector • Skipping timing chain teeth	Inspect the DTC P0171, P0172, P0174 or P0175 using “List of Diagnostic Trouble Code (DTC)”. <Ref. to EN(H6DO)(diag)-71, List of Diagnostic Trouble Code (DTC).>

Step		Check	Yes	No
27	GROUP OF #2, #4 AND #6 CYLINDERS.	Is there any fault in #2, #4 and #6 cylinders?	Repair or replace the faulty part. NOTE: Check the following items: • Spark plug • Fuel injector • Compression ratio • Skipping timing chain teeth	Inspect the DTC P0171, P0172, P0174 or P0175 using “List of Diagnostic Trouble Code (DTC)”. <Ref. to EN(H6DO)(diag)-71, List of Diagnostic Trouble Code (DTC).>
28	CYLINDER AT RANDOM.	Is the engine idle rough?	Inspect the DTC P0171, P0172, P0174 or P0175 using “List of Diagnostic Trouble Code (DTC)”. <Ref. to EN(H6DO)(diag)-71, List of Diagnostic Trouble Code (DTC).>	Repair or replace the faulty part. NOTE: Check the following items: • Spark plug • Fuel injector • Compression ratio

BP:DTC P0327 KNOCK SENSOR 1 CIRCUIT LOW INPUT (BANK 1 OR SINGLE SENSOR)

DTC DETECTING CONDITION:

- Detect as soon as malfunction occurs.
- GENERAL DESCRIPTION <Ref. to GD(H6DO)-107, DTC P0327 KNOCK SENSOR 1 CIRCUIT LOW INPUT (BANK 1 OR SINGLE SENSOR), Diagnostic Trouble Code (DTC) Detecting Criteria.>

TROUBLE SYMPTOM:

- Poor driving performance
- Knocking occurs.

CAUTION:
After repair or replacement of faulty parts, conduct Clear Memory Mode <Ref. to EN(H6DO)(diag)-44, OPERATION, Clear Memory Mode.> and Inspection Mode <Ref. to EN(H6DO)(diag)-35, PROCEDURE, Inspection Mode.>.

WIRING DIAGRAM:

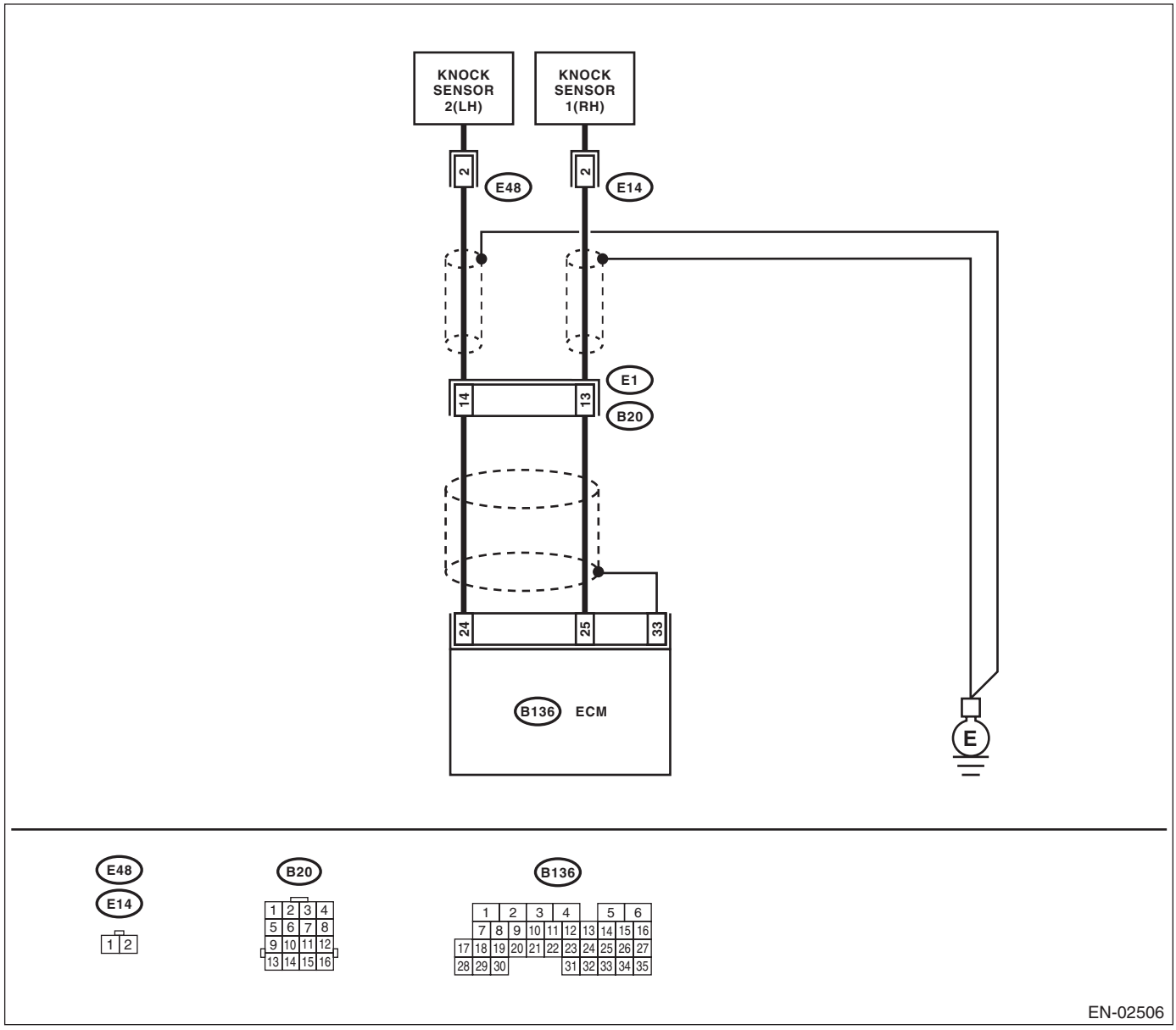

	Step	Check	Yes	No
1	**CHECK HARNESS BETWEEN KNOCK SENSOR AND ECM CONNECTOR.** 1) Turn the ignition switch to OFF. 2) Disconnect the connector from ECM. 3) Measure the resistance between ECM harness connector and chassis ground. ***Connector & terminal*** ***(B136) No. 25 — Chassis ground:***	Is the resistance more than 700 kΩ?	Go to step **2.**	Repair the harness and connector. NOTE: In this case repair the following: • Open circuit in harness between knock sensor and ECM connector • Poor contact in knock sensor connector • Poor contact in coupling connector
2	**CHECK KNOCK SENSOR.** 1) Disconnect the connector from knock sensor. 2) Measure the resistance between knock sensor connector terminal and engine ground. ***Terminals*** ***No. 2 — Engine ground:***	Is the resistance more than 700 kΩ?	Go to step **3.**	Repair the harness and connector. NOTE: In this case repair the following: • Poor contact in knock sensor connector
3	**CHECK CONDITION OF KNOCK SENSOR INSTALLATION.**	Is the knock sensor installation bolt tightened securely?	Replace the knock sensor. <Ref. to FU(H6DO)-22, Knock Sensor.>	Tighten knock sensor installation bolt securely.

BQ:DTC P0328 KNOCK SENSOR 1 CIRCUIT HIGH INPUT (BANK 1 OR SINGLE SENSOR)

DTC DETECTING CONDITION:

- Detect as soon as malfunction occurs.
- GENERAL DESCRIPTION <Ref. to GD(H6DO)-109, DTC P0328 KNOCK SENSOR 1 CIRCUIT HIGH INPUT (BANK 1 OR SINGLE SENSOR), Diagnostic Trouble Code (DTC) Detecting Criteria.>

TROUBLE SYMPTOM:

- Poor driving performance
- Knocking occurs.

CAUTION:
After repair or replacement of faulty parts, conduct Clear Memory Mode <Ref. to EN(H6DO)(diag)-44, OPERATION, Clear Memory Mode.> and Inspection Mode <Ref. to EN(H6DO)(diag)-35, PROCEDURE, Inspection Mode.>.

WIRING DIAGRAM:

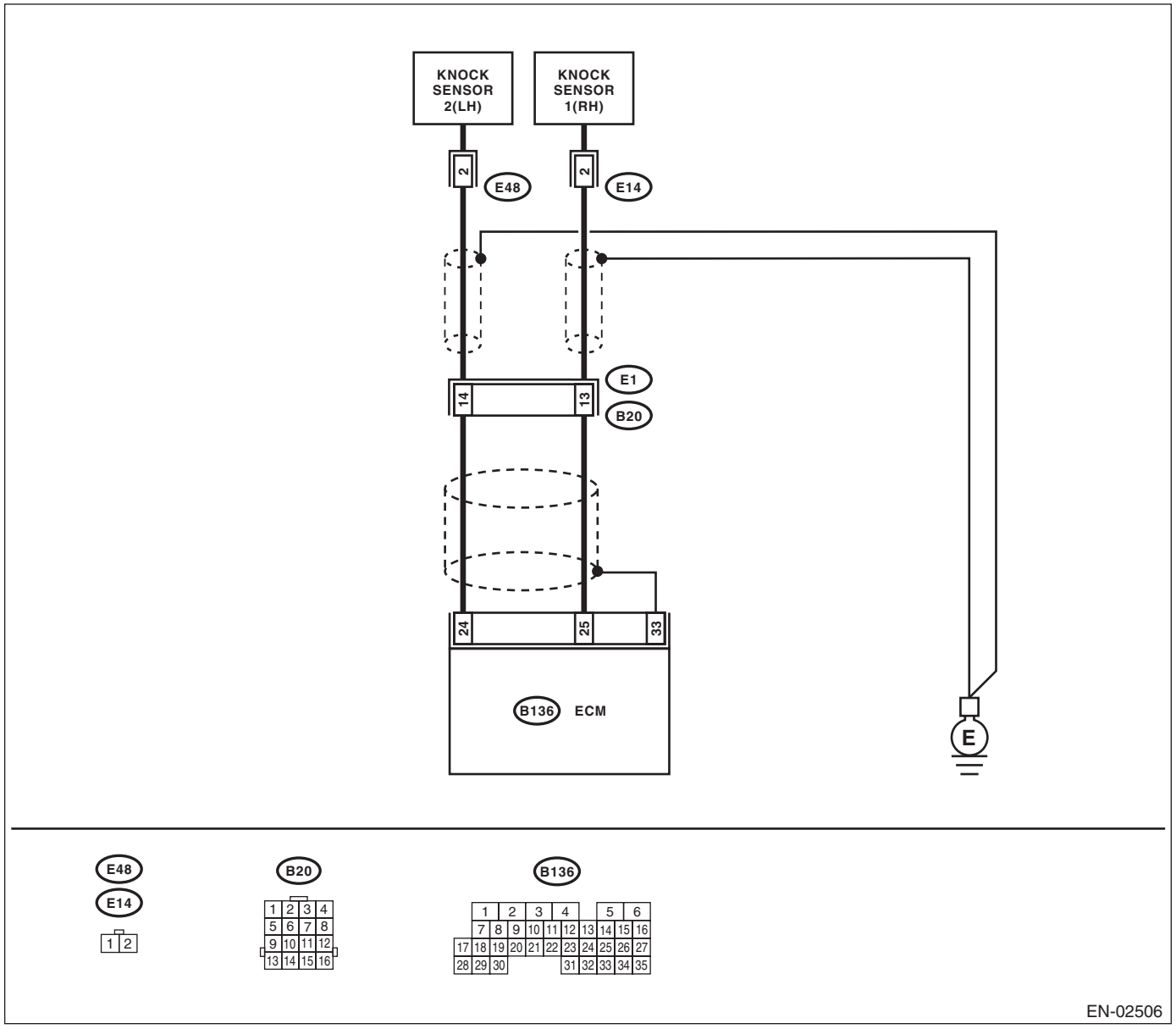

	Step	Check	Yes	No
1	**CHECK HARNESS BETWEEN KNOCK SENSOR AND ECM CONNECTOR.** Measure the resistance of harness between ECM connector and chassis ground. ***Connector & terminal*** ***(B136) No. 25 — Chassis ground:***	Is the resistance less than 400 kΩ?	Go to step **2.**	Go to step **3.**
2	**CHECK KNOCK SENSOR.** 1) Disconnect the connector from knock sensor. 2) Measure the resistance between knock sensor connector terminal and engine ground. ***Terminals*** ***No. 2 — Engine ground:***	Is the resistance less than 400 kΩ?	Replace the knock sensor. <Ref. to FU(H6DO)-22, Knock Sensor.>	Repair the ground short circuit in harness between knock sensor connector and ECM connector. NOTE: The harness between both connectors are shielded. Repair the short circuit in harness covered with shield.
3	**CHECK INPUT SIGNAL FROM ECM.** 1) Connect the connectors to ECM and knock sensor. 2) Turn the ignition switch to ON. 3) Measure the voltage between ECM and chassis ground. ***Connector & terminal*** ***(B136) No. 25 (+) — Chassis ground (−):***	Is the voltage more than 2 V?	Even if the malfunction indicator light illuminates, the circuit has returned to a normal condition at this time. (However, the possibility of poor contact still remains.) NOTE: In this case repair the following: • Poor contact in knock sensor connector • Poor contact in ECM connector • Poor contact in coupling connector	Repair the poor contact in ECM connector.

BR:DTC P0332 KNOCK SENSOR 2 CIRCUIT LOW INPUT (BANK 2)

DTC DETECTING CONDITION:

- Detect as soon as malfunction occurs.
- GENERAL DESCRIPTION <Ref. to GD(H6DO)-110, DTC P0332 KNOCK SENSOR 2 CIRCUIT LOW INPUT (BANK 2), Diagnostic Trouble Code (DTC) Detecting Criteria.>

TROUBLE SYMPTOM:

- Driving performance problem
- Knocking is occurred.

CAUTION:
After repair or replacement of faulty parts, conduct Clear Memory Mode <Ref. to EN(H6DO)(diag)-44, OPERATION, Clear Memory Mode.> and Inspection Mode <Ref. to EN(H6DO)(diag)-35, PROCEDURE, Inspection Mode.>.

WIRING DIAGRAM:

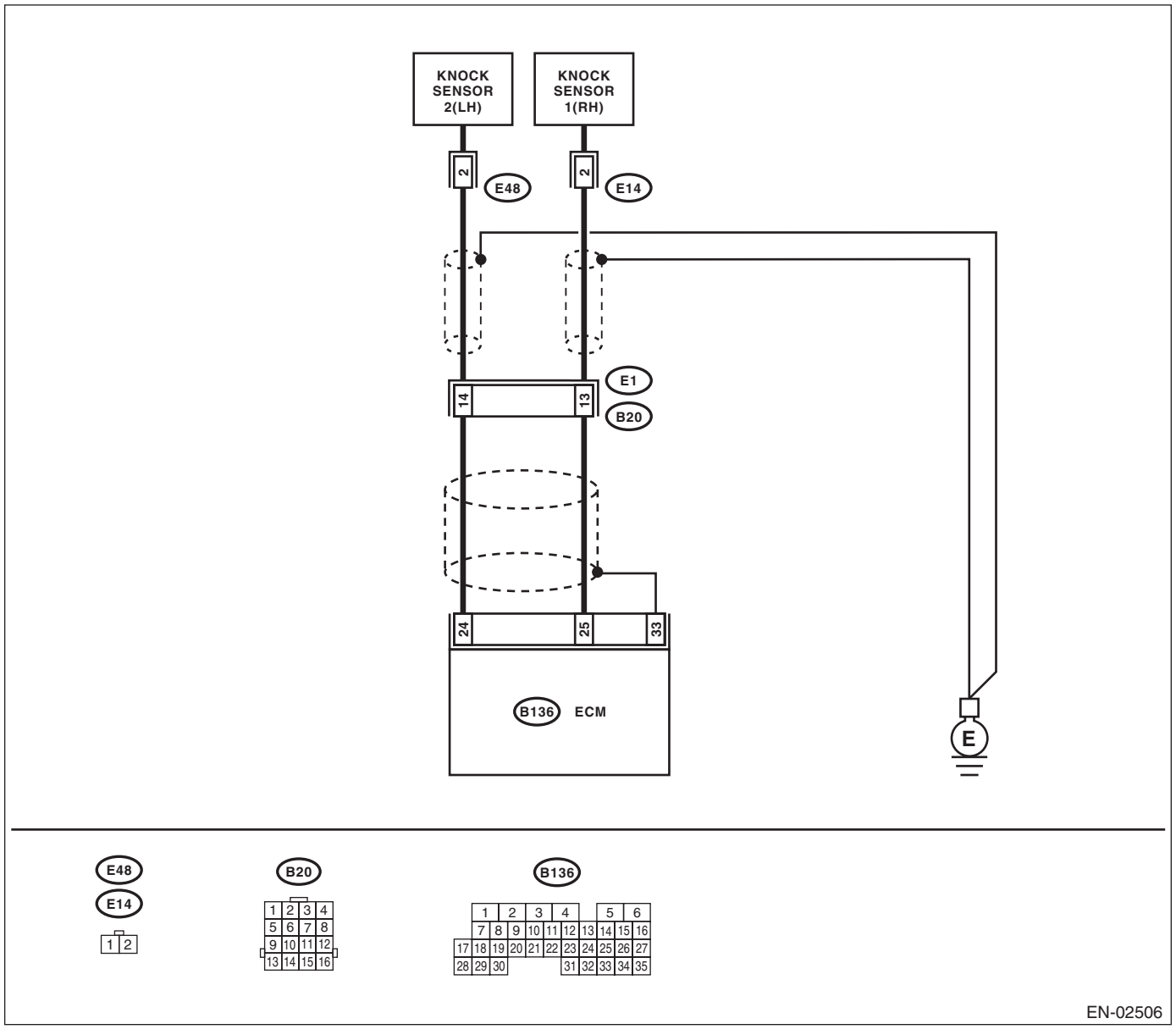

	Step	Check	Yes	No
1	**CHECK HARNESS BETWEEN KNOCK SENSOR AND ECM CONNECTOR.** 1) Turn the ignition switch to OFF. 2) Disconnect the connector from ECM. 3) Measure the resistance between ECM harness connector and chassis ground. ***Connector & terminal*** ***(B136) No. 24 — Chassis ground:***	Is the resistance more than 700 kΩ?	Go to step **2.**	Repair the harness and connector. NOTE: In this case repair the following: • Open circuit in harness between knock sensor and ECM connector • Poor contact in knock sensor connector • Poor contact in coupling connector
2	**CHECK KNOCK SENSOR.** 1) Disconnect the connector from knock sensor. 2) Measure the resistance between knock sensor connector terminal and engine ground. ***Terminals*** ***No. 2 — Engine ground:***	Is the resistance more than 700 kΩ?	Go to step **3.**	Repair the harness and connector. NOTE: In this case repair the following: • Poor contact in knock sensor connector
3	**CHECK CONDITION OF KNOCK SENSOR INSTALLATION.**	Is the knock sensor installation bolt tightened securely?	Replace the knock sensor. <Ref. to FU(H6DO)-22, Knock Sensor.>	Tighten knock sensor installation bolt securely.

BS:DTC P0333 KNOCK SENSOR 2 CIRCUIT HIGH INPUT (BANK 2)

DTC DETECTING CONDITION:

- Detect as soon as malfunction occurs.
- GENERAL DESCRIPTION <Ref. to GD(H6DO)-110, DTC P0333 KNOCK SENSOR 2 CIRCUIT HIGH INPUT (BANK 2), Diagnostic Trouble Code (DTC) Detecting Criteria.>

TROUBLE SYMPTOM:

- Driving performance problem
- Knocking occurs.

CAUTION:
After repair or replacement of faulty parts, conduct Clear Memory Mode <Ref. to EN(H6DO)(diag)-44, OPERATION, Clear Memory Mode.> and Inspection Mode <Ref. to EN(H6DO)(diag)-35, PROCEDURE, Inspection Mode.>.

WIRING DIAGRAM:

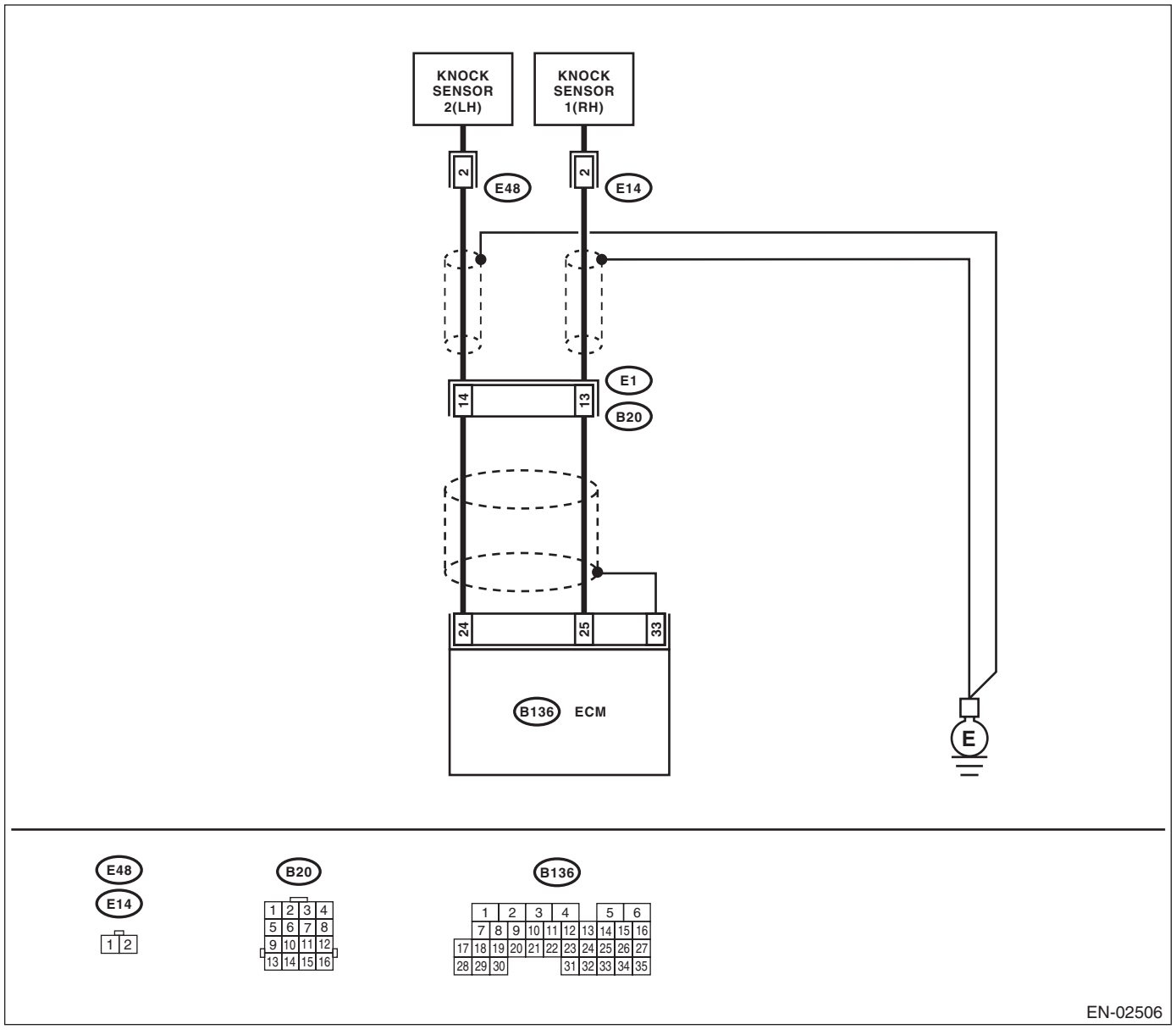

	Step	Check	Yes	No
1	**CHECK HARNESS BETWEEN KNOCK SENSOR AND ECM CONNECTOR.** Measure the resistance of harness between ECM connector and chassis ground. ***Connector & terminal*** ***(B136) No. 24 — Chassis ground:***	Is the resistance less than 400 kΩ?	Go to step **2.**	Go to step **3.**
2	**CHECK KNOCK SENSOR.** 1) Disconnect the connector from knock sensor. 2) Measure the resistance between knock sensor connector terminal and engine ground. ***Terminals*** ***No. 2 — Engine ground:***	Is the resistance less than 400 kΩ?	Replace the knock sensor. <Ref. to FU(H6DO)-22, Knock Sensor.>	Repair the ground short circuit in harness between knock sensor connector and ECM connector. NOTE: The harness between both connectors are shielded. Repair the short circuit in harness covered with shield.
3	**CHECK INPUT SIGNAL FROM ECM.** 1) Connect the connectors to ECM and knock sensor. 2) Turn the ignition switch to ON. 3) Measure the voltage between ECM and chassis ground. ***Connector & terminal*** ***(B136) No. 24 (+) — Chassis ground (−):***	Is the voltage more than 2 V?	Even if the malfunction indicator light illuminates, the circuit has returned to a normal condition at this time. (However, the possibility of poor contact still remains.) NOTE: In this case repair the following: • Poor contact in knock sensor connector • Poor contact in ECM connector • Poor contact in coupling connector	Repair the poor contact in ECM connector.

BT:DTC P0335 CRANKSHAFT POSITION SENSOR “A” CIRCUIT

DTC DETECTING CONDITION:

- Detect as soon as malfunction occurs.
- GENERAL DESCRIPTION <Ref. to GD(H6DO)-111, DTC P0335 CRANKSHAFT POSITION SENSOR “A” CIRCUIT, Diagnostic Trouble Code (DTC) Detecting Criteria.>

TROUBLE SYMPTOM:

- Engine stalls.
- Failure of engine to start

CAUTION:

After repair or replacement of faulty parts, conduct Clear Memory Mode <Ref. to EN(H6DO)(diag)-44, OPERATION, Clear Memory Mode.> and Inspection Mode <Ref. to EN(H6DO)(diag)-35, PROCEDURE, Inspection Mode.>.

WIRING DIAGRAM:

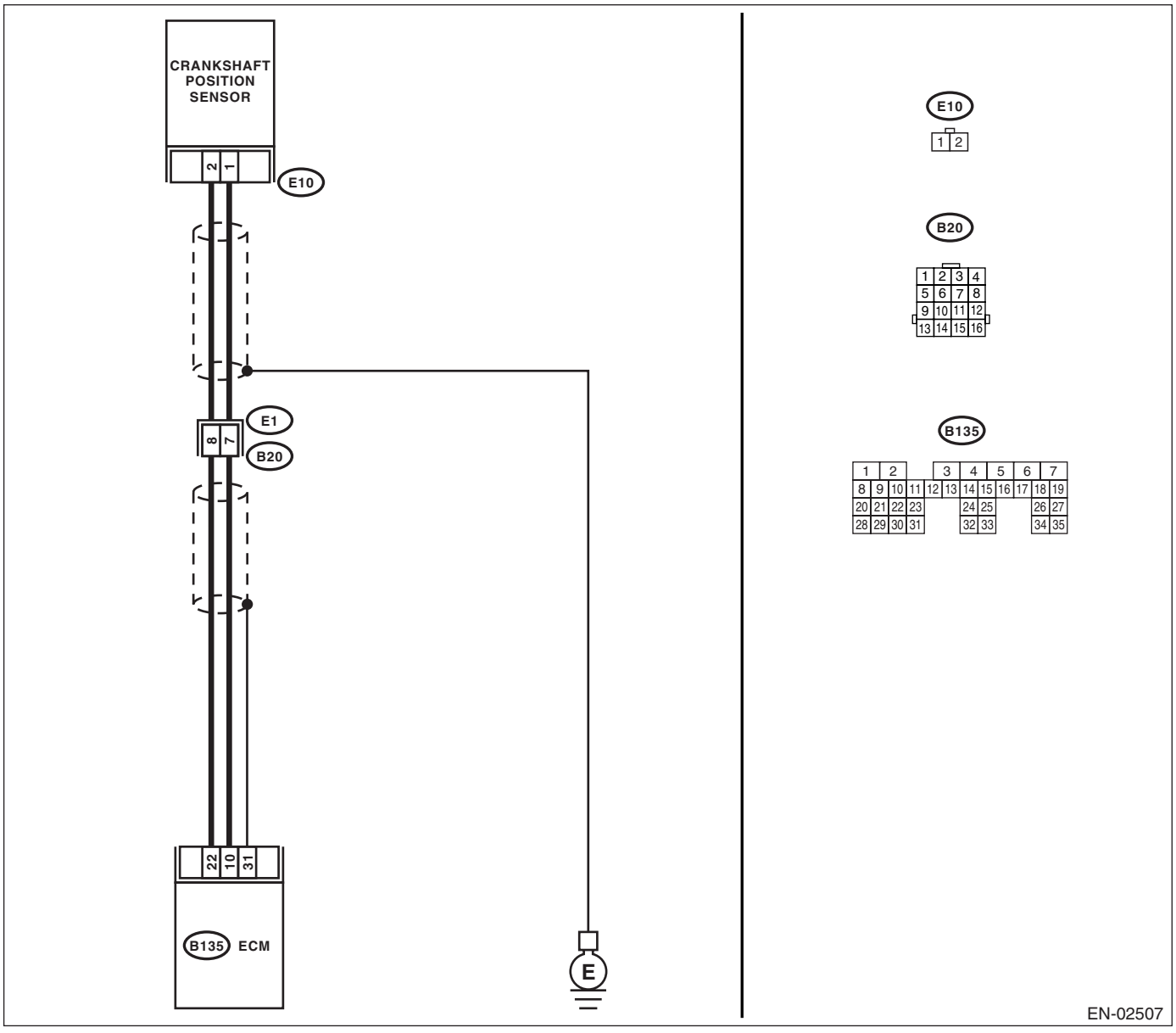

	Step	Check	Yes	No
1	**CHECK HARNESS BETWEEN CRANKSHAFT POSITION SENSOR AND ECM CONNECTOR.** 1) Turn the ignition switch to OFF. 2) Disconnect the connector from the crankshaft position sensor. 3) Measure the resistance of harness between crankshaft position sensor connector and engine ground. ***Connector & terminal*** ***(E10) No. 1 — Engine ground:***	Is the resistance more than 100 kΩ?	Repair the harness and connector. NOTE: In this case repair the following: • Open circuit in harness between crankshaft position sensor and ECM connector • Poor contact in ECM connector • Poor contact in coupling connector	Go to step **2.**
2	**CHECK HARNESS BETWEEN CRANKSHAFT POSITION SENSOR AND ECM CONNECTOR.** Measure the resistance of harness between crankshaft position sensor connector and engine ground. ***Connector & terminal*** ***(E10) No. 1 — Engine ground:***	Is the resistance less than 10 Ω?	Repair the ground short circuit in harness between crankshaft position sensor and ECM connector. NOTE: The harness between both connectors are shielded. Repair the ground short circuit in harness together with shield.	Go to step **3.**
3	**CHECK HARNESS BETWEEN CRANKSHAFT POSITION SENSOR AND ECM CONNECTOR.** Measure the resistance of harness between crankshaft position sensor connector and engine ground. ***Connector & terminal*** ***(E10) No. 2 — Engine ground:***	Is the resistance less than 5 Ω?	Go to step **4.**	Repair the harness and connector. NOTE: In this case repair the following: • Open circuit in harness between crankshaft position sensor and ECM connector • Poor contact in ECM connector • Poor contact in coupling connector
4	**CHECK CONDITION OF CRANKSHAFT POSITION SENSOR.**	Is the crankshaft position sensor installation bolt tightened securely?	Go to step **5.**	Tighten the crankshaft position sensor installation bolt securely.
5	**CHECK CRANKSHAFT POSITION SENSOR.** 1) Remove the crankshaft position sensor. 2) Measure the resistance between connector terminals of crankshaft position sensor. ***Terminals*** ***No. 1 — No. 2:***	Is the resistance 1 — 4 kΩ?	Repair the poor contact in crankshaft position sensor connector.	Replace the crankshaft position sensor. <Ref. to FU(H6DO)-20, Crankshaft Position Sensor.>

BU:DTC P0336 CRANKSHAFT POSITION SENSOR “A” CIRCUIT RANGE/PERFORMANCE

DTC DETECTING CONDITION:

- Two consecutive driving cycles with fault
- GENERAL DESCRIPTION <Ref. to GD(H6DO)-113, DTC P0336 CRANKSHAFT POSITION SENSOR “A” CIRCUIT RANGE/PERFORMANCE, Diagnostic Trouble Code (DTC) Detecting Criteria.>

TROUBLE SYMPTOM:

- Engine stalls.
- Failure of engine to start

CAUTION:
After repair or replacement of faulty parts, conduct Clear Memory Mode <Ref. to EN(H6DO)(diag)-44, OPERATION, Clear Memory Mode.> and Inspection Mode <Ref. to EN(H6DO)(diag)-35, PROCEDURE, Inspection Mode.>.

WIRING DIAGRAM:

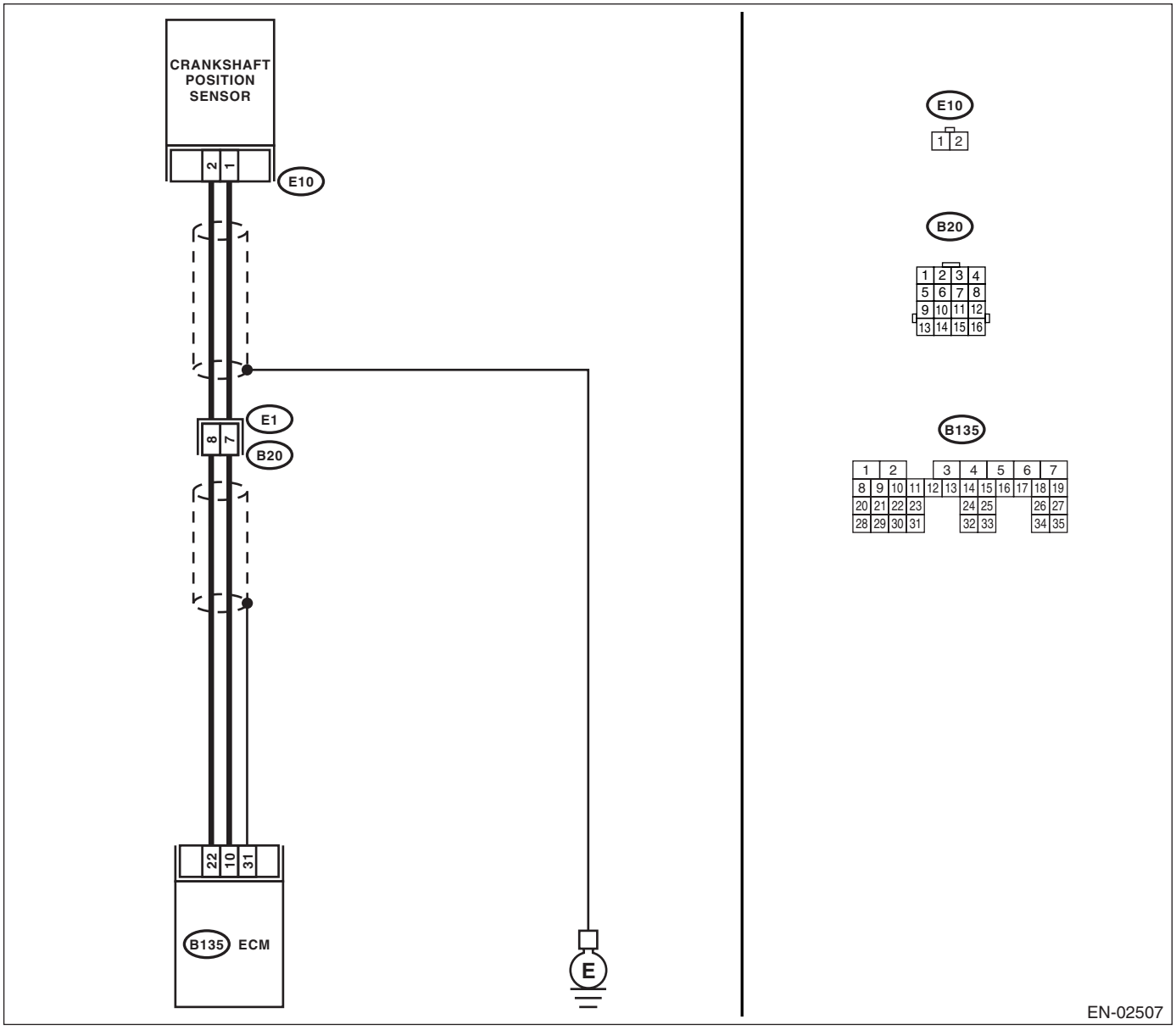

	Step	Check	Yes	No
1	**CHECK FOR ANY OTHER DTC ON DISPLAY.**	Is any other DTC displayed?	Inspect the relevant DTC using "List of Diagnostic Trouble Code (DTC)". <Ref. to EN(H6DO)(diag)-71, List of Diagnostic Trouble Code (DTC).>	Go to step **2.**
2	**CHECK CONDITION OF CRANKSHAFT POSITION SENSOR.** Turn the ignition switch to OFF.	Is the crankshaft position sensor installation bolt tightened securely?	Go to step **3.**	Tighten the crankshaft position sensor installation bolt securely.
3	**CHECK CRANKSHAFT PLATE.**	Are the crankshaft plate teeth cracked or damaged?	Replace the crankshaft plate.	Go to step **4.**
4	**CHECK INSTALLATION CONDITION OF TIMING CHAIN.** Turn the crankshaft, and align alignment mark on crank sprocket with alignment mark on cylinder block.	Is the timing chain dislocated from its proper position?	Repair the installation condition of timing chain. <Ref. to ME(H6DO)-44, Timing Chain Assembly.>	Replace the crankshaft position sensor. <Ref. to FU(H6DO)-20, Crankshaft Position Sensor.>

BV:DTC P0340 CAMSHAFT POSITION SENSOR “A” CIRCUIT (BANK 1 OR SINGLE SENSOR)

DTC DETECTING CONDITION:

- Detect as soon as malfunction occurs.
- GENERAL DESCRIPTION <Ref. to GD(H6DO)-115, DTC P0340 CAMSHAFT POSITION SENSOR “A” CIRCUIT (BANK 1 OR SINGLE SENSOR), Diagnostic Trouble Code (DTC) Detecting Criteria.>

TROUBLE SYMPTOM:

- Engine stalls.
- Failure of engine to start

CAUTION:
After repair or replacement of faulty parts, conduct Clear Memory Mode <Ref. to EN(H6DO)(diag)-44, OPERATION, Clear Memory Mode.> and Inspection Mode. <Ref. to EN(H6DO)(diag)-35, PROCEDURE, Inspection Mode.>

WIRING DIAGRAM:

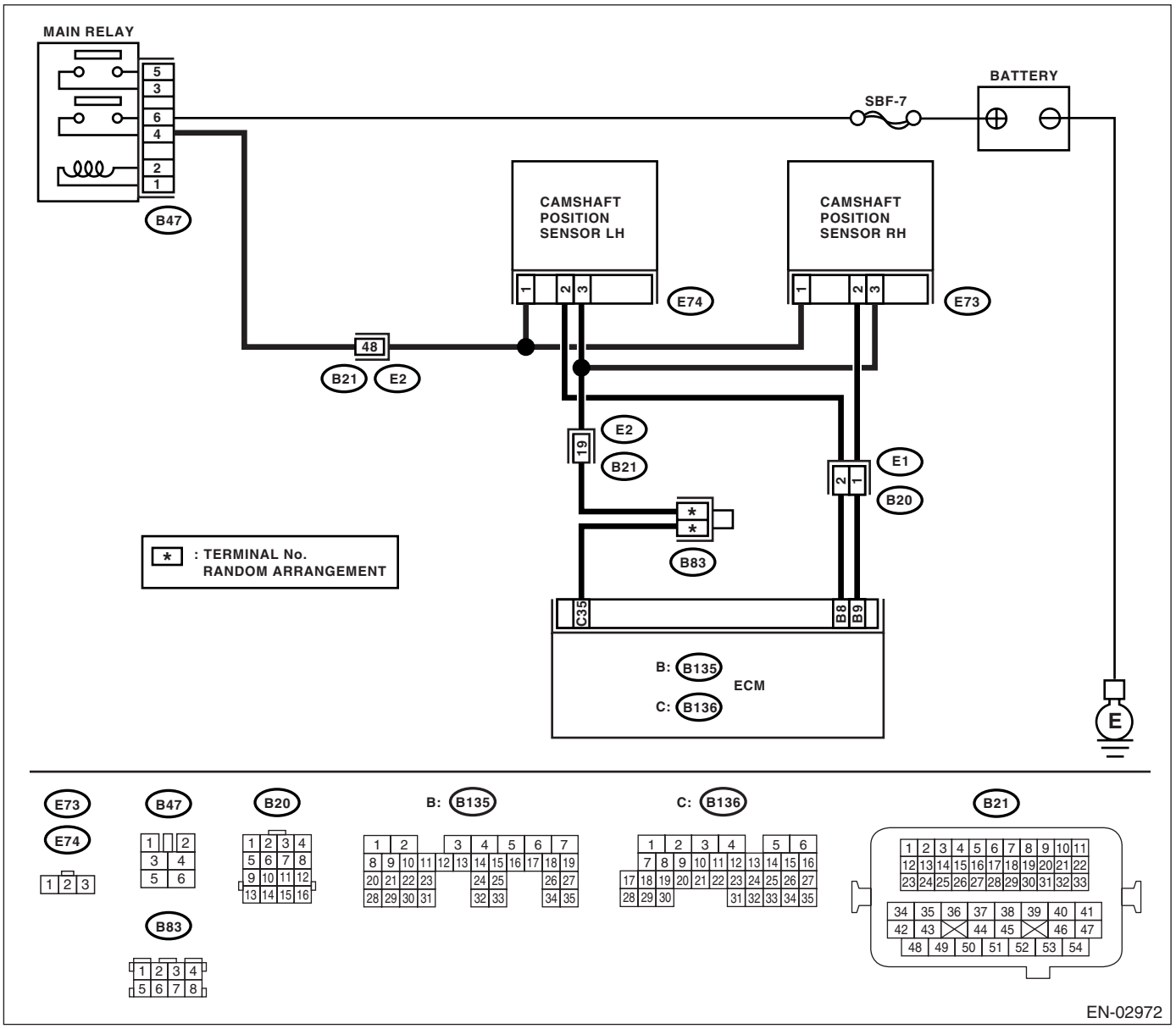

	Step	Check	Yes	No
1	**CHECK FOR ANY OTHER DTC ON DISPLAY.**	Is any other DTC displayed?	Inspect the DTC using "List of Diagnostic Trouble Code (DTC)". <Ref. to EN(H6DO)(diag)-71, List of Diagnostic Trouble Code (DTC).>	Go to step **2.**
2	**CHECK POWER SUPPLY OF CAMSHAFT POSITION SENSOR.** 1) Turn the ignition switch to OFF. 2) Disconnect the connector from camshaft position sensor. 3) Measure the voltage between camshaft position sensor connector and engine ground. ***Connector & terminal*** ***(E73) No. 1 (+) — Engine ground (−):***	Is the voltage more than 10 V?	Repair the battery short circuit between main relay connector and camshaft position sensor connector.	Go to step **3.**
3	**CHECK POWER SUPPLY OF CAMSHAFT POSITION SENSOR.** 1) Turn the ignition switch to ON. 2) Measure the voltage between camshaft position sensor connector and engine ground. ***Connector & terminal*** ***(E73) No. 1 (+) — Engine ground (−):***	Is the voltage more than 10 V?	Go to step **4.**	Repair open or battery short circuit between main relay connector and camshaft position sensor connector.
4	**CHECK HARNESS BETWEEN CAMSHAFT POSITION SENSOR CONNECTOR AND ECM.** 1) Turn the ignition switch to OFF. 2) Disconnect the connector from ECM. 3) Measure the resistance between camshaft position sensor connector and ECM. ***Connector & terminal*** ***(E73) No. 2 — (B135) No. 9:*** ***(E73) No. 3 — (B136) No. 35:***	Is the resistance less than 1 Ω?	Go to step **5.**	Repair the open circuit between camshaft position sensor and ECM.
5	**CHECK HARNESS BETWEEN CAMSHAFT POSITION SENSOR CONNECTOR AND ECM.** Measure the resistance between camshaft position sensor connector and engine ground. ***Connector & terminal*** ***(E73) No. 2 — Engine ground:***	Is the resistance more than 1 MΩ?	Go to step **6.**	Repair the ground short circuit between camshaft position sensor and ECM.
6	**CHECK CONDITION OF CAMSHAFT POSITION SENSOR.**	Is the camshaft position sensor installation bolt tightened securely?	Go to step **7.**	Tighten the camshaft position sensor installation bolt securely.
7	**CHECK CAMSHAFT POSITION SENSOR.** Check waveform of camshaft position sensor. <Ref. to EN(H6DO)(diag)-18, Engine Control Module (ECM) I/O Signal.>	Is there any abnormality in waveform?	Replace the camshaft position sensor. <Ref. to FU(H6DO)-21, Camshaft Position Sensor.>	Go to step **8.**
8	**CHECK POOR CONTACT.** Check poor contact in ECM connector.	Is the poor contact in ECM connector?	Repair the poor contact in ECM connector.	Replace the ECM. <Ref. to FU(H6DO)-34, Engine Control Module (ECM).>

BW:DTC P0345 CAMSHAFT POSITION SENSOR “A” CIRCUIT (BANK 2)

DTC DETECTING CONDITION:

- Detect as soon as malfunction occurs.
- GENERAL DESCRIPTION <Ref. to GD(H6DO)-117, DTC P0345 CAMSHAFT POSITION SENSOR “A” CIRCUIT (BANK 2), Diagnostic Trouble Code (DTC) Detecting Criteria.>

TROUBLE SYMPTOM:

- Engine stalls.
- Failure of engine to start

CAUTION:

After repair or replacement of faulty parts, conduct Clear Memory Mode <Ref. to EN(H6DO)(diag)-44, OPERATION, Clear Memory Mode.> and Inspection Mode. <Ref. to EN(H6DO)(diag)-35, PROCEDURE, Inspection Mode.>

WIRING DIAGRAM:

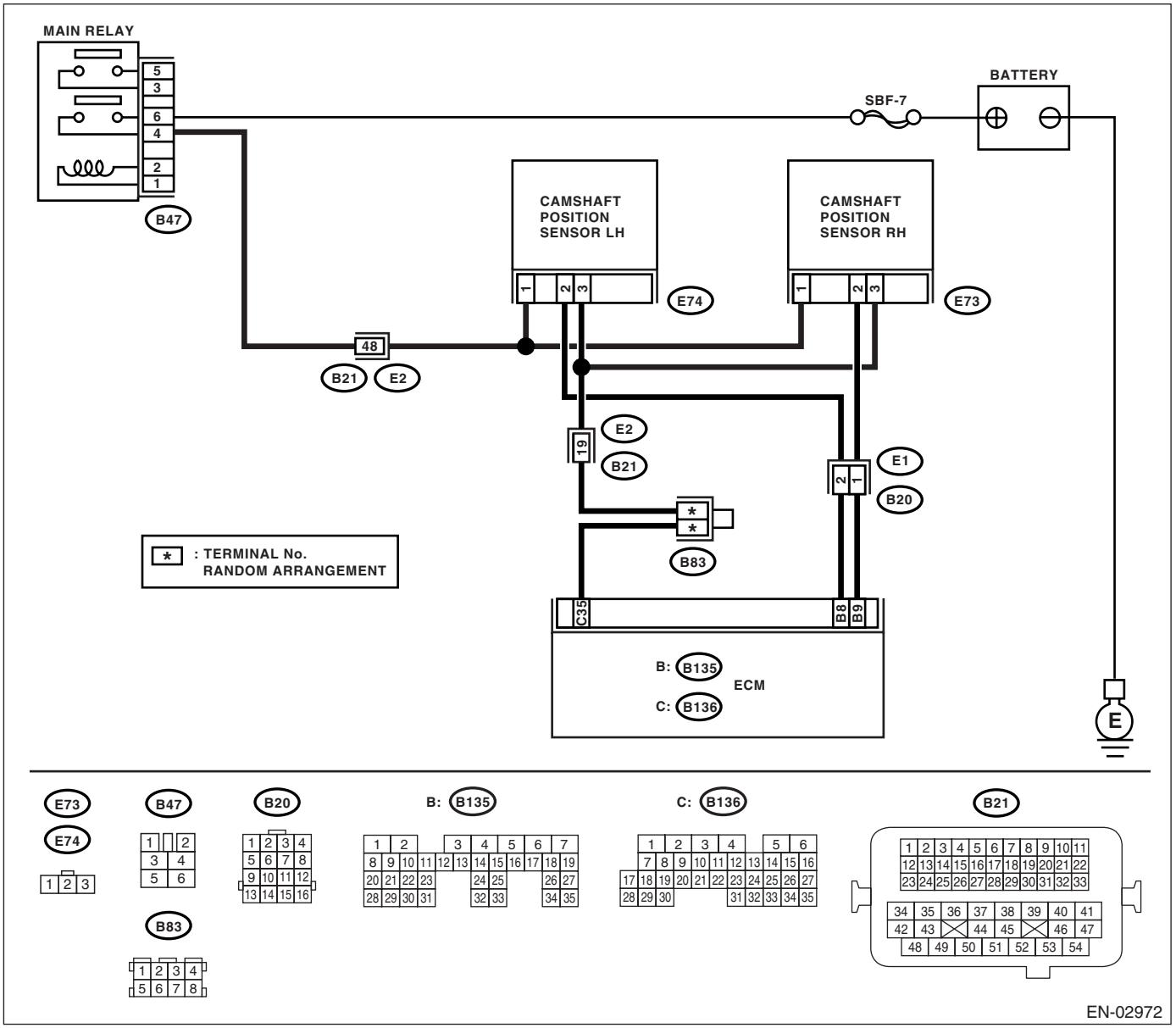

	Step	Check	Yes	No
1	**CHECK FOR ANY OTHER DTC ON DISPLAY.**	Is any other DTC displayed?	Inspect the DTC using "List of Diagnostic Trouble Code (DTC)". <Ref. to EN(H6DO)(diag)-71, List of Diagnostic Trouble Code (DTC).>	Go to step **2.**
2	**CHECK POWER SUPPLY OF CAMSHAFT POSITION SENSOR.** 1) Turn the ignition switch to OFF. 2) Disconnect the connector from camshaft position sensor. 3) Measure the voltage between camshaft position sensor connector and engine ground. ***Connector & terminal*** ***(E74) No. 1 (+) — Engine ground (−):***	Is the voltage more than 10 V?	Repair the battery short circuit between main relay connector and camshaft position sensor connector.	Go to step **3.**
3	**CHECK POWER SUPPLY OF CAMSHAFT POSITION SENSOR.** 1) Turn the ignition switch to ON. 2) Measure the voltage between camshaft position sensor connector and engine ground. ***Connector & terminal*** ***(E74) No. 1 (+) — Engine ground (−):***	Is the voltage more than 10 V?	Go to step **4.**	Repair open or battery short circuit between main relay connector and camshaft position sensor connector.
4	**CHECK HARNESS BETWEEN CAMSHAFT POSITION SENSOR CONNECTOR AND ECM.** 1) Turn the ignition switch to OFF. 2) Disconnect the connector from ECM. 3) Measure the resistance between camshaft position sensor connector and ECM. ***Connector & terminal*** ***(E74) No. 2 — (B135) No. 8:*** ***(E74) No. 3 — (B136) No. 35:***	Is the resistance less than 1 Ω?	Go to step **5.**	Repair the open circuit between camshaft position sensor and ECM.
5	**CHECK HARNESS BETWEEN CAMSHAFT POSITION SENSOR CONNECTOR AND ECM.** Measure the resistance between camshaft position sensor connector and engine ground. ***Connector & terminal*** ***(E74) No. 2 — Engine ground:***	Is the resistance more than 1 MΩ?	Go to step **6.**	Repair the ground short circuit between camshaft position sensor and ECM.
6	**CHECK CONDITION OF CAMSHAFT POSITION SENSOR.**	Is the camshaft position sensor installation bolt tightened securely?	Go to step **7.**	Tighten the camshaft position sensor installation bolt securely.
7	**CHECK CAMSHAFT POSITION SENSOR.** Check waveform of camshaft position sensor. <Ref. to EN(H6DO)(diag)-18, Engine Control Module (ECM) I/O Signal.>	Is there any abnormality in waveform?	Replace the camshaft position sensor. <Ref. to FU(H6DO)-21, Camshaft Position Sensor.>	Go to step **8.**
8	**CHECK POOR CONTACT.** Check poor contact in ECM connector.	Is the poor contact in ECM connector?	Repair the poor contact in ECM connector.	Replace the ECM. <Ref. to FU(H6DO)-34, Engine Control Module (ECM).>

BX:DTC P0420 CATALYST SYSTEM EFFICIENCY BELOW THRESHOLD (BANK 1)

DTC DETECTING CONDITION:

- Two consecutive driving cycles with fault
- GENERAL DESCRIPTION <Ref. to GD(H6DO)-117, DTC P0420 CATALYST SYSTEM EFFICIENCY BELOW THRESHOLD (BANK 1), Diagnostic Trouble Code (DTC) Detecting Criteria.>

TROUBLE SYMPTOM:

- Engine stalls.
- Idle mixture is out of specifications.

CAUTION:
After repair or replacement of faulty parts, perform Clear Memory Mode <Ref. to EN(H6DO)(diag)-44, OPERATION, Clear Memory Mode.> and Inspection Mode <Ref. to EN(H6DO)(diag)-35, PROCEDURE, Inspection Mode.>.

WIRING DIAGRAM:

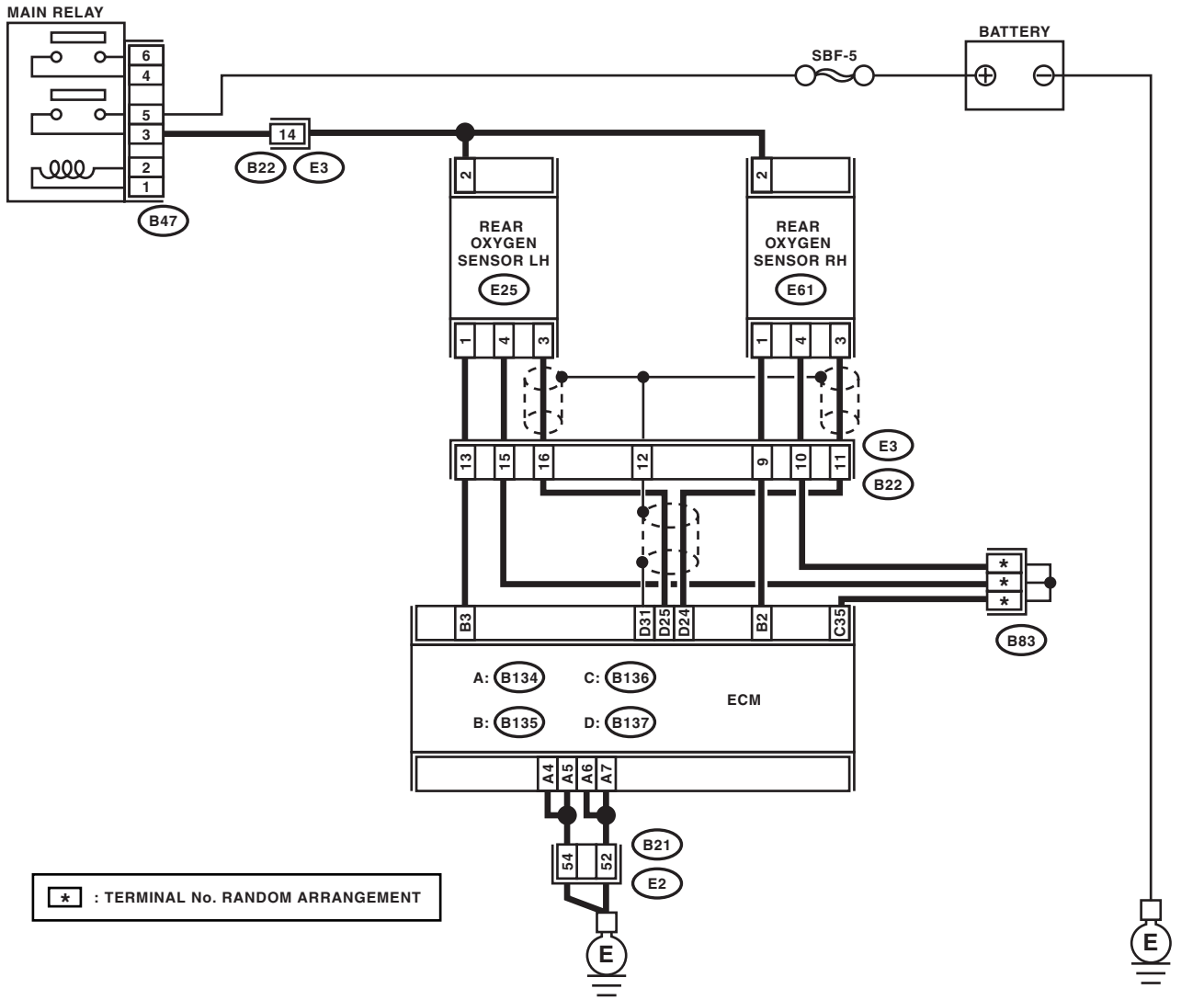

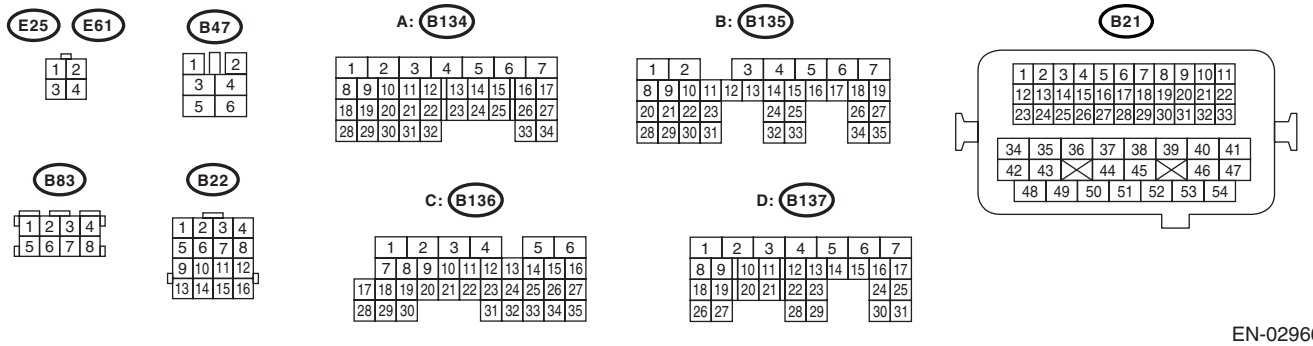

EN-02966

	Step	Check	Yes	No
1	**CHECK ANY OTHER DTC ON DISPLAY.**	Is any other DTC displayed?	Check the appropriate DTC using the "List of Diagnostic Trouble Code (DTC)". <Ref. to EN(H6DO)(diag)-71, List of Diagnostic Trouble Code (DTC).> NOTE: In this case, it is not necessary to inspect DTC P0420.	Go to step **2.**
2	**CHECK EXHAUST SYSTEM.** Check for gas leaks or air suction caused by loose or dislocated nuts and bolts, and open hole at exhaust pipes. NOTE: Check the following positions. • Between cylinder head and front exhaust pipe • Between front exhaust pipe and front catalytic converter • Between front catalytic converter and rear catalytic converter • Loose part and improper installation of front oxygen (A/F) sensor or rear oxygen sensor	Is there any fault in exhaust system?	Repair or replace the exhaust system. <Ref. to EX(H6DO)-2, General Description.>	Go to step **3.**
3	**CHECK WAVEFORM DATA ON SUBARU SELECT MONITOR (WHILE DRIVING).** 1) Drive the vehicle at a constant speed of 80 — 112 km/h (50 — 70 MPH). 2) Keep the condition of step 1) for 5 minutes, then read the waveform data in a driving condition using Subaru Select Monitor. 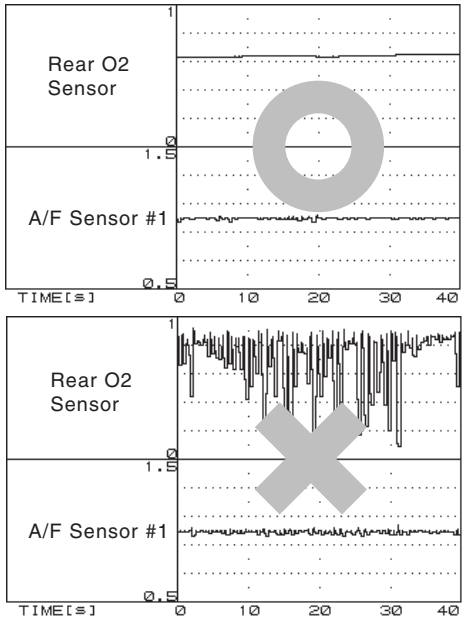	Is normal waveform pattern displayed?	Contact with your SOA Service Center. NOTE: The probable cause is considered as the deterioration of multiple parts.	Go to step **4.**

	Step	Check	Yes	No
4	**CHECK WAVEFORM DATA ON SUBARU SELECT MONITOR (WHILE IDLING).** 1) Idle the engine. 2) Under the condition of step 1), read the waveform data using Subaru Select Monitor. 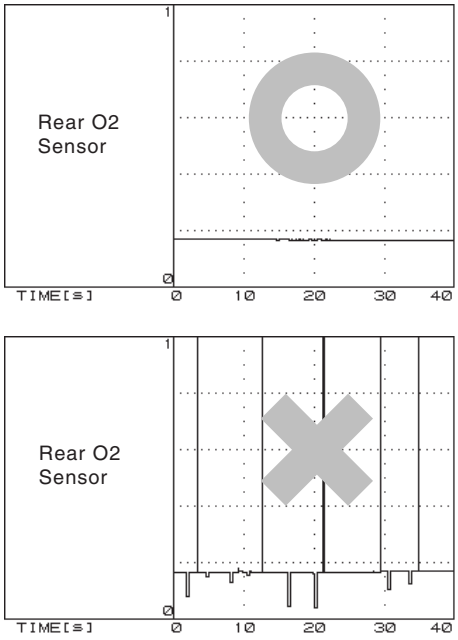 EN-04681	Is normal waveform pattern displayed?	Go to step **10.**	Go to step **5.**
5	**CHECK REAR OXYGEN SENSOR VOLTAGE.** 1) Warm-up the engine until engine coolant temperature is above 70°C (158°F), and keep the engine speed at 3,000 rpm. (Max. 2 minutes) 2) Read the voltage of rear oxygen (A/F) sensor using Subaru Select Monitor. NOTE: Subaru Select Monitor For detailed operation procedure, refer to "READ CURRENT DATA FOR ENGINE". <Ref. to EN(H6DO)(diag)-26, Subaru Select Monitor.>	Is the voltage more than 490 mV?	Go to step **9.**	Go to step **6.**
6	**CHECK REAR OXYGEN SENSOR CONNECTOR AND COUPLING CONNECTOR.**	Does water enter the connector?	Dry the water thoroughly.	Go to step **7.**
7	**CHECK HARNESS BETWEEN ECM AND REAR OXYGEN SENSOR CONNECTOR.** 1) Turn the ignition switch to OFF. 2) Disconnect the connector from ECM and rear oxygen sensor. 3) Measure the resistance of harness between ECM and rear oxygen sensor connector. ***Connector & terminal*** ***(B137) No. 25 — (E25) No. 3:*** ***(B136) No. 35 — (E25) No. 4:*** ***(B137) No. 24 — (E61) No. 3:*** ***(B136) No. 35 — (E61) No. 4:***	Is the resistance more than 3 Ω?	Repair the open circuit of harness between ECM and rear oxygen sensor connector.	Go to step **8.**

	Step	Check	Yes	No
8	**CHECK HARNESS BETWEEN ECM AND REAR OXYGEN SENSOR CONNECTOR.** 1) Turn the ignition switch to ON. 2) Measure the voltage between rear oxygen sensor connector and chassis ground. ***Connector & terminal*** ***(E25) No. 3 (+) — Chassis ground (−):*** ***(E61) No. 3 (+) — Chassis ground (−):***	Is the voltage 0.2 — 0.5 V?	Go to step **11.**	Repair the harness and connector. NOTE: Repair the following. • Open circuit in harness between rear oxygen sensor and ECM connector • Poor contact in rear oxygen sensor and ECM connector • Poor contact in ECM connector
9	**CHECK REAR OXYGEN SENSOR VOLTAGE.** 1) Warm-up the engine until engine coolant temperature is above 70°C (158°F), and rapidly reduce the engine speed from 3,000 rpm. 2) Read the voltage of rear oxygen (A/F) sensor using Subaru Select Monitor. NOTE: Subaru Select Monitor For detailed operation procedure, refer to “READ CURRENT DATA FOR ENGINE”. <Ref. to EN(H6DO)(diag)-26, Subaru Select Monitor.>	Is the voltage 250 mV or less?	Contact with your SOA Service Center. NOTE: The probable cause is considered as the deterioration of multiple parts.	Go to step **6.**
10	**CHECK CATALYTIC CONVERTER.**	Is the catalytic converter damaged?	Replace the catalytic converter. <Ref. to EC(H6DO)-3, Front Catalytic Converter.>	Contact with your SOA Service Center. NOTE: The probable cause is considered as the deterioration of multiple parts.
11	**CHECK REAR OXYGEN SENSOR SHIELD.** 1) Turn the ignition switch to OFF. 2) Bare the harness sensor shield on the body side of rear oxygen sensor connector. 3) Measure the resistance between sensor shield and chassis ground.	Is resistance less than 1 Ω?	Replace the rear oxygen sensor. <Ref. to FU(H6DO)-32, Rear Oxygen Sensor.>	Repair the open circuit of the rear oxygen sensor harness.

BY:DTC P0442 EVAPORATIVE EMISSION CONTROL SYSTEM LEAK DETECTED (SMALL LEAK)

DTC DETECTING CONDITION:

- Two consecutive driving cycles with fault
- GENERAL DESCRIPTION <Ref. to GD(H6DO)-120, DTC P0442 EVAPORATIVE EMISSION CONTROL SYSTEM LEAK DETECTED (SMALL LEAK), Diagnostic Trouble Code (DTC) Detecting Criteria.>

TROUBLE SYMPTOM:

- Fuel odor
- There is a hole of more than 1.0 mm (0.04 in) dia. in evaporation system or fuel tank.

CAUTION:
After repair or replacement of faulty parts, conduct Clear Memory Mode <Ref. to EN(H6DO)(diag)-44, OPERATION, Clear Memory Mode.> and Inspection Mode <Ref. to EN(H6DO)(diag)-35, PROCEDURE, Inspection Mode.>.

WIRING DIAGRAM:

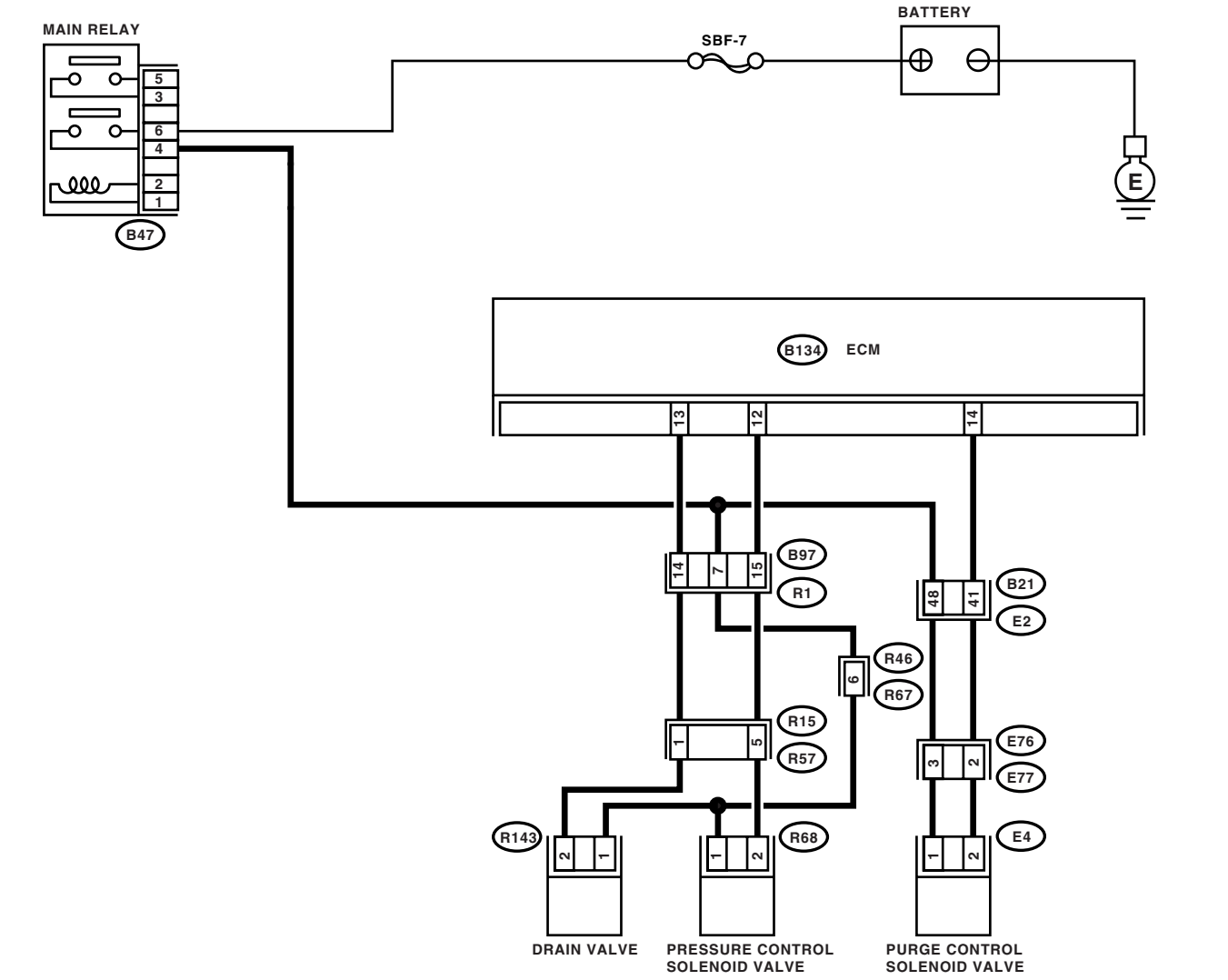

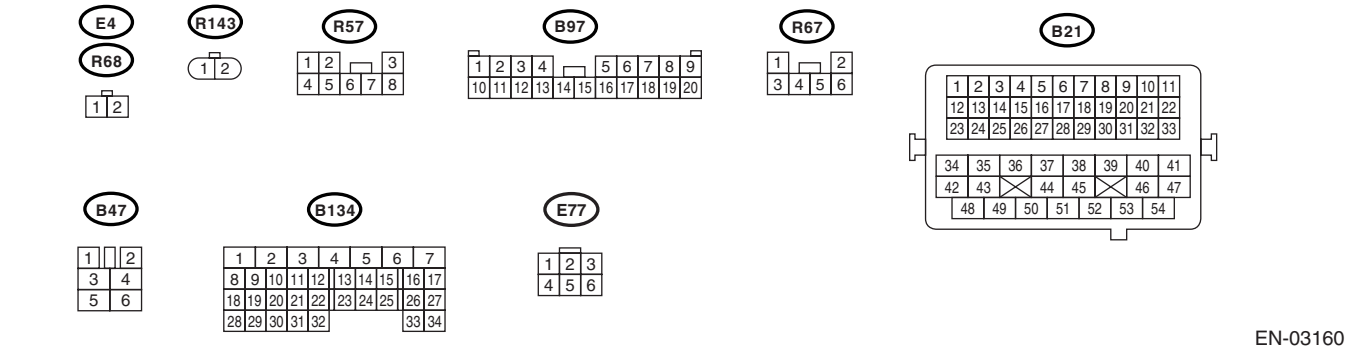

EN-03160

	Step	Check	Yes	No
1	**CHECK FOR ANY OTHER DTC ON DISPLAY.**	Is any other DTC displayed?	Inspect the relevant DTC using "List of Diagnostic Trouble Code (DTC)". <Ref. to EN(H6DO)(diag)-71, List of Diagnostic Trouble Code (DTC).>	Go to step **2.**
2	**CHECK FUEL FILLER CAP.** 1) Turn the ignition switch to OFF. 2) Check the fuel filler cap. NOTE: The DTC is stored in memory if fuel filler cap is or was loose or if the cap chain was caught while tightening.	Is the fuel filler cap tightened securely?	Go to step **3.**	Tighten fuel filler cap securely.
3	**CHECK FUEL FILLER CAP.**	Is the fuel filler cap SUBARU genuine?	Go to step **4.**	Replace with a SUBARU genuine fuel filler cap.
4	**CHECK FUEL FILLER PIPE PACKING.**	Is there any damage to the seal between fuel filler cap and fuel filler pipe?	Repair or replace the fuel filler cap and fuel filler pipe. <Ref. to FU(H6DO)-46, Fuel Filler Pipe.>	Go to step **5.**
5	**CHECK DRAIN VALVE.** 1) Connect the test mode connector. 2) Turn the ignition switch to ON. 3) Operate the drain valve. NOTE: Drain valve operation can also be executed using Subaru Select Monitor. For the procedure, refer to "Compulsory Valve Operation Check Mode". <Ref. to EN(H6DO)(diag)-45, Compulsory Valve Operation Check Mode.>	Does the drain valve operate?	Go to step **6.**	Replace the drain valve. <Ref. to EC(H6DO)-15, Drain Valve.>
6	**CHECK PURGE CONTROL SOLENOID VALVE.** Operate the purge control solenoid valve. NOTE: Purge control solenoid valve operation can also be executed using Subaru Select Monitor. For the procedure, refer to "Compulsory Valve Operation Check Mode". <Ref. to EN(H6DO)(diag)-45, Compulsory Valve Operation Check Mode.>	Does the purge control solenoid valve operate?	Go to step **7.**	Replace the purge control solenoid valve. <Ref. to EC(H6DO)-6, Purge Control Solenoid Valve.>
7	**CHECK PRESSURE CONTROL SOLENOID VALVE.** Operate the pressure control solenoid valve. NOTE: Pressure control solenoid valve operation can also be executed using Subaru Select Monitor. For the procedure, refer to "Compulsory Valve Operation Check Mode". <Ref. to EN(H6DO)(diag)-45, Compulsory Valve Operation Check Mode.>	Does the pressure control solenoid valve operate?	Go to step **8.**	Replace the pressure control solenoid valve. <Ref. to EC(H6DO)-12, Pressure Control Solenoid Valve.>

	Step	Check	Yes	No
8	**CHECK EVAPORATIVE EMISSION CONTROL SYSTEM LINE.** Turn the ignition switch to OFF.	Is there a hole of more than 1.0 mm (0.04 in) dia. on evaporation line?	Repair or replace the evaporation line. <Ref. to FU(H6DO)-55, Fuel Delivery, Return and Evaporation Lines.>	Go to step **9.**
9	**CHECK CANISTER.**	Is the canister damaged or is there a hole of more than 1.0 mm (0.04 in) dia. in it?	Repair or replace the canister. <Ref. to EC(H6DO)-5, Canister.>	Go to step **10.**
10	**CHECK FUEL TANK.** Remove the fuel tank. <Ref. to FU(H6DO)-40, Fuel Tank.>	Is the fuel tank damaged or is there a hole of more than 1.0 mm (0.04 in) dia. in it?	Repair or replace the fuel tank. <Ref. to FU(H6DO)-40, Fuel Tank.>	Go to step **11.**
11	**CHECK ANY OTHER MECHANICAL TROUBLE IN EVAPORATIVE EMISSION CONTROL SYSTEM.**	Are there holes of more than 1.0 mm (0.04 in) dia., cracks, clogging, or disconnections, bend, misconnection of hoses or pipes in evaporative emission control system?	Repair or replace the hoses or pipes.	Contact with SOA Service Center.

BZ:DTC P0447 EVAPORATIVE EMISSION CONTROL SYSTEM VENT CONTROL CIRCUIT OPEN

DTC DETECTING CONDITION:

- Detect as soon as the malfunction occurs.
- GENERAL DESCRIPTION <Ref. to GD(H6DO)-135, DTC P0447 EVAPORATIVE EMISSION CONTROL SYSTEM VENT CONTROL CIRCUIT OPEN, Diagnostic Trouble Code (DTC) Detecting Criteria.>

CAUTION:

After repair or replacement of faulty parts, conduct Clear Memory Mode <Ref. to EN(H6DO)(diag)-44, OPERATION, Clear Memory Mode.> and Inspection Mode <Ref. to EN(H6DO)(diag)-35, PROCEDURE, Inspection Mode.>.

WIRING DIAGRAM:

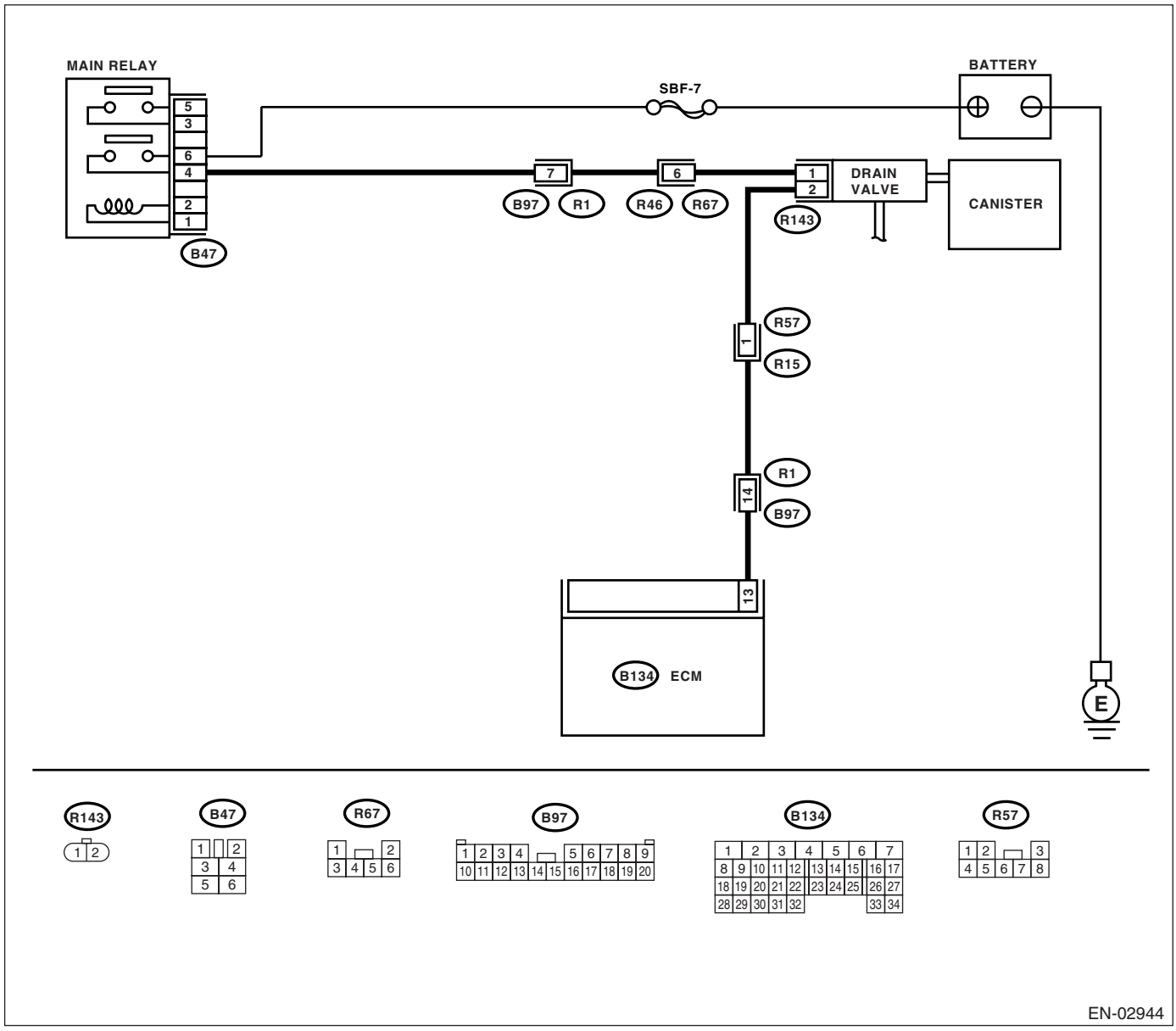

	Step	Check	Yes	No
1	**CHECK OUTPUT SIGNAL FROM ECM.** 1) Turn the ignition switch to ON. 2) Measure the voltage between ECM and chassis ground. ***Connector & terminal*** ***(B134) No. 13 (+) — Chassis ground (−):***	Is the voltage more than 10 V?	Go to step **2.**	Go to step **3.**
2	**CHECK FOR POOR CONTACT.** Check for poor contact in ECM connector.	Is there poor contact in ECM connector?	Repair poor contact in ECM connector.	The malfunction indicator light may light up, however, the circuit is returned to the normal status at the moment. (However, the possibility of poor contact still remains.) NOTE: In this case, repair the following: • Poor contact in drain valve connector • Poor contact in ECM connector • Poor contact in coupling connector
3	**CHECK HARNESS BETWEEN DRAIN VALVE AND ECM CONNECTOR.** 1) Turn the ignition switch to OFF. 2) Disconnect the connectors from drain valve and ECM. 3) Measure the resistance of harness between drain valve connector and chassis ground. ***Connector & terminal*** ***(R143) No. 2 — Chassis ground:***	Is the resistance more than 1 MΩ?	Go to step **4.**	Repair short circuit to ground in harness between ECM and drain valve connector.
4	**CHECK HARNESS BETWEEN DRAIN VALVE AND ECM CONNECTOR.** Measure the resistance of harness between ECM and drain valve connector. ***Connector & terminal*** ***(B134) No. 13 — (R143) No. 2:***	Is the resistance less than 1 Ω?	Go to step **5.**	Repair harness and connector. NOTE: In this case, repair the following: • Open circuit in harness between ECM and drain valve connector • Poor contact in coupling connector
5	**CHECK DRAIN VALVE.** Measure the resistance between drain valve terminals. ***Terminals*** ***No. 1 — No. 2:***	Is the resistance 10 — 100 Ω?	Go to step **6.**	Replace the drain valve. <Ref. to EC(H6DO)-15, Drain Valve.>

	Step	Check	Yes	No
6	**CHECK POWER SUPPLY TO DRAIN VALVE.** 1) Turn the ignition switch to ON. 2) Measure the voltage between drain valve and chassis ground. ***Connector & terminal*** ***(R143) No. 1 (+) — Chassis ground (−):***	Is the voltage more than 10 V?	Go to step **7.**	Repair harness and connector. NOTE: In this case, repair the following: • Open circuit in harness between main relay and drain valve • Poor contact in coupling connector • Poor contact in main relay connector
7	**CHECK FOR POOR CONTACT.** Check for poor contact in drain valve connector.	Is there poor contact in drain valve connector?	Repair poor contact in drain valve connector.	Contact with SOA Service Center.

CA:DTC P0448 EVAPORATIVE EMISSION CONTROL SYSTEM VENT CONTROL CIRCUIT SHORTED

DTC DETECTING CONDITION:

- Detect as soon as the malfunction occurs.
- GENERAL DESCRIPTION <Ref. to GD(H6DO)-137, DTC P0448 EVAPORATIVE EMISSION CONTROL SYSTEM VENT CONTROL CIRCUIT SHORTED, Diagnostic Trouble Code (DTC) Detecting Criteria.>

CAUTION:

After repair or replacement of faulty parts, conduct Clear Memory Mode <Ref. to EN(H6DO)(diag)-44, OPERATION, Clear Memory Mode.> and Inspection Mode <Ref. to EN(H6DO)(diag)-35, PROCEDURE, Inspection Mode.>.

WIRING DIAGRAM:

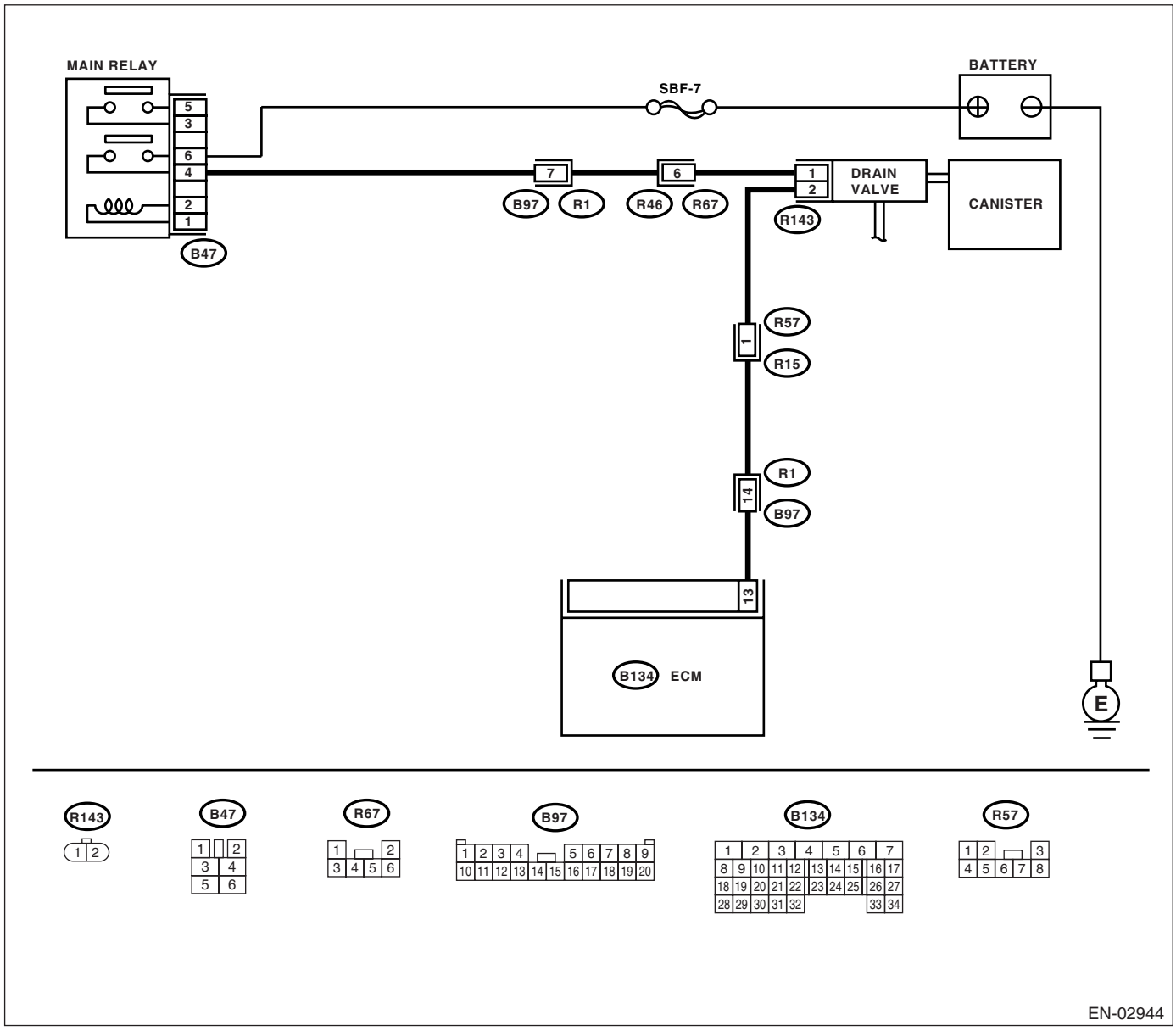

Step		Check	Yes	No
1	**CHECK INPUT SIGNAL FOR ECM.** 1) Turn the ignition switch to OFF. 2) Connect the test mode connector at the lower portion of instrument panel (on the driver's side). 3) Turn the ignition switch to ON. 4) While operating the drain valve, measure voltage between ECM and chassis ground. NOTE: Drain valve operation can be executed using Subaru Select Monitor. For the procedure, refer to "Compulsory Valve Operation Check Mode". <Ref. to EN(H6DO)(diag)-45, Compulsory Valve Operation Check Mode.> ***Connector & terminal*** ***(B134) No. 13 (+) — Chassis ground (–):***	Is the voltage 0 — 10 V?	Go to step **2.**	The malfunction indicator light may light up, however, the circuit is returned to the normal status at the moment. In this case, repair poor contact in ECM connector.
2	**CHECK INPUT SIGNAL FOR ECM.** 1) Turn the ignition switch to ON. 2) Measure the voltage between ECM and chassis ground. ***Connector & terminal*** ***(B134) No. 13 (+) — Chassis ground (–):***	Is the voltage more than 10 V?	Go to step **4.**	Go to step **3.**
3	**CHECK FOR POOR CONTACT.** Check for poor contact in ECM connector.	Is there poor contact in ECM connector?	Repair poor contact in ECM connector.	Replace the ECM. <Ref. to FU(H6DO)-34, Engine Control Module (ECM).>
4	**CHECK HARNESS BETWEEN DRAIN VALVE AND ECM CONNECTOR.** 1) Turn the ignition switch to OFF. 2) Disconnect the connector from drain valve. 3) Turn the ignition switch to ON. 4) Measure the voltage between ECM and chassis ground. ***Connector & terminal*** ***(B134) No. 13 (+) — Chassis ground (–):***	Is the voltage more than 10 V?	Repair short circuit to battery in harness between ECM and drain valve connector. After repair, replace the ECM. <Ref. to FU(H6DO)-34, Engine Control Module (ECM).>	Go to step **5.**
5	**CHECK DRAIN VALVE.** 1) Turn the ignition switch to OFF. 2) Measure the resistance between drain valve terminals. ***Terminals*** ***No. 1 — No. 2:***	Is the resistance less than 1 Ω?	Replace the drain valve <Ref. to EC(H6DO)-15, Drain Valve.> and ECM <Ref. to FU(H6DO)-34, Engine Control Module (ECM).>.	Go to step **6.**
6	**CHECK FOR POOR CONTACT.** Check for poor contact in ECM connector.	Is there poor contact in ECM connector?	Repair poor contact in ECM connector.	Replace the ECM. <Ref. to FU(H6DO)-34, Engine Control Module (ECM).>

CB:DTC P0451 EVAPORATIVE EMISSION CONTROL SYSTEM PRESSURE SENSOR

DTC DETECTING CONDITION:

- Two consecutive driving cycles with fault
- GENERAL DESCRIPTION <Ref. to GD(H6DO)-139, DTC P0451 EVAPORATIVE EMISSION CONTROL SYSTEM PRESSURE SENSOR, Diagnostic Trouble Code (DTC) Detecting Criteria.>

CAUTION:

After repair or replacement of faulty parts, conduct Clear Memory Mode <Ref. to EN(H6DO)(diag)-44, OPERATION, Clear Memory Mode.> and Inspection Mode <Ref. to EN(H6DO)(diag)-35, PROCEDURE, Inspection Mode.>.

WIRING DIAGRAM:

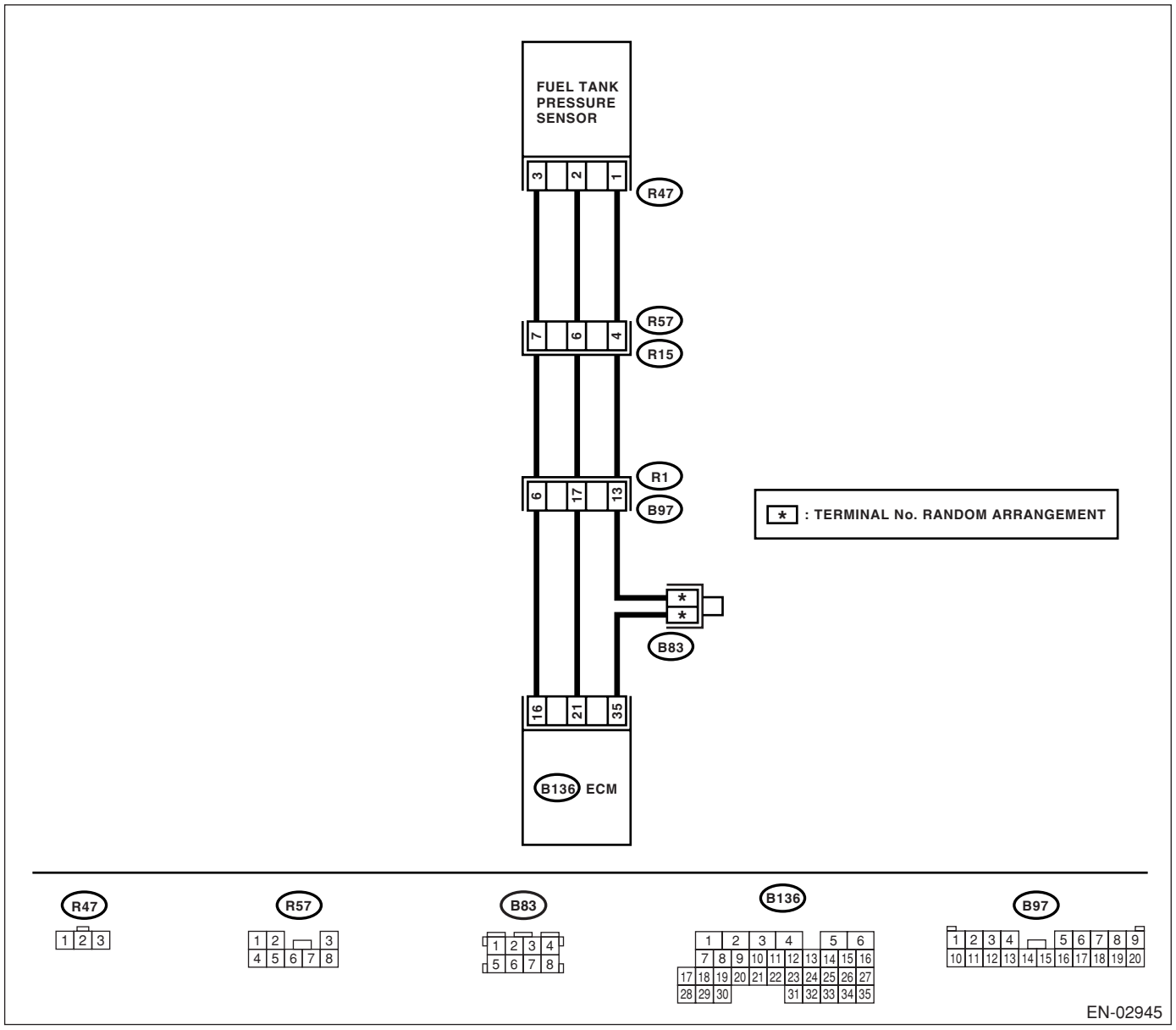

	Step	Check	Yes	No
1	**CHECK FOR ANY OTHER DTC ON DISPLAY.**	Is any other DTC displayed?	Inspect the relevant DTC using "List of Diagnostic Trouble Code (DTC)". <Ref. to EN(H6DO)(diag)-71, List of Diagnostic Trouble Code (DTC).>	Go to step **2.**
2	**CHECK FUEL FILLER CAP.** 1) Turn the ignition switch to OFF. 2) Open the fuel flap.	Is the fuel filler cap tightened securely?	Go to step **3.**	Tighten fuel filler cap securely.
3	**CHECK PRESSURE/VACUUM LINE.** NOTE: Check the following items. • Disconnection, leakage and clogging of the vacuum hoses and pipes between fuel tank pressure sensor and fuel tank • Disconnection, leakage and clogging of air ventilation hoses and pipes between fuel filler pipe and fuel tank	Is there any fault in pressure/vacuum line?	Repair or replace the hoses and pipes.	Replace the fuel tank pressure sensor. <Ref. to EC(H6DO)-10, Fuel Tank Pressure Sensor.>

CC:DTC P0452 EVAPORATIVE EMISSION CONTROL SYSTEM PRESSURE SENSOR LOW INPUT

DTC DETECTING CONDITION:

- Detect as soon as the malfunction occurs.
- GENERAL DESCRIPTION <Ref. to GD(H6DO)-141, DTC P0452 EVAPORATIVE EMISSION CONTROL SYSTEM PRESSURE SENSOR LOW INPUT, Diagnostic Trouble Code (DTC) Detecting Criteria.>

CAUTION:

After repair or replacement of faulty parts, conduct Clear Memory Mode <Ref. to EN(H6DO)(diag)-44, OPERATION, Clear Memory Mode.> and Inspection Mode <Ref. to EN(H6DO)(diag)-35, PROCEDURE, Inspection Mode.>.

WIRING DIAGRAM:

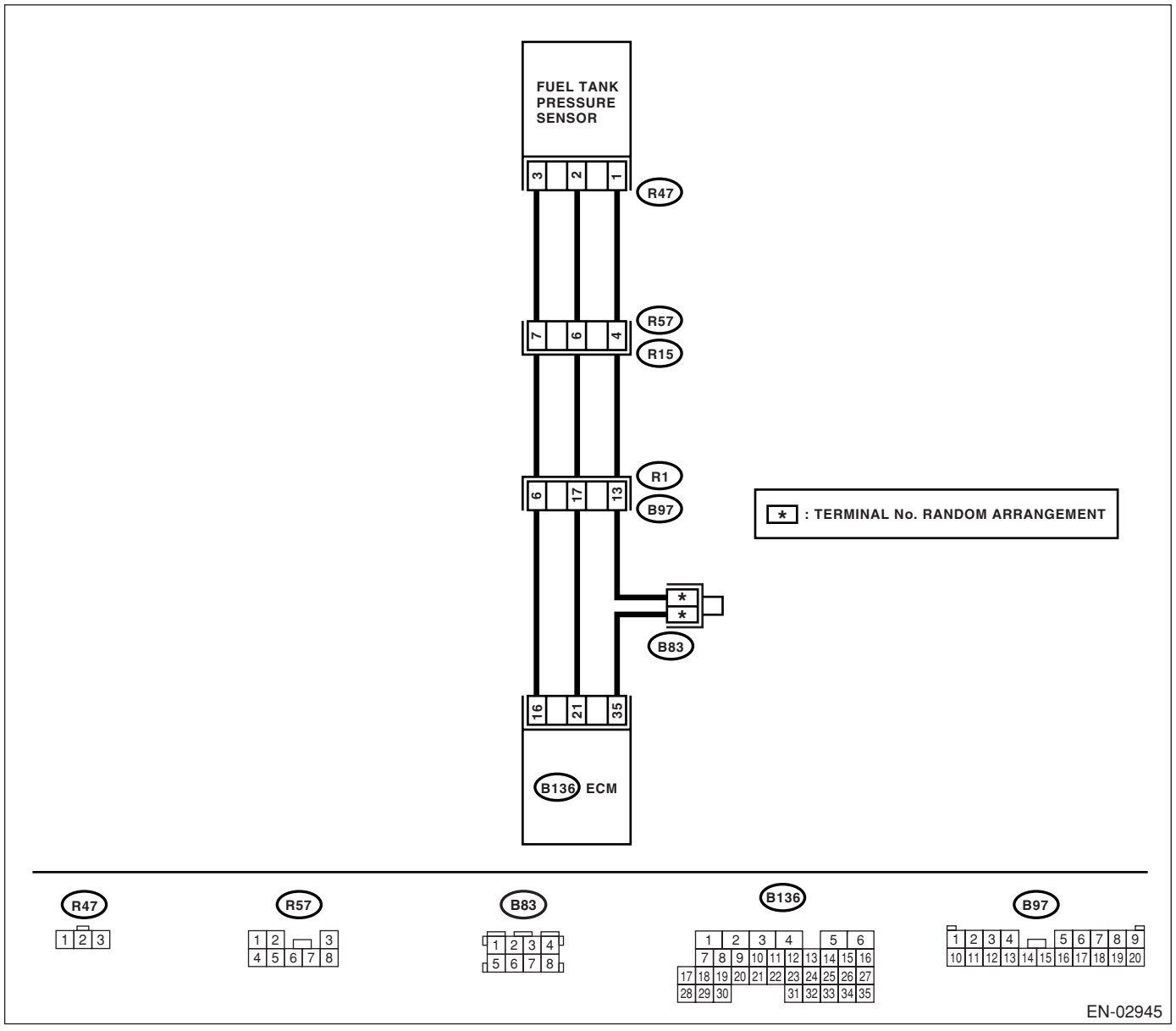

	Step	Check	Yes	No
1	**CHECK CURRENT DATA.** 1) Turn the ignition switch to OFF. 2) Remove the fuel filler cap. 3) Install the fuel filler cap. 4) Turn the ignition switch to ON. 5) Read the data of fuel tank pressure sensor signal using Subaru Select Monitor. NOTE: • Subaru Select Monitor For detailed operation procedure, refer to "READ CURRENT DATA FOR ENGINE". <Ref. to EN(H6DO)(diag)-26, Subaru Select Monitor.>	Is the measured valve less than −2.8 kPa (−21.0 mmHg, −0.827 inHg)?	Go to step **2.**	The malfunction indicator light may light up, however, the circuit is returned to the normal status at the moment.
2	**CHECK POWER SUPPLY TO FUEL TANK PRESSURE SENSOR.** Measure the voltage between ECM connector and chassis ground. ***Connector & terminal*** ***(B136) No. 16 (+) — Chassis ground (−):***	Is the voltage more than 4.5 V?	Go to step **4.**	Go to step **3.**
3	**CHECK POWER SUPPLY TO FUEL TANK PRESSURE SENSOR.** Measure the voltage between ECM connector and chassis ground. ***Connector & terminal*** ***(B136) No. 16 (+) — Chassis ground (−):***	Is the voltage more than 4.5 V?	Repair poor contact in ECM connector.	Contact with SOA Service Center.
4	**CHECK INPUT SIGNAL FOR ECM.** Measure the voltage between ECM and chassis ground. ***Connector & terminal*** ***(B136) No. 21 (+) — Chassis ground (−):***	Is the voltage less than 0.2 V?	Go to step **6.**	Go to step **5.**
5	**CHECK INPUT SIGNAL FOR ECM. (USING SUBARU SELECT MONITOR.)** Read the data of fuel tank pressure sensor signal using Subaru Select Monitor. NOTE: • Subaru Select Monitor For detailed operation procedure, refer to "READ CURRENT DATA FOR ENGINE". <Ref. to EN(H6DO)(diag)-26, Subaru Select Monitor.>	Does the measured value exceed the specified value by shaking the ECM harness and connector?	Repair poor contact in ECM connector.	Go to step **6.**
6	**CHECK HARNESS BETWEEN ECM AND COUPLING CONNECTOR IN REAR WIRING HARNESS.** 1) Turn the ignition switch to OFF. 2) Remove the rear seat cushion. 3) Separate rear wiring harness and fuel tank cord. 4) Turn the ignition switch to ON. 5) Measure the voltage between rear wiring harness connector and chassis ground. ***Connector & terminal*** ***(R15) No. 7 (+) — Chassis ground (−):***	Is the voltage more than 4.5 V?	Go to step **7.**	Repair harness and connector. NOTE: In this case, repair the following: • Open circuit in harness between ECM and rear wiring harness connector • Poor contact in coupling connector

	Step	Check	Yes	No
7	**CHECK HARNESS BETWEEN ECM AND COUPLING CONNECTOR IN REAR WIRING HARNESS.** 1) Turn the ignition switch to OFF. 2) Disconnect the connector from ECM. 3) Measure the resistance of harness between ECM and rear wiring harness connector. ***Connector & terminal*** ***(B136) No. 35 — (R15) No. 4:***	Is the resistance less than 1 Ω?	Go to step **8.**	Repair harness and connector. NOTE: In this case, repair the following: • Open circuit in harness between ECM and rear wiring harness connector • Poor contact in coupling connector • Poor contact in joint connector
8	**CHECK HARNESS BETWEEN ECM AND COUPLING CONNECTOR IN REAR WIRING HARNESS.** Measure the resistance of harness between rear wiring harness connector and chassis ground. ***Connector & terminal*** ***(R15) No. 4 — Chassis ground:***	Is the resistance more than 1 MΩ?	Go to step **9.**	Repair short circuit to ground in harness between ECM and rear wiring harness connector.
9	**CHECK FUEL TANK CORD.** 1) Disconnect the connector from fuel tank pressure sensor. 2) Measure the resistance of fuel tank cord. ***Connector & terminal*** ***(R57) No. 7 — (R47) No. 3:***	Is the resistance less than 1 Ω?	Go to step **10.**	Repair open circuit in fuel tank cord.
10	**CHECK FUEL TANK CORD.** Measure the resistance of fuel tank cord. ***Connector & terminal*** ***(R57) No. 4 — (R47) No. 1:***	Is the resistance less than 1 Ω?	Go to step **11.**	Repair open circuit in fuel tank cord.
11	**CHECK FUEL TANK CORD.** Measure the resistance of harness between fuel tank pressure sensor connector and engine ground. ***Connector & terminal*** ***(R47) No. 2 — Chassis ground:***	Is the resistance more than 1 MΩ?	Go to step **12.**	Repair short circuit to ground in fuel tank cord.
12	**CHECK POOR CONTACT.** Check poor contact in fuel tank pressure sensor connector.	Is there poor contact in fuel tank pressure sensor connector?	Repair poor contact in fuel tank pressure sensor connector.	Replace the fuel tank pressure sensor. <Ref. to EC(H6DO)-10, Fuel Tank Pressure Sensor.>

CD:DTC P0453 EVAPORATIVE EMISSION CONTROL SYSTEM PRESSURE SENSOR HIGH INPUT

DTC DETECTING CONDITION:

- Detect as soon as the malfunction occurs.
- GENERAL DESCRIPTION <Ref. to GD(H6DO)-143, DTC P0453 EVAPORATIVE EMISSION CONTROL SYSTEM PRESSURE SENSOR HIGH INPUT, Diagnostic Trouble Code (DTC) Detecting Criteria.>

CAUTION:

After repair or replacement of faulty parts, conduct Clear Memory Mode <Ref. to EN(H6DO)(diag)-44, OPERATION, Clear Memory Mode.> and Inspection Mode <Ref. to EN(H6DO)(diag)-35, PROCEDURE, Inspection Mode.>.

WIRING DIAGRAM:

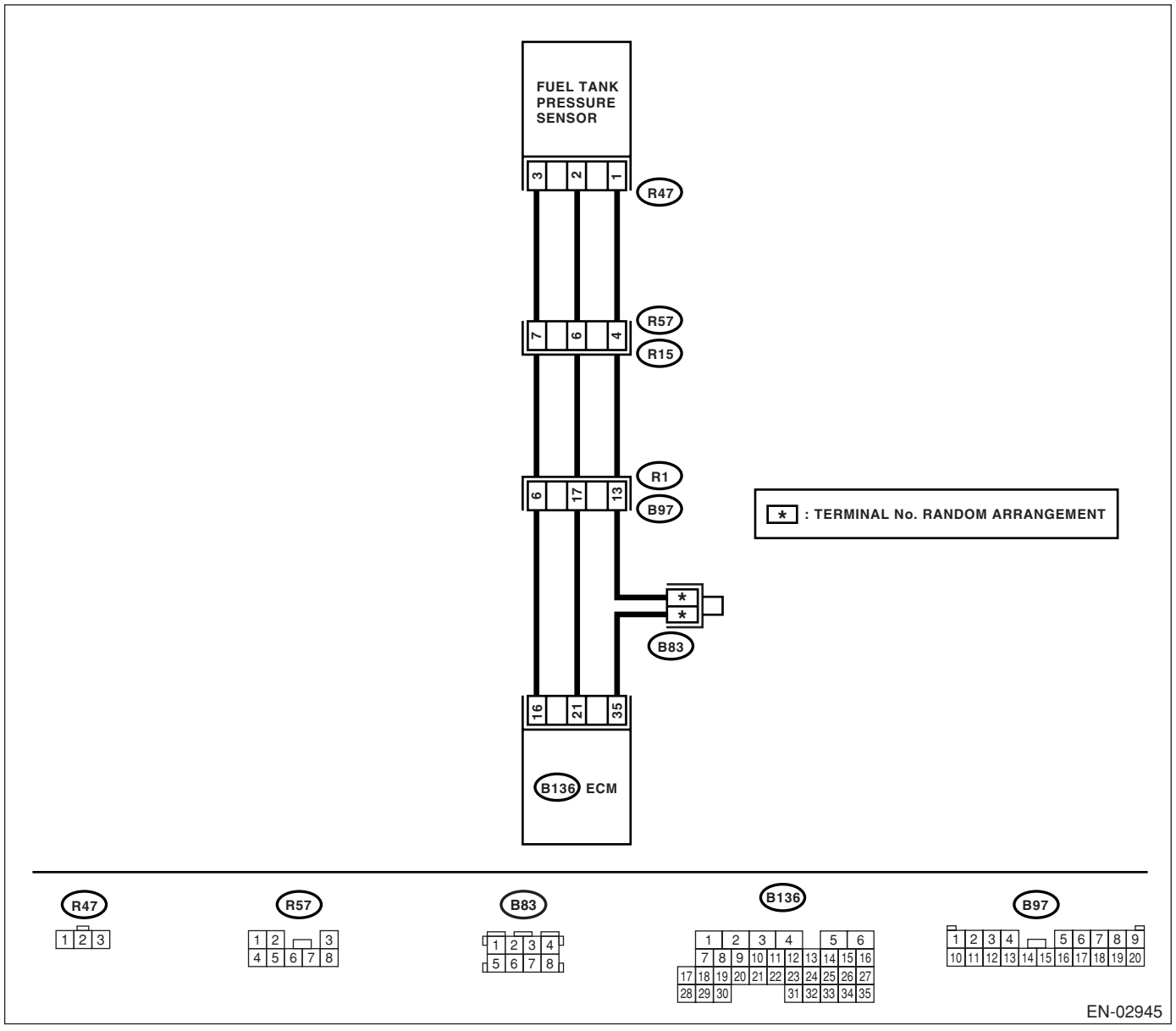

	Step	Check	Yes	No
1	**CHECK CURRENT DATA.** 1) Turn the ignition switch to OFF. 2) Remove the fuel filler cap. 3) Install the fuel filler cap. 4) Turn the ignition switch to ON. 5) Read the data of fuel tank pressure sensor signal using Subaru Select Monitor. NOTE: • Subaru Select Monitor For detailed operation procedure, refer to "READ CURRENT DATA FOR ENGINE". <Ref. to EN(H6DO)(diag)-26, Subaru Select Monitor.>	Is the measured value more than 2.8 kPa (21.0 mmHg, 0.827 inHg)	Go to step **11.**	Go to step **2.**
2	**CHECK POWER SUPPLY TO FUEL TANK PRESSURE SENSOR.** Measure the voltage between ECM connector and chassis ground. ***Connector & terminal*** ***(B136) No. 16 (+) — Chassis ground (–):***	Is the voltage more than 4.5 V?	Go to step **4.**	Go to step **3.**
3	**CHECK POWER SUPPLY TO FUEL TANK PRESSURE SENSOR.** Measure the voltage between ECM connector and chassis ground. ***Connector & terminal*** ***(B136) No. 16 (+) — Chassis ground (–):***	Does the measured value exceed the specified value by shaking the ECM harness and connector?	Repair poor contact in ECM connector.	Replace the ECM. <Ref. to FU(H6DO)-34, Engine Control Module (ECM).>
4	**CHECK INPUT SIGNAL FOR ECM.** Measure the voltage between ECM and chassis ground. ***Connector & terminal*** ***(B136) No. 21 (+) — Chassis ground (–):***	Is the voltage less than 0.2 V?	Go to step **6.**	Go to step **5.**
5	**CHECK INPUT SIGNAL FOR ECM. (USING SUBARU SELECT MONITOR.)** Read the data of fuel tank pressure sensor signal using Subaru Select Monitor. NOTE: • Subaru Select Monitor For detailed operation procedure, refer to "READ CURRENT DATA FOR ENGINE". <Ref. to EN(H6DO)(diag)-26, Subaru Select Monitor.>	Does the measured value change by shaking the ECM harness and connector?	Repair poor contact in ECM connector.	Go to step **6.**
6	**CHECK HARNESS BETWEEN ECM AND COUPLING CONNECTOR IN REAR WIRING HARNESS.** 1) Turn the ignition switch to OFF. 2) Remove the rear seat cushion. 3) Separate rear wiring harness and fuel tank cord. 4) Turn the ignition switch to ON. 5) Measure the voltage between rear wiring harness connector and chassis ground. ***Connector & terminal*** ***(R15) No. 7 (+) — Chassis ground (–):***	Is the voltage more than 4.5 V?	Go to step **7.**	Repair harness and connector. NOTE: In this case, repair the following: • Open circuit in harness between ECM and rear wiring harness connector • Poor contact in coupling connector

	Step	Check	Yes	No
7	**CHECK HARNESS BETWEEN ECM AND COUPLING CONNECTOR IN REAR WIRING HARNESS.** 1) Turn the ignition switch to OFF. 2) Disconnect the connector from ECM. 3) Measure the resistance of harness between ECM and rear wiring harness connector. ***Connector & terminal*** ***(B136) No. 21 — (R15) No. 6:*** ***(B136) No. 35 — (R15) No. 4:***	Is the resistance less than 1 Ω?	Go to step **8.**	Repair harness and connector. NOTE: In this case, repair the following: • Open circuit in harness between ECM and rear wiring harness connector • Poor contact in coupling connector
8	**CHECK FUEL TANK CORD.** 1) Disconnect the connector from fuel tank pressure sensor. 2) Measure the resistance of fuel tank cord. ***Connector & terminal*** ***(R57) No. 6 — (R47) No. 2:***	Is the resistance less than 1 Ω?	Go to step **9.**	Repair open circuit in fuel tank cord.
9	**CHECK FUEL TANK CORD.** Measure the resistance of fuel tank cord. ***Connector & terminal*** ***(R57) No. 4 — (R47) No. 1:***	Is the resistance less than 1 Ω?	Go to step **10.**	Repair open circuit in fuel tank cord.
10	**CHECK FOR POOR CONTACT.** Check for poor contact in fuel tank pressure sensor connector.	Is there poor contact in fuel tank pressure sensor connector?	Repair poor contact in fuel tank pressure sensor connector.	Replace the fuel tank pressure sensor. <Ref. to EC(H6DO)-10, Fuel Tank Pressure Sensor.>
11	**CHECK HARNESS BETWEEN ECM AND FUEL TANK PRESSURE SENSOR CONNECTOR.** 1) Turn the ignition switch to OFF. 2) Disconnect the connector from fuel tank pressure sensor. 3) Turn the ignition switch to ON. 4) Read the data of fuel tank pressure sensor signal using Subaru Select Monitor. NOTE: • Subaru Select Monitor For detailed operation procedure, refer to “READ CURRENT DATA FOR ENGINE”. <Ref. to EN(H6DO)(diag)-26, Subaru Select Monitor.>	Is the measured value more than 2.8 kPa (21.0 mmHg, 0.827 inHg)?	Repair short circuit to battery in harness between ECM and fuel tank pressure sensor connector.	Replace the fuel tank pressure sensor. <Ref. to EC(H6DO)-10, Fuel Tank Pressure Sensor.>

CE:DTC P0456 EVAPORATIVE EMISSION CONTROL SYSTEM LEAK DETECTED (VERY SMALL LEAK)

DTC DETECTING CONDITION:

- Two consecutive driving cycles with fault
- GENERAL DESCRIPTION <Ref. to GD(H6DO)-144, DTC P0456 EVAPORATIVE EMISSION CONTROL SYSTEM LEAK DETECTED (VERY SMALL LEAK), Diagnostic Trouble Code (DTC) Detecting Criteria.>

TROUBLE SYMPTOM:

- Fuel odor
- There is a hole of more than 0.5 mm (0.020 in) dia. in evaporation system or fuel tank.

CAUTION:
After repair or replacement of faulty parts, conduct Clear Memory Mode <Ref. to EN(H6DO)(diag)-44, OPERATION, Clear Memory Mode.> and Inspection Mode <Ref. to EN(H6DO)(diag)-35, PROCEDURE, Inspection Mode.>.

WIRING DIAGRAM:

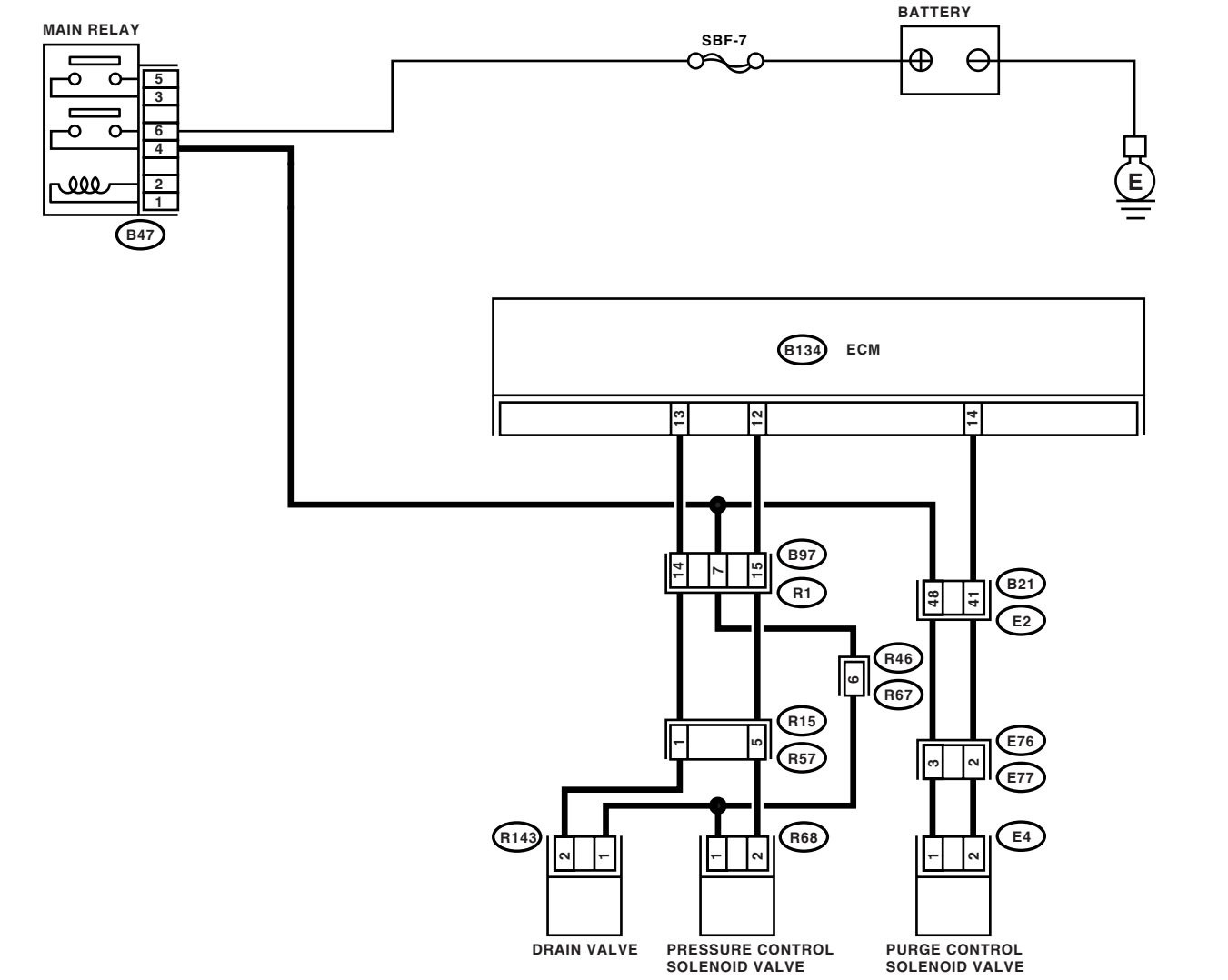

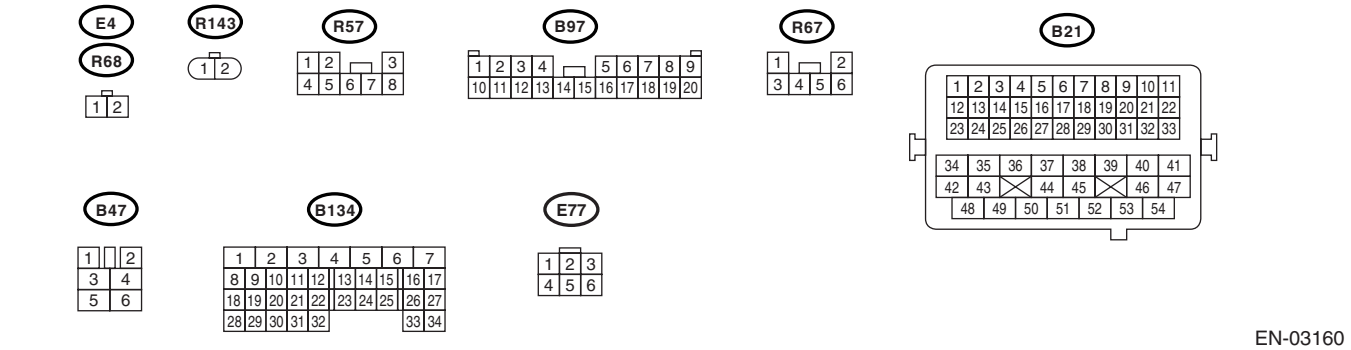

EN-03160

	Step	Check	Yes	No
1	**CHECK FOR ANY OTHER DTC ON DISPLAY.**	Is any other DTC displayed?	Inspect the relevant DTC using "List of Diagnostic Trouble Code (DTC)". <Ref. to EN(H6DO)(diag)-71, List of Diagnostic Trouble Code (DTC).>	Go to step **2.**
2	**CHECK FUEL FILLER CAP.** 1) Turn the ignition switch to OFF. 2) Check the fuel filler cap. NOTE: The DTC is stored in memory if fuel filler cap is or was loose or if the cap chain was caught while tightening.	Is the fuel filler cap tightened securely?	Go to step **3.**	Tighten fuel filler cap securely.
3	**CHECK FUEL FILLER CAP.**	Is the fuel filler cap SUBARU genuine?	Go to step **4.**	Replace with a SUBARU genuine fuel filler cap.
4	**CHECK FUEL FILLER PIPE PACKING.**	Is there any damage to the seal between fuel filler cap and fuel filler pipe?	Repair or replace the fuel filler cap and fuel filler pipe. <Ref. to FU(H6DO)-46, Fuel Filler Pipe.>	Go to step **5.**
5	**CHECK DRAIN VALVE.** 1) Connect the test mode connector. 2) Turn the ignition switch to ON. 3) Operate the drain valve. NOTE: Drain valve operation can also be executed using Subaru Select Monitor. For the procedure, refer to "Compulsory Valve Operation Check Mode". <Ref. to EN(H6DO)(diag)-45, Compulsory Valve Operation Check Mode.>	Does the drain valve operate?	Go to step **6.**	Replace the drain valve. <Ref. to EC(H6DO)-15, Drain Valve.>
6	**CHECK PURGE CONTROL SOLENOID VALVE.** Operate the purge control solenoid valve. NOTE: Purge control solenoid valve operation can also be executed using Subaru Select Monitor. For the procedure, refer to "Compulsory Valve Operation Check Mode". <Ref. to EN(H6DO)(diag)-45, Compulsory Valve Operation Check Mode.>	Does the purge control solenoid valve operate?	Go to step **7.**	Replace the purge control solenoid valve. <Ref. to EC(H6DO)-6, Purge Control Solenoid Valve.>
7	**CHECK PRESSURE CONTROL SOLENOID VALVE.** Operate the pressure control solenoid valve. NOTE: Pressure control solenoid valve operation can also be executed using Subaru Select Monitor. For the procedure, refer to "Compulsory Valve Operation Check Mode". <Ref. to EN(H6DO)(diag)-45, Compulsory Valve Operation Check Mode.>	Does the pressure control solenoid valve operate?	Go to step **8.**	Replace the pressure control solenoid valve. <Ref. to EC(H6DO)-6, Purge Control Solenoid Valve.>

	Step	Check	Yes	No
8	**CHECK EVAPORATIVE EMISSION CONTROL SYSTEM LINE.** Turn the ignition switch to OFF.	Is there a hole of more than 0.5 mm (0.020 in) dia. on evaporation line?	Repair or replace the evaporation line. <Ref. to FU(H6DO)-55, Fuel Delivery, Return and Evaporation Lines.>	Go to step **9.**
9	**CHECK CANISTER.**	Is the canister damaged or is there a hole of more than 0.5 mm (0.020 in) dia. in it?	Repair or replace the canister. <Ref. to EC(H6DO)-5, Canister.>	Go to step **10.**
10	**CHECK FUEL TANK.** Remove the fuel tank. <Ref. to FU(H6DO)-40, Fuel Tank.>	Is the fuel tank damaged or is there a hole of more than 0.5 mm (0.020 in) dia. in it?	Repair or replace the fuel tank. <Ref. to FU(H6DO)-40, Fuel Tank.>	Go to step **11.**
11	**CHECK FOR ANY OTHER MECHANICAL TROUBLE IN EVAPORATIVE EMISSION CONTROL SYSTEM.**	Are there holes of more than 0.5 mm (0.020 in) dia., cracks, clogging, or disconnections, bend, misconnection of hoses or pipes in evaporative emission control system?	Repair or replace the hoses or pipes.	Contact with SOA Service Center.

CF:DTC P0457 EVAPORATIVE EMISSION CONTROL SYSTEM LEAK DETECTED (FUEL CAP LOOSE/OFF)

DTC DETECTING CONDITION:

- Two consecutive driving cycles with fault
- GENERAL DESCRIPTION <Ref. to GD(H6DO)-144, DTC P0457 EVAPORATIVE EMISSION CONTROL SYSTEM LEAK DETECTED (FUEL CAP LOOSE/OFF), Diagnostic Trouble Code (DTC) Detecting Criteria.>

TROUBLE SYMPTOM:

- Fuel odor
- Fuel filler cap is loose or not installed.

CAUTION:

After repair or replacement of faulty parts, conduct Clear Memory Mode <Ref. to EN(H6DO)(diag)-44, OPERATION, Clear Memory Mode.> and Inspection Mode <Ref. to EN(H6DO)(diag)-35, PROCEDURE, Inspection Mode.>.

WIRING DIAGRAM:

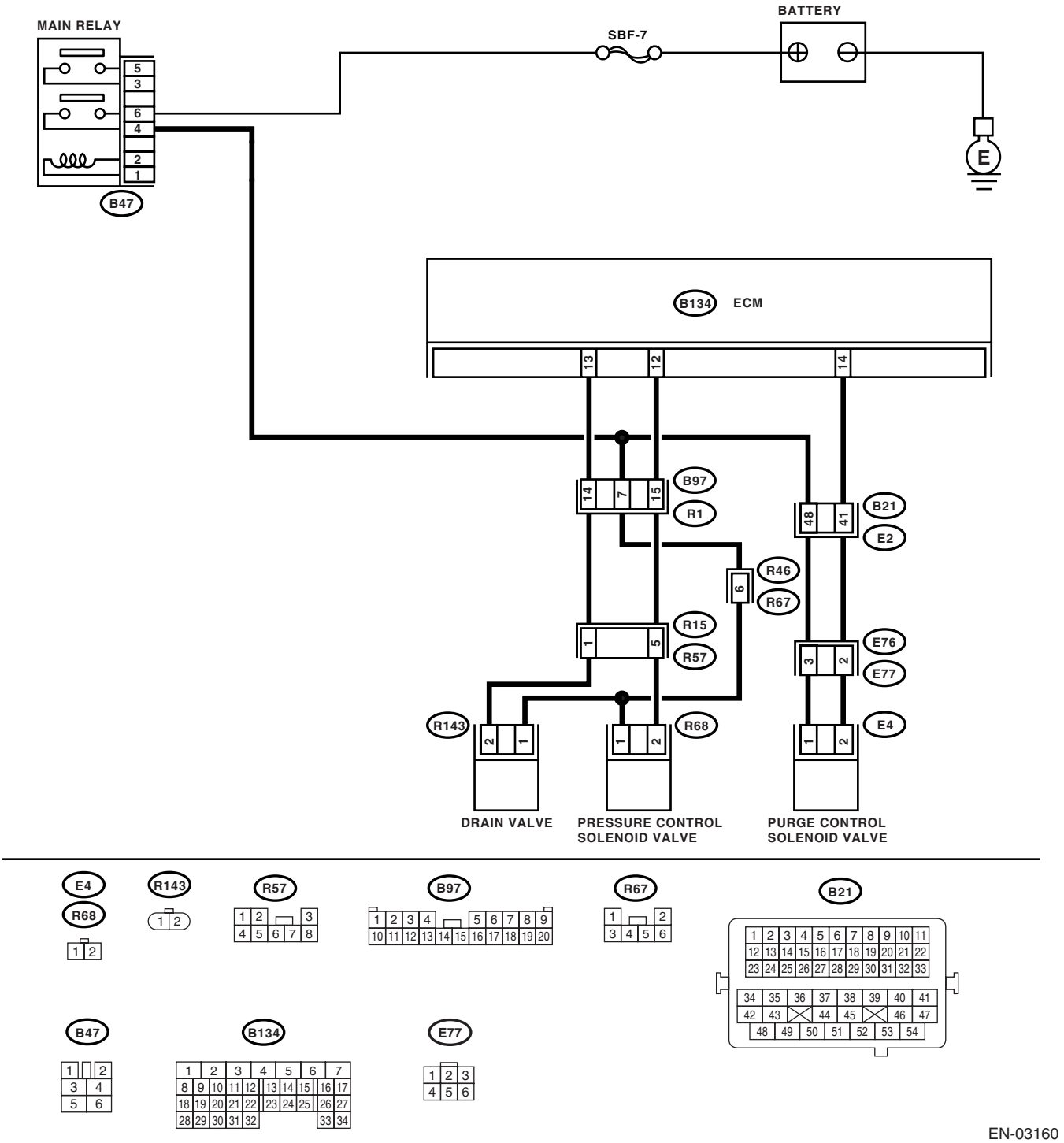

EN-03160

	Step	Check	Yes	No
1	**CHECK FOR ANY OTHER DTC ON DISPLAY.**	Is any other DTC displayed?	Inspect the relevant DTC using "List of Diagnostic Trouble Code (DTC)". <Ref. to EN(H6DO)(diag)-71, List of Diagnostic Trouble Code (DTC).>	Go to step **2.**
2	**CHECK FUEL FILLER CAP.** 1) Turn the ignition switch to OFF. 2) Check the fuel filler cap. NOTE: The DTC is stored in memory if fuel filler cap is or was loose or if the cap chain was caught while tightening.	Is the fuel filler cap tightened securely?	Go to step **3.**	Tighten fuel filler cap securely.
3	**CHECK FUEL FILLER CAP.**	Is the fuel filler cap SUBARU genuine?	Go to step **4.**	Replace with a SUBARU genuine fuel filler cap.
4	**CHECK FUEL FILLER PIPE PACKING.**	Is there any damage to the seal between fuel filler cap and fuel filler pipe?	Repair or replace the fuel filler cap and fuel filler pipe. <Ref. to FU(H6DO)-46, Fuel Filler Pipe.>	Go to step **5.**
5	**CHECK DRAIN VALVE.** 1) Connect the test mode connector. 2) Turn the ignition switch to ON. 3) Operate the drain valve. NOTE: Drain valve operation can also be executed using Subaru Select Monitor. For the procedure, refer to "Compulsory Valve Operation Check Mode". <Ref. to EN(H6DO)(diag)-45, Compulsory Valve Operation Check Mode.>	Does the drain valve operate?	Go to step **6.**	Replace the drain valve. <Ref. to EC(H6DO)-15, Drain Valve.>
6	**CHECK PURGE CONTROL SOLENOID VALVE.** Operate the purge control solenoid valve. NOTE: Purge control solenoid valve operation can also be executed using Subaru Select Monitor. For the procedure, refer to "Compulsory Valve Operation Check Mode". <Ref. to EN(H6DO)(diag)-71, List of Diagnostic Trouble Code (DTC).>	Does the purge control solenoid valve operate?	Go to step **7.**	Replace the purge control solenoid valve. <Ref. to EC(H6DO)-6, Purge Control Solenoid Valve.>
7	**CHECK PRESSURE CONTROL SOLENOID VALVE.** Operate the pressure control solenoid valve. NOTE: Pressure control solenoid valve operation can also be executed using Subaru Select Monitor. For the procedure, refer to "Compulsory Valve Operation Check Mode". <Ref. to EN(H6DO)(diag)-45, Compulsory Valve Operation Check Mode.>	Does the pressure control solenoid valve operate?	Go to step **8.**	Replace the pressure control solenoid valve. <Ref. to EC(H6DO)-6, Purge Control Solenoid Valve.>
8	**CHECK CANISTER.**	Is the canister damaged?	Repair or replace the canister. <Ref. to EC(H6DO)-5, Canister.>	Go to step **9.**

	Step	Check	Yes	No
9	**CHECK FUEL TANK.** Remove the fuel tank. <Ref. to FU(H6DO)-40, Fuel Tank.>	Is the fuel tank damaged?	Repair or replace the fuel tank. <Ref. to FU(H6DO)-40, Fuel Tank.>	Go to step **10.**
10	**CHECK ANY OTHER MECHANICAL TROUBLE IN EVAPORATIVE EMISSION CONTROL SYSTEM.**	Are there holes of more than 0.5 mm (0.020 in) dia., cracks, clogging, or disconnections, misconnection of hoses or pipes in evaporative emission control system?	Repair or replace the hoses or pipes.	Contact with SOA Service Center.

CG:DTC P0458 EVAPORATIVE EMISSION CONTROL SYSTEM PURGE CONTROL VALVE CIRCUIT LOW

DTC DETECTING CONDITION:

- Two consecutive driving cycles with fault
- GENERAL DESCRIPTION <Ref. to GD(H6DO)-145, DTC P0458 EVAPORATIVE EMISSION CONTROL SYSTEM PURGE CONTROL VALVE CIRCUIT LOW, Diagnostic Trouble Code (DTC) Detecting Criteria.>

TROUBLE SYMPTOM:

Erroneous idling

CAUTION:

After repair or replacement of faulty parts, conduct Clear Memory Mode <Ref. to EN(H6DO)(diag)-44, OPERATION, Clear Memory Mode.> and Inspection Mode <Ref. to EN(H6DO)(diag)-35, PROCEDURE, Inspection Mode.>.

WIRING DIAGRAM:

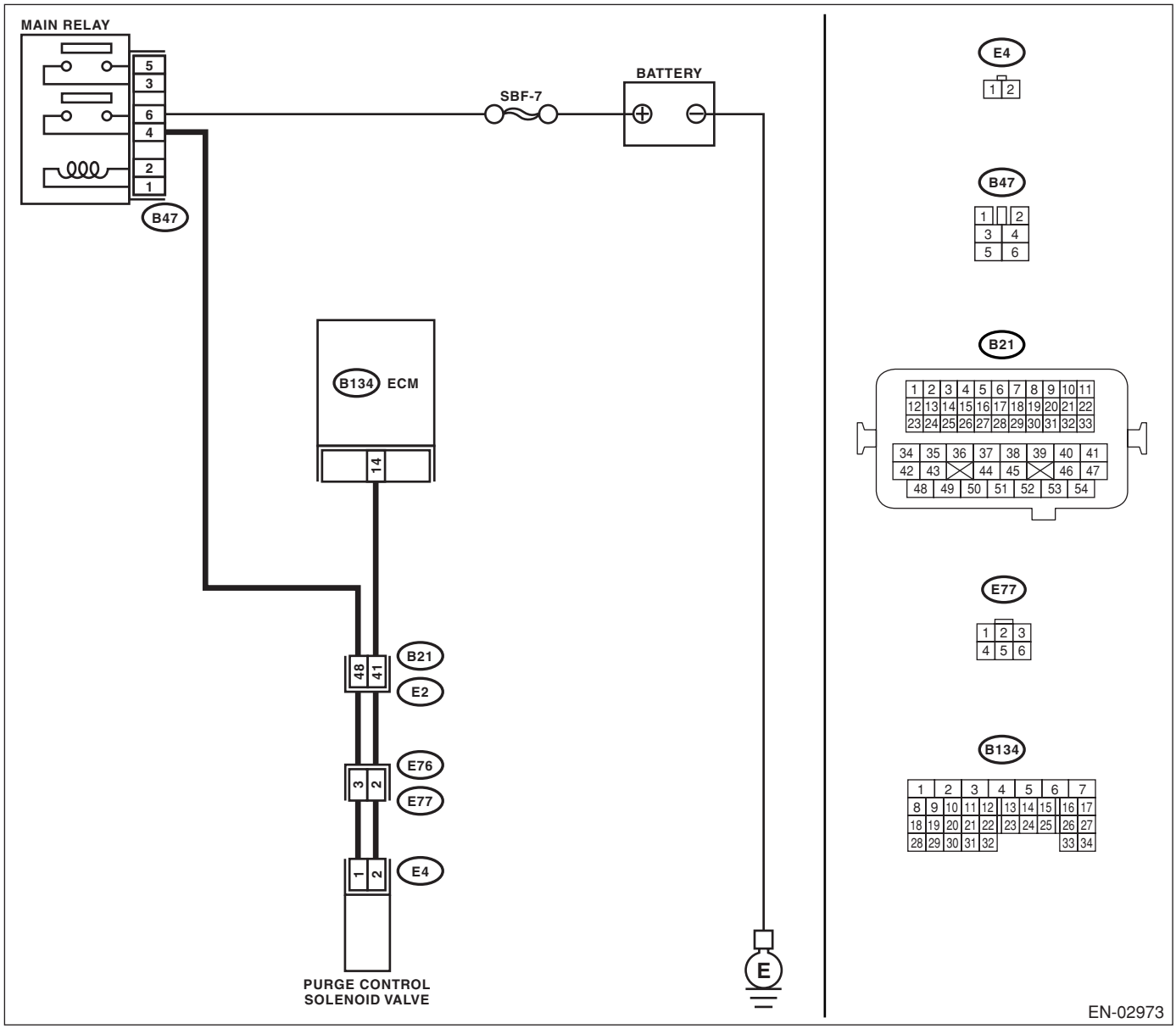

	Step	Check	Yes	No
1	**CHECK OUTPUT SIGNAL FROM ECM.** 1) Turn the ignition switch to ON. 2) Measure the voltage between ECM and chassis ground. ***Connector & terminal*** ***(B134) No. 14 (+) — Chassis ground (−):***	Is the voltage more than 10 V?	Even if the malfunction indicator light illuminates, the circuit has returned to a normal condition at this time.	Go to step **2.**
2	**CHECK HARNESS BETWEEN PURGE CONTROL SOLENOID VALVE AND ECM CONNECTOR.** 1) Turn the ignition switch to OFF. 2) Disconnect the connectors from purge control solenoid valve and ECM. 3) Measure the resistance of harness between purge control solenoid valve connector and engine ground. ***Connector & terminal*** ***(E4) No. 2 — Engine ground:***	Is the resistance more than 1 MΩ?	Go to step **3.**	Repair the ground short circuit in harness between ECM and purge control solenoid valve connector.
3	**CHECK HARNESS BETWEEN PURGE CONTROL SOLENOID VALVE AND ECM CONNECTOR.** Measure the resistance of harness between ECM and purge control solenoid valve of harness connector. ***Connector & terminal*** ***(B134) No. 14 — (E4) No. 2:***	Is the resistance less than 1 Ω?	Go to step **4.**	Repair the open circuit in harness between ECM and purge control solenoid valve connector. NOTE: In this case repair the following: • Open circuit in harness between ECM and purge control solenoid valve connector • Poor contact in coupling connector
4	**CHECK PURGE CONTROL SOLENOID VALVE.** 1) Remove the purge control solenoid valve. 2) Measure the resistance between purge control solenoid valve terminals. ***Terminals*** ***No. 1 — No. 2:***	Is the resistance 10 — 100 Ω?	Go to step **5.**	Replace the purge control solenoid valve. <Ref. to EC(H6DO)-6, Purge Control Solenoid Valve.>
5	**CHECK POWER SUPPLY TO PURGE CONTROL SOLENOID VALVE.** 1) Turn the ignition switch to ON. 2) Measure the voltage between purge control solenoid valve and engine ground. ***Connector & terminal*** ***(E4) No. 1 (+) — Engine ground (−):***	Is the voltage more than 10 V?	Go to step **6.**	Repair the open circuit in harness between main relay and purge control solenoid valve connector.
6	**CHECK POOR CONTACT.** Check poor contact in purge control solenoid valve connector.	Is there poor contact in purge control solenoid valve connector?	Repair the poor contact in purge control solenoid valve connector.	Replace the ECM. <Ref. to FU(H6DO)-34, Engine Control Module (ECM).>

CH:DTC P0459 EVAPORATIVE EMISSION CONTROL SYSTEM PURGE CONTROL VALVE CIRCUIT HIGH

DTC DETECTING CONDITION:

- Two consecutive driving cycles with fault
- GENERAL DESCRIPTION <Ref. to GD(H6DO)-147, DTC P0459 EVAPORATIVE EMISSION CONTROL SYSTEM PURGE CONTROL VALVE CIRCUIT HIGH, Diagnostic Trouble Code (DTC) Detecting Criteria.>

TROUBLE SYMPTOM:

Erroneous idling

CAUTION:

After repair or replacement of faulty parts, conduct Clear Memory Mode <Ref. to EN(H6DO)(diag)-44, OPERATION, Clear Memory Mode.> and Inspection Mode <Ref. to EN(H6DO)(diag)-35, PROCEDURE, Inspection Mode.>.

WIRING DIAGRAM:

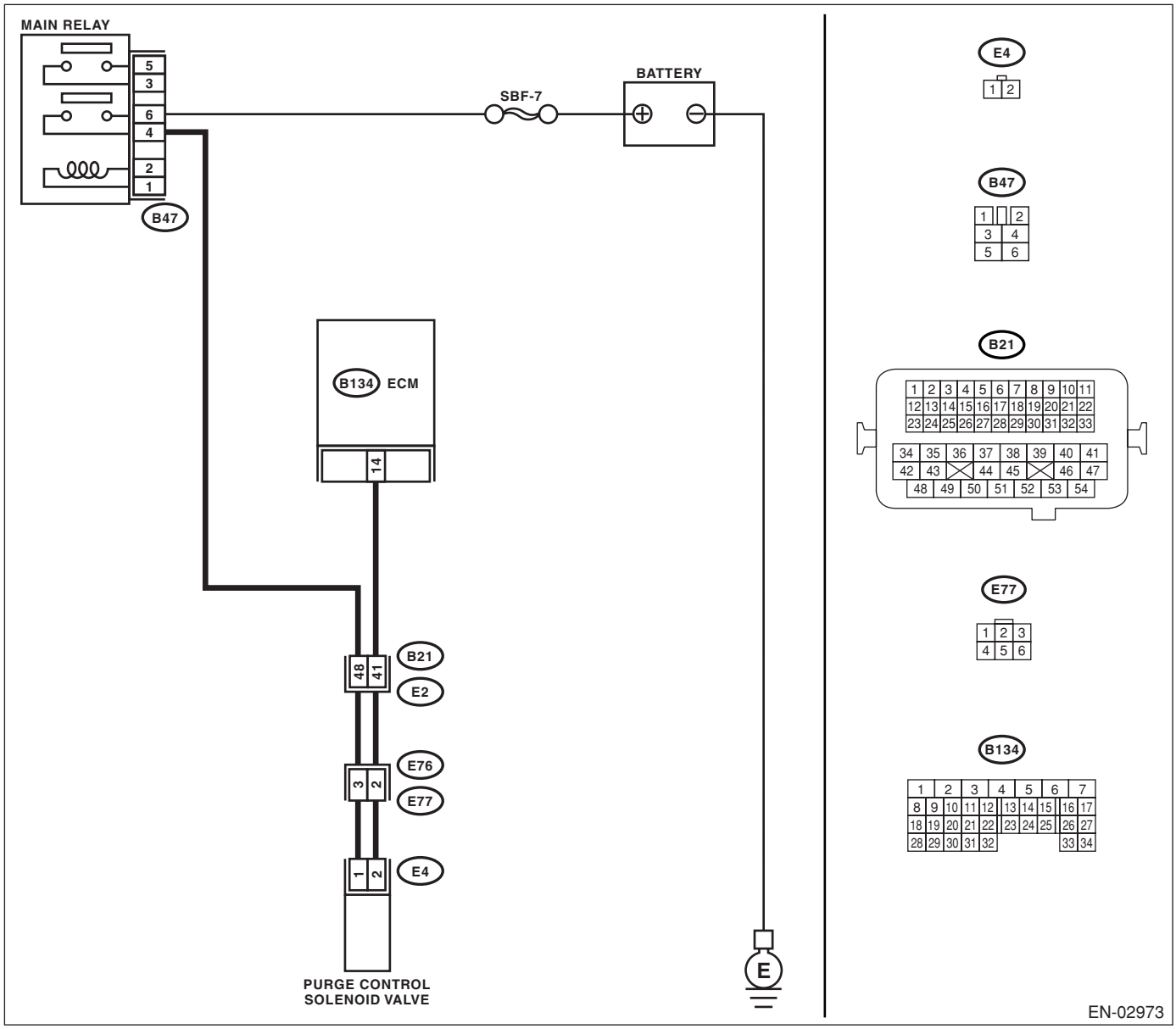

	Step	Check	Yes	No
1	**CHECK OUTPUT SIGNAL FROM ECM.** 1) Turn the ignition switch to OFF. 2) Connect the test mode connector at the lower portion of instrument panel (on the driver's side). 3) Turn the ignition switch to ON. 4) While operating the purge control solenoid valve, measure voltage between ECM and chassis ground. NOTE: Purge control solenoid valve operation can be executed using Subaru Select Monitor. Refer to "Compulsory Valve Operation Check Mode" for procedures. <Ref. to EN(H6DO)(diag)-45, Compulsory Valve Operation Check Mode.> ***Connector & terminal*** ***(B134) No. 14 (+) — Chassis ground (–):***	Is the voltage 0 — 10 V?	Go to step **2.**	Even if the malfunction indicator light illuminates, the circuit has returned to a normal condition at this time. In this case repair the poor contact in ECM connector.
2	**CHECK OUTPUT SIGNAL FROM ECM.** 1) Turn the ignition switch to ON. 2) Measure the voltage between ECM and chassis ground. ***Connector & terminal*** ***(B134) No. 14 (+) — Chassis ground (–):***	Is the voltage more than 10 V?	Go to step **4.**	Go to step **3.**
3	**CHECK POOR CONTACT.** Check poor contact in ECM connector.	Is the poor contact in ECM connector?	Repair the poor contact in ECM connector.	Replace the ECM. <Ref. to FU(H6DO)-34, Engine Control Module (ECM).>
4	**CHECK HARNESS BETWEEN PURGE CONTROL SOLENOID VALVE AND ECM CONNECTOR.** 1) Turn the ignition switch to OFF. 2) Disconnect the connector from purge control solenoid valve. 3) Turn the ignition switch to ON. 4) Measure the voltage between ECM and chassis ground. ***Connector & terminal*** ***(B134) No. 14 (+) — Chassis ground (–):***	Is the voltage more than 10 V?	Repair the battery short circuit in harness between ECM and purge control solenoid valve connector. After repair, replace the ECM. <Ref. to FU(H6DO)-34, Engine Control Module (ECM).>	Go to step **5.**
5	**CHECK PURGE CONTROL SOLENOID VALVE.** 1) Turn the ignition switch to OFF. 2) Measure the resistance between purge control solenoid valve terminals. ***Terminals*** ***No. 1 — No. 2:***	Is the resistance less than 1 Ω?	Replace the purge control solenoid valve. <Ref. to EC(H6DO)-6, Purge Control Solenoid Valve.> and ECM <Ref. to FU(H6DO)-34, Engine Control Module (ECM).>	Go to step **6.**
6	**CHECK POOR CONTACT.** Check poor contact in ECM connector.	Is the poor contact in ECM connector?	Repair the poor contact in ECM connector.	Replace the ECM. <Ref. to FU(H6DO)-34, Engine Control Module (ECM).>

CI: DTC P0461 FUEL LEVEL SENSOR CIRCUIT RANGE/PERFORMANCE

DTC DETECTING CONDITION:

- Two consecutive driving cycles with fault
- GENERAL DESCRIPTION <Ref. to GD(H6DO)-149, DTC P0461 FUEL LEVEL SENSOR CIRCUIT RANGE/PERFORMANCE, Diagnostic Trouble Code (DTC) Detecting Criteria.>

CAUTION:
After repair or replacement of faulty parts, conduct Clear Memory Mode <Ref. to EN(H6DO)(diag)-44, OPERATION, Clear Memory Mode.> and Inspection Mode <Ref. to EN(H6DO)(diag)-35, PROCEDURE, Inspection Mode.>.

	Step	Check	Yes	No
1	**CHECK FOR ANY OTHER DTC ON DISPLAY.**	Is any other DTC displayed?	Inspect the relevant DTC using "List of Diagnostic Trouble Code (DTC)". <Ref. to EN(H6DO)(diag)-71, List of Diagnostic Trouble Code (DTC).> NOTE: In this case, it is not necessary to inspect DTC P0461.	Replace the fuel level sensor. <Ref. to FU(H6DO)-51, Fuel Level Sensor.> and fuel sub level sensor <Ref. to FU(H6DO)-52, Fuel Sub Level Sensor.>

CJ:DTC P0462 FUEL LEVEL SENSOR CIRCUIT LOW INPUT

NOTE:
For the diagnostic procedure, refer to DTC P0463. <Ref. to EN(H6DO)(diag)-266, DTC P0463 FUEL LEVEL SENSOR CIRCUIT HIGH INPUT, Diagnostic Procedure with Diagnostic Trouble Code (DTC).>

CK:DTC P0463 FUEL LEVEL SENSOR CIRCUIT HIGH INPUT

DTC DETECTING CONDITION:

- Two consecutive driving cycles with fault
- GENERAL DESCRIPTION <Ref. to GD(H6DO)-153, DTC P0463 FUEL LEVEL SENSOR CIRCUIT HIGH INPUT, Diagnostic Trouble Code (DTC) Detecting Criteria.>

CAUTION:
After repair or replacement of faulty parts, conduct Clear Memory Mode <Ref. to EN(H6DO)(diag)-44, OPERATION, Clear Memory Mode.> and Inspection Mode <Ref. to EN(H6DO)(diag)-35, PROCEDURE, Inspection Mode.>.

	Step	Check	Yes	No
1	**CHECK FOR ANY OTHER DTC ON DISPLAY.**	Is DTC P0462 or P0463 displayed on the Subaru Select Monitor?	Check the combination meter. <Ref. to IDI-15, Combination Meter.>	Temporary poor contact occurs.

CL:DTC P0464 FUEL LEVEL SENSOR CIRCUIT INTERMITTENT

DTC DETECTING CONDITION:

- Two consecutive driving cycles with fault
- GENERAL DESCRIPTION <Ref. to GD(H6DO)-155, DTC P0464 FUEL LEVEL SENSOR CIRCUIT INTERMITTENT, Diagnostic Trouble Code (DTC) Detecting Criteria.>

CAUTION:
After repair or replacement of faulty parts, conduct Clear Memory Mode <Ref. to EN(H6DO)(diag)-44, OPERATION, Clear Memory Mode.> and Inspection Mode <Ref. to EN(H6DO)(diag)-35, PROCEDURE, Inspection Mode.>.

	Step	Check	Yes	No
1	**CHECK FOR ANY OTHER DTC ON DISPLAY.**	Is DTC P0464 displayed on the display?	Check the combination meter. <Ref. to IDI-15, Combination Meter.>	Temporarypoor contact occurted.

CM:DTC P0483 COOLING FAN RATIONALITY CHECK

DTC DETECTING CONDITION:

- Two consecutive driving cycles with fault
- GENERAL DESCRIPTION <Ref. to GD(H6DO)-158, DTC P0483 COOLING FAN RATIONALITY CHECK.>

TROUBLE SYMPTOM:

- Occurrence of noise
- Overheating

CAUTION:
After repair or replacement of faulty parts, conduct Clear Memory Mode <Ref. to EN(H6DO)(diag)-44, OPERATION, Clear Memory Mode.> and Inspection Mode <Ref. to EN(H6DO)(diag)-35, PROCEDURE, Inspection Mode.>.

NOTE:
If the vehicle, with the engine idling, is placed very close to a wall or another vehicle, preventing normal cooling function, the OBD system may detect malfunction.

	Step	Check	Yes	No
1	**CHECK FOR ANY OTHER DTC ON DISPLAY.**	Is any other DTC displayed?	Inspect the relevant DTC using “List of Diagnostic Trouble Code (DTC)”. <Ref. to EN(H6DO)(diag)-71, List of Diagnostic Trouble Code (DTC).>	Check the radiator fan, fan motor and thermostat. <Ref. to CO(H6DO)-18, Radiator Main Fan and Fan Motor.> and <Ref. to CO(H6DO)-21, Radiator Sub Fan and Fan Motor.> If thermostat is stuck, replace thermostat.

CN:DTC P0500 VEHICLE SPEED SENSOR

DTC DETECTING CONDITION:

- Detect as soon as malfunction occurs.
- GENERAL DESCRIPTION <Ref. to GD(H6DO)-159, DTC P0500 VEHICLE SPEED SENSOR, Diagnostic Trouble Code (DTC) Detecting Criteria.>

CAUTION:
After repair or replacement of faulty parts, conduct Clear Memory Mode <Ref. to EN(H6DO)(diag)-44, OPERATION, Clear Memory Mode.> and Inspection Mode <Ref. to EN(H6DO)(diag)-35, PROCEDURE, Inspection Mode.>.

	Step	Check	Yes	No
1	**CHECK DTC OF ABS.** Check DTC of ABS.	Is DTC of ABS displayed?	Perform the diagnosis according to DTC. <Ref. to ABS(diag)-34, List of Diagnostic Trouble Code (DTC).>	Repair the poor contact in ECM.

CO:DTC P0506 IDLE CONTROL SYSTEM RPM LOWER THAN EXPECTED

DTC DETECTING CONDITION:

- Two consecutive driving cycles with fault
- GENERAL DESCRIPTION <Ref. to GD(H6DO)-161, DTC P0506 IDLE CONTROL SYSTEM RPM LOWER THAN EXPECTED, Diagnostic Trouble Code (DTC) Detecting Criteria.>

TROUBLE SYMPTOM:

- Engine is difficult to start.
- Engine does not start.
- Erroneous idling
- Engine stalls.

CAUTION:
After repair or replacement of faulty parts, conduct Clear Memory Mode <Ref. to EN(H6DO)(diag)-44, OPERATION, Clear Memory Mode.> and Inspection Mode <Ref. to EN(H6DO)(diag)-35, PROCEDURE, Inspection Mode.>.

WIRING DIAGRAM:

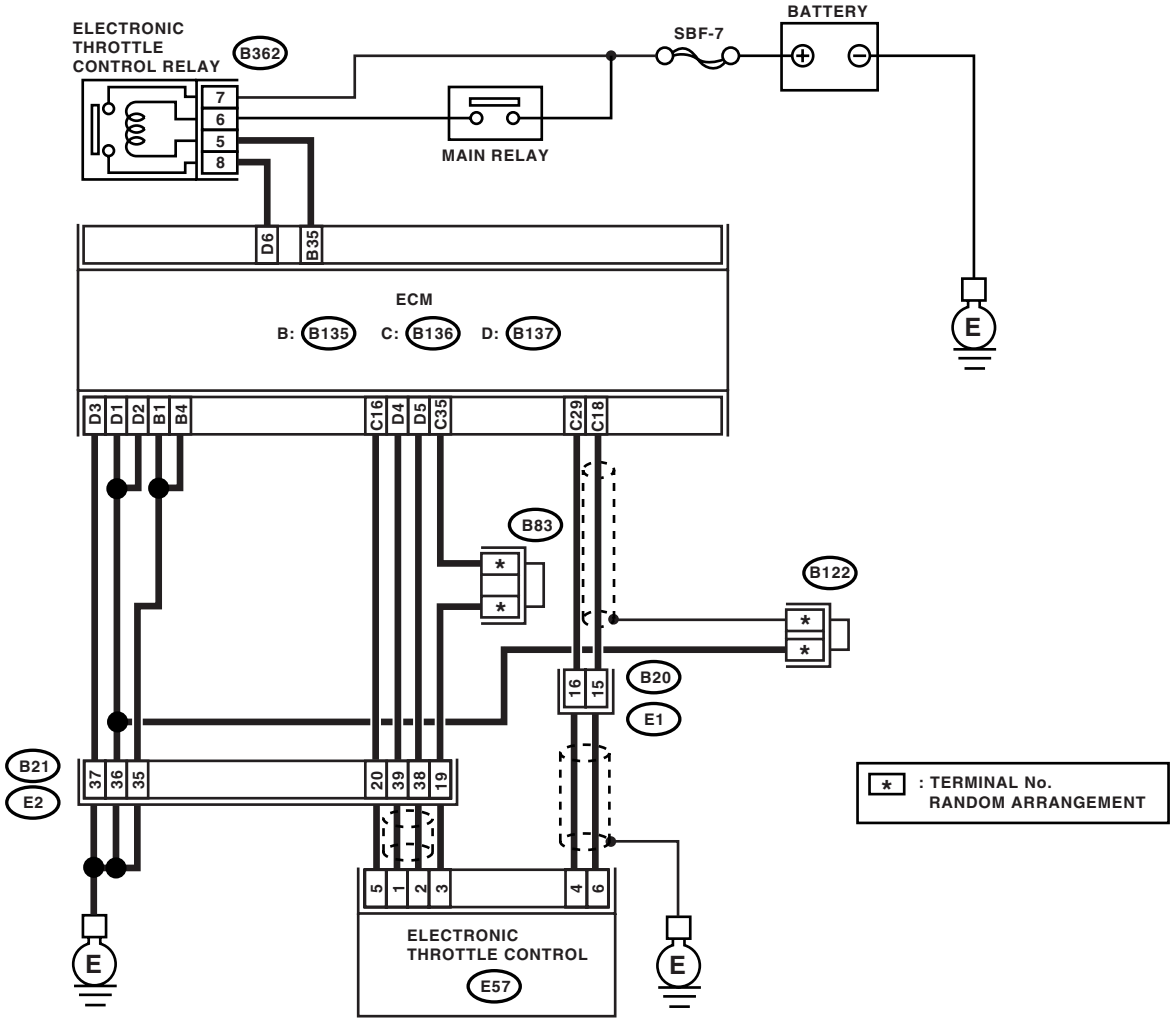

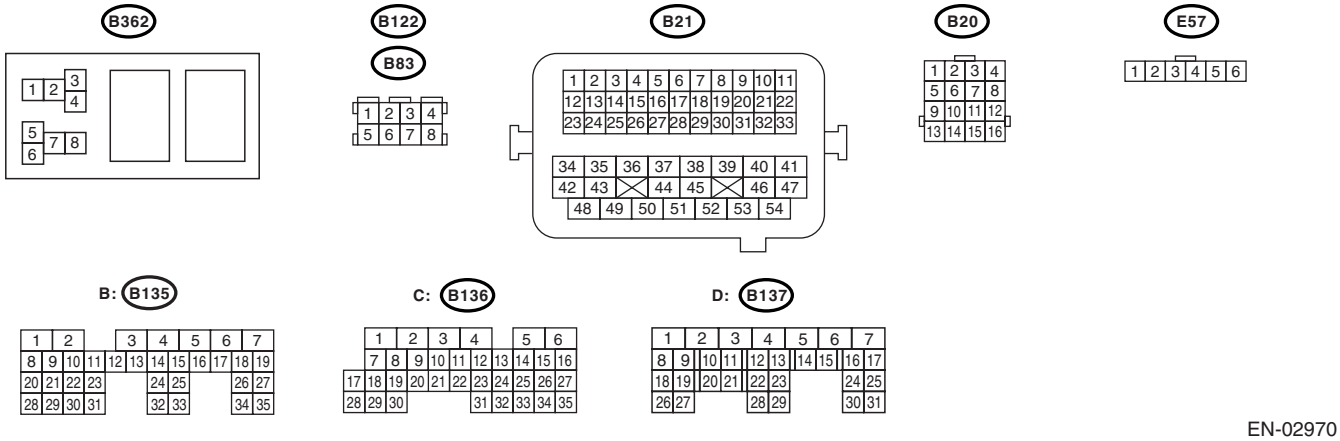

EN-02970

	Step	Check	Yes	No
1	**CHECK FOR ANY OTHER DTC ON DISPLAY.**	Is any other DTC displayed?	Inspect the relevant DTC using "List of Diagnostic Trouble Code (DTC)". <Ref. to EN(H6DO)(diag)-71, List of Diagnostic Trouble Code (DTC).> NOTE: In this case, it is not necessary to inspect DTC P0506.	Go to step **2.**
2	**CHECK THE AIR CLEANER ELEMENT.** 1) Turn the ignition switch to OFF. 2) Check the air cleaner element.	Is there excessive clogging on air cleaner element.	Replace the air cleaner element. <Ref. to IN(H6DO)-4, Air Cleaner Element.>	Go to step **3.**
3	**CHECK ELECTRONIC THROTTLE CONTROL.** 1) Turn the ignition switch to OFF. 2) Remove the electronic throttle control. 3) Check the electronic throttle control.	Are there foreign particles in electronic throttle control?	Remove the foreign particles from electronic throttle control.	Perform the diagnosis of DTC P2101.

CP:DTC P0507 IDLE CONTROL SYSTEM RPM HIGHER THAN EXPECTED

DTC DETECTING CONDITION:

- Two consecutive driving cycles with fault
- GENERAL DESCRIPTION <Ref. to GD(H6DO)-163, DTC P0507 IDLE CONTROL SYSTEM RPM HIGHER THAN EXPECTED, Diagnostic Trouble Code (DTC) Detecting Criteria.>

TROUBLE SYMPTOM:

Engine keeps running at higher revolution than specified idling revolution.

CAUTION:

After repair or replacement of faulty parts, conduct Clear Memory Mode <Ref. to EN(H6DO)(diag)-44, OPERATION, Clear Memory Mode.> and Inspection Mode <Ref. to EN(H6DO)(diag)-35, PROCEDURE, Inspection Mode.>.

WIRING DIAGRAM:

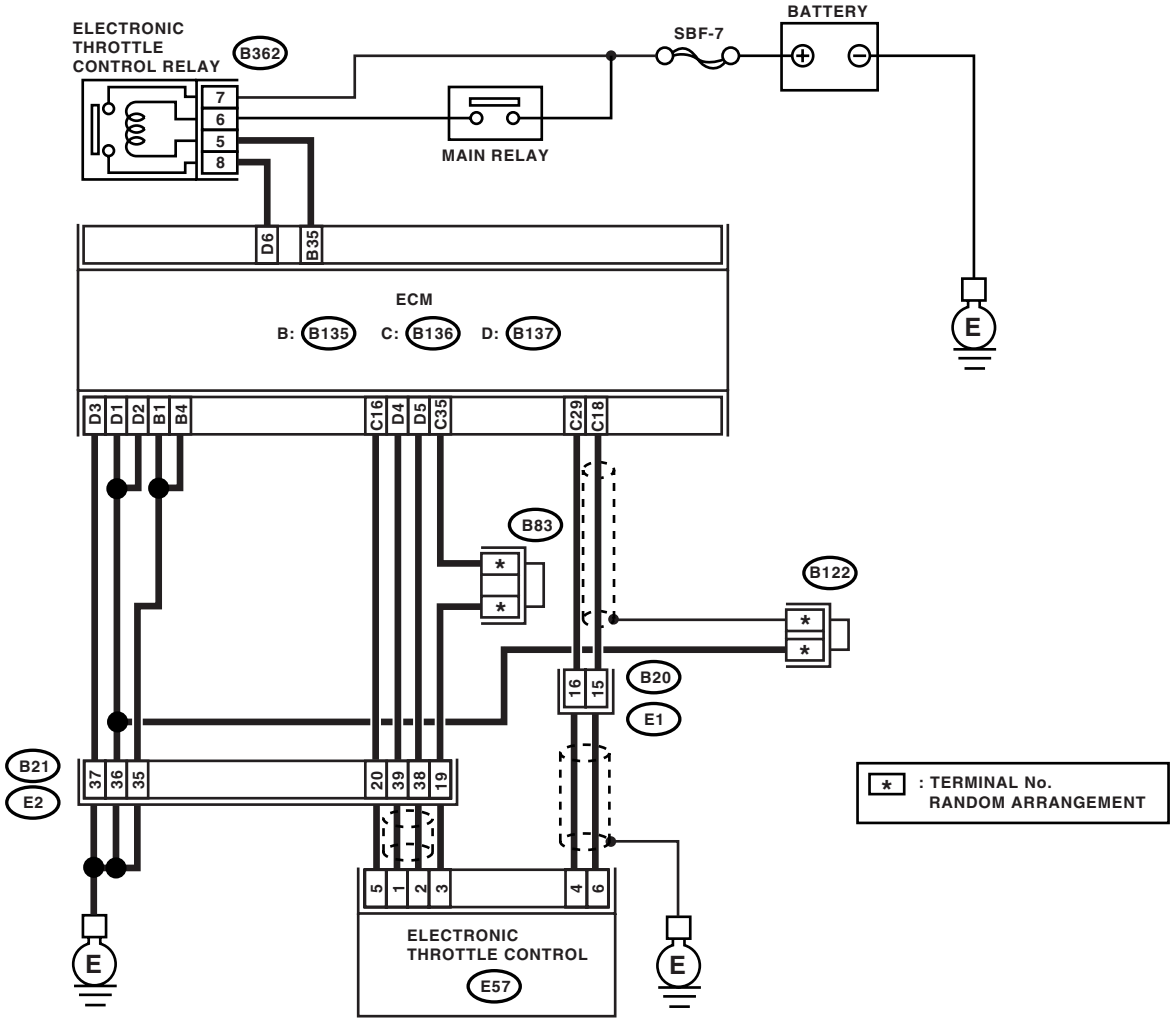

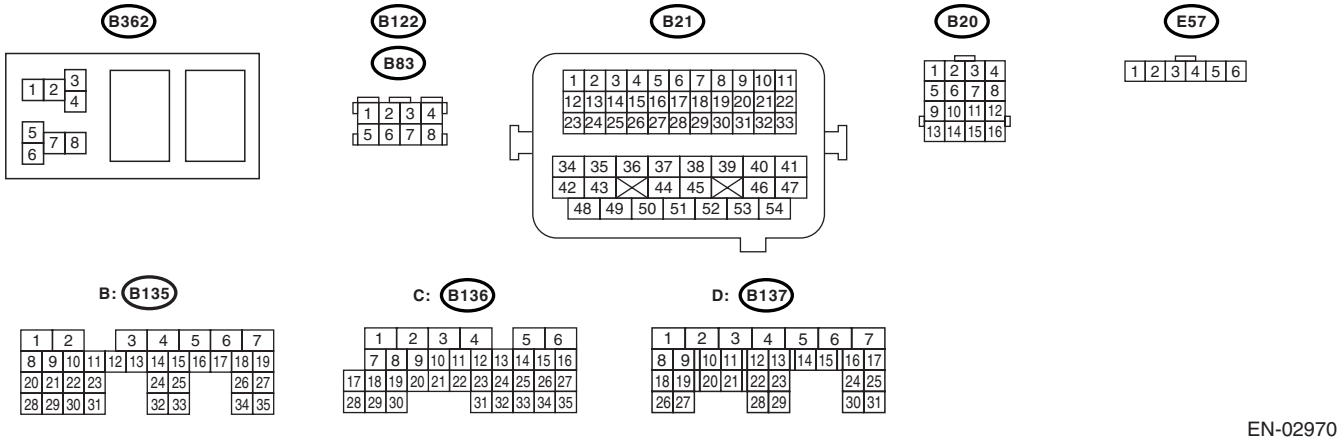

EN-02970

	Step	Check	Yes	No
1	**CHECK FOR ANY OTHER DTC ON DISPLAY.**	Is any other DTC displayed?	Inspect the relevant DTC using "List of Diagnostic Trouble Code (DTC)". <Ref. to EN(H6DO)(diag)-71, List of Diagnostic Trouble Code (DTC).> NOTE: In this case, it is not necessary to inspect DTC P0507.	Go to step **2.**
2	**CHECK AIR INTAKE SYSTEM.** 1) Turn the ignition switch to ON. 2) Start the engine, and idle it. 3) Check the following items. • Loose installation of intake manifold and throttle body • Cracks of intake manifold gasket and throttle body gasket • Disconnections of vacuum hoses	Is there any fault in air intake system?	Repair the air suction and leaks.	Go to step **3.**
3	**CHECK ELECTRONIC THROTTLE CONTROL.** 1) Turn the ignition switch to OFF. 2) Remove the electronic throttle control. 3) Check the electronic throttle control.	Are there foreign particles in electronic throttle control?	Remove the foreign particles from electronic throttle control.	Perform the diagnosis of DTC P2101.

CQ:DTC P0512 STARTER REQUEST CIRCUIT

DTC DETECTING CONDITION:

- Detect as soon as manfunction occurs.
- GENERAL DESCRIPTION <Ref. to GD(H6DO)-164, DTC P0512 STARTER REQUEST CIRCUIT, Diagnostic Trouble Code (DTC) Detecting Criteria.>

TROUBLE SYMPTOM:

Failure of engine to start

CAUTION:

After repair or replacement of faulty parts, conduct Clear Memory Mode <Ref. to EN(H6DO)(diag)-44, OPERATION, Clear Memory Mode.> and Inspection Mode <Ref. to EN(H6DO)(diag)-35, PROCEDURE, Inspection Mode.>.

WIRING DIAGRAM:

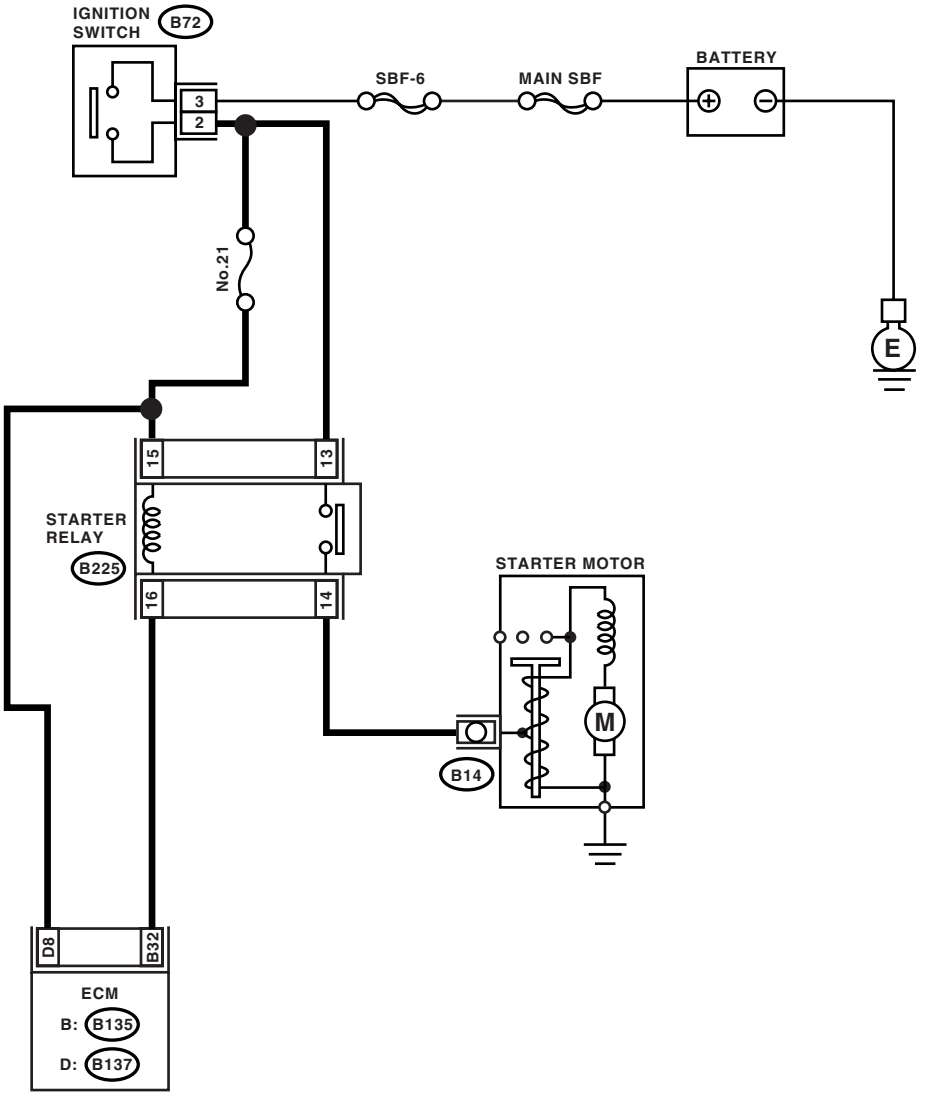

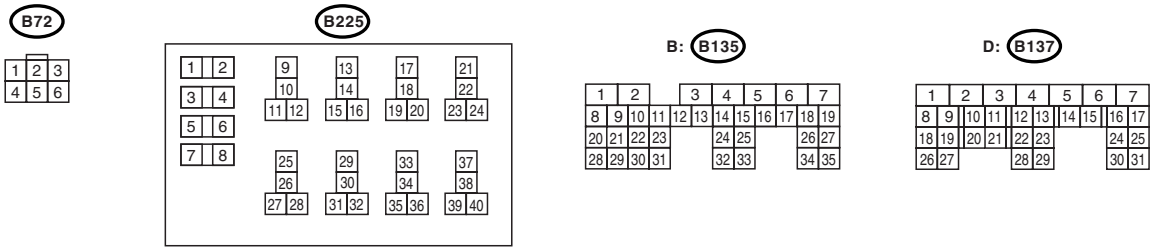

EN-02964

	Step	Check	Yes	No
1	**CHECK OPERATION OF STARTER MOTOR.** Turn the ignition switch to ON. NOTE: Place the inhibitor switch in each position.	Does the starter motor operate?	Repair the battery short circuit in starter motor circuit.	Check starter motor circuit. <Ref. to EN(H6DO)(diag)-57, STARTER MOTOR CIRCUIT, Diagnostics for Engine Starting Failure.>

CR:DTC P0519 IDLE CONTROL SYSTEM MALFUNCTION (FAIL-SAFE)

DTC DETECTING CONDITION:

- Detect as soon as malfunction occurs.
- GENERAL DESCRIPTION <Ref. to GD(H6DO)-166, DTC P0519 IDLE CONTROL SYSTEM MALFUNCTION (FAIL-SAFE), Diagnostic Trouble Code (DTC) Detecting Criteria.>

TROUBLE SYMPTOM:

Engine keeps running at higher revolution than specified idling revolution.

CAUTION:

After repair or replacement of faulty parts, conduct Clear Memory Mode <Ref. to EN(H6DO)(diag)-44, OPERATION, Clear Memory Mode.> and Inspection Mode <Ref. to EN(H6DO)(diag)-35, PROCEDURE, Inspection Mode.>.

	Step	Check	Yes	No
1	**CHECK FOR ANY OTHER DTC ON DISPLAY.**	Is any other DTC displayed?	Inspect the DTC using "List of Diagnostic Trouble Code (DTC)". <Ref. to EN(H6DO)(diag)-71, List of Diagnostic Trouble Code (DTC).> NOTE: In this case, it is not necessary to inspect DTC P0519.	Go to step **2.**
2	**CHECK AIR INTAKE SYSTEM.** 1) Turn the ignition switch to ON. 2) Start and idle the engine. 3) Check the following items: • Loose installation of intake manifold and throttle body • Cracks of intake manifold gasket and throttle body gasket • Disconnections of vacuum hoses	Is there any fault in air intake system?	Repair air suction and leaks.	Go to step **3.**
3	**CHECK ELECTRONIC THROTTLE CONTROL.** 1) Turn the ignition switch to OFF. 2) Remove the electronic throttle control. 3) Check the electronic throttle control.	Are foreign matters found inside the electronic throttle control?	Remove foreign matters from the electronic throttle control.	Perform the diagnosis of DTC P2101.

CS:DTC P0600 SERIAL COMMUNICATION LINK

NOTE:
For the diagnostic procedure, refer to LAN section. <Ref. to LAN(diag)-2, Basic Diagnostic Procedure.>

CT:DTC P0604 INTERNAL CONTROL MODULE RANDOM ACCESS MEMORY (RAM) ERROR

DTC DETECTING CONDITION:

- Detect as soon as malfunction occurs.
- GENERAL DESCRIPTION <Ref. to GD(H6DO)-168, DTC P0604 INTERNAL CONTROL MODULE RANDOM ACCESS MEMORY (RAM) ERROR, Diagnostic Trouble Code (DTC) Detecting Criteria.>

TROUBLE SYMPTOM:

- Engine does not start.
- Engine stalls.

CAUTION:

After repair or replacement of faulty parts, conduct Clear Memory Mode <Ref. to EN(H6DO)(diag)-44, OPERATION, Clear Memory Mode.> and Inspection Mode <Ref. to EN(H6DO)(diag)-35, PROCEDURE, Inspection Mode.>.

WIRING DIAGRAM:

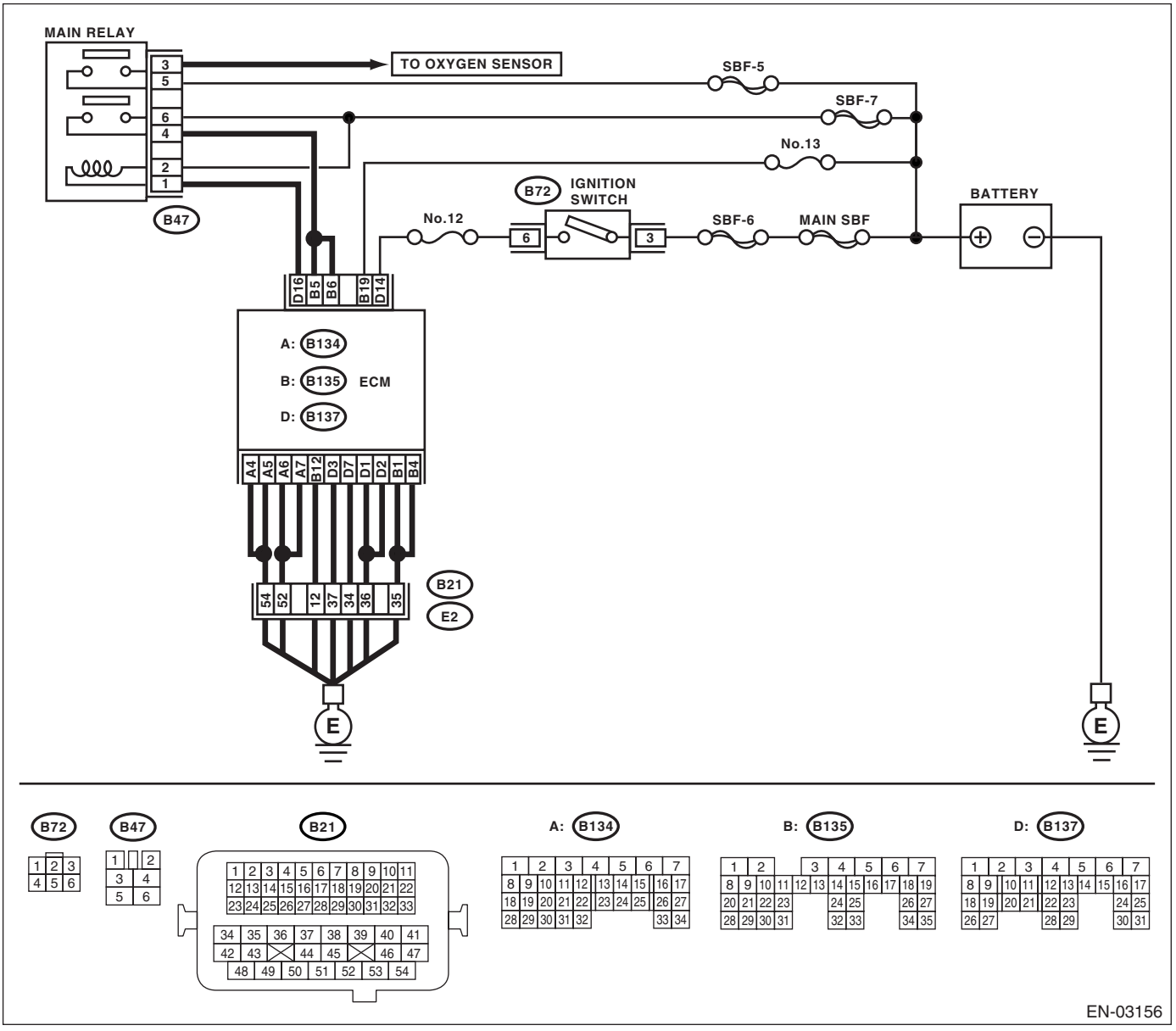

Step		Check	Yes	No
1	**CHECK FOR ANY OTHER DTC ON DISPLAY.**	Is any other DTC displayed?	Inspect the relevant DTC using "List of Diagnostic Trouble Code (DTC)". <Ref. to EN(H6DO)(diag)-71, List of Diagnostic Trouble Code (DTC).>	Temporary poor contact occurs.

CU:DTC P0605 INTERNAL CONTROL MODULE READ ONLY MEMORY (ROM) ERROR

NOTE:
For the diagnostic procedure, refer to DTC P0607. <Ref. to EN(H6DO)(diag)-277, DTC P0607 CONTROL MODULE PERFORMANCE, Diagnostic Procedure with Diagnostic Trouble Code (DTC).>

CV:DTC P0607 CONTROL MODULE PERFORMANCE

DTC DETECTING CONDITION:

- Detect as soon as malfunction occurs.
- GENERAL DESCRIPTION <Ref. to GD(H6DO)-170, DTC P0607 CONTROL MODULE PERFORMANCE, Diagnostic Trouble Code (DTC) Detecting Criteria.>

TROUBLE SYMPTOM:

- Erroneous idling
- Poor driving performance

CAUTION:

After repair or replacement of faulty parts, conduct Clear Memory Mode <Ref. to EN(H6DO)(diag)-44, OPERATION, Clear Memory Mode.> and Inspection Mode <Ref. to EN(H6DO)(diag)-35, PROCEDURE, Inspection Mode.>.

WIRING DIAGRAM:

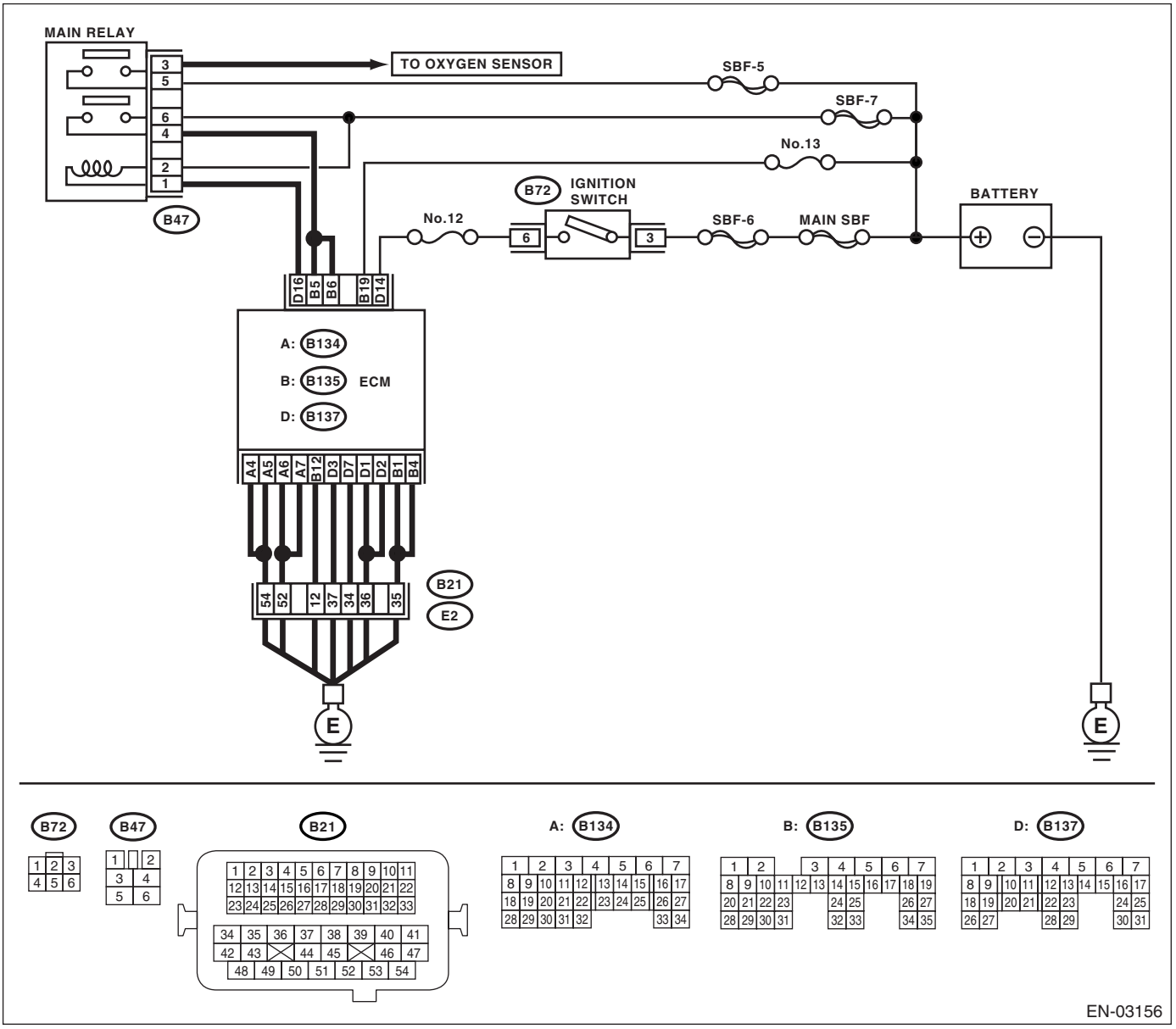

	Step	Check	Yes	No
1	**CHECK INPUT VOLTAGE OF ECM.** 1) Turn the ignition switch to ON. 2) Measure the voltage between ECM connector and chassis ground. ***Connector & terminal*** ***(B135) No. 5 (+) — Chassis ground (−):*** ***(B135) No. 6 (+) — Chassis ground (−):***	Is the voltage 10 — 13 V?	Go to step **2.**	Repair the open or ground short circuit of power supply circuit.
2	**CHECK INPUT VOLTAGE OF ECM.** 1) Start the engine. 2) Measure the voltage between ECM connector and chassis ground. ***Connector & terminal*** ***(B135) No. 5 (+) — Chassis ground (−):*** ***(B135) No. 6 (+) — Chassis ground (−):***	Is the voltage 13 — 15 V?	Go to step **3.**	Repair the open or ground short circuit of power supply circuit.
3	**CHECK ECM GROUND HARNESS.** Measure the voltage between ECM connector and chassis ground. ***Connector & terminal*** ***(B137) No. 1 (+) — Chassis ground (−):*** ***(B137) No. 2 (+) — Chassis ground (−):*** ***(B137) No. 3 (+) — Chassis ground (−):***	Is the voltage less than 1 V?	Repair the poor contact in ECM connector. Replace the ECM if defective. <Ref. to FU(H6DO)-34, Engine Control Module (ECM).>	Further tighten the engine ground terminal.

CW:DTC P0638 THROTTLE ACTUATOR CONTROL RANGE/PERFORMANCE (BANK 1)

NOTE:
For diagnostic procedure, refer to DTC P2101. <Ref. to EN(H6DO)(diag)-339, DTC P2101 THROTTLE ACTUATOR CONTROL MOTOR CIRCUIT RANGE/PERFORMANCE, Diagnostic Procedure with Diagnostic Trouble Code (DTC).>

CX:DTC P0691 COOLING FAN 1 CONTROL CIRCUIT LOW

DTC DETECTING CONDITION:

- Two consecutive driving cycles with fault
- GENERAL DESCRIPTION <Ref. to GD(H6DO)-176, DTC P0691 COOLING FAN 1 CONTROL CIRCUIT LOW, Diagnostic Trouble Code (DTC) Detecting Criteria.>

TROUBLE SYMPTOM:

- Radiator fan does not operate properly.
- Over-heating

CAUTION:
After repair or replacement of faulty parts, conduct Clear Memory Mode <Ref. to EN(H6DO)(diag)-44, OPERATION, Clear Memory Mode.> and Inspection Mode <Ref. to EN(H6DO)(diag)-35, PROCEDURE, Inspection Mode.>.

	Step	Check	Yes	No
1	**CHECK FOR ANY OTHER DTC ON DISPLAY.**	Is DTC P0691 displayed?	Check radiator fan system. <Ref. to CO(H6DO)-7, Radiator Fan System.>	Temporary poor contact occurs.

CY:DTC P0692 COOLING FAN 1 CONTROL CIRCUIT HIGH

DTC DETECTING CONDITION:

- Two consecutive driving cycles with fault
- GENERAL DESCRIPTION <Ref. to GD(H6DO)-177, DTC P0692 COOLING FAN 1 CONTROL CIRCUIT HIGH, Diagnostic Trouble Code (DTC) Detecting Criteria.>

TROUBLE SYMPTOM:

- Radiator fan does not operate properly.
- Over-heating

CAUTION:
After repair or replacement of faulty parts, conduct Clear Memory Mode <Ref. to EN(H6DO)(diag)-44, OPERATION, Clear Memory Mode.> and Inspection Mode <Ref. to EN(H6DO)(diag)-35, PROCEDURE, Inspection Mode.>.

	Step	Check	Yes	No
1	**CHECK FOR ANY OTHER DTC ON DISPLAY.**	Is DTC P0692 displayed?	Check radiator fan system. <Ref. to CO(H6DO)-7, Radiator Fan System.>	Temporary poor contact occurs.

CZ:DTC P0700 TRANSMISSION CONTROL SYSTEM (MIL REQUEST)

NOTE:
For the diagnostic procedure, refer to AT section. <Ref. to 5AT(diag)-2, Basic Diagnostic Procedure.>

DA:DTC P1152 O2 SENSOR CIRCUIT RANGE/PERFORMANCE (LOW) (BANK1 SENSOR1)

NOTE:
For the diagnostic procedure, refer to DTC P1153. <Ref. to EN(H6DO)(diag)-279, DTC P1153 O2 SENSOR CIRCUIT RANGE/PERFORMANCE (HIGH) (BANK1 SENSOR1), Diagnostic Procedure with Diagnostic Trouble Code (DTC).>

DB:DTC P1153 O2 SENSOR CIRCUIT RANGE/PERFORMANCE (HIGH) (BANK1 SENSOR1)

DTC DETECTING CONDITION:

- Two consecutive driving cycles with fault
- GENERAL DESCRIPTION <Ref. to GD(H6DO)-182, DTC P1153 O2 SENSOR CIRCUIT RANGE/PERFORMANCE (HIGH) (BANK1 SENSOR1), Diagnostic Trouble Code (DTC) Detecting Criteria.>

CAUTION:
After repair or replacement of faulty parts, conduct Clear Memory Mode <Ref. to EN(H6DO)(diag)-44, OPERATION, Clear Memory Mode.> and Inspection Mode <Ref. to EN(H6DO)(diag)-35, PROCEDURE, Inspection Mode.>.

WIRING DIAGRAM:

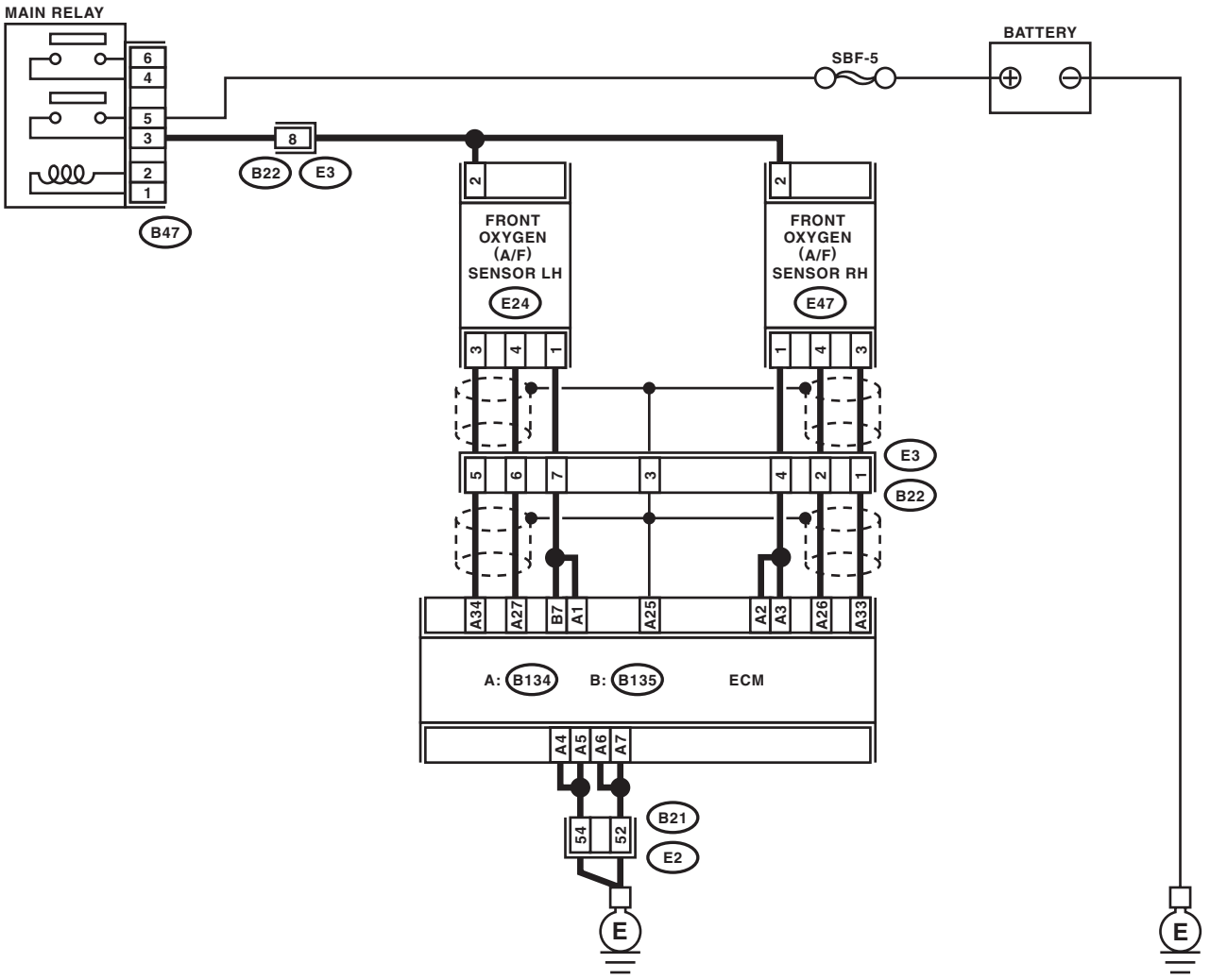

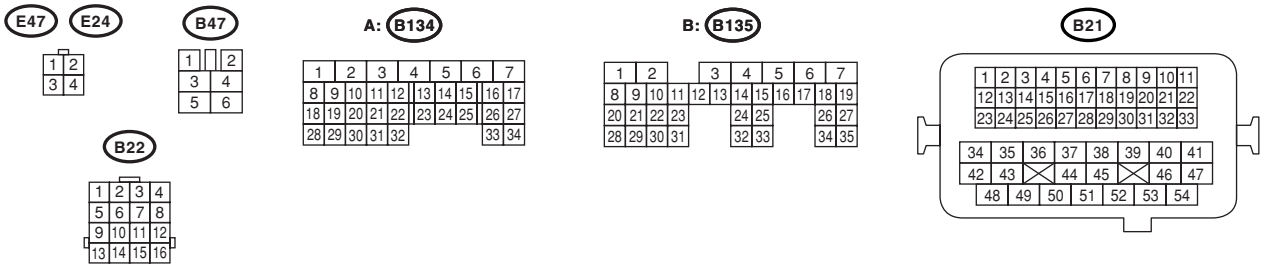

EN-03159

	Step	Check	Yes	No
1	**CHECK FOR ANY OTHER DTC ON DISPLAY.**	Is any other DTC displayed?	Inspect the relevant DTC using "List of Diagnostic Trouble Code (DTC)". <Ref. to EN(H6DO)(diag)-71, List of Diagnostic Trouble Code (DTC).>	Go to step **2.**
2	**CHECK FRONT OXYGEN (A/F) SENSOR DATA.** 1) Start engine. 2) While observing the Subaru Select Monitor or general scan tool screen, warm-up the engine until coolant temperature is above 75°C (167°F). If the engine is already warmed-up, operate at idle speed for at least 1 minute. 3) Read data of front oxygen (A/F) sensor signal using Subaru Select Monitor or general scan tool. NOTE: • Subaru Select Monitor For detailed operation procedure, refer to the "READ CURRENT DATA FOR ENGINE". <Ref. to EN(H6DO)(diag)-26, Subaru Select Monitor.> • General scan tool For detailed operation procedures, refer to the general scan tool instruction manual.	Is the measured value within 0.86 — 1.15 at idle?	Go to step **3.**	Go to step **4.**
3	**CHECK REAR OXYGEN SENSOR SIGNAL.** 1) Race engine at speeds from idling to 5,000 rpm for a total of 5 cycles. NOTE: To increase engine speed to 5,000 rpm, slowly depress accelerator pedal, taking approximately 5 seconds, and quickly release accelerator pedal to decrease engine speed. 2) Operate the LED operation mode for engine. NOTE: • Subaru Select Monitor For detailed operation procedure, refer to the "LED OPERATION MODE FOR ENGINE". <Ref. to EN(H6DO)(diag)-26, Subaru Select Monitor.>	Does the LED of {Rear O2 Rich Signal} blink?	Check front oxygen (A/F) sensor circuit.	Check rear oxygen sensor circuit. <Ref. to FU(H6DO)-32, Rear Oxygen Sensor.>
4	**CHECK EXHAUST SYSTEM.** Check exhaust system parts. NOTE: Check the following items. • Loose installation of portions • Damage (crack, hole etc.) of parts • Looseness of front oxygen (A/F) sensor • Looseness and ill fitting of parts between front oxygen (A/F) sensor and rear oxygen sensor	Is there any fault in exhaust system?	Repair or replace faulty parts.	Replace front oxygen (A/F) sensor. <Ref. to FU(H6DO)-30, Front Oxygen (A/F) Sensor.>

DC:DTC P1154 O2 SENSOR CIRCUIT RANGE/PERFORMANCE (LOW) (BANK 2 SENSOR 1)

NOTE:
For the diagnostic procedure, refer to DTC P1155. <Ref. to EN(H6DO)(diag)-282, DTC P1155 O2 SENSOR CIRCUIT RANGE/PERFORMANCE (HIGH) (BANK 2 SENSOR 1), Diagnostic Procedure with Diagnostic Trouble Code (DTC).>

DD:DTC P1155 O2 SENSOR CIRCUIT RANGE/PERFORMANCE (HIGH) (BANK 2 SENSOR 1)

DTC DETECTING CONDITION:

- Two consecutive driving cycles with fault
- GENERAL DESCRIPTION <Ref. to GD(H6DO)-184, DTC P1155 O2 SENSOR CIRCUIT RANGE/PERFORMANCE (HIGH) (BANK 2 SENSOR 1), Diagnostic Trouble Code (DTC) Detecting Criteria.>

CAUTION:
After repair or replacement of faulty parts, conduct Clear Memory Mode <Ref. to EN(H6DO)(diag)-44, OPERATION, Clear Memory Mode.> and Inspection Mode <Ref. to EN(H6DO)(diag)-35, PROCEDURE, Inspection Mode.>.

WIRING DIAGRAM:

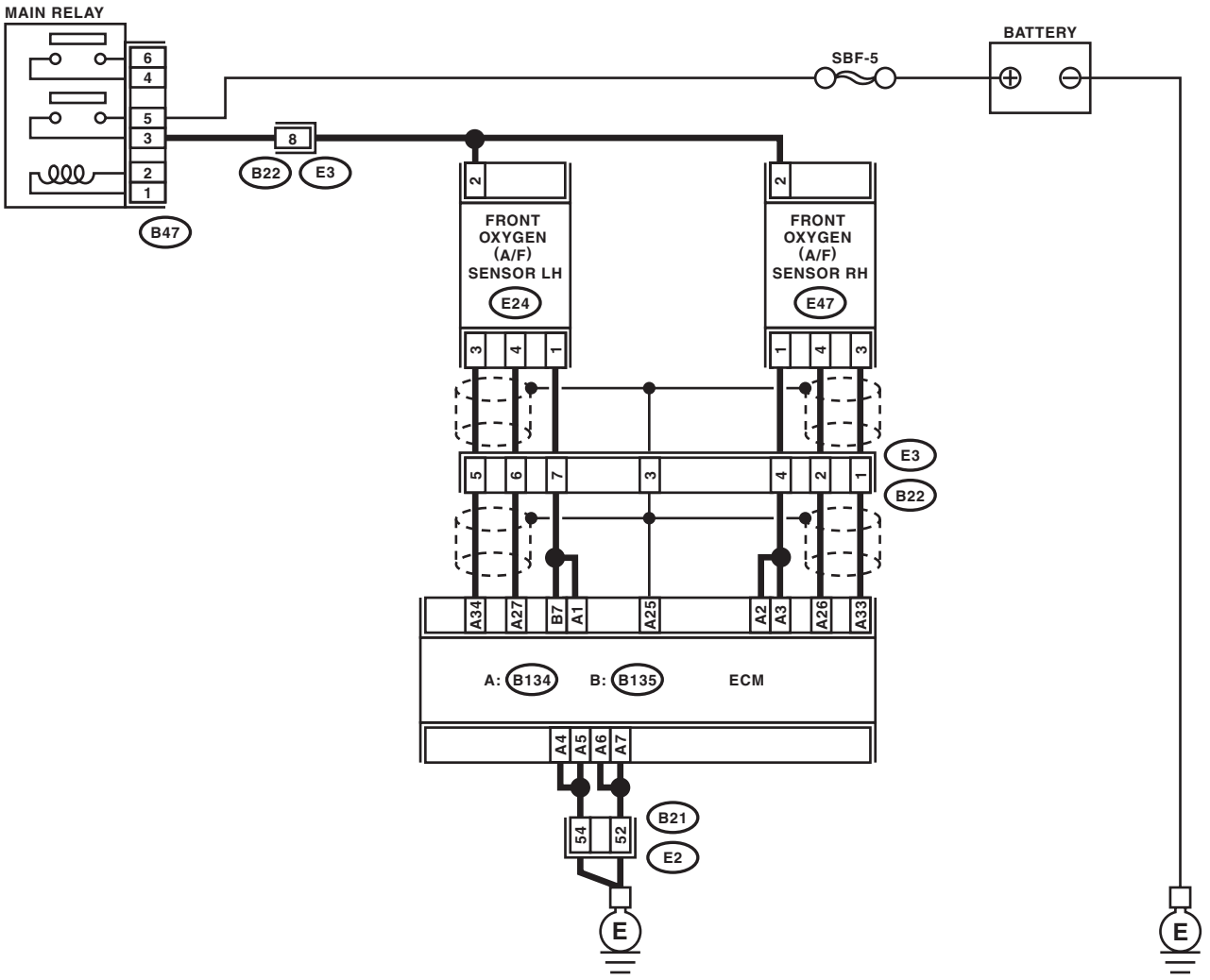

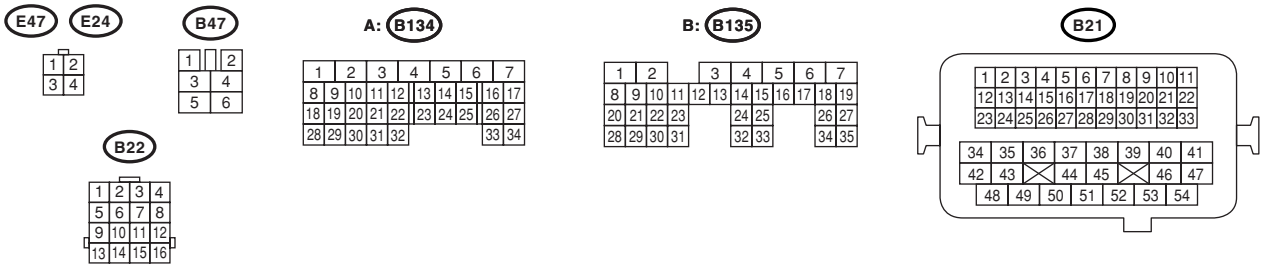

EN-03159

	Step	Check	Yes	No
1	**CHECK FOR ANY OTHER DTC ON DISPLAY.**	Is any other DTC displayed?	Inspect the relevant DTC using "List of Diagnostic Trouble Code (DTC)". <Ref. to EN(H6DO)(diag)-71, List of Diagnostic Trouble Code (DTC).>	Go to step **2.**
2	**CHECK FRONT OXYGEN (A/F) SENSOR DATA.** 1) Start engine. 2) While observing the Subaru Select Monitor or general scan tool screen, warm-up the engine until coolant temperature is above 75°C (167°F). If the engine is already warmed-up, operate at idle speed for at least 1 minute. 3) Read data of front oxygen (A/F) sensor signal using Subaru Select Monitor or general scan tool. NOTE: • Subaru Select Monitor For detailed operation procedure, refer to the "READ CURRENT DATA FOR ENGINE". <Ref. to EN(H6DO)(diag)-26, Subaru Select Monitor.> • General scan tool For detailed operation procedures, refer to the general scan tool instruction manual.	Is the measured value within 0.86 — 1.15 at idle?	Go to step **3.**	Go to step **4.**
3	**CHECK REAR OXYGEN SENSOR SIGNAL.** 1) Race engine at speeds from idling to 5,000 rpm for a total of 5 cycles. NOTE: To increase engine speed to 5,000 rpm, slowly depress accelerator pedal, taking approximately 5 seconds, and quickly release accelerator pedal to decrease engine speed. 2) Operate the LED operation mode for engine. NOTE: • Subaru Select Monitor For detailed operation procedure, refer to the "LED OPERATION MODE FOR ENGINE". <Ref. to EN(H6DO)(diag)-26, Subaru Select Monitor.>	Does the LED of {Rear O2 Rich Signal} blink?	Check front oxygen (A/F) sensor circuit.	Check rear oxygen sensor circuit. <Ref. to FU(H6DO)-32, Rear Oxygen Sensor.>
4	**CHECK EXHAUST SYSTEM.** Check exhaust system parts. NOTE: Check the following items. • Loose installation of portions • Damage (crack, hole etc.) of parts • Looseness of front oxygen (A/F) sensor • Looseness and ill fitting of parts between front oxygen (A/F) sensor and rear oxygen sensor	Is there any fault in exhaust system?	Repair or replace faulty parts.	Replace front oxygen (A/F) sensor. <Ref. to FU(H6DO)-30, Front Oxygen (A/F) Sensor.>

DE:DTC P1160 RETURN SPRING FAILURE

NOTE:
For diagnostic procedure, refer to DTC P2101. <Ref. to EN(H6DO)(diag)-339, DTC P2101 THROTTLE ACTUATOR CONTROL MOTOR CIRCUIT RANGE/PERFORMANCE, Diagnostic Procedure with Diagnostic Trouble Code (DTC).>

DF:DTC P1400 FUEL TANK PRESSURE CONTROL SOLENOID VALVE CIRCUIT LOW

DTC DETECTING CONDITION:

- Two consecutive driving cycles with fault
- GENERAL DESCRIPTION <Ref. to GD(H6DO)-187, DTC P1400 FUEL TANK PRESSURE CONTROL SOLENOID VALVE CIRCUIT LOW, Diagnostic Trouble Code (DTC) Detecting Criteria.>

CAUTION:
After repair or replacement of faulty parts, conduct Clear Memory Mode <Ref. to EN(H6DO)(diag)-44, OPERATION, Clear Memory Mode.> and Inspection Mode <Ref. to EN(H6DO)(diag)-35, PROCEDURE, Inspection Mode.>.

WIRING DIAGRAM:

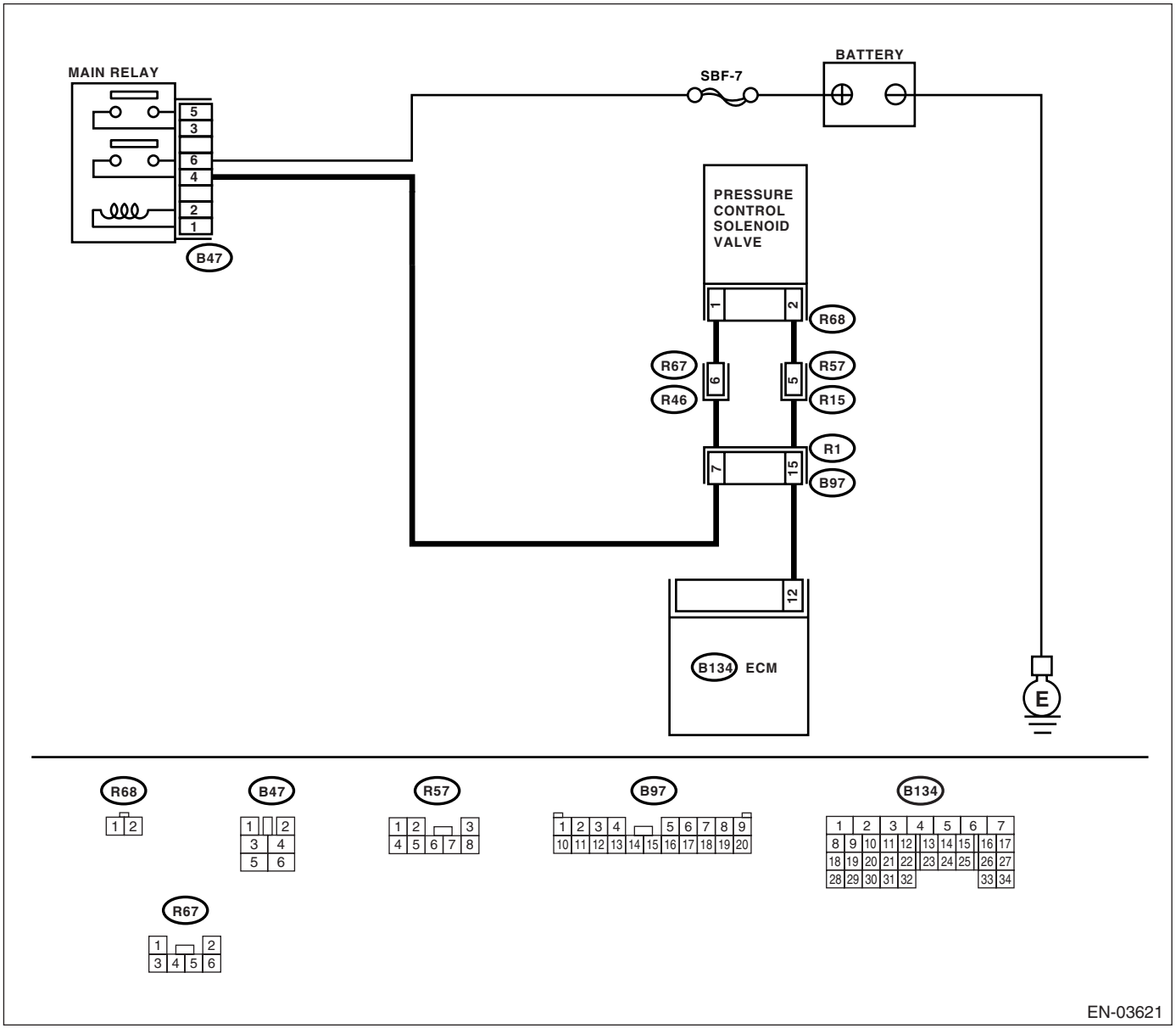

	Step	Check	Yes	No
1	**CHECK OUTPUT SIGNAL FROM ECM.** 1) Turn the ignition switch to ON. 2) Measure the voltage between ECM and chassis ground. ***Connector & terminal*** ***(B134) No. 12 (+) — Chassis ground (−):***	Is the voltage more than 10 V?	Go to step **2.**	Go to step **3.**
2	**CHECK POOR CONTACT.** Check poor contact in ECM connector.	Is there poor contact in ECM connector?	Repair poor contact in ECM connector.	Contact with SOA Service Center.
3	**CHECK HARNESS BETWEEN PRESSURE CONTROL SOLENOID VALVE AND ECM CONNECTOR.** 1) Turn the ignition switch to OFF. 2) Disconnect the connectors from pressure control solenoid valve and ECM. 3) Measure the resistance of harness between pressure control solenoid valve connector and chassis ground. ***Connector & terminal*** ***(R68) No. 2 — Chassis ground:***	Is the resistance more than 1 MΩ?	Go to step **4.**	Repair short circuit to ground in harness between ECM and pressure control solenoid valve connector.
4	**CHECK HARNESS BETWEEN PRESSURE CONTROL SOLENOID VALVE AND ECM CONNECTOR.** Measure the resistance of harness between ECM and pressure control solenoid valve connector. ***Connector & terminal*** ***(B134) No. 12 — (R68) No. 2:***	Is the resistance less than 1 Ω?	Go to step **5.**	Repair harness and connector. NOTE: In this case, repair the following: • Open circuit in harness between ECM and pressure control solenoid valve connector • Poor contact in coupling connector
5	**CHECK PRESSURE CONTROL SOLENOID VALVE.** Measure the resistance between pressure control solenoid valve terminals. ***Terminals*** ***No. 1 — No. 2:***	Is the resistance 10 — 100 Ω?	Go to step **6.**	Replace the pressure control solenoid valve. <Ref. to EC(H6DO)-12, Pressure Control Solenoid Valve.>
6	**CHECK POWER SUPPLY TO PRESSURE CONTROL SOLENOID VALVE.** 1) Turn the ignition switch to ON. 2) Measure the voltage between pressure control solenoid valve and chassis ground. ***Connector & terminal*** ***(R68) No. 1 (+) — Chassis ground (−):***	Is the voltage more than 10 V?	Go to step **7.**	Repair harness and connector. NOTE: In this case, repair the following: • Open circuit in harness between main relay and pressure control solenoid valve connector • Poor contact in coupling connector • Poor contact in main relay connector
7	**CHECK POOR CONTACT.** Check poor contact in pressure control solenoid valve connector.	Is there poor contact in pressure control solenoid valve connector?	Repair poor contact in pressure control solenoid valve connector.	Contact with SOA Service Center.

DG:DTC P1420 FUEL TANK PRESSURE CONTROL SOL. VALVE CIRCUIT HIGH

DTC DETECTING CONDITION:

- Two consecutive driving cycles with fault
- GENERAL DESCRIPTION <Ref. to GD(H6DO)-189, DTC P1420 FUEL TANK PRESSURE CONTROL SOL. VALVE CIRCUIT HIGH, Diagnostic Trouble Code (DTC) Detecting Criteria.>

CAUTION:
After repair or replacement of faulty parts, conduct Clear Memory Mode <Ref. to EN(H6DO)(diag)-44, OPERATION, Clear Memory Mode.> and Inspection Mode <Ref. to EN(H6DO)(diag)-35, PROCEDURE, Inspection Mode.>.

WIRING DIAGRAM:

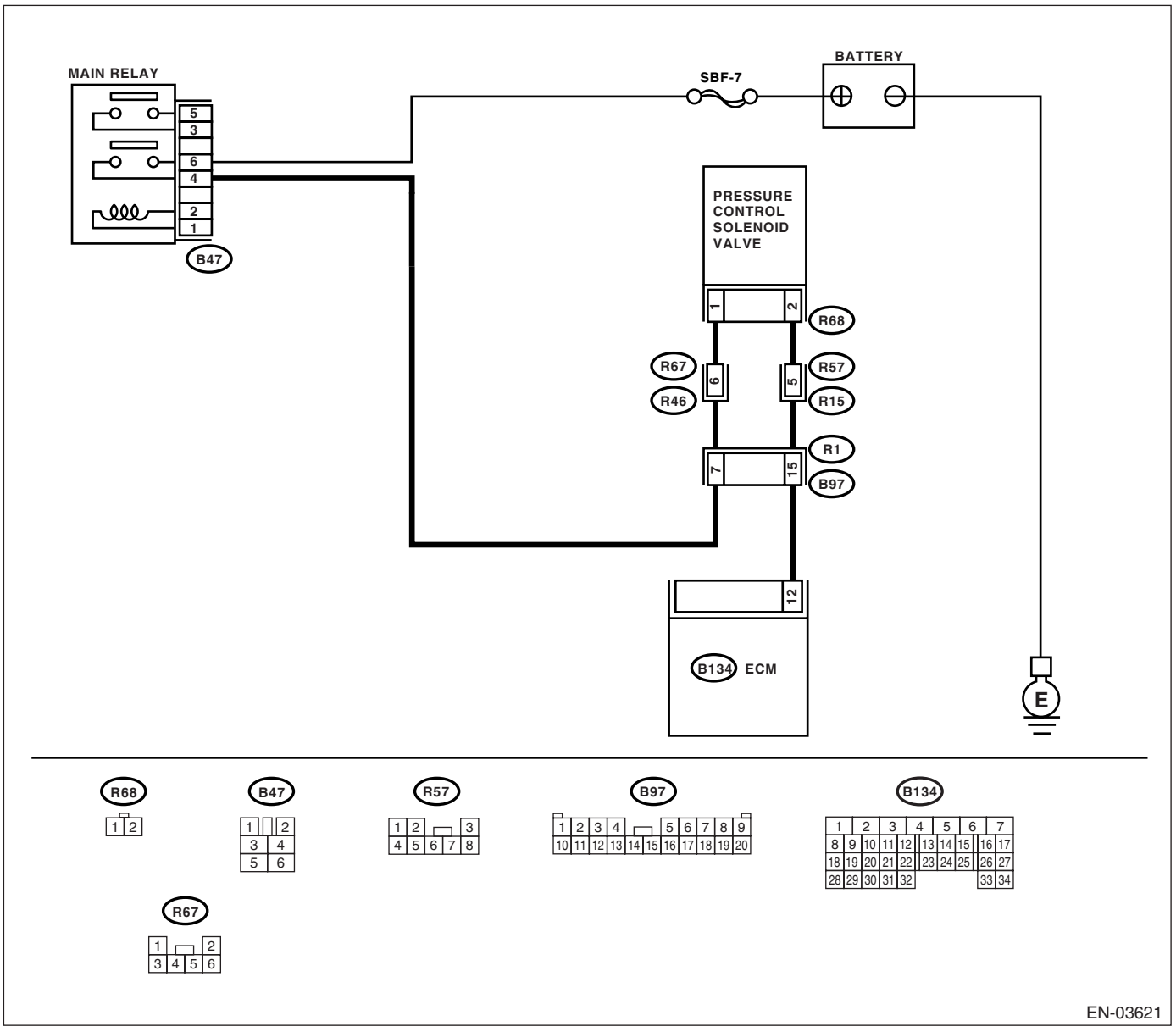

	Step	Check	Yes	No
1	**CHECK INPUT SIGNAL FOR ECM.** 1) Turn the ignition switch to OFF. 2) Connect the test mode connector at the lower portion of instrument panel (on the driver's side). 3) Turn the ignition switch to ON. 4) While operating the pressure control solenoid valve, measure voltage between ECM and chassis ground. NOTE: Pressure control solenoid valve operation can be executed using Subaru Select Monitor. For the procedure, refer to "Compulsory Valve Operation Check Mode". <Ref. to EN(H6DO)(diag)-45, Compulsory Valve Operation Check Mode.> ***Connector & terminal*** ***(B134) No. 12 (+) — Chassis ground (–):***	Does the voltage change 0 — 10 V?	Go to step **2.**	The malfunction indicator light may light up, however, the circuit is returned to the normal status at the moment. In this case, repair poor contact in ECM connector.
2	**CHECK INPUT SIGNAL FOR ECM.** 1) Turn the ignition switch to ON. 2) Measure the voltage between ECM and chassis ground. ***Connector & terminal*** ***(B134) No. 12 (+) — Chassis ground (–):***	Is the voltage more than 10 V?	Go to step **4.**	Go to step **3.**
3	**CHECK POOR CONTACT.** Check poor contact in ECM connector.	Is there poor contact in ECM connector?	Repair poor contact in ECM connector.	Replace the ECM. <Ref. to FU(H6DO)-34, Engine Control Module (ECM).>
4	**CHECK HARNESS BETWEEN PRESSURE CONTROL SOLENOID VALVE AND ECM CONNECTOR.** 1) Turn the ignition switch to OFF. 2) Disconnect the connector from pressure control solenoid valve. 3) Turn the ignition switch to ON. 4) Measure the voltage between ECM and chassis ground. ***Connector & terminal*** ***(B134) No. 12 (+) — Chassis ground (–):***	Is the voltage more than 10 V?	Repair short circuit to battery in harness between ECM and pressure control solenoid valve connector. After repair, replace the ECM. <Ref. to FU(H6DO)-34, Engine Control Module (ECM).>	Go to step **5.**
5	**CHECK PRESSURE CONTROL SOLENOID VALVE.** 1) Turn the ignition switch to OFF. 2) Measure the resistance between pressure control solenoid valve terminals. ***Terminals*** ***No. 1 — No. 2:***	Is the resistance less than 1 Ω?	Replace the pressure control solenoid valve <Ref. to EC(H6DO)-12, Pressure Control Solenoid Valve.> and the ECM <Ref. to FU(H6DO)-34, Engine Control Module (ECM).>.	Go to step **6.**
6	**CHECK POOR CONTACT.** Check poor contact in ECM connector.	Is there poor contact in ECM connector?	Repair poor contact in ECM connector.	Replace the ECM. <Ref. to FU(H6DO)-34, Engine Control Module (ECM).>

DH:DTC P1443 VENT CONTROL SOLENOID VALVE FUNCTION PROBLEM

DTC DETECTING CONDITION:

- Detect as soon as malfunction occurs.
- GENERAL DESCRIPTION <Ref. to GD(H6DO)-191, DTC P1443 VENT CONTROL SOLENOID VALVE FUNCTION PROBLEM, Diagnostic Trouble Code (DTC) Detecting Criteria.>

TROUBLE SYMPTOM:

Improper fuel supply

CAUTION:

After repair or replacement of faulty parts, conduct Clear Memory Mode <Ref. to EN(H6DO)(diag)-44, OPERATION, Clear Memory Mode.> and Inspection Mode <Ref. to EN(H6DO)(diag)-35, PROCEDURE, Inspection Mode.>.

WIRING DIAGRAM:

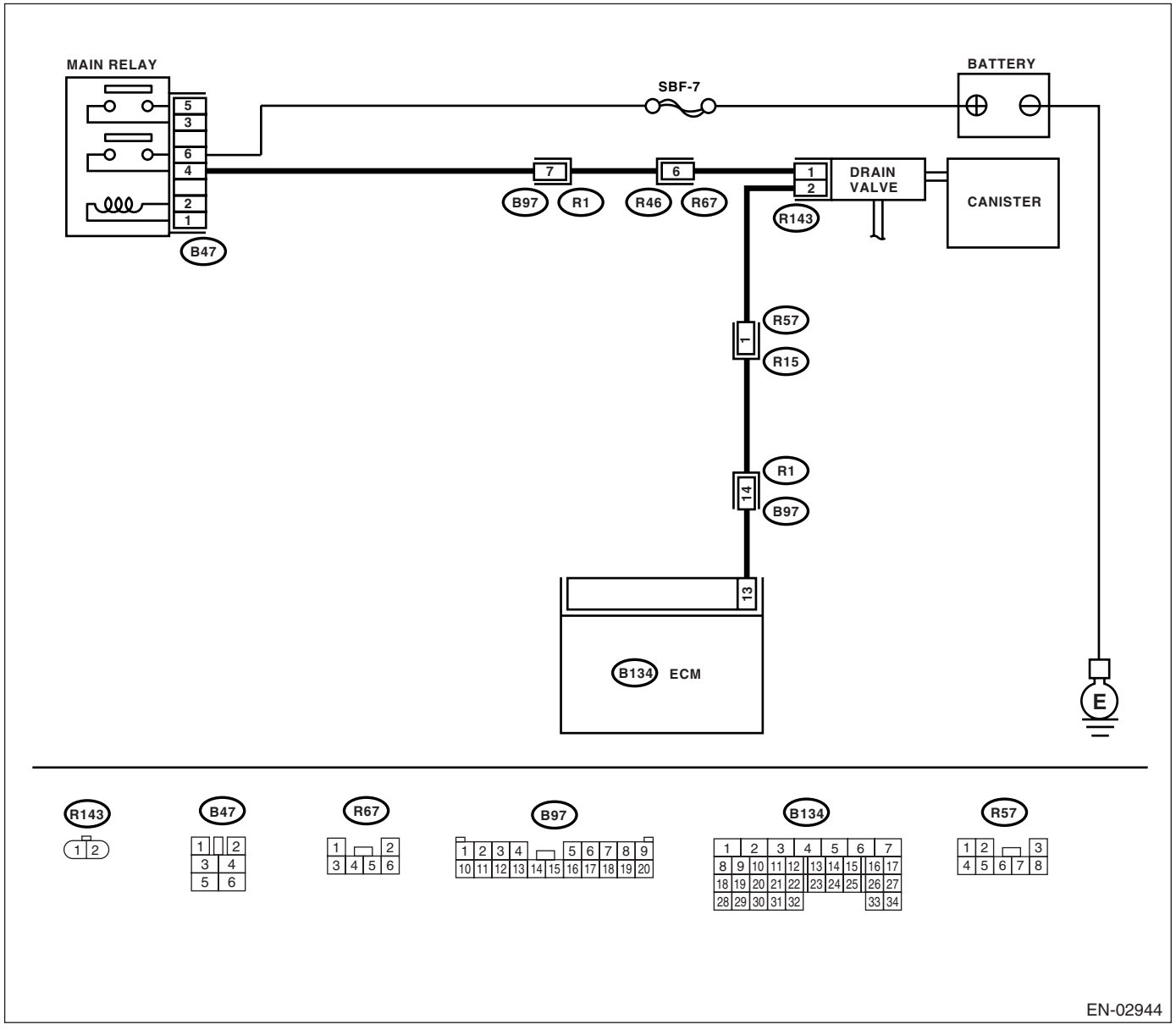

	Step	Check	Yes	No
1	**CHECK FOR ANY OTHER DTC ON DISPLAY.**	Is any other DTC displayed?	Inspect the relevant DTC using "List of Diagnostic Trouble Code (DTC)". <Ref. to EN(H6DO)(diag)-71, List of Diagnostic Trouble Code (DTC).>	Go to step **2.**
2	**CHECK DRAIN HOSE.** Check the drain hose for clogging.	Is there clogging in the drain hose?	Replace the drain hose.	Go to step **3.**
3	**CHECK DRAIN VALVE OPERATION.** 1) Turn the ignition switch to OFF. 2) Connect the test mode connector at the lower portion of instrument panel (on the driver's side). 3) Turn the ignition switch to ON. 4) Operate the drain valve. NOTE: Drain valve operation can also be executed using Subaru Select Monitor. For the procedure, refer to "Compulsory Valve Operation Check Mode". <Ref. to EN(H6DO)(diag)-45, Compulsory Valve Operation Check Mode.>	Does the drain valve operate?	Contact with SOA Service Center.	Replace the drain valve. <Ref. to EC(H6DO)-15, Drain Valve.>

DI: DTC P1446 FUEL TANK SENSOR CONTROL VALVE CIRCUIT LOW

DTC DETECTING CONDITION:

- Two consecutive driving cycles with fault
- GENERAL DESCRIPTION <Ref. to GD(H6DO)-193, DTC P1446 FUEL TANK SENSOR CONTROL VALVE CIRCUIT LOW, Diagnostic Trouble Code (DTC) Detecting Criteria.>

CAUTION:
After repair or replacement of faulty parts, conduct Clear Memory Mode <Ref. to EN(H6DO)(diag)-44, OPERATION, Clear Memory Mode.> and Inspection Mode <Ref. to EN(H6DO)(diag)-35, PROCEDURE, Inspection Mode.>.

WIRING DIAGRAM:

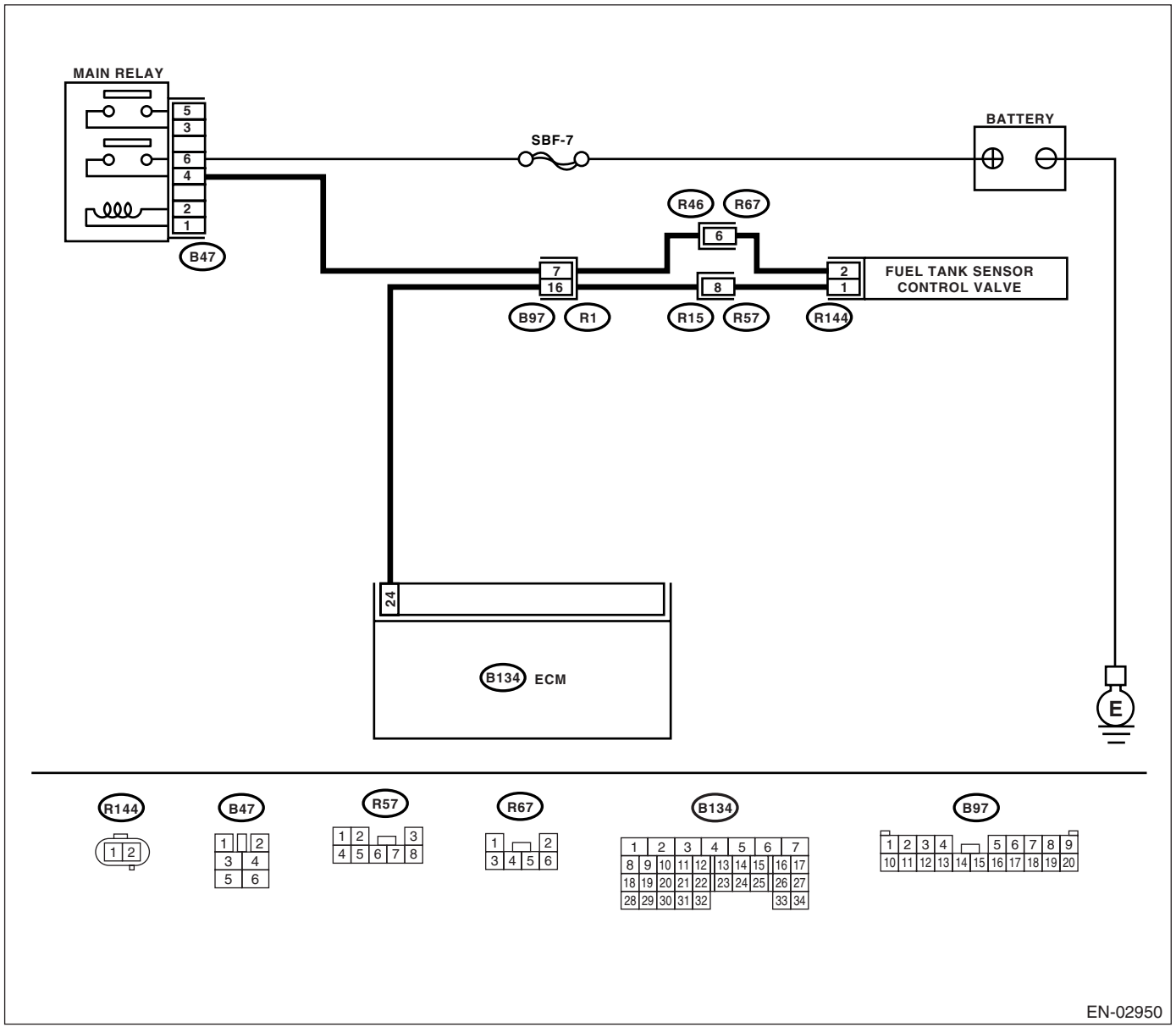

	Step	Check	Yes	No
1	**CHECK OUTPUT SIGNAL FROM ECM.** 1) Turn the ignition switch to ON. 2) Measure the voltage between ECM and chassis ground. ***Connector & terminal*** ***(B134) No. 24 (+) — Chassis ground (−):***	Is the voltage more than 10 V?	Go to step **2.**	Go to step **3.**
2	**CHECK POOR CONTACT.** Check poor contact in ECM connector.	Is there poor contact in ECM connector?	Repair poor contact in ECM connector.	The malfunction indicator light may light up, however, the circuit is returned to the normal status at the moment. (However, the possibility of poor contact still remains.) NOTE: In this case, repair the following: • Poor contact in fuel tank sensor control valve connector • Poor contact in ECM connector • Poor contact in coupling connector
3	**CHECK HARNESS BETWEEN FUEL TANK SENSOR CONTROL VALVE AND ECM CONNECTOR.** 1) Turn the ignition switch to OFF. 2) Disconnect the connectors from fuel tank sensor control valve and ECM. 3) Measure the resistance of harness between fuel tank sensor control valve connector and chassis ground. ***Connector & terminal*** ***(R144) No. 2 — Chassis ground:***	Is the resistance more than 1 MΩ?	Go to step **4.**	Repair short circuit to ground in harness between ECM and fuel tank sensor control valve connector.
4	**CHECK HARNESS BETWEEN FUEL TANK SENSOR CONTROL VALVE AND ECM CONNECTOR.** Measure the resistance of harness between ECM and fuel tank sensor control valve connector. ***Connector & terminal*** ***(B134) No. 24 — (R144) No. 1:***	Is the resistance less than 1 Ω?	Go to step **5.**	Repair harness and connector. NOTE: In this case, repair the following: • Open circuit in harness between ECM and fuel tank sensor control valve connector • Poor contact in coupling connector
5	**CHECK FUEL TANK SENSOR CONTROL VALVE.** Measure the resistance between fuel tank sensor control valve terminals. ***Terminals*** ***No. 1 — No. 2:***	Is the resistance 10 — 100 Ω?	Go to step **6.**	Replace the fuel tank sensor control valve. <Ref. to EC(H6DO)-15, Drain Valve.>

	Step	Check	Yes	No
6	**CHECK POWER SUPPLY TO FUEL TANK SENSOR CONTROL VALVE.** 1) Turn the ignition switch to ON. 2) Measure the voltage between fuel tank sensor control valve and chassis ground. ***Connector & terminal*** ***(R144) No. 2 (+) — Chassis ground (−):***	Is the voltage more than 10 V?	Go to step **7.**	Repair harness and connector. NOTE: In this case, repair the following: • Open circuit in harness between main relay and fuel tank sensor control valve • Poor contact in coupling connector • Poor contact in main relay connector
7	**CHECK POOR CONTACT.** Check poor contact in fuel tank sensor control valve connector.	Is there poor contact in fuel tank sensor control valve connector?	Repair poor contact in fuel tank sensor control valve connector.	Contact with SOA Service Center.

DJ:DTC P1447 FUEL TANK SENSOR CONTROL VALVE CIRCUIT HIGH

DTC DETECTING CONDITION:

- Two consecutive driving cycles with fault
- GENERAL DESCRIPTION <Ref. to GD(H6DO)-195, DTC P1447 FUEL TANK SENSOR CONTROL VALVE CIRCUIT HIGH, Diagnostic Trouble Code (DTC) Detecting Criteria.>

CAUTION:
After repair or replacement of faulty parts, conduct Clear Memory Mode <Ref. to EN(H6DO)(diag)-44, OPERATION, Clear Memory Mode.> and Inspection Mode <Ref. to EN(H6DO)(diag)-35, PROCEDURE, Inspection Mode.>.

WIRING DIAGRAM:

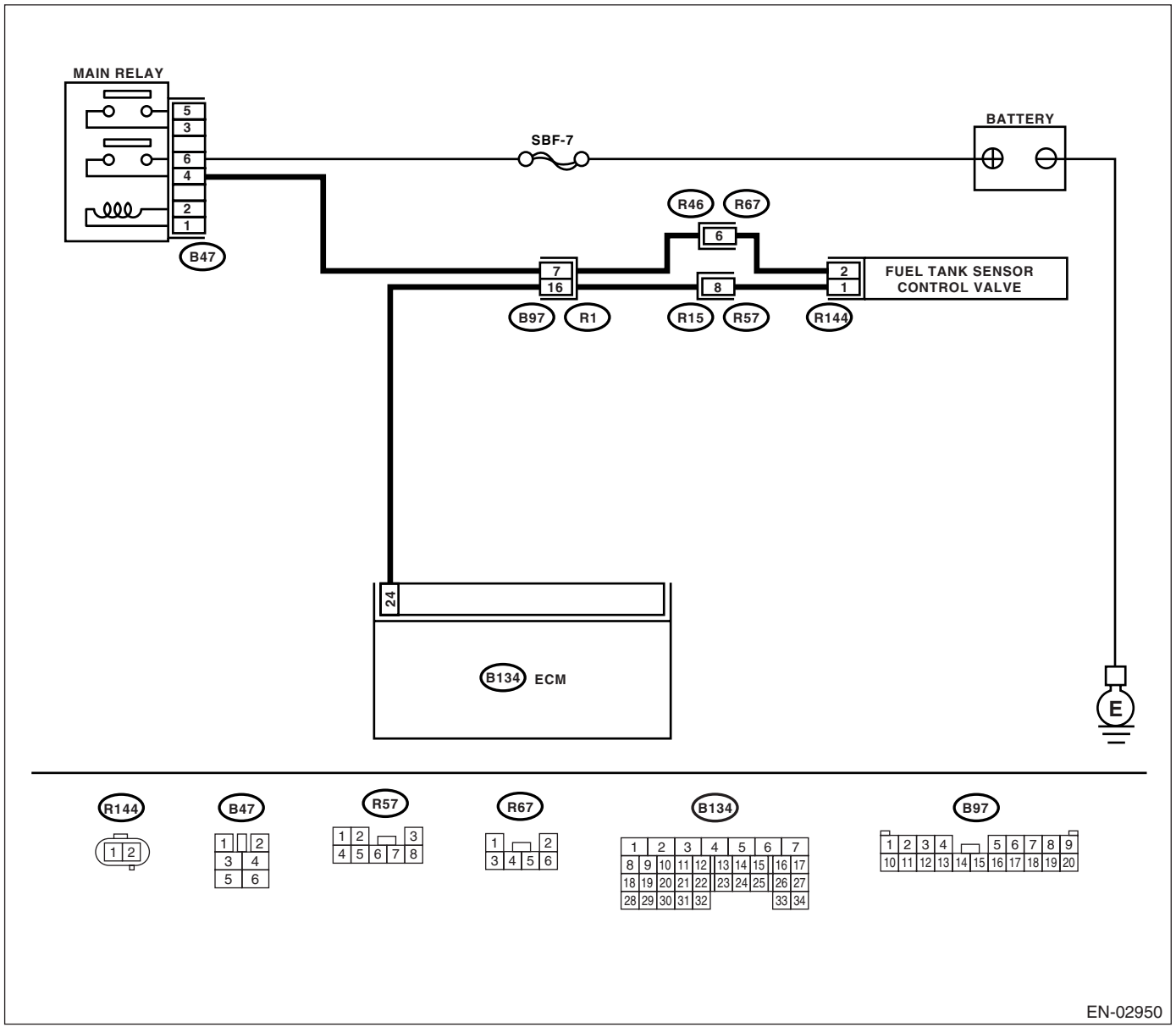

	Step	Check	Yes	No
1	**CHECK OUTPUT SIGNAL FROM ECM.** 1) Turn the ignition switch to ON. 2) Measure the voltage between ECM and chassis ground. ***Connector & terminal*** ***(B134) No. 24 (+) — Chassis ground (−):***	Is the voltage more than 10 V?	Go to step **3.**	Go to step **2.**
2	**CHECK POOR CONTACT.** Check poor contact in ECM connector.	Is there poor contact in ECM connector?	Repair poor contact in ECM connector.	Replace the ECM. <Ref. to FU(H6DO)-34, Engine Control Module (ECM).>
3	**CHECK HARNESS BETWEEN FUEL TANK SENSOR CONTROL VALVE AND ECM CONNECTOR.** 1) Turn the ignition switch to OFF. 2) Disconnect the connector from fuel tank sensor control valve. 3) Turn the ignition switch to ON. 4) Measure the voltage between ECM and chassis ground. ***Connector & terminal*** ***(B134) No. 24 (+) — Chassis ground (−):***	Is the voltage more than 10 V?	Repair short circuit to battery in harness between ECM and fuel tank sensor control valve connector. After repair, replace the ECM. <Ref. to FU(H6DO)-34, Engine Control Module (ECM).>	Go to step **4.**
4	**CHECK FUEL TANK SENSOR CONTROL VALVE.** 1) Turn the ignition switch to OFF. 2) Measure the resistance between fuel tank sensor control valve terminals. ***Terminals*** ***No. 1 — No. 2:***	Is the resistance less than 1 Ω?	Replace the fuel tank sensor control valve <Ref. to EC(H6DO)-11, Fuel Tank Sensor Control Valve.> and the ECM <Ref. to FU(H6DO)-34, Engine Control Module (ECM).>.	Go to step **5.**
5	**CHECK POOR CONTACT.** Check poor contact in ECM connector.	Is there poor contact in ECM connector?	Repair poor contact in ECM connector.	Replace the ECM. <Ref. to FU(H6DO)-34, Engine Control Module (ECM).>

DK:DTC P1518 STARTER SWITCH CIRCUIT LOW INPUT

DTC DETECTING CONDITION:

- Detect as soon as malfunction occurs.
- GENERAL DESCRIPTION <Ref. to GD(H6DO)-197, DTC P1518 STARTER SWITCH CIRCUIT LOW INPUT, Diagnostic Trouble Code (DTC) Detecting Criteria.>

TROUBLE SYMPTOM:

Failure of engine to start

CAUTION:

After repair or replacement of faulty parts, conduct Clear Memory Mode <Ref. to EN(H6DO)(diag)-44, OPERATION, Clear Memory Mode.> and Inspection Mode <Ref. to EN(H6DO)(diag)-35, PROCEDURE, Inspection Mode.>.

WIRING DIAGRAM:

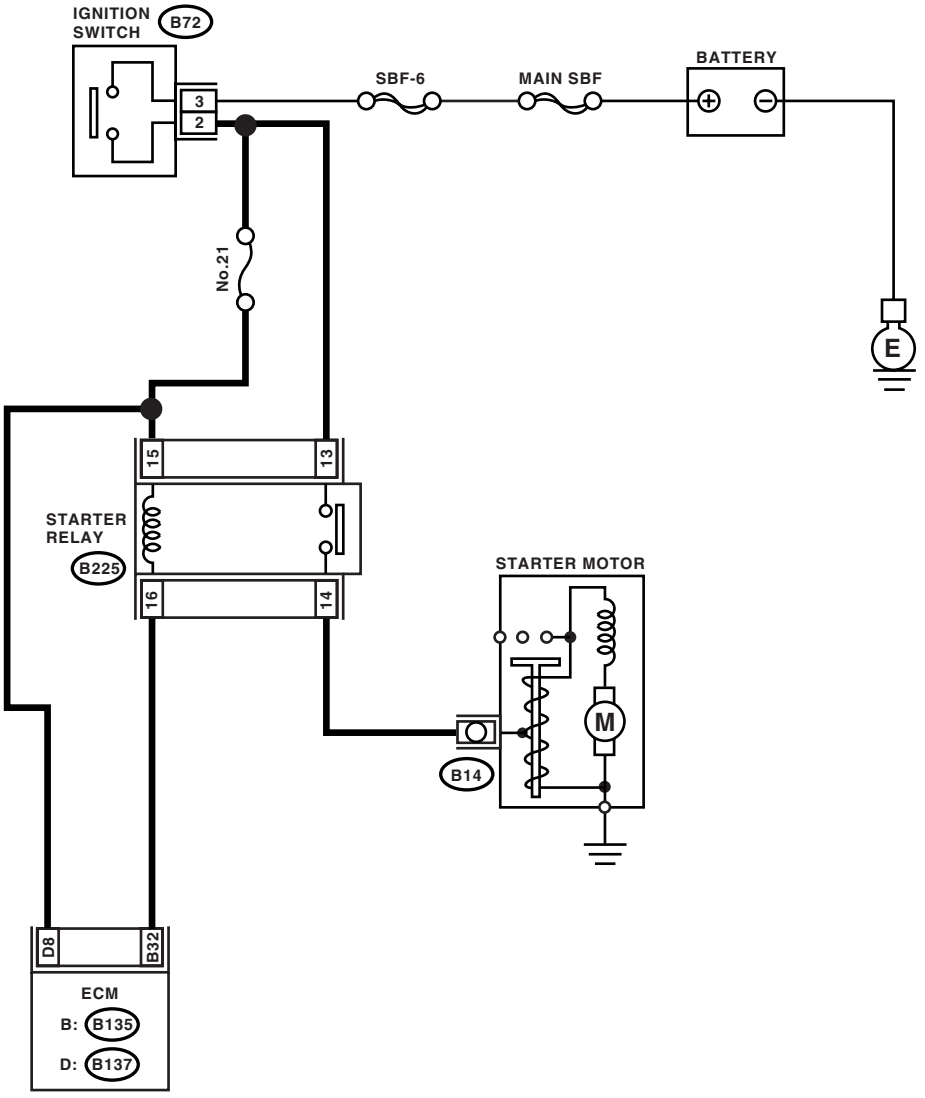

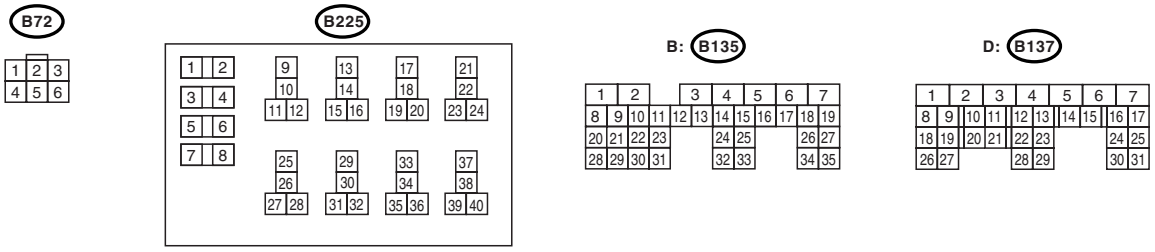

EN-02964

	Step	Check	Yes	No
1	**CHECK OPERATION OF STARTER MOTOR.** Set the inhibitor switch to “P” or “N” range.	Does the starter motor operate when ignition switch to START?	Repair the harness and connector. NOTE: In this case repair the following: • Open or ground short circuit in harness between ECM and starter motor connector. • Poor contact in ECM connector	Check starter motor circuit. <Ref. to EN(H6DO)(diag)-57, STARTER MOTOR CIRCUIT, Diagnostics for Engine Starting Failure.>

DL:DTC P1560 BACK-UP VOLTAGE CIRCUIT MALFUNCTION

DTC DETECTING CONDITION:

- Detect as soon as malfunction occurs.
- GENERAL DESCRIPTION <Ref. to GD(H6DO)-198, DTC P1560 BACK-UP VOLTAGE CIRCUIT MALFUNCTION, Diagnostic Trouble Code (DTC) Detecting Criteria.>

CAUTION:
After repair or replacement of faulty parts, conduct Clear Memory Mode <Ref. to EN(H6DO)(diag)-44, OPERATION, Clear Memory Mode.> and Inspection Mode <Ref. to EN(H6DO)(diag)-35, PROCEDURE, Inspection Mode.>.

WIRING DIAGRAM:

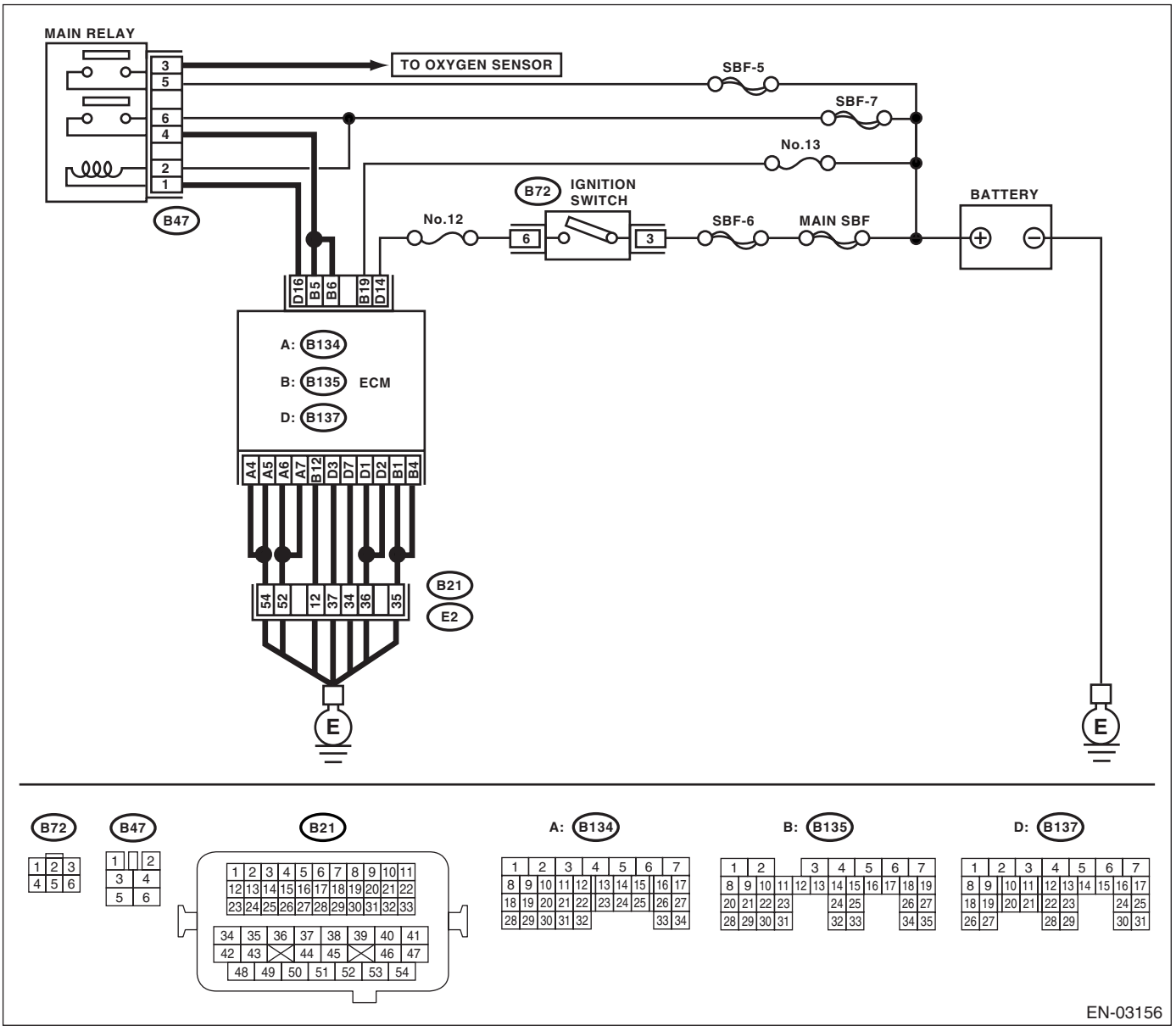

	Step	Check	Yes	No
1	**CHECK INPUT SIGNAL FROM ECM.** 1) Turn the ignition switch to OFF. 2) Measure the voltage between ECM and chassis ground. ***Connector & terminal*** ***(B135) No. 19 (+) — Chassis ground (−):***	Is the voltage more than 10 V?	Repair the poor contact in ECM connector.	Go to step **2.**
2	**CHECK HARNESS BETWEEN ECM AND MAIN FUSE BOX CONNECTOR.** 1) Disconnect the connector from ECM. 2) Measure the resistance of harness between ECM and chassis ground. ***Connector & terminal*** ***(B135) No. 19 — Chassis ground:***	Is the resistance less than 10 Ω?	Repair the ground short circuit in harness between ECM connector and battery terminal.	Go to step **3.**
3	**CHECK FUSE No. 13.**	Is the fuse blown out?	Replace the fuse.	Repair the harness and connector. NOTE: In this case repair the following: • Open circuit in harness between ECM and battery • Poor contact in ECM connector • Poor contact in battery terminal

DM:DTC P2088 OCV SOLENOID VALVE SIGNAL A CIRCUIT OPEN (BANK 1)

DTC DETECTING CONDITION:

- Detect as soon as malfunction occurs.
- GENERAL DESCRIPTION <Ref. to GD(H6DO)-200, DTC P2088 OCV SOLENOID VALVE SIGNAL A CIRCUIT OPEN (BANK 1), Diagnostic Trouble Code (DTC) Detecting Criteria.>

TROUBLE SYMPTOM:

Erroneous idling

CAUTION:

After repair or replacement of faulty parts, conduct Clear Memory Mode <Ref. to EN(H6DO)(diag)-44, OPERATION, Clear Memory Mode.> and Inspection Mode. <Ref. to EN(H6DO)(diag)-35, PROCEDURE, Inspection Mode.>

WIRING DIAGRAM:

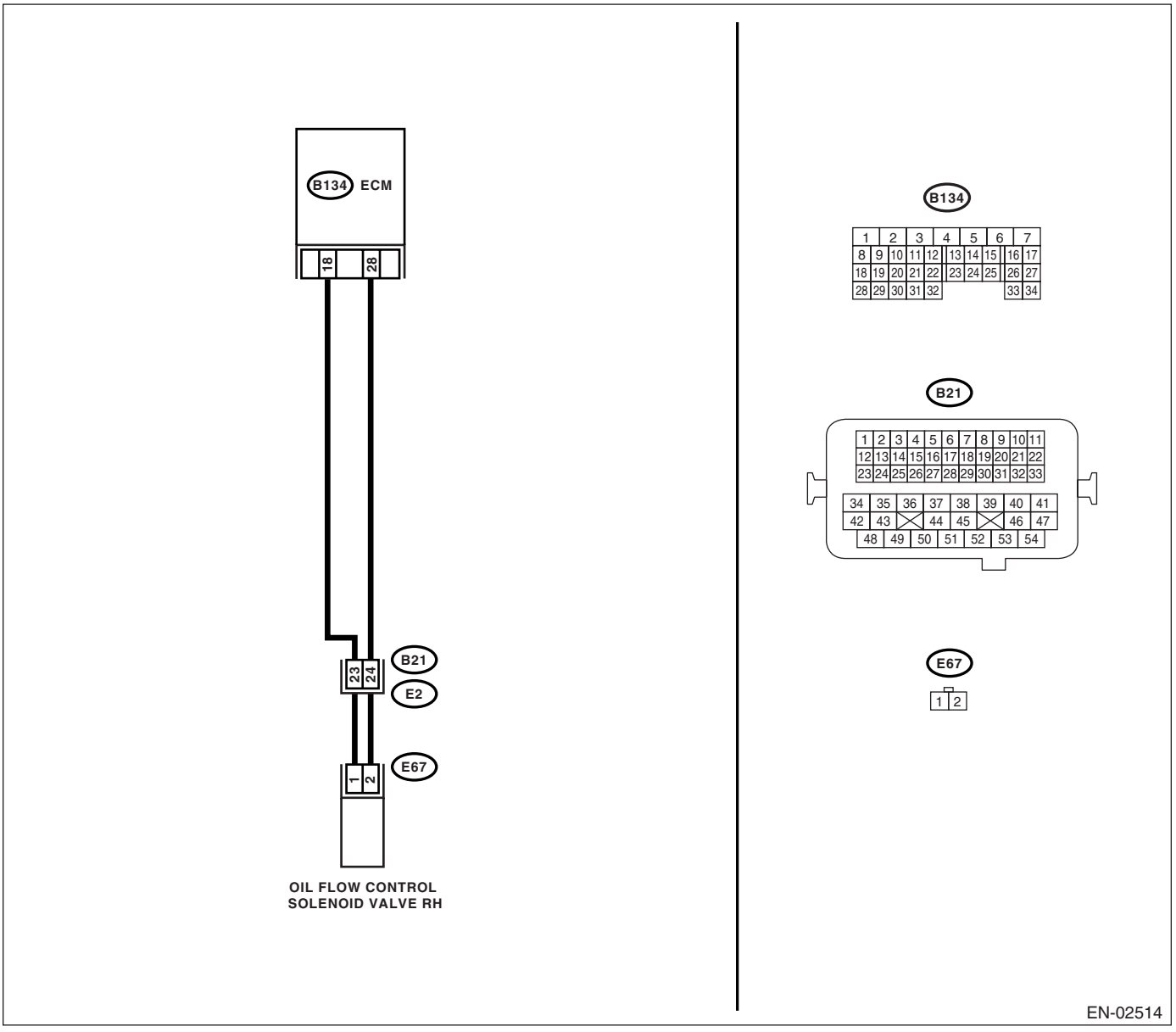

	Step	Check	Yes	No
1	**CHECK HARNESS BETWEEN ECM AND OIL FLOW CONTROL SOLENOID VALVE.** 1) Turn the ignition switch to OFF. 2) Disconnect the connectors from ECM and oil flow control solenoid valve. 3) Measure the resistance between ECM and oil flow control solenoid valve. ***Connector & terminal*** ***(B134) No. 18 — (E67) No. 1:*** ***(B134) No. 28 — (E67) No. 2:***	Is the resistance less than 1 Ω?	Go to step **2.**	Repair the open circuit in harness between ECM and oil flow control solenoid valve connector. NOTE: In this case repair the following: • Open circuit in harness between ECM and oil flow control solenoid valve connector • Poor contact in coupling connector
2	**CHECK OIL FLOW CONTROL SOLENOID VALVE.** 1) Remove the oil flow control solenoid valve connector. 2) Measure the resistance between oil flow control solenoid valve terminals. ***Terminals*** ***No. 1 — No. 2:***	Is the resistance 6 — 12 Ω?	Repair the poor contact in ECM and oil flow control solenoid valve.	Replace the oil flow control solenoid valve. <Ref. to ME(H6DO)-76, Oil Flow Control Solenoid Valve.>

DN:DTC P2089 OCV SOLENOID VALVE SIGNAL A CIRCUIT SHORT (BANK 1)

DTC DETECTING CONDITION:

- Detect as soon as malfunction occurs.
- GENERAL DESCRIPTION <Ref. to GD(H6DO)-202, DTC P2089 OCV SOLENOID VALVE SIGNAL A CIRCUIT SHORT (BANK 1), Diagnostic Trouble Code (DTC) Detecting Criteria.>

TROUBLE SYMPTOM:

Erroneous idling

CAUTION:

After repair or replacement of faulty parts, conduct Clear Memory Mode <Ref. to EN(H6DO)(diag)-44, OPERATION, Clear Memory Mode.> and Inspection Mode. <Ref. to EN(H6DO)(diag)-35, PROCEDURE, Inspection Mode.>

WIRING DIAGRAM:

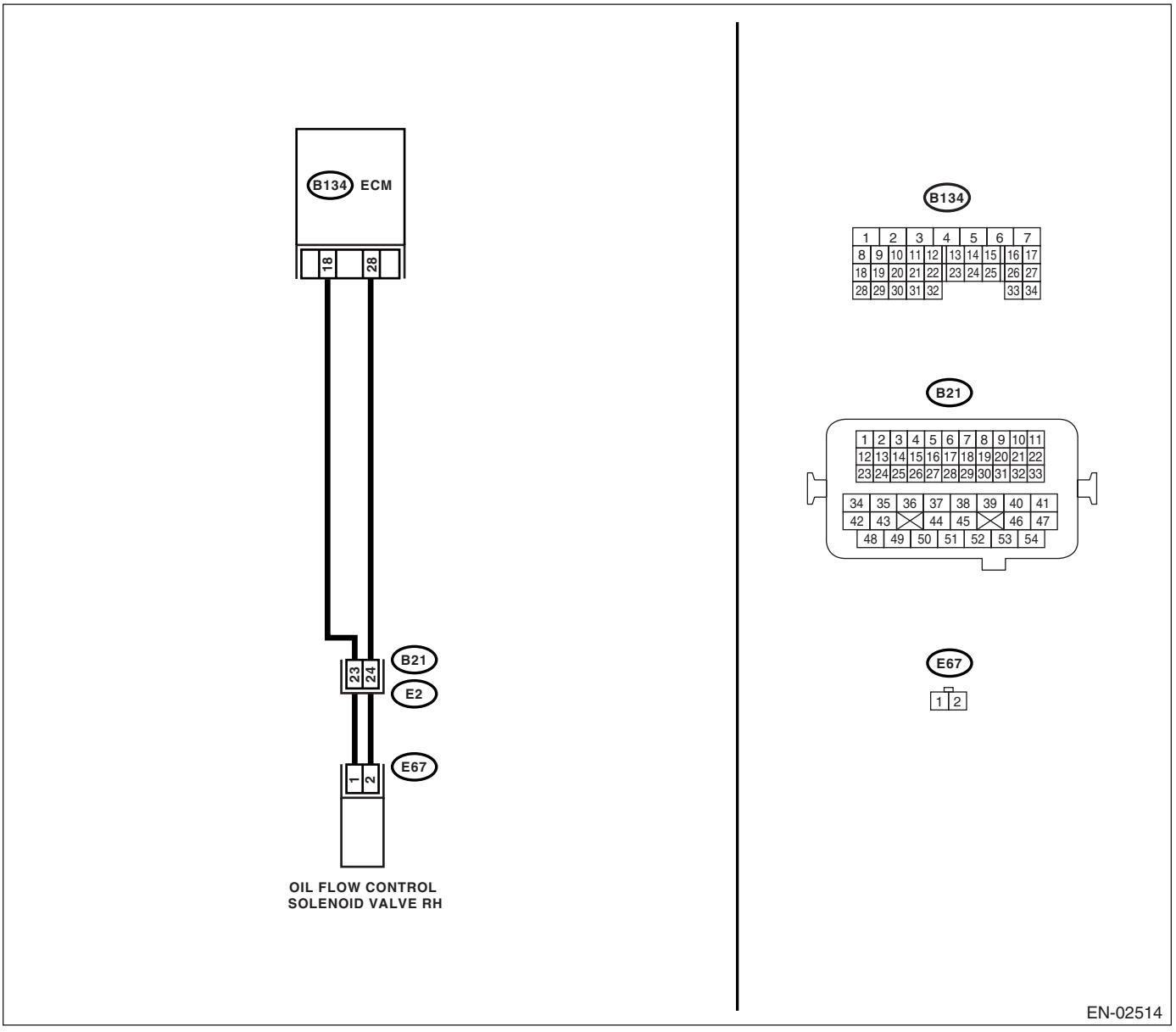

	Step	Check	Yes	No
1	**CHECK HARNESS BETWEEN ECM AND OIL FLOW CONTROL SOLENOID VALVE.** 1) Turn the ignition switch to OFF. 2) Disconnect the connectors from ECM and oil flow control solenoid valve. 3) Measure the resistance between oil flow control solenoid valve and engine ground. ***Connector & terminal*** ***(E67) No. 1 — Engine ground:*** ***(E67) No. 2 — Engine ground:***	Is the resistance more than 1 MΩ?	Go to step **2.**	Repair the short circuit between ECM and oil flow control solenoid valve connector.
2	**CHECK OIL FLOW CONTROL SOLENOID VALVE.** 1) Remove the oil flow control solenoid valve connector. 2) Measure the resistance between oil flow control solenoid valve terminals. ***Terminals*** ***No. 1 — No. 2:***	Is the resistance 6 — 12 Ω?	Repair the poor contact in ECM and oil flow control solenoid valve.	Replace the oil flow control solenoid valve. <Ref. to ME(H6DO)-76, Oil Flow Control Solenoid Valve.>

DO:DTC P2092 OCV SOLENOID VALVE SIGNAL A CIRCUIT OPEN (BANK 2)

DTC DETECTING CONDITION:

- Detect as soon as malfunction occurs.
- GENERAL DESCRIPTION <Ref. to GD(H6DO)-203, DTC P2092 OCV SOLENOID VALVE SIGNAL A CIRCUIT OPEN (BANK 2), Diagnostic Trouble Code (DTC) Detecting Criteria.>

TROUBLE SYMPTOM:

Erroneous idling

CAUTION:

After repair or replacement of faulty parts, conduct Clear Memory Mode <Ref. to EN(H6DO)(diag)-44, OPERATION, Clear Memory Mode.> and Inspection Mode. <Ref. to EN(H6DO)(diag)-35, PROCEDURE, Inspection Mode.>

WIRING DIAGRAM:

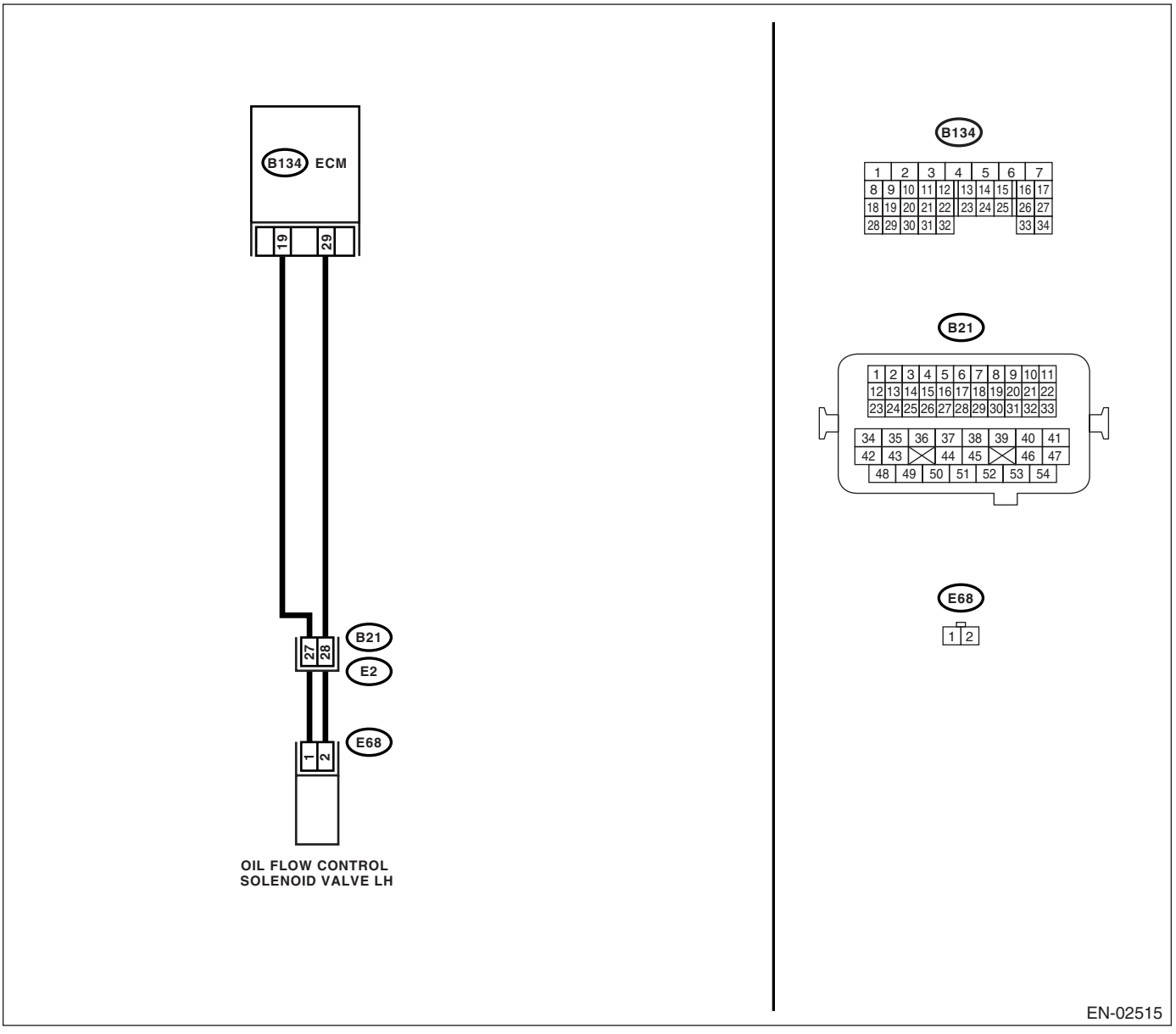

	Step	Check	Yes	No
1	**CHECK HARNESS BETWEEN ECM AND OIL FLOW CONTROL SOLENOID VALVE.** 1) Turn the ignition switch to OFF. 2) Disconnect the connectors from ECM and oil flow control solenoid valve. 3) Measure the resistance between ECM and oil flow control solenoid valve. ***Connector & terminal*** ***(B134) No. 19 — (E68) No. 1:*** ***(B134) No. 29 — (E68) No. 2:***	Is the resistance less than 1 Ω?	Go to step **2.**	Repair the open circuit in harness between ECM and oil flow control solenoid valve connector. NOTE: In this case repair the following: • Open circuit in harness between ECM and oil flow control solenoid valve connector • Poor contact in coupling connector
2	**CHECK OIL FLOW CONTROL SOLENOID VALVE.** 1) Remove the oil flow control solenoid valve connector. 2) Measure the resistance between oil flow control solenoid valve terminals. ***Terminals*** ***No. 1 — No. 2:***	Is the resistance 6 — 12 Ω?	Repair the poor contact in ECM and oil flow control solenoid valve.	Replace the oil flow control solenoid valve. <Ref. to ME(H6DO)-76, Oil Flow Control Solenoid Valve.>

DP:DTC P2093 OCV SOLENOID VALVE SIGNAL A CIRCUIT SHORT (BANK 2)

DTC DETECTING CONDITION:

- Detect as soon as malfunction occurs.
- GENERAL DESCRIPTION <Ref. to GD(H6DO)-203, DTC P2093 OCV SOLENOID VALVE SIGNAL A CIRCUIT SHORT (BANK 2), Diagnostic Trouble Code (DTC) Detecting Criteria.>

TROUBLE SYMPTOM:

Erroneous idling

CAUTION:

After repair or replacement of faulty parts, conduct Clear Memory Mode <Ref. to EN(H6DO)(diag)-44, OPERATION, Clear Memory Mode.> and Inspection Mode. <Ref. to EN(H6DO)(diag)-35, PROCEDURE, Inspection Mode.>

WIRING DIAGRAM:

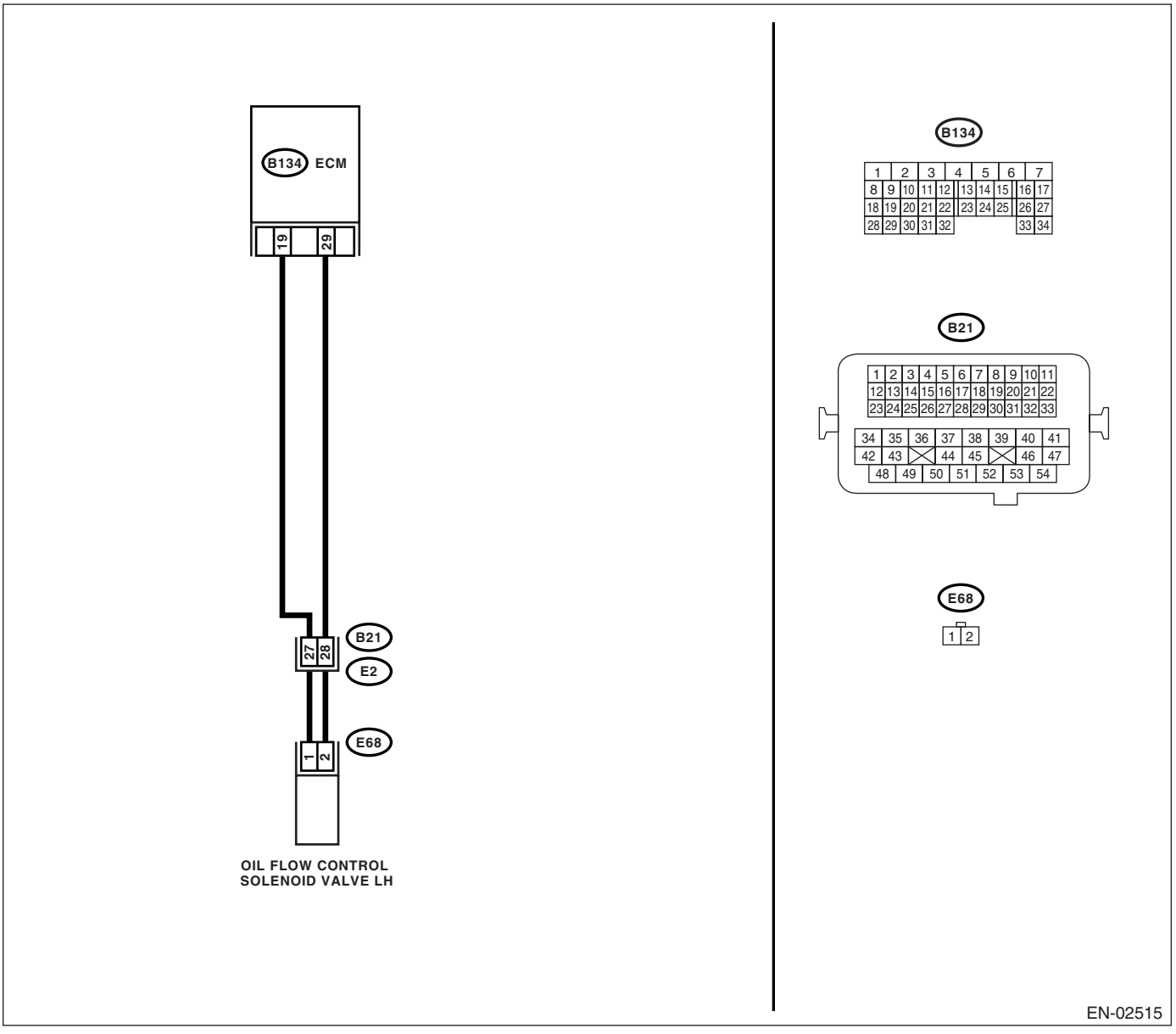

	Step	Check	Yes	No
1	**CHECK HARNESS BETWEEN ECM AND OIL FLOW CONTROL SOLENOID VALVE.** 1) Turn the ignition switch to OFF. 2) Disconnect the connectors from ECM and oil flow control solenoid valve. 3) Measure the resistance between oil flow control solenoid valve and engine ground. ***Connector & terminal*** ***(E68) No. 1 — Engine ground:*** ***(E68) No. 2 — Engine ground:***	Is the resistance more than 1 MΩ?	Go to step **2.**	Repair the short circuit between ECM and oil flow control solenoid valve connector.
2	**CHECK OIL FLOW CONTROL SOLENOID VALVE.** 1) Remove the oil flow control solenoid valve connector. 2) Measure the resistance between oil flow control solenoid valve terminals. ***Terminals*** ***No. 1 — No. 2:***	Is the resistance 6 — 12 Ω?	Repair the poor contact in ECM and oil flow control solenoid valve.	Replace the oil flow control solenoid valve. <Ref. to ME(H6DO)-76, Oil Flow Control Solenoid Valve.>

DQ:DTC P2096 POST CATALYST FUEL TRIM SYSTEM TOO LEAN BANK 1

DTC DETECTING CONDITION:

- Two consecutive driving cycles with fault
- GENERAL DESCRIPTION <Ref. to GD(H6DO)-204, DTC P2096 POST CATALYST FUEL TRIM SYSTEM TOO LEAN BANK 1, Diagnostic Trouble Code (DTC) Detecting Criteria.>

CAUTION:
After repair or replacement of faulty parts, conduct Clear Memory Mode <Ref. to EN(H6DO)(diag)-44, OPERATION, Clear Memory Mode.> and Inspection Mode <Ref. to EN(H6DO)(diag)-35, PROCEDURE, Inspection Mode.>.

WIRING DIAGRAM:

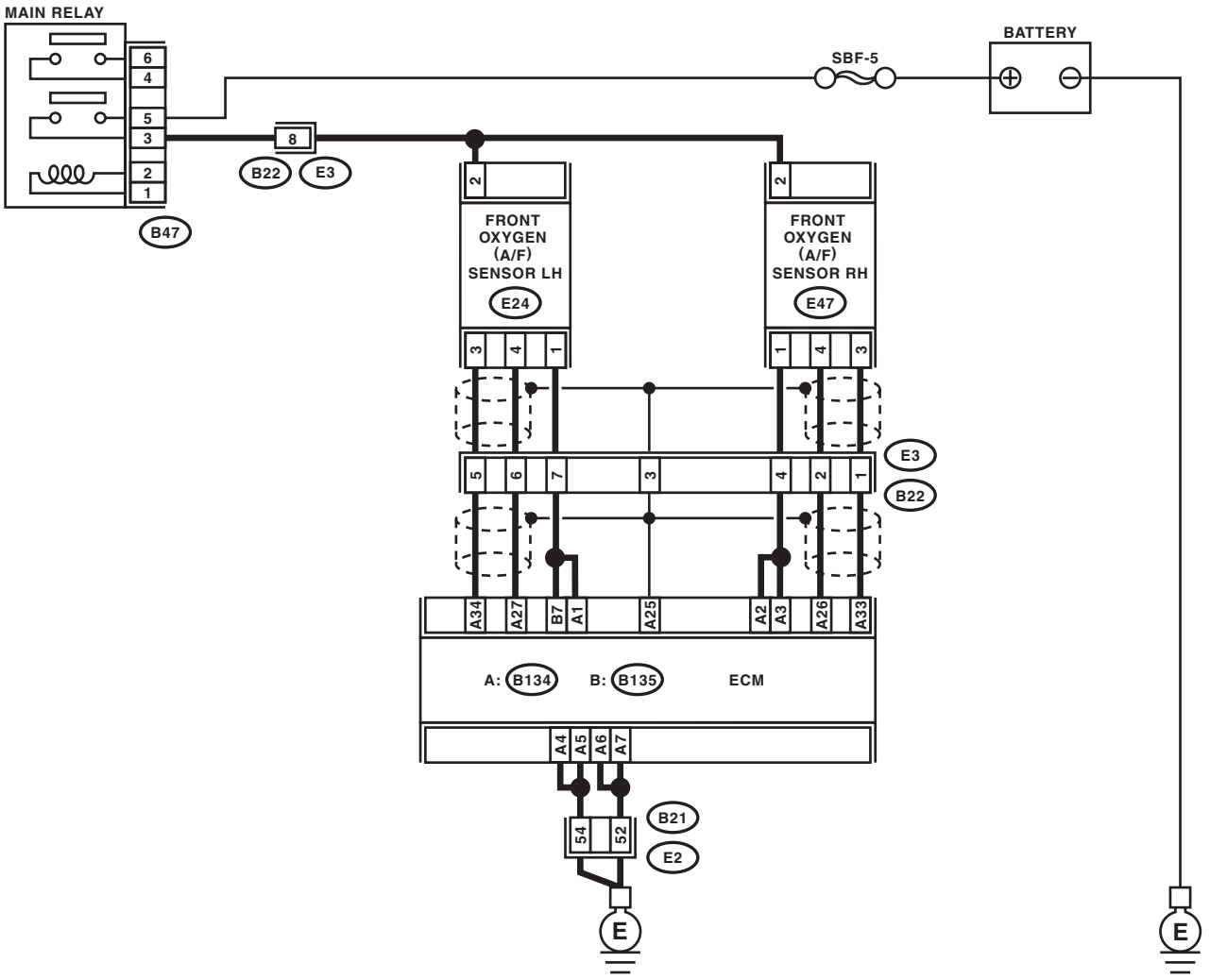

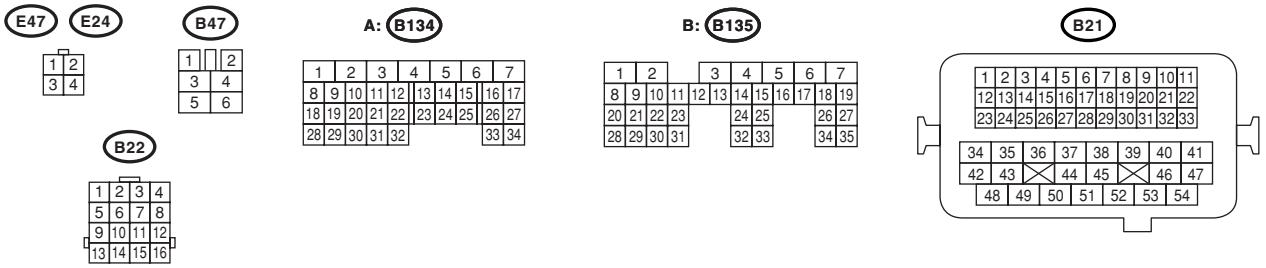

EN-03159

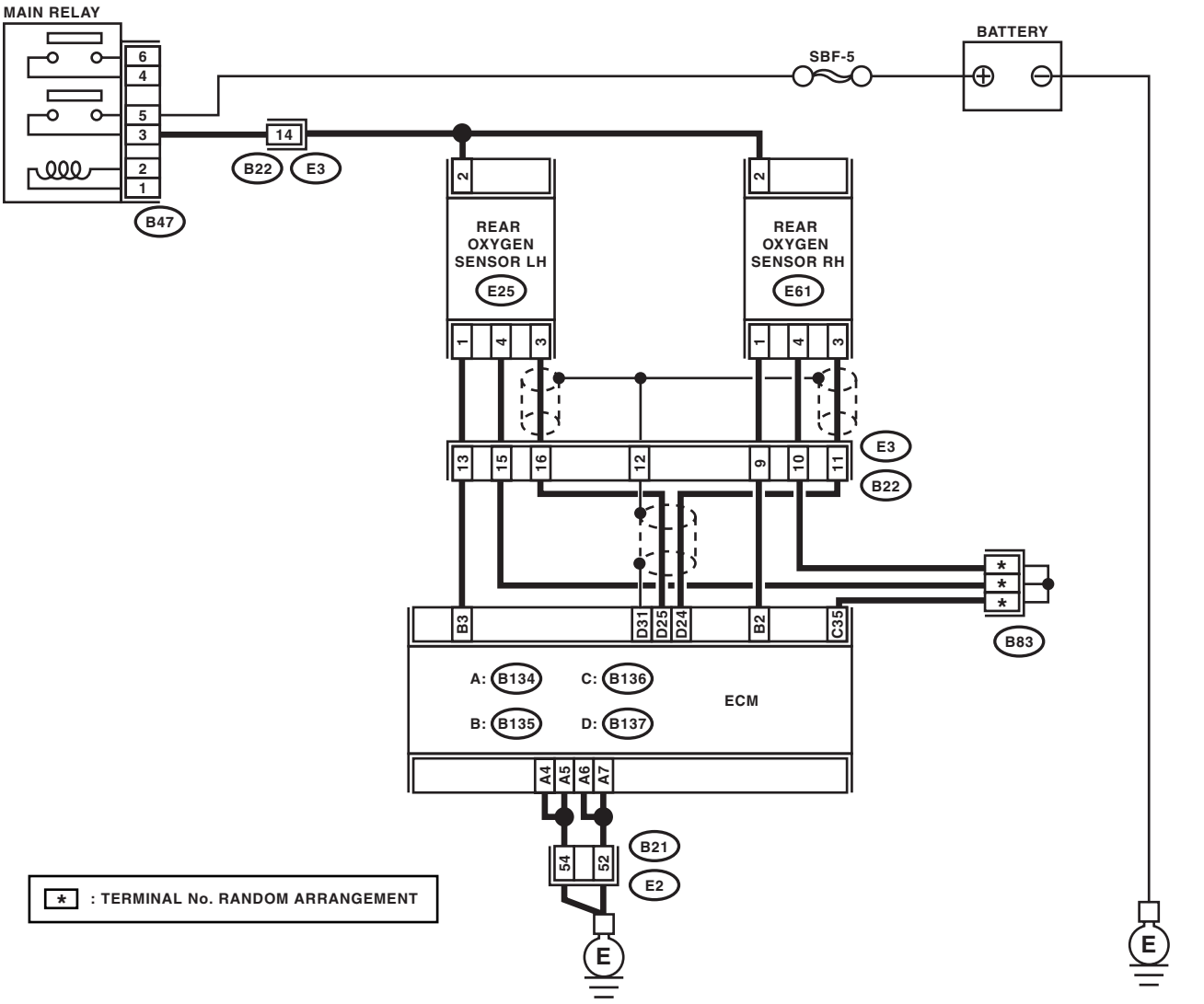
MAIN RELAY
BATTERY
SBF-5
B47
B22
E3
REAR OXYGEN SENSOR LH
E25
REAR OXYGEN SENSOR RH
E61
B83
A: B134
C: B136
B: B135
D: B137
ECM
B21
E2
* : TERMINAL No. RANDOM ARRANGEMENT

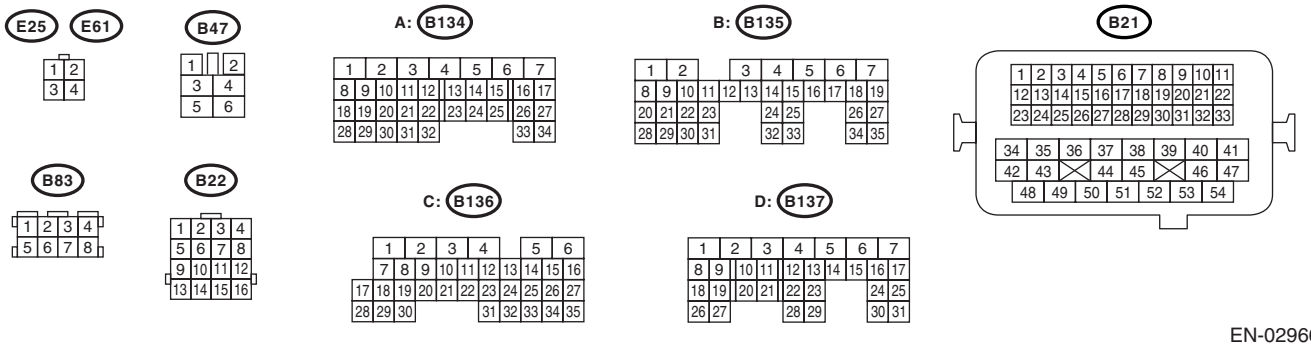
E25
E61
B47
A: B134
B: B135
B21
B83
B22
C: B136
D: B137

EN-02966

	Step	Check	Yes	No
1	**CHECK FOR ANY OTHER DTC ON DISPLAY.**	Is any other DTC displayed?	Inspect the relevant DTC using "List of Diagnostic Trouble Code (DTC)". <Ref. to EN(H6DO)(diag)-71, List of Diagnostic Trouble Code (DTC).>	Go to step **2.**
2	**CHECK FRONT OXYGEN (A/F) SENSOR DATA.** 1) Start engine. 2) While observing the Subaru Select Monitor or general scan tool screen, warm-up the engine until coolant temperature is above 75°C (167°F). If the engine is already warmed-up, operate at idle speed for at least 1 minute. 3) Read data of front oxygen (A/F) sensor signal using Subaru Select Monitor or general scan tool. NOTE: • Subaru Select Monitor For detailed operation procedure, refer to the "READ CURRENT DATA SHOWN ON DISPLAY FOR ENGINE". <Ref. to EN(H6DO)(diag)-26, Subaru Select Monitor.> • General scan tool For detailed operation procedure, refer to the general scan tool instruction manual.	Is the measured value within 0.86 — 1.15 at idle?	Go to step **3.**	Go to step **4.**
3	**CHECK REAR OXYGEN SENSOR SIGNAL.** 1) Race engine at speeds from idling to 5,000 rpm for a total of 5 cycles. NOTE: To increase engine speed to 5,000 rpm, slowly depress accelerator pedal, taking approximately 5 seconds, and quickly release accelerator pedal to decrease engine speed. 2) Operate the LED operation mode for engine. NOTE: • Subaru Select Monitor For detailed operation procedure, refer to the "LED OPERATION MODE FOR ENGINE". <Ref. to EN(H6DO)(diag)-26, Subaru Select Monitor.>	Does the LED of {Rear O2 Rich Signal} blink?	Check front oxygen (A/F) sensor circuit.	Check rear oxygen sensor circuit. <Ref. to FU(H6DO)-32, Rear Oxygen Sensor.>
4	**CHECK EXHAUST SYSTEM.** Check exhaust system parts. NOTE: Check the following items. • Loose installation of portions • Damage (crack, hole etc.) of parts • Looseness of front oxygen (A/F) sensor • Looseness and ill fitting of parts between front oxygen (A/F) sensor and rear oxygen sensor	Is there any fault in exhaust system?	Repair or replace faulty parts.	Go to step **5.**
5	**CHECK AIR INTAKE SYSTEM.**	Are there holes, loose bolts or disconnection of hose on air intake system?	Repair the air intake system.	Go to step **6.**

	Step	Check	Yes	No
6	**CHECK FUEL PRESSURE.** **Warning:** **• Place "NO FIRE" signs near the working area.** **• Be careful not to spill fuel on the floor.** Measure the fuel pressure while disconnecting pressure regulator vacuum hose from intake manifold. <Ref. to ME(H6DO)-27, INSPECTION, Fuel Pressure.> **Warning:** **Before removing the fuel pressure gauge, release fuel pressure.**	Is the measured value 333 — 363 kPa (3.4 — 3.7 kg/cm^2, 48 — 53 psi)?	Go to step **7.**	Repair the following items. Fuel pressure too high: • Clogged fuel line or bent hose Fuel pressure too low: • Improper fuel pump discharge • Clogged fuel supply line
7	**CHECK FUEL PRESSURE.** After connecting the pressure regulator vacuum hose, measure fuel pressure. <Ref. to ME(H6DO)-27, INSPECTION, Fuel Pressure.> **Warning:** **Before removing the fuel pressure gauge, release fuel pressure.** NOTE: If out of specification as measured at this step, check or replace the pressure regulator and pressure regulator vacuum hose.	Is the measured value 279 — 309 kPa (2.85 — 3.15 kg/cm^2, 40 — 45 psi)?	Go to step **8.**	Repair the following items. Fuel pressure too high: • Faulty pressure regulator • Clogged fuel line or bent hose Fuel pressure too low: • Faulty pressure regulator • Improper fuel pump discharge • Clogged fuel supply line
8	**CHECK ENGINE COOLANT TEMPERATURE SENSOR.** 1) Start the engine and warm-up completely. 2) Read the data of engine coolant temperature sensor signal using Subaru Select Monitor or general scan tool. NOTE: • Subaru Select Monitor For detailed operation procedure, refer to the "READ CURRENT DATA FOR ENGINE". <Ref. to EN(H6DO)(diag)-26, Subaru Select Monitor.> • General scan tool For detailed operation procedures, refer to the general scan tool instruction manual.	Is the temperature more than 60°C (140°F)?	Go to step **9.**	Replace the engine coolant temperature sensor. <Ref. to FU(H6DO)-19, Engine Coolant Temperature Sensor.>

	Step	Check	Yes	No
9	**CHECK MASS AIR FLOW AND INTAKE AIR TEMPERATURE.** 1) Start the engine and warm-up engine until coolant temperature is greater than 60°C (140°F). 2) Place the shift lever in neutral position. 3) Turn the A/C switch to OFF. 4) Turn all accessory switches to OFF. 5) Read the data of mass air flow and intake air temperature sensor signal using Subaru Select Monitor or general scan tool. NOTE: • Subaru Select Monitor For detailed operation procedure, refer to the "READ CURRENT DATA FOR ENGINE". <Ref. to EN(H6DO)(diag)-26, Subaru Select Monitor.> • General scan tool For detailed operation procedure, refer to the general scan tool instruction manual.	Is the measured value 3.1 — 4.3 g/s (0.41 — 0.57 lb/m)?	Go to step **10.**	Replace the mass air flow and intake air temperature sensor. <Ref. to FU(H6DO)-25, Mass Air Flow and Intake Air Temperature Sensor.>
10	**CHECK MASS AIR FLOW AND INTAKE AIR TEMPERATURE SENSOR.** 1) Start the engine and warm-up engine until coolant temperature is greater than 60°C (140°F). 2) Place the shift lever in neutral position. 3) Turn the A/C switch to OFF. 4) Turn all accessory switches to OFF. 5) Open the front hood. 6) Measure the ambient temperature. 7) Read the data of mass air flow and intake air temperature sensor signal using Subaru Select Monitor or general scan tool. NOTE: • Subaru Select Monitor For detailed operation procedure, refer to the "READ CURRENT DATA FOR ENGINE". <Ref. to EN(H6DO)(diag)-26, Subaru Select Monitor.> • General scan tool For detailed operation procedure, refer to the general scan tool instruction manual.	Subtract ambient temperature from intake air temperature. Is the obtained value −10°C — 50°C (−18°F — 90°F)?	Go to step **11.**	Check the mass air flow and intake air temperature sensor. <Ref. to FU(H6DO)-25, Mass Air Flow and Intake Air Temperature Sensor.>
11	**CHECK HARNESS BETWEEN ECM AND FRONT OXYGEN (A/F) SENSOR CONNECTOR.** 1) Turn the ignition switch to OFF. 2) Disconnect the connectors from ECM and front oxygen (A/F) sensor connector. 3) Measure the resistance of harness between ECM and front oxygen (A/F) sensor connector. ***Connector & terminal*** ***(B134) No. 26 — Chassis ground:*** ***(B134) No. 33 — Chassis ground:***	Is the resistance more than 1 MΩ?	Go to step **12.**	Repair ground short circuit in harness between ECM and front oxygen (A/F) sensor connector.

	Step	Check	Yes	No
12	**CHECK HARNESS BETWEEN ECM AND FRONT OXYGEN (A/F) SENSOR CONNECTOR.** 1) Turn the ignition switch to OFF. 2) Disconnect the connectors from front oxygen (A/F) sensor. 3) Measure the voltage of harness between ECM connector and chassis ground. ***Connector & terminal*** ***(B134) No. 26 (+) — Chassis ground (−):*** ***(B134) No. 33 (+) — Chassis ground (−):***	Is the voltage more than 8 V?	Go to step **13.**	Repair battery short circuit in harness between ECM and front oxygen (A/F) sensor connector.
13	**CHECK HARNESS BETWEEN ECM AND FRONT OXYGEN (A/F) SENSOR CONNECTOR.** 1) Turn the ignition switch to OFF. 2) Disconnect the connectors from ECM and front oxygen (A/F) sensor connector. 3) Measure the resistance of harness between ECM and front oxygen (A/F) sensor connector. ***Connector & terminal*** ***(B134) No. 26 — (E47) No. 4:*** ***(B134) No. 33 — (E47) No. 3:***	Is the resistance less than 1 Ω?	Go to step **14.**	Repair open circuit in harness between ECM and front oxygen (A/F) sensor connector.
14	**CHECK REAR OXYGEN SENSOR DATA.** 1) Warm-up the engine until engine coolant temperature is above 70°C (158°F), and keep the engine speed at 5,000 rpm. 2) Read the data of rear oxygen sensor signal using Subaru Select Monitor or general scan tool. NOTE: • Subaru Select Monitor For detailed operation procedure, refer to the "READ CURRENT DATA SHOWN ON DISPLAY FOR ENGINE". <Ref. to EN(H6DO)(diag)-26, Subaru Select Monitor.> • General scan tool For detailed operation procedure, refer to the general scan tool instruction manual.	Is the voltage more than 490 mV?	Go to step **17.**	Go to step **15.**
15	**CHECK HARNESS BETWEEN ECM AND REAR OXYGEN SENSOR CONNECTOR.** 1) Turn the ignition switch to OFF. 2) Disconnect the connector from ECM and rear oxygen sensor. 3) Measure the resistance in harness between ECM and rear oxygen sensor connector. ***Connector & terminal*** ***(B137) No. 24 — (E61) No. 3:*** ***(B136) No. 35 — (E61) No. 4:***	Is the resistance more than 3 Ω?	Repair the open circuit in harness between ECM and rear oxygen sensor connector.	Go to step **16.**

	Step	Check	Yes	No
16	**CHECK HARNESS BETWEEN REAR OXYGEN SENSOR AND ECM CONNECTOR.** 1) Turn the ignition switch to OFF. 2) Disconnect the connector from rear oxygen sensor. 3) Turn the ignition switch to ON. 4) Measure the voltage between rear oxygen sensor harness connector and chassis ground. ***Connector & terminal*** ***(E61) No. 3 (+) — Chassis ground (−):***	Is the voltage 0.2 — 0.5 V?	Replace the rear oxygen sensor. <Ref. to FU(H6DO)-32, Rear Oxygen Sensor.>	Repair the harness and connector. NOTE: In this case repair the following: • Open circuit in harness between rear oxygen sensor and ECM connector • Poor contact in rear oxygen sensor connector • Poor contact in ECM connector
17	**CHECK REAR OXYGEN SENSOR DATA.** 1) Warm-up the engine until engine coolant temperature is above 70°C (158°F), and lower the engine speed rapidly from 5,000 rpm. 2) Read the data of rear oxygen sensor signal using Subaru Select Monitor or general scan tool. NOTE: • Subaru Select Monitor For detailed operation procedure, refer to the "READ CURRENT DATA SHOWN ON DISPLAY FOR ENGINE". <Ref. to EN(H6DO)(diag)-26, Subaru Select Monitor.> • General scan tool For detailed operation procedure, refer to the general scan tool instruction manual.	Is the voltage less than 250 mV?	Go to step **18.**	Go to step **19.**
18	**CHECK FRONT OXYGEN (A/F) SENSOR AND REAR OXYGEN SENSOR DATA.** 1) Warm-up the engine until the engine coolant temperature exceeds 70°C (158°F), and leave it at idle for more than 5 minutes. 2) Read the data of rear oxygen sensor signal using Subaru Select Monitor or general scan tool. NOTE: • Subaru Select Monitor For detailed operation procedure, refer to the "READ CURRENT DATA SHOWN ON DISPLAY FOR ENGINE". <Ref. to EN(H6DO)(diag)-26, Subaru Select Monitor.> • General scan tool For detailed operation procedure, refer to the general scan tool instruction manual.	Does the voltage keep 0.8 V for more than 5 minutes?	Replace the front oxygen (A/F) sensor. <Ref. to FU(H6DO)-30, Front Oxygen (A/F) Sensor.>	Go to step **19.**
19	**CHECK HARNESS BETWEEN ECM AND REAR OXYGEN SENSOR CONNECTOR.** 1) Turn the ignition switch to OFF. 2) Disconnect the connector from ECM and rear oxygen sensor. 3) Measure the resistance in harness between ECM and rear oxygen sensor connector. ***Connector & terminal*** ***(B137) No. 24 — (E61) No. 3:*** ***(B136) No. 35 — (E61) No. 4:***	Is the resistance more than 3 Ω?	Repair the open circuit in harness between ECM and rear oxygen sensor connector.	Go to step **20.**

	Step	Check	Yes	No
20	**CHECK HARNESS BETWEEN REAR OXYGEN SENSOR AND ECM CONNECTOR.** 1) Turn the ignition switch to OFF. 2) Disconnect the connector from rear oxygen sensor. 3) Turn the ignition switch to ON. 4) Measure the voltage between rear oxygen sensor harness connector and chassis ground. ***Connector & terminal*** ***(E61) No. 3 (+) — Chassis ground (−):***	Is the voltage 0.2 — 0.5 V?	Replace the rear oxygen sensor. <Ref. to FU(H6DO)-32, Rear Oxygen Sensor.>	Repair the harness and connector. NOTE: In this case repair the following: • Open circuit in harness between rear oxygen sensor and ECM connector • Poor contact in rear oxygen sensor connector • Poor contact in ECM connector

DR:DTC P2097 POST CATALYST FUEL TRIM SYSTEM TOO RICH BANK 1

DTC DETECTING CONDITION:

- Two consecutive driving cycles with fault
- GENERAL DESCRIPTION <Ref. to GD(H6DO)-206, DTC P2097 POST CATALYST FUEL TRIM SYSTEM TOO RICH BANK 1, Diagnostic Trouble Code (DTC) Detecting Criteria.>

CAUTION:
After repair or replacement of faulty parts, conduct Clear Memory Mode <Ref. to EN(H6DO)(diag)-44, OPERATION, Clear Memory Mode.> and Inspection Mode <Ref. to EN(H6DO)(diag)-35, PROCEDURE, Inspection Mode.>.

WIRING DIAGRAM:

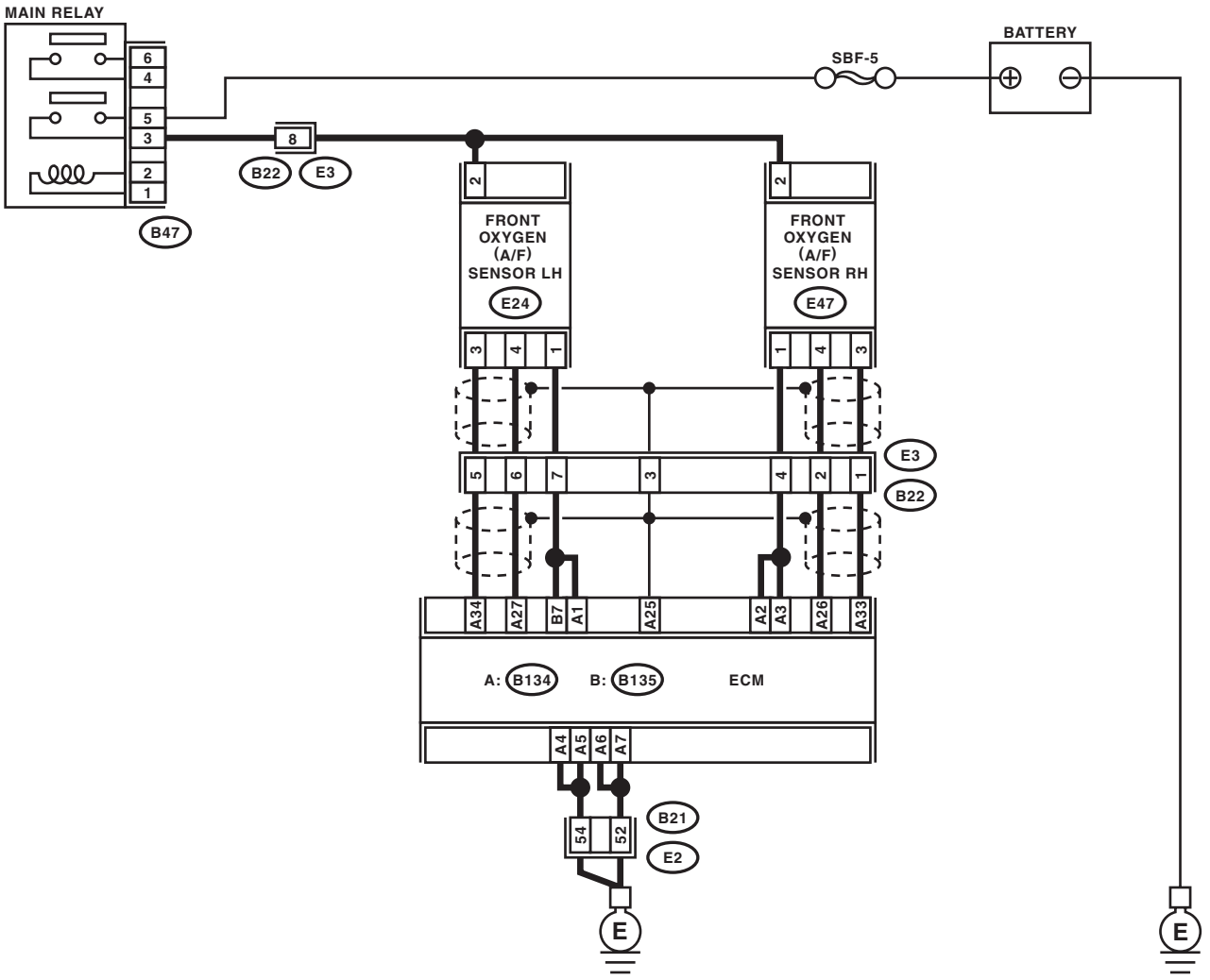

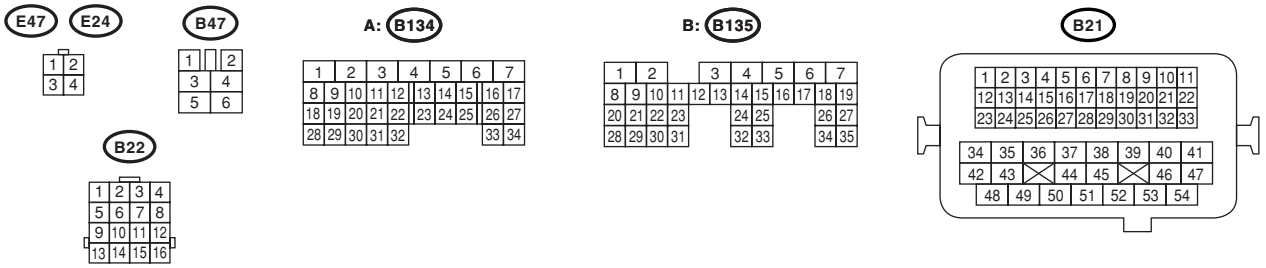

EN-03159

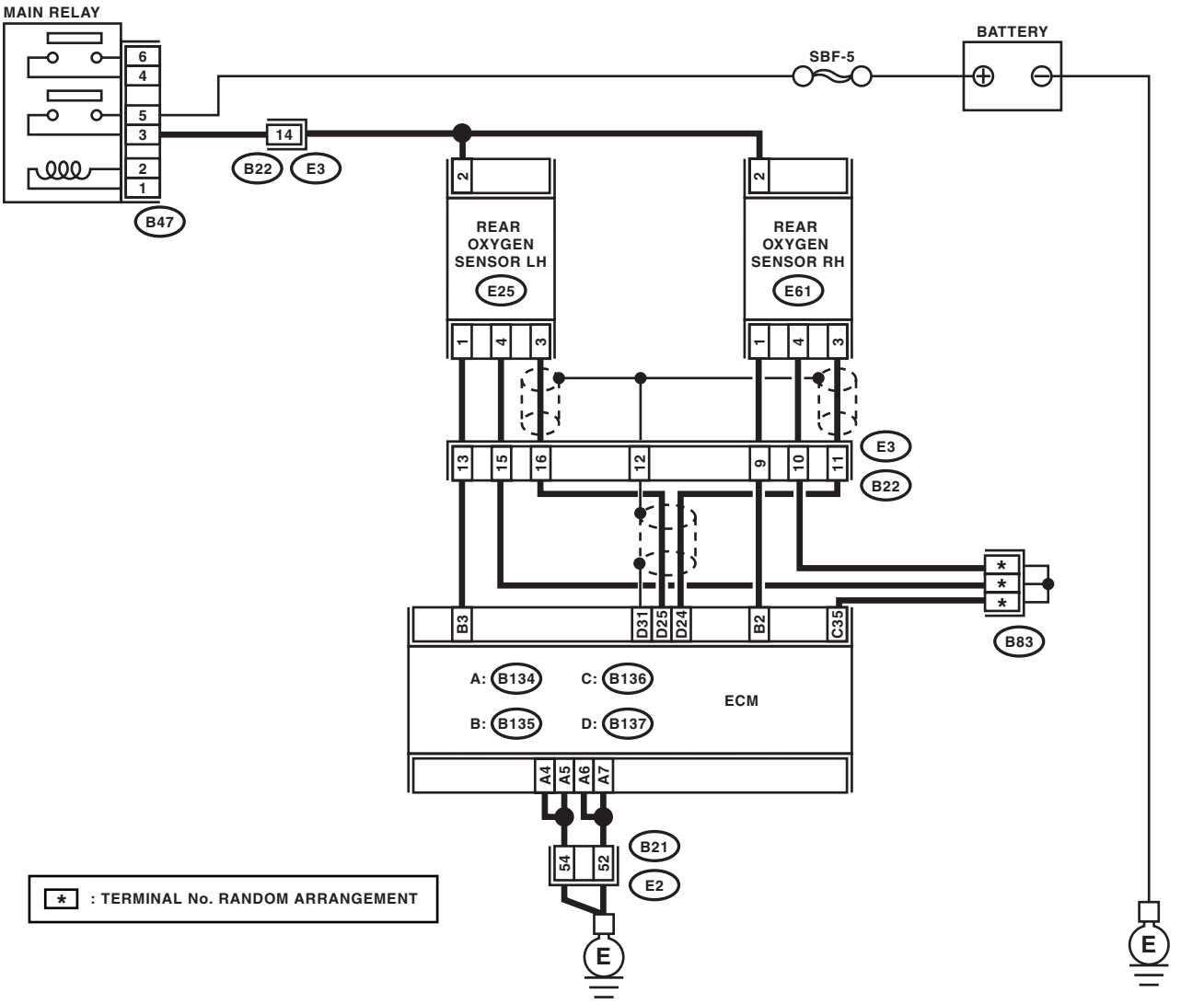
MAIN RELAY
6
4
5
3
2
1
B47
14
B22
E3
SBF-5
BATTERY
REAR OXYGEN SENSOR LH
E25
REAR OXYGEN SENSOR RH
E61
2
1
4
3
13
15
16
12
9
10
11
E3
B22
B3
D31
D25
D24
B2
C35
B83
A: B134
C: B136
B: B135
D: B137
ECM
A4
A5
A6
A7
54
52
B21
E2
E
* : TERMINAL No. RANDOM ARRANGEMENT

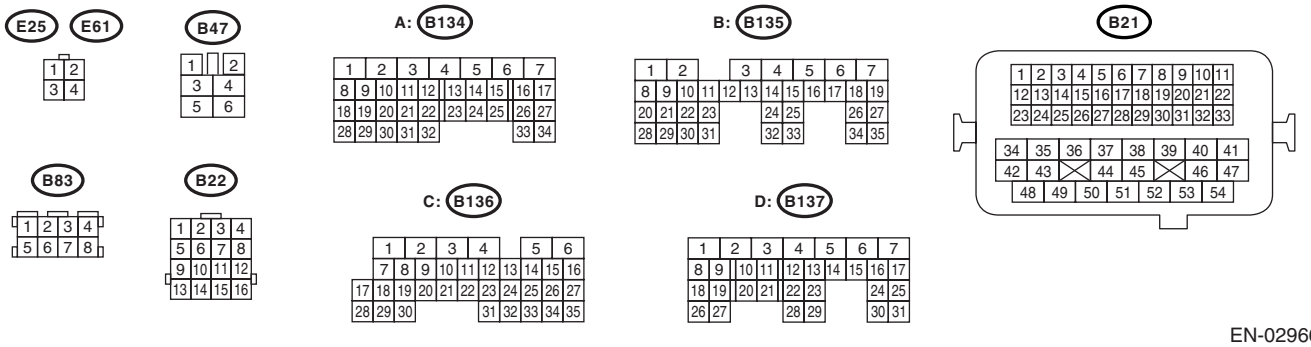
E25
E61
B47
A: B134
B: B135
B21
B83
B22
C: B136
D: B137

EN-02966

	Step	Check	Yes	No
1	**CHECK FOR ANY OTHER DTC ON DISPLAY.**	Is any other DTC displayed?	Inspect the relevant DTC using "List of Diagnostic Trouble Code (DTC)". <Ref. to EN(H6DO)(diag)-71, List of Diagnostic Trouble Code (DTC).>	Go to step **2.**
2	**CHECK FRONT OXYGEN (A/F) SENSOR DATA.** 1) Start engine. 2) While observing the Subaru Select Monitor or general scan tool screen, warm-up the engine until coolant temperature is above 75°C (167°F). If the engine is already warmed-up, operate at idle speed for at least 1 minute. 3) Read data of front oxygen (A/F) sensor signal using Subaru Select Monitor or general scan tool. NOTE: • Subaru Select Monitor For detailed operation procedure, refer to the "READ CURRENT DATA SHOWN ON DISPLAY FOR ENGINE". <Ref. to EN(H6DO)(diag)-26, Subaru Select Monitor.> • General scan tool For detailed operation procedure, refer to the general scan tool instruction manual.	Is the measured value within 0.86 — 1.15 at idle?	Go to step **3.**	Go to step **4.**
3	**CHECK REAR OXYGEN SENSOR SIGNAL.** 1) Race engine at speeds from idling to 5,000 rpm for a total of 5 cycles. NOTE: To increase engine speed to 5,000 rpm, slowly depress accelerator pedal, taking approximately 5 seconds, and quickly release accelerator pedal to decrease engine speed. 2) Operate the LED operation mode for engine. NOTE: • Subaru Select Monitor For detailed operation procedure, refer to the "LED OPERATION MODE FOR ENGINE". <Ref. to EN(H6DO)(diag)-26, Subaru Select Monitor.>	Does the LED of {Rear O2 Rich Signal} blink?	Check front oxygen (A/F) sensor circuit.	Check rear oxygen sensor circuit. <Ref. to FU(H6DO)-32, Rear Oxygen Sensor.>
4	**CHECK EXHAUST SYSTEM.** Check exhaust system parts. NOTE: Check the following items. • Loose installation of portions • Damage (crack, hole etc.) of parts • Looseness of front oxygen (A/F) sensor • Looseness and ill fitting of parts between front oxygen (A/F) sensor and rear oxygen sensor	Is there any fault in exhaust system?	Repair or replace faulty parts.	Go to step **5.**
5	**CHECK AIR INTAKE SYSTEM.**	Are there holes, loose bolts or disconnection of hose on air intake system?	Repair the air intake system.	Go to step **6.**

	Step	Check	Yes	No
6	**CHECK FUEL PRESSURE.** **Warning:** **• Place "NO FIRE" signs near the working area.** **• Be careful not to spill fuel on the floor.** Measure the fuel pressure while disconnecting pressure regulator vacuum hose from intake manifold. <Ref. to ME(H6DO)-27, INSPECTION, Fuel Pressure.> **Warning:** **Before removing the fuel pressure gauge, release fuel pressure.**	Is the measured value 333 — 363 kPa (3.4 — 3.7 kg/cm^2, 48 — 53 psi)?	Go to step **7.**	Repair the following items. Fuel pressure too high: • Clogged fuel line or bent hose Fuel pressure too low: • Improper fuel pump discharge • Clogged fuel supply line
7	**CHECK FUEL PRESSURE.** After connecting the pressure regulator vacuum hose, measure fuel pressure. <Ref. to ME(H6DO)-27, INSPECTION, Fuel Pressure.> **Warning:** **Before removing the fuel pressure gauge, release fuel pressure.** NOTE: If out of specification as measured at this step, check or replace the pressure regulator and pressure regulator vacuum hose.	Is the measured value 279 — 309 kPa (2.85 — 3.15 kg/cm^2, 40 — 45 psi)?	Go to step **8.**	Repair the following items. Fuel pressure too high: • Faulty pressure regulator • Clogged fuel line or bent hose Fuel pressure too low: • Faulty pressure regulator • Improper fuel pump discharge • Clogged fuel supply line
8	**CHECK ENGINE COOLANT TEMPERATURE SENSOR.** 1) Start the engine and warm-up completely. 2) Read the data of engine coolant temperature sensor signal using Subaru Select Monitor or general scan tool. NOTE: • Subaru Select Monitor For detailed operation procedure, refer to the "READ CURRENT DATA FOR ENGINE". <Ref. to EN(H6DO)(diag)-26, Subaru Select Monitor.> • General scan tool For detailed operation procedures, refer to the general scan tool instruction manual.	Is the temperature more than 60°C (140°F)?	Go to step **9.**	Replace the engine coolant temperature sensor. <Ref. to FU(H6DO)-19, Engine Coolant Temperature Sensor.>

	Step	Check	Yes	No
9	**CHECK MASS AIR FLOW AND INTAKE AIR TEMPERATURE.** 1) Start the engine and warm-up engine until coolant temperature is greater than 60°C (140°F). 2) Place the shift lever in neutral position. 3) Turn the A/C switch to OFF. 4) Turn all accessory switches to OFF. 5) Read the data of mass air flow and intake air temperature sensor signal using Subaru Select Monitor or general scan tool. NOTE: • Subaru Select Monitor For detailed operation procedure, refer to the "READ CURRENT DATA FOR ENGINE". <Ref. to EN(H6DO)(diag)-26, Subaru Select Monitor.> • General scan tool For detailed operation procedure, refer to the general scan tool instruction manual.	Is the measured value 3.1 — 4.3 g/s (0.41 — 0.57 lb/m)?	Go to step **10.**	Replace the mass air flow and intake air temperature sensor. <Ref. to FU(H6DO)-25, Mass Air Flow and Intake Air Temperature Sensor.>
10	**CHECK MASS AIR FLOW AND INTAKE AIR TEMPERATURE SENSOR.** 1) Start the engine and warm-up engine until coolant temperature is greater than 60°C (140°F). 2) Place the shift lever in neutral position. 3) Turn the A/C switch to OFF. 4) Turn all accessory switches to OFF. 5) Open the front hood. 6) Measure the ambient temperature. 7) Read the data of mass air flow and intake air temperature sensor signal using Subaru Select Monitor or general scan tool. NOTE: • Subaru Select Monitor For detailed operation procedure, refer to the "READ CURRENT DATA FOR ENGINE". <Ref. to EN(H6DO)(diag)-26, Subaru Select Monitor.> • General scan tool For detailed operation procedure, refer to the general scan tool instruction manual.	Subtract ambient temperature from intake air temperature. Is the obtained value −10°C — 50°C (−18°F — 90°F)?	Go to step **11.**	Check the mass air flow and intake air temperature sensor. <Ref. to FU(H6DO)-25, Mass Air Flow and Intake Air Temperature Sensor.>
11	**CHECK HARNESS BETWEEN ECM AND FRONT OXYGEN (A/F) SENSOR CONNECTOR.** 1) Turn the ignition switch to OFF. 2) Disconnect the connectors from ECM and front oxygen (A/F) sensor connector. 3) Measure the resistance of harness between ECM and front oxygen (A/F) sensor connector. ***Connector & terminal*** ***(B134) No. 26 — Chassis ground:*** ***(B134) No. 33 — Chassis ground:***	Is the resistance more than 1 MΩ?	Go to step **12.**	Repair ground short circuit in harness between ECM and front oxygen (A/F) sensor connector.

	Step	Check	Yes	No
12	**CHECK HARNESS BETWEEN ECM AND FRONT OXYGEN (A/F) SENSOR CONNECTOR.** 1) Turn the ignition switch to OFF. 2) Disconnect the connectors from front oxygen (A/F) sensor. 3) Measure the voltage of harness between ECM connector and chassis ground. ***Connector & terminal*** ***(B134) No. 26 (+) — Chassis ground (−):*** ***(B134) No. 33 (+) — Chassis ground (−):***	Is the voltage more than 8 V?	Go to step **13.**	Repair battery short circuit in harness between ECM and front oxygen (A/F) sensor connector.
13	**CHECK HARNESS BETWEEN ECM AND FRONT OXYGEN (A/F) SENSOR CONNECTOR.** 1) Turn the ignition switch to OFF. 2) Disconnect the connectors from ECM and front oxygen (A/F) sensor connector. 3) Measure the resistance of harness between ECM and front oxygen (A/F) sensor connector. ***Connector & terminal*** ***(B134) No. 26 — (E47) No. 4:*** ***(B134) No. 33 — (E47) No. 3:***	Is the resistance less than 1 Ω?	Go to step **14.**	Repair open circuit in harness between ECM and front oxygen (A/F) sensor connector.
14	**CHECK REAR OXYGEN SENSOR DATA.** 1) Warm-up the engine until engine coolant temperature is above 70°C (158°F), and keep the engine speed at 5,000 rpm. 2) Read the data of rear oxygen sensor signal using Subaru Select Monitor or general scan tool. NOTE: • Subaru Select Monitor For detailed operation procedure, refer to the "READ CURRENT DATA SHOWN ON DISPLAY FOR ENGINE". <Ref. to EN(H6DO)(diag)-26, Subaru Select Monitor.> • General scan tool For detailed operation procedure, refer to the general scan tool instruction manual.	Is the voltage more than 490 mV?	Go to step **17.**	Go to step **15.**
15	**CHECK HARNESS BETWEEN ECM AND REAR OXYGEN SENSOR CONNECTOR.** 1) Turn the ignition switch to OFF. 2) Disconnect the connector from ECM and rear oxygen sensor. 3) Measure the resistance in harness between ECM and rear oxygen sensor connector. ***Connector & terminal*** ***(B137) No. 24 — (E61) No. 3:*** ***(B136) No. 35 — (E61) No. 4:***	Is the resistance more than 3 Ω?	Repair the open circuit in harness between ECM and rear oxygen sensor connector.	Go to step **16.**

	Step	Check	Yes	No
16	**CHECK HARNESS BETWEEN REAR OXYGEN SENSOR AND ECM CONNECTOR.** 1) Turn the ignition switch to OFF. 2) Disconnect the connector from rear oxygen sensor. 3) Turn the ignition switch to ON. 4) Measure the voltage between rear oxygen sensor harness connector and chassis ground. ***Connector & terminal*** ***(E61) No. 3 (+) — Chassis ground (−):***	Is the voltage 0.2 — 0.5 V?	Replace the rear oxygen sensor. <Ref. to FU(H6DO)-32, Rear Oxygen Sensor.>	Repair the harness and connector. NOTE: In this case repair the following: • Open circuit in harness between rear oxygen sensor and ECM connector • Poor contact in rear oxygen sensor connector • Poor contact in ECM connector
17	**CHECK REAR OXYGEN SENSOR DATA.** 1) Warm-up the engine until engine coolant temperature is above 70°C (158°F), and lower the engine speed rapidly from 5,000 rpm. 2) Read the data of rear oxygen sensor signal using Subaru Select Monitor or general scan tool. NOTE: • Subaru Select Monitor For detailed operation procedure, refer to the "READ CURRENT DATA SHOWN ON DISPLAY FOR ENGINE". <Ref. to EN(H6DO)(diag)-26, Subaru Select Monitor.> • General scan tool For detailed operation procedure, refer to the general scan tool instruction manual.	Is the voltage less than 250 mV?	Go to step **18.**	Go to step **19.**
18	**CHECK FRONT OXYGEN (A/F) SENSOR AND REAR OXYGEN SENSOR DATA.** 1) Warm-up the engine until the engine coolant temperature exceeds 70°C (158°F), and leave it at idle for more than 5 minutes. 2) Read the data of rear oxygen sensor signal using Subaru Select Monitor or general scan tool. NOTE: • Subaru Select Monitor For detailed operation procedure, refer to the "READ CURRENT DATA SHOWN ON DISPLAY FOR ENGINE". <Ref. to EN(H6DO)(diag)-26, Subaru Select Monitor.> • General scan tool For detailed operation procedure, refer to the general scan tool instruction manual.	Does the voltage keep 0.8 V for more than 5 minutes?	Replace the front oxygen (A/F) sensor. <Ref. to FU(H6DO)-30, Front Oxygen (A/F) Sensor.>	Go to step **19.**
19	**CHECK HARNESS BETWEEN ECM AND REAR OXYGEN SENSOR CONNECTOR.** 1) Turn the ignition switch to OFF. 2) Disconnect the connector from ECM and rear oxygen sensor. 3) Measure the resistance in harness between ECM and rear oxygen sensor connector. ***Connector & terminal*** ***(B137) No. 24 — (E61) No. 3:*** ***(B136) No. 35 — (E61) No. 4:***	Is the resistance more than 3 Ω?	Repair the open circuit in harness between ECM and rear oxygen sensor connector.	Go to step **20.**

	Step	Check	Yes	No
20	**CHECK HARNESS BETWEEN REAR OXYGEN SENSOR AND ECM CONNECTOR.** 1) Turn the ignition switch to OFF. 2) Disconnect the connector from rear oxygen sensor. 3) Turn the ignition switch to ON. 4) Measure the voltage between rear oxygen sensor harness connector and chassis ground. ***Connector & terminal*** ***(E61) No. 3 (+) — Chassis ground (−):***	Is the voltage 0.2 — 0.5 V?	Replace the rear oxygen sensor. <Ref. to FU(H6DO)-32, Rear Oxygen Sensor.>	Repair the harness and connector. NOTE: In this case repair the following: • Open circuit in harness between rear oxygen sensor and ECM connector • Poor contact in rear oxygen sensor connector • Poor contact in ECM connector

DS:DTC P2098 POST CATALYST FUEL TRIM SYSTEM TOO LEAN BANK 2

DTC DETECTING CONDITION:

- Two consecutive driving cycles with fault
- GENERAL DESCRIPTION <Ref. to GD(H6DO)-207, DTC P2098 POST CATALYST FUEL TRIM SYSTEM TOO LEAN BANK 2, Diagnostic Trouble Code (DTC) Detecting Criteria.>

CAUTION:
After repair or replacement of faulty parts, conduct Clear Memory Mode <Ref. to EN(H6DO)(diag)-44, OPERATION, Clear Memory Mode.> and Inspection Mode <Ref. to EN(H6DO)(diag)-35, PROCEDURE, Inspection Mode.>.

WIRING DIAGRAM:

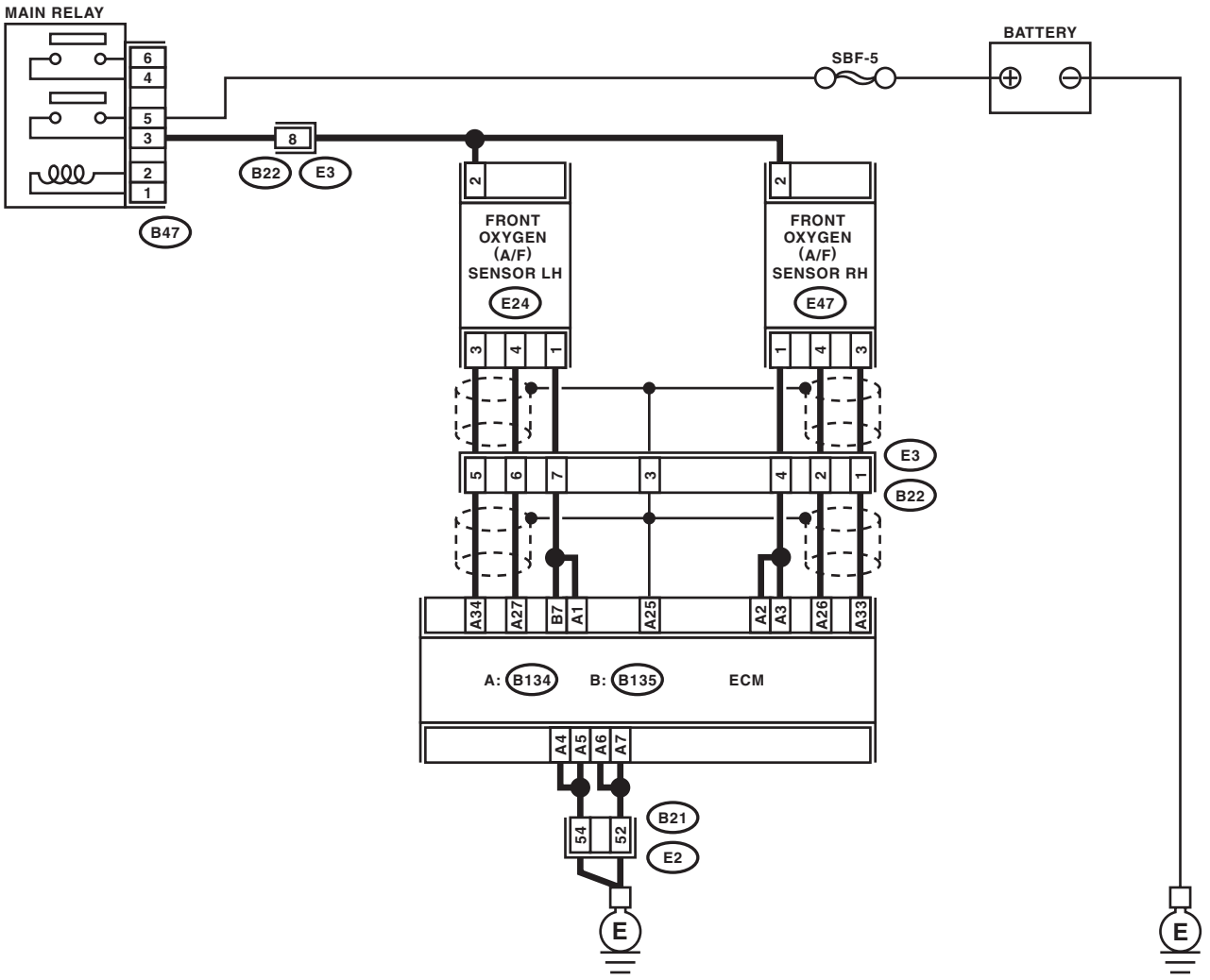

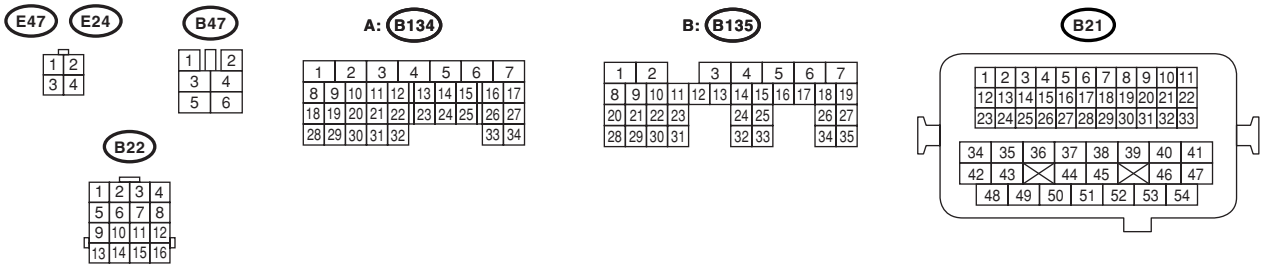

EN-03159

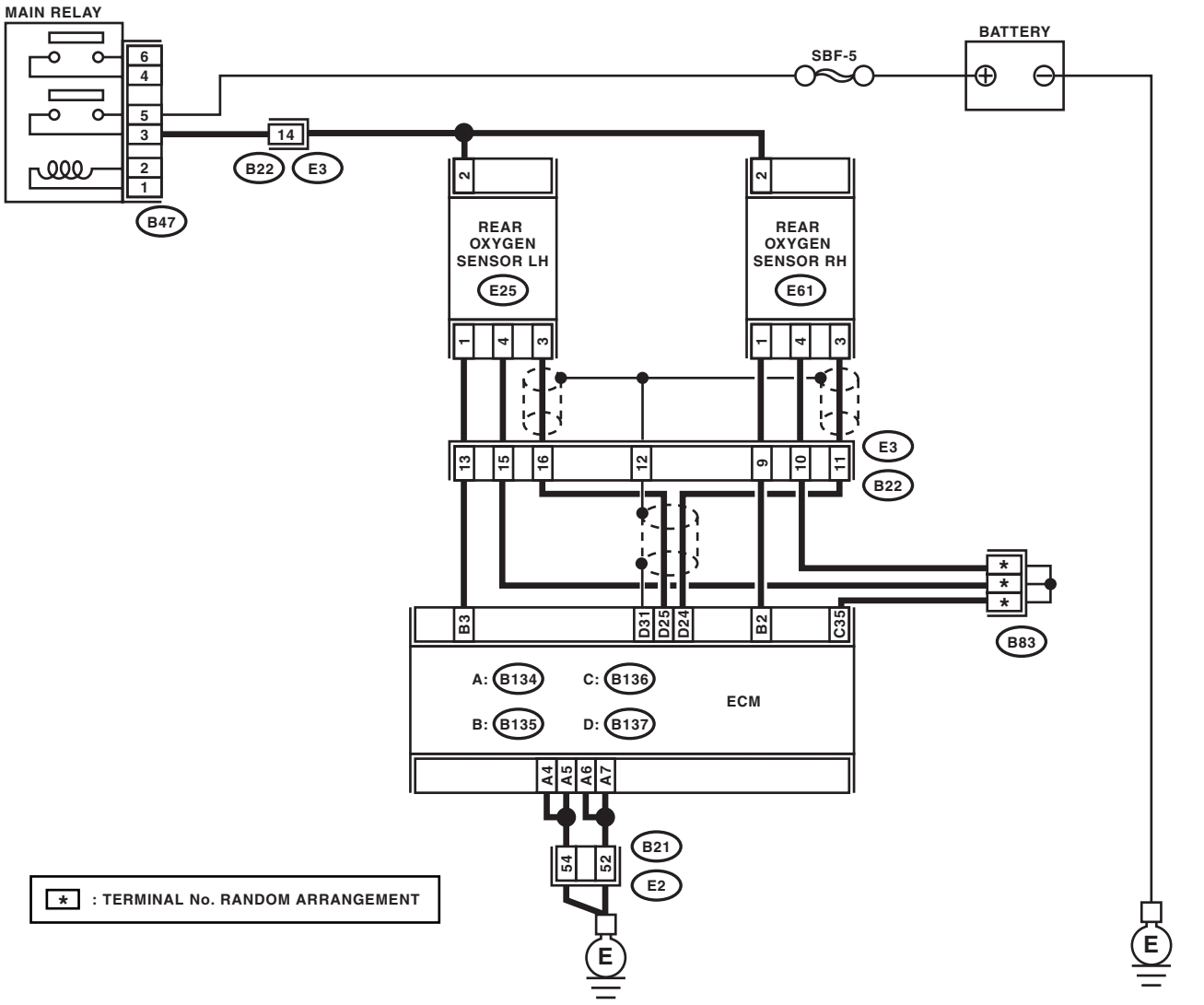
MAIN RELAY
6
4
5
3
2
1
B47
14
B22
E3
SBF-5
BATTERY
REAR OXYGEN SENSOR LH
E25
REAR OXYGEN SENSOR RH
E61
2
1
4
3
13
15
16
12
9
10
11
E3
B22
B83
B3
D31
D25
D24
B2
C35
A: B134
C: B136
B: B135
D: B137
ECM
A4
A5
A6
A7
B21
54
52
E2
E
* : TERMINAL No. RANDOM ARRANGEMENT

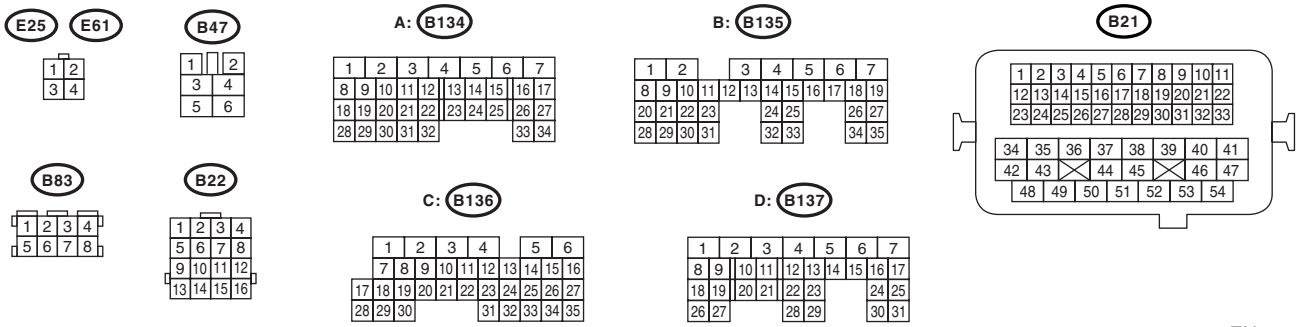
E25
E61
B47
A: B134
B: B135
B21
B83
B22
C: B136
D: B137

EN-02966

	Step	Check	Yes	No
1	**CHECK FOR ANY OTHER DTC ON DISPLAY.**	Is any other DTC displayed?	Inspect the relevant DTC using "List of Diagnostic Trouble Code (DTC)". <Ref. to EN(H6DO)(diag)-71, List of Diagnostic Trouble Code (DTC).>	Go to step **2.**
2	**CHECK FRONT OXYGEN (A/F) SENSOR DATA.** 1) Start engine. 2) While observing the Subaru Select Monitor or general scan tool screen, warm-up the engine until coolant temperature is above 75°C (167°F). If the engine is already warmed-up, operate at idle speed for at least 1 minute. 3) Read data of front oxygen (A/F) sensor signal using Subaru Select Monitor or general scan tool. NOTE: • Subaru Select Monitor For detailed operation procedure, refer to the "READ CURRENT DATA FOR ENGINE". <Ref. to EN(H6DO)(diag)-26, Subaru Select Monitor.> • General scan tool For detailed operation procedures, refer to the general scan tool instruction manual.	Is the measured value within 0.86 — 1.15 at idle?	Go to step **3.**	Go to step **4.**
3	**CHECK REAR OXYGEN SENSOR SIGNAL.** 1) Race engine at speeds from idling to 5,000 rpm for a total of 5 cycles. NOTE: To increase engine speed to 5,000 rpm, slowly depress accelerator pedal, taking approximately 5 seconds, and quickly release accelerator pedal to decrease engine speed. 2) Operate the LED operation mode for engine. NOTE: • Subaru Select Monitor For detailed operation procedure, refer to the "LED OPERATION MODE FOR ENGINE". <Ref. to EN(H6DO)(diag)-26, Subaru Select Monitor.>	Does the LED of {Rear O2 Rich Signal} blink?	Check front oxygen (A/F) sensor circuit.	Check rear oxygen sensor circuit. <Ref. to FU(H6DO)-32, Rear Oxygen Sensor.>
4	**CHECK EXHAUST SYSTEM.** Check exhaust system parts. NOTE: Check the following items. • Loose installation of portions • Damage (crack, hole etc.) of parts • Looseness of front oxygen (A/F) sensor • Looseness and ill fitting of parts between front oxygen (A/F) sensor and rear oxygen sensor	Is there any fault in exhaust system?	Repair or replace faulty parts.	Go to step **5.**
5	**CHECK AIR INTAKE SYSTEM.**	Are there holes, loose bolts or disconnection of hose on air intake system?	Repair the air intake system.	Go to step **6.**

	Step	Check	Yes	No
6	**CHECK FUEL PRESSURE.** **Warning:** **• Place "NO FIRE" signs near the working area.** **• Be careful not to spill fuel on the floor.** Measure the fuel pressure while disconnecting pressure regulator vacuum hose from intake manifold. <Ref. to ME(H6DO)-27, INSPECTION, Fuel Pressure.> **Warning:** **Before removing the fuel pressure gauge, release fuel pressure.**	Is the measured value 333 — 363 kPa (3.4 — 3.7 kg/cm^2, 48 — 53 psi)?	Go to step **7.**	Repair the following items. Fuel pressure too high: • Clogged fuel line or bent hose Fuel pressure too low: • Improper fuel pump discharge • Clogged fuel supply line
7	**CHECK FUEL PRESSURE.** After connecting the pressure regulator vacuum hose, measure fuel pressure. <Ref. to ME(H6DO)-27, INSPECTION, Fuel Pressure.> **Warning:** **Before removing the fuel pressure gauge, release fuel pressure.** NOTE: If out of specification as measured at this step, check or replace the pressure regulator and pressure regulator vacuum hose.	Is the measured value 279 — 309 kPa (2.85 — 3.15 kg/cm^2, 40 — 45 psi)?	Go to step **8.**	Repair the following items. Fuel pressure too high: • Faulty pressure regulator • Clogged fuel line or bent hose Fuel pressure too low: • Faulty pressure regulator • Improper fuel pump discharge • Clogged fuel supply line
8	**CHECK ENGINE COOLANT TEMPERATURE SENSOR.** 1) Start the engine and warm-up completely. 2) Read the data of engine coolant temperature sensor signal using Subaru Select Monitor or general scan tool. NOTE: • Subaru Select Monitor For detailed operation procedure, refer to the "READ CURRENT DATA FOR ENGINE". <Ref. to EN(H6DO)(diag)-26, Subaru Select Monitor.> • General scan tool For detailed operation procedures, refer to the general scan tool instruction manual.	Is the temperature more than 60°C (140°F)?	Go to step **9.**	Replace the engine coolant temperature sensor. <Ref. to FU(H6DO)-19, Engine Coolant Temperature Sensor.>

	Step	Check	Yes	No
9	**CHECK MASS AIR FLOW AND INTAKE AIR TEMPERATURE.** 1) Start the engine and warm-up engine until coolant temperature is greater than 60°C (140°F). 2) Place the shift lever in neutral position. 3) Turn the A/C switch to OFF. 4) Turn all accessory switches to OFF. 5) Read the data of mass air flow and intake air temperature sensor signal using Subaru Select Monitor or general scan tool. NOTE: • Subaru Select Monitor For detailed operation procedure, refer to the "READ CURRENT DATA FOR ENGINE". <Ref. to EN(H6DO)(diag)-26, Subaru Select Monitor.> • General scan tool For detailed operation procedure, refer to the general scan tool instruction manual.	Is the measured value 3.1 — 4.3 g/s (0.41 — 0.57 lb/m)?	Go to step **10.**	Replace the mass air flow and intake air temperature sensor. <Ref. to FU(H6DO)-25, Mass Air Flow and Intake Air Temperature Sensor.>
10	**CHECK MASS AIR FLOW AND INTAKE AIR TEMPERATURE SENSOR.** 1) Start the engine and warm-up engine until coolant temperature is greater than 60°C (140°F). 2) Place the shift lever in neutral position. 3) Turn the A/C switch to OFF. 4) Turn all accessory switches to OFF. 5) Open the front hood. 6) Measure the ambient temperature. 7) Read the data of mass air flow and intake air temperature sensor signal using Subaru Select Monitor or general scan tool. NOTE: • Subaru Select Monitor For detailed operation procedure, refer to the "READ CURRENT DATA FOR ENGINE". <Ref. to EN(H6DO)(diag)-26, Subaru Select Monitor.> • General scan tool For detailed operation procedure, refer to the general scan tool instruction manual.	Subtract ambient temperature from intake air temperature. Is the obtained value −10°C — 50°C (−18°F — 90°F)?	Go to step **11.**	Check the mass air flow and intake air temperature sensor. <Ref. to FU(H6DO)-25, Mass Air Flow and Intake Air Temperature Sensor.>
11	**CHECK HARNESS BETWEEN ECM AND FRONT OXYGEN (A/F) SENSOR CONNECTOR.** 1) Turn the ignition switch to OFF. 2) Disconnect the connectors from ECM and front oxygen (A/F) sensor connector. 3) Measure the resistance of harness between ECM and front oxygen (A/F) sensor connector. ***Connector & terminal*** ***(B134) No. 27 — Chassis ground:*** ***(B134) No. 34 — Chassis ground:***	Is the resistance more than 1 MΩ?	Go to step **12.**	Repair ground short circuit in harness between ECM and front oxygen (A/F) sensor connector.

	Step	Check	Yes	No
12	**CHECK HARNESS BETWEEN ECM AND FRONT OXYGEN (A/F) SENSOR CONNECTOR.** 1) Turn the ignition switch to OFF. 2) Disconnect the connectors from front oxygen (A/F) sensor. 3) Measure the voltage of harness between ECM connector and chassis ground. ***Connector & terminal*** ***(B134) No. 27 (+) — Chassis ground (−):*** ***(B134) No. 34 (+) — Chassis ground (−):***	Is the voltage more than 8 V?	Go to step **13.**	Repair battery short circuit in harness between ECM and front oxygen (A/F) sensor connector.
13	**CHECK HARNESS BETWEEN ECM AND FRONT OXYGEN (A/F) SENSOR CONNECTOR.** 1) Turn the ignition switch to OFF. 2) Disconnect the connectors from ECM and front oxygen (A/F) sensor connector. 3) Measure the resistance of harness between ECM and front oxygen (A/F) sensor connector. ***Connector & terminal*** ***(B134) No. 27 — (E24) No. 4:*** ***(B134) No. 34 — (E24) No. 3:***	Is the resistance less than 1 Ω?	Go to step **14.**	Repair open circuit in harness between ECM and front oxygen (A/F) sensor connector.
14	**CHECK REAR OXYGEN SENSOR DATA.** 1) Warm-up the engine until engine coolant temperature is above 70°C (158°F), and keep the engine speed at 5,000 rpm. 2) Read the data of rear oxygen sensor signal using Subaru Select Monitor or general scan tool. NOTE: • Subaru Select Monitor For detailed operation procedure, refer to the "READ CURRENT DATA SHOWN ON DISPLAY FOR ENGINE". <Ref. to EN(H6DO)(diag)-26, Subaru Select Monitor.> • General scan tool For detailed operation procedure, refer to the general scan tool instruction manual.	Is the voltage more than 490 mV?	Go to step **17.**	Go to step **15.**
15	**CHECK HARNESS BETWEEN ECM AND REAR OXYGEN SENSOR CONNECTOR.** 1) Turn the ignition switch to OFF. 2) Disconnect the connector from ECM and rear oxygen sensor. 3) Measure the resistance in harness between ECM and rear oxygen sensor connector. ***Connector & terminal*** ***(B137) No. 25 — (E25) No. 3:*** ***(B136) No. 35 — (E25) No. 4:***	Is the resistance more than 3 Ω?	Repair the open circuit in harness between ECM and rear oxygen sensor connector.	Go to step **16.**

	Step	Check	Yes	No
16	**CHECK HARNESS BETWEEN REAR OXYGEN SENSOR AND ECM CONNECTOR.** 1) Turn the ignition switch to OFF. 2) Disconnect the connector from rear oxygen sensor. 3) Turn the ignition switch to ON. 4) Measure the voltage between rear oxygen sensor harness connector and chassis ground. ***Connector & terminal*** ***(E25) No. 3 (+) — Chassis ground (−):***	Is the voltage 0.2 — 0.5 V?	Replace the rear oxygen sensor. <Ref. to FU(H6DO)-32, Rear Oxygen Sensor.>	Repair the harness and connector. NOTE: In this case repair the following: • Open circuit in harness between rear oxygen sensor and ECM connector • Poor contact in rear oxygen sensor connector • Poor contact in ECM connector
17	**CHECK REAR OXYGEN SENSOR DATA.** 1) Warm-up the engine until engine coolant temperature is above 70°C (158°F), and lower the engine speed rapidly from 5,000 rpm. 2) Read the data of rear oxygen sensor signal using Subaru Select Monitor or general scan tool. NOTE: • Subaru Select Monitor For detailed operation procedure, refer to the "READ CURRENT DATA SHOWN ON DISPLAY FOR ENGINE". <Ref. to EN(H6DO)(diag)-26, Subaru Select Monitor.> • General scan tool For detailed operation procedure, refer to the general scan tool instruction manual.	Is the voltage less than 250 mV?	Go to step **18.**	Go to step **19.**
18	**CHECK FRONT OXYGEN (A/F) SENSOR AND REAR OXYGEN SENSOR DATA.** 1) Warm-up the engine until the engine coolant temperature exceeds 70°C (158°F), and leave it at idle for more than 5 minutes. 2) Read the data of rear oxygen sensor signal using Subaru Select Monitor or general scan tool. NOTE: • Subaru Select Monitor For detailed operation procedure, refer to the "READ CURRENT DATA SHOWN ON DISPLAY FOR ENGINE". <Ref. to EN(H6DO)(diag)-26, Subaru Select Monitor.> • General scan tool For detailed operation procedure, refer to the general scan tool instruction manual.	Does the voltage keep 0.8 V for more than 5 minutes?	Replace the front oxygen (A/F) sensor. <Ref. to FU(H6DO)-30, Front Oxygen (A/F) Sensor.>	Go to step **19.**
19	**CHECK HARNESS BETWEEN ECM AND REAR OXYGEN SENSOR CONNECTOR.** 1) Turn the ignition switch to OFF. 2) Disconnect the connector from ECM and rear oxygen sensor. 3) Measure the resistance in harness between ECM and rear oxygen sensor connector. ***Connector & terminal*** ***(B137) No. 25 — (E25) No. 3:*** ***(B136) No. 35 — (E25) No. 4:***	Is the resistance more than 3 Ω?	Repair the open circuit in harness between ECM and rear oxygen sensor connector.	Go to step **20.**

	Step	Check	Yes	No
20	**CHECK HARNESS BETWEEN REAR OXYGEN SENSOR AND ECM CONNECTOR.** 1) Turn the ignition switch to OFF. 2) Disconnect the connector from rear oxygen sensor. 3) Turn the ignition switch to ON. 4) Measure the voltage between rear oxygen sensor harness connector and chassis ground. ***Connector & terminal*** ***(E25) No. 3 (+) — Chassis ground (−):***	Is the voltage 0.2 — 0.5 V?	Replace the rear oxygen sensor. <Ref. to FU(H6DO)-32, Rear Oxygen Sensor.>	Repair the harness and connector. NOTE: In this case repair the following: • Open circuit in harness between rear oxygen sensor and ECM connector • Poor contact in rear oxygen sensor connector • Poor contact in ECM connector

DT:DTC P2099 POST CATALYST FUEL TRIM SYSTEM TOO RICH BANK 2

DTC DETECTING CONDITION:

- Two consecutive driving cycles with fault
- GENERAL DESCRIPTION <Ref. to GD(H6DO)-207, DTC P2099 POST CATALYST FUEL TRIM SYSTEM TOO RICH BANK 2, Diagnostic Trouble Code (DTC) Detecting Criteria.>

CAUTION:
After repair or replacement of faulty parts, conduct Clear Memory Mode <Ref. to EN(H6DO)(diag)-44, OPERATION, Clear Memory Mode.> and Inspection Mode <Ref. to EN(H6DO)(diag)-35, PROCEDURE, Inspection Mode.>.

WIRING DIAGRAM:

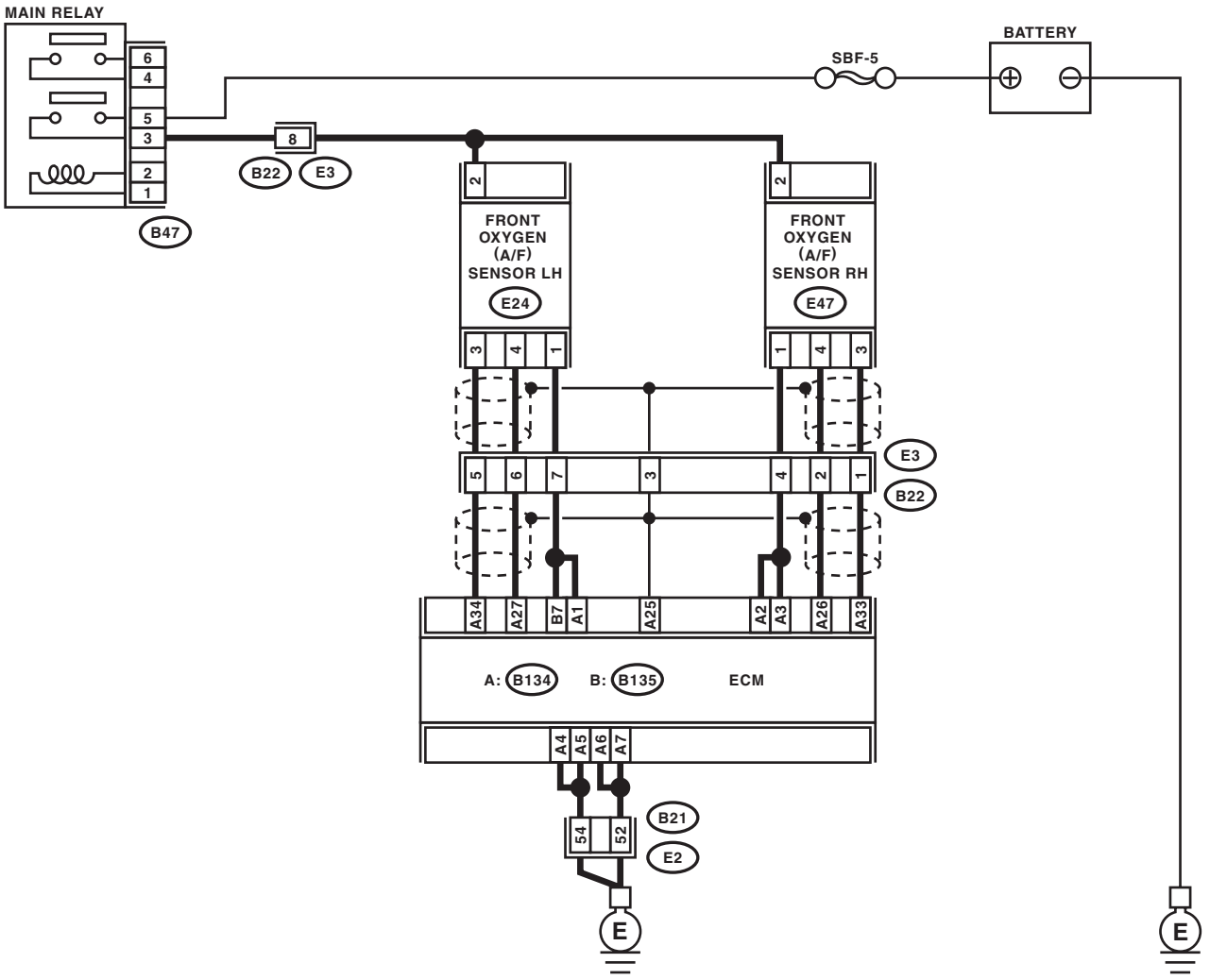

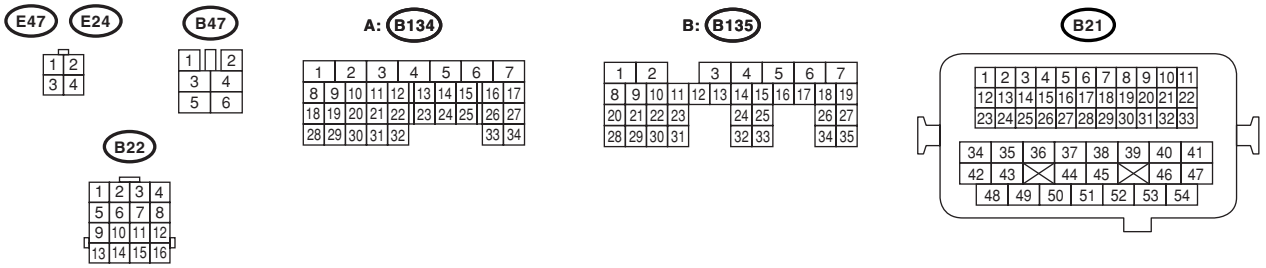

EN-03159

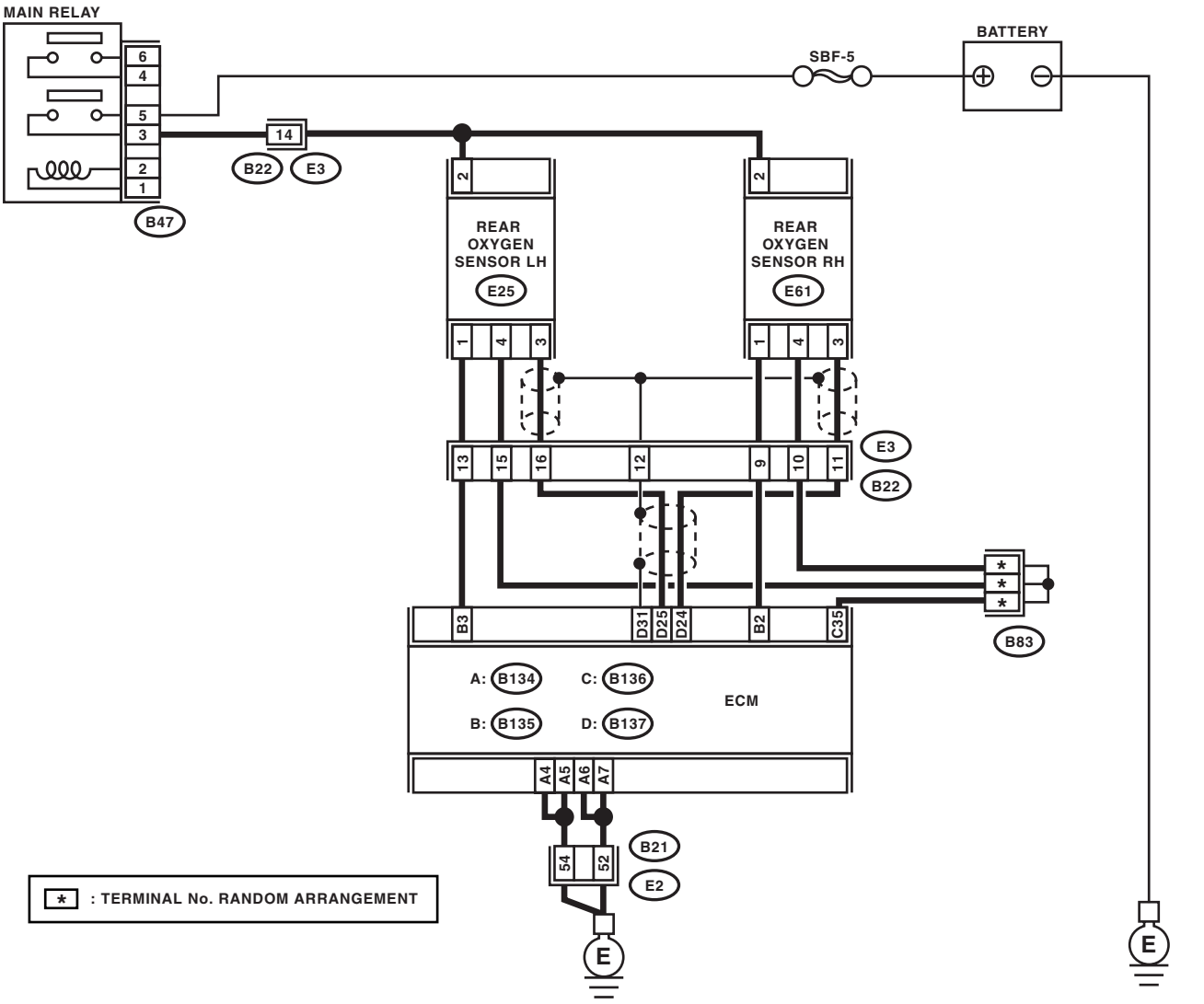
MAIN RELAY
BATTERY
SBF-5
B47
B22
E3
REAR OXYGEN SENSOR LH
E25
REAR OXYGEN SENSOR RH
E61
B83
A: B134
C: B136
B: B135
D: B137
ECM
B21
E2
* : TERMINAL No. RANDOM ARRANGEMENT

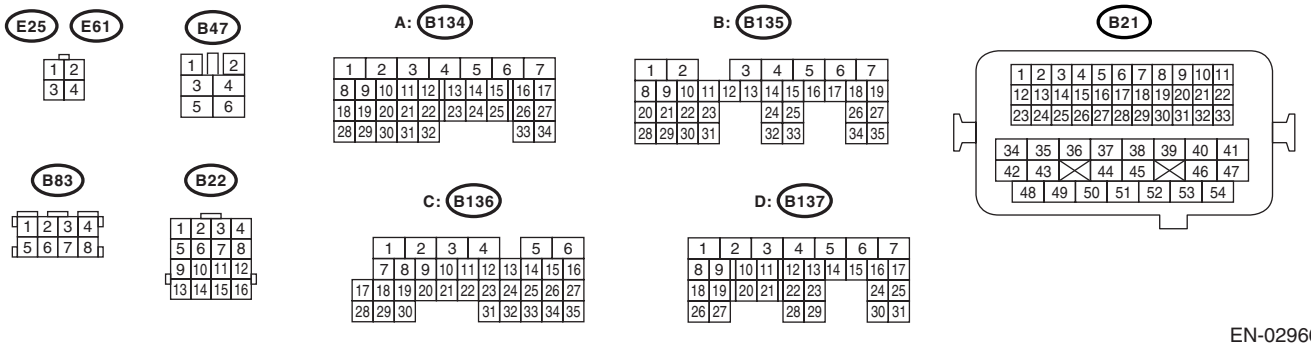
E25
E61
B47
A: B134
B: B135
B21
B83
B22
C: B136
D: B137

EN-02966

	Step	Check	Yes	No
1	**CHECK FOR ANY OTHER DTC ON DISPLAY.**	Is any other DTC displayed?	Inspect the relevant DTC using "List of Diagnostic Trouble Code (DTC)". <Ref. to EN(H6DO)(diag)-71, List of Diagnostic Trouble Code (DTC).>	Go to step **2.**
2	**CHECK FRONT OXYGEN (A/F) SENSOR DATA.** 1) Start engine. 2) While observing the Subaru Select Monitor or general scan tool screen, warm-up the engine until coolant temperature is above 75°C (167°F). If the engine is already warmed-up, operate at idle speed for at least 1 minute. 3) Read data of front oxygen (A/F) sensor signal using Subaru Select Monitor or general scan tool. NOTE: • Subaru Select Monitor For detailed operation procedure, refer to the "READ CURRENT DATA FOR ENGINE". <Ref. to EN(H6DO)(diag)-26, Subaru Select Monitor.> • General scan tool For detailed operation procedures, refer to the general scan tool instruction manual.	Is the measured value within 0.86 — 1.15 at idle?	Go to step **3.**	Go to step **4.**
3	**CHECK REAR OXYGEN SENSOR SIGNAL.** 1) Race engine at speeds from idling to 5,000 rpm for a total of 5 cycles. NOTE: To increase engine speed to 5,000 rpm, slowly depress accelerator pedal, taking approximately 5 seconds, and quickly release accelerator pedal to decrease engine speed. 2) Operate the LED operation mode for engine. NOTE: • Subaru Select Monitor For detailed operation procedure, refer to the "LED OPERATION MODE FOR ENGINE". <Ref. to EN(H6DO)(diag)-26, Subaru Select Monitor.>	Does the LED of {Rear O2 Rich Signal} blink?	Check front oxygen (A/F) sensor circuit.	Check rear oxygen sensor circuit. <Ref. to FU(H6DO)-32, Rear Oxygen Sensor.>
4	**CHECK EXHAUST SYSTEM.** Check exhaust system parts. NOTE: Check the following items. • Loose installation of portions • Damage (crack, hole etc.) of parts • Looseness of front oxygen (A/F) sensor • Looseness and ill fitting of parts between front oxygen (A/F) sensor and rear oxygen sensor	Is there any fault in exhaust system?	Repair or replace faulty parts.	Go to step **5.**
5	**CHECK AIR INTAKE SYSTEM.**	Are there holes, loose bolts or disconnection of hose on air intake system?	Repair the air intake system.	Go to step **6.**

	Step	Check	Yes	No
6	**CHECK FUEL PRESSURE.** **Warning:** **• Place "NO FIRE" signs near the working area.** **• Be careful not to spill fuel on the floor.** Measure the fuel pressure while disconnecting pressure regulator vacuum hose from intake manifold. <Ref. to ME(H6DO)-27, INSPECTION, Fuel Pressure.> **Warning:** **Before removing the fuel pressure gauge, release fuel pressure.**	Is the measured value 333 — 363 kPa (3.4 — 3.7 kg/cm^2, 48 — 53 psi)?	Go to step **7.**	Repair the following items. Fuel pressure too high: • Clogged fuel line or bent hose Fuel pressure too low: • Improper fuel pump discharge • Clogged fuel supply line
7	**CHECK FUEL PRESSURE.** After connecting the pressure regulator vacuum hose, measure fuel pressure. <Ref. to ME(H6DO)-27, INSPECTION, Fuel Pressure.> **Warning:** **Before removing the fuel pressure gauge, release fuel pressure.** NOTE: If out of specification as measured at this step, check or replace the pressure regulator and pressure regulator vacuum hose.	Is the measured value 279 — 309 kPa (2.85 — 3.15 kg/cm^2, 40 — 45 psi)?	Go to step **8.**	Repair the following items. Fuel pressure too high: • Faulty pressure regulator • Clogged fuel line or bent hose Fuel pressure too low: • Faulty pressure regulator • Improper fuel pump discharge • Clogged fuel supply line
8	**CHECK ENGINE COOLANT TEMPERATURE SENSOR.** 1) Start the engine and warm-up completely. 2) Read the data of engine coolant temperature sensor signal using Subaru Select Monitor or general scan tool. NOTE: • Subaru Select Monitor For detailed operation procedure, refer to the "READ CURRENT DATA FOR ENGINE". <Ref. to EN(H6DO)(diag)-26, Subaru Select Monitor.> • General scan tool For detailed operation procedures, refer to the general scan tool instruction manual.	Is the temperature more than 60°C (140°F)?	Go to step **9.**	Replace the engine coolant temperature sensor. <Ref. to FU(H6DO)-19, Engine Coolant Temperature Sensor.>

	Step	Check	Yes	No
9	**CHECK MASS AIR FLOW AND INTAKE AIR TEMPERATURE.** 1) Start the engine and warm-up engine until coolant temperature is greater than 60°C (140°F). 2) Place the shift lever in neutral position. 3) Turn the A/C switch to OFF. 4) Turn all accessory switches to OFF. 5) Read the data of mass air flow and intake air temperature sensor signal using Subaru Select Monitor or general scan tool. NOTE: • Subaru Select Monitor For detailed operation procedure, refer to the "READ CURRENT DATA FOR ENGINE". <Ref. to EN(H6DO)(diag)-26, Subaru Select Monitor.> • General scan tool For detailed operation procedure, refer to the general scan tool instruction manual.	Is the measured value 3.1 — 4.3 g/s (0.41 — 0.57 lb/m)?	Go to step **10.**	Replace the mass air flow and intake air temperature sensor. <Ref. to FU(H6DO)-25, Mass Air Flow and Intake Air Temperature Sensor.>
10	**CHECK MASS AIR FLOW AND INTAKE AIR TEMPERATURE SENSOR.** 1) Start the engine and warm-up engine until coolant temperature is greater than 60°C (140°F). 2) Place the shift lever in neutral position. 3) Turn the A/C switch to OFF. 4) Turn all accessory switches to OFF. 5) Open the front hood. 6) Measure the ambient temperature. 7) Read the data of mass air flow and intake air temperature sensor signal using Subaru Select Monitor or general scan tool. NOTE: • Subaru Select Monitor For detailed operation procedure, refer to the "READ CURRENT DATA FOR ENGINE". <Ref. to EN(H6DO)(diag)-26, Subaru Select Monitor.> • General scan tool For detailed operation procedure, refer to the general scan tool instruction manual.	Subtract ambient temperature from intake air temperature. Is the obtained value −10°C — 50°C (−18°F — 90°F)?	Go to step **11.**	Check the mass air flow and intake air temperature sensor. <Ref. to FU(H6DO)-25, Mass Air Flow and Intake Air Temperature Sensor.>
11	**CHECK HARNESS BETWEEN ECM AND FRONT OXYGEN (A/F) SENSOR CONNECTOR.** 1) Turn the ignition switch to OFF. 2) Disconnect the connectors from ECM and front oxygen (A/F) sensor connector. 3) Measure the resistance of harness between ECM and front oxygen (A/F) sensor connector. ***Connector & terminal*** ***(B134) No. 27 — Chassis ground:*** ***(B134) No. 34 — Chassis ground:***	Is the resistance more than 1 MΩ?	Go to step **12.**	Repair ground short circuit in harness between ECM and front oxygen (A/F) sensor connector.

	Step	Check	Yes	No
12	**CHECK HARNESS BETWEEN ECM AND FRONT OXYGEN (A/F) SENSOR CONNECTOR.** 1) Turn the ignition switch to OFF. 2) Disconnect the connectors from front oxygen (A/F) sensor. 3) Measure the voltage of harness between ECM connector and chassis ground. ***Connector & terminal*** ***(B134) No. 27 (+) — Chassis ground (−):*** ***(B134) No. 34 (+) — Chassis ground (−):***	Is the voltage more than 8 V?	Go to step **13.**	Repair battery short circuit in harness between ECM and front oxygen (A/F) sensor connector.
13	**CHECK HARNESS BETWEEN ECM AND FRONT OXYGEN (A/F) SENSOR CONNECTOR.** 1) Turn the ignition switch to OFF. 2) Disconnect the connectors from ECM and front oxygen (A/F) sensor connector. 3) Measure the resistance of harness between ECM and front oxygen (A/F) sensor connector. ***Connector & terminal*** ***(B134) No. 27 — (E24) No. 4:*** ***(B134) No. 34 — (E24) No. 3:***	Is the resistance less than 1 Ω?	Go to step **14.**	Repair open circuit in harness between ECM and front oxygen (A/F) sensor connector.
14	**CHECK REAR OXYGEN SENSOR DATA.** 1) Warm-up the engine until engine coolant temperature is above 70°C (158°F), and keep the engine speed at 5,000 rpm. 2) Read the data of rear oxygen sensor signal using Subaru Select Monitor or general scan tool. NOTE: • Subaru Select Monitor For detailed operation procedure, refer to the "READ CURRENT DATA SHOWN ON DISPLAY FOR ENGINE". <Ref. to EN(H6DO)(diag)-26, Subaru Select Monitor.> • General scan tool For detailed operation procedure, refer to the general scan tool instruction manual.	Is the voltage more than 490 mV?	Go to step **17.**	Go to step **15.**
15	**CHECK HARNESS BETWEEN ECM AND REAR OXYGEN SENSOR CONNECTOR.** 1) Turn the ignition switch to OFF. 2) Disconnect the connector from ECM and rear oxygen sensor. 3) Measure the resistance in harness between ECM and rear oxygen sensor connector. ***Connector & terminal*** ***(B137) No. 25 — (E25) No. 3:*** ***(B136) No. 35 — (E25) No. 4:***	Is the resistance more than 3 Ω?	Repair the open circuit in harness between ECM and rear oxygen sensor connector.	Go to step **16.**

	Step	Check	Yes	No
16	**CHECK HARNESS BETWEEN REAR OXYGEN SENSOR AND ECM CONNECTOR.** 1) Turn the ignition switch to OFF. 2) Disconnect the connector from rear oxygen sensor. 3) Turn the ignition switch to ON. 4) Measure the voltage between rear oxygen sensor harness connector and chassis ground. ***Connector & terminal*** ***(E25) No. 3 (+) — Chassis ground (−):***	Is the voltage 0.2 — 0.5 V?	Replace the rear oxygen sensor. <Ref. to FU(H6DO)-32, Rear Oxygen Sensor.>	Repair the harness and connector. NOTE: In this case repair the following: • Open circuit in harness between rear oxygen sensor and ECM connector • Poor contact in rear oxygen sensor connector • Poor contact in ECM connector
17	**CHECK REAR OXYGEN SENSOR DATA.** 1) Warm-up the engine until engine coolant temperature is above 70°C (158°F), and lower the engine speed rapidly from 5,000 rpm. 2) Read the data of rear oxygen sensor signal using Subaru Select Monitor or general scan tool. NOTE: • Subaru Select Monitor For detailed operation procedure, refer to the "READ CURRENT DATA SHOWN ON DISPLAY FOR ENGINE". <Ref. to EN(H6DO)(diag)-26, Subaru Select Monitor.> • General scan tool For detailed operation procedure, refer to the general scan tool instruction manual.	Is the voltage less than 250 mV?	Go to step **18.**	Go to step **19.**
18	**CHECK FRONT OXYGEN (A/F) SENSOR AND REAR OXYGEN SENSOR DATA.** 1) Warm-up the engine until the engine coolant temperature exceeds 70°C (158°F), and leave it at idle for more than 5 minutes. 2) Read the data of rear oxygen sensor signal using Subaru Select Monitor or general scan tool. NOTE: • Subaru Select Monitor For detailed operation procedure, refer to the "READ CURRENT DATA SHOWN ON DISPLAY FOR ENGINE". <Ref. to EN(H6DO)(diag)-26, Subaru Select Monitor.> • General scan tool For detailed operation procedure, refer to the general scan tool instruction manual.	Does the voltage keep 0.8 V for more than 5 minutes?	Replace the front oxygen (A/F) sensor. <Ref. to FU(H6DO)-30, Front Oxygen (A/F) Sensor.>	Go to step **19.**
19	**CHECK HARNESS BETWEEN ECM AND REAR OXYGEN SENSOR CONNECTOR.** 1) Turn the ignition switch to OFF. 2) Disconnect the connector from ECM and rear oxygen sensor. 3) Measure the resistance in harness between ECM and rear oxygen sensor connector. ***Connector & terminal*** ***(B137) No. 25 — (E25) No. 3:*** ***(B136) No. 35 — (E25) No. 4:***	Is the resistance more than 3 Ω?	Repair the open circuit in harness between ECM and rear oxygen sensor connector.	Go to step **20.**

	Step	Check	Yes	No
20	**CHECK HARNESS BETWEEN REAR OXYGEN SENSOR AND ECM CONNECTOR.** 1) Turn the ignition switch to OFF. 2) Disconnect the connector from rear oxygen sensor. 3) Turn the ignition switch to ON. 4) Measure the voltage between rear oxygen sensor harness connector and chassis ground. ***Connector & terminal*** ***(E25) No. 3 (+) — Chassis ground (−):***	Is the voltage 0.2 — 0.5 V?	Replace the rear oxygen sensor. <Ref. to FU(H6DO)-32, Rear Oxygen Sensor.>	Repair the harness and connector. NOTE: In this case repair the following: • Open circuit in harness between rear oxygen sensor and ECM connector • Poor contact in rear oxygen sensor connector • Poor contact in ECM connector

DU:DTC P2101 THROTTLE ACTUATOR CONTROL MOTOR CIRCUIT RANGE/ PERFORMANCE

DTC DETECTING CONDITION:

- Detect as soon as malfunction occurs.
- GENERAL DESCRIPTION <Ref. to GD(H6DO)-208, DTC P2101 THROTTLE ACTUATOR CONTROL MOTOR CIRCUIT RANGE/PERFORMANCE, Diagnostic Trouble Code (DTC) Detecting Criteria.>

TROUBLE SYMPTOM:

- Erroneous idling
- Poor driving performance
- Engine stalls.

WIRING DIAGRAM:

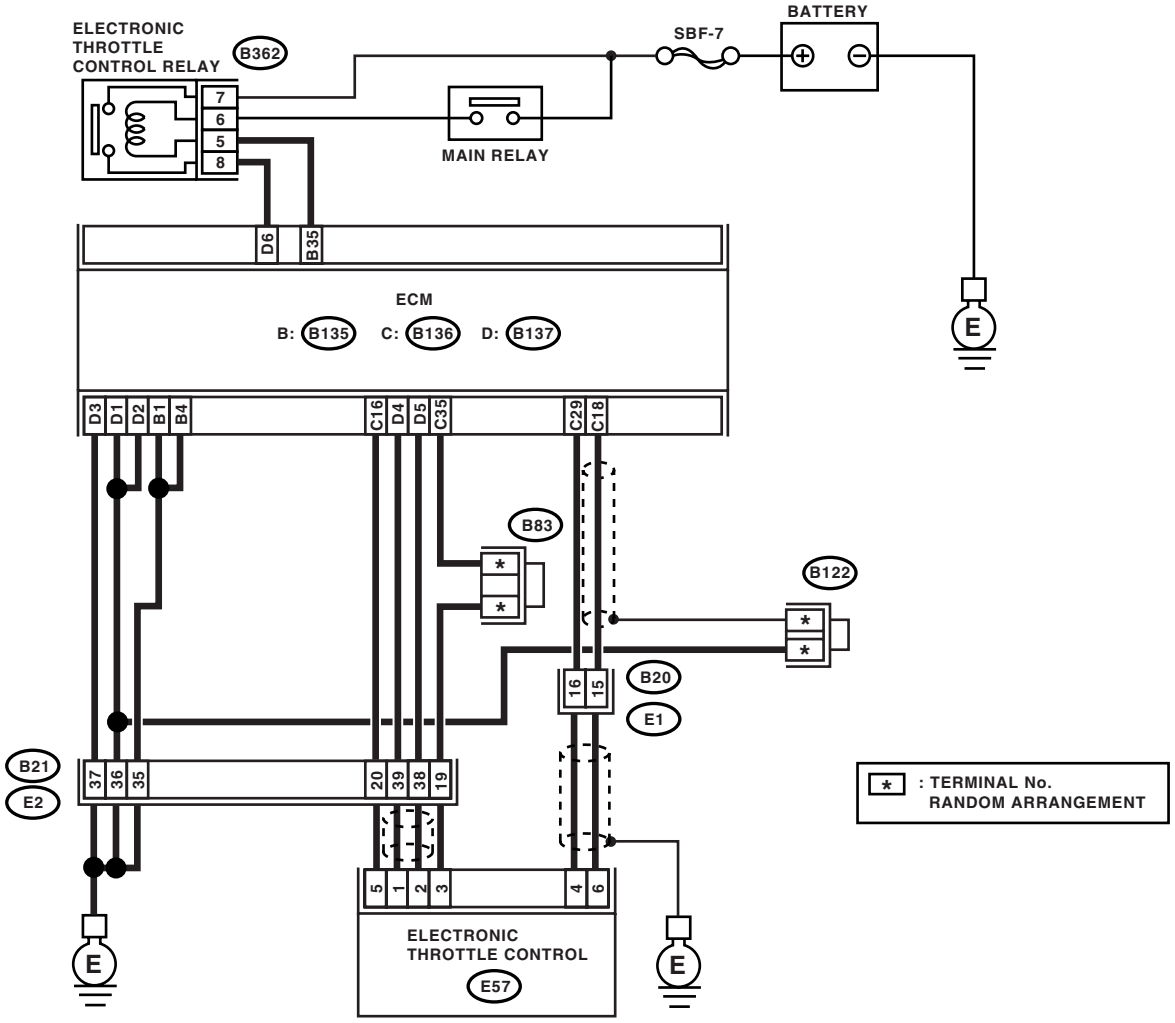

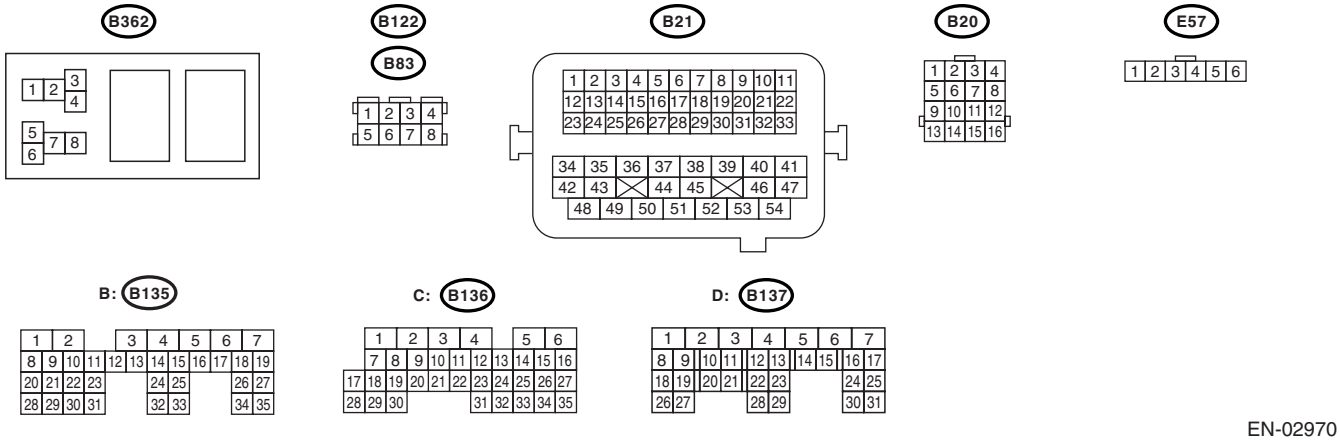

EN-02970

	Step	Check	Yes	No
1	**CHECK ELECTRONIC THROTTLE CONTROL RELAY.** 1) Turn the ignition switch to OFF. 2) Remove the electronic throttle control relay. 3) Connect the battery to electronic throttle control relay terminals No. 5 and No. 6. 4) Measure the resistance between electronic throttle control relay terminals. ***Terminals*** ***No. 7 — No. 8:***	Is the resistance less than 1 Ω?	Go to step **2.**	Replace the electronic throttle control relay.
2	**CHECK POWER SUPPLY OF ELECTRONIC THROTTLE CONTROL RELAY.** 1) Turn the ignition switch to ON. 2) Measure the voltage between electronic throttle control relay connector and chassis ground. ***Connector & terminal*** ***(B362) No. 7 (+) — Chassis ground (−):*** ***(B362) No. 6 (+) — Chassis ground (−):***	Is the voltage more than 10 V?	Go to step **3.**	Repair the open or ground short circuit of power supply circuit.
3	**CHECK HARNESS BETWEEN ECM AND ELECTRONIC THROTTLE CONTROL RELAY.** 1) Turn the ignition switch to OFF. 2) Disconnect the connector from ECM. 3) Turn the ignition switch to ON. 4) Measure the voltage between electronic throttle control relay connector and chassis ground. ***Connector & terminal*** ***(B362) No. 5 (+) — Chassis ground (−):***	Is the voltage more than 10 V?	Repair power supply short circuit in harness between ECM and electronic throttle control.	Go to step **4.**
4	**CHECK HARNESS BETWEEN ECM AND ELECTRONIC THROTTLE CONTROL RELAY.** 1) Turn the ignition switch to OFF. 2) Measure the resistance between electronic throttle control relay connector and chassis ground. ***Connector & terminal*** ***(B362) No. 5 — Chassis ground:*** ***(B362) No. 8 — Chassis ground:***	Is the resistance more than 1 MΩ?	Go to step **5.**	Repair the ground short circuit in harness between ECM and electronic throttle control relay.
5	**CHECK HARNESS BETWEEN ECM AND ELECTRONIC THROTTLE CONTROL RELAY.** Measure the resistance between ECM connector and electronic throttle control relay connector. ***Connector & terminal*** ***(B135) No. 35 — (B362) No. 5:*** ***(B137) No. 6 — (B362) No. 8:***	Is the resistance less than 1 Ω?	Go to step **6.**	Repair the open circuit in harness between ECM and electronic throttle control relay.
6	**CHECK SENSOR OUTPUT.** 1) Connect all the connectors. 2) Turn the ignition switch to ON. 3) Read the data of main throttle sensor signal using Subaru Select Monitor. NOTE: • Subaru Select Monitor For detailed operation procedure, refer to the “READ CURRENT DATA FOR ENGINE”. <Ref. to EN(H6DO)(diag)-26, Subaru Select Monitor.>	Is the voltage more than 0.4 V?	Go to step **7.**	Go to step **9.**

	Step	Check	Yes	No
7	**CHECK SENSOR OUTPUT.** Read the data of sub throttle sensor signal using Subaru Select Monitor. NOTE: • Subaru Select Monitor For detailed operation procedure, refer to the "READ CURRENT DATA FOR ENGINE". <Ref. to EN(H6DO)(diag)-26, Subaru Select Monitor.>	Is the voltage more than 0.8 V?	Go to step **8.**	Go to step **9.**
8	**CHECK POOR CONTACT.** Check the poor contact in connector between ECM and electronic throttle control.	Is there poor contact?	Repair the poor contact.	Go to step **13.**
9	**CHECK HARNESS BETWEEN ECM AND ELECTRONIC THROTTLE CONTROL.** 1) Turn the ignition switch to OFF. 2) Disconnect the connector from ECM. 3) Disconnect the connector from the electronic throttle control. 4) Measure the resistance between ECM connector and electronic throttle control connector. ***Connector & terminal*** ***(B136) No. 18 — (E57) No. 6:*** ***(B136) No. 29 — (E57) No. 4:*** ***(B136) No. 16 — (E57) No. 5:***	Is the resistance less than 1 Ω?	Go to step **10.**	Repair the open circuit of harness connector.
10	**CHECK HARNESS BETWEEN ECM AND ELECTRONIC THROTTLE CONTROL.** Measure the resistance between ECM connector and chassis ground. ***Connector & terminal*** ***(B136) No. 16 — Chassis ground:*** ***(B136) No. 18 — Chassis ground:*** ***(B136) No. 29 — Chassis ground:***	Is the resistance more than 1 MΩ?	Go to step **11.**	Repair the ground short circuit of harness.
11	**CHECK SENSOR POWER SUPPLY.** 1) Connect the ECM connector. 2) Turn the ignition switch to ON. 3) Measure the voltage between electronic throttle control connector and engine ground. ***Connector & terminal*** ***(E57) No. 5 (+) — Engine ground (−):***	Is the voltage 4.5 — 5.5 V?	Go to step **12.**	Repair the poor contact in ECM connector. Replace the ECM if defective. <Ref. to FU(H6DO)-34, Engine Control Module (ECM).>
12	**CHECK SHORT CIRCUIT IN ECM.** 1) Turn the ignition switch to OFF. 2) Measure the resistance between electronic throttle control connector and engine ground. ***Connector & terminal*** ***(E57) No. 6 — Engine ground:*** ***(E57) No. 4 — Engine ground:***	Is the resistance more than 10 Ω?	Go to step **13.**	Repair the poor contact in ECM connector. Replace the ECM if defective. <Ref. to FU(H6DO)-34, Engine Control Module (ECM).>
13	**CHECK SENSOR OUTPUT.** 1) Connect all the connectors. 2) Turn the ignition switch to ON. 3) Read the data of main throttle sensor signal using Subaru Select Monitor. NOTE: • Subaru Select Monitor For detailed operation procedure, refer to the "READ CURRENT DATA FOR ENGINE". <Ref. to EN(H6DO)(diag)-26, Subaru Select Monitor.>	Is the voltage 4.63 V?	Go to step **14.**	Go to step **16.**

	Step	Check	Yes	No
14	**CHECK SENSOR OUTPUT.** Read the data of sub throttle sensor signal using Subaru Select Monitor. NOTE: • Subaru Select Monitor For detailed operation procedure, refer to the "READ CURRENT DATA FOR ENGINE". <Ref. to EN(H6DO)(diag)-26, Subaru Select Monitor.>	Is the voltage 4.73 V?	Go to step **15.**	Go to step **16.**
15	**CHECK POOR CONTACT.** Check the poor contact in connector between ECM and electronic throttle control.	Is there poor contact?	Repair the poor contact.	Go to step **21.**
16	**CHECK HARNESS BETWEEN ECM AND ELECTRONIC THROTTLE CONTROL.** 1) Turn the ignition switch to OFF. 2) Disconnect the connector from ECM. 3) Disconnect the connector from the electronic throttle control. 4) Measure the resistance between ECM connector and electronic throttle control connector. ***Connector & terminal*** ***(B136) No. 35 — (E57) No. 3:*** ***(B136) No. 18 — (E57) No. 6:*** ***(B136) No. 29 — (E57) No. 4:***	Is the resistance less than 1 Ω?	Go to step **17.**	Repair the open circuit of harness connector.
17	**CHECK HARNESS BETWEEN ECM AND ELECTRONIC THROTTLE CONTROL.** 1) Connect the ECM connector. 2) Measure the resistance between electronic throttle control connector and engine ground. ***Connector & terminal*** ***(E57) No. 3 — Engine ground:***	Is the resistance less than 5 Ω?	Go to step **18.**	Repair the poor contact in ECM connector. Replace the ECM if defective. <Ref. to FU(H6DO)-34, Engine Control Module (ECM).>
18	**CHECK HARNESS BETWEEN ECM AND ELECTRONIC THROTTLE CONTROL.** 1) Turn the ignition switch to ON. 2) Measure the voltage between electronic throttle control connector and engine ground. ***Connector & terminal*** ***(E57) No. 5 (+) — Engine ground (−):***	Is the voltage less than 10 V?	Go to step **19.**	Repair the battery short circuit in harness between ECM connector and electronic throttle control connector.
19	**CHECK HARNESS BETWEEN ECM AND ELECTRONIC THROTTLE CONTROL.** Measure the voltage between electronic throttle control connector and engine ground. ***Connector & terminal*** ***(E57) No. 6 (+) — Engine ground (−):*** ***(E57) No. 4 (+) — Engine ground (−):***	Is the voltage less than 10 V?	Go to step **20.**	Repair the short circuit in harness between ECM connector and electronic throttle control connector.
20	**CHECK HARNESS BETWEEN ECM AND ELECTRONIC THROTTLE CONTROL.** 1) Turn the ignition switch to OFF. 2) Remove the ECM. 3) Measure the resistance between ECM connectors. ***Connector & terminal*** ***(B136) No. 18 — (B136) No. 16:*** ***(B136) No. 29 — (B136) No. 16:***	Is the resistance more than 1 MΩ?	Go to step **21.**	Repair the short circuit to sensor power supply.

	Step	Check	Yes	No
21	**CHECK SENSOR OUTPUT.** 1) Turn the ignition switch to OFF. 2) Connect the connectors except of the electronic throttle control relay. 3) Turn the ignition switch to ON. 4) Read the data of main throttle sensor signal using Subaru Select Monitor. NOTE: • Subaru Select Monitor For detailed operation procedure, refer to the "READ CURRENT DATA FOR ENGINE". <Ref. to EN(H6DO)(diag)-26, Subaru Select Monitor.>	Is the voltage 0.81 — 0.87 V?	Go to step **22.**	Repair the poor contact in electronic throttle control connector. Replace the electronic throttle control if defective.
22	**CHECK SENSOR OUTPUT.** Read the data of sub throttle sensor signal using Subaru Select Monitor. NOTE: • Subaru Select Monitor For detailed operation procedure, refer to the "READ CURRENT DATA FOR ENGINE". <Ref. to EN(H6DO)(diag)-26, Subaru Select Monitor.>	Is the voltage 1.64 — 1.70 V?	Go to step **23.**	Repair the poor contact in ECM connector. Replace the electronic throttle control if defective.
23	**CHECK HARNESS BETWEEN ECM AND ELECTRONIC THROTTLE CONTROL MOTOR.** 1) Turn the ignition switch to OFF. 2) Disconnect the connector from ECM. 3) Disconnect the connector from the electronic throttle control. 4) Measure the resistance between ECM connector and electronic throttle control connector. ***Connector & terminal*** ***(B137) No. 5 — (E57) No. 2:*** ***(B137) No. 4 — (E57) No. 1:***	Is the resistance less than 1 Ω?	Go to step **24.**	Repair the open circuit of harness connector.
24	**CHECK HARNESS BETWEEN ECM AND ELECTRONIC THROTTLE CONTROL MOTOR.** 1) Connect the connector to ECM. 2) Turn the ignition switch to ON. 3) Measure the voltage between electronic throttle control connector and engine ground. ***Connector & terminal*** ***(E57) No. 2 (+) — Engine ground (−):*** ***(E57) No. 1 (+) — Engine ground (−):***	Is the voltage less than 5 V?	Go to step **25.**	Repair power supply short circuit in harness between ECM and electronic throttle control.
25	**CHECK HARNESS BETWEEN ECM AND ELECTRONIC THROTTLE CONTROL MOTOR.** 1) Turn the ignition switch to OFF. 2) Disconnect the connector from ECM. 3) Measure the resistance between electronic throttle control connector and engine ground. ***Connector & terminal*** ***(E57) No. 2 — Engine ground:*** ***(E57) No. 1 — Engine ground:***	Is the resistance more than 1 MΩ?	Go to step **26.**	Repair the short circuit of harness.
26	**CHECK ELECTRONIC THROTTLE CONTROL MOTOR HARNESS.** Measure the resistance between electronic throttle control connector terminals. ***Connector & terminal*** ***(E57) No. 2 — (E57) No. 1:***	Is the resistance more than 1 MΩ?	Go to step **27.**	Repair the short circuit of harness.

	Step	Check	Yes	No
27	**CHECK ELECTRONIC THROTTLE CONTROL GROUND CIRCUIT.** Measure the resistance between ECM connector and chassis ground. ***Connector & terminal*** ***(B137) No. 3 — Chassis ground:***	Is the resistance less than 10 Ω?	Go to step **28.**	Repair the open circuit of harness.
28	**CHECK ELECTRONIC THROTTLE CONTROL.** Measure the resistance between electronic throttle control terminals. ***Terminals*** ***No. 1 — No. 2:***	Is the resistance less than 5 Ω?	Go to step **29.**	Repair the electronic throttle control.
29	**CHECK ELECTRONIC THROTTLE CONTROL.** Move the throttle valve to the fully open and fully closed positions with fingers Check the valve returns to the specified position when releasing fingers.	Does the valve return to the specified position? Standard value: 3 mm (0.12 in) from fully closed position	Repair the poor contact in ECM connector. Replace the ECM if defective. <Ref. to FU(H6DO)-34, Engine Control Module (ECM).>	Repair the electronic throttle control.

DV:DTC P2102 THROTTLE ACTUATOR CONTROL MOTOR CIRCUIT LOW

DTC DETECTING CONDITION:

- Detect as soon as malfunction occurs.
- GENERAL DESCRIPTION <Ref. to GD(H6DO)-210, DTC P2102 THROTTLE ACTUATOR CONTROL MOTOR CIRCUIT LOW, Diagnostic Trouble Code (DTC) Detecting Criteria.>

TROUBLE SYMPTOM:

- Erroneous idling
- Poor driving performance
- Engine stalls.

WIRING DIAGRAM:

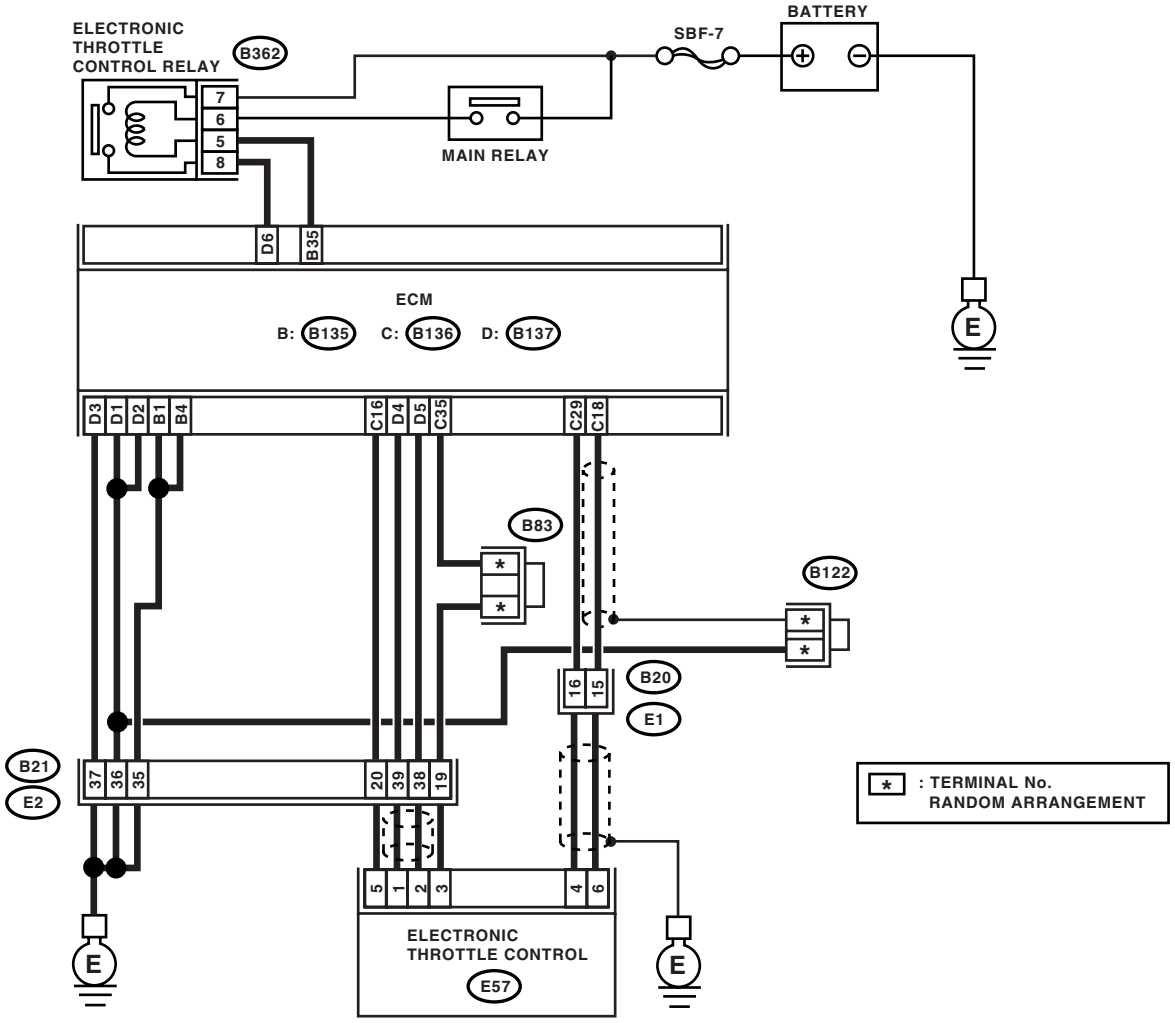

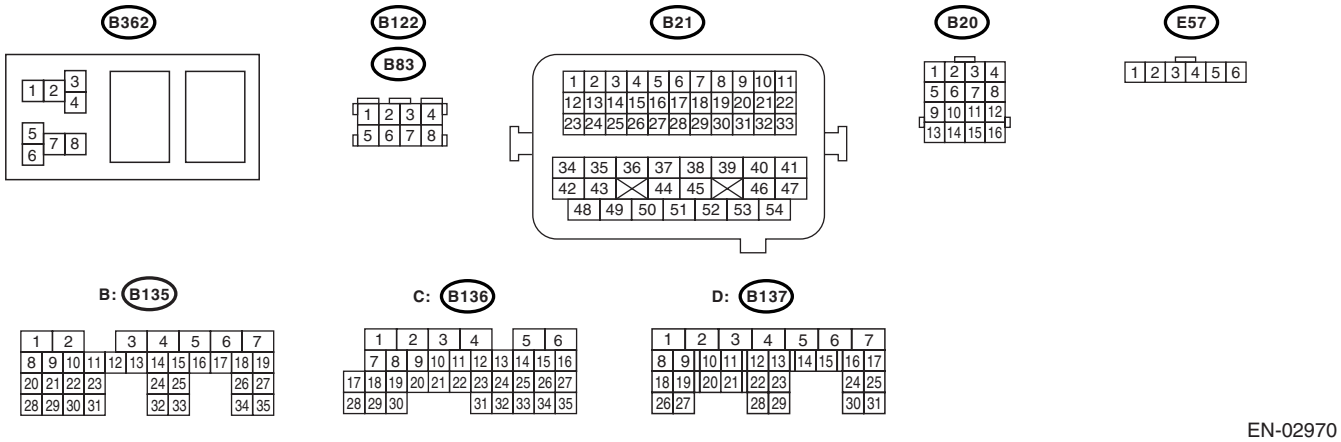

EN-02970

	Step	Check	Yes	No
1	**CHECK ELECTRONIC THROTTLE CONTROL RELAY.** 1) Turn the ignition switch to OFF. 2) Remove the electronic throttle control relay. 3) Connect the battery to electronic throttle control relay terminals No. 5 and No. 6. 4) Measure the resistance between electronic throttle control relay terminals. ***Terminals*** ***No. 7 — No. 8:***	Is the resistance less than 1 Ω?	Go to step **2.**	Replace the electronic throttle control relay.
2	**CHECK POWER SUPPLY OF ELECTRONIC THROTTLE CONTROL RELAY.** 1) Turn the ignition switch to ON. 2) Measure the voltage between electronic throttle control relay connector and chassis ground. ***Connector & terminal*** ***(B362) No. 7 (+) — Chassis ground (−):*** ***(B362) No. 6 (+) — Chassis ground (−):***	Is the voltage more than 10 V?	Go to step **3.**	Repair the open or ground short circuit of power supply circuit.
3	**CHECK HARNESS BETWEEN ECM AND ELECTRONIC THROTTLE CONTROL RELAY.** 1) Turn the ignition switch to OFF. 2) Disconnect the connector from ECM. 3) Turn the ignition switch to ON. 4) Measure the voltage between electronic throttle control relay connector and chassis ground. ***Connector & terminal*** ***(B362) No. 5 (+) — Chassis ground (−):***	Is the voltage more than 10 V?	Repair power supply short circuit in harness between ECM and electronic throttle control relay.	Go to step **4.**
4	**CHECK HARNESS BETWEEN ECM AND ELECTRONIC THROTTLE CONTROL RELAY.** 1) Turn the ignition switch to OFF. 2) Measure the resistance between electronic throttle control relay connector and chassis ground. ***Connector & terminal*** ***(B362) No. 5 — Chassis ground:*** ***(B362) No. 8 — Chassis ground:***	Is the resistance more than 1 MΩ?	Go to step **5.**	Repair the ground short circuit in harness between ECM and electronic throttle control relay.
5	**CHECK HARNESS BETWEEN ECM AND ELECTRONIC THROTTLE CONTROL RELAY.** Measure the resistance between ECM connector and electronic throttle control relay connector. ***Connector & terminal*** ***(B135) No. 35 — (B362) No. 5:*** ***(B137) No. 6 — (B362) No. 8:***	Is the resistance less than 1 Ω?	Repair the poor contact in ECM connector. Replace the ECM if defective. <Ref. to FU(H6DO)-34, Engine Control Module (ECM).>	Repair the open circuit in harness between ECM and electronic throttle control relay.

DW:DTC P2103 THROTTLE ACTUATOR CONTROL MOTOR CIRCUIT HIGH

DTC DETECTING CONDITION:

- Detect as soon as malfunction occurs.
- GENERAL DESCRIPTION <Ref. to GD(H6DO)-212, DTC P2103 THROTTLE ACTUATOR CONTROL MOTOR CIRCUIT HIGH, Diagnostic Trouble Code (DTC) Detecting Criteria.>

WIRING DIAGRAM:

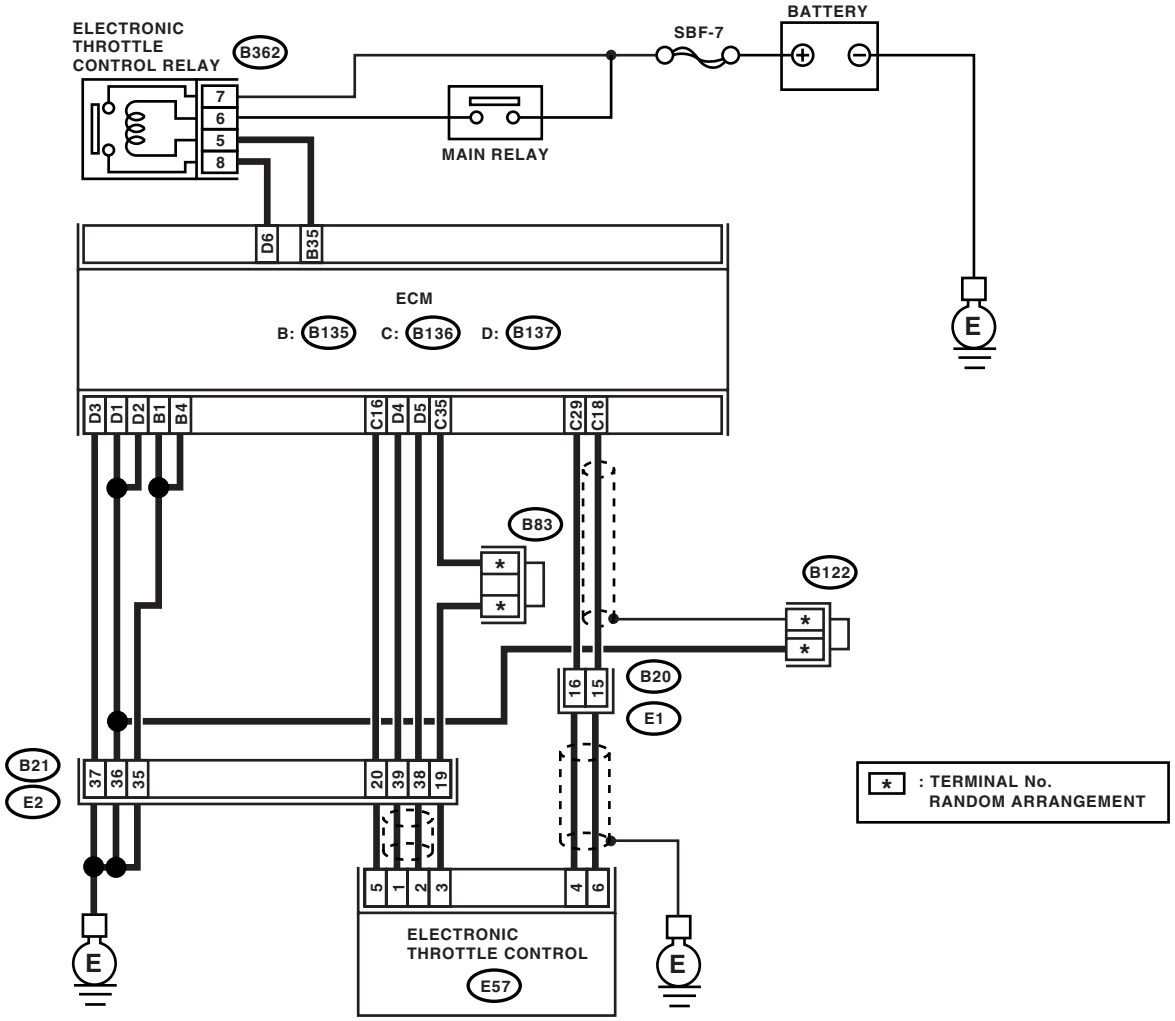

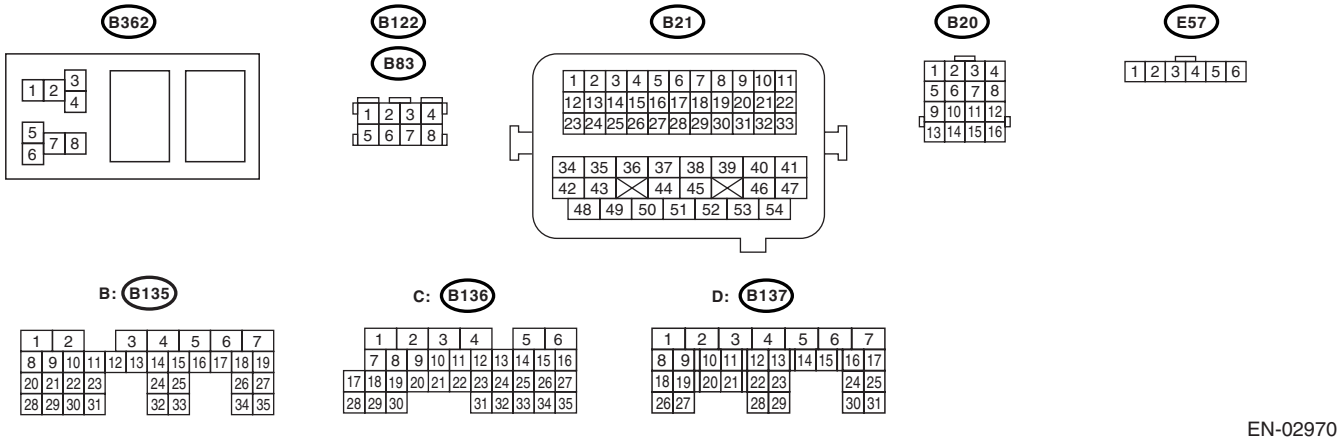

EN-02970

	Step	Check	Yes	No
1	**CHECK ELECTRONIC THROTTLE CONTROL RELAY.** 1) Turn the ignition switch to OFF. 2) Remove the electronic throttle control relay. 3) Measure the resistance between electronic throttle control relay terminals. ***Terminals*** ***No. 7 — No. 8:***	Is the resistance more than 1 MΩ?	Go to step **2.**	Replace the electronic throttle control relay.
2	**CHECK POWER SUPPLY SHORT CIRCUIT OF ELECTRONIC THROTTLE CONTROL RELAY.** 1) Turn the ignition switch to ON. 2) Measure the voltage between electronic throttle control relay connector and chassis ground. ***Connector & terminal*** ***(B362) No. 8 (+) — Chassis ground (−):***	Is the voltage more than 5 V?	Go to step **3.**	Repair power supply short circuit in harness between ECM and electronic throttle control relay.
3	**CHECK HARNESS BETWEEN ECM AND ELECTRONIC THROTTLE CONTROL RELAY.** 1) Turn the ignition switch to OFF. 2) Disconnect the connector from ECM. 3) Measure the resistance between ECM connector and chassis ground. ***Connector & terminal*** ***(B135) No. 35 — Chassis ground:***	Is the resistance more than 1 MΩ?	Repair the poor contact in ECM connector. Replace the ECM if defective. <Ref. to FU(H6DO)-34, Engine Control Module (ECM).>	Repair the ground short circuit in harness between ECM and electronic throttle control relay.

DX:DTC P2109 THROTTLE/PEDAL POSITION SENSOR A MINIMUM STOP PERFORMANCE

NOTE:
For diagnostic procedure, refer to DTC P2101. <Ref. to EN(H6DO)(diag)-339, DTC P2101 THROTTLE ACTUATOR CONTROL MOTOR CIRCUIT RANGE/PERFORMANCE, Diagnostic Procedure with Diagnostic Trouble Code (DTC).>

DY:DTC P2122 THROTTLE/PEDAL POSITION SENSOR/SWITCH “D” CIRCUIT LOW INPUT

DTC DETECTING CONDITION:

- Detect as soon as malfunction occurs.
- GENERAL DESCRIPTION <Ref. to GD(H6DO)-216, DTC P2122 THROTTLE/PEDAL POSITION SENSOR/SWITCH “D” CIRCUIT LOW INPUT, Diagnostic Trouble Code (DTC) Detecting Criteria.>

TROUBLE SYMPTOM:

- Erroneous idling
- Poor driving performance

WIRING DIAGRAM:

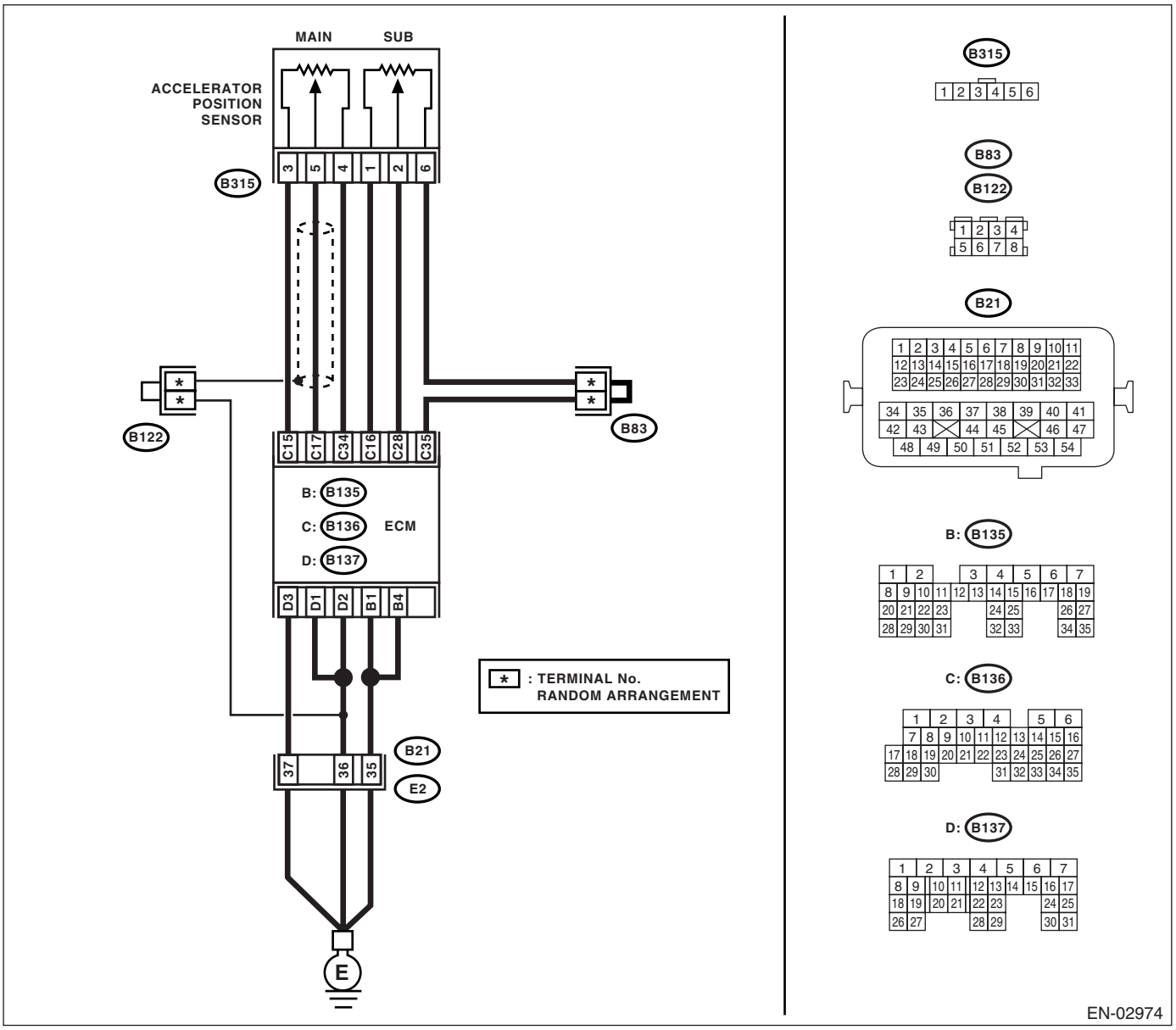

	Step	Check	Yes	No
1	**CHECK ACCELERATOR PEDAL POSITION SENSOR OUTPUT.** 1) Turn the ignition switch to ON. 2) Read the data of main accelerator pedal position sensor signal using Subaru Select Monitor. NOTE: • Subaru Select Monitor For detailed operation procedure, refer to the "READ CURRENT DATA FOR ENGINE". <Ref. to EN(H6DO)(diag)-26, Subaru Select Monitor.>	Is the voltage more than 0.4 V?	Go to step **2.**	Go to step **3.**
2	**CHECK POOR CONTACT.** Check poor contact in connector between ECM and accelerator pedal position sensor.	Is there poor contact?	Repair the poor contact.	Temporary poor contact occurred, but it is normal at present.
3	**CHECK HARNESS BETWEEN ECM AND ACCELERATOR PEDAL POSITION SENSOR.** 1) Turn the ignition switch to OFF. 2) Disconnect the connector from ECM. 3) Disconnect the connector from the accelerator pedal position sensor. 4) Measure the resistance between ECM connector and accelerator pedal position sensor connector. ***Connector & terminal*** ***(B136) No. 17 — (B315) No. 5:*** ***(B136) No. 15 — (B315) No. 3:***	Is the resistance less than 1 Ω?	Go to step **4.**	Repair the open circuit of harness connector.
4	**CHECK HARNESS BETWEEN ECM AND ACCELERATOR PEDAL POSITION SENSOR.** Measure the resistance between ECM connector and chassis ground. ***Connector & terminal*** ***(B136) No. 17 — Chassis ground:*** ***(B136) No. 15 — Chassis ground:***	Is the resistance more than 1 MΩ?	Go to step **5.**	Repair the chassis short circuit of harness.
5	**CHECK POWER SUPPLY OF ACCELERATOR PEDAL POSITION SENSOR.** 1) Connect the ECM connector. 2) Turn the ignition switch to ON. 3) Measure the voltage between accelerator pedal position sensor connector and engine ground. ***Connector & terminal*** ***(B315) No. 3 (+) — Engine ground (−):***	Is the voltage 4.5 — 5.5 V?	Go to step **6.**	Repair the poor contact in ECM connector. Replace the ECM if defective. <Ref. to FU(H6DO)-34, Engine Control Module (ECM).>
6	**CHECK ACCELERATOR PEDAL POSITION SENSOR.** Measure the resistance of accelerator pedal position sensor. ***Terminals*** ***No. 3 — No. 4:***	Is the resistance 1.2 — 4.8 kΩ?	Go to step **7.**	Replace the accelerator pedal position sensor.
7	**CHECK ACCELERATOR PEDAL POSITION SENSOR.** Measure the resistance of accelerator pedal position sensor. ***Terminals*** ***No. 5 — No. 4:*** Check the measured value is within the specification without depressing the accelerator pedal.	Is the resistance 0.2 — 1.0 kΩ?	Go to step **8.**	Replace the accelerator pedal position sensor.

	Step	Check	Yes	No
8	**CHECK ACCELERATOR PEDAL POSITION SENSOR.** Measure the resistance of accelerator pedal position sensor. ***Terminals*** ***No. 5 — No. 4:*** Check the measured value is within the specification with the accelerator pedal depressed.	Is the resistance 0.5 — 2.5 kΩ?	Repair the poor contact in ECM connector. Replace the ECM if defective. <Ref. to FU(H6DO)-34, Engine Control Module (ECM).>	Replace the accelerator pedal position sensor.

DZ:DTC P2123 THROTTLE/PEDAL POSITION SENSOR/SWITCH “D” CIRCUIT HIGH INPUT

DTC DETECTING CONDITION:

- Detect as soon as malfunction occurs.
- GENERAL DESCRIPTION <Ref. to GD(H6DO)-218, DTC P2123 THROTTLE/PEDAL POSITION SENSOR/SWITCH “D” CIRCUIT HIGH INPUT, Diagnostic Trouble Code (DTC) Detecting Criteria.>

TROUBLE SYMPTOM:

- Erroneous idling
- Poor driving performance

WIRING DIAGRAM:

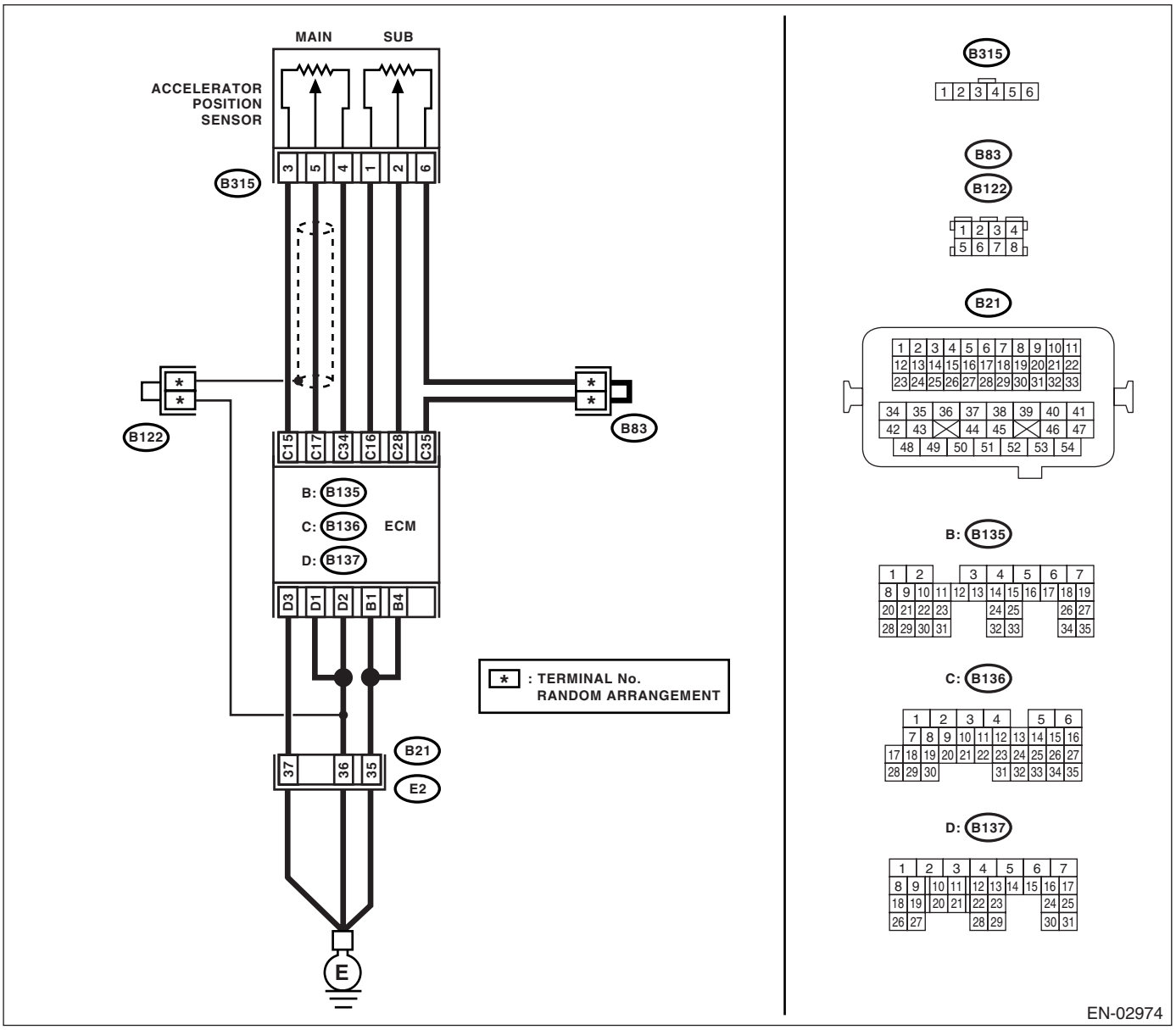

	Step	Check	Yes	No
1	**CHECK ACCELERATOR PEDAL POSITION SENSOR OUTPUT.** 1) Turn the ignition switch to ON. 2) Read the data of main accelerator pedal position sensor signal using Subaru Select Monitor. NOTE: • Subaru Select Monitor For detailed operation procedure, refer to the "READ CURRENT DATA FOR ENGINE". <Ref. to EN(H6DO)(diag)-26, Subaru Select Monitor.>	Is the voltage less than 4.8 V?	Go to step **2.**	Go to step **3.**
2	**CHECK POOR CONTACT.** Check poor contact in connector between ECM and accelerator pedal position sensor.	Is there poor contact?	Repair the poor contact.	Temporary poor contact occurred, but it is normal at present.
3	**CHECK HARNESS BETWEEN ECM AND ACCELERATOR PEDAL POSITION SENSOR.** 1) Turn the ignition switch to OFF. 2) Disconnect the connector from ECM. 3) Disconnect the connector from the accelerator pedal position sensor. 4) Measure the resistance between ECM connector and accelerator pedal position sensor connector. ***Connector & terminal*** ***(B136) No. 34 — (B315) No. 4:***	Is the resistance less than 1 Ω?	Go to step **4.**	Repair the open circuit of harness connector.
4	**CHECK HARNESS BETWEEN ECM AND ACCELERATOR PEDAL POSITION SENSOR.** 1) Connect the ECM connector. 2) Measure the resistance between accelerator pedal position sensor connector and engine ground. ***Connector & terminal*** ***(B315) No. 4 — Engine ground:***	Is the resistance less than 5 Ω?	Go to step **5.**	Repair the poor contact in ECM connector. Replace the ECM if defective. <Ref. to FU(H6DO)-34, Engine Control Module (ECM).>
5	**CHECK HARNESS BETWEEN ECM AND ACCELERATOR PEDAL POSITION SENSOR.** 1) Connect the ECM connector. 2) Turn the ignition switch to ON. 3) Measure the voltage between accelerator pedal position sensor connector and engine ground. ***Connector & terminal*** ***(B315) No. 5 (+) — Engine ground (−):***	Is the voltage less than 6 V?	Go to step **6.**	Repair the battery short circuit in harness between ECM connector and accelerator pedal position sensor connector.
6	**CHECK HARNESS BETWEEN ECM AND ACCELERATOR PEDAL POSITION SENSOR.** 1) Turn the ignition switch to OFF. 2) Disconnect the connector from ECM. 3) Measure the resistance between ECM connectors. ***Connector & terminal*** ***(B136) No. 17 — (B136) No. 15:*** ***(B136) No. 17 — (B136) No. 16:***	Is the resistance more than 1 MΩ?	Repair the poor contact in accelerator pedal position sensor connector. Replace the accelerator pedal position sensor if defective.	Repair the short circuit to sensor power supply.

EA:DTC P2127 THROTTLE/PEDAL POSITION SENSOR/SWITCH “E” CIRCUIT LOW INPUT

DTC DETECTING CONDITION:

- Detect as soon as malfunction occurs.
- GENERAL DESCRIPTION <Ref. to GD(H6DO)-220, DTC P2127 THROTTLE/PEDAL POSITION SENSOR/SWITCH “E” CIRCUIT LOW INPUT, Diagnostic Trouble Code (DTC) Detecting Criteria.>

TROUBLE SYMPTOM:

- Erroneous idling
- Poor driving performance

WIRING DIAGRAM:

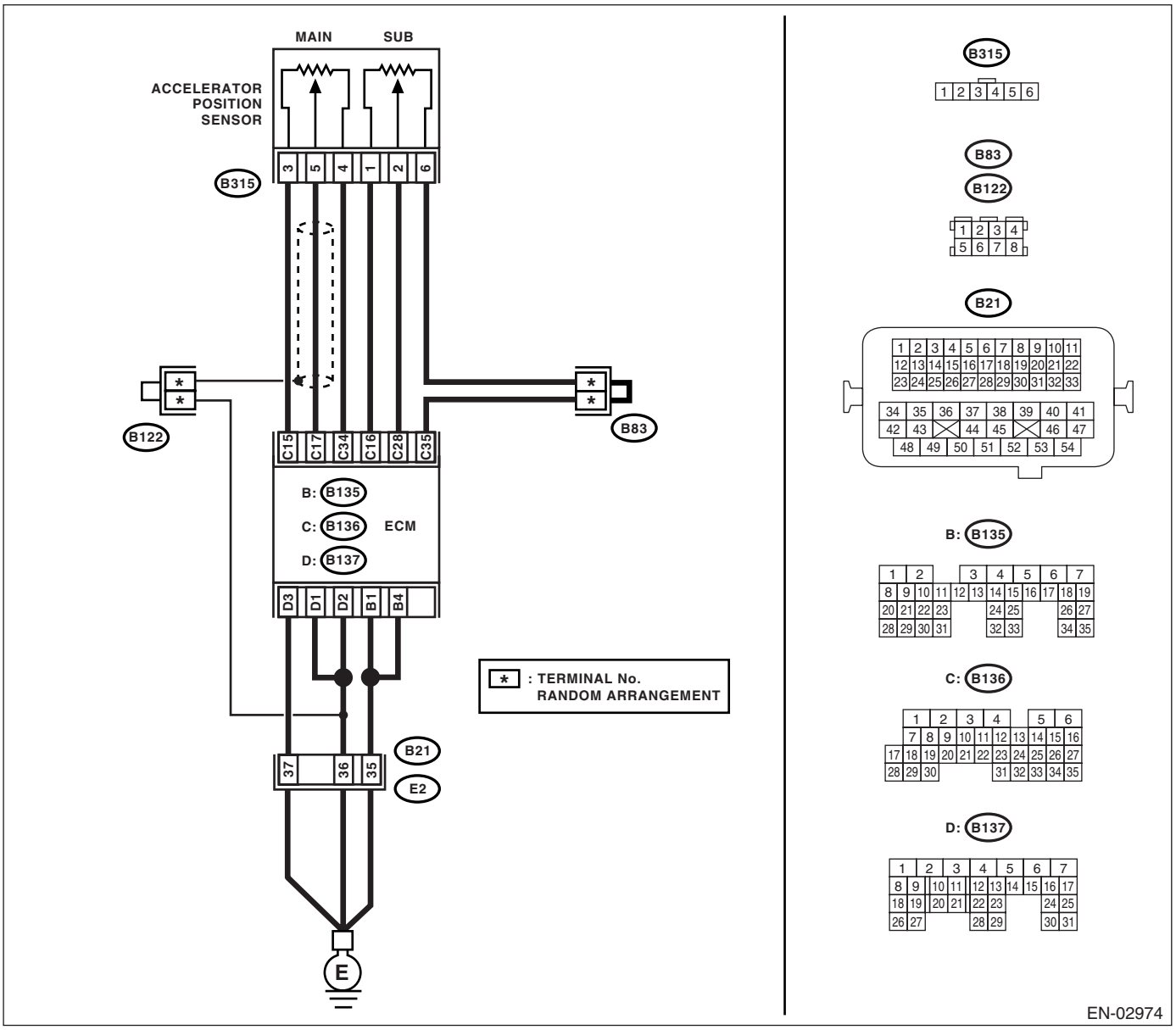

	Step	Check	Yes	No
1	**CHECK ACCELERATOR PEDAL POSITION SENSOR OUTPUT.** 1) Turn the ignition switch to ON. 2) Read the data of sub accelerator pedal position sensor signal using Subaru Select Monitor.	Is the voltage more than 0.4 V?	Go to step **2.**	Go to step **3.**
2	**CHECK POOR CONTACT.** Check poor contact in connector between ECM and accelerator pedal position sensor.	Is there poor contact?	Repair the poor contact.	Temporary poor contact occurred, but it is normal at present.
3	**CHECK HARNESS BETWEEN ECM AND ACCELERATOR PEDAL POSITION SENSOR.** 1) Turn the ignition switch to OFF. 2) Disconnect the connector from ECM. 3) Disconnect the connector from the accelerator pedal position sensor. 4) Measure the resistance between ECM connector and accelerator pedal position sensor connector. ***Connector & terminal*** ***(B136) No. 28 — (B315) No. 2:*** ***(B136) No. 16 — (B315) No. 1:***	Is the resistance less than 1 Ω?	Go to step **4.**	Repair the open circuit of harness connector.
4	**CHECK HARNESS BETWEEN ECM AND ACCELERATOR PEDAL POSITION SENSOR.** Measure the resistance between ECM connector and chassis ground. ***Connector & terminal*** ***(B136) No. 28 — Chassis ground:*** ***(B136) No. 16 — Chassis ground:***	Is the resistance more than 1 MΩ?	Go to step **5.**	Repair the chassis short circuit of harness.
5	**CHECK POWER SUPPLY OF ACCELERATOR PEDAL POSITION SENSOR.** 1) Connect the ECM connector. 2) Turn the ignition switch to ON. 3) Measure the voltage between accelerator pedal position sensor connector and engine ground. ***Connector & terminal*** ***(B315) No. 1 (+) — Engine ground (−):***	Is the voltage 4.5 — 5.5 V?	Go to step **6.**	Repair the poor contact in ECM connector. Replace the ECM if defective. <Ref. to FU(H6DO)-34, Engine Control Module (ECM).>
6	**CHECK ACCELERATOR PEDAL POSITION SENSOR.** Measure the resistance of accelerator pedal position sensor. ***Terminals*** ***No. 1 — No. 6:***	Is the resistance 0.75 — 3.15 kΩ?	Go to step **7.**	Replace the accelerator pedal position sensor.
7	**CHECK ACCELERATOR PEDAL POSITION SENSOR.** 1) Measure the resistance of accelerator pedal position sensor. ***Terminals*** ***No. 2 — No. 6:*** 2) Check the measured value is within the specification without depressing the accelerator pedal.	Is the resistance 0.15 — 0.63 kΩ?	Go to step **8.**	Replace the accelerator pedal position sensor.

	Step	Check	Yes	No
8	**CHECK ACCELERATOR PEDAL POSITION SENSOR.** 1) Measure the resistance of accelerator pedal position sensor. ***Terminals*** ***No. 2 — No. 6:*** 2) Check the measured value is within the specification with the accelerator pedal depressed.	Is the resistance 0.28 — 1.68 kΩ?	Repair the poor contact in ECM connector. Replace the ECM if defective. <Ref. to FU(H6DO)-34, Engine Control Module (ECM).>	Replace the accelerator pedal position sensor.

EB:DTC P2128 THROTTLE/PEDAL POSITION SENSOR/SWITCH “E” CIRCUIT HIGH INPUT

DTC DETECTING CONDITION:

- Detect as soon as malfunction occurs.
- GENERAL DESCRIPTION <Ref. to GD(H6DO)-222, DTC P2128 THROTTLE/PEDAL POSITION SENSOR/SWITCH “E” CIRCUIT HIGH INPUT, Diagnostic Trouble Code (DTC) Detecting Criteria.>

TROUBLE SYMPTOM:

- Erroneous idling
- Poor driving performance

WIRING DIAGRAM:

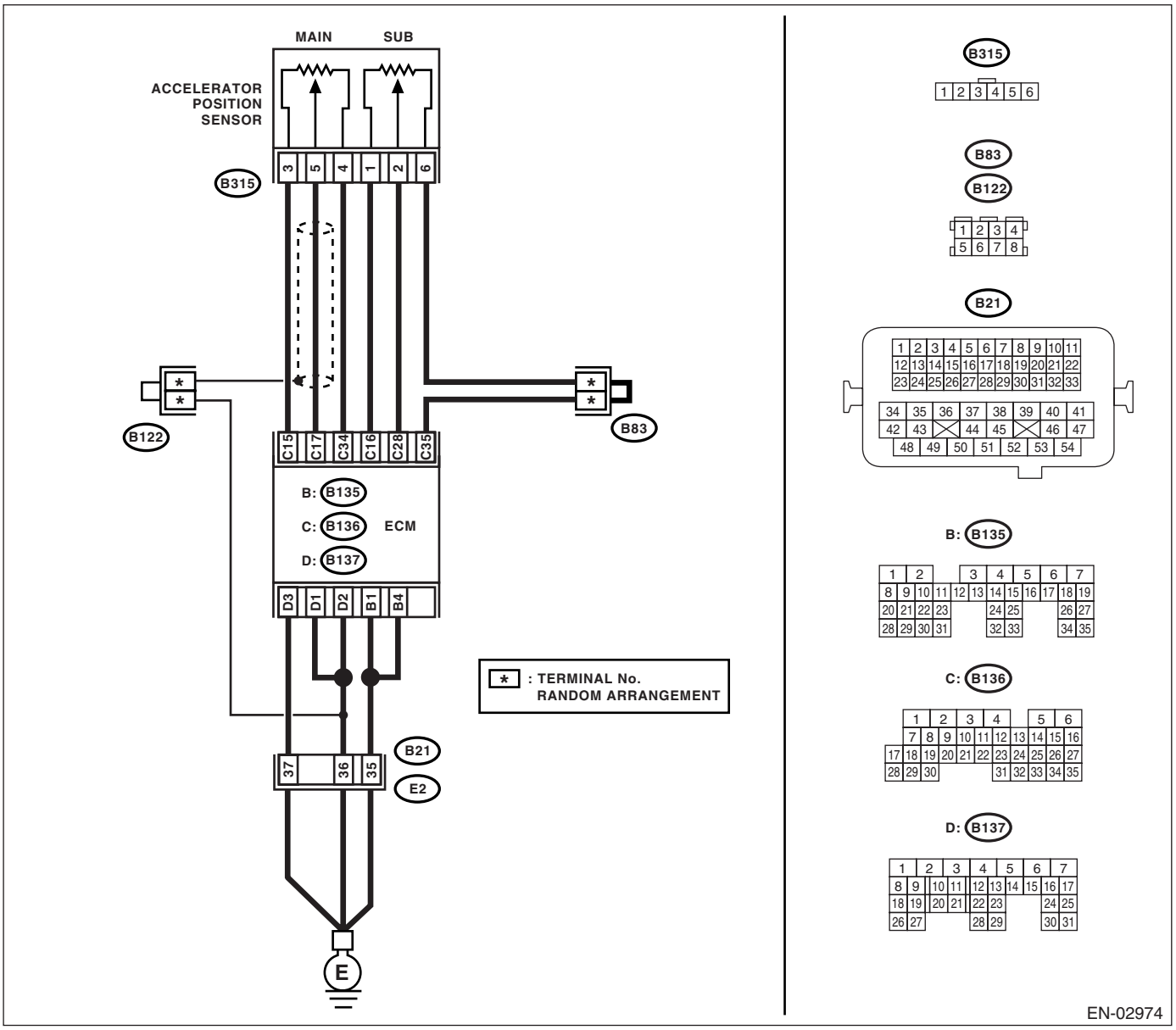

	Step	Check	Yes	No
1	**CHECK ACCELERATOR PEDAL POSITION SENSOR OUTPUT.** 1) Turn the ignition switch to ON. 2) Read the data of sub accelerator pedal position sensor signal using Subaru Select Monitor. NOTE: • Subaru Select Monitor For detailed operation procedure, refer to the "READ CURRENT DATA FOR ENGINE". <Ref. to EN(H6DO)(diag)-26, Subaru Select Monitor.>	Is the voltage less than 4.8 V?	Go to step **2.**	Go to step **3.**
2	**CHECK POOR CONTACT.** Check poor contact in connector between ECM and accelerator pedal position sensor.	Is there poor contact?	Repair the poor contact.	Temporary poor contact occurred, but it is normal at present.
3	**CHECK HARNESS BETWEEN ECM AND ACCELERATOR PEDAL POSITION SENSOR.** 1) Turn the ignition switch to OFF. 2) Disconnect the connector from ECM. 3) Disconnect the connector from the accelerator pedal position sensor. 4) Measure the resistance between ECM connector and accelerator pedal position sensor connector. ***Connector & terminal*** ***(B136) No. 35 — (B315) No. 6:***	Is the resistance less than 1 Ω?	Go to step **4.**	Repair the open circuit of harness connector.
4	**CHECK HARNESS BETWEEN ECM AND ACCELERATOR PEDAL POSITION SENSOR.** 1) Connect the ECM connector. 2) Measure the resistance between accelerator pedal position sensor connector and engine ground. ***Connector & terminal*** ***(B315) No. 6 — Engine ground:***	Is the resistance less than 5 Ω?	Go to step **5.**	Repair the poor contact in ECM connector. Replace the ECM if defective. <Ref. to FU(H6DO)-34, Engine Control Module (ECM).>
5	**CHECK HARNESS BETWEEN ECM AND ACCELERATOR PEDAL POSITION SENSOR.** 1) Connect the ECM connector. 2) Turn the ignition switch to ON. 3) Measure the voltage between accelerator pedal position sensor connector and engine ground. ***Connector & terminal*** ***(B315) No. 2 (+) — Engine ground (−):***	Is the voltage less than 6 V?	Go to step **6.**	Repair the battery short circuit in harness between ECM connector and accelerator pedal position sensor connector.
6	**CHECK HARNESS BETWEEN ECM AND ACCELERATOR PEDAL POSITION SENSOR.** 1) Turn the ignition switch to OFF. 2) Disconnect the connector from ECM. 3) Measure the resistance between ECM connectors. ***Connector & terminal*** ***(B136) No. 28 — (B136) No. 15:*** ***(B136) No. 28 — (B136) No. 16:***	Is the resistance more than 1 MΩ?	Repair the poor contact in accelerator pedal position sensor connector. Replace the accelerator pedal position sensor if defective.	Repair the short circuit to sensor power supply.

EC:DTC P2135 THROTTLE/PEDAL POSITION SENSOR/SWITCH “A”/“B” VOLTAGE RATIONALITY

DTC DETECTING CONDITION:

- Detect as soon as malfunction occurs.
- GENERAL DESCRIPTION <Ref. to GD(H6DO)-224, DTC P2135 THROTTLE/PEDAL POSITION SENSOR/SWITCH “A”/“B” VOLTAGE RATIONALITY, Diagnostic Trouble Code (DTC) Detecting Criteria.>

TROUBLE SYMPTOM:

- Erroneous idling
- Poor driving performance

WIRING DIAGRAM:

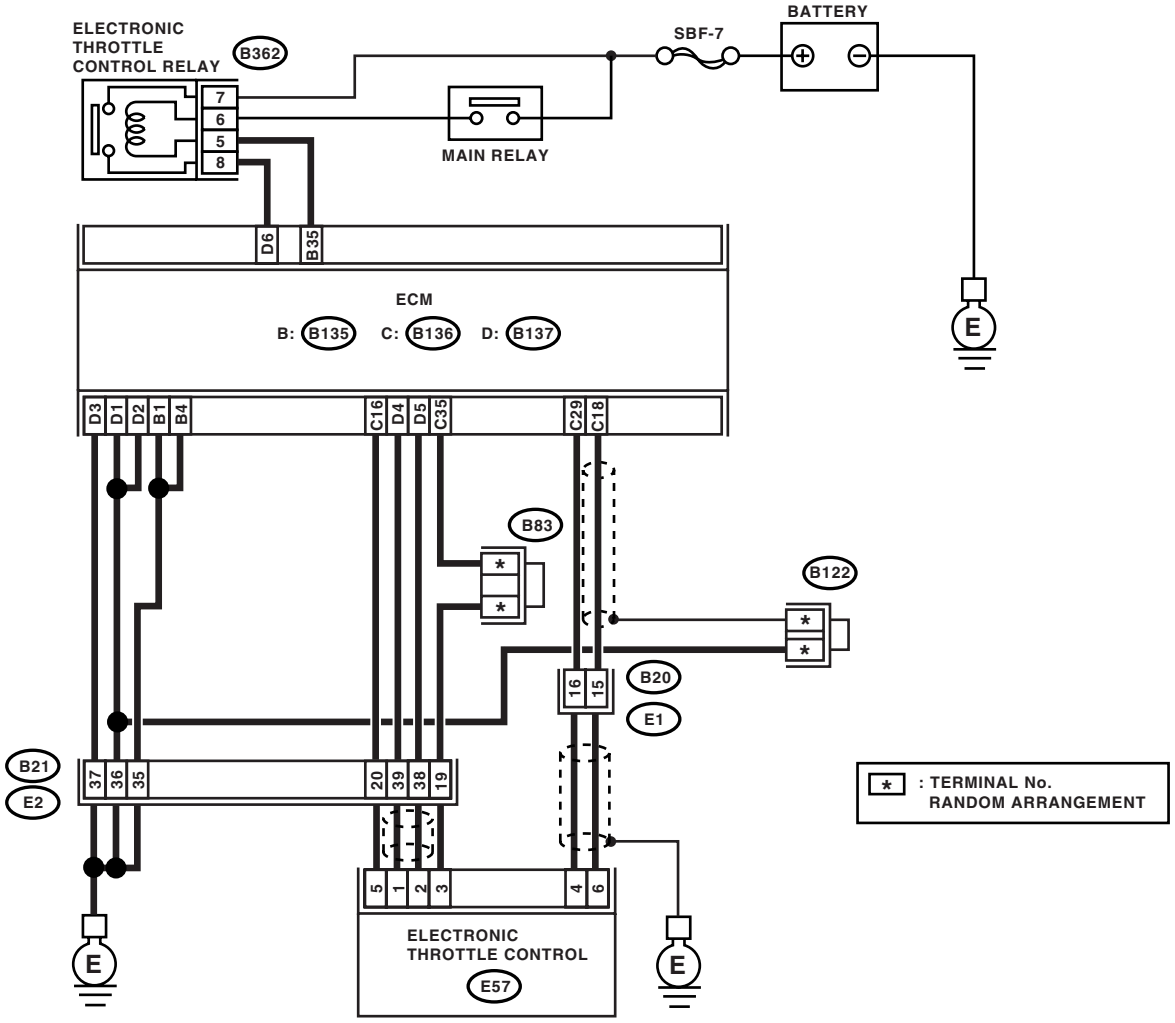

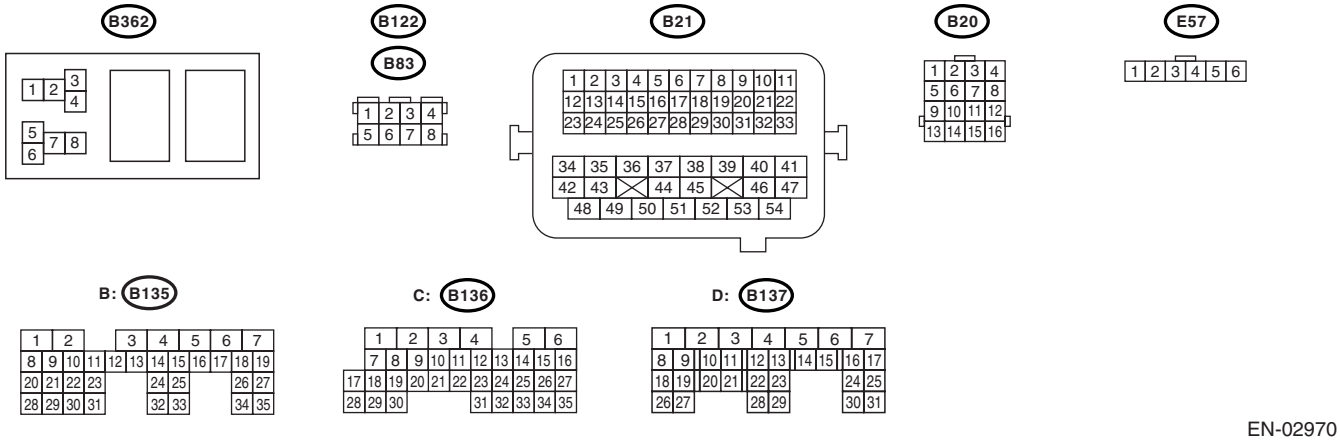

EN-02970

	Step	Check	Yes	No
1	**CHECK SENSOR OUTPUT.** 1) Turn the ignition switch to ON. 2) Read the data of main throttle sensor signal using Subaru Select Monitor. NOTE: • Subaru Select Monitor For detailed operation procedure, refer to the "READ CURRENT DATA FOR ENGINE". <Ref. to EN(H6DO)(diag)-26, Subaru Select Monitor.>	Is the voltage more than 0.4 V?	Go to step **2.**	Go to step **4.**
2	**CHECK SENSOR OUTPUT.** Read the data of sub throttle sensor signal using Subaru Select Monitor.	Is the voltage more than 0.8 V?	Go to step **3.**	Go to step **4.**
3	**CHECK POOR CONTACT.** Check the poor contact in connector between ECM and electronic throttle control.	Is there poor contact?	Repair the poor contact.	Go to step **14.**
4	**CHECK HARNESS BETWEEN ECM AND ELECTRONIC THROTTLE CONTROL.** 1) Turn the ignition switch to OFF. 2) Disconnect the connector from ECM. 3) Disconnect the connector from the electronic throttle control. 4) Measure the resistance between ECM connector and electronic throttle control connector. ***Connector & terminal*** ***(B136) No. 18 — (E57) No. 6:*** ***(B136) No. 29 — (E57) No. 4:*** ***(B136) No. 16 — (E57) No. 5:***	Is the resistance less than 1 Ω?	Go to step **5.**	Repair the open circuit of harness connector.
5	**CHECK HARNESS BETWEEN ECM AND ELECTRONIC THROTTLE CONTROL.** Measure the resistance between ECM connector and chassis ground. ***Connector & terminal*** ***(B136) No. 18 — Chassis ground:*** ***(B136) No. 29 — Chassis ground:*** ***(B136) No. 16 — Chassis ground:***	Is the resistance more than 1 MΩ?	Go to step **6.**	Repair the ground short circuit of harness.
6	**CHECK SENSOR POWER SUPPLY.** 1) Connect the ECM connector. 2) Turn the ignition switch to ON. 3) Measure the voltage between electronic throttle control connector and engine ground. ***Connector & terminal*** ***(E57) No. 5 (+) — Engine ground (−):***	Is the voltage 4.5 — 5.5 V?	Go to step **7.**	Repair the poor contact in ECM connector. Replace the ECM if defective. <Ref. to FU(H6DO)-34, Engine Control Module (ECM).>
7	**CHECK SHORT CIRCUIT IN ECM.** 1) Turn the ignition switch to OFF. 2) Measure the resistance between electronic throttle control connector and engine ground. ***Connector & terminal*** ***(E57) No. 6 — Engine ground:*** ***(E57) No. 4 — Engine ground:***	Is the resistance more than 10 Ω?	Go to step **8.**	Repair the poor contact in ECM connector. Replace the ECM if defective. <Ref. to FU(H6DO)-34, Engine Control Module (ECM).>
8	**CHECK SENSOR OUTPUT.** 1) Connect all the connectors. 2) Turn the ignition switch to ON. 3) Read the data of main throttle sensor signal using Subaru Select Monitor.	Is the voltage less than 4.63 V?	Go to step **9.**	Go to step **11.**

	Step	Check	Yes	No
9	**CHECK SENSOR OUTPUT.** Read the data of sub throttle sensor signal using Subaru Select Monitor.	Is the voltage less than 4.73 V?	Go to step **10.**	Go to step **11.**
10	**CHECK POOR CONTACT.** Check the poor contact in connector between ECM and electronic throttle control.	Is there poor contact?	Repair the poor contact.	Temporary poor contact occurred, but it is normal at present.
11	**CHECK HARNESS BETWEEN ECM AND ELECTRONIC THROTTLE CONTROL.** 1) Turn the ignition switch to OFF. 2) Disconnect the connector from ECM. 3) Disconnect the connector from the electronic throttle control. 4) Measure the resistance between ECM connector and electronic throttle control connector. ***Connector & terminal*** ***(B136) No. 35 — (E57) No. 3:*** ***(B136) No. 18 — (E57) No. 6:*** ***(B136) No. 29 — (E57) No. 4:***	Is the resistance less than 1 Ω?	Go to step **12.**	Repair the open circuit of harness connector.
12	**CHECK HARNESS BETWEEN ECM AND ELECTRONIC THROTTLE CONTROL.** 1) Connect the ECM connector. 2) Measure the resistance between electronic throttle control connector and engine ground. ***Connector & terminal*** ***(E57) No. 3 — Engine ground:***	Is the resistance less than 5 Ω?	Go to step **13.**	Repair the poor contact in ECM connector. Replace the ECM if defective. <Ref. to FU(H6DO)-34, Engine Control Module (ECM).>
13	**CHECK HARNESS BETWEEN ECM AND ELECTRONIC THROTTLE CONTROL.** 1) Connect the ECM connector. 2) Turn the ignition switch to ON. 3) Measure the voltage between electronic throttle control connector and engine ground. ***Connector & terminal*** ***(E57) No. 5 (+) — Engine ground (−):***	Is the voltage less than 10 V?	Go to step **14.**	Repair the battery short circuit in harness between ECM connector and electronic throttle control connector.
14	**CHECK HARNESS BETWEEN ECM AND ELECTRONIC THROTTLE CONTROL.** Measure the voltage between electronic throttle control connector and engine ground. ***Connector & terminal*** ***(E57) No. 6 (+) — Engine ground (−):*** ***(E57) No. 4 (+) — Engine ground (−):***	Is the voltage less than 10 V?	Go to step **15.**	Repair the short circuit in harness between ECM connector and electronic throttle control connector.
15	**CHECK HARNESS BETWEEN ECM AND ELECTRONIC THROTTLE CONTROL.** 1) Turn the ignition switch to OFF. 2) Disconnect the connector from ECM. 3) Measure the resistance between ECM connectors. ***Connector & terminal*** ***(B136) No. 18 — (B136) No. 16:*** ***(B136) No. 29 — (B136) No. 16:***	Is the resistance more than 1 MΩ?	Go to step **16.**	Repair the short circuit to sensor power supply.
16	**CHECK ELECTRONIC THROTTLE CONTROL HARNESS.** 1) Disconnect the connector from ECM. 2) Disconnect the connector from the electronic throttle control. 3) Measure the resistance between electronic throttle control connector terminals. ***Connector & terminal*** ***(E57) No. 6 — (E57) No. 4:***	Is the resistance more than 1 MΩ?	Repair the poor contact in ECM connector. Replace the ECM if defective. <Ref. to FU(H6DO)-34, Engine Control Module (ECM).>	Repair the short circuit of harness.

ED:DTC P2138 THROTTLE/PEDAL POSITION SENSOR/SWITCH “D”/“E” VOLTAGE RATIONALITY

DTC DETECTING CONDITION:

- Detect as soon as malfunction occurs.
- GENERAL DESCRIPTION <Ref. to GD(H6DO)-226, DTC P2138 THROTTLE/PEDAL POSITION SENSOR/SWITCH “D”/“E” VOLTAGE RATIONALITY, Diagnostic Trouble Code (DTC) Detecting Criteria.>

TROUBLE SYMPTOM:

- Erroneous idling
- Poor driving performance

WIRING DIAGRAM:

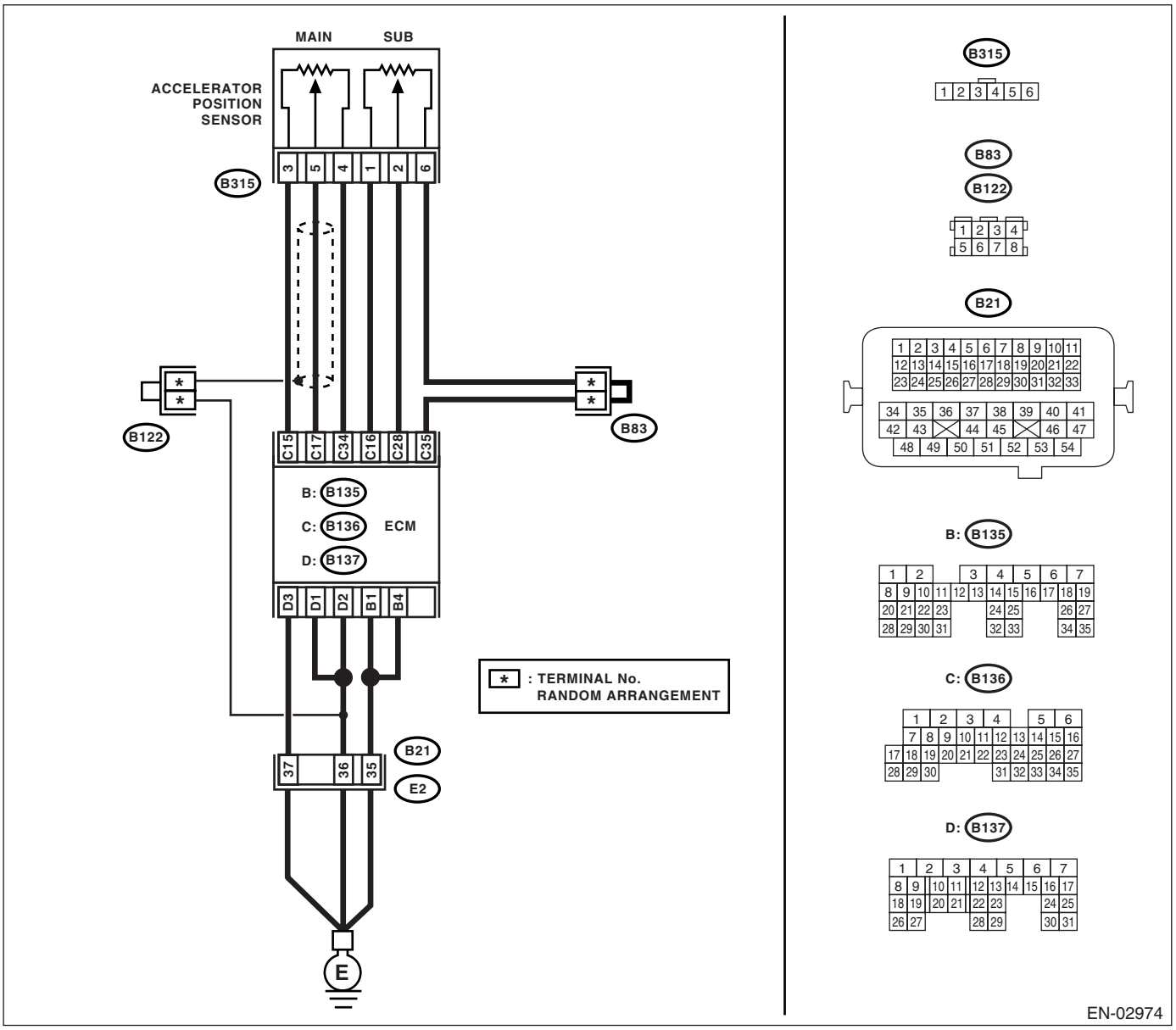

	Step	Check	Yes	No
1	**CHECK ACCELERATOR PEDAL POSITION SENSOR OUTPUT.** 1) Turn the ignition switch to ON. 2) Read the data of main accelerator pedal position sensor signal and sub accelerator pedal position sensor signal using Subaru Select Monitor. NOTE: • Subaru Select Monitor For detailed operation procedure, refer to the "READ CURRENT DATA FOR ENGINE". <Ref. to EN(H6DO)(diag)-26, Subaru Select Monitor.>	Is the voltage more than 0.4 V?	Go to step **2.**	Go to step **3.**
2	**CHECK POOR CONTACT.** Check poor contact in connector between ECM and accelerator pedal position sensor.	Is there poor contact?	Repair the poor contact.	Go to step **12.**
3	**CHECK HARNESS BETWEEN ECM AND ACCELERATOR PEDAL POSITION SENSOR.** 1) Turn the ignition switch to OFF. 2) Disconnect the connector from ECM. 3) Disconnect the connector from the accelerator pedal position sensor. 4) Measure the resistance between ECM connector and accelerator pedal position sensor connector. ***Connector & terminal*** ***(B136) No. 17 — (B315) No. 5:*** ***(B136) No. 15 — (B315) No. 3:*** ***(B136) No. 28 — (B315) No. 2:*** ***(B136) No. 16 — (B315) No. 1:***	Is the resistance less than 1 Ω?	Go to step **4.**	Repair the open circuit of harness connector.
4	**CHECK HARNESS BETWEEN ECM AND ACCELERATOR PEDAL POSITION SENSOR.** Measure the resistance between ECM connector and chassis ground. ***Connector & terminal*** ***(B136) No. 17 — Chassis ground:*** ***(B136) No. 15 — Chassis ground:*** ***(B136) No. 28 — Chassis ground:*** ***(B136) No. 16 — Chassis ground:***	Is the resistance more than 1 MΩ?	Go to step **5.**	Repair the ground short circuit of harness.
5	**CHECK POWER SUPPLY OF ACCELERATOR PEDAL POSITION SENSOR.** 1) Connect the ECM connector. 2) Turn the ignition switch to ON. 3) Measure the voltage between accelerator pedal position sensor connector and engine ground. ***Connector & terminal*** ***(B315) No. 3 (+) — Engine ground (−):*** ***(B315) No. 1 (+) — Engine ground (−):***	Is the voltage 4.5 — 5.5 V?	Go to step **6.**	Repair the poor contact in ECM connector. Replace the ECM if defective. <Ref. to FU(H6DO)-34, Engine Control Module (ECM).>
6	**CHECK ACCELERATOR PEDAL POSITION SENSOR.** Measure the resistance of accelerator pedal position sensor. ***Terminals*** ***No. 3 — No. 4:***	Is the resistance 1.2 — 4.8 kΩ?	Go to step **7.**	Replace the accelerator pedal position sensor.

	Step	Check	Yes	No
7	**CHECK ACCELERATOR PEDAL POSITION SENSOR.** Measure the resistance of accelerator pedal position sensor. ***Terminals*** ***No. 1 — No. 6:***	Is the resistance 0.75 — 3.15 kΩ?	Go to step **8.**	Replace the accelerator pedal position sensor.
8	**CHECK ACCELERATOR PEDAL POSITION SENSOR.** Measure the resistance of accelerator pedal position sensor without depressing the accelerator pedal. ***Terminals*** ***No. 5 — No. 4:***	Is the resistance 0.2 — 0.8 kΩ?	Go to step **9.**	Replace the accelerator pedal position sensor.
9	**CHECK ACCELERATOR PEDAL POSITION SENSOR.** Measure the resistance of accelerator pedal position sensor without depressing the accelerator pedal. ***Terminals*** ***No. 2 — No. 6:***	Is the resistance 0.15 — 0.63 kΩ?	Go to step **10.**	Replace the accelerator pedal position sensor.
10	**CHECK ACCELERATOR PEDAL POSITION SENSOR.** Measure the resistance of accelerator pedal position sensor with the accelerator pedal depressed. ***Terminals*** ***No. 5 — No. 4:***	Is the resistance 0.5 — 2.5 kΩ?	Go to step **11.**	Replace the accelerator pedal position sensor.
11	**CHECK ACCELERATOR PEDAL POSITION SENSOR.** Measure the resistance of accelerator pedal position sensor with the accelerator pedal depressed. ***Terminals*** ***No. 2 — No. 6:***	Is the resistance 0.28 — 1.68 kΩ?	Go to step **12.**	Replace the accelerator pedal position sensor.
12	**CHECK ACCELERATOR PEDAL POSITION SENSOR OUTPUT.** 1) Turn the ignition switch to OFF. 2) Connect all the connectors. 3) Turn the ignition switch to ON. 4) Read the data of main throttle sensor signal and sub accelerator pedal position sensor signal using Subaru Select Monitor.	Is the voltage less than 4.8 V?	Go to step **13.**	Go to step **14.**
13	**CHECK POOR CONTACT.** Check poor contact in connector between ECM and accelerator peda position sensor.	Is there poor contact?	Repair the poor contact.	Go to step **18.**
14	**CHECK HARNESS BETWEEN ECM AND ACCELERATOR PEDAL POSITION SENSOR.** 1) Turn the ignition switch to OFF. 2) Disconnect the connector from ECM. 3) Disconnect the connector from the accelerator pedal position sensor. 4) Measure the resistance between ECM connector and accelerator pedal position sensor connector. ***Connector & terminal*** ***(B136) No. 34 — (B315) No. 4:*** ***(B136) No. 35 — (B315) No. 6:***	Is the resistance less than 1 Ω?	Go to step **15.**	Repair the open circuit of harness connector.

	Step	Check	Yes	No
15	**CHECK HARNESS BETWEEN ECM AND ACCELERATOR PEDAL POSITION SENSOR.** 1) Connect the ECM connector. 2) Measure the resistance between accelerator pedal position sensor connector and engine ground. ***Connector & terminal*** ***(B315) No. 4 — Engine ground:*** ***(B315) No. 6 — Engine ground:***	Is the resistance less than 5 Ω?	Go to step **16.**	Repair the poor contact in ECM connector. Replace the ECM if defective. <Ref. to FU(H6DO)-34, Engine Control Module (ECM).>
16	**CHECK HARNESS BETWEEN ECM AND ACCELERATOR PEDAL POSITION SENSOR.** 1) Connect the ECM connector. 2) Turn the ignition switch to ON. 3) Measure the voltage between accelerator pedal position sensor connector and engine ground. ***Connector & terminal*** ***(B315) No. 5 (+) — Engine ground (−):*** ***(B315) No. 2 (+) — Engine ground (−):***	Is the voltage less than 6 V?	Go to step **17.**	Repair the battery short circuit in harness between ECM connector and accelerator pedal position sensor connector.
17	**CHECK HARNESS BETWEEN ECM AND ACCELERATOR PEDAL POSITION SENSOR.** 1) Turn the ignition switch to OFF. 2) Disconnect the connector from ECM. 3) Measure the resistance between ECM connectors. ***Connector & terminal*** ***(B136) No. 17 — (B136) No. 15:*** ***(B136) No. 17 — (B136) No. 16:*** ***(B136) No. 28 — (B136) No. 15:*** ***(B136) No. 28 — (B136) No. 16:***	Is the resistance more than 1 MΩ?	Go to step **18.**	Repair the short circuit to sensor power supply.
18	**CHECK HARNESS BETWEEN ECM AND ACCELERATOR PEDAL POSITION SENSOR.** 1) Turn the ignition switch to OFF. 2) Disconnect the connector from ECM. 3) Disconnect the connector from the accelerator pedal position sensor. 4) Measure the resistance between connector terminals of accelerator pedal position sensor. ***Connector & terminal*** ***(B315) No. 5 — (B315) No. 2:***	Is the resistance more than 1 MΩ?	Repair the poor contact in ECM connector. Replace the ECM if defective. <Ref. to FU(H6DO)-34, Engine Control Module (ECM).>	Repair the short circuit in harness between ECM connector and accelerator pedal position sensor connector.

EE:DTC P2227 BAROMETRIC PRESSURE CIRCUIT RANGE/PERFORMANCE

DTC DETECTING CONDITION:

- Two consecutive driving cycles with fault
- GENERAL DESCRIPTION <Ref. to GD(H6DO)-228, DTC P2227 BAROMETRIC PRESSURE CIRCUIT RANGE/PERFORMANCE, Diagnostic Trouble Code (DTC) Detecting Criteria.>

CAUTION:
After repair or replacement of faulty parts, conduct Clear Memory Mode <Ref. to EN(H6DO)(diag)-44, OPERATION, Clear Memory Mode.> and Inspection Mode <Ref. to EN(H6DO)(diag)-35, PROCEDURE, Inspection Mode.>.

	Step	Check	Yes	No
1	**CHECK FOR ANY OTHER DTC ON DISPLAY.**	Is any other DTC displayed?	Replace the ECM. <Ref. to FU(H6DO)-34, Engine Control Module (ECM).> NOTE: Atmospheric pressure sensor is built into ECM.	NOTE: It is not necessary to inspect DTC P0129.

EF:DTC P2228 BAROMETRIC PRESSURE CIRCUIT LOW INPUT

DTC DETECTING CONDITION:

- Detect as soon as malfunction occurs.
- GENERAL DESCRIPTION <Ref. to GD(H6DO)-229, DTC P2228 BAROMETRIC PRESSURE CIRCUIT LOW INPUT.>

CAUTION:
After repair or replacement of faulty parts, conduct Clear Memory Mode <Ref. to EN(H6DO)(diag)-44, OPERATION, Clear Memory Mode.> and Inspection Mode <Ref. to EN(H6DO)(diag)-35, PROCEDURE, Inspection Mode.>.

	Step	Check	Yes	No
1	**CHECK FOR ANY OTHER DTC ON DISPLAY.**	Does the Subaru Select Monitor or general scan tool indicate DTC P2228?	Replace the ECM. <Ref. to FU(H6DO)-34, Engine Control Module (ECM).> NOTE: Atmospheric pressure sensor is built into ECM.	A temporary poor contact.

EG:DTC P2229 BAROMETRIC PRESSURE CIRCUIT HIGH INPUT

DTC DETECTING CONDITION:

- Detect as soon as malfunction occurs.
- GENERAL DESCRIPTION <Ref. to GD(H6DO)-230, DTC P2229 BAROMETRIC PRESSURE CIRCUIT HIGH INPUT, Diagnostic Trouble Code (DTC) Detecting Criteria.>

CAUTION:
After repair or replacement of faulty parts, conduct Clear Memory Mode <Ref. to EN(H6DO)(diag)-44, OPERATION, Clear Memory Mode.> and Inspection Mode <Ref. to EN(H6DO)(diag)-35, PROCEDURE, Inspection Mode.>.

	Step	Check	Yes	No
1	**CHECK FOR ANY OTHER DTC ON DISPLAY.**	Does the Subaru Select Monitor or general scan tool indicate DTC P2229?	Replace the ECM. <Ref. to FU(H6DO)-34, Engine Control Module (ECM).> NOTE: Atmospheric pressure sensor is built into ECM.	A temporary poor contact.

EH:DTC P2503 CHARGING SYSTEM VOLTAGE LOW

NOTE:
For diagnostic procedure, refer to DTC P2504. <Ref. to EN(H6DO)(diag)-370, DTC P2504 CHARGING SYSTEM VOLTAGE HIGH, Diagnostic Procedure with Diagnostic Trouble Code (DTC).>

EI: DTC P2504 CHARGING SYSTEM VOLTAGE HIGH

DTC DETECTING CONDITION:

- Detect as soon as malfunction occurs.
- GENERAL DESCRIPTION <Ref. to GD(H6DO)-232, DTC P2504 CHARGING SYSTEM VOLTAGE HIGH, Diagnostic Trouble Code (DTC) Detecting Criteria.>

CAUTION:
After repair or replacement of faulty parts, conduct Clear Memory Mode <Ref. to EN(H6DO)(diag)-44, OPERATION, Clear Memory Mode.> and Inspection Mode <Ref. to EN(H6DO)(diag)-35, PROCEDURE, Inspection Mode.>.

WIRING DIAGRAM:

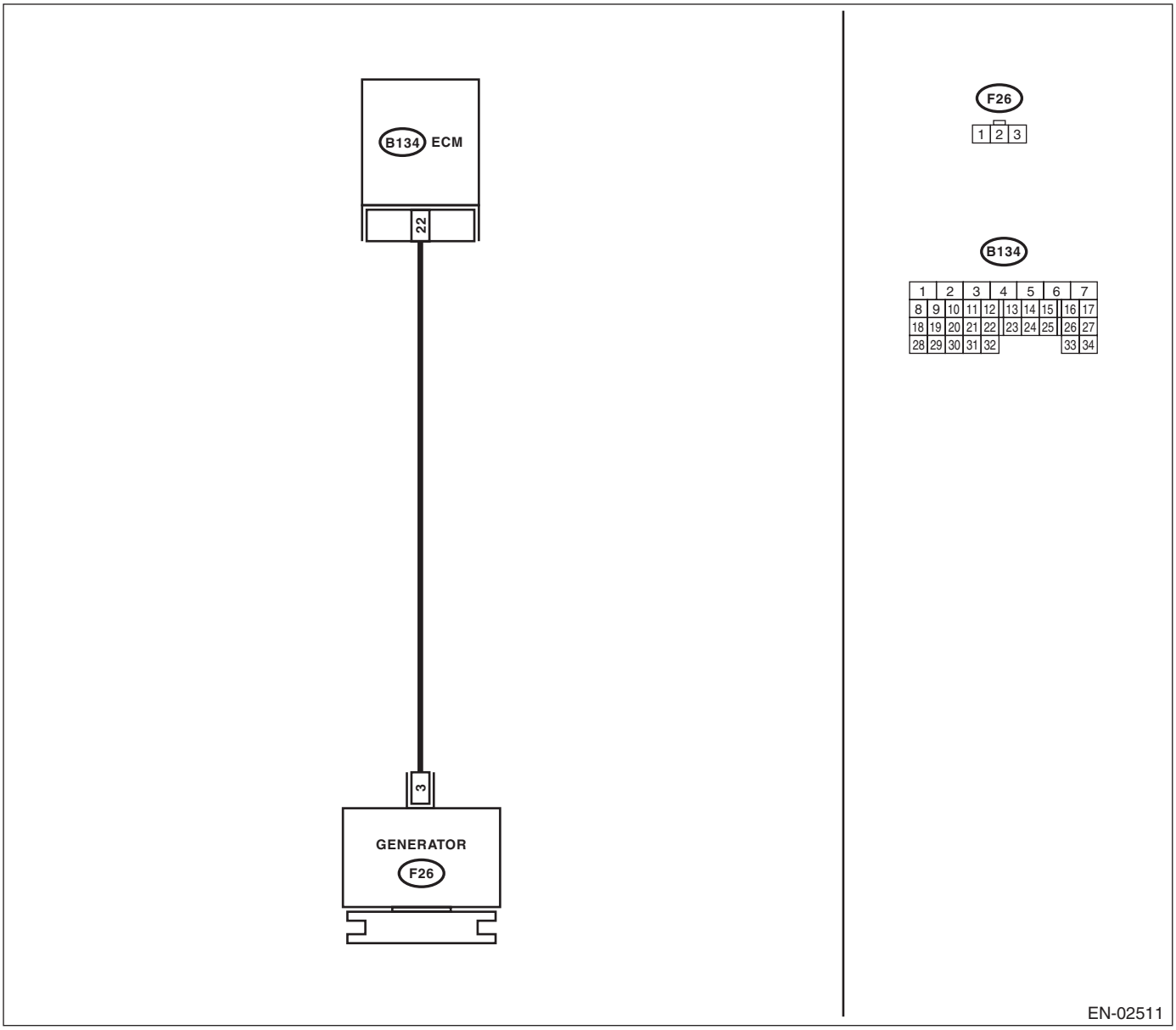

	Step	Check	Yes	No
1	**CHECK HARNESS BETWEEN GENERATOR AND ECM CONNECTOR.** 1) Turn the ignition switch to OFF. 2) Disconnect the connector from generator and ECM. 3) Measure the resistance of harness between generator connector and engine ground. ***Connector & terminal*** ***(F26) No. 3 — Engine ground:***	Is the resistance more than 1 MΩ?	Go to step **2.**	Repair the ground short circuit in harness between ECM and generator connector.
2	**CHECK HARNESS BETWEEN GENERATOR AND ECM CONNECTOR.** Measure the resistance of harness between ECM and generator. ***Connector & terminal*** ***(B136) No. 22 — (F26) No. 3:***	Is the resistance less than 1 Ω?	Repair the poor contact connector.	Repair the open circuit in harness between ECM and generator connector. NOTE: In this case repair the following: • Open circuit in harness between ECM and generator connector • Poor contact in coupling connector

19.General Diagnostic Table

A: INSPECTION

1. ENGINE

NOTE:
Malfunction of parts other than those listed is also possible. <Ref. to ME(H6DO)-82, Engine Trouble in General.>

Symptom	Problem parts
1. Engine stalls during idling.	1) Manifold absolute pressure sensor 2) Mass air flow and intake air temperature sensor 3) Ignition parts (*1) 4) Engine coolant temperature sensor (*2) 5) Crankshaft position sensor (*3) 6) Camshaft position sensor (*3) 7) Fuel injection parts (*4)
2. Rough idling	1) Manifold absolute pressure sensor 2) Mass air flow and intake air temperature sensor 3) Engine coolant temperature sensor (*2) 4) Ignition parts (*1) 5) Air intake system (*5) 6) Fuel injection parts (*4) 7) Electronic throttle control 8) Crankshaft position sensor (*3) 9) Camshaft position sensor (*3) 10) Oxygen sensor 11) Fuel pump and fuel pump relay
3. Engine does not return to idle.	1) Engine coolant temperature sensor 2) Electronic throttle control 3) Manifold absolute pressure sensor 4) Mass air flow and intake air temperature sensor 5) Accelerator pedal position sensor 6) Oil temperature sensor
4. Poor acceleration	1) Manifold absolute pressure sensor 2) Mass air flow and intake air temperature sensor 3) Electronic throttle control 4) Fuel injection parts (*4) 5) Fuel pump and fuel pump relay 6) Engine coolant temperature sensor (*2) 7) Crankshaft position sensor (*3) 8) Camshaft position sensor (*3) 9) A/C switch and A/C cut relay 10) Engine torque control signal circuit 11) Ignition parts (*1) 12) Accelerator pedal position sensor 13) Oil temperature sensor
5. Engine stalls or engine sags or hesitates at acceleration.	1) Manifold absolute pressure sensor 2) Mass air flow and intake air temperature sensor 3) Engine coolant temperature sensor (*2) 4) Crankshaft position sensor (*3) 5) Camshaft position sensor (*3) 6) Purge control solenoid valve 7) Fuel injection parts (*4) 8) Electronic throttle control 9) Fuel pump and fuel pump relay

Symptom	Problem parts
6. Surging	1) Mass air flow and intake air temperature sensor 2) Manifold absolute pressure sensor 3) Engine coolant temperature sensor (*2) 4) Crankshaft position sensor (*3) 5) Camshaft position sensor (*3) 6) Fuel injection parts (*4) 7) Electronic throttle control 8) Fuel pump and fuel pump relay
7. Spark knock	1) Mass air flow and intake air temperature sensor 2) Manifold absolute pressure sensor 3) Engine coolant temperature sensor 4) Knock sensor 5) Fuel injection parts (*4) 6) Fuel pump and fuel pump relay
8. After burning in exhaust system	1) Mass air flow and intake air temperature sensor 2) Manifold absolute pressure sensor 3) Engine coolant temperature sensor (*2) 4) Fuel injection parts (*4) 5) Fuel pump and fuel pump relay

*1: Check ignition coil and ignitor assembly and spark plug.
*2: Indicate the symptom occurring only in cold temperatures.
*3: Ensure the secure installation.
*4: Check the fuel injector and fuel pressure regulator.
*5: Inspect air leak in air intake system.

GENERAL DESCRIPTION

GD(H6DO)

Page

1. List of Diagnostic Trouble Code (DTC) 2
2. Diagnostic Trouble Code (DTC) Detecting Criteria 9

1. List of Diagnostic Trouble Code (DTC)

A: LIST

DTC	Description	Index
P0011	Intake Camshaft Position Timing - Over-Advanced (Bank 1)	<Ref. to GD(H6DO)-9, DTC P0011 INTAKE CAMSHAFT POSITION TIMING - OVER-ADVANCED (BANK 1), Diagnostic Trouble Code (DTC) Detecting Criteria.>
P0021	Intake Camshaft Position Timing - Over-Advanced (Bank 2)	<Ref. to GD(H6DO)-11, DTC P0021 INTAKE CAMSHAFT POSITION TIMING - OVER-ADVANCED (BANK 2), Diagnostic Trouble Code (DTC) Detecting Criteria.>
P0026	Intake Valve Control Solenoid Circuit Range/Performance (Bank 1)	<Ref. to GD(H6DO)-11, DTC P0026 INTAKE VALVE CONTROL SOLENOID CIRCUIT RANGE/PERFORMANCE (BANK 1), Diagnostic Trouble Code (DTC) Detecting Criteria.>
P0028	Intake Valve Control Solenoid Circuit Range/Performance (Bank 2)	<Ref. to GD(H6DO)-13, DTC P0028 INTAKE VALVE CONTROL SOLENOID CIRCUIT RANGE/PERFORMANCE (BANK 2), Diagnostic Trouble Code (DTC) Detecting Criteria.>
P0030	HO2S Heater Control Circuit (Bank 1 Sensor 1)	<Ref. to GD(H6DO)-14, DTC P0030 HO2S HEATER CONTROL CIRCUIT (BANK 1 SENSOR 1), Diagnostic Trouble Code (DTC) Detecting Criteria.>
P0031	HO2S Heater Control Circuit Low (Bank 1 Sensor 1)	<Ref. to GD(H6DO)-16, DTC P0031 HO2S HEATER CONTROL CIRCUIT LOW (BANK 1 SENSOR 1), Diagnostic Trouble Code (DTC) Detecting Criteria.>
P0032	HO2S Heater Control Circuit High (Bank 1 Sensor 1)	<Ref. to GD(H6DO)-18, DTC P0032 HO2S HEATER CONTROL CIRCUIT HIGH (BANK 1 SENSOR 1), Diagnostic Trouble Code (DTC) Detecting Criteria.>
P0037	HO2S Heater Control Circuit Low (Bank 1 Sensor 2)	<Ref. to GD(H6DO)-20, DTC P0037 HO2S HEATER CONTROL CIRCUIT LOW (BANK 1 SENSOR 2), Diagnostic Trouble Code (DTC) Detecting Criteria.>
P0038	HO2S Heater Control Circuit High (Bank 1 Sensor 2)	<Ref. to GD(H6DO)-22, DTC P0038 HO2S HEATER CONTROL CIRCUIT HIGH (BANK 1 SENSOR 2), Diagnostic Trouble Code (DTC) Detecting Criteria.>
P0050	HO2S Heater Control Circuit (Bank 2 Sensor 1)	<Ref. to GD(H6DO)-24, DTC P0050 HO2S HEATER CONTROL CIRCUIT (BANK 2 SENSOR 1), Diagnostic Trouble Code (DTC) Detecting Criteria.>
P0051	HO2S Heater Control Circuit Low (Bank 2 Sensor 1)	<Ref. to GD(H6DO)-24, DTC P0051 HO2S HEATER CONTROL CIRCUIT LOW (BANK 2 SENSOR 1), Diagnostic Trouble Code (DTC) Detecting Criteria.>
P0052	HO2S Heater Control Circuit High (Bank 2 Sensor 1)	<Ref. to GD(H6DO)-24, DTC P0052 HO2S HEATER CONTROL CIRCUIT HIGH (BANK 2 SENSOR 1), Diagnostic Trouble Code (DTC) Detecting Criteria.>
P0057	HO2S Heater Control Circuit Low (Bank 2 Sensor 2)	<Ref. to GD(H6DO)-24, DTC P0057 HO2S HEATER CONTROL CIRCUIT LOW (BANK 2 SENSOR 2), Diagnostic Trouble Code (DTC) Detecting Criteria.>
P0058	HO2S Heater Control Circuit High (Bank 2 Sensor 2)	<Ref. to GD(H6DO)-24, DTC P0058 HO2S HEATER CONTROL CIRCUIT HIGH (BANK 2 SENSOR 2), Diagnostic Trouble Code (DTC) Detecting Criteria.>
P0068	MAP/MAF - Throttle Position Correlation	<Ref. to GD(H6DO)-25, DTC P0068 MAP/MAF - THROTTLE POSITION CORRELATION, Diagnostic Trouble Code (DTC) Detecting Criteria.>
P0076	Intake Valve Control Circuit Low (Bank 1)	<Ref. to GD(H6DO)-27, DTC P0076 INTAKE VALVE CONTROL CIRCUIT LOW (BANK 1), Diagnostic Trouble Code (DTC) Detecting Criteria.>
P0077	Intake Valve Control Circuit High (Bank 1)	<Ref. to GD(H6DO)-28, DTC P0077 INTAKE VALVE CONTROL CIRCUIT HIGH (BANK 1), Diagnostic Trouble Code (DTC) Detecting Criteria.>
P0082	Intake Valve Control Circuit Low (Bank 2)	<Ref. to GD(H6DO)-29, DTC P0082 INTAKE VALVE CONTROL CIRCUIT LOW (BANK 2), Diagnostic Trouble Code (DTC) Detecting Criteria.>
P0083	Intake Valve Control Circuit High (Bank 2)	<Ref. to GD(H6DO)-29, DTC P0083 INTAKE VALVE CONTROL CIRCUIT HIGH (BANK 2), Diagnostic Trouble Code (DTC) Detecting Criteria.>
P0101	Mass or Volume Air Flow Circuit Range/Performance	<Ref. to GD(H6DO)-29, DTC P0101 MASS OR VOLUME AIR FLOW CIRCUIT RANGE/PERFORMANCE, Diagnostic Trouble Code (DTC) Detecting Criteria.>

DTC	Description	Index
P0102	Mass or Volume Air Flow Circuit Low Input	<Ref. to GD(H6DO)-32, DTC P0102 MASS OR VOLUME AIR FLOW CIRCUIT LOW INPUT, Diagnostic Trouble Code (DTC) Detecting Criteria.>
P0103	Mass or Volume Air Flow Circuit High Input	<Ref. to GD(H6DO)-34, DTC P0103 MASS OR VOLUME AIR FLOW CIRCUIT HIGH INPUT, Diagnostic Trouble Code (DTC) Detecting Criteria.>
P0107	Manifold Absolute Pressure/Barometric Pressure Circuit Low Input	<Ref. to GD(H6DO)-36, DTC P0107 MANIFOLD ABSOLUTE PRESSURE/BAROMETRIC PRESSURE CIRCUIT LOW INPUT, Diagnostic Trouble Code (DTC) Detecting Criteria.>
P0108	Manifold Absolute Pressure/Barometric Pressure Circuit High Input	<Ref. to GD(H6DO)-38, DTC P0108 MANIFOLD ABSOLUTE PRESSURE/BAROMETRIC PRESSURE CIRCUIT HIGH INPUT, Diagnostic Trouble Code (DTC) Detecting Criteria.>
P0111	Intake Air Temperature Circuit Range/Performance	<Ref. to GD(H6DO)-40, DTC P0111 INTAKE AIR TEMPERATURE CIRCUIT RANGE/PERFORMANCE, Diagnostic Trouble Code (DTC) Detecting Criteria.>
P0112	Intake Air Temperature Circuit Low Input	<Ref. to GD(H6DO)-42, DTC P0112 INTAKE AIR TEMPERATURE CIRCUIT LOW INPUT, Diagnostic Trouble Code (DTC) Detecting Criteria.>
P0113	Intake Air Temperature Circuit High Input	<Ref. to GD(H6DO)-44, DTC P0113 INTAKE AIR TEMPERATURE CIRCUIT HIGH INPUT, Diagnostic Trouble Code (DTC) Detecting Criteria.>
P0117	Engine Coolant Temperature Circuit Low Input	<Ref. to GD(H6DO)-46, DTC P0117 ENGINE COOLANT TEMPERATURE CIRCUIT LOW INPUT, Diagnostic Trouble Code (DTC) Detecting Criteria.>
P0118	Engine Coolant Temperature Circuit High Input	<Ref. to GD(H6DO)-48, DTC P0118 ENGINE COOLANT TEMPERATURE CIRCUIT HIGH INPUT, Diagnostic Trouble Code (DTC) Detecting Criteria.>
P0122	Throttle/Pedal Position Sensor/Switch “A” Circuit Low Input	<Ref. to GD(H6DO)-50, DTC P0122 THROTTLE/PEDAL POSITION SENSOR/SWITCH “A” CIRCUIT LOW INPUT, Diagnostic Trouble Code (DTC) Detecting Criteria.>
P0123	Throttle/Pedal Position Sensor/Switch “A” Circuit High Input	<Ref. to GD(H6DO)-52, DTC P0123 THROTTLE/PEDAL POSITION SENSOR/SWITCH “A” CIRCUIT HIGH INPUT, Diagnostic Trouble Code (DTC) Detecting Criteria.>
P0125	Insufficient Engine Coolant Temperature For Closed Loop Fuel Control	<Ref. to GD(H6DO)-54, DTC P0125 INSUFFICIENT ENGINE COOLANT TEMPERATURE FOR CLOSED LOOP FUEL CONTROL, Diagnostic Trouble Code (DTC) Detecting Criteria.>
P0126	Insufficient Engine Coolant Temperature For Stable Operation	<Ref. to GD(H6DO)-56, DTC P0126 INSUFFICIENT ENGINE COOLANT TEMPERATURE FOR STABLE OPERATION, Diagnostic Trouble Code (DTC) Detecting Criteria.>
P0128	Coolant Thermostat (Engine Coolant Temperature Below Thermostat Regulating Temperature)	<Ref. to GD(H6DO)-58, DTC P0128 COOLANT THERMOSTAT (ENGINE COOLANT TEMPERATURE BELOW THERMOSTAT REGULATING TEMPERATURE), Diagnostic Trouble Code (DTC) Detecting Criteria.>
P0131	O2 Sensor Circuit Low Voltage (Bank 1 Sensor 1)	<Ref. to GD(H6DO)-60, DTC P0131 O2 SENSOR CIRCUIT LOW VOLTAGE (BANK 1 SENSOR 1), Diagnostic Trouble Code (DTC) Detecting Criteria.>
P0132	O2 Sensor Circuit High Voltage (Bank 1 Sensor 1)	<Ref. to GD(H6DO)-62, DTC P0132 O2 SENSOR CIRCUIT HIGH VOLTAGE (BANK 1 SENSOR 1), Diagnostic Trouble Code (DTC) Detecting Criteria.>
P0133	O2 Sensor Circuit Slow Response (Bank 1 Sensor 1)	<Ref. to GD(H6DO)-64, DTC P0133 O2 SENSOR CIRCUIT SLOW RESPONSE (BANK 1 SENSOR 1), Diagnostic Trouble Code (DTC) Detecting Criteria.>
P0134	O2 Sensor Circuit No Activity Detected (Bank 1 Sensor 1)	<Ref. to GD(H6DO)-67, DTC P0134 O2 SENSOR CIRCUIT NO ACTIVITY DETECTED (BANK 1 SENSOR 1), Diagnostic Trouble Code (DTC) Detecting Criteria.>
P0137	O2 Sensor Circuit Low Voltage (Bank 1 Sensor 2)	<Ref. to GD(H6DO)-69, DTC P0137 O2 SENSOR CIRCUIT LOW VOLTAGE (BANK 1 SENSOR 2), Diagnostic Trouble Code (DTC) Detecting Criteria.>
P0138	O2 Sensor Circuit High Voltage (Bank 1 Sensor 2)	<Ref. to GD(H6DO)-71, DTC P0138 O2 SENSOR CIRCUIT HIGH VOLTAGE (BANK 1 SENSOR 2), Diagnostic Trouble Code (DTC) Detecting Criteria.>
P0139	O2 Sensor Circuit Slow Response (Bank 1 Sensor 2)	<Ref. to GD(H6DO)-73, DTC P0139 O2 SENSOR CIRCUIT SLOW RESPONSE (BANK 1 SENSOR 2), Diagnostic Trouble Code (DTC) Detecting Criteria.>
P0151	O2 Sensor Circuit Low Voltage (Bank 2 Sensor 1)	<Ref. to GD(H6DO)-79, DTC P0151 O2 SENSOR CIRCUIT LOW VOLTAGE (BANK 2 SENSOR 1), Diagnostic Trouble Code (DTC) Detecting Criteria.>
P0152	O2 Sensor Circuit High Voltage (Bank 2 Sensor 1)	<Ref. to GD(H6DO)-79, DTC P0152 O2 SENSOR CIRCUIT HIGH VOLTAGE (BANK 2 SENSOR 1), Diagnostic Trouble Code (DTC) Detecting Criteria.>

DTC	Description	Index
P0153	O2 Sensor Circuit Slow Response (Bank 2 Sensor 1)	<Ref. to GD(H6DO)-79, DTC P0153 O2 SENSOR CIRCUIT SLOW RESPONSE (BANK 2 SENSOR 1), Diagnostic Trouble Code (DTC) Detecting Criteria.>
P0154	O2 Sensor Circuit No Activity Detected (Bank 2 Sensor 1)	<Ref. to GD(H6DO)-79, DTC P0154 O2 SENSOR CIRCUIT NO ACTIVITY DETECTED (BANK 2 SENSOR 1), Diagnostic Trouble Code (DTC) Detecting Criteria.>
P0157	O2 Sensor Circuit Low Voltage (Bank 2 Sensor 2)	<Ref. to GD(H6DO)-79, DTC P0157 O2 SENSOR CIRCUIT LOW VOLTAGE (BANK 2 SENSOR 2), Diagnostic Trouble Code (DTC) Detecting Criteria.>
P0158	O2 Sensor Circuit High Voltage (Bank 2 Sensor 2)	<Ref. to GD(H6DO)-79, DTC P0158 O2 SENSOR CIRCUIT HIGH VOLTAGE (BANK 2 SENSOR 2), Diagnostic Trouble Code (DTC) Detecting Criteria.>
P0159	O2 Sensor Circuit Slow Response (Bank 2 Sensor 2)	<Ref. to GD(H6DO)-79, DTC P0159 O2 SENSOR CIRCUIT SLOW RESPONSE (BANK 2 SENSOR 2), Diagnostic Trouble Code (DTC) Detecting Criteria.>
P0171	System Too Lean (Bank 1)	<Ref. to GD(H6DO)-80, DTC P0171 SYSTEM TOO LEAN (BANK 1), Diagnostic Trouble Code (DTC) Detecting Criteria.>
P0172	System Too Rich (Bank 1)	<Ref. to GD(H6DO)-82, DTC P0172 SYSTEM TOO RICH (BANK 1), Diagnostic Trouble Code (DTC) Detecting Criteria.>
P0174	System too Lean (Bank 2)	<Ref. to GD(H6DO)-83, DTC P0174 SYSTEM TOO LEAN (BANK 2), Diagnostic Trouble Code (DTC) Detecting Criteria.>
P0175	System too Rich (Bank 2)	<Ref. to GD(H6DO)-83, DTC P0175 SYSTEM TOO RICH (BANK 2), Diagnostic Trouble Code (DTC) Detecting Criteria.>
P0181	Fuel Temperature Sensor “A” Circuit Range/Performance	<Ref. to GD(H6DO)-84, DTC P0181 FUEL TEMPERATURE SENSOR “A” CIRCUIT RANGE/PERFORMANCE, Diagnostic Trouble Code (DTC) Detecting Criteria.>
P0182	Fuel Temperature Sensor “A” Circuit Low Input	<Ref. to GD(H6DO)-87, DTC P0182 FUEL TEMPERATURE SENSOR “A” CIRCUIT LOW INPUT, Diagnostic Trouble Code (DTC) Detecting Criteria.>
P0183	Fuel Temperature Sensor “A” Circuit High Input	<Ref. to GD(H6DO)-89, DTC P0183 FUEL TEMPERATURE SENSOR “A” CIRCUIT HIGH INPUT, Diagnostic Trouble Code (DTC) Detecting Criteria.>
P0196	Engine Oil Temperature Sensor Circuit Range/Performance	<Ref. to GD(H6DO)-91, DTC P0196 ENGINE OIL TEMPERATURE SENSOR CIRCUIT RANGE/PERFORMANCE, Diagnostic Trouble Code (DTC) Detecting Criteria.>
P0197	Engine Oil Temperature Sensor Circuit Low	<Ref. to GD(H6DO)-93, DTC P0197 ENGINE OIL TEMPERATURE SENSOR CIRCUIT LOW, Diagnostic Trouble Code (DTC) Detecting Criteria.>
P0198	Engine Oil Temperature Sensor Circuit High	<Ref. to GD(H6DO)-94, DTC P0198 ENGINE OIL TEMPERATURE SENSOR CIRCUIT HIGH, Diagnostic Trouble Code (DTC) Detecting Criteria.>
P0222	Throttle/Pedal Position Sensor/ Switch “B” Circuit Low Input	<Ref. to GD(H6DO)-95, DTC P0222 THROTTLE/PEDAL POSITION SENSOR/SWITCH “B” CIRCUIT LOW INPUT, Diagnostic Trouble Code (DTC) Detecting Criteria.>
P0223	Throttle/Pedal Position Sensor/ Switch “B” Circuit High Input	<Ref. to GD(H6DO)-97, DTC P0223 THROTTLE/PEDAL POSITION SENSOR/SWITCH “B” CIRCUIT HIGH INPUT, Diagnostic Trouble Code (DTC) Detecting Criteria.>
P0230	Fuel Pump Primary Circuit	<Ref. to GD(H6DO)-99, DTC P0230 FUEL PUMP PRIMARY CIRCUIT, Diagnostic Trouble Code (DTC) Detecting Criteria.>
P0301	Cylinder 1 Misfire Detected	<Ref. to GD(H6DO)-101, DTC P0301 CYLINDER 1 MISFIRE DETECTED, Diagnostic Trouble Code (DTC) Detecting Criteria.>
P0302	Cylinder 2 Misfire Detected	<Ref. to GD(H6DO)-106, DTC P0302 CYLINDER 2 MISFIRE DETECTED, Diagnostic Trouble Code (DTC) Detecting Criteria.>
P0303	Cylinder 3 Misfire Detected	<Ref. to GD(H6DO)-106, DTC P0303 CYLINDER 3 MISFIRE DETECTED, Diagnostic Trouble Code (DTC) Detecting Criteria.>
P0304	Cylinder 4 Misfire Detected	<Ref. to GD(H6DO)-106, DTC P0304 CYLINDER 4 MISFIRE DETECTED, Diagnostic Trouble Code (DTC) Detecting Criteria.>
P0305	Cylinder 5 Misfire Detected	<Ref. to GD(H6DO)-106, DTC P0305 CYLINDER 5 MISFIRE DETECTED, Diagnostic Trouble Code (DTC) Detecting Criteria.>
P0306	Cylinder 6 Misfire Detected	<Ref. to GD(H6DO)-106, DTC P0306 CYLINDER 6 MISFIRE DETECTED, Diagnostic Trouble Code (DTC) Detecting Criteria.>

DTC	Description	Index
P0327	Knock Sensor 1 Circuit Low Input (Bank 1 or Single Sensor)	<Ref. to GD(H6DO)-107, DTC P0327 KNOCK SENSOR 1 CIRCUIT LOW INPUT (BANK 1 OR SINGLE SENSOR), Diagnostic Trouble Code (DTC) Detecting Criteria.>
P0328	Knock Sensor 1 Circuit High Input (Bank 1 or Single Sensor)	<Ref. to GD(H6DO)-109, DTC P0328 KNOCK SENSOR 1 CIRCUIT HIGH INPUT (BANK 1 OR SINGLE SENSOR), Diagnostic Trouble Code (DTC) Detecting Criteria.>
P0332	Knock Sensor 2 Circuit Low Input (Bank 2)	<Ref. to GD(H6DO)-110, DTC P0332 KNOCK SENSOR 2 CIRCUIT LOW INPUT (BANK 2), Diagnostic Trouble Code (DTC) Detecting Criteria.>
P0333	Knock Sensor 2 Circuit High Input (Bank 2)	<Ref. to GD(H6DO)-110, DTC P0333 KNOCK SENSOR 2 CIRCUIT HIGH INPUT (BANK 2), Diagnostic Trouble Code (DTC) Detecting Criteria.>
P0335	Crankshaft Position Sensor “A” Circuit	<Ref. to GD(H6DO)-111, DTC P0335 CRANKSHAFT POSITION SENSOR “A” CIRCUIT, Diagnostic Trouble Code (DTC) Detecting Criteria.>
P0336	Crankshaft Position Sensor “A” Circuit Range/Performance	<Ref. to GD(H6DO)-113, DTC P0336 CRANKSHAFT POSITION SENSOR “A” CIRCUIT RANGE/PERFORMANCE, Diagnostic Trouble Code (DTC) Detecting Criteria.>
P0340	Camshaft Position Sensor “A” Circuit (Bank 1 or Single Sensor)	<Ref. to GD(H6DO)-115, DTC P0340 CAMSHAFT POSITION SENSOR “A” CIRCUIT (BANK 1 OR SINGLE SENSOR), Diagnostic Trouble Code (DTC) Detecting Criteria.>
P0345	Camshaft Position Sensor “A” Circuit (Bank 2)	<Ref. to GD(H6DO)-117, DTC P0345 CAMSHAFT POSITION SENSOR “A” CIRCUIT (BANK 2), Diagnostic Trouble Code (DTC) Detecting Criteria.>
P0420	Catalyst System Efficiency Below Threshold (Bank 1)	<Ref. to GD(H6DO)-117, DTC P0420 CATALYST SYSTEM EFFICIENCY BELOW THRESHOLD (BANK 1), Diagnostic Trouble Code (DTC) Detecting Criteria.>
P0442	Evaporative Emission Control System Leak Detected (Small Leak)	<Ref. to GD(H6DO)-120, DTC P0442 EVAPORATIVE EMISSION CONTROL SYSTEM LEAK DETECTED (SMALL LEAK), Diagnostic Trouble Code (DTC) Detecting Criteria.>
P0447	Evaporative Emission Control System Vent Control Circuit Open	<Ref. to GD(H6DO)-135, DTC P0447 EVAPORATIVE EMISSION CONTROL SYSTEM VENT CONTROL CIRCUIT OPEN, Diagnostic Trouble Code (DTC) Detecting Criteria.>
P0448	Evaporative Emission Control System Vent Control Circuit Shorted	<Ref. to GD(H6DO)-137, DTC P0448 EVAPORATIVE EMISSION CONTROL SYSTEM VENT CONTROL CIRCUIT SHORTED, Diagnostic Trouble Code (DTC) Detecting Criteria.>
P0451	Evaporative Emission Control System Pressure Sensor Range/Performance	<Ref. to GD(H6DO)-139, DTC P0451 EVAPORATIVE EMISSION CONTROL SYSTEM PRESSURE SENSOR, Diagnostic Trouble Code (DTC) Detecting Criteria.>
P0452	Evaporative Emission Control System Pressure Sensor Low Input	<Ref. to GD(H6DO)-141, DTC P0452 EVAPORATIVE EMISSION CONTROL SYSTEM PRESSURE SENSOR LOW INPUT, Diagnostic Trouble Code (DTC) Detecting Criteria.>
P0453	Evaporative Emission Control System Pressure Sensor High Input	<Ref. to GD(H6DO)-143, DTC P0453 EVAPORATIVE EMISSION CONTROL SYSTEM PRESSURE SENSOR HIGH INPUT, Diagnostic Trouble Code (DTC) Detecting Criteria.>
P0456	Evaporative Emission Control System Leak Detected (Very Small Leak)	<Ref. to GD(H6DO)-144, DTC P0456 EVAPORATIVE EMISSION CONTROL SYSTEM LEAK DETECTED (VERY SMALL LEAK), Diagnostic Trouble Code (DTC) Detecting Criteria.>
P0457	Evaporative Emission Control System Leak Detected (Fuel Cap Loose/Off)	<Ref. to GD(H6DO)-144, DTC P0457 EVAPORATIVE EMISSION CONTROL SYSTEM LEAK DETECTED (FUEL CAP LOOSE/OFF), Diagnostic Trouble Code (DTC) Detecting Criteria.>
P0458	Evaporative Emission Control System Purge Control Valve Circuit Low	<Ref. to GD(H6DO)-145, DTC P0458 EVAPORATIVE EMISSION CONTROL SYSTEM PURGE CONTROL VALVE CIRCUIT LOW, Diagnostic Trouble Code (DTC) Detecting Criteria.>
P0459	Evaporative Emission Control System Purge Control Valve Circuit High	<Ref. to GD(H6DO)-147, DTC P0459 EVAPORATIVE EMISSION CONTROL SYSTEM PURGE CONTROL VALVE CIRCUIT HIGH, Diagnostic Trouble Code (DTC) Detecting Criteria.>
P0461	Fuel Level Sensor Circuit Range/Performance	<Ref. to GD(H6DO)-149, DTC P0461 FUEL LEVEL SENSOR CIRCUIT RANGE/PERFORMANCE, Diagnostic Trouble Code (DTC) Detecting Criteria.>

List of Diagnostic Trouble Code (DTC)

DTC	Description	Index
P0462	Fuel Level Sensor Circuit Low Input	<Ref. to GD(H6DO)-151, DTC P0462 FUEL LEVEL SENSOR CIRCUIT LOW INPUT, Diagnostic Trouble Code (DTC) Detecting Criteria.>
P0463	Fuel Level Sensor Circuit High Input	<Ref. to GD(H6DO)-153, DTC P0463 FUEL LEVEL SENSOR CIRCUIT HIGH INPUT, Diagnostic Trouble Code (DTC) Detecting Criteria.>
P0464	Fuel Level Sensor Circuit Intermittent	<Ref. to GD(H6DO)-155, DTC P0464 FUEL LEVEL SENSOR CIRCUIT INTERMITTENT, Diagnostic Trouble Code (DTC) Detecting Criteria.>
P0483	Cooling Fan Rationality Check	<Ref. to GD(H6DO)-158, DTC P0483 COOLING FAN RATIONALITY CHECK, Diagnostic Trouble Code (DTC) Detecting Criteria.>
P0500	Vehicle Speed Sensor	<Ref. to GD(H6DO)-159, DTC P0500 VEHICLE SPEED SENSOR, Diagnostic Trouble Code (DTC) Detecting Criteria.>
P0506	Idle Control System Rpm Lower Than Expected	<Ref. to GD(H6DO)-161, DTC P0506 IDLE CONTROL SYSTEM RPM LOWER THAN EXPECTED, Diagnostic Trouble Code (DTC) Detecting Criteria.>
P0507	Idle Control System Rpm Higher Than Expected	<Ref. to GD(H6DO)-163, DTC P0507 IDLE CONTROL SYSTEM RPM HIGHER THAN EXPECTED, Diagnostic Trouble Code (DTC) Detecting Criteria.>
P0512	Starter Request Circuit	<Ref. to GD(H6DO)-164, DTC P0512 STARTER REQUEST CIRCUIT, Diagnostic Trouble Code (DTC) Detecting Criteria.>
P0513	Incorrect Immobilizer Key	<Ref. to GD(H6DO)-165, DTC P0513 INCORRECT IMMOBILIZER KEY, Diagnostic Trouble Code (DTC) Detecting Criteria.>
P0519	Idle Control System Malfunction (Fail-Safe)	<Ref. to GD(H6DO)-166, DTC P0519 IDLE CONTROL SYSTEM MALFUNCTION (FAIL-SAFE), Diagnostic Trouble Code (DTC) Detecting Criteria.>
P0600	Serial Communication Link	<Ref. to GD(H6DO)-167, DTC P0600 SERIAL COMMUNICATION LINK, Diagnostic Trouble Code (DTC) Detecting Criteria.>
P0604	Internal Control Module Random Access Memory (RAM) Error	<Ref. to GD(H6DO)-168, DTC P0604 INTERNAL CONTROL MODULE RANDOM ACCESS MEMORY (RAM) ERROR, Diagnostic Trouble Code (DTC) Detecting Criteria.>
P0605	Internal Control Module Read Only Memory (ROM) Error	<Ref. to GD(H6DO)-169, DTC P0605 INTERNAL CONTROL MODULE READ ONLY MEMORY (ROM) ERROR, Diagnostic Trouble Code (DTC) Detecting Criteria.>
P0607	Control Module Performance	<Ref. to GD(H6DO)-170, DTC P0607 CONTROL MODULE PERFORMANCE, Diagnostic Trouble Code (DTC) Detecting Criteria.>
P0638	Throttle Actuator Control Range/ Performance (Bank 1)	<Ref. to GD(H6DO)-173, DTC P0638 THROTTLE ACTUATOR CONTROL RANGE/PERFORMANCE (BANK 1), Diagnostic Trouble Code (DTC) Detecting Criteria.>
P0691	Cooling Fan 1 Control Circuit Low	<Ref. to GD(H6DO)-176, DTC P0691 COOLING FAN 1 CONTROL CIRCUIT LOW, Diagnostic Trouble Code (DTC) Detecting Criteria.>
P0692	Cooling Fan 1 Control Circuit High	<Ref. to GD(H6DO)-177, DTC P0692 COOLING FAN 1 CONTROL CIRCUIT HIGH, Diagnostic Trouble Code (DTC) Detecting Criteria.>
P0700	Transmission Control System (Mil Request)	<Ref. to GD(H6DO)-178, DTC P0700 TRANSMISSION CONTROL SYSTEM (MIL REQUEST), Diagnostic Trouble Code (DTC) Detecting Criteria.>
P1152	O2 Sensor Circuit Range/Performance (Low) (Bank 1 Sensor 1)	<Ref. to GD(H6DO)-179, DTC P1152 O2 SENSOR CIRCUIT RANGE/PERFORMANCE (LOW) (BANK1 SENSOR1), Diagnostic Trouble Code (DTC) Detecting Criteria.>
P1153	O2 Sensor Circuit Range/Performance (High) (Bank 1 Sensor 1)	<Ref. to GD(H6DO)-182, DTC P1153 O2 SENSOR CIRCUIT RANGE/PERFORMANCE (HIGH) (BANK1 SENSOR1), Diagnostic Trouble Code (DTC) Detecting Criteria.>
P1154	O2 Sensor Circuit Range/Performance (Low) (Bank 2 Sensor 1)	<Ref. to GD(H6DO)-184, DTC P1154 O2 SENSOR CIRCUIT RANGE/PERFORMANCE (LOW) (BANK 2 SENSOR 1), Diagnostic Trouble Code (DTC) Detecting Criteria.>
P1155	O2 Sensor Circuit Range/Performance (High) (Bank 2 Sensor 1)	<Ref. to GD(H6DO)-184, DTC P1155 O2 SENSOR CIRCUIT RANGE/PERFORMANCE (HIGH) (BANK 2 SENSOR 1), Diagnostic Trouble Code (DTC) Detecting Criteria.>
P1160	Return Spring Failure	<Ref. to GD(H6DO)-185, DTC P1160 RETURN SPRING FAILURE, Diagnostic Trouble Code (DTC) Detecting Criteria.>

DTC	Description	Index
P1400	Fuel Tank Pressure Control Solenoid Valve Circuit Low	<Ref. to GD(H6DO)-187, DTC P1400 FUEL TANK PRESSURE CONTROL SOLENOID VALVE CIRCUIT LOW, Diagnostic Trouble Code (DTC) Detecting Criteria.>
P1420	Fuel Tank Pressure Control Sol. Valve Circuit High	<Ref. to GD(H6DO)-189, DTC P1420 FUEL TANK PRESSURE CONTROL SOL. VALVE CIRCUIT HIGH, Diagnostic Trouble Code (DTC) Detecting Criteria.>
P1443	Vent Control Solenoid Valve Function Problem	<Ref. to GD(H6DO)-191, DTC P1443 VENT CONTROL SOLENOID VALVE FUNCTION PROBLEM, Diagnostic Trouble Code (DTC) Detecting Criteria.>
P1446	Fuel Tank Sensor Control Valve Circuit Low	<Ref. to GD(H6DO)-193, DTC P1446 FUEL TANK SENSOR CONTROL VALVE CIRCUIT LOW, Diagnostic Trouble Code (DTC) Detecting Criteria.>
P1447	Fuel Tank Sensor Control Valve Circuit High	<Ref. to GD(H6DO)-195, DTC P1447 FUEL TANK SENSOR CONTROL VALVE CIRCUIT HIGH, Diagnostic Trouble Code (DTC) Detecting Criteria.>
P1518	Starter Switch Circuit Low Input	<Ref. to GD(H6DO)-197, DTC P1518 STARTER SWITCH CIRCUIT LOW INPUT, Diagnostic Trouble Code (DTC) Detecting Criteria.>
P1560	Back-Up Voltage Circuit Malfunction	<Ref. to GD(H6DO)-198, DTC P1560 BACK-UP VOLTAGE CIRCUIT MALFUNCTION, Diagnostic Trouble Code (DTC) Detecting Criteria.>
P1570	Antenna	<Ref. to GD(H6DO)-199, DTC P1570 ANTENNA, Diagnostic Trouble Code (DTC) Detecting Criteria.>
P1571	Reference Code Incompatibility	<Ref. to GD(H6DO)-199, DTC P1571 REFERENCE CODE INCOMPATIBILITY, Diagnostic Trouble Code (DTC) Detecting Criteria.>
P1572	Imm Circuit Failure (Except Antenna Circuit)	<Ref. to GD(H6DO)-199, DTC P1572 IMM CIRCUIT FAILURE (EXCEPT ANTENNA CIRCUIT), Diagnostic Trouble Code (DTC) Detecting Criteria.>
P1574	Key Communication Failure	<Ref. to GD(H6DO)-199, DTC P1574 KEY COMMUNICATION FAILURE, Diagnostic Trouble Code (DTC) Detecting Criteria.>
P1576	Egi Control Module Eeprom	<Ref. to GD(H6DO)-199, DTC P1576 EGI CONTROL MODULE EEPROM, Diagnostic Trouble Code (DTC) Detecting Criteria.>
P1577	Imm Control Module Eeprom	<Ref. to GD(H6DO)-199, DTC P1577 IMM CONTROL MODULE EEPROM, Diagnostic Trouble Code (DTC) Detecting Criteria.>
P1578	Meter Failure	<Ref. to GD(H6DO)-199, DTC P1578 METER FAILURE, Diagnostic Trouble Code (DTC) Detecting Criteria.>
P2088	OCV Solenoid Valve Signal A Circuit Open (Bank 1)	<Ref. to GD(H6DO)-200, DTC P2088 OCV SOLENOID VALVE SIGNAL A CIRCUIT OPEN (BANK 1), Diagnostic Trouble Code (DTC) Detecting Criteria.>
P2089	OCV Solenoid Valve Signal A Circuit Short (Bank 1)	<Ref. to GD(H6DO)-202, DTC P2089 OCV SOLENOID VALVE SIGNAL A CIRCUIT SHORT (BANK 1), Diagnostic Trouble Code (DTC) Detecting Criteria.>
P2092	OCV Solenoid Valve Signal A Circuit Open (Bank 2)	<Ref. to GD(H6DO)-203, DTC P2092 OCV SOLENOID VALVE SIGNAL A CIRCUIT OPEN (BANK 2), Diagnostic Trouble Code (DTC) Detecting Criteria.>
P2093	OCV Solenoid Valve Signal A Circuit Short (Bank 2)	<Ref. to GD(H6DO)-203, DTC P2093 OCV SOLENOID VALVE SIGNAL A CIRCUIT SHORT (BANK 2), Diagnostic Trouble Code (DTC) Detecting Criteria.>
P2096	Post Catalyst Fuel Trim System Too Lean Bank 1	<Ref. to GD(H6DO)-204, DTC P2096 POST CATALYST FUEL TRIM SYSTEM TOO LEAN BANK 1, Diagnostic Trouble Code (DTC) Detecting Criteria.>
P2097	Post Catalyst Fuel Trim System Too Rich Bank 1	<Ref. to GD(H6DO)-206, DTC P2097 POST CATALYST FUEL TRIM SYSTEM TOO RICH BANK 1, Diagnostic Trouble Code (DTC) Detecting Criteria.>
P2098	Post Catalyst Fuel Trim System Too Lean Bank 2	<Ref. to GD(H6DO)-207, DTC P2098 POST CATALYST FUEL TRIM SYSTEM TOO LEAN BANK 2, Diagnostic Trouble Code (DTC) Detecting Criteria.>
P2099	Post Catalyst Fuel Trim System Too Rich Bank 2	<Ref. to GD(H6DO)-207, DTC P2099 POST CATALYST FUEL TRIM SYSTEM TOO RICH BANK 2, Diagnostic Trouble Code (DTC) Detecting Criteria.>
P2101	Throttle Actuator Control Motor Circuit Range/Performance	<Ref. to GD(H6DO)-208, DTC P2101 THROTTLE ACTUATOR CONTROL MOTOR CIRCUIT RANGE/PERFORMANCE, Diagnostic Trouble Code (DTC) Detecting Criteria.>

DTC	Description	Index
P2102	Throttle Actuator Control Motor Circuit Low	<Ref. to GD(H6DO)-210, DTC P2102 THROTTLE ACTUATOR CONTROL MOTOR CIRCUIT LOW, Diagnostic Trouble Code (DTC) Detecting Criteria.>
P2103	Throttle Actuator Control Motor Circuit High	<Ref. to GD(H6DO)-212, DTC P2103 THROTTLE ACTUATOR CONTROL MOTOR CIRCUIT HIGH, Diagnostic Trouble Code (DTC) Detecting Criteria.>
P2109	Throttle/Pedal Position Sensor A Minimum Stop Performance	<Ref. to GD(H6DO)-214, DTC P2109 THROTTLE/PEDAL POSITION SENSOR A MINIMUM STOP PERFORMANCE, Diagnostic Trouble Code (DTC) Detecting Criteria.>
P2122	Throttle/Pedal Position Sensor/ Switch “D” Circuit Low Input	<Ref. to GD(H6DO)-216, DTC P2122 THROTTLE/PEDAL POSITION SENSOR/SWITCH “D” CIRCUIT LOW INPUT, Diagnostic Trouble Code (DTC) Detecting Criteria.>
P2123	Throttle/Pedal Position Sensor/ Switch “D” Circuit High Input	<Ref. to GD(H6DO)-218, DTC P2123 THROTTLE/PEDAL POSITION SENSOR/SWITCH “D” CIRCUIT HIGH INPUT, Diagnostic Trouble Code (DTC) Detecting Criteria.>
P2127	Throttle/Pedal Position Sensor/ Switch “E” Circuit Low Input	<Ref. to GD(H6DO)-220, DTC P2127 THROTTLE/PEDAL POSITION SENSOR/SWITCH “E” CIRCUIT LOW INPUT, Diagnostic Trouble Code (DTC) Detecting Criteria.>
P2128	Throttle/Pedal Position Sensor/ Switch “E” Circuit High Input	<Ref. to GD(H6DO)-222, DTC P2128 THROTTLE/PEDAL POSITION SENSOR/SWITCH “E” CIRCUIT HIGH INPUT, Diagnostic Trouble Code (DTC) Detecting Criteria.>
P2135	Throttle/Pedal Position Sensor/ Switch “A”/“B” Voltage Rationality	<Ref. to GD(H6DO)-224, DTC P2135 THROTTLE/PEDAL POSITION SENSOR/SWITCH “A”/“B” VOLTAGE RATIONALITY, Diagnostic Trouble Code (DTC) Detecting Criteria.>
P2138	Throttle/Pedal Position Sensor/ Switch “D”/“E” Voltage Rationality	<Ref. to GD(H6DO)-226, DTC P2138 THROTTLE/PEDAL POSITION SENSOR/SWITCH “D”/“E” VOLTAGE RATIONALITY, Diagnostic Trouble Code (DTC) Detecting Criteria.>
P2227	Barometric Pressure Circuit Range/Performance	<Ref. to GD(H6DO)-228, DTC P2227 BAROMETRIC PRESSURE CIRCUIT RANGE/PERFORMANCE, Diagnostic Trouble Code (DTC) Detecting Criteria.>
P2228	Barometric Pressure Circuit Low Input	<Ref. to GD(H6DO)-229, DTC P2228 BAROMETRIC PRESSURE CIRCUIT LOW INPUT, Diagnostic Trouble Code (DTC) Detecting Criteria.>
P2229	Barometric Pressure Circuit High Input	<Ref. to GD(H6DO)-230, DTC P2229 BAROMETRIC PRESSURE CIRCUIT HIGH INPUT, Diagnostic Trouble Code (DTC) Detecting Criteria.>
P2503	Charging System Voltage Low	<Ref. to GD(H6DO)-231, DTC P2503 CHARGING SYSTEM VOLTAGE LOW, Diagnostic Trouble Code (DTC) Detecting Criteria.>
P2504	Charging System Voltage High	<Ref. to GD(H6DO)-232, DTC P2504 CHARGING SYSTEM VOLTAGE HIGH, Diagnostic Trouble Code (DTC) Detecting Criteria.>

2. Diagnostic Trouble Code (DTC) Detecting Criteria

A: DTC P0011 INTAKE CAMSHAFT POSITION TIMING - OVER-ADVANCED (BANK 1)

1. OUTLINE OF DIAGNOSIS

Detect the malfunction of AVCS system.

2. COMPONENT DESCRIPTION

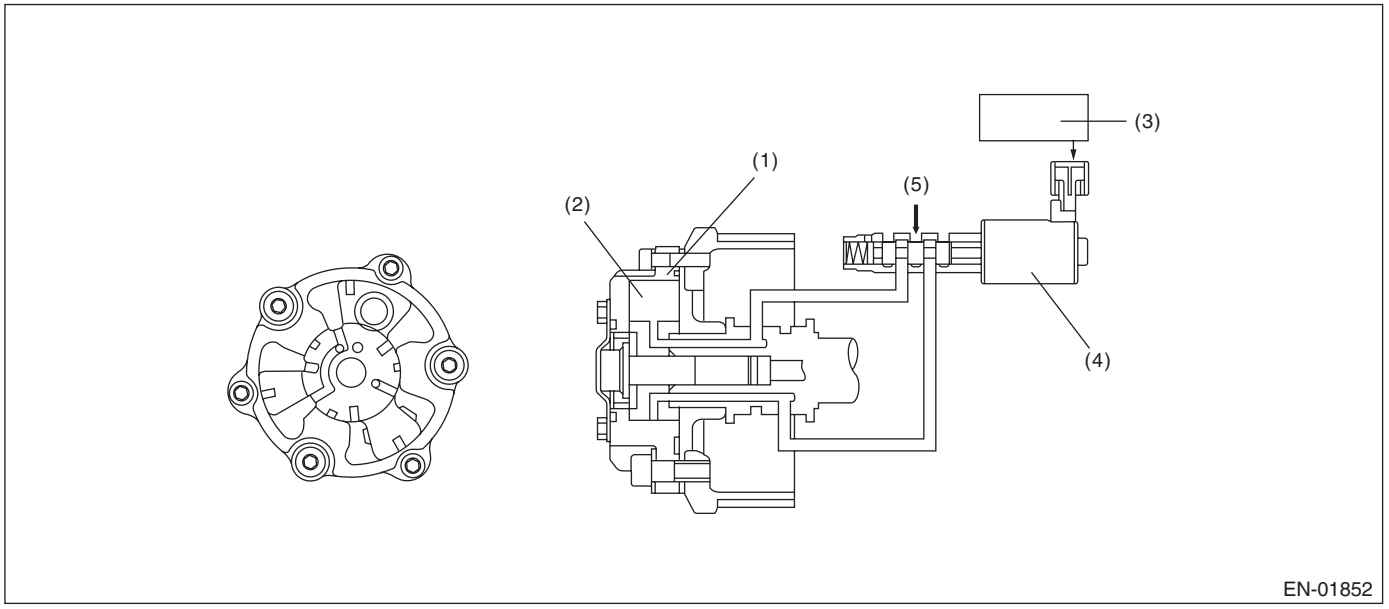

(1) AVCS timing controller
(2) Vane
(3) Engine control module (ECM)
(4) Oil flow control solenoid valve
(5) Oil pressure

3. ENABLE CONDITION (FOR ABNORMALITY JUDGMENT ONLY)

Secondary Parameters	Enable Conditions
Abnormality judgement (1)	
Battery voltage	≥ 10.9 V
Engine speed	≥ 1500 rpm
Engine coolant temperature	≥ 50°C (122°F)
Abnormality judgement (2)	
AVCS control	Operation
Battery voltage	≥ 10.9 V
Engine speed	≥ 500 rpm
Engine coolant temperature	≥ 50°C (122°F)

4. GENERAL DRIVING CYCLE

1) Always perform the diagnosis after warming up when the engine speed increases and AVCS operates.
2) Always perform the diagnosis after warming up the engine.

5. DIAGNOSTIC METHOD

1) Judge NG when the difference of the amount of AVCS target timing advance and the amount of AVCS actual timing advance becomes large.
2) Judge NG when the most retarded learning value is outside of the normal range.

• Abnormality Judgment

Judge NG when the continuous time of completing the malfunction criteria below becomes more than 20 seconds.

Judgment Value

Malfunction Criteria	Threshold Value
(1) Judgment value |AVCS target position − AVCS actual position|	≥ 20°
(2) Judgment value Most timing retard learning value	< −18°CA or > 18°CA

Time Needed for Diagnosis: 20 seconds

Malfunction Indicator Light Illumination: Illuminates when malfunction occurs in 2 continuous driving cycles.

• Normality Judgment

Judge OK and clear the NG when the continuous time of completing the malfunction criteria below becomes more than 1 second.

Judgment Value

Malfunction Criteria	Threshold Value
AVCS control	Operation
Amount of AVCS target timing advance	−40 — 10°CA
AVCS target position − AVCS actual position	< 20°
Most timing retard learning value	−18 — 18°CA

6. DTC CLEAR CONDITION

- When the OK idling cycle was completed 40 times in a row
- When “Clear Memory” was performed

7. MALFUNCTION INDICATOR LIGHT CLEAR CONDITION

- When the OK driving cycle was completed 3 times in a row
- When “Clear Memory” was performed

8. FAIL SAFE

- Ignition timing whole learning compensation:
  – Enter the initial value (whole learning compensation factor = 0.5, Variable amount of whole learning compensation factor = 0.25) to the whole learning compensation factor and variable amount of whole learning compensation factor when IG OFF, and then make the whole learning incomplete.
  – Enter the initial value (whole learning compensation factor = 0.5, Variable amount of whole learning compensation factor = 0.25) to the whole learning compensation factor and variable amount of whole learning compensation factor when making a normality judgment from abnormality judgment, and then make the whole learning incomplete.
- Ignition timing partial learning compensation:
  – Enter the initial value (0°CA) to the compensation value of partial learning zone when IG OFF.
  – Enter the initial value (0°CA) to the compensation value of partial learning zone when making a normality judgment from abnormality judgment.
- AVCS control: Most timing retard learning is not complete or most timing retard learning completion is not experienced.
- ISC feedback compensation: Do not perform the AVCS actual timing advance compensation. Make the OCV driving duty to be the given value (9.36%).

9. ECM OPERATION AT DTC SETTING

Memorize the freeze frame data. (For test mode $02)

B: DTC P0021 INTAKE CAMSHAFT POSITION TIMING - OVER-ADVANCED (BANK 2)

1. OUTLINE OF DIAGNOSIS

For the diagnostic procedure, refer to DTC P0011. <Ref. to GD(H6DO)-9, DTC P0011 INTAKE CAMSHAFT POSITION TIMING - OVER-ADVANCED (BANK 1), Diagnostic Trouble Code (DTC) Detecting Criteria.>

C: DTC P0026 INTAKE VALVE CONTROL SOLENOID CIRCUIT RANGE/PERFORMANCE (BANK 1)

1. OUTLINE OF DIAGNOSIS

Judge NG from Low NG or High NG.
Variable valve lift diagnosis oil pressure switch is attached for diagnosis, ON or OFF of variable valve lift diagnosis oil pressure switch shows whether intake valve is in High mode (increasing the lift amount) or Low mode (decreasing the lift amount).

• Normal condition

Oil switching solenoid valve duty	Intake valve	Variable valve lift diagnosis oil pressure switch
Large	High mode	OFF
Small	Low mode	ON

• Low NG

Judge Low NG when variable valve lift diagnosis oil pressure switch remains ON though the intake valve is being shifted to High mode (Oil switching solenoid valve duty: large).

• High NG

Judge High NG when variable valve lift diagnosis oil pressure switch remains OFF though the intake valve is being shifted to Low mode (Oil switching solenoid valve duty: small).

2. COMPONENT DESCRIPTION

Variable valve lift system optimizes the lift amount of intake valve with switching low lift cam and high lift cam depending on engine speed. Variable valve system changes the lift amount of intake valve with duty controlling oil switching solenoid valve.

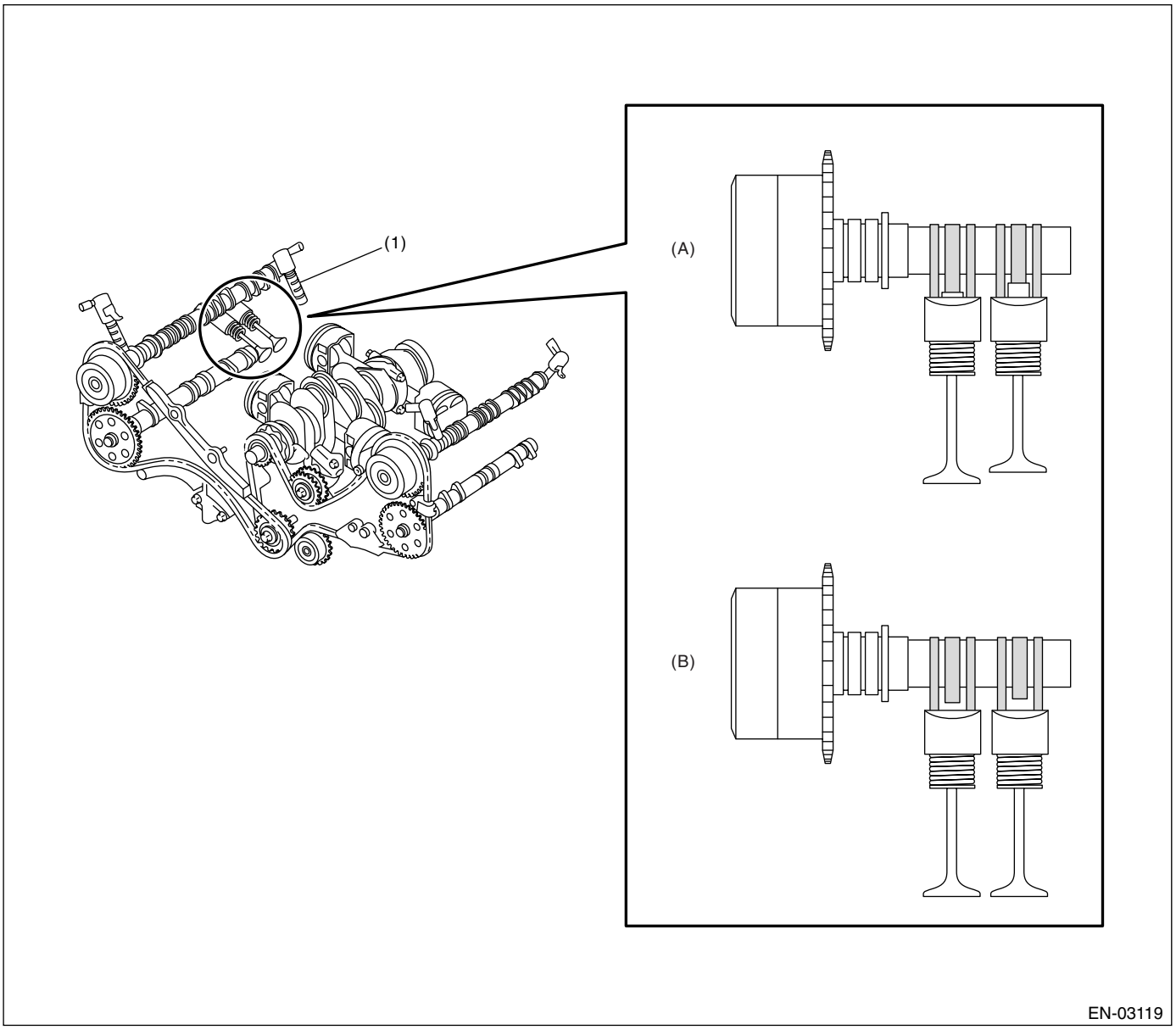

(1) Oil switching solenoid valve
(A) Engine low speed
(B) Engine high speed

3. ENABLE CONDITION

Secondary Parameters	Enable Conditions
Battery voltage	≥ 10.9 V
After engine starting	≥ 6 sec
Engine oil temperature	≥ 0°C (0°F)
Variable Valve lift control	In operation

4. GENERAL DRIVING CYCLE

Perform the diagnosis continuously after 6 seconds from engine starting with controlling of variable valve lift.

5. DIAGNOSTIC METHOD

• Abnormality Judgment

Judge NG when the continuous time of completing the malfunction criteria below becomes more than the specified time.

Judgment Value

Malfunction Criteria	Threshold Value
Low NG	
Duty ratio	≥ 62%
Variable valve lift diagnosis pressure switch	ON
High NG	
Duty ratio	< 33%
Variable valve lift diagnosis pressure switch	OFF

Time needed for diagnosis:
0.784 seconds (Low side)
3.0 seconds (High side)
Malfunction Indicator Light Illumination: Illuminates as soon as malfunction occurs.

• Normality Judgment

Judge OK and clear NG when the continuous time of completing malfunction criteria becomes more than 3 seconds.

Judgment Value

Malfunction Criteria	Threshold Value
Low OK	
Duty ratio	≥ 62%
Variable valve lift diagnosis oil pressure switch	OFF
High OK	
Duty ratio	< 33%
Variable valve lift diagnosis oil pressure switch	ON

6. DTC CLEAR CONDITION

- When the OK idling cycle was completed 40 times in a row
- When “Clear Memory” was performed

7. MALFUNCTION INDICATOR LIGHT CLEAR CONDITION

- When the OK cycle was completed 3 times in a row
- When “Clear Memory” was performed

8. FAIL SAFE

None

9. ECM OPERATION AT DTC SETTING

Memorize the freeze frame data. (For test mode $02)

D: DTC P0028 INTAKE VALVE CONTROL SOLENOID CIRCUIT RANGE/PERFORMANCE (BANK 2)

1. OUTLINE OF DIAGNOSIS

For the diagnostic procedure, refer to DTC P0026. <Ref. to GD(H6DO)-11, DTC P0026 INTAKE VALVE CONTROL SOLENOID CIRCUIT RANGE/PERFORMANCE (BANK 1), Diagnostic Trouble Code (DTC) Detecting Criteria.>

E: DTC P0030 HO2S HEATER CONTROL CIRCUIT (BANK 1 SENSOR 1)

1. OUTLINE OF DIAGNOSIS

Detect the malfunction of front oxygen (A/F) sensor heater.
Judge NG when impedance of front oxygen (A/F) sensor is larger than the standard value by referring to the engine condition such as fuel shut-off in deceleration, etc.

2. COMPONENT DESCRIPTION

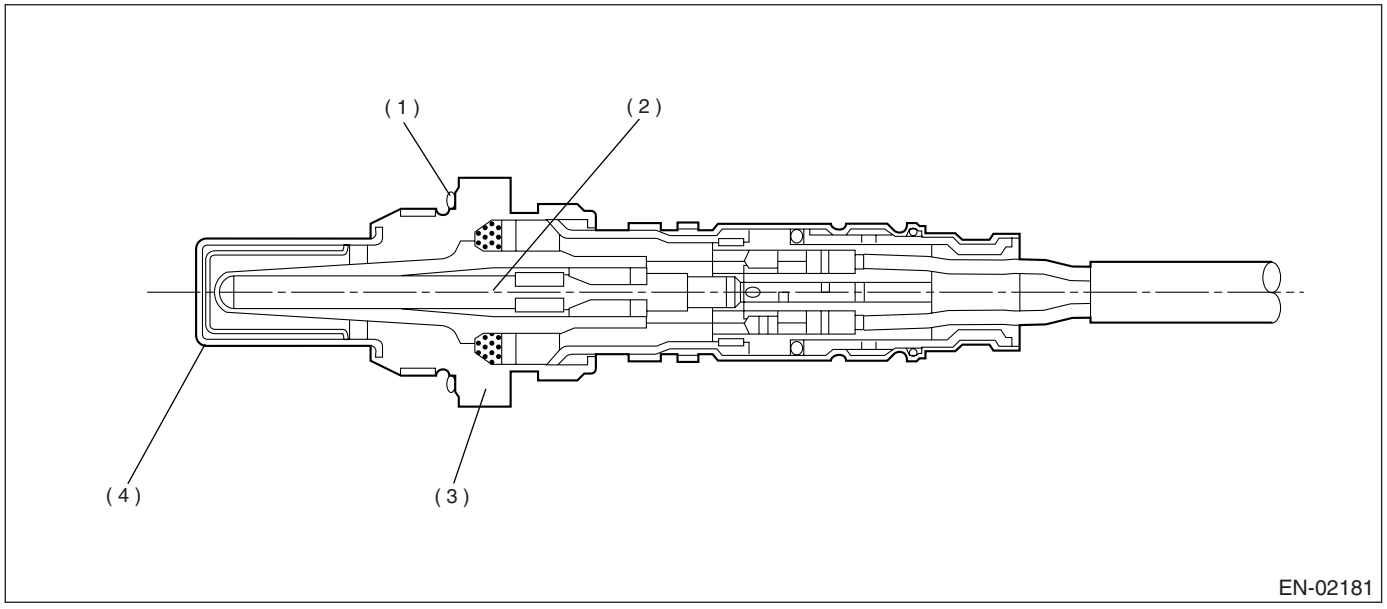

(1) Gasket
(2) Ceramic heater
(3) Sensor housing
(4) Protection tube

3. ENABLE CONDITION

Secondary Parameters	Enable Conditions
Condition following time	30 seconds or more
Battery voltage	> 10.9 V
Control duty ≥ 35%	Experienced
After fuel shut off	20 seconds or more

4. GENERAL DRIVING CYCLE

Perform diagnosis continuously in 30 seconds after starting engine.

5. DIAGNOSTIC METHOD

Judge NG when the continuous time of completing the malfunction criteria below becomes more than the time needed for diagnosis (10 seconds). Judge OK and clear NG when the continuous time of not completing the malfunction criteria below becomes more than the time needed for diagnosis (10 seconds).
Judgment Value

Malfunction Criteria	Threshold Value
Impedance of front oxygen (A/F) sensor	> 50 Ω

Time Needed for Diagnosis: 10 seconds
Malfunction Indicator Light Illumination: Illuminates when malfunction occurs in 2 continuous driving cycles.

6. DTC CLEAR CONDITION

- When the OK idling cycle was completed 40 times in a row

- When “Clear Memory” was performed

7. MALFUNCTION INDICATOR LIGHT CLEAR CONDITION

- When the OK driving cycle was completed 3 times in a row
- When “Clear Memory” was performed

8. FAIL SAFE

- Front oxygen (A/F) sensor main learning correction: Not allowed to calculate
- Rear oxygen (A/F) sensor sub learning correction: Not allowed to calculate
- Correction when re-starting at high temperature: Normally minimum value 0.06 → 0
- Purge control: Not allowed to purge

9. ECM OPERATION AT DTC SETTING

Memorize the freeze frame data. (For test mode $02)

F: DTC P0031 HO2S HEATER CONTROL CIRCUIT LOW (BANK 1 SENSOR 1)

1. OUTLINE OF DIAGNOSIS

Detect the open or short circuit of heater.
The heater conducts the duty control. The output terminal voltage at ON becomes 0 V, and the output terminal voltage at OFF becomes battery voltage.
Judge NG when the terminal voltage remains Low.

2. COMPONENT DESCRIPTION

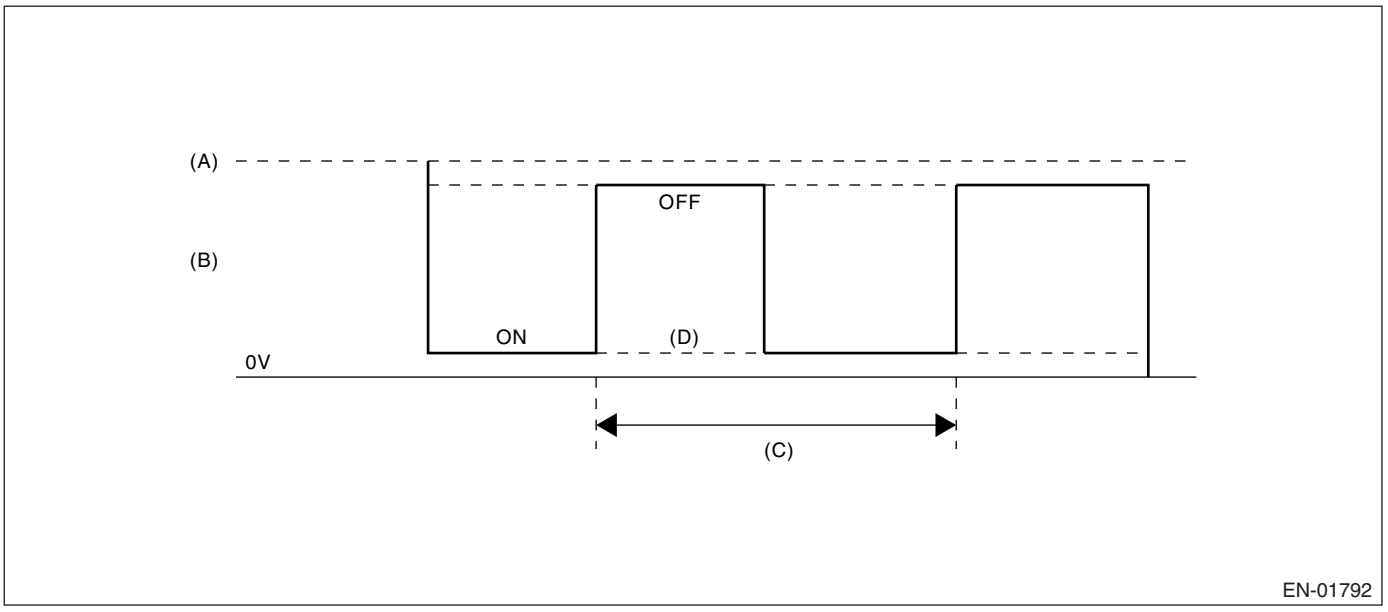

(A) Battery voltage
(B) Front oxygen (A/F) sensor heater output voltage
(C) 128 milliseconds
(D) Low malfunction

3. ENABLE CONDITION

Secondary Parameters	Enable Conditions
Battery voltage	≥ 10.9 V

4. GENERAL DRIVING CYCLE

Always perform diagnosis continuously.

5. DIAGNOSTIC METHOD

• Abnormality Judgment

Judge NG when the continuous time of completing the malfunction criteria below becomes more than 1 second (8 cycles).

Judgment Value

Malfunction Criteria	Threshold Value
Output voltage level	Low
Front oxygen (A/F) sensor heater control duty	< 87.5%

Time Needed for Diagnosis: 1 second
Malfunction Indicator Light Illumination: Illuminates as soon as malfunction occurs.

• Normality Judgment

Judge OK and clear the NG when all the malfunction criteria below are completed.

Judgment Value

Malfunction Criteria	Threshold Value
Output voltage level	High

6. DTC CLEAR CONDITION

- When the OK idling cycle was completed 40 times in a row
- When “Clear Memory” was performed

7. MALFUNCTION INDICATOR LIGHT CLEAR CONDITION

- When the OK driving cycle was completed 3 times in a row
- When “Clear Memory” was performed

8. FAIL SAFE

- Front oxygen (A/F) sensor activation judgment: Front oxygen (A/F) sensor full activation is not complete, or front oxygen (A/F) sensor half activation is not complete.
- A/F main learning: Not allowed to calculate the A/F main learning compensation factor.
- Compensation when starting the engine at high temperature: Make the MIN value to be 0 from 0.3 normally.
- Purge control: Not allowed to purge.

9. ECM OPERATION AT DTC SETTING

Memorize the freeze frame data. (For test mode $02)

G: DTC P0032 HO2S HEATER CONTROL CIRCUIT HIGH (BANK 1 SENSOR 1)

1. OUTLINE OF DIAGNOSIS

Detect the open or short circuit of heater.
The heater conducts the duty control. The output terminal voltage at ON becomes 0 V, and the output terminal voltage at OFF becomes battery voltage.
Judge NG when the terminal voltage remains High.

2. COMPONENT DESCRIPTION

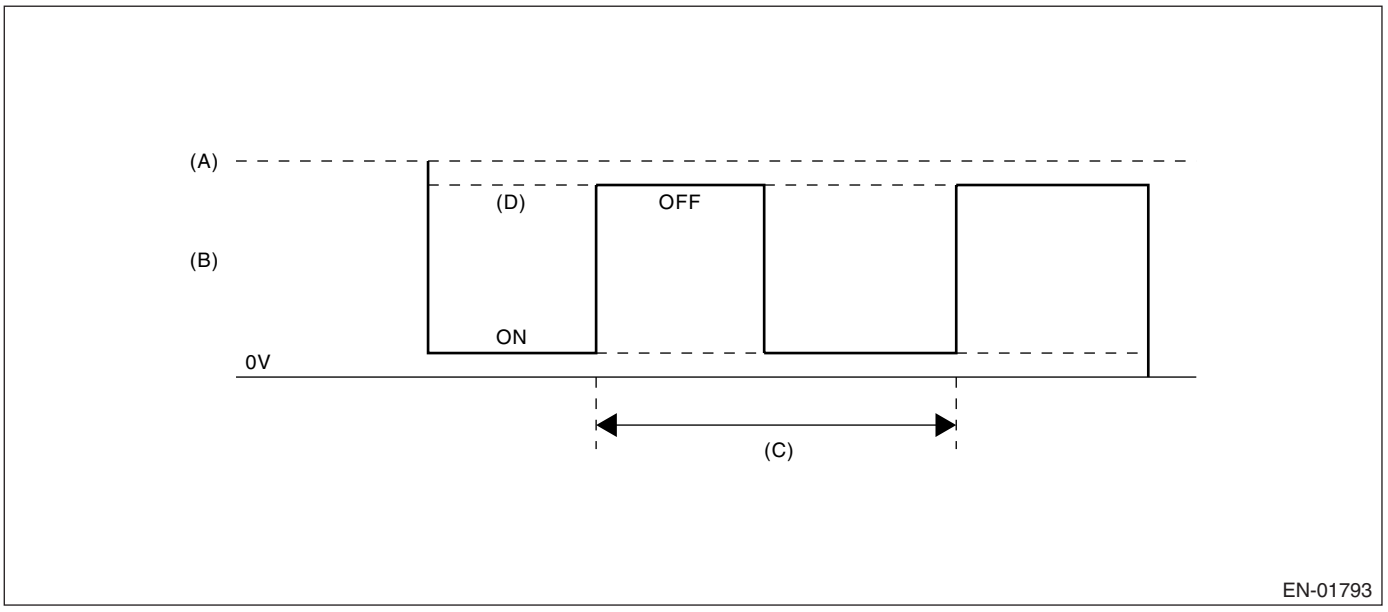

(A) Battery voltage
(B) Front oxygen (A/F) sensor heater output voltage
(C) 128 milliseconds
(D) High abnormality

3. ENABLE CONDITION

Secondary Parameters	Enable Conditions
Battery voltage	≥ 10.9 V

4. GENERAL DRIVING CYCLE

Always perform diagnosis continuously.

5. DIAGNOSTIC METHOD

• Abnormality Judgment

Judge NG when the continuous time of completing the malfunction criteria below becomes 1 second (8 cycles).

Judgment Value

Malfunction Criteria	Threshold Value
Output voltage level	High
Front oxygen (A/F) sensor heater control duty	≥ 12.5%

Time Needed for Diagnosis: 1 second
Malfunction Indicator Light Illumination: Illuminates as soon as malfunction occurs.

• Normality Judgment

Judge OK and clear the NG when all the malfunction criteria below are completed.

Judgment Value

Malfunction Criteria	Threshold Value
Output voltage level	Low

6. DTC CLEAR CONDITION

- When the OK idling cycle was completed 40 times in a row
- When “Clear Memory” was performed

7. MALFUNCTION INDICATOR LIGHT CLEAR CONDITION

- When the OK driving cycle was completed 3 times in a row
- When “Clear Memory” was performed

8. FAIL SAFE

- Front oxygen (A/F) sensor activation judgment: Front oxygen (A/F) sensor full activation is not complete, or front oxygen (A/F) sensor half activation is not complete.
- A/F main learning: Not allowed to calculate the A/F main learning compensation factor.
- Compensation when starting the engine at high temperature: Make the MIN value to be 0 from 0.3 normally.
- Purge control: Not allowed to purge.

9. ECM OPERATION AT DTC SETTING

Memorize the freeze frame data. (For test mode $02)

H: DTC P0037 HO2S HEATER CONTROL CIRCUIT LOW (BANK 1 SENSOR 2)

1. OUTLINE OF DIAGNOSIS

Detect open or short circuit of rear oxygen sensor heater.
Rear oxygen sensor heater conducted the duty control, and the output terminal voltage at ON is 0 V and the output terminal voltage at OFF is the battery voltage.
Judge NG when the terminal voltage remains to be Low.

2. COMPONENT DESCRIPTION

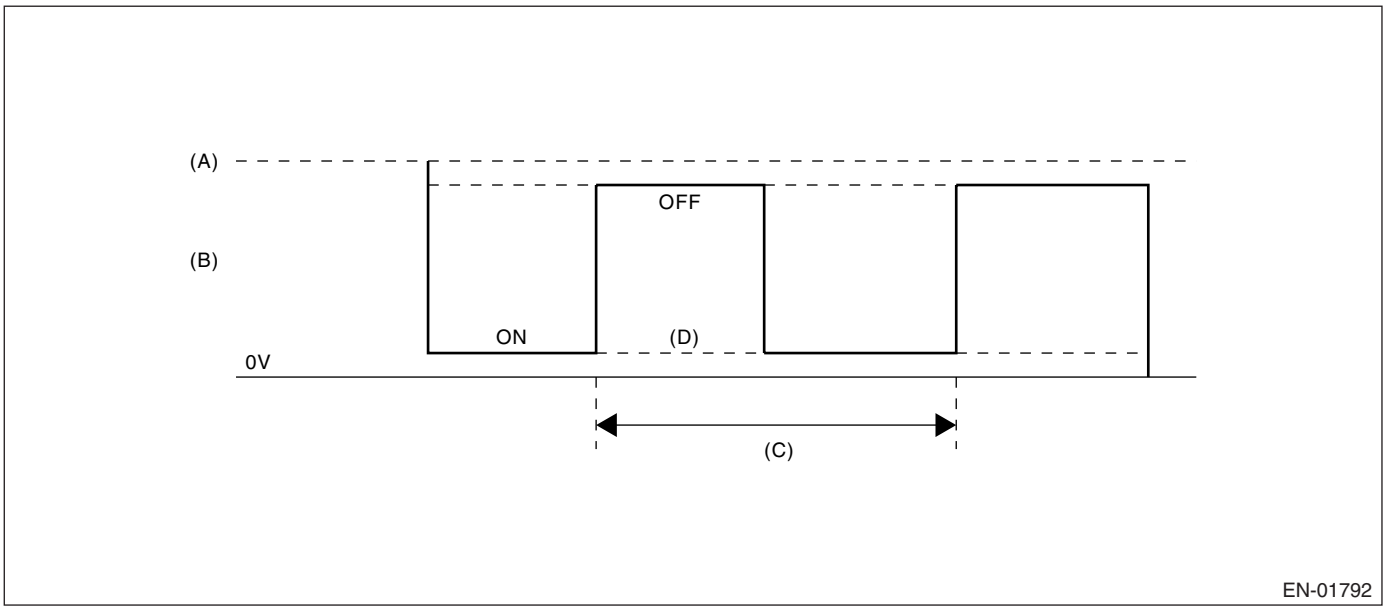

(A) Battery voltage
(B) Rear oxygen sensor heater output voltage
(C) 256 milliseconds (cycles)
(D) Low malfunction

3. ENABLE CONDITION

Secondary Parameters	Enable Conditions
Battery voltage	> 10.9 V

4. GENERAL DRIVING CYCLE

Perform the diagnosis continuously after engine starting.

5. DIAGNOSTIC METHOD

• Abnormality Judgment

Judge NG when the continuous time of completing all the malfunction criteria below becomes more than 2560 milliseconds (10 cycles).

Judgment Value

Malfunction Criteria	Threshold Value
Output voltage level	Low
Rear oxygen sensor heater control duty	< 75%

Time Needed for Diagnosis: 2.56 seconds
Malfunction Indicator Light Illumination: Illuminates when malfunction occurs in 2 continuous driving cycles.

• Normality Judgment

Judge OK and clear the NG when all the malfunction criteria below are completed.

Judgment Value

Malfunction Criteria	Threshold Value
Output voltage level	High

6. DTC CLEAR CONDITION

- When the OK idling cycle was completed 40 times in a row
- When “Clear Memory” was performed

7. MALFUNCTION INDICATOR LIGHT CLEAR CONDITION

- When the OK driving cycle was completed 3 times in a row
- When “Clear Memory” was performed

8. FAIL SAFE

Sub feedback control: Not allowed

9. ECM OPERATION AT DTC SETTING

Memorize the freeze frame data. (For test mode $02)

I: DTC P0038 HO2S HEATER CONTROL CIRCUIT HIGH (BANK 1 SENSOR 2)

1. OUTLINE OF DIAGNOSIS

Detect open or short circuit of rear oxygen heater.
Rear oxygen heater conducted the duty control, and the output terminal voltage at ON is 0 V and the output terminal voltage at OFF is the battery voltage.
Judge NG when the terminal voltage remains High.

2. COMPONENT DESCRIPTION

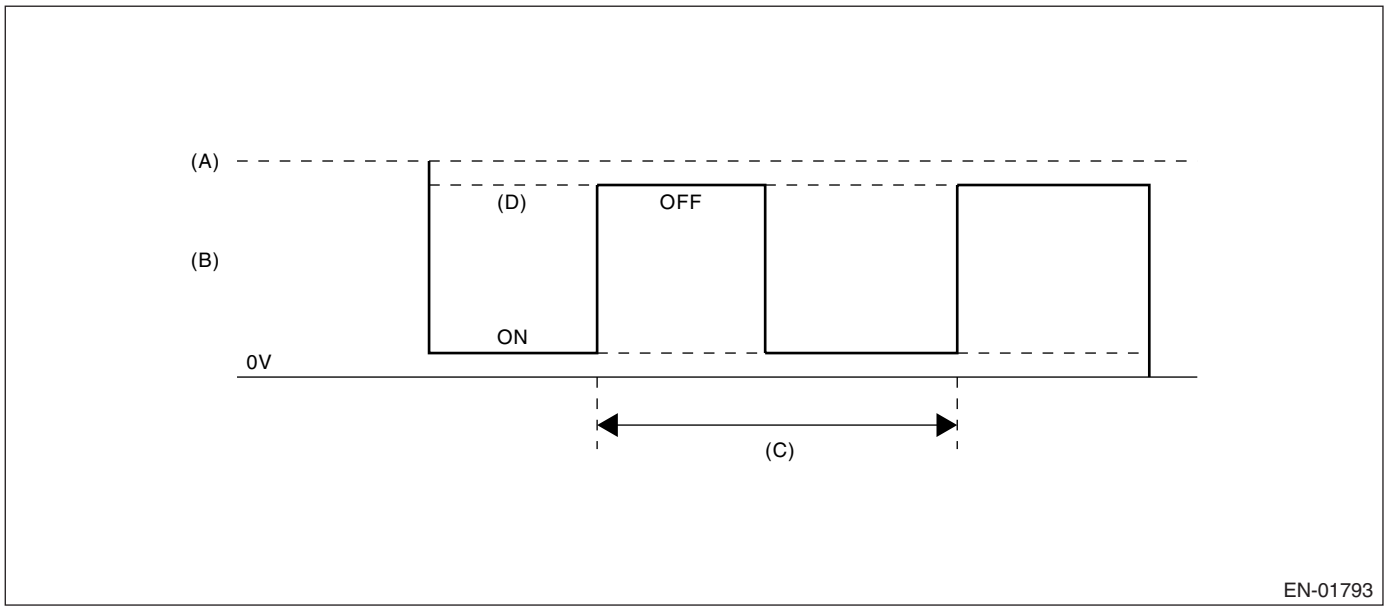

(A) Battery voltage
(B) Rear oxygen sensor heater output voltage
(C) 256 milliseconds (cycle)
(D) High malfunction

3. ENABLE CONDITION

Secondary Parameters	Enable Conditions
Battery voltage	> 10.9 V

4. GENERAL DRIVING CYCLE

Perform the diagnosis continuously after engine starting.

5. DIAGNOSTIC METHOD

• Abnormality Judgment

Judge NG when the continuous time of completing all the malfunction criteria below becomes more than 2560 milliseconds (10 cycles).

Judgment Value

Malfunction Criteria	Threshold Value
Output voltage level	High
Rear oxygen sensor heater control duty	≥ 15%

Time Needed for Diagnosis: 2.56 seconds
Malfunction Indicator Light Illumination: Illuminates when malfunction occurs in 2 continuous driving cycles.

• Normality Judgment

Judge OK and clear the NG when all the malfunction criteria below are completed.

Judgment Value

Malfunction Criteria	Threshold Value
Output voltage level	Low

6. DTC CLEAR CONDITION

- When the OK idling cycle was completed 40 times in a row
- When “Clear Memory” was performed

7. MALFUNCTION INDICATOR LIGHT CLEAR CONDITION

- When the OK driving cycle was completed 3 times in a row
- When “Clear Memory” was performed

8. FAIL SAFE

Sub feedback control: Not allowed

9. ECM OPERATION AT DTC SETTING

Memorize the freeze frame data. (For test mode $02)

J: DTC P0050 HO2S HEATER CONTROL CIRCUIT (BANK 2 SENSOR 1)

1. OUTLINE OF DIAGNOSIS

For the detecting criteria, refer to P0030. <Ref. to GD(H6DO)-14, DTC P0030 HO2S HEATER CONTROL CIRCUIT (BANK 1 SENSOR 1), Diagnostic Trouble Code (DTC) Detecting Criteria.>

K: DTC P0051 HO2S HEATER CONTROL CIRCUIT LOW (BANK 2 SENSOR 1)

1. OUTLINE OF DIAGNOSIS

For the detecting criteria, refer to P0031. <Ref. to GD(H6DO)-16, DTC P0031 HO2S HEATER CONTROL CIRCUIT LOW (BANK 1 SENSOR 1), Diagnostic Trouble Code (DTC) Detecting Criteria.>

L: DTC P0052 HO2S HEATER CONTROL CIRCUIT HIGH (BANK 2 SENSOR 1)

1. OUTLINE OF DIAGNOSIS

For the detecting criteria, refer to P0032. <Ref. to GD(H6DO)-18, DTC P0032 HO2S HEATER CONTROL CIRCUIT HIGH (BANK 1 SENSOR 1), Diagnostic Trouble Code (DTC) Detecting Criteria.>

M: DTC P0057 HO2S HEATER CONTROL CIRCUIT LOW (BANK 2 SENSOR 2)

1. OUTLINE OF DIAGNOSIS

For the detecting criteria, refer to P0037. <Ref. to GD(H6DO)-20, DTC P0037 HO2S HEATER CONTROL CIRCUIT LOW (BANK 1 SENSOR 2), Diagnostic Trouble Code (DTC) Detecting Criteria.>

N: DTC P0058 HO2S HEATER CONTROL CIRCUIT HIGH (BANK 2 SENSOR 2)

1. OUTLINE OF DIAGNOSIS

For the detecting criteria, refer to P0038. <Ref. to GD(H6DO)-22, DTC P0038 HO2S HEATER CONTROL CIRCUIT HIGH (BANK 1 SENSOR 2), Diagnostic Trouble Code (DTC) Detecting Criteria.>

O: DTC P0068 MAP/MAF - THROTTLE POSITION CORRELATION

1. OUTLINE OF DIAGNOSIS

Detect the malfunction of intake manifold pressure sensor output property. Judge NG when the intake air pressure AD value is Low whereas it seemed to be High from the viewpoint of engine condition, or when it is High whereas it seemed to be Low from the engine condition.

2. COMPONENT DESCRIPTION

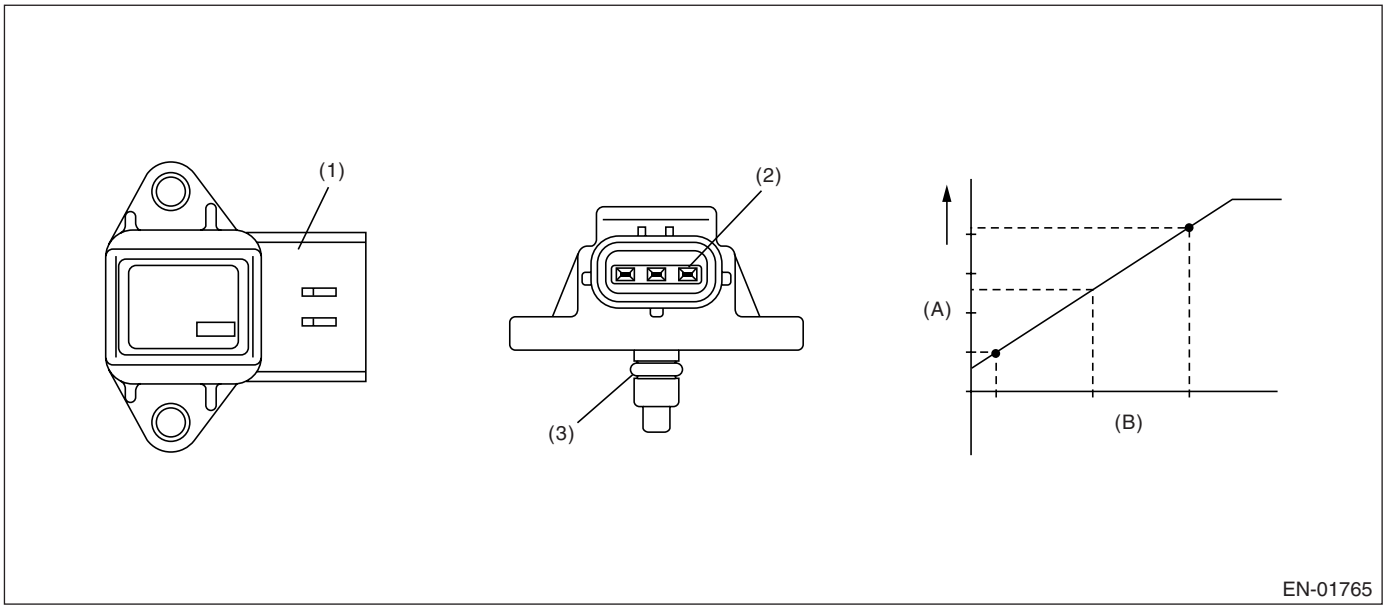

(1) Connector
(2) Terminal
(3) O-ring
(A) Output voltage
(B) Absolute pressure

3. ENABLE CONDITION

Secondary Parameters	Enable Conditions
Engine coolant temperature	≥ 75°C (167°F)

4. GENERAL DRIVING CYCLE

Perform the diagnosis continuously after idling.

5. DIAGNOSTIC METHOD

• Abnormality Judgment

Judge NG when either Low side or High side becomes NG. Judge NG when the continuous time of completing the malfunction criteria below becomes more than predetermined time.

Judgment Value

Malfunction Criteria	Threshold Value
Low side	
Engine speed	< 2500 rpm
Throttle position	≥ 15°
Output voltage	< 2.12 V
Engine load	> 0.87 g/rev
High side	
Engine speed	500 ←→ 850 rpm
Throttle position	< 3.5°
Output voltage	≥ 2.66 V
Engine load	< 0.6 g/rev

Time Needed for Diagnosis:
3 seconds (Low side)
10 seconds (High side)
Malfunction Indicator Light Illumination: Illuminates when malfunction occurs in 2 continuous driving cycles.
• Normality Judgment

Judge OK and clear the NG when both Low side and High side become OK. Judge OK when the malfunction criteria below are completed.
Judgment Value

Malfunction Criteria	Threshold Value
Low side	
Engine speed	< 2500 rpm
Throttle position	≥ 10°
Output voltage	≥ 1.3 V
High side	
Engine speed	600 ←→ 900 rpm
Throttle position	< 1.3°
Output voltage	< 2.6 V

6. DTC CLEAR CONDITION

- When the OK idling cycle was completed 40 times in a row
- When “Clear Memory” was performed

7. MALFUNCTION INDICATOR LIGHT CLEAR CONDITION

- When the OK driving cycle was completed 3 times in a row
- When “Clear Memory” was performed

8. FAIL SAFE

- Intake manifold pressure sensor process: Estimate the pressure from engine speed and throttle position. When also throttle position is NG, adopt 66.7 kPa (500 mmHg, 19.69 inHg) as definite value.
- Heavy fuel judgment: Not allowed to carry out the heavy judgment.
- Fuel cut control: Fuel cut will operate at engine high speed.
- EVAP density learning (Fuel): Not allowed to learn
- Knocking compensation
  At normal condition: Self-learning ignition advance value = knock F/B advance + overall self-learning advance value + partial self-learning advance value
  When malfunctioning: Self-learning ignition advance value = −6°CA (6°CA retard)
  Knock F/B advance value = 0°CA
  Prohibit overall self-learning
  Partially prohibit self-learning
- ISC control: Not allowed to calculate the amount of ISC feedback.

Amount of ISC open-loop compensation = Fixed at 6.82%
- Purge control: Not allowed to purge

9. ECM OPERATION AT DTC SETTING

Memorize the freeze frame data. (For test mode $02)

P: DTC P0076 INTAKE VALVE CONTROL CIRCUIT LOW (BANK 1)

1. OUTLINE OF DIAGNOSIS

Detect the open circuit of oil switching solenoid valve.
Judge open circuit NG when the current is small though output duty is large.

2. ENABLE CONDITION

Secondary Parameters	Enable Conditions
Battery voltage	≥ 10.9 V

3. GENERAL DRIVING CYCLE

Always perform the diagnosis continuously.

4. DIAGNOSTIC METHOD

• Abnormality judgment

Judge NG when the continuous time of completing malfunction criteria below becomes more than 2 seconds.
Judgment Value

Malfunction Criteria	Threshold Value
Duty ratio	≥ 30%
Control current	< 0.026 A

Time needed for diagnosis: 2 seconds
Malfunction Indicator Light Illumination: Illuminates as soon as malfunction occurs.
• Normality Judgment

Judge OK and clear NG when the continuous time of completing the malfunction criteria below becomes more than 2 seconds.
Judgment Value

Malfunction Criteria	Threshold Value
Oil switching solenoid valve target current value – Oil switching solenoid valve current value	< 0.08 A
Control current	≥ 0.11 A

5. DTC CLEAR CONDITION

- When the OK idling cycle was completed 40 times in a row
- When “Memory Clear” was performed

6. MALFUNCTION INDICATOR LIGHT CLEAR CONDITION

- When the OK driving cycle was completed 3 times in a row
- When “Memory Clear” was performed

7. FAIL SAFE

None

8. ECM OPERATION AT DTC SETTING

Memorize the freeze frame data. (For test mode $02)

Q: DTC P0077 INTAKE VALVE CONTROL CIRCUIT HIGH (BANK 1)

1. OUTLINE OF DIAGNOSIS

Detect the short circuit of oil switching solenoid valve.
Judge short circuit NG when the current is large though output duty is small.

2. ENABLE CONDITION

Secondary Parameters	Enable Conditions
Battery voltage	≥ 10.9 V

3. GENERAL DRIVING CYCLE

Always perform the diagnosis continuously.

4. DIAGNOSTIC METHOD

• Abnormality judgment

Judge NG when the continuous time of completing malfunction criteria below becomes more than 2 seconds.
Judgment Value

Malfunction Criteria	Threshold Value
Duty ratio	< 7%
Control current	≥ 0.465 A

Time needed for diagnosis: 2 seconds
Malfunction Indicator Light Illumination: Illuminates as soon as malfunction occurs.
• Normality Judgment

Judge OK and clear NG when the continuous time of completing the malfunction criteria below becomes more than 2 seconds.
Judgment Value

Malfunction Criteria	Threshold Value
Oil switching solenoid valve target current value − Oil switching solenoid valve current value	< 0.08 A

5. DTC CLEAR CONDITION

- When the OK idling cycle was completed 40 times in a row
- When “Memory Clear” was performed

6. MALFUNCTION INDICATOR LIGHT CLEAR CONDITION

- When the OK driving cycle was completed 3 times in a row
- When “Memory Clear” was performed

7. FAIL SAFE

None

8. ECM OPERATION AT DTC SETTING

Memorize the freeze frame data. (For test mode $02)

R: DTC P0082 INTAKE VALVE CONTROL CIRCUIT LOW (BANK 2)

1. OUTLINE OF DIAGNOSIS

For the detecting criteria, refer to P0076. <Ref. to GD(H6DO)-27, DTC P0076 INTAKE VALVE CONTROL CIRCUIT LOW (BANK 1), Diagnostic Trouble Code (DTC) Detecting Criteria.>

S: DTC P0083 INTAKE VALVE CONTROL CIRCUIT HIGH (BANK 2)

1. OUTLINE OF DIAGNOSIS

For the detecting criteria, refer to P0077. <Ref. to GD(H6DO)-28, DTC P0077 INTAKE VALVE CONTROL CIRCUIT HIGH (BANK 1), Diagnostic Trouble Code (DTC) Detecting Criteria.>

T: DTC P0101 MASS OR VOLUME AIR FLOW CIRCUIT RANGE/PERFORMANCE

1. OUTLINE OF DIAGNOSIS

Detect the malfunction of air flow sensor output property. Judge Low side NG when the air flow voltage indicates low value in spite of the driving condition that the air flow voltage might be high; otherwise, judge High side NG when the air flow voltage indicates high value in spite of the driving condition that the air flow voltage might be low. Judge air flow sensor property NG when the Low side or High side becomes NG.

2. COMPONENT DESCRIPTION

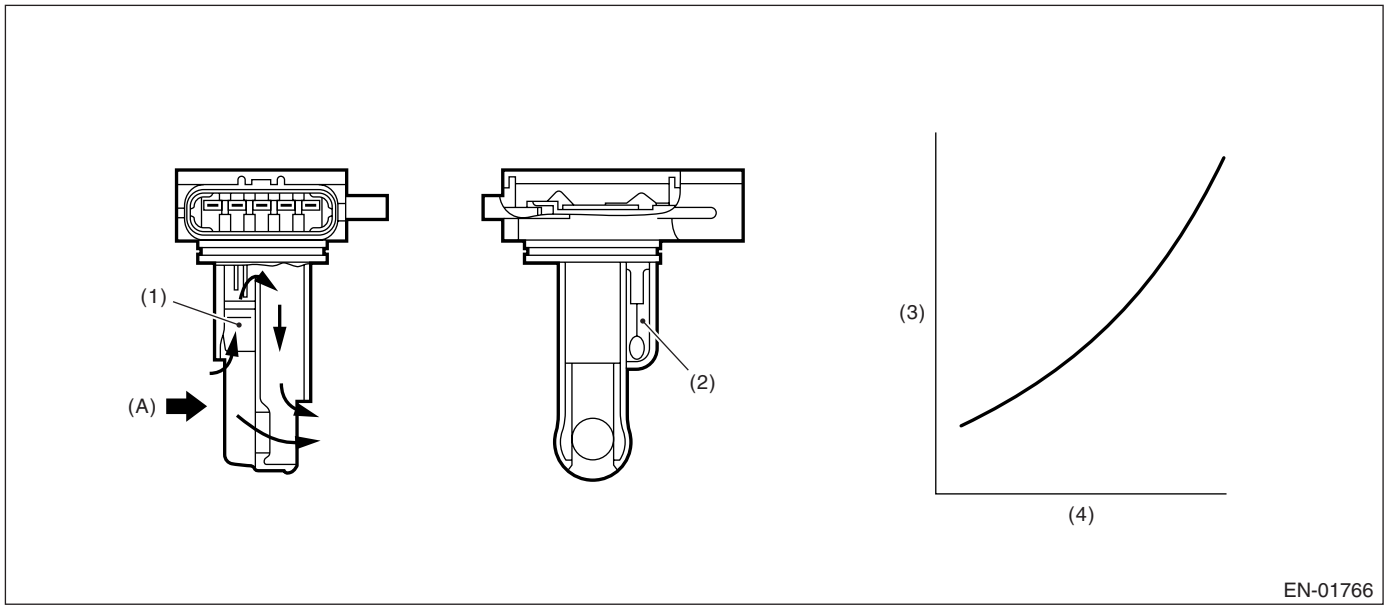

(1) Air flow sensor
(2) Intake air temperature sensor
(3) Voltage (V)
(4) Intake air volume (kg/s)
(A) Air

3. ENABLE CONDITION

Secondary Parameters	Enable Conditions
Engine coolant temperature	≥ 75°C (167°F)

4. GENERAL DRIVING CYCLE

Perform the diagnosis continuously after idling.

5. DIAGNOSTIC METHOD

• Abnormality Judgment

Judge NG when the continuous time of completing the malfunction criteria below becomes more than the time needed for diagnosis.

Judgment Value

Malfunction Criteria	Threshold Value
Low side NG	
Output voltage	< 1.79 V
Engine speed	≥ 2000 rpm
Throttle opening angle	≥ 15°
Intake manifold pressure	≥ 73.3 kPa (550 mmHg, 21.7 inHg)
High side NG (1)	
Output voltage	≥ 1.83 V
Engine speed	500 ←→ 850 rpm
Throttle opening angle	< 3.5°
Intake manifold pressure	< 46.7 kPa (350 mmHg, 13.8 inHg)
High side NG (2)	
Output voltage	≥ 1.73 V
Engine speed	500 ←→ 850 rpm
Throttle opening angle	< 3.5°
Intake manifold pressure	< 46.7 kPa (350 mmHg, 13.8 inHg)
Fuel system diagnosis	Rich side NG

Time Needed for Diagnosis:

Low side	5 seconds
High side	10 seconds

Malfunction Indicator Light Illumination: Illuminates when malfunction occurs in 2 continuous driving cycles.

• Normality Judgment

Judge OK the when the malfunction criteria below are completed.

Judgment Value

Malfunction Criteria	Threshold Value
Low side NG	
Output voltage	≥ 1.79 V
Engine speed	≥ 2000 rpm
Throttle opening angle	≥ 15°
Intake manifold pressure	≥ 73.3 kPa (550 mmHg, 21.7 inHg)
High side NG	
Output voltage	< 1.83 V
Engine speed	500 ←→ 850 rpm
Throttle opening angle	< 3.5°
Intake manifold pressure	< 46.7 kPa (350 mmHg, 13.8 inHg)
Fuel system diagnosis	Rich side OK

6. DTC CLEAR CONDITION

- When the OK idling cycle was completed 40 times in a row
- When “Clear Memory” was performed

7. MALFUNCTION INDICATOR LIGHT CLEAR CONDITION

- When the OK driving cycle was completed 3 times in a row
- When “Clear Memory” was performed

8. FAIL SAFE

None

9. ECM OPERATION AT DTC SETTING

Memorize the freeze frame data. (For test mode $02)

U: DTC P0102 MASS OR VOLUME AIR FLOW CIRCUIT LOW INPUT

1. OUTLINE OF DIAGNOSIS

Detect the open or short circuit of air flow sensor. Judge NG when out of the standard value.

2. COMPONENT DESCRIPTION

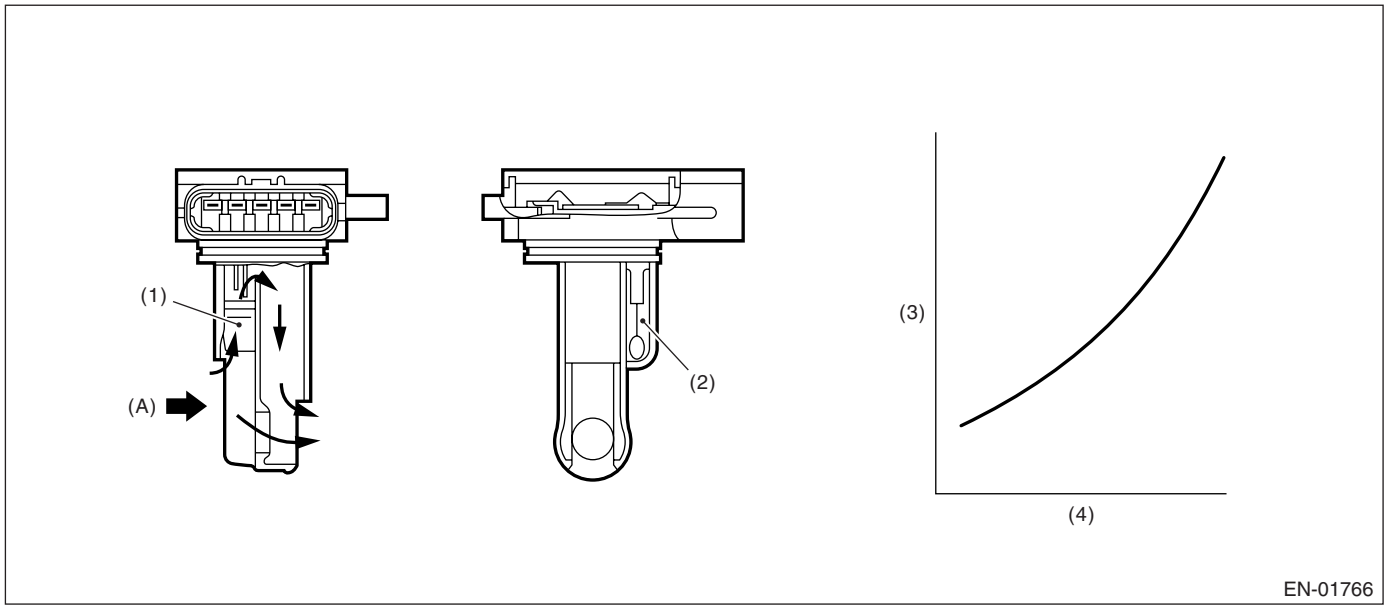

(1) Air flow sensor
(2) Intake air temperature sensor
(3) Voltage (V)
(4) Intake air volume (kg (lb)/s)
(A) Air

3. ENABLE CONDITION

Secondary Parameters	Enable Conditions
None	

4. GENERAL DRIVING CYCLE

Always perform the diagnosis continuously.

5. DIAGNOSTIC METHOD

Judge NG when the continuous time of completing the malfunction criteria below becomes more than 0.5 seconds. Judge OK and clear the NG when the malfunction criteria below are not completed.

Judgment Value

Malfunction Criteria	Threshold Value
Output voltage	≤ 0.2 V

Time Needed for Diagnosis: 0.5 seconds
Malfunction Indicator Light Illumination: Illuminates as soon as the malfunction occurs.

6. DTC CLEAR CONDITION

- When the OK idling cycle was completed 40 times in a row
- When “Clear Memory” was performed

7. MALFUNCTION INDICATOR LIGHT CLEAR CONDITION

- When the OK driving cycle was completed 3 times in a row
- When “Clear Memory” was performed

8. FAIL SAFE

• Air flow meter: Engine load is normally calculated by manifold pressure and engine speed; however, calculated only by manifold pressure.
• EVAP conc. learning (fuel): Not allowed to learn.
• Knock compensation:
  – Knock compensation final timing advance and retard value = knock compensation + whole learning compensation value + partial learning compensation value.
  – At normal: knock compensation = 0°CA is fixed.
  – At trouble: knock compensation ≠ 0°CA is fixed. (Retard max. 12°CA at knock.)
  – Not allowed to update the whole learning compensation factor.
  – Not allowed to calculate the partial learning zone compensation value.
• ISC control: Make the open loop compensation to be the given value (1 g (0.04 oz)/s). Stop calculating the throttle sensor temperature compensation. (Hold the previous value.)
• Purge control: Not allowed to purge.

9. ECM OPERATION AT DTC SETTING

Memorize the freeze frame data. (For test mode $02)

V: DTC P0103 MASS OR VOLUME AIR FLOW CIRCUIT HIGH INPUT

1. OUTLINE OF DIAGNOSIS

Detect the open or short circuit of air flow sensor. Judge NG when out of the standard value.

2. COMPONENT DESCRIPTION

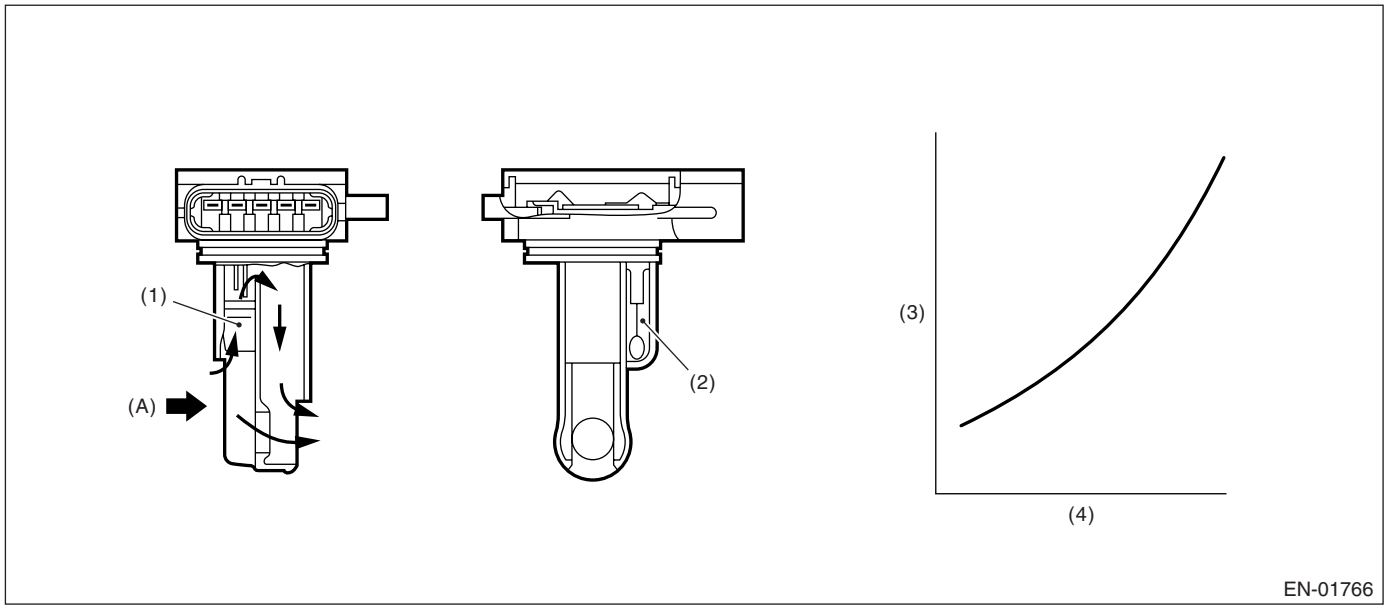

(1) Air flow sensor
(2) Intake air temperature sensor
(3) Voltage (V)
(4) Intake air volume (kg (lb)/s)
(A) Air

3. ENABLE CONDITION

Secondary Parameters	Enable Conditions
None	

4. GENERAL DRIVING CYCLE

Always perform the diagnosis continuously.

5. DIAGNOSTIC METHOD

Judge NG when the continuous time of completing the malfunction criteria below becomes more than 0.5 seconds. Judge OK and clear the NG when the malfunction criteria below are not completed.

Judgment Value

Malfunction Criteria	Threshold Value
Output voltage	≥ 4.985 V

Time Needed for Diagnosis: 0.5 seconds
Malfunction Indicator Light Illumination: Illuminates as soon as the malfunction occurs.

6. DTC CLEAR CONDITION

- When the OK idling cycle was completed 40 times in a row
- When “Clear Memory” was performed

7. MALFUNCTION INDICATOR LIGHT CLEAR CONDITION

- When the OK driving cycle was completed 3 times in a row
- When “Clear Memory” was performed

8. FAIL SAFE

• Air flow meter: Engine load is normally calculated by manifold pressure and engine speed; however, calculated only by manifold pressure.
• EVAP conc. learning (fuel): Not allowed to learn.
• Knock compensation:
  – Knock compensation final timing advance and retard value = knock compensation + whole learning compensation value + partial learning compensation value.
  – At normal: knock compensation = 0°CA is fixed.
  – At trouble: knock compensation ≠ 0°CA is fixed. (Retard max. 12°CA at knock.)
  – Not allowed to update the whole learning compensation factor.
  – Not allowed to calculate the partial learning zone compensation value.
• ISC control: Make the open loop compensation to be the given value (1 g (0.04 oz)/s). Stop calculating the throttle sensor temperature compensation. (Hold the previous value.)
• Purge control: Not allowed to purge.

9. ECM OPERATION AT DTC SETTING

Memorize the freeze frame data. (For test mode $02)

W: DTC P0107 MANIFOLD ABSOLUTE PRESSURE/BAROMETRIC PRESSURE CIRCUIT LOW INPUT

1. OUTLINE OF DIAGNOSIS

Detect the open or short circuit of intake manifold pressure sensor. Judge NG when out of the standard value.

2. COMPONENT DESCRIPTION

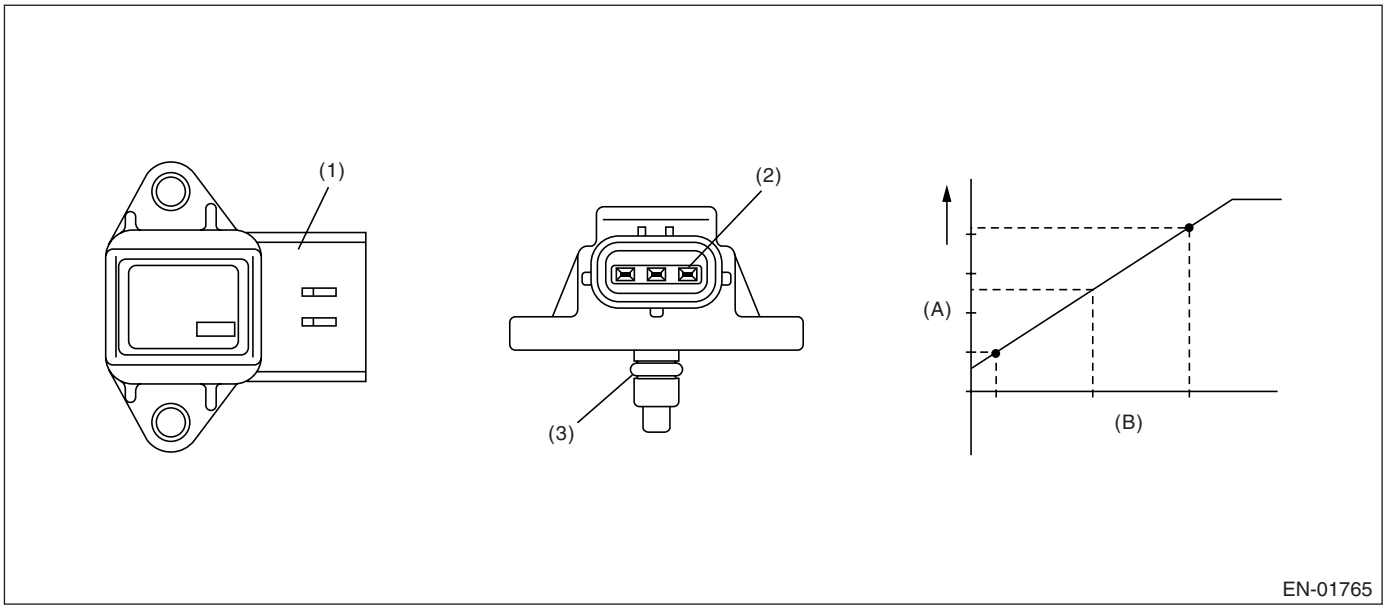

(1) Connector
(2) Terminal
(3) O-ring
(A) Output voltage
(B) Absolute pressure

3. ENABLE CONDITION

Secondary Parameters	Enable Conditions
None	

4. GENERAL DRIVING CYCLE

Always perform the diagnosis continuously.

5. DIAGNOSTIC METHOD

Judge NG when the continuous time of completing the malfunction criteria below becomes more than 0.5 seconds. Judge OK and clear the NG when the malfunction criteria below are not completed.

Judgment Value

Malfunction Criteria	Threshold Value
Output voltage	< 0.568 V

Time Needed for Diagnosis: 0.5 seconds
Malfunction Indicator Light Illumination: Illuminates as soon as the malfunction occurs.

6. DTC CLEAR CONDITION

- When the OK idling cycle was completed 40 times in a row
- When “Clear Memory” was performed

7. MALFUNCTION INDICATOR LIGHT CLEAR CONDITION

- When the OK driving cycle was completed 3 times in a row
- When “Clear Memory” was performed

8. FAIL SAFE

- Intake manifold pressure sensor process: Estimate the pressure from engine speed and throttle position.

When also throttle position is NG, adopt 66.7 kPa (500 mmHg, 19.69 inHg) as definite value.

- Heavy fuel judgment: Not allowed to carry out the heavy judgment.
- Fuel cut control: Fuel cut will operate at engine high speed.
- EVAP density learning (Fuel): Not allowed to learn
- Knocking compensation

  At normal condition: Self-learning ignition advance value = knock F/B advance + overall self-learning advance value + partial self-learning advance value
  When malfunctioning: Self-learning ignition advance value = −6°CA (6°CA retard)
  Knock F/B advance value = 0°CA
  Prohibit overall self-learning
  Partially prohibit self-learning
- ISC control: Not allowed to calculate the amount of ISC feedback.

Amount of ISC open-loop compensation = Fixed at 6.82%

- Purge control: Not allowed to purge

9. ECM OPERATION AT DTC SETTING

Memorize the freeze frame data. (For test mode $02)

X: DTC P0108 MANIFOLD ABSOLUTE PRESSURE/BAROMETRIC PRESSURE CIRCUIT HIGH INPUT

1. OUTLINE OF DIAGNOSIS

Detect the open or short circuit of intake manifold pressure sensor. Judge NG when out of the standard value.

2. COMPONENT DESCRIPTION

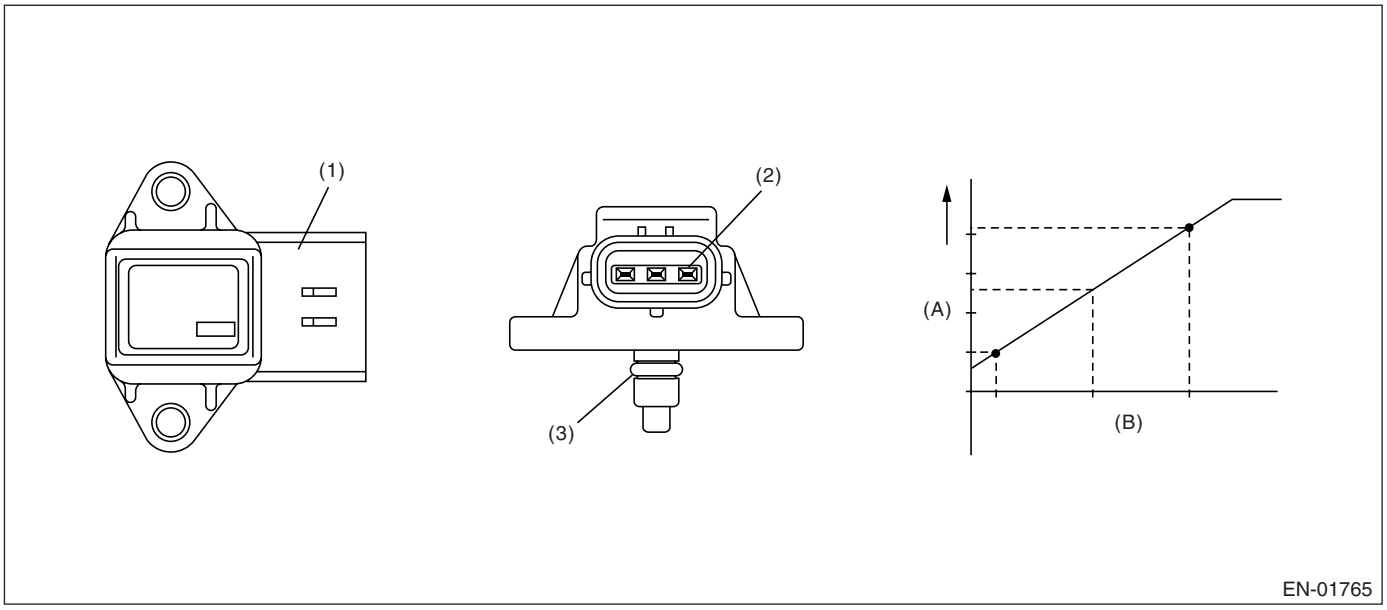

(1) Connector
(2) Terminal
(3) O-ring
(A) Output voltage
(B) Absolute pressure

3. ENABLE CONDITION

Secondary Parameters	Enable Conditions
None	

4. GENERAL DRIVING CYCLE

Always perform the diagnosis continuously.

5. DIAGNOSTIC METHOD

Judge NG when the continuous time of completing the malfunction criteria below becomes more than 0.5 seconds. Judge OK and clear the NG when the malfunction criteria below are not completed.

Judgment Value

Malfunction Criteria	Threshold Value
Output voltage	≥ 4.921 V

Time Needed for Diagnosis: 0.5 seconds
Malfunction Indicator Light Illumination: Illuminates as soon as the malfunction occurs.

6. DTC CLEAR CONDITION

- When the OK idling cycle was completed 40 times in a row
- When “Clear Memory” was performed

7. MALFUNCTION INDICATOR LIGHT CLEAR CONDITION

- When the OK driving cycle was completed 3 times in a row
- When “Clear Memory” was performed

8. FAIL SAFE

- Intake manifold pressure sensor process: Estimate the pressure from engine speed and throttle position.

When also throttle position is NG, adopt 66.7 kPa (500 mmHg, 19.69 inHg) as definite value.

- Heavy fuel judgment: Not allowed to carry out the heavy judgment.
- Fuel cut control: Fuel cut will operate at engine high speed.
- EVAP density learning (Fuel): Not allowed to learn
- Knocking compensation

  At normal condition: Self-learning ignition advance value = knock F/B advance + overall self-learning advance value + partial self-learning advance value
  When malfunctioning: Self-learning ignition advance value = −6°CA (6°CA retard)
  Knock F/B advance value = 0°CA
  Prohibit overall self-learning
  Partially prohibit self-learning
- ISC control: Not allowed to calculate the amount of ISC feedback.

Amount of ISC open-loop compensation = Fixed at 6.82%

- Purge control: Not allowed to purge

9. ECM OPERATION AT DTC SETTING

Memorize the freeze frame data. (For test mode $02)

Y: DTC P0111 INTAKE AIR TEMPERATURE CIRCUIT RANGE/PERFORMANCE

1. OUTLINE OF DIAGNOSIS

Detect the malfunction of intake air temperature sensor output property. Judge NG when the intake air temperature is not varied whereas it seemed to be varied from the viewpoint of engine condition.

2. COMPONENT DESCRIPTION

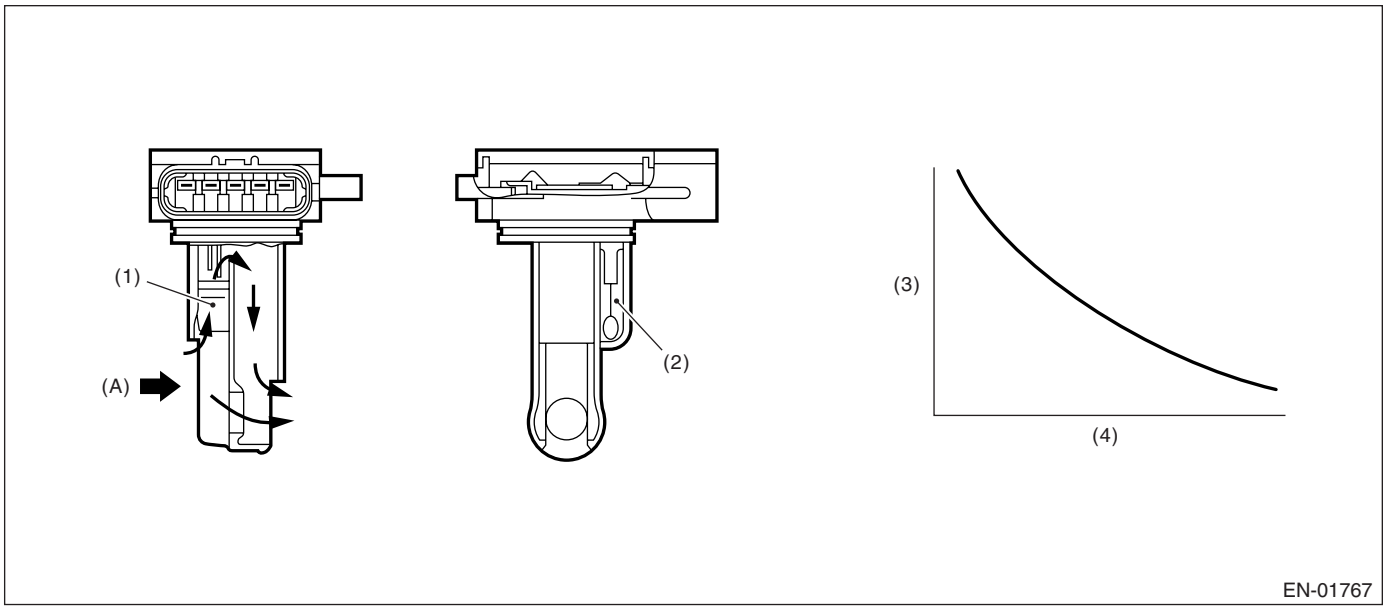

(1) Air flow sensor
(2) Intake air temperature sensor
(3) Resistance value (Ω)
(4) Intake air temperature °C (°F)
(A) Air

3. ENABLE CONDITION

Secondary Parameters	Enable Conditions
Coolant temp. before engine start	< 30°C (86°F)
Engine coolant temperature	> 95°C (203°F)
Battery voltage	≥ 10.9 V
Continuous time when the vehicle speed is less than 60 km/h (37 MPH)	600 seconds or more

4. GENERAL DRIVING CYCLE

Perform the diagnosis when the vehicle speed condition is completed after idling from starting the cooled engine.

5. DIAGNOSTIC METHOD

• Abnormality Judgment

Judge NG when the continuous time of completing the malfunction criteria below becomes more than 1 second.

Judgment Value

Malfunction Criteria	Threshold Value
Output voltage difference between Max. and Min.	< 20 mV (Approx. 0.5°C (0.9°F) is equivalent to around 25°.)

Time Needed for Diagnosis: 1 second
Malfunction Indicator Light Illumination: Illuminates when malfunction occurs in 2 continuous driving cycles.

• Normality Judgment

Judge OK and clear the NG when the malfunction criteria below are completed.
Judgment Value

Malfunction Criteria	Threshold Value
Output voltage difference between Max. and Min.	≥ 20 mV

6. DTC CLEAR CONDITION

- When the OK idling cycle was completed 40 times in a row
- When “Clear Memory” was performed

7. MALFUNCTION INDICATOR LIGHT CLEAR CONDITION

- When the OK driving cycle was completed 3 times in a row
- When “Clear Memory” was performed

8. FAIL SAFE

Intake air temperature sensor process: Intake air temperature is fixed at 20°C (68°F).

9. ECM OPERATION AT DTC SETTING

Memorize the freeze frame data. (For test mode $02)

Z: DTC P0112 INTAKE AIR TEMPERATURE CIRCUIT LOW INPUT

1. OUTLINE OF DIAGNOSIS

Detect the open or short circuit of intake air temperature sensor. Judge NG when out of the standard value.

2. COMPONENT DESCRIPTION

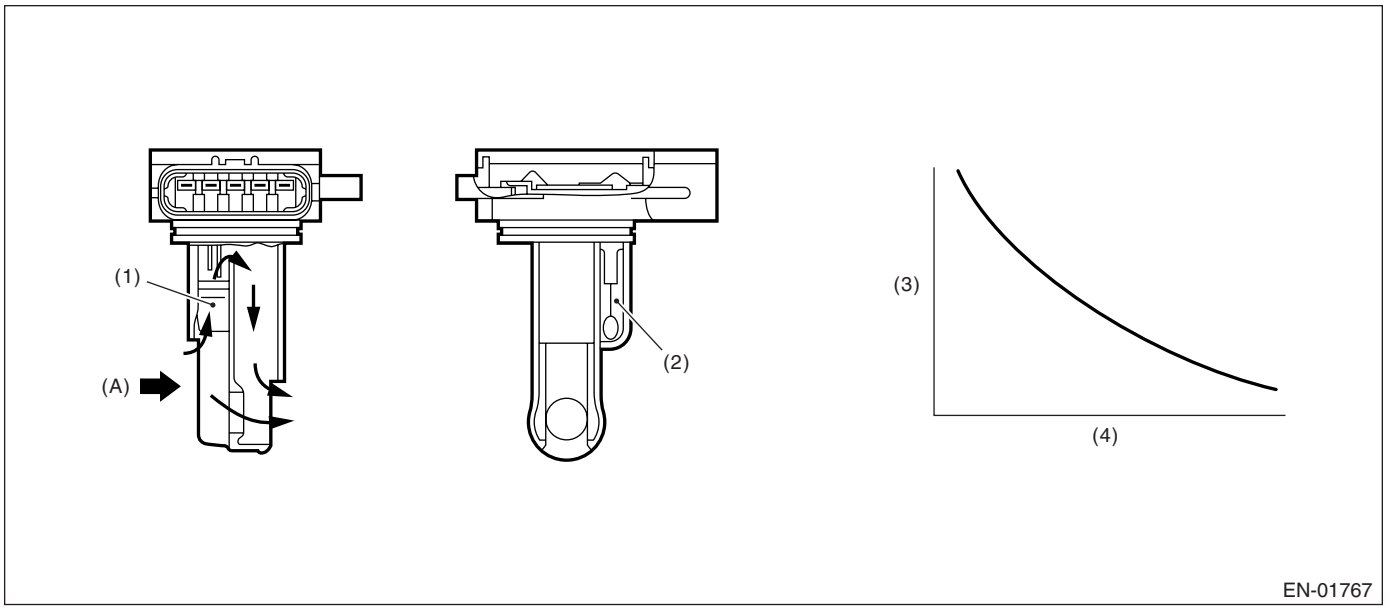

(1) Air flow sensor
(2) Intake air temperature sensor
(3) Resistance value (Ω)
(4) Intake air temperature °C (°F)
(A) Air

3. ENABLE CONDITION

Secondary Parameters	Enable Conditions
None	

4. GENERAL DRIVING CYCLE

Always perform the diagnosis continuously.

5. DIAGNOSTIC METHOD

• Abnormality Judgment

Judge NG when the continuous time of completing the malfunction criteria below becomes more than 0.5 seconds.

Judgment Value

Malfunction Criteria	Threshold Value
Output voltage	< 0.165 V
Ignition switch	ON

Time Needed for Diagnosis: 0.5 seconds
Malfunction Indicator Light Illumination: Illuminates as soon as the malfunction occurs.

• Normality Judgment

Judge OK and clear the NG when the malfunction criteria below are completed.

Judgment Value

Malfunction Criteria	Threshold Value
Output voltage	≥ 0.165 V
Ignition switch	ON

6. DTC CLEAR CONDITION

- When the OK idling cycle was completed 40 times in a row
- When “Clear Memory” was performed

7. MALFUNCTION INDICATOR LIGHT CLEAR CONDITION

- When the OK driving cycle was completed 3 times in a row
- When “Clear Memory” was performed

8. FAIL SAFE

Intake air temperature sensor process: Intake air temperature is fixed at 20°C (68°F).

9. ECM OPERATION AT DTC SETTING

Memorize the freeze frame data. (For test mode $02)

AA:DTC P0113 INTAKE AIR TEMPERATURE CIRCUIT HIGH INPUT

1. OUTLINE OF DIAGNOSIS

Detect the open or short circuit of intake air temperature sensor. Judge NG when out of the standard value.

2. COMPONENT DESCRIPTION

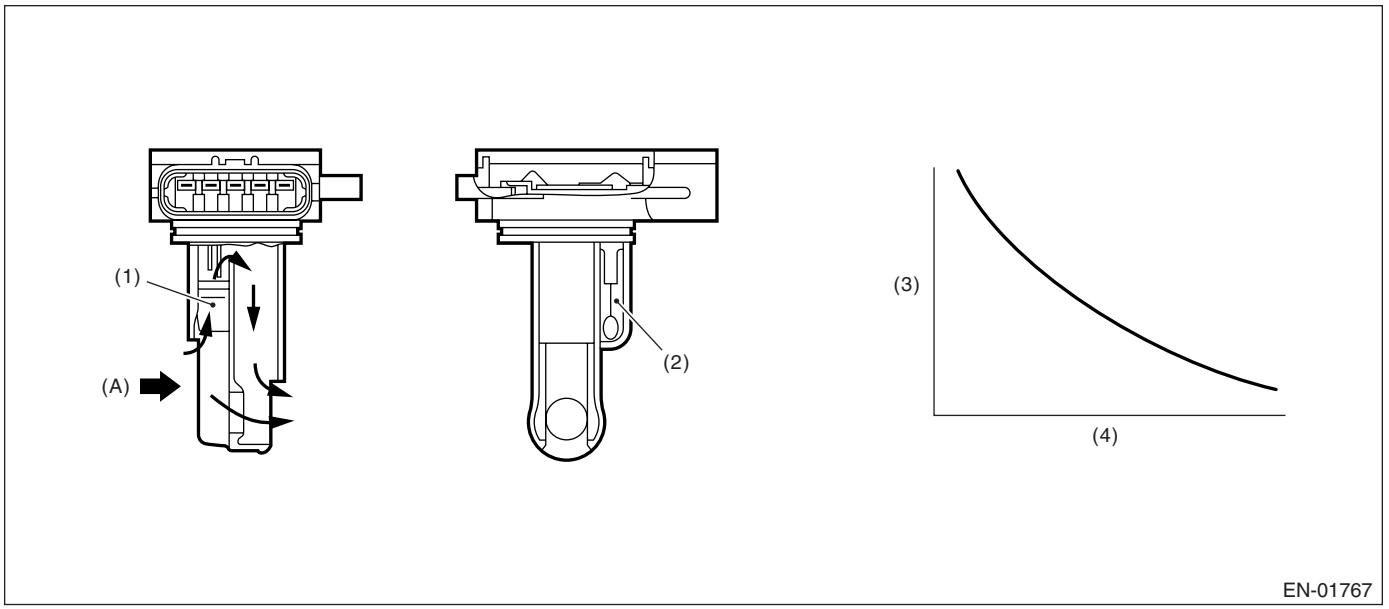

(1) Air flow sensor
(2) Intake air temperature sensor
(3) Resistance value (Ω)
(4) Intake air temperature °C (°F)
(A) Air

3. ENABLE CONDITION

Secondary Parameters	Enable Conditions
None	

4. GENERAL DRIVING CYCLE

Always perform the diagnosis continuously.

5. DIAGNOSTIC METHOD

• Abnormality Judgment

Judge NG when the continuous time of completing the malfunction criteria below becomes more than 0.5 seconds.

Judgment Value

Malfunction Criteria	Threshold Value
Output voltage	≥ 4.716 V
Ignition switch	ON

Time Needed for Diagnosis: 0.5 seconds
Malfunction Indicator Light Illumination: Illuminates as soon as the malfunction occurs.

• Normality Judgment

Judge OK and clear the NG when the malfunction criteria below are completed.

Judgment Value

Malfunction Criteria	Threshold Value
Output voltage	< 4.716 V
Ignition switch	ON

6. DTC CLEAR CONDITION

- When the OK idling cycle was completed 40 times in a row
- When “Clear Memory” was performed

7. MALFUNCTION INDICATOR LIGHT CLEAR CONDITION

- When the OK driving cycle was completed 3 times in a row
- When “Clear Memory” was performed

8. FAIL SAFE

Intake air temperature sensor process: Intake air temperature is fixed at 20°C (68°F).

9. ECM OPERATION AT DTC SETTING

Memorize the freeze frame data. (For test mode $02)

AB:DTC P0117 ENGINE COOLANT TEMPERATURE CIRCUIT LOW INPUT

1. OUTLINE OF DIAGNOSIS

Detect the open or short circuit of engine coolant temperature sensor. Judge NG when out of the standard value.

2. COMPONENT DESCRIPTION

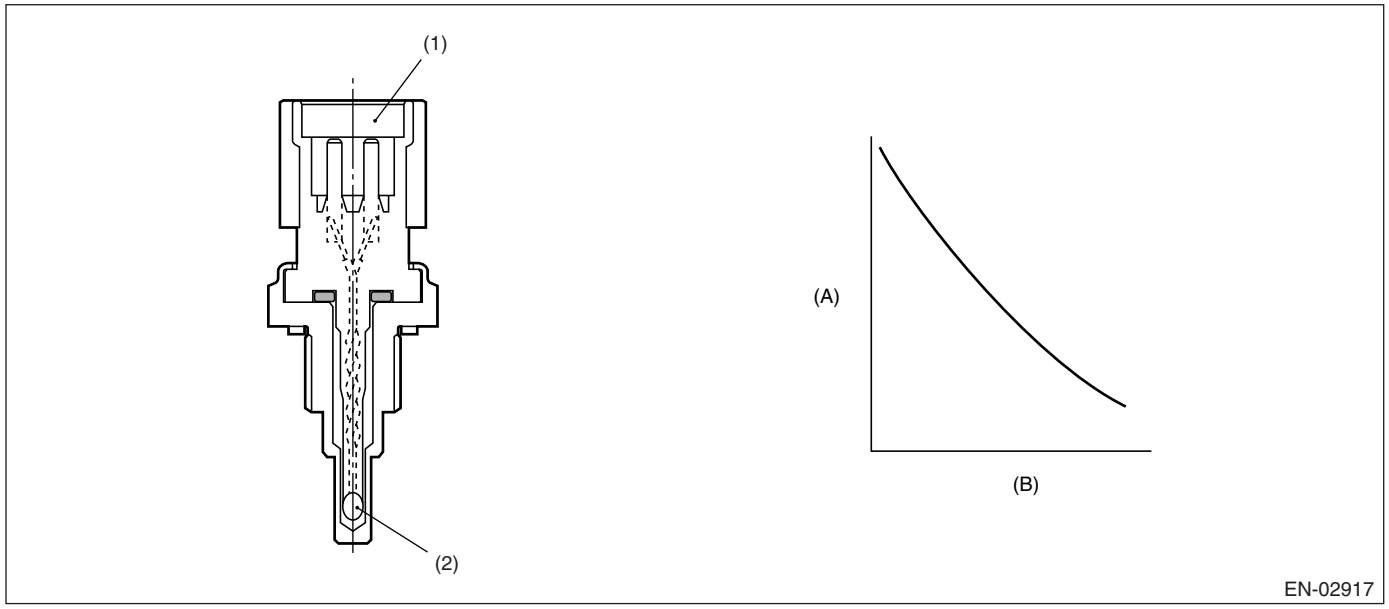

(1) Connector
(2) Thermistor element
(A) Resistance value (kΩ)
(B) Temperature °C (°F)

3. ENABLE CONDITION

Secondary Parameters	Enable Conditions
None	

4. GENERAL DRIVING CYCLE

Always perform the diagnosis continuously.

5. DIAGNOSTIC METHOD

Judge NG when the continuous time of completing the malfunction criteria below becomes more than 0.5 seconds. Judge OK and clear the NG when the malfunction criteria below are not completed.

Judgment Value

Malfunction Criteria	Threshold Value
Output voltage	〈 0.165 V

Time Needed for Diagnosis: 0.5 seconds
Malfunction Indicator Light Illumination: Illuminates as soon as the malfunction occurs.

6. DTC CLEAR CONDITION

- When the OK idling cycle was completed 40 times in a row
- When “Clear Memory” was performed

7. MALFUNCTION INDICATOR LIGHT CLEAR CONDITION

- When the OK driving cycle was completed 3 times in a row
- When “Clear Memory” was performed

8. FAIL SAFE

- Engine coolant temperature process: Fix the engine coolant temperature at 70°C (158°F).
- ISC feedback: Calculate the target engine speed setting the engine coolant temperature to 70°C (158°F).
- ISC learning: Not allowed to learn.
- Heavy fuel judgment control: Not allowed to carry out the heavy judgment.
- Air conditioner control: Not allowed to turn the air conditioner to ON.
- Radiator fan control: Both main and sub fan are in High driving.
- Increase compensation coefficient at a high water temperature: The water temperature condition is disregarded and increased by approval of other condition, though usually increases by a high water temperature and approval of other condition.

9. ECM OPERATION AT DTC SETTING

Memorize the freeze frame data. (For test mode $02)

AC:DTC P0118 ENGINE COOLANT TEMPERATURE CIRCUIT HIGH INPUT

1. OUTLINE OF DIAGNOSIS

Detect the open or short circuit of engine coolant temperature sensor. Judge NG when out of the standard value.

2. COMPONENT DESCRIPTION

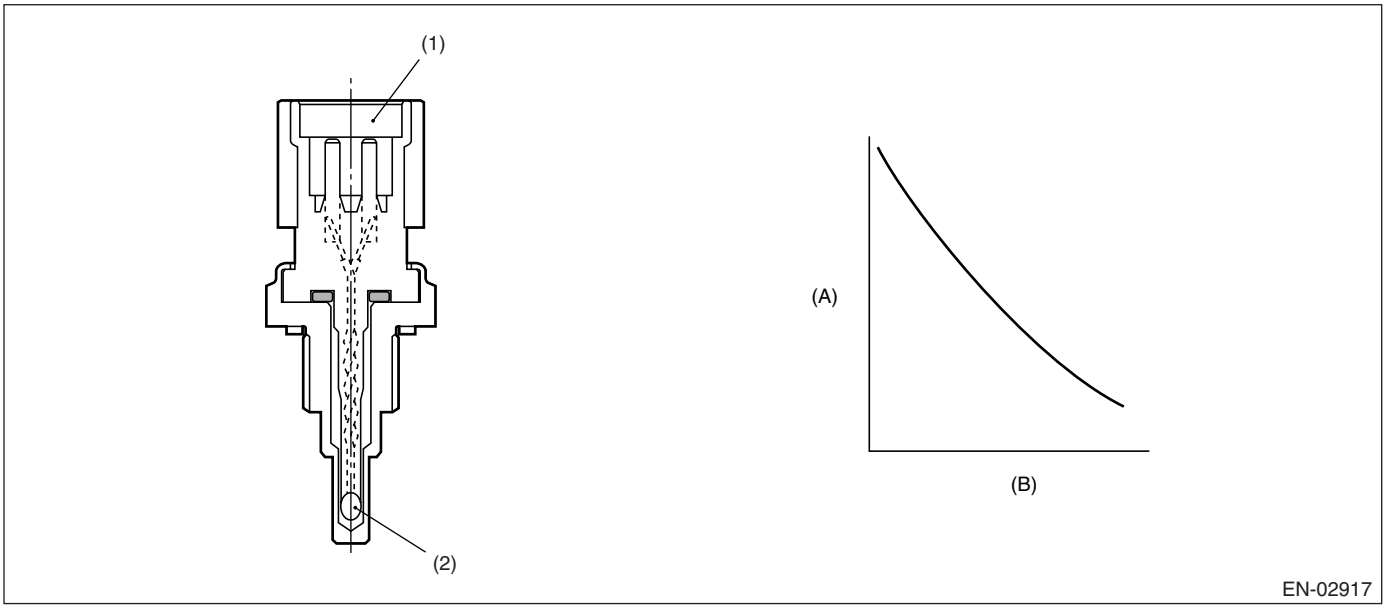

(1) Connector
(2) Thermistor element
(A) Resistance value (kΩ)
(B) Temperature °C (°F)

3. ENABLE CONDITION

Secondary Parameters	Enable Conditions
None	

4. GENERAL DRIVING CYCLE

Always perform the diagnosis continuously.

5. DIAGNOSTIC METHOD

Judge NG when the continuous time of completing the malfunction criteria below becomes more than 0.5 seconds. Judge OK and clear the NG when the malfunction criteria below are not completed.

Judgment Value

Malfunction Criteria	Threshold Value
Output voltage	≥ 4.716 V

Time Needed for Diagnosis: 0.5 seconds
Malfunction Indicator Light Illumination: Illuminates as soon as the malfunction occurs.

6. DTC CLEAR CONDITION

- When the OK idling cycle was completed 40 times in a row
- When “Clear Memory” was performed

7. MALFUNCTION INDICATOR LIGHT CLEAR CONDITION

- When the OK driving cycle was completed 3 times in a row
- When “Clear Memory” was performed

8. FAIL SAFE

- Engine coolant temperature process: Fix the engine coolant temperature at 70°C (158°F).
- ISC feedback: Calculate the target engine speed setting the engine coolant temperature to 70°C (158°F).
- ISC learning: Not allowed to learn.
- Heavy fuel judgment control: Not allowed to carry out the heavy judgment.
- Air conditioner control: Not allowed to turn the air conditioner to ON.
- Radiator fan control: Both main and sub fan are in High driving.
- Increase compensation coefficient at a high water temperature: The water temperature condition is disregarded and increased by approval of other condition, though usually increases by a high water temperature and approval of other condition.

9. ECM OPERATION AT DTC SETTING

Memorize the freeze frame data. (For test mode $02)

AD:DTC P0122 THROTTLE/PEDAL POSITION SENSOR/SWITCH "A" CIRCUIT LOW INPUT

1. OUTLINE OF DIAGNOSIS

Detect the open or short circuit of throttle position sensor 1.
Judge NG when out of the standard value.

2. COMPONENT DESCRIPTION

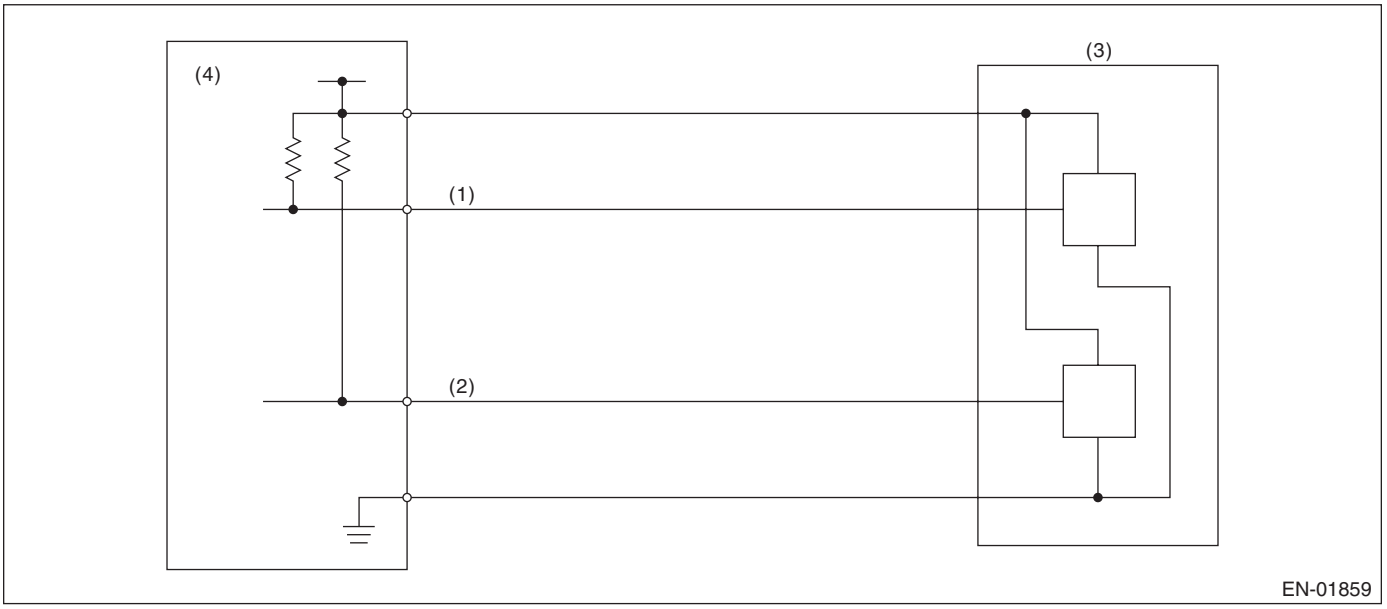

(1) Throttle position sensor 1 signal
(2) Throttle position sensor 2 signal
(3) Throttle position sensor
(4) Engine control module (ECM)

3. ENABLE CONDITION

Secondary Parameters	Enable Conditions
Ignition switch	ON

4. GENERAL DRIVING CYCLE

Always perform the diagnosis continuously.

5. DIAGNOSTIC METHOD

Judge OK and clear the NG when the malfunction criteria below are completed.
Judgment Value

Malfunction Criteria	Threshold Value
Sensor 1 input voltage	≥ 0.309 V

Time Needed for Diagnosis: 24 milliseconds
Malfunction Indicator Light Illumination: Illuminates as soon as malfunction occurs.

6. DTC CLEAR CONDITION

- When the OK idling cycle was completed 40 times in a row
- When "Clear Memory" was performed (Only with engine stopped)

7. MALFUNCTION INDICATOR LIGHT CLEAR CONDITION

- When the OK driving cycle was completed 3 times in a row
- When "Clear Memory" was performed (Only with engine stopped)

8. FAIL SAFE

Stop power distribution to electronic throttle control motor. (Throttle opening is fixed to 6°.)

9. ECM OPERATION AT DTC SETTING

Memorize the freeze frame data. (For test mode $02)

AE:DTC P0123 THROTTLE/PEDAL POSITION SENSOR/SWITCH “A” CIRCUIT HIGH INPUT

1. OUTLINE OF DIAGNOSIS

Detect the open or short circuit of throttle position sensor 1.
Judge NG when out of the standard value.

2. COMPONENT DESCRIPTION

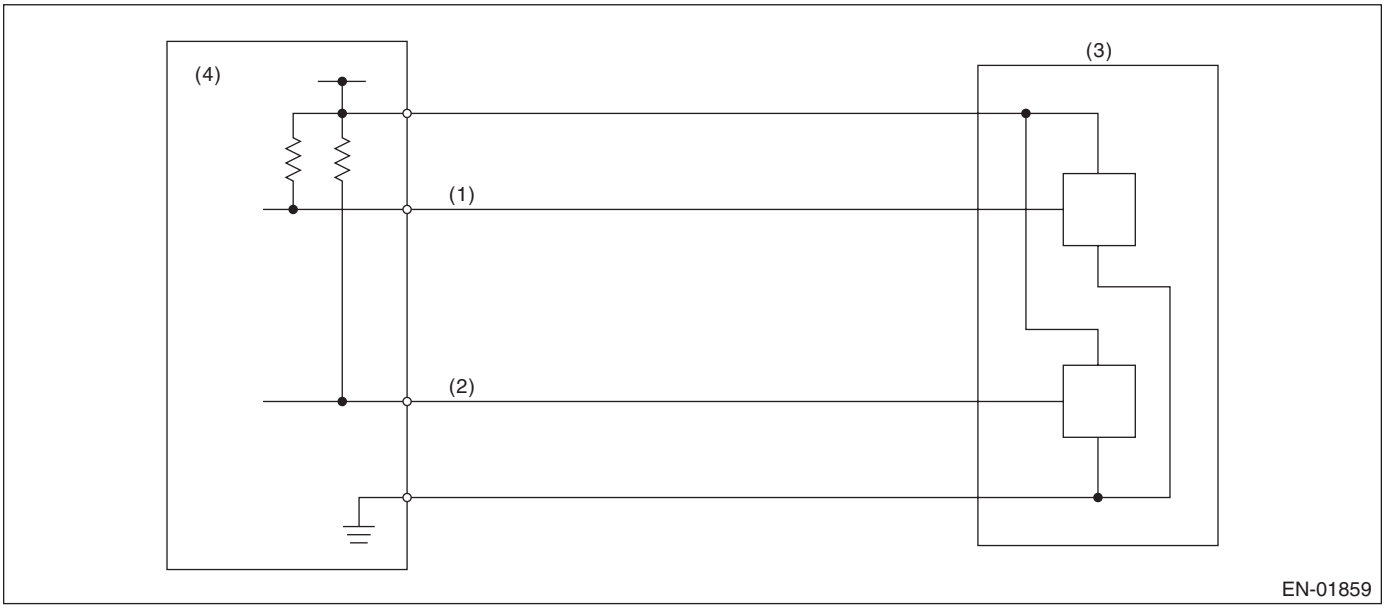

(1) Throttle position sensor 1 signal
(2) Throttle position sensor 2 signal
(3) Throttle position sensor
(4) Engine control module (ECM)

3. ENABLE CONDITION

Secondary Parameters	Enable Conditions
Ignition switch	ON

4. GENERAL DRIVING CYCLE

Always perform the diagnosis continuously.

5. DIAGNOSTIC METHOD

Judge OK and clear the NG when the malfunction criteria below are completed.
Judgment Value

Malfunction Criteria	Threshold Value
Sensor 1 input voltage	≤ 4.646 V

Time Needed for Diagnosis: 24 milliseconds
Malfunction Indicator Light Illumination: Illuminates as soon as malfunction occurs.

6. DTC CLEAR CONDITION

- When the OK idling cycle was completed 40 times in a row
- When “Clear Memory” was performed (Only with engine stopped)

7. MALFUNCTION INDICATOR LIGHT CLEAR CONDITION

- When the OK driving cycle was completed 3 times in a row
- When “Clear Memory” was performed (Only with engine stopped)

8. FAIL SAFE

Stop power distribution to electronic throttle control motor. (Throttle opening is fixed to 6°.)

9. ECM OPERATION AT DTC SETTING

Memorize the freeze frame data. (For test mode $02)

AF:DTC P0125 INSUFFICIENT ENGINE COOLANT TEMPERATURE FOR CLOSED LOOP FUEL CONTROL

1. OUTLINE OF DIAGNOSIS

Detect the malfunction of engine coolant temperature output property. Judge NG when the engine coolant temperature does not rise whereas it seemed to rise from the viewpoint of the engine condition.

2. COMPONENT DESCRIPTION

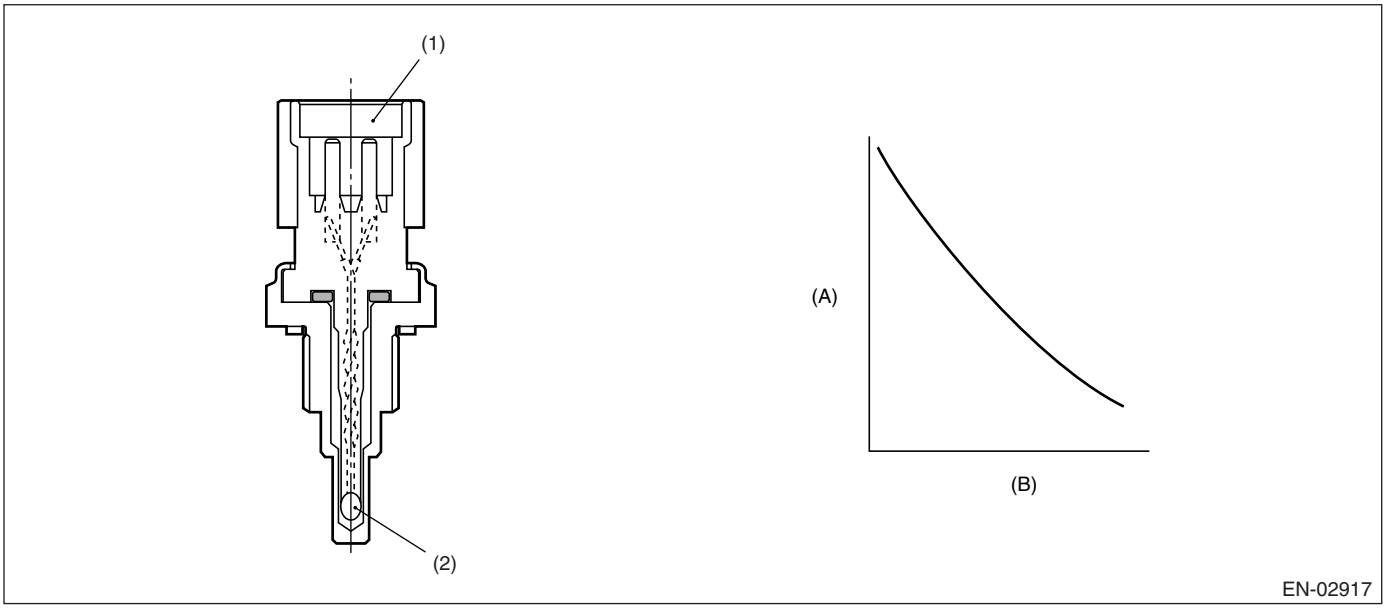

(1) Connector
(2) Thermistor element
(A) Resistance value (kΩ)
(B) Temperature °C (°F)

3. ENABLE CONDITION

Secondary Parameters	Enable Conditions
Engine speed	≥ 500 rpm
Battery voltage	〉10.9 V

4. GENERAL DRIVING CYCLE

Perform the diagnosis only once after engine starting.

5. DIAGNOSTIC METHOD

• Abnormality Judgment

Judge NG when the malfunction criteria below are completed.

Judgment Value

Malfunction Criteria	Threshold Value
Engine coolant temperature	〈 20°C (68°F)
Timer for diagnosis after engine starting	≥ Timer judgment value after engine starting

Timer for diagnosis after engine starting
a) Timer stop at fuel cut mode.
b) During the driving conditions (except a) above), timer count up by 64 milliseconds + TWCNT milliseconds at every 64 milliseconds.
Where, TWCNT is determined as follows,
TWCNT = 0 at idle switch ON,

Refer to the following table for TWCNT with idle switch OFF.

Temp. °C (°F)	Vehicle speed km/h (MPH)							
	0 (0)	8 (4.97)	16 (9.94)	24 (14.9)	32 (19.9)	40 (24.9)	48 (29.8)	56 (34.8)
−20 (−4)	0 ms	37.1 ms	72.3 ms	111.4 ms	126.7 ms	141.9 ms	163.6 ms	185.3 ms
−10 (14)	0 ms	27.4 ms	54.8 ms	82.2 ms	99.7 ms	117.1 ms	136.0 ms	154.8 ms
0 (32)	0 ms	17.6 ms	35.3 ms	52.9 ms	72.6 ms	92.3 ms	108.3 ms	124.3 ms
10 (50)	0 ms	7.9 ms	15.8 ms	23.7 ms	45.6 ms	67.6 ms	80.7 ms	93.9 ms
20 (68)	0 ms	7.9 ms	15.8 ms	23.7 ms	45.6 ms	67.6 ms	80.7 ms	93.9 ms

Judgment value of timer after engine starting
$t = 429.5 - 28.605 \times Ti$
Ti is the lowest engine coolant temperature after starting the engine.
Time Needed for Diagnosis: To be determined. (It is varied by the Min. engine coolant temperature and engine conditions such as vehicle speed and engine coolant temperature.)
Malfunction Indicator Light Illumination: Illuminates when malfunction occurs in 2 continuous driving cycles.
• Normality Judgment

Judge OK and clear the NG when the malfunction criteria below are completed.
Judgment Value

Malfunction Criteria	Threshold Value
Engine coolant temperature	≥ 20°C (68°F)

6. DTC CLEAR CONDITION

- When the OK idling cycle was completed 40 times in a row
- When “Clear Memory” was performed

7. MALFUNCTION INDICATOR LIGHT CLEAR CONDITION

- When the OK driving cycle was completed 3 times in a row
- When “Clear Memory” was performed

8. FAIL SAFE

- Engine coolant temperature process: Fix the engine coolant temperature at 70°C (158°F).
- ISC feedback: Calculate the target engine speed setting the engine coolant temperature to 70°C (158°F).
- ISC learning: Not allowed to learn.
- Heavy fuel judgment control: Not allowed to carry out the heavy judgment.
- Air conditioner control: Not allowed to turn the air conditioner to ON.
- Radiator fan control: Both main and sub fan are in High driving.
- Increase compensation coefficient at a high water temperature: The water temperature condition is disregarded and increased by approval of other condition, though usually increases by a high water temperature and approval of other condition.

9. ECM OPERATION AT DTC SETTING

Memorize the freeze frame data. (For test mode $02)

AG:DTC P0126 INSUFFICIENT ENGINE COOLANT TEMPERATURE FOR STABLE OPERATION

1. OUTLINE OF DIAGNOSIS

Judge NG when the engine coolant temperature sensor output does not change.
Judge NG when the engine coolant temperature sensor output does not change though the vehicle is operated in a manner which is expected to affect the engine coolant temperature.

2. COMPONENT DESCRIPTION

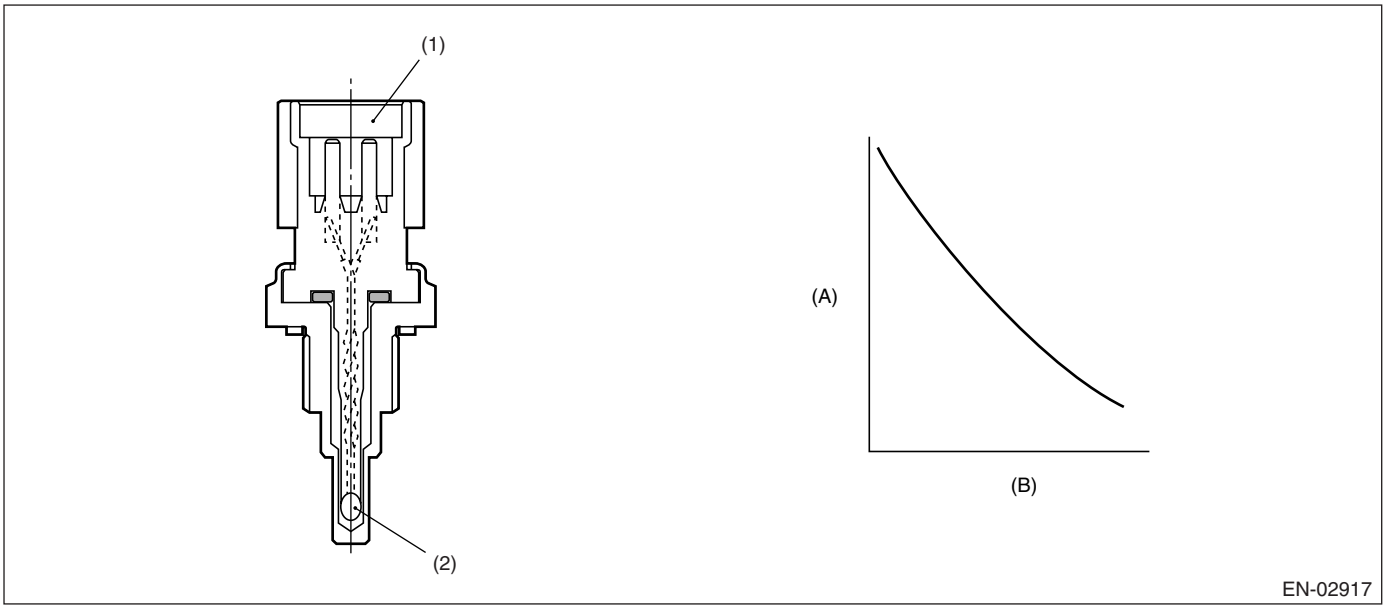

(1) Connector
(2) Thermistor element
(A) Resistance value (kΩ)
(B) Temperature °C (°F)

3. ENABLE CONDITION

Secondary Parameters	Enable Conditions
Battery voltage	≥ 10.9 V
Kept for 20 seconds with vehicle speed ≥ 70km/h (43 MPH)	5 time experienced
Kept for 20 seconds with idling engine	5 time experienced

4. GENERAL DRIVING CYCLE

Perform the diagnosis once after idling and driving for predetermined time. (Judge OK/NG.)

5. DIAGNOSTIC METHOD

Judge NG when the following criteria are satisfied, and OK when not satisfied.
Judgment Value

Malfunction Criteria	Threshold Value
Engine coolant temperature sensor Max. voltage − Min. voltage	< 15 mV

Time Needed for Diagnosis: To be detertmined
Malfunction Indicator Light Illumination: Detect when malfunction occurs in 2 continuous driving cycles.

6. DTC CLEAR CONDITION

- When the OK idling cycle is completed 40 times in a row
- When “Clear Memory” was performed

7. MALFUNCTION INDICATOR LIGHT CLEAR CONDITION

- When the OK idling cycle was completed 40 times in a row
- When “Clear Memory” was performed

8. FAIL SAFE

None

9. ECM OPERATION AT DTC SETTING

Memorize the freeze frame data. (For test mode $02)

AH:DTC P0128 COOLANT THERMOSTAT (ENGINE COOLANT TEMPERATURE BELOW THERMOSTAT REGULATING TEMPERATURE)

1. OUTLINE OF DIAGNOSIS

Detect the malfunction of thermostat function. Judge NG when the engine coolant temperature is lower than the estimated engine coolant temperature and the difference between them is large. Judge OK when the engine coolant temperature becomes 75°C (167°F) and the difference is small before judging NG.

2. COMPONENT DESCRIPTION

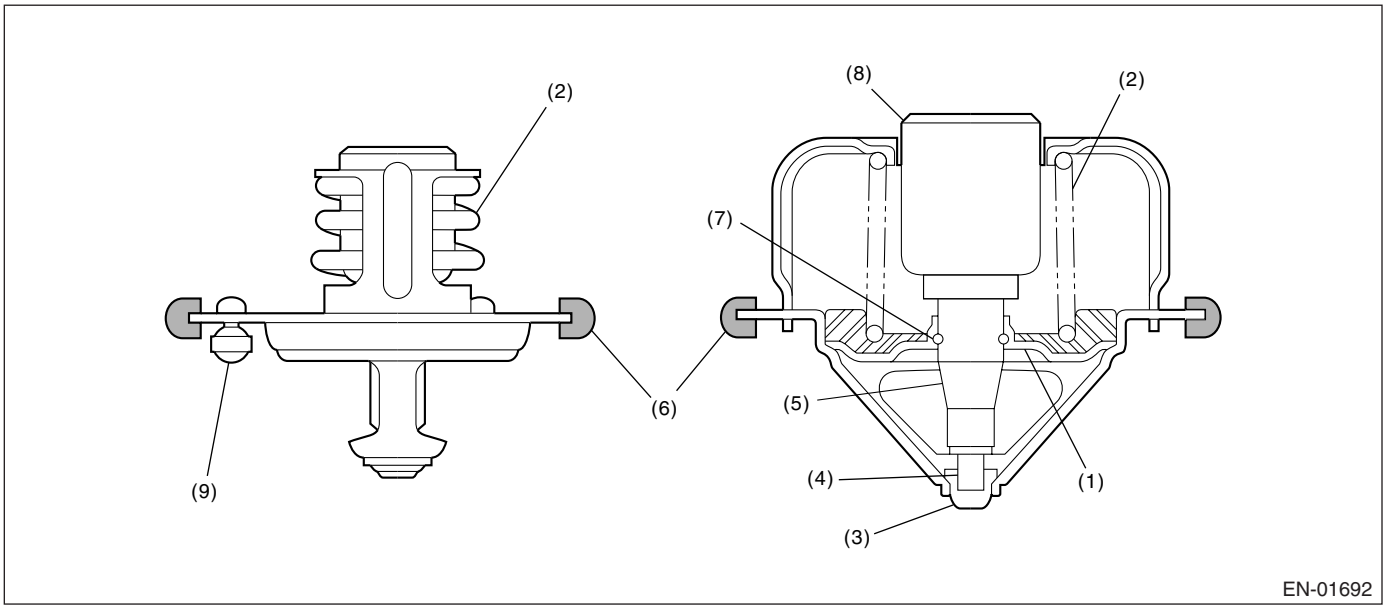

(1) Valve
(2) Spring
(3) Stopper
(4) Piston
(5) Guide
(6) Rubber packing
(7) Stop ring
(8) Wax element
(9) Jiggle valve

3. ENABLE CONDITION

Secondary Parameters	Enable Conditions
None	

4. GENERAL DRIVING CYCLE

Always perform the diagnosis continuously.

5. DIAGNOSTIC METHOD

• Abnormality Judgment

Judge NG when the continuous time of completing the malfunction criteria below becomes more than 23 seconds.

Judgment Value

Malfunction Criteria	Threshold Value
Battery voltage	≥ 10.9 V
Estimated ambient air temperature	≥ –7°C (19.4°F)
Thermostat malfunction diagnosis	Not finished
Engine coolant temperature at engine starting	〈 55°C (131°F)
Estimated engine coolant temperature	≥ 75°C (167°F)
Engine coolant temperature	≤ 75°C (167°F)
(Estimated – measured) engine coolant temperature	〉 20°C (68°F)
vehicle speed	≥ 20km/h (12 MPH)

Time Needed for Diagnosis: 23 seconds
Malfunction Indicator Light Illumination: Illuminates when malfunction occurs in 2 continuous driving cycles.

• Normality Judgment

Judge OK and clear the NG when the malfunction criteria below are completed.

Judgment Value

Malfunction Criteria	Threshold Value
Battery voltage	≥ 10.9 V
Estimated ambient air temperature	≥ –7°C (19.4°F)
Thermostat malfunction diagnosis	Not finished
Engine coolant temperature at engine starting	〈 55°C (131°F)
Engine coolant temperature	≥ 75°C (167°F)
(Estimated – measured) engine coolant temperature	≤ 20°C (68°F)

6. DTC CLEAR CONDITION

- When the OK idling cycle was completed 40 times in a row
- When “Clear Memory” was performed

7. MALFUNCTION INDICATOR LIGHT CLEAR CONDITION

- When the OK driving cycle was completed 3 times in a row
- When “Clear Memory” was performed

8. FAIL SAFE

None

9. ECM OPERATION AT DTC SETTING

Memorize the freeze frame data. (For test mode $02)

AI: DTC P0131 O2 SENSOR CIRCUIT LOW VOLTAGE (BANK 1 SENSOR 1)

1. OUTLINE OF DIAGNOSIS

Detect the open or short circuit of sensor.
Judge NG when the element impressed voltage is out of range, or the element current is out of range.

2. COMPONENT DESCRIPTION

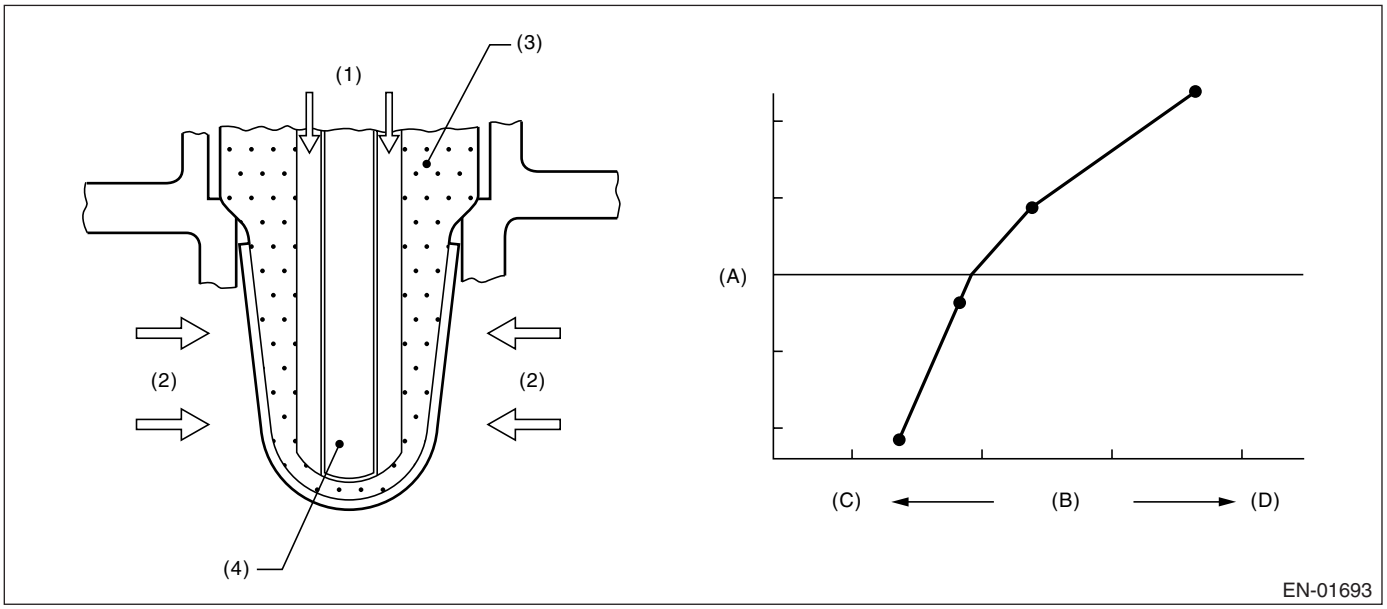

(1) Atmosphere
(2) Exhaust
(3) ZrO2
(4) Ceramic heater
(A) Electromotive force
(B) Air fuel ratio
(C) Lean
(D) Rich

3. ENABLE CONDITION

Secondary Parameters	Enable Conditions
Voltage	≥ 10.9 V

4. GENERAL DRIVING CYCLE

Always perform the diagnosis continuously.

5. DIAGNOSTIC METHOD

Judge NG when the continuous time of completing any malfunction criteria below becomes more than 1 second.

Judgment Value

Malfunction Criteria	Threshold Value
Input voltage	< 1.8 V
Input current	< −0.005 A

Time Needed for Diagnosis: 1 second
Malfunction Indicator Light Illumination: Illuminates as soon as the malfunction occurs.

6. DTC CLEAR CONDITION

- When the OK idling cycle was completed 40 times in a row
- When “Clear Memory” was performed

7. MALFUNCTION INDICATOR LIGHT CLEAR CONDITION

- When the OK driving cycle was completed 3 times in a row
- When “Clear Memory” was performed

8. FAIL SAFE

- Front oxygen (A/F) sensor heater control: Not allowed to turned on the heater.
- A/F main learning: Not allowed to calculate the A/F main learning compensation factor.
- A/F sub learning: Not allowed to calculate the A/F sub learning compensation factor.
- Compensation when starting the engine at high temperature: Make the MIN value to be 0 from 0.06 normally.
- Purge control: Not allowed to purge.

9. ECM OPERATION AT DTC SETTING

Memorize the freeze frame data. (For test mode $02)

AJ:DTC P0132 O2 SENSOR CIRCUIT HIGH VOLTAGE (BANK 1 SENSOR 1)

1. OUTLINE OF DIAGNOSIS

Detect the open or short circuit of sensor.
Judge NG when the element impressed voltage is out of range, or the element current is out of range.

2. COMPONENT DESCRIPTION

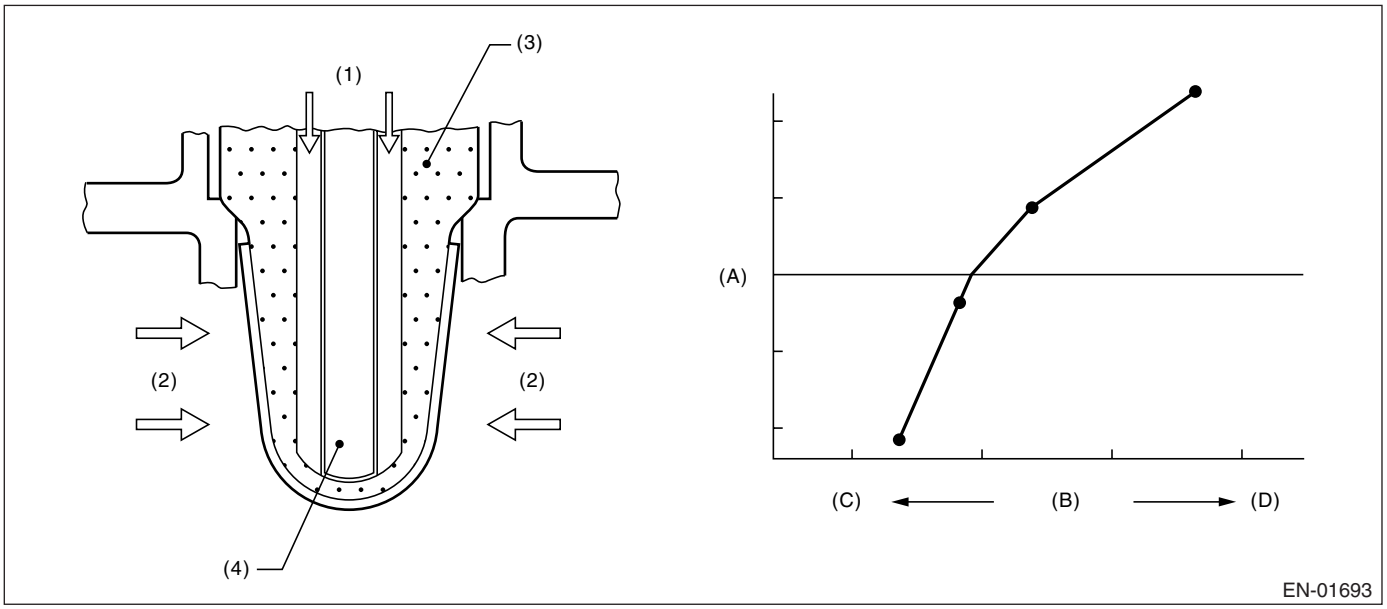

(1) Atmosphere
(2) Exhaust
(3) ZrO2
(4) Ceramic heater
(A) Electromotive force
(B) Air fuel ratio
(C) Lean
(D) Rich

3. ENABLE CONDITION

Secondary Parameters	Enable Conditions
Voltage	≥ 10.9 V

4. GENERAL DRIVING CYCLE

Always perform the diagnosis continuously.

5. DIAGNOSTIC METHOD

Judge NG when the continuous time of completing any malfunction criteria below becomes more than 1 second.

Judgment Value

Malfunction Criteria	Threshold Value
Input voltage	≥ 3.8 V
Input current	≥ 0.005 A

Time Needed for Diagnosis: 1 second
Malfunction Indicator Light Illumination: Illuminates as soon as the malfunction occurs.

6. DTC CLEAR CONDITION

- When the OK idling cycle was completed 40 times in a row
- When “Clear Memory” was performed

7. MALFUNCTION INDICATOR LIGHT CLEAR CONDITION

- When the OK driving cycle was completed 3 times in a row
- When “Clear Memory” was performed

8. FAIL SAFE

- Front oxygen (A/F) sensor heater control: Not allowed to turned on the heater.
- A/F main learning: Not allowed to calculate the A/F main learning compensation factor.
- A/F sub learning: Not allowed to calculate the A/F sub learning compensation factor.
- Compensation when starting the engine at high temperature: Make the MIN value to be 0 from 0.06 normally.
- Purge control: Not allowed to purge.

9. ECM OPERATION AT DTC SETTING

Memorize the freeze frame data. (For test mode $02)

AK:DTC P0133 O2 SENSOR CIRCUIT SLOW RESPONSE (BANK 1 SENSOR 1)

1. OUTLINE OF DIAGNOSIS

Detect time-lag of front oxygen (A/F) sensor response. Front oxygen (A/F) sensor cover has some ventilation holes for exhaust gas. Clogged ventilation holes are diagnosed. When the holes are clogged, the A/F output variation becomes slow comparing with the actual A/F variation because oxygen which reaches the zirconia layer is insufficient. Therefore, if the cover has clogged holes, the rich to lean judgment in ECM is delayed when the change from rich to lean is caused. Judge NG when the actual A/F variation is slow comparing with the ECM control amount.

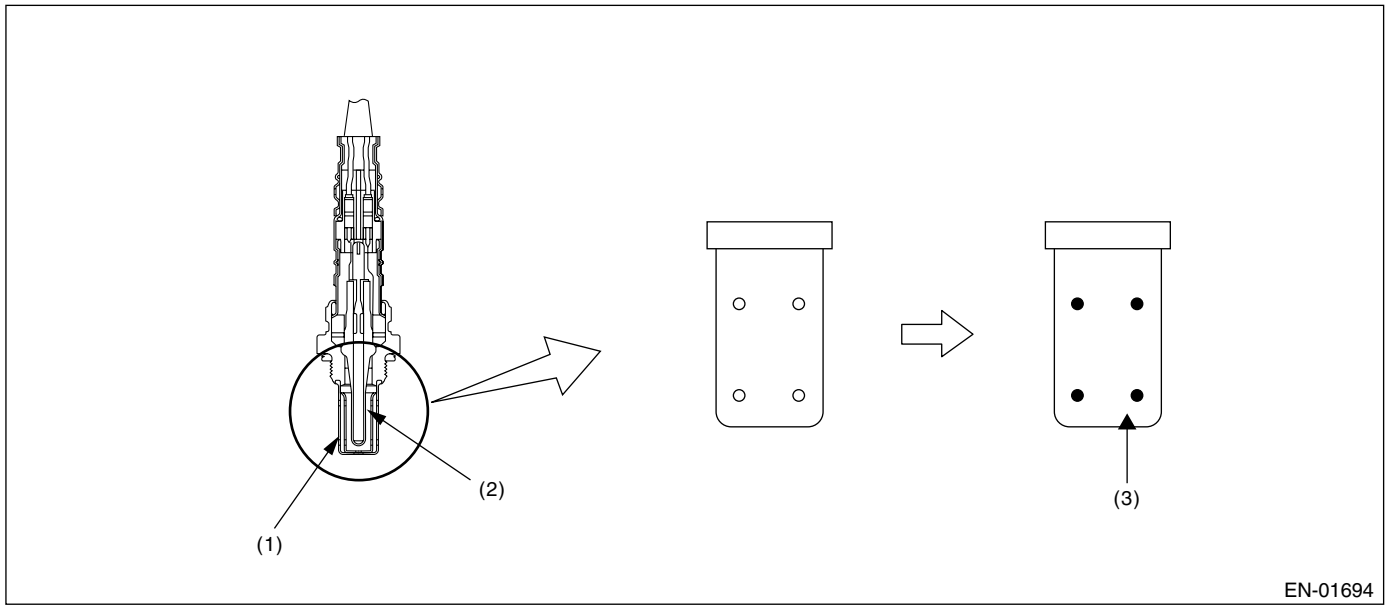

(1) Cover
(2) Zirconia
(3) Clogging

2. COMPONENT DESCRIPTION

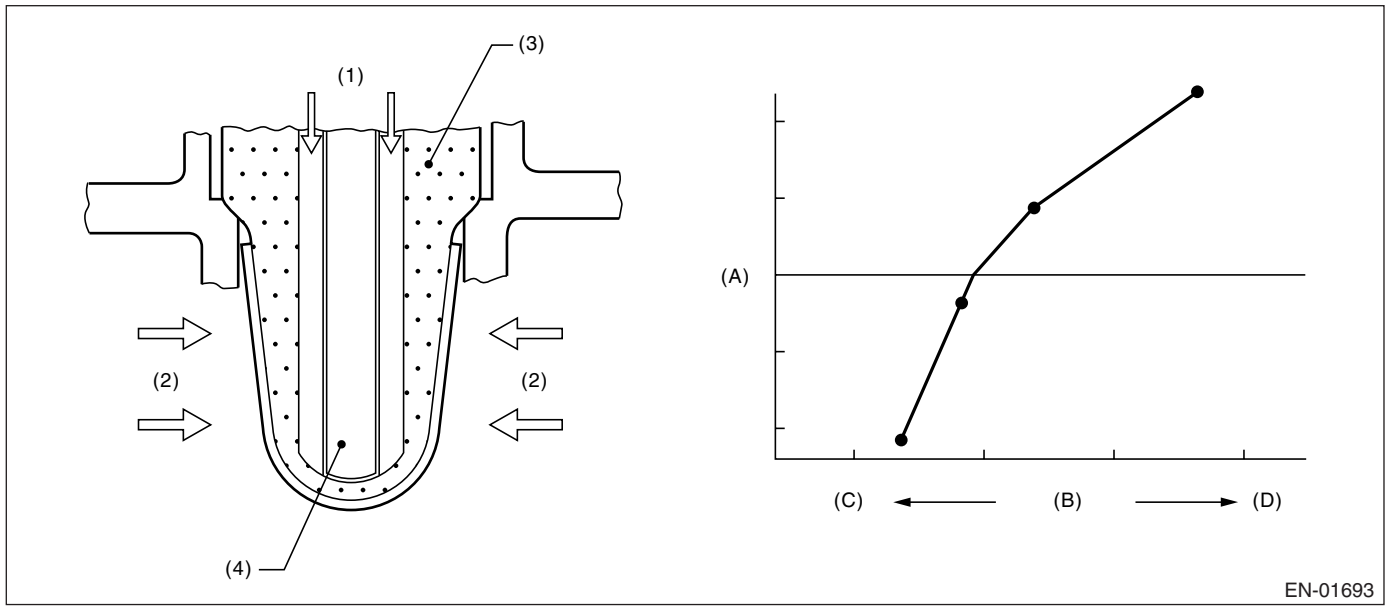

(1) Atmosphere
(2) Exhaust
(3) ZrO2
(4) Ceramic heater
(A) Electromotive force
(B) Air fuel ratio
(C) Lean
(D) Rich

3. ENABLE CONDITION

Secondary Parameters	Enable Conditions
All secondary parameters enable conditions	1 second or more
Battery voltage	> 10.9 V
Atmospheric pressure	> 75.1 kPa (563 mmHg, 22.2 inHg)
Closed loop control with main feedback	operating
Impedance of front oxygen (A/F) sensor	0 ←→ 50 Ω
After engine starting	120 seconds or more
Engine coolant temperature	≥ 75°C (167°F)
Engine speed	1000 ←→ 2500 rpm
Vehicle speed	10 ←→ 120 km/h (6.21 ←→ 74.6 MPH)
Amount of intake air	10 ←→ 40 g/s
Engine load	< 0.02 g/rev
Learning value of EVAP conc. during purge	≤ 0.2
Accumulated time of operating canister purge	20 seconds or more

4. GENERAL DRIVING CYCLE

Perform diagnosis only once at a constant speed of 10 to 120 km/h (6.21 to 74.6 MPH) in 60 seconds after starting the engine.

5. DIAGNOSTIC METHOD

Integrate the difference of faf in every 128 milliseconds and difference of λ value.
After integrate 1640 times (210 seconds), calculate the diagnosis value.
Judge NG when the malfunction criteria below are completed. Judge OK and clear NG when the malfunction criteria below are not completed.

Judgment Value

Malfunction Criteria	Threshold Value
parafca = td2faf/td2lmd where, td2faf (N) = td2faf (n−1) + |d2faf (n)| td2lmd (N) = td2lmd (n−1) + |d2lmd (n)| add up for a total of 300 seconds d2faf (n) = (faf (n) − faf (n−1)) − (faf (n−1) − faf (n−2)) d2lmd (n) = (lmd (n) − lmd (n−1)) − (lmd (n−1) − lmd (n−2)) faf = main feedback compensation coefficient every 128 milliseconds lmd = output lambda every 128 milliseconds	≥ 0.325

Time Needed for Diagnosis: 210 seconds
Malfunction Indicator Light Illumination: Illuminates when malfunction occurs in 2 continuous driving cycles.

6. DTC CLEAR CONDITION

- When the OK idling cycle was completed 40 times in a row
- When “Clear Memory” was performed

7. MALFUNCTION INDICATOR LIGHT CLEAR CONDITION

- When the OK driving cycle was completed 3 times in a row
- When “Clear Memory” was performed

8. FAIL SAFE

- Front oxygen (A/F) sensor main learning correction: Not allowed to calculate.
- Rear oxygen (A/F) sensor sub learning correction: Not allowed to calculate.
- Correction when re-starting at high temperature: Normally minimum value 0.06 → 0.
- Purge control: Not allowed to purge.

9. ECM OPERATION AT DTC SETTING

- Memorize the freeze frame data. (For test mode $02)
- Memorize the diagnostic value and trouble standard value. (For test mode $06)

AL:DTC P0134 O2 SENSOR CIRCUIT NO ACTIVITY DETECTED (BANK 1 SENSOR 1)

1. OUTLINE OF DIAGNOSIS

Detect the open circuit of sensor.
Judge NG when the element impedance is large.

2. COMPONENT DESCRIPTION

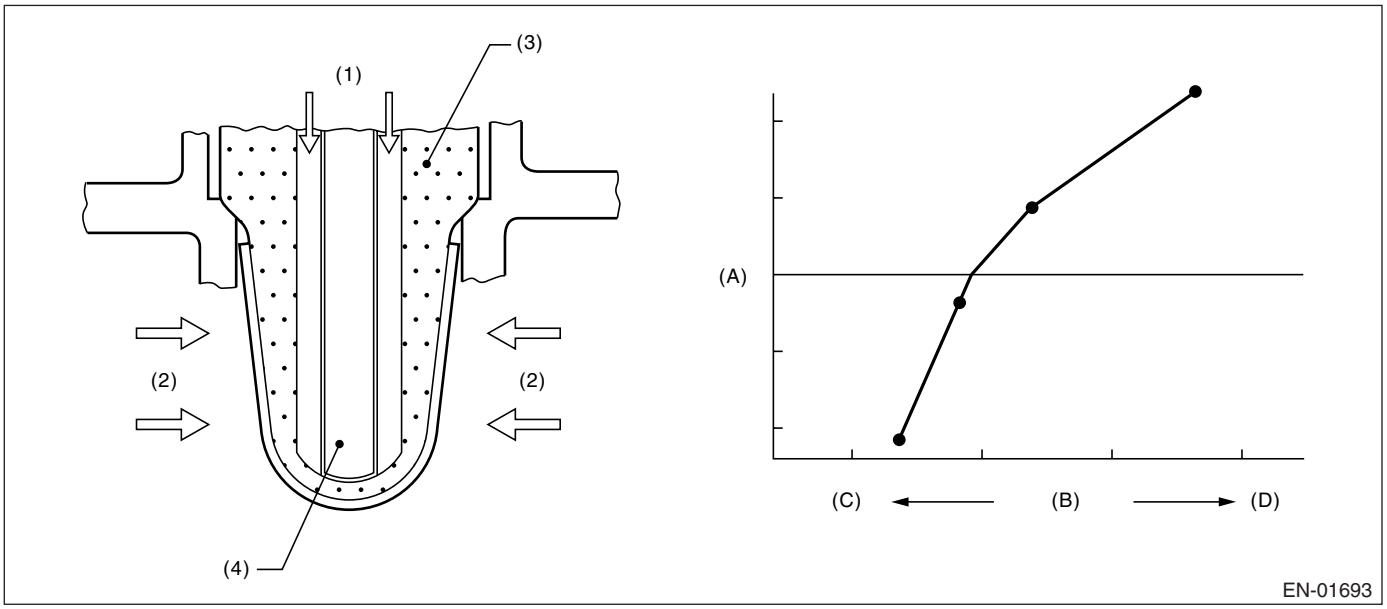

(1) Atmosphere
(2) Exhaust
(3) ZrO2
(4) Ceramic heater
(A) Electromotive force
(B) Air fuel ratio
(C) Lean
(D) Rich

3. ENABLE CONDITION

Secondary Parameters	Enable Conditions
None	

4. GENERAL DRIVING CYCLE

Always perform the diagnosis continuously.

5. DIAGNOSTIC METHOD

Judge NG when the continuous time of completing the malfunction criteria below becomes more than 5 seconds.

Judgment Value

Malfunction Criteria	Threshold Value
Voltage	≥ 10.9 V
Time after heater duty ≥ 70 %	≥ 30 seconds
Front lambda sensor impedance	≥ 500 Ω

Time Needed for Diagnosis: 5 seconds
Malfunction Indicator Light Illumination: Illuminates as soon as the malfunction occurs.

6. DTC CLEAR CONDITION

- When the OK idling cycle was completed 40 times in a row
- When “Clear Memory” was performed

7. MALFUNCTION INDICATOR LIGHT CLEAR CONDITION

- When the OK driving cycle was completed 3 times in a row
- When “Clear Memory” was performed

8. FAIL SAFE

- Front oxygen (A/F) sensor IC communication: Not allowed to communicate
- Front oxygen (A/F) sensor main learning correction: Not allowed to calculate
- Correction when re-starting at hich temperature: Normally minimum value 0.06 → 0.
- Purge control: Not allowed to purge.

9. ECM OPERATION AT DTC SETTING

Memorize the freeze frame data. (For test mode $02)

AM:DTC P0137 O2 SENSOR CIRCUIT LOW VOLTAGE (BANK 1 SENSOR 2)

1. OUTLINE OF DIAGNOSIS

Detect the malfunction of rear oxygen sensor open or short circuit. Judge NG when the rear oxygen sensor voltage may be abnormal from rear oxygen sensor voltage value with considering the conditions such as intake air amount, engine coolant temperature, main feedback control.

2. COMPONENT DESCRIPTION

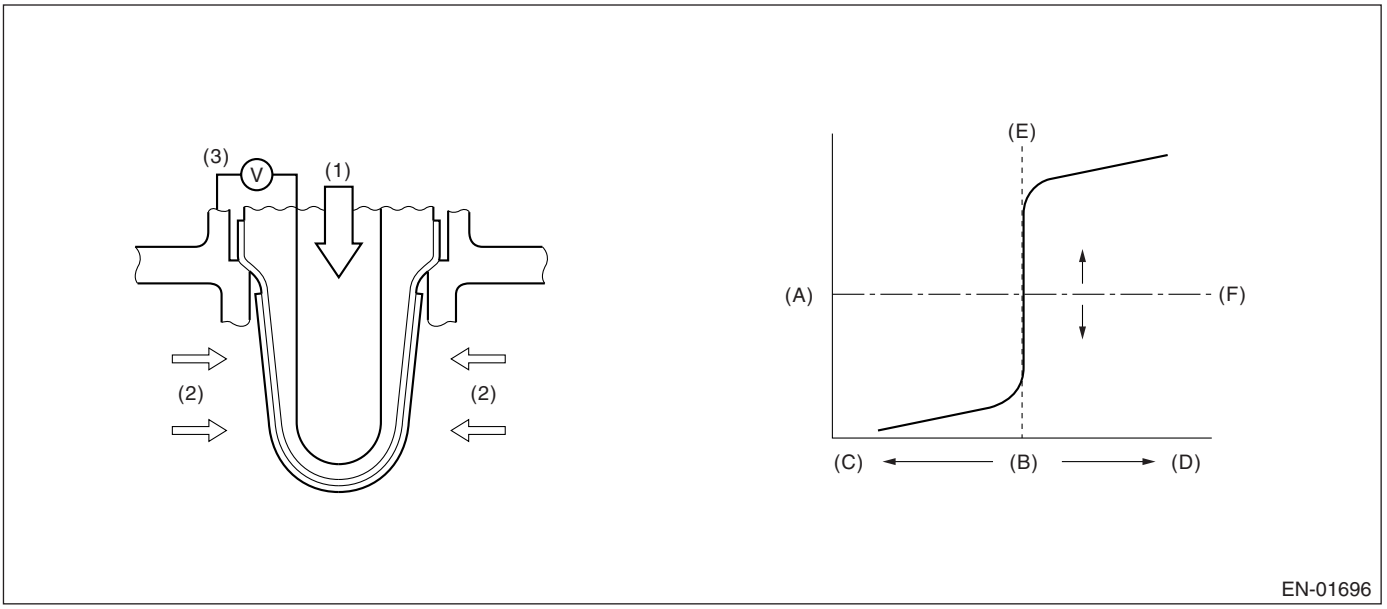

(1) Atmosphere
(2) Exhaust
(3) Electromotive force
(A) Electromotive force
(B) Air fuel ratio
(C) Rich
(D) Lean
(E) Theoretical air fuel ratio
(F) Comparative voltage

3. ENABLE CONDITION (USED ONLY FOR MALFUNCTION JUDGMENT)

Secondary Parameters	Enable Conditions
Closed loop control with rear oxygen sensor	In operation
Target output voltage of rear oxygen sensor	≥ 0.6 V
Amount of intake air	≥ 10 g/s
Engine coolant temperature	≥ 75°C (167°F)
Misfire detection during 200 engine revs.	≤ 7 times
Compensation factor for front oxygen (A/F) sensor with main feedback control	Not in limit value
Battery voltage with main feedback control	〉10.9 V
5 seconds or more fuel shut-off in decel.	Experienced

4. GENERAL DRIVING CYCLE

Perform the diagnosis once after starting the engine.

5. DIAGNOSTIC METHOD

• Abnormality Judgment

Judge NG when the malfunction criteria below are completed.

Judgment Value

Malfunction Criteria	Threshold Value
Max. output voltage	〈 500 mV

Time Needed for Diagnosis: 200 seconds
Malfunction Indicator Light Illumination: Illuminates when malfunction occurs in 2 continuous driving cycles.

• Normality Judgment

Judge OK when the malfunction criteria below are completed.

Judgment Value

Malfunction Criteria	Threshold Value
Low side diagnosis of rear oxygen sensor voltage	Incomplete
Max. output voltage	≥ 500 mV

6. DTC CLEAR CONDITION

- When the OK idling cycle was completed 40 times in a row
- When “Clear Memory” was performed

7. MALFUNCTION INDICATOR LIGHT CLEAR CONDITION

- When the OK driving cycle was completed 3 times in a row
- When “Clear Memory” was performed

8. FAIL SAFE

Sub feedback control: Not allowed

9. ECM OPERATION AT DTC SETTING

Memorize the freeze frame data. (For test mode $02)

AN:DTC P0138 O2 SENSOR CIRCUIT HIGH VOLTAGE (BANK 1 SENSOR 2)

1. OUTLINE OF DIAGNOSIS

Detect the malfunction of rear oxygen sensor open or short circuit. Judge NG when the rear oxygen sensor voltage may be abnormal with considering the conditions such as intake air amount, engine coolant temperature, main feedback control.

2. COMPONENT DESCRIPTION

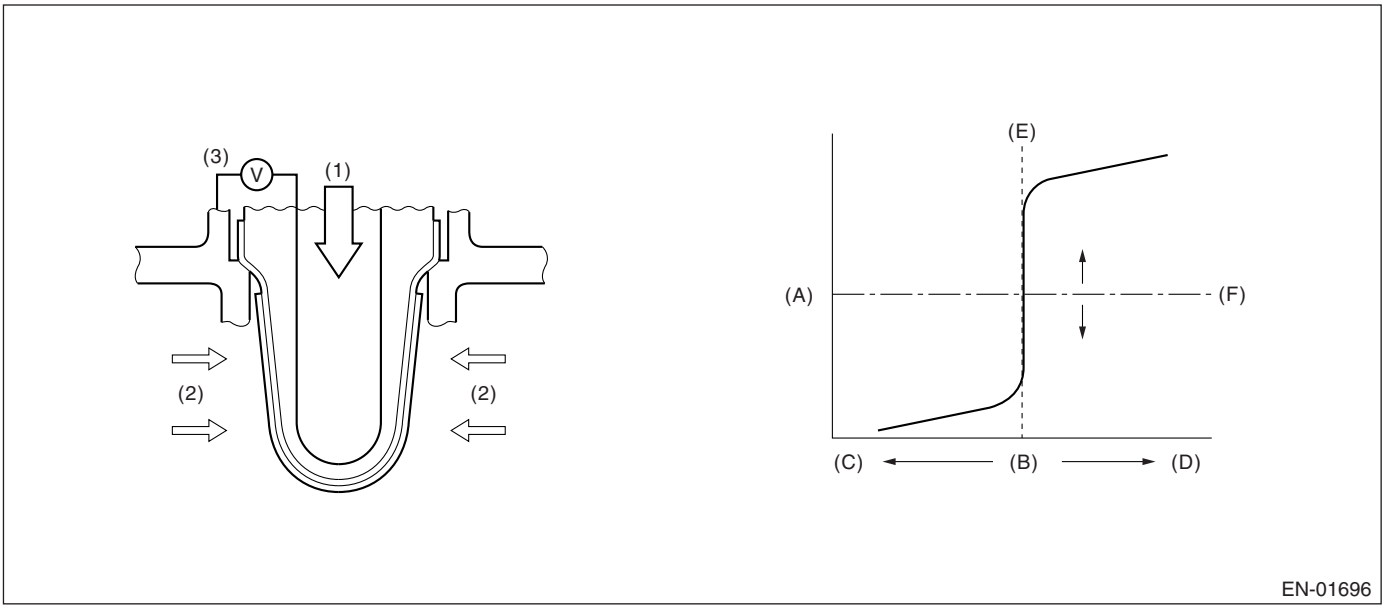

(1) Atmosphere
(2) Exhaust
(3) Electromotive force
(A) Electromotive force
(B) Air fuel ratio
(C) Rich
(D) Lean
(E) Theoretical air fuel ratio
(F) Comparative voltage

3. ENABLE CONDITION (USED ONLY FOR MALFUNCTION JUDGMENT)

Secondary Parameters	Enable Conditions
Closed loop control with rear oxygen sensor	In operation
Target output voltage of rear oxygen sensor	≥ 0.6 V
Amount of intake air	≥ 10 g/s
Engine coolant temperature	≥ 75°C (167°F)
Misfire detection during 200 engine revs.	≤ 7 times
Compensation factor for front oxygen (A/F) sensor	Not in limit value
Battery voltage with main feedback control	〉10.9 V
5 seconds or more fuel shut-off in decel.	Experienced

4. GENERAL DRIVING CYCLE

Perform the diagnosis once after starting the engine.

5. DIAGNOSTIC METHOD

• Abnormality Judgment

Judge NG when the malfunction criteria below are completed.

Judgment Value

Malfunction Criteria	Threshold Value
Min. output voltage	> 250 mV

Time Needed for Diagnosis: 200 seconds
Malfunction Indicator Light Illumination: Detect when malfunction occurs in 2 continuous driving cycles.
• Normality Judgment

Judge OK when the malfunction criteria below are completed.
Judgment Value

Malfunction Criteria	Threshold Value
High side diagnosis of rear oxygen sensor voltage	Incomplete
Min. output voltage	≤ 250 mV

6. DTC CLEAR CONDITION

- When the OK idling cycle was completed 40 times in a row
- When “Clear Memory” was performed

7. MALFUNCTION INDICATOR LIGHT CLEAR CONDITION

- When the OK driving cycle was completed 3 times in a row
- When “Clear Memory” was performed

8. FAIL SAFE

Sub feedback control: Not allowed

9. ECM OPERATION AT DTC SETTING

Memorize the freeze frame data. (For test mode $02)

AO:DTC P0139 O2 SENSOR CIRCUIT SLOW RESPONSE (BANK 1 SENSOR 2)

1. OUTLINE OF DIAGNOSIS

Detect the slow response of rear oxygen sensor.
Judge NG when the Rich → Lean response diagnosis or Lean → Rich response diagnosis is NG and judge OK when both response diagnoses are OK.
[Rich → Lean diagnosis response]
(1) When the measured response time is larger than a threshold, since the A/F ratio is rich, the response time of the output change of O2 sensor when changing from Rich to Lean is measured, and it judges with NG, and when small, it judges with OK.
(2) When O2 sensor voltage at the time of a fuel shut-off in deceleration return is large (rich), it judges with NG.
[Lean → Rich diagnosis response]
(1) The response time of output change of O2 sensor when an A/F ratio changes from Lean to Rich is measured, and it is referred to as NG when the measured response time is larger than a threshold.
(2) It is referred to as NG when O2 sensor voltage after recovery of fuel shut-off in deceleration is small and still small.

• Diagnostic Method

Measure the response time of the output change of the oxygen sensor when the A/F ratio changes from rich to lean. And Judge NG when the measured response time is larger than the threshold value.

2. COMPONENT DESCRIPTION

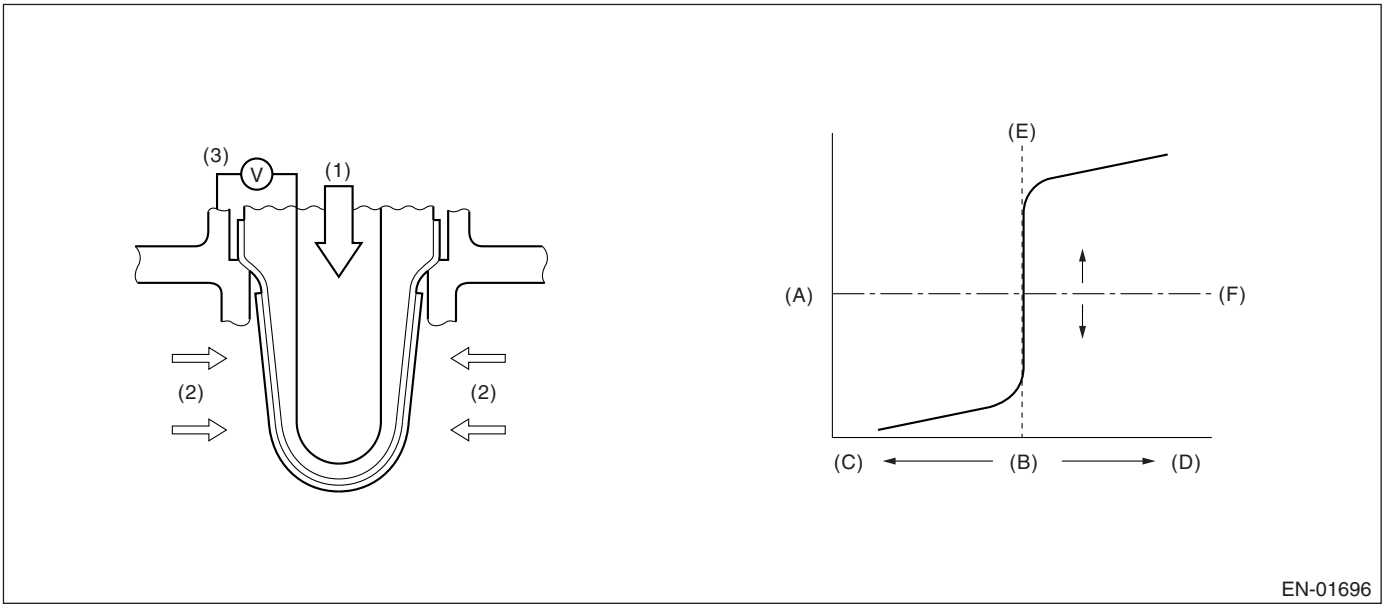

(1) Atmosphere
(2) Exhaust
(3) Electromotive force
(A) Electromotive force
(B) Air fuel ratio
(C) Rich
(D) Lean
(E) Theoretical air fuel ratio
(F) Comparative voltage

3. ENABLE CONDITION

- Rich → Lean response diagnosis

Secondary Parameters	Enable Conditions
Battery voltage	〉10.9 V
A/F sub feedback control condition	Completed
5 seconds or more fuel shut-off indecel.	Experienced
After fuel cut	≥ 2 seconds
Accumulated time with rear oxygen sensor heater ON	≥ 60 seconds
Continuous time with rear oxygen sensor heater ON	≥ 25 seconds
Catalyst couture warm up	≥ 8000 seconds

4. GENERAL DRIVING CYCLE

Perform the diagnosis only once when fuel shut-off in deceleration after rapid acceleration. (Pay attention to oxygen sensor voltage for the timing of deceleration.)

5. DIAGNOSTIC METHOD

When the oxygen sensor output voltage changes from 0.55 V (rich) to 0.25 V (lean), calculate the Min. value of response time regarded as judgment value while the output varies from 0.5 V to 0.3 V.

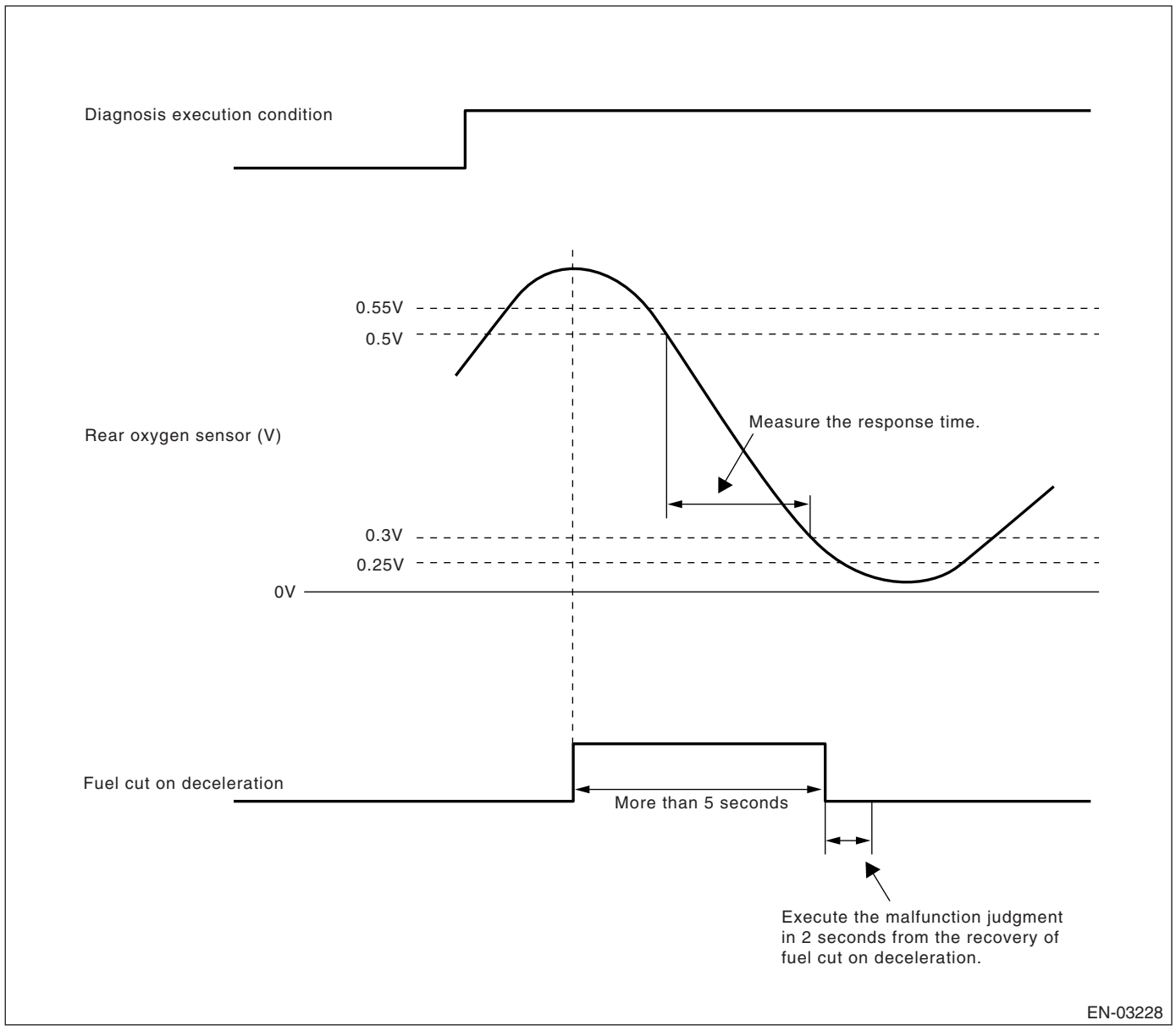

• Abnormality Judgment

(1) Judge NG when the judgment value is larger than the threshold value after fuel shut-off in deceleration.
Response time (Diagnosis value) > Threshold value → Abnormal

NOTE:
Variation time of rear oxygen sensor output voltage is short during fuel shut-off in deceleration. Carry out the NG judgment only after the fuel shut-off in deceleration. As for OK judgment, without the condition of fuel shut-off in deceleration, judge OK if the value is below the threshold value.

Judge NG when the malfunction criteria below are completed in 2 seconds after the recovery of fuel shut-off in deceleration which requires 6 seconds or more.

(2) Judge NG when the O2 sensor voltage after recovery of fuel shut-off in deceleration is large. Judge NG when fuel shut-off in deceleration is also long (6s or more), and although carried out the fuel shut-off in deceleration cut return, when O2 sensor voltage is large (more than 0.55V).

Judgment Value

Malfunction Criteria	Threshold Value
Shortest time change from rich (500 mV O2 output) to lean (300 mV) if voltage reduces from 550 mV to 250 mV.	> 0.327 milliseconds
Time when more than 550 mV	> 2 seconds

Time Needed for Diagnosis: Once
Malfunction Indicator Light Illumination: Illuminates when malfunction occurs in 2 continuous driving cycles.

• Normality Judgement

(1) Judge Normal when the response time (diagnostic value) is smaller than threshold (judgment value) when changing to lean since O2 sensor voltage.
(2) A normal judging is not carried out.

Judgment Value

Judge OK when the following standards value are completed.

Malfunction Criteria	Threshold Value
Change of the shortest time from rich (500 mV O2 output), when voltage decreases from 550 mV to 250 mV to lean (300 mV).	≤ 0.327 seconds

6. DTC CLEAR CONDITION

- When the OK idling cycle was completed 40 times in a row
- When “Clear Memory” was performed

7. MALFUNCTION INDICATOR LIGHT CLEAR CONDITION

- When the OK driving cycle was completed 3 times in a row
- When “Clear Memory” was performed

8. FAIL SAFE

Sub feedback control: Not allowed

9. ECM OPERATION AT DTC SETTING

- Memorize the freeze frame data. (For test mode $02)
- Memorize the diagnostic value and trouble standard value. (For test mode $06)

10.ENABLE CONDITION

- Lean → Rich response diagnosis

Secondary Parameters	Enable Conditions
Battery voltage	> 10.9 V
A/F main feedback control condition	Completed
Fuel cut on deceleration ≥ 5 seconds	Experienced
After fuel cut	≥ 2 seconds

11.GENERAL DRIVING CYCLE

Perform the diagnosis only once when fuel shut-off in deceleration after rapid acceleration. (Pay attention to oxygen sensor voltage for the timing of deceleration.)

12.DIAGNOSTIC METHOD

When the oxygen sensor output voltage changes from 0.25 V (lean) to 0.55 V (rich), calculate the Min. value of response time regarded as judgment value while the output varies from 0.3 V to 0.5 V.

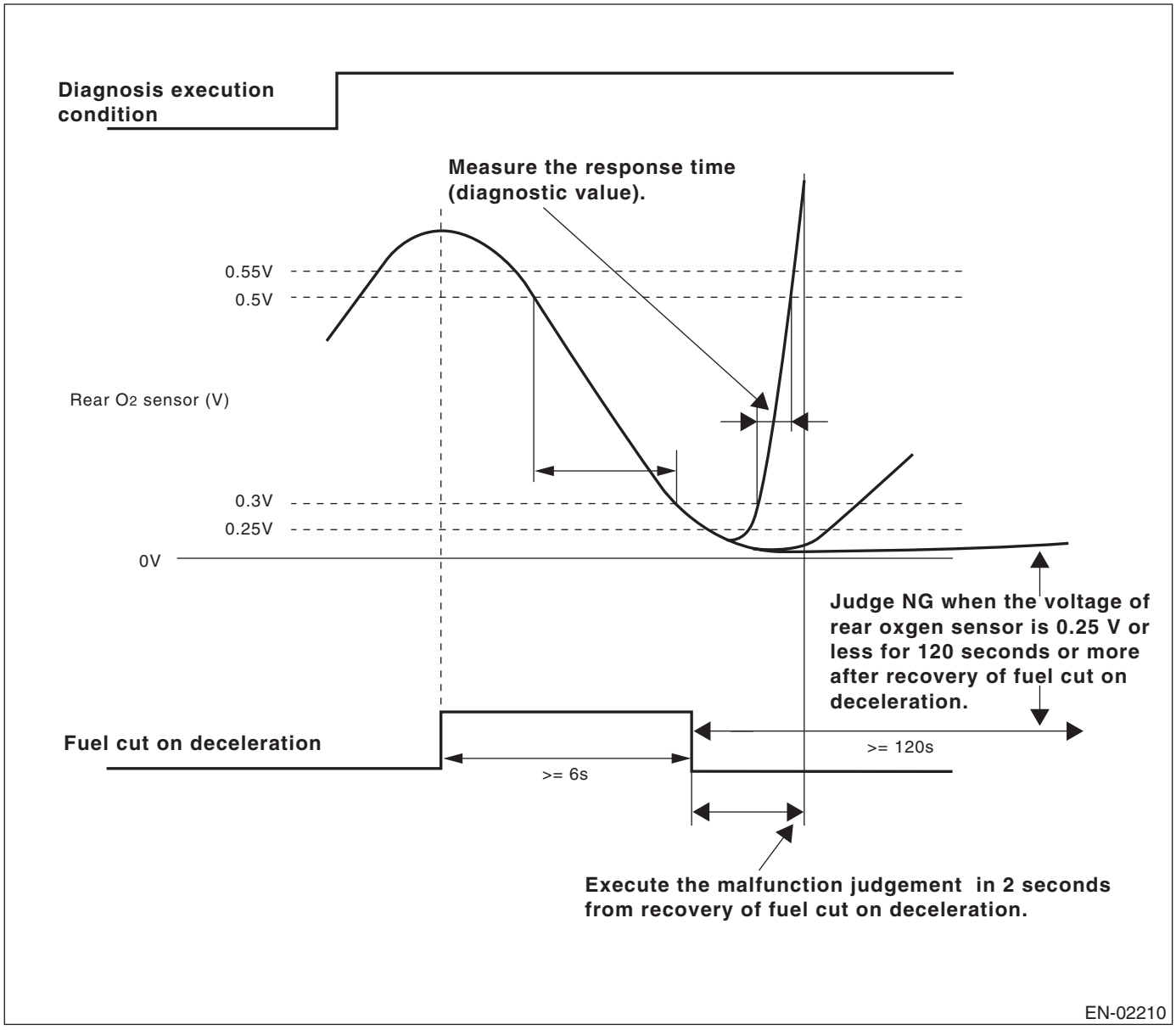

• Abnormality Judgment

(1) Judge NG when the judgment value is larger than the threshold value after recovery of fuel shut-off in deceleration.
Response time (Diagnosis value) > Threshold value → Abnormal
(2) Judge NG when the O2 sensor voltage after recovery of fuel shut-off in deceleration is small.

Judgment Value

Malfunction Criteria	Threshold Value
Shortest time change from lean (300 mV O2 output) to rich (500 mV) if voltage reduces from 500 mV to 250 mV.	> 2 seconds
Or longest time to 250 mV or less	> 120 seconds

Time Needed for Diagnosis: Once
Malfunction Indicator Light Illumination: Illuminates when malfunction occurs in 2 continuous driving cycles.

• Normality Judgement

(1) Judge Normal when the response time (diagnostic value) is smaller than threshold (judgment value) when changing to lean since O2 sensor voltage.
Response Time (diagnosis value) ≤ Threshold value → Normal
(2) A normal judging is not carried out.

Judgment Value

Judge OK when the following standards value are completed.

Malfunction Criteria	Threshold Value
Change of the shortest time from rich (300 mV O2 output), when voltage decreases from 550 mV to 250 mV to lean (500 mV).	≤ 2 seconds

13.DTC CLEAR CONDITION

- When the OK idling cycle was completed 40 times in a row
- When “Clear Memory” was performed

14.MALFUNCTION INDICATOR LIGHT CLEAR CONDITION

- When the OK driving cycle was completed 3 times in a row
- When “Clear Memory” was performed

15.FAIL SAFE

Sub feedback control: Not allowed

16.ECM OPERATION AT DTC SETTING

- Memorize the freeze frame data. (For test mode $02)
- Memorize the diagnostic value and trouble standard value. (For test mode $06)

AP:DTC P0151 O2 SENSOR CIRCUIT LOW VOLTAGE (BANK 2 SENSOR 1)

1. OUTLINE OF DIAGNOSIS

For the detecting criteria, refer to P0131. <Ref. to GD(H6DO)-60, DTC P0131 O2 SENSOR CIRCUIT LOW VOLTAGE (BANK 1 SENSOR 1), Diagnostic Trouble Code (DTC) Detecting Criteria.>

AQ:DTC P0152 O2 SENSOR CIRCUIT HIGH VOLTAGE (BANK 2 SENSOR 1)

1. OUTLINE OF DIAGNOSIS

For the detecting criteria, refer to P0132. <Ref. to GD(H6DO)-62, DTC P0132 O2 SENSOR CIRCUIT HIGH VOLTAGE (BANK 1 SENSOR 1), Diagnostic Trouble Code (DTC) Detecting Criteria.>

AR:DTC P0153 O2 SENSOR CIRCUIT SLOW RESPONSE (BANK 2 SENSOR 1)

1. OUTLINE OF DIAGNOSIS

For the detecting criteria, refer to DTC P0133. <Ref. to GD(H6DO)-64, DTC P0133 O2 SENSOR CIRCUIT SLOW RESPONSE (BANK 1 SENSOR 1), Diagnostic Trouble Code (DTC) Detecting Criteria.>

AS:DTC P0154 O2 SENSOR CIRCUIT NO ACTIVITY DETECTED (BANK 2 SENSOR 1)

1. OUTLINE OF DIAGNOSIS

For the detecting criteria, refer to DTC P0134. <Ref. to GD(H6DO)-67, DTC P0134 O2 SENSOR CIRCUIT NO ACTIVITY DETECTED (BANK 1 SENSOR 1), Diagnostic Trouble Code (DTC) Detecting Criteria.>

AT:DTC P0157 O2 SENSOR CIRCUIT LOW VOLTAGE (BANK 2 SENSOR 2)

1. OUTLINE OF DIAGNOSIS

For the detecting criteria, refer to P0137. <Ref. to GD(H6DO)-69, DTC P0137 O2 SENSOR CIRCUIT LOW VOLTAGE (BANK 1 SENSOR 2), Diagnostic Trouble Code (DTC) Detecting Criteria.>

AU:DTC P0158 O2 SENSOR CIRCUIT HIGH VOLTAGE (BANK 2 SENSOR 2)

1. OUTLINE OF DIAGNOSIS

For the detecting criteria, refer to P0138. <Ref. to GD(H6DO)-71, DTC P0138 O2 SENSOR CIRCUIT HIGH VOLTAGE (BANK 1 SENSOR 2), Diagnostic Trouble Code (DTC) Detecting Criteria.>

AV:DTC P0159 O2 SENSOR CIRCUIT SLOW RESPONSE (BANK 2 SENSOR 2)

1. OUTLINE OF DIAGNOSIS

For the detecting criteria, refer to P0139. <Ref. to GD(H6DO)-73, DTC P0139 O2 SENSOR CIRCUIT SLOW RESPONSE (BANK 1 SENSOR 2), Diagnostic Trouble Code (DTC) Detecting Criteria.>

AW:DTC P0171 SYSTEM TOO LEAN (BANK 1)

1. OUTLINE OF DIAGNOSIS

Detect the fuel system malfunction by the amount of main feedback control.

• Diagnostic Method

Fuel system is diagnosed by comparing the target air fuel ratio calculated by ECM with the actual air fuel ratio measured by sensor.

2. ENABLE CONDITION

Secondary Parameters	Enable Conditions
A/F main learning system	In operation
Engine coolant temperature	≥ 75°C (167°F)
Engine load	≤ 0.02 g/rev
Amount of intake air	≥ Map 5

Map 1

Engine speed (rpm)	Idling	700	1000	1500	2000	2500	3000	3500	4000	4500	5000
Measured vlue (g(oz)/ rev)	na	0.357 (0.013)	0.25 (0.009)	0.25 (0.009)	0.317 (0.011)	0.326 (0.011)	0.337 (0.012)	0.397 (0.014)	0.439 (0.015)	0.454 (0.016)	0.454 (0.016)

3. GENERAL DRIVING CYCLE

Perform the diagnosis continuously idling after warm-up or at a constant vehicle speed.

4. DIAGNOSTIC METHOD

• Abnormality Judgment

Judge that the fuel system malfunction occurs when the time during completing the malfunction criteria below continues 50 seconds or more by comparing the diagnosed value (fsobd) with threshold value.

Judgment Value

Malfunction Criteria	Threshold Value
fsobd = (sglmd − tglmda) + faf + flaf	≥ fsobdL1
where,	See Map 4
sglmd = measured lambda	
tglmda = target lambda	fsobdL1 = lean side threshold value of fsobd
faf = main feedback compensation coefficient every 64 milliseconds	
flaf = main feedback learning compensation coefficient	

Map 4 Threshold value for fuel system malfunction criteria

Amount of air (g (oz)/s)	0 (0)	3.2 (0.113)	6.4 (0.226)	9.6 (0.339)	12.8 (0.451)	16 (0.564)	19.2 (0.677)
fsobdL1 (%)	40	40	33.2	26.5	26.5	26.5	26.5

Time Needed for Diagnosis: 10 seconds × 5 times

Malfunction Indicator Light Illumination: Illuminates when malfunction occurs in 2 continuous driving cycles.

• Normality Judgment

Judge OK when the malfunction criteria below are continued for 10 seconds.

Judgment Value

Malfunction Criteria	Threshold Value
fsobd = (sglmd − tglmda) + faf + flaf	< 19%

5. DTC CLEAR CONDITION

- When the OK idling cycle was completed 40 times in a row
- When “Clear Memory” was performed

6. MALFUNCTION INDICATOR LIGHT CLEAR CONDITION

- When OK with similar drive in 3 driving cycles.
- When “Clear Memory” was performed

7. FAIL SAFE

None

8. ECM OPERATION AT DTC SETTING

- Memorize the freeze frame data. (For test mode $02)
- Memorize the diagnostic value and trouble standard value. (For test mode $06)

AX:DTC P0172 SYSTEM TOO RICH (BANK 1)

1. OUTLINE OF DIAGNOSIS

Detect the fuel system malfunction by the amount of main feedback control.

2. ENABLE CONDITION

Secondary Parameters	Enable Conditions
A/F main learning system	In operation
Engine coolant temperature	≥ 75°C (167°F)
Cumulative time of canister purge after engine start	20 seconds or more
Continuous period after canister purge starting	30 seconds or more
Intake manifold absolute pressure	≥ Map 1

3. GENERAL DRIVING CYCLE

Perform the diagnosis continuously at engine idling after warm-up or a constant speed.

4. DIAGNOSTIC METHOD

• Abnormality Judgment

Judge that the fuel system malfunction occurs when the time during completing the malfunction criteria below continues 50 seconds or more by comparing the diagnosed value (fsobd) with threshold value.

Judgment Value

Malfunction Criteria	Threshold Value
fsobd = (sglmd − tglmda) + faf + flaf	≤ fsobdR1
where,	See Map 4
sglmd = measured lambda	fsobdR1 = rich side threshold value of fsobd
tglmda = target lambda	
faf = main feedback compensation coefficient (every 64 milliseconds)	
flaf = main feedback learning compensation coefficient	

Map 4 Threshold value for fuel system malfunction criteria for System E

Amount of air [g (oz)/s]	0 (0)	3.2 (0.113)	6.4 (0.226)	9.6 (0.339)	12.8 (0.451)	11.7 (0.413)	19.2 (0.677)
fsobdR1 (%)	−40	−40	−31.2	−26.5	−26.5	−26.5	−26.5

Time Needed for Diagnosis: 10 seconds × 5 times

Malfunction Indicator Light Illumination: Illuminates when malfunction occurs in 2 continuous driving cycles.

• Normality Judgment

Judge OK when the malfunction criteria below are continued for 10 seconds.

Judgment Value

Malfunction Criteria	Threshold Value
fsobd = (sglmd − tglmda) + faf + flaf	≥ −20%

5. DTC CLEAR CONDITION

- When the OK idling cycle was completed 40 times in a row
- When “Clear Memory” was performed

6. MALFUNCTION INDICATOR LIGHT CLEAR CONDITION

- When OK with similar drive in 3 drive cycles.

- When “Clear Memory” was performed

7. FAIL SAFE

- Purge control solenoid valve control: Not allowed to purge.
- Heavy fuel judgment control: Not allowed to carry out the heavy judgment.

8. ECM OPERATION AT DTC SETTING

- Memorize the freeze frame data. (For test mode $02)
- Memorize the diagnostic value and trouble standard value. (For test mode $06)

AY:DTC P0174 SYSTEM TOO LEAN (BANK 2)

1. OUTLINE OF DIAGNOSIS

For the detecting Criteria, refer to DTC P0171. <Ref. to GD(H6DO)-80, DTC P0171 SYSTEM TOO LEAN (BANK 1), Diagnostic Trouble Code (DTC) Detecting Criteria.>

AZ:DTC P0175 SYSTEM TOO RICH (BANK 2)

1. OUTLINE OF DIAGNOSIS

For the detecting Criteria, refer to DTC P0172. <Ref. to GD(H6DO)-82, DTC P0172 SYSTEM TOO RICH (BANK 1), Diagnostic Trouble Code (DTC) Detecting Criteria.>

BA:DTC P0181 FUEL TEMPERATURE SENSOR “A” CIRCUIT RANGE/PERFORMANCE

1. OUTLINE OF DIAGNOSIS

Detect the malfunction of fuel temperature sensor output property. Perform the diagnosis in two methods; namely, drift diagnosis and stuck diagnosis. Judge NG when either of them results in NG, and judge OK when both of them result in OK.

• Drift Diagnosis

Normally fuel temperature is lower than engine coolant temperature. When the fuel temperature becomes higher than the engine coolant temperature, the range is considered to be shifted, and make an NG judgment.

2. COMPONENT DESCRIPTION

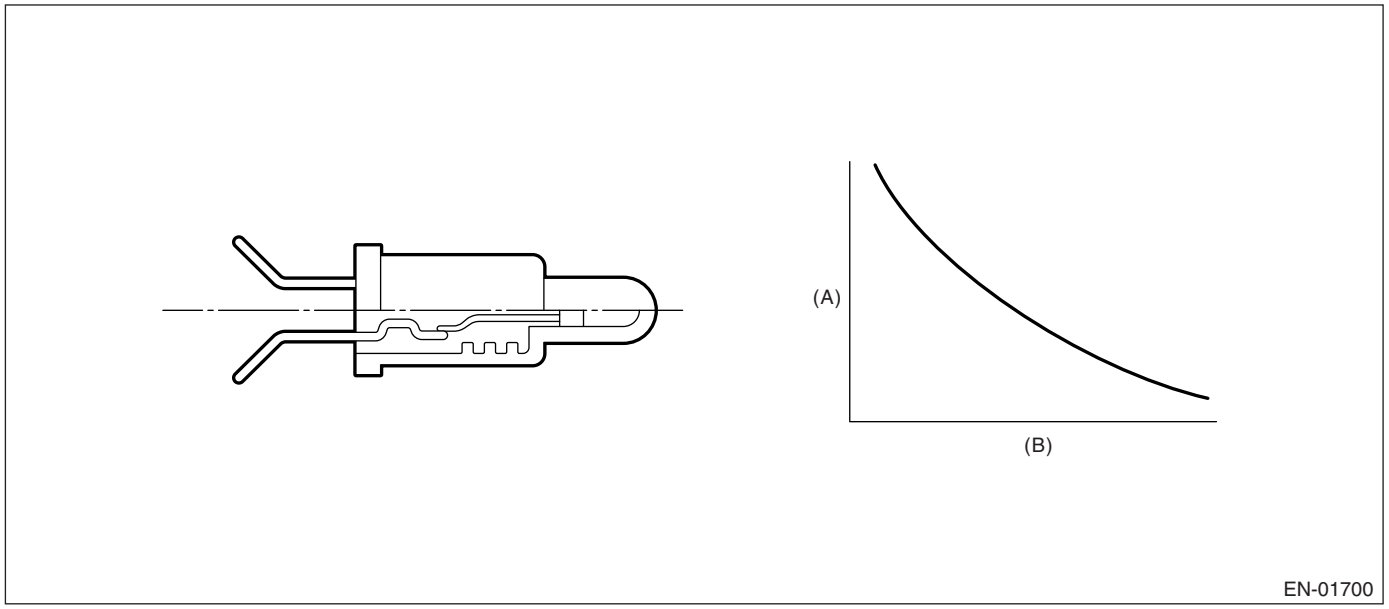

(A) Resistance value (Ω) (B) Fuel temperature °C (°F)

3. ENABLE CONDITION

Secondary Parameters	Enable Conditions
None	

4. GENERAL DRIVING CYCLE

Always perform the diagnosis continuously.

5. DIAGNOSTIC METHOD

• Abnormality Judgment

Judge NG when the continuous time of completing the malfunction criteria below becomes more than 120 seconds.

Judgment Value

Malfunction Criteria	Threshold Value
Fuel level	≥ 9.6 ℓ (25.4 US gal, 2.11 Imp gal)
After engine starting	20 seconds or more
Engine coolant temperature – engine coolant temperature at engine starting	> 10°C (50°F)
Fuel temperature – engine coolant temperature	≥ 10°C (50°F)
Battery voltage	> 10.9 V

Time Needed for Diagnosis: 120 seconds
Malfunction Indicator Light Illumination: Illuminates when malfunction occurs in 2 continuous driving cycles.

• Normality Judgment

Judge OK when the malfunction criteria below are completed.

Judgment Value

Malfunction Criteria	Threshold Value
Fuel level	≥ 9.6 ℓ (25.4 US gal, 2.11 Imp gal)
After engine starting	20 seconds or more
Engine coolant temperature – engine coolant temperature at engine starting	> 10°C (50°F)
Fuel temperature – engine coolant temperature	< 10°C (50°F)
Battery voltage	> 10.9 V
Engine coolant temperature	< 75°C (167°F)

• Stuck Diagnosis

If the fuel temperature which might rise along with the engine idling (the cumulative amount of intake air after engine starting is large) does not increase, the engine is considered to be stuck and make an NG judgment.

6. ENABLE CONDITION

Secondary Parameters	Enable Conditions
After engine starting	20 seconds or more
Battery voltage	> 10.9 V

7. GENERAL DRIVING CYCLE

Perform the diagnosis continuously in 20 seconds after starting the engine.

8. DIAGNOSTIC METHOD

• Abnormality Judgment

Judge NG when the malfunction criteria below are completed.

Judgment Value

Malfunction Criteria	Threshold Value
Accumulated amount of intake air	≥ 551 kg (1215 lb)
Fuel temperature difference between Max. and Min.	< 2°C (3.6°F)

Time Needed for Diagnosis: To be determined.
Malfunction Indicator Light Illumination: Illuminates when malfunction occurs in 2 continuous driving cycles.

• Normality Judgment

Judge OK when the malfunction criteria below are completed.

Judgment Value

Malfunction Criteria	Threshold Value
Accumulated amount of intake air	≥ 551 kg (1215 lb)
Fuel temperature difference between Max. and Min.	≥ 2°C (3.6°F)

9. DTC CLEAR CONDITION

- When the OK idling cycle was completed 40 times in a row
- When “Clear Memory” was performed

10.MALFUNCTION INDICATOR LIGHT CLEAR CONDITION

- When the OK driving cycle was completed 3 times in a row
- When “Clear Memory” was performed

11.FAIL SAFE

None

12.ECM OPERATION AT DTC SETTING

Memorize the freeze frame data. (For test mode $02)

BB:DTC P0182 FUEL TEMPERATURE SENSOR “A” CIRCUIT LOW INPUT

1. OUTLINE OF DIAGNOSIS

Detect the open or short circuit of fuel temperature sensor. Judge NG when out of the standard value.

2. COMPONENT DESCRIPTION

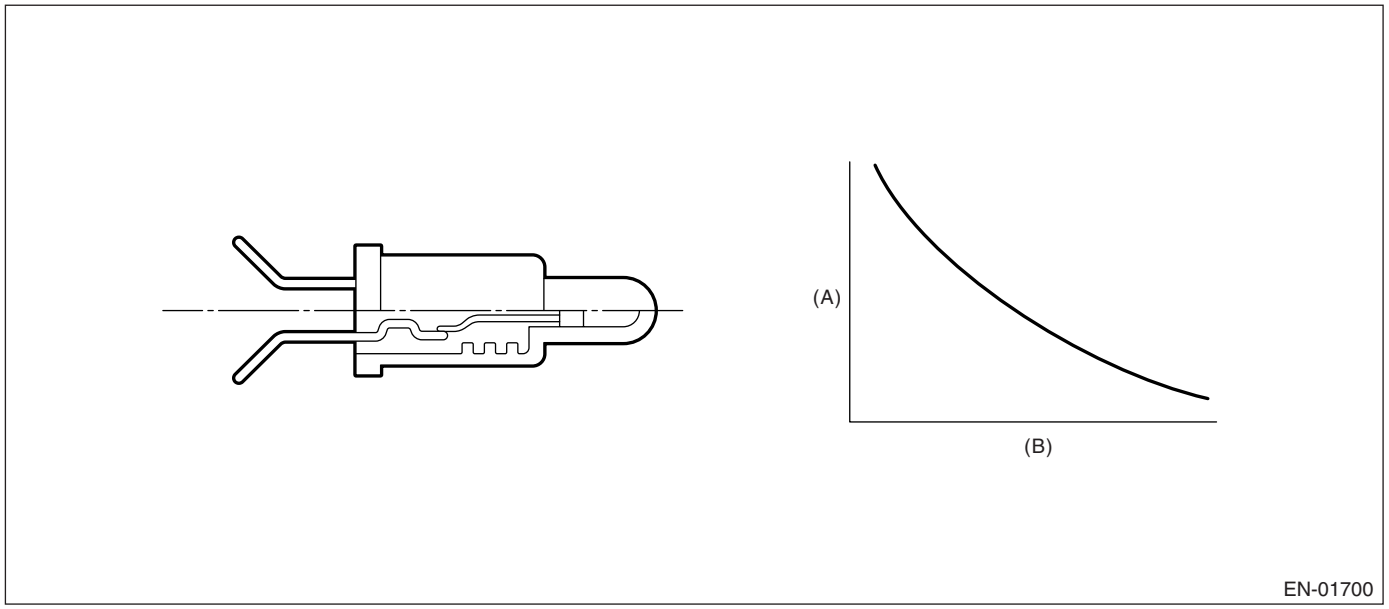

(A) Resistance value (Ω) (B) Fuel temperature °C (°F)

3. ENABLE CONDITION

Secondary Parameters	Enable Conditions
None	

4. GENERAL DRIVING CYCLE

Always perform the diagnosis continuously.

5. DIAGNOSTIC METHOD

• Abnormality Judgment

Judge NG when the continuous time of completing the malfunction criteria below becomes more than 2.5 seconds.

Judgment Value

Malfunction Criteria	Threshold Value
Output voltage	〈 0.164 V
Battery voltage	≥ 10.9 V

Time Needed for Diagnosis: 2.5 seconds

Malfunction Indicator Light Illumination: Illuminates as soon as the malfunction occurs.

• Normality Judgment

Judge OK and clear NG when the malfunction criteria below are completed.

Judgment Value

Malfunction Criteria	Threshold Value
Output voltage	≥ 0.164 V
Battery voltage	≥ 10.9 V

6. DTC CLEAR CONDITION

- When the OK idling cycle was completed 40 times in a row
- When “Clear Memory” was performed

7. MALFUNCTION INDICATOR LIGHT CLEAR CONDITION

- When the OK driving cycle was completed 3 times in a row
- When “Clear Memory” was performed

8. FAIL SAFE

None

9. ECM OPERATION AT DTC SETTING

Memorize the freeze frame data. (For test mode $02)

BC:DTC P0183 FUEL TEMPERATURE SENSOR “A” CIRCUIT HIGH INPUT

1. OUTLINE OF DIAGNOSIS

Detect the open or short circuit of fuel temperature sensor. Judge NG when out of the standard value.

2. COMPONENT DESCRIPTION

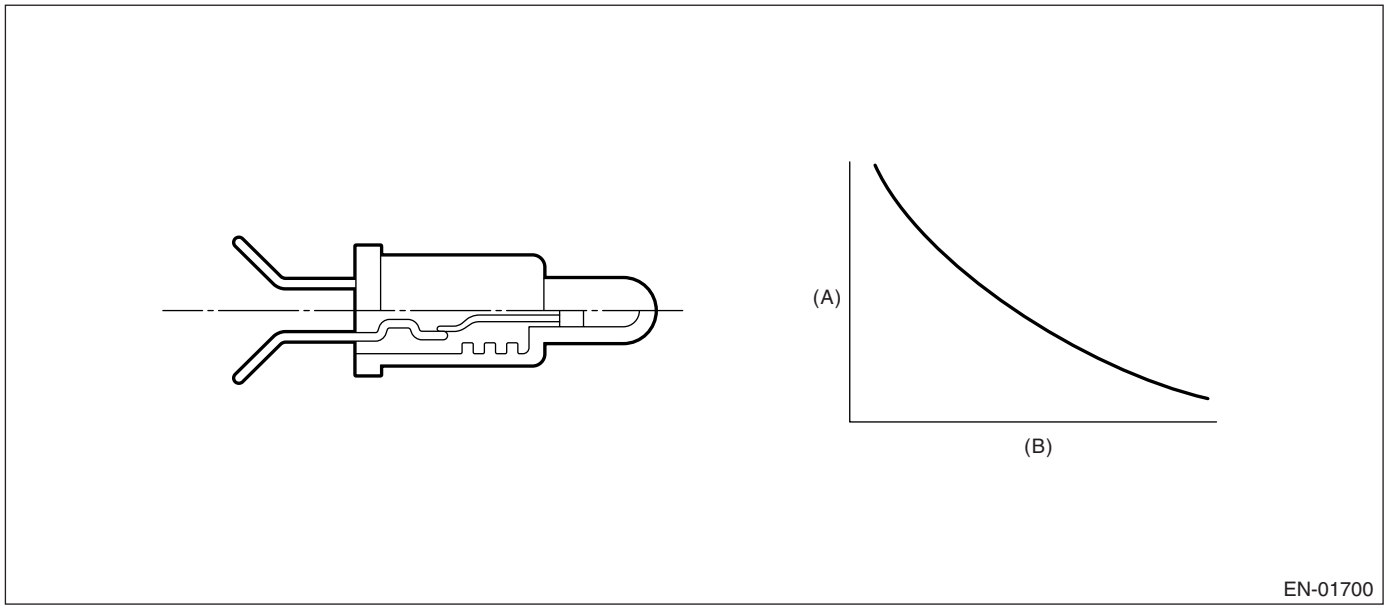

(A) Resistance value (Ω) (B) Fuel temperature °C (°F)

3. ENABLE CONDITION

Secondary Parameters	Enable Conditions
None	

4. GENERAL DRIVING CYCLE

Always perform the diagnosis continuously.

5. DIAGNOSTIC METHOD

• Abnormality Judgment

Judge NG when the continuous time of completing the malfunction criteria below becomes more than 2.5 seconds.

Judgment Value

Malfunction Criteria	Threshold Value
Output voltage	≥ 4.716 V
Battery voltage	≥ 10.9 V

Time Needed for Diagnosis: 2.5 seconds
Malfunction Indicator Light Illumination: Illuminates as soon as the malfunction occurs.

• Normality Judgment

Judge OK and clear NG when the malfunction criteria below are completed.

Judgment Value

Malfunction Criteria	Threshold Value
Output voltage	< 4.716 V
Battery voltage	≥ 10.9 V

6. DTC CLEAR CONDITION

- When the OK idling cycle was completed 40 times in a row
- When “Clear Memory” was performed

7. MALFUNCTION INDICATOR LIGHT CLEAR CONDITION

- When the OK driving cycle was completed 3 times in a row
- When “Clear Memory” was performed

8. FAIL SAFE

None

9. ECM OPERATION AT DTC SETTING

Memorize the freeze frame data. (For test mode $02)

BD:DTC P0196 ENGINE OIL TEMPERATURE SENSOR CIRCUIT RANGE/PERFORMANCE

1. OUTLINE OF DIAGNOSIS

Detect the malfunction of engine oil temperature sensor output property.
Judge NG when the engine oil temperature does not increase regardless of the driving condition that engine oil temperature may be thought to increase.

2. ENABLE CONDITION

Secondary Parameters	Enable Conditions
Battery voltage	≥ 10.9 V
Engine speed	500 rpm

3. GENERAL DRIVING CYCLE

Always perform the diagnosis continuously.

4. DIAGNOSTIC METHOD

• Abnormality Judgment

Judge NG when the malfunction criteria below is completed.
Judgment Value

Malfunction Criteria	Threshold Value
Engine oil temperature	〈 15°C (59°F)
Timer for diagnosis of oil temperature sensor after engine starting	≥ Judgment value of timer for diagnosis of oil temperature sensor after engine starting

Timer for diagnosis of oil temperature sensor after engine starting (Timer for diagnosis)
a) Timer stop at fuel cut mode.
b) During the driving condition (except a) above), timer count up by
64ms + TOILCNT ms at every 64ms.
Where, TOILCNT is determined as follows,
TOILCNT = 0 at idle switch on,
Refer to the following table for TWCNT with idle switch OFF.

		Vehicle speed km/h (MPH)							
		0 (0)	8 (5)	16 (10)	24 (15)	32 (20)	40 (25)	48 (30)	56 (35)
Temp. °C (°F)	−40 (−40)	0 ms	32 ms	76 ms	130 ms	149 ms	171 ms	176 ms	181 ms
	−30 (−22)	67 ms	93 ms	121 ms	157 ms	170 ms	184 ms	193 ms	203 ms
	−20 (−4)	98 ms	123 ms	148 ms	184 ms	193 ms	204 ms	214 ms	226 ms
	−10 (14)	145 ms	166 ms	187 ms	208 ms	223 ms	239 ms	242 ms	245 ms
	0 (32)	161 ms	187 ms	212 ms	243 ms	252 ms	262 ms	266 ms	270 ms

Judgment value of Timer for diagnosis of temperature sensor after engine starting (t)
$t = 2400000 - 60000 \times Ti$ ($t \geq 2400000$)
Ti is a lowest engine coolant temperature after starting the engine.
Time needed for diagnosis: To be determined.
Malfunction Indicator Light Illumination: Immediately in continuous 2 driving cycles
• Normality Judgment

Judge OK when the malfunction criteria below is completed.

Judgment Value

Malfunction Criteria	Threshold Value
Engine oil temperature	≥ 15°C (59°F)

5. DTC CLEAR CONDITION

- When the OK idling cycle was completed 40 times in a row
- When “Memory Clear” was performed

6. MALFUNCTION INDICATOR LIGHT CLEAR CONDITION

- When the OK idling cycle was completed 3 times in a row
- When “Memory Clear” was performed

7. FAIL SAFE

Oil temperature sensor process: Make the engine oil temperature 70°C (158°F)

8. ECM OPERATION AT DTC SETTING

Memorize the freeze frame data. (For test mode $02)

BE:DTC P0197 ENGINE OIL TEMPERATURE SENSOR CIRCUIT LOW

1. OUTLINE OF DIAGNOSIS

Detect open or short circuit of engine oil temperature sensor.
Judge NG when out of the standard value.

2. ENABLE CONDITION

Secondary Parameters	Enable Conditions
None	

3. GENERAL DRIVING CYCLE

Always perform the diagnosis continuously.

4. DIAGNOSTIC METHOD

Judge NG when the continuous time of completing malfunction criteria below becomes more than 0.5 seconds.
Judge OK and clear NG when the malfunction criteria below is not completed.
Judgment Value

Malfunction Criteria	Threshold Value
Output voltage	≤ 0.164 V

Time needed for diagnosis: 0.5 seconds
Malfunction Indicator Light Illumination: Illuminates as soon as malfunction occurs.

5. DTC CLEAR CONDITION

- When the OK idling cycle was completed 40 times in a row
- When “Memory Clear” was performed

6. MALFUNCTION INDICATOR LIGHT CLEAR CONDITION

- When the OK idling cycle was completed 3 times in a row
- When “Memory Clear” was performed

7. FAIL SAFE

Oil temperature sensor process: Make the engine oil temperature 70°C (158°F)

8. ECM OPERATION AT DTC SETTING

Memorize the freeze frame data. (For test mode $02)

BF:DTC P0198 ENGINE OIL TEMPERATURE SENSOR CIRCUIT HIGH

1. OUTLINE OF DIAGNOSIS

Detect the open or the short circuit of engine oil temperature sensor.
Judge NG when out of the judgment value.

2. ENABLE CONDITION

Secondary Parameters	Enable Conditions
None	

3. GENERAL DRIVING CYCLE

Always perform the diagnosis continuously.

4. DIAGNOSTIC METHOD

Judge NG when the continuous time of completing malfunction criteria below becomes more than 0.5 seconds.
Judge OK and clear NG when the malfunction criteria below is not completed.
Judgment Value

Malfunction Criteria	Threshold Value
Output voltage	≥ 4.716 V

Time needed for diagnosis: 0.5 seconds
Malfunction Indicator Light Illumination: Illuminates as soon as malfunction occurs.

5. DTC CLEAR CONDITION

- When the OK idling cycle was completed 40 times in a row
- When “Memory Clear” was performed

6. MALFUNCTION INDICATOR LIGHT CLEAR CONDITION

- When the OK idling cycle was completed 3 times in a row
- When “Memory Clear” was performed

7. FAIL SAFE

Oil temperature sensor process: Make the engine oil temperature 70°C (158°F)

8. ECM OPERATION AT DTC SETTING

Memorize the freeze frame data. (For test mode $02)

BG:DTC P0222 THROTTLE/PEDAL POSITION SENSOR/SWITCH “B” CIRCUIT LOW INPUT

1. OUTLINE OF DIAGNOSIS

Detect the open or short circuit of throttle position sensor 2.
Judge NG when out of the standard value.

2. COMPONENT DESCRIPTION

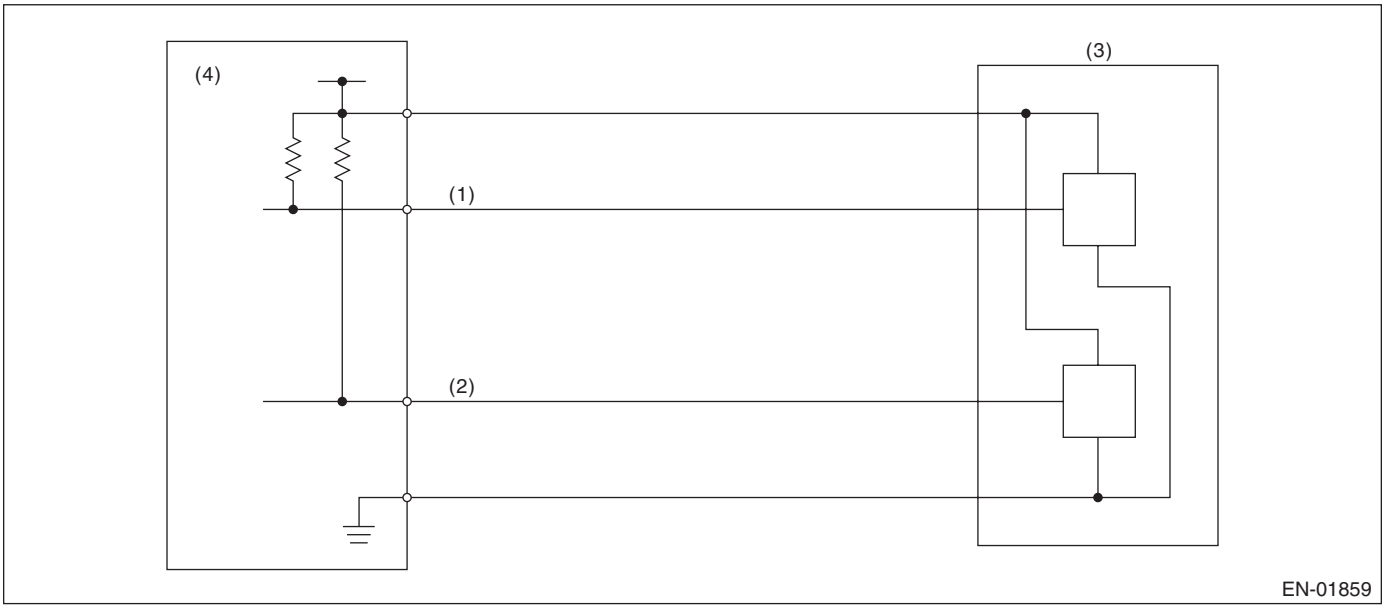

(1) Throttle position sensor 1 signal
(2) Throttle position sensor 2 signal
(3) Throttle position sensor
(4) Engine control module (ECM)

3. ENABLE CONDITION

Secondary Parameters	Enable Conditions
Ignition switch	ON

4. GENERAL DRIVING CYCLE

Always perform the diagnosis continuously.

5. DIAGNOSTIC METHOD

Judge OK and clear the NG when the malfunction criteria below are completed.
Judgment Value

Malfunction Criteria	Threshold Value
Sensor 2 input voltage	≥ 0.749 V

Time Needed for Diagnosis: 24 milliseconds
Malfunction Indicator Light Illumination: Illuminates as soon as malfunction occurs.

6. DTC CLEAR CONDITION

- When the OK idling cycle was completed 40 times in a row
- When “Clear Memory” was performed (Only with engine stopped)

7. MALFUNCTION INDICATOR LIGHT CLEAR CONDITION

- When the OK driving cycle was completed 3 times in a row
- When “Clear Memory” was performed (Only with engine stopped)

8. FAIL SAFE

Stop power distribution to electronic throttle control motor. (Throttle opening is fixed to 6°.)

9. ECM OPERATION AT DTC SETTING

Memorize the freeze frame data. (For test mode $02)

BH:DTC P0223 THROTTLE/PEDAL POSITION SENSOR/SWITCH “B” CIRCUIT HIGH INPUT

1. OUTLINE OF DIAGNOSIS

Detect the open or short circuit of throttle position sensor 2.
Judge NG when out of the standard value.

2. COMPONENT DESCRIPTION

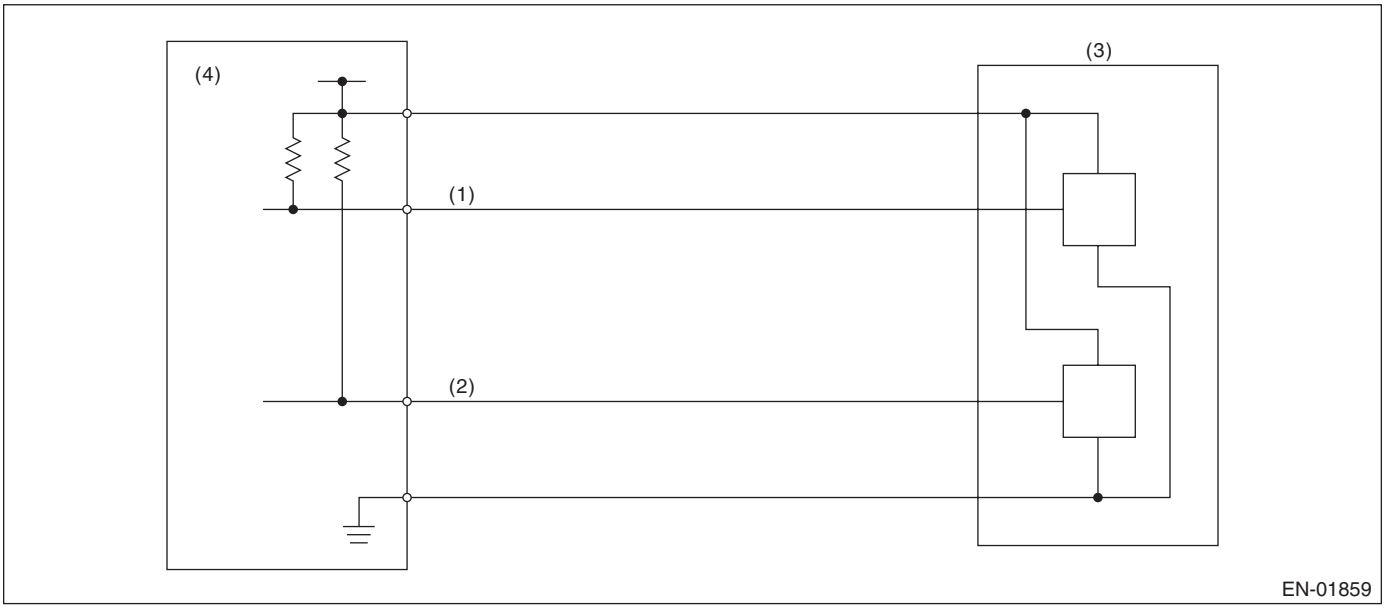

(1) Throttle position sensor 1 signal
(2) Throttle position sensor 2 signal
(3) Throttle position sensor
(4) Engine control module (ECM)

3. ENABLE CONDITION

Secondary Parameters	Enable Conditions
Ignition switch	ON

4. GENERAL DRIVING CYCLE

Always perform the diagnosis continuously.

5. DIAGNOSTIC METHOD

Judge OK and clear the NG when the malfunction criteria below are completed.
Judgment Value

Malfunction Criteria	Threshold Value
Sensor 2 input voltage	≤ 4.747 V

Time Needed for Diagnosis: 24 milliseconds
Malfunction Indicator Light Illumination: Illuminates as soon as malfunction occurs.

6. DTC CLEAR CONDITION

- When the OK idling cycle was completed 40 times in a row
- When “Clear Memory” was performed (Only with engine stopped)

7. MALFUNCTION INDICATOR LIGHT CLEAR CONDITION

- When the OK driving cycle was completed 3 times in a row
- When “Clear Memory” was performed (Only with engine stopped)

8. FAIL SAFE

Stop power distribution to electronic throttle control motor. (Throttle opening is fixed to 6°.)

9. ECM OPERATION AT DTC SETTING

Memorize the freeze frame data. (For test mode $02)

BI: DTC P0230 FUEL PUMP PRIMARY CIRCUIT

1. OUTLINE OF DIAGNOSIS

Detect the malfunction of fuel pump control unit. Judge NG when the NG signal is sent through a diagnostic line coming from the fuel pump control unit. Fuel pump control unit detects the open or short circuit malfunction for each line, and then sends NG signals if one of them is found NG.

2. COMPONENT DESCRIPTION

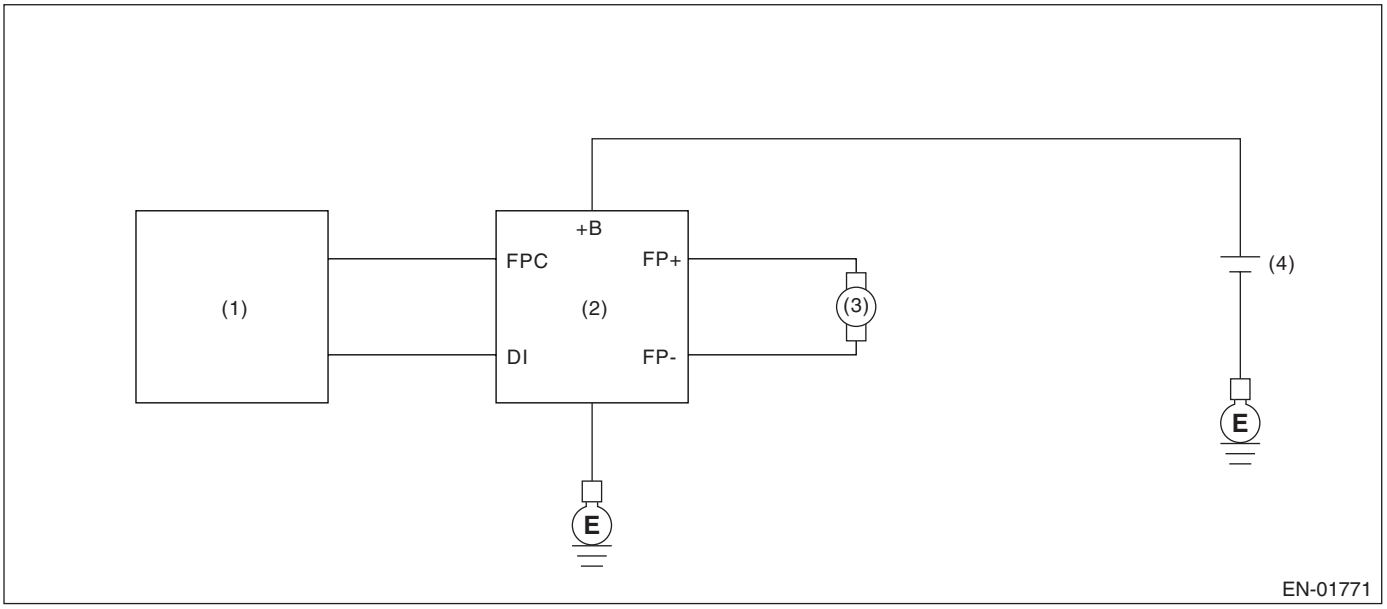

(1) Engine control module (ECM)
(2) Fuel pump control unit
(3) Fuel pump
(4) Battery

3. ENABLE CONDITION

Secondary Parameters	Enable Conditions
None	

4. GENERAL DRIVING CYCLE

Always perform the diagnosis continuously.

5. DIAGNOSTIC METHOD

• Abnormality Judgment

Judge NG when the continuous time of completing the malfunction criteria below becomes more than 2.5 seconds.

Judgment Value

Malfunction Criteria	Threshold Value
Battery voltage	≥ 8 V
Fuel level	≥ 9.6 ℓ (2.54 US gal, 2.11 Imp gal)
Fuel pump control unit output diagnosis signal	Low

Time Needed for Diagnosis: 2.5 seconds

Malfunction Indicator Light Illumination: Illuminates when malfunction occurs in 2 continuous driving cycles.

• Normality Judgment

Judge OK and clear the NG when the malfunction criteria below are completed.

Judgment Value

Malfunction Criteria	Threshold Value
Battery voltage	≥ 8 V
Fuel level	≥ 9.6 ℓ (2.54 US gal, 2.11 Imp gal)
Fuel pump control unit output diagnosis signal	High

6. DTC CLEAR CONDITION

- When the OK idling cycle was completed 40 times in a row
- When “Clear Memory” was performed

7. MALFUNCTION INDICATOR LIGHT CLEAR CONDITION

- When the OK driving cycle was completed 3 times in a row
- When “Clear Memory” was performed

8. FAIL SAFE

OFF setting may be needed depending on the NG portion.

9. ECM OPERATION AT DTC SETTING

Memorize the freeze frame data. (For test mode $02)

BJ:DTC P0301 CYLINDER 1 MISFIRE DETECTED

1. OUTLINE OF DIAGNOSIS

Detect whether the misfire occurred or not. (Revolution fluctuation method) Monitoring the misfire which influences exhaust deterioration (1.5 times of FTP) and catalyst damage is made obligatory by the law. Misfire affecting these two has three patterns below.

- Intermittent misfire (The same cylinder misfires in random, or different cylinders misfire in random.): FTP 1.5 times misfire
- Every time misfire (The same cylinder misfires every time.): FTP 1.5 times misfire, Catalyst damage misfire

The following detecting methods are adopted for these detection.

1) Intermittent misfire: FTP 1.5 times misfire
- 120° Interval Difference Method
- 360° Interval Difference Method (whole range)
- 720° Interval Difference Method (3,000 rpm or less)

2) Every time misfire: FTP 1.5 times misfire, Catalyst damage misfire
- 360° Interval Difference Method

2. ENABLE CONDITION

Secondary Parameters	Enable Conditions
Enable conditions of all secondary parameters	1 second or more
Intake manifold pressure change during 120°CA	< 20 kPa (150 mmHg, 5.9 inHg)
Throttle position change during 16 milliseconds	< 20°
Fuel shut-off function	Not operating
Fuel level	≥ 9.6 ℓ (2.54 US gal, 2.11 Imp gal)
Vehicle dynamic control or AT torque control	Not operating
Evaporative system leak check	Not in operation
Engine speed	400 — 7000 rpm
Intake manifold pressure	> Map 3 or more
Battery voltage	≥ 8 V
Atmospheric pressure	≥ 75.0 kPa (563 mmHg, 22.17 inHg)
Decided fuel parameters	Do not allow ultra low evaporation

Map3

rpm	700	1000	1500	2000	2500	3000	3500	4000	4500	5000	5500	6000	6500	7000
kPa (mmHg, inHg)	26.7 (200.0, 7.87)	26.7 (200.0, 7.87)	24.0 (180.0, 7.09)	24.1 (181.0, 7.13)	24.3 (182.0, 7.17)	24.7 (185.0, 7.28)	28.3 (212.3, 8.36)	30.9 (232.1, 9.14)	32.9 (247.0, 9.72)	33.1 (248.0, 9.76)	34.3 (257.0, 10.12)	38.1 (286.0, 11.26)	41.9 (314.0, 12.36)	48.9 (367.0, 14.45)

3. GENERAL DRIVING CYCLE

- The misfire is detected from idling to high engine revolution speed if the condition is matched.
- Perform the diagnosis continuously.

4. DIAGNOSTIC METHOD

When the misfire occurred, the engine speed is decreased and the crankshaft position speed will change. Calculate the interval difference value (diagnostic value) from crankshaft position speed by the following formula, and judge whether the misfire occurs or not comparing the calculated result with judgment value. Counting the number of misfire up, and if the misfire ratio is higher during 1000 rev. or 200 rev., judge NG for the corresponding cylinder.

Calculate the diagnostic value (from crankshaft position speed)	→	Misfire detection every single ignition (Compare diagnostic value with judgment value) • 120° Interval Difference Method • 360° Interval Difference Method • 720° Interval Difference Method	→	NG judgment (Judge misfire occurrence required by the law) (Compare number of misfire with judgment) • FTP1.5 times misfire NG judgment • Catalyst damage misfire NG judgment

As the following figure, pick out a random cylinder as the standard and name it omg 0. And the former crankshaft position speed is named omg 1, the second former crankshaft position speed is named omg 2, the third is named omg 3, and the following is the same.

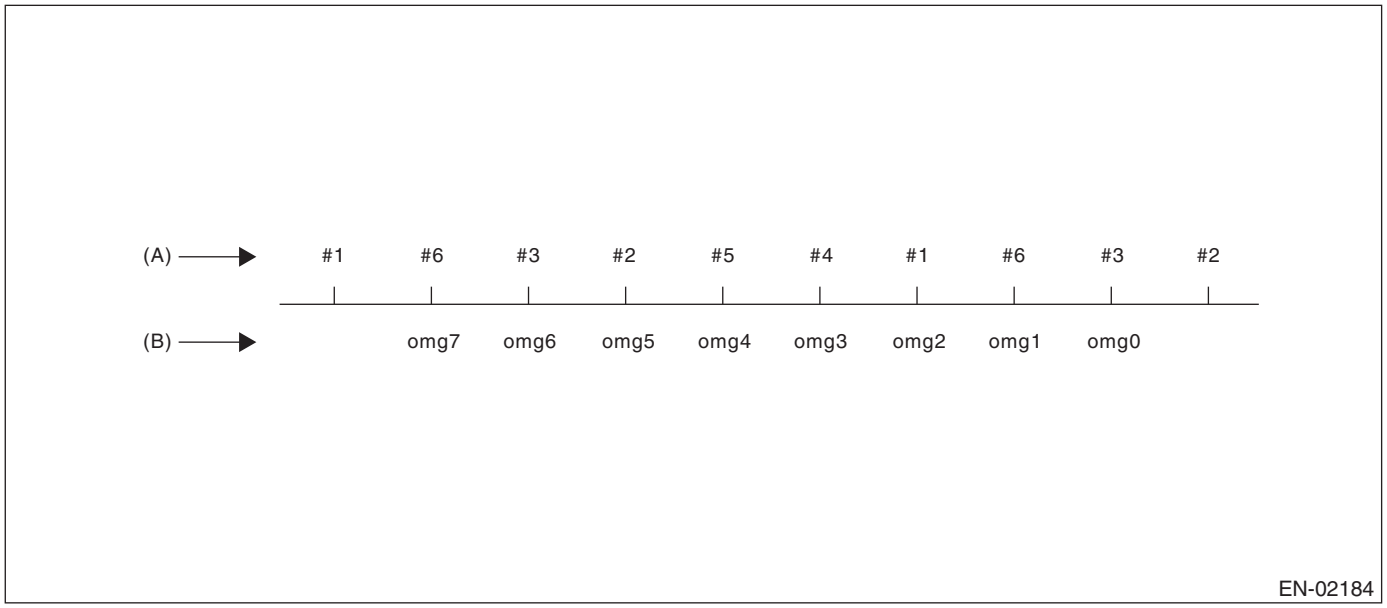

(A) Ignition order (B) Crankshaft position speed

• 120° Interval Difference Method

Diagnosis value domg120 = (omg –1 omg 0) – (omg 7 – omg 1)/6

Judge misfire occurs in the following cases.

- domg 120 > judgment value of positive side
- domg 121 ≤ judgment value of negative side

(judgment value before 120°CA)

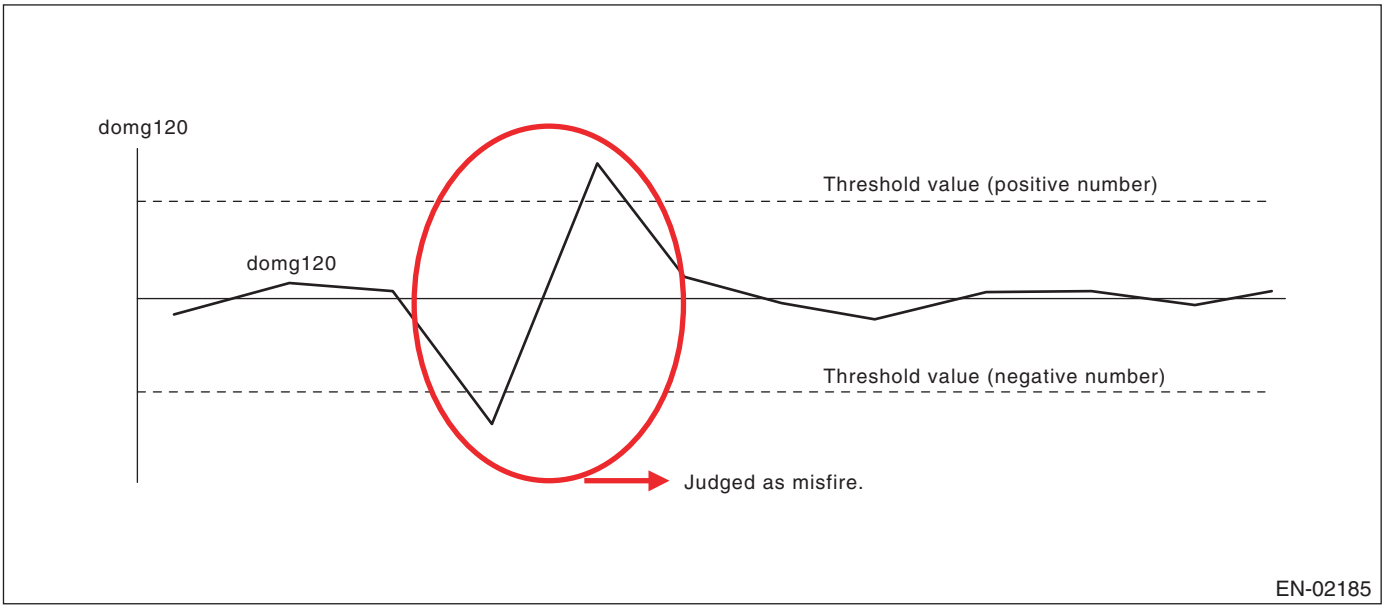

• 360° Interval Difference Method

Diagnosis value domg 360 = (omg 1 – omg 0) – (omg 4 – omg 3)

Misfire judgment domg 360 > judgment value → Misfire occurs

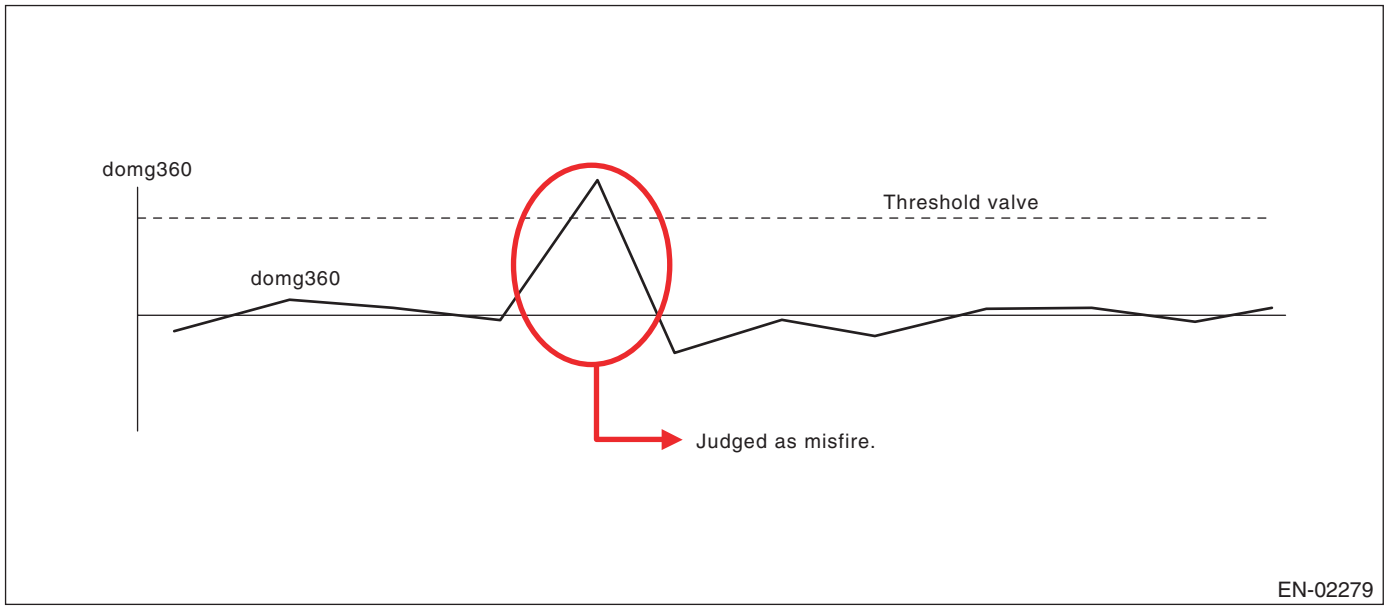

• 720° Interval Difference Method

Diagnosis value	domg 720 = (omg 1 – omg 0) – (omg 7 – omg 6)		
Misfire judgment	domg 720 > judgment value	→	Misfire occurs

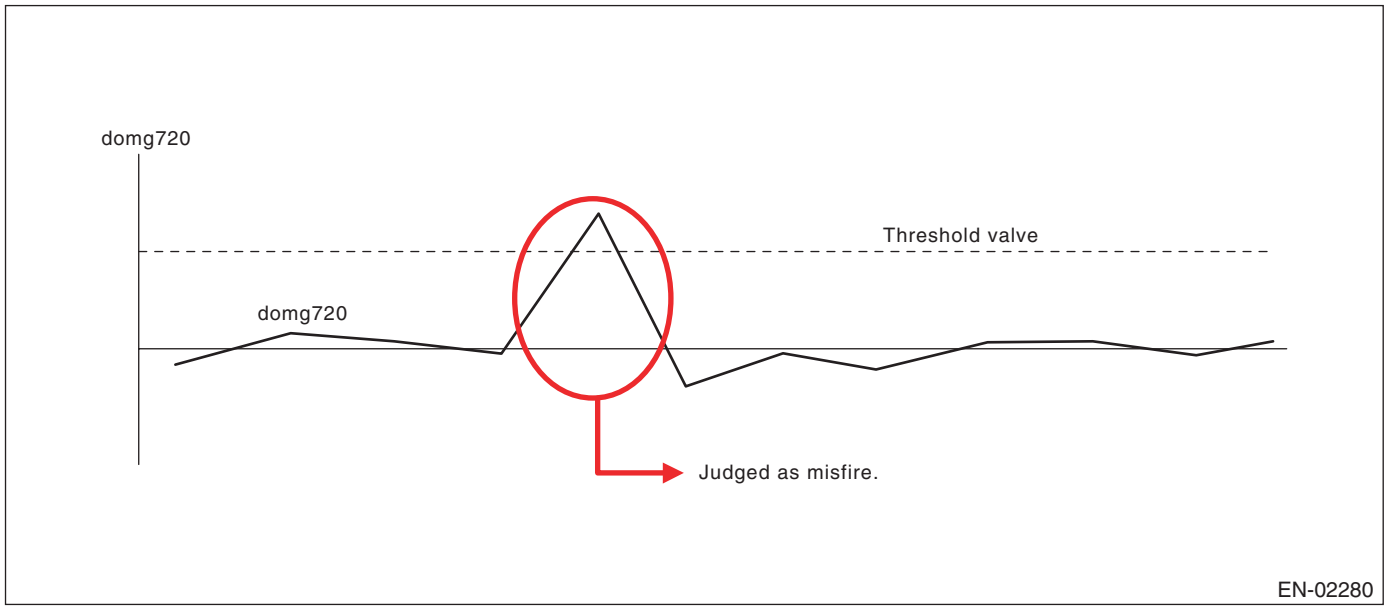

• FTP 1.5 times misfire (Misfire occurrence level affecting exhaust gas)

Judgment Value (Judge that malfunction occurs when the misfire ratio is high in 1000 engine revs.)

Malfunction Criteria	Threshold Value
FTP emission judgment value	> 1.0% in 1000 revs.

Time Needed for Diagnosis: 1000 engine revs.
Malfunction Indicator Light Illumination: Illuminates when malfunction occurs in 2 continuous driving cycles.

• Catalyst damage misfire (Misfire occurrence level damaging catalyst)

Judgment Value

Malfunction Criteria	Threshold Value
Catalyst damage misfire judgment value	See Map

Map

		Intake air (g (oz)/rev.)									
		0.2 (0.035)	0.4 (0.014)	0.6 (0.021)	0.8 (0.028)	1 (0.035)	1.2 (0.042)	1.4 (0.049)	1.6 (0.056)	1.8 (0.063)	2 (0.071)
Engine speed (rpm)	700	90	90	88	76	68	78	78	78	78	78
	1000	90	90	88	76	68	78	78	78	78	78
	1500	89	88	80	64	56	62	62	62	62	62
	2000	88	84	64	40	36	35	35	35	35	35
	2500	88	80	56	36	24	34	34	34	34	34
	3000	64	56	26	23	23	33	33	33	33	33
	3500	50	40	24	24	32	32	32	32	32	32
	4000	40	38	30	26	20	20	20	20	20	20
	4500	50	28	20	20	20	20	20	20	20	20
	5000	40	30	20	20	20	20	20	20	20	20
	5500	40	25	26	21	20	20	20	20	20	20
	6000	36	36	25	20	20	20	20	20	20	20
	6500	32	32	20	20	20	20	20	20	20	20
	7000	32	32	20	20	20	20	20	20	20	20

Time Needed for Diagnosis: 200 engine revs.
Malfunction Indicator Light Illumination: Illuminates as soon as the malfunction occurs.

5. DTC CLEAR CONDITION

- When the OK idling cycle was completed 40 times in a row
- When “Clear Memory” was performed

6. MALFUNCTION INDICATOR LIGHT CLEAR CONDITION

- When the OK driving cycle was completed 3 times in a row
- When “Clear Memory” was performed

7. FAIL SAFE

None

8. ECM OPERATION AT DTC SETTING

Memorize the freeze frame data. (For test mode $02)

BK:DTC P0302 CYLINDER 2 MISFIRE DETECTED

1. OUTLINE OF DIAGNOSIS

For the detecting criteria, refer to DTC P0301. <Ref. to GD(H6DO)-101, DTC P0301 CYLINDER 1 MISFIRE DETECTED, Diagnostic Trouble Code (DTC) Detecting Criteria.>

BL:DTC P0303 CYLINDER 3 MISFIRE DETECTED

1. OUTLINE OF DIAGNOSIS

For the detecting criteria, refer to DTC P0301. <Ref. to GD(H6DO)-101, DTC P0301 CYLINDER 1 MISFIRE DETECTED, Diagnostic Trouble Code (DTC) Detecting Criteria.>

BM:DTC P0304 CYLINDER 4 MISFIRE DETECTED

1. OUTLINE OF DIAGNOSIS

For the detecting criteria, refer to DTC P0301. <Ref. to GD(H6DO)-101, DTC P0301 CYLINDER 1 MISFIRE DETECTED, Diagnostic Trouble Code (DTC) Detecting Criteria.>

BN:DTC P0305 CYLINDER 5 MISFIRE DETECTED

1. OUTLINE OF DIAGNOSIS

For the detecting criteria, refer to DTC P0301. <Ref. to GD(H6DO)-101, DTC P0301 CYLINDER 1 MISFIRE DETECTED, Diagnostic Trouble Code (DTC) Detecting Criteria.>

BO:DTC P0306 CYLINDER 6 MISFIRE DETECTED

1. OUTLINE OF DIAGNOSIS

For the detecting criteria, refer to DTC P0301. <Ref. to GD(H6DO)-101, DTC P0301 CYLINDER 1 MISFIRE DETECTED, Diagnostic Trouble Code (DTC) Detecting Criteria.>

BP:DTC P0327 KNOCK SENSOR 1 CIRCUIT LOW INPUT (BANK 1 OR SINGLE SENSOR)

1. OUTLINE OF DIAGNOSIS

Detect the open or short circuit of the knock sensor. Judge NG when out of the standard value.

2. COMPONENT DESCRIPTION

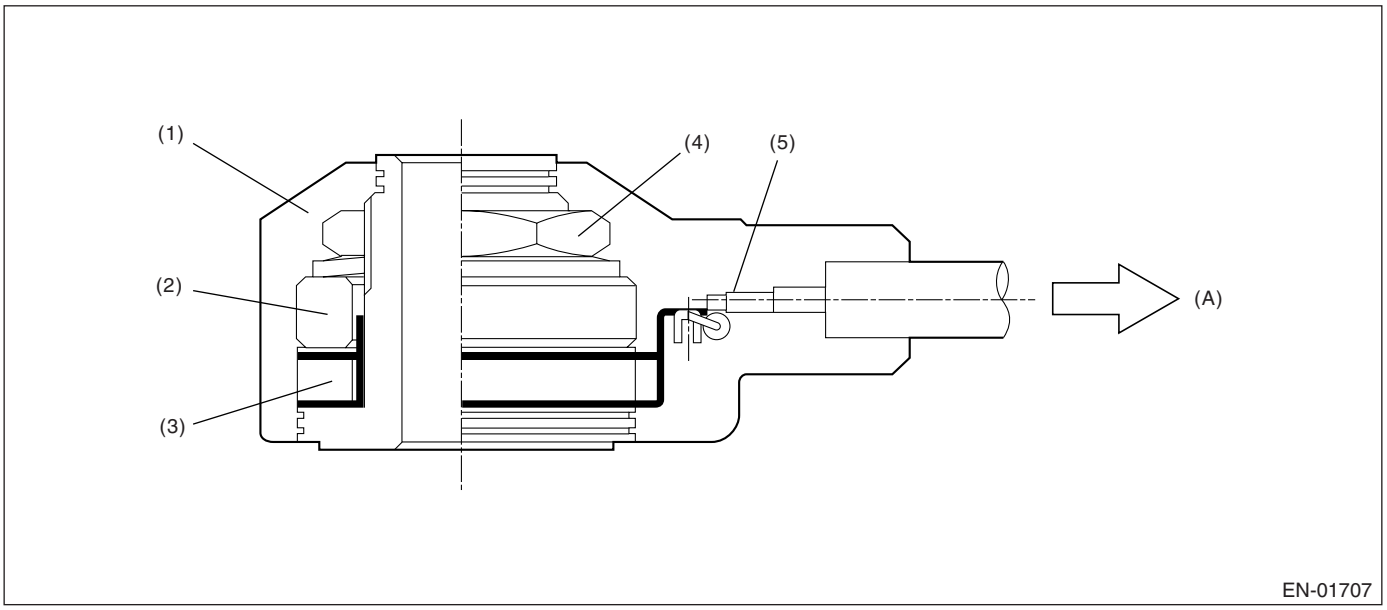

(1) Case
(2) Weight
(3) Piezoelectric element
(4) Nut
(5) Resistance
(A) To knock sensor harness

3. ENABLE CONDITION

Secondary Parameters	Enable Conditions
None	

4. GENERAL DRIVING CYCLE

Always perform the diagnosis continuously.

5. DIAGNOSTIC METHOD

• Abnormality Judgment

Judge NG when the continuous time of completing the malfunction criteria below becomes more than 1 second.

Judgment Value

Malfunction Criteria	Threshold Value
Output voltage	< 0.238 V
Ignition switch	ON

Time Needed for Diagnosis: 1 second
Malfunction Indicator Light Illumination: Illuminates as soon as the malfunction occurs.

• Normality Judgment

Judge OK and clear NG when the malfunction criteria below are completed.

Judgment Value

Malfunction Criteria	Threshold Value
Output voltage	≥ 0.238 V
Ignition switch	ON

6. DTC CLEAR CONDITION

- When the OK idling cycle was completed 40 times in a row
- When “Clear Memory” was performed

7. MALFUNCTION INDICATOR LIGHT CLEAR CONDITION

- When the OK driving cycle was completed 3 times in a row
- When “Clear Memory” was performed

8. FAIL SAFE

- Knocking compensation

At normal condition: Self-learning ignition advance value = knock F/B advance + overall self-learning advance value + partial self-learning advance value
When malfunctioning: Self-learning ignition advance value = –6°CA (6°CA retard)
knock F/B advance value = 0°CA
Prohibit overall self-learning
Partially prohibit self-learning

9. ECM OPERATION AT DTC SETTING

Memorize the freeze frame data. (For test mode $02)

BQ:DTC P0328 KNOCK SENSOR 1 CIRCUIT HIGH INPUT (BANK 1 OR SINGLE SENSOR)

1. OUTLINE OF DIAGNOSIS

Detect the open or short circuit of the knock sensor. Judge NG when out of the standard value.

2. COMPONENT DESCRIPTION

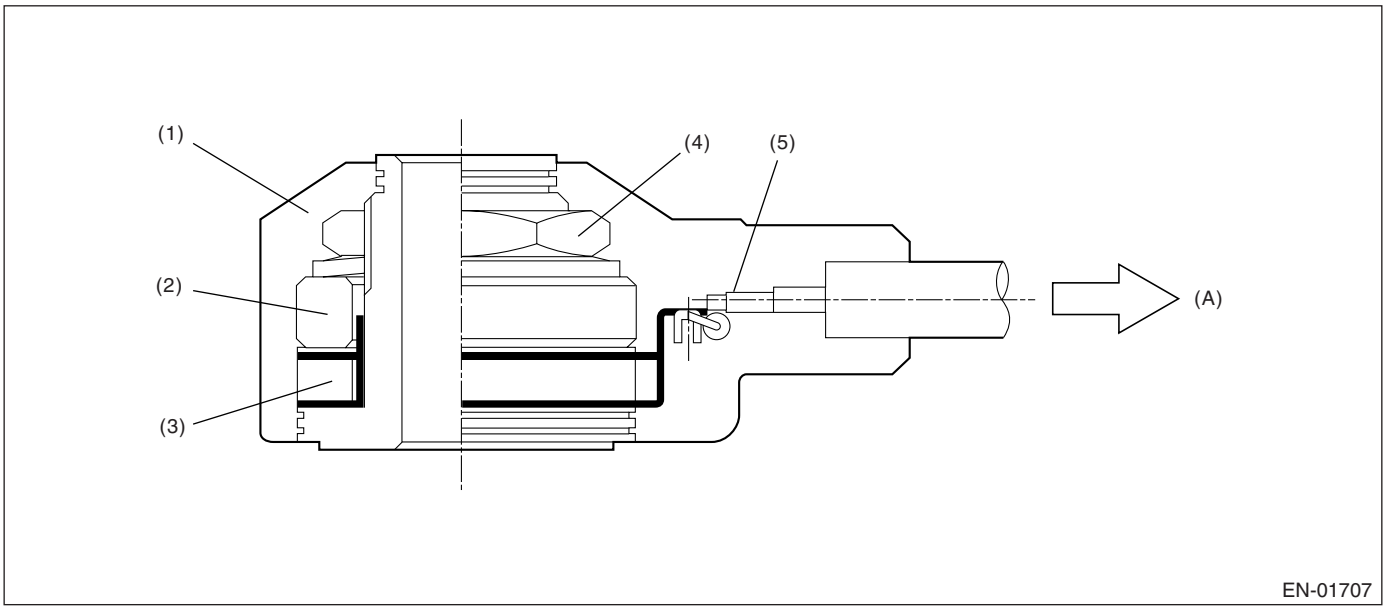

(1) Case
(2) Weight
(3) Piezoelectric element
(4) Nut
(5) Resistance
(A) To knock sensor harness

3. ENABLE CONDITION

Secondary Parameters	Enable Conditions
None	

4. GENERAL DRIVING CYCLE

Always perform diagnosis continuously.

5. DIAGNOSTIC METHOD

• Abnormality Judgment

Judge NG when the continuous time of completing the malfunction criteria below becomes more than 1 second.

Judgment Value

Malfunction Criteria	Threshold Value
Output voltage	≥ 4.714 V
Ignition switch	ON

Time Needed for Diagnosis: 1 second
Malfunction Indicator Light Illumination: Illuminates as soon as the malfunction occurs.
• Normality Judgment

Judge OK and clear NG when the malfunction criteria below are completed.

Judgment Value

Malfunction Criteria	Threshold Value
Output voltage	〈 4.714 V
Ignition switch	ON

6. DTC CLEAR CONDITION

- When the OK idling cycle was completed 40 times in a row
- When “Clear Memory” was performed

7. MALFUNCTION INDICATOR LIGHT CLEAR CONDITION

- When the OK driving cycle was completed 3 times in a row
- When “Clear Memory” was performed

8. FAIL SAFE

- Knocking compensation

At normal condition: Self-learning ignition advance value = knock F/B advance + overall self-learning advance value + partial self-learning advance value
When malfunctioning: Self-learning ignition advance value = −6°CA (6°CA retard)
knock F/B advance value = 0°CA
Prohibit overall self-learning
Partially prohibit self-learning

9. ECM OPERATION AT DTC SETTING

Memorize the freeze frame data. (For test mode $02)

BR:DTC P0332 KNOCK SENSOR 2 CIRCUIT LOW INPUT (BANK 2)

1. OUTLINE OF DIAGNOSIS

For the detecting criteria, refer to P0327. <Ref. to GD(H6DO)-107, DTC P0327 KNOCK SENSOR 1 CIRCUIT LOW INPUT (BANK 1 OR SINGLE SENSOR), Diagnostic Trouble Code (DTC) Detecting Criteria.>

BS:DTC P0333 KNOCK SENSOR 2 CIRCUIT HIGH INPUT (BANK 2)

1. OUTLINE OF DIAGNOSIS

For the detecting criteria, refer to P0328. <Ref. to GD(H6DO)-109, DTC P0328 KNOCK SENSOR 1 CIRCUIT HIGH INPUT (BANK 1 OR SINGLE SENSOR), Diagnostic Trouble Code (DTC) Detecting Criteria.>

BT:DTC P0335 CRANKSHAFT POSITION SENSOR “A” CIRCUIT

1. OUTLINE OF DIAGNOSIS

Detect the open or short circuit of crankshaft position sensor. Judge NG when the crankshaft signal does not input regardless of turning the starter.

2. COMPONENT DESCRIPTION

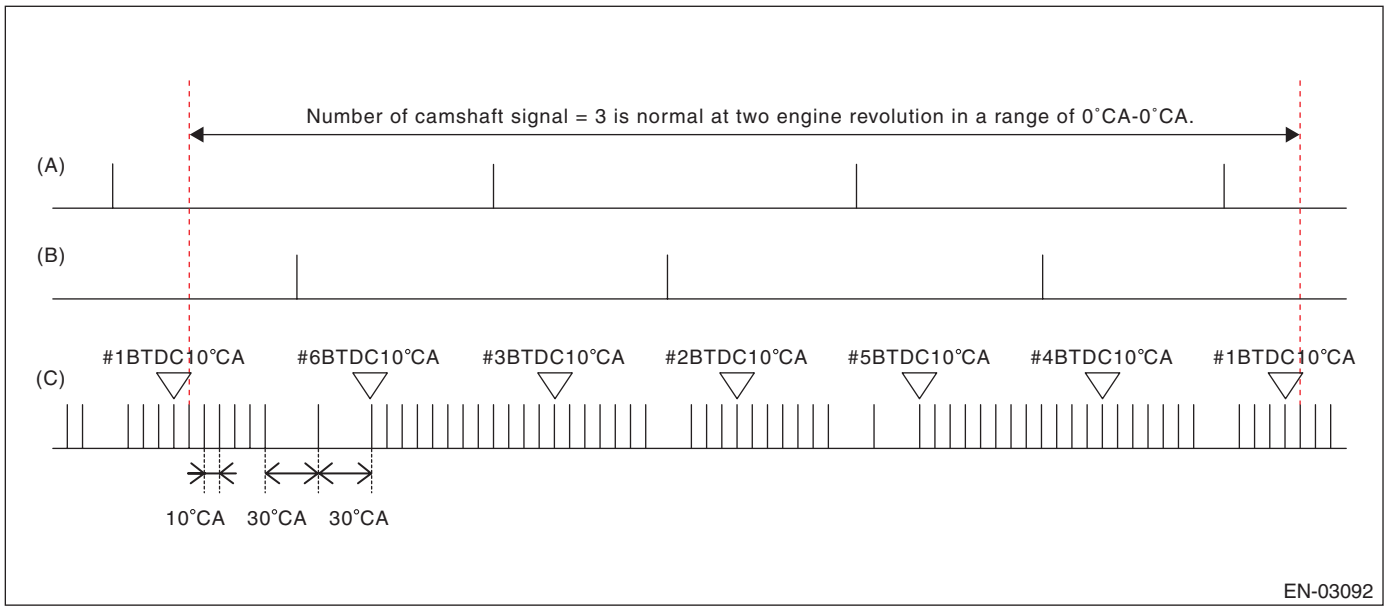

(A) Camshaft signal (RH) (B) Camshaft signal (LH) (C) Crankshaft signal

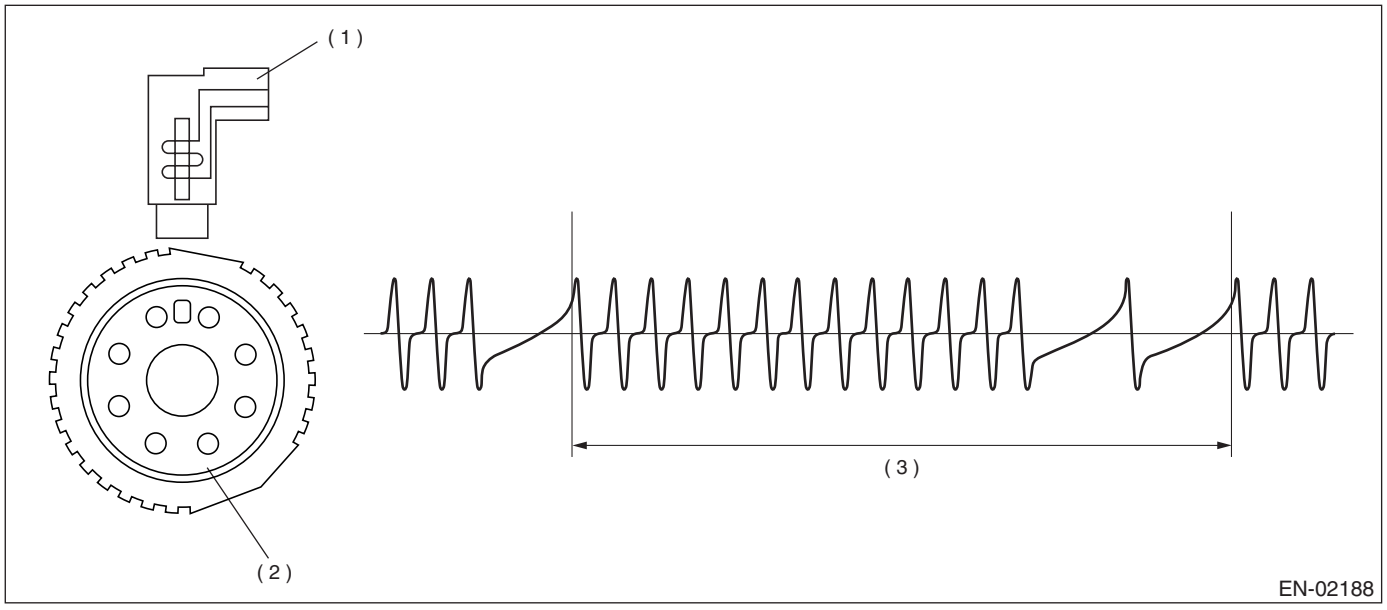

(1) Crankshaft position sensor (2) Crank sprocket (3) Crankshaft half-turn

3. ENABLE CONDITION

Secondary Parameters	Enable Conditions
None	

4. GENERAL DRIVING CYCLE

Always perform the diagnosis continuously.

5. DIAGNOSTIC METHOD

• Abnormality Judgment

Judge NG when the continuous time of completing the malfunction criteria below becomes more than 3 seconds.

Judgment Value

Malfunction Criteria	Threshold Value
Starter switch	ON
Crankshaft position sensor signal	Not detected
Battery voltage	≥ 8 V

Time Needed for Diagnosis: 3 seconds
Malfunction Indicator Light Illumination: Illuminates as soon as the malfunction occurs.

• Normality Judgment

Judge OK when the continuous time of completing the malfunction criteria below becomes more than 3 seconds.

Judgment Value

Malfunction Criteria	Threshold Value
Crankshaft position sensor signal	Input exists
Battery voltage	≥ 8 V

6. DTC CLEAR CONDITION

- When the OK idling cycle was completed 40 times in a row
- When “Clear Memory” was performed

7. MALFUNCTION INDICATOR LIGHT CLEAR CONDITION

- When the OK driving cycle was completed 3 times in a row
- When “Clear Memory” was performed

8. FAIL SAFE

None

9. ECM OPERATION AT DTC SETTING

Memorize the freeze frame data. (For test mode $02)

BU:DTC P0336 CRANKSHAFT POSITION SENSOR “A” CIRCUIT RANGE/PERFORMANCE

1. OUTLINE OF DIAGNOSIS

Detect the malfunction of crankshaft position sensor output property. Judge NG when the number of crankshaft signal every 1 revolution becomes abnormal.

2. COMPONENT DESCRIPTION

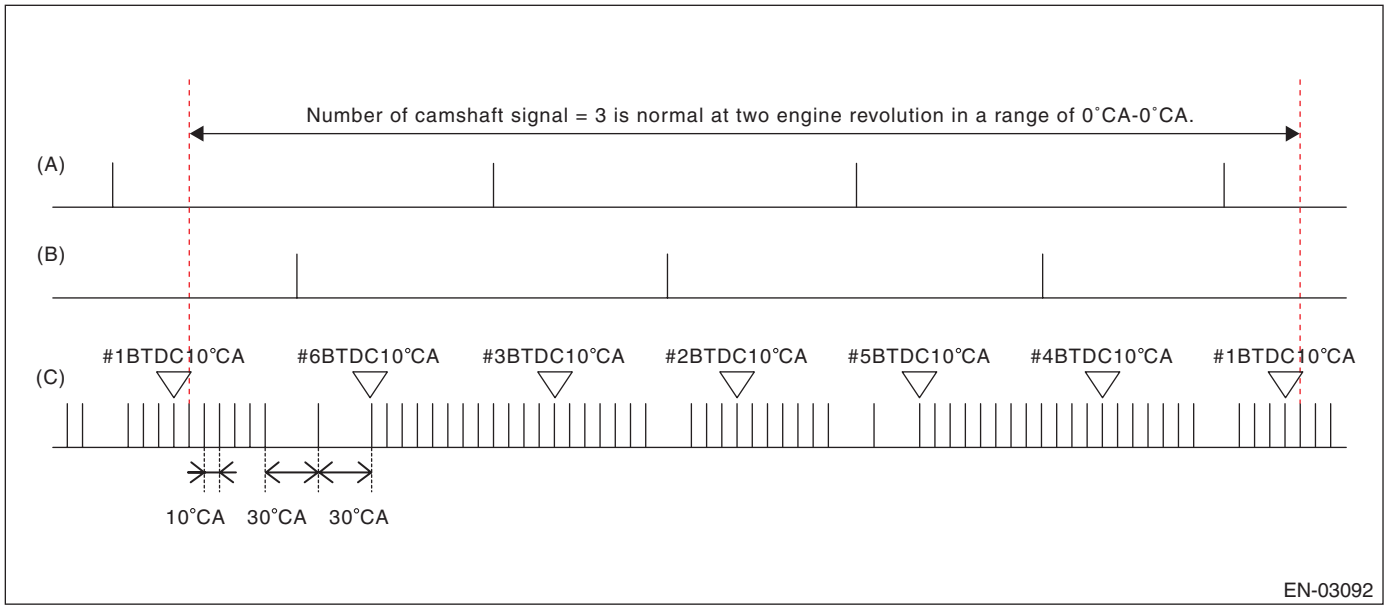

(A) Camshaft signal (RH) (B) Camshaft signal (LH) (C) Crankshaft signal

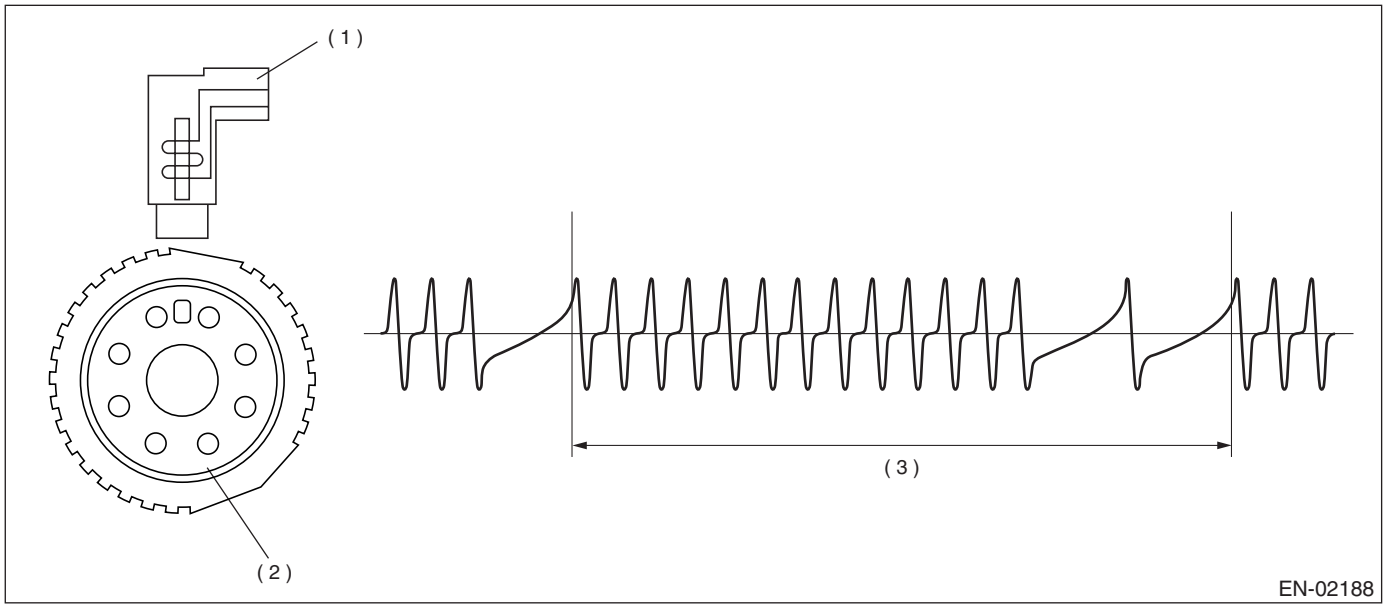

(1) Crankshaft position sensor (2) Crank sprocket (3) Crankshaft half-turn

3. ENABLE CONDITION

Secondary Parameters	Enable Conditions
Battery voltage	≥ 8 V
Engine speed	< 3000 rpm

4. GENERAL DRIVING CYCLE

Perform the diagnosis continuously under 3000 rpm engine speed.

5. DIAGNOSTIC METHOD

• Abnormality Judgment

Judge NG when all the malfunction criteria below are completed more than 10 times in a row.
Judgment Value

Malfunction Criteria	Threshold Value
Cylinder number distinction	Completed
Amount of crank sensor signal during 1 rev.	Not = 30

Time Needed for Diagnosis: 10 engine revs.
Malfunction Indicator Light Illumination: Illuminates when malfunction occurs in 2 continuous driving cycles.

• Normality Judgment

Judge OK and clear the NG when the malfunction criteria below are completed.
Judgment Value

Malfunction Criteria	Threshold Value
Cylinder number distinction	Completed
Amount of crank sensor signal during 1 rev.	= 30

6. DTC CLEAR CONDITION

- When the OK idling cycle was completed 40 times in a row
- When “Clear Memory” was performed

7. MALFUNCTION INDICATOR LIGHT CLEAR CONDITION

- When the OK driving cycle was completed 3 times in a row
- When “Clear Memory” was performed

8. FAIL SAFE

None

9. ECM OPERATION AT DTC SETTING

Memorize the freeze frame data. (For test mode $02)

BV:DTC P0340 CAMSHAFT POSITION SENSOR “A” CIRCUIT (BANK 1 OR SINGLE SENSOR)

1. OUTLINE OF DIAGNOSIS

Detect the open or short circuit of camshaft position sensor. Judge NG when the number of camshaft signal remains to be abnormal.

2. COMPONENT DESCRIPTION

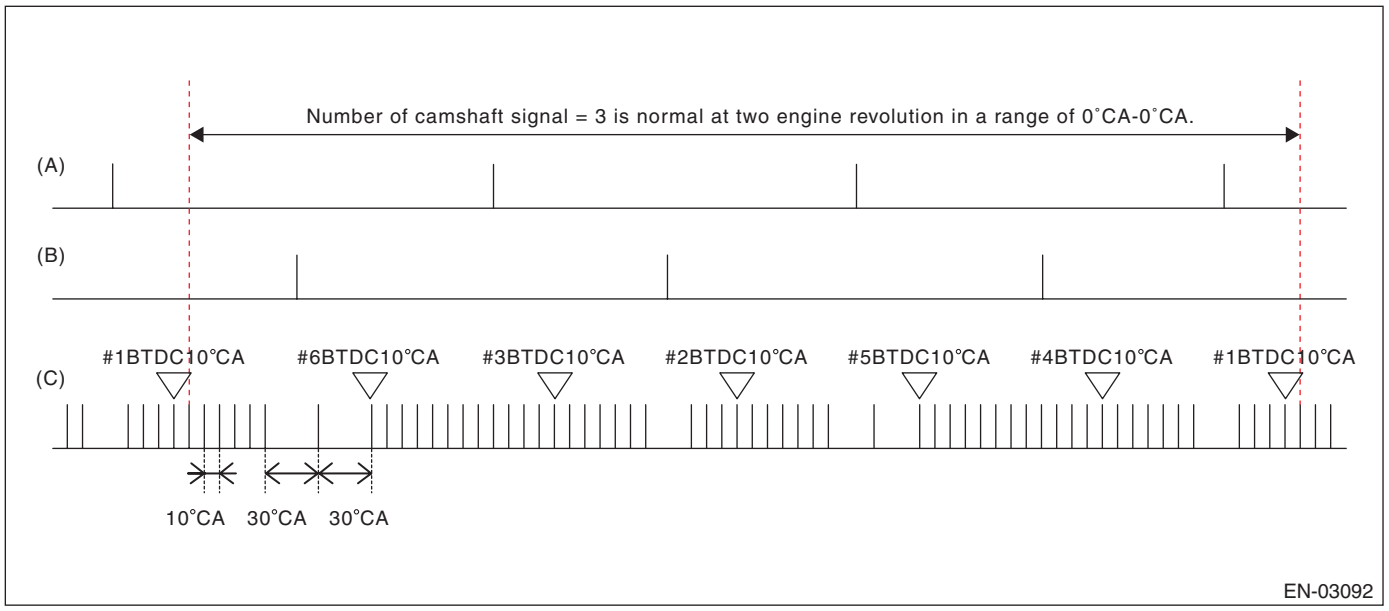

(A) Camshaft signal (RH)
(B) Camshaft signal (LH)
(C) Crankshaft signal

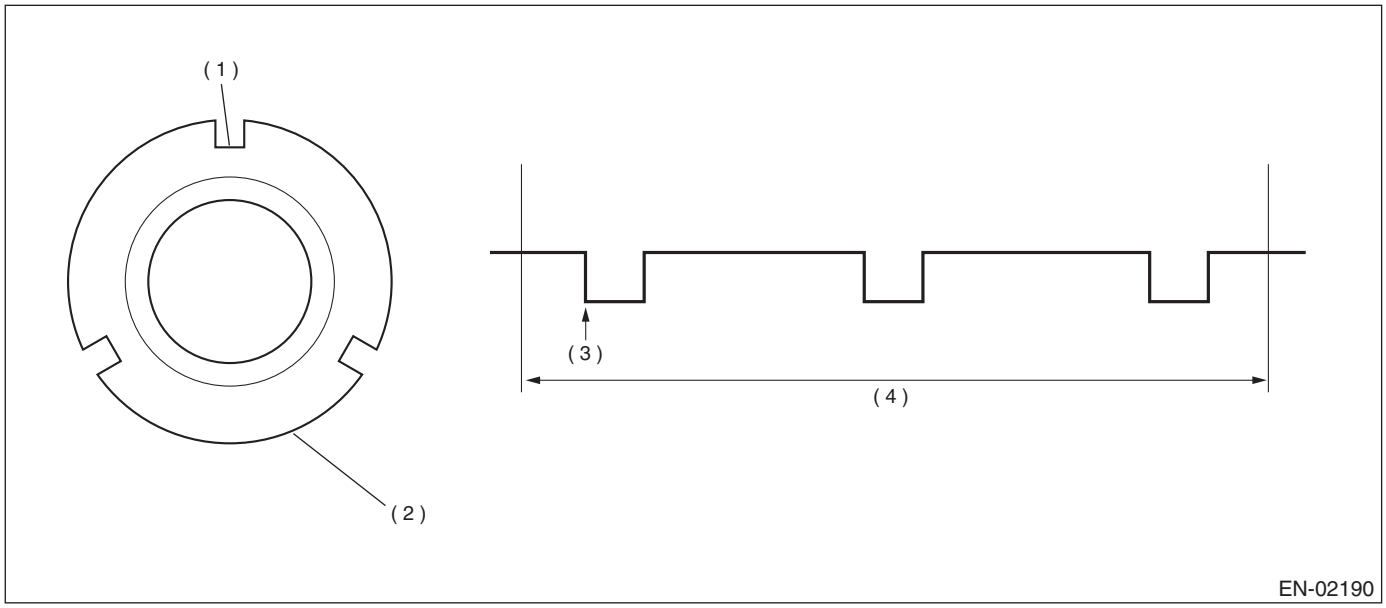

(1) Slot
(2) Camshaft plate
(3) Sensing point
(4) Camshaft one revolution (Engine two revolutions)

3. ENABLE CONDITION

Secondary Parameters	Enable Conditions
Battery voltage	≥ 8 V

4. GENERAL DRIVING CYCLE

Always perform the diagnosis continuously.

5. DIAGNOSTIC METHOD

• Abnormality Judgment

Judge NG when following condition continues 3 seconds or more: the amount of camshaft sensor signal during engine 2 revs. are not 3 times.
Judge OK and clear NG when the malfunction criteria below is not completed.
Judgment Value

Malfunction Criteria	Threshold Value
Amount of camshaft sensor signal during engine 2 revs.	≠ 3

Time Needed for Diagnosis: 4 revs.
Malfunction Indicator Light Illumination: Illuminates as soon as the malfunction occurs.
• Normality Judgment

Judge OK and clear the NG when the malfunction criteria below are completed.
Judgment Value

Malfunction Criteria	Threshold Value
Amount of camshaft sensor signal	= 3

6. DTC CLEAR CONDITION

- When the OK idling cycle was completed 40 times in a row
- When “Clear Memory” was performed

7. MALFUNCTION INDICATOR LIGHT CLEAR CONDITION

- When the OK driving cycle was completed 3 times in a row
- When “Clear Memory” was performed

8. FAIL SAFE

- Ignition timing whole learning compensation:
  – Enter the initial value (whole learning compensation factor = 0.5, Variable amount of whole learning compensation factor = 0.25) to the whole learning compensation factor and variable amount of whole learning compensation factor when IG OFF, and then make the whole learning incomplete.
  – Enter the initial value (whole learning compensation factor = 0.5, Variable amount of whole learning compensation factor = 0.25) to the whole learning compensation factor and variable amount of whole learning compensation factor when making a normality judgment from abnormality judgment, and then make the whole learning incomplete.
- Ignition timing partial learning compensation:
  – Enter the initial value (0°CA) to the compensation value of partial learning zone when IG OFF.
  – Enter the initial value (0°CA) to the compensation value of partial learning zone when making a normality judgment from abnormality judgment.
- AVCS control: Most timing retard learning is not complete or most timing retard learning completion is not experienced.
- ISC feedback compensation:
  – Do not perform the AVCS actual timing advance compensation.
  – Make the OCV driving Duty to be the given value (9.36%).

9. ECM OPERATION AT DTC SETTING

Memorize the freeze frame data. (For test mode $02)

BW:DTC P0345 CAMSHAFT POSITION SENSOR “A” CIRCUIT (BANK 2)

1. OUTLINE OF DIAGNOSIS

For the detecting criteria, refer to DTC P0340. <Ref. to GD(H6DO)-115, DTC P0340 CAMSHAFT POSITION SENSOR “A” CIRCUIT (BANK 1 OR SINGLE SENSOR), Diagnostic Trouble Code (DTC) Detecting Criteria.>

BX:DTC P0420 CATALYST SYSTEM EFFICIENCY BELOW THRESHOLD (BANK 1)

1. OUTLINE OF DIAGNOSIS

Detect the deterioration of catalyst function.
Though the rear oxygen sensor output would change slowly with a new catalyst, the sensor output with a deteriorated catalyst becomes high and the inversion time is shortened. For this reason, the catalyst diagnosis is carried out by monitoring the rear oxygen sensor output and comparing it with the front A/F sensor output.

2. COMPONENT DESCRIPTION

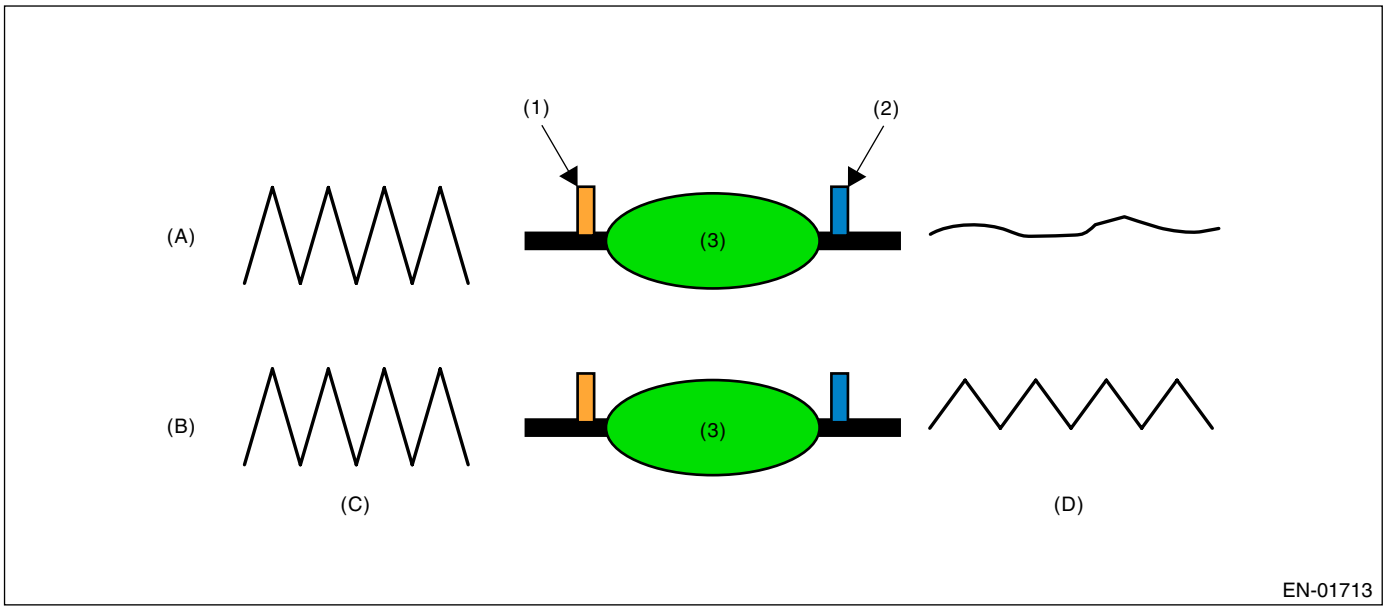

(1) Front oxygen (A/F) sensor
(2) Rear oxygen sensor
(3) Catalyst
(A) Normal
(B) Deterioration
(C) Front oxygen (A/F) sensor waveform
(D) Rear oxygen sensor waveform

3. ENABLE CONDITION

Secondary Parameters	Enable Conditions
Battery voltage	〉10.9 V
Atmospheric pressure	〉75.1 kPa (563 mmHg, 22.2 inHg)
Engine coolant temperature	≥ 70°C (158°F)
Catalyst warm-up counter on Map 2	≥ 8000
Misfire detection during 200 engine revs.	〈 5 times
Sub feedback	Operating
Evaporative system diagnostic	Not in operation
Difference between actual and target time lambda 〈 0.10	1000 milliseconds or more
Vehicle speed	≥ 70 km/h (43 MPH)
Amount of intake air	10 ←→ 40 g (0.35 — 1.41 oz)/s
Rear oxygen output change from below 600 mV to over	Experienced after fuel cut
Absolute valve of engne load change	≤ 0.02 g (0.007 oz)/rev
Accumulated time of canister purge operation	≥ 5 seconds
Learning valve of evaporation gas density	≤ 0.2
After engine starting	≥ 205 seconds

• Map 2

Add the following value every 512 milliseconds.

Amount of intake air (g (oz)/s)	0 (0)	3.2 (0.113)	6.4 (0.226)	9.6 (0.339)	12.8 (0.451)	16 (0.564)	19.2 (0.677)	22.4 (0.790)	25.6 (0.903)	28.8 (1.016)	32 (1.129)	35.2 (1.242)
Integrated value for warm-up counter	−19	−8	11	19	30	44	61	81	104	130	159	161

4. GENERAL DRIVING CYCLE

Perform the diagnosis once at the constant vehicle speed more than 70 km/h (43 MPH).

5. DIAGNOSTIC METHOD

After the malfunction criterias are completed, calculate the output fluctuation value of front oxygen (A/F) sensor (average of left and right) and output fluctuation value of rear oxygen sensor.
Calculate the diagnosis value when the front oxygen (A/F) sensor output fluctuation value more than specified value.
Regard the A/F response properties and diagnosis value as parameters for judgment value.
Judge NG when the malfunction criteria below are completed, and judge OK when they are not completed.
Judgment Value

Malfunction Criteria	Threshold Value
Accumulated variation of output voltage of rear oxygen sensor per 32 milliseconds × 4 divided by accumulated variation of lambda of front oxygen (A/F) sensor per 32 milliseconds × 4	≥ 9.534

Time Needed for Diagnosis: 30 — 55 seconds
Malfunction Indicator Light Illumination: Illuminates when malfunction occurs in 2 continuous driving cycles.

6. DTC CLEAR CONDITION

- When the OK idling cycle was completed 40 times in a row
- When “Clear Memory” was performed

7. MALFUNCTION INDICATOR LIGHT CLEAR CONDITION

- When the OK driving cycle was completed 3 times in a row
- When “Clear Memory” was performed

8. FAIL SAFE

None

9. ECM OPERATION AT DTC SETTING

- Memorize the freeze frame data. (For test mode $02)
- Memorize the diagnostic value and trouble standard value. (For test mode $06)

BY:DTC P0442 EVAPORATIVE EMISSION CONTROL SYSTEM LEAK DETECTED (SMALL LEAK)

1. OUTLINE OF DIAGNOSIS

Perform the diagnosis of leakage of fuels system and valve functions.

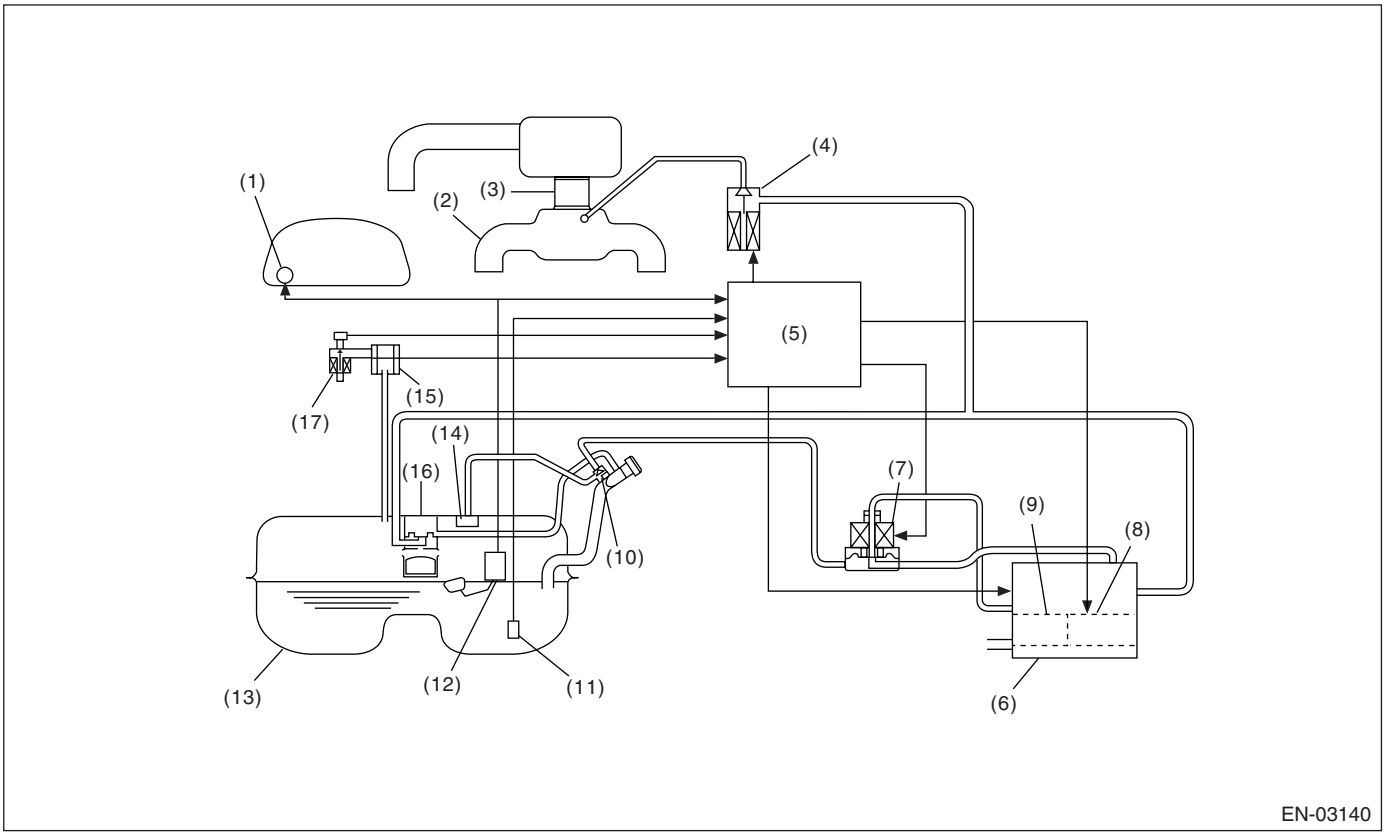

(1)	Fuel gauge	(7)	Pressure control solenoid valve	(13)	Fuel tank
(2)	Intake manifold	(8)	Drain valve	(14)	Fuel cut valve
(3)	Throttle body	(9)	Drain filter	(15)	Fuel tank pressure sensor
(4)	Purge control solenoid valve	(10)	Shut-off valve	(16)	Vent valve
(5)	Engine control module (ECM)	(11)	Fuel temperature sensor	(17)	Fuel tank sensor control valve
(6)	Canister	(12)	Fuel level sensor		

In this system diagnosis, checking for leakage and valve operation is conducted by changing the fuel tank pressure, and monitoring the pressure change using the fuel tank pressure sensor.
0.04 inch diagnosis is performed in the order of Mode Z, Mode A, Mode B, Mode C, Mode D, and 0.02 inch diagnosis is performed in the order of Mode A, Mode B, Mode C, Mode D, Mode E.

0.04-inch Diagnosis

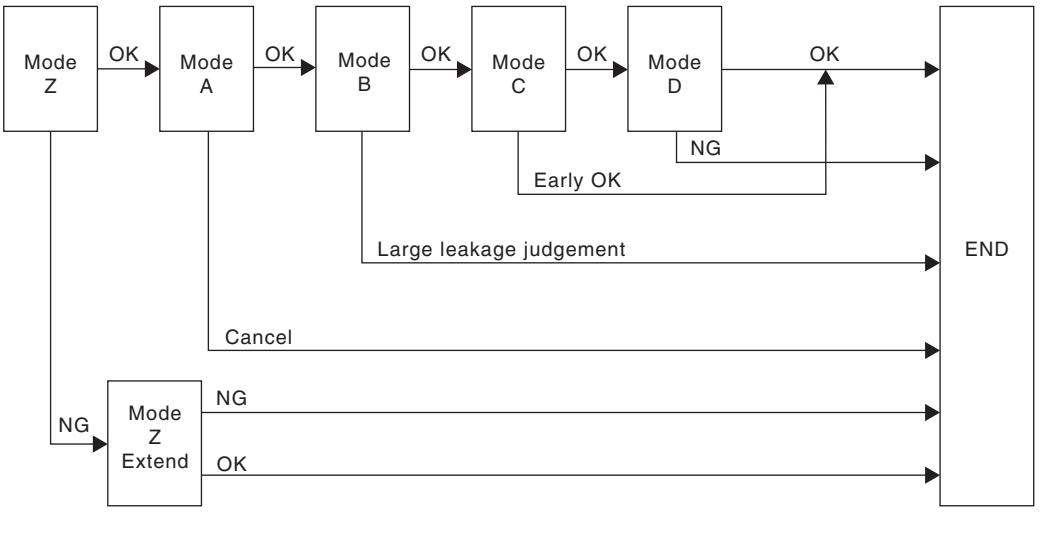

EN-02872

Mode	Mode Description	Diagnosis Period
Mode Z (CPC open fail diagnosis)	Perform the diagnosis of CPC open fail depending on the amount of the tank pressure change after the diagnosis has started.	3 — 16 seconds
Mode A (Estimated evaporation amount)	Calculate the tank pressure change amount (P1).	10 seconds
Mode B (Sealed negative pressure, large leakage judgment)	Operating the purge control solenoid valve, introduce the intake manifold pressure into the fuel tank. If the tank pressure cannot be reduced, diagnose that there is large leakage.	5 — 25 seconds
Mode C (Pressure increase check advanced OK judgment)	Wait until the tank pressure becomes to the target value (pressure to start calculating P2). If the tank pressure does not return to make advanced OK judgment.	1 — 15 seconds
Mode D (Negative pressure variation measurement evaporation leakage diagnosis)	Calculate the tank pressure variation (P2), and obtain the diagnostic value using P1 of Mode A. Perform the evaporation leakage diagnosis using the diagnosis value.	10 seconds

Mode table for Evaporative Emission Control System diagnosis

Mode	Normal conditions	Diagnostic item	DTC
Mode Z	Nearly same as atmospheric pressure (equivalent pressure of 0 kPa (0 mmHg, 0 inHg))	CPC is judged to be open.	P0457
Mode A	Pressure is in proportion to amount of evaporative emission.	—	
Mode B	Negative pressure is formed due to intake manifold negative pressure	Large leak	P0457
Mode C	Target pressure is reached.	—	—
Mode D	Pressure change is small.	EVAP system is judged to have large leak [1.0 mm (0.04 in)].	P0442

0.02-inch Diagnosis

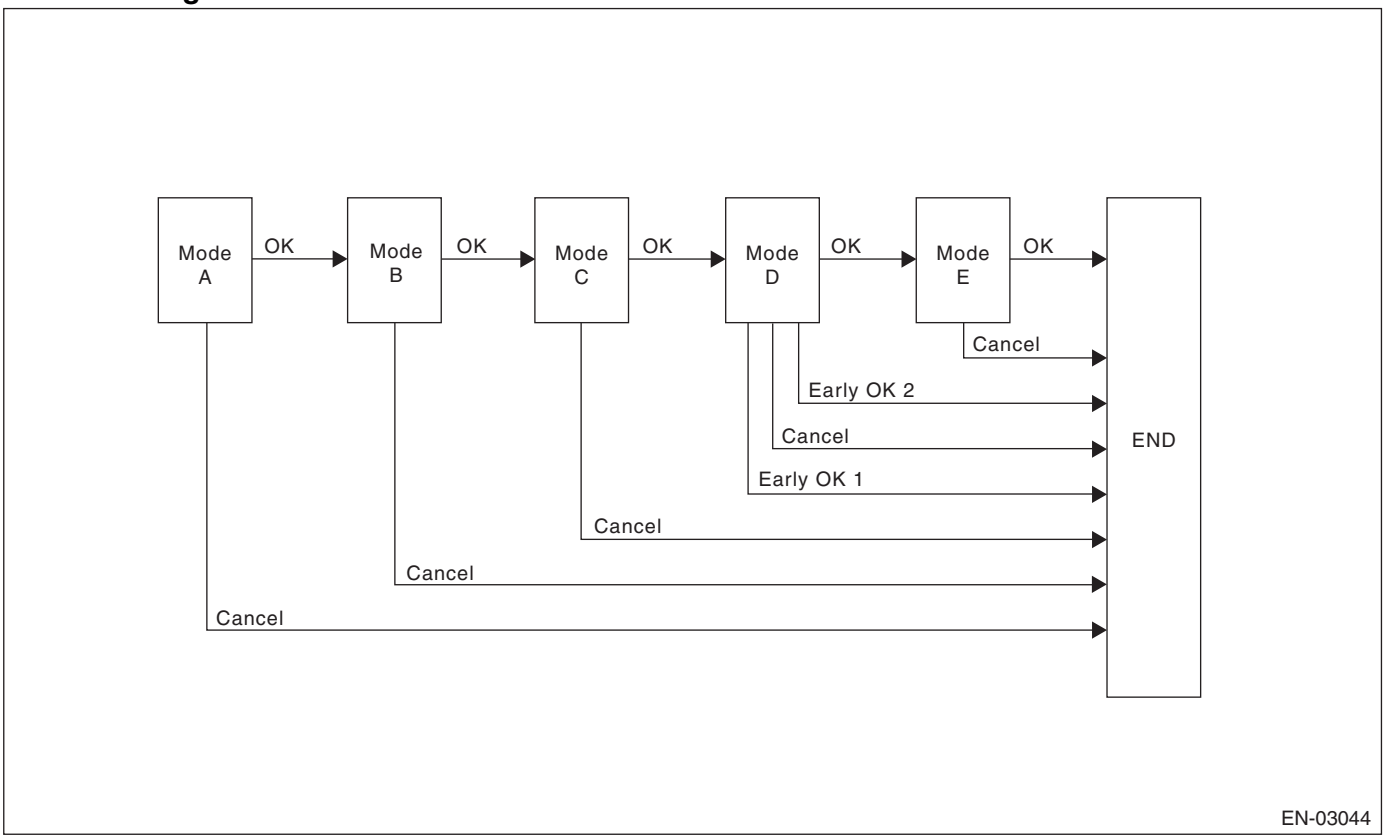

Mode	Mode Description	Diagnosis Period
Mode A (0 point correction)	Wait until the tank pressure returns to 0 point (0 kPa (0 mmHg, 0 inHg)) when tank pressure is high.	0 — 12 seconds
Mode B (Introduce negative pressure)	Introduce the intake manifold pressure to the fuel tank and reduce the tank pressure to the desired value.	0 — 27 seconds
Mode C (Maintain negative pressure)	Wait until the tank pressure returns to start pressure of P2 calculation.	0 — 20 seconds
Mode D (Calculation of negative pressure variation)	Calculate the time until the tank pressure becomes the end pressure of P2 calculation. Make advanced OK judgment when the tank pressure does not become the end pressure of P2 calculation.	0 — 200 seconds
Mode E (Calculation of Evaporative gas yield)	Calculate the amount of evaporative gas yield (P1).	0 — 280 seconds

2. COMPONENT DESCRIPTION

• Pressure Control Solenoid Valve

PCV controls the fuel tank pressure to be equal to the atmospheric air pressure. Normally, the solenoid is set to OFF, and the valve mechanically opens and closes in accordance with the difference between the tank pressure and atmospheric air pressure, and the tank pressure and canister pressure.

During the diagnosis, the valve is forcibly opened by setting the solenoid to ON.

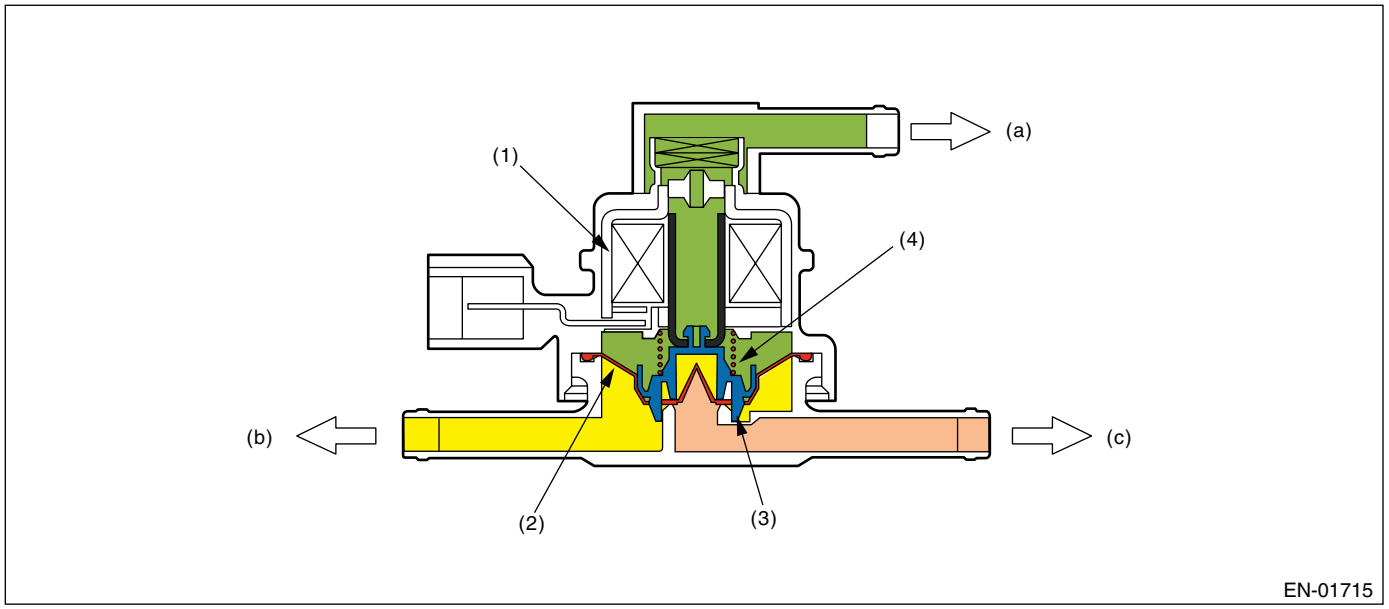

(1) Solenoid
(2) Diaphragm
(3) Valve
(4) Spring
(a) Atmospheric pressure
(b) Fuel tank
(c) Canister

• Valve Operation and Air Flow

As in the X parts below, there are the area with atmospheric air pressure above the diaphragm and the area with tank pressure below the diaphragm. Also, as in the Y parts below, there are the area with tank pressure above the diaphragm and the area with canister pressure below the diaphragm. In the table below the air flow from each port in accordance with pressure difference is shown with the atmospheric air pressure port A, tank pressure port B and canister pressure port C.

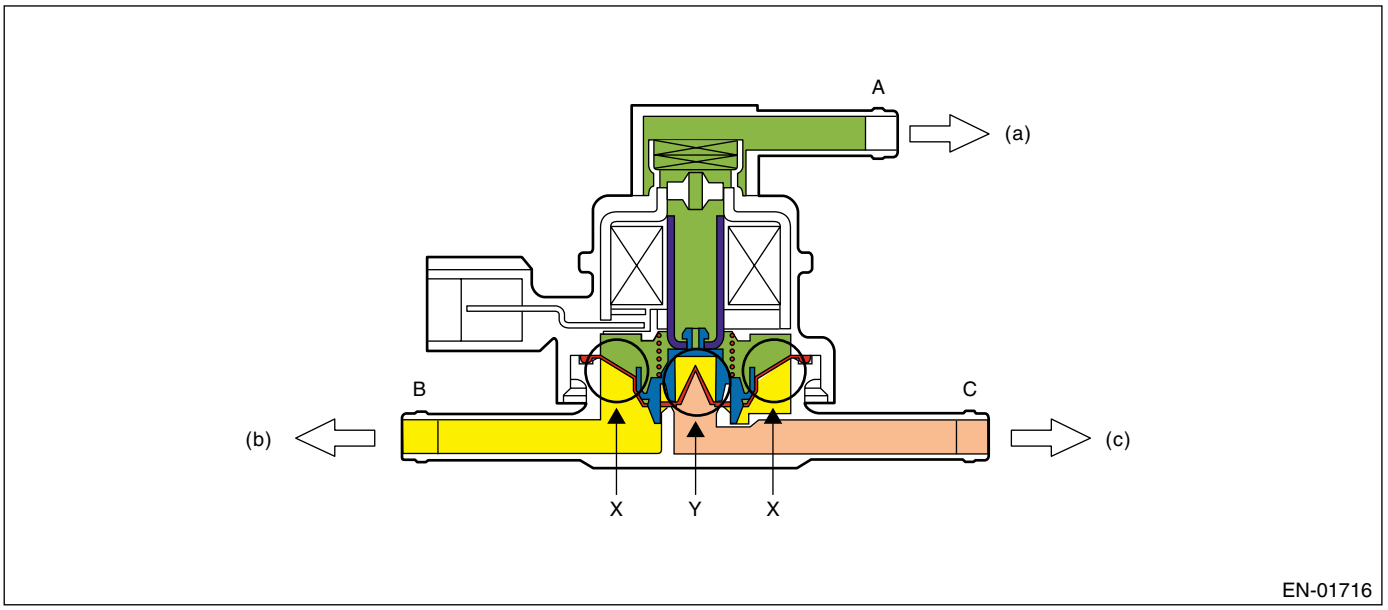

(a) Atmospheric pressure
(b) Fuel tank
(c) Canister

Pressure Status	Flow
A < B (Solenoid OFF)	B → C
B < C (Solenoid OFF)	C → B
Solenoid ON	B ←→ C

When A < B (Solenoid OFF)

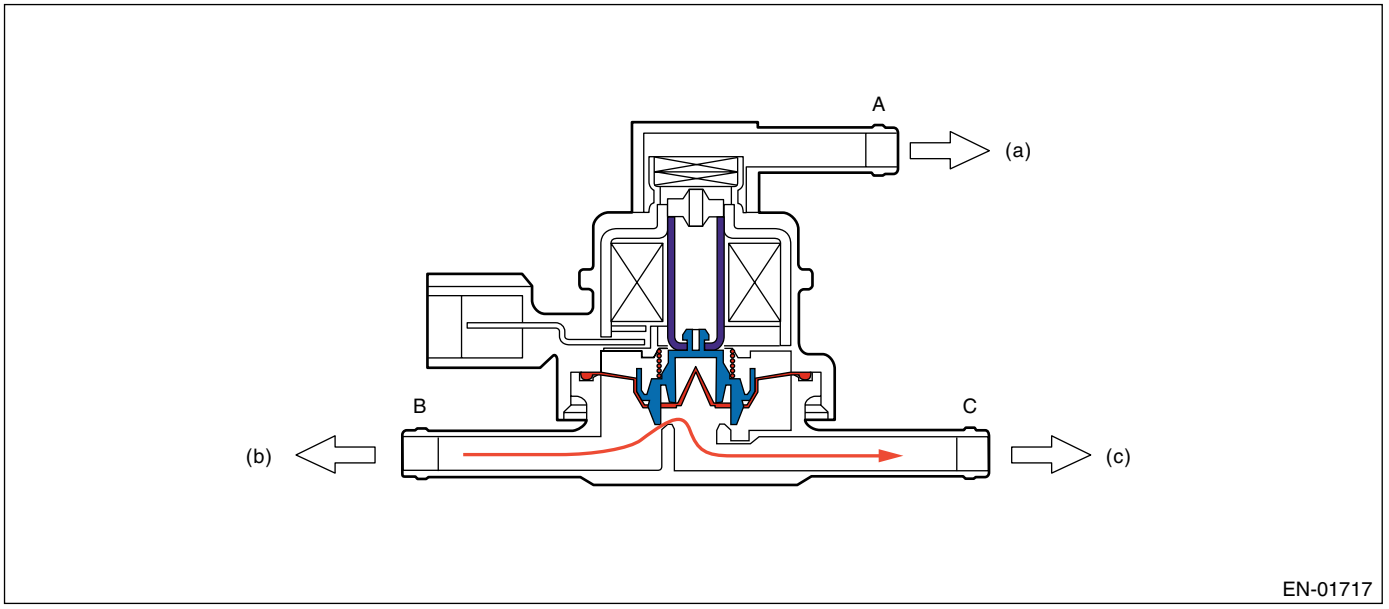

(a) Atmospheric pressure (b) Fuel tank (c) Canister

When B < C (Solenoid OFF)

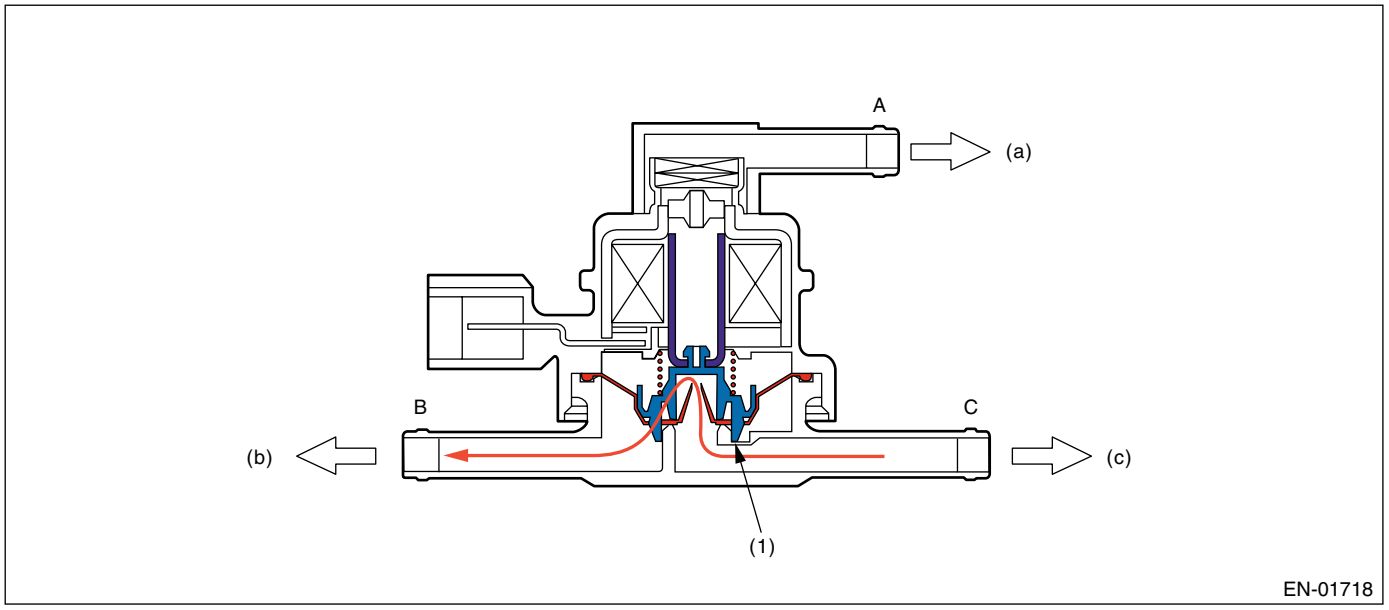

(1) Valve

(a) Atmospheric pressure
(b) Fuel tank
(c) Canister

When solenoid is ON

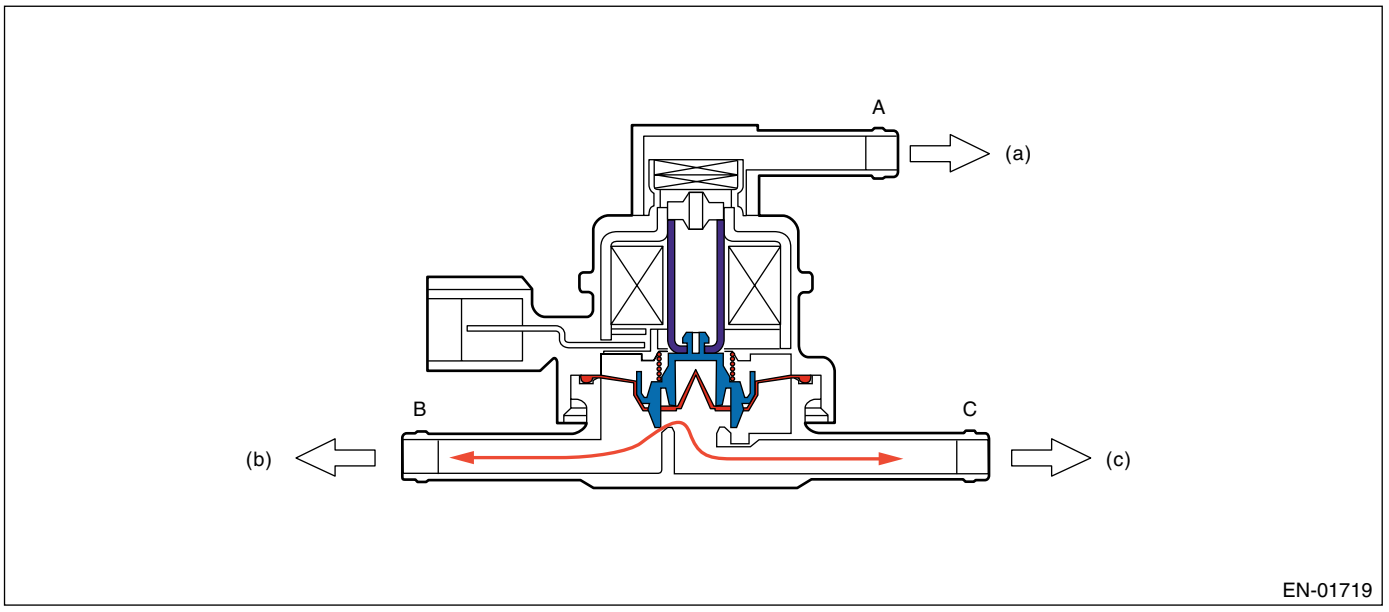

(a) Atmospheric pressure (b) Fuel tank (c) Canister

• Drain valve

Drain valve controls the ambient air to be introduced to the canister.

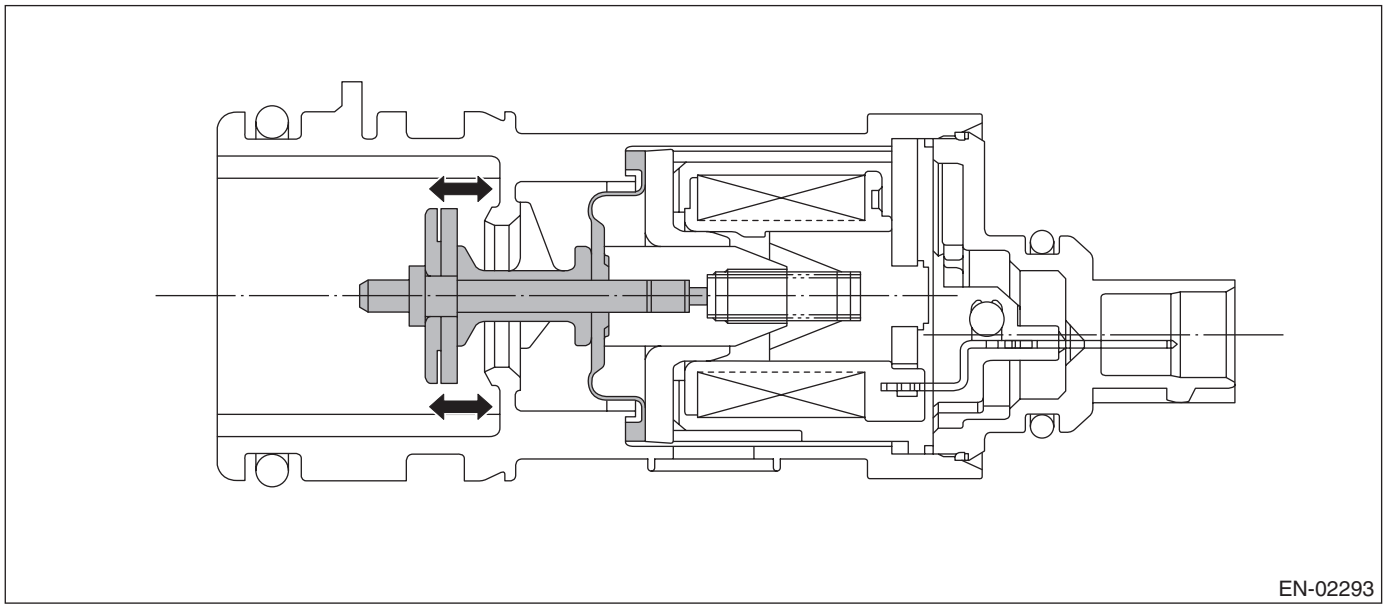

3. ENABLE CONDITION

0.04-inch Diagnosis

Secondary Parameters	Enable Conditions
Battery voltage	≥ 10.9 V
Barometric pressure	≥ 75.1 kPa (563 mmHg, 22.2 inHg)
Accumulated time of canister purge	120 seconds or more
After engine starting	856 seconds or more
Learning value of evaporation gas density (both left and right)	≤ 0.08
Engine speed	1050 ←→ 6500 rpm
Fuel tank pressure	≥ −4.0 kPa (−30 mmHg, −1.18 inHg)
Intake manifold vacuum (relative pressure)	< −26.7 kPa (−200 mmHg, −7.87 inHg)
Vehicle speed	≥ 32 km/h (20 MPH)
Fuel level	9.6 ←→ 54.4 ℓ (2.53 ←→ 14.37 US gal, 2.11 ←→ 12.00 Imp gal)
Closed air fuel ratio control	In operation
Fuel temperature	− 10 ←→ 45°C (14 ←→ 113°F)
Intake air temperature	≥ −10°C (14°F)
Pressure change per second	〈 0.13 kPa (0.96 mmHg, 0.04 inHg)
Min. pressure change per second − Max. pressure change per second	〈 0.23 kPa (1.7 mmHg, 0.023 inHg)
Fuel level change	〈 2 ℓ (2.1 US qt, 1.76 Imp qt)/131 milliseconds
Air fuel ratio	0.76 — 1.25

0.02-inch Diagnosis

Secondary Parameters	Enable Conditions
(At starting a diagnosis)	
Evap. Diagnosis	Incomplete
Battery voltage	≥ 10.9 V
Atmospheric pressure	≥ 75.1 kPa (563 mmHg, 22.2 inHg)
Time since last incompleted diagnosis event of 0.02 inches leak	〉 600 seconds
Accumulated time of canister purge operation	120 seconds or more
After engine starting	770 seconds or more
Fuel temperature	–10 ←→ 55°C (14 ←→ 131°F)
Fuel level	9.6 ←→ 54.4 liters (2.54 ←→ 14.37 US gal, 2.11 ←→ 12.00 Imp gal)
Intake manifold vacuum (relative pressure)	< –8.0 kPa (–60 mmHg, –2.36 inHg)
Fuel tank pressure	–0.43 — 1.43 kPa (–2.6 — 10.7 mmHg, –0.13 — 0.42 inHg)
Vehicle speed	≥ 100 km/h (62 MPH)
Closed air fuel ratio control	In operation
Engine speed	500 ←→ 6800 rpm
(During diagnosis)	
Change of fuel level	≤ 5 ℓ (1.3 US gal, 1.1 Imp gal)
Pressure change per second	〈 0.06 kPa (0.44 mmHg, 0.02 inHg)
Min. tank pressure change per second – Max. tank pressure change per second	〈 0.07 kPa (0.51 mmHg, 0.02 inHg)
|Tank pressure change per second|	≤ 0.1 kPa (0.75 mmHg, 0.03 inHg)
Pressure change (Mode D)	–0.47 ←→ 0.32 kPa (–3.5 ←→ 2.4 mmHg, –0.14 ←→ 0.09 inHg)
Pressure change (Mode E)	–0.32 ←→ 0.32 kPa (–2.4 ←→ 2.4 mmHg, –0.09 ←→ 0.09 inHg)

4. GENERAL DRIVING CYCLE

• 0.04-inch Diagnosis

• Perform the diagnosis only once in 856 seconds or more after starting the engine constantly at 32 km/h (19.9 MPH) or more.
• Pay attention to the fuel temperature and fuel level.

• 0.02-inch Diagnosis

• Perform the diagnosis in 770 seconds after starting the engine constantly at 68 km/h (42 MPH) or more, and perform OK/NG judgment.
• If OK/NG judgment is not possible, repeat the diagnosis.
• Pay attention to the fuel temperature and fuel level.

5. DIAGNOSTIC METHOD

• 0.04-inch Diagnosis

Purpose of Mode Z

When performing the leakage diagnosis of EVAP system, and CPC have to operate normally. Therefore, mode Z is used for monitoring the tank pressure to diagnose the CPC open fixation.

If the CPC open fixation trouble is detected, the evaporation system leakage diagnosis is cancelled.

• Diagnosing The CPC Open Fixation

DTC

P0457 Evaporative Emission Control System Leak Detected (Fuel Cap Loose/Off)

CPC open fixation diagnosis are performed in mode Z as shown in the figure below.

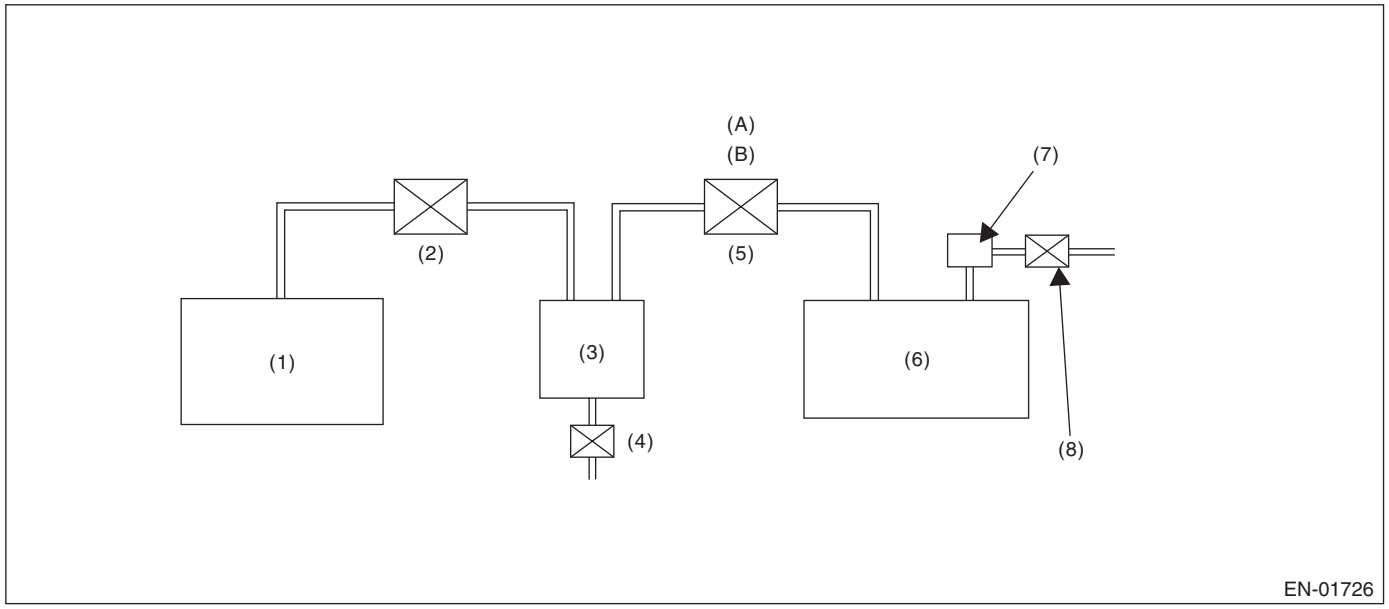

(1)	Engine	(4)	Drain valve	(7)	Fuel tank pressure sensor
(2)	Purge control solenoid valve	(5)	Pressure control solenoid valve	(8)	Fuel tank sensor control valve
(3)	Canister	(6)	Fuel tank		
(A)	Normal condition: mechanical control	(B)	During diagnosis: electronic control		

• Diagnosing function of CPC

DTC

P0457 Evaporative Emission Control System Leak Detected (Fuel Cap Loose/Off)

CPC functional diagnosis is performed by monitoring the tank pressure in Mode Z.

Normality Judgment

Make OK judgment in 3 seconds after Mode Z started, and change to Mode A if OK.

Judgment Value

Malfunction Criteria	Threshold Value	DTC
(Tank pressure when Mode Z started) — (Tank pressure when Mode Z finished)	≤ 0.4 kPa (3 mmHg, 0.12 inHg)	P0457

• Normal Operation

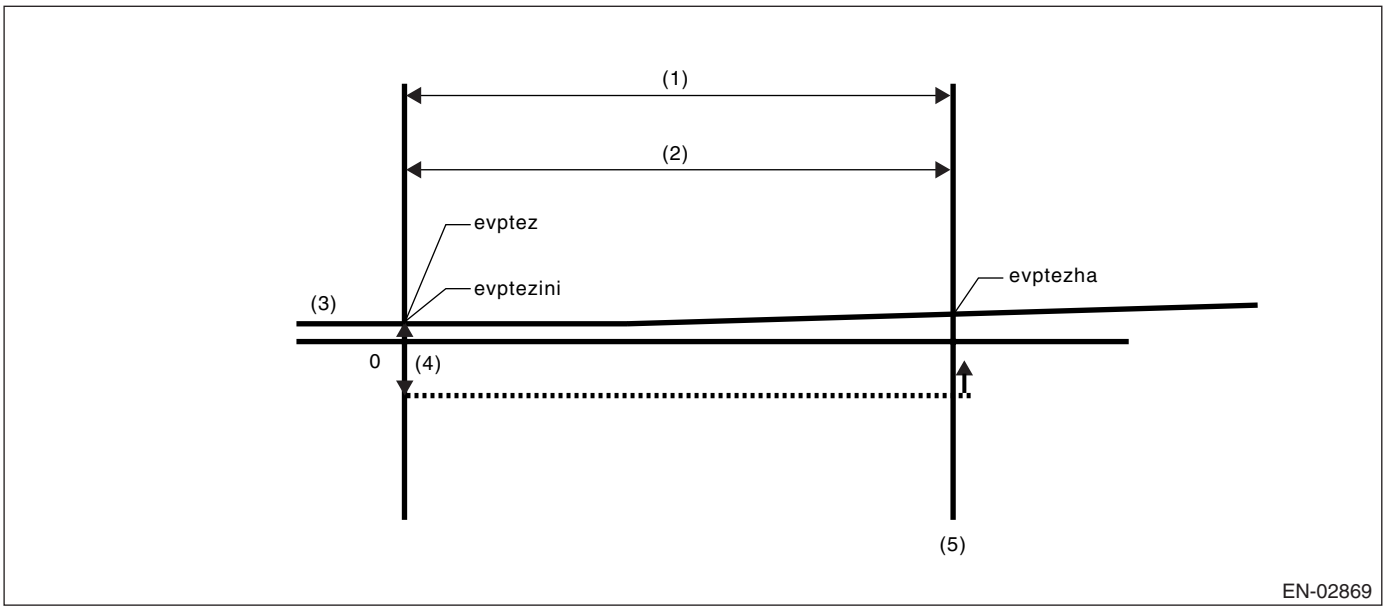

(1) Mode Z
(2) 3 seconds
(3) Fuel tank pressure
(4) 0.4 kPa (3.0 mmHg, 0.12 inHg)
(5) OK judgment

- evptez − evptezha ≤ 0.4 kPa (3.0 mmHg, 0.12 inHg)
- evptezini − evptezha ≤ 0.4 kPa (3.0 mmHg, 0.12 inHg)

Judge normal when both calculation is completed.

Abnormality Judgment

If OK judgment cannot be made, extend Mode Z 16 seconds more, and judge NG when all the criteria below are completed in 16 seconds.

Judgment Value

Malfunction Criteria	Threshold Value	DTC
(Tank pressure when Mode Z started) − (Tank pressure when Mode Z finished)	〉0.6 kPa (4.5 mmHg, 0.18 inHg)	P0457
Tank pressure when Mode Z started	≤ 1.43 kPa (10.7 mmHg, 0.42 inHg)	
Time for no fuel rolling of 2 ℓ or more	≥ 40 seconds	

Time Needed for Diagnosis: 16 seconds

Malfunction Indicator Light Illumination: Illuminates when malfunction occurs in 2 continuous driving cycles.

Finish the Evap. diagnosis when making NG judgment for purge control solenoid valve open fixation.

Cancel the Evap. diagnosis when the OK/NG judgment for drain valve close fixation and purge control solenoid valve open fixation cannot be made in Mode Z.

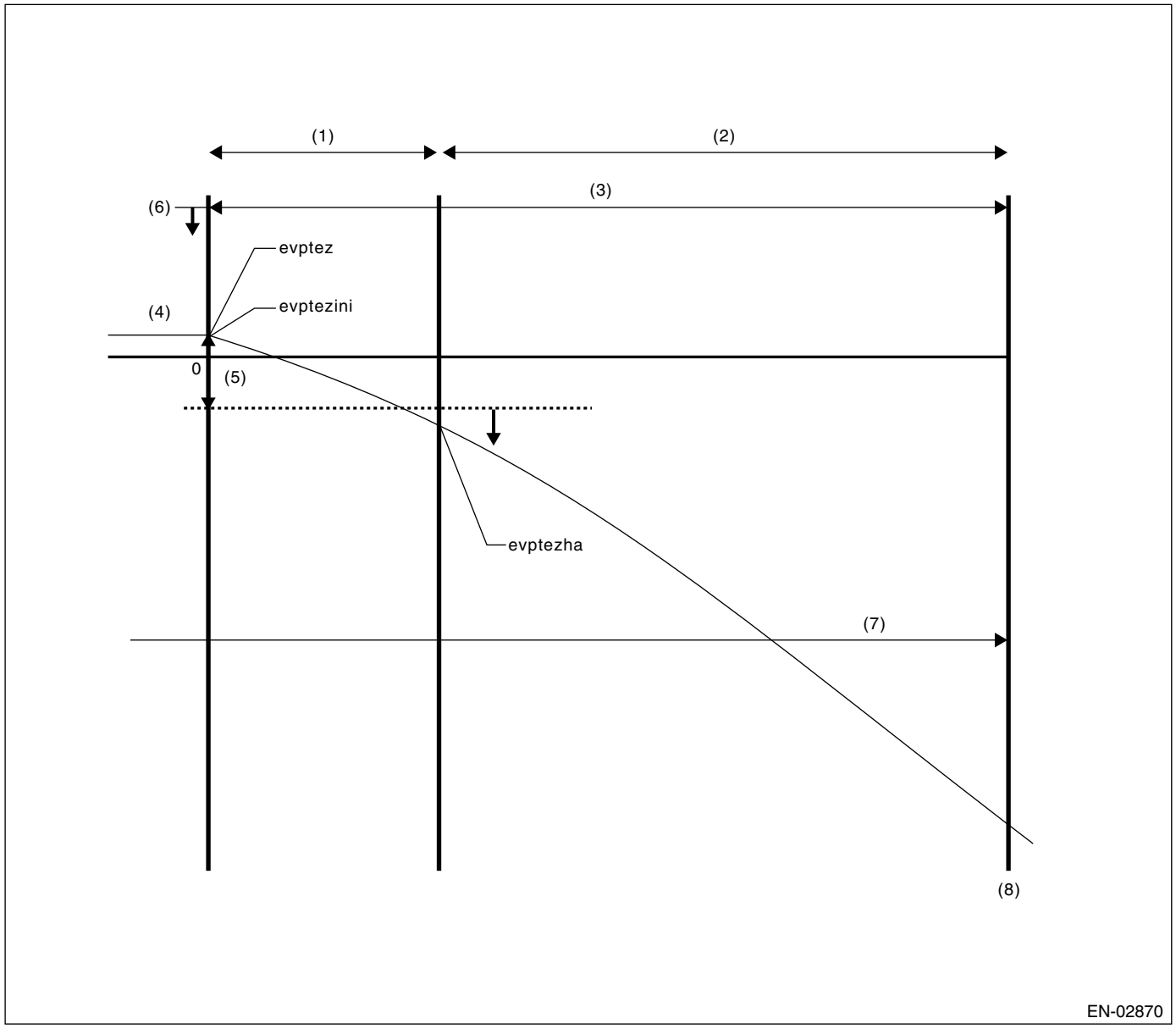

(1)	Mode Z	(4)	Fuel tank pressure	(7)	No fuel rolling for more than 40 seconds
(2)	Mode Z extension	(5)	0.87 kPa (6.5 mmHg, 0.26 inHg)		
(3)	16 seconds	(6)	1.43 kPa (10.7 mmHg, 0.42 inHg)	(8)	NG judgment

- evptezini, evptez ≤ 1.43 kPa (10.7 mmHg, 0.42 inHg)
- evptez – evptezha ≤ 0.87 kPa (6.5 mmHg, 0.26 inHg)
- evptezini – evptezha ≤ 0.87 kPa (6.5 mmHg, 0.26 inHg)
- No fuel rolling of above 2 ℓ (0.79 US gal, 0.67 Imp gal) for more than 40 seconds.

Judge normal when all calculations are completed.

• Leak Diagnosis

DTC

P0442 Evaporative Emission Control System Leak Detected (Small Leak)
P0457 Evaporative Emission Control System Leak Detected (Fuel Cap Loose/Off)

• Diagnostic method

The diagnostic method consists of creating a sealed vacuum in the fuel tank and then determining the presence of leakage from the speed at which the tank internal pressure returns to atmospheric pressure.

Mode A: (Estimation of evaporation gas yield)

The amount of change of tank pressure (P1) in Mode A is calculated. After calculating P1, change to Mode B.

Mode B: (Seal negative pressure)

Introduce the negative pressure in the intake manifold to the tank.

Approx. 0 → −1.4 kPa (0 → −10.5 mmHg, 0 → −0.41 inHg)

When the pressure above (desired negative pressure) is reached, Mode C is entered.

In this case, if the tank pressure does not become the desired negative pressure, judge that there is a large leakage in the system and judge as large leak (10 or 25 seconds).

Abnormality Judgment

Judge NG (large leak) when the criteria below are completed in the specified time.

Judgment Value

Malfunction Criteria	Threshold Value	DTC
Time before reaching desired negative pressure	≥ 25 seconds	P0457
Or time for Mode B	≥ 10 seconds	
(Min. value of tank pressure during Mode B) − (Tank pressure when Mode B started)	< −0.3 kPa (−2 mmHg, −0.08 inHg)	

Mode C: (Check increasing pressure)

Stop the introduction of negative pressure. (Wait until the tank pressure returns to the start level of P2 calculation.)

Change to Mode D when the tank pressure returns to the start level of P2 calculation.

Judge immediate OK and change to Mode E when it does not return in spite of spending the specified time.

Tank pressure when P2 calculation started	Time for immediate OK judgment
−1.3 kPa (−9.75 mmHg, −0.38 inHg)	15 seconds

Mode D: (Measurement of negative pressure changes)

Monitor the pressure variation in the tank in Mode Z. In this case, the tank pressure increases, that is, the pressure becomes as high as the atmospheric air pressure, because evaporator is generated. However, if any leakage exists, the pressure increases additionally in proportion to this leakage. The pressure variation of this tank is P2.

After calculating P2, perform following small leak diagnosis.

• After Mode D

Assigning P1 and P2, which are tank variations measured in Mode A and Mode B, to the formula below, judge the small leakage of the system. If the measured judgment value exceeds the threshold value, it is judged to be malfunction.

Judge NG when the criteria below are completed and judge OK when not completed.

Judgment Value

Malfunction Criteria	Threshold Value	DTC
P2 − 1.5 × P1 P2: Change of tank pressure within 10 seconds on Mode D P1: Change of tank pressure within 10 seconds on Mode A	> Value on Map 7. * Threshold value: Figure (Fuel level vs Tank temperature)	P0442

***1.5:** Compensation value of the amount of evaporator occurrence. (Because evaporator increases more when becoming negative pressure.)

Map 7 Limit of malfunction criteria for 0.04-inch leak as Evap. diagnosis.

Fuel temperature & Fuel level	25°C (77°F)	30°C (86°F)	35°C (95°F)	40°C (104°F)	45°C (113°F)
10 L (2.6 US gal, 2.2 Imp gal)	0.28 kPa (2.1 mmHg, 0.083 inHg)	0.29 kPa (2.2 mmHg, 0.087 inHg)	0.31 kPa (2.3 mmHg, 0.090 inHg)	0.31 kPa (2.35 mmHg, 0.092 inHg)	0.32 kPa (2.4 mmHg, 0.094 inHg)
20 L (5.3 US gal, 4.4 Imp gal)	0.31 kPa (2.3 mmHg, 0.091 inHg)	0.32 kPa (2.4 mmHg, 0.094 inHg)	0.33 kPa (2.5 mmHg, 0.098 inHg)	0.35 kPa (2.6 mmHg, 0.102 inHg)	0.36 kPa (2.7 mmHg, 0.106 inHg)
30 L (7.9 US gal, 6.6 Imp gal)	0.39 kPa (2.9 mmHg, 0.114 inHg)	0.41 kPa (3.05 mmHg, 0.120 inHg)	0.42 kPa (3.15 mmHg, 0.124 inHg)	0.43 kPa (3.25 mmHg, 0.128 inHg)	0.45 kPa (3.35 mmHg, 0.134 inHg)
40 L (10.6 US gal, 8.8 Imp gal)	0.39 kPa (2.9 mmHg, 0.114 inHg)	0.42 kPa (3.15 mmHg, 0.124 inHg)	0.44 kPa (3.3 mmHg, 0.130 inHg)	0.45 kPa (3.4 mmHg, 0.134 inHg)	0.47 kPa (3.5 mmHg, 0.138 inHg)
50 L (13.2 US gal, 11.0 Imp gal)	0.43 kPa (3.2 mmHg, 0.126 inHg)	0.44 kPa (3.3 mmHg, 0.130 inHg)	0.47 kPa (3.5 mmHg, 0.138 inHg)	0.48 kPa (3.6 mmHg, 0.142 inHg)	0.49 kPa (3.7 mmHg, 0.146 inHg)

Time Needed for Diagnosis: 30 — 100 seconds

0.02-inch Diagnosis

DTC

P0456 Evaporative Emission Control System (Very Small Leak)

• Diagnostic method

The diagnostic method consists of creating a sealed vacuum in the fuel tank and then determining the presence of leakage from the speed at which the tank internal pressure returns to atmospheric pressure.

Mode A: (0 point correction)

Wait until the tank pressure returns to 0 point (0 kPa (0 mmHg, 0 inHg)) when the tank pressure is high. Change to Mode B when the tank pressure becomes 0. Cancel the diagnosis when the tank pressure does not return to 0 point in spite of spending the specified time.

Mode B: (Introduce negative pressure)

Introduce the intake manifold negative pressure to fuel tank.

About 0 → –2.0 kPa (0 mmHg → –15 mmHg, 0 → –0.59 inHg)

Change to Mode C when the tank pressure becomes the pressure (desired negative pressure) above. Cancel the diagnosis when the tank pressure does not become the value above.

Mode C: (Hold negative pressure)

Stop introducing the negative pressure and wait the tank pressure returns to the start level of P2 calculation. Change to Mode D when the tank pressure returns to the start level of P2 calculation or when spending the specified time.

Mode D: (Calculation of negative pressure variation)

Monitor the tank pressure on Mode D, and calculate the tank pressure variation (P2) and time until it returns to the end level of P2 (evpdset). When it returns, change to Mode E. Make advanced OK judgment or cancel depending on the P2 level, when it doesn't return in spite of spending the specified time.

Judge OK when the criteria below are completed.

Judgment Value

Malfunction Criteria	Threshold Value	DTC
Advanced OK judgment #1		P0456
Mode D time	≥ 30 s	
Tank pressure	≤ −1.8 kPa (−13.4 mmHg, −0.53 inHg)	
Advanced OK judgment #2		
Mode D time	≥ 200 s	
P2	≥ 0.9 — 1.3 kPa (7 — 9.6 mmHg, 0.28 — 0.38 inHg)	

Mode E: (Calculation of evaporation gas yield)

Calculate the tank pressure variation P1 in time evpdset, judge NG/OK from P1 value. (Gray judgment possible)

Abnormal judgment

Judge NG when the criteria below are completed.

Judgment Value

Malfunction Criteria	Threshold Value	DTC
P1	〈 Map 7 value * Threshold value: map (fuel level vs evpdset)	P0456

Map 7 Limit of malfunction criteria for 0.02-inch leak as Evap. diagnosis

Time evpdset & Fuel level	0 second	30 seconds	50 seconds	100 seconds	160 seconds	200 seconds
10 L (2.6 US gal, 2.2 Imp gal)	0 kPa (0 mmHg, 0 inHg)	0.07 kPa (0.5 mmHg, 0.020 inHg)	0.23 kPa (1.7 mmHg, 0.067 inHg)	0.36 kPa (2.7 mmHg, 0.106 inHg)	0.36 kPa (2.7 mmHg, 0.106 inHg)	0.36 kPa (2.7 mmHg, 0.106 inHg)
20 L (5.3 US gal, 4.4 Imp gal)	0 kPa (0 mmHg, 0 inHg)	0.07 kPa (0.5 mmHg, 0.020 inHg)	0.23 kPa (1.7 mmHg, 0.067 inHg)	0.36 kPa (2.7 mmHg, 0.106 inHg)	0.36 kPa (2.7 mmHg, 0.106 inHg)	0.36 kPa (2.7 mmHg, 0.106 inHg)
30 L (7.9 US gal, 6.6 Imp gal)	0 kPa (0 mmHg, 0 inHg)	0.07 kPa (0.5 mmHg, 0.020 inHg)	0.23 kPa (1.7 mmHg, 0.067 inHg)	0.36 kPa (2.7 mmHg, 0.106 inHg)	0.36 kPa (2.7 mmHg, 0.106 inHg)	0.36 kPa (2.7 mmHg, 0.106 inHg)
40 L (10.6 US gal, 8.8 Imp gal)	0 kPa (0 mmHg, 0 inHg)	0.07 kPa (0.5 mmHg, 0.020 inHg)	0.25 kPa (1.85 mmHg, 0.073 inHg)	0.33 kPa (2.5 mmHg, 0.098 inHg)	0.33 kPa (2.5 mmHg, 0.098 inHg)	0.33 kPa (2.5 mmHg, 0.098 inHg)
50 L (13.2 US gal, 11.0 Imp gal)	0 kPa (0 mmHg, 0 inHg)	0.07 kPa (0.5 mmHg, 0.020 inHg)	0.27 kPa (2.0 mmHg, 0.079 inHg)	0.31 kPa (2.3 mmHg, 0.091 inHg)	0.31 kPa (2.3 mmHg, 0.091 inHg)	0 kPa (0 mmHg, 0 inHg)

• Normality Judgment

Judge OK when all the malfunction criteria below are completed.

Judgment Value

Malfunction Criteria	Threshold Value	DTC
P1	〉Value of Map 8 * Threshold value: Map (Fuel level vs evpdset)	P0456

Map 8

Time evpdset & Fuel level	0 second	30 seconds	50 seconds	100 seconds	160 seconds	200 seconds
10 L (2.6 US gal, 2.2 Imp gal)	0.13 kPa (1.0 mmHg, 0.039 inHg)	0.47 kPa (3.5 mmHg, 0.138 inHg)	0.56 kPa (4.2 mmHg, 0.165 inHg)	0.56 kPa (4.2 mmHg, 0.165 inHg)	0.56 kPa (4.2 mmHg, 0.165 inHg)	0.56 kPa (4.2 mmHg, 0.165 inHg)
20 L (5.3 US gal, 4.4 Imp gal)	0.13 kPa (1.0 mmHg, 0.039 inHg)	0.43 kPa (3.25 mmHg, 0.128 inHg)	0.55 kPa (4.1 mmHg, 0.161 inHg)	0.55 kPa (4.1 mmHg, 0.161 inHg)	0.55 kPa (4.1 mmHg, 0.161 inHg)	0.55 kPa (4.1 mmHg, 0.161 inHg)
30 L (7.9 US gal, 6.6 Imp gal)	0.13 kPa (1.0 mmHg, 0.039 inHg)	0.4 kPa (3 mmHg, 0.118 inHg)	0.52 kPa (3.9 mmHg, 0.154 inHg)	0.52 kPa (3.9 mmHg, 0.154 inHg)	0.52 kPa (3.9 mmHg, 0.154 inHg)	0.52 kPa (3.9 mmHg, 0.154 inHg)
40 L (10.6 US gal, 8.8 Imp gal)	0.13 kPa (1.0 mmHg, 0.039 inHg)	0.30 kPa (2.25 mmHg, 0.089 inHg)	0.45 kPa (3.4 mmHg, 0.134 inHg)	0.45 kPa (3.4 mmHg, 0.134 inHg)	0.45 kPa (3.4 mmHg, 0.134 inHg)	0.45 kPa (3.4 mmHg, 0.134 inHg)
50 L (13.2 US gal, 11.0 Imp gal)	0.13 kPa (1.0 mmHg, 0.039 inHg)	0.20 kPa (1.5 mmHg, 0.059 inHg)	0.39 kPa (2.9 mmHg, 0.114 inHg)	0.39 kPa (2.9 mmHg, 0.114 inHg)	0.39 kPa (2.9 mmHg, 0.114 inHg)	0.39 kPa (2.9 mmHg, 0.114 inHg)

Time Needed for Diagnosis: 65 — 514 seconds
Malfunction Indicator Light Illumination: Illuminates when malfunction occurs in 2 continuous drive cycles.

6. DTC CLEAR CONDITION

- When the OK idling cycle was completed 40 times in a row
- When “Clear Memory” was performed

7. MALFUNCTION INDICATOR LIGHT CLEAR CONDITION

- When the OK driving cycle was completed 3 times in a row
- When “Clear Memory” was performed

8. FAIL SAFE

None

9. ECM OPERATION AT DTC SETTING

- Memorize the freeze frame data. (For test mode $02)
- Memorize the diagnostic value and trouble standard value. (For test mode $06)

BZ:DTC P0447 EVAPORATIVE EMISSION CONTROL SYSTEM VENT CONTROL CIRCUIT OPEN

1. OUTLINE OF DIAGNOSIS

Detect the open or short circuit of drain valve.
Judge NG when the ECM output level is different from the actual terminal level.

2. COMPONENT DESCRIPTION

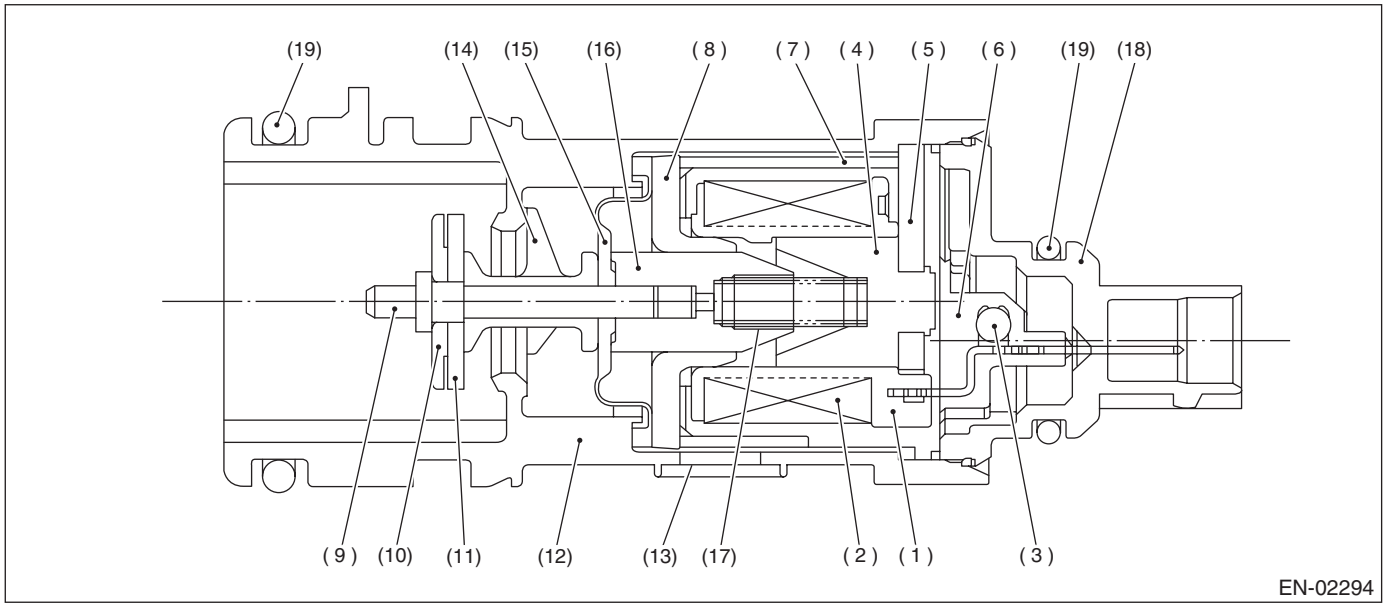

(1) Bobbin
(2) Coil
(3) Diode
(4) Stator core
(5) End plate
(6) Body
(7) Yoke
(8) Magnetic plate
(9) Shaft
(10) Plate
(11) Valve
(12) Housing
(13) Filter
(14) Retainer
(15) Diaphragm
(16) Movable core
(17) Spring
(18) Cover
(19) O-ring

3. ENABLE CONDITION

Secondary Parameters	Enable Conditions
None	

4. GENERAL DRIVING CYCLE

Always perform the diagnosis continuously.

5. DIAGNOSTIC METHOD

• Abnormality Judgment

Judge NG when the continuous time of completing the malfunction criteria below becomes more than 2.5 seconds.

Judgment Value

Malfunction Criteria	Threshold Value
Ignition switch	ON
Battery voltage	≥ 10.9 V
After engine starting	1 second or more
Terminal output voltage when ECM sends OFF signal	Low

Time Needed for Diagnosis: 2.5 seconds
Malfunction Indicator Light Illumination: Illuminates as soon as the malfunction occurs.
• Normality Judgment

Judge OK and clear the NG when the malfunction criteria below are completed.
Judgment Value

Malfunction Criteria	Threshold Value
Ignition switch	ON
Battery voltage	≥ 10.9 V
After engine starting	1 second or more
Terminal output voltage when ECM sends OFF signal	High

6. DTC CLEAR CONDITION

- When the OK idling cycle was completed 40 times in a row
- When “Clear Memory” was performed

7. MALFUNCTION INDICATOR LIGHT CLEAR CONDITION

- When the OK driving cycle was completed 3 times in a row
- When “Clear Memory” was performed

8. FAIL SAFE

PCV control: Open the PCV solenoid.

9. ECM OPERATION AT DTC SETTING

Memorize the freeze frame data. (For test mode $02)

CA:DTC P0448 EVAPORATIVE EMISSION CONTROL SYSTEM VENT CONTROL CIRCUIT SHORTED

1. OUTLINE OF DIAGNOSIS

Detect the open or short circuit of drain valve.
Judge NG when the ECM output level is different from the actual terminal level.

2. COMPONENT DESCRIPTION

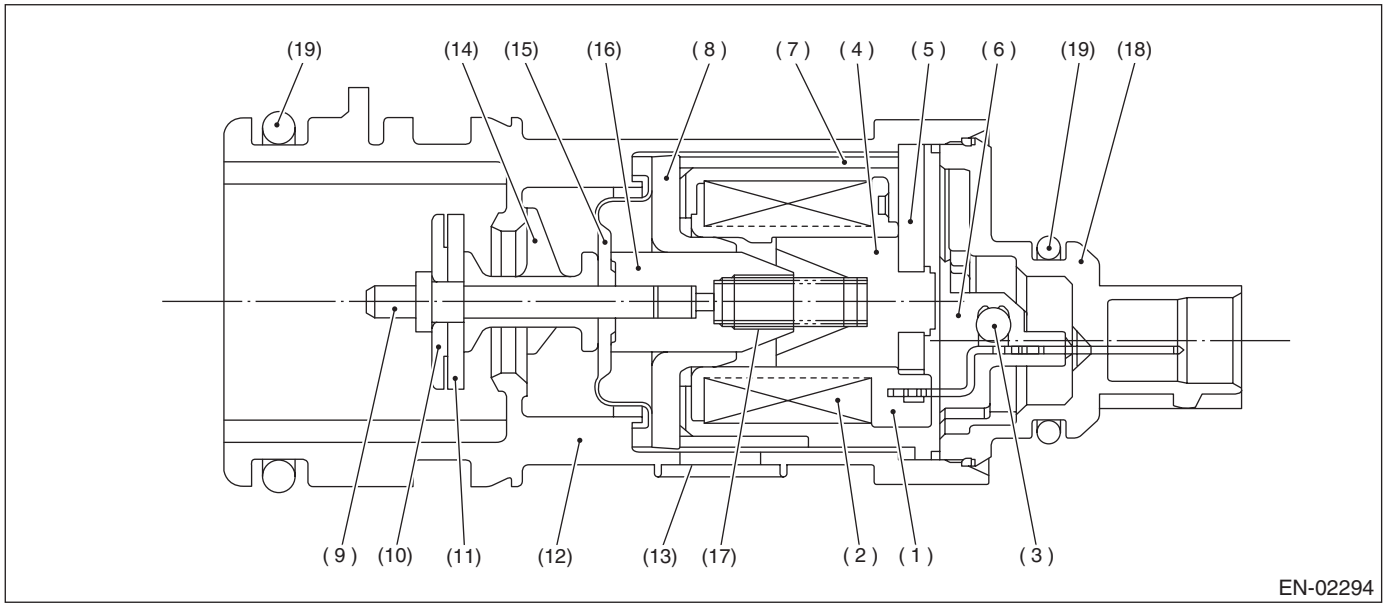

(1) Bobbin
(2) Coil
(3) Diode
(4) Stator core
(5) End plate
(6) Body
(7) Yoke
(8) Magnetic plate
(9) Shaft
(10) Plate
(11) Valve
(12) Housing
(13) Filter
(14) Retainer
(15) Diaphragm
(16) Movable core
(17) Spring
(18) Cover
(19) O-ring

3. ENABLE CONDITION

Secondary Parameters	Enable Conditions
None	

4. GENERAL DRIVING CYCLE

Always perform the diagnosis continuously.

5. DIAGNOSTIC METHOD

• Abnormality Judgment

Judge NG when the continuous time of completing the malfunction criteria below becomes more than 2.5 seconds.

Judgment Value

Malfunction Criteria	Threshold Value
Ignition switch	ON
Battery voltage	≥ 10.9 V
After engine starting	1 second or more
Terminal output voltage when ECM sends ON signal	High

Time Needed for Diagnosis: 2.5 seconds
Malfunction Indicator Light Illumination: Illuminates as soon as the malfunction occurs.
• Normality Judgment

Judge OK and clear the NG when the malfunction criteria below are completed.
Judgment Value

Malfunction Criteria	Threshold Value
Ignition switch	ON
Battery voltage	≥ 10.9 V
After engine starting	1 second or more
Terminal output voltage when ECM sends ON signal	Low

6. DTC CLEAR CONDITION

- When the OK idling cycle was completed 40 times in a row
- When “Clear Memory” was performed

7. MALFUNCTION INDICATOR LIGHT CLEAR CONDITION

- When the OK driving cycle was completed 3 times in a row
- When “Clear Memory” was performed

8. FAIL SAFE

PCV control: Open the PCV solenoid.

9. ECM OPERATION AT DTC SETTING

Memorize the freeze frame data. (For test mode $02)

CB:DTC P0451 EVAPORATIVE EMISSION CONTROL SYSTEM PRESSURE SENSOR

1. OUTLINE OF DIAGNOSIS

Detect the tank pressure sensor output property abnormality.
Judge NG when there is no pressure variation, which should exist in the tank, considering the engine status.

2. COMPONENT DESCRIPTION

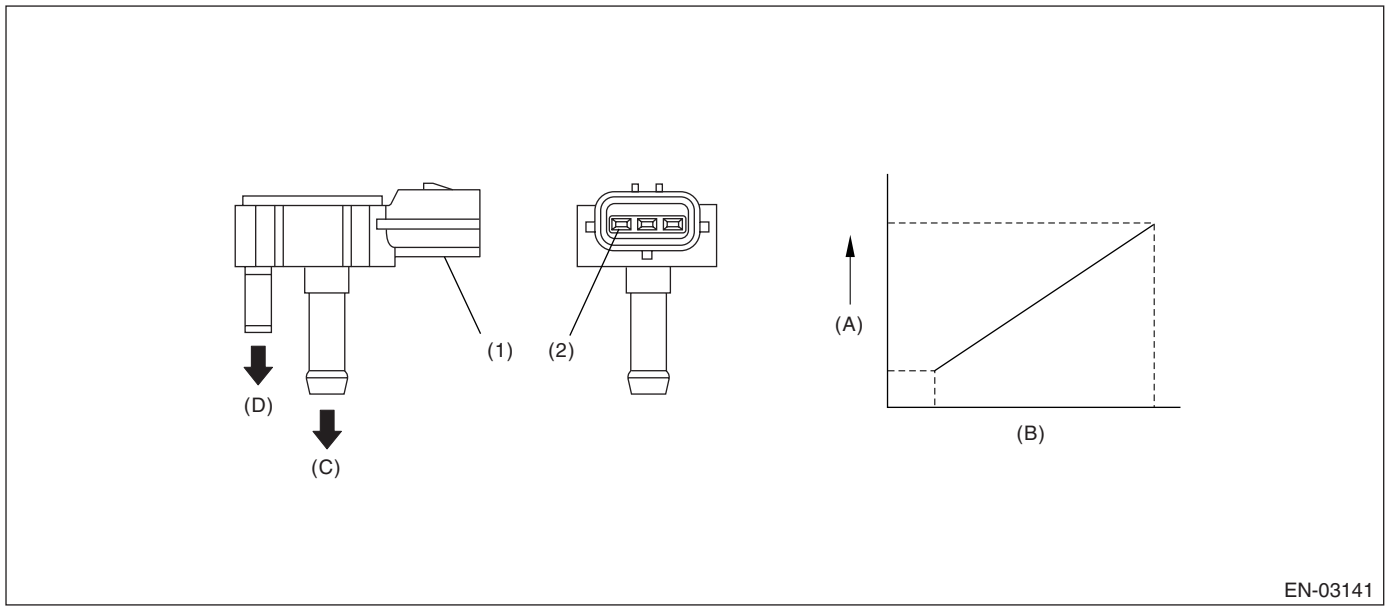

(1) Connector
(2) Terminal
(A) Output voltage
(B) Input voltage
(C) To fuel tank
(D) To fuel tank sensor control valve

3. ENABLE CONDITION

Secondary Parameters	Enable Conditions
After starting the engine	60 seconds or more
Fuel level	≥ 9.6 ℓ (2.54 US gal, 2.11 Imp gal)
Fuel temperature	〈 35°C (95°F)
Battery voltage	≥ 10.9 V
Atmospheric pressure	〉 75.1 kPa (563 mmHg, 22.2 inHg)
Engine speed	〈 6500 rpm

4. GENERAL DRIVING CYCLE

- Perform the diagnosis continuously in 60 seconds or more after starting the engine.
- Be sure to check the fuel level and fuel temperature.

5. DIAGNOSTIC METHOD

• Abnormality Judgment

Judge NG when the malfunction criteria below is completed.

Judgment Value

Malfunction Criteria	Threshold Value
Number of times when the difference between the Max. fuel level and the Min., fuel level every 60 seconds is 2 ℓ (0.52 US gal, 0.44 Imp gal) or more (with enable condition completed)	≥ 16 times
Max. − Min. tank pressure (with enable condition completed)	< 0.05 kPa (0.375 mmHg, 0.02 inHg)
Max. − Min. fuel temperature (with enable condition completed)	≥ 7°C (44.6°F)

If the fuel level (Max. − Min.) in every 60 seconds is less than 2 ℓ (0.52 US gal, 0.44 Imp gal), extend 60 seconds more and make judgment with the Max. and Min. fuel level in 120 seconds.
If the difference did not appear though the time extended, extend the time (180, 240, 300 seconds) and continue the judgment.
Diagnosis counter will count up when the difference of fuel level (Max. − Min.) is more than 2 ℓ (0.52 US gal, 0.44Imp gal).
Time Needed for Diagnosis: 60 seconds × 16 times or more
Malfunction Indicator Light Illumination: Illuminates when malfunction occurs in two continuous drive cycles.

• Normality Judgment

Judge OK when the malfunction criteria below is completed.
Judgment Value

Malfunction Criteria	Threshold Value
Max. − Min. tank pressure	≥ 0.05 kPa (0.375 mmHg, 0.02 inHg)

6. DTC CLEAR CONDITION

- When the OK idling cycle was completed 40 times in a row
- When “Clear Memory” was performed

7. MALFUNCTION INDICATOR LIGHT CLEAR CONDITION

- When the OK driving cycle was completed 3 times in a row
- When “Clear Memory” was performed

8. FAIL SAFE

Purge control solenoid valve control: Purge fixation mode is prohibited.

9. ECM OPERATION AT DTC SETTING

Memorize the freeze frame data. (For test mode $02)

CC:DTC P0452 EVAPORATIVE EMISSION CONTROL SYSTEM PRESSURE SENSOR LOW INPUT

1. OUTLINE OF DIAGNOSIS

Detect the open or short circuit of the fuel tank pressure sensor.
Judge NG when out of the standard value.

2. COMPONENT DESCRIPTION

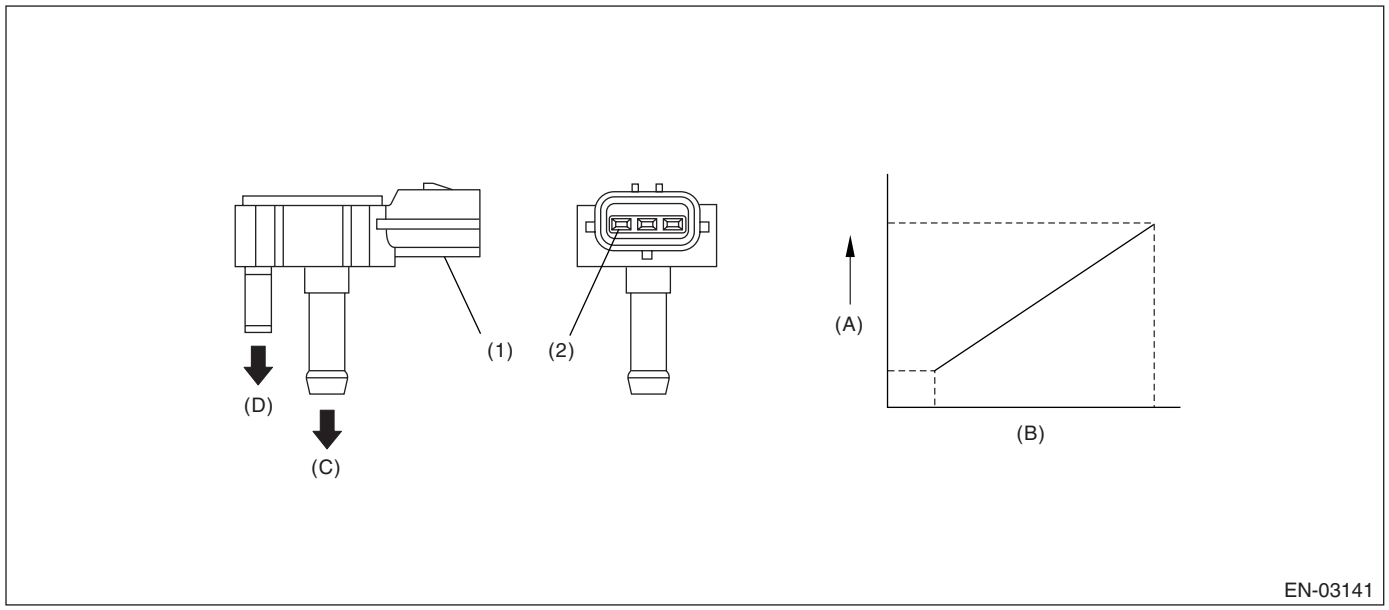

(1) Connector
(2) Terminal
(A) Output voltage
(B) Input voltage
(C) To fuel tank
(D) To fuel tank sensor control valve

3. ENABLE CONDITION

Secondary Parameters	Enable Conditions
None	

4. GENERAL DRIVING CYCLE

Always perform the diagnosis continuously.

5. DIAGNOSTIC METHOD

• Abnormality Judgment

Judge NG when the continuous time of completing the malfunction criteria below becomes more than 15 seconds.

Judgment Value

Malfunction Criteria	Threshold Value
Fuel tank pressure	< –7.4 kPa (–55.85 mmHg, –2.20 inHg)
Battery voltage	≥ 10.9 V

Time Needed for Diagnosis: 15 seconds
Malfunction Indicator Light Illumination: Illuminates as soon as malfunction occurs.

• Normality Judgment

Judge OK when the malfunction criteria below is completed.

Judgment Value

Malfunction Criteria	Threshold Value
Fuel tank pressure	≥ −7.4 kPa (−55.85 mmHg, −2.20 inHg)
Battery voltage	≥ 10.9 V

6. DTC CLEAR CONDITION

- When the OK idling cycle was completed 40 times in a row
- When “Clear Memory” was performed

7. MALFUNCTION INDICATOR LIGHT CLEAR CONDITION

- When the OK driving cycle was completed 3 times in a row
- When “Clear Memory” was performed

8. FAIL SAFE

Purge control solenoid valve control: Purge fixation mode is prohibited.

9. ECM OPERATION AT DTC SETTING

Memorize the freeze frame data. (For test mode $02)

CD:DTC P0453 EVAPORATIVE EMISSION CONTROL SYSTEM PRESSURE SENSOR HIGH INPUT

1. OUTLINE OF DIAGNOSIS

Detect the breaking/shortage of the fuel tank pressure sensor.
Judge NG when out of the standard value.

2. COMPONENT DESCRIPTION

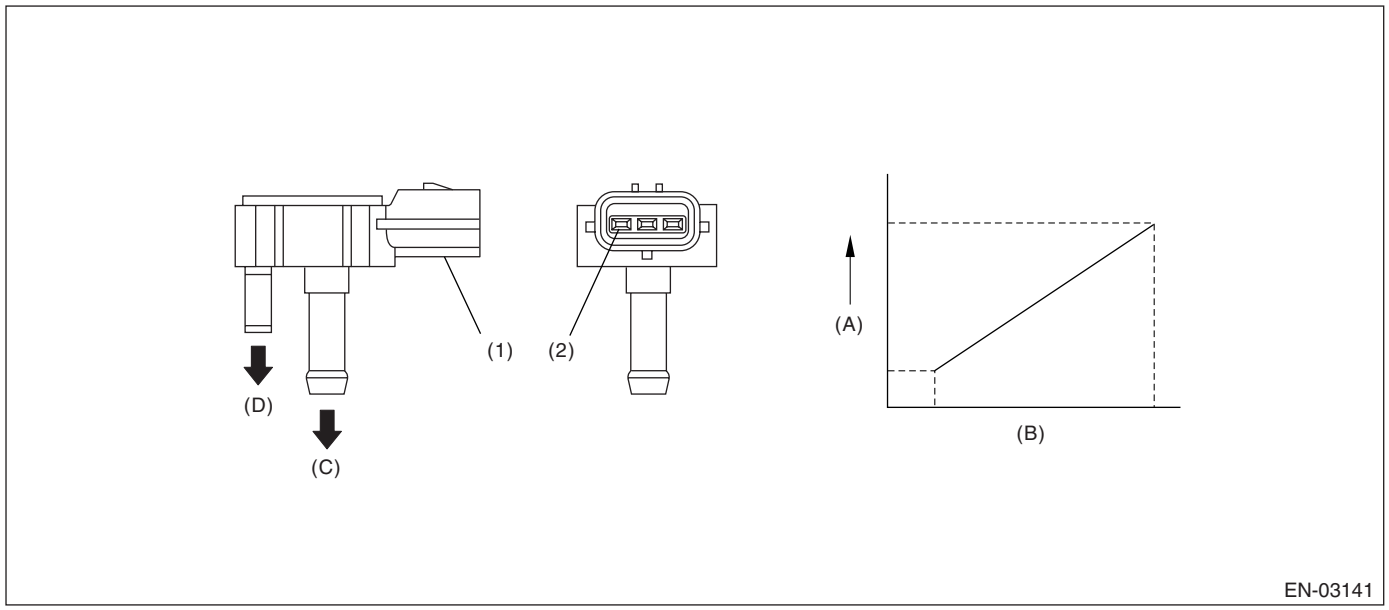

(1) Connector
(2) Terminal
(A) Output voltage
(B) Input voltage
(C) To fuel tank
(D) To fuel tank sensor control valve

3. ENABLE CONDITION

Secondary Parameters	Enable Conditions
Vehicle speed	≥ 2 km/h (1.24 MPH)
All conditions of EVAP canister purge	Complete
Evaporation gas density learning value (both left and right)	< 0.08
Main feedback compensation coefficient (both left and right)	≥ 0.9
Battery voltage	≥ 10.9 V

4. GENERAL DRIVING CYCLE

Perform the diagnosis when purging.

5. DIAGNOSTIC METHOD

• Abnormality Judgment

Judge NG when the continuous time until completing the malfunction criteria below becomes more than 15 seconds.

Judgment Value

Malfunction Criteria	Threshold Value
Fuel tank pressure	≥ 7.98 kPa (59.85 mmHg, 2.36 inHg)
Fuel temperature	< 35°C (95°F)
Atmospheric pressure	75.1 kPa (563 mmHg, 22.2 inHg)

Time Needed for Diagnosis: 15 seconds
Malfunction Indicator Light Illumination: Illuminates as soon as malfunction occurs.
• Normality Judgment

Judge OK when the malfunction criteria below is completed.
Judgment Value

Malfunction Criteria	Threshold Value
Fuel tank pressure	< 7.98 kPa (59.85 mmHg, 2.36 inHg)

6. DTC CLEAR CONDITION

- When the OK idling cycle was completed 40 times in a row
- When “Clear Memory” was performed

7. MALFUNCTION INDICATOR LIGHT CLEAR CONDITION

- When the OK driving cycle was completed 3 times in a row
- When “Clear Memory” was performed

8. FAIL SAFE

Purge control solenoid valve control: Purge fixation mode is prohibited.

9. ECM OPERATION AT DTC SETTING

Memorize the freeze frame data. (For test mode $02)

CE:DTC P0456 EVAPORATIVE EMISSION CONTROL SYSTEM LEAK DETECTED (VERY SMALL LEAK)

1. OUTLINE OF DIAGNOSIS

For the detecting criteria, refer to DTC P0442 EVAPORATIVE EMISSION CONTROL SYSTEM LEAK DETECTED (SMALL LEAK). <Ref. to GD(H6DO)-120, DTC P0442 EVAPORATIVE EMISSION CONTROL SYSTEM LEAK DETECTED (SMALL LEAK), Diagnostic Trouble Code (DTC) Detecting Criteria.>

CF:DTC P0457 EVAPORATIVE EMISSION CONTROL SYSTEM LEAK DETECTED (FUEL CAP LOOSE/OFF)

1. OUTLINE OF DIAGNOSIS

For the detecting criteria, refer to DTC P0442 EVAPORATIVE EMISSION CONTROL SYSTEM LEAK DETECTED (SMALL LEAK). <Ref. to GD(H6DO)-120, DTC P0442 EVAPORATIVE EMISSION CONTROL SYSTEM LEAK DETECTED (SMALL LEAK), Diagnostic Trouble Code (DTC) Detecting Criteria.>

CG:DTC P0458 EVAPORATIVE EMISSION CONTROL SYSTEM PURGE CONTROL VALVE CIRCUIT LOW

1. OUTLINE OF DIAGNOSIS

Detect open or short circuit of purge control solenoid valve.
Judge NG when ECM output level is different from actual terminal level.

2. COMPONENT DESCRIPTION

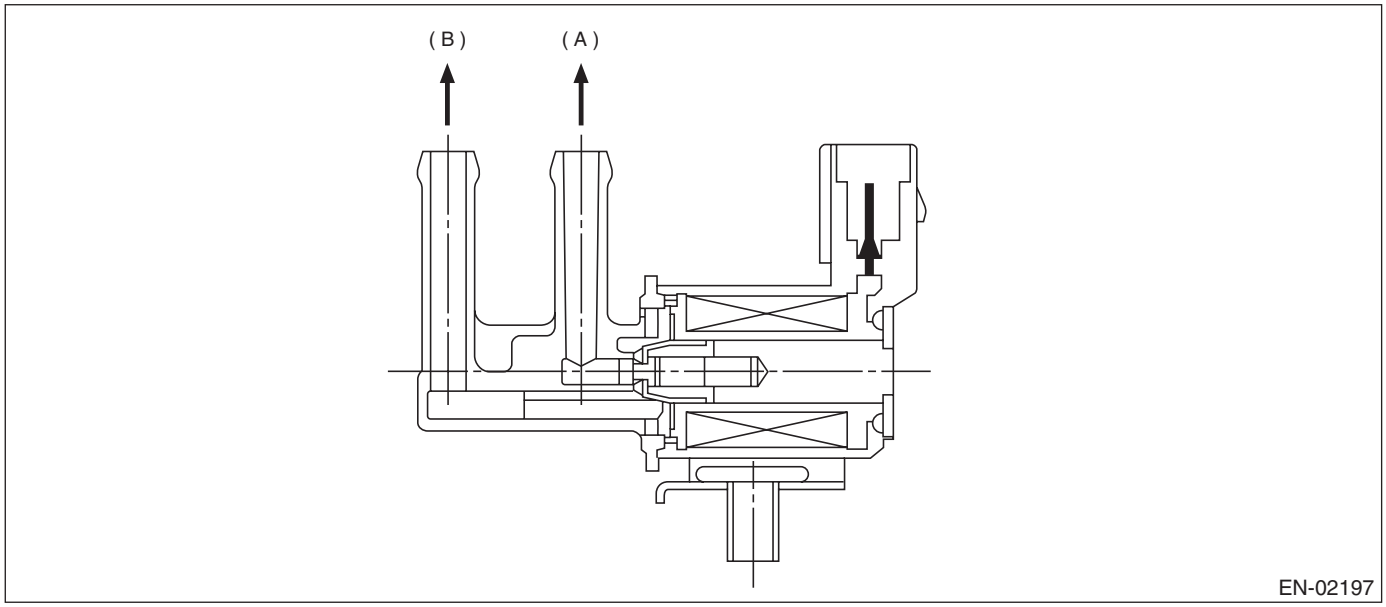

(A) To canister (B) To intake manifold

3. ENABLE CONDITION

Secondary Parameters	Enable Conditions
Ignition switch	ON
Battery voltage	≥ 10.9 V
After engine starting	1 second or more

4. GENERAL DRIVING CYCLE

Always perform the diagnosis after starting the engine.

5. DIAGNOSTIC METHOD

• Abnormality Judgment

Judge NG when the malfunction criteria below becomes.
Judgment Value

Malfunction Criteria	Threshold Value
Duty ratio of 'ON'	< 75%
Terminal output voltage	Low

Time Needed for Diagnosis: 2.5 seconds
Malfunction Indicator Light Illumination: Illuminates when malfunction occurs in 2 continuous driving cycles.

• Normality Judgment

Judge OK and clear NG when the malfunction criterion below is completed.

Judgment Value

Malfunction Criteria	Threshold Value
Terminal output voltage	High

6. DTC CLEAR CONDITION

- When the OK idling cycle was completed 40 times in a row
- When “Clear Memory” was performed

7. MALFUNCTION INDICATOR LIGHT CLEAR CONDITION

- When the OK driving cycle was completed 3 times in a row
- When “Clear Memory” was performed

8. FAIL SAFE

None

9. ECM OPERATION AT DTC SETTING

Memorize the freeze frame data. (For test mode $02)

CH:DTC P0459 EVAPORATIVE EMISSION CONTROL SYSTEM PURGE CONTROL VALVE CIRCUIT HIGH

1. OUTLINE OF DIAGNOSIS

Detect open or short circuit of purge control solenoid valve.
Judge NG when ECM output level is different from actual terminal level.

2. COMPONENT DESCRIPTION

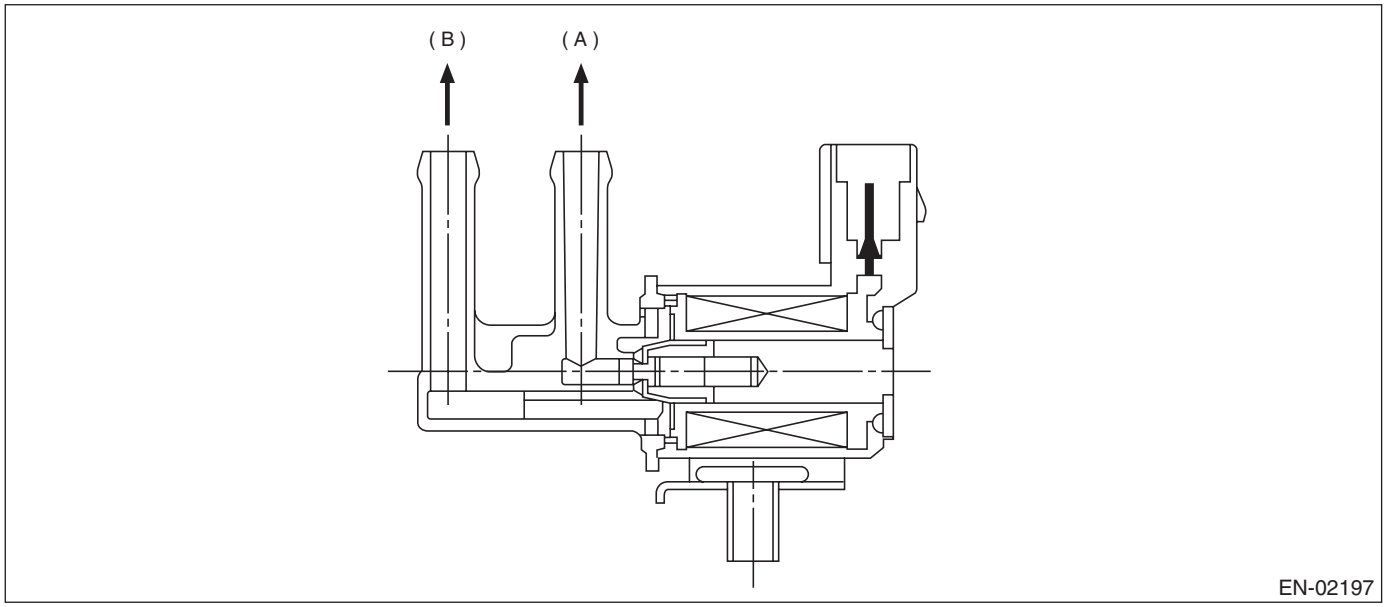

(A) To canister (B) To intake manifold

3. ENABLE CONDITION

Secondary Parameters	Enable Conditions
Ignition switch	ON
Battery voltage	≥ 10.9 V
After engine starting	1 second or more

4. GENERAL DRIVING CYCLE

Always perform the diagnosis after starting the engine.

5. DIAGNOSTIC METHOD

• Abnormality Judgment

Judge NG when the continuous time of completing the malfunction criteria below becomes more than the time needed for diagnosis (2.5 seconds).

Judgment Value

Malfunction Criteria	Threshold Value
Duty ratio of 'ON'	≥ 25%
Terminal output voltage	High

Time Needed for Diagnosis: 2.5 seconds
Malfunction Indicator Light Illumination: Illuminates when malfunction occurs in 2 continuous driving cycles.

• Normality Judgment

Judge OK and clear NG when the malfunction criterion below is completed.

Judgment Value

Malfunction Criteria	Threshold Value
Terminal output voltage	Low

6. DTC CLEAR CONDITION

- When the OK idling cycle was completed 40 times in a row
- When “Clear Memory” was performed

7. MALFUNCTION INDICATOR LIGHT CLEAR CONDITION

- When the OK driving cycle was completed 3 times in a row
- When “Clear Memory” was performed

8. FAIL SAFE

None

9. ECM OPERATION AT DTC SETTING

Memorize the freeze frame data. (For test mode $02)

CI: DTC P0461 FUEL LEVEL SENSOR CIRCUIT RANGE/PERFORMANCE

1. OUTLINE OF DIAGNOSIS

Detect the malfunction of fuel level sensor output property.
Judge NG when the fuel level does not vary whereas it seemed to vary be in a usual driving speed.

2. COMPONENT DESCRIPTION

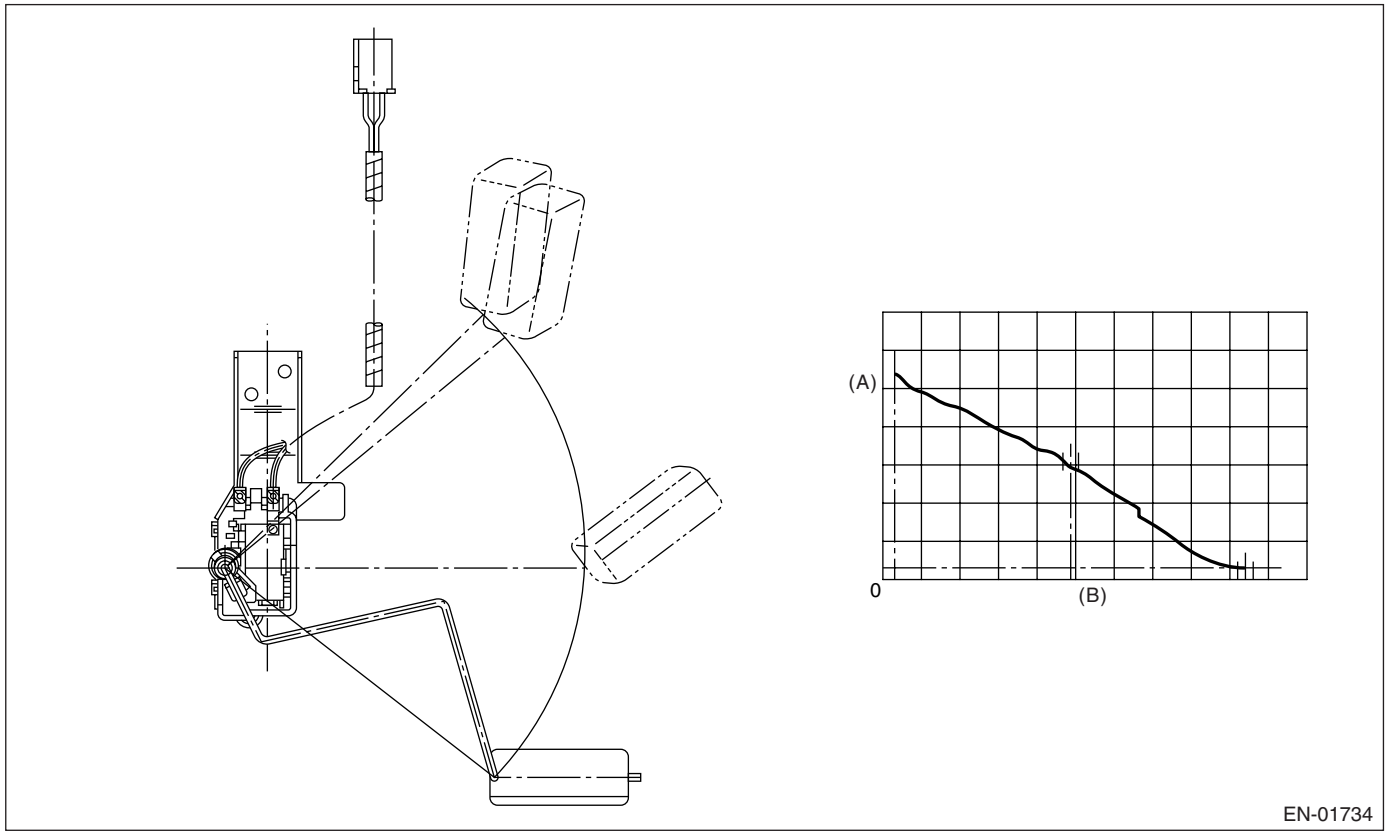

(A) Fuel level (B) Resistance

3. ENABLE CONDITION

Secondary Parameters	Enable Conditions
None	

4. GENERAL DRIVING CYCLE

Always perform the diagnosis continuously.

5. DIAGNOSTIC METHOD

• Abnormality Judgment

Judge NG when the malfunction criteria below are completed.
Judgment Value

Malfunction Criteria	Threshold Value
Accumulated amount of intake air	〉331 kg (729.7 lb)
Max.– Min. fuel level output	〈 2.6 ℓ (0.69 US gal, 0.57 Imp gal)
Battery voltage	≥ 10.9 V
Engine speed	〈 6500 rpm
After engine starting	5 seconds or more

Time Needed for Diagnosis: To be determined.
Malfunction Indicator Light Illumination: Illuminates when malfunction occurs in 2 continuous driving cycles.
• Normality Judgment

Judge OK and clear the NG when the malfunction criteria below are completed.
Judgment Value

Malfunction Criteria	Threshold Value
Accumulated amount of intake air	〉331 kg (729.7 lb)
Max.– Min. fuel level output	≥ 2.6 ℓ (0.69 US gal, 0.57 Imp gal)
Battery voltage	≥ 10.9 V
Engine speed	〈 6500 rpm
After engine starting	5 seconds or more

6. DTC CLEAR CONDITION

- When the OK idling cycle was completed 40 times in a row
- When “Clear Memory” was performed

7. MALFUNCTION INDICATOR LIGHT CLEAR CONDITION

- When the OK driving cycle was completed 3 times in a row
- When “Clear Memory” was performed

8. FAIL SAFE

None

9. ECM OPERATION AT DTC SETTING

Memorize the freeze frame data. (For test mode $02)

CJ:DTC P0462 FUEL LEVEL SENSOR CIRCUIT LOW INPUT

1. OUTLINE OF DIAGNOSIS

Detect the open or short circuit of fuel level sensor. Judge NG when out of the standard value.

2. COMPONENT DESCRIPTION

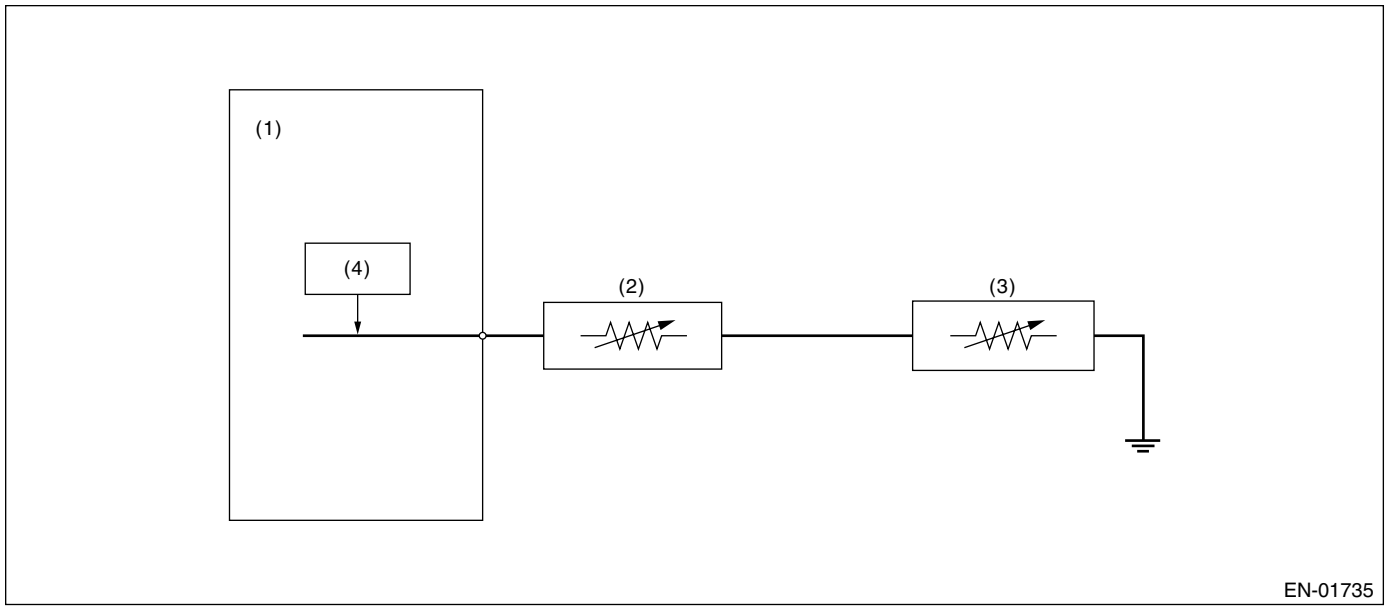

(1) Engine control module (ECM)
(2) Fuel level sensor
(3) Fuel sub level sensor
(4) Detecting circuit

3. ENABLE CONDITION

Secondary Parameters	Enable Conditions
None	

4. GENERAL DRIVING CYCLE

Always perform the diagnosis continuously

5. DIAGNOSTIC METHOD

• Abnormality Judgment

Judge NG when the continuous time of completing the malfunction criteria below becomes more than the time needed for diagnosis (2.5 seconds).

Judgment Value

Malfunction Criteria	Threshold Value
Ignition switch	ON
Battery voltage	≥ 10.9 V
After engine starting	3 seconds or more
Output voltage	< 0.173 V

Time Needed for Diagnosis: 2.5 seconds

Malfunction Indicator Light Illumination: Illuminates when malfunction occurs in 2 continuous driving cycles.

• Normality Judgment

Judge OK and clear the NG when the malfunction criteria below are completed.

Judgment Value

Malfunction Criteria	Threshold Value
Ignition switch	ON
Battery voltage	≥ 10.9 V
After engine starting	3 seconds or more
Output voltage	≥ 0.173 V

6. DTC CLEAR CONDITION

- When the OK idling cycle was completed 40 times in a row
- When “Clear Memory” was performed

7. MALFUNCTION INDICATOR LIGHT CLEAR CONDITION

- When the OK driving cycle was completed 3 times in a row
- When “Clear Memory” was performed

8. FAIL SAFE

None

9. ECM OPERATION AT DTC SETTING

Memorize the freeze frame data. (For test mode $02)

CK:DTC P0463 FUEL LEVEL SENSOR CIRCUIT HIGH INPUT

1. OUTLINE OF DIAGNOSIS

Detect the open or short circuit of fuel level sensor. Judge NG when out of the standard value.

2. COMPONENT DESCRIPTION

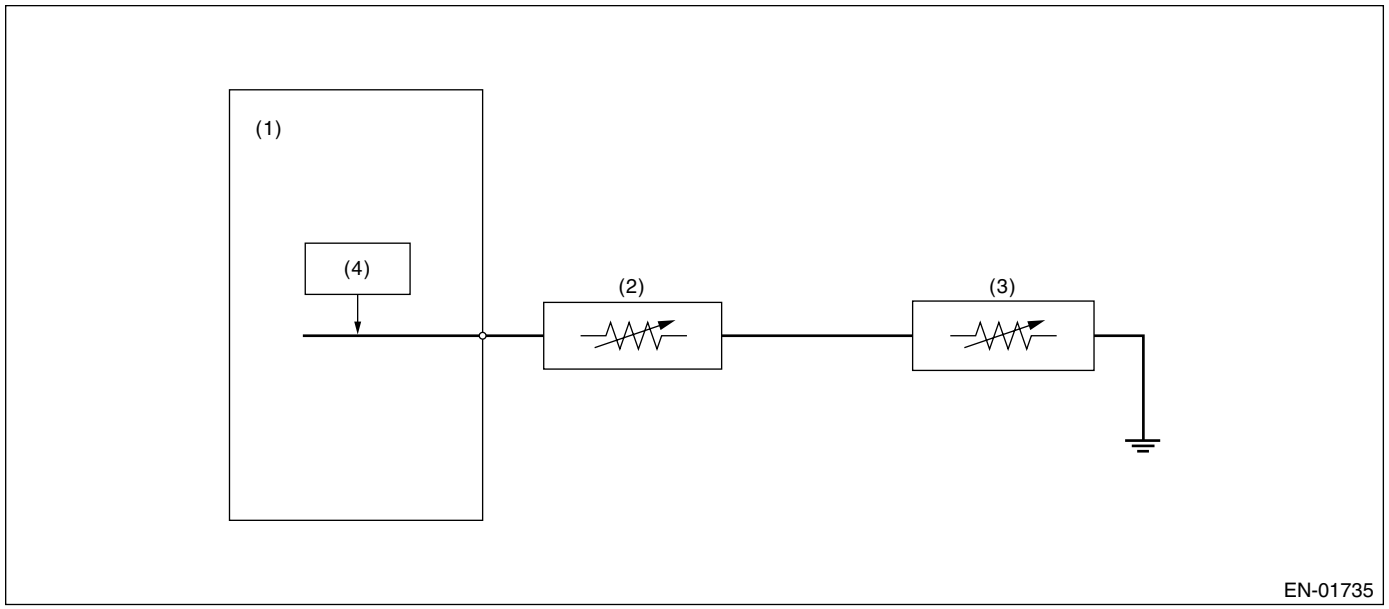

(1) Engine control module (ECM)
(2) Fuel level sensor
(3) Fuel sub level sensor
(4) Detecting circuit

3. ENABLE CONDITION

Secondary Parameters	Enable Conditions
None	

4. GENERAL DRIVING CYCLE

Always perform the diagnosis continuously

5. DIAGNOSTIC METHOD

• Abnormality Judgment

Judge NG when the continuous time of completing the malfunction criteria below becomes more than the time needed for diagnosis (2.5 seconds).

Judgment Value

Malfunction Criteria	Threshold Value
Ignition switch	ON
Battery voltage	≥ 10.9 V
After engine starting	3 seconds or more
Output voltage	≥ 7.212 V

Time Needed for Diagnosis: 1 seconds

Malfunction Indicator Light Illumination: Illuminates when malfunction occurs in 2 continuous driving cycles.

• Normality Judgment

Judge OK and clear the NG when the malfunction criteria below are completed.

Judgment Value

Malfunction Criteria	Threshold Value
Ignition switch	ON
Battery voltage	≥ 10.9 V
After engine starting	3 seconds or more
Output voltage	< 7.212 V

6. DTC CLEAR CONDITION

- When the OK idling cycle was completed 40 times in a row
- When “Clear Memory” was performed

7. MALFUNCTION INDICATOR LIGHT CLEAR CONDITION

- When the OK driving cycle was completed 3 times in a row
- When “Clear Memory” was performed

8. FAIL SAFE

None

9. ECM OPERATION AT DTC SETTING

Memorize the freeze frame data. (For test mode $02)

CL:DTC P0464 FUEL LEVEL SENSOR CIRCUIT INTERMITTENT

1. OUTLINE OF DIAGNOSIS

Detect the malfunction of unstable output from fuel level sensor caused by noise.
Judge NG when the max. value and cumulative value of output voltage variation of fuel level sensor is larger than the threshold value.

2. ENABLE CONDITION

Secondary Parameters	Enable Conditions
Engine speed	≥ 500 rpm
After engine starting	1 second or more
Ignition switch	ON
Battery voltage	〉10.9 V
Idle switch	ON
Fuel level	9.6 ←→ 54.4 ℓ (2.54 ←→ 14.37 US gal, 2.11 ←→ 11.97 Imp gal)
Vehicle speed = 0 km/h (0 MPH)	10 seconds or more

3. GENERAL DRIVING CYCLE

- Perform the diagnosis continuously in idling condition.
- Pay attention to the fuel level.

4. DIAGNOSTIC METHOD

Calculate the Max. value (delflmax) and cumulative value (sumfl) of output voltage variation of fuel level sensor during 12.2 seconds. Judge it normal when both max. and cumulative values are not over the threshold

value. Otherwise, when either of them is over the threshold value, count the diagnosis counter up. And judge NG if the counter indicated 4 counts.

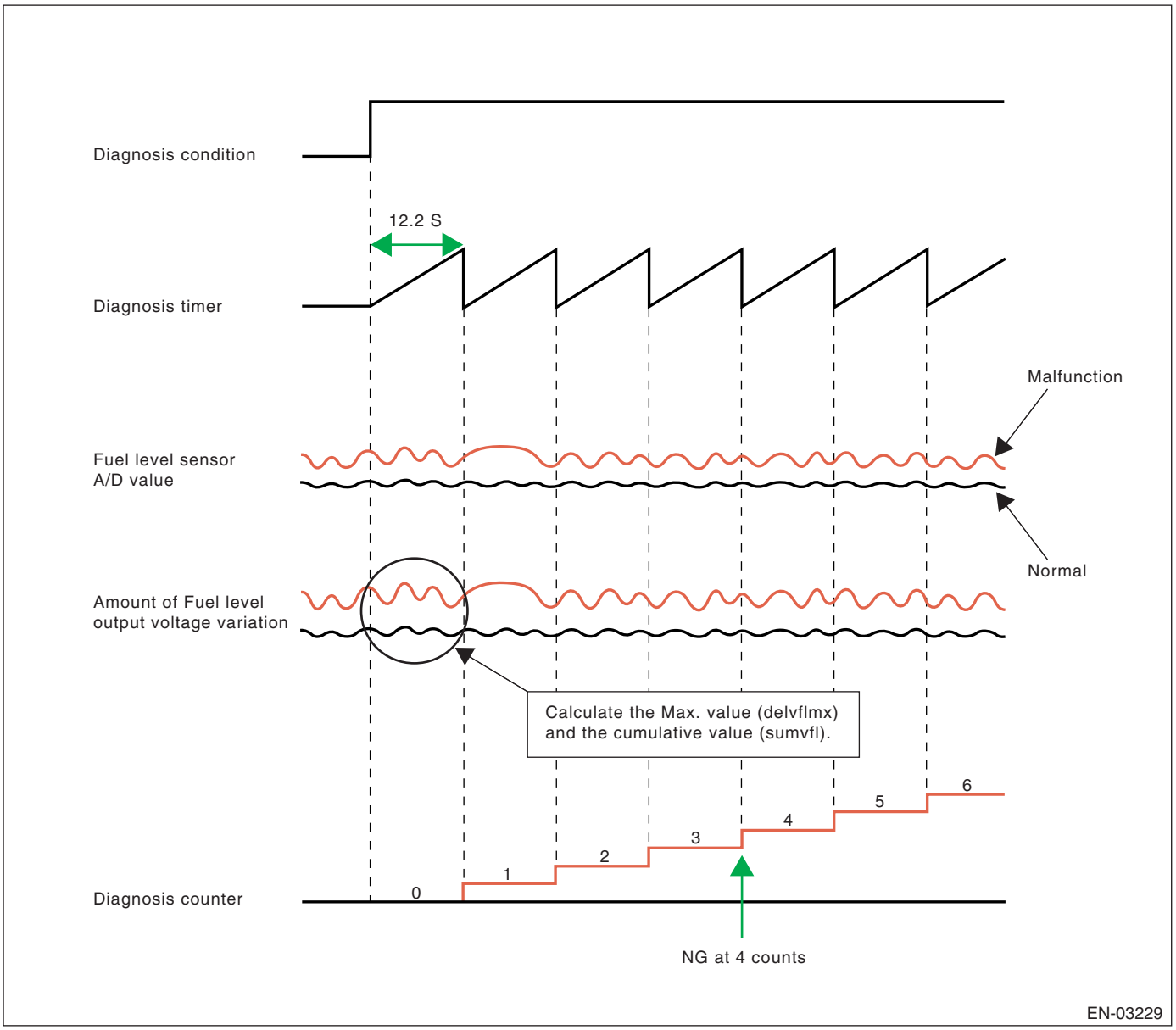

• Abnormality Judgment

Judge NG when the malfunction criteria below are completed.

Judgment Value

Malfunction Criteria	Threshold Value
Integrated times of the condition reaching follows, DELFLMAX ≥ 0.27 ←→ 0.894 V or SUMFL ≥ 25.92 V where, DELFLMAX is Max. deviation of sensor output during 12.2 seconds. SUMFL is integrated value of sensor output deviation during 12.2 seconds.	≥ 4 times

Do not count the diagnosis counter up when the following conditions are completed during 12.2 seconds.

Max − Min of tank pressure during 12.2 seconds	≥ 0.05 kPa (0.375 mmHg, 0.02 inHg)
Max − Min of battery voltage during 12.2 seconds	≥ 0.609 V

Time Needed for Diagnosis: 12.2 seconds × 4 times
Malfunction Indicator Light Illumination: Illuminates when malfunction occurs in 2 continuous driving cycles.
• Normality Judgment

Judge OK and clear the NG when the malfunction criteria below are completed.
Judgment Value

Malfunction Criteria	Threshold Value
DELFLMAX	−0.27 ←→ 0.894 V
SUMFL Where, DELFLMAX is Max. deviation of sensor output during 12.2 seconds. SUMFL is integrated value of sensor output deviation during 12.2 seconds.	< 25.92 V

5. DTC CLEAR CONDITION

- When the OK idling cycle was completed 40 times in a row
- When “Clear Memory” was performed

6. MALFUNCTION INDICATOR LIGHT CLEAR CONDITION

- When the OK driving cycle was completed 3 times in a row
- When “Clear Memory” was performed

7. FAIL SAFE

None

8. ECM OPERATION AT DTC SETTING

Memorize the freeze frame data. (For test mode $02)

CM:DTC P0483 COOLING FAN RATIONALITY CHECK

1. OUTLINE OF DIAGNOSIS

Detect the function abnormality of the radiator fan.
Judge NG when the engine coolant temperature slowly decreases even when the radiator fan is rotating.

2. ENABLE CONDITION

Diagnostic enable condition is completed if the radiator fan changes from OFF to ON when all of the conditions below are completed. When one of the conditions below is not completed, the diagnostic enable condition is not completed.

Secondary Parameters	Enable Conditions
Engine Speed	500 — 900 rpm
Idle switch	ON
Vehicle speed	< 2 km/h (1 MPH)
Battery voltage	≥ 10.9 V

3. GENERAL DRIVING CYCLE

Perform the diagnosis continuously when the radiator fan changes from OFF to ON when idling.

4. DIAGNOSTIC METHOD

• Abnormality Judgment

Judge NG when the continuous time of completing the malfunction criteria below becomes more than 5 minutes.

Judgment Value

Malfunction Criteria	Threshold Value
Engine coolant temperature	≥ 102°C (216°F)
Engine coolant temperature	Does not decrease

Time Needed for Diagnosis: 5 minutes
Malfunction Indicator Light Illumination: Illuminates when malfunction occurs in 2 continuous driving cycles.

• Normality Judgment

Judge OK and clear NG when the malfunction criteria below are completed.

Judgment Value

Malfunction Criteria	Threshold Value
Engine coolant temperature	Decrease

5. DTC CLEAR CONDITION

- When the OK idling cycle was completed 40 times in a row
- When “Clear Memory” was performed

6. MALFUNCTION INDICATOR LIGHT CLEAR CONDITION

- When the OK driving cycle was completed 3 times in a row
- When “Clear Memory” was performed

7. FAIL SAFE

None

8. ECM OPERATION AT DTC SETTING

Memorize the freeze frame data. (For test mode $02)

CN:DTC P0500 VEHICLE SPEED SENSOR

1. OUTLINE OF DIAGNOSIS

Judge NG when out of standard value.
Judge NG when the received data from ABSCM&H/U is abnormal, and the vehicle speed data is impossible.

2. COMPONENT DESCRIPTION

The vehicle speed signal is transmitted to ABSCM&H/U. Then the OK/NG data of ABS wheel speed sensor is transmitted from ABSCM&H/U through CAN communication.

3. ENABLE CONDITION (USED WITH ABNORMAL JUDGMENT)

Secondary Parameters	Enable Condition
Battery voltage	≥ 10.9 V
After engine starting	≥ 2 seconds

4. GENERAL DRIVING CYCLE

Perform the diagnosis continuously in 2 seconds or more after starting the engine.

5. DIAGNOSTIC METHOD

• Abnormality judgment

Judge NG when the continuous time of completing the malfunction criteria below becomes more than 2.5 seconds.

Judgment Value

Malfunction Criteria	Threshold Value
Front ABS wheel speed sensor When either of the following is completed	Abnormal
Front left wheel speed	≥ 300 km/h (186 MPH)
Front right wheel speed	≥ 300 km/h (186 MPH)

Time Needed for the Diagnosis: 2.5 seconds
Malfunction Indicator Light Illumination: Illuminates as soon as the malfunction occurs.

• Normality Judgment

Judge OK and clear the NG when all malfunction criteria below is completed.

Judgment Value

Malfunction Criteria	Threshold Value
Front left wheel speed	> 0 km/h (0 MPH) and < 300 km/h (186 MPH)
Front right wheel speed	> 0 km/h (0 MPH) and < 300 km/h (186 MPH)

6. DTC CLEAR CONDITION

- When the OK idling cycle was completed 40 times in a row
- When “Clear Memory” was performed

7. MALFUNCTION INDICATOR LIGHT CLEAR CONDITION

- When the OK driving cycle was completed 3 times in a row
- When “Clear Memory” was performed

8. FAIL SAFE

- Accelerator sensor signal process: Not allowed all closed points learning.
- Vehicle speed sensor signal process: Vehicle speed = 10 km/h (6 MPH)

- Fuel cut control: Not allowed vehicle speed 0 km/h (0 MPH) fuel cut. Normally the high vehicle speed fuel cut performs on vehicle speed condition and engine speed, but perform the fuel cut only on engine speed condition (4,400 rpm or more).
- ISC control: Set the open loop compensation to specified value (1 g (0.04 oz)/s). Not allowed ISC feedback volume calculation.
- Air conditioner control: Not allowed air conditioner cut at accelerating.
- Radiator fan control: ON both main/sub.
- Judge gear ratio: Control as gear fixed on 6th.
- Tumble generator valve control: Open the tumble generator valve.

9. ECM OPERATION AT DTC SETTING

Memorize the freeze frame data. (For test mode $02)

CO:DTC P0506 IDLE CONTROL SYSTEM RPM LOWER THAN EXPECTED

1. OUTLINE OF DIAGNOSIS

Detect the malfunction that actual engine speed is not close to target engine speed during idling.
Judge NG when actual engine speed is not close to target engine speed during idling.

2. ENABLE CONDITION

Secondary Parameters	Enable Conditions
Engine coolant temperature	≥ 75°C (167°F)
Battery voltage	≥ 10.9 V
Atmospheric pressure	> 75.1 kPa (563 mmHg, 22.2 inHg)
Fuel level	≥ 9.6 ℓ (2.54 US gal, 2.11 Imp gal)
After engine starting	10 seconds or more
Feedback in ISC	In operation
Measured lambda (both left and right)	0.9 ←→ 1.1
After air condition switching ON-OFF, OFF-ON	5.1 seconds or more
After in-manifold pressure change more than 4 kPa (30 mmHg, 1.2 inHg)	> 5.1 seconds
After neutral switch ON-OFF event	> 5.1 seconds
Vehicle speed	0 km/h (0 MPH)

3. GENERAL DRIVING CYCLE

Always perform diagnosis during idling after warm-up.

4. DIAGNOSTIC METHOD

• Abnormality Judgment

Judge NG when the cumulative time of completing the malfunction criterion below becomes more than the time needed for diagnosis (10 seconds × 3 times).

Judgment Value

Malfunction Criteria	Threshold Value
Actual – target engine speed	< –100 rpm
Feedback correction for idle air control solenoid valve	Max.

Time Needed for Diagnosis: 10 seconds × 3 times
Malfunction Indicator Light Illumination: Illuminates when malfunction occurs in 2 continuous driving cycles.

• Normality Judgment

Judge OK and clear NG when the continuous time of completing the malfunction criterion below becomes more than the time needed for diagnosis (10 seconds).

Judgment Value

Malfunction Criteria	Threshold Value
Actual – target engine speed	≥ –100 rpm

5. DTC CLEAR CONDITION

- When the OK idling cycle was completed 40 times in a row
- When “Clear Memory” was performed

6. MALFUNCTION INDICATOR LIGHT CLEAR CONDITION

- When the OK driving cycle was completed 3 times in a row
- When “Clear Memory” was performed

7. FAIL SAFE

Judgment of heavy fuel: Not allowed to make the judgment of heavy fuel.

8. ECM OPERATION AT DTC SETTING

Memorize the freeze frame data. (For test mode $02)

CP:DTC P0507 IDLE CONTROL SYSTEM RPM HIGHER THAN EXPECTED

1. OUTLINE OF DIAGNOSIS

Detect the malfunction that actual engine speed is not close to target engine speed during idling.
Judge NG when actual engine speed is not close to target engine speed during idling.

2. ENABLE CONDITION

Secondary Parameters	Enable Conditions
Engine coolant temperature	≥ 75°C (167°F)
Battery voltage	≥ 10.9 V
Atmospheric pressure	> 75.1 kPa (563 mmHg, 22.2 inHg)
Fuel level	≥ 9.6 ℓ (2.54 US gal, 2.11 Imp gal)
After engine starting	10 seconds or more
Feedback in ISC	In operation
Lambda (both left and right)	0.9 ←→ 1.1
After A/C switch ON-OFF event	5.1 seconds or more
After in-manifold pressure change more than 4 kPa (30 mmHg, 1.2 inHg)	> 5.1 seconds
After neutral switch ON-OFF event	> 5.1 seconds
Vehicle speed	0 km/h (0 MPH)

3. GENERAL DRIVING CYCLE

Always perform diagnosis during idling after warm-up.

4. DIAGNOSTIC METHOD

• Abnormality Judgment

Judge NG when the continuous time of completing the malfunction criterion below becomes more than the time needed for diagnosis (10 seconds × 3 times).

Judgment Value

Malfunction Criteria	Threshold Value
Actual – target eng. speed	≥ 200 rpm
Feedback correction for idle air control solenoid valve	Min.

Time Needed for Diagnosis: 10 seconds × 3 times
Malfunction Indicator Light Illumination: Illuminates when malfunction occurs in 2 continuous driving cycles.

• Normality Judgment

Judge OK and clear NG when the continuous time of completing the malfunction criterion below becomes more than the time needed for diagnosis (10 seconds).

Judgment Value

Malfunction Criteria	Threshold Value
Actual – target eng. speed	< 200 rpm

5. DTC CLEAR CONDITION

- When the OK idling cycle was completed 40 times in a row
- When “Clear Memory” was performed

6. MALFUNCTION INDICATOR LIGHT CLEAR CONDITION

- When the OK driving cycle was completed 3 times in a row
- When “Clear Memory” was performed

7. FAIL SAFE

Judgment of heavy fuel: Not allowed to make the judgment of heavy fuel.

8. ECM OPERATION AT DTC SETTING

Memorize the freeze frame data. (For test mode $02)

CQ:DTC P0512 STARTER REQUEST CIRCUIT

1. OUTLINE OF DIAGNOSIS

Detect the open or short circuit of starter SW.
Judge ON NG when the starter SW signal remains on.

2. ENABLE CONDITION

Secondary Parameters	Enable Conditions
None	

3. GENERAL DRIVING CYCLE

Always perform the diagnosis continuously.

4. DIAGNOSTIC METHOD

• Abnormality Judgment

Judge NG when the continuous time of completing the malfunction criteria below becomes more than 3 minutes.

Judgment Value

Malfunction Criteria	Threshold Value
Engine speed	〉500 rpm
Starter OFF signal	Undetected
Battery voltage	〉8 V

Time Needed for Diagnosis: 180 seconds
Malfunction Indicator Light Illumination: Illuminates when malfunction occurs in 2 continuous driving cycles.

• Normality Judgment

Judge ON OK and clear the NG when the malfunction criteria below are completed.

Judgment Value

Malfunction Criteria	Threshold Value
Starter SW	OFF
Battery voltage	〉8 V

5. DTC CLEAR CONDITION

- When the OK idling cycle was completed 40 times in a row
- When “Clear Memory” was performed

6. MALFUNCTION INDICATOR LIGHT CLEAR CONDITION

- When the OK driving cycle was completed 3 times in a row
- When “Clear Memory” was performed

7. FAIL SAFE

None

8. ECM OPERATION AT DTC SETTING

Memorize the freeze frame data. (For test mode $02)

CR:DTC P0513 INCORRECT IMMOBILIZER KEY

1. OUTLINE OF DIAGNOSIS

DTC	ITEM	OUTLINE OF DIAGNOSIS
P0513	Incorrect Immobilizer Key	Incorrect immobilizer key (Use of key not registered in body integrated unit)
P1570	Antenna	Improper antenna
P1571	Reference Code Incompatibility	Unmatched reference code between body integrated unit and ECM
P1572	IMM Circuit Failure (Except Antenna Circuit)	Communication malfunction between body integrated unit and ECM
P1574	Key Communication Failure	Malfunction of body integrated unit that check the key (transponder) ID or Malfunction of transponder.
P1576	EGI Control Module EEPROM	Abnormality of ECM
P1577	IMM Control Module EEPROM	Malfunction of body integrated unit.
P1578	Meter Failure	Unmatched reference code between body integrated unit and combination meter.

2. ENABLE CONDITION

When the engine started.

3. GENERAL DRIVING CYCLE

Only engine started.

4. DIAGNOSTIC METHOD

Judge NG when conditions of the above outline of diagnosis are judged as NG.

CS:DTC P0519 IDLE CONTROL SYSTEM MALFUNCTION (FAIL-SAFE)

1. OUTLINE OF DIAGNOSIS

Detect the malfunction that engine speed increases more than that in normal condition during idling.

2. ENABLE CONDITION

Secondary Parameters	Enable Conditions
Battery voltage	≥ 10.9 V
Feedback in ISC	In operation
Vehicle speed	〈 4 km/h (2.49 MPH)
After engine starting	1 second or more

3. GENERAL DRIVING CYCLE

Always perform diagnosis at less than 4 km/h (2.49 MPH) of vehicle speed.

4. DIAGNOSTIC METHOD

• Abnormality Judgment

Judge NG when the continuous time until completing the all malfunction criteria below becomes more than the time needed for diagnosis (2 seconds).

Judgment Value

Malfunction Criteria	Threshold Value
Engine speed – target eng. speed	≥ 1500 rpm
Feedback value for ISC	≤ 0
Engine speed change every 120°CA engine rev.	≥ –5 rpm

Time Needed for Diagnosis: 2 seconds
Malfunction Indicator Light Illumination: Illuminates as soon as malfunction occurs.

• Normality Judgment

Judge OK and clear NG when the continuous time until completing the malfunction criteria below becomes more than the time needed for diagnosis (5 seconds).

Judgment Value

Malfunction Criteria	Threshold Value
Engine speed – target eng. speed	〈 200 rpm

5. DTC CLEAR CONDITION

- When the OK idling cycle was completed 40 times in a row
- When “Clear Memory” was performed

6. MALFUNCTION INDICATOR LIGHT CLEAR CONDITION

- When the OK driving cycle was completed 3 times in a row
- When “Clear Memory” was performed

7. FAIL SAFE

Fuel shut-off: Shut-off fuel for only #1 and #2 cylinder, or for all cylinder in accordance with vehicle speed, engine speed, throttle position

8. ECM OPERATION AT DTC SETTING

Memorize the freeze frame data. (For test mode $02)

CT:DTC P0600 SERIAL COMMUNICATION LINK

1. OUTLINE OF DIAGNOSIS

Detect the malfunction of CAN communication.
It judges as NG when CAN communication becomes impossible, the CAN communication with AT becomes impossible, and the data from AT is not normal.

2. COMPONENT DISCRIPTION

CAN connects between ECM and TCM with high speed.

(Common Specification)
CAN PROTCOL 2.0B (active)
Frame format: 11 bit ID Frame (Standard frame)
(High Speed CAN)
ISO 11898 compliance
Communication Speed: 500 kbps

3. ENABLE CONDITION

Secondary Parameters	Enable Conditions
Battery Voltages	≥ 10.9 V
Starter switch	OFF
Engine	run

4. GENERAL DRIVING CYCLE

Perform the diagnosis continuously after starting the engine.

5. DIAGNOSTIC METHOD

• JUDGMENT OF MALFUNCTION

It judges as NG if any of the following conditions are judged as NG. It judges as OK if all of the following conditions are judged as OK within 1s, and the NG memory is cleared.
Judgement Value

Malfunction Criteria	Threshold Value
Buss off flag or error warning flag	Set
ID cannot be received from body integrated unit	= 500 ms
Data from body integrated unit cannot be renewed	= 500 ms

Time needed for Diagnosis: 1 time
Malfunction Indicator Light Illumination: Illuminates simultaneously when malfunction is detected.

6. DTC CLEAR CONDITION

When the OK driving cycle was completed 40 consecutive times
When “Clear Memory” was performed

7. MALFUNCTION INDICATOR LIGHT CLEAR CONDITION

- When the OK driving cycle was completed 3 consecutive times
- When “Clear Memory” was performed

8. FAIL SAFE

None

9. ECM OPERATION AT DTC SETTING

Memorize the freeze frame data. (For test mode $02)

CU:DTC P0604 INTERNAL CONTROL MODULE RANDOM ACCESS MEMORY (RAM) ERROR

1. OUTLINE OF DIAGNOSIS

Detect the function abnormality of the micro-computer (RAM).
Normally, zero-clear all the RAM area in the initial routine. And judge NG when the total of all the RAM after the clear is not $0000.

2. ENABLE CONDITION

Secondary Parameters	Enable Conditions
None	

Perform the diagnosis in the initial routine.

3. GENERAL DRIVING CYCLE

Perform the diagnosis immediately after IG key SW is turned ON.

4. DIAGNOSTIC METHOD

Judge NG when the malfunction criteria below are completed. Judge OK and clear NG when the malfunction criteria below are not completed.

Judgment Value

Malfunction Criteria	Threshold Value
Total of all the RAM after the zero-clear the all the normal RAM area.	Not 0

Time Needed for Diagnosis: Undecided
Malfunction Indicator Light Illumination: Illuminates as soon as malfunction occurs.

5. DTC CLEAR CONDITION

- When the OK idling cycle was completed 40 times in a row
- When “Clear Memory” was performed

6. MALFUNCTION INDICATOR LIGHT CLEAR CONDITION

- When the OK driving cycle was completed 3 times in a row
- When “Clear Memory” was performed

7. FAIL SAFE

None

8. ECM OPERATION AT DTC SETTING

Memorize the freeze frame data. (For test mode $02)

CV:DTC P0605 INTERNAL CONTROL MODULE READ ONLY MEMORY (ROM) ERROR

1. OUTLINE OF DIAGNOSIS

Judge NG when SUM value of ROM is out of the standard value.

2. ENABLE CONDITION

Secondary Parameters	Enable Conditions
Ignition switch	ON

3. GENERAL DRIVING CYCLE

Always perform the diagnosis continuously.

4. DIAGNOSTIC METHOD

• Abnormality Judgment

Judge NG when the continuous time of completing the malfunction criteria below becomes more than 0.5 seconds.

Judgment Value

Malfunction Criteria	Threshold Value
SUM value of ROM	Standard value

Time Needed for Diagnosis: To be determined.
Malfunction Indicator Light Illumination: Illuminates as soon as malfunction occurs.

5. DTC CLEAR CONDITION

- When the OK idling cycle was completed 40 times in a row
- When “Clear Memory” was performed (Only at engine stop)

6. MALFUNCTION INDICATOR LIGHT CLEAR CONDITION

- When the OK driving cycle was completed 3 times in a row
- When “Clear Memory” was performed

7. FAIL SAFE

Stop the current to electronic throttle control motor. (Fix the throttle opening angle to 6°.)

8. ECM OPERATION AT DTC SETTING

Memorize the freeze frame data. (For test mode $02)

CW:DTC P0607 CONTROL MODULE PERFORMANCE

1. OUTLINE OF DIAGNOSIS

Judge NG when either the following is completed.
- When the read value of throttle position sensor 1 signal is mismatched between main CPU and sub CPU.
- When the read value of accelerator position sensor 1 signal is mismatched between main CPU and sub CPU.
- When the sub CPU operates abnormally.
- When the communication between main CPU and sub CPU is abnormal.
- When the input amplifier circuit of throttle position sensor 1 is abnormal.
- When the cruise control cannot be canceled correctly.
- When the signal of brake SW1 and 2 is mismatched.
- When the directed angle from main CPU is abnormal.

2. COMPONENT DESCRIPTION

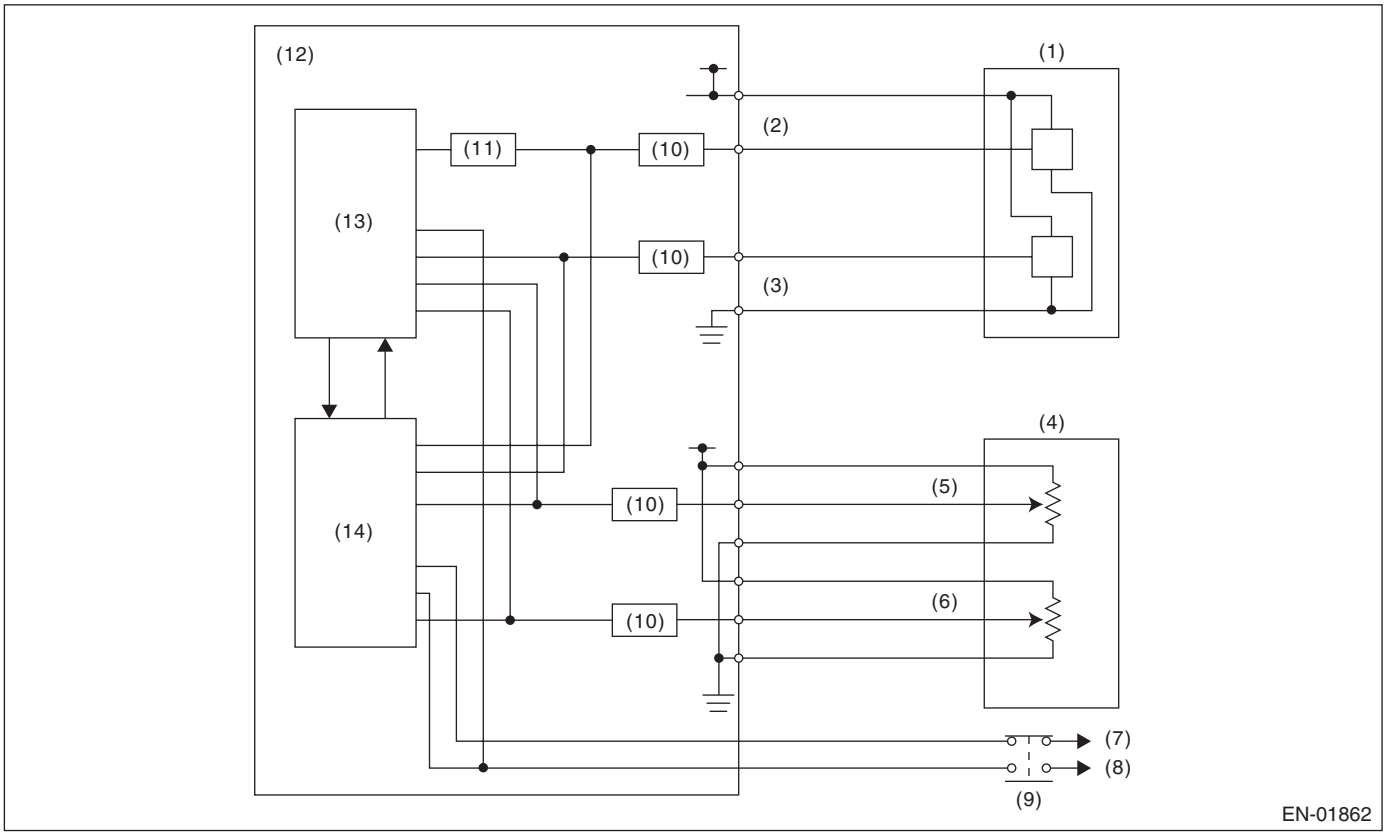

(1) Throttle position sensor
(2) Throttle position sensor 1
(3) Throttle position sensor 2
(4) Accelerator pedal position sensor
(5) Accelerator pedal position sensor 1
(6) Accelerator pedal position sensor 2
(7) Battery
(8) Stop light
(9) Brake switch
(10) I/F circuit
(11) Amplifier circuit
(12) Engine control module (ECM)
(13) Sub CPU
(14) Main CPU

3. ENABLE CONDITION

Secondary Parameters	Enable Conditions
(1) Ignition switch	ON
(2) Ignition switch	ON
(3) None	—
(4) None	—
(5) Throttle opening angle	
(6) Brake SW (with cruise control)	ON
(7) None	—
(8) Cruise control	OFF

4. GENERAL DRIVING CYCLE

(1) — (4): Always perform the diagnosis continuously.
(5): Always perform the diagnosis continuously on idling.
(6): Perform the diagnosis when the brake pedal is depressed.
(7): Always perform the diagnosis continuously.
(8): Always perform the diagnosis continuously when the cruise control pedal is not operating.

5. DIAGNOSTIC METHOD

Judge OK and clear NG when the malfunction criteria below are completed.

Judgment Value

Malfunction Criteria	Threshold Value
(1) Difference of CPU on reading value of throttle position sensor signal	Within 0.116 V
(2) Difference of CPU on reading value of accelerator position sensor signal	Within 0.0615 V
(3) WD pulse from sub CPU	WD pulse occur
(4) Communication between CPU	Possible to communicate
(5) Difference of signal on connection of amplifier	Within × 4±0.56 V
(6) Cruise control cancel signal at brake ON	Cruise control cancel signal ON
(7) Brake switch 1, 2 signal	SW 1 and 2 are matched
(8) Throttle opening angle directing value	Within the opening angle +3.5° which calculated from accelerator opening angle coefficient

Time Needed for Diagnosis:
(1) 200 milliseconds
(2) 250 milliseconds
(3) 200 milliseconds
(4) 200 milliseconds
(5) 24 milliseconds
(6) 250 milliseconds
(7) 200 milliseconds
(8) 750 milliseconds

Malfunction Indicator Light Illumination: Illuminates as soon as malfunction occurs.

6. DTC CLEAR CONDITION

- When the OK idling cycle was completed 40 times in a row
- When “Clear Memory” was performed

7. MALFUNCTION INDICATOR LIGHT CLEAR CONDITION

- When the OK driving cycle was completed 3 times in a row
- When “Clear Memory” was performed

8. FAIL SAFE

Stop the current to electronic throttle control motor. (Fix the throttle opening angle to 6°.)

9. ECM OPERATION AT DTC SETTING

Memorize the freeze frame data. (For test mode $02)

CX:DTC P0638 THROTTLE ACTUATOR CONTROL RANGE/PERFORMANCE (BANK 1)

1. OUTLINE OF DIAGNOSIS

Judge NG when the target opening angle and actual opening angle is mismatched or the current to motor is more than specified duty for specified time continuously.

2. COMPONENT DESCRIPTION

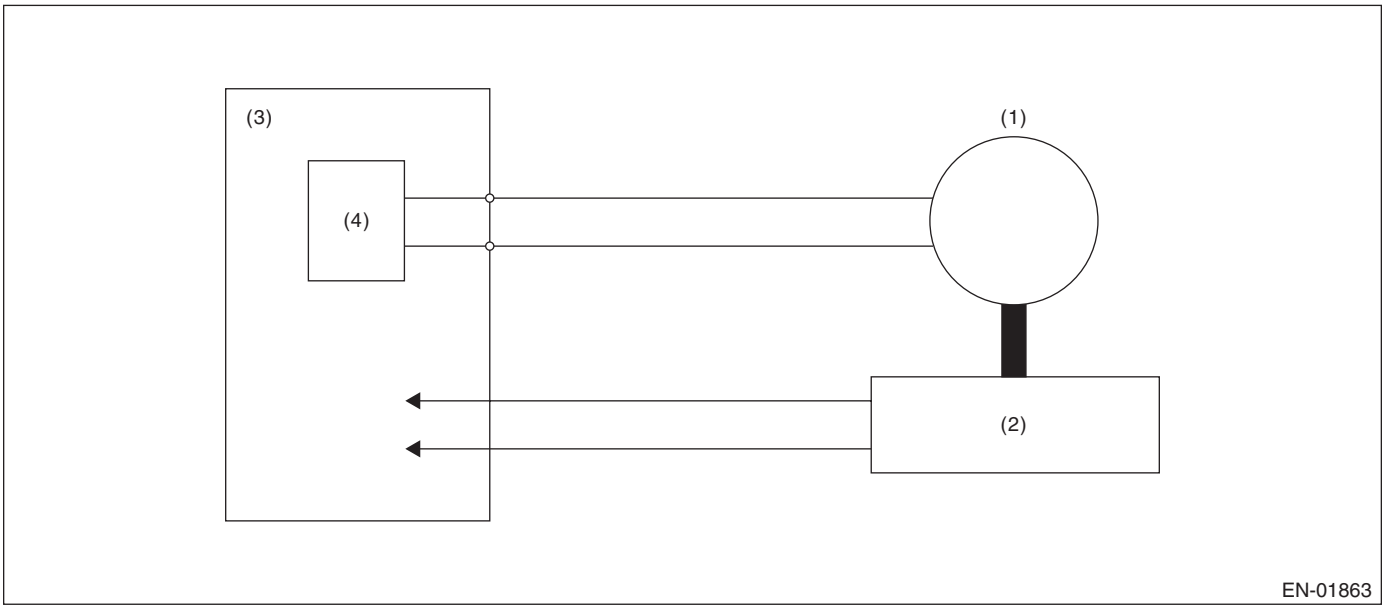

(1) Motor
(2) Throttle position sensor
(3) Engine control module (ECM)
(4) Drive circuit

3. ENABLE CONDITION

Secondary Parameters	Enable Conditions
Ignition switch	ON
Normal operation of electronic throttle control	ON

4. GENERAL DRIVING CYCLE

Always perform the diagnosis continuously when the electronic throttle control is operating.

5. DIAGNOSTIC METHOD

Judge OK and clear NG when the malfunction criteria below are completed.

Judgment Value

Malfunction Criteria	Threshold Value
Difference between target opening angle and actual opening angle	Less than 3°
Output duty to drive circuit	Less than 95%

Time Needed for Diagnosis:

- Target opening angle and actual opening angle: 250 milliseconds (For NG) 2000 milliseconds (For OK)
- Output duty to drive circuit: 2000 milliseconds

Details of Judgment

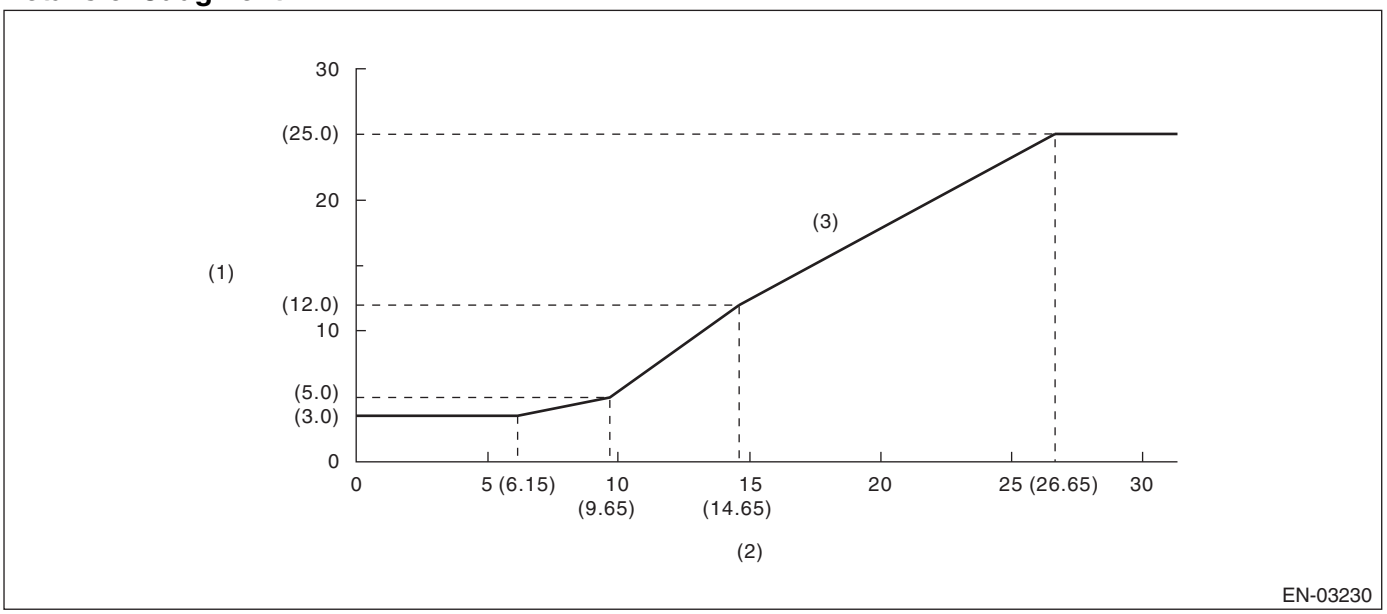

(1) Difference between target opening angle and actual opening angle (°)
(2) Target throttle opening angle (°)
(3) NG area

Details of Judgment (Always 1000 milliseconds when the actual opening angle ≤ target opening angle)

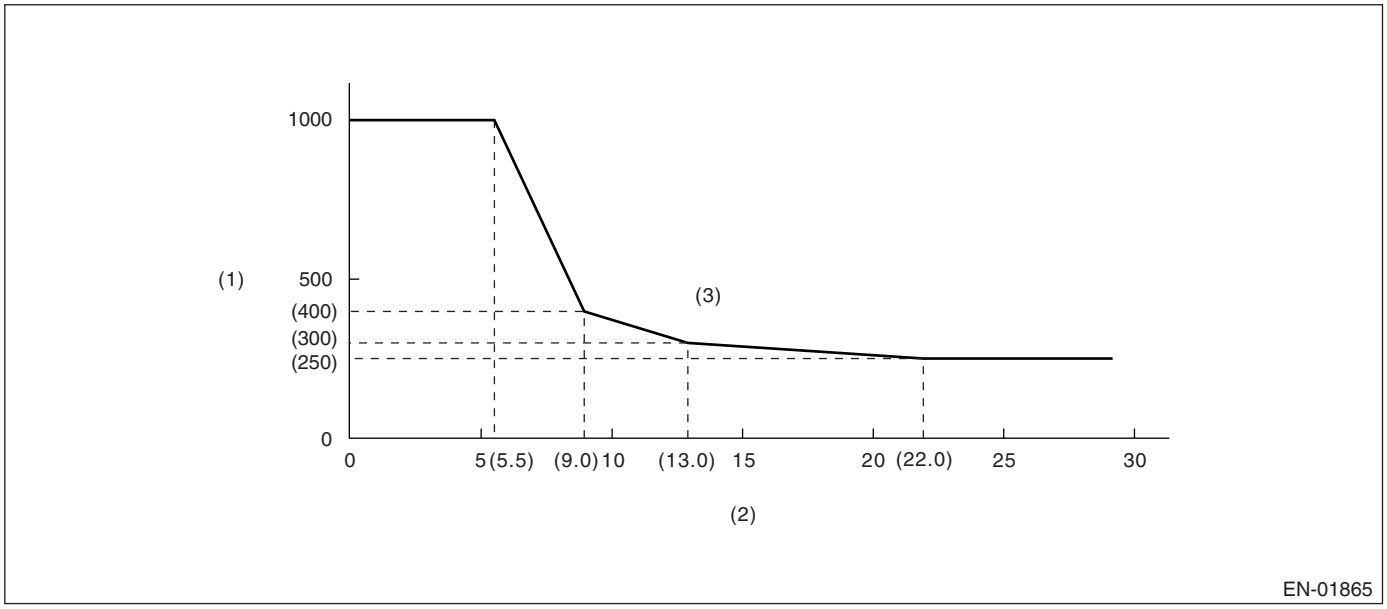

(1) Judgment time (milliseconds)
(2) Throttle position sensor 1 opening angle
(3) NG area

Malfunction Indicator Light Illumination: Illuminates as soon as malfunction occurs.

6. DTC CLEAR CONDITION

- When the OK idling cycle was completed 40 times in a row
- When “Clear Memory” was performed (Only with engine stoppedped)

7. MALFUNCTION INDICATOR LIGHT CLEAR CONDITION

- When the OK driving cycle was completed 3 times in a row
- When “Clear Memory” was performed (Only with engine stoppedped)

8. FAIL SAFE

Stop the current to electronic throttle control motor. (Fix the throttle opening angle to 6°.)

9. ECM OPERATION AT DTC SETTING

Memorize the freeze frame data. (For test mode $02)

CY:DTC P0691 COOLING FAN 1 CONTROL CIRCUIT LOW

1. OUTLINE OF DIAGNOSIS

Detect the open or short circuit of the radiator fan circuit.
Judge NG when the ECM output level differs from the actual terminal level.

2. ENABLE CONDITION

Secondary Parameters	Enable Conditions
Ignition switch	ON
Battery voltage	≥ 10.9 V
After engine starting	≥ 1 second
Engine speed	500 ←→ 850 rpm

3. GENERAL DRIVING CYCLE

Perform the diagnosis continuously when idling.

4. DIAGNOSTIC METHOD

• Abnormality Judgment

Judge NG when the cumulative time of completing the malfunction criteria below becomes more than 2.5 seconds.

Judgment Value

Malfunction Criteria	Threshold Value
Duty ratio Terminal voltage level	= 100% Low level
Duty ratio Terminal voltage level	5% ←→ 95% Low level

Time Needed for Diagnosis: 2.5 seconds
Malfunction Indicator Light Illumination: Illuminates when malfunction occurs in 2 continuous driving cycles.

• Normality Judgment

Judge OK and clear NG when the malfunction criteria below are completed.

Judgment Value

Malfunction Criteria	Threshold Value
Duty ratio Terminal voltage level	= 100% High level
Duty ratio Terminal voltage level	5% ←→ 95% High level

5. DTC CLEAR CONDITION

- When the OK idling cycle was completed 40 times in a row
- When “Clear Memory” was performed

6. MALFUNCTION INDICATOR LIGHT CLEAR CONDITION

- When the OK driving cycle was completed 3 times in a row
- When “Clear Memory” was performed

7. FAIL SAFE

None

8. ECM OPERATION AT DTC SETTING

Memorize the freeze frame data. (For test mode $02)

CZ:DTC P0692 COOLING FAN 1 CONTROL CIRCUIT HIGH

1. OUTLINE OF DIAGNOSIS

Detect the open or short circuit of the radiator fan circuit.
Judge NG when the ECM output level differs from the actual terminal level.

2. ENABLE CONDITION

Secondary Parameters	Enable Conditions
Ignition switch	ON
Battery voltage	≥ 10.9 V
After engine starting	≥ 1 second
Engine speed	500 ←→ 850 rpm

3. GENERAL DRIVING CYCLE

Perform the diagnosis continuously when idling.

4. DIAGNOSTIC METHOD

• Abnormality Judgment

Judge NG when the cumulative time of completing the malfunction criteria below becomes more than 2.5 seconds.

Judgment Value

Malfunction Criteria	Threshold Value
Duty ratio	= 0%
Terminal voltage level	High level
Duty ratio	5% ←→ 95%
Terminal voltage level	High level

Time Needed for Diagnosis: 2.5 seconds
Malfunction Indicator Light Illumination: Illuminates when malfunction occurs in 2 continuous driving cycles.

• Normality Judgment

Judge OK and clear NG when the malfunction criteria below are completed.

Judgment Value

Malfunction Criteria	Threshold Value
Duty ratio	= 0%
Terminal voltage level	Low level
Duty ratio	5% ←→ 95%
Terminal voltage level	Low level

5. DTC CLEAR CONDITION

- When the OK idling cycle was completed 40 times in a row
- When “Clear Memory” was performed

6. MALFUNCTION INDICATOR LIGHT CLEAR CONDITION

- When the OK driving cycle was completed 3 times in a row
- When “Clear Memory” was performed

7. FAIL SAFE

None

8. ECM OPERATION AT DTC SETTING

Memorize the freeze frame data. (For test mode $02)

DA:DTC P0700 TRANSMISSION CONTROL SYSTEM (MIL REQUEST)

1. OUTLINE OF DIAGNOSIS

AT C/U performs CAN communication. It judges as NG if malfunction is detected.

2. ENABLE CONDITION

Secondary Parameters	Enable Conditions
Batery Voltage	≥ 10.9 V

3. GENERAL DRIVING CYCLE

Always perform diagnosis continously.

4. DIAGNOSTIC METHOD

It judges as NG if the following condition malfunctions more than the predetermined time (2.5s). It judges as OK if the following condition does not malfunction, and the NG memory is cleared.

Judgement Value

Malfunction Criteria	Threshold Value
MIL light up request from TCM	set

Time needed for diagnosis: 2.5 seconds
Malfunction Indicator Light Illumination: Illuminates simultaneously when malfunction is detected.

5. DTC CLEAR CONDITION

- When the OK driving cycle was completed 40 consecutive times.
- When “Clear Memory” was performed.

6. MALFUNCTION INDICATOR LIGHT CLEAR CONDITION

- When the OK driving cycle was completed 3 consecutive times.
- When “Clear Memory” was performed.

7. FAIL-SAFE

None

8. ECM OPERATING AT DTC SETTING

Store the freeze frame data. (For test mode $02)

DB:DTC P1152 O2 SENSOR CIRCUIT RANGE/PERFORMANCE (LOW) (BANK1 SENSOR1)

1. OUTLINE OF DIAGNOSIS

Detect that lambda value remains Low.
Judge NG when lambda value is abnormal in accordance with lambda value of front oxygen (A/F) sensor and running condition that is vehicle speed, amount of intake air engine coolant temperature, sub feedback control, etc.

Lambda value = Actual air fuel ratio/Theoretical air fuel ratio

Lambda > 1: Lean
Lambda < 1: Rich

2. COMPONENT DESCRIPTION

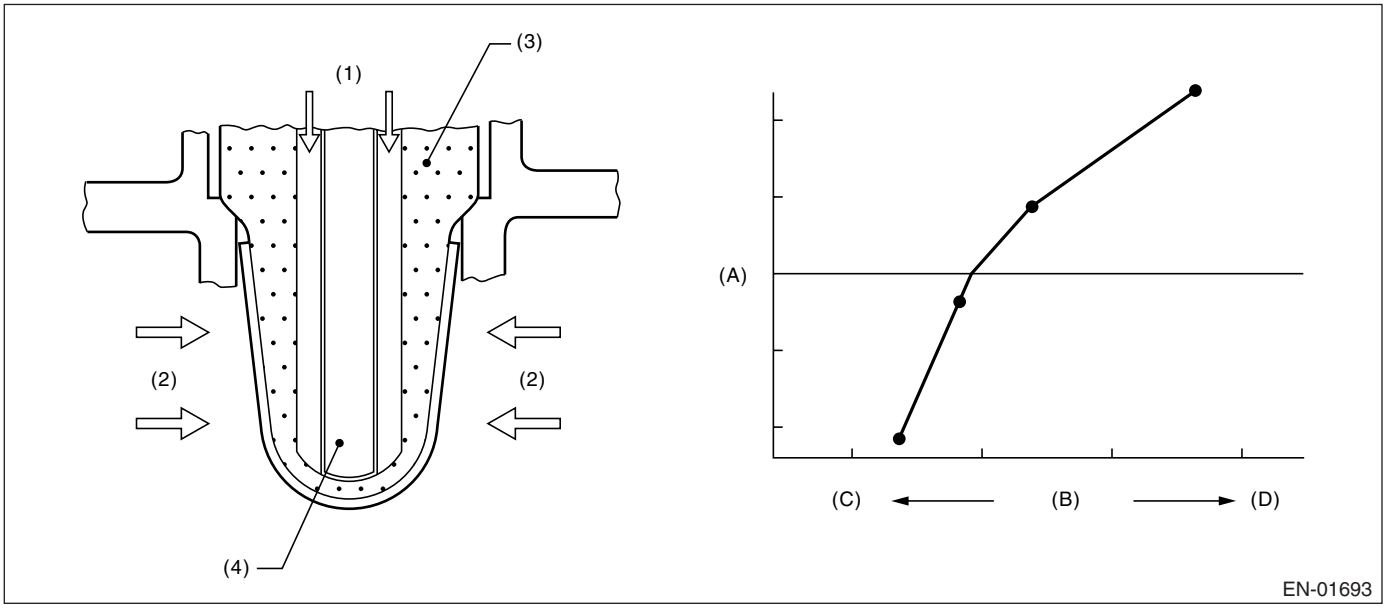

(1) Atmosphere
(2) Exhaust
(3) ZrO2
(4) Ceramic heater
(A) Electromotive force
(B) Air fuel ratio
(C) Lean
(D) Rich

3. ENABLE CONDITION

Secondary Parameters	Enable Conditions
All secondary parameters to be in enable conditions	4 seconds or more
Battery voltage	> 10.9 V
Atmospheric pressure	> 75.1 kPa (563 mmHg, 22.2 inHg)
Rear oxygen sensor sub feedback	Operating
Rear oxygen sensor output voltage – feedback target voltage	–0.2 V ←→ 0.1 V
or rear oxygen sensor sub feedback compensation coefficient	On Min.
or rear oxygen sensor sub feedback compensation coefficient	On Max.
After engine starting	60 seconds or more
Engine coolant temperature	≥ 75°C (167°F)
Vehicle speed	≥ 20 km/h (12 MPH)
Amount of intake air	≥ 8 g (0.28 oz)/s
Change of load every 1/3 engine revolutions	≤ 0.02 g (0.001 oz)/rev
Impedance of front oxygen (A/F) sensor	0 ←→ 50 Ω
Learning value of evaporation gas density	≤ 0.2
Accumulated time of operating canister purge	20 seconds or more
Target lambda load compensation coefficient	–0.05 ←→ 0.05

4. GENERAL DRIVING CYCLE

Perform diagnosis continuously at a constant speed of 20 km/h (12 MPH) or more since 60 seconds after starting the engine.

5. DIAGNOSTIC METHOD

Judge NG when the continuous time of completing the malfunction criteria below becomes more than the time needed for diagnosis (10 seconds). Judge OK and clear NG when the malfunction criteria below are not completed.

Judgment Value

Malfunction Criteria	Threshold Value
Output lambda when rear oxygen sensor sub feedback compensation coefficient being at not high limit	≤ 0.85

Time Needed for Diagnosis: 10 seconds

Malfunction Indicator Light Illumination: Illuminates when malfunction occurs in 2 continuous driving cycles.

6. DTC CLEAR CONDITION

- When the OK idling cycle was completed 40 times in a row
- When “Clear Memory” was performed

7. MALFUNCTION INDICATOR LIGHT CLEAR CONDITION

- When the OK driving cycle was completed 3 times in a row
- When “Clear Memory” was performed

8. FAIL SAFE

- Front oxygen (A/F) sensor main learning correction: Not allowed to calculate.
- Rear oxygen sensor sub learning correction: Not allowed to calculate.
- Correction when re-starting at high temperature: Normally minimum value 0.06 → 0
- Purge control: Not allowed to purge

9. ECM OPERATION AT DTC SETTING

Memorize the freeze frame data. (For test mode $02)

DC:DTC P1153 O2 SENSOR CIRCUIT RANGE/PERFORMANCE (HIGH) (BANK1 SENSOR1)

1. OUTLINE OF DIAGNOSIS

Detect that lambda value remains High.
Judge NG when lambda value is abnormal in accordance with lambda value of front oxygen (A/F) sensor and running condition that is vehicle speed, amount of intake air engine coolant temperature, sub feedback control, etc.
Lambda value = Actual air fuel ratio/Theoretical air fuel ratio
Lambda > 1: Lean
Lambda < 1: Rich

2. COMPONENT DESCRIPTION

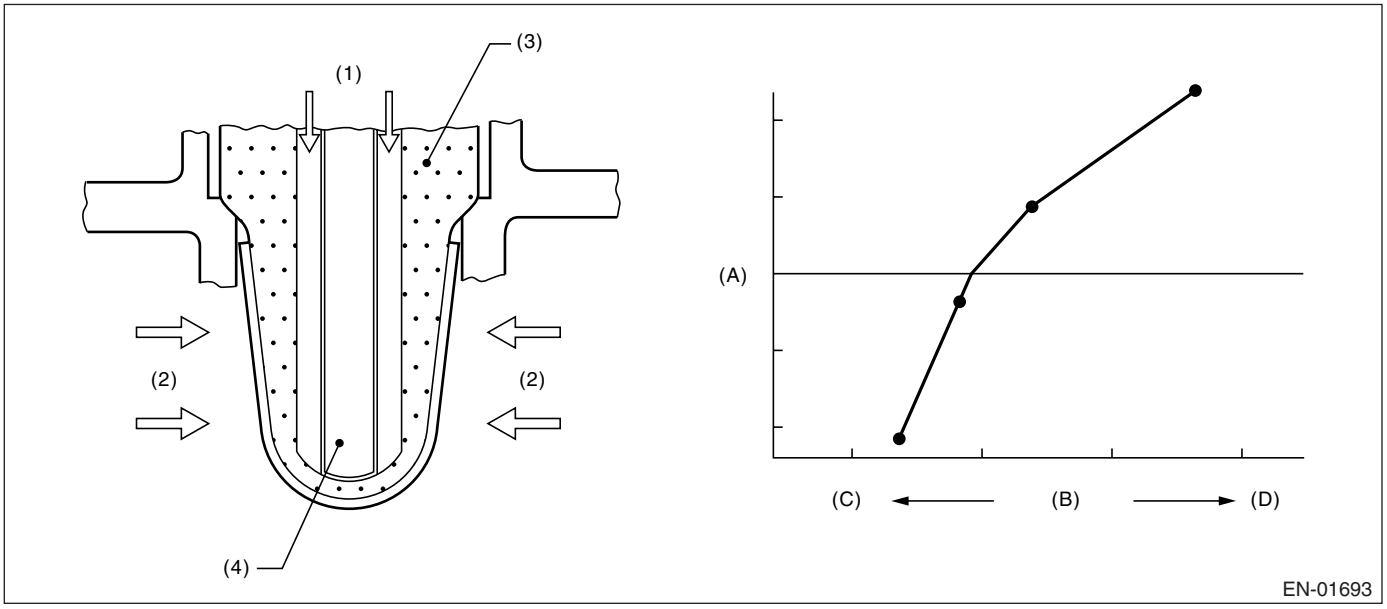

(1) Atmosphere
(2) Exhaust
(3) ZrO2
(4) Ceramic heater
(A) Electromotive force
(B) Air fuel ratio
(C) Lean
(D) Rich

3. ENABLE CONDITION

Secondary Parameters	Enable Conditions
All secondary parameters to be in enable conditions	4 seconds or more
Battery voltage	> 10.9 V
Atmospheric pressure	> 75.1 kPa (563 mmHg, 22.2 inHg)
Rear oxygen sensor sub feedback	Operating
Rear oxygen sensor output voltage – feedback target voltage	–0.2 V ←→ 0.1 V
or rear oxygen sensor sub feedback compensation coefficient	On Min.
or rear oxygen sensor sub feedback compensation coefficient	On Max.
After engine starting	60 seconds or more
Engine coolant temperature	≥ 75°C (167°F)
Vehicle speed	≥ 20 km/h (12 MPH)
Amount of intake air	≥ 8 g (0.28 oz)/s
Change of load every 1/3 engine revolutions	≤ 0.02g (0.001 oz)/rev
Impedance of front oxygen (A/F) sensor	0 ←→ 52 Ω
Learning value of evaporation gas density	≤ 0.2
Accumulated time of operating canister purge	20 seconds or more
Target lambda load compensation coefficient	–0.05 ←→ 0.05

4. GENERAL DRIVING CYCLE

Perform diagnosis continuously at a constant speed of 20 km/h (12 MPH) or more since 60 seconds after starting the engine.

5. DIAGNOSTIC METHOD

Judge NG when the continuous time of completing the malfunction criteria below becomes more than the time needed for diagnosis (10 seconds). Judge OK and clear NG when the malfunction criteria below are not completed.

Judgment Value

Malfunction Criteria	Threshold Value
Output lambda when rear oxygen sensor sub feedback compensation coefficient value being at not low limit	≥ 1.15

Time Needed for Diagnosis: 10 seconds

Malfunction Indicator Light Illumination: Illuminates when malfunction occurs in 2 continuous driving cycles.

6. DTC CLEAR CONDITION

- When the OK idling cycle was completed 40 times in a row
- When “Clear Memory” was performed

7. MALFUNCTION INDICATOR LIGHT CLEAR CONDITION

- When the OK driving cycle was completed 3 times in a row
- When “Clear Memory” was performed

8. FAIL SAFE

- Front oxygen (A/F) sensor main learning compensation: Not allowed to calculate.
- Rear oxygen sensor sub learning compensation: Not allowed to calculate.
- Correction when re-starting at high temperature: Normally minimum value 0.06 → 0
- Purge control: Not allowed to purge

9. ECM OPERATION AT DTC SETTING

Memorize the freeze frame data. (For test mode $02)

DD:DTC P1154 O2 SENSOR CIRCUIT RANGE/PERFORMANCE (LOW) (BANK 2 SENSOR 1)

1. OUTLINE OF DIAGNOSIS

For the detecting criteria, refer to DTC P1152. <Ref. to GD(H6DO)-179, DTC P1152 O2 SENSOR CIRCUIT RANGE/PERFORMANCE (LOW) (BANK1 SENSOR1), Diagnostic Trouble Code (DTC) Detecting Criteria.>

DE:DTC P1155 O2 SENSOR CIRCUIT RANGE/PERFORMANCE (HIGH) (BANK 2 SENSOR 1)

1. OUTLINE OF DIAGNOSIS

For the detecting criteria, refer to DTC P1153. <Ref. to GD(H6DO)-182, DTC P1153 O2 SENSOR CIRCUIT RANGE/PERFORMANCE (HIGH) (BANK1 SENSOR1), Diagnostic Trouble Code (DTC) Detecting Criteria.>

DF:DTC P1160 RETURN SPRING FAILURE

1. OUTLINE OF DIAGNOSIS

Judge NG when the valve does not move to the close direction with the motor power stopped and the valve open more than the default opening.

2. COMPONENT DESCRIPTION

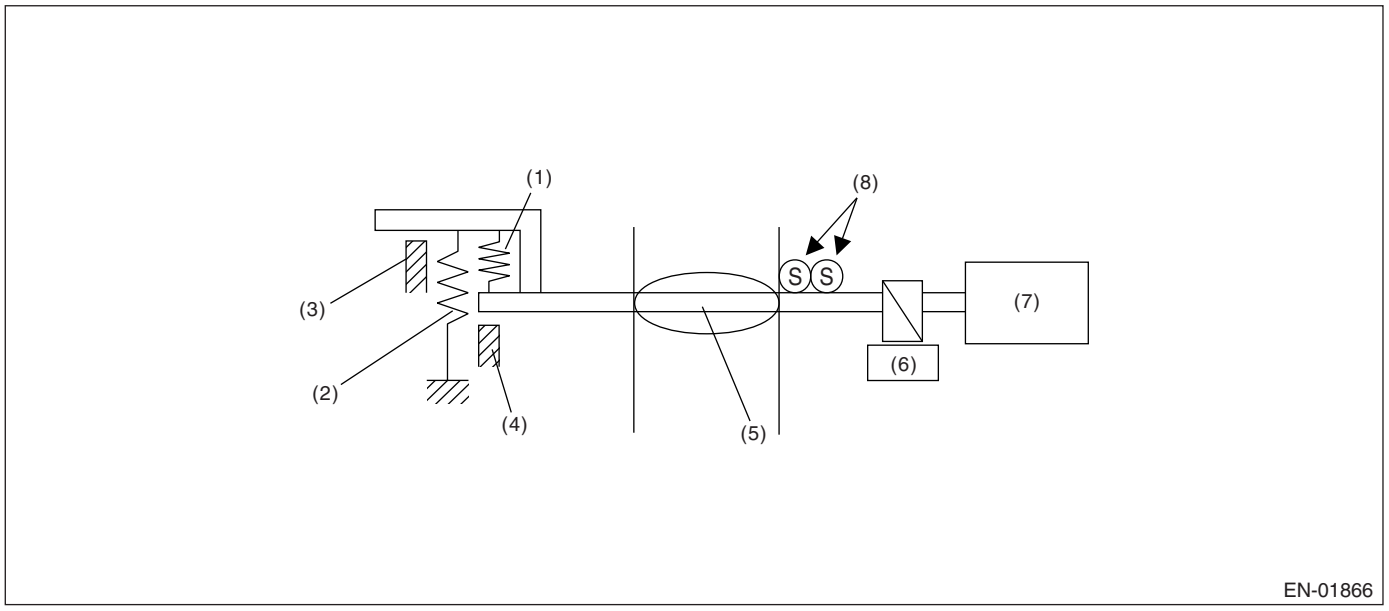

(1) Opener spring
(2) Return spring
(3) Intermediate stopper
(4) Full closed stopper
(5) Throttle valve
(6) Gear
(7) DC motor
(8) Main and sub throttle sensor

3. ENABLE CONDITION

Secondary Parameters	Enable Conditions
Throttle opening	OFF
Motor continuity	OFF

4. GENERAL DRIVING CYCLE

- Ignition switch ON → OFF
- Ignition switch OFF → ON (After clear memory only)

5. DIAGNOSTIC METHOD

Judge NG when the continuous time of completing the malfunction criteria below becomes more than th time needed for 0.6 seconds.

Judgment Value

Malfunction Criteria	Threshold Value
Opening variation after continuity is set to OFF	≥ 2°

Time Needed for Diagnosis: 600 milliseconds
Malfunction Indicator Light Illumination: Illuminates as soon as malfunction occurs.

6. DTC CLEAR CONDITION

- When the OK idling cycle was completed 40 times in a row
- When “Clear Memory” was performed (Only with engine stopped)

7. MALFUNCTION INDICATOR LIGHT CLEAR CONDITION

- When the OK driving cycle was completed 3 times in a row
- When “Clear Memory” was performed (Only with engine stopped)

8. FAIL SAFE

Fix the throttle opening to 6°.

9. ECM OPERATION AT DTC SETTING

Memorize the freeze frame data. (For test mode $02)

DG:DTC P1400 FUEL TANK PRESSURE CONTROL SOLENOID VALVE CIRCUIT LOW

1. OUTLINE OF DIAGNOSIS

Detect open or short circuit of pressure control solenoid valve. Judge NG when ECM output level is different from actual terminal level.

2. COMPONENT DESCRIPTION

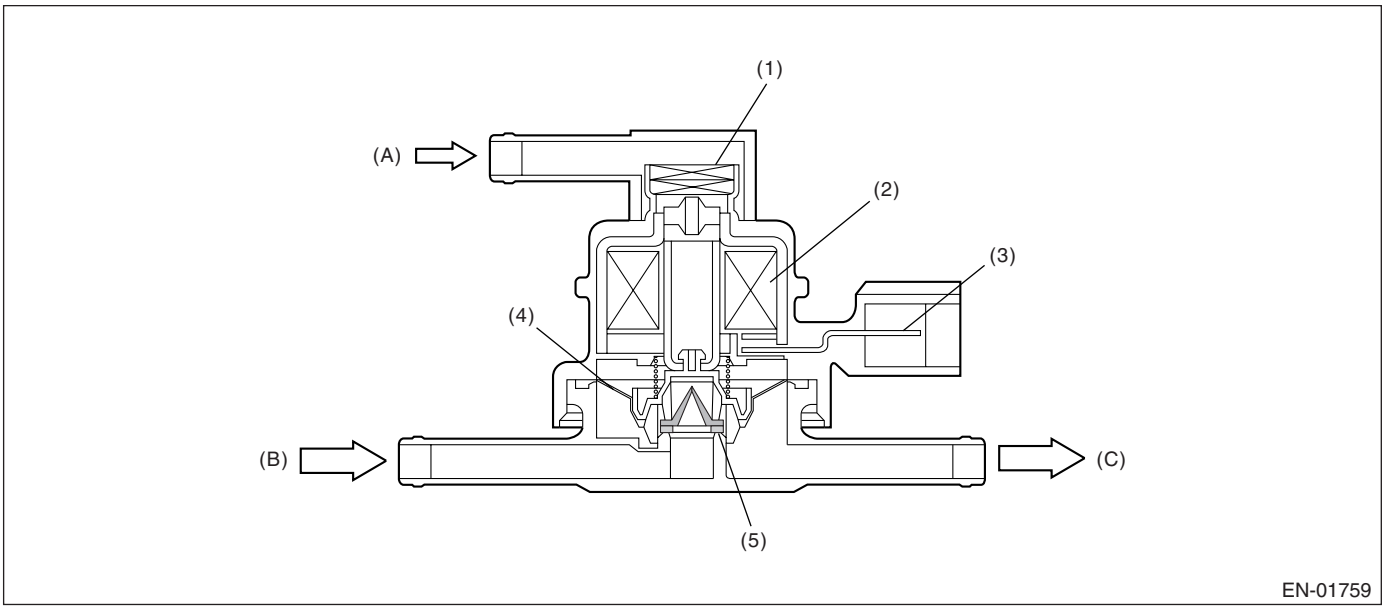

(1) Filter
(2) Coil
(3) Connector terminal
(4) Diaphragm
(5) Valve
(A) Atmospheric pressure
(B) Shut off valve
(C) To fuel tank

3. ENABLE CONDITION

Secondary Parameters	Enable Conditions
Ignition switch	ON
Battery voltage	≥ 10.9 V
After engine starting	1 second or more

4. GENERAL DRIVING CYCLE

Always perform the diagnosis after starting the engine.

5. DIAGNOSTIC METHOD

Judge NG when the continuous time of completing the malfunction criteria below becomes more than time needed for diagnosis (2.5 seconds). Judge OK and clear the NG when the malfunction criteria below are not completed.

Judgment Value

Malfunction Criteria	Threshold Value
Terminal voltage when ECM outputs OFF signal	Low

Time Needed for Diagnosis: 2.5 seconds

Malfunction Indicator Light Illumination: Illuminates when malfunction occurs in two continuous drive cycles.

6. DTC CLEAR CONDITION

- When the OK idling cycle was completed 40 times in a row
- When “Clear Memory” was performed

7. MALFUNCTION INDICATOR LIGHT CLEAR CONDITION

- When the OK driving cycle was completed 3 times in a row
- When “Clear Memory” was performed

8. FAIL SAFE

None

9. ECM OPERATION AT DTC SETTING

Memorize the freeze frame data. (For test mode $02)

DH:DTC P1420 FUEL TANK PRESSURE CONTROL SOL. VALVE CIRCUIT HIGH

1. OUTLINE OF DIAGNOSIS

Detect open or short circuit of pressure control solenoid valve.
Judge NG when ECM output level is different from actual terminal level.

2. COMPONENT DESCRIPTION

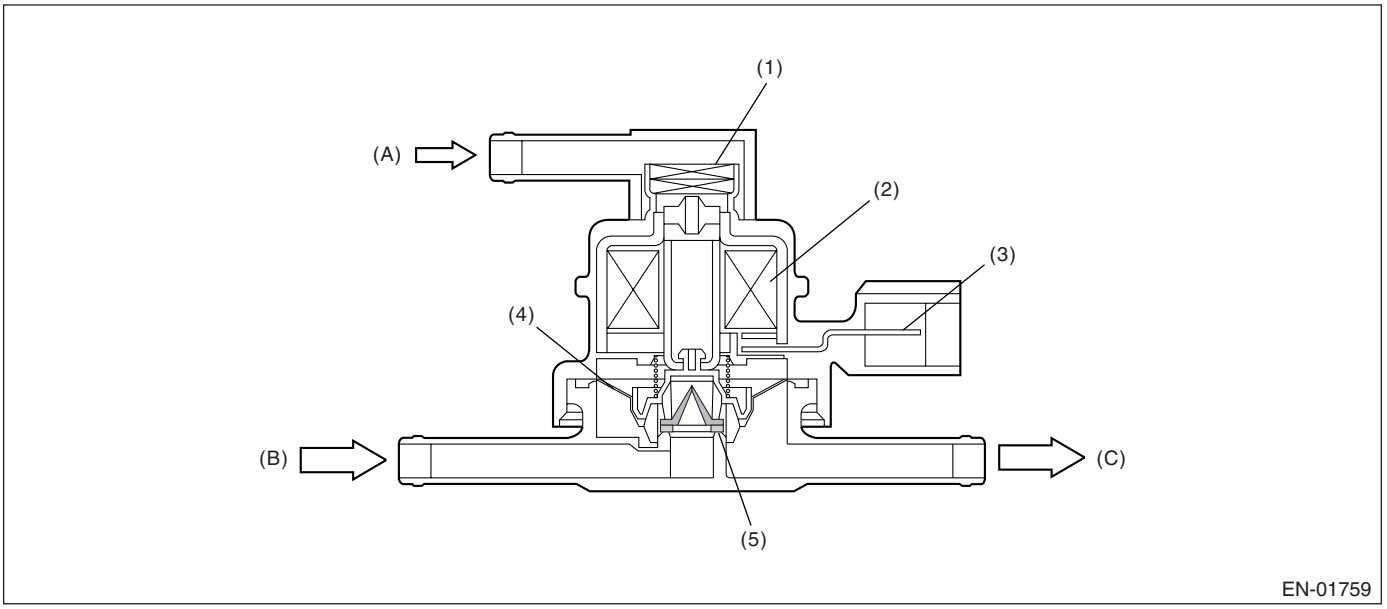

(1) Filter
(2) Coil
(3) Connector terminal
(4) Diaphragm
(5) Valve
(A) Atmospheric pressure
(B) Shut off valve
(C) To fuel tank

3. ENABLE CONDITION

Secondary Parameters	Enable Conditions
Ignition switch	ON
Battery voltage	≥ 10.9 V
After engine starting	1 second or more

4. GENERAL DRIVING CYCLE

Always perform the diagnosis after starting the engine.

5. DIAGNOSTIC METHOD

Judge NG when the continuous time of completing the malfunction criteria below becomes more than time needed for diagnosis (2.5 seconds). Judge OK and clear the NG when the malfunction criteria below are not completed.

Judgment Value

Malfunction Criteria	Threshold Value
Terminal voltage when ECM outputs ON signal	High

Time Needed for Diagnosis: 2.5 seconds
Malfunction Indicator Light Illumination: Illuminates when malfunction occurs in two continuous drive cycles.

6. DTC CLEAR CONDITION

- When the OK idling cycle was completed 40 times in a row

- When “Clear Memory” was performed

7. MALFUNCTION INDICATOR LIGHT CLEAR CONDITION

- When the OK driving cycle was completed 3 times in a row
- When “Clear Memory” was performed

8. FAIL SAFE

None

9. ECM OPERATION AT DTC SETTING

Memorize the freeze frame data. (For test mode $02)

DI: DTC P1443 VENT CONTROL SOLENOID VALVE FUNCTION PROBLEM

1. OUTLINE OF DIAGNOSIS

Detect malfunction of drain valve (close fixing).
Judge NG when the fuel tank pressure becomes smaller.

2. COMPONENT DESCRIPTION

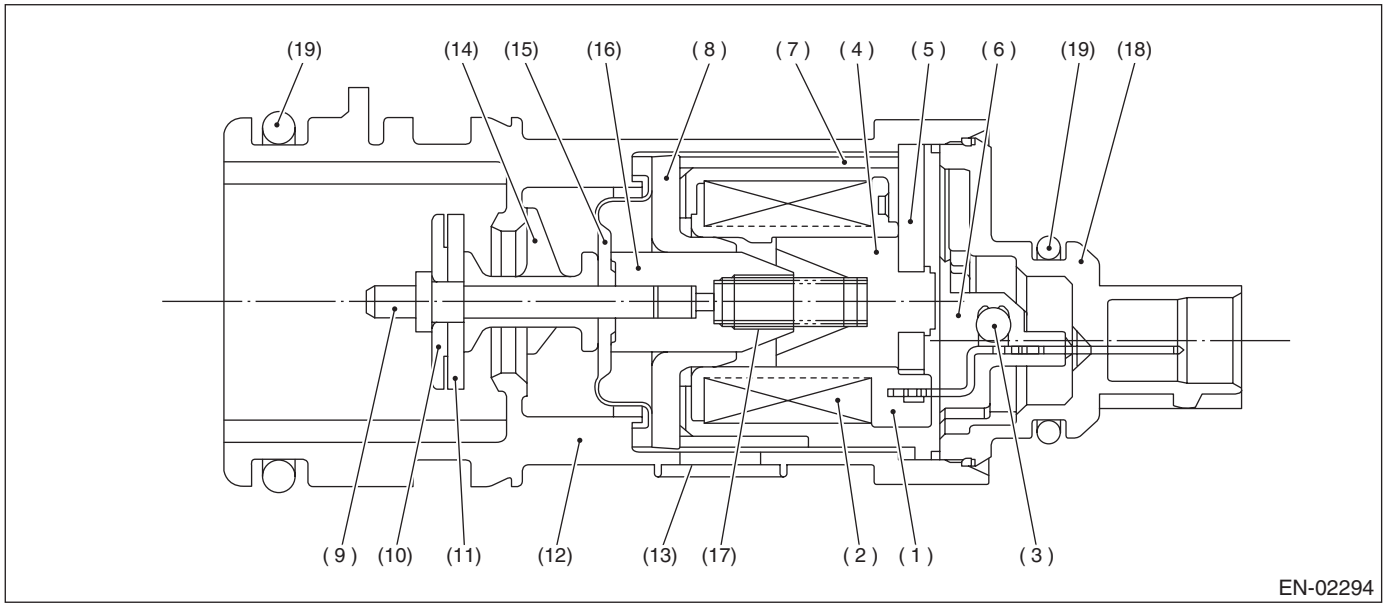

(1) Bobbin
(2) Coil
(3) Diode
(4) Stator core
(5) End plate
(6) Body
(7) Yoke
(8) Magnetic plate
(9) Shaft
(10) Plate
(11) Valve
(12) Housing
(13) Fitter
(14) Retainer
(15) Diaphragm
(16) Movable core
(17) Spring
(18) Cover
(19) O-ring

3. ENABLE CONDITION

Secondary Parameters	Enable Conditions
Battery voltage	≥ 10.9 V
Ignition switch	ON
Atmospheric pressure	≥ 75.0 kPa (563 mmHg, 22.17 inHg)
Tank pressure when starter SW OFF → ON	−0.43 ←→ 1.42 kPa (−3.2 ←→ 10.7 mmHg, −0.13 ←→ 0.42 inHg)
Drain valve	Open

4. GENERAL DRIVING CYCLE

Always perform the diagnosis continuously.

5. DIAGNOSTIC METHOD

• Abnormality Judgment

Judge NG when the continuous time of completing the malfunction criteria below becomes more than 3 seconds.

Judgment Value

Malfunction Criteria	Threshold Value
Tank pressure	≤ –4.0 kPa (–30 mmHg, –1.18 inHg)

Time Needed for Diagnosis: 3 seconds
Malfunction Indicator Light Illumination: Illuminates as soon as the malfunction occurs.
• Normality Judgment

Judge OK and clear the NG when the malfunction criteria below are completed.
Judgment Value

Malfunction Criteria	Threshold Value
Tank pressure	> –4.0 kPa (–30 mmHg, –1.18 inHg)
Cumulative time	≥ 30 seconds
Purge control solenoid valve duty ratio	Except 0
Fuel temperature	–10 ←→ 45°C (14 ←→ 133°F)
Intake manifold relative pressure	≤ –26.7 kPa (–200 mmHg, –7.87 inHg)

6. DTC CLEAR CONDITION

- When the OK idling cycle was completed 40 times in a row
- When “Clear Memory” was performed

7. MALFUNCTION INDICATOR LIGHT CLEAR CONDITION

- When the OK driving cycle was completed 3 times in a row
- When “Clear Memory” was performed

8. FAIL SAFE

PCV control: Open the PCV solenoid.

9. ECM OPERATION AT DTC SETTING

Memorize the freeze frame data. (For test mode $02)

DJ:DTC P1446 FUEL TANK SENSOR CONTROL VALVE CIRCUIT LOW

1. OUTLINE OF DIAGNOSIS

Detect the open or short circuit of fuel tank sensor control valve.
Judge NG when the ECM output level is different from actual terminal level.

2. COMPONENT DESCRIPTION

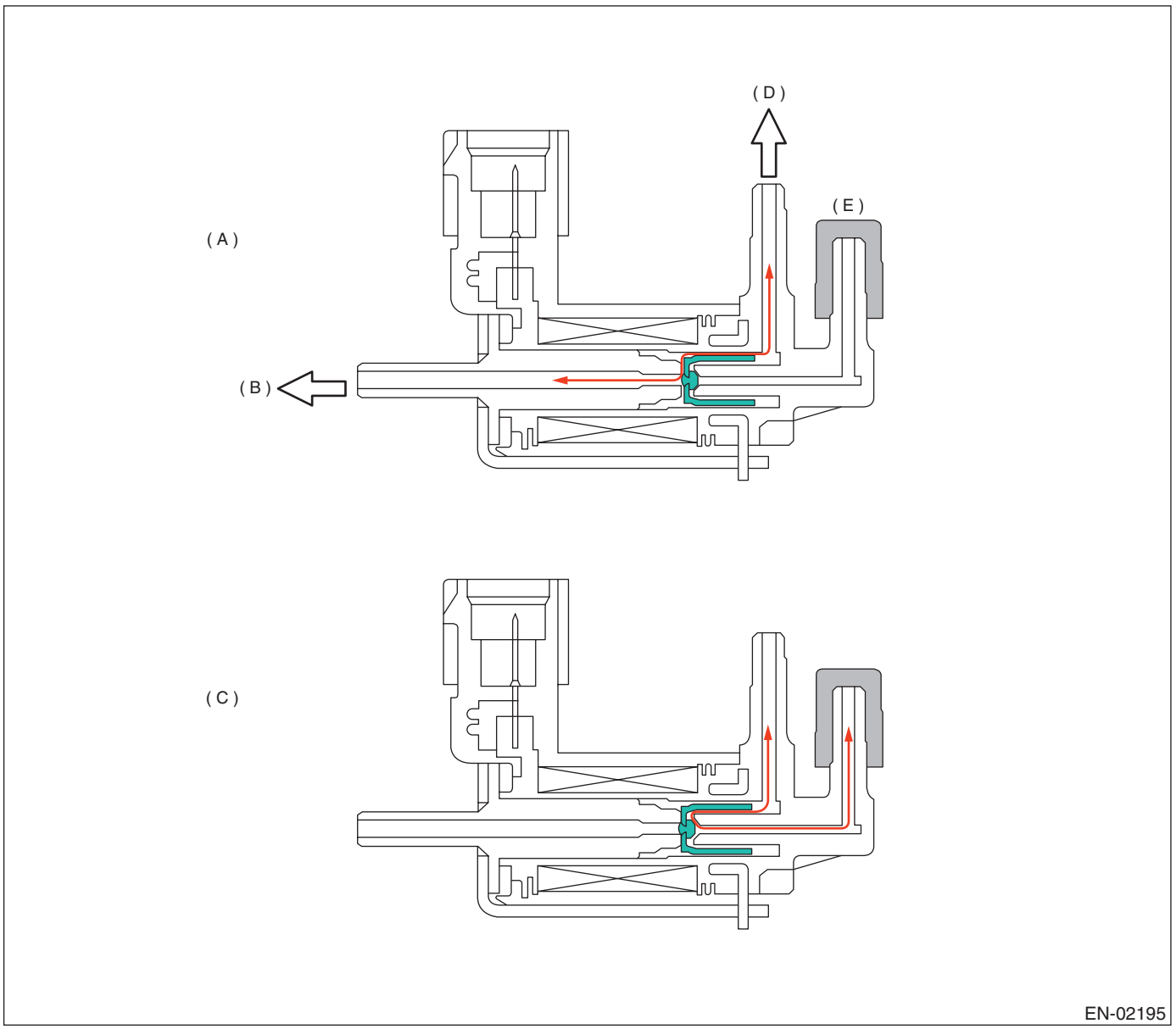

(A) Open atmosphere (solenoid OFF)
(B) Ambient air
(C) During diagnosis (solenoid ON)
(D) To pressure sensor
(E) Plug

3. ENABLE CONDITION

Secondary Parameters	Enable Conditions
None	

4. GENERAL DRIVING CYCLE

Always perform the diagnosis continuously.

5. DIAGNOSTIC METHOD

• Abnormality Judgment

Judge NG when the continuous time of completing the malfunction criteria below becomes more than 2.5 seconds.

Judgment Value

Malfunction Criteria	Threshold Value
Battery voltage	≥ 10.9 V
Ignition switch	ON
After engine starting	1 second or more
Terminal output voltage when ECM output OFF signals	Low

Time Needed for Diagnosis: 2.5 seconds
Malfunction Indicator Light Illumination: Illuminates when malfunction occurs in 2 continuous driving cycles.

• Normality Judgment

Judge OK when the malfunction criteria below are completed.

Judgment Value

Malfunction Criteria	Threshold Value
Battery voltage	≥ 10.9 V
After engine starting	1 second or more
Terminal output voltage when ECM output OFF signals	High

6. DTC CLEAR CONDITION

- When the OK idling cycle is completed 40 times in a row
- When “Clear Memory” was performed

7. MALFUNCTION INDICATOR LIGHT CLEAR CONDITION

- When the OK driving cycle is completed 3 times in a row
- When “Clear Memory” was performed

8. FAIL SAFE

None

9. ECM OPERATION AT DTC SETTING

Memorize the freeze frame data. (For test mode $02)

DK:DTC P1447 FUEL TANK SENSOR CONTROL VALVE CIRCUIT HIGH

1. OUTLINE OF DIAGNOSIS

Detect the open or short circuit of fuel tank sensor control valve.
Judge NG when the ECM output level is different from actual terminal level.

2. COMPONENT DESCRIPTION

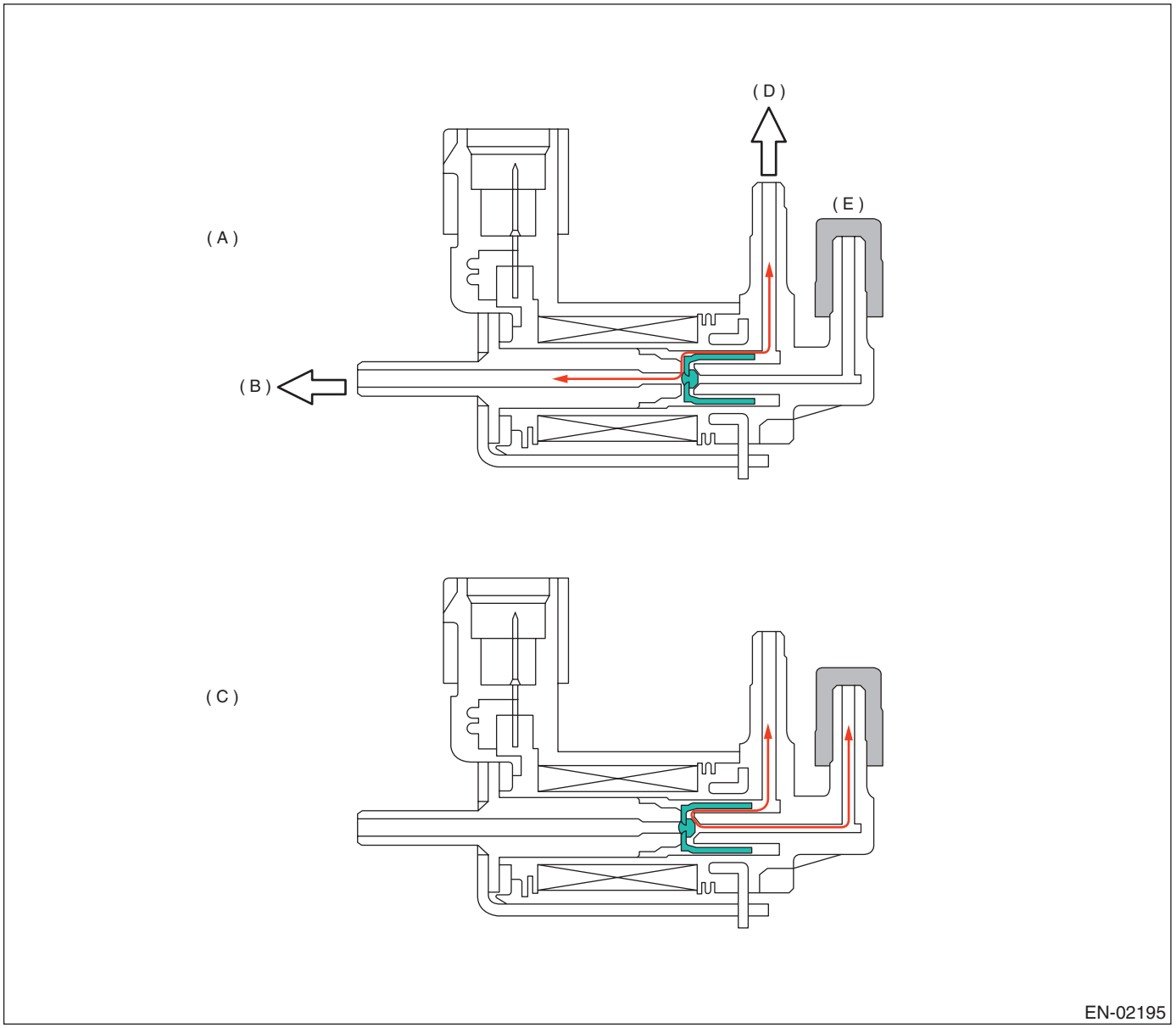

(A) Open atmosphere (solenoid OFF)
(B) Ambient air
(C) During diagnosis (solenoid ON)
(D) To pressure sensor
(E) Plug

3. ENABLE CONDITION

Secondary Parameters	Enable Conditions
None	

4. GENERAL DRIVING CYCLE

Always perform the diagnosis continuously.

5. DIAGNOSTIC METHOD

• Abnormality Judgment

Judge NG when the cumulative time of completing the malfunction criteria below becomes more than 2.5 seconds.

Judgment Value

Malfunction Criteria	Threshold Value
Battery voltage	≥ 10.9 V
Ignition switch	ON
After engine starting	1 second or more
Terminal output voltage when ECM output ON signals	High

Time Needed for Diagnosis: 2.5 seconds
Malfunction Indicator Light Illumination: Illuminates when malfunction occurs in two continuous drive cycles.

• Normality Judgment

Judge OK when the malfunction criteria below are completed.

Judgment Value

Malfunction Criteria	Threshold Value
Battery voltage	≥ 10.9 V
After engine starting	1 second or more
Terminal output voltage when ECM output OFF signals	Low

6. DTC CLEAR CONDITION

- When the OK idling cycle is completed 40 times in a row
- When “Clear Memory” was performed

7. MALFUNCTION INDICATOR LIGHT CLEAR CONDITION

- When the OK driving cycle is completed 3 times in a row
- When “Clear Memory” was performed

8. FAIL SAFE

None

9. ECM OPERATION AT DTC SETTING

Memorize the freeze frame data. (For test mode $02)

DL:DTC P1518 STARTER SWITCH CIRCUIT LOW INPUT

1. OUTLINE OF DIAGNOSIS

Detect the open or short circuit of starter SW.
Judge OFF NG when the engine starts without starter ON experience.

2. ENABLE CONDITION

Secondary Parameters	Enable Conditions
None	

3. GENERAL DRIVING CYCLE

Always perform the diagnosis continuously.

4. DIAGNOSTIC METHOD

• Abnormality Judgment

Judge OFF NG when the malfunction criteria below are completed.
Judgment Value

Malfunction Criteria	Threshold Value
Vehicle speed	< 1 km/h (0.62 MPH)
Starter ON signal	Not detected
Engine speed of less than 500 rpm after 0.8 seconds confinuity	≥ 500 rpm

Time Needed for Diagnosis: 1 second
Malfunction Indicator Light Illumination: Illuminates when malfunction occurs in 2 continuous driving cycles.

• Normality Judgment

Judge OFF OK and clear the NG when the malfunction criteria below are completed.
Judgment Value

Malfunction Criteria	Threshold Value
Starter ON	Experienced
Starter ON diagnosis	Not experienced
Battery voltage	> 8 V

5. DTC CLEAR CONDITION

- When the OK idling cycle was completed 40 times in a row
- When “Clear Memory” was performed

6. MALFUNCTION INDICATOR LIGHT CLEAR CONDITION

- When the OK driving cycle was completed 3 times in a row
- When “Clear Memory” was performed

7. FAIL SAFE

None

8. ECM OPERATION AT DTC SETTING

Memorize the freeze frame data. (For test mode $02)

DM:DTC P1560 BACK-UP VOLTAGE CIRCUIT MALFUNCTION

1. OUTLINE OF DIAGNOSIS

Detect open or short circuit of the back-up voltage circuit.
Judge NG when the voltage of back-up power becomes small.

2. ENABLE CONDITION

Secondary Parameter	Enable Condition
None	

3. GENERAL DRIVING CYCLE

Always perform the diagnosis continuously.

4. DIAGNOSTIC METHOD

• Abnormality Judgment

Judge NG when the continuous time of completing the malfunction criteria below becomes more than 2.5 seconds.

Judgment Value

Malfunction Criteria	Threshold Value
Voltage of back-up power	Low
Battery voltage	≥ 10.9 V
Engine speed	〉500 rpm

Time Needed for Diagnosis: 2.5 seconds
Malfunction Indicator Light Illumination: Illuminates as soon as malfunction occurs.

• Normality Judgment

Judge OK and clear NG when the malfunction criteria below is completed.

Judgment Value

Malfunction Criteria	Threshold Value
Voltage of back-up power supply	High
Battery voltage	≥ 10.9 V
Engine speed	〉500 rpm

5. DTC CLEAR CONDITION

- When the OK idling cycle was completed 40 times in a row
- When “Clear Memory” was performed

6. MALFUNCTION INDICATOR LIGHT CLEAR CONDITION

- When the OK driving cycle was completed 3 times in a row
- When “Clear Memory” was performed

7. FAIL SAFE

None

8. ECM OPERATION AT DTC SETTING

Memorize the freeze frame data. (For test mode $02)

DN:DTC P1570 ANTENNA

1. OUTLINE OF DIAGNOSIS

For the detecting criteria, refer to DTC P0513. <Ref. to GD(H6DO)-165, DTC P0513 INCORRECT IMMOBILIZER KEY, Diagnostic Trouble Code (DTC) Detecting Criteria.>

DO:DTC P1571 REFERENCE CODE INCOMPATIBILITY

1. OUTLINE OF DIAGNOSIS

For the detecting criteria, refer to DTC P0513. <Ref. to GD(H6DO)-165, DTC P0513 INCORRECT IMMOBILIZER KEY, Diagnostic Trouble Code (DTC) Detecting Criteria.>

DP:DTC P1572 IMM CIRCUIT FAILURE (EXCEPT ANTENNA CIRCUIT)

1. OUTLINE OF DIAGNOSIS

For the detecting criteria, refer to DTC P0513. <Ref. to GD(H6DO)-165, DTC P0513 INCORRECT IMMOBILIZER KEY, Diagnostic Trouble Code (DTC) Detecting Criteria.>

DQ:DTC P1574 KEY COMMUNICATION FAILURE

1. OUTLINE OF DIAGNOSIS

For the detecting criteria, refer to DTC P0513. <Ref. to GD(H6DO)-165, DTC P0513 INCORRECT IMMOBILIZER KEY, Diagnostic Trouble Code (DTC) Detecting Criteria.>

DR:DTC P1576 EGI CONTROL MODULE EEPROM

1. OUTLINE OF DIAGNOSIS

For the detecting criteria, refer to DTC P0513. <Ref. to GD(H6DO)-165, DTC P0513 INCORRECT IMMOBILIZER KEY, Diagnostic Trouble Code (DTC) Detecting Criteria.>

DS:DTC P1577 IMM CONTROL MODULE EEPROM

1. OUTLINE OF DIAGNOSIS

For the detecting criteria, refer to DTC P0513. <Ref. to GD(H6DO)-165, DTC P0513 INCORRECT IMMOBILIZER KEY, Diagnostic Trouble Code (DTC) Detecting Criteria.>

DT:DTC P1578 METER FAILURE

1. OUTLINE OF DIAGNOSIS

For the detecting criteria, refer to DTC P0513. <Ref. to GD(H6DO)-165, DTC P0513 INCORRECT IMMOBILIZER KEY, Diagnostic Trouble Code (DTC) Detecting Criteria.>

DU:DTC P2088 OCV SOLENOID VALVE SIGNAL A CIRCUIT OPEN (BANK 1)

1. OUTLINE OF DIAGNOSIS

Detect open circuit of oil flow control solenoid valve.
Judge open NG when the current flow is small whereas duty signal is large.

2. ENABLE CONDITION

Secondary Parameter	Enable Condition
Battery voltage	≥ 10.9 V

3. GENERAL DRIVING CYCLE

Always perform the diagnosis continuously.

4. DIAGNOSTIC METHOD

• Abnormality Judgment

Judge NG when the continuous time of completing the malfunction criteria below becomes more than 2 seconds.

Judgment Value

Malfunction Criteria	Threshold Value
Oil flow control solenoid valve control duty	≥ 99.61%
Oil flow control solenoid valve control present current	< 0.306 A

Time Needed for Diagnosis: 2000 milliseconds
Malfunction Indicator Light Illumination: Illuminates as soon as malfunction occurs.

• Normality Judgment

Judge OK and clear NG when the continuous time of completing the malfunction criteria below becomes more than 2 seconds.

Judgment Value

Malfunction Criteria	Threshold Value
Target current value of oil flow control solenoid valve	≥ 0.14%
| Target current value of oil flow control solenoid valve − Control current value of oil flow control solenoid valve |	≥ 0.08 A

5. DTC CLEAR CONDITION

- When the OK idling cycle was completed 40 times in a row
- When “Clear Memory” was performed

6. MALFUNCTION INDICATOR LIGHT CLEAR CONDITION

- When the OK driving cycle was completed 3 times in a row
- When “Clear Memory” was performed

7. FAIL SAFE

- Ignition timing whole learning compensation:
  – Enter the initial value (whole learning compensation factor = 0.5, Variable amount of whole learning compensation factor = 0.25) to the whole learning compensation factor and variable amount of whole learning compensation factor when IG OFF, and then make the whole learning incomplete.
  – Enter the initial value (whole learning compensation factor = 0.5, Variable amount of whole learning compensation factor = 0.25) to the whole learning compensation factor and variable amount of whole learning compensation factor when making a normality judgment from abnormality judgment, and then make the whole learning incomplete.
- Ignition timing partial learning compensation:

– Enter the initial value (0°CA) to the compensation value of partial learning zone when IG OFF.
– Enter the initial value (0°CA) to the compensation value of partial learning zone when making a normality judgment from abnormality judgment.

- AVCS control:
  – Most timing retard learning is not complete or most timing retard learning completion is not experienced.
  – ISC feedback compensation: Do not perform the AVCS actual timing advance compensation.
  – Make the OCV driving Duty to be the given value (9.36%).

8. ECM OPERATION AT DTC SETTING

Memorize the freeze frame data. (For test mode $02)

DV:DTC P2089 OCV SOLENOID VALVE SIGNAL A CIRCUIT SHORT (BANK 1)

1. OUTLINE OF DIAGNOSIS

Detect short circuit of oil flow control solenoid valve.
Judge short NG when the current flow is large whereas duty signal is small.

2. ENABLE CONDITION

Secondary Parameter	Enable Condition
Battery voltage	≥ 10.9 V

3. GENERAL DRIVING CYCLE

Always perform the diagnosis continuously.

4. DIAGNOSTIC METHOD

• Abnormality Judgment

Judge NG when the continuous time of completing the malfunction criteria below becomes more than 2 seconds.

Judgment Value

Malfunction Criteria	Threshold Value
oil flow control solenoid valve control duty	< 0.39%
oil flow control solenoid valve control present current	≥ 0.306 A

Time Needed for Diagnosis: 2000 milliseconds
Malfunction Indicator Light Illumination: Illuminates as soon as malfunction occurs.

• Normality Judgment

Judge OK and clear NG when the continuous time of completing the malfunction criteria below becomes more than 2 seconds.

Judgment Value

Malfunction Criteria	Threshold Value
| Target current value of oil flow control solenoid valve − Control current value of oil flow control solenoid valve |	< 0.08 A

5. DTC CLEAR CONDITION

- When the OK idling cycle was completed 40 times in a row
- When “Clear Memory” was performed

6. MALFUNCTION INDICATOR LIGHT CLEAR CONDITION

- When the OK driving cycle was completed 3 times in a row
- When “Clear Memory” was performed

7. FAIL SAFE

- Ignition timing whole learning compensation:
  – Enter the initial value (whole learning compensation factor = 0.5, Variable amount of whole learning compensation factor = 0.25) to the whole learning compensation factor and variable amount of whole learning compensation factor when IG OFF, and then make the whole learning incomplete.
  – Enter the initial value (whole learning compensation factor = 0.5, Variable amount of whole learning compensation factor = 0.25) to the whole learning compensation factor and variable amount of whole learning compensation factor when making a normality judgment from abnormality judgment, and then make the whole learning incomplete.
- Ignition timing partial learning compensation:
  – Enter the initial value (0°CA) to the compensation value of partial learning zone when IG OFF.

– Enter the initial value (0°CA) to the compensation value of partial learning zone when making a normality judgment from abnormality judgment.

- AVCS control:
  – Most timing retard learning is not complete or most timing retard learning completion is not experienced.
  – ISC feedback compensation: Do not perform the AVCS actual timing advance compensation.
  – Make the oil flow control solenoid valve driving Duty to be the given value (9.36%).

8. ECM OPERATION AT DTC SETTING

Memorize the freeze frame data. (For test mode $02)

DW:DTC P2092 OCV SOLENOID VALVE SIGNAL A CIRCUIT OPEN (BANK 2)

1. OUTLINE OF DIAGNOSIS

For the detecting criteria, refer to P2088. <Ref. to GD(H6DO)-200, DTC P2088 OCV SOLENOID VALVE SIGNAL A CIRCUIT OPEN (BANK 1), Diagnostic Trouble Code (DTC) Detecting Criteria.>

DX:DTC P2093 OCV SOLENOID VALVE SIGNAL A CIRCUIT SHORT (BANK 2)

1. OUTLINE OF DIAGNOSIS

For the detecting criteria, refer to P2089. <Ref. to GD(H6DO)-202, DTC P2089 OCV SOLENOID VALVE SIGNAL A CIRCUIT SHORT (BANK 1), Diagnostic Trouble Code (DTC) Detecting Criteria.>

DY:DTC P2096 POST CATALYST FUEL TRIM SYSTEM TOO LEAN BANK 1

1. OUTLINE OF DIAGNOSIS

Detect the malfunction of fuel system from the amount of sub feedback learning value.
Judge NG when the sub feedback learning value sticks to lean sides during sub feedback learning control.

2. COMPONENT DESCRIPTION

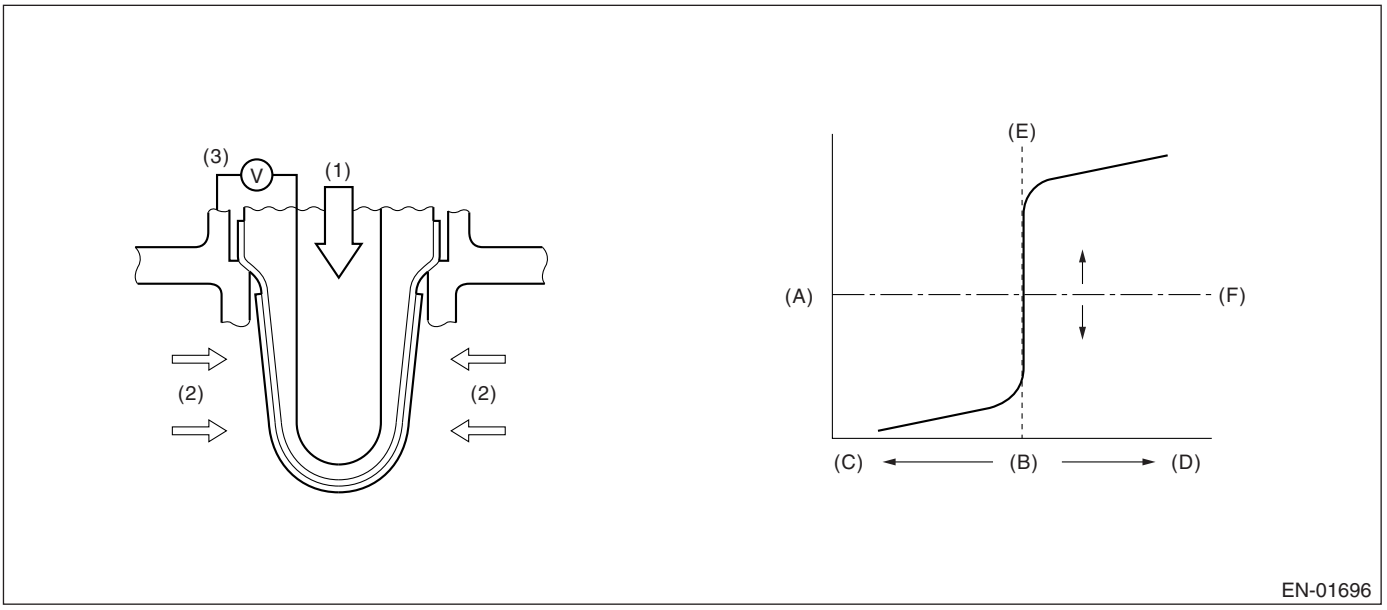

(1) Atmosphere
(2) Exhaust gas
(3) Electromotive force
(A) Electromotive force
(B) Air fuel ratio
(C) Rich
(D) Lean
(E) Theoretical air fuel ratio
(F) Comparative voltage

3. ENABLE CONDITION

Secondary Parameters	Enable Conditions
Continuous time of completing all conditions	≥ 1 second
Sub feedback learning enable condition	Completed

4. GENERAL DRIVING CYCLE

Perform the diagnosis continuously at an idling or a constant speed of more than 80 km/h (50 MPH).

5. DIAGNOSTIC METHOD

Judge NG when the continuous time of completing the malfunction criteria below becomes more than 5 seconds.
Judge OK and clear NG when the continuous time of not completing the malfunction criteria below becomes more than 5 seconds.

Judgment Value

Malfunction Criteria	Threshold Value
Sub feedback learning value	< –0.018

Time Needed for Diagnosis: 5 seconds
Malfunction Indicator Light Illumination: Illuminates when malfunction occurs in 2 continuous driving cycles.

6. DTC CLEAR CONDITION

- When the OK idling cycle was completed 40 times in a row

- When “Clear Memory” was performed

7. MALFUNCTION INDICATOR LIGHT CLEAR CONDITION

- When OK with similar drive in 3 drive cycles.
- When “Clear Memory” was performed

8. FAIL SAFE

None

9. ECM OPERATION AT DTC SETTING

Memorize the freeze frame data. (For test mode $02)

DZ:DTC P2097 POST CATALYST FUEL TRIM SYSTEM TOO RICH BANK 1

1. OUTLINE OF DIAGNOSIS

Detect the malfunction of fuel system from the amount of sub feedback learning value.
Judge NG when the sub feedback learning value sticks to rich sides during sub feedback learning control.

2. COMPONENT DESCRIPTION

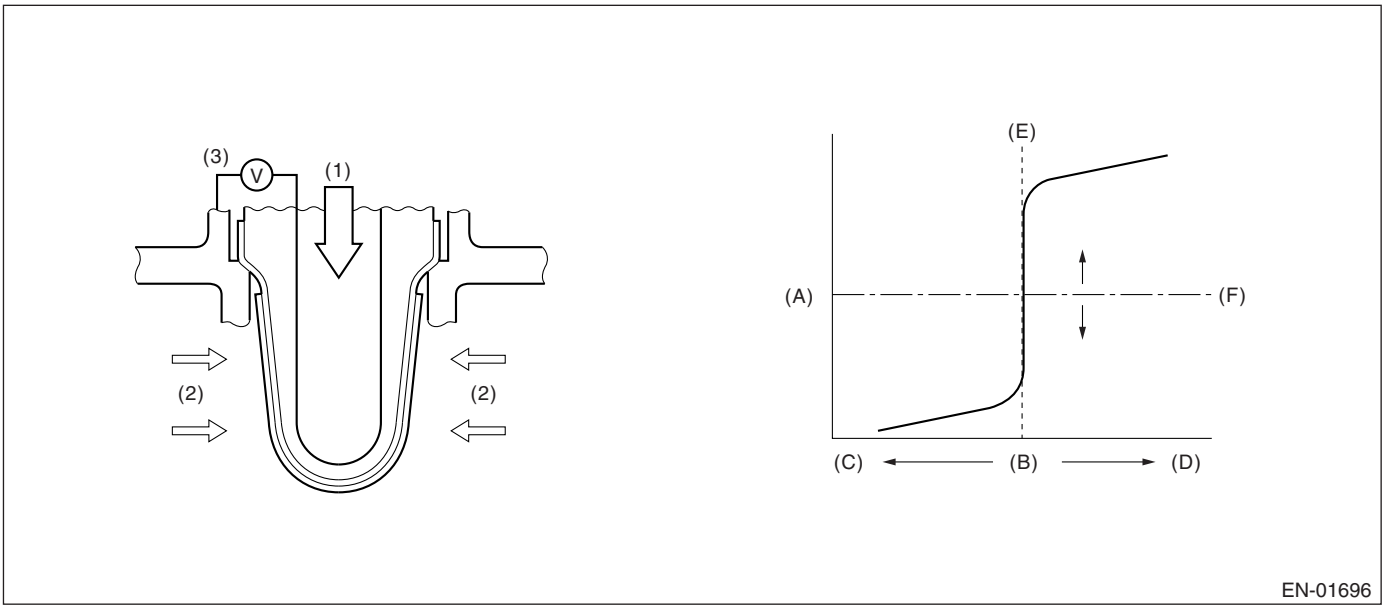

(1) Atmosphere
(2) Exhaust gas
(3) Electromotive force
(A) Electromotive force
(B) Air fuel ratio
(C) Rich
(D) Lean
(E) Theoretical air fuel ratio
(F) Comparative voltage

3. ENABLE CONDITION

Secondary Parameters	Enable Conditions
Continuous time of completing all conditions	≥ 1 second
Sub feedback learning enable condition	Completed

4. GENERAL DRIVING CYCLE

Perform the diagnosis continuously at an idling or a constant speed of more than 80 km/h (50 MPH).

5. DIAGNOSTIC METHOD

Judge NG when the continuous time of completing the malfunction criteria below becomes more than 5 seconds.
Judge OK and clear NG when the continuous time of not completing the malfunction criteria below becomes more than 5 seconds.

Judgment Value

Malfunction Criteria	Threshold Value
Sub feedback learning value	≥ 0.018

Time Needed for Diagnosis: 5 seconds
Malfunction Indicator Light Illumination: Illuminates when malfunction occurs in 2 continuous drive cycles.

6. DTC CLEAR CONDITION

- When the OK idling cycle was completed 40 times in a row

- When “Clear Memory” was performed

7. MALFUNCTION INDICATOR LIGHT CLEAR CONDITION

- When OK with similar drive in 3 drive cycles.
- When “Clear Memory” was performed

8. FAIL SAFE

None

9. ECM OPERATION AT DTC SETTING

Memorize the freeze frame data. (For test mode $02)

EA:DTC P2098 POST CATALYST FUEL TRIM SYSTEM TOO LEAN BANK 2

1. OUTLINE OF DIAGNOSIS

For the detecting criteria, refer to P2096. <Ref. to GD(H6DO)-204, DTC P2096 POST CATALYST FUEL TRIM SYSTEM TOO LEAN BANK 1, Diagnostic Trouble Code (DTC) Detecting Criteria.>

EB:DTC P2099 POST CATALYST FUEL TRIM SYSTEM TOO RICH BANK 2

1. OUTLINE OF DIAGNOSIS

For the detecting criteria, refer to P2097. <Ref. to GD(H6DO)-206, DTC P2097 POST CATALYST FUEL TRIM SYSTEM TOO RICH BANK 1, Diagnostic Trouble Code (DTC) Detecting Criteria.>

EC:DTC P2101 THROTTLE ACTUATOR CONTROL MOTOR CIRCUIT RANGE/ PERFORMANCE

1. OUTLINE OF DIAGNOSIS

Judge NG when the motor current becomes large or drive circuit is heated.

2. COMPONENT DESCRIPTION

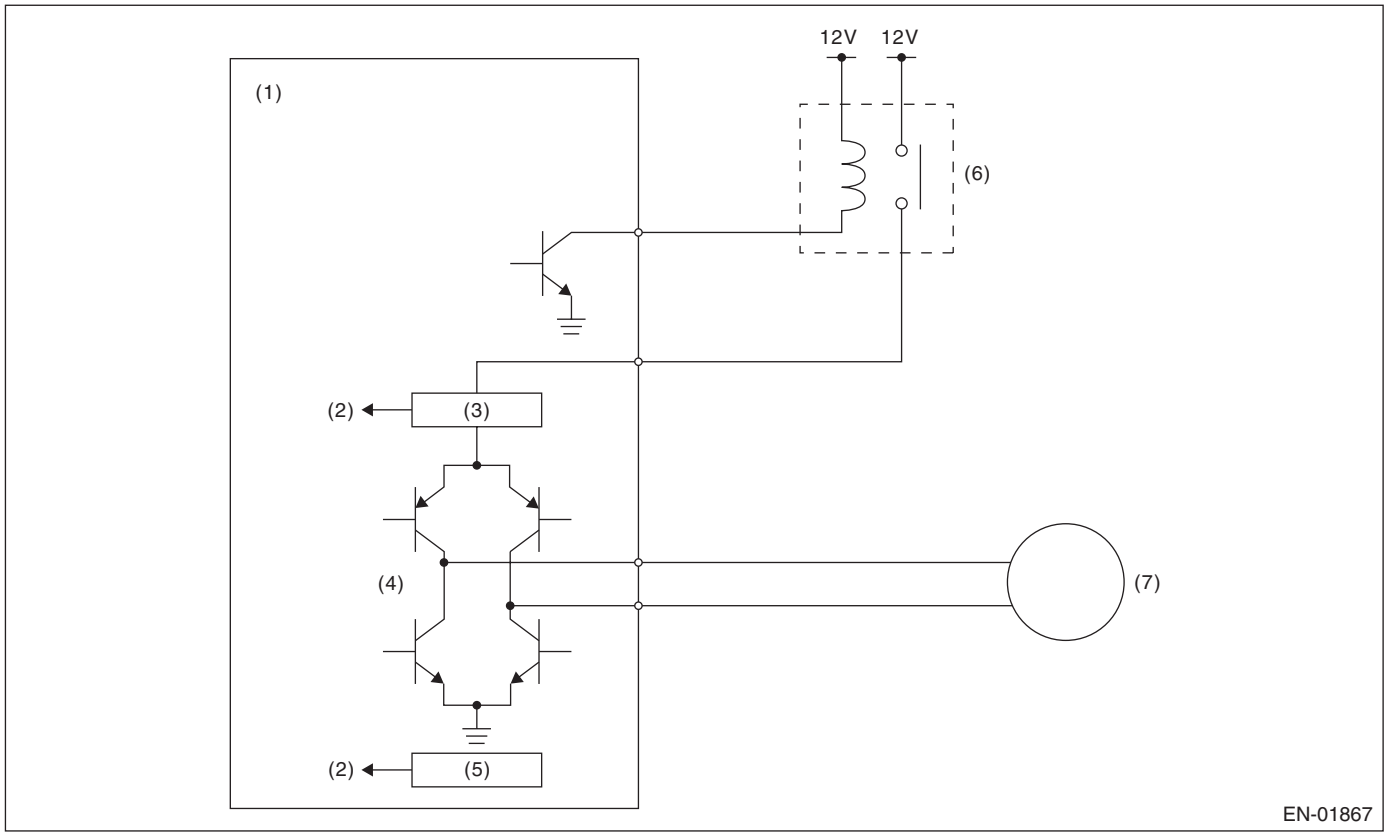

(1) Engine control unit (ECM)
(2) Detection circuit
(3) Overcurrent detection circuit
(4) Drive circuit
(5) Temperature detection circuit
(6) Electronic throttle control relay
(7) Motor

3. ENABLE CONDITION

Secondary Parameters	Enable Conditions
Under control of electronic throttle control	ON

4. GENERAL DRIVING CYCLE

Always perform the diagnosis continuously.

5. DIAGNOSTIC METHOD

Judge OK and clear the NG when the malfunction criteria below are completed.

Judgment Value

Malfunction Criteria	Threshold Value
Motor current	≤ 8 A
Drive circuit inner temperature	≤ 175°C (347°F)

Time Needed for Diagnosis:

- 500 milliseconds (NG judgment)

- 2000 milliseconds (OK judgment)

Malfunction Indicator Light Illumination: Illuminates as soon as malfunction occurs.

6. DTC CLEAR CONDITION

- When the OK idling cycle was completed 40 times in a row
- When “Clear Memory” was performed (Only with engine stopped)

7. MALFUNCTION INDICATOR LIGHT CLEAR CONDITION

- When the OK driving cycle was completed 3 times in a row
- When “Clear Memory” was performed (Only with engine stopped)

8. FAIL SAFE

Stop the continuity to the electronic throttle control motor. (Fix the throttle opening angle to 6°.)

9. ECM OPERATION AT DTC SETTING

Memorize the freeze frame data. (For test mode $02)

ED:DTC P2102 THROTTLE ACTUATOR CONTROL MOTOR CIRCUIT LOW

1. OUTLINE OF DIAGNOSIS

Judge NG when the electronic throttle control power is not supplied even when ECM sets the electronic throttle control relay to ON.

2. COMPONENT DESCRIPTION

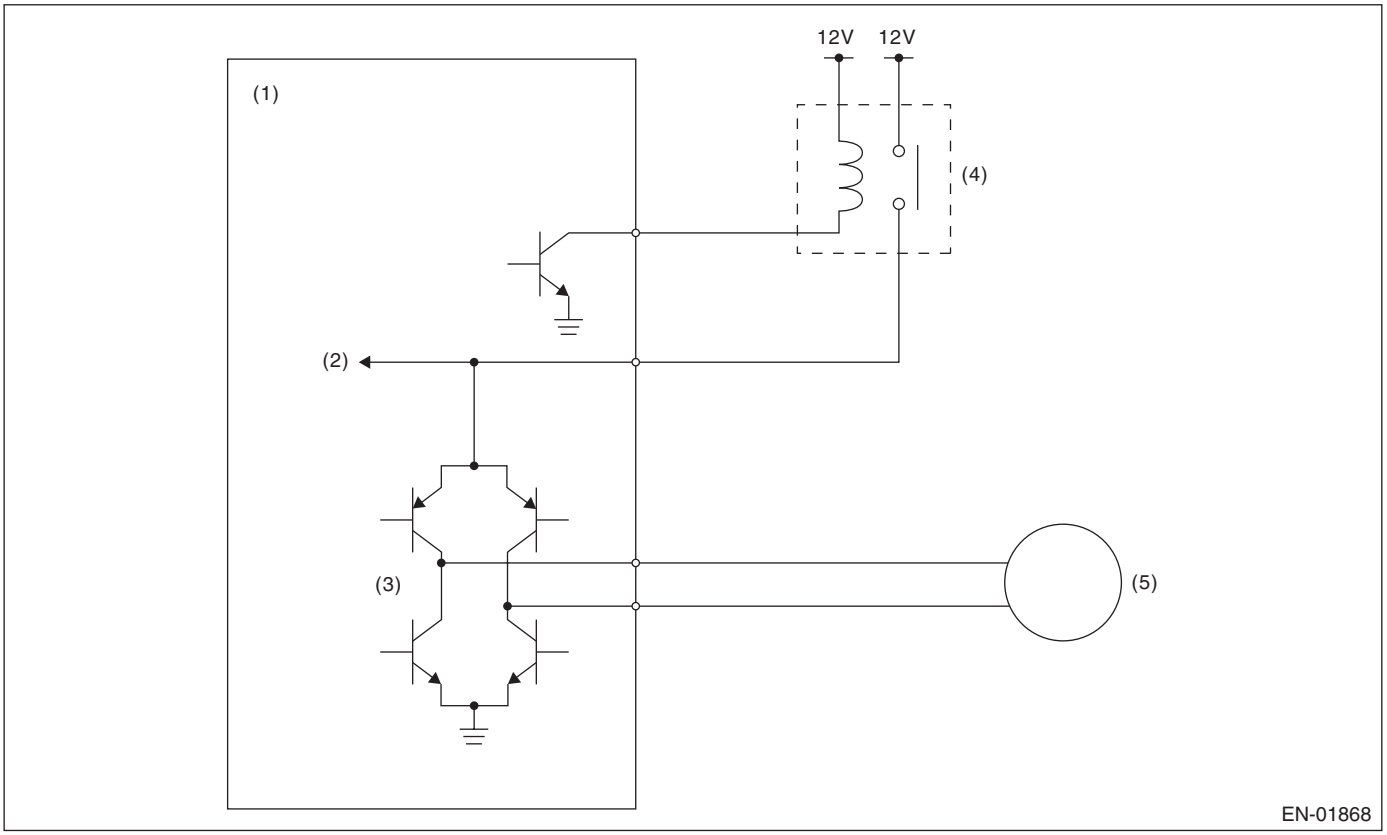

(1) Engine control module (ECM)
(2) Voltage detection circuit
(3) Drive circuit
(4) Electronic throttle control relay
(5) Motor

3. ENABLE CONDITION

Secondary Parameters	Enable Conditions
Electronic throttle control relay output	ON

4. GENERAL DRIVING CYCLE

Always perform the diagnosis continuously.

5. DIAGNOSTIC METHOD

Judge OK and clear the NG when the malfunction criteria below are cmpleted.

Judgment Value

Malfunction Criteria	Threshold Value
Motor power voltage	≥ 5 V

Time Needed for Diagnosis:

- 400 milliseconds (For NG)
- 2000 milliseconds (For OK)

Malfunction Indicator Light Illumination: Illuminates as soon as malfunction occurs.

6. DTC CLEAR CONDITION

- When the OK idling cycle was completed 40 times in a row
- When “Clear Memory” was performed (Only with engine stopped)

7. MALFUNCTION INDICATOR LIGHT CLEAR CONDITION

- When the OK driving cycle was completed 3 times in a row
- When “Clear Memory” was performed (Only with engine stopped)

8. FAIL SAFE

Stop the continuity to the electronic throttle control motor. (Fix the throttle opening angle to 6°.)

9. ECM OPERATION AT DTC SETTING

Memorize the freeze frame data. (For test mode $02)

EE:DTC P2103 THROTTLE ACTUATOR CONTROL MOTOR CIRCUIT HIGH

1. OUTLINE OF DIAGNOSIS

Judge NG when the electronic throttle control power is not supplied even when ECM sets the electronic throttle control relay to OFF.

2. COMPONENT DESCRIPTION

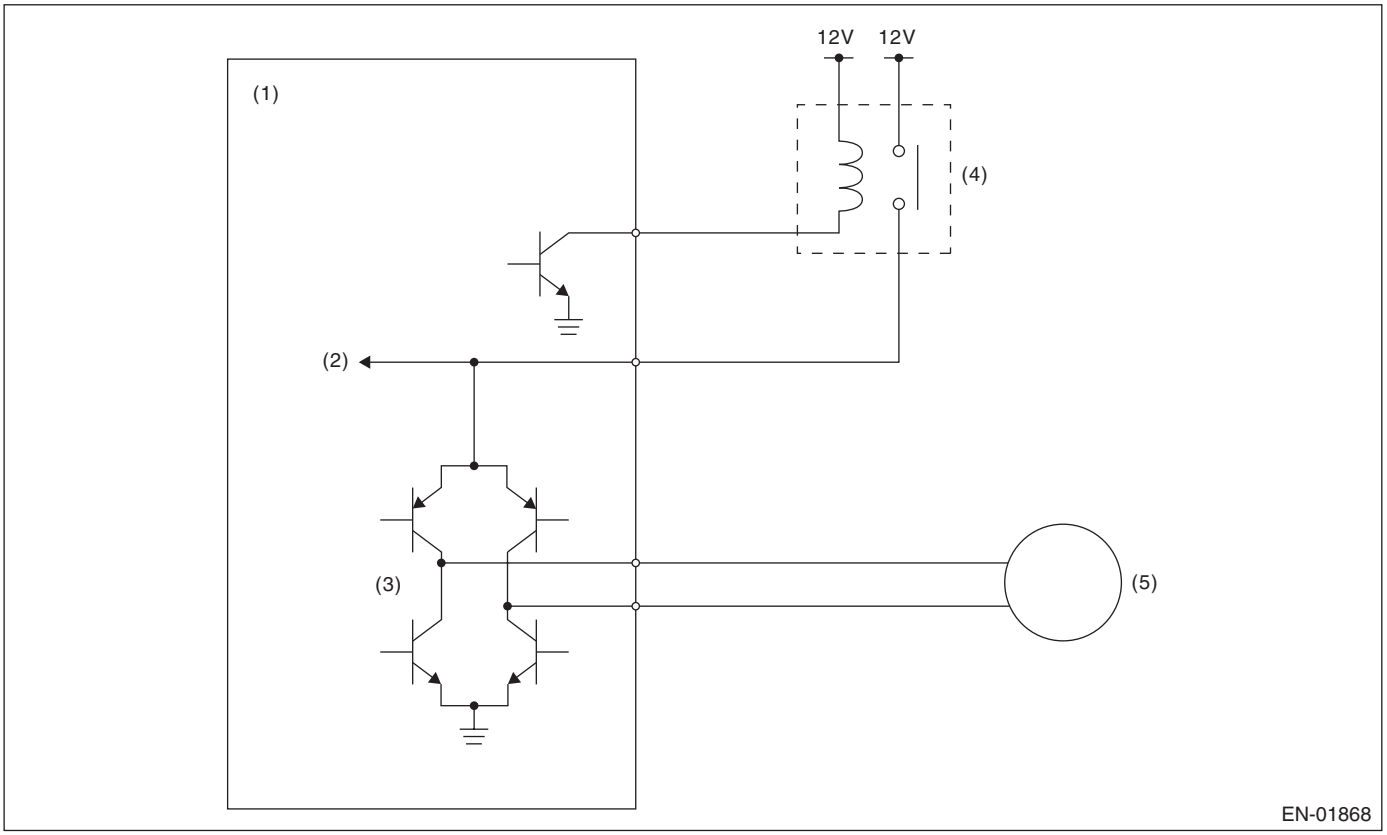

(1) Engine control module (ECM)
(2) Voltage detection circuit
(3) Drive circuit
(4) Electronic throttle control relay
(5) Motor

3. ENABLE CONDITION

Secondary Parameters	Enable Conditions
Electronic throttle control relay output	OFF

4. GENERAL DRIVING CYCLE

- Ignition switch ON → OFF
- Ignition switch OFF → ON (After clear memory only)

5. DIAGNOSTIC METHOD

Judge OK and clear the NG when the malfunction criteria below are completed.

Judgment Value

Malfunction Criteria	Threshold Value
Motor power voltage	≤ 5 V

Time Needed for Diagnosis:

- 600 milliseconds (For NG)
- 400 milliseconds (For OK)

Malfunction Indicator Light Illumination: Illuminates as soon as malfunction occurs.

6. DTC CLEAR CONDITION

- When the OK idling cycle was completed 40 times in a row
- When “Clear Memory” was performed (Only with engine stopped)

7. MALFUNCTION INDICATOR LIGHT CLEAR CONDITION

- When the OK driving cycle was completed 3 times in a row
- When “Clear Memory” was performed (Only with engine stopped)

8. FAIL SAFE

Stop the continuity to the electronic throttle control motor. (Fix the throttle opening angle to 6°.)

9. ECM OPERATION AT DTC SETTING

Memorize the freeze frame data. (For test mode $02)

EF:DTC P2109 THROTTLE/PEDAL POSITION SENSOR A MINIMUM STOP PERFORMANCE

1. OUTLINE OF DIAGNOSIS

Judge NG when all close point learning cannot conducted or abnormal value is detected.

2. COMPONENT DESCRIPTION

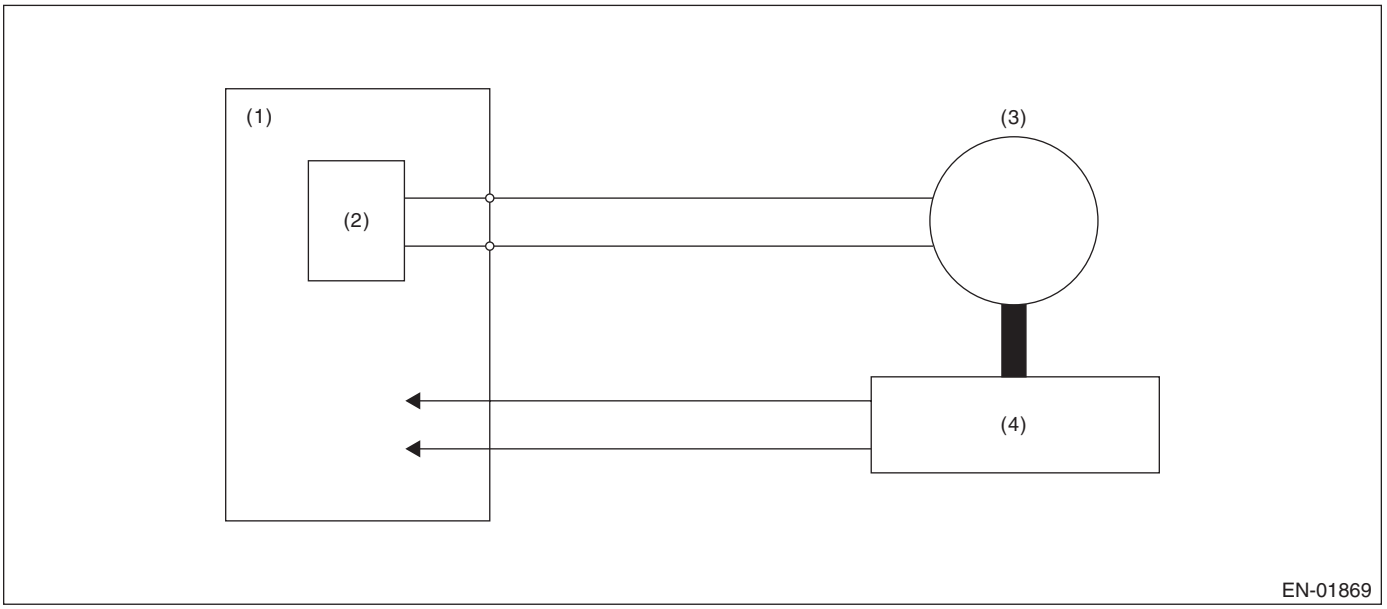

(1) Engine control module (ECM)
(2) Drive circuit
(3) Motor
(4) Throttle position sensor

3. ENABLE CONDITION

Secondary Parameters	Enable Conditions
Ignition switch	ON → OFF
Ignition switch (after clear memory only)	OFF → ON

4. GENERAL DRIVING CYCLE

Perform the diagnosis at all close point learning.

5. DIAGNOSTIC METHOD

Judge OK and clear the NG when the malfunction criteria below are completed.

Judgment Value

Malfunction Criteria	Threshold Value
Throttle sensor voltage at all close point learning	0.41 — 0.79 V
Time for all close point learning completion	Within 80 milliseconds

Time Needed for Diagnosis: None
Malfunction Indicator Light Illumination: Illuminates as soon as malfunction occurs.

6. DTC CLEAR CONDITION

- When the OK idling cycle was completed 40 times in a row
- When “Clear Memory” was performed (Only with engine stopped)

7. MALFUNCTION INDICATOR LIGHT CLEAR CONDITION

- When the OK driving cycle was completed 3 times in a row
- When “Clear Memory” was performed (Only with engine stopped)

8. FAIL SAFE

Stop the continuity to the electronic throttle control motor. (Fix the throttle opening angle to 6°.)

9. ECM OPERATION AT DTC SETTING

Memorize the freeze frame data. (For test mode $02)

EG:DTC P2122 THROTTLE/PEDAL POSITION SENSOR/SWITCH “D” CIRCUIT LOW INPUT

1. OUTLINE OF DIAGNOSIS

Detect the open or short circuit of accelerator pedal position sensor 1.
Judge NG when out of the standard value.

2. COMPONENT DESCRIPTION

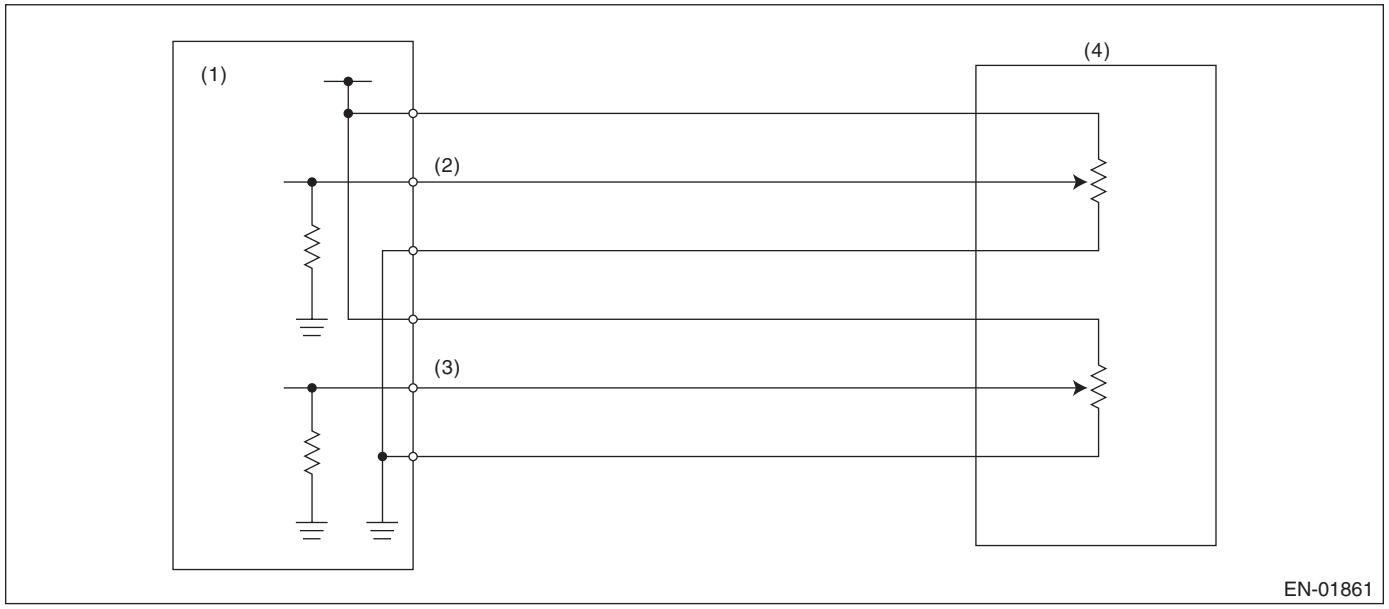

(1) Engine control module (ECM)
(2) Accelerator pedal position sensor 1 signal
(3) Accelerator pedal position sensor 2 signal
(4) Accelerator pedal position sensor

3. ENABLE CONDITION

Secondary Parameters	Enable Conditions
Ignition switch	ON

4. GENERAL DRIVING CYCLE

Always perform the diagnosis continuously.

5. DIAGNOSTIC METHOD

Judge OK and clear the NG when the malfunction criteria below are completed.
Judgment Value

Malfunction Criteria	Threshold Value
Sensor 1 input voltage	≥ 0.308 V

Time Needed for Diagnosis: 100 milliseconds
Malfunction Indicator Light Illumination: Illuminates as soon as malfunction occurs.

6. DTC CLEAR CONDITION

- When the OK idling cycle was completed 40 times in a row
- When “Clear Memory” was performed (Only with engine stopped)

7. MALFUNCTION INDICATOR LIGHT CLEAR CONDITION

- When the OK driving cycle was completed 3 times in a row
- When “Clear Memory” was performed (Only with engine stopped)

8. FAIL SAFE

- Single malfunction: Control with normal sensor
- Multi malfunction: Fix the throttle opening angle to 6°.

9. ECM OPERATION AT DTC SETTING

Memorize the freeze frame data. (For test mode $02)

EH:DTC P2123 THROTTLE/PEDAL POSITION SENSOR/SWITCH “D” CIRCUIT HIGH INPUT

1. OUTLINE OF DIAGNOSIS

Detect the open or short circuit of accelerator pedal position sensor 1.
Judge NG when out of the standard value.

2. COMPONENT DESCRIPTION

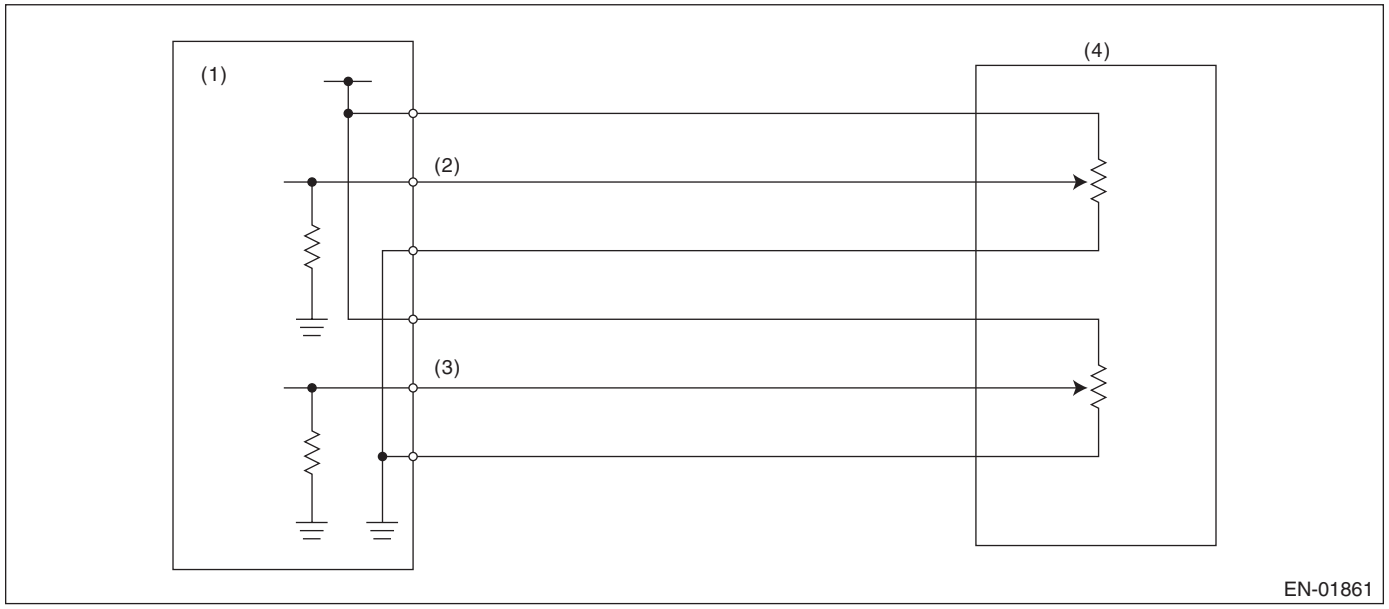

(1) Engine control module (ECM)
(2) Accelerator pedal position sensor 1 signal
(3) Accelerator pedal position sensor 2 signal
(4) Accelerator pedal position sensor

3. ENABLE CONDITION

Secondary Parameters	Enable Conditions
Ignition switch	ON

4. GENERAL DRIVING CYCLE

Always perform the diagnosis continuously.

5. DIAGNOSTIC METHOD

Judge OK and clear the NG when the malfunction criteria below are completed.
Judgment Value

Malfunction Criteria	Threshold Value
Sensor 1 input voltage	≤ 4.865 V

Time Needed for Diagnosis: 32 milliseconds
Malfunction Indicator Light Illumination: Illuminates as soon as malfunction occurs.

6. DTC CLEAR CONDITION

- When the OK idling cycle was completed 40 times in a row
- When “Clear Memory” was performed (Only with engine stopped)

7. MALFUNCTION INDICATOR LIGHT CLEAR CONDITION

- When the OK driving cycle was completed 3 times in a row
- When “Clear Memory” was performed (Only with engine stopped)

8. FAIL SAFE

- Single malfunction: Control with normal sensor
- Multi malfunction: Fix the throttle opening angle to 6°.

9. ECM OPERATION AT DTC SETTING

Memorize the freeze frame data. (For test mode $02)

EI: DTC P2127 THROTTLE/PEDAL POSITION SENSOR/SWITCH “E” CIRCUIT LOW INPUT

1. OUTLINE OF DIAGNOSIS

Detect the open or short circuit of accelerator pedal position sensor 2.
Judge NG when out of the standard value.

2. COMPONENT DESCRIPTION

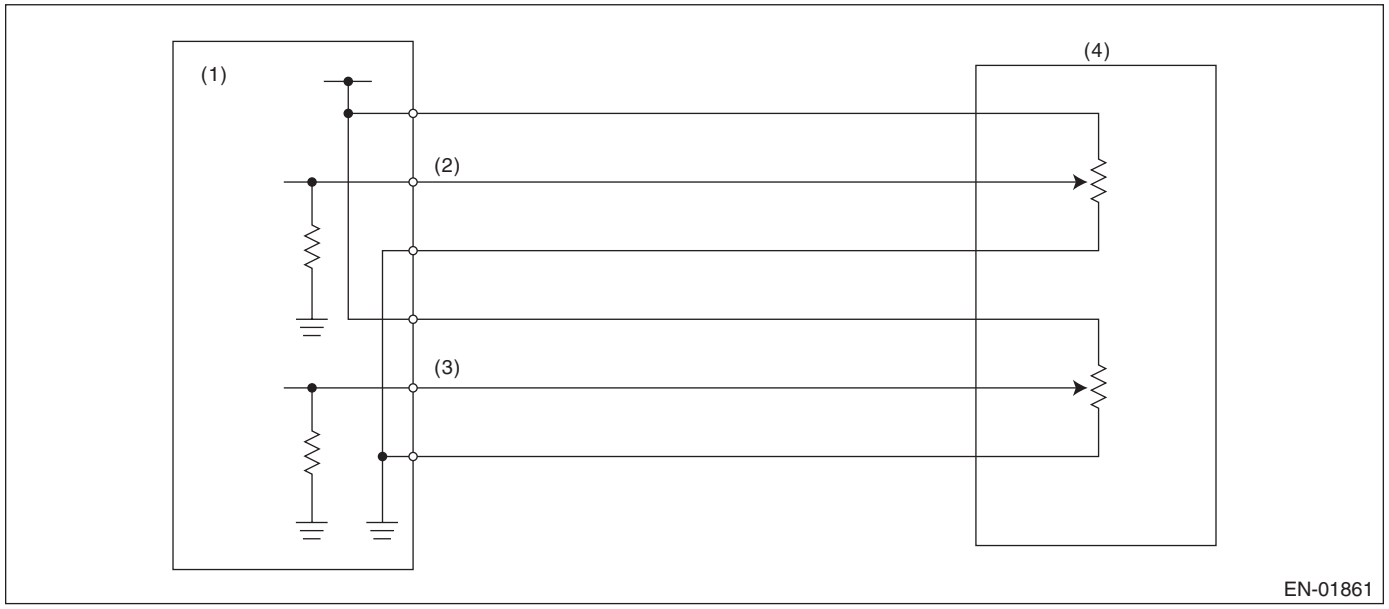

(1) Engine control module (ECM)
(2) Accelerator pedal position sensor 1 signal
(3) Accelerator pedal position sensor 2 signal
(4) Accelerator pedal position sensor

3. ENABLE CONDITION

Secondary Parameters	Enable Conditions
Ignition switch	ON

4. GENERAL DRIVING CYCLE

Always perform the diagnosis continuously.

5. DIAGNOSTIC METHOD

Judge OK and clear the NG when the malfunction criteria below are completed.
Judgment Value

Malfunction Criteria	Threshold Value
Sensor 2 input voltage	≥ 0.308 V

Time Needed for Diagnosis: 100 milliseconds
Malfunction Indicator Light Illumination: Illuminates as soon as malfunction occurs.

6. DTC CLEAR CONDITION

- When the OK idling cycle was completed 40 times in a row
- When “Clear Memory” was performed (Only with engine stopped)

7. MALFUNCTION INDICATOR LIGHT CLEAR CONDITION

- When the OK driving cycle was completed 3 times in a row
- When “Clear Memory” was performed (Only with engine stopped)

8. FAIL SAFE

- Single malfunction: Control with normal sensor
- Multi malfunction: Fix the throttle opening angle to 6°.

9. ECM OPERATION AT DTC SETTING

Memorize the freeze frame data. (For test mode $02)

EJ: DTC P2128 THROTTLE/PEDAL POSITION SENSOR/SWITCH "E" CIRCUIT HIGH INPUT

1. OUTLINE OF DIAGNOSIS

Detect the open or short circuit of accelerator pedal position sensor 2.
Judge NG when out of the standard value.

2. COMPONENT DESCRIPTION

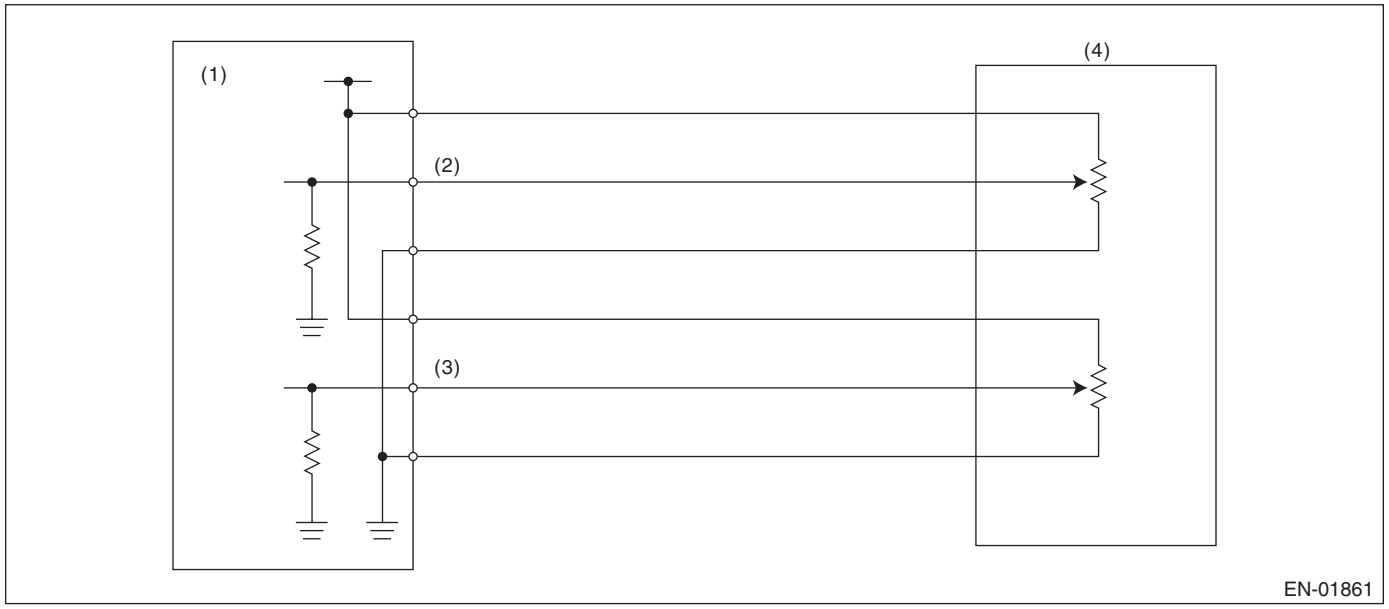

(1) Engine control module (ECM)
(2) Accelerator pedal position sensor 1 signal
(3) Accelerator pedal position sensor 2 signal
(4) Accelerator pedal position sensor

3. ENABLE CONDITION

Secondary Parameters	Enable Conditions
Ignition switch	ON

4. GENERAL DRIVING CYCLE

Always perform the diagnosis continuously.

5. DIAGNOSTIC METHOD

Judge OK and clear the NG when the malfunction criteria below are completed.
Judgment Value

Malfunction Criteria	Threshold Value
Sensor 2 input voltage	≤ 4.865 V

Time Needed for Diagnosis: 32 milliseconds
Malfunction Indicator Light Illumination: Illuminates as soon as malfunction occurs.

6. DTC CLEAR CONDITION

- When the OK idling cycle was completed 40 times in a row
- When "Clear Memory" was performed (Only with engine stopped)

7. MALFUNCTION INDICATOR LIGHT CLEAR CONDITION

- When the OK driving cycle was completed 3 times in a row
- When "Clear Memory" was performed (Only with engine stopped)

8. FAIL SAFE

- Single malfunction: Control with normal sensor
- Multi malfunction: Fix the throttle opening angle to 6°.

9. ECM OPERATION AT DTC SETTING

Memorize the freeze frame data. (For test mode $02)

EK:DTC P2135 THROTTLE/PEDAL POSITION SENSOR/SWITCH “A”/“B” VOLTAGE RATIONALITY

1. OUTLINE OF DIAGNOSIS

Judge NG when the signal level of throttle position sensor 1 is different from the throttle position sensor 2.

2. COMPONENT DESCRIPTION

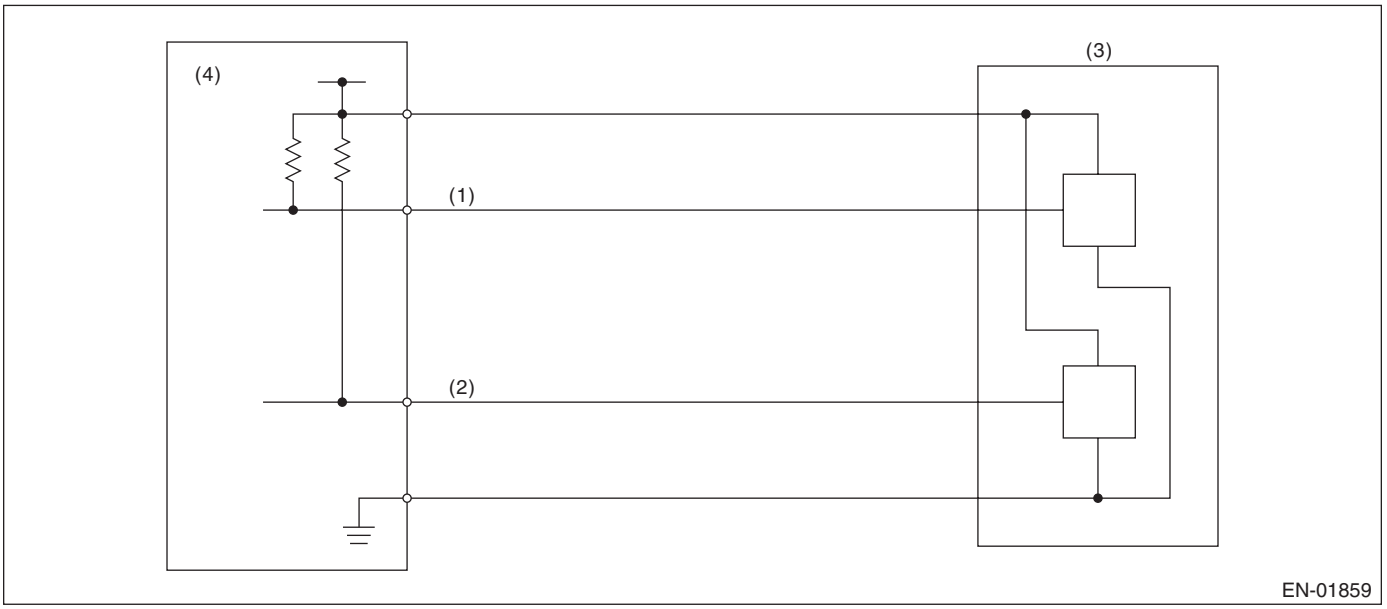

(1) Throttle position sensor 1 signal
(2) Throttle position sensor 2 signal
(3) Throttle position sensor
(4) Engine control module (ECM)

3. ENABLE CONDITION

Secondary Parameters	Enable Conditions
Ignition switch	ON

4. GENERAL DRIVING CYCLE

Always perform the diagnosis continuously.

5. DIAGNOSTIC METHOD

Judge OK and clear the NG when the malfunction criteria below are completed.

Judgment Value

Malfunction Criteria	Threshold Value
Signal difference between two sensors	≤ 4.25°

Details of Judgment Value

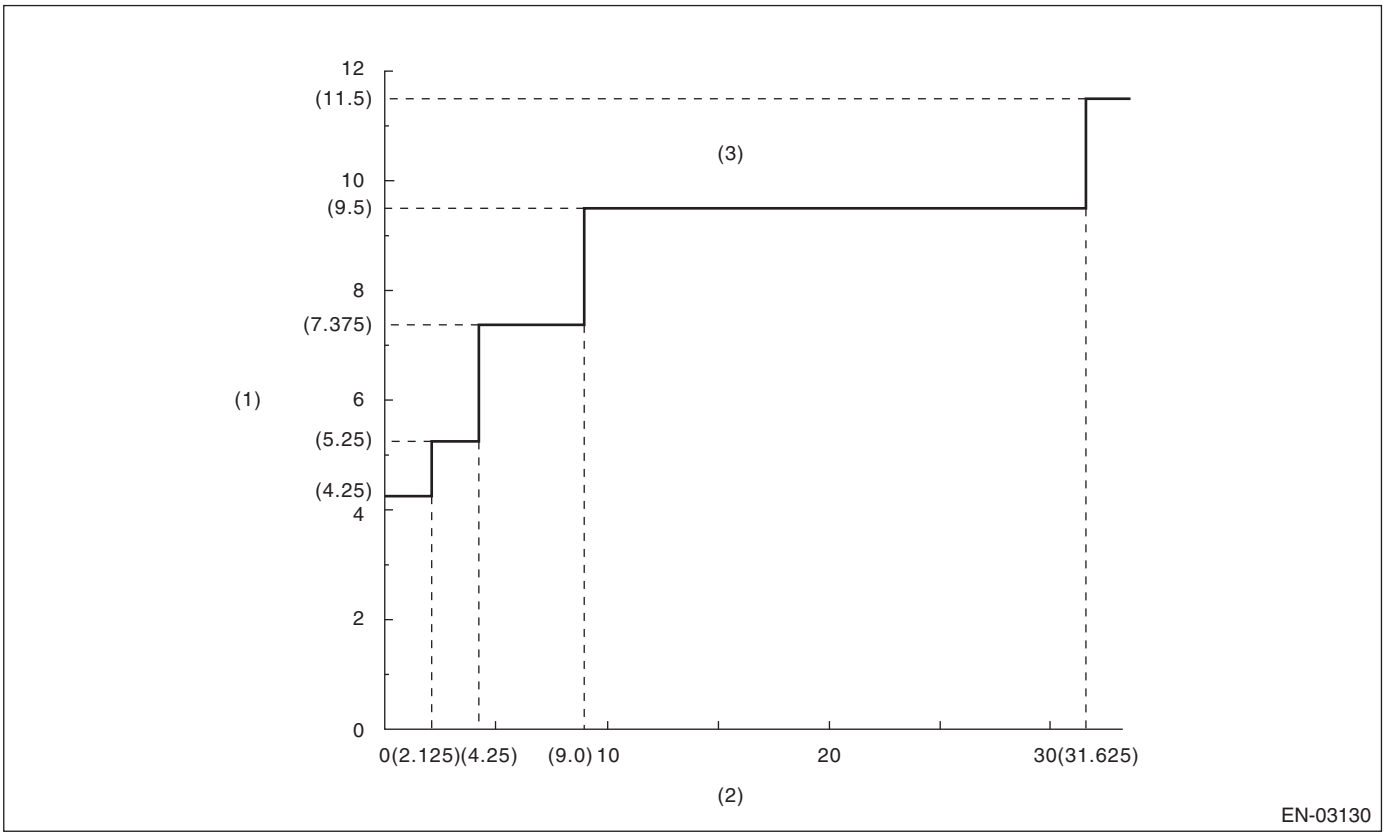

(1) Sensor output difference (°)
(2) Throttle position sensor 1 opening angle (°)
(3) NG area

Time Needed for Diagnosis: 212 milliseconds(NG judgment) 24 milliseconds(OK judgment)
Malfunction Indicator Light Illumination: Illuminates as soon as malfunction occurs.

6. DTC CLEAR CONDITION

- When the OK idling cycle was completed 40 times in a row
- When “Clear Memory” was performed (Only with engine stopped)

7. MALFUNCTION INDICATOR LIGHT CLEAR CONDITION

- When the OK driving cycle was completed 3 times in a row
- When “Clear Memory” was performed (Only with engine stopped)

8. FAIL SAFE

Stop the continuity to electronic throttle control motor. (Fix the throttle opening angle to 6°.)

9. ECM OPERATION AT DTC SETTING

Memorize the freeze frame data. (For test mode $02)

EL:DTC P2138 THROTTLE/PEDAL POSITION SENSOR/SWITCH “D”/“E” VOLTAGE RATIONALITY

1. OUTLINE OF DIAGNOSIS

Judge NG when the signal level of throttle position sensor 1 is different from the throttle position sensor 2.

2. COMPONENT DESCRIPTION

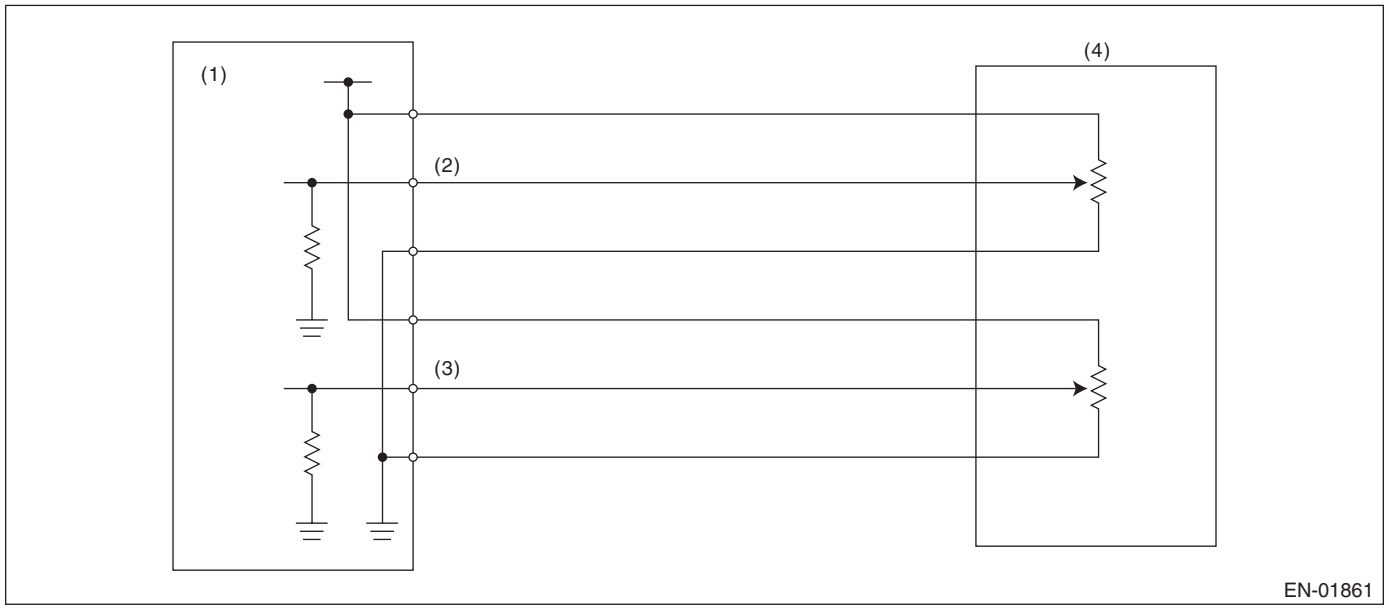

(1) Engine control module (ECM)
(2) Accelerator pedal position sensor 1 signal
(3) Accelerator pedal position sensor 2 signal
(4) Accelerator pedal position sensor

3. ENABLE CONDITION

Secondary Parameters	Enable Conditions
Ignition switch	ON

4. GENERAL DRIVING CYCLE

Always perform the diagnosis continuously.

5. DIAGNOSTIC METHOD

Judge OK and clear the NG when the malfunction criteria below are completed.

Judgment Value

Malfunction Criteria	Threshold Value
Signal difference between two sensors	≤ 1.6°

Details of Judgment Value

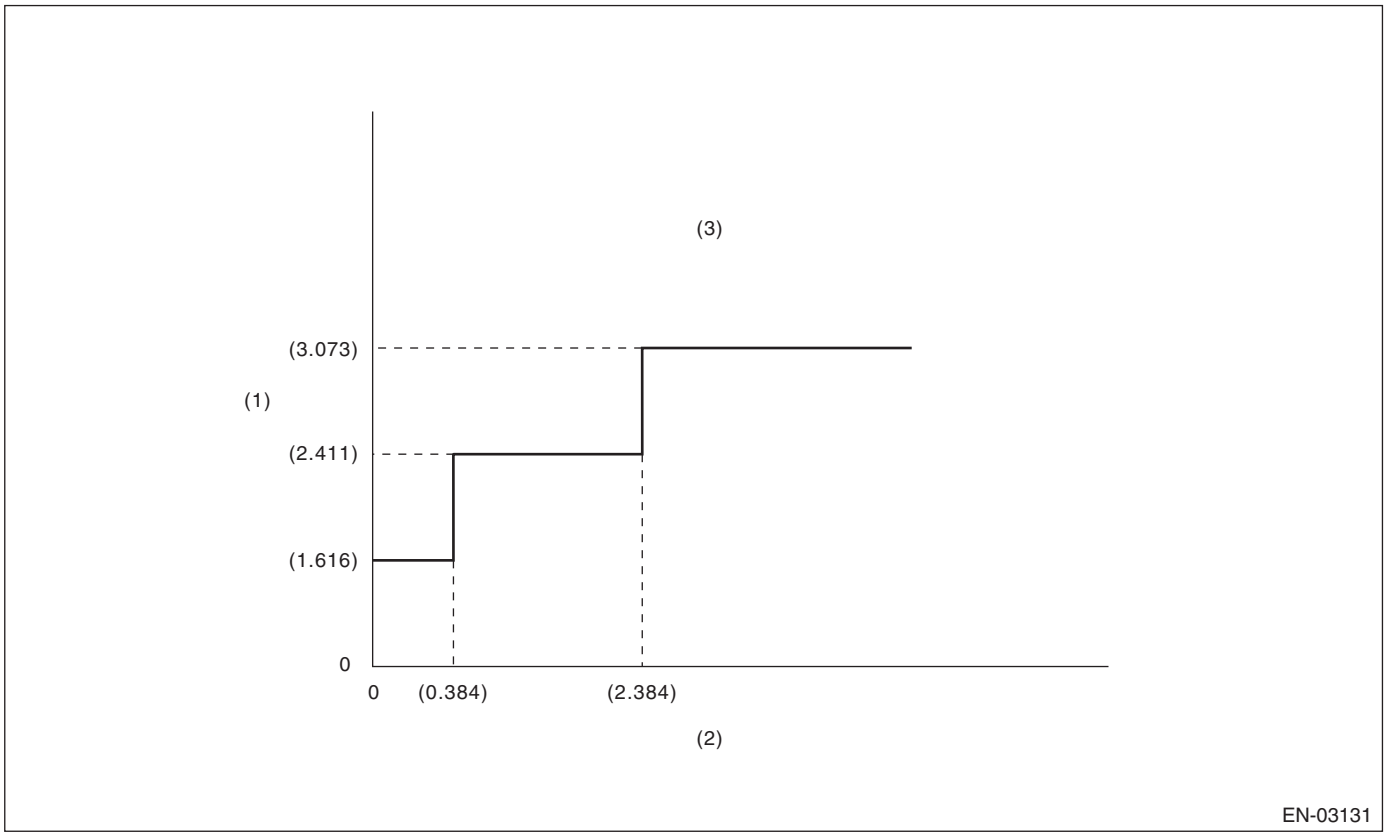

(1) Sensor output difference (°)
(2) Accelerator pedal position sensor 2 opening angle (°)
(3) NG area

Time Needed for Diagnosis:
- 116 milliseconds (For NG)
- 1000 milliseconds (For OK)

Malfunction Indicator Light Illumination: Illuminates as soon as malfunction occurs.

6. DTC CLEAR CONDITION

- When the OK idling cycle was completed 40 times in a row
- When “Clear Memory” was performed

7. MALFUNCTION INDICATOR LIGHT CLEAR CONDITION

- When the OK driving cycle was completed 3 times in a row
- When “Clear Memory” was performed

8. FAIL SAFE

Fix the throttle opening angle to 6°.

9. ECM OPERATION AT DTC SETTING

Memorize the freeze frame data. (For test mode $02)

EM:DTC P2227 BAROMETRIC PRESSURE CIRCUIT RANGE/PERFORMANCE

1. OUTLINE OF DIAGNOSIS

Detect the malfunction of atmospheric pressure sensor output property. Judge NG when the atmospheric pressure sensor output is largely different from the intake manifold pressure at engine starting.

2. COMPONENT DESCRIPTION

Atmospheric pressure sensor is built in ECM.

3. ENABLE CONDITION

Secondary Parameters	Enable Conditions
Engine speed at engine starting	< 300 rpm
Vehicle speed	< 1 km/h (0.62 MPH)
Diagnosis for atmospheric pressure sensor property	Not finished

4. GENERAL DRIVING CYCLE

Perform the diagnosis once turning the ignition switch to ON.

5. DIAGNOSTIC METHOD

• Abnormality Judgment

Judge NG when the continuous time of completing the malfunction criteria below becomes more than 0.3 seconds.

Judgment Value

Malfunction Criteria	Threshold Value
|Atmospheric – manifold absolute pressure|	≥ 26.7 kPa (200 mmHg, 7.88 inHg)
|Intake manifold pressure at engine starting – manifold absolute pressure|	< 1.33 kPa (10 mmHg, 2.95 inHg)

Time Needed for Diagnosis: 0.3 seconds
Malfunction Indicator Light Illumination: Detect when malfunction occurs in 2 continuous driving cycles.

• Normality Judgment

Judge OK and clear the NG when the continuous time of completing the malfunction criteria below becomes more than 0.262 seconds.

Judgment Value

Malfunction Criteria	Threshold Value
|Atmospheric – manifold absolute pressure|	< 26.7 kPa (200 mmHg, 7.88 inHg)

6. DTC CLEAR CONDITION

- When the OK idling cycle was completed 40 times in a row
- When “Clear Memory” was performed

7. MALFUNCTION INDICATOR LIGHT CLEAR CONDITION

- When the OK driving cycle was completed 3 times in a row
- When “Clear Memory” was performed

8. FAIL SAFE

Atmospheric pressure sensor process: Fix the atmospheric pressure to 101 kPa (760 mmHg, 29.8 inHg).

9. ECM OPERATION AT DTC SETTING

Memorize the freeze frame data. (For test mode $02)

EN:DTC P2228 BAROMETRIC PRESSURE CIRCUIT LOW INPUT

1. OUTLINE OF DIAGNOSIS

Detect the open or short circuit of atmospheric pressure sensor.
Judge NG when out of the standard value.

2. COMPONENT DESCRIPTION

Atmospheric pressure sensor is built in ECM.

3. ENABLE CONDITION

Secondary Parameters	Enable Conditions
None	

4. GENERAL DRIVING CYCLE

Always perform the diagnosis continuously.

5. DIAGNOSTIC METHOD

• Abnormality Judgment

Judge NG when the continuous time of completing the malfunction criteria below becomes more than 0.5 seconds.

Judgment Value

Malfunction Criteria	Threshold Value
Ignition switch	ON
Output voltage	$<$ 0.118 V

Time Needed for Diagnosis: 0.5 seconds
Malfunction Indicator Light Illumination: Illuminates as soon as malfunction occurs.

• Normality Judgment

Judge OK and clear the NG when the malfunction criteria below are completed.

Judgment Value

Malfunction Criteria	Threshold Value
Ignition switch	ON
Output voltage	$\geq$ 0.118 V

6. DTC CLEAR CONDITION

- When the OK idling cycle was completed 40 times in a row
- When “Clear Memory” was performed

7. MALFUNCTION INDICATOR LIGHT CLEAR CONDITION

- When the OK driving cycle was completed 3 times in a row
- When “Clear Memory” was performed

8. FAIL SAFE

Atmospheric pressure sensor process: Fix the atmospheric pressure to 101.3 kPa (760 mmHg, 29.9 inHg).

9. ECM OPERATION AT DTC SETTING

Memorize the freeze frame data. (For test mode $02)

EO:DTC P2229 BAROMETRIC PRESSURE CIRCUIT HIGH INPUT

1. OUTLINE OF DIAGNOSIS

Detect the open or short circuit of atmospheric pressure sensor.
Judge NG when out of the standard value.

2. COMPONENT DESCRIPTION

Atmospheric pressure sensor is built in ECM.

3. ENABLE CONDITION

Secondary Parameters	Enable Conditions
None	

4. GENERAL DRIVING CYCLE

Always perform the diagnosis continuously.

5. DIAGNOSTIC METHOD

• Abnormality Judgment

Judge NG when the continuous time of completing the malfunction criteria below becomes more than 0.5 seconds.

Judgment Value

Malfunction Criteria	Threshold Value
Ignition switch	ON
Output voltage	≥ 4.936 V

Time Needed for Diagnosis: 0.5 seconds
Malfunction Indicator Light Illumination: Illuminates as soon as malfunction occurs.

• Normality Judgment

Judge OK and clear the NG when the malfunction criteria below are completed.

Judgment Value

Malfunction Criteria	Threshold Value
Ignition switch	ON
Output voltage	< 4.936 V

6. DTC CLEAR CONDITION

- When the OK idling cycle was completed 40 times in a row
- When “Clear Memory” was performed

7. MALFUNCTION INDICATOR LIGHT CLEAR CONDITION

- When the OK driving cycle was completed 3 times in a row
- When “Clear Memory” was performed

8. FAIL SAFE

Atmospheric pressure sensor process: Fix the atmospheric pressure to 101.3 kPa (760 mmHg, 29.9 inHg).

9. ECM OPERATION AT DTC SETTING

Memorize the freeze frame data. (For test mode $02)

EP:DTC P2503 CHARGING SYSTEM VOLTAGE LOW

1. OUTLINE OF DIAGNOSIS

Detect open or short circuit of generator control terminal.
Judge NG when the output level of ECM is different from actual terminal level.

2. COMPONENT DESCRIPTION

- Driving cycle: 50 ms cycles (frequency: 20 Hz)
- Driving method: ON/OFF duty ratio control

3. ENABLE CONDITION

Secondary Parameters	Enable Conditions
Battery voltage	≥ 10.9 V
Ignition switch	ON
After engine starting	≥ 5 sec
Engine speed	≥ 525 rpm

4. GENERAL DRIVING CYCLE

Perform the continuous diagnosis after 5 seconds from engine starting.

5. DIAGNOSTIC METHOD

• Abnormality judgment

Judge NG when the continuous time of completing the malfunction criteria below becomes more than 2.5 seconds.

Judgment value

Malfunction Criteria	Threshold Value
Duty ratio	< 75%
Terminal voltage level	Low level

Time needed for diagnosis: 2.5 seconds
Malfunction Indicator Light Illumination: Illuminates as soon as malfunction occurs.

• Normality Judgment

Judge OK and clear NG when the malfunction criteria below is completed.

Judgment Value

Malfunction Criteria	Threshold Value
Terminal voltage level	High level

6. DTC CLEAR CONDITION

- When the OK idling cycle was completed 40 times in a row
- When “Clear Memory” was performed

7. MALFUNCTION INDICATOR LIGHT CLEAR CONDITION

- When the OK cycle was completed 3 times in a row
- When “Clear Memory” was performed

8. FAIL SAFE

None

9. ECM OPERATION AT DTC SETTING

Memorize the freeze frame data. (For test mode $02)

EQ:DTC P2504 CHARGING SYSTEM VOLTAGE HIGH

1. OUTLINE OF DIAGNOSIS

Detect the open or the short circuit of generator control terminal.
Judge NG when the output level of ECM is different from actual terminal level.

2. COMPONENT DESCRIPTION

- Driving cycle: 50 ms cycles (frequency: 20 Hz)
- Driving method: ON/OFF duty ratio control

3. ENABLE CONDITION

Secondary Parameters	Enable Conditions
Battery voltage	≥ 10.9 V
Ignition switch	ON
After engine starting	≥ 5 sec
Engine speed	≥ 525 rpm

4. GENERAL DRIVING CYCLE

Perform the continuous diagnosis after 5 seconds from engine starting.

5. DIAGNOSTIC METHOD

• Abnormality Judgment

Judge NG when the continuous time of completing the malfunction criteria below becomes more than 2.5 seconds.
Judgment Value

Malfunction Criteria	Threshold Value
Duty ratio	> 25%
Terminal voltage level	High level

Time needed for diagnosis: 2.5 seconds
Malfunction Indicator Light Illumination: Illuminates as soon as malfunction occurs.
• Normality Judgment

Judge OK and clear NG when the malfunction criteria below is completed.
Judgment Value

Malfunction Criteria	Threshold Value
Terminal voltage level	Low level

6. DTC CLEAR CONDITION

- When the OK idling cycle was completed 40 times in a row
- When “Clear Memory” was performed

7. MALFUNCTION INDICATOR LIGHT CLEAR CONDITION

- When the OK cycle was completed 3 times in a row
- When “Clear Memory” was performed

8. FAIL SAFE

None

9. ECM OPERATION AT DTC SETTING

Memorize the freeze frame data. (For test mode $02)

TRANSMISSION SECTION

CONTROL SYSTEMS	CS
AUTOMATIC TRANSMISSION	4AT
AUTOMATIC TRANSMISSION (DIAGNOSTICS)	4AT(D)(diag)
AUTOMATIC TRANSMISSION	5AT
AUTOMATIC TRANSMISSION (DIAGNOSTICS)	5AT(diag)
MANUAL TRANSMISSION AND DIFFERENTIAL	5MT
CLUTCH SYSTEM	CL

This service manual has been prepared to provide SUBARU service personnel with the necessary information and data for the correct maintenance and repair of SUBARU vehicles.
This manual includes the procedures for maintenance, disassembling, reassembling, inspection and adjustment of components and diagnostics for guidance of experienced mechanics.
Please peruse and utilize this manual fully to ensure complete repair work for satisfying our customers by keeping their vehicle in optimum condition. When replacement of parts during repair work is needed, be sure to use SUBARU genuine parts.

All information, illustration and specifications contained in this manual are based on the latest product information available at the time of publication approval.

FUJI HEAVY INDUSTRIES LTD.

G2350BE4

CONTROL SYSTEMS

CS

Page

1. General Description 2
2. AT Shift Lock Control System 6
3. Select Lever 20
4. Select Cable 24
5. AT Steering Shift Switch 28
6. AT Shift Lock Solenoid and “P” Range Switch 30
7. Body Integrated Unit 33
8. MT Gear Shift Lever 34
9. General Diagnostic Table 41

1. General Description

A: SPECIFICATION

Item	Specification
Swing torque of rod against lever N (kgf, lb)	3.7 (0.38, 0.84) or less

B: COMPONENT

1. AT SELECT LEVER

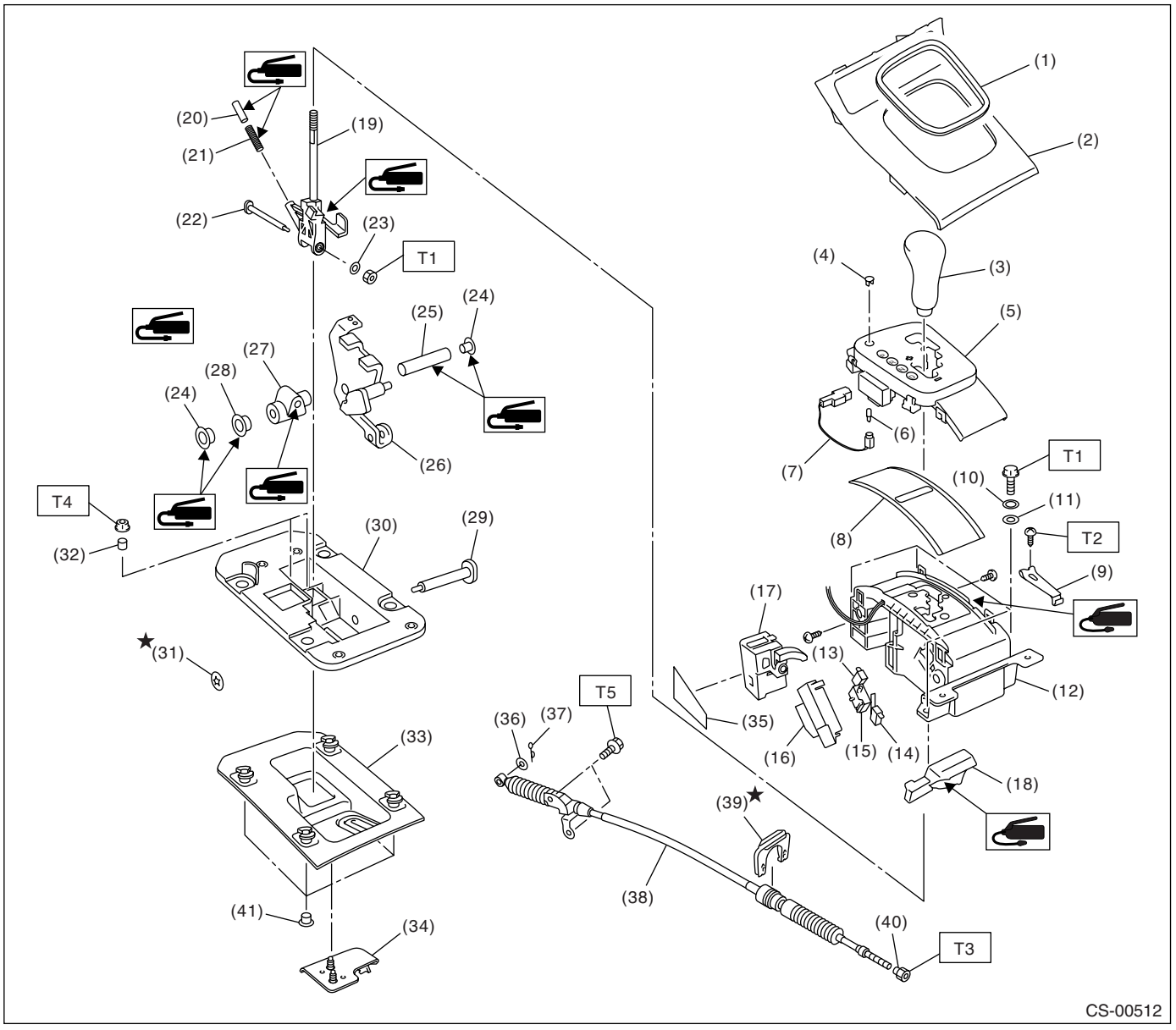

(1) Ring indicator
(2) Front cover
(3) Grip
(4) Release cover
(5) Indicator ASSY
(6) Indicator valve
(7) Valve harness
(8) Blind
(9) Detent spring
(10) Spring washer
(11) Washer
(12) Guide plate upper
(13) Up switch
(14) Down switch
(15) SPORT mode switch
(16) Switch cover
(17) Shift lock solenoid ASSY
(18) Check plate
(19) Lever ASSY
(20) Check sheet ball
(21) Return spring
(22) Shaft
(23) Washer
(24) Bushing A
(25) Collar
(26) Arm ASSY
(27) Bushing plate
(28) Bushing B
(29) Shaft
(30) Plate lower
(31) Clamp
(32) Collar
(33) Packing
(34) Cable bracket
(35) Sheet
(36) Washer
(37) Snap pin
(38) Select cable
(39) Clamp
(40) Nut A
(41) Bushing

Tightening torque: N·m (kgf-m, ft-lb)
T1: 5.1 (0.52, 3.8)
T2: 6.9 (0.70, 5.1)
T3: 7.5 (0.76, 5.5)
T4: 12.7 (1.3, 9.4)
T5: 18 (1.8, 13.3)

2. 5MT GEAR SHIFT LEVER

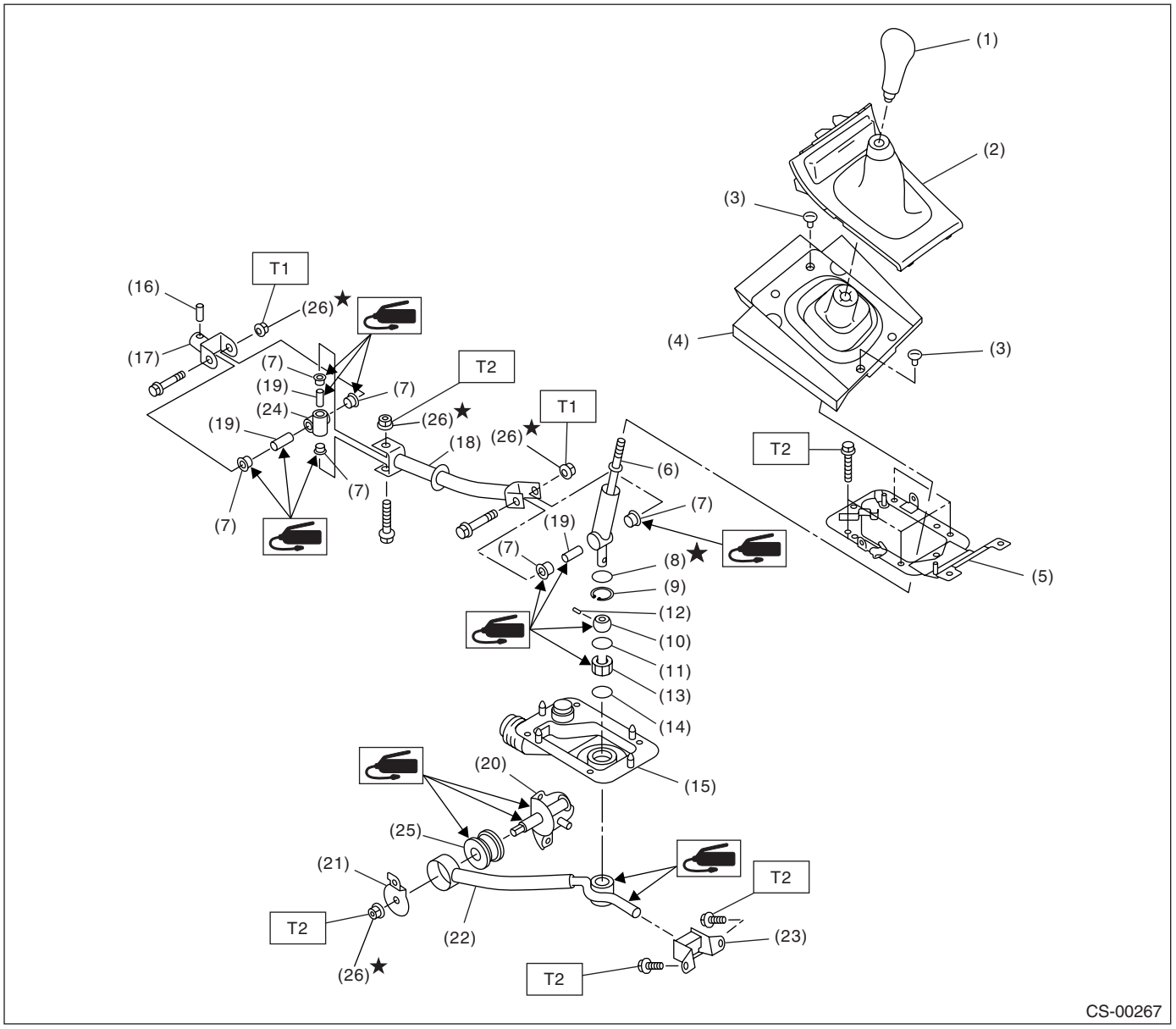

(1) Gear shift knob
(2) Front cover ASSY
(3) Clamp
(4) Boot and insulator ASSY
(5) Plate ASSY
(6) Lever
(7) Bushing
(8) Lock wire
(9) Snap ring
(10) Bushing
(11) O-ring
(12) Spring pin
(13) Bushing B
(14) O-ring
(15) Boot
(16) Spring pin
(17) Joint
(18) Rod
(19) Spacer
(20) Bracket
(21) Washer
(22) Stay
(23) Cushion rubber
(24) Boss
(25) Bushing
(26) Self-locking nut

Tightening torque: N·m (kgf-m, ft-lb)
T1: 12 (1.2, 8.9)
T2: 18 (1.8, 13.3)

C: PREPARATION TOOL

1. SPECIAL TOOL

ILLUSTRATION	TOOL NUMBER	DESCRIPTION	REMARKS
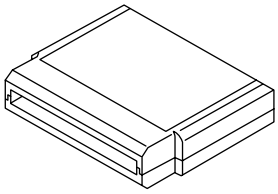 ST24082AA260	24082AA260	CARTRIDGE	Troubleshooting for electrical system.
ST22771AA030	22771AA030	SUBARU SELECT MONITOR KIT	Troubleshooting for electrical system.

D: CAUTION

• Wear work clothing, including a cap, protective goggles, and protective shoes during operation.
• Remove contamination including dirt and corrosion before removal, installation or disassembly.
• Keep the disassembled parts in order and protect them from dust and dirt.
• Before removal, installation or disassembly, be sure to clarify the failure. Avoid unnecessary removal, installation, disassembly and replacement.
• Use SUBARU genuine fluid, grease etc. or equivalent. Do not mix fluid, grease etc. with that of another grade or from other manufacturers.
• Be sure to tighten fasteners including bolts and nuts to the specified torque.
• Place shop jacks or rigid racks at the specified points.
• Apply grease onto sliding or revolution surfaces before installation.
• Before installing O-rings or snap rings, apply sufficient amount of fluid to avoid damage and deformation.
• Before securing a part in a vice, place cushioning material such as wood blocks, aluminum plate, or cloth between the part and vice.
• Before disconnecting electrical connectors, be sure to disconnect the ground cable from battery.

2. AT Shift Lock Control System

A: LOCATION

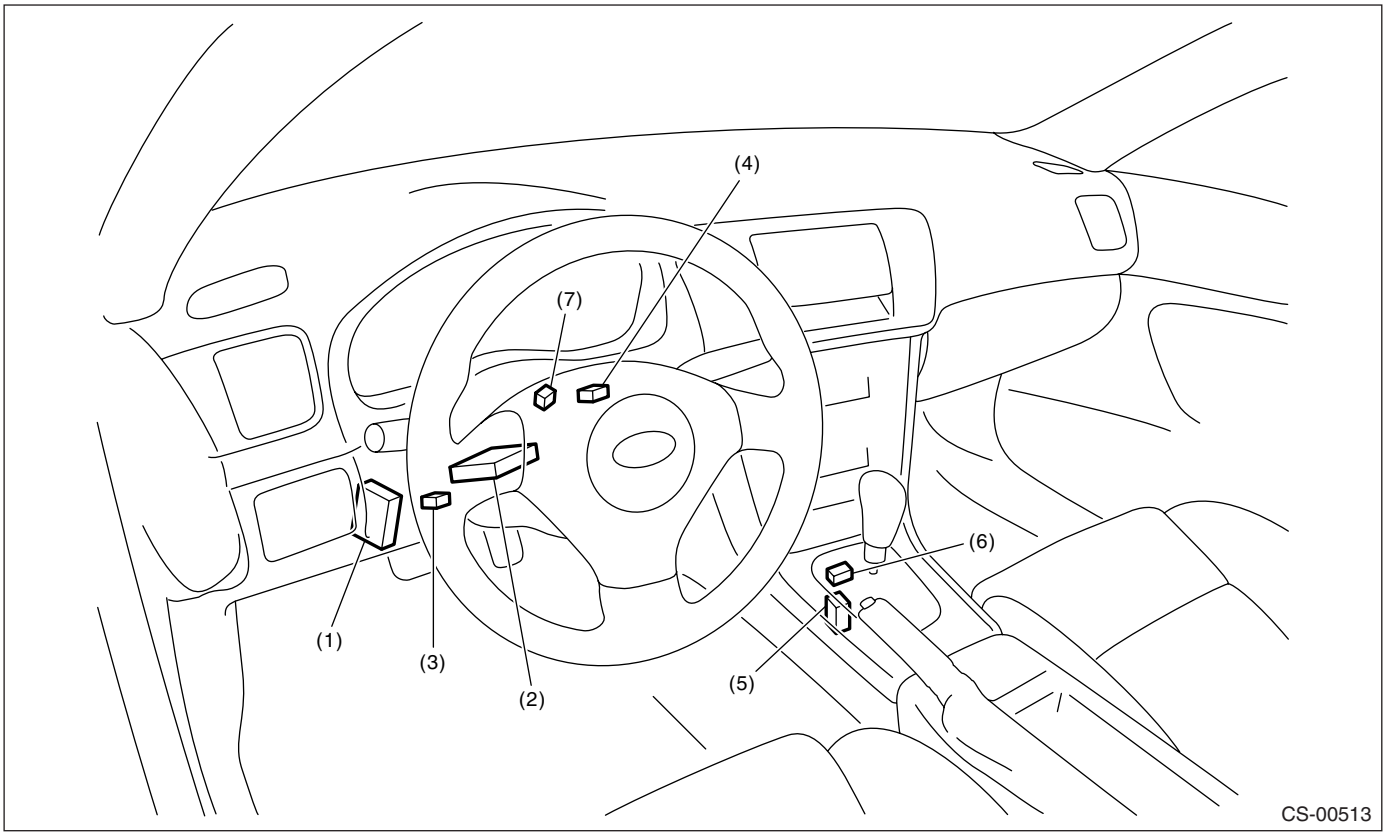

(1) TCM (“P” range)
(2) Body integrated unit
(3) Stop light switch
(4) Key cylinder (with built-in key warning switch)
(5) Shift lock solenoid ASSY
(6) “P” range switch
(7) Key lock solenoid

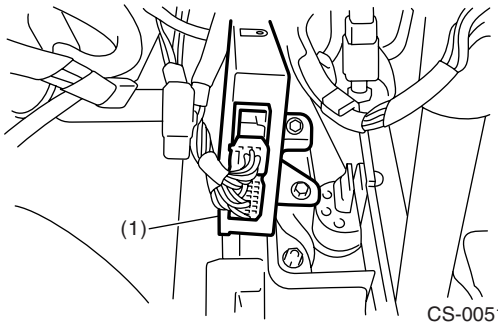

CS-00514

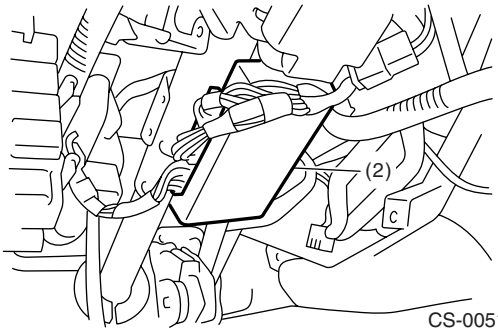

CS-00515

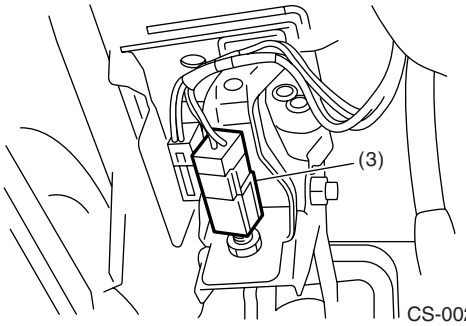

CS-00270

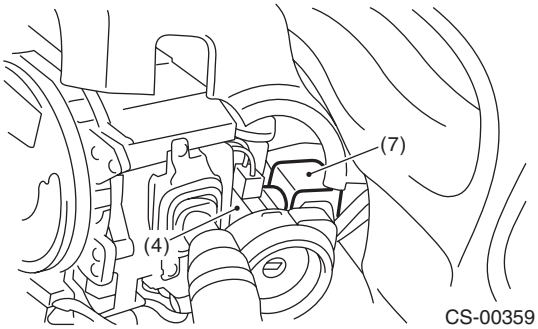

CS-00359

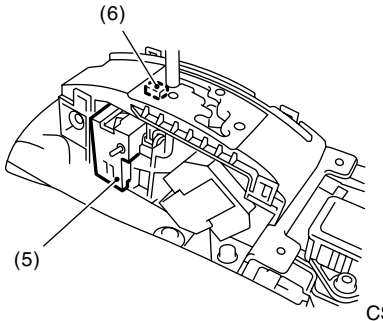

CS-00543

B: ELECTRICAL SPECIFICATION

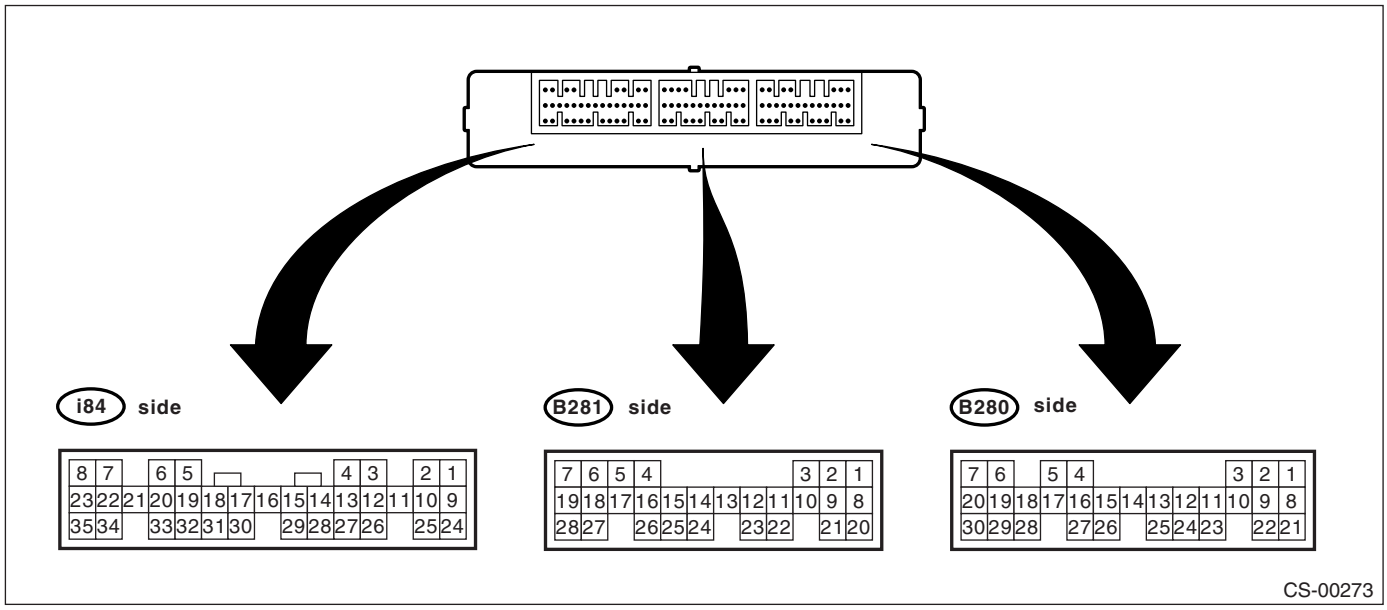

Item	To connector No.	Terminal No.	Input/Output signal Measured value and measuring conditions
Battery power supply	B281	1	9 — 16 V
		2	
	i84	7	
Ignition power supply	B280	1	10 — 15 V when ignition switch is at ON or START.
	i84	24	10 — 15 V when ignition switch is at ACC.
TCM (“P” range)	B280	20	Pulse signal
	B280	30	
Stop light switch	B281	23	9 — 16 V when stop light switch is ON. 0 V when stop light switch is OFF.
“P” range switch	B281	13	0 V when select lever is in “P” range. 9 — 16 V when select lever is in other positions than “P” range.
Shift lock solenoid signal	i84	6	8.5 — 16 V when shift lock is released. 0 V when shift lock is operating.
Key warning switch signal	B281	7	9 — 16 V when key is inserted. 0 V when key is removed.
Key lock solenoid signal	B280	5	7.5 — 16 V when ignition switch is ON, select lever is in “P” range and brake switch is ON. 0 V at other conditions than above.
Ground	B280	22	—
	i84	21	
	B281	8	
		9	

C: WIRING DIAGRAM

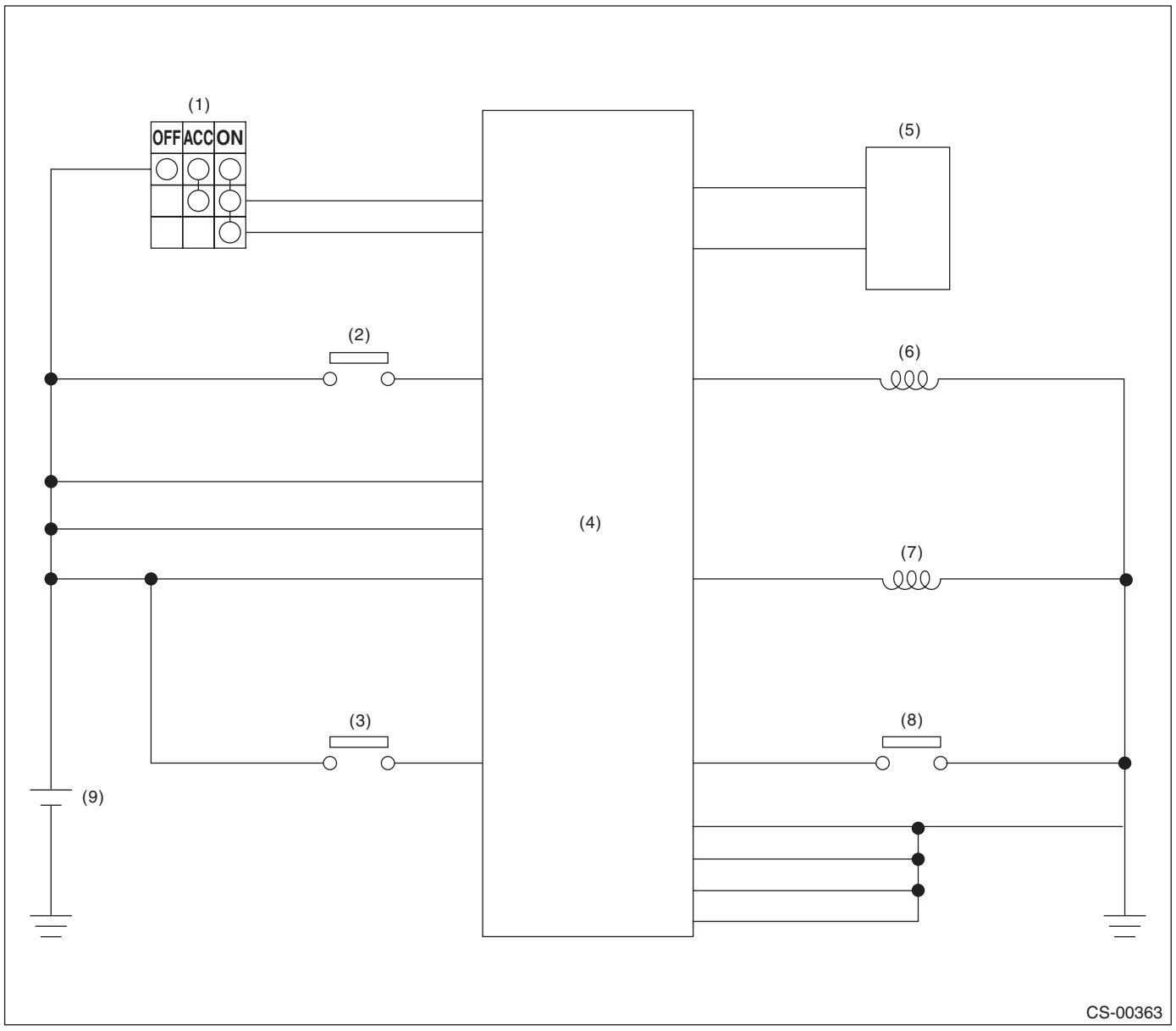

(1) Ignition switch
(2) Stop light switch
(3) Key warning switch
(4) Body integrated unit
(5) TCM (“P” range)
(6) Key lock solenoid
(7) Shift lock solenoid
(8) “P” range switch
(9) Battery

D: INSPECTION

1. SHIFT LOCK OPERATION

	Step	Check	Yes	No
1	**CHECK SHIFT LOCK.** 1) Turn the ignition switch to ON. 2) Shift the select lever to “P” range.	While brake pedal is not depressed, can select lever move from “P” range to other ranges?	Inspect “SELECT LEVER CANNOT BE SHIFT LOCKED”. <Ref. to CS-13, SELECT LEVER CANNOT BE SHIFT, INSPECTION, AT Shift Lock Control System.>	Go to step **2.**
2	**CHECK SHIFT LOCK.**	While brake pedal is depressed, can select lever move from “P” range to other ranges?	Go to step **3.**	Inspect “SELECT LEVER SHIFT LOCK CANNOT BE RELEASED”. <Ref. to CS-15, SHIFT LOCK OF SELECT LEVER CANNOT BE RELEASED, INSPECTION, AT Shift Lock Control System.>
3	**CHECK KEY INTER LOCK.**	Is the ignition switch turned to the “LOCK” position when the select lever is set to other than “P” range?	Inspect “KEY INTER LOCK DOES NOT BE LOCKED OR RELEASED”. <Ref. to CS-15, SHIFT LOCK OF SELECT LEVER CANNOT BE RELEASED, INSPECTION, AT Shift Lock Control System.>	Go to step **4.**
4	**CHECK KEY INTER LOCK.**	Is the ignition switch turned to the “LOCK” position when the select lever is set to “P” range?	AT shift lock system is normal.	Inspect “KEY INTER LOCK DOES NOT BE LOCKED OR RELEASED”. <Ref. to CS-15, SHIFT LOCK OF SELECT LEVER CANNOT BE RELEASED, INSPECTION, AT Shift Lock Control System.>

2. BODY INTEGRATED UNIT POWER SUPPLY AND GROUND CIRCUIT

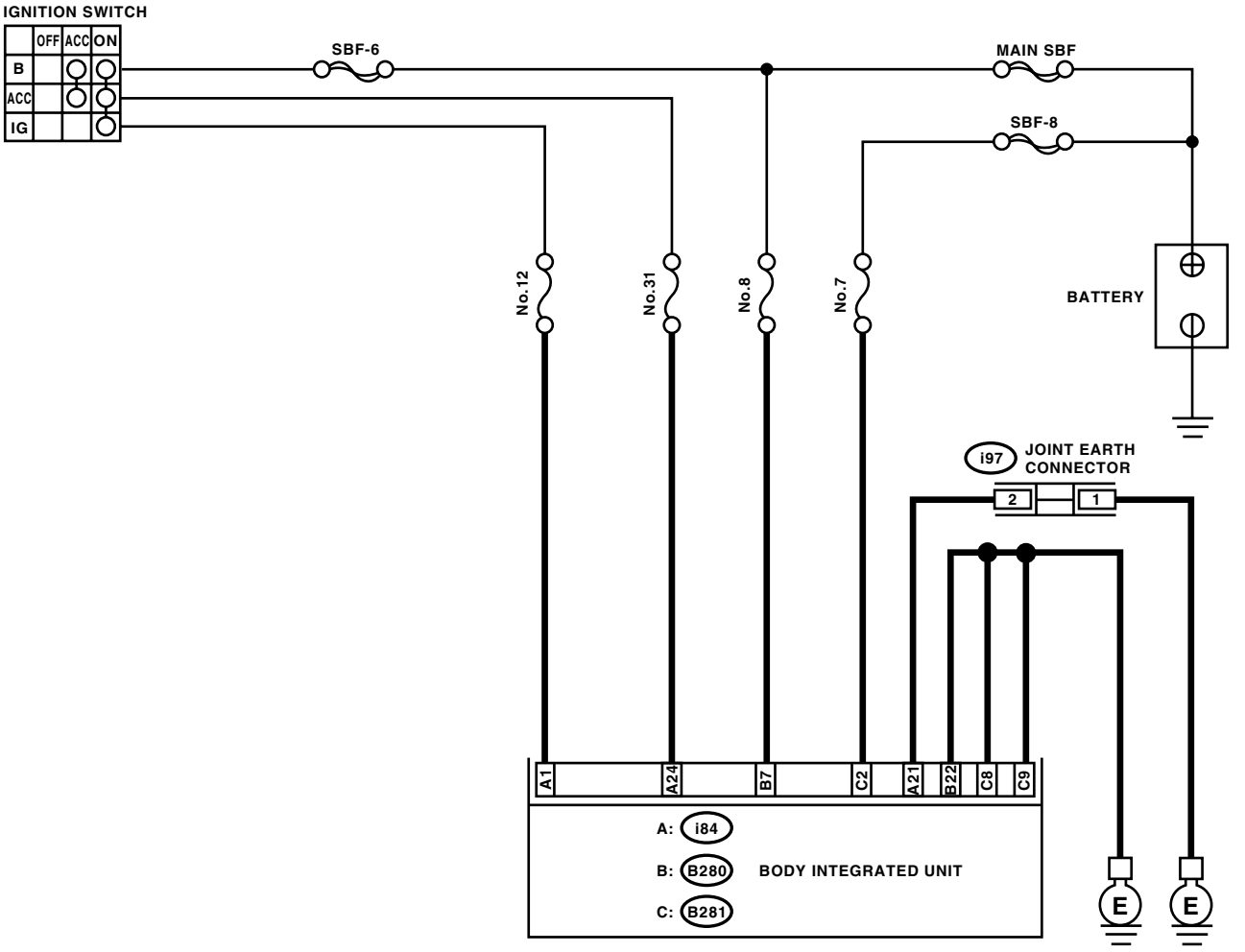

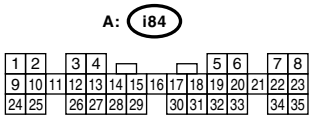

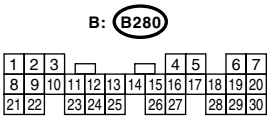

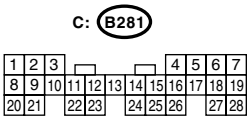

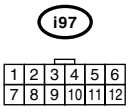

CS-00547

Step		Check	Yes	No
1	**CHECK DTC OF BODY INTEGRATED UNIT.** Check DTC of body integrated unit. <Ref. to LAN(diag)-14, OPERATION, Subaru Select Monitor.>	Is the DTC of power line displayed on body integrated unit?	Repair or replace it according to the DTC.	Go to step **2.**

Step		Check	Yes	No
2	**CHECK HARNESS CONNECTOR BETWEEN BODY INTEGRATED UNIT AND CHASSIS GROUND.** 1) Turn the ignition switch to OFF. 2) Measure the harness resistance between body integrated unit and chassis ground. ***Connector & terminal*** ***(i84) No. 21 — Chassis ground:*** ***(B280) No. 22 — Chassis ground:*** ***(B281) No. 8 — Chassis ground:*** ***(B281) No. 9 — Chassis ground:***	Is the resistance less than 1 Ω?	Go to step **3.**	Repair open circuit of the harness between body integrated unit and chassis ground.
3	**CHECK POOR CONTACT.**	Is there poor contact in connector?	Repair the poor contact.	Check the body integrated unit.

3. SELECT LEVER CANNOT BE SHIFT

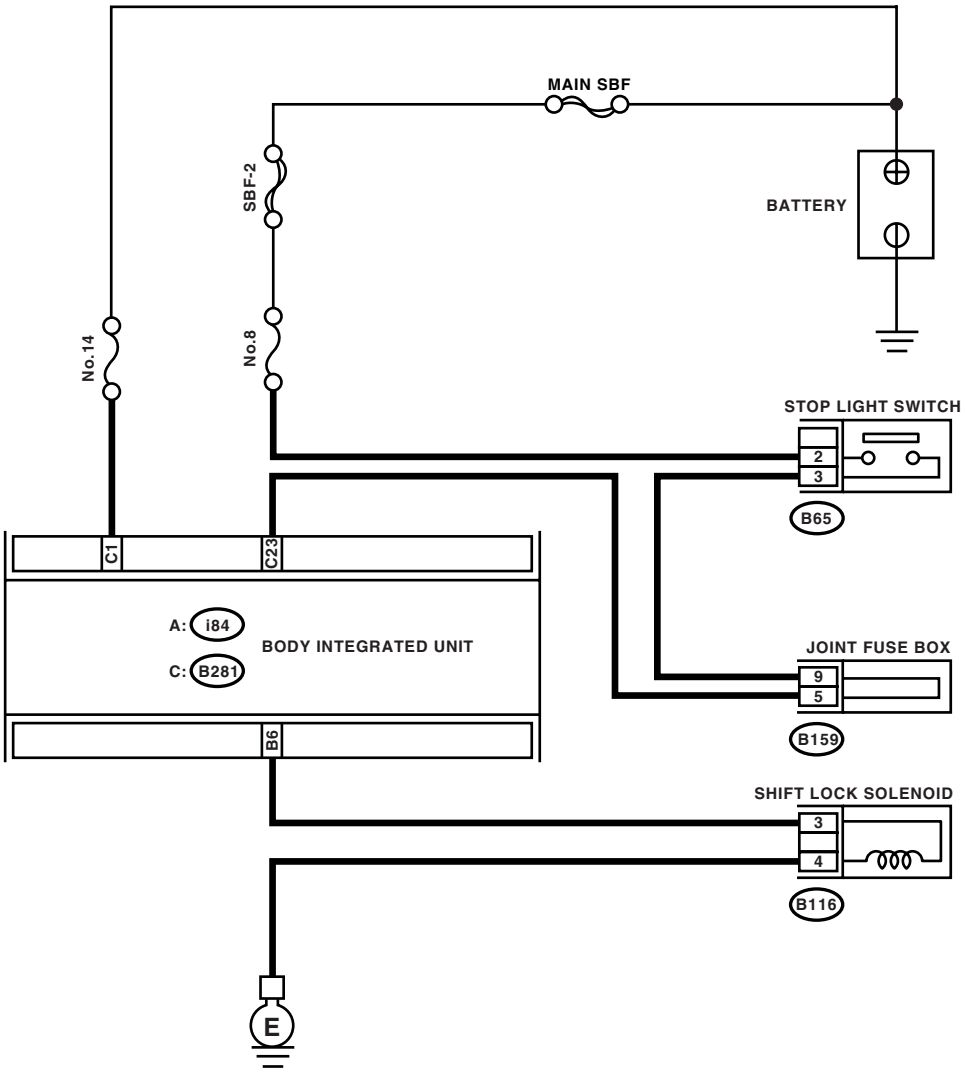

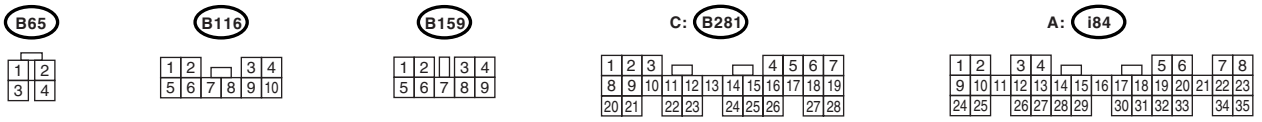

CS-00516

	Step	Check	Yes	No
1	**CHECK INPUT SIGNAL OF BODY INTEGRATED UNIT USING SUBARU SELECT MONITOR.** 1) Turn the ignition switch to OFF. 2) Connect the Subaru Select Monitor to data link connector. 3) Turn the ignition switch and Subaru Select Monitor to ON. 4) Depress the brake pedal. 5) Read the input signal of stop light switch from Subaru Select Monitor. <Ref. to LAN(diag)-14, OPERATION, Subaru Select Monitor.>	Is "ON" displayed?	Go to step **2.**	Go to step **3.**
2	**CHECK DTC OF BODY INTEGRATED UNIT.** Check DTC of body integrated unit. <Ref. to LAN(diag)-24, OPERATION, Read Diagnostic Trouble Code (DTC).>	Is DTC (B0106) displayed?	Repair or replace it according to the DTC.	Go to step **6.**
3	**CHECK STOP LIGHT SWITCH.** Depress the brake pedal.	Does the stop light illuminate?	Go to step **4.**	Check the stop light system.
4	**CHECK HARNESS BETWEEN STOP LIGHT SWITCH AND BODY INTEGRATED UNIT.** 1) Turn the ignition switch to OFF. 2) Disconnect the connectors of body integrated unit and stop light switch. 3) Measure the resistance of harness between stop light switch and body integrated unit. ***Connector & terminal*** ***(B65) No. 3 — (B281) No. 23:***	Is the resistance more than 1 MΩ?	Repair open circuit of the harness between body integrated unit and stop light switch.	Go to step **5.**
5	**CHECK HARNESS BETWEEN STOP LIGHT SWITCH AND BODY INTEGRATED UNIT.** Measure the resistance of harness between stop light switch and chassis ground. ***Connector & terminal*** ***(B65) No. 3 — Chassis ground:***	Is the resistance less than 1 Ω?	Repair short circuit of the harness between body integrated unit and stop light switch.	Go to step **7.**
6	**CHECK SHIFT LOCK SOLENOID.** 1) Disconnect the connector of shift lock solenoid. 2) Connect the battery to connector terminal of shift lock solenoid, and operate the solenoid. ***Terminals*** ***No. 3 (+) — No. 4 (−):***	Is the shift lock solenoid operating properly?	Go to step **7.**	Replace the shift lock solenoid.
7	**CHECK SHIFT LOCK OPERATION.** 1) Connect all the connectors. 2) Shift the select lever to "P" range. 3) Shift the select lever from "P" range to "R" range.	Can the select lever shift from "P" range to "R" range?	Check the body integrated unit.	A temporary poor contact of connector or harness may be the cause.

4. SHIFT LOCK OF SELECT LEVER CANNOT BE RELEASED

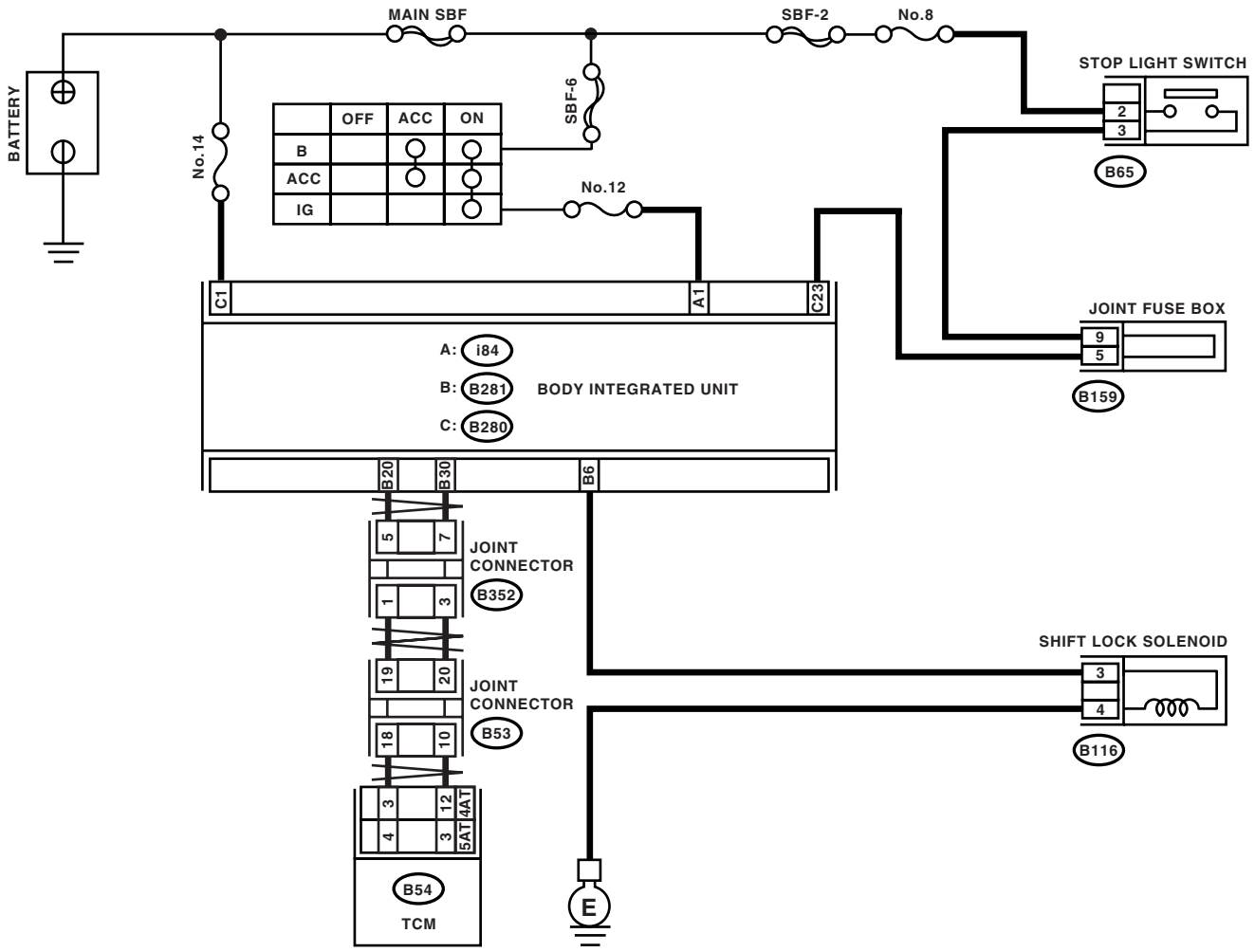

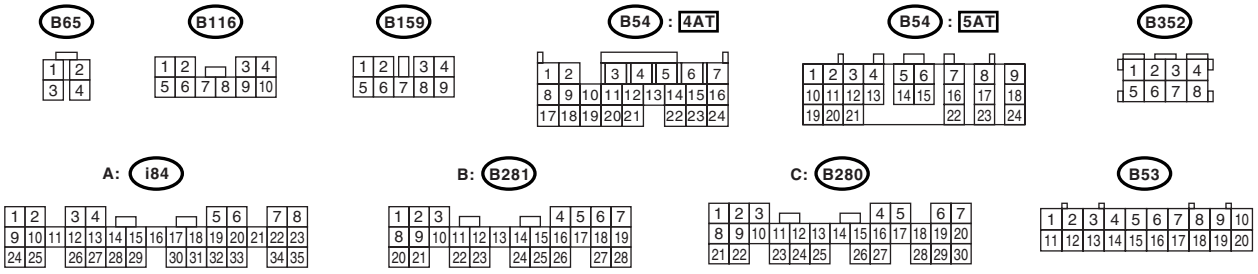

CS-00517

	Step	Check	Yes	No
1	**CHECK INPUT SIGNAL OF BODY INTEGRATED UNIT USING SUBARU SELECT MONITOR.** 1) Turn the ignition switch to OFF. 2) Connect the Subaru Select Monitor to data link connector. 3) Turn the ignition switch and Subaru Select Monitor to ON. 4) Depress the brake pedal. 5) Read the input signal of shift position from Subaru Select Monitor. <Ref. to LAN(diag)-14, OPERATION, Subaru Select Monitor.>	Is "7" displayed?	Go to step **2.**	Check the inhibitor switch, TCM and body integrated unit.
2	**CHECK INPUT SIGNAL OF BODY INTEGRATED UNIT USING SUBARU SELECT MONITOR.** Read the input signal of stop light switch from Subaru Select Monitor. <Ref. to LAN(diag)-14, OPERATION, Subaru Select Monitor.>	Is "ON" displayed?	Go to step **5.**	Go to step **3.**
3	**CHECK STOP LIGHT SWITCH.** Depress the brake pedal.	Does the stop light illuminate?	Go to step **4.**	Check the stop light system.
4	**CHECK HARNESS BETWEEN STOP LIGHT SWITCH AND BODY INTEGRATED UNIT.** 1) Depress the brake pedal. 2) Measure the voltage between body integrated unit and chassis ground. ***Connector & terminal*** ***(B281) No. 23 (+) — Chassis ground (−):***	Is the voltage more than 9 V?	Go to step **5.**	Repair open or short circuit of the harness between the body integrated unit and stop light switch.
5	**CHECK DTC OF BODY INTEGRATED UNIT.** Check DTC of body integrated unit. <Ref. to LAN(diag)-24, OPERATION, Read Diagnostic Trouble Code (DTC).>	Is DTC (B0106) displayed?	Repair or replace it according to the DTC.	Go to step **6.**
6	**CHECK SHIFT LOCK SOLENOID.** 1) Turn the ignition switch to OFF. 2) Disconnect the connector of shift lock solenoid. 3) Connect the battery to connector terminal of shift lock solenoid, and operate the solenoid. ***Terminals*** ***No. 3 (+) — No. 4 (−):***	Is the shift lock solenoid operating properly?	Go to step **7.**	Replace the shift lock solenoid.
7	**CHECK OPERATION.** 1) Connect all the connectors. 2) Turn the ignition switch to ON. (Engine OFF) 3) Shift the select lever to "P" range. 4) Depress the brake pedal. 5) Shift the select lever from "P" range to "R" range.	Can the select lever shift from "P" range to "R" range?	A temporary poor contact of connector or harness may be the cause.	Check the body integrated unit.

5. KEY INTER LOCK DOES NOT LOCK OR RELEASE

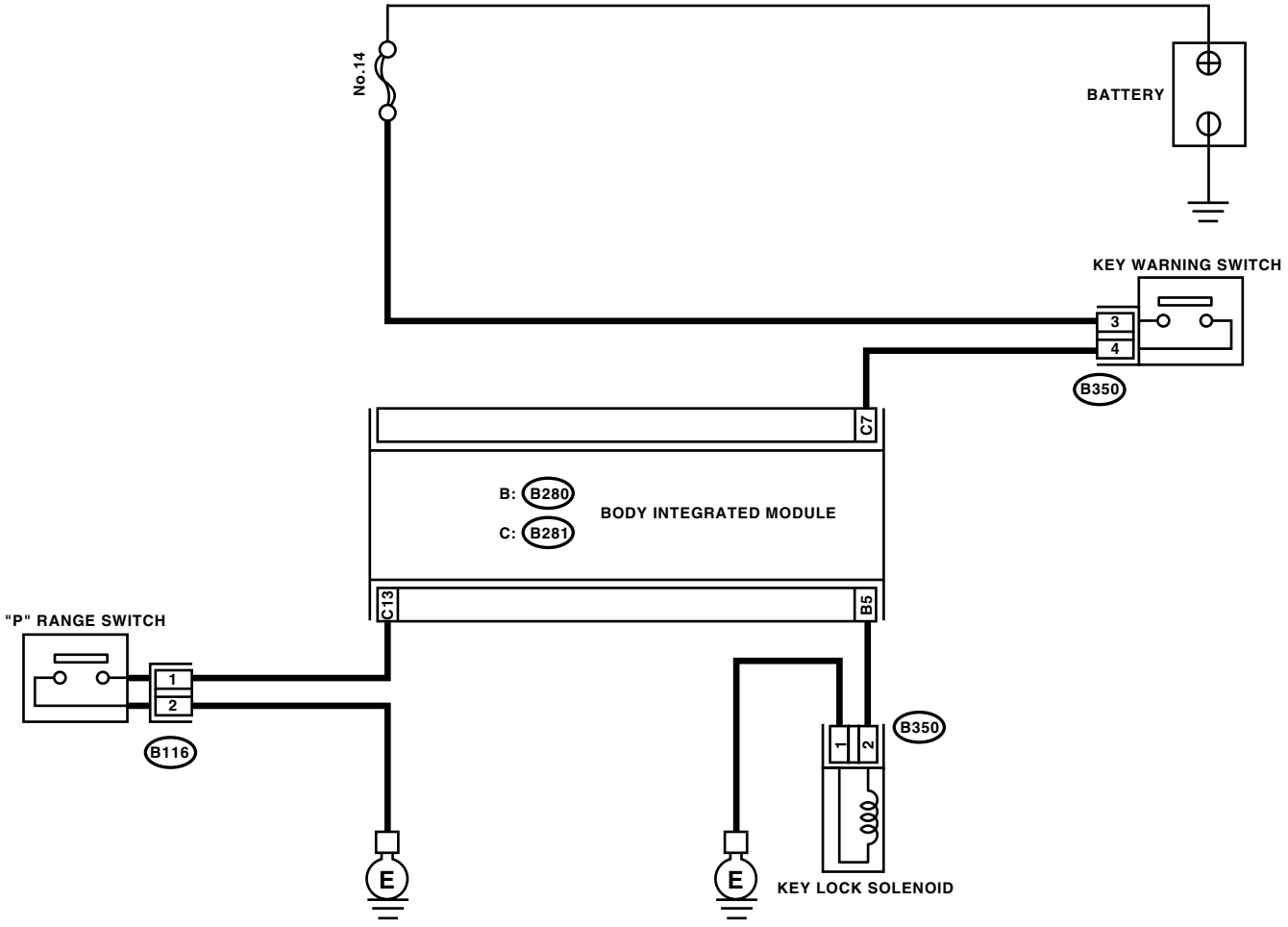

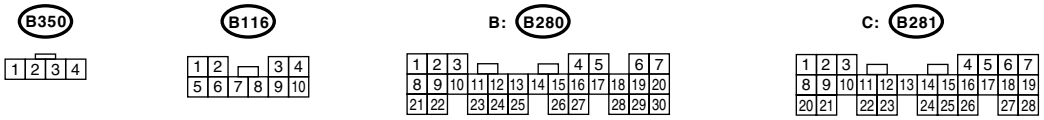

CS-00277

	Step	Check	Yes	No
1	**CHECK INPUT SIGNAL OF BODY INTEGRATED UNIT USING SUBARU SELECT MONITOR.** 1) Turn the ignition switch to OFF. 2) Connect the Subaru Select Monitor to data link connector. 3) Turn the ignition switch and Subaru Select Monitor to ON. 4) Depress the brake pedal. 5) Read the input signal of key warning switch from Subaru Select Monitor. <Ref. to LAN(diag)-14, OPERATION, Subaru Select Monitor.>	Is "ON" displayed?	Go to step **2.**	Go to step **4.**
2	**CHECK INPUT SIGNAL OF BODY INTEGRATED UNIT USING SUBARU SELECT MONITOR.** 1) Shift the select lever to "P" range. 2) Read the input signal of "P" range switch from Subaru Select Monitor. <Ref. to LAN(diag)-14, OPERATION, Subaru Select Monitor.>	Is "ON" displayed?	Go to step **3.**	Go to step **8.**
3	**CHECK DTC OF BODY INTEGRATED UNIT.** Check DTC of body integrated unit. <Ref. to LAN(diag)-24, OPERATION, Read Diagnostic Trouble Code (DTC).>	Is DTC (B0105) displayed?	Repair or replace it according to the DTC.	Check the body integrated unit.
4	**CHECK HARNESS BETWEEN BATTERY AND KEY WARNING SWITCH.** 1) Disconnect the connector of key warning switch. 2) Measure the voltage of harness between key warning switch and chassis ground. ***Connector & terminal*** ***(B350) No. 3 (+) — Chassis ground (−):***	Is the voltage 9 — 16 V?	Go to step **5.**	Repair open or short circuit of the harness between battery and key warning switch.
5	**CHECK KEY WARNING SWITCH.** Measure the resistance between connector terminals of key warning switch. ***Terminals*** ***No. 3 — No. 4:***	Is the resistance more than 1 MΩ?	Replace the key warning switch.	Go to step **6.**
6	**CHECK KEY WARNING SWITCH.** 1) Remove the key. 2) Measure the resistance between connector terminals of key warning switch. ***Terminals*** ***No. 3 — No. 4:***	Is the resistance more than 1 MΩ?	Go to step **7.**	Replace the key warning switch.
7	**CHECK HARNESS BETWEEN AT SHIFT LOCK CONTROL MODULE AND KEY WARNING SWITCH.** 1) Disconnect the connector of body integrated unit. 2) Measure the voltage between body integrated unit and chassis ground. ***Connector & terminal*** ***(B281) No. 7 (+) — Chassis ground (−):***	Is the voltage more than 9 V?	Go to step **8.**	Repair open circuit of the harness between body integrated unit and key warning switch.
8	**CHECK HARNESS BETWEEN "P" RANGE SWITCH AND CHASSIS GROUND.** Measure the resistance of harness between "P" range switch and chassis ground. ***Connector & terminal*** ***(B116) No. 1 — Chassis ground:***	Is the resistance less than 1 Ω?	Go to step **9.**	Repair short circuit of the harness between "P" range switch and body integrated unit.

	Step	Check	Yes	No
9	**CHECK HARNESS BETWEEN BODY INTEGRATED UNIT AND "P" RANGE SWITCH.** 1) Disconnect the connector of "P" range switch. 2) Measure the resistance of harness between body integrated unit and "P" range switch. ***Connector & terminal*** ***(B116) No. 1 — (B281) No. 13:***	Is the resistance more than 1 MΩ?	Repair open circuit of the harness between body integrated unit and "P" range switch.	Go to step **10.**
10	**CHECK HARNESS BETWEEN "P" RANGE SWITCH AND CHASSIS GROUND.** Measure the resistance of harness between "P" range switch and chassis ground. ***Connector & terminal*** ***(B116) No. 2 — Chassis ground:***	Is the resistance more than 1 MΩ?	Repair open circuit in the harness between "P" range switch and chassis ground.	Go to step **11.**
11	**CHECK "P" RANGE SWITCH.** 1) Shift the select lever to "P" range. 2) Measure resistance between "P" range switch connector terminals. ***Terminals*** ***No. 2 — No. 1:***	Is the resistance less than 1 Ω?	Go to step **12.**	Replace the "P" range switch.
12	**CHECK "P" RANGE SWITCH.** 1) Shift the select lever to other than "P" range. 2) Measure resistance between "P" range switch connector terminals. ***Terminals*** ***No. 2 — No. 1:***	Is the resistance more than 1 MΩ?	Go to step **13.**	Replace the "P" range switch.
13	**CHECK OPERATION.** 1) Connect all the connectors. 2) Operate the key lock solenoid.	Does the key lock solenoid operate normally?	A temporary poor contact of connector or harness may be the cause.	Check the body integrated unit.

3. Select Lever

A: REMOVAL

1) Set the vehicle on a lift.
2) Disconnect the ground cable from battery.
3) Shift the select lever to “N” range.
4) Lift-up the vehicle.
5) Remove the rear exhaust pipe and muffler.
• SOHC model
<Ref. to EX(H4SO)-8, REMOVAL, Rear Exhaust Pipe.> <Ref. to EX(H4SO)-10, REMOVAL, Muffler.>
• DOHC turbo model
<Ref. to EX(H4DOTC)-12, REMOVAL, Rear Exhaust Pipe.> <Ref. to EX(H4DOTC)-13, REMOVAL, Muffler.>
• DOHC 3.0 L model
<Ref. to EX(H6DO)-7, REMOVAL, Rear Exhaust Pipe.> <Ref. to EX(H6DO)-9, REMOVAL, Muffler.>
6) Remove the heat shield cover.

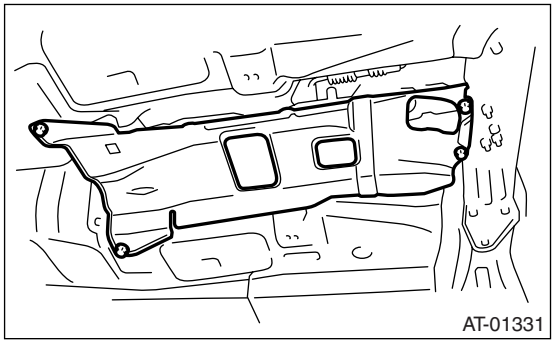

7) Remove the cable from arm assembly.

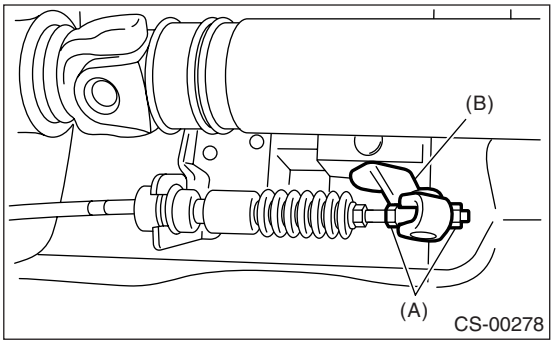

(A) Adjusting nut
(B) Arm ASSY

8) Raise the pawl of clamp to remove the cable.

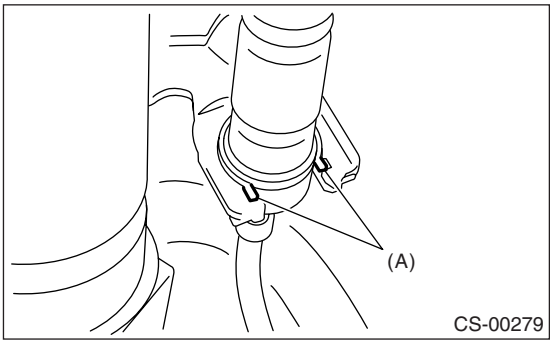

(A) Claw

9) Lower the vehicle.
10) Remove the console box. <Ref. to EI-53, REMOVAL, Console Box.>
11) Remove the center console. <Ref. to EI-54, REMOVAL, Center Console.>
12) Remove the harness clips from bracket.

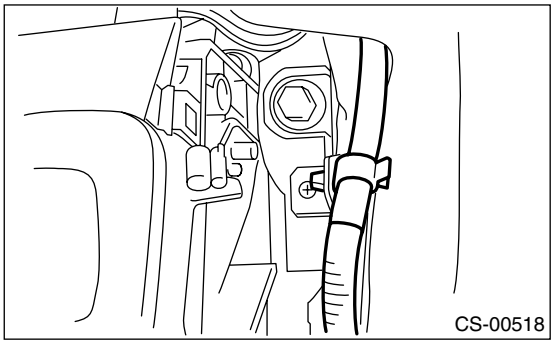

13) Disconnect the connectors, and then remove the four bolts to take out the select lever assembly from vehicle body.

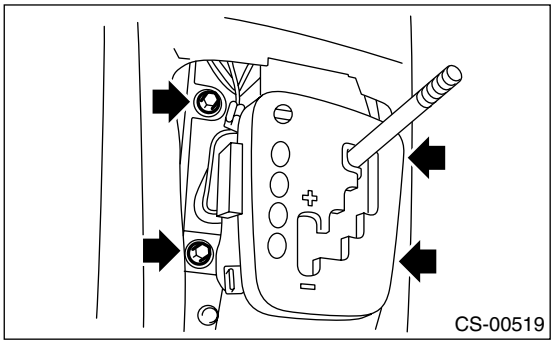

B: INSTALLATION

1) Set the select lever to vehicle body.
2) Tighten the four bolts to install the select lever to vehicle body, and then connect the connector.
(1) Temporarily tighten the bolt A.
(2) Tighten the bolt B.
(3) Tighten the bolt A.
(4) Tighten the bolts C and D.

Tightening torque:
18 N·m (1.8 kgf-m, 13.3 ft-lb)

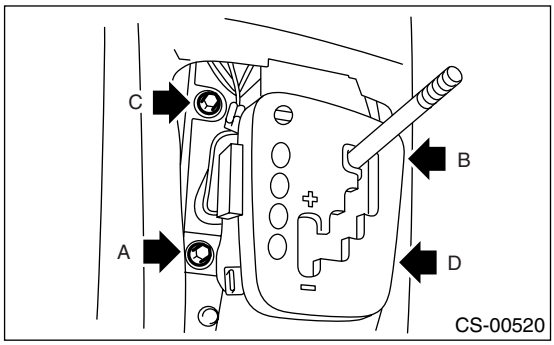

3) Install the harness clips to the bracket.

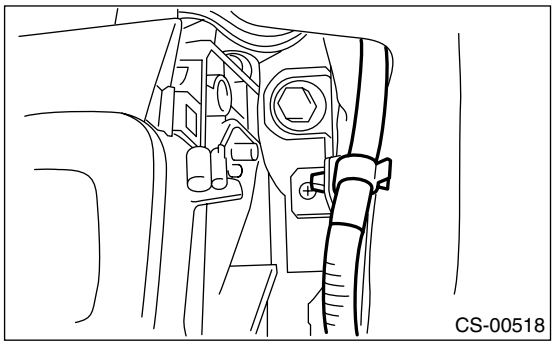

4) Install the center console. <Ref. to EI-55, INSTALLATION, Center Console.>
5) Install the console box. <Ref. to EI-53, INSTALLATION, Console Box.>
6) Shift the select lever to “N” range.
7) Lift-up the vehicle.
8) Shift the range select lever to “N” range.
9) Fix the cable to bracket. <Ref. to CS-25, INSTALLATION, Select Cable.>
10) Adjust the select cable position. <Ref. to CS-26, ADJUSTMENT, Select Cable.>
11) After the completion of adjustment, confirm that the select lever operates properly at all range positions.
12) Install the heat shield cover.
13) Install the rear exhaust pipe and muffler.
• SOHC model
<Ref. to EX(H4SO)-8, INSTALLATION, Rear Exhaust Pipe.> <Ref. to EX(H4SO)-10, INSTALLATION, Muffler.>
• DOHC turbo model
<Ref. to EX(H4DOTC)-12, INSTALLATION, Rear Exhaust Pipe.> <Ref. to EX(H4DOTC)-13, INSTALLATION, Muffler.>
• DOHC 3.0 L model
<Ref. to EX(H6DO)-7, INSTALLATION, Rear Exhaust Pipe.> <Ref. to EX(H6DO)-9, INSTALLATION, Muffler.>
14) Inspect the following items. When the malfunctions are found in the inspection, adjust the select cable and inhibitor switch.

NOTE:
Inhibitor switch for 5AT model is not adjustable. <Ref. to CS-26, ADJUSTMENT, Select Cable.> <Ref. to 4AT-48, ADJUSTMENT, Inhibitor Switch.>

(1) Engine starts when the select lever is in “P” and “N” range, but not in other range.
(2) Back-up light illuminates when the select lever is in the “R” range, but not in other range.
(3) Select lever and indicator positions are matched.

C: DISASSEMBLY

1) Shift the select lever to “N” range.
2) Remove the indicator light.

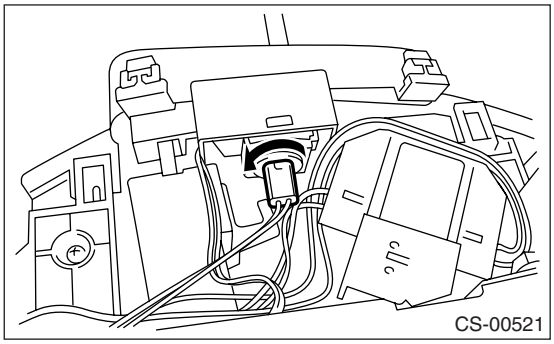

3) Remove the grip.
4) Remove the indicator assembly.

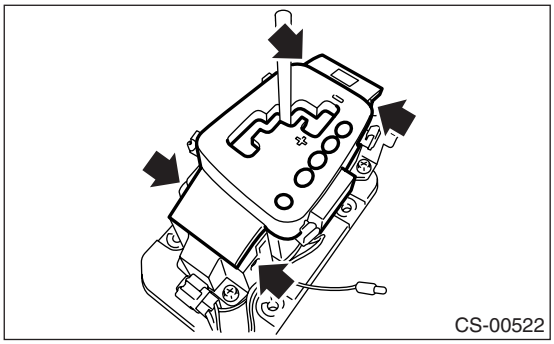

5) Remove the blind.

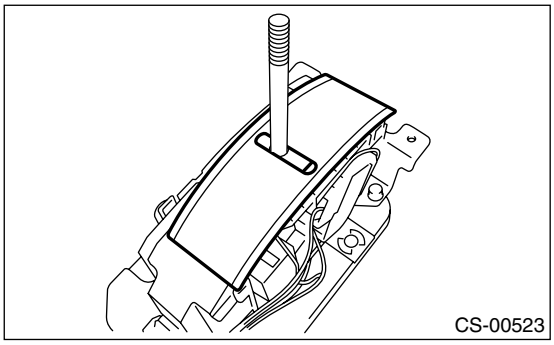

6) Shift the select lever to “N” range, and then remove the detent spring.

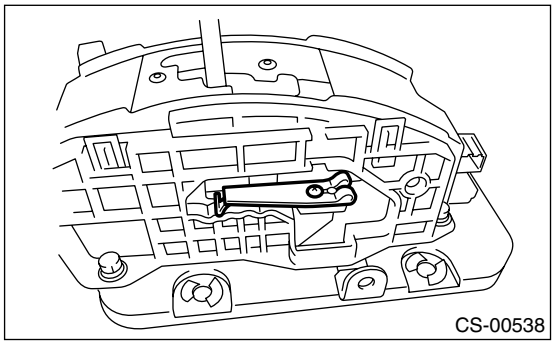

7) Remove the bolt, and separate the guide plate upper from plate lower.

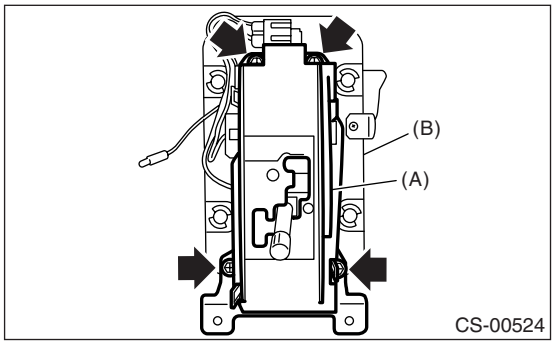

(A) Guide plate upper
(B) Plate lower

8) Remove the connector from guide plate upper.

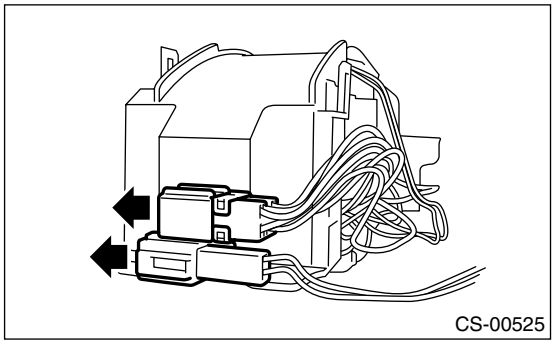

9) Remove the sheet, and remove the shift lock solenoid assembly.

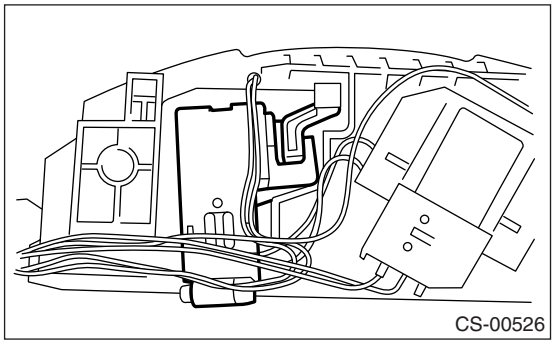

10) Remove the switch assembly.

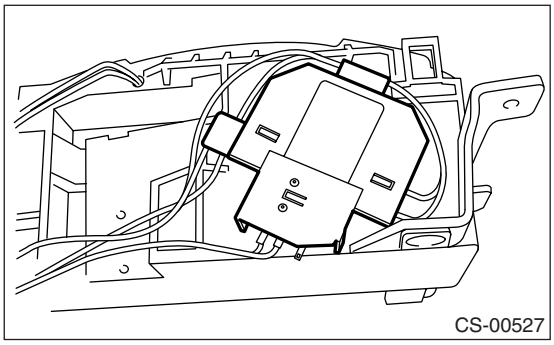

11) Remove the check plate.

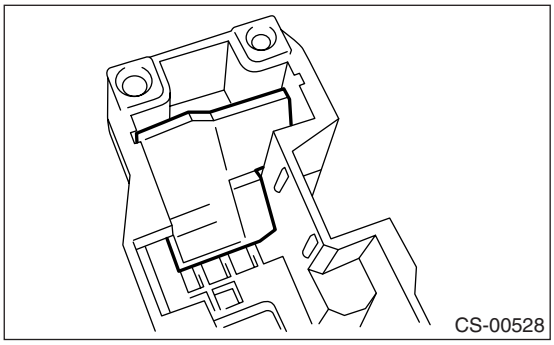

12) Raise the claw of connector.

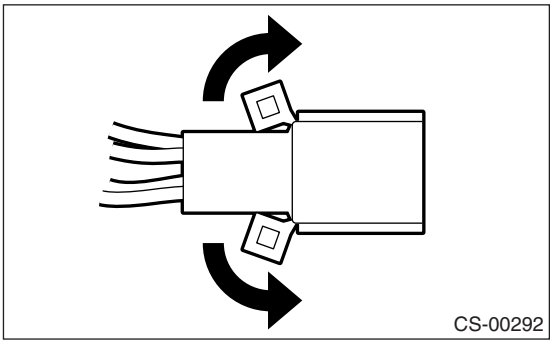

13) Disconnect the terminals of SPORT mode switch and shift lock solenoid assembly from connector, using a flat-tip screwdriver with thin tip.

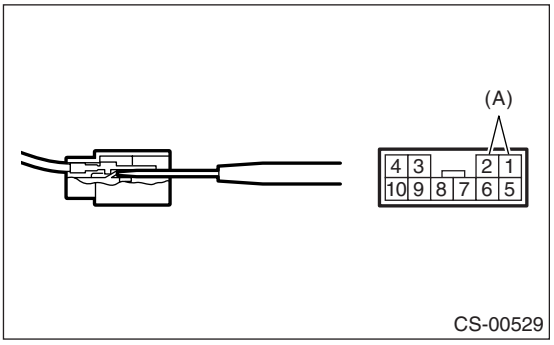

(A) “P” range switch

14) Remove the cable bracket.

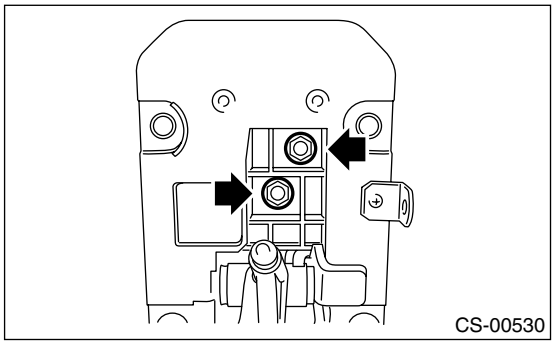

15) Remove the cover.

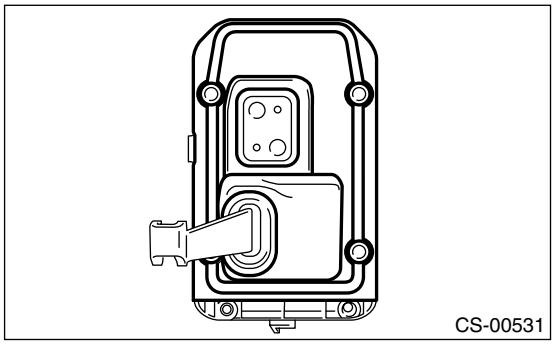

16) Remove the select lever assembly.

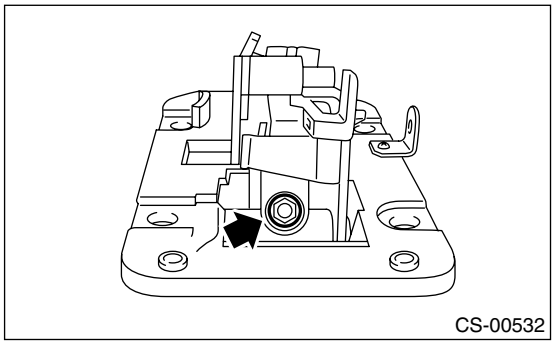

17) Remove the clamp, and remove the arm assembly and bushing plate.

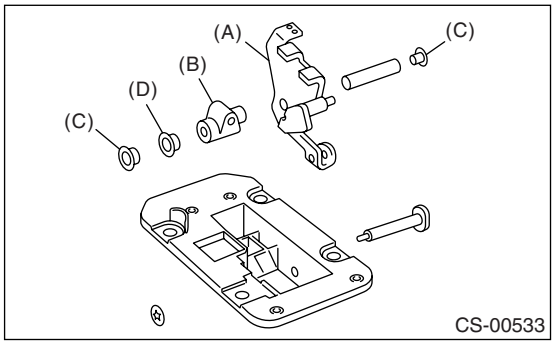

(A) Arm ASSY
(B) Bushing plate
(C) Bushing A
(D) Bushing B

D: ASSEMBLY

1) Clean all the parts before assembly.
2) Apply grease [Multemp AC-D or equivalent] to each parts. <Ref. to CS-2, AT SELECT LEVER, COMPONENT, General Description.>
3) Assemble in the reverse order of disassembly.

NOTE:
• Refer to “COMPONENT” for each tightening torque. <Ref. to CS-2, AT SELECT LEVER, COMPONENT, General Description.>
• Connect the switch terminal to connector.

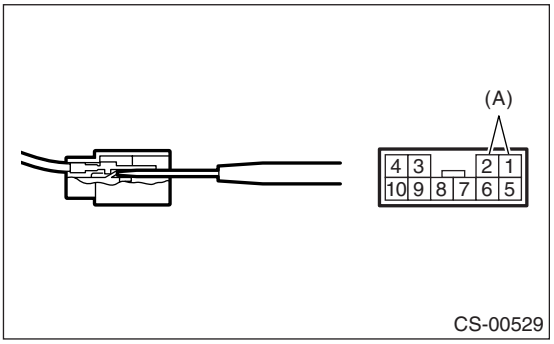

(A) “P” range switch

4) After completion of installation, shift the select lever from “P” range to “D” range, then check whether the indicator and select lever matches, whether the pointer and position mark matches and what the operating force is.

E: INSPECTION

1) Inspect the removed parts by comparing with new ones for deformation, damage and wear. Repair or replace if defective.
2) Confirm the select lever operating condition before assembly. Normal if it operates smoothly.

4. Select Cable

A: REMOVAL

1) Set the vehicle on a lift.
2) Shift the select lever to “N” range.
3) Disconnect the ground cable from battery.
4) Lift-up the vehicle.
5) Remove the front, center and rear exhaust pipes and muffler. (SOHC and DOHC non-turbo model)
• SOHC model
<Ref. to EX(H4SO)-4, REMOVAL, Front Exhaust Pipe.> <Ref. to EX(H4SO)-7, REMOVAL, Center Exhaust Pipe.> <Ref. to EX(H4SO)-8, REMOVAL, Rear Exhaust Pipe.> <Ref. to EX(H4SO)-10, REMOVAL, Muffler.>
• DOHC 3.0 L model
<Ref. to EX(H6DO)-4, REMOVAL, Front Exhaust Pipe.> <Ref. to EX(H6DO)-7, REMOVAL, Rear Exhaust Pipe.> <Ref. to EX(H6DO)-9, REMOVAL, Muffler.>
6) Remove the center and rear exhaust pipe and muffler. (DOHC turbo model)
<Ref. to EX(H4DOTC)-8, REMOVAL, Center Exhaust Pipe.> <Ref. to EX(H4DOTC)-12, REMOVAL, Rear Exhaust Pipe.> <Ref. to EX(H4DOTC)-13, REMOVAL, Muffler.>
7) Remove the heat shield cover.

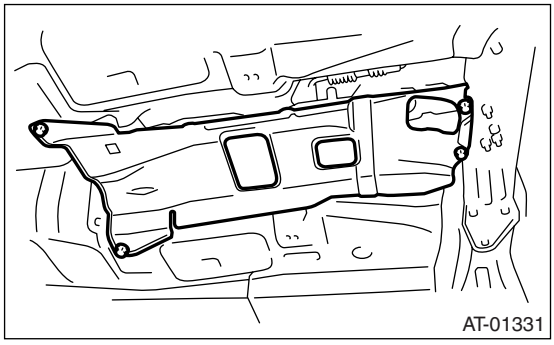

8) Remove the snap pin and washer from range select lever.

• 4AT

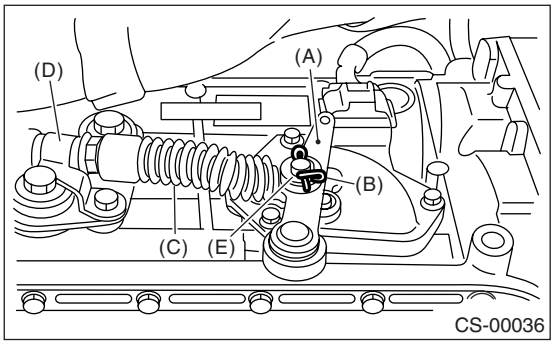

(A) Range select lever
(B) Snap pin
(C) Select cable
(D) Bracket
(E) Washer

• 5AT

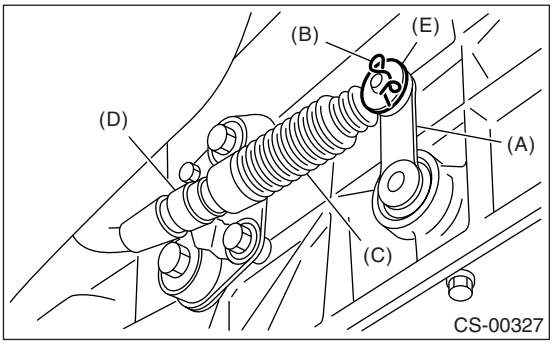

(A) Range select lever
(B) Snap pin
(C) Select cable
(D) Bracket
(E) Washer

9) Remove the plate assembly from transmission case.
• 4AT

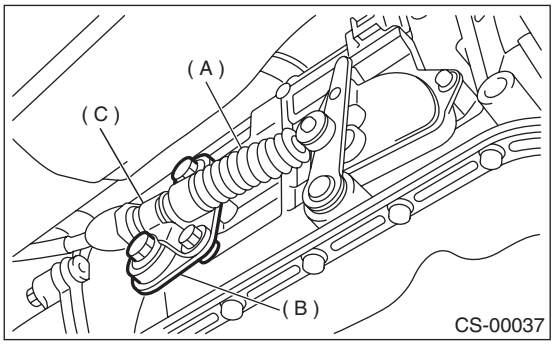

(A) Select cable
(B) Plate ASSY
(C) Bracket

• 5AT

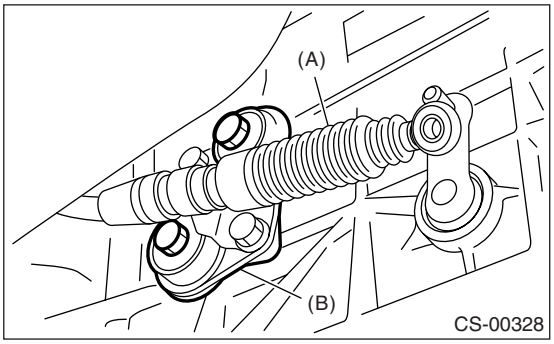

(A) Select cable
(B) Plate ASSY

10) Disconnect the cable from arm assembly.

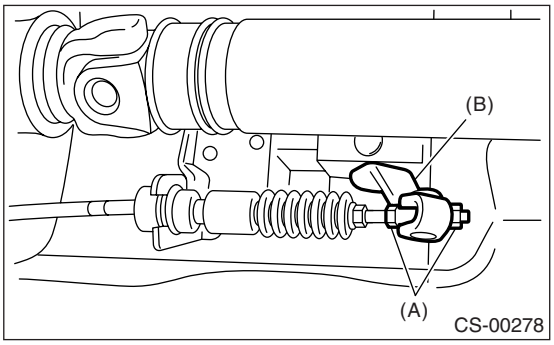

(A) Adjusting nut
(B) Arm ASSY

11) Raise the pawl of clamp to remove the cable from bracket.

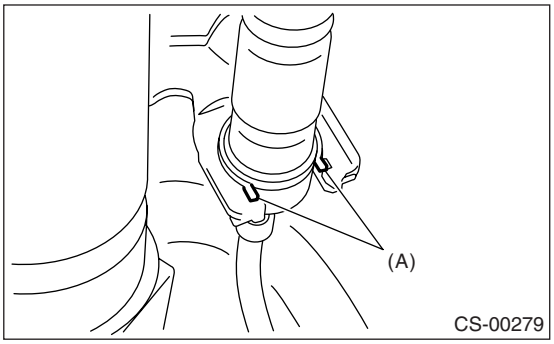

(A) Pawl

12) Remove the select cable from plate assembly.

B: INSTALLATION

1) Install the select cable to plate assembly.

Tightening torque:
18 N·m (1.8 kgf-m, 13.3 ft-lb)

2) Install the select cable to range select lever.
3) Install the plate assembly to transmission.

Tightening torque:
T: 24.5 N·m (2.5 kgf-m, 18.1 ft-lb)

• 4AT

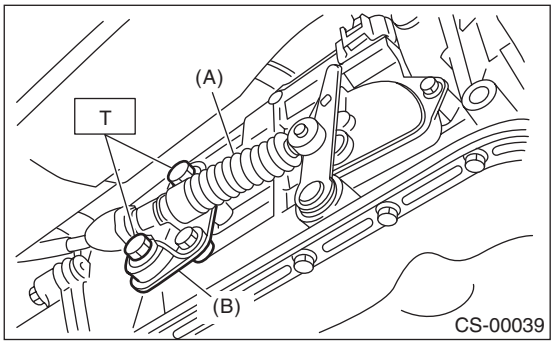

(A) Select cable
(B) Plate ASSY

• 5AT

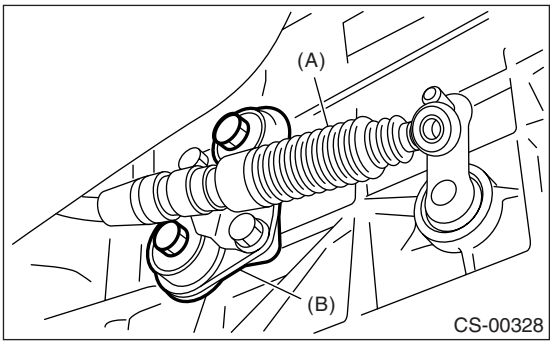

(A) Select cable
(B) Plate ASSY

4) Install the washer and snap pin to range select lever.

• 4AT

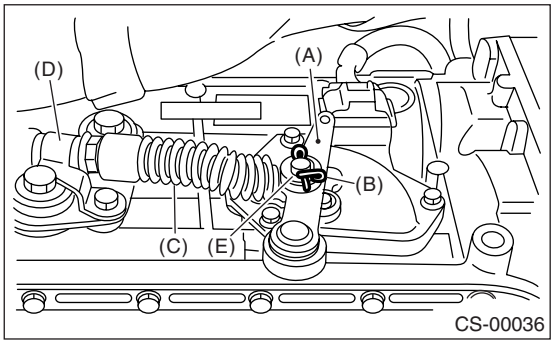

(A) Range select lever
(B) Snap pin
(C) Select cable
(D) Bracket
(E) Washer

• 5AT

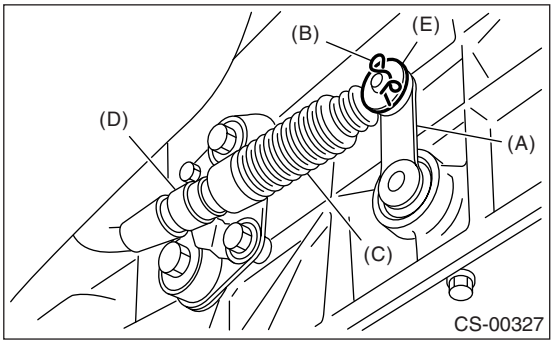

(A) Range select lever
(B) Snap pin
(C) Select cable
(D) Bracket
(E) Washer

5) Install a new clump paying attention to the installing direction.

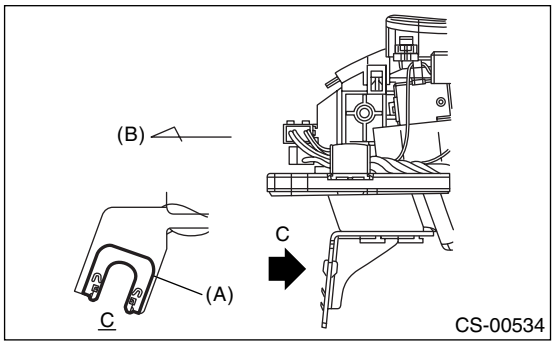

(A) Clamp
(B) Forward

6) Insert the tip of inner cable into connector hole of the select lever, and fix the cable to bracket.

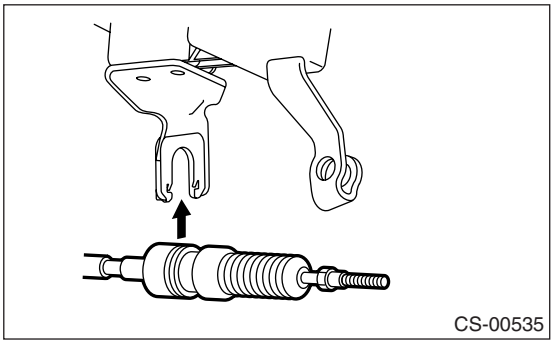

7) Shift the select lever to “N” range, and then adjust the select cable position. <Ref. to CS-26, ADJUSTMENT, Select Cable.>

8) Install the heat shield cover.

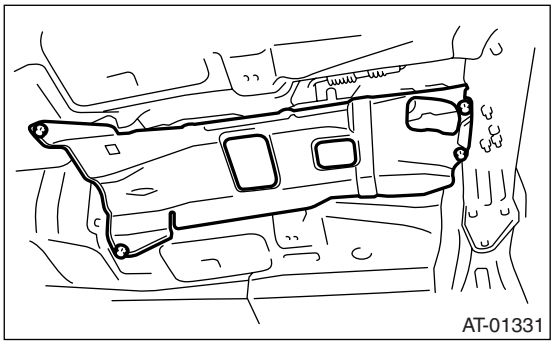

9) Install the front, center and rear exhaust pipes and muffler. (SOHC and DOHC non-turbo model)

• SOHC model

<Ref. to EX(H4SO)-5, INSTALLATION, Front Exhaust Pipe.> <Ref. to EX(H4SO)-7, INSTALLATION, Center Exhaust Pipe.> <Ref. to EX(H4SO)-8, INSTALLATION, Rear Exhaust Pipe.> <Ref. to EX(H4SO)-10, INSTALLATION, Muffler.>

• DOHC 3.0 L model

<Ref. to EX(H6DO)-5, INSTALLATION, Front Exhaust Pipe.> <Ref. to EX(H6DO)-7, INSTALLATION, Rear Exhaust Pipe.> <Ref. to EX(H6DO)-9, INSTALLATION, Muffler.>

10) Install the center and rear exhaust pipe and muffler. (DOHC turbo model)

<Ref. to EX(H4DOTC)-9, INSTALLATION, Center Exhaust Pipe.> <Ref. to EX(H4DOTC)-12, INSTALLATION, Rear Exhaust Pipe.> <Ref. to EX(H4DOTC)-13, INSTALLATION, Muffler.>

C: INSPECTION

Check the removed cable and replace or adjust if damaged, rusty or malfunctioning.

1) Check for smooth operation of the cable.
2) Check the inner cable for damage and rust.
3) Check the outer cable for damage, bends and cracks.
4) Check the boot for damage, cracks and deterioration.
5) Move the select lever from “P” to “D” range. Check the existence of feel to contact the detents in each range. If the detents cannot be felt or the position pointer is improperly aligned, adjust the cable.
6) Check if the starter motor rotates when the select lever is set to “P” range.
7) Check the back-up light illumination when the select lever is in “R” range.
8) Check the parking lock operation when the select lever is in “P” range.

D: ADJUSTMENT

1) Shift the select lever to “N” range.
2) Remove the rear exhaust pipe and muffler.

• SOHC model
<Ref. to EX(H4SO)-8, REMOVAL, Rear Exhaust Pipe.> <Ref. to EX(H4SO)-10, REMOVAL, Muffler.>
• DOHC turbo model
<Ref. to EX(H4DOTC)-12, REMOVAL, Rear Exhaust Pipe.> <Ref. to EX(H4DOTC)-13, REMOVAL, Muffler.>
• DOHC 3.0 L model
<Ref. to EX(H6DO)-7, REMOVAL, Rear Exhaust Pipe.> <Ref. to EX(H6DO)-9, REMOVAL, Muffler.>
3) Remove the heat shield cover.

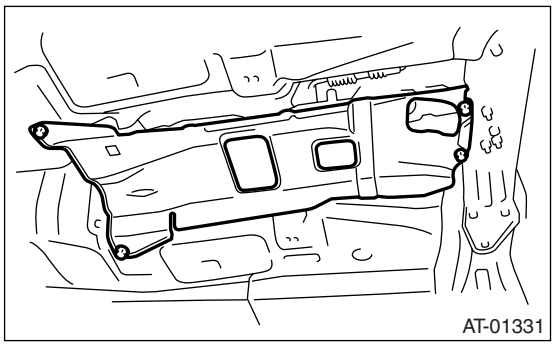

4) Loosen the adjusting nuts on both sides.

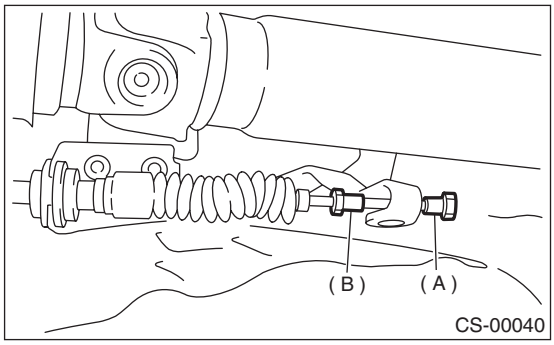

(A) Adjusting nut A
(B) Adjusting nut B

5) Turn the adjusting nut B until it lightly touches the connector.

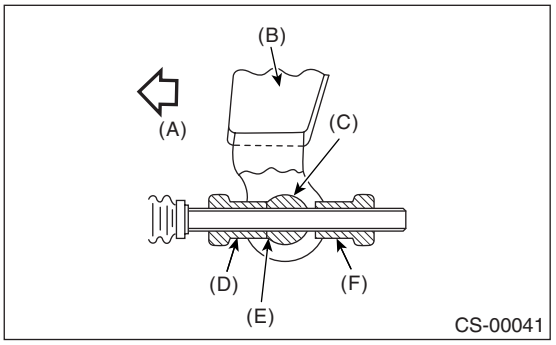

(A) Forward side
(B) Select lever
(C) Connector
(D) Adjusting nut B
(E) Contact point
(F) Adjusting nut A

6) Set a spanner wrench to adjusting nut B so that it does not rotate, and then tighten the adjusting nut A.

Tightening torque:
7.5 N·m (0.76 kgf-m, 5.5 ft-lb)

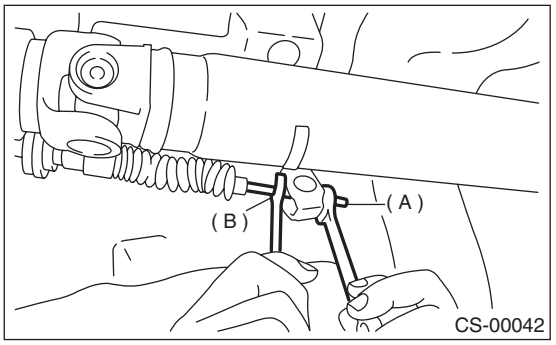

(A) Adjusting nut A
(B) Adjusting nut B

7) After the completion of adjustment, confirm that the select lever operates normally at all ranges.
8) Install in the reverse order of removal.

5. AT Steering Shift Switch

A: REMOVAL

1) Disconnect the ground cable from battery.
2) Set the tire to the straight-ahead position.
3) Remove the airbag module. <Ref. to AB-16, REMOVAL, Driver's Airbag Module.>

WARNING:
With the airbag module equipped, always refer to "Airbag System" when performing the airbag module repair service. <Ref. to AB-16, INSPECTION, Driver's Airbag Module.>

4) Remove the steering wheel. <Ref. to PS-14, REMOVAL, Steering Wheel.>
5) Remove the cover from steering wheel.
6) Remove each one of AT steering shift switch mounting screw from the LH and RH side.

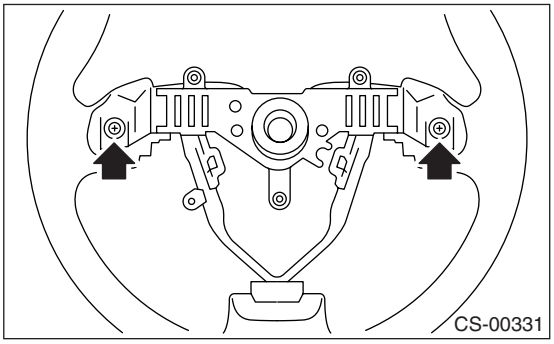

7) Remove the steering shift switch.

B: INSTALLATION

1) Clean all parts before installation.
2) Install in the reverse order of removal.
3) After completion of installation, set the select lever to SPORT shift side and confirm that manual mode "1" illuminates on the combination meter.
4) Operate the steering shift switch and confirm that the "2" illuminates on combination meter.

C: INSPECTION

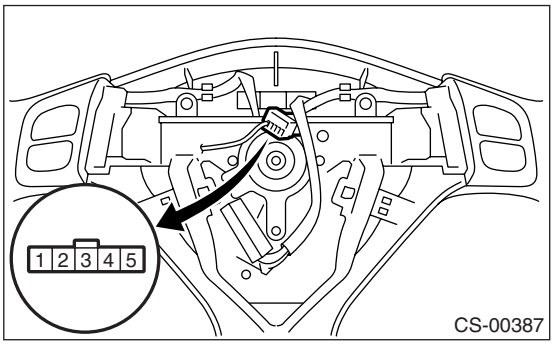

Step		Check	Yes	No
1	**SHIFT-UP SWITCH CONTINUITY CHECK.** 1) Press the shift-up switch. 2) Measure the resistance between shift switch connector terminals. ***Terminals*** ***No. 4 — No. 3:***	Is the resistance less than 10 Ω?	Go to step **2.**	Replace the steering shift switch.
2	**SHIFT-DOWN SWITCH CONTINUITY CHECK.** 1) Press the shift-down switch. 2) Measure the resistance between shift switch connector terminals. ***Terminals*** ***No. 3 — No. 2:***	Is the resistance less than 10 Ω?	Go to step **3.**	Replace the steering shift switch.
3	**CHECK SHIFT SWITCH INSULATION.** 1) Not to operate the shift switch. 2) Measure the resistance between shift switch connector terminals. ***Terminals*** ***No. 3 — No. 2:*** ***No. 3 — No. 4:***	Is the resistance 1 MΩ?	Steering shift switch is normal.	Replace the steering shift switch.

6. AT Shift Lock Solenoid and “P” Range Switch

A: REMOVAL

1) Remove the console box. <Ref. to EI-53, REMOVAL, Console Box.>
2) Remove the connector.
3) Remove the indicator bulb.

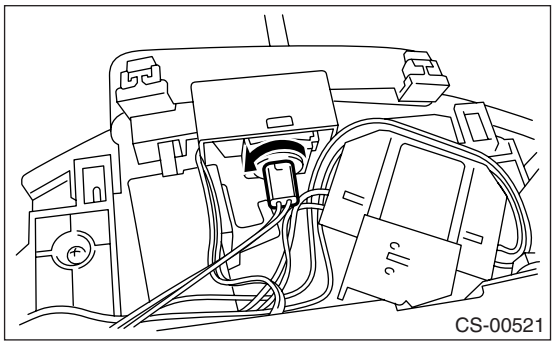
CS-00521

4) Remove the grip.
5) Remove the indicator cover.

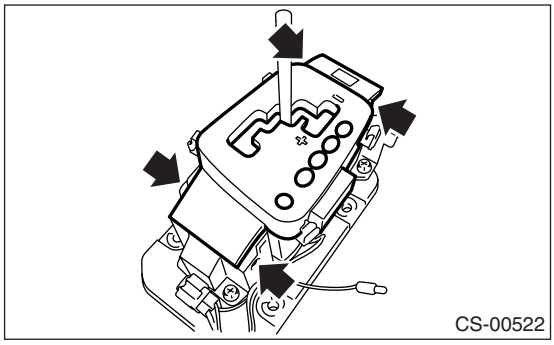
CS-00522

6) Remove the connector from guide plate upper.

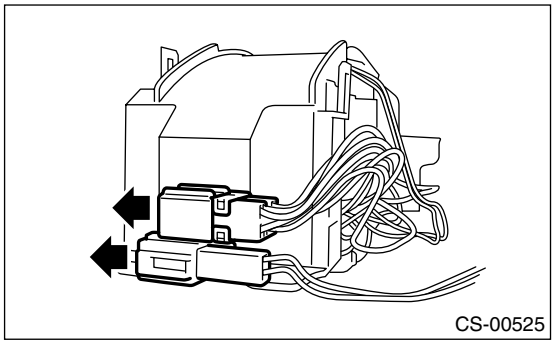
CS-00525

7) Shift the select lever to “N” range, and remove the detent spring.

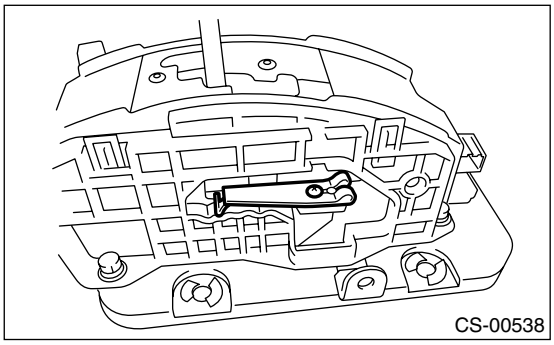
CS-00538

8) Remove the switch assembly and shift lock solenoid assembly.

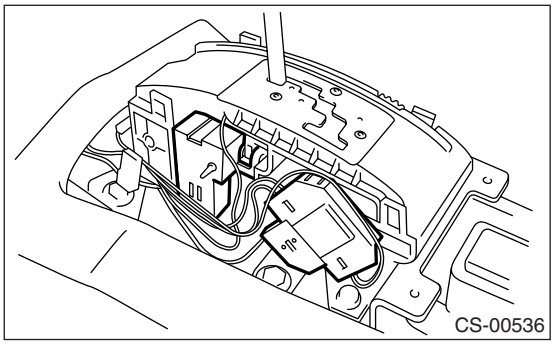
CS-00536

9) Remove the bolt to remove guide plate upper (A).

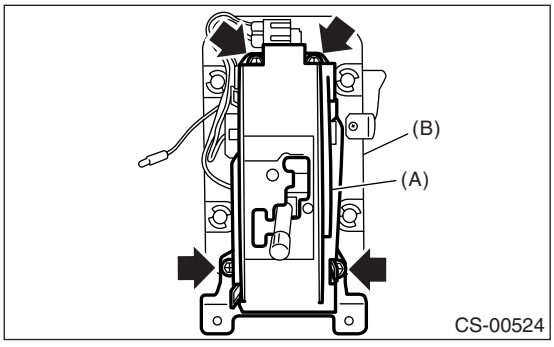

CS-00524

10) Raise the claw of connector.

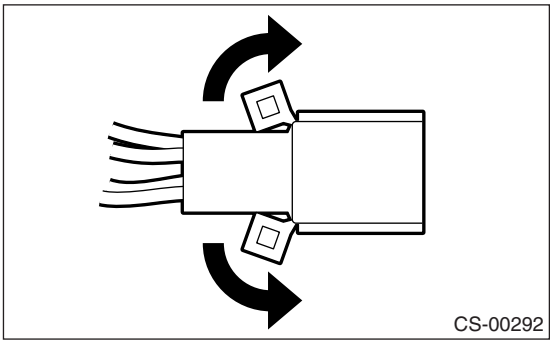
CS-00292

11) Disconnect the terminal of “P” range switch from connector, using a flat-tip screwdriver with thin tip.

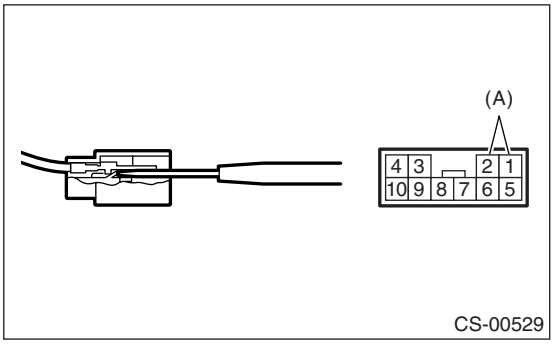

(A) “P” range switch

B: INSTALLATION

Install in the reverse order of removal.

NOTE:
• Refer to “COMPONENT” for each tightening torque. <Ref. to CS-2, AT SELECT LEVER, COMPONENT, General Description.>
• Connect the “P” range switch terminal to connector.

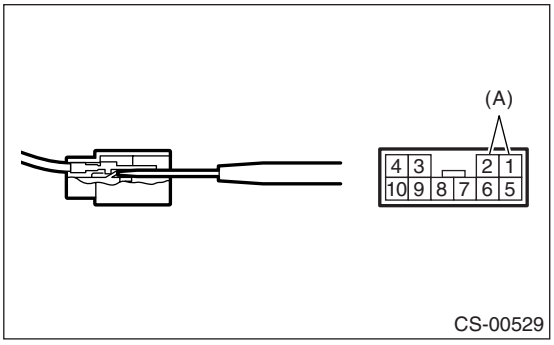

(A) “P” range switch

C: INSPECTION

	Step	Check	Yes	No
1	**CHECK SHIFT LOCK SOLENOID.** Measure the resistance of shift lock solenoid connector terminals. ***Terminals*** ***No. 4 — No. 3:***	Is the resistance 12 — 18 Ω?	Go to step **2.**	Replace the shift lock solenoid.
2	**CHECK SHIFT LOCK SOLENOID.** Connect the battery to shift lock solenoid connector terminal, and then operate the solenoid. ***Terminals*** ***No. 3 (+) — No. 4 (–):***	Does the shift lock solenoid operate normally?	Go to step **3.**	Replace the shift lock solenoid.
3	**CHECK “P” RANGE SWITCH.** 1) Set the select lever to “P” range. 2) Measure the resistance between “P” range switch connector terminals. ***Terminals*** ***No. 1 — No. 2:***	Is the resistance less than 1 Ω?	Go to step **4.**	Replace the “P” range switch.
4	**CHECK “P” RANGE SWITCH.** 1) Set the select lever to other than “P” range. 2) Measure the resistance between “P” range switch connector terminals. ***Terminals*** ***No. 1 — No. 2:***	Is the resistance more than 1 MΩ?	Normal operation	Replace the “P” range switch.

7. Body Integrated Unit

A: NOTE

Refer to “Body Integrated Unit” for removal and installation procedure. <Ref. to SL-54, Body Integrated Unit.>

8. MT Gear Shift Lever

A: REMOVAL

1) Set the vehicle on a lift.
2) Disconnect the ground cable from battery.
3) Remove the gear shift knob.
4) Remove the console box. <Ref. to EI-53, REMOVAL, Console Box.>
5) Remove the clamp.

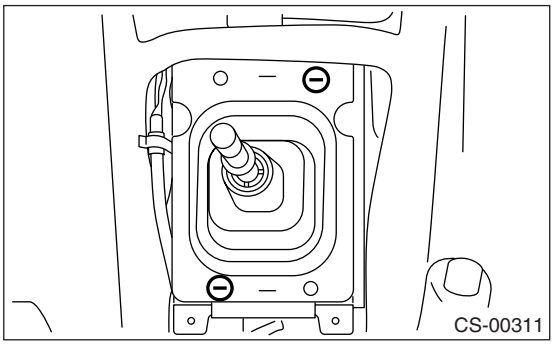

6) Remove the boot and insulator assembly.

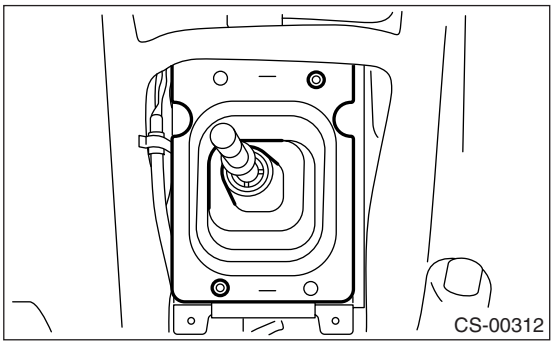

7) Remove the harness clamp from plate.

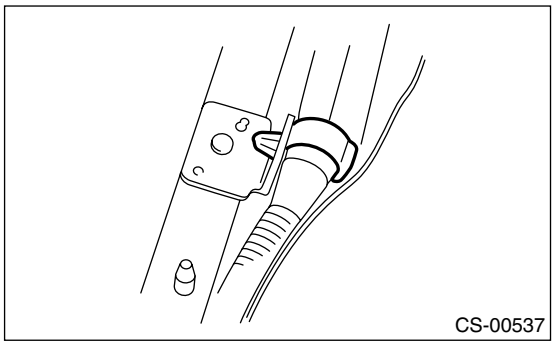

8) Remove the plate assembly from vehicle body.

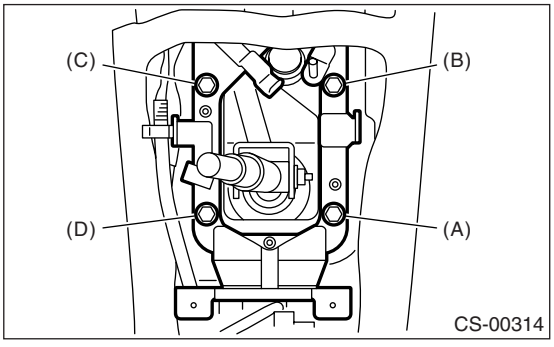

9) Lift-up the vehicle.
10) Remove the rear exhaust pipe and muffler.
- SOHC model

<Ref. to EX(H4SO)-8, REMOVAL, Rear Exhaust Pipe.> <Ref. to EX(H4SO)-10, REMOVAL, Muffler.>
- DOHC turbo model

<Ref. to EX(H4DOTC)-12, REMOVAL, Rear Exhaust Pipe.> <Ref. to EX(H4DOTC)-11, REMOVAL, Joint Pipe.>
- DOHC 3.0 L model

<Ref. to EX(H6DO)-7, REMOVAL, Rear Exhaust Pipe.> <Ref. to EX(H6DO)-9, REMOVAL, Muffler.>

11) Remove the heat shield cover.

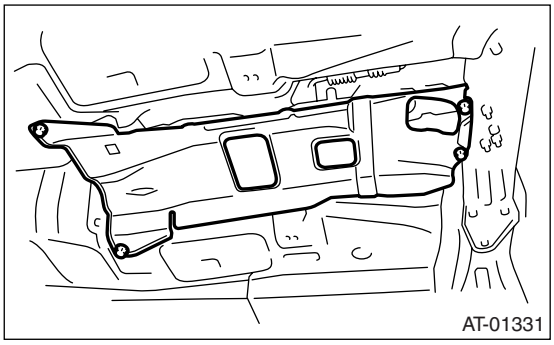

12) Remove the stay from transmission bracket.

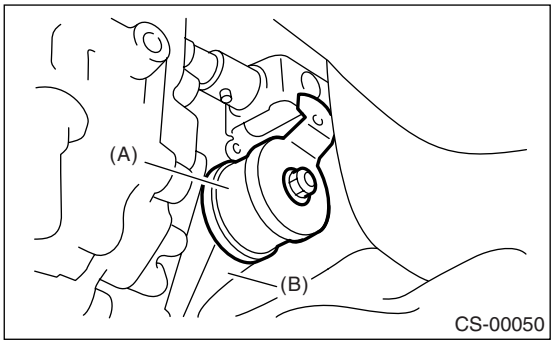

(A) Stay
(B) Transmission bracket

13) Remove the rod from joint.

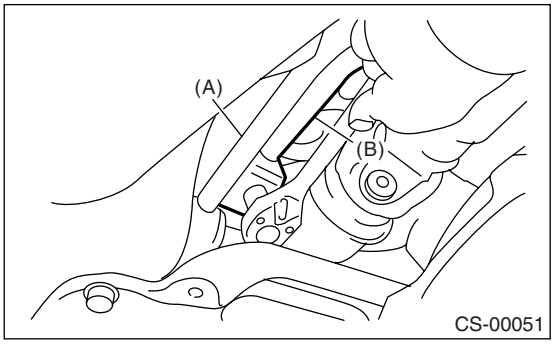

(A) Stay
(B) Rod

14) Remove the cushion rubber from vehicle body.

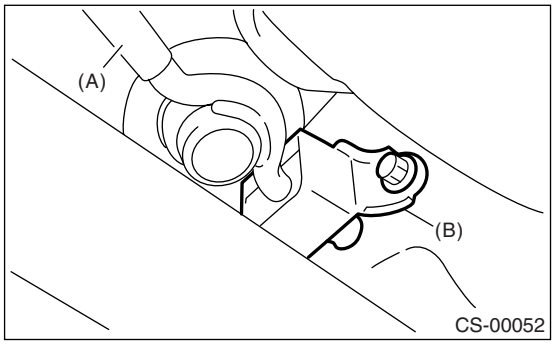

(A) Stay
(B) Cushion rubber

15) Extract the spring pin and remove the joint.

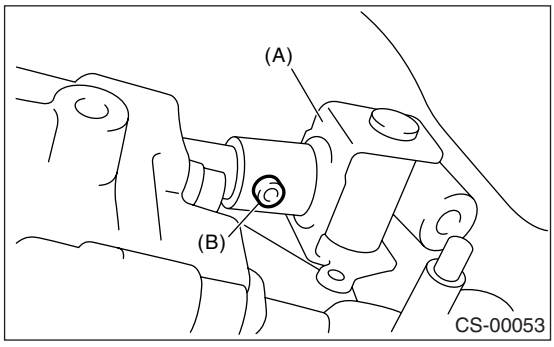

(A) Joint
(B) Spring pin

16) Lower the vehicle.
17) Remove the gear shift lever.

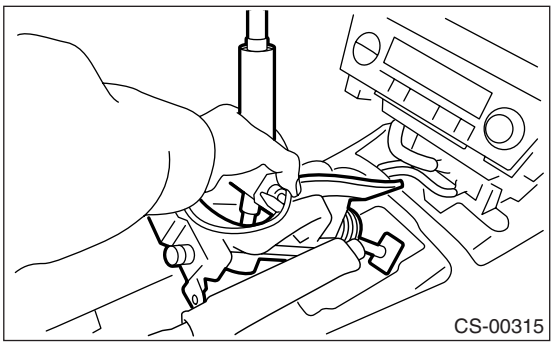

B: INSTALLATION

1) Install the joint to transmission and secure with spring pin.
2) Insert the gear shift lever from the room side.

NOTE:
Insert the rod and the stay, and then temporarily set them onto transmission mount.

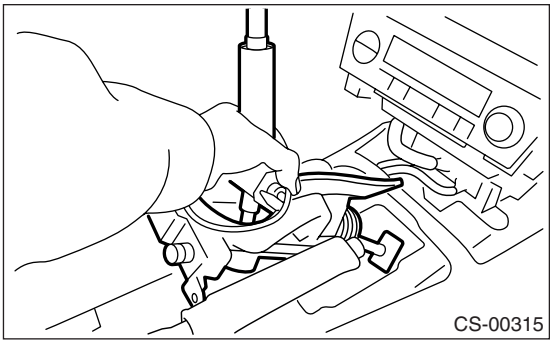

3) Lift-up the vehicle.
4) Mount the cushion rubber on the vehicle body.

Tightening torque:
18 N·m (1.8 kgf-m, 13.3 ft-lb)

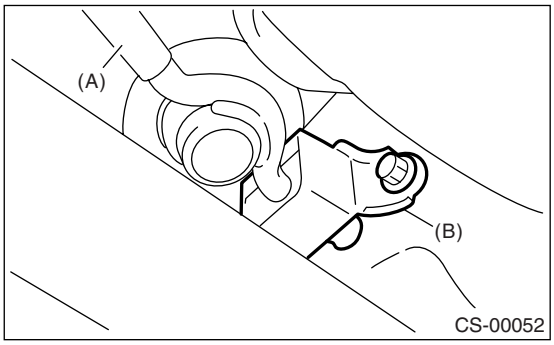

(A) Stay
(B) Cushion rubber

5) Using new self-locking nuts, connect the rod to the joint.

Tightening torque:
18 N·m (1.8 kgf-m, 13.3 ft-lb)

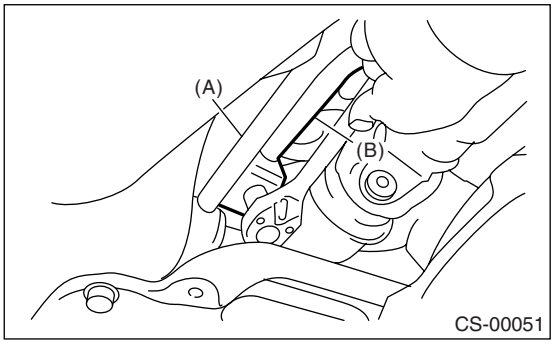

(A) Stay
(B) Rod

6) Using new self-locking nuts, connect the stay to transmission bracket.

Tightening torque:
18 N·m (1.8 kgf-m, 13.3 ft-lb)

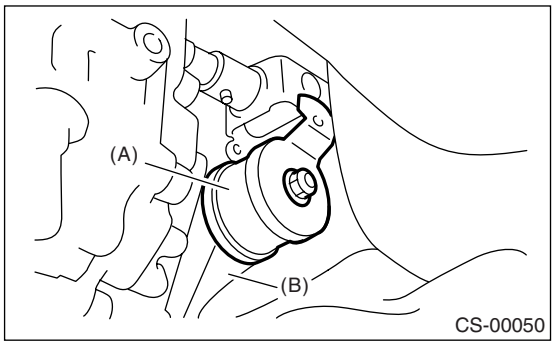

(A) Stay
(B) Transmission bracket

7) Install the heat shield cover.

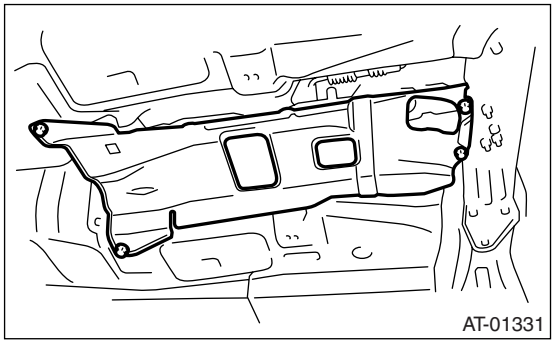

8) Install the rear exhaust pipe and muffler.
• SOHC model
<Ref. to EX(H4SO)-8, INSTALLATION, Rear Exhaust Pipe.> <Ref. to EX(H4SO)-10, INSTALLATION, Muffler.>
• DOHC turbo model
<Ref. to EX(H4DOTC)-12, INSTALLATION, Rear Exhaust Pipe.> <Ref. to EX(H4DOTC)-13, INSTALLATION, Muffler.>
• DOHC 3.0 L model
<Ref. to EX(H6DO)-7, INSTALLATION, Rear Exhaust Pipe.> <Ref. to EX(H6DO)-9, INSTALLATION, Muffler.>
9) Install the plate assembly to vehicle body.

Tightening torque:
18 N·m (1.8 kgf-m, 13.3 ft-lb)
(1) Set the plate assembly to vehicle.
(2) Temporarily tighten the bolt (A).
(3) Tighten the bolt (B).
(4) Tighten the bolt (A).
(5) Tighten the bolts (C) and (D).

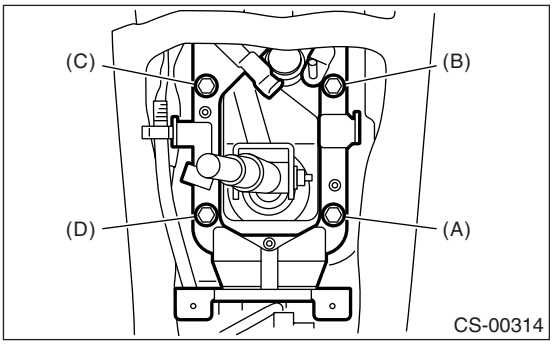

10) Install the harness clamp to plate.
11) Install the boot and insulator assembly, and secure them with clamp.

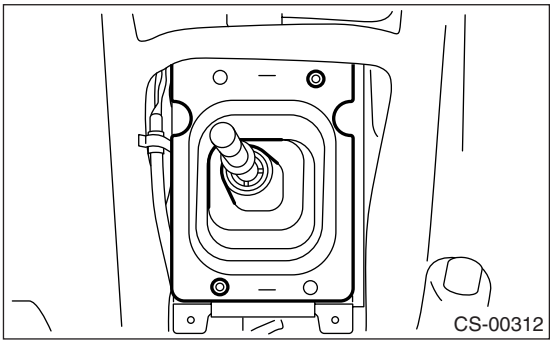

12) Install the console box. <Ref. to EI-53, INSTALLATION, Console Box.>

C: DISASSEMBLY

1) Remove the lock wires.

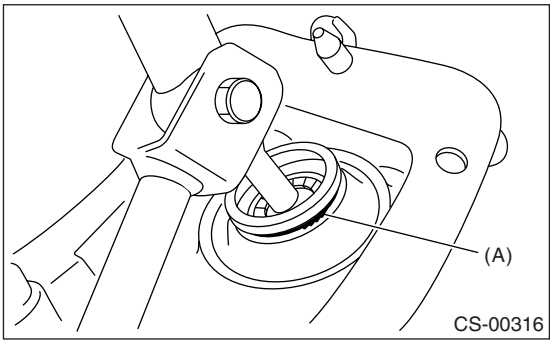

(A) Lock wire

2) Remove the rod from lever.

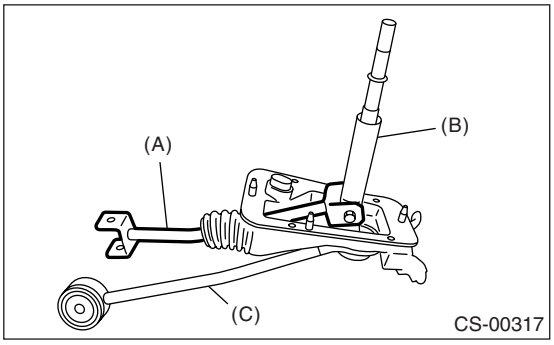

(A) Rod
(B) Lever
(C) Stay

3) Separate the rod and inner boot.
4) Remove the snap ring from the stay.

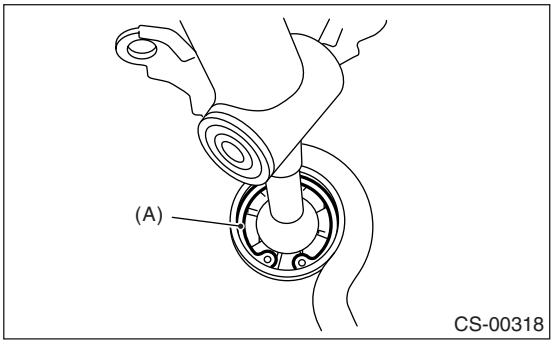

(A) Snap ring

5) Separate the gear shift lever and the stay.

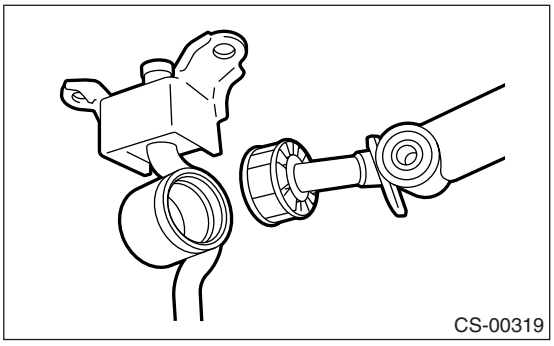

6) Remove the boot, bushing and snap ring from gear shift lever.

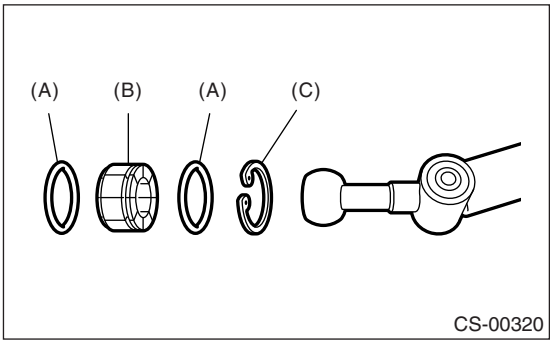

(A) O-ring
(B) Bushing
(C) Snap ring

7) Remove the spring pin, and then remove the bushing and snap ring.

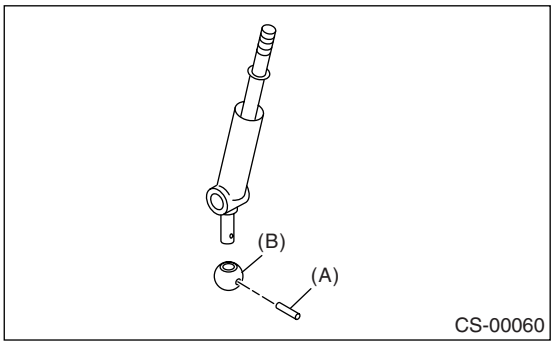

(A) Spring pin
(B) Bushing

8) Remove the boss from the joint.

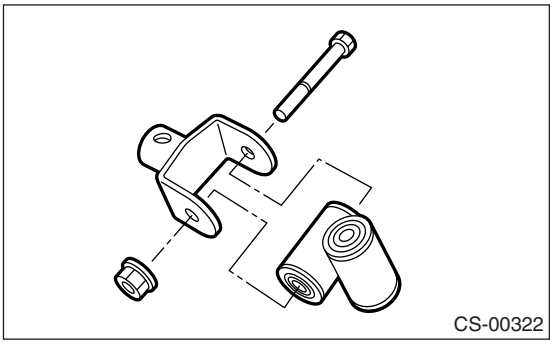

9) Remove the bushing and spacer from boss.

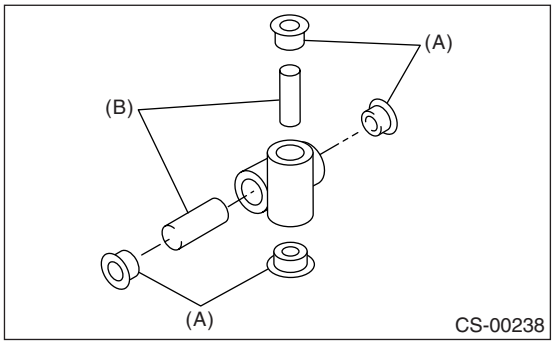

(A) Bushing
(B) Spacer

10) Remove the bushing and cushion rubber from the stay.

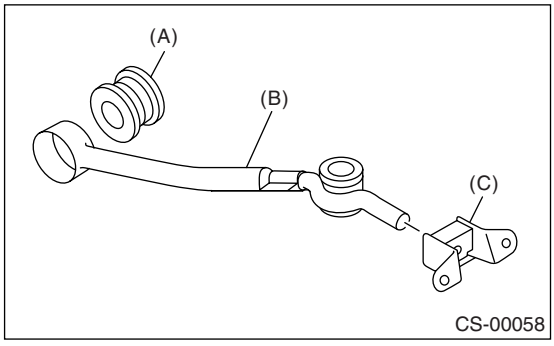

(A) Bushing
(B) Stay
(C) Cushion rubber

D: ASSEMBLY

NOTE:
• Clean all the parts before assembly.
• Apply grease [SUNLIGHT 2 (Part No. 003602010) or equivalent] to each part.

1) Mount the bushing and cushion rubber on the stay.

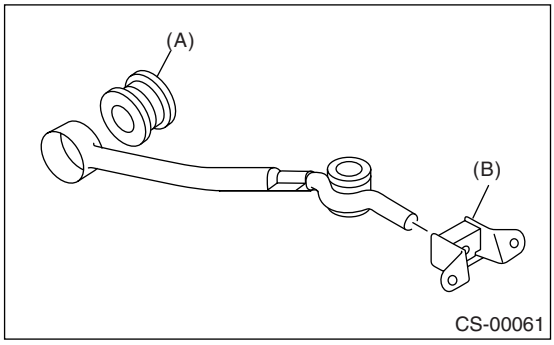

(A) Bushing
(B) Cushion rubber

2) Install the bushing and spacer to boss.

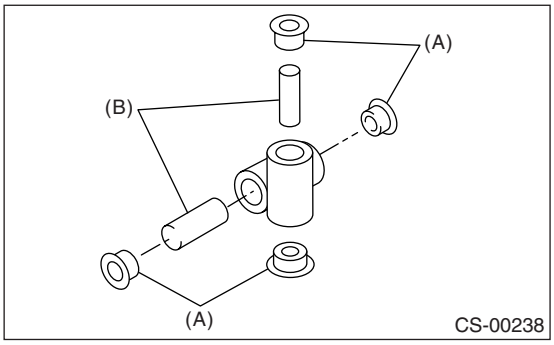

(A) Bushing
(B) Spacer

3) Using new self-locking nuts, install the boss to the joint.

Tightening torque:
18 N·m (1.8 kgf-m, 13.3 ft-lb)

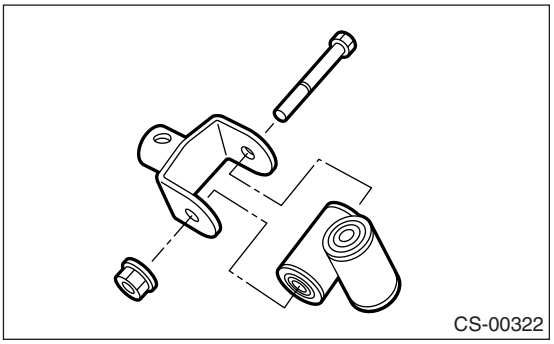

4) Install the snap ring to gear shift lever and install the bushing.

NOTE:
Apply grease to the bushing.

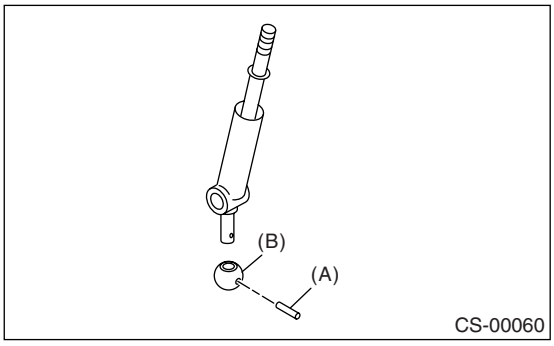

(A) Spring pin
(B) Bushing

5) Apply grease to the bushing and O-ring, and then install to the gear shift lever.

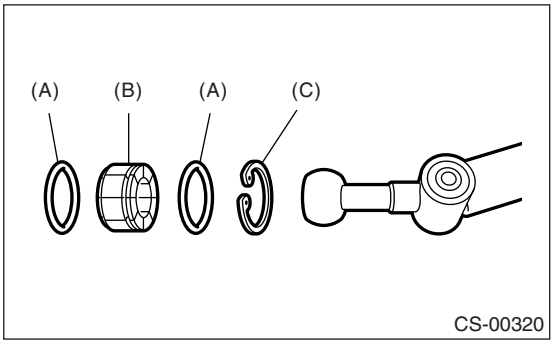

(A) O-ring
(B) Bushing
(C) Snap ring

6) Apply sufficient grease into boss, and then install the gear shift lever to the stay.

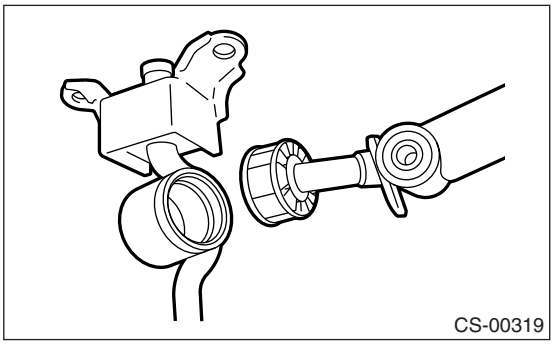

7) Install the washer and snap ring.

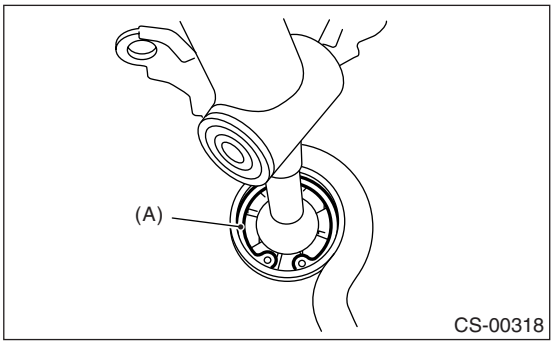

(A) Snap ring

8) Insert the gear shift lever and rod into boot hole.
9) Install the rod.

Tightening torque:
12 N·m (1.2 kgf-m, 8.9 ft-lb)

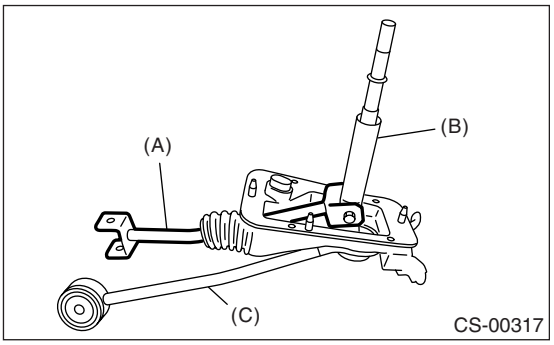

(A) Rod
(B) Lever
(C) Stay

10) Install a new lock wire.

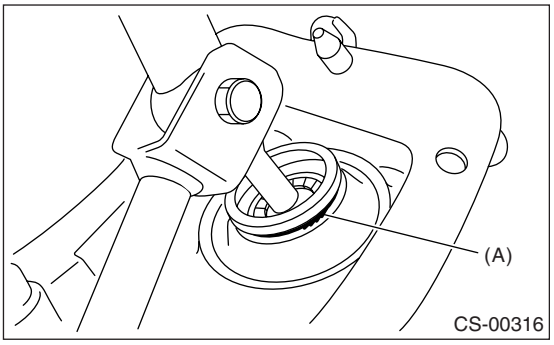

(A) Lock wire

NOTE:
• Install the lock wire to the stay groove.

• Bend the extra wire to same direction of lock wire winding.

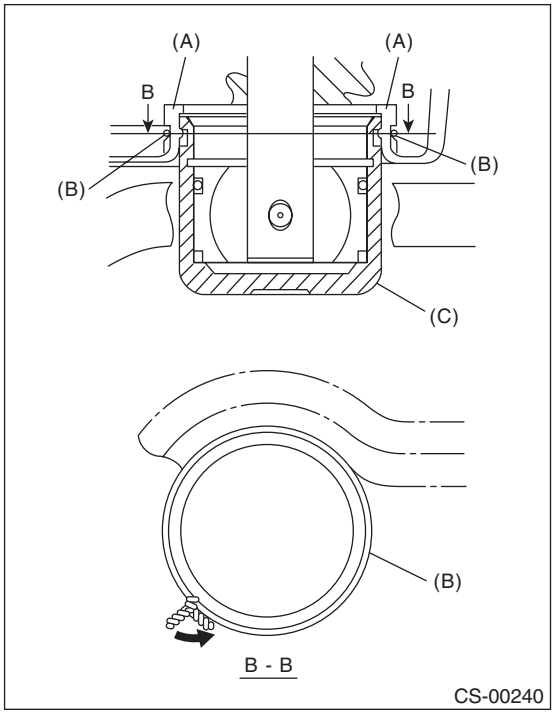

(A) Inner boot
(B) Lock wire
(C) Stay

E: INSPECTION

1) Check the parts (bushing, cushion rubber, spacer, boot, stay and rod, etc.) for deformation, damage and wear. If necessary, repair or replace faulty parts. Compare the removed parts with new ones to judge if there are damages or not.

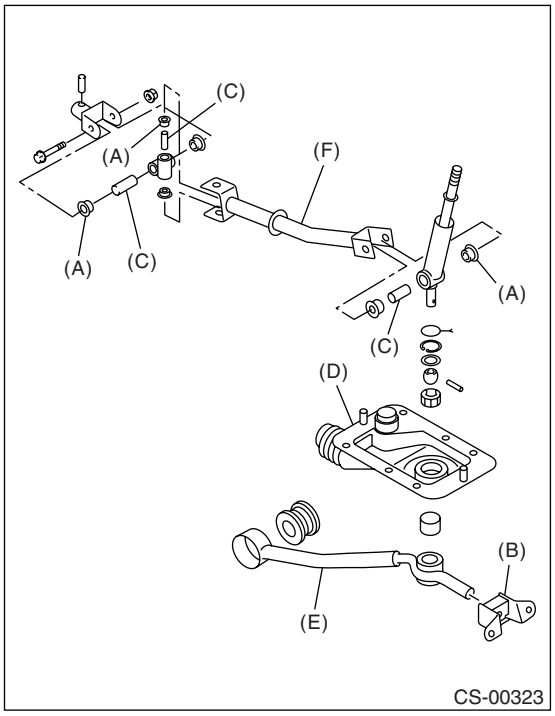

(A) Bushing
(B) Cushion rubber
(C) Spacer
(D) Boot
(E) Stay
(F) Rod

2) Check the swing torque of rod linked with the gear shift lever.
If the torque exceeds the specifications, replace the bushing or retighten nuts.

Swing torque:
Less than 3.7 N (0.38 kgf, 0.84 lb)

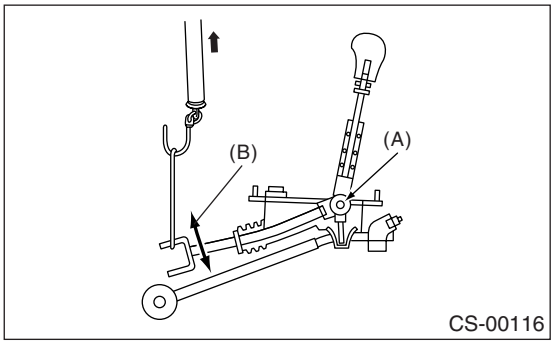

(A) Pivot
(B) Swing torque

9. General Diagnostic Table

A: INSPECTION

Symptom	Possible cause	Corrective action
Select lever	Starter does not run.	Adjust the select cable and inhibitor switch, or inspect circuit.
	Back-up light does not illuminate.	Adjust the select cable and inhibitor switch, or inspect circuit.
	AT shift lock control system does not operate normally.	Adjust the select cable and inhibitor switch, or inspect circuit.
	Manual mode is not engaged.	Adjust the mode switch and select lever, or inspect circuit.
	Up-shift is not engaged at manual mode.	Check the shift-up switch and circuit.
	Down-shift is not engaged at manual mode.	Check the shift-down switch and circuit.

AUTOMATIC TRANSMISSION

4AT

		Page
1.	General Description	2
2.	Automatic Transmission Fluid	28
3.	Differential Gear Oil	30
4.	Road Test	31
5.	Stall Test	32
6.	Time Lag Test	34
7.	Line Pressure Test	35
8.	Transfer Clutch Pressure Test	36
9.	Automatic Transmission Assembly	37
10.	Transmission Mounting System	44
11.	Extension Case Oil Seal	46
12.	Differential Side Retainer Oil Seal	47
13.	Inhibitor Switch	48
14.	Front Vehicle Speed Sensor	51
15.	Rear Vehicle Speed Sensor	54
16.	Torque Converter Turbine Speed Sensor	55
17.	Control Valve Strainer	56
18.	Control Valve Body	58
19.	Air Bleeding of Control Valve	61
20.	ATF Filter	62
21.	Transmission Control Module (TCM)	64
22.	ATF Cooler Pipe and Hose	65
23.	Air Breather Hose	70
24.	Oil Charge Pipe	71
25.	Torque Converter Assembly	72
26.	Extension Case	73
27.	Transfer Clutch	75
28.	Reduction Driven Gear	80
29.	Reduction Drive Gear	82
30.	Parking Pawl	84
31.	Converter Case	85
32.	Oil Pump Housing	87
33.	Drive Pinion Shaft Assembly	92
34.	Front Differential Assembly	97
35.	AT Main Case	103
36.	Transmission Control Device	124

1. General Description

A: SPECIFICATION

1. TORQUE CONVERTER

Type	Symmetric, 3 element, single stage, 2 phase torque converter
Stall torque ratio	2.1 — 2.3
Nominal diameter mm (in)	249 (9.69)
Stall speed (at sea level)	2,300 — 2,700 rpm
One-way clutch	Sprague type one-way clutch

2. OIL PUMP

Type	Pracoid constant-displacement pump	
Driving method	Driven by engine	
Number of teeth	Inner rotor	9
	Outer rotor	10

3. TRANSMISSION CONTROL ELEMENT

Type	4-forward, 1-reverse, double-row planetary gears
Multi-plate clutch	3 sets
Multi-plate brake	2 sets
One-way clutch (sprague type)	1 sets

4. TRANSMISSION GEAR RATIO

1st	2.785
2nd	1.545
3rd	1.000
4th	0.694
Rev	2.272

5. PLANETARY GEAR AND PLATE

Front sun gear number of teeth	33
Front pinion number of teeth	21
Front internal gear number of teeth	75
Rear sun gear number of teeth	42
Rear pinion number of teeth	17
Rear internal gear number of teeth	75
Drive plate number of high clutch	4
Drive plate number of low clutch	5
Drive plate number of reverse clutch	2
Drive plate number of 2-4 brake	3
Drive plate number of low & reverse brake	5

6. SELECTOR POSITION

P (Park)	Transmission in neutral, output member immovable, and engine start possible
R (Reverse)	Transmission in reverse for backing
N (Neutral)	Transmission in neutral and engine start possible
D (Drive)	4-forward automatic gear change 1st $\leftarrow_{\rightarrow}$ 2nd $\leftarrow_{\rightarrow}$ 3rd $\leftarrow_{\rightarrow}$ 4th
SPORT mode	4-forward automatic gear change 1st $\leftarrow_{\rightarrow}$ 2nd $\leftarrow_{\rightarrow}$ 3rd $\leftarrow_{\rightarrow}$ 4th
Manual mode (+)	4-forward manual gear change (shift up) 1st → 2nd → 3rd → 4th
Manual mode (–)	4-forward manual gear change (shift down) 1st ←2nd ← 3rd ← 4th
Control method	Wire cable

7. HYDRAULIC CONTROL AND LUBRICATION

Type	Electronic hydraulic control [Four forward speed changes by electrical signals of vehicle speed and accelerator (throttle) opening]
Fluid	SUBARU ATF, IDEMITSU “Apolloil ATF HP”, Castrol “Transmax J” or DEXRON III
Fluid capacity ℓ (US qt, Imp qt)	9.3 — 9.6 (9.8 — 10.1, 8.2 — 8.4)
Lubrication system	Forced feed lubrication with oil pump
Oil	Automatic transmission fluid (above mentioned)

8. COOLING AND HARNESS

Cooling System	Liquid-cooled cooler
Inhibitor switch	12 poles
Transmission harness	20 poles

9. TRANSFER

Transfer type	Multi-plate transfer (MPT)
Drive and driven plate number of transfer clutch	5
Control method	Electronic hydraulic type
Lubricant	The same Automatic transmission fluid used in automatic transmission
Reduction gear ratio	1.000 (53/53)

10.FINAL REDUCTION

Model	Except for OUTBACK	OUTBACK
Front final reduction gear ratio	4.111 (37/9)	4.444 (40/9)

11.RECOMMENDED GEAR OIL

Lubrication oil	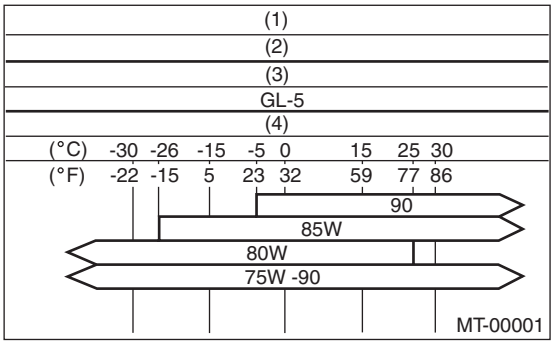 (1) Item (2) Front differential gear oil (3) API standard (4) SAE viscosity No. and applicable temperature
Front differential oil capacity ℓ (US qt, Imp qt)	1.1 — 1.3 (1.2 — 1.4, 1.0 — 1.1)

B: COMPONENT

1. TORQUE CONVERTER AND CASE

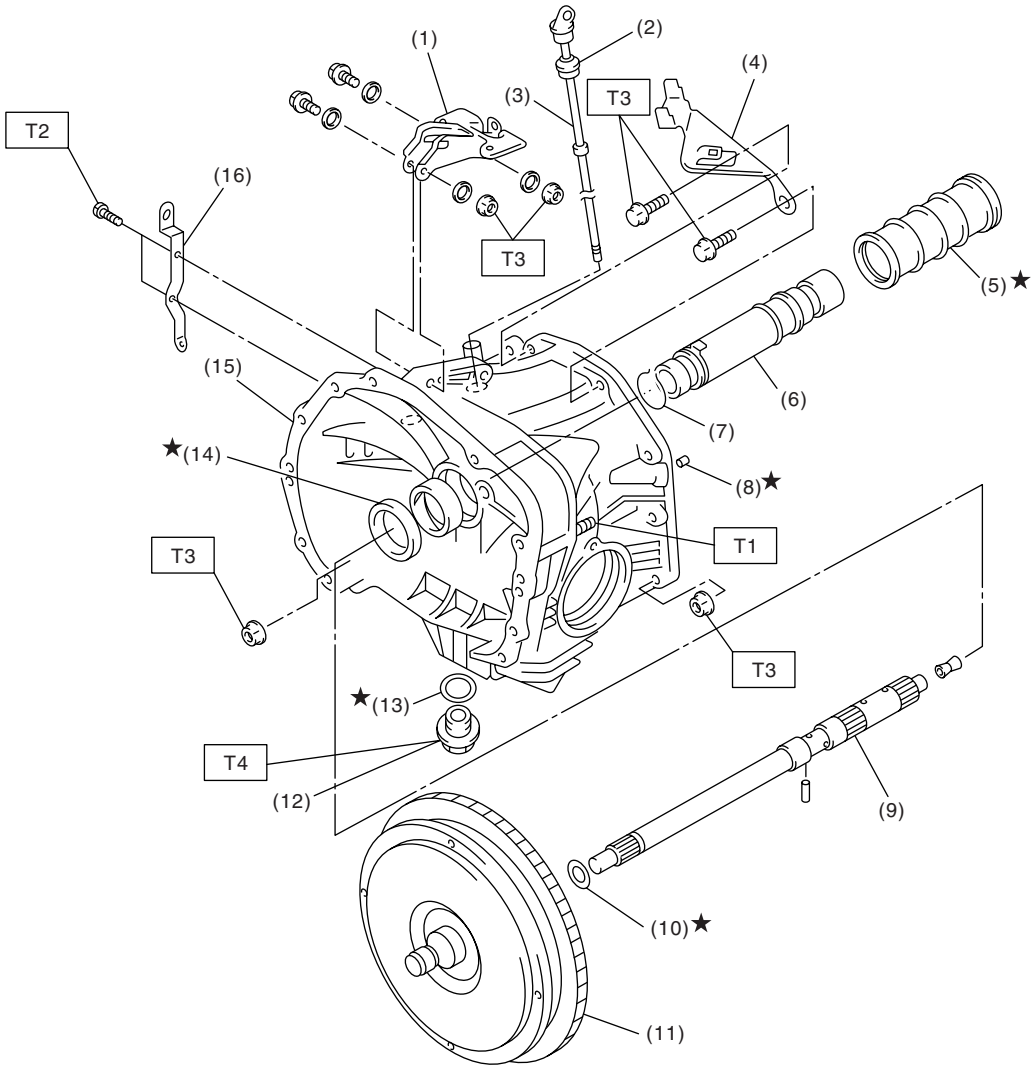

(1)	Pitching stopper bracket	(9)	Input shaft
(2)	O-ring	(10)	O-ring
(3)	Differential oil level gauge	(11)	Torque converter ASSY
(4)	Stay	(12)	Drain plug
(5)	Seal pipe	(13)	Gasket
(6)	Oil pump shaft	(14)	Oil seal
(7)	Clip	(15)	Converter case
(8)	Oil drain pipe	(16)	Harness stay

Tightening torque: N·m (kgf-m, ft-lb)

T1: 18 (1.8, 13.3)
T2: 23 (2.3, 16.7)
T3: 33 (3.4, 24.3)
T4: 41 (4.2, 30.4)
T5: 44 (4.5, 32.5) (Aluminum gasket)
70 (7.1, 51.6) (Copper gasket)

2. OIL PUMP

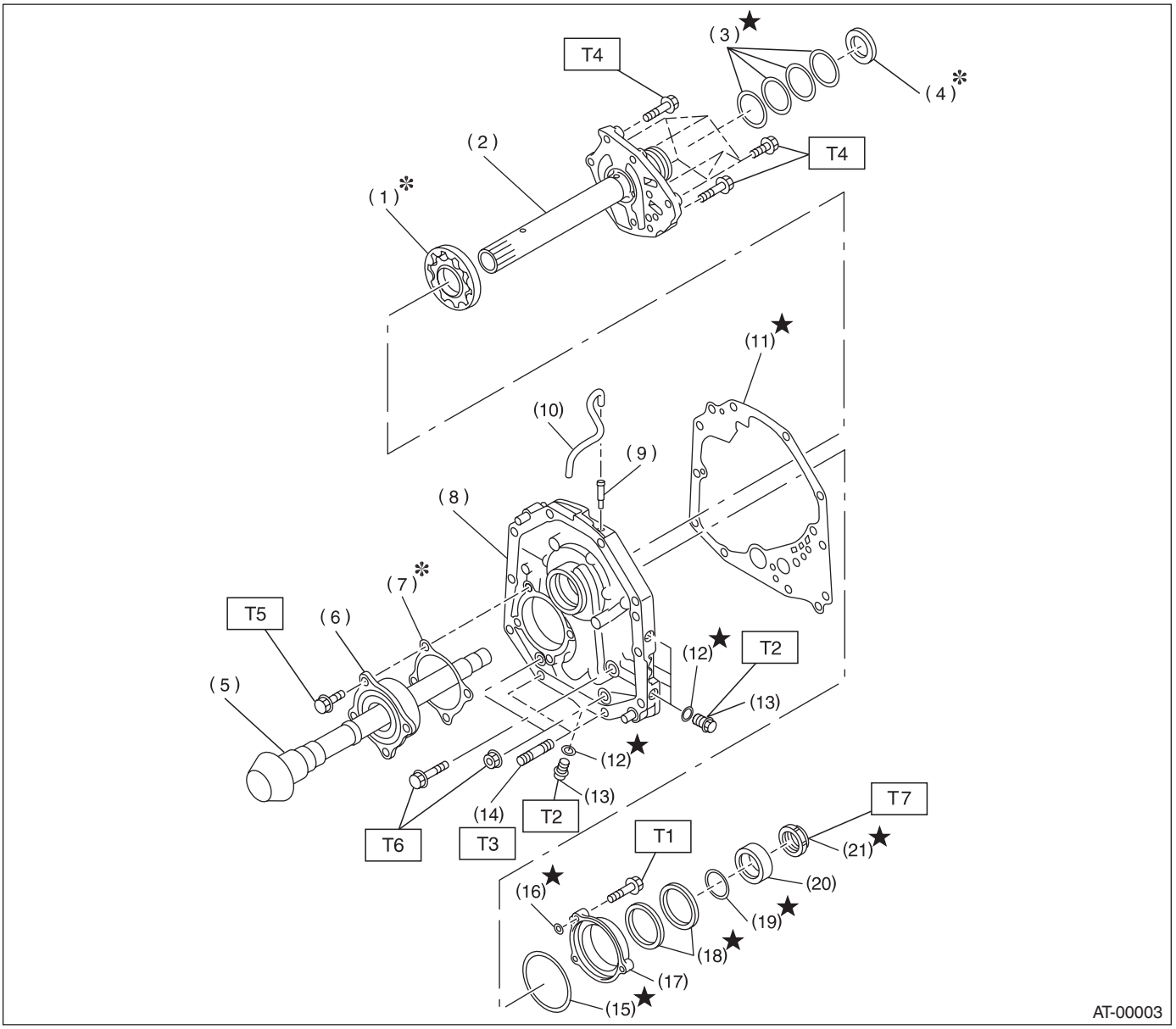

(1)	Oil pump rotor	(11)	Gasket	(21)	Lock nut
(2)	Oil pump cover	(12)	O-ring		
(3)	Seal ring	(13)	Test plug	***Tightening torque: N·m (kgf-m, ft-lb)***	
(4)	Thrust needle bearing	(14)	Stud bolt	***T1:***	***7 (0.7, 5.1)***
(5)	Drive pinion shaft	(15)	O-ring	***T2:***	***13 (1.3, 9.4)***
(6)	Roller bearing	(16)	O-ring	***T3:***	***18 (1.8, 13.3)***
(7)	Shim	(17)	Oil seal retainer	***T4:***	***25 (2.5, 18)***
(8)	Oil pump housing	(18)	Oil seal	***T5:***	***40 (4.1, 30)***
(9)	Nipple	(19)	O-ring	***T6:***	***42 (4.3, 31)***
(10)	Air breather hose	(20)	Drive pinion collar	***T7:***	***116 (11.8, 85)***

3. TRANSMISSION CASE AND CONTROL DEVICE

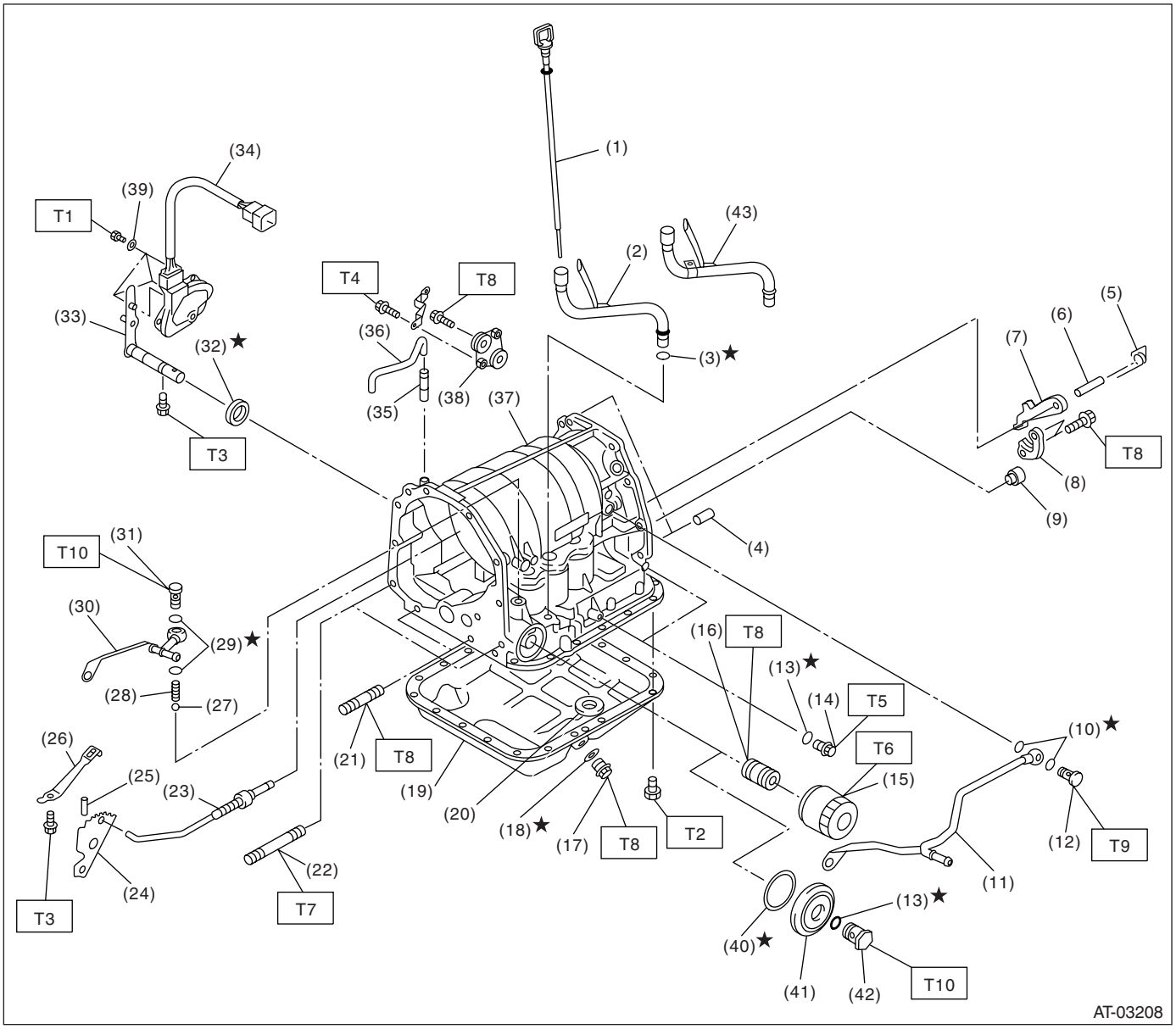

(1) ATF level gauge
(2) Oil charge pipe (Except for U5 model)
(3) O-ring
(4) Straight pin
(5) Return spring
(6) Shaft
(7) Parking pawl
(8) Parking support
(9) Bushing
(10) Gasket
(11) Inlet pipe
(12) Union screw
(13) O-ring
(14) Test plug
(15) Oil filter
(16) Oil filter stud bolt
(17) Drain plug
(18) Gasket
(19) Oil pan
(20) Magnet
(21) Stud bolt (Short)
(22) Stud bolt (Long)
(23) Parking rod
(24) Manual plate
(25) Spring pin
(26) Detention spring
(27) Ball
(28) Spring
(29) Gasket
(30) Outlet pipe
(31) Union screw
(32) Oil seal
(33) Select lever
(34) Inhibitor switch ASSY
(35) Nipple
(36) Air breather hose
(37) Transmission case
(38) Plate ASSY
(39) Washer
(40) O-ring (U5 model)
(41) Cover (U5 model)
(42) Union screw (U5 model)
(43) Oil charge pipe (U5 model)

Tightening torque: N·m (kgf-m, ft-lb)

T1:	***3.4 (0.35, 2.5)***
T2:	***5 (0.5, 3.6)***
T3:	***6 (0.6, 4)***
T4:	***12 (1.2, 8.7)***
T5:	***13 (1.3, 10)***
T6:	***14 (1.4, 10)***
T7:	***18 (1.8, 13.3)***
T8:	***25 (2.5, 18)***
T9:	***40 (4.1, 29.5)***
T10:	***44 (4.5, 32.5)***

4. CONTROL VALVE AND HARNESS ROUTING

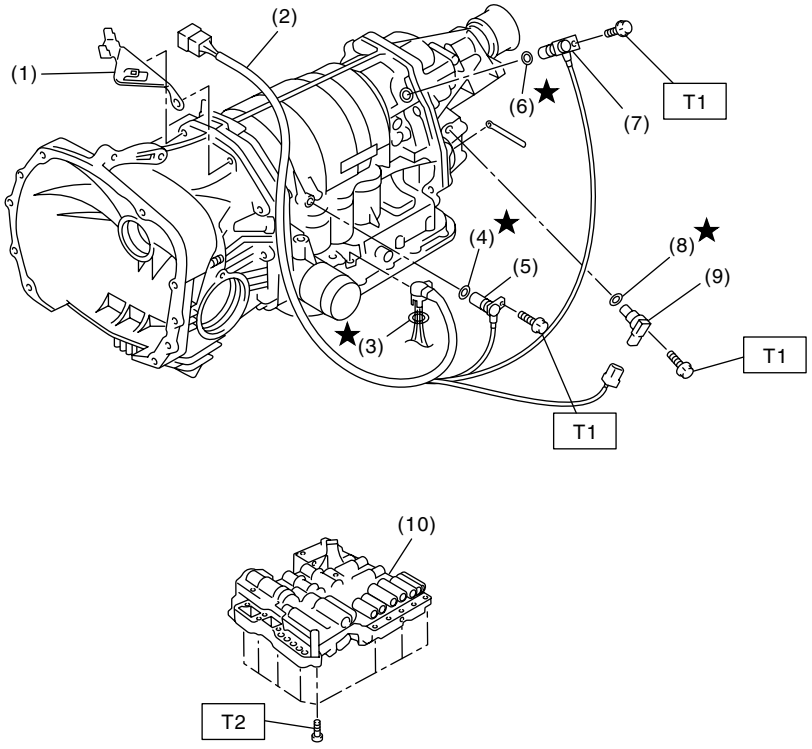

(1)	Stay	(6)	O-ring
(2)	Transmission harness	(7)	Front vehicle speed sensor
(3)	O-ring	(8)	O-ring
(4)	O-ring	(9)	Rear vehicle speed sensor
(5)	Torque converter turbine speed sensor	(10)	Control valve body

Tightening torque: N·m (kgf-m, ft-lb)
T1: 7 (0.7, 5.1)
T2: 8 (0.8, 5.8)

5. HIGH CLUTCH AND REVERSE CLUTCH

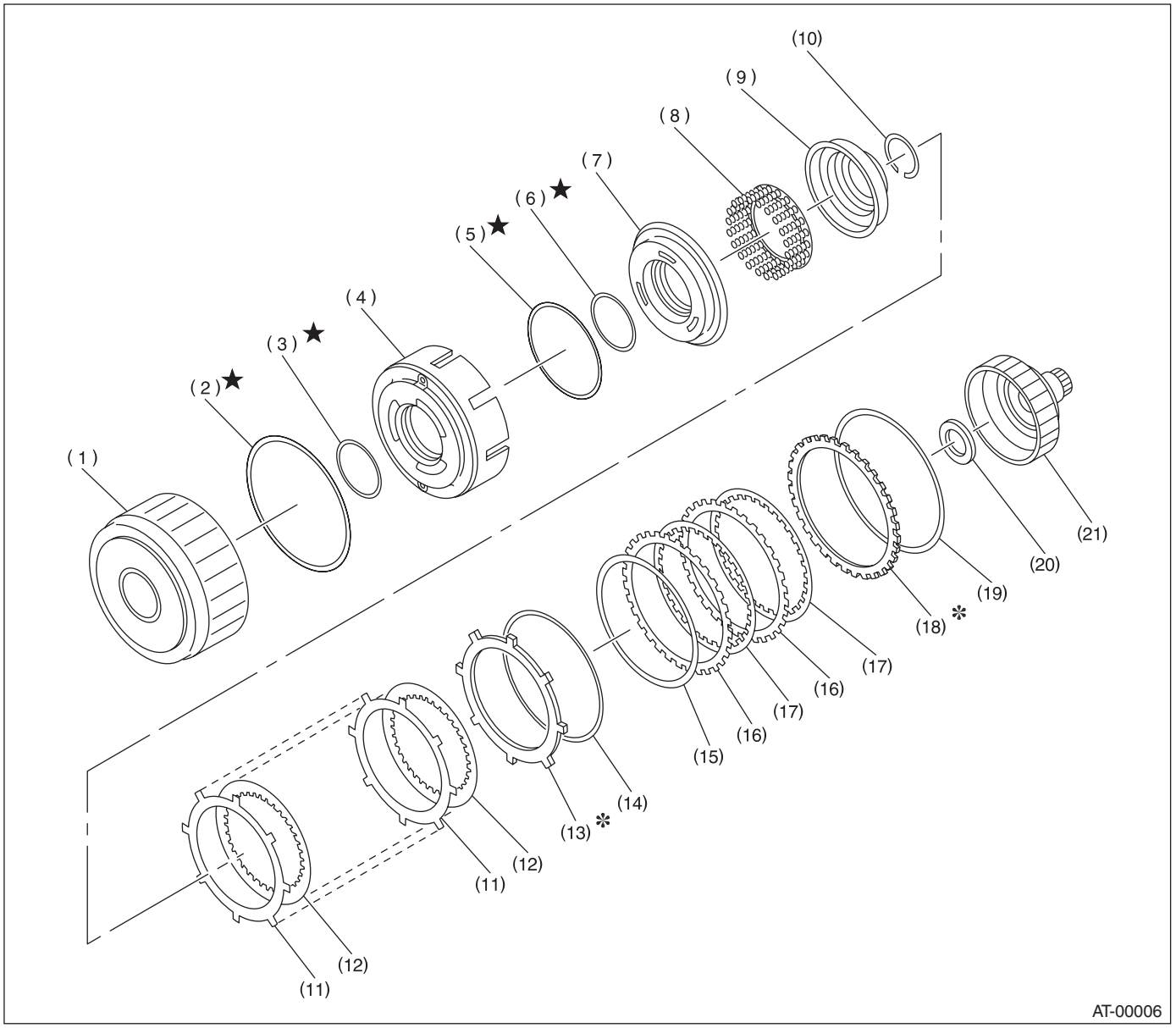

(1)	High clutch drum	(8)	Spring retainer	(15)	Dish plate
(2)	Lip seal	(9)	Cover	(16)	Driven plate (reverse clutch)
(3)	D-ring	(10)	Snap ring	(17)	Drive plate (reverse clutch)
(4)	Reverse clutch piston	(11)	Driven plate (high clutch)	(18)	Retaining plate (reverse clutch)
(5)	D-ring	(12)	Drive plate (high clutch)	(19)	Snap ring
(6)	D-ring	(13)	Retaining plate (high clutch)	(20)	Thrust needle bearing
(7)	High clutch piston	(14)	Snap ring	(21)	High clutch hub

6. PLANETARY GEAR AND 2-4 BRAKE

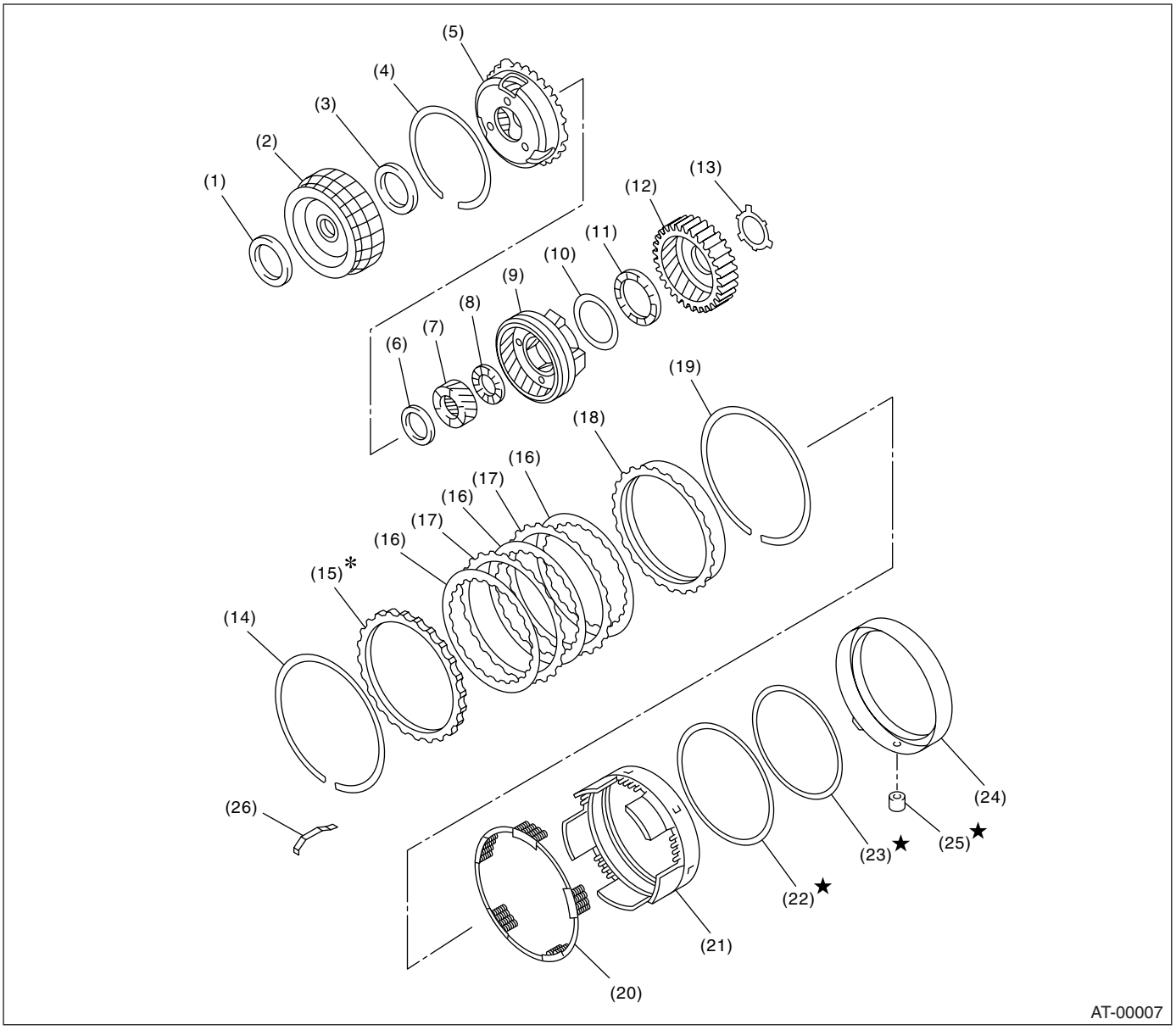

(1) Thrust needle bearing
(2) Front sun gear
(3) Thrust needle bearing
(4) Snap ring
(5) Front planetary carrier
(6) Thrust needle bearing
(7) Rear sun gear
(8) Thrust needle bearing
(9) Rear planetary carrier
(10) Washer
(11) Thrust needle bearing
(12) Rear internal gear
(13) Washer
(14) Snap ring
(15) Retaining plate
(16) Drive plate
(17) Driven plate
(18) Pressure rear plate
(19) Snap ring
(20) Spring retainer
(21) 2-4 brake piston
(22) D-ring
(23) D-ring
(24) 2-4 brake piston retainer
(25) 2-4 brake seal
(26) Leaf spring

7. LOW CLUTCH AND LOW & REVERSE BRAKE

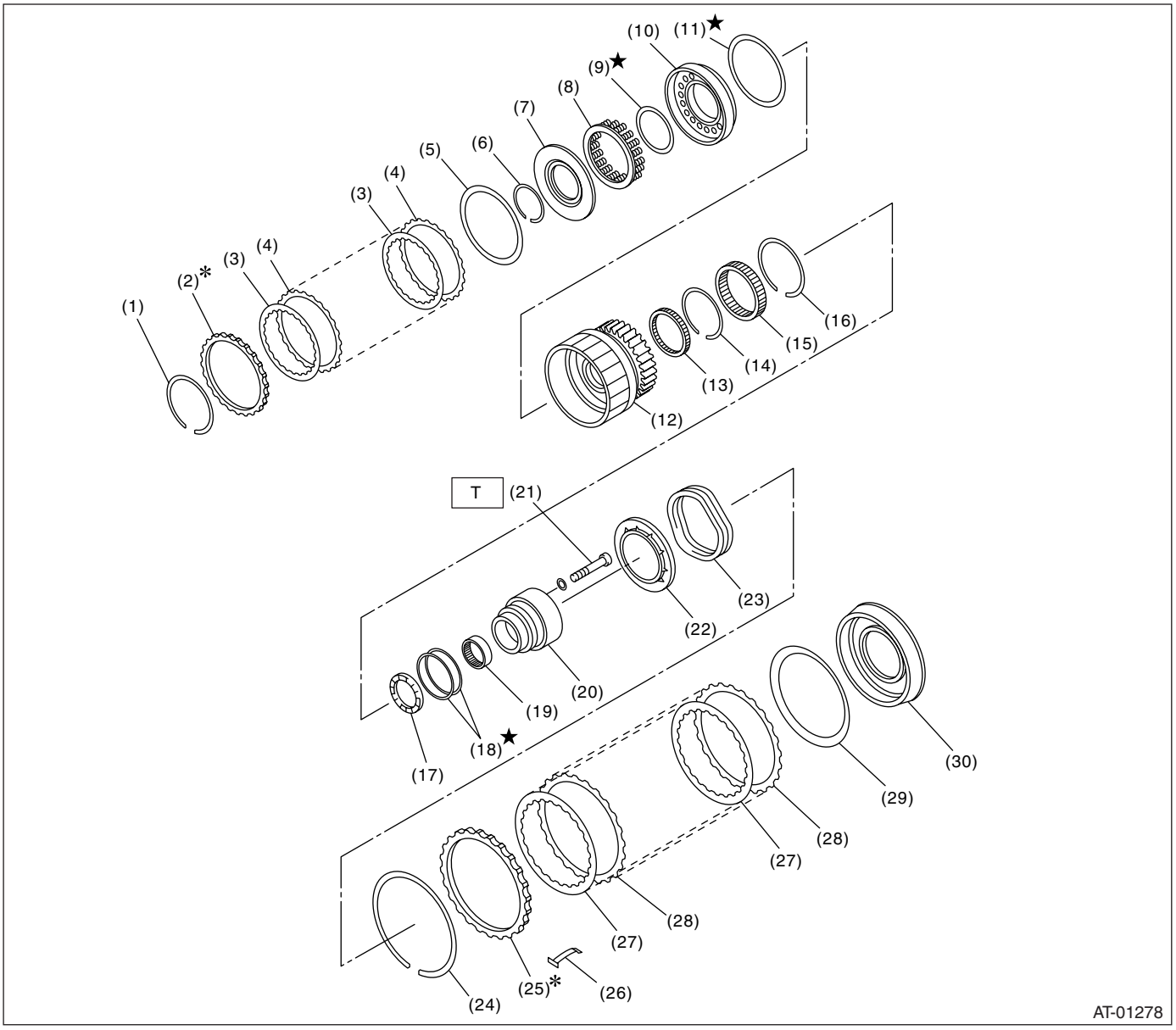

(1) Snap ring
(2) Retaining plate
(3) Drive plate
(4) Driven plate
(5) Dish plate
(6) Snap ring
(7) Cover
(8) Spring retainer
(9) D-ring
(10) Low clutch piston
(11) D-ring
(12) Low clutch dram
(13) Needle bearing
(14) Snap ring
(15) One-way clutch
(16) Snap ring
(17) Thrust needle bearing
(18) Seal ring
(19) Needle bearing
(20) One-way clutch inner race
(21) Socket bolt
(22) Spring retainer
(23) Return spring
(24) Snap ring
(25) Retaining plate
(26) Leaf spring
(27) Drive plate
(28) Driven plate
(29) Dish plate
(30) Low & reverse brake piston

Tightening torque: N·m (kgf-m, ft-lb)
T: 25 (2.5, 18)

8. REDUCTION GEAR

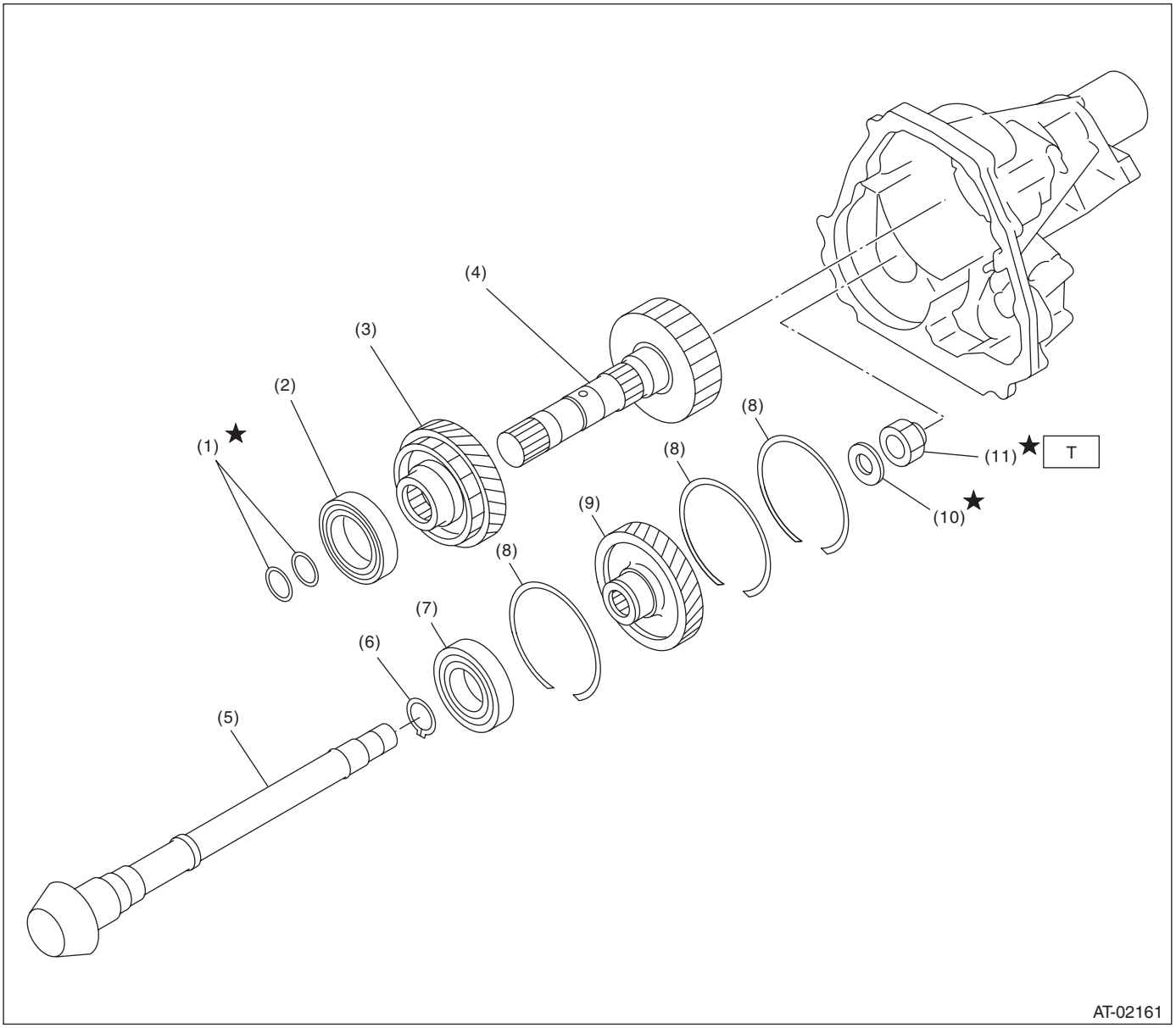

(1) Seal ring
(2) Ball bearing
(3) Reduction drive gear
(4) Reduction drive shaft
(5) Drive pinion shaft
(6) Snap ring
(7) Ball bearing
(8) Snap ring
(9) Reduction driven gear
(10) Washer
(11) Lock nut

Tightening torque: N·m (kgf-m, ft-lb)
T: 100 (10.2, 73.8)

9. DIFFERENTIAL GEAR

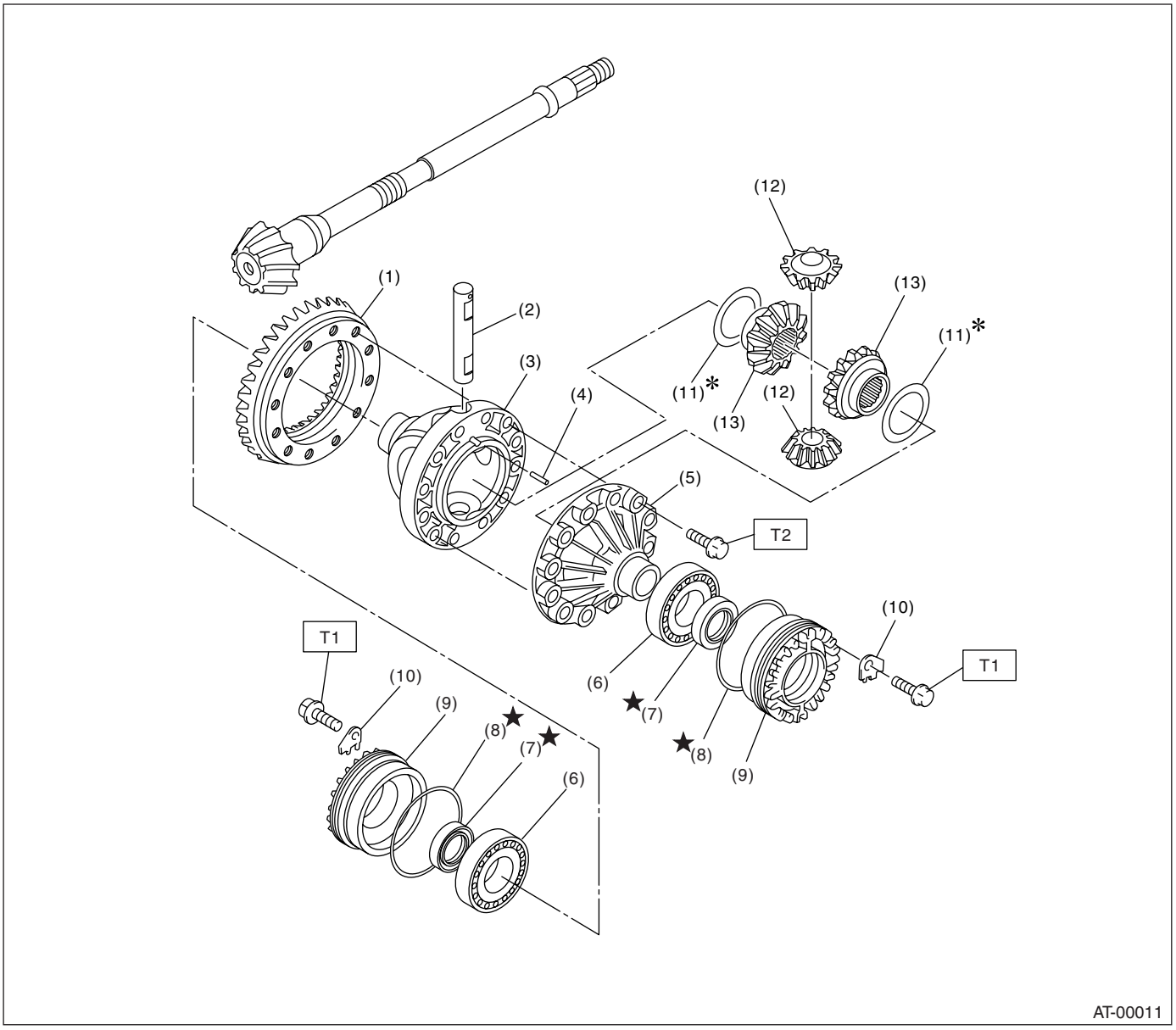

(1) Hypoid driven gear
(2) Pinion shaft
(3) Differential case (RH)
(4) Straight pin
(5) Differential case (LH)
(6) Taper roller bearing
(7) Oil seal
(8) O-ring
(9) Differential side retainer
(10) Lock plate
(11) Washer
(12) Differential bevel pinion
(13) Differential bevel gear

Tightening torque: N·m (kgf-m, ft-lb)
T1: 25 (2.5, 18)
T2: 62 (6.3, 45.6)

10.TRANSFER AND EXTENSION CASE

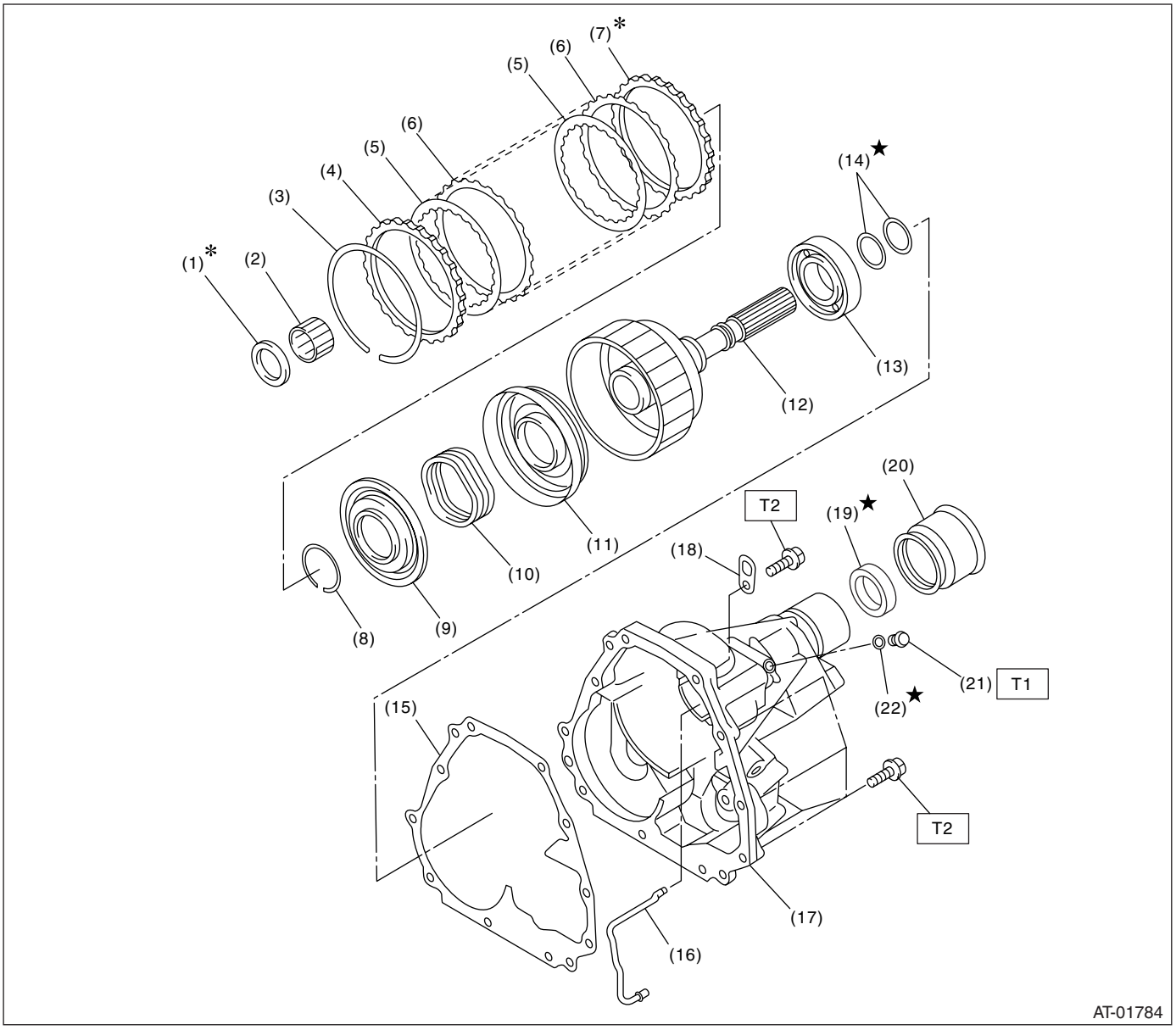

(1) Thrust needle bearing
(2) Needle bearing
(3) Snap ring
(4) Pressure plate
(5) Drive plate
(6) Driven plate
(7) Retaining plate
(8) Snap ring
(9) Transfer piston seal
(10) Return spring
(11) Transfer clutch piston
(12) Rear drive shaft
(13) Ball bearing
(14) Seal ring
(15) Gasket
(16) Transfer clutch pipe
(17) Extension case
(18) Transmission hanger
(19) Oil seal
(20) Dust cover
(21) Test plug
(22) O-ring

Tightening torque: N·m (kgf-m, ft-lb)
T1: 13 (1.3, 9.4)
T2: 25 (2.5, 18)

11.TRANSMISSION MOUNTING

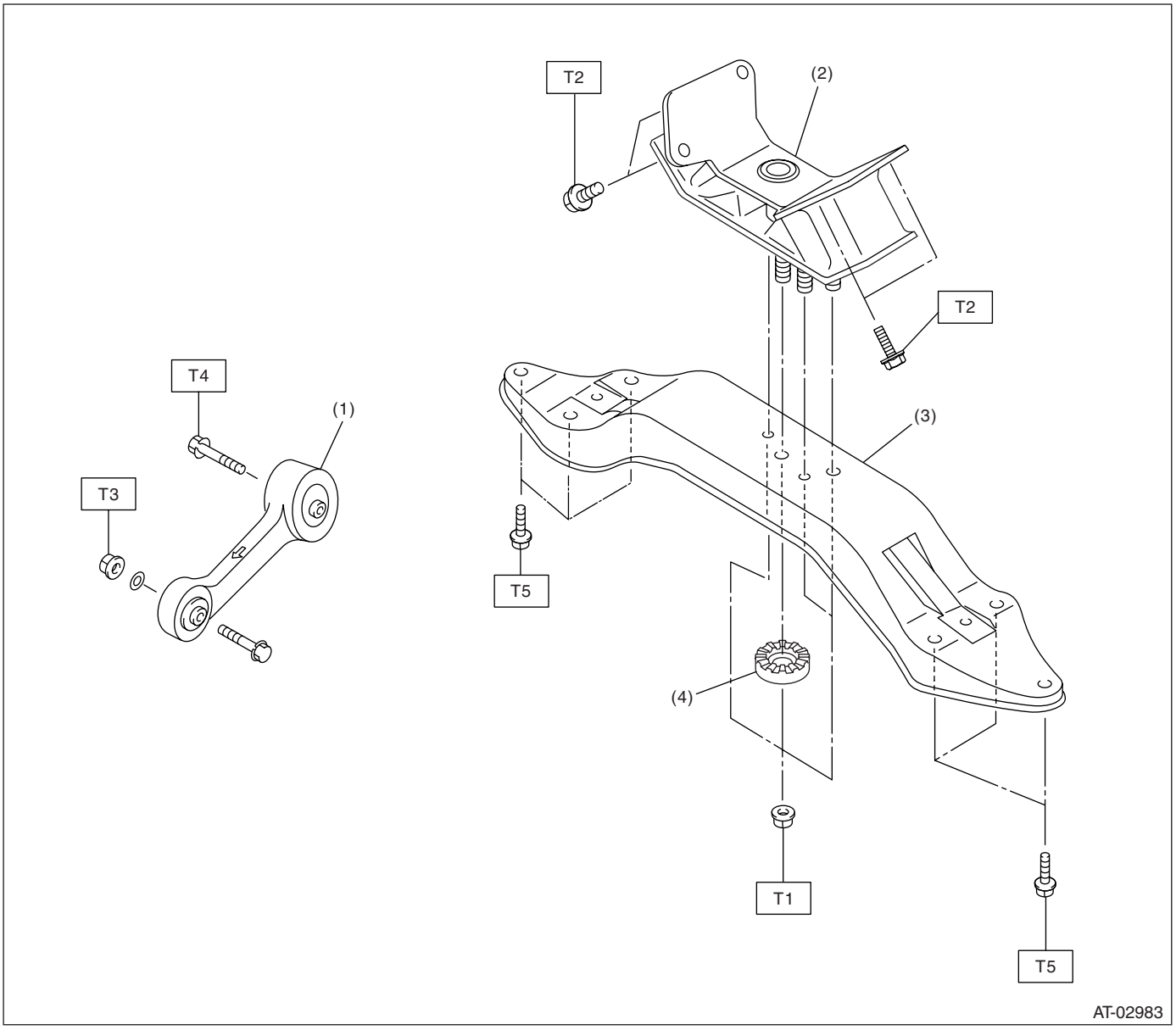

(1) Pitching stopper
(2) Rear cushion rubber
(3) Crossmember
(4) Stopper

Tightening torque: N·m (kgf-m, ft-lb)
T1: 35 (3.6, 26)
T2: 40 (4.1, 30)
T3: 50 (5.1, 37)
T4: 58 (5.9, 43)
T5: 75 (7.6, 55)

C: CAUTION

• Wear work clothing, including a cap, protective goggles and protective shoes during operation.
• Remove contamination including dirt and corrosion before removal, installation or disassembly.
• Keep the disassembled parts in order and protect them from dust and dirt.
• Do not place the oil pan with its inner side facing upward until it is installed so as to prevent foreign matter intrusion into valve body.
• Before removal, installation or disassembly, be sure to clarify the failure. Avoid unnecessary removal, installation, disassembly and replacement.
• When disassembling the case and other light alloy parts, use a plastic hammer to force it apart. Do not pry it apart with a screwdriver or other tool.
• Be careful not to burn yourself, because each part on the vehicle is hot after running.
• Use SUBARU genuine gear oil, grease etc. or the equivalent. Do not mix gear oil, grease etc. with that of another grade or from other manufacturers.
• Be sure to tighten bolts and nuts to the specified torque.
• Place shop jacks or rigid racks at the specified points.
• Apply gear oil or ATF onto sliding or revolution surfaces before installation in view of components usage.
• Replace deformed or otherwise damaged snap rings with new ones.
• Before installing O-rings or oil seals, apply sufficient amount of ATF to avoid damage and deformation.
• Be careful not to incorrectly install or fail to install O-rings, snap rings and other such parts.
• Before securing a part on a vice, place cushioning material such as wood blocks, aluminum plate or cloth between the part and the vice.
• Avoid damaging the mating surface of the case.
• Before applying liquid gasket, completely remove the old seal.
• When disassembling AT, be sure to use nylon or paper towel, do not use cloth glove and cloth.

D: PREPARATION TOOL

1. SPECIAL TOOL

ILLUSTRATION	TOOL NUMBER	DESCRIPTION	REMARKS
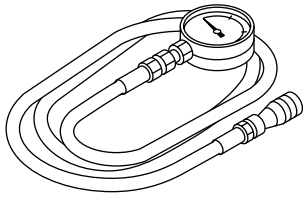 ST-498575400	498575400	OIL PRESSURE GAUGE ASSY	Used for measuring oil pressure.
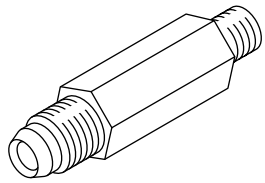 ST-498897200	498897200	ADAPTER	Used for oil pump housing when measuring reverse clutch pressure and line pressure.
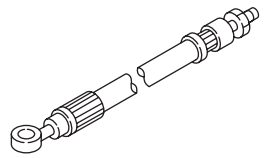 ST-498897700	498897700	ADAPTER SET	Used for measuring transfer clutch pressure.
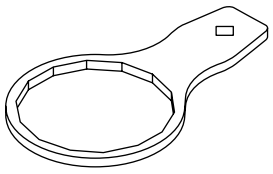 ST-498545400	498545400	FILTER WRENCH	Used for removing and installing ATF filter.

ILLUSTRATION	TOOL NUMBER	DESCRIPTION	REMARKS
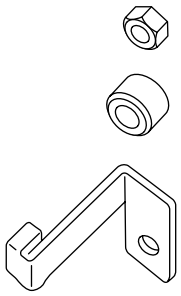 ST-498277200	498277200	STOPPER SET	Used for removing and installing automatic transmission assembly to engine.
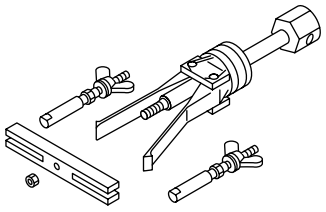 ST-398527700	398527700	PULLER ASSY	• Used for removing extension case roller bearing. • Used for removing extension oil seal. • Used for removing front differential side retainer bearing outer race. • Used for removing front differential side retainer oil seal.
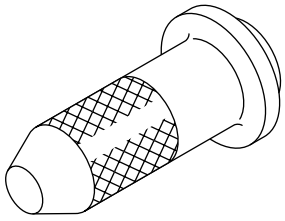 ST-498057300	498057300	INSTALLER	Used for installing extension oil seal.
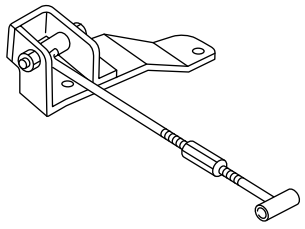 ST41099AC000	41099AC000	ENGINE SUPPORT ASSY	Used for supporting engine.

ILLUSTRATION	TOOL NUMBER	DESCRIPTION	REMARKS
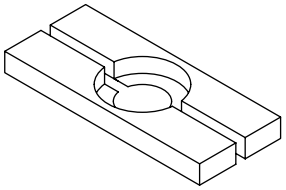 ST-498077000	498077000	REMOVER	Used for removing differential taper roller bearing.
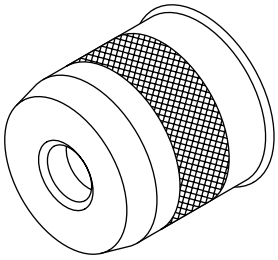 ST-499247400	499247400	INSTALLER	• Used for installing transfer outer snap ring. • Used with GUIDE (499257300).
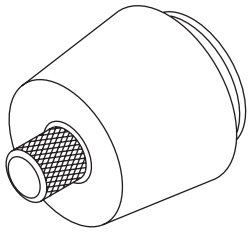 ST-499257300	499257300	SNAP RING OUTER GUIDE	• Used for installing transfer outer snap ring. • Used with INSTALLER (499247400).
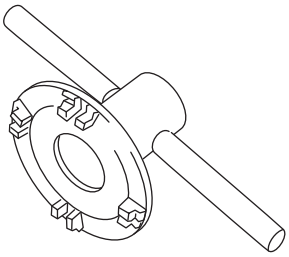 ST18630AA010	18630AA010	WRENCH ASSY	• Used for removing and installing differential side retainer. • WRENCH ASSY (499787000) can be also used.

ILLUSTRATION	TOOL NUMBER	DESCRIPTION	REMARKS
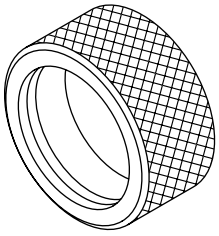 ST-398437700	398437700	DRIFT	Used for installing converter case oil seal.
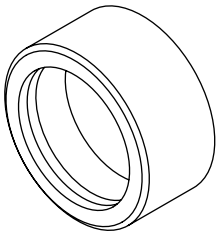 ST-398487700	398487700	INSTALLER	Used for installing front differential taper roller bearing.
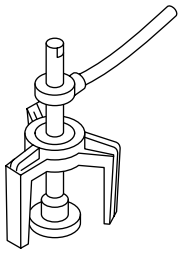 ST-398673600	398673600	COMPRESSOR	Used for removing and installing clutch spring.
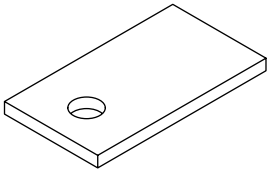 ST-498255400	498255400	PLATE	Used for measuring backlash of hypoid gear.

ILLUSTRATION	TOOL NUMBER	DESCRIPTION	REMARKS
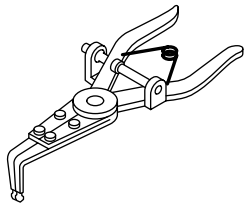 ST-399893600	399893600	PLIERS	Used for removing and installing clutch spring.
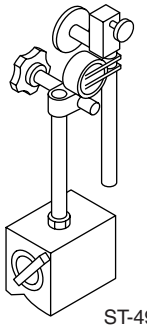 ST-498247001	498247001	MAGNET BASE	• Used for measuring gear backlash. • Used with DIAL GAUGE (498247100).
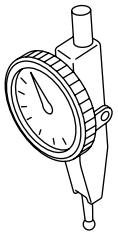 ST-498247100	498247100	DIAL GAUGE	• Used for measuring gear backlash. • Used with MAGNET BASE (498247001).
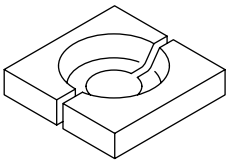 ST-498517000	498517000	REPLACER	Used for removing front roller bearing.

ILLUSTRATION	TOOL NUMBER	DESCRIPTION	REMARKS
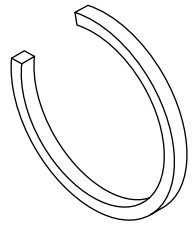 ST-398623600	398623600	SEAT	Used for removing spring of transfer clutch piston.
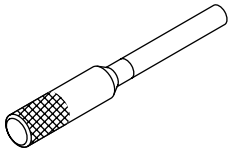 ST-499267300	499267300	STOPPER PIN	Used for installing inhibitor switch.
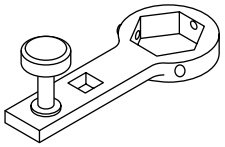 ST-499787700	499787700	WRENCH	Used for removing and installing drive pinion lock nut.
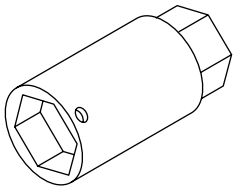 ST-499787500	499787500	ADAPTER	Used for removing and installing drive pinion lock nut.

ILLUSTRATION	TOOL NUMBER	DESCRIPTION	REMARKS
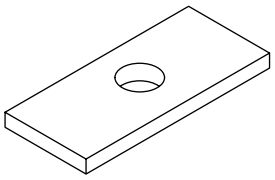 ST-398643600	398643600	GAUGE	Used for measuring total end play, extension end play and drive pinion height.
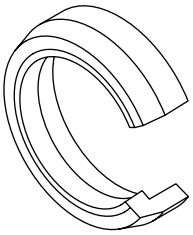 ST-498627100	498627100	SEAT	Used for holding low clutch piston retainer spring when installing snap ring.
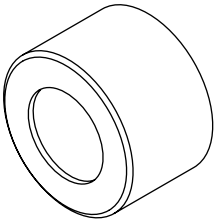 ST-499577000	499577000	GAUGE	Used for measuring mating surface of transmission to end of reduction gear.
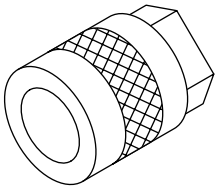 ST-499737000	499737000	PULLER	Used for removing reduction driven gear assembly.

ILLUSTRATION	TOOL NUMBER	DESCRIPTION	REMARKS
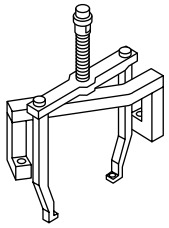 ST-499737100	499737100	PULLER SET	Used for removing reduction drive gear assembly.
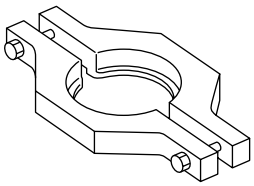 ST-498077600	498077600	REMOVER	Used for removing ball bearing.
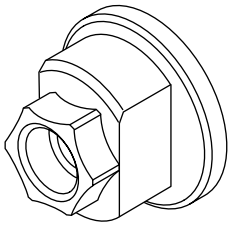 ST-498937110	498937110	HOLDER	Used for removing and installing drive pinion lock nut.
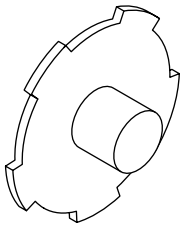 ST-498677100	498677100	COMPRESSOR	Used for installing 2-4 brake snap ring.

ILLUSTRATION	TOOL NUMBER	DESCRIPTION	REMARKS
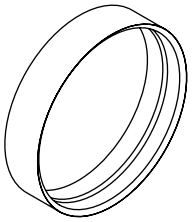 ST-498437000	498437000	HIGH CLUTCH PISTON GUIDE	Used for installing high clutch piston.
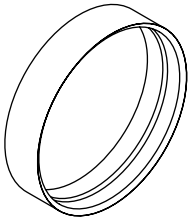 ST-498437100	498437100	LOW CLUTCH PISTON GUIDE	Used for installing low clutch piston.
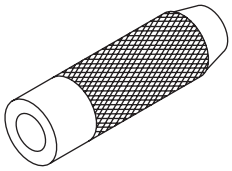 ST-899580100	899580100	INSTALLER	Used for press-fitting of ball bearing for transfer clutch.
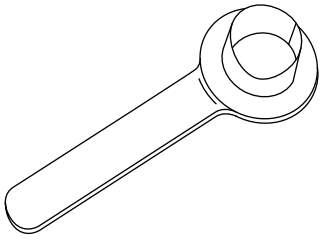 ST28399SA010	28399SA010	OIL SEAL PROTECTOR	Used for installing axle shaft.

ILLUSTRATION	TOOL NUMBER	DESCRIPTION	REMARKS
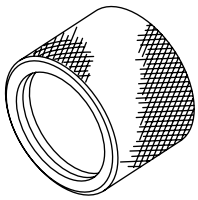 ST18675AA000	18675AA000	DIFFERENTIAL OIL SEAL INSTALLER	Used for installing differential side retainer oil seal.
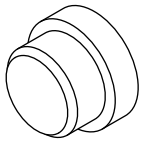 ST-398497701	398497701	SEAT	Used for installing needle bearing.
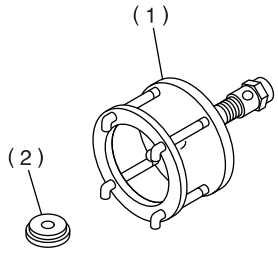 ST-899524100	899524100	PULLER SET	Used for bolt only. • Used with PULLER SET (499737100). • Used with PULLER (499737000). (1) Puller (2) Cap
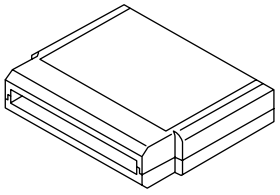 ST24082AA260	24082AA260	CARTRIDGE	Troubleshooting for electrical system.

ILLUSTRATION	TOOL NUMBER	DESCRIPTION	REMARKS
ST22771AA030	22771AA030	SUBARU SELECT MONITOR KIT	Troubleshooting for electrical system.

2. GENERAL TOOL

TOOL NAME	REMARKS
Depth gauge	Used for measuring transmission end play.
Thickness gauge	Used for measuring clearance of clutch, brake and oil pump.
Micro meter	Used for measuring thickness of drive pinion.
Spring balance	Used for measuring starting torque of drive pinion.
Circuit tester	Used for measuring resistance and voltage.
TORX® T70	Used for removing and installing differential gear oil drain plug.
Push/pull gauge	Used for measuring clutch piston stroke.

2. Automatic Transmission Fluid

A: INSPECTION

NOTE:
The level of ATF varies with fluid temperature. Pay attention to the ATF temperature when checking ATF level.

1) Raise the ATF temperature by driving a distance of 5 to 10 km (3 to 6 miles). Otherwise, idle the engine to raise ATF temperature to 70 — 80°C (158 — 176°F) on Subaru Select Monitor. <Ref. to 4AT(D)(diag)-14, READ CURRENT DATA, OPERATION, Subaru Select Monitor.>
2) Park the vehicle on a level surface.
3) After selecting all positions (P, R, N, D), set the select lever in "P" range. Measure the ATF level with engine idling for one or two minutes.

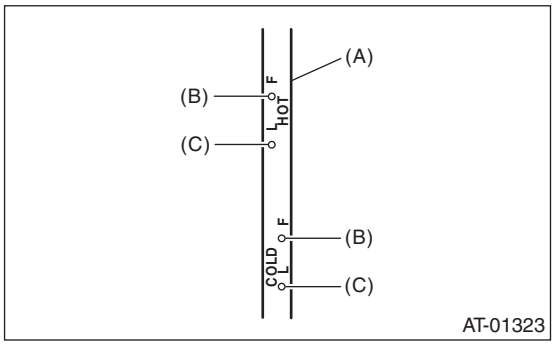

(A) ATF level gauge
(B) Upper level
(C) Lower level

4) Make sure that ATF level is between the upper level and lower level at HOT side.
5) If the ATF level is below the lower level, replenish recommended ATF to bring the fluid level between the upper level and lower level.

CAUTION:
- **Use care not to exceed the upper limit level.**
- **Be sure that the replenishment of ATF to the upper level with the transmission cold will cause overfilling of ATF and result in a transmission failure.**

6) Raise the ATF temperature by driving a distance of 5 to 10 km (3 to 6 miles). Otherwise, idle the engine to raise ATF temperature to 70 — 80°C (158 — 176°F) on Subaru Select Monitor. <Ref. to 4AT(D)(diag)-14, READ CURRENT DATA, OPERATION, Subaru Select Monitor.>
7) Check the ATF for leaks.
Make visual inspection for leaks from the inside of transmission. If there are leaks, repair or replace the gasket, oil seals, plugs or other parts.

B: REPLACEMENT

1) Lift up the vehicle.
2) Remove the ATF drain plug to drain ATF.

CAUTION:
After running the engine or after idling for a long time, the ATF is hot. Be careful not to burn yourself.

3) Check the condition of ATF. <Ref. to 4AT-29, CONDITION CHECK, Automatic Transmission Fluid.>
4) Tighten the ATF drain plug.

NOTE:
Use a new gasket.

Tightening torque:
25 N·m (2.5 kgf-m, 18 ft-lb)

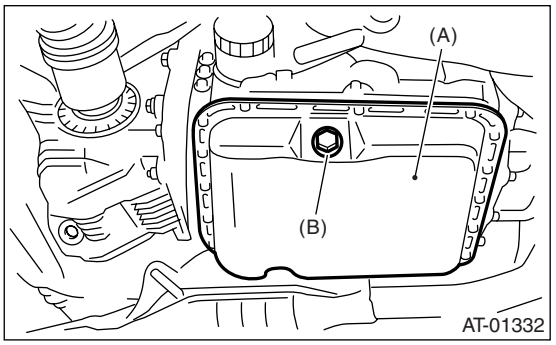

(A) Oil pan
(B) ATF drain plug

5) Lower the vehicle.
6) Pour ATF from the oil charge pipe.

Recommended fluid:
SUBARU ATF (Part No. K0410Y0700), IDEMITSU "Apolloil ATF HP", Castrol "Transmax J" or DEXRON III

Capacity:
Fill the same amount of ATF drained.

Capacity when transmission is overhauled:
9.3 — 9.6 ℓ
(9.8 — 10.1 US qt, 8.2 — 8.4 Imp qt)

7) Bleed the air of control valve.
<Ref. to 4AT-61, Air Bleeding of Control Valve.>
8) Check the level and leaks of ATF.
<Ref. to 4AT-28, INSPECTION, Automatic Transmission Fluid.>

C: CONDITION CHECK

NOTE:
When replacing ATF, check the inside condition of the transmission body by inspecting the drained ATF.

Fluid condition	Trouble and possible cause	Corrective action
Large amount of metallic pieces are found.	Excessive wear of the internal of the transmission body.	Replace ATF and check if AT operates correctly.
Thick and varnish-form fluid.	Burned clutch and etc.	Replace ATF and check AT itself and vehicle for faulty.
Clouded fluid or bubbles are found in fluid.	Water mixed in fluid.	Replace ATF and check the water entering point.

3. Differential Gear Oil

A: INSPECTION

1) Park the vehicle on a level surface.
2) Remove the oil level gauge and wipe it clean.
3) Reinsert the level gauge all the way. Be sure that the level gauge is correctly inserted and in the proper orientation.
4) Remove the level gauge again and note the reading. If the differential gear oil level is below the “L” line, add oil to bring the level up to the “F” line.

NOTE:
To prevent overfilling the differential gear oil, do not add oil above the “F” line.

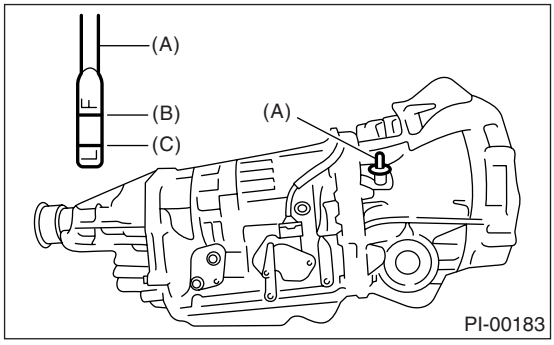

(A) Oil level gauge
(B) Upper level
(C) Lower level

B: REPLACEMENT

1) Lift up the vehicle.
2) Remove the differential gear oil drain plug using TORX® BIT T70, and drain the differential gear oil completely.

CAUTION:
• After running the engine or after idling for a long time, the differential gear oil is hot. Be careful not to burn yourself.
• Be careful not to spill the differential gear oil on exhaust pipe to prevent it from emitting smoke or fire. When the differential gear oil is spilled on exhaust pipe, wipe it away completely.

3) Tighten the differential gear oil drain plug using TORX® BIT T70.

Tightening torque:
70 N·m (7.1 kgf-m, 51.6 ft-lb)

NOTE:
Use a new gasket.

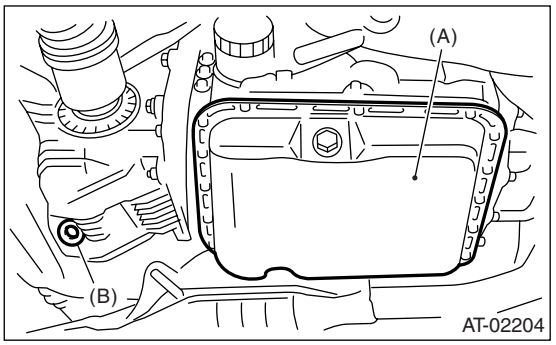

(A) Oil pan
(B) Differential gear oil drain plug

4) Lower the vehicle.
5) Pour gear oil into the gauge hole.

Recommended gear oil:
<Ref. to 4AT-3, RECOMMENDED GEAR OIL, SPECIFICATION, General Description.>

Differential gear oil capacity:
1.1 — 1.3 ℓ (1.2 — 1.4 US qt, 1.0 — 1.1 Imp qt)

6) Check the level of the differential gear oil.
<Ref. to 4AT-30, INSPECTION, Differential Gear Oil.>

4. Road Test

A: INSPECTION

1. GENERAL PRECAUTION

Road tests should be conducted to properly diagnose the condition of the automatic transmission.

NOTE:
When performing the test, do not exceed posted speed limit.

2. D RANGE SHIFT FUNCTION

Check shifting between 1st ←→ 2nd ←→ 3rd ←→ 4th while driving on general city streets.

3. D RANGE SHIFT SHOCK

Check the shock level when shifting up during normal driving.

4. KICK-DOWN FUNCTION

Check kick-down for each gear. Also check the kick-down shock level.

5. ENGINE BRAKE OPERATION

• Check the 3rd gear engine brake when shifting down from 4th to 3rd range while driving in 4th gear of manual mode [50 — 60 km/h (31 — 37 MPH)].
• Check the 2nd gear engine brake when shifting down from 3rd to 2nd range while driving in 3rd gear of manual mode [40 — 50 km/h (25 — 31 MPH)].
• Check the 1st gear engine brake when shifting down from 2nd to 1st range while driving in 2nd gear of manual mode [20 — 30 km/h (12 — 19 MPH)].

6. LOCK-UP FUNCTION

Check that rpm does not change sharply when the axle pedal is lightly depressed while driving on flat roads at normal speed in “D” range.

7. P RANGE OPERATION

Stop the vehicle on an uphill grade of 5% or more and shift to “P” range. Check that the vehicle does not move when the parking brake is released.

8. NOISE AND VIBRATION

Check for noise and vibration while driving and during shifting.

9. CLIMBING CONTROL FUNCTION

• Check that the gear remains in 3rd when going up a grade.
• Check that the gear remains in 3rd when applying the brakes while going down a grade.

10.TRANSFER CLUTCH

Check tight corner “braking” phenomenon when the vehicle started with steering fully turned.

11.OIL LEAKS

After the driving test, inspect for oil leaks.

5. Stall Test

A: INSPECTION

NOTE:
The stall test is of extreme importance in diagnosing the condition of the automatic transmission and the engine. It should be conducted to measure the engine stall speeds in “R” and 2nd of manual mode.
Purposes of the stall test:

- To check the operation of the automatic transmission clutch.
- To check the operation of the torque converter clutch.
- To check engine performance.

1) Check that the throttle valve opens fully.
2) Check that the engine oil level is correct.
3) Check that the coolant level is correct.
4) Check that the ATF level is correct.
5) Check that the differential gear oil level is correct.
6) Increase ATF temperature to 70 — 80°C (158 — 176°F) by idling the engine for approximately 30 minutes (with select lever set to “N” or “P”).
7) Place the wheel chocks at the front and rear of all wheels and apply the parking brake.
8) Move the manual linkage to ensure it operates properly, and then set to the 2nd on manual mode.

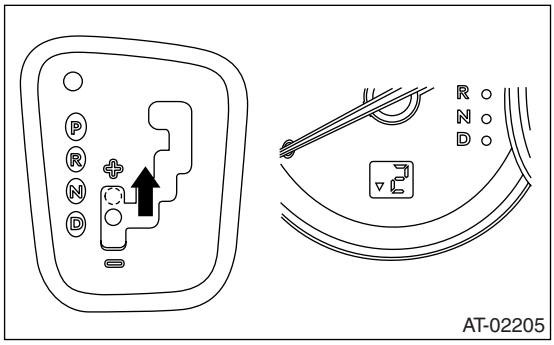

9) While forcibly depressing the foot brake pedal, gradually depress the accelerator pedal until the engine operates at full throttle.

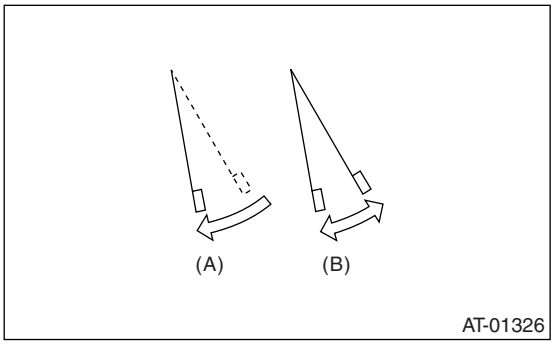

(A) Brake pedal
(B) Accelerator pedal

10) When the engine speed is stabilized, record that speed quickly and release the accelerator pedal.
11) Shift the select lever to “N” range, and cool down the engine by idling it for more than one minute.
12) If the stall speed in the 2nd of manual mode is higher than specifications, low clutch slipping and 2-4 brake slipping may occur. To identify it, conduct the same test as above in “R” range.
13) Perform the stall tests with the select lever in “D” range.

NOTE:

- Do not continue the stall test for more than five seconds at a time (from closed throttle, fully open throttle to stall speed reading). Failure to follow this instruction causes the engine oil and ATF to deteriorate and the clutch and brake to be adversely affected.
- Be sure to cool down the engine for at least one minute after each stall test with the select lever set in “P” or “N” range and with the idle speed lower than 1,200 rpm.
- If the stall speed is higher than the specified range, attempt to finish the stall test in as short a time as possible, in order to prevent the automatic transmission from sustaining damage.

Stall speed (at sea level):
2,300 — 2,700 rpm

Stall speed (at sea level)	Range	Cause
Less than standard	2nd on manual mode, R	• Throttle valve not fully open • Erroneous engine operation • Torque converter clutch's one-way clutch slipping
More than standard	D	• Line pressure is too low • Low clutch slipping • One-way clutch malfunctioning
	R	• Line pressure is too low • Reverse clutch slipping • Low & reverse brake slipping
	2nd on manual mode	• Line pressure is too low • Low clutch slipping • 2-4 brake slipping

6. Time Lag Test

A: INSPECTION

NOTE:
If the select lever is shifted while the engine is idling, there will be a certain time elapse or lag before the shock can be felt. This is used for checking the condition of the low clutch, reverse clutch, low & reverse brake and one-way clutch.

- Perform the test at normal operation fluid temperature 70 — 80°C (158 — 176°F).
- Be sure to allow a one minute interval between tests.
- Make three measurements and take the average value.

1) Fully apply the parking brake.
2) Start the engine.
Check the idling speed (A/C OFF).
3) Shift the select lever from “N” to “D” range.
Using a stop watch, measure the time it takes from shifting the lever until the shock is felt.
Time lag: Less than 1.2 seconds
If “N” → “D” time lag is longer than specified:

- Line pressure too low
- Low clutch worn
- One-way clutch not operating properly
- D-ring worn

4) In the same manner, measure the time lag for “N” → “R”.
Time lag: Less than 1.5 seconds
If “N” → “R” time lag is longer than specified:

- Line pressure too low
- Reverse clutch worn
- Low & reverse brake worn
- D-ring worn

7. Line Pressure Test

A: MEASUREMENT

NOTE:
If the clutch or the brake shows a sign of slippage or shifting sensation is not correct, the line pressure should be checked.

• Excessive shocks during upshifting or shifting takes place at a higher point than under normal circumstances, may be due to the line pressure being too high.

• Slippage or inability to operate the vehicle may, in most cases, be due to loss of oil pressure for the operation of the clutch, brake or control valve.

1) Line pressure measurement (under no load):
   (1) Before measuring line pressure, jack-up all the wheels.
   (2) Maintain the temperature of ATF at approx. 70 — 80°C (158 — 176°F) during measurement. (ATF will reach the above-mentioned temperature after idling the engine for approx. 30 minutes with the select lever in “N” or “P”.)
2) Line pressure measurement (under heavy load):
   (1) Before measuring line pressure, apply both the foot and parking brakes with all wheels chocked (Same as for “stall” test conditions).
   (2) Measure the line pressure when the select lever is in “R” or 2nd of manual mode with engine under stall conditions.
   (3) Measure the line pressure within 5 seconds after shifting the select lever to each position. (If the line pressure needs to be measured again, allow the engine to idle and cool it down more than 1 minute.)
   (4) Maintain the ATF temperature at approx. 70 — 80°C (158 — 176°F) during measurement. (ATF will reach the above-mentioned temperature after idling the engine for approx. 30 minutes with the select lever in “N” or “P”.)
3) Remove the test plug and install the ST instead.

ST 498897200 OIL PRESSURE GAUGE ADAPTER

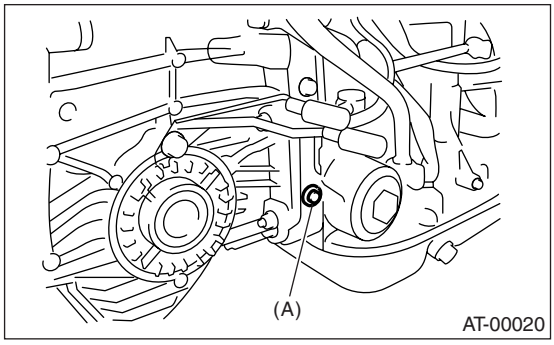

(A) Test plug

4) Connect the ST1 with ST2.

ST1 498897200 OIL PRESSURE GAUGE ADAPTER
ST2 498575400 OIL PRESSURE GAUGE ASSY

5) Check for duty ratio changes by adjusting the acceleration pedal position using Subaru Select Monitor.

Standard line pressure			
Range position	Line pressure duty ratio (%)	Throttle valve angle	Line pressure kPa (kg/cm^2, psi)
Manual mode (2nd)	25 — 35	Full open	1,000 — 1,300 (10.2 — 13.3, 145 — 189)
R	15 — 25	Full open	1,500 — 1,850 (15.3 — 18.9, 217 — 268)
D	35 — 43	Full closed	500 — 800 (5.1 — 8.2, 73 — 116)

8. Transfer Clutch Pressure Test

A: INSPECTION

Check the transfer clutch pressure in accordance with the following chart in the same manner as with line pressure. <Ref. to 4AT-35, Line Pressure Test.>

ST	498897700	OIL PRESSURE ADAPTER SET
ST	498575400	OIL PRESSURE GAUGE ASSY

NOTE:
• Before setting in FWD mode, install the spare fuse on FWD mode switch.

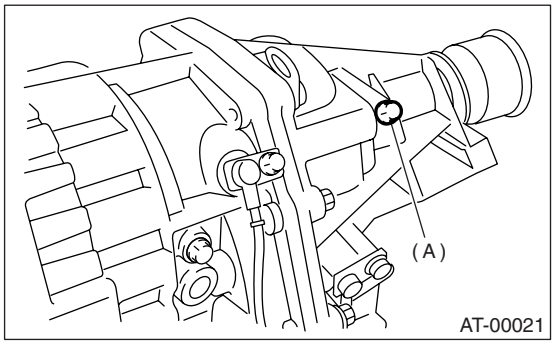

(A) Test plug

• If no oil pressure is produced or if it does not change in AWD mode, the control valve body may be malfunctioning. If oil pressure is produced in FWD mode, the same problem as AWD mode occurs.

Range position	ON Duty ratio (%)	Acceleration pedal position (%)	Standard transfer clutch pressure kPa (kg/cm^2, psi)	
			AWD mode	FWD mode
Manual mode (2nd)	95	Fully opened: 100	1,000 — 1,200 (10.2 — 12.2, 145 — 174)	—
	60	Adjust ON Duty ratio to 60%.	500 — 700 (5.1 — 7.1, 73 — 102)	—
	—	Fully closed: 0	—	0 (0, 0)
N or P	5	Fully closed: 0	0	—

9. Automatic Transmission Assembly

A: REMOVAL

1) Set the vehicle on a lift.
2) Fully open the front hood and support with hood stay.
3) Disconnect the ground cable from battery.
4) Remove the air intake duct.
<Ref. to IN(H4SO)-10, REMOVAL, Air Intake Duct.>
5) Remove the air intake chamber.
<Ref. to IN(H4SO)-9, REMOVAL, Air Intake Chamber.>
6) Remove the air cleaner case stay.

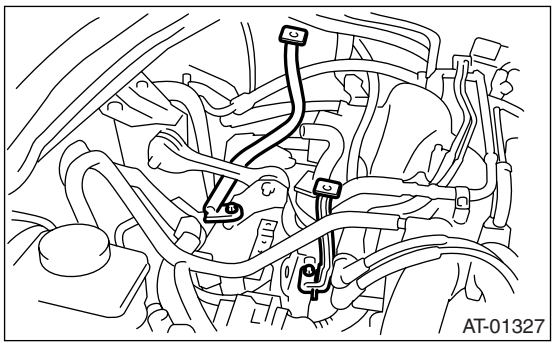

7) Disconnect the following connectors.
(1) Transmission harness connectors

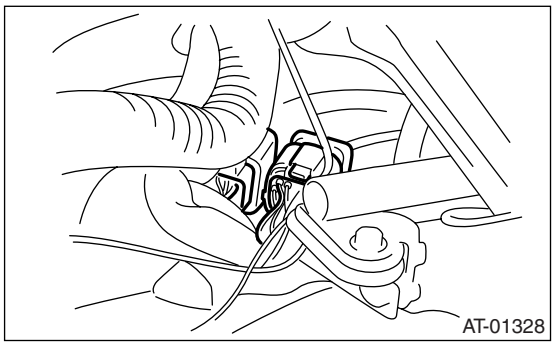

(2) Transmission ground terminal
8) Remove the starter.
<Ref. to SC(H4SO)-6, REMOVAL, Starter.>
9) Remove the pitching stopper.

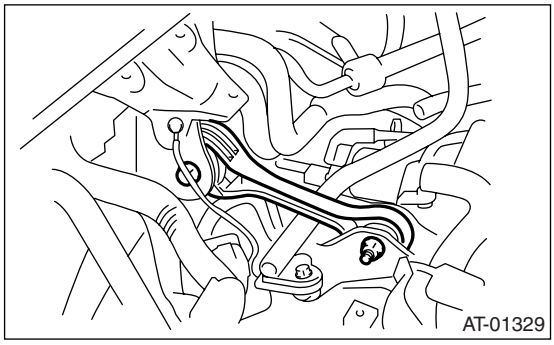

10) Separate the torque converter assembly from drive plate.
(1) Remove the V-belt covers.
(2) Remove the service hole plug.
(3) Remove the bolts which hold torque converter assembly to drive plate.
(4) Insert the wrench to crank pulley bolt, and then remove all the bolts with slightly rotating crank pulley.

CAUTION:
Be careful not to drop bolts into converter case.

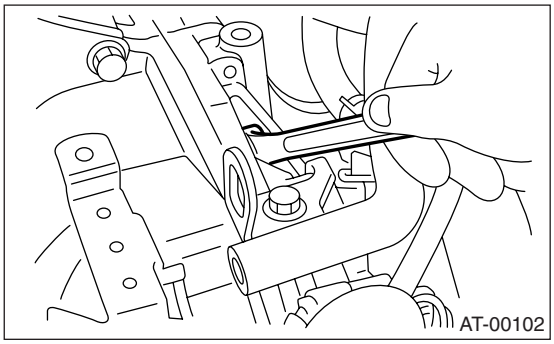

11) Install the ST to converter case.
ST 498277200 STOPPER SET

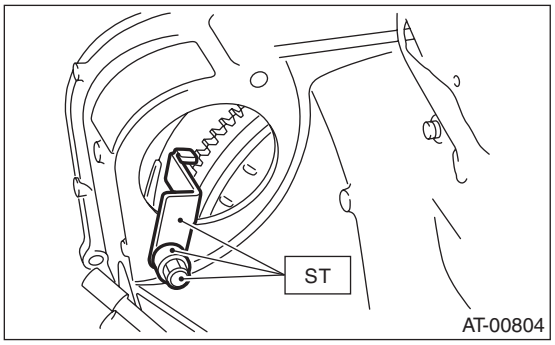

12) Remove the ATF level gauge.

NOTE:
Plug the opening to prevent entry of foreign particles into transmission fluid.

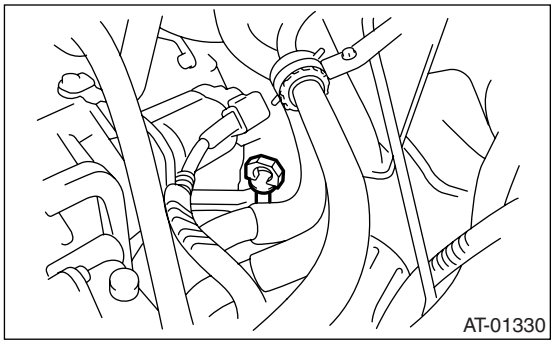

13) Remove the throttle body. <Ref. to FU(H4SO)-11, REMOVAL, Throttle Body.>
14) Disconnect the engine harness, and then remove the harness connector from engine harness bracket.

15) Remove the engine harness bracket.

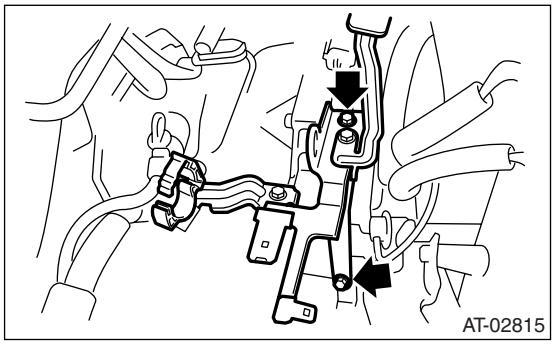

16) Remove the pitching stopper bracket.
17) Set the ST.
ST 41099AC000 ENGINE SUPPORT ASSEMBLY

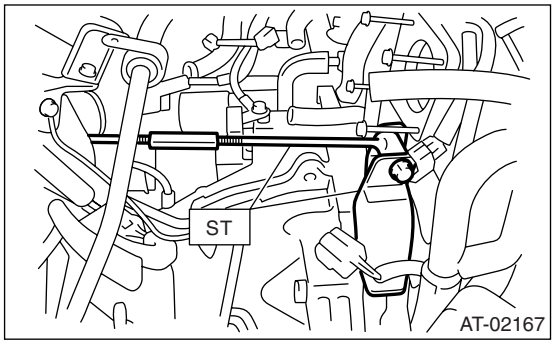

18) Remove the bolts which hold upper side of transmission to engine.

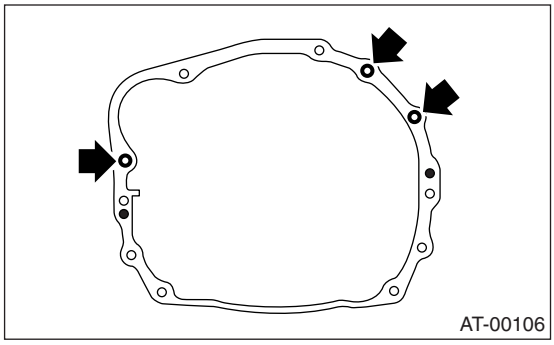

19) Lift up the vehicle.
20) Remove the under cover.
21) Remove the front, center and rear exhaust pipes and muffler.
<Ref. to EX(H4SO)-4, REMOVAL, Front Exhaust Pipe.> <Ref. to EX(H4SO)-8, REMOVAL, Rear Exhaust Pipe.> <Ref. to EX(H4SO)-10, REMOVAL, Muffler.>

22) Remove the heat shield cover.

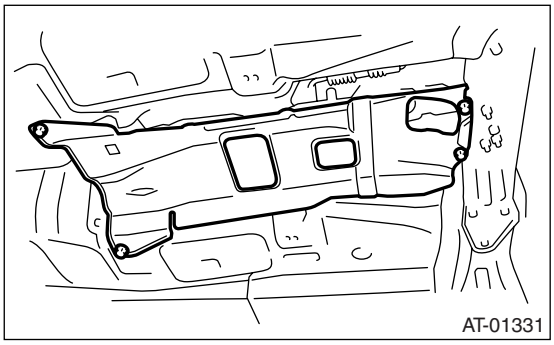

23) Remove the ATF drain plug to drain ATF.

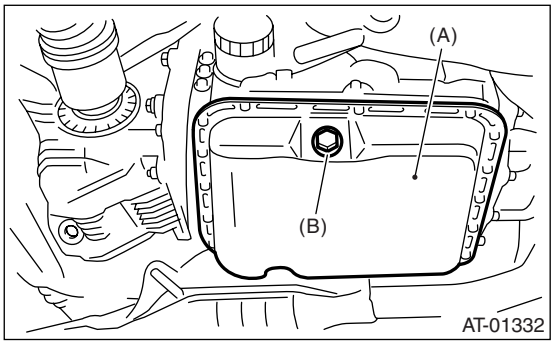

(A) Oil pan
(B) ATF drain plug

24) Disconnect the ATF cooler hoses from pipes of transmission side, and remove the oil charge pipe.

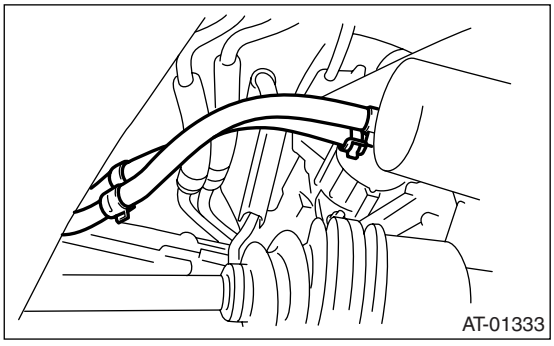

25) Remove the propeller shaft.
<Ref. to DS-10, REMOVAL, Propeller Shaft.>
26) Remove the shift select cable.
<Ref. to CS-24, REMOVAL, Select Cable.>
27) Remove the brackets (two) which hold front stabilizer.

28) Remove the bolt securing ball joint of front arm to housing.

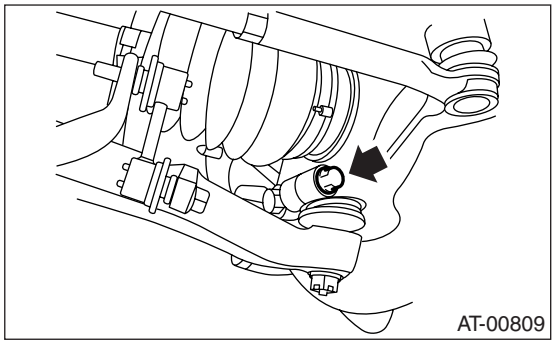

29) Pull out the front drive shaft from transmission.
(1) Using a tire lever or a pinch bar, etc., pull out the front drive shaft until its joint facing to transmission can move smoothly.

NOTE:
Place cloth between tire lever or pinch bar and transmission in order to avoid damaging the side retainer of transmission.

(2) Hold the transmission side joint portion of front drive shaft by hand and extract the housing from the transmission by pressing it outside so as not to stretch the boot.

30) Remove the bolts which hold the clutch housing cover.
31) Remove the bolts which hold lower side of transmission to engine.

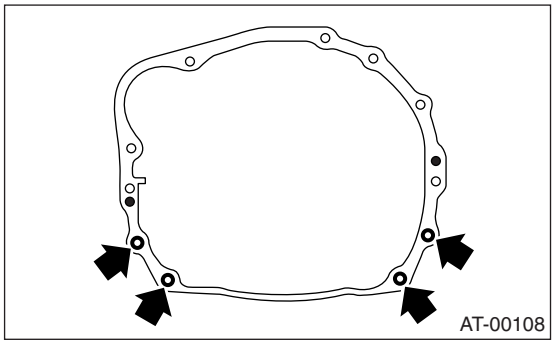

32) Place the transmission jack under transmission.

NOTE:
Make sure that the support plates of transmission jack don't touch the oil pan.

33) Remove the transmission rear crossmember from the vehicle.

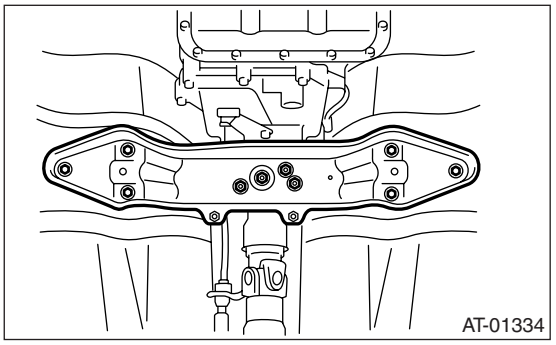

34) Fully contract the engine support while lowering the transmission jack gradually, and tilt the engine backward.

NOTE:
Contract the support until the clearance between front crossmember and converter case becomes approx. 10 mm (0.39 in).

35) Remove the transmission.

CAUTION:
Remove the transmission and torque converter as a unit from engine.

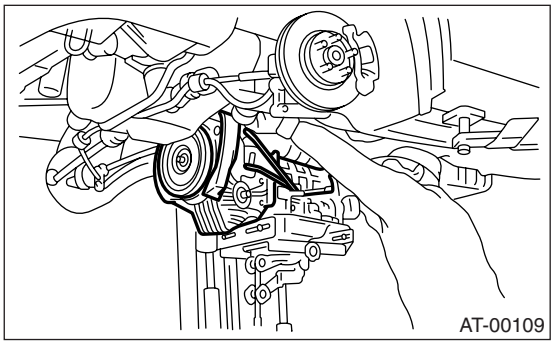

36) Remove the rear cushion rubber from transmission assembly.

B: INSTALLATION

1) Replace the differential side oil seal with a new one.

NOTE:
When a new oil seal has been installed, the replacement is not required.

2) Install the rear cushion rubber to transmission assembly.

Tightening torque:
40 N·m (4.1 kgf-m, 30 ft-lb)

3) Install the ST to converter case.

ST 498277200 STOPPER SET

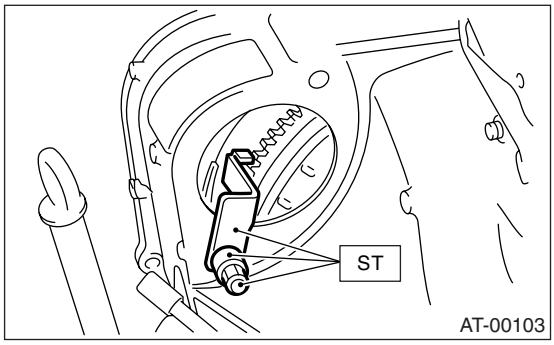

4) Install the transmission onto engine.
(1) Lift up the transmission gradually using a transmission jack.

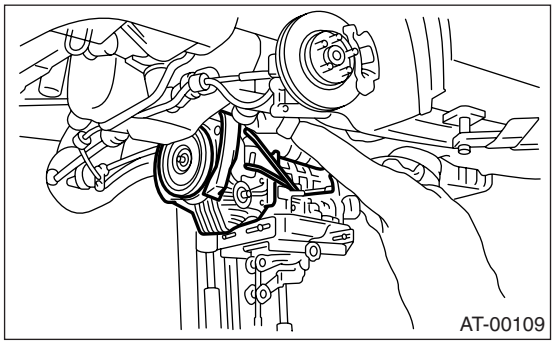

(2) Engage them at splines.
(3) Turn the screws of engine support while raising the transmission jack gradually, and tilt the engine forward.
5) Install the transmission rear crossmember.

Tightening torque:
T1: 35 N·m (3.6 kgf-m, 26 ft-lb)
T2: 75 N·m (7.6 kgf-m, 55 ft-lb)

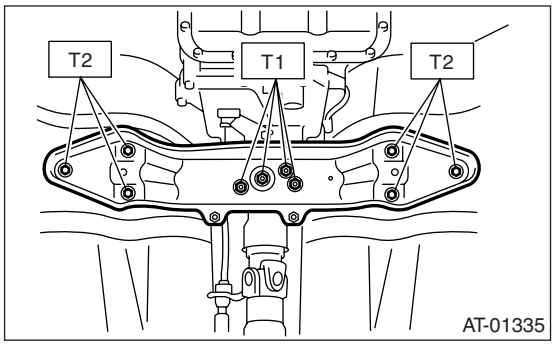

6) Take off the transmission jack.
7) Tighten the bolts which hold the lower side of transmission to engine.

Tightening torque:
50 N·m (5.1 kgf-m, 36.9 ft-lb)

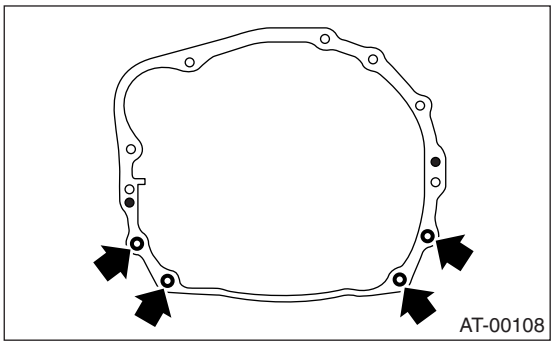

8) Screw the bolts for the clutch housing cover.
9) Lower the lift.
10) Connect the engine and transmission.
(1) Remove the ST from converter case.

NOTE:
When removing the ST, be careful not to drop it into converter case.

ST 498277200 STOPPER SET

(2) Install the starter.
<Ref. to SC(H4SO)-6, INSTALLATION, Starter.>
(3) Tighten the bolts which hold the upper side of transmission to engine.

Tightening torque:
50 N·m (5.1 kgf-m, 36.9 ft-lb)

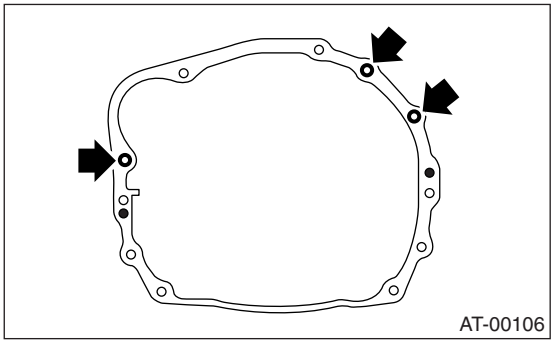

11) Install the torque converter assembly to drive plate.
(1) Tighten the bolts which hold torque converter assembly to drive plate.
(2) Insert the wrench to crank pulley bolt, and then tighten all bolts while slightly rotating the crank pulley.

Tightening torque:
25 N·m (2.5 kgf-m, 18 ft-lb)

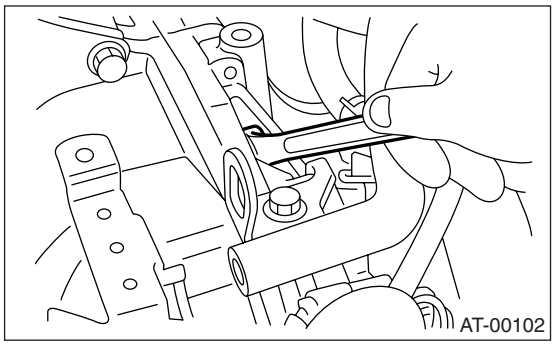

(3) Fit the plug to service hole.
(4) Install the V-belt cover.

12) Remove the ST.

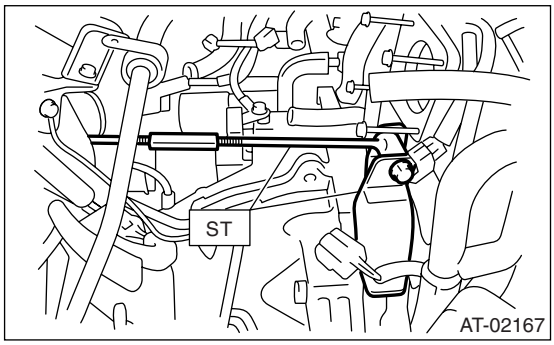

13) Install the engine harness bracket.

Tightening torque:
T1: 16 N·m (1.6 kgf-m, 11.6 ft-lb)
T2: 36 N·m (3.6 kgf-m, 26 ft-lb)

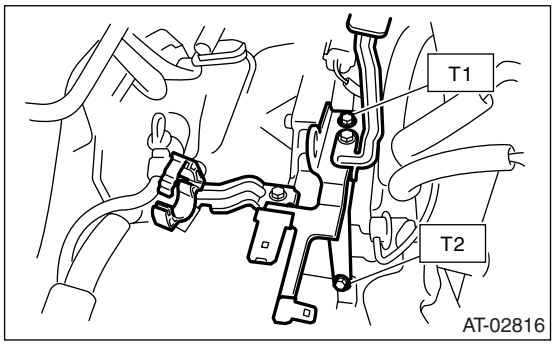

14) Install the harness connector to engine harness bracket, and then connect the harness.
15) Install the pitching stopper bracket.

Tightening torque:
41 N·m (4.2 kgf-m, 30.4 ft-lb)

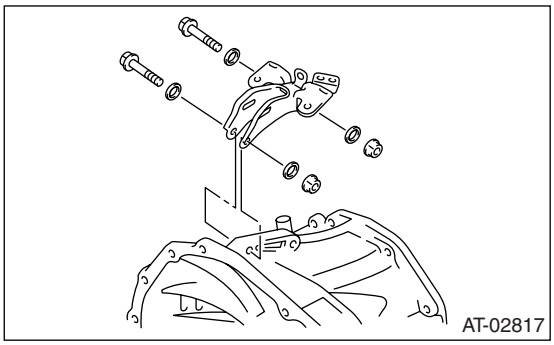

16) Install the throttle body. <Ref. to FU(H4SO)-11, INSTALLATION, Throttle Body.>
17) Install the pitching stopper.

Tightening torque:
T1: 50 N·m (5.1 kgf-m, 37 ft-lb)
T2: 58 N·m (5.9 kgf-m, 43 ft-lb)

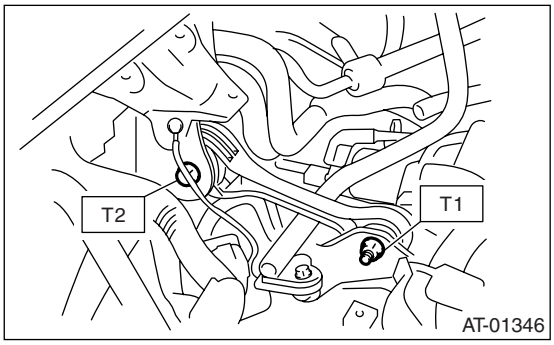

18) Lift up the vehicle.
19) Replace the snap ring of front drive shaft with a new one.
20) Apply grease to the oil seal lips.
21) Install the ST to side retainer.
ST 28399SA010 OIL SEAL PROTECTOR

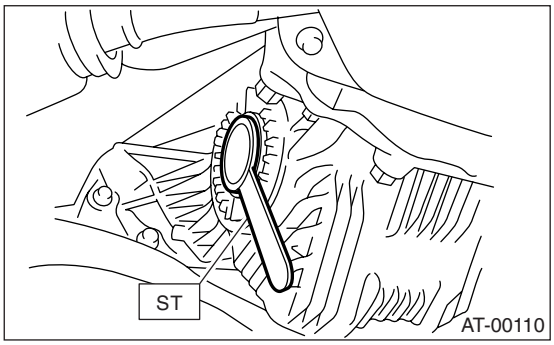

22) Align the spline of front differential shaft to that of differential bevel gear for insertion, and remove them using ST.
ST 28399SA010 OIL SEAL PROTECTOR

23) Insert the front drive shaft into transmission securely by pressing the front housing from outside.

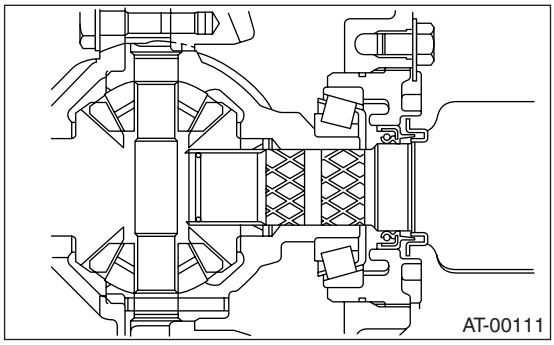

24) Install the ball joint into housing.
25) Tighten the attachment bolts.

Tightening torque:
50 N·m (5.1 kgf-m, 36.9 ft-lb)

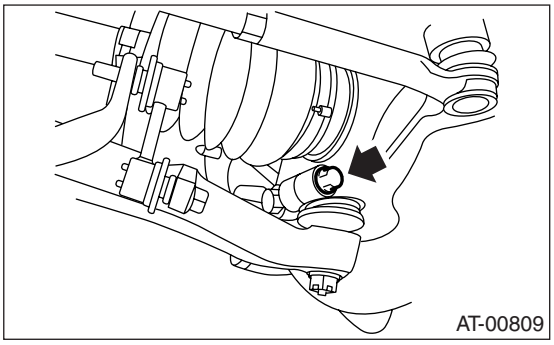

26) Install the stabilizer to crossmember.

NOTE:
• Install the bushing (on front crossmember side) while aligning it with the paint mark on stabilizer.
• Ensure the bushing and stabilizer have the same identification colors when installing.

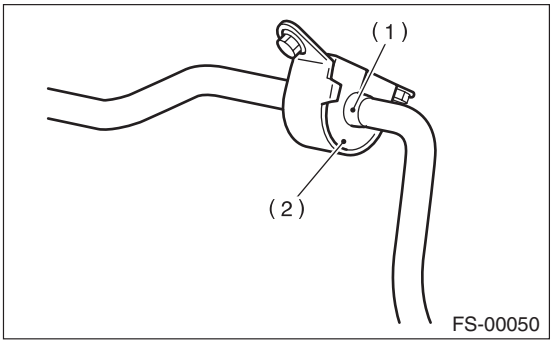

(1) Identification mark on stabilizer
(2) Bushing identification color

27) Always tighten the rubber bushing location when wheels are in full contact with the ground and vehicle is curb weight.

Tightening torque:
25 N·m (2.5 kgf-m, 18 ft-lb)

28) Install the shift select cable onto select lever.
<Ref. to CS-25, INSTALLATION, Select Cable.>
29) Install the oil charge pipe, and connect the ATF cooler hoses to pipe.

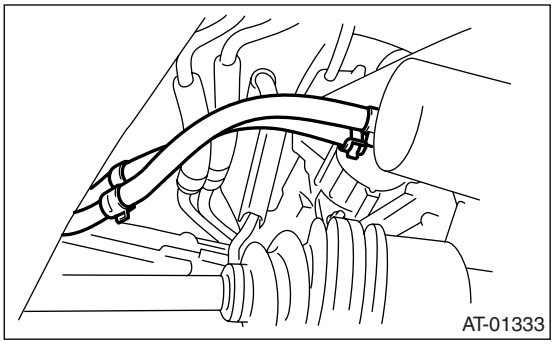

30) Install the propeller shaft.
<Ref. to DS-11, INSTALLATION, Propeller Shaft.>
31) Install the heat shield cover.

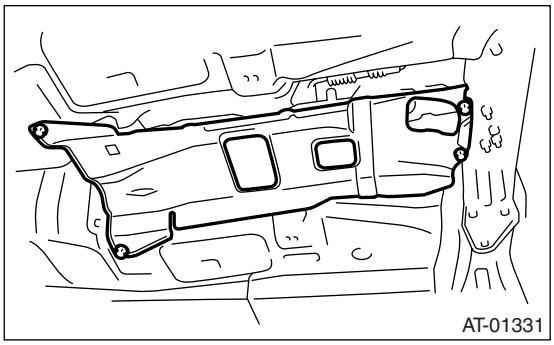

32) Install the rear exhaust pipe and muffler assembly.
<Ref. to EX(H4SO)-8, INSTALLATION, Rear Exhaust Pipe.> <Ref. to EX(H4SO)-10, INSTALLATION, Muffler.>
33) Install the front and center exhaust pipe.
<Ref. to EX(H4SO)-5, INSTALLATION, Front Exhaust Pipe.>
34) Install the under cover.
35) Lower the lift.
36) Install the ATF level gauge.

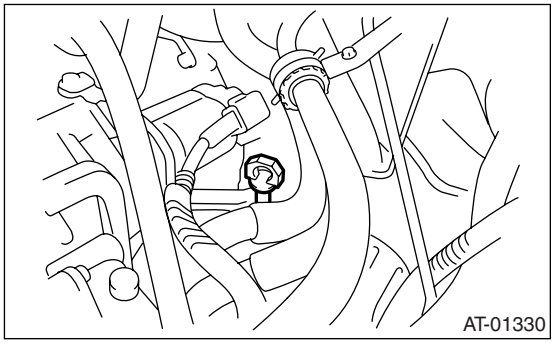

37) Connect the following connectors.
(1) Transmission harness connectors
(2) Transmission ground terminal
38) Install the air cleaner case stay.

Tightening torque:
16 N·m (1.6 kgf-m, 11.6 ft-lb)

39) Install the air intake chamber.
<Ref. to IN(H4SO)-9, INSTALLATION, Air Intake Chamber.>
40) Install the air intake duct.
<Ref. to IN(H4SO)-10, INSTALLATION, Air Intake Duct.>
41) Using a gauge hole, add the ATF until the fluid level is found at the center between upper and lower levels of level gauge “COLD” side. <Ref. to 4AT-28, Automatic Transmission Fluid.>
42) Take off the vehicle from a lift.
43) Check the level of differential gear oil. <Ref. to 4AT-30, Differential Gear Oil.>
44) Check the select lever operation.
<Ref. to 4AT-48, INSPECTION, Inhibitor Switch.>
45) Bleed the air of control valve. <Ref. to 4AT-61, Air Bleeding of Control Valve.>
46) Check the ATF level. <Ref. to 4AT-28, Automatic Transmission Fluid.>
47) Execute the learning control promotion. <Ref. to 4AT(D)(diag)-15, FACILITATION OF LEARNING CONTROL, OPERATION, Subaru Select Monitor.>
48) Perform the road test.
<Ref. to 4AT-31, Road Test.>

10.Transmission Mounting System

A: REMOVAL

1. PITCHING STOPPER

1) Remove the air intake chamber.
<Ref. to IN(H4SO)-9, REMOVAL, Air Intake Chamber.>
2) Remove the pitching stopper.

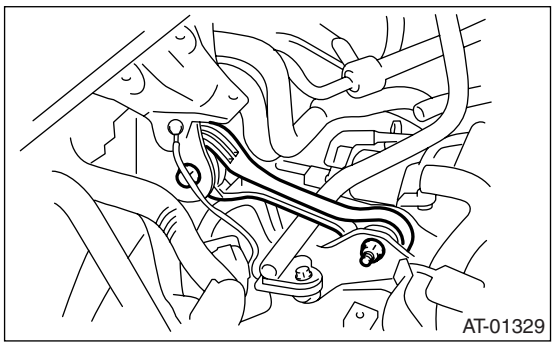

2. TRANSMISSION REAR CROSSMEMBER AND REAR CUSHION RUBBER

1) Disconnect the ground cable from battery.
2) Jack-up the vehicle and support it with rigid racks.
3) Remove the front, center, rear, exhaust pipes and muffler.
<Ref. to EX(H4SO)-4, REMOVAL, Front Exhaust Pipe.> <Ref. to EX(H4SO)-8, REMOVAL, Rear Exhaust Pipe.> <Ref. to EX(H4SO)-10, REMOVAL, Muffler.>
4) Remove the heat shield cover.
5) Set the transmission jack under the transmission. Make sure that the support plate of transmission jack does not touch the oil pan.
6) Remove the transmission rear crossmember.

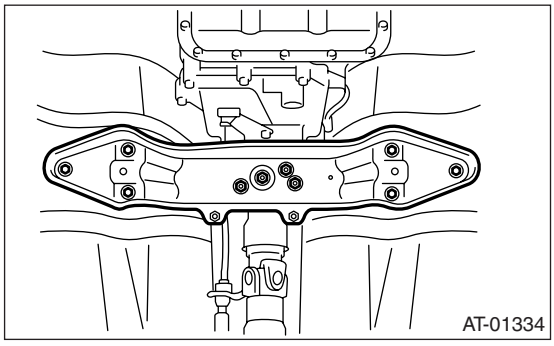

7) Remove the rear cushion rubber.

B: INSTALLATION

1. PITCHING STOPPER

1) Install the pitching stopper.

Tightening torque:
T1: 50 N·m (5.1 kgf-m, 37 ft-lb)
T2: 58 N·m (5.9 kgf-m, 43 ft-lb)

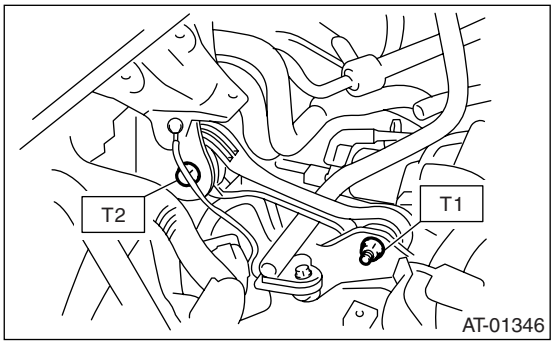

2) Install the air intake chamber.
<Ref. to IN(H4SO)-9, INSTALLATION, Air Intake Chamber.>

2. TRANSMISSION REAR CROSSMEMBER AND REAR CUSHION RUBBER

1) Install the rear cushion rubber.

Tightening torque:
40 N·m (4.1 kgf-m, 29.5 ft-lb)

2) Install the crossmember.

Tightening torque:
T1: 35 N·m (3.6 kgf-m, 26 ft-lb)
T2: 75 N·m (7.6 kgf-m, 55 ft-lb)

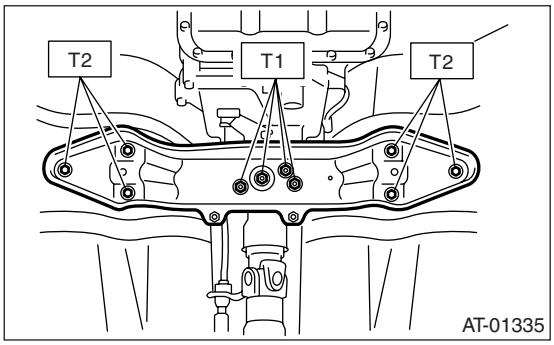

3) Remove the transmission jack.
4) Install the heat shield cover.
5) Install the front, center and rear exhaust pipes and muffler.
<Ref. to EX(H4SO)-5, INSTALLATION, Front Exhaust Pipe.> <Ref. to EX(H4SO)-8, INSTALLATION, Rear Exhaust Pipe.> <Ref. to EX(H4SO)-10, INSTALLATION, Muffler.>

C: INSPECTION

Repair or replace parts if the results of the inspection below are not satisfied.

1. PITCHING STOPPER

Make sure that the pitching stopper is not bent or damaged. Ensure there are no cracks, hardening, or damage on rubbers.

2. TRANSMISSION REAR CROSSMEMBER AND REAR CUSHION RUBBER

Make sure that the crossmember is not bent or damaged. Ensure there are no cracks, hardening, or damage on cushion rubbers.

11.Extension Case Oil Seal

A: INSPECTION

Make sure that the ATF does not leak from the joint of transmission and propeller shaft. If so, replace the oil seal. <Ref. to 4AT-46, REPLACEMENT, Extension Case Oil Seal.>

B: REPLACEMENT

1) Lift up the vehicle.
2) Clean the transmission exterior.
3) Remove the ATF drain plug to drain ATF.

CAUTION:
After running the engine or after idling for a long time, the ATF is hot. Be careful not to burn yourself.

4) Tighten the ATF drain plug.

NOTE:
Use a new gasket.

Tightening torque:
25 N·m (2.5 kgf-m, 18 ft-lb)

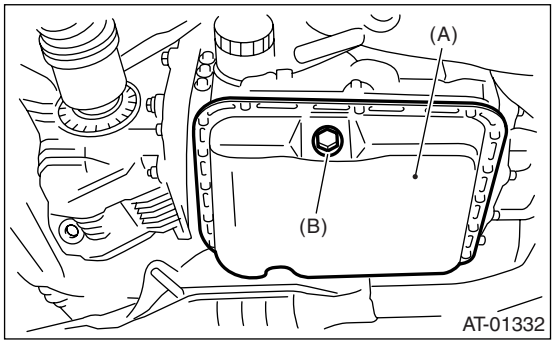

(A) Oil pan
(B) ATF drain plug

5) Remove the rear exhaust pipe and muffler.
<Ref. to EX(H4SO)-8, REMOVAL, Rear Exhaust Pipe.> <Ref. to EX(H4SO)-10, REMOVAL, Muffler.>
6) Remove the heat shield cover.
7) Remove the propeller shaft. <Ref. to DS-10, REMOVAL, Propeller Shaft.>
8) Using the ST, remove the oil seal.
ST 398527700 PULLER ASSY
9) Using the ST, install the oil seal.
ST 498057300 INSTALLER
10) Install the propeller shaft. <Ref. to DS-11, INSTALLATION, Propeller Shaft.>
11) Install the heat shield cover.
12) Install the rear exhaust pipe and muffler.
<Ref. to EX(H4SO)-8, INSTALLATION, Rear Exhaust Pipe.> <Ref. to EX(H4SO)-10, INSTALLATION, Muffler.>
13) Pour ATF into the oil charge pipe.

Recommended fluid:
SUBARU ATF (Part No. K0410Y0700), IDEMITSU "Apolloil ATF HP", Castrol "Transmax J" or DEXRON III

Capacity:
Fill the same amount of ATF drained.

14) Bleed the air of control valve.
<Ref. to 4AT-61, Air Bleeding of Control Valve.>
15) Check the level and leaks of ATF. <Ref. to 4AT-28, Automatic Transmission Fluid.>

12. Differential Side Retainer Oil Seal

A: INSPECTION

Check the leakage of gear oil from differential side retainer oil seal part. If there is oil leakage, replace the oil seal.

B: REPLACEMENT

1) Lift up the vehicle.
2) Remove the front and center exhaust pipe. <Ref. to EX(H4SO)-4, REMOVAL, Front Exhaust Pipe.>
3) Remove the differential gear oil drain plug using TORX® BIT T70, and drain the differential gear oil.

CAUTION:
• After running the engine or after idling for a long time, the differential gear oil is hot. Be careful not to burn yourself.
• Be careful not to spill the differential gear oil on exhaust pipe to prevent it from emitting smoke or fire. When the differential gear oil is spilled on exhaust pipe, wipe it away completely.

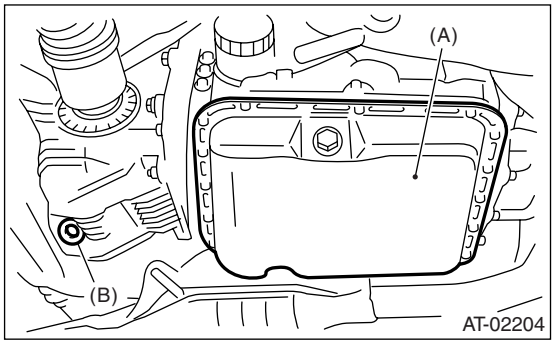

(A) Oil pan
(B) Differential gear oil drain plug

4) Tighten the differential gear oil drain plug.

NOTE:
Use a new gasket.

Tightening torque:
70 N·m (7.1 kgf-m, 51.6 ft-lb)

5) Separate the front drive shaft from transmission. <Ref. to DS-22, REMOVAL, Front Drive Shaft.>
6) Remove the differential side retainer oil seal using a driver wrapped with vinyl tape or etc.
7) Using the ST, install the differential side retainer by slightly tapping with hammer.

ST 18675AA000 DIFFERENTIAL SIDE OIL SEAL INSTALLER

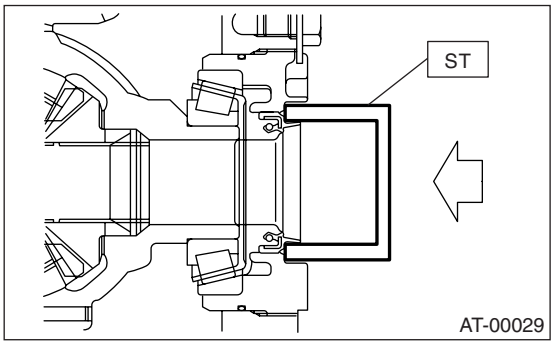

8) Apply gear oil to the oil seal lips.
9) Install the front drive shaft. <Ref. to DS-22, INSTALLATION, Front Drive Shaft.>
10) Install the front and center exhaust pipe. <Ref. to EX(H4SO)-5, INSTALLATION, Front Exhaust Pipe.>
11) Lower the vehicle.
12) Pour the gear oil into the gauge hole.

Recommended gear oil:
<Ref. to 4AT-3, RECOMMENDED GEAR OIL, SPECIFICATION, General Description.>

Differential gear oil capacity:
1.1 — 1.3 ℓ (1.3 — 1.4 US qt, 1.0 — 1.1 Imp qt)

13) Check the level of differential gear oil. <Ref. to 4AT-30, INSPECTION, Differential Gear Oil.>

13.Inhibitor Switch

A: INSPECTION

When the driving condition or starter motor operation is erroneous, first check the shift linkage for improper operation. If the shift linkage is functioning properly, check the inhibitor switch.

1) Disconnect the inhibitor switch connector.

2) Check continuity in inhibitor switch circuits with the select lever moved to each position.

NOTE:

• Also check that continuity in ignition circuit does not exist when the select lever is in “R” and “D” ranges.

• If the inhibitor switch is inoperative, check for poor contact of connector on transmission side.

	Range	Pin No.
Signal sent to TCM	P	4 — 3
	R	4 — 2
	N	4 — 1
	D	4 — 8
Ignition circuit	P/N	12 — 11
Back-up light circuit	R	10 — 9

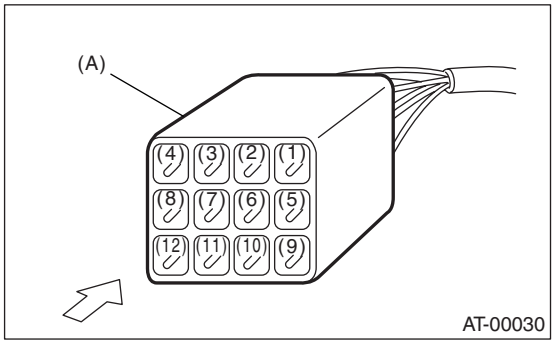

(A) Inhibitor switch connector

3) Check there is continuity at equal points when the select lever is turned 1.5° in both directions from “N” range.

If there is continuity in one direction or in other points, adjust the inhibitor switch. <Ref. to 4AT-48, ADJUSTMENT, Inhibitor Switch.>

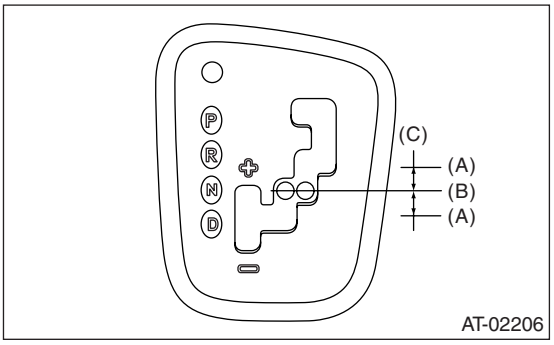

(A) Continuity does not exist.

(B) Continuity exists.

(C) 1.5°

4) Repeat the above checks. If there are abnormalities, adjust the select cable. <Ref. to CS-26, ADJUSTMENT, Select Cable.>

B: ADJUSTMENT

1) Set the select lever to “N” range.

2) Loosen the three inhibitor switch securing bolts.

3) Insert the ST as vertical as possible into the holes in the inhibitor switch lever and switch body.

ST 499267300 STOPPER PIN

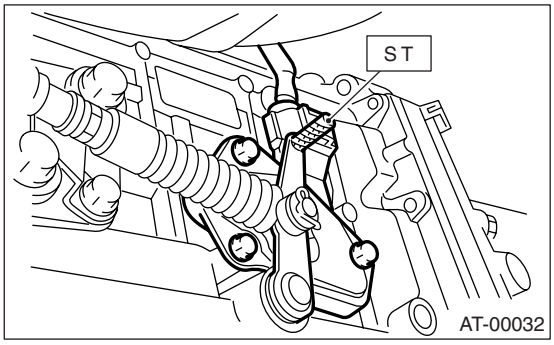

4) Tighten the three inhibitor switch securing bolts.

Tightening torque:

3.4 N·m (0.35 kgf-m, 2.5 ft-lb)

5) Repeat the above checks. If the inhibitor switch is determined to be “faulty”, replace it.

C: REMOVAL

1) Set the vehicle on a lift.

2) Set the select lever to “N” range.

3) Remove the air intake chamber.

<Ref. to IN(H4SO)-9, REMOVAL, Air Intake Chamber.>

4) Disconnect the inhibitor switch connector.

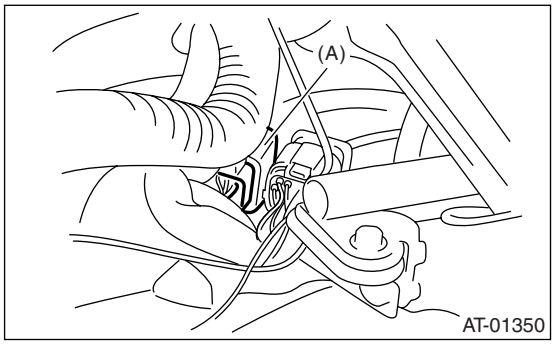

(A) Inhibitor switch connector

5) Remove the inhibitor switch connector from stay.
6) Lift up the vehicle.
7) Remove the front and center exhaust pipe.
<Ref. to EX(H4SO)-4, REMOVAL, Front Exhaust Pipe.>
8) Remove the snap pin and washers from range select lever.

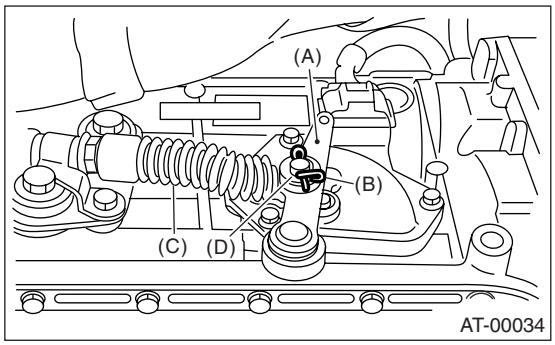

(A) Range select lever
(B) Snap pin
(C) Select cable
(D) Washer

9) Remove the plate assembly from transmission case.

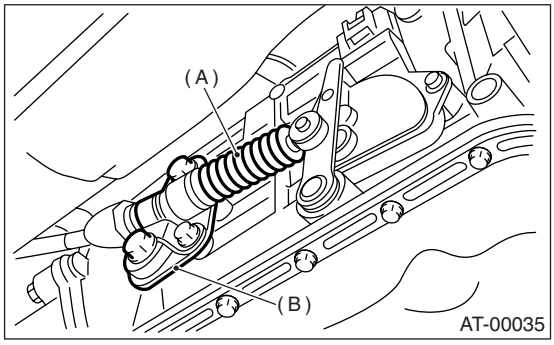

(A) Select cable
(B) Plate ASSY

10) Remove the three bolts which secure inhibitor switch.

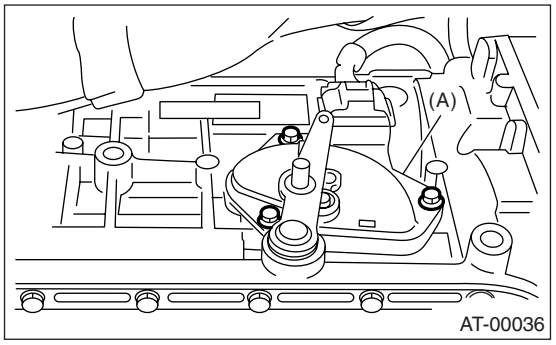

(A) Inhibitor switch

11) Shift the range select lever to parking position (left side).

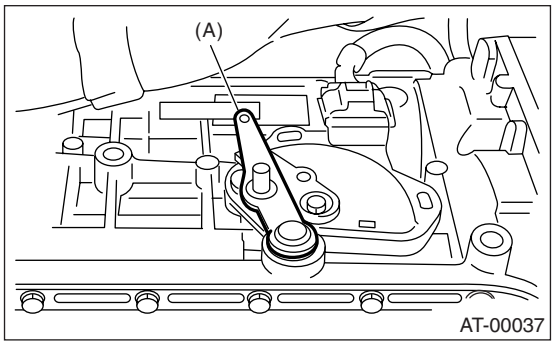

(A) Range select lever

12) Remove the inhibitor switch from transmission.

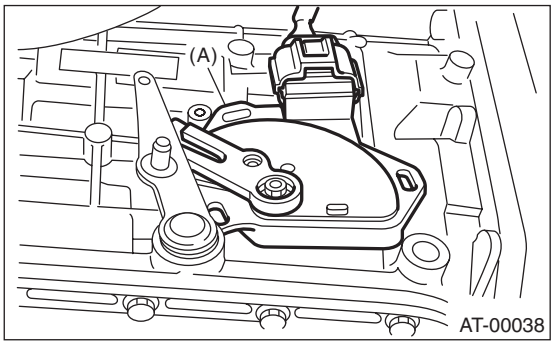

(A) Inhibitor switch

13) Disconnect the inhibitor switch harness connector from inhibitor switch.

D: INSTALLATION

1) Connect the inhibitor switch harness connector to inhibitor switch.

2) Install the inhibitor switch to transmission case.

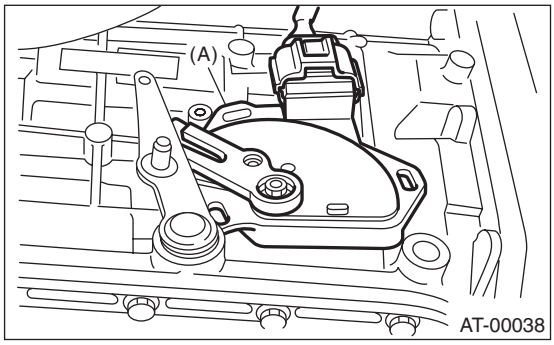

(A) Inhibitor switch

3) Move the range select lever to neutral position.
4) Tighten the three inhibitor switch securing bolts using ST.
ST 499267300 STOPPER PIN

Tightening torque:
3.5 N·m (0.36 kgf-m, 2.6 ft-lb)

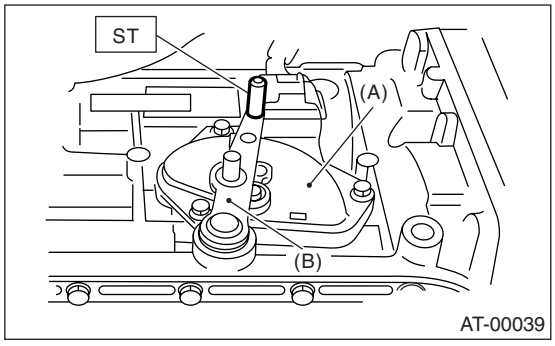

(A) Inhibitor switch
(B) Range select lever

5) Install the select cable to range select lever.
6) Install the plate assembly to transmission.

Tightening torque:
T: 25 N·m (2.5 kgf-m, 18 ft-lb)

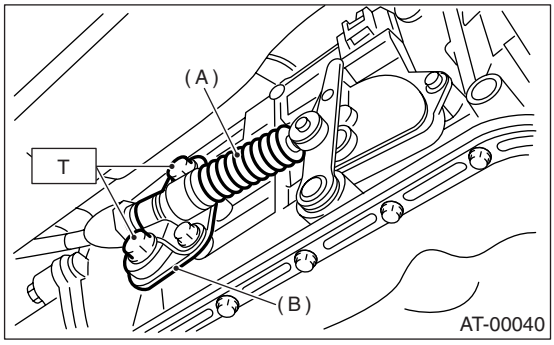

(A) Select cable
(B) Plate ASSY

7) Install the washer and snap pin to range select lever.

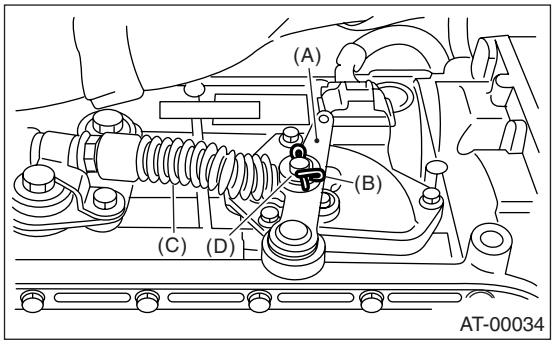

(A) Range select lever
(B) Snap ring
(C) Select cable
(D) Washer

8) Install the front and center exhaust pipe.
<Ref. to EX(H4SO)-5, INSTALLATION, Front Exhaust Pipe.>
9) Lower the vehicle.
10) Install the inhibitor switch connector to the stay.
11) Connect the inhibitor switch connector.

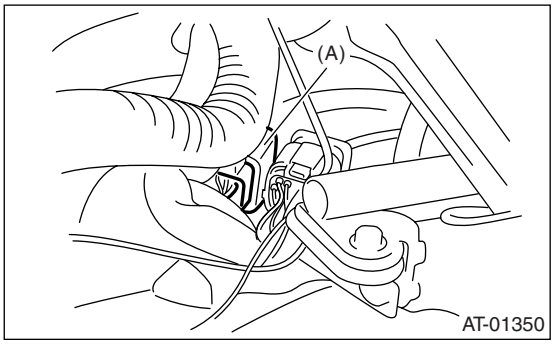

(A) Inhibitor switch connector

12) Install the air intake chamber.
<Ref. to IN(H4SO)-9, INSTALLATION, Air Intake Chamber.>
13) Inspect the inhibitor switch. <Ref. to 4AT-48, INSPECTION, Inhibitor Switch.>

14.Front Vehicle Speed Sensor

A: REMOVAL

1) Set the vehicle on a lift.
2) Disconnect the ground cable from battery.
3) Remove the air intake chamber.
<Ref. to IN(H4SO)-9, REMOVAL, Air Intake Chamber.>
4) Disconnect the transmission connector.

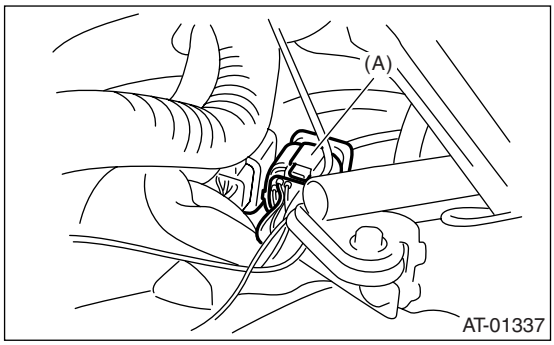

(A) Transmission connector

5) Remove the pitching stopper. <Ref. to 4AT-44, REMOVAL, Transmission Mounting System.>
6) Remove the transmission connector from the stay.
7) Lift up the vehicle.
8) Clean the transmission exterior.
9) Remove the ATF drain plug to drain ATF.

CAUTION:
After running the engine or after idling for a long time, the ATF is hot. Be careful not to burn yourself.

10) Tighten the ATF drain plug.

NOTE:
Use a new gasket.

Tightening torque:
25 N·m (2.5 kgf-m, 18 ft-lb)

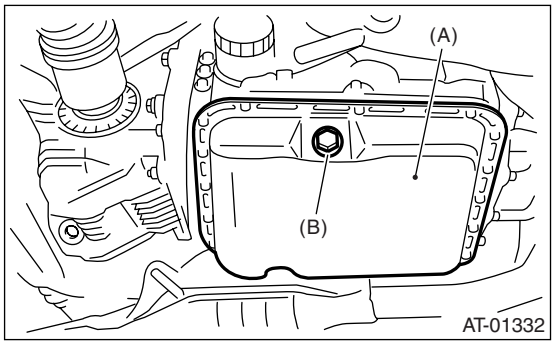

(A) Oil pan
(B) ATF drain plug

11) Remove the front, center and rear exhaust pipes and muffler. <Ref. to EX(H4SO)-4, REMOVAL, Front Exhaust Pipe.> <Ref. to EX(H4SO)-8, REMOVAL, Rear Exhaust Pipe.> <Ref. to EX(H4SO)-10, REMOVAL, Muffler.>
12) Remove the shield cover.
13) Remove the propeller shaft. <Ref. to DS-10, REMOVAL, Propeller Shaft.>
14) Place the transmission jack under transmission.

NOTE:
Make sure that the support plates of transmission jack does not touch the oil pan.

15) Remove the transmission rear crossmember bolt.

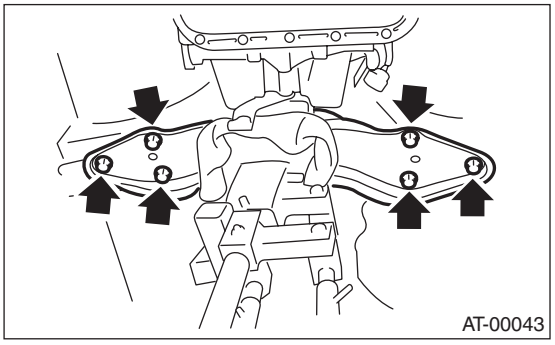

16) Lower the transmission jack.

NOTE:
Do not separate the transmission jack and transmission.

17) Remove the oil cooler inlet and outlet pipes.

NOTE:
When removing the outlet pipe, be careful not to lose the ball and spring used with retaining screw.

18) Remove the front vehicle speed sensor and torque converter turbine speed sensor.

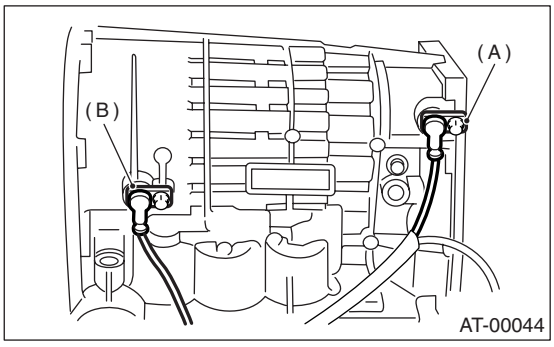

(A) Front vehicle speed sensor
(B) Torque converter turbine speed sensor

19) Disconnect the connector from rear vehicle speed sensor.

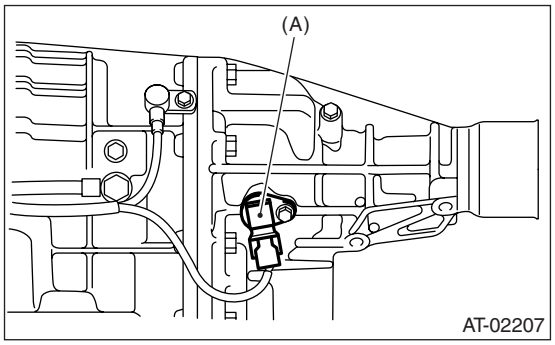

(A) Rear vehicle speed sensor

20) Remove the oil pan.
21) Disconnect the harness connector and transmission ground terminal.

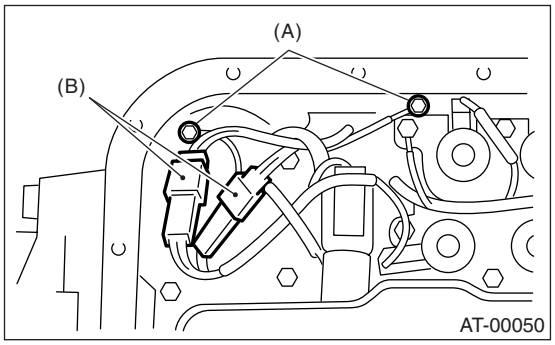

(A) Transmission ground
(B) Harness connector

22) Remove the harness assembly.

B: INSTALLATION

1) Pass the harness assembly through the hole in transmission case.

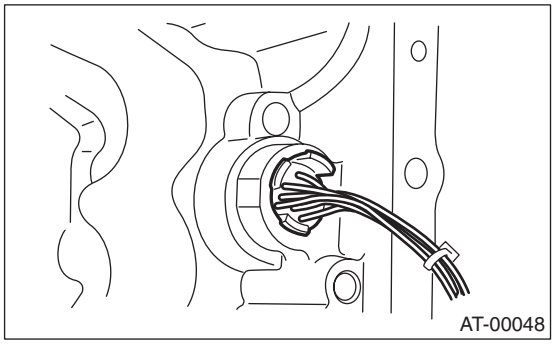

2) Connect the harness connector and transmission ground.

Tightening torque:
8 N·m (0.8 kgf-m, 5.8 ft-lb)

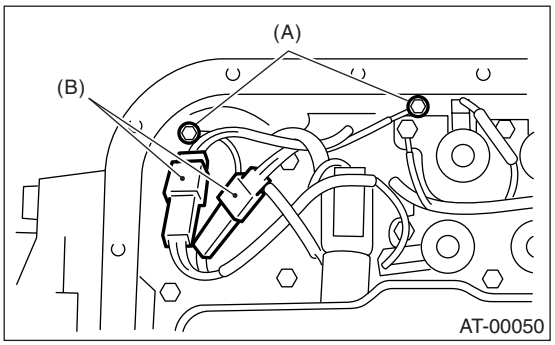

(A) Transmission ground
(B) Harness connector

3) Apply proper amount of liquid gasket to the entire oil pan mating surface.

Liquid gasket:
THREE BOND 1217B (Part No. K0877YA020)

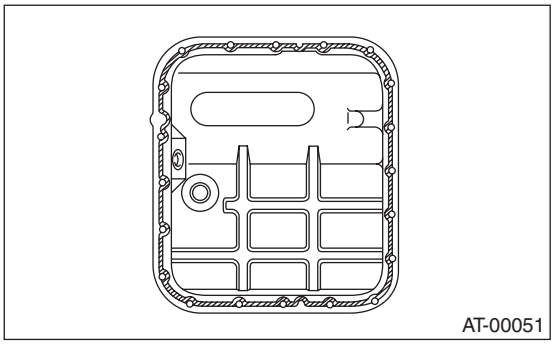

4) Apply liquid gasket fully to the three holes other than screw holes on the transmission case

Liquid gasket:
THREE BOND 1217B (Part No. K0877YA020)

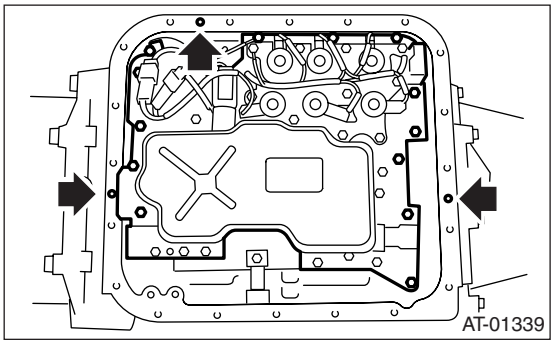

5) Install the oil pan.

Tightening torque:
5 N·m (0.5 kgf-m, 3.6 ft-lb)

6) Install the front vehicle speed sensor and torque converter turbine speed sensor.

Tightening torque:
7 N·m (0.7 kgf-m, 5.1 ft-lb)

7) Connect the connector to rear vehicle speed sensor.
8) Install the oil cooler pipe.

NOTE:
Use a copper washer.

Tightening torque:
T1: 25 N·m (2.5 kgf-m, 18 ft-lb)
T2: 44 N·m (4.5 kgf-m, 32.5 ft-lb)

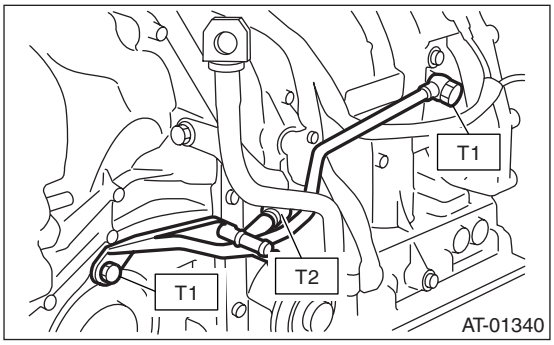

9) Install the transmission rear crossmember bolt.

Tightening torque:
75 N·m (7.6 kgf-m, 55 ft-lb)

10) Install the propeller shaft. <Ref. to DS-11, INSTALLATION, Propeller Shaft.>
11) Install the shield cover.
12) Install the front, center and rear exhaust pipes and muffler. <Ref. to EX(H4SO)-5, INSTALLATION, Front Exhaust Pipe.> <Ref. to EX(H4SO)-8, INSTALLATION, Rear Exhaust Pipe.> <Ref. to EX(H4SO)-10, INSTALLATION, Muffler.>
13) Lower the vehicle.
14) Install the transmission connector to the stay.
15) Install the pitching stopper. <Ref. to 4AT-44, INSTALLATION, Transmission Mounting System.>
16) Install the air intake chamber.
<Ref. to IN(H4SO)-9, INSTALLATION, Air Intake Chamber.>
17) Fill the same amount of ATF drained.
18) Bleed the air of control valve.
<Ref. to 4AT-61, Air Bleeding of Control Valve.>
19) Check the level of ATF. <Ref. to 4AT-28, Automatic Transmission Fluid.>
20) Execute the learning control promotion. <Ref. to 4AT(D)(diag)-15, FACILITATION OF LEARNING CONTROL, OPERATION, Subaru Select Monitor.>

15.Rear Vehicle Speed Sensor

A: REMOVAL

1) Set the vehicle on a lift, and then lift up the vehicle.
2) Disconnect the connector from rear vehicle speed sensor.

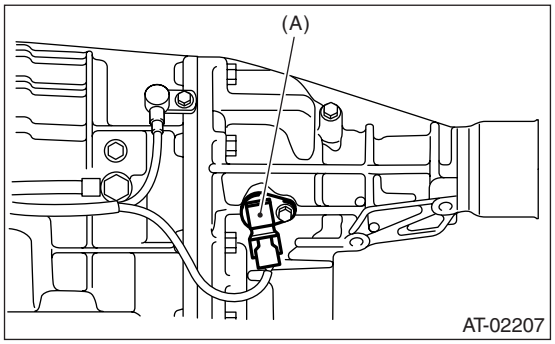

(A) Rear vehicle speed sensor

3) Remove the rear vehicle speed sensor.

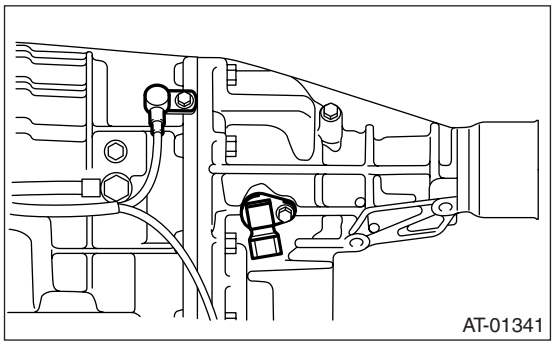

B: INSTALLATION

Install in the reverse order of removal.

NOTE:
Replace O-ring with a new one.

Tightening torque:
7 N·m (0.7 kgf-m, 5.1 ft-lb)

16. Torque Converter Turbine Speed Sensor

A: REMOVAL

For removal procedure of torque converter turbine speed sensor, refer to “Front Vehicle Speed Sensor”. <Ref. to 4AT-51, REMOVAL, Front Vehicle Speed Sensor.>

B: INSTALLATION

For installation procedure of torque converter turbine speed sensor, refer to “Front Vehicle Speed Sensor”. <Ref. to 4AT-52, INSTALLATION, Front Vehicle Speed Sensor.>

17.Control Valve Strainer

A: REMOVAL

1) Set the vehicle on a lift.
2) Disconnect the ground cable from the battery.
3) Lift up the vehicle.
4) Clean the transmission exterior.
5) Remove the drain plug (ATF) to drain the ATF.

CAUTION:
The ATF will be extremely hot after driving. Be careful not to receive burns.

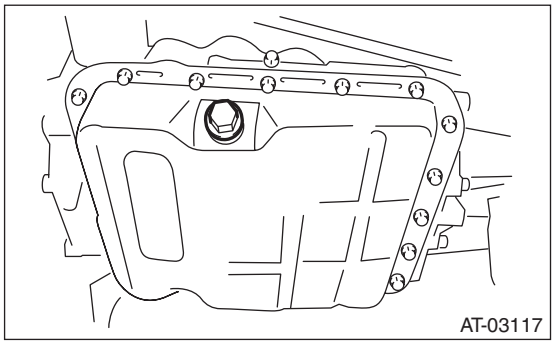

6) Perform replacement with a new gasket, and tighten the drain plug (ATF).

Tightening torque:
25 N·m (2.5 kgf-m, 18.4 ft-lb)

7) Remove the oil pan.

CAUTION:
Be careful not to allow foreign matter such as dust or dirt to enter the oil pan.

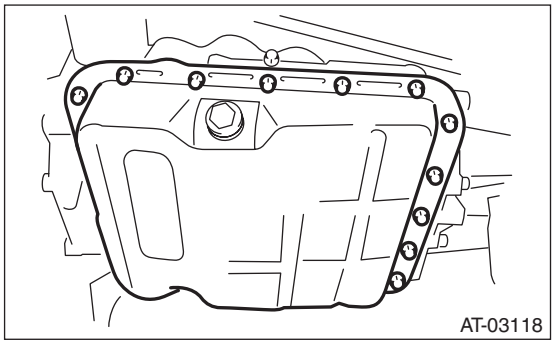

8) Remove the magnet.
9) Clean the magnet.
10) Completely remove the remaining liquid gasket on the transmission case and oil pan.
11) Remove the control valve strainer tightening bolt, and remove control valve strainer from the control valve body.

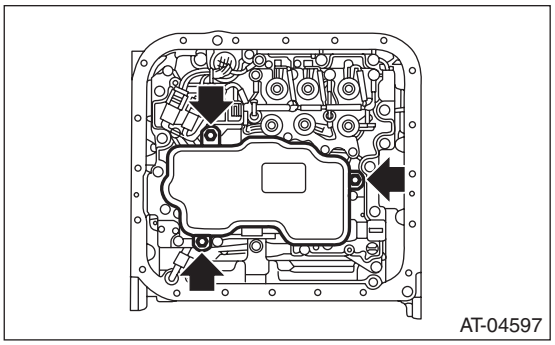

B: INSTALLATION

1) Check the control valve body for dust and other foreign matter.
2) Mount new control valve strainer to the control valve body.
   (1) Apply ATF to the entire perimeter of the O-ring on the control valve strainer.

CAUTION:
Protect the O-ring from dust and dirt while applying ATF.

   (2) Install the control valve strainer to the control valve body from the O-ring side.

CAUTION:
If the control valve strainer is pushed in at an angle, the O-ring may be damaged. Be sure to push in the control valve strainer straight to install.

   (3) Tighten the three bolts.

Tightening torque:
10 N·m (1.0 kgf-m, 7.4 ft-lb)

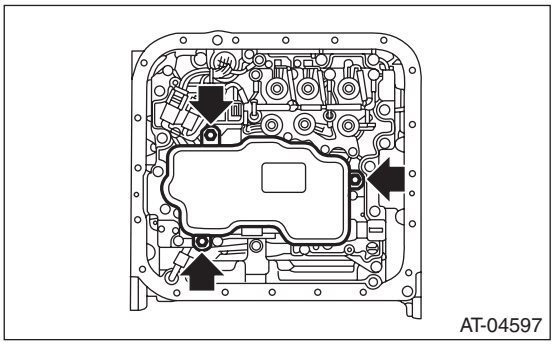

3) Attach the magnet at the specified position of the oil pan.

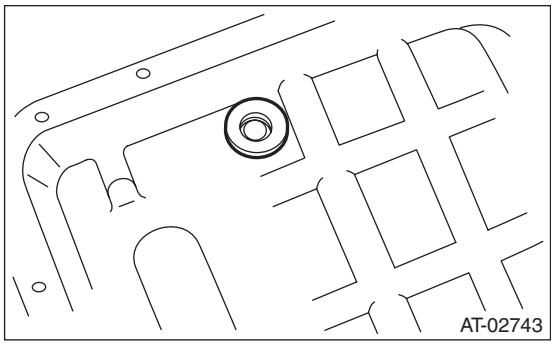

4) Apply proper amount of liquid gasket to the entire oil pan mating surface.

Liquid gasket:
THREE BOND 1217B (Part No. K0877YA020) or equivalent

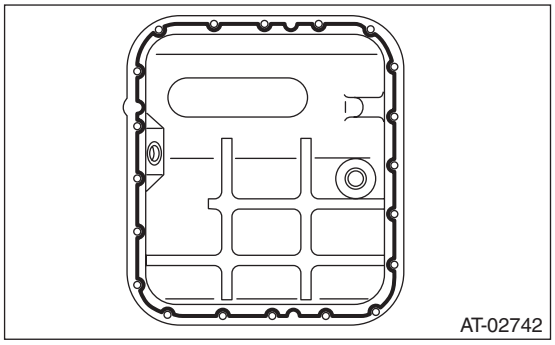

5) Fill the three holes aside from the bolt holes in the transmission case, with liquid gasket.

Liquid gasket:
THREE BOND 1217B (Part No. K0877YA020) or equivalent

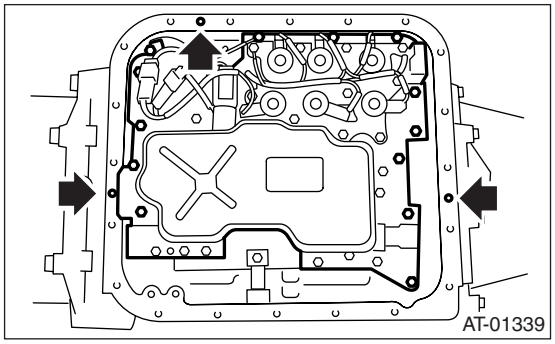

6) Install the oil pan by equally tightening the bolts.

Tightening torque:
5 N·m (0.5 kgf-m, 3.7 ft-lb)

7) Fill ATF from the oil charge pipe.

Recommended fluid:
<Ref. to 4AT-3, HYDRAULIC CONTROL AND LUBRICATION, SPECIFICATION, General Description.>

Capacity:
Fill with the same amount of ATF as drained.

8) Bleed the air of control valve. <Ref. to 4AT-61, Air Bleeding of Control Valve.>
9) Check the ATF level. <Ref. to 4AT-28, Automatic Transmission Fluid.>

C: INSPECTION

Check the control valve strainer for holes, damages or adhesion of dust and other foreign particles.

18.Control Valve Body

A: REMOVAL

1) Set the vehicle on a lift.
2) Disconnect the ground cable from battery.
3) Lift up the vehicle.
4) Clean the transmission exterior.
5) Remove the ATF drain plug to drain ATF.

CAUTION:
After running the engine or after idling for a long time, the ATF is hot. Be careful not to burn yourself.

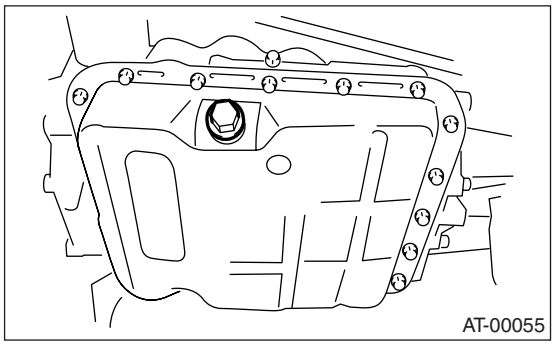
AT-00055

6) Tighten the ATF drain plug.

NOTE:
Use a new gasket.

Tightening torque:
25 N·m (2.5 kgf-m, 18 ft-lb)

7) Remove the oil pan.

CAUTION:
Be sure to prevent the entering of dust and other foreign matters into oil pan.

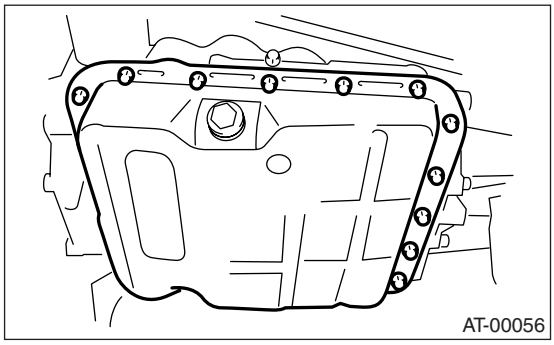
AT-00056

8) Remove the magnet.

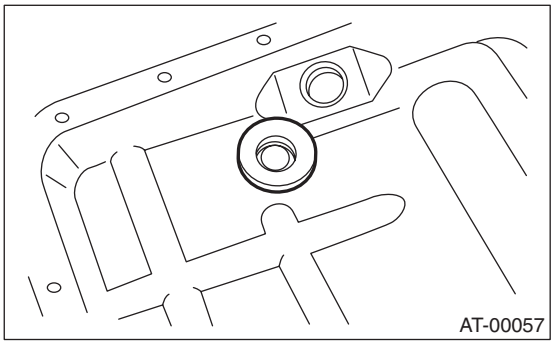
AT-00057

9) Clean the magnet.
10) Completely remove the remaining liquid gasket on transmission case and oil pan.
11) Disconnect the control valve connector.

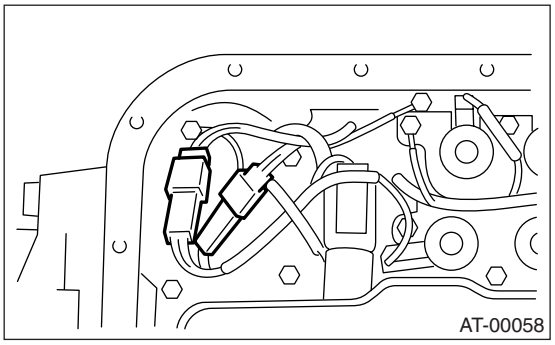
AT-00058

12) Remove the oil cooler pipe.

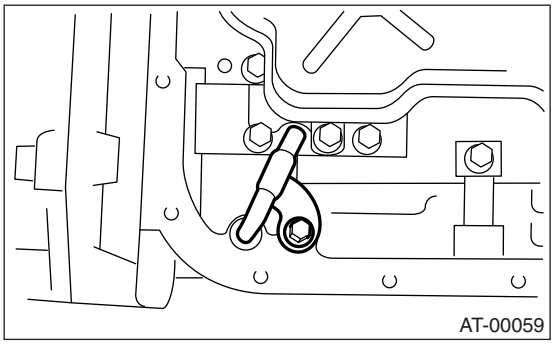
AT-00059

13) Remove the control valve body.

NOTE:
Replace the control valve body as assembly, because it is non-disassemble part.

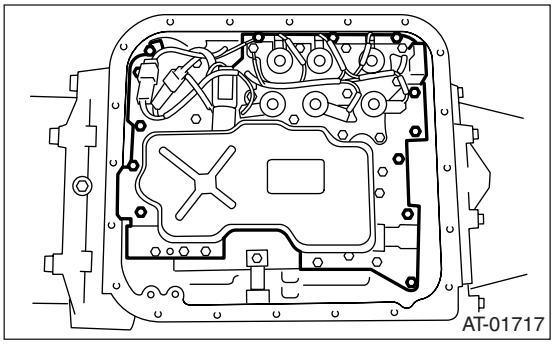
AT-01717

B: INSTALLATION

1) Check that the dust and other foreign matters are not on control valve body.
2) Temporarily install the control valve body to transmission.
3) Install the oil cooler pipe.

Tightening torque:
8 N·m (0.8 kgf-m, 5.8 ft-lb)

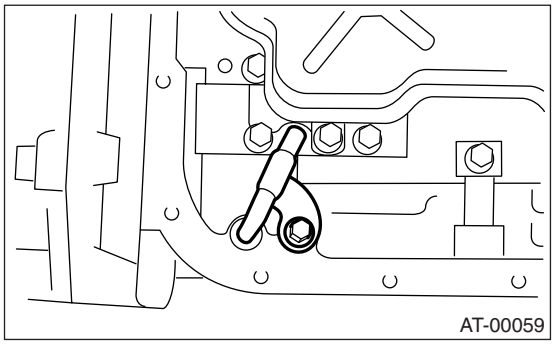

4) Tighten the bolts equally.

Tightening torque:
8 N·m (0.8 kgf-m, 5.8 ft-lb)

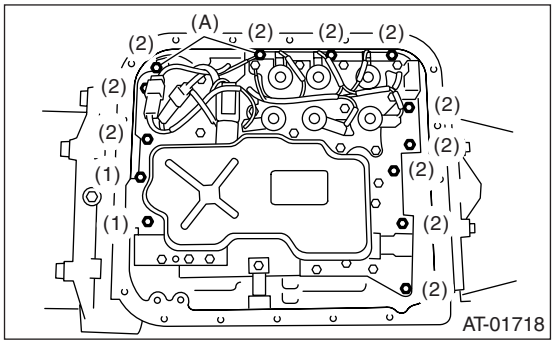

(A) Transmission ground
Bolt length mm (in)
(1) 35 (1.38)
(2) 30 (1.18)

5) Connect the control valve connector.

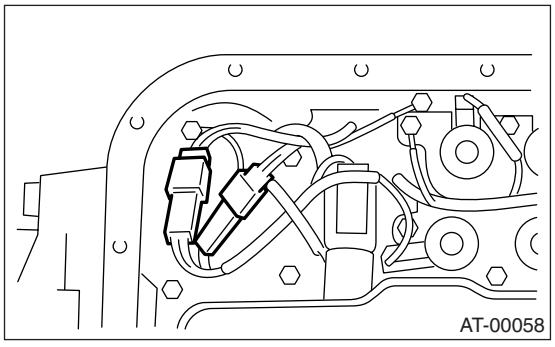

6) Attach the magnet at the specified position of oil pan.

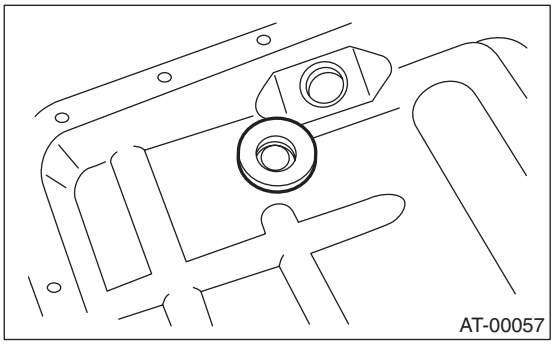

7) Apply liquid gasket to the oil pan.

Liquid gasket:
THREE BOND 1217B (Part No. K0877YA020)

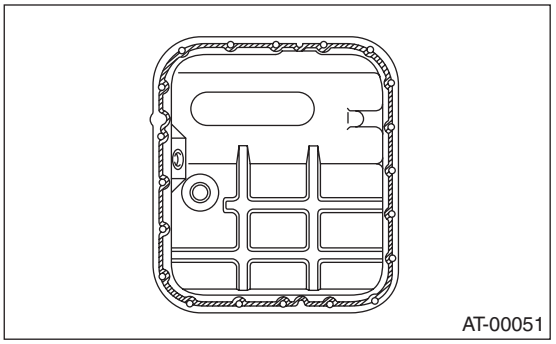

8) Fill liquid gasket to the holes except for bolt holes (three) of transmission case.

Liquid gasket:
THREE BOND 1217B (Part No. K0877YA020)

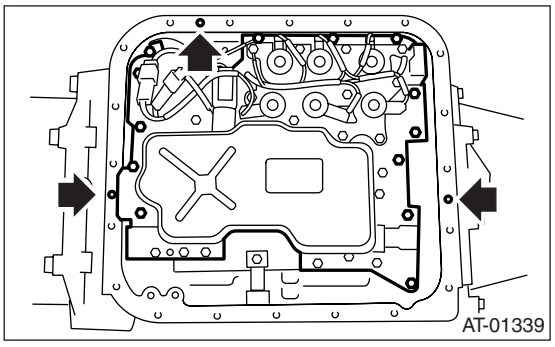

9) Install the oil pan with equally tighten the bolts.

Tightening torque:
5 N·m (0.5 kgf-m, 3.6 ft-lb)

10) Fill ATF from oil charge pipe.

Recommended fluid:
SUBARU ATF (Part No. K0410Y0700), IDEMITSU "Apolloil ATF HP", Castrol "Transmax J" or DEXRON III

Capacity:
Fill the same amount of ATF drained.

11) Bleed the air of control valve. <Ref. to 4AT-61, Air Bleeding of Control Valve.>
12) Check the ATF level.
<Ref. to 4AT-28, Automatic Transmission Fluid.>
13) Execute the learning control promotion. <Ref. to 4AT(D)(diag)-15, FACILITATION OF LEARNING CONTROL, OPERATION, Subaru Select Monitor.>

C: INSPECTION

Check that the holes, damages or other foreign matters are not on each parts.

19.Air Bleeding of Control Valve

A: PROCEDURE

1) Lift up the vehicle with setting the select lever to “P” range and applying the parking brake.
2) Connect the Subaru Select Monitor to the vehicle.
3) Using Subaru Select Monitor, check that the DTC is not output.
4) Using Subaru Select Monitor, check that the ATF temperature is less than 60°C (140°F). <Ref. to 4AT(D)(diag)-14, OPERATION, Subaru Select Monitor.>
5) Turn the Subaru Select Monitor switch to OFF.
6) Release the manual mode, and then turn the ignition switch to OFF.
7) Set the select lever to “R” range.
8) Depress the brake pedal fully until the air bleeding is completed.
9) Turn the ignition switch to ON.
10) Set the select lever to “P” range, and then wait for more than 3 seconds.
11) Set the select lever to “R” range, and then wait for more than 3 seconds.
12) Set the select lever to “N” range, and then wait for more than 3 seconds.
13) Set the select lever to “D” range, and then wait for more than 3 seconds.
14) Set the select lever to “N” range, and then wait for more than 3 seconds.
15) Slowly depress the accelerator pedal fully.
16) Slowly release the accelerator pedal fully.
17) Start the engine.
18) Set the select lever to “D” range.
19) Turn the Subaru Select Monitor switch to ON.
20) Select {Each System Check} in «Main Menu» of Subaru Select Monitor.
21) On the «System Selection Menu» display screen, select “Transmission”. Air bleeding of control valve starts on transmission. At this time, the SPORT indicator light in combination meter blinks at 2 Hz. When the SPORT indicator light does not blink, repeat the procedures from step 4).
22) Air bleeding of control valve is finished when blinking of SPORT indicator light in combination meter goes off from 2 Hz.

NOTE:
When blinking of SPORT indicator light changes from 2 Hz to 4 Hz during air bleeding, repeat the procedure from step 4).

23) Set the select lever to “N” range, and then turn the ignition switch to OFF.
24) Set the select lever to “P” range, and then finish the air bleeding.

20.ATF Filter

A: REMOVAL

1. EXCEPT FOR U5 MODEL

NOTE:
The ATF filter is maintenance free.

1) Lift up the vehicle.
2) Using the ST, remove the ATF filter.
ST 498545400 OIL FILTER WRENCH

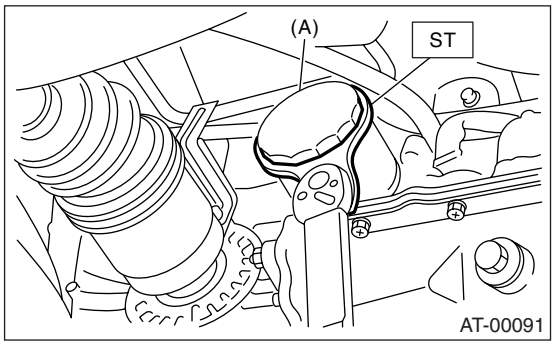

(A) ATF filter

2. U5 MODEL

NOTE:
ATF filter is maintenance free.

1) Remove the battery from vehicle. <Ref. to SC(H4SO)-26, REMOVAL, Battery.>
2) Remove the harness securing bracket.

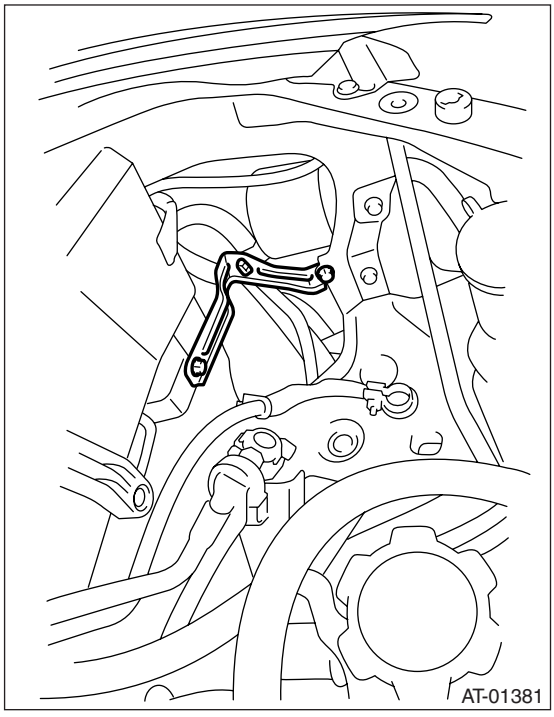

3) Using the ST, remove the ATF filter.
ST 498545400 OIL FILTER WRENCH

B: INSTALLATION

1. EXCEPT FOR U5 MODEL

1) Apply a thin coat of ATF to the oil seal part of new ATF filter.
2) Install the ATF filter. Turn it by hand, being careful not to damage oil seal.
3) Tighten the ATF filter using ST.
Calculate the ATF filter tightening torque using following formula.
$T2 = L2/(L1 + L2) \times T1$
T1: 14 N·m (1.4 kgf-m, 10.1 ft-lb)
[Required torque setting]
T2: Tightening torque
L1: ST length 78 mm (3.07 in)
L2: Torque wrench length
Example:

Torque wrench length mm (in)	Tightening torque N·m (kgf-m, ft-lb)
100 (3.94)	7.7 (0.79, 5.7)
150 (5.91)	9.0 (0.92, 6.7)
200 (7.87)	10 (1.0, 7.2)

NOTE:
Install the ST straightly to converter case.
ST 498545400 OIL FILTER WRENCH
4) Fill the ATF.
5) Inspect the level of ATF. <Ref. to 4AT-28, Automatic Transmission Fluid.>

2. U5 MODEL

1) Apply a thin coat of ATF to the oil seal part of new ATF filter.
2) Install the ATF filter. Turn it by hand, being careful not to damage oil seal.
3) Tighten the ATF filter using ST.
Calculate the ATF filter tightening torque using following formula.
$T2 = L2/(L1 + L2) \times T1$
T1: 14 N·m (1.4 kgf-m, 10.1 ft-lb)
[Required torque setting]
T2: Tightening torque
L1: ST length 78 mm (3.07 in)
L2: Torque wrench length
Example:

Torque wrench length mm (in)	Tightening torque N·m (kgf-m, ft-lb)
100 (3.94)	7.7 (0.79, 5.7)
150 (5.91)	9.0 (0.92, 6.7)
200 (7.87)	10 (1.0, 7.2)

NOTE:
Align the ST with torque wrench while tightening the ATF filter.

ST 498545400 OIL FILTER WRENCH
4) Fill ATF.
5) Inspect the level of ATF. <Ref. to 4AT-28, Automatic Transmission Fluid.>
6) Install the harness securing bracket.
7) Install the battery. <Ref. to SC(H4SO)-26, INSTALLATION, Battery.>

C: INSPECTION

Check for rust, hole, ATF leaks, and other damage.

21.Transmission Control Module (TCM)

A: REMOVAL

1) Disconnect the ground cable from battery.
2) Remove the instrument panel lower cover and remove connector.
3) Disconnect the connector from TCM.

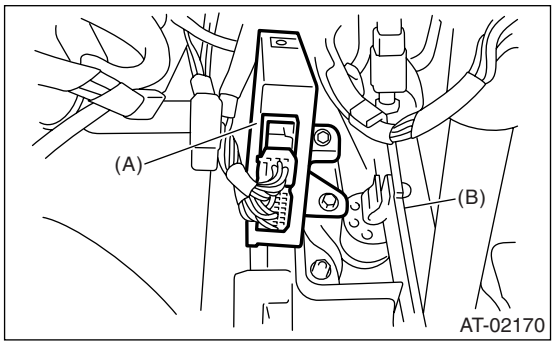

(A) Transmission control module (TCM)
(B) Brake pedal

4) Remove the TCM.

B: INSTALLATION

1) Install the TCM.

Tightening torque:
7.5 N·m (0.76 kgf-m, 5.5 ft-lb)

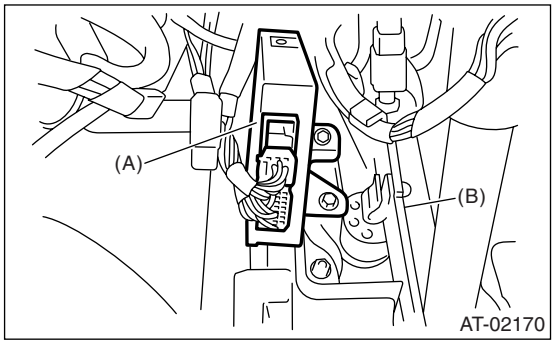

(A) Transmission control module (TCM)
(B) Brake pedal

2) Connect the connector to TCM.
3) Install in the reverse order of removal.
4) Execute the learning control promotion. <Ref. to 4AT(D)(diag)-15, FACILITATION OF LEARNING CONTROL, OPERATION, Subaru Select Monitor.>

22.ATF Cooler Pipe and Hose

A: REMOVAL

1. EXCEPT FOR U5 MODEL

1) Set the vehicle on a lift.
2) Remove the battery.
3) Lift up the vehicle.
4) Remove the under cover.
5) Disconnect the ATF cooler hose from radiator.

NOTE:
• Do not use a screwdriver or other pointed tools.
• When hard to remove the hose, wrap the hose with cloth to prevent from damaging, and then turn with pliers and pull out with hand straightly.

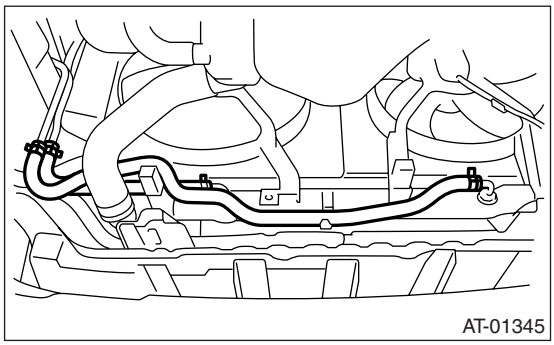

6) Disconnect the ATF cooler hoses from pipes.

NOTE:
• Do not use a screwdriver or other pointed tools.
• When hard to remove the hose, wrap the hose with cloth to prevent from damaging, and then turn with pliers and pull out with hand straightly.

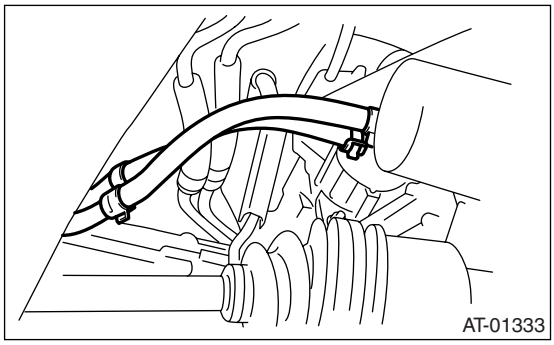

7) Disconnect the ATF cooler pipe from frame.

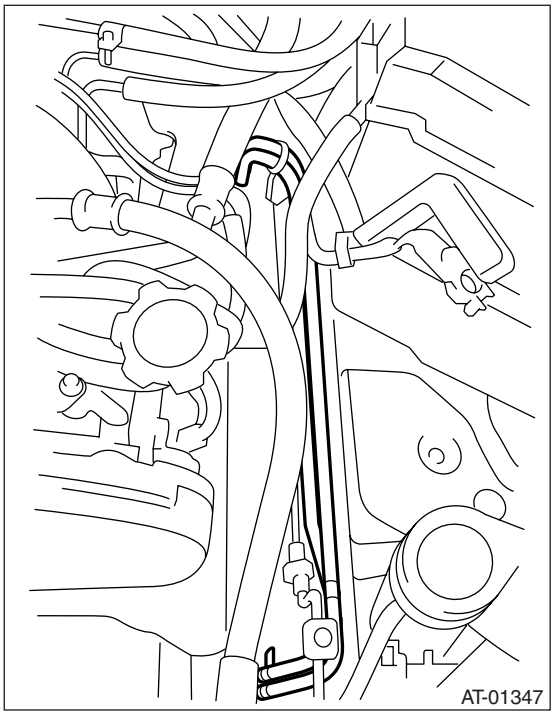

8) Remove the oil cooler inlet and outlet pipes.

NOTE:
When disconnecting the outlet pipe, be careful not to lose the ball and spring used with retaining screw.

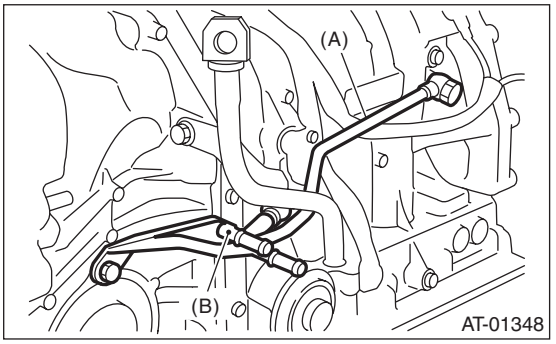

(A) Inlet pipe
(B) Outlet pipe

2. U5 MODEL

1) Set the vehicle on a lift.
2) Remove the battery.
3) Lift up the vehicle.
4) Remove the under cover.
5) Disconnect the ATF cooler hose from radiator.

NOTE:
• Do not use a screwdriver or other pointed tools.

• When hard to remove the hose, wrap the hose with cloth to prevent from damaging, and then turn with pliers and pull out with hand straightly.

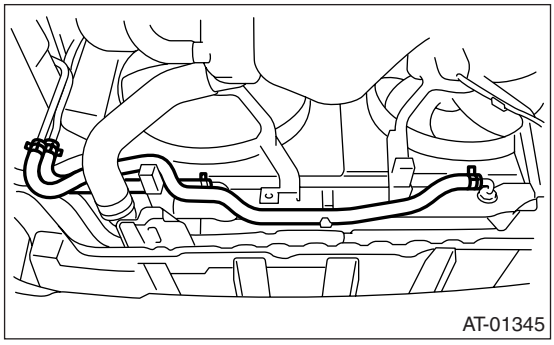

6) Disconnect the ATF cooler hoses from pipes.

NOTE:
• Do not use a screwdriver or other pointed tools.
• When hard to remove the hose, wrap the hose with cloth to prevent from damaging, and then turn with pliers and pull out with hand straightly.

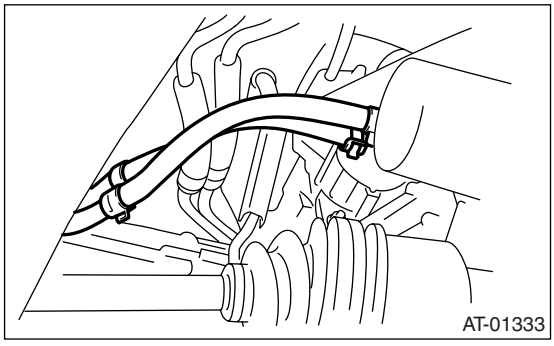

7) Lower the vehicle, and remove the headlight LH. <Ref. to LI-11, REMOVAL, Headlight Assembly.>
8) Disconnect the ATF cooler hose from ATF filter.

NOTE:
• Do not use a screwdriver or other pointed tools.
• When hard to remove the hose, wrap the hose with cloth to prevent from damaging, and then turn with pliers and pull out with hand straightly.

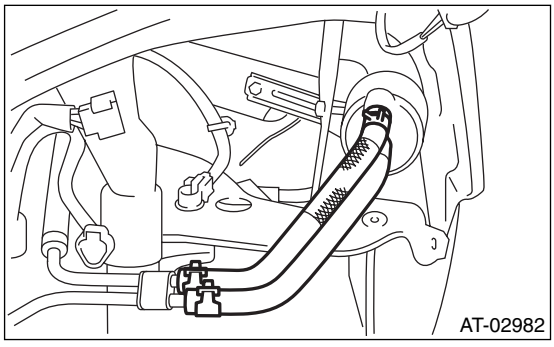

9) Disconnect the ATF cooler pipe from frame.

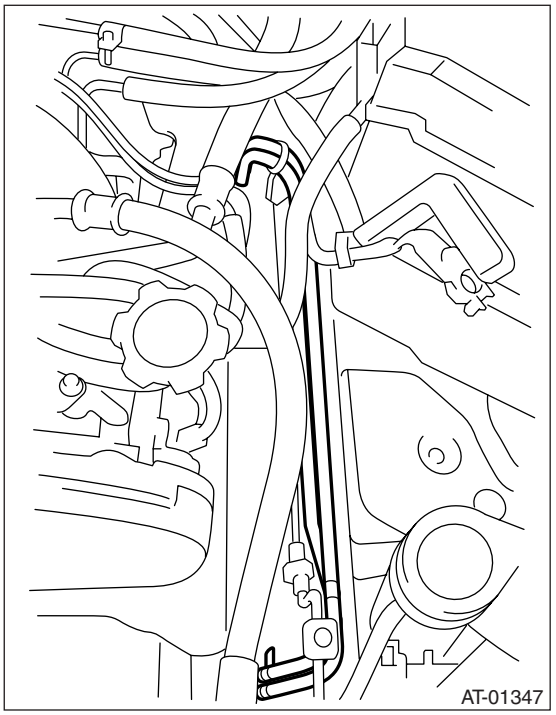

10) Remove the oil cooler inlet and outlet pipes.

NOTE:
When disconnecting the outlet pipe, be careful not to lose the ball and spring used with retaining screw.

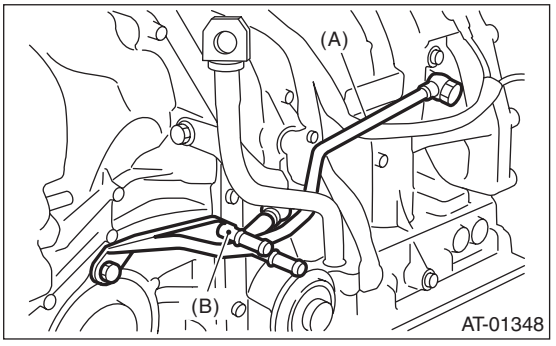

(A) Outlet pipe
(B) Inlet pipe

B: INSTALLATION

1. EXCEPT FOR U5 MODEL

1) Install the oil cooler inlet pipe and outlet pipe with new washer.

Tightening torque:
T1: 25 N·m (2.5 kgf-m, 18 ft-lb)
T2: 40 N·m (4.1 kgf-m, 29.5 ft-lb)
T3: 44 N·m (4.5 kgf-m, 32.5 ft-lb)

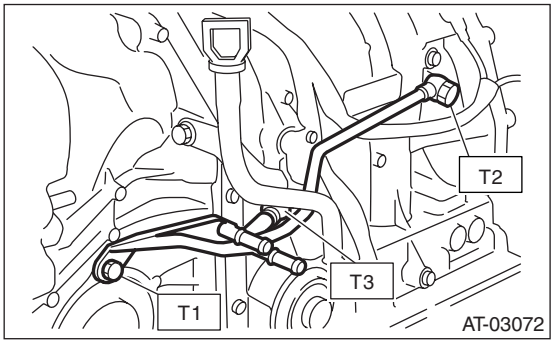

2) Install the ATF cooler pipe to frame.

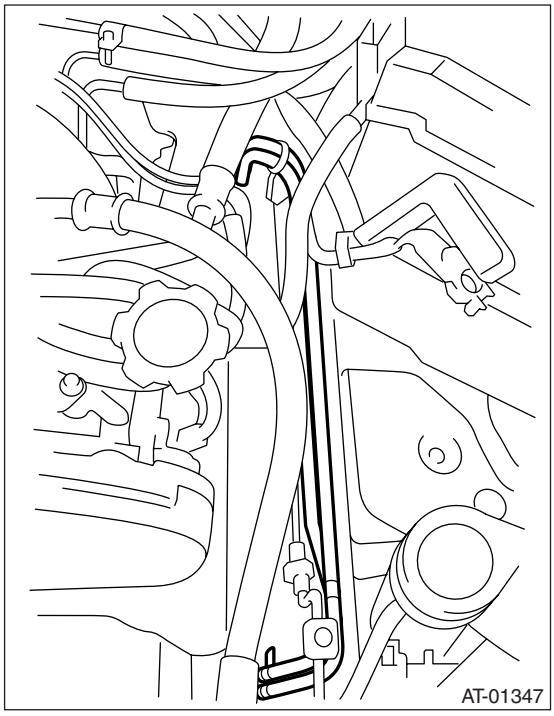

3) Connect the ATF cooler hose to pipe on transmission side.

NOTE:
• Install so that the hose is not folded over, excessively bent, or twisted.
• Be careful to insert the hose to the specified position.

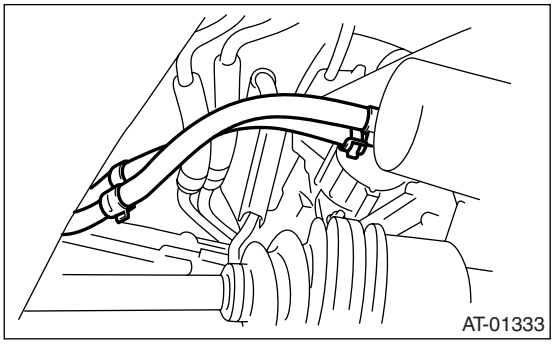

4) Connect the ATF cooler hose to pipe on radiator side.

NOTE:
• Install so that the hose is not folded over, excessively bent, or twisted.
• Be careful to insert the hose to the specified position.

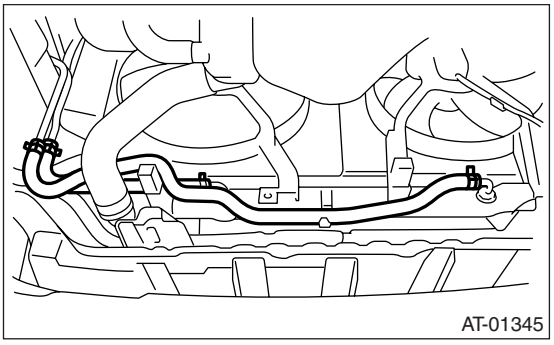

5) Install the under cover.
6) Install the battery.
7) Fill the ATF. <Ref. to 4AT-28, Automatic Transmission Fluid.>

NOTE:
Make sure there are no ATF leaks in joints between the transmission, radiator, pipes, and hoses.

2. U5 MODEL

1) Install the oil cooler inlet and outlet pipes with new washer.

Tightening torque:
T1: 25 N·m (2.5 kgf-m, 18 ft-lb)
T2: 40 N·m (4.1 kgf-m, 29.5 ft-lb)
T3: 44 N·m (4.5 kgf-m, 32.5 ft-lb)

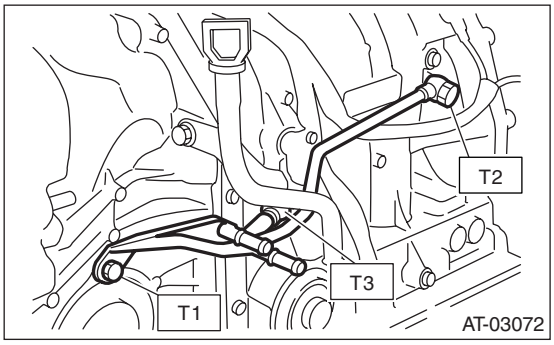

2) Install the ATF cooler pipe to frame.

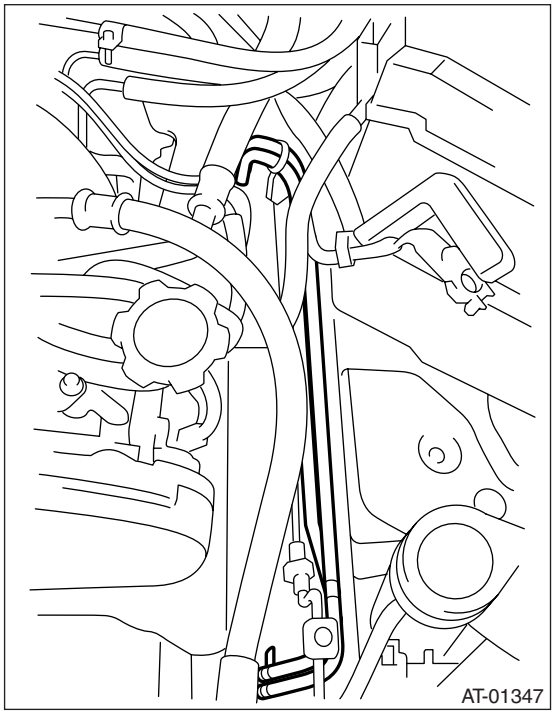

3) Connect the ATF cooler hose to pipe on the transmission side.

NOTE:
• Install so that the hose is not folded over, excessively bent or twisted.
• Be careful to insert the hose to the specified position.

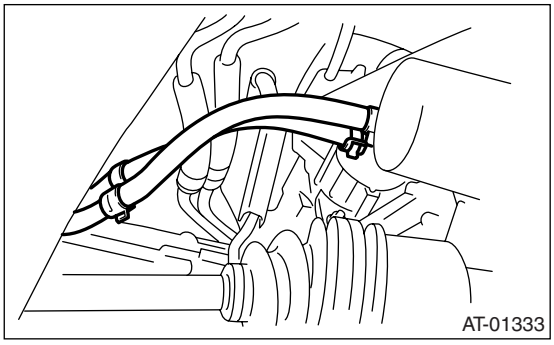

4) Connect the ATF cooler hose to ATF filter.

NOTE:
• Install so that the hose is not folded over, excessively bent or twisted.
• Be careful to insert the hose to the specified position.

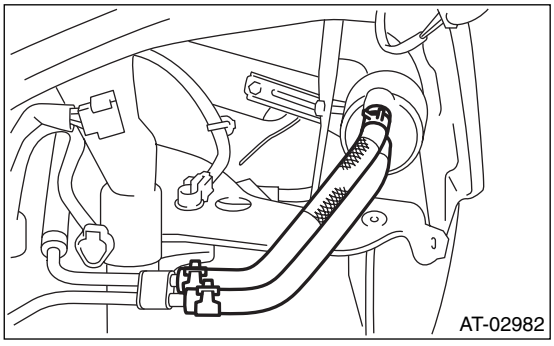

5) Install the headlight assembly. <Ref. to LI-11, INSTALLATION, Headlight Assembly.>
6) Connect the ATF cooler hose to pipe on radiator side.

NOTE:
• Install so that the hose is not folded over, excessively bent, or twisted.
• Be careful to insert the hose to the specified position.

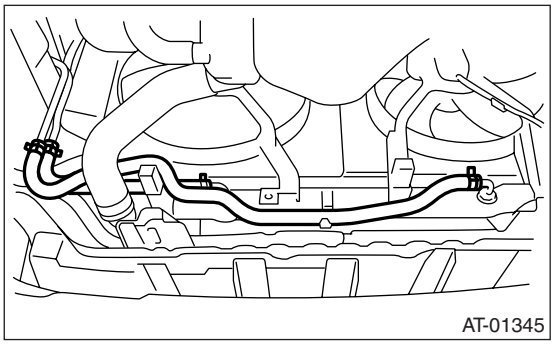

7) Install the under cover.
8) Install the battery.
9) Fill ATF. <Ref. to 4AT-28, Automatic Transmission Fluid.>

NOTE:
Make sure there are no ATF leaks in joints between the transmission, radiator, pipes, and hoses.

C: INSPECTION

Repair or replace any defective hoses, pipes, clamps, and washers found in the inspection below.
1) Check for ATF leaks in joints between the transmission, radiator, pipes, and hoses.
2) Check for deformed clamps.
3) Lightly bend the hose and check for cracks in the surface and other damage.
4) Pinch the hose with your fingers and check for poor elasticity. Also check for poor elasticity in the parts where the clamp was installed by pressing with your fingernail.
5) Check for peeling, cracks and deformation at the tip of the hose.

23.Air Breather Hose

A: REMOVAL

1) Remove the air intake chamber.
<Ref. to IN(H4SO)-9, REMOVAL, Air Intake Chamber.>
2) Disconnect the air breather hose.

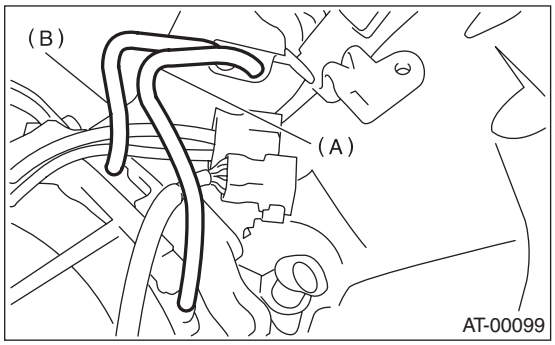

(A) Air breather hose (Transmission case)
(B) Air breather hose (Oil pump housing)

B: INSTALLATION

1) Install the air breather hose.

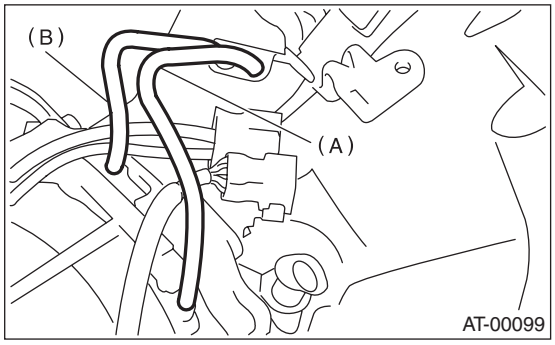

(A) Air breather hose (Transmission case)
(B) Air breather hose (Oil pump housing)

2) Install the air intake chamber.
<Ref. to IN(H4SO)-9, INSTALLATION, Air Intake Chamber.>

C: INSPECTION

Make sure the hose is not cracked or clogged.

24.Oil Charge Pipe

A: REMOVAL

1) Remove the air intake chamber.
<Ref. to IN(H4SO)-9, REMOVAL, Air Intake Chamber.>
2) Remove the oil charge pipe, and then remove the O-ring from flange side.

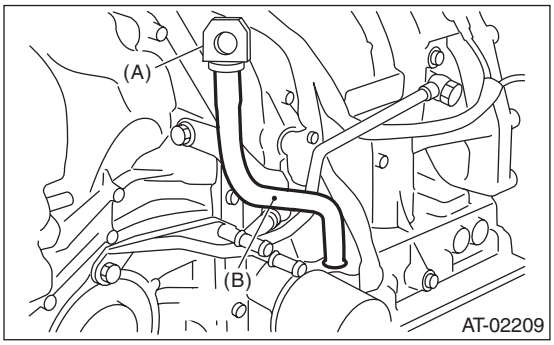

(A) Oil level gauge
(B) Oil charge pipe

B: INSTALLATION

1) Install the oil charge pipe with a new O-ring applied with ATF.

Tightening torque:
41 N·m (4.2 kgf-m, 30.4 ft-lb)

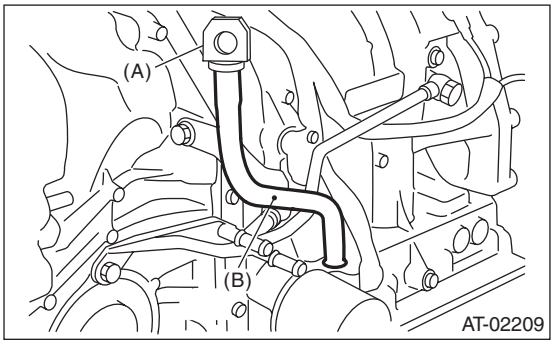

(A) Oil level gauge
(B) Oil charge pipe

2) Install the air intake chamber.
<Ref. to IN(H4SO)-9, INSTALLATION, Air Intake Chamber.>

C: INSPECTION

Make sure the oil charge pipe is not deformed or damaged.

25.Torque Converter Assembly

A: REMOVAL

1) Remove the transmission assembly from vehicle. <Ref. to 4AT-37, REMOVAL, Automatic Transmission Assembly.>
2) Pull out the torque converter assembly and oil pump shaft horizontally.

NOTE:
Be sure not to scratch the inside of bushing in oil pump shaft.

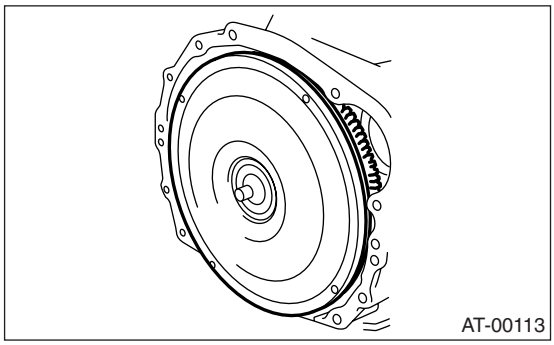

3) Remove the input shaft.

NOTE:
When removing the torque converter assembly, the input shaft is also removed.

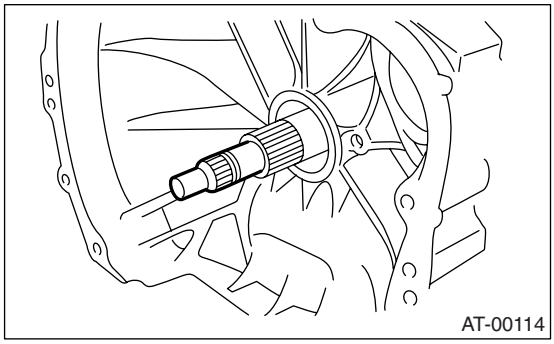

4) Remove the oil pump shaft from the torque converter assembly as necessary.

B: INSTALLATION

1) Install the shaft to the converter case when oil pump shaft is removed.
2) Install the oil pump shaft to torque converter assembly, and then make sure that the clip is secured on groove.
3) Apply ATF to O-ring and insert the input shaft with rotating it by hand lightly.

Normal protrusion A:
50 — 55 mm (1.97 — 2.17 in)

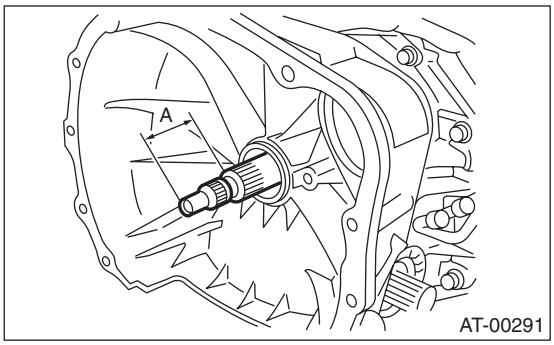

4) With holding the torque converter assembly by hands, carefully install to the converter case. Take care not to damage the bushing. Do not contact the oil pump shaft bush with starter shaft part of oil pump cover inappropriately.
5) Lightly rotating the shaft by hands to engage the spline securely, and then check it is within the dimension A.

Dimension A:
2.7 — 2.9 mm (0.106 — 0.114 in)

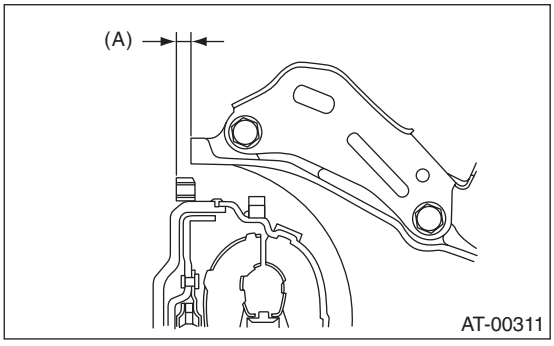

(A) Dimension A

6) Install the transmission assembly into vehicle. <Ref. to 4AT-39, INSTALLATION, Automatic Transmission Assembly.>

C: INSPECTION

Make sure the ring gear and protrusion of torque converter assembly end are not deformed or damaged.

26.Extension Case

A: REMOVAL

1) Remove the transmission assembly.
<Ref. to 4AT-37, REMOVAL, Automatic Transmission Assembly.>
2) Remove the rear vehicle speed sensor.

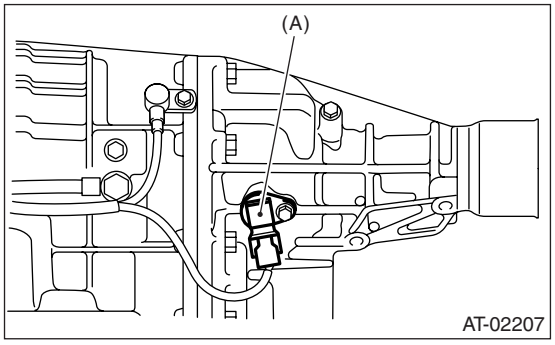

(A) Rear vehicle speed sensor

3) Separate the transmission case and extension case part.

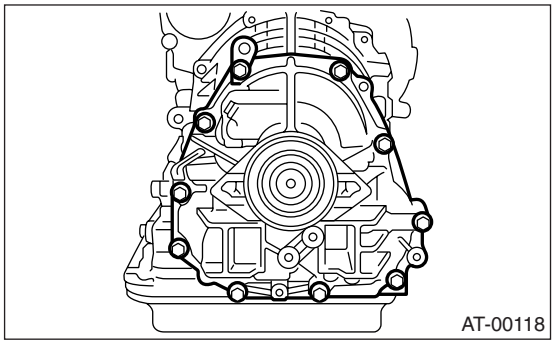

B: INSTALLATION

1) Attach the selected thrust needle bearing to the end surface of reduction drive gear with vaseline.

NOTE:
Install the thrust needle bearing in correct direction.

2) Install a new gasket.
3) Install the extension case to transmission case.
4) Tighten bolts to secure extension case.

Tightening torque:
25 N·m (2.5 kgf-m, 18 ft-lb)

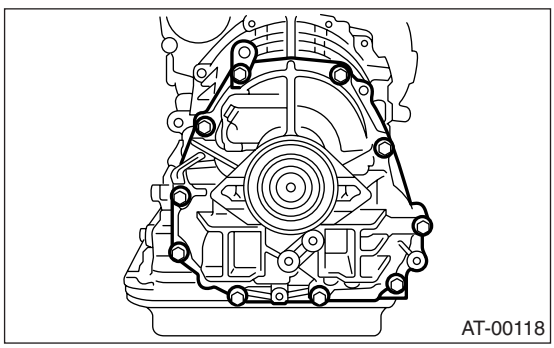

5) Install the rear vehicle speed sensor.

Tightening torque:
7 N·m (0.7 kgf-m, 5.1 ft-lb)

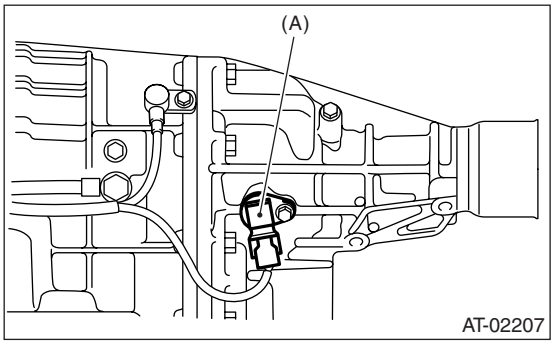

(A) Rear vehicle speed sensor

6) Install the transmission assembly.
<Ref. to 4AT-39, INSTALLATION, Automatic Transmission Assembly.>

C: DISASSEMBLY

1) Take out the transfer clutch by lightly tapping the end of rear drive shaft.

NOTE:
Be careful not to damage the oil seal of extension case.

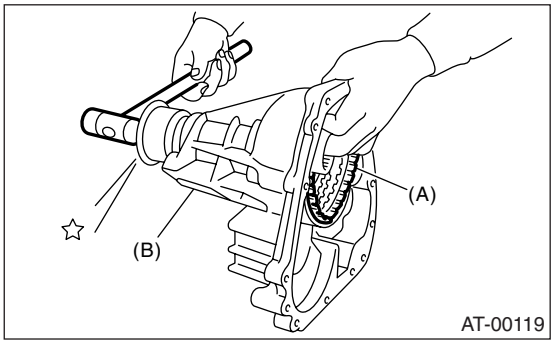

(A) Extension case
(B) Transfer clutch

2) Remove the transfer clutch pipe without deforming the pipe.

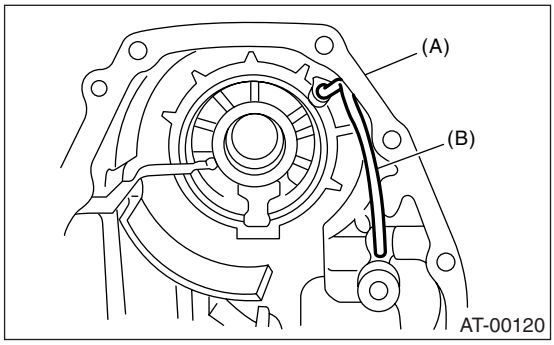

(A) Extension case
(B) Transfer clutch pipe

3) Remove the dust cover from extension case.
4) Remove the oil seal from extension case.

D: ASSEMBLY

1) Press-fit new oil seal using ST and press.
ST 498057300 INSTALLER
2) Press-fit the dust cover.
3) Install the transfer clutch pipe to extension case without deforming the pipe.

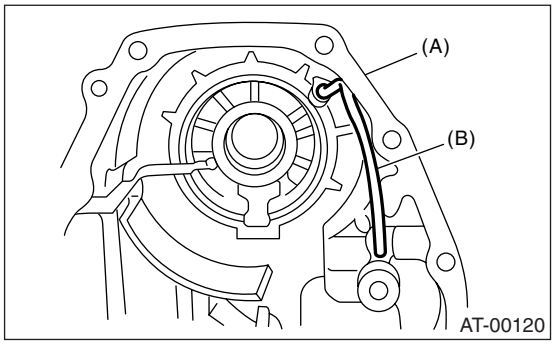

(A) Extension case
(B) Transfer pipe

4) Install the transfer clutch assembly to the case.

NOTE:
• Be careful not to damage the seal ring.
• Press-fit the clutch assembly to bottom of bearing shoulder completely.

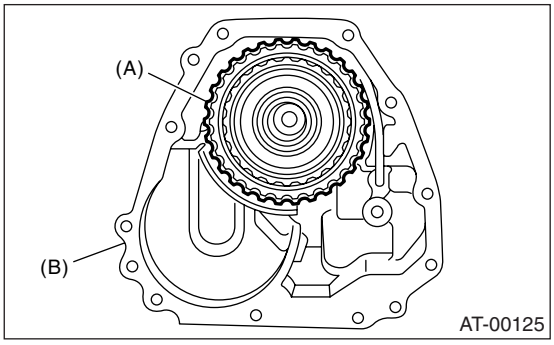

(A) Transfer clutch
(B) Extension case

E: INSPECTION

• Spray compressed air, and make sure the transfer pipe and extension case routes are not clogged and have no leaks.
• Measure the extension end play and adjust it to within specifications.
<Ref. to 4AT-78, ADJUSTMENT, Transfer Clutch.>

27.Transfer Clutch

A: REMOVAL

1) Remove the transmission assembly from vehicle. <Ref. to 4AT-37, REMOVAL, Automatic Transmission Assembly.>
2) Remove the extension case, and then remove the transfer clutch. <Ref. to 4AT-73, REMOVAL, Extension Case.> <Ref. to 4AT-73, DISASSEMBLY, Extension Case.>

B: INSTALLATION

1) Select the thrust needle bearing. <Ref. to 4AT-78, ADJUSTMENT, Transfer Clutch.>
2) Install the transfer clutch assembly to the case.

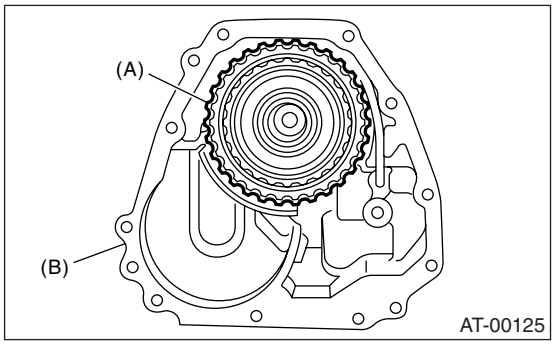

(A) Transfer clutch
(B) Extension case

3) Tighten the bolts to secure the case.

Tightening torque:
25 N·m (2.5 kgf-m, 18 ft-lb)

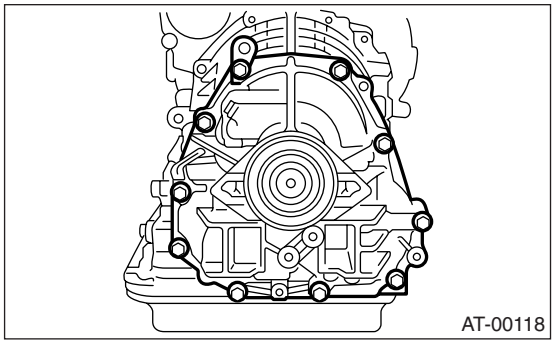

4) Install the transmission assembly into vehicle. <Ref. to 4AT-39, INSTALLATION, Automatic Transmission Assembly.>

C: DISASSEMBLY

1) Remove the seal ring.

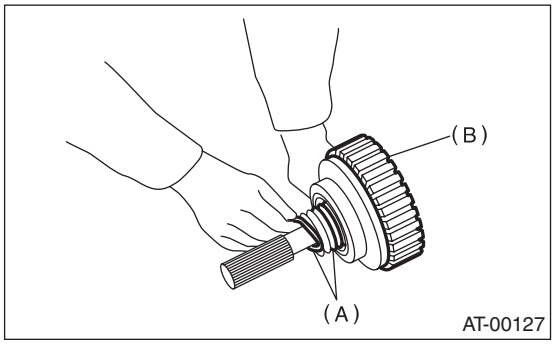

(A) Seal ring
(B) Transfer clutch

2) Remove the ball bearing using ST and press.
ST 498077600 REMOVER

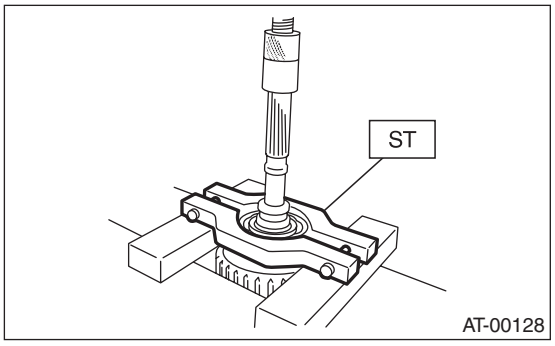

3) Remove the snap ring, and then take out the pressure plate, drive plate and driven plate.

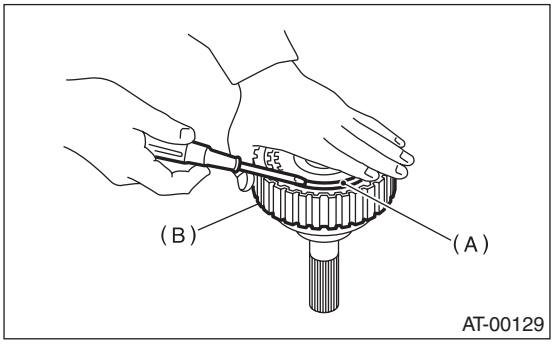

(A) Snap ring
(B) Transfer clutch

4) Using the ST1, ST2 and ST3, remove the snap ring, and then take out the return spring and transfer clutch piston seal.
ST1 399893600 PLIERS
ST2 398673600 COMPRESSOR

ST3 398623600 SEAT

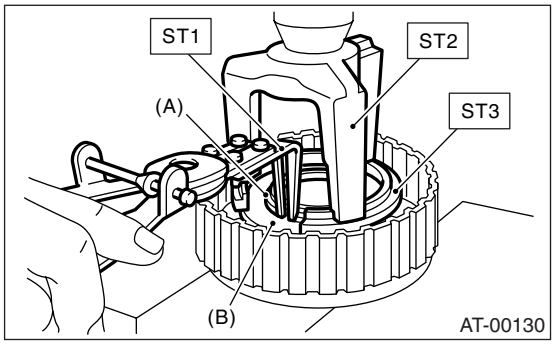

(A) Snap ring
(B) Transfer piston seal

5) Apply compressed air to the rear drive shaft to remove transfer clutch piston.

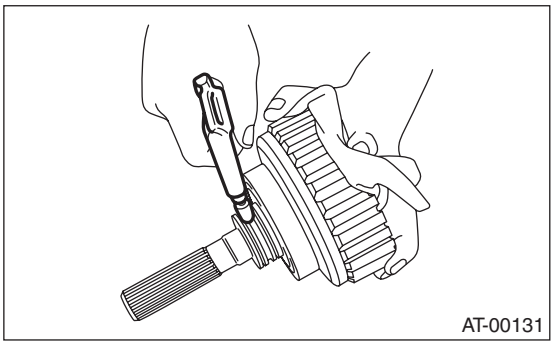

D: ASSEMBLY

1) Install the transfer clutch piston.

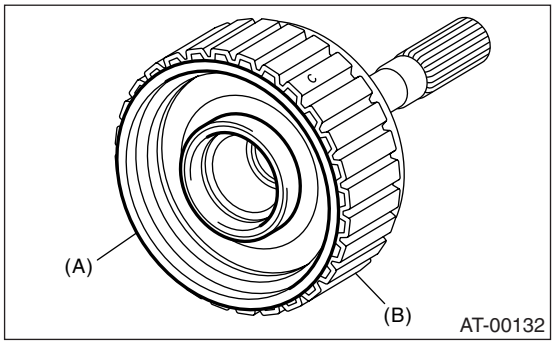

(A) Transfer clutch piston
(B) Rear drive shaft

2) Install the return spring to transfer clutch piston.

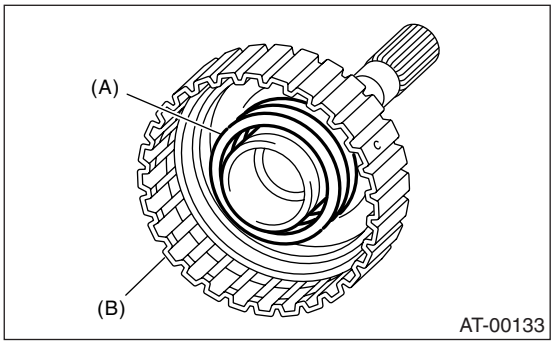

(A) Return spring
(B) Rear drive shaft

3) Apply ATF to the lip of transfer clutch piston seal and install it.

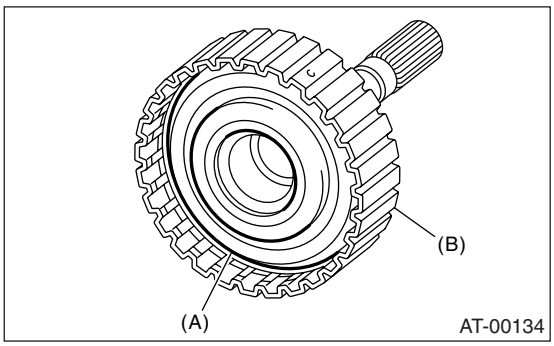

(A) Transfer clutch piston seal
(B) Rear drive shaft

4) Install the ST to the rear drive shaft.
ST 499257300 SNAP RING OUTER GUIDE

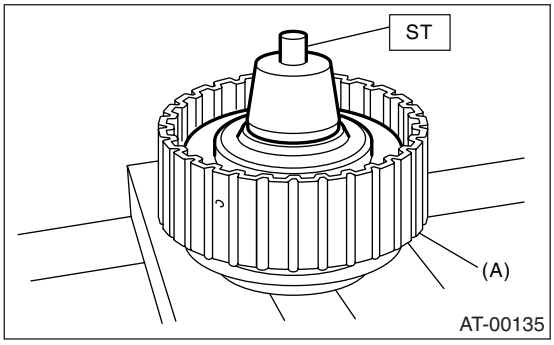

(A) Transfer clutch

5) Install the snap ring to ST.

ST 499257300 SNAP RING OUTER GUIDE

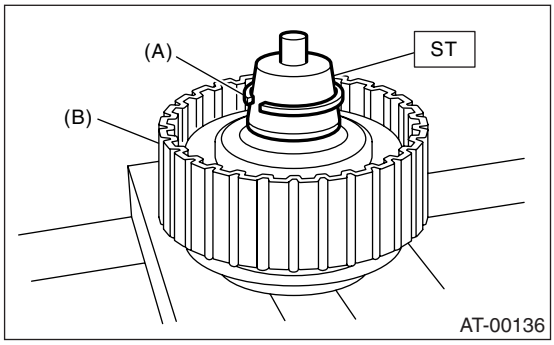

(A) Snap ring
(B) Transfer clutch

6) Install the snap ring to rear drive shaft using ST1 and ST2.
ST1 499257300 SNAP RING OUTER GUIDE
ST2 499247400 INSTALLER

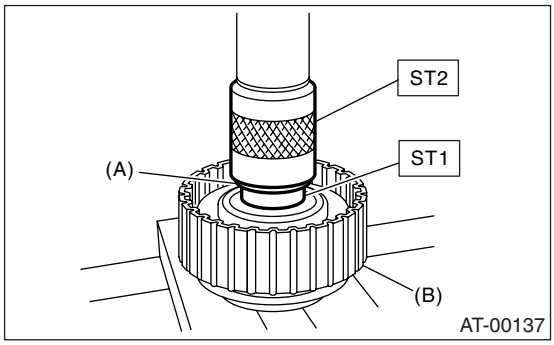

(A) Snap ring
(B) Transfer clutch

7) Install the driven plate, drive plate, pressure plate and snap ring.

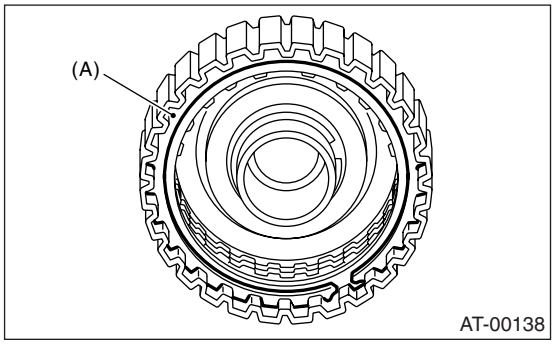

(A) Snap ring

8) Apply compressed air to see if the assembled parts move smoothly.

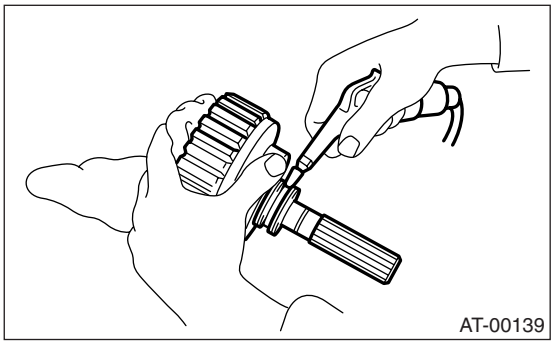

9) Check clearance between snap ring and pressure plate. <Ref. to 4AT-78, INSPECTION, Transfer Clutch.>
10) Press-fit new ball bearing using ST.
ST 899580100 INSTALLER

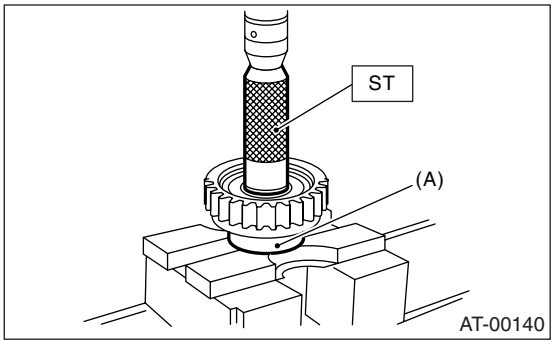

(A) Ball bearing

11) Apply vaseline to a new seal ring and attach to the seal ring groove of the shaft.

NOTE:
While installing the seal ring, not to expand the seal ring excessively.

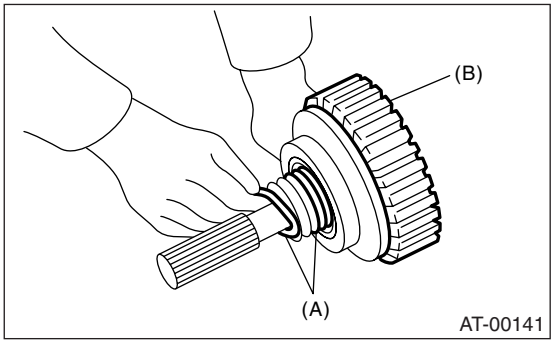

(A) Seal ring
(B) Transfer clutch

12) Install the transfer clutch assembly without damaging seal ring.

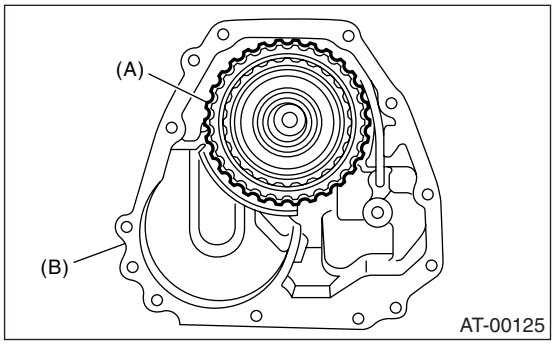

(A) Transfer clutch
(B) Extension case

E: INSPECTION

- Inspect the drive plate facing for wear and damage.
- Inspect the snap ring for wear, return spring for permanent distortion, breakage and deformation.
- Inspect the D-ring for damage.
- Inspect the extension end play and adjust it to within specifications. <Ref. to 4AT-78, ADJUSTMENT, Transfer Clutch.>

1) Check clearance between snap ring and pressure gauge.
2) Before measuring clearance, place the same thickness of shim on both sides to prevent pressure plate from tilting.
3) If the clearance is not within specification, adjust it by selecting a suitable pressure plate on transfer clutch piston side.

Initial standard:
0.7 — 1.1 mm (0.028 — 0.043 in)

Limit thickness:
1.6 mm (0.063 in)

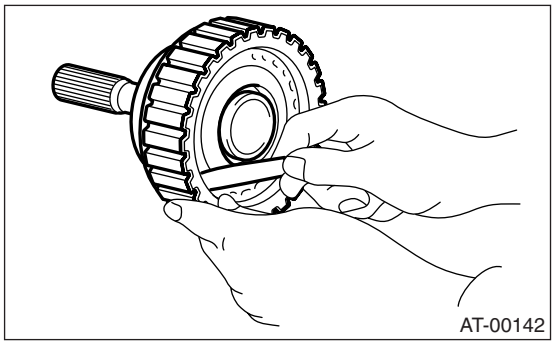

Pressure plate	
Part number	Thickness mm (in)
31593AA151	3.3 (0.130)
31593AA161	3.7 (0.146)
31593AA171	4.1 (0.161)
31593AA181	4.5 (0.177)

4) Check that the tight corner braking does not occur when the vehicle is started with steering wheel held at fully turned position. If tight corner braking occurs, perform the following procedures.
(1) With the steering wheel held at fully turned position, drive the vehicle in “D” range and with vehicle speed at approx. 5 km/h (3 MPH) in both clockwise and counterclockwise directions for approx. ten times each, while repeating acceleration and braking intermittently.
(2) If the tight corner braking still persists, drive the vehicle again in a circle for several laps.

F: ADJUSTMENT

1) Measure the distance “A” from the end surface of ST to rear drive shaft using ST.
ST 398643600 GAUGE

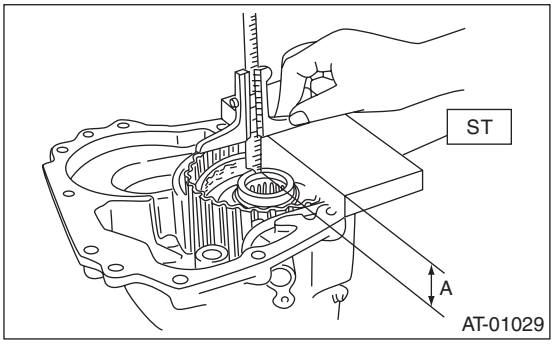

2) Measure the distance “B” from the transmission case mating surface to the ST end surface using ST1 and ST2.
ST1 398643600 GAUGE
ST2 499577000 GAUGE

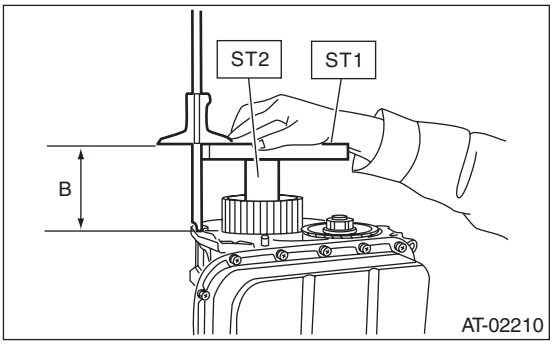

3) Calculation formula:

NOTE:
Calculate “T”:
T = A − B + 35.4 mm
[T = A − B + 1.3937 in]
T: Thrust needle bearing thickness
A: Distance from the end surface of ST to the end of rear drive shaft
B: Distance from the mating surface of transmission case to the end surface of ST

Example:
When, A = 33.6 mm (1.3228 in), B = 65.05 mm (2.5610 in)
T = 33.6 − 65.05 + 35.4 = 3.95
[T = 1.3228 − 2.5610 + 1.3937 = 0.1555]
After calculation, the value of "T" becomes 3.95, therefore select bearing thickness of 3.8 mm (0.150 in).

NOTE:
Calculation formula for "T" is applied when measuring using ST (398643600 GAUGE, 499577000 GAUGE). When not using ST, apply
T = (A − α + 0.45 mm) − (B − β) − H
[T = (A − α + 0.0177 in) − (B − β) − H]

T: Thrust needle bearing thickness
A: Distance from end surface of collar as substitute for ST to end of reduction drive shaft
B: Distance from mating surface of transmission case to end surface of collar as substitute for ST
α: Collar thickness used when measuring "A"
β: Collar thickness used when measuring "B"
0.45: Gasket thickness (mm)
0.0177: Gasket thickness (in)
H: Shim clearance

Thrust needle bearing	
Part number	Thickness mm (in)
806536020	3.8 (0.150)
806535030	4.0 (0.157)
806535040	4.2 (0.165)
806535050	4.4 (0.173)
806535060	4.6 (0.181)
806535070	4.8 (0.189)
806535090	5.0 (0.197)

28.Reduction Driven Gear

A: REMOVAL

1) Remove the transmission assembly from vehicle. <Ref. to 4AT-37, REMOVAL, Automatic Transmission Assembly.>
2) Remove the rear vehicle speed sensor, and then separate the extension case from transmission case. <Ref. to 4AT-73, REMOVAL, Extension Case.>
3) Set the select lever to “P” range.
4) Remove the caulking part, and then remove the lock nut.

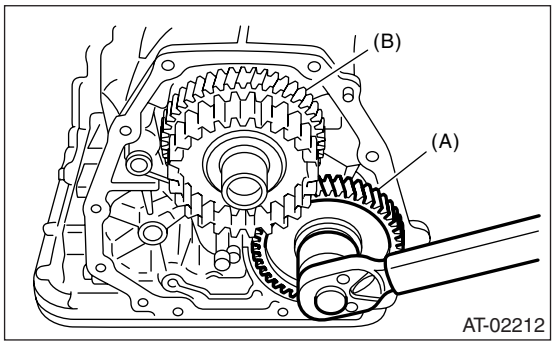

(A) Reduction driven gear
(B) Reduction drive gear

5) Using the ST1 and ST2, extract the reduction driven gear.
ST1 499737000 PULLER
ST2 899524100 PULLER SET

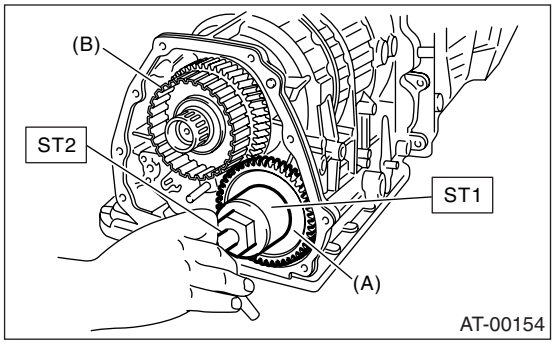

(A) Reduction driven gear
(B) Reduction drive gear

B: INSTALLATION

1) Set the select lever to “P” range.
2) Using a plastic hammer, install the reduction driven gear assembly and new washer, and tighten new drive pinion lock nut.

Tightening torque:
100 N·m (10.2 kgf-m, 73.8 ft-lb)

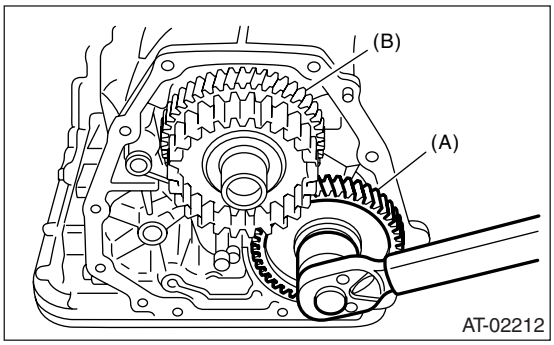

(A) Reduction driven gear
(B) Reduction drive gear

3) After tightening, stake the lock nut securely.
4) Combine the transmission case with extension case, and then install the rear vehicle speed sensor. <Ref. to 4AT-73, INSTALLATION, Extension Case.>
5) Install the transmission assembly into vehicle. <Ref. to 4AT-39, INSTALLATION, Automatic Transmission Assembly.>

C: DISASSEMBLY

1) Remove the snap ring from reduction driven gear.

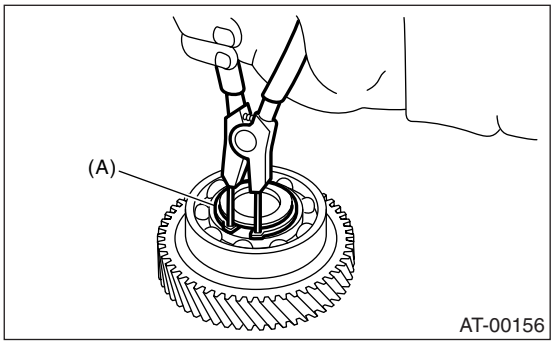

(A) Snap ring

2) Remove the ball bearing from reduction driven gear using ST.

ST 498077600 REMOVER

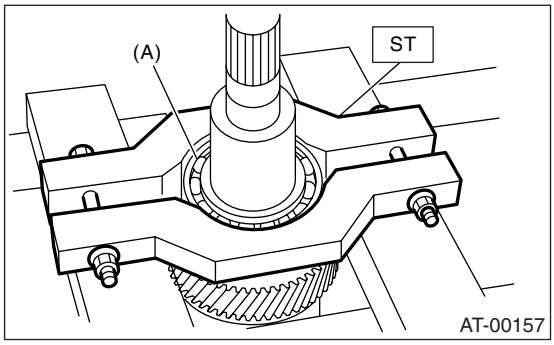

(A) Ball bearing

3) Remove the snap ring from reduction driven gear.

D: ASSEMBLY

1) Install the snap ring to reduction driven gear.
2) Install the new ball bearing to reduction driven gear using press.

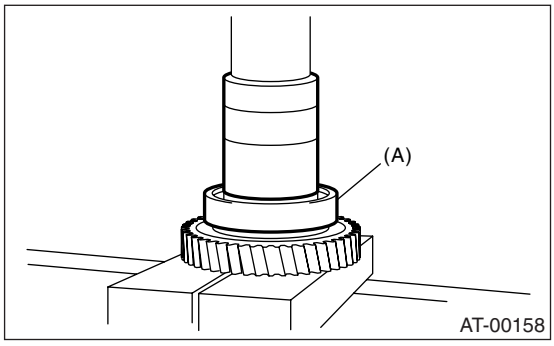

(A) Ball bearing

3) Install the snap ring to reduction driven gear.

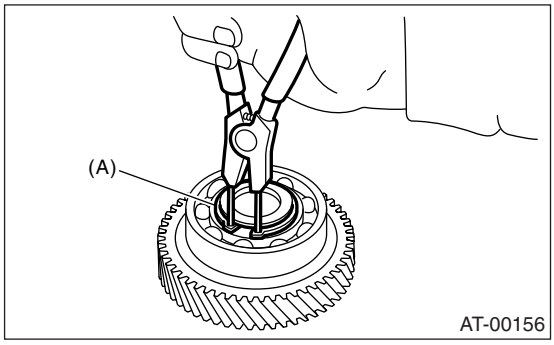

(A) Snap ring

E: INSPECTION

Make sure the ball bearing and gear is not deformed or damaged.

29.Reduction Drive Gear

A: REMOVAL

1) Remove the transmission assembly from vehicle. <Ref. to 4AT-37, REMOVAL, Automatic Transmission Assembly.>
2) Remove the rear vehicle speed sensor, and then separate the extension case from transmission case. <Ref. to 4AT-73, REMOVAL, Extension Case.>
3) Remove the reduction driven gear. <Ref. to 4AT-80, REMOVAL, Reduction Driven Gear.>
4) Using the ST, extract the reduction drive gear.
ST1 499737100 PULLER
ST2 899524100 PULLER SET

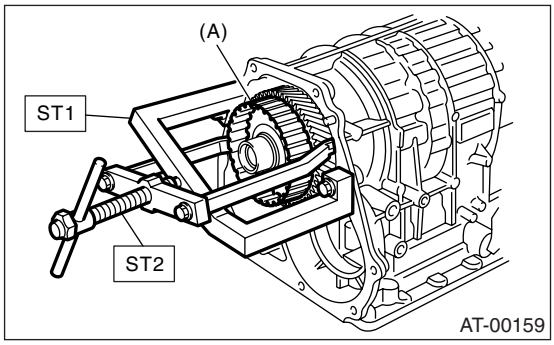

(A) Reduction drive gear

B: INSTALLATION

1) Install the reduction drive gear assembly.

NOTE:
Press-fit it to the bottom of bearing shoulder completely.

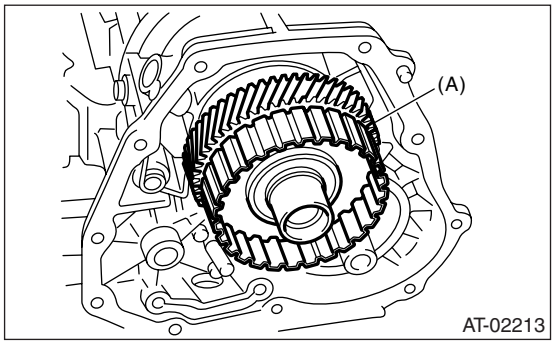

(A) Reduction drive gear

2) Install the reduction driven gear. <Ref. to 4AT-80, INSTALLATION, Reduction Driven Gear.>
3) Combine the transmission case with extension case, and then install the rear vehicle speed sensor. <Ref. to 4AT-73, INSTALLATION, Extension Case.>
4) Install the transmission assembly into vehicle. <Ref. to 4AT-39, INSTALLATION, Automatic Transmission Assembly.>

C: DISASSEMBLY

1) Take out the seal ring.

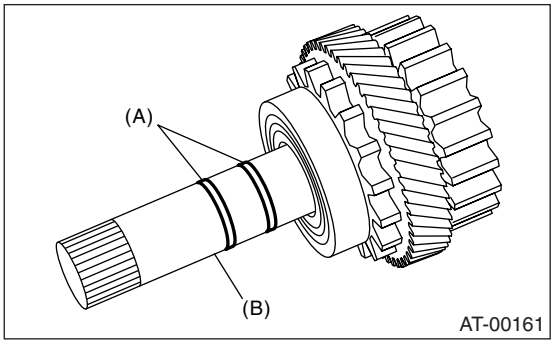

(A) Seal ring
(B) Reduction drive shaft

2) Remove the ball bearing using ST.
ST 498077600 REMOVER

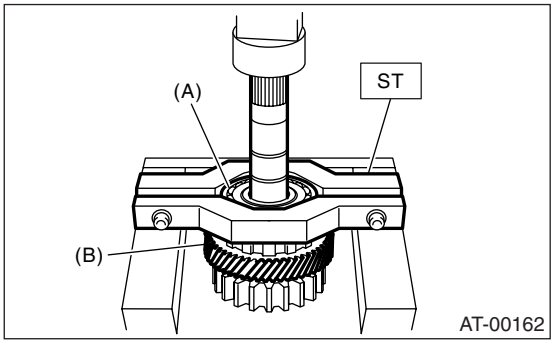

(A) Ball bearing
(B) Reduction drive gear

3) Using the press, remove the reduction drive gear.

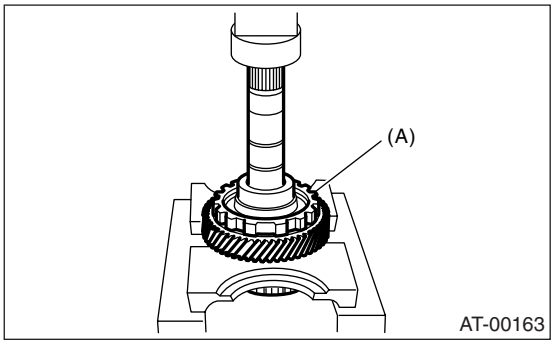

(A) Reduction drive gear

D: ASSEMBLY

1) Press-fit the reduction drive gear to shaft.
2) Press-fit the new ball bearing into reduction drive gear.
3) Apply vaseline to the outer surface of seal ring and shaft groove.

4) Apply ATF to new seal rings and install them.

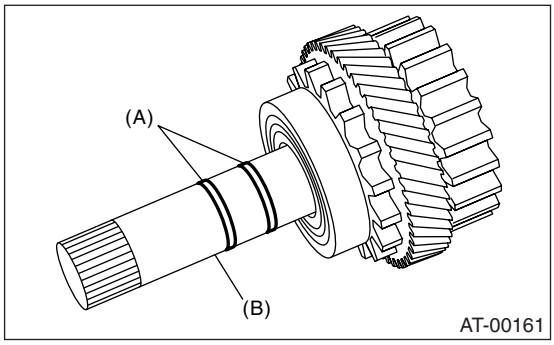

(A) Seal ring
(B) Reduction drive shaft

E: INSPECTION

- Rotate the bearing by hand, make sure it rotates smoothly.
- Check that the holes, damages or other foreign matters are not on each parts.
- Measure the extension end play and adjust it to within specifications. <Ref. to 4AT-78, ADJUSTMENT, Transfer Clutch.>

30.Parking Pawl

A: REMOVAL

1) Remove the transmission assembly from vehicle. <Ref. to 4AT-37, REMOVAL, Automatic Transmission Assembly.>
2) Remove the rear vehicle speed sensor, and then separate the extension case from transmission case. <Ref. to 4AT-73, REMOVAL, Extension Case.>
3) Remove the reduction drive gear. <Ref. to 4AT-82, REMOVAL, Reduction Drive Gear.>
4) Remove the parking pawl, return spring and shaft.

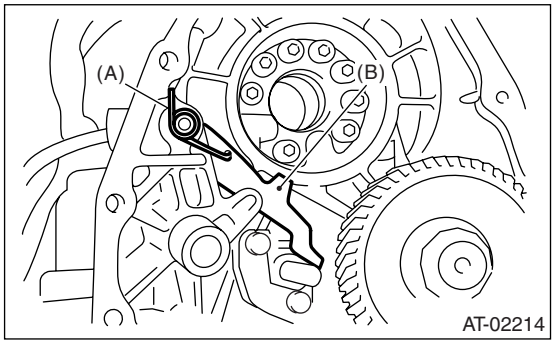

(A) Return spring
(B) Parking pawl

B: INSTALLATION

1) Install the parking pawl, return spring and shaft.

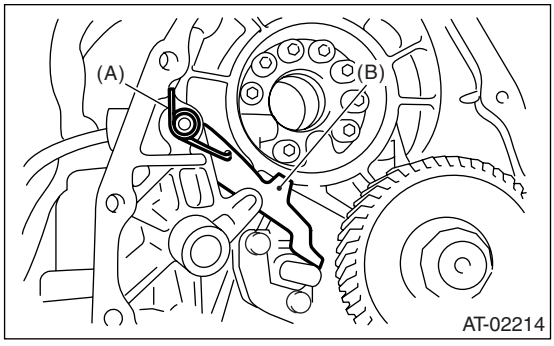

(A) Return spring
(B) Parking pawl

2) Install the reduction drive gear. <Ref. to 4AT-82, INSTALLATION, Reduction Drive Gear.>
3) Install the extension case and rear vehicle speed sensor. <Ref. to 4AT-73, INSTALLATION, Extension Case.>
4) Install the transmission assembly into the vehicle. <Ref. to 4AT-39, INSTALLATION, Automatic Transmission Assembly.>

C: INSPECTION

Make sure that the tab of parking pawl on reduction gear is not worn or otherwise damaged.

31.Converter Case

A: REMOVAL

1) Remove the transmission assembly from vehicle. <Ref. to 4AT-37, REMOVAL, Automatic Transmission Assembly.>
2) Pull out the torque converter assembly. <Ref. to 4AT-72, REMOVAL, Torque Converter Assembly.>
3) Remove the input shaft.

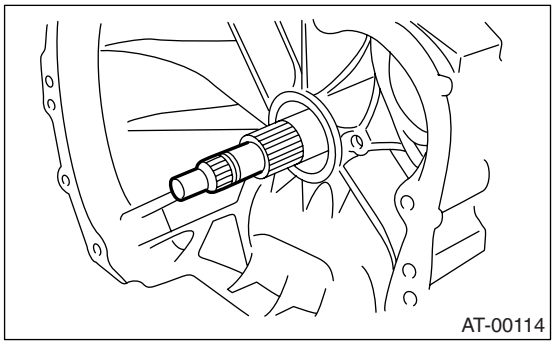

4) Lift up the lever on the rear side of connector, and then disconnect it from the stay.
5) Disconnect the inhibitor switch connector from the stay.

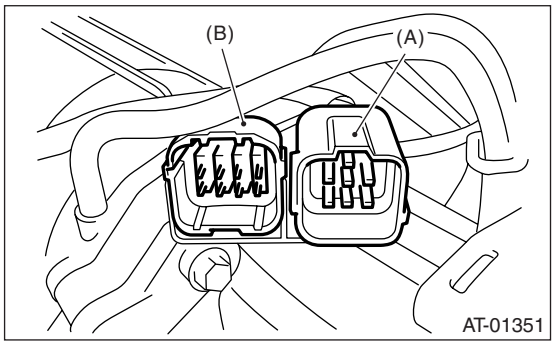

(A) Transmission connector
(B) Inhibitor switch connector

6) Remove the oil charge pipe. <Ref. to 4AT-71, REMOVAL, Oil Charge Pipe.>
7) Remove the oil cooler inlet and outlet pipes. <Ref. to 4AT-65, REMOVAL, ATF Cooler Pipe and Hose.>
8) Remove the converter case aligning bolt, and then separate the transmission case and converter case by lightly tapping with plastic hammer.

NOTE:
• Be careful not to damage the oil seal and bush inside the converter case by the oil pump cover.
• Be careful not to loosen the rubber seal.

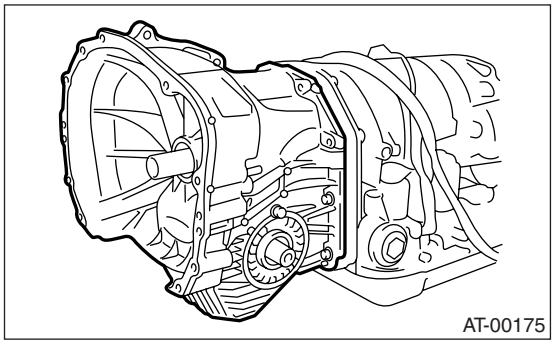

9) Remove the seal pipe.

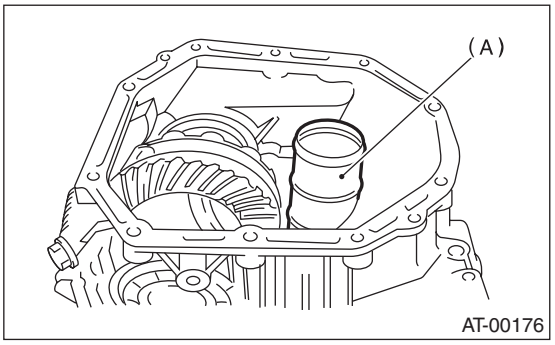

(A) Seal pipe

10) Remove the differential assembly. <Ref. to 4AT-97, REMOVAL, Front Differential Assembly.>
11) Remove the oil seal from converter case.

B: INSTALLATION

1) Check the appearance of each component and clean them.
2) Press-fit the oil seal to converter case using ST.
ST 398437700 DRIFT

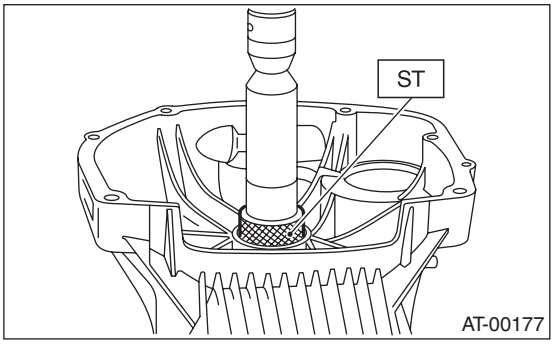

3) Install the differential assembly to case. <Ref. to 4AT-97, INSTALLATION, Front Differential Assembly.>
4) Install the left and right side retainers. <Ref. to 4AT-101, ADJUSTMENT, Front Differential Assembly.>

5) Install the new seal pipe to converter case.

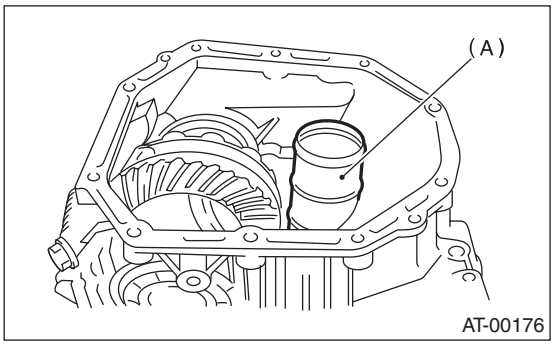

(A) Seal pipe

6) Install the rubber seal to converter case.

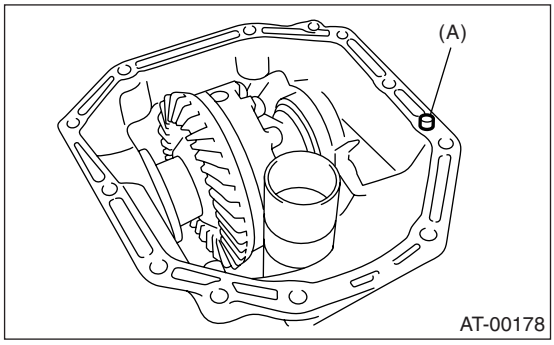

(A) Rubber seal

7) Apply proper amount of liquid gasket to the entire matching surface of converter case.

Liquid gasket:
THREE BOND 1215 (Part No. 004403007)

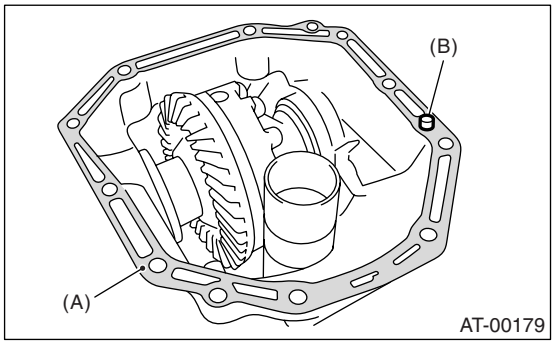

(A) THREE BOND 1215
(B) Rubber seal

8) Install the converter case without damaging bushing and oil seal.

Tightening torque:
41 N·m (4.2 kgf-m, 30.4 ft-lb)

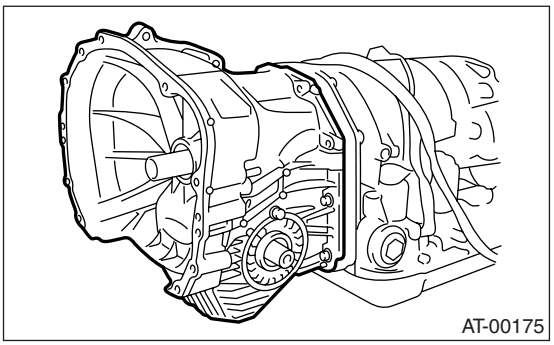

9) Insert the inhibitor switch and transmission connector to the stay.
10) Install the air breather hose. <Ref. to 4AT-70, INSTALLATION, Air Breather Hose.>
11) Install the oil cooler pipe. <Ref. to 4AT-67, INSTALLATION, ATF Cooler Pipe and Hose.>
12) Install the oil charge pipe with O-ring. <Ref. to 4AT-71, INSTALLATION, Oil Charge Pipe.>
13) Insert the input shaft with rotating it by hand lightly, and then check the protrusion amount.

Normal protrusion A:
50 — 55 mm (1.97 — 2.17 in)

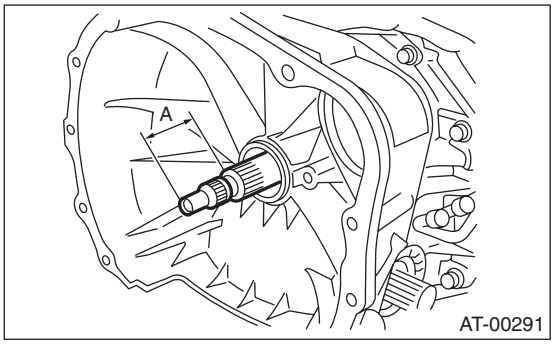

14) Install the torque converter assembly. <Ref. to 4AT-72, INSTALLATION, Torque Converter Assembly.>
15) Install the transmission assembly into vehicle. <Ref. to 4AT-39, INSTALLATION, Automatic Transmission Assembly.>

C: INSPECTION

Measure the backlash, and then adjust it within specification. <Ref. to 4AT-94, ADJUSTMENT, Drive Pinion Shaft Assembly.>

32.Oil Pump Housing

A: REMOVAL

1) Remove the transmission assembly from vehicle. <Ref. to 4AT-37, REMOVAL, Automatic Transmission Assembly.>
2) Pull out the torque converter assembly. <Ref. to 4AT-72, REMOVAL, Torque Converter Assembly.>
3) Remove the input shaft.

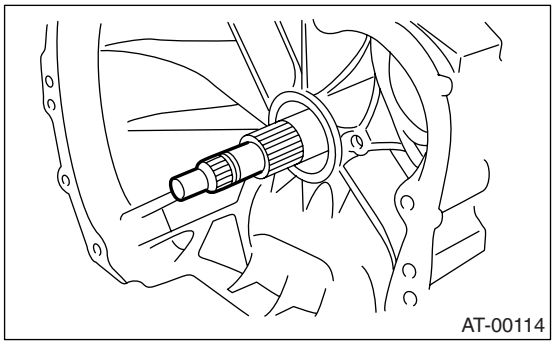

4) Lift up the lever on the rear side of transmission harness connector, and then remove it from stay.
5) Remove the inhibitor switch connector from stay.
6) Remove the oil charge pipe. <Ref. to 4AT-71, REMOVAL, Oil Charge Pipe.>
7) Remove the oil cooler inlet and outlet pipes. <Ref. to 4AT-65, REMOVAL, ATF Cooler Pipe and Hose.>
8) Separate the converter case and transmission case part. <Ref. to 4AT-85, REMOVAL, Converter Case.>
9) Separate the transmission case and extension case part. <Ref. to 4AT-73, REMOVAL, Extension Case.>
10) Remove the reduction drive gear. <Ref. to 4AT-82, REMOVAL, Reduction Drive Gear.>
11) Remove the reduction driven gear. <Ref. to 4AT-80, REMOVAL, Reduction Driven Gear.>
12) Loosen the oil pump housing mounting bolts.

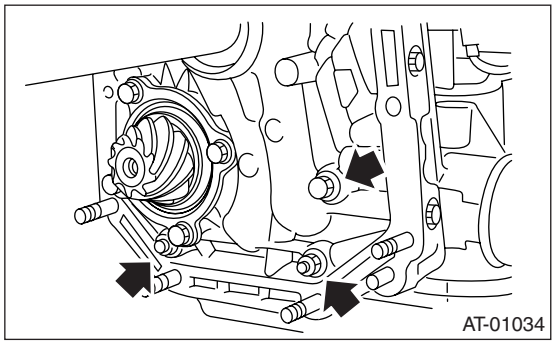

13) Place two wooden blocks on the workbench, and stand the transmission case with its rear end facing down.

NOTE:
• Be careful not to scratch the rear mating surface of transmission case.
• Note that the parking rod and drive pinion protrudes from mating surface.

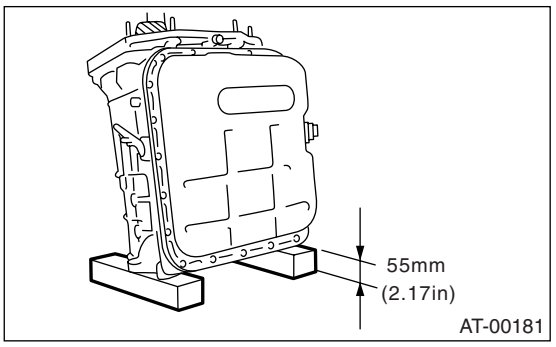

14) Remove the oil pump housing and adjusting thrust washer.

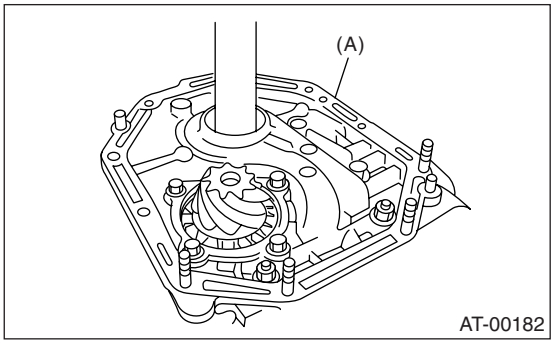

(A) Oil pump housing

B: INSTALLATION

1) Secure the oil pump housing with two nuts and a bolt.

Tightening torque:
42 N·m (4.3 kgf-m, 31 ft-lb)

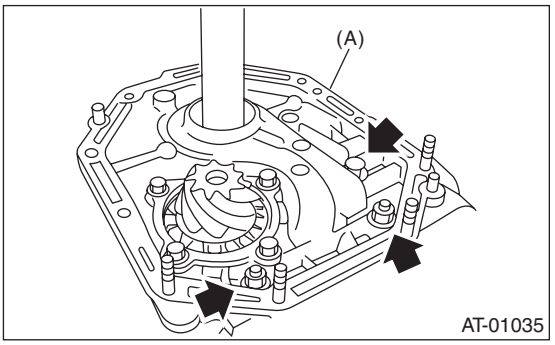

(A) Oil pump housing

2) Install the converter case into transmission case assembly. <Ref. to 4AT-85, INSTALLATION, Converter Case.>
3) Install the reduction driven gear. <Ref. to 4AT-80, INSTALLATION, Reduction Driven Gear.>
4) Install the reduction drive gear. <Ref. to 4AT-82, INSTALLATION, Reduction Drive Gear.>
5) Combine the transmission case with extension case, and then install the rear vehicle speed sen-

sor. <Ref. to 4AT-73, INSTALLATION, Extension Case.>
6) Insert the inhibitor switch and transmission connector to the stay.

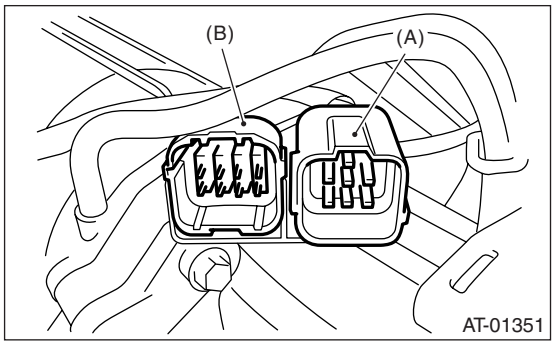

(A) Transmission connector
(B) Inhibitor switch connector

7) Install the oil cooler pipe. <Ref. to 4AT-67, INSTALLATION, ATF Cooler Pipe and Hose.>
8) Install the oil charge pipe with a O-ring. <Ref. to 4AT-71, INSTALLATION, Oil Charge Pipe.>
9) Insert the input shaft with rotating it by hand lightly, and then check the protrusion amount.

Normal protrusion A:
50 — 55 mm (1.97 — 2.17 in)

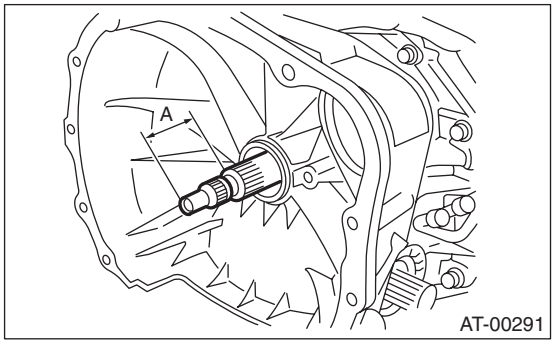

10) Install the torque converter assembly. <Ref. to 4AT-72, INSTALLATION, Torque Converter Assembly.>
11) Install the transmission assembly into vehicle. <Ref. to 4AT-39, INSTALLATION, Automatic Transmission Assembly.>

C: DISASSEMBLY

1. OIL PUMP COVER

1) Remove four seal rings.

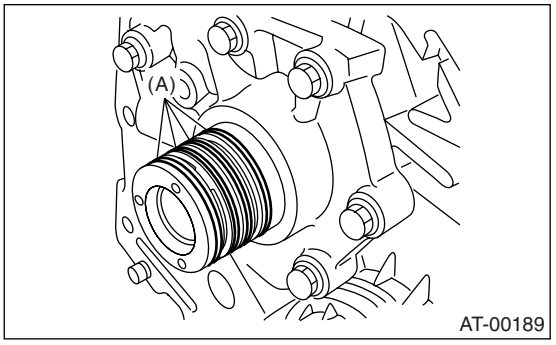

(A) Seal ring

2) Remove the cover by lightly tapping the end of stator shaft.

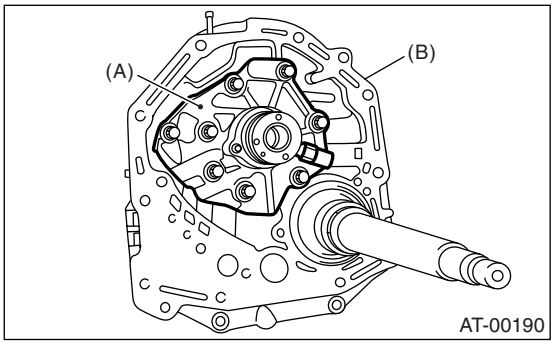

(A) Oil pump cover
(B) Oil pump housing

3) Remove the inner and outer rotor.

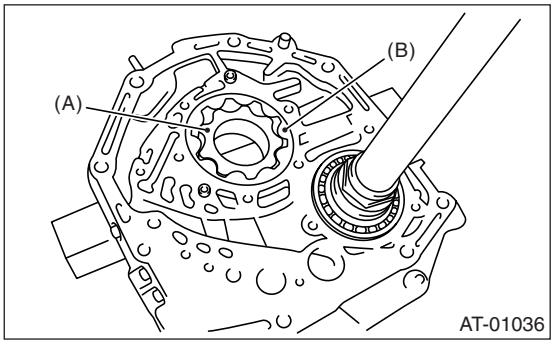

(A) Inner rotor
(B) Outer rotor

2. OIL SEAL RETAINER

1) Remove the oil seal retainer.

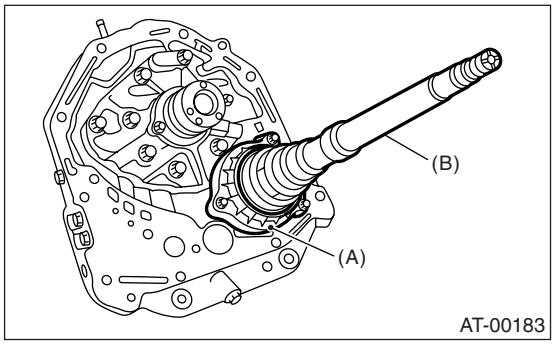

(A) Oil seal retainer
(B) Drive pinion shaft

2) Remove the O-ring.

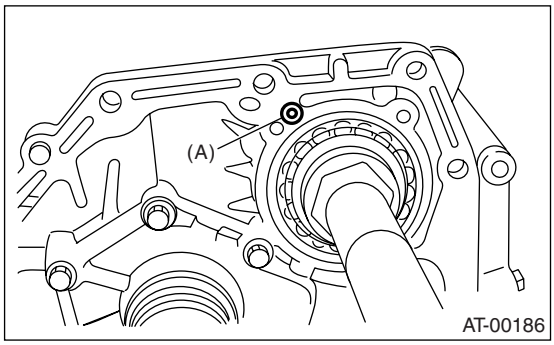

(A) O-ring

3) Remove the oil seal from oil seal retainer.

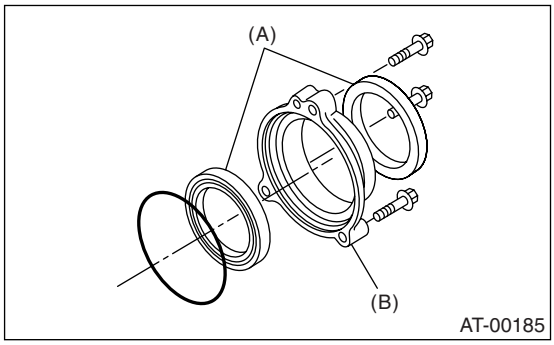

(A) Oil seal
(B) Oil seal retainer

D: ASSEMBLY

1. OIL PUMP COVER

1) Install the oil pump rotor assembly to oil pump housing.

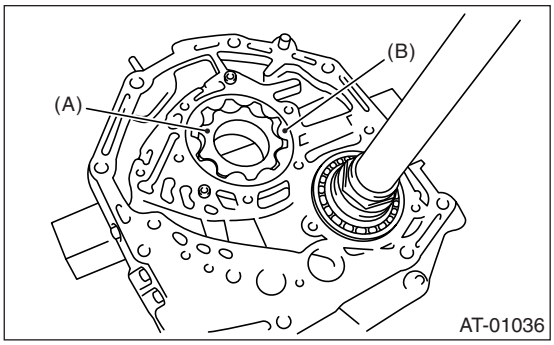

(A) Inner rotor
(B) Outer rotor

2) Align both pivots with the pivot holes of cover, and then install the oil pump cover being careful not to apply excessive force to the pivots.

Tightening torque:
25 N·m (2.5 kgf-m, 18 ft-lb)

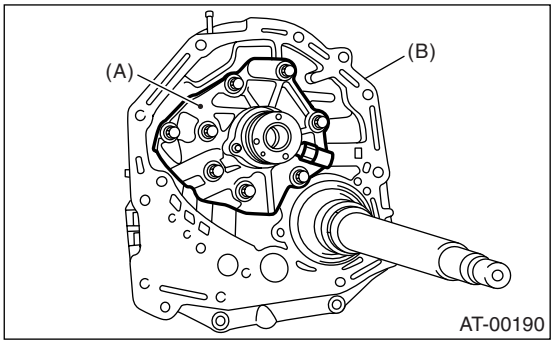

(A) Oil pump cover
(B) Oil pump housing

3) After assembling, turn the oil pump shaft to check the smooth rotation of rotor.
4) Apply vaseline to the oil seal retainer and new seal rings, and install them. After installing, adjust the tooth contact and backlash of drive pinion.

<Ref. to 4AT-91, ADJUSTMENT, Oil Pump Housing.>

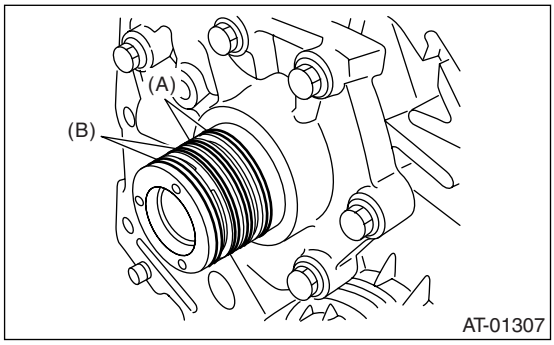

(A) Seal ring (Black)
(B) Seal ring (Brown)

2. OIL SEAL RETAINER

1) Apply ATF to new oil seals (two), and install them to the oil seal retainer in proper direction using ST.
ST 499247300 INSTALLER

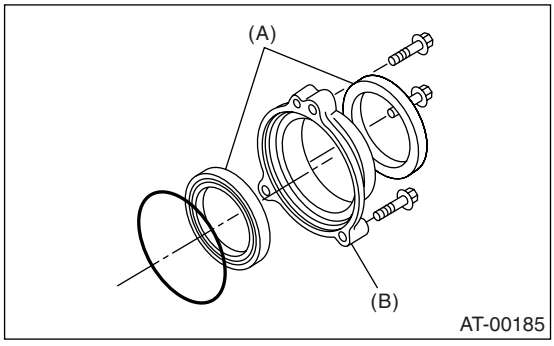

(A) Oil seal
(B) Oil seal retainer

2) Apply ATF to a new O-ring and install it to the oil seal retainer. Install the seal to oil pump housing bore.

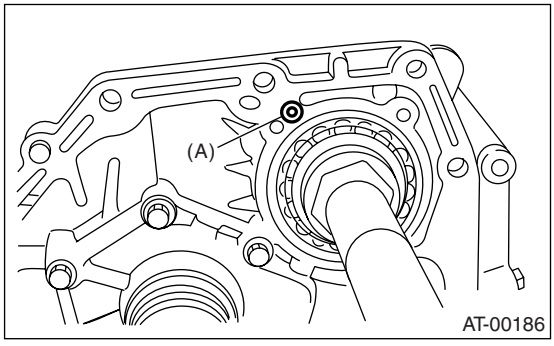

(A) O-ring

3) Install the oil seal and secure it using three bolts being careful not to damage oil seal lip.

Tightening torque:
7 N·m (0.7 kgf-m, 5.1 ft-lb)

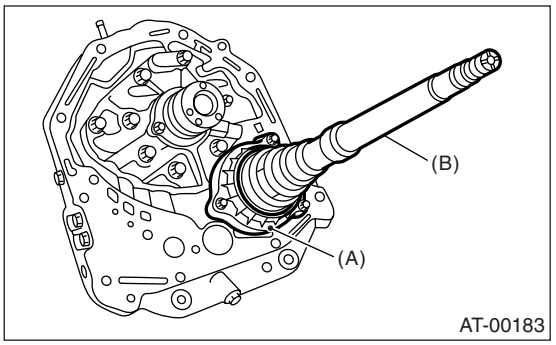

(A) Oil seal retainer
(B) Drive pinion shaft

E: INSPECTION

1) Check the seal ring and oil seal for breaks and damages.
2) Check other parts for dents or abnormalities.
3) Selection of oil pump rotor assembly
(1) Tip clearance
Install the inner rotor and outer rotor to oil pump. With rotor gears facing each other, measure the crest-to-crest clearance.

Tip clearance:
0.02 — 0.15 mm (0.0008 — 0.0059 in)

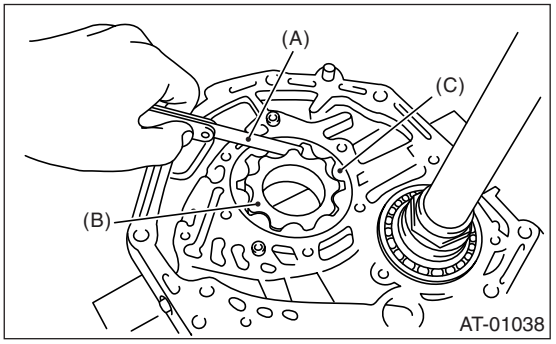

(A) Thickness gauge
(B) Inner rotor
(C) Outer rotor

(2) Side clearance
Set a depth gauge to oil pump housing, then measure the oil pump housing-to-rotor clearance.

Side clearance:
0.02 — 0.04 mm (0.0008 — 0.0016 in)

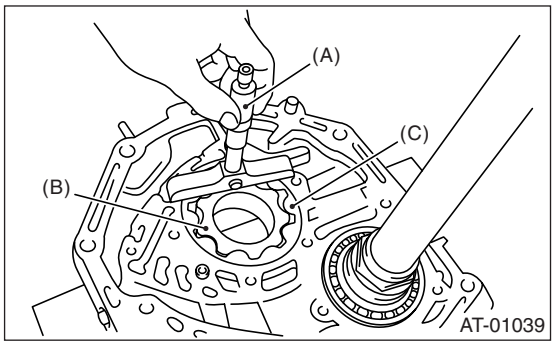

(A) Depth gauge
(B) Inner rotor
(C) Outer rotor

(3) If the depth and/or side clearance are not within the specifications, replace the rotor assembly.

Oil pump rotor ASSY	
Part number	Thickness mm (in)
15008AA060	11.37 — 11.38 (0.4476 — 0.4480)
15008AA070	11.38 — 11.39 (0.4480 — 0.4484)
15008AA080	11.39 — 11.40 (0.4484 — 0.4488)

Measure the total end play and adjust it within specifications. <Ref. to 4AT-91, ADJUSTMENT, Oil Pump Housing.>

F: ADJUSTMENT

1) Using the ST, measure the length “L”, which is from the mating surface of transmission to the recessed portion of high clutch drum.
ST 398643600 GAUGE

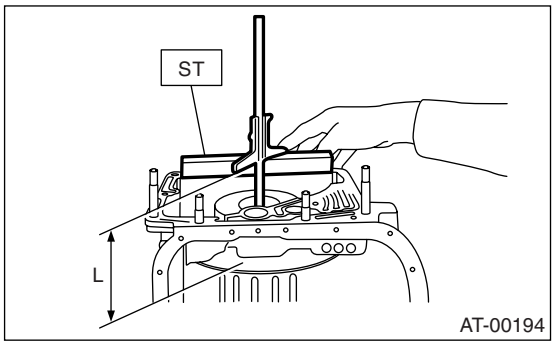

2) Using the ST, measure the length from oil pump housing mating surface to the top surface of oil pump cover with thrust needle bearing.

ST 398643600 GAUGE

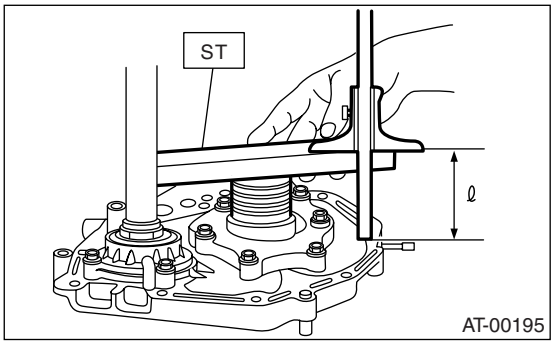

3) Calculation of total end play
Select the suitable bearing race from among those listed in this table so that clearance C to be within 0.25 to 0.55 mm (0.0098 to 0.0217 in).
$C = (L + G) - \ell$

C	Clearance between concave portion of high clutch and end of clutch drum support
L	Length from case mating surface to concave portion of high clutch
G	Gasket thickness [0.28 mm (0.0110 in)]
ℓ	Height from housing mating surface to upper surface of clutch drum support

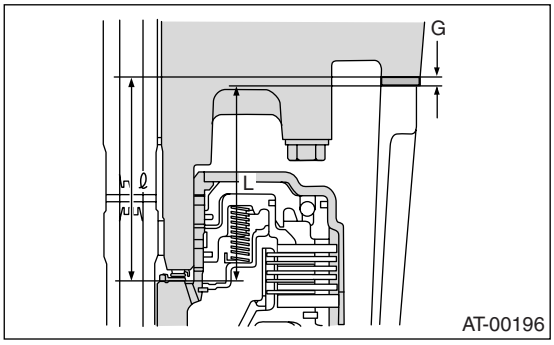

Thrust needle bearing	
Part number	Thickness mm (in)
806528050	4.1 (0.161)
806528060	4.3 (0.169)
806528070	4.5 (0.177)
806528080	4.7 (0.185)
806528090	4.9 (0.193)
806528100	5.1 (0.201)

4) After completing the end play adjustment, insert the bearing race in recess of the high clutch. Install the thrust needle bearing to oil pump cover using vaseline.
5) After correctly install the new gasket to the case mating surface, carefully install the oil pump housing assembly. Be careful to avoid hitting the drive pinion against the inside of case.
6) Install both parts with dowel pins aligned. Make sure no clearance at mating surface.

33.Drive Pinion Shaft Assembly

A: REMOVAL

1) Remove the transmission assembly from vehicle. <Ref. to 4AT-37, REMOVAL, Automatic Transmission Assembly.>
2) Pull out the torque converter assembly. <Ref. to 4AT-72, REMOVAL, Torque Converter Assembly.>
3) Remove the input shaft.

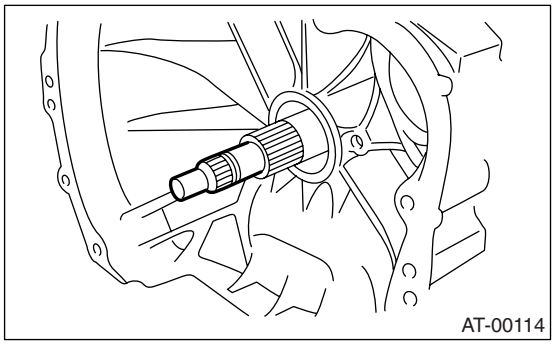
AT-00114

4) Lift up the lever on rear side of transmission harness connector, and then disconnect it from the stay.
5) Disconnect the inhibitor switch connector from the stay.
6) Disconnect the air breather hose. <Ref. to 4AT-70, REMOVAL, Air Breather Hose.>
7) Remove the oil charge pipe. <Ref. to 4AT-71, REMOVAL, Oil Charge Pipe.>
8) Remove the oil cooler inlet and outlet pipes. <Ref. to 4AT-65, REMOVAL, ATF Cooler Pipe and Hose.>
9) Separate the converter case and transmission case part. <Ref. to 4AT-85, REMOVAL, Converter Case.>
10) Separate the transmission case and extension case part. <Ref. to 4AT-73, REMOVAL, Extension Case.>
11) Remove the reduction drive gear. <Ref. to 4AT-82, REMOVAL, Reduction Drive Gear.>
12) Remove the reduction driven gear. <Ref. to 4AT-80, REMOVAL, Reduction Driven Gear.>
13) Remove the drive pinion shaft mounting bolt and remove the drive shaft assembly from oil pump housing.

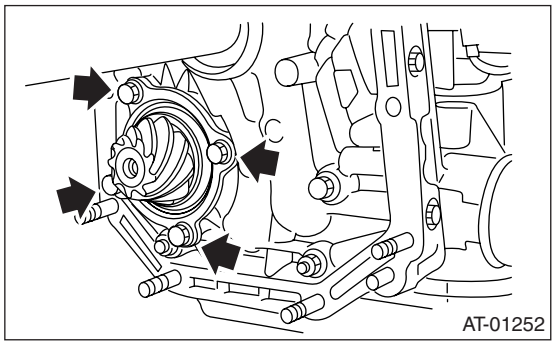
AT-01252

B: INSTALLATION

1) Assemble the drive pinion assembly to oil pump housing.

NOTE:
- Be careful not to bend the shim.
- Be careful not to press-fit the pinion into housing bore.

Tightening torque:
40 N·m (4.0 kgf-m, 30 ft-lb)

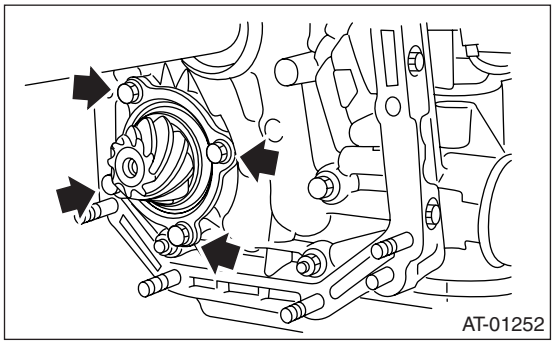
AT-01252

2) Combine the torque converter case with transmission case. <Ref. to 4AT-85, INSTALLATION, Converter Case.>
3) Install the reduction driven gear. <Ref. to 4AT-80, INSTALLATION, Reduction Driven Gear.>
4) Install the reduction drive gear. <Ref. to 4AT-82, INSTALLATION, Reduction Drive Gear.>
5) Combine the transmission case with the extension case, and then install the rear vehicle speed sensor. <Ref. to 4AT-73, INSTALLATION, Extension Case.>
6) Insert the inhibitor switch and transmission connector to the stay.
7) Install the oil cooler inlet and outlet pipes. <Ref. to 4AT-67, INSTALLATION, ATF Cooler Pipe and Hose.>
8) Install the oil charge pipe with O-ring.
9) Insert the input shaft with rotating it by hand lightly, and then check the protrusion amount.

Normal protrusion A:
50 — 55 mm (1.97 — 2.17 in)

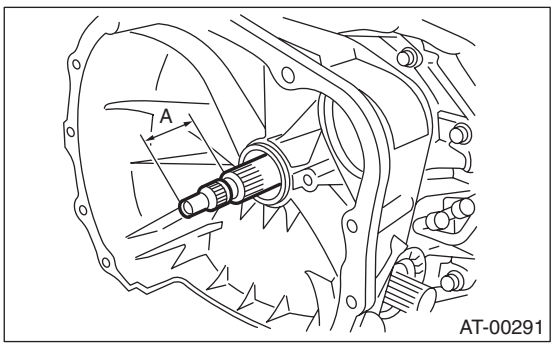

AT-00291

10) Install the torque converter assembly. <Ref. to 4AT-72, INSTALLATION, Torque Converter Assembly.>
11) Install the transmission assembly into vehicle. <Ref. to 4AT-39, INSTALLATION, Automatic Transmission Assembly.>

C: DISASSEMBLY

1) Remove the caulking part of lock nut, and then remove the lock nut with holding the rear spline part of shaft using ST1 and ST2. Pull out the drive pinion collar.
ST1 498937110 HOLDER
ST2 499787700 WRENCH
ST3 499787500 ADAPTER

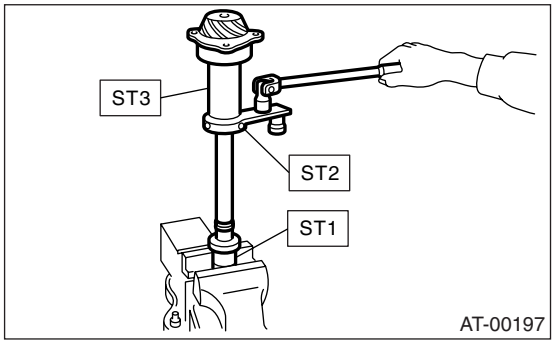

2) Remove the O-ring.
3) Separate the roller bearing and outer race from shaft using press.

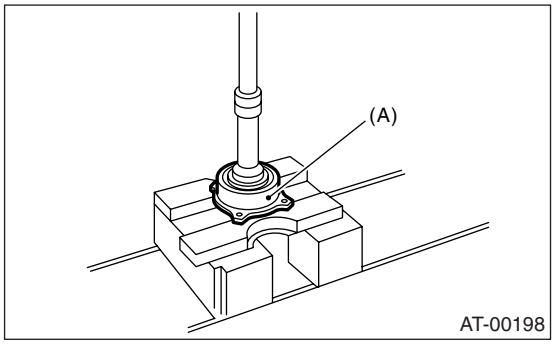

(A) Outer race

4) Separate the front roller bearing from shaft using a press and ST.
ST 498517000 REPLACER

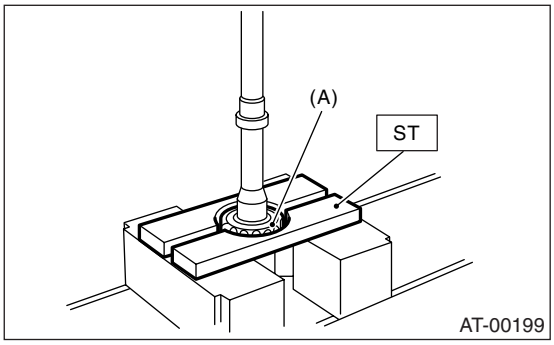

(A) Front roller bearing

D: ASSEMBLY

1) Measure the dimension “A” of drive pinion shaft
ST 398643600 GAUGE

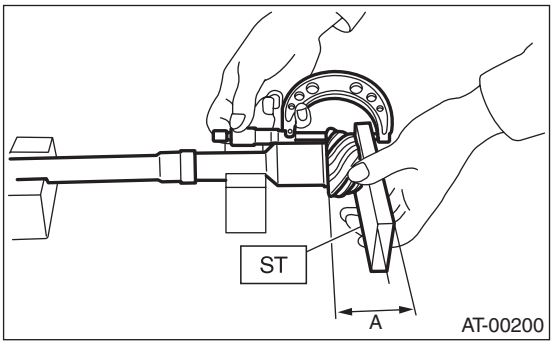

2) Using a press, press-fit the new roller bearing into specified position.

NOTE:
If excessive force is applied to roller bearing, the roller bearing will not turn easily.

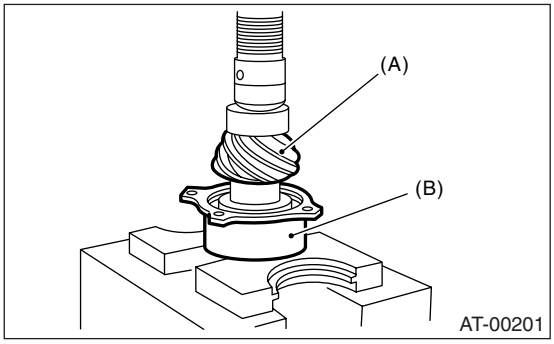

(A) Drive pinion shaft
(B) Roller bearing

3) After applying ATF to a new O-ring and fitting it to the shaft, attach the drive pinion collar to shaft.
4) Install the lock washer to drive pinion shaft in proper direction.
5) Tighten the new lock nuts using ST1, ST2 and ST3.
Calculate the lock washer and lock nut specifications using following formula.

$T2 = L2/(L1 + L2) \times T1$
T1: 116 N·m (11.8 kgf-m, 85.3 ft-lb)
[Required torque setting]
T2: Tightening torque
L1: ST2 length 0.072 m (2.83 in)
L2: Torque wrench length
Example:

Torque wrench length m (in)	Tightening torque N·m (kgf-m, ft-lb)
0.4 (15.75)	98 (10.0, 72)
0.45 (17.72)	100 (10.2, 73.8)
0.5 (19.69)	101 (10.3, 74.5)
0.55 (21.65)	102 (10.4, 75)

ST1 498937110 HOLDER
ST2 499787700 WRENCH
ST3 499787500 ADAPTER

NOTE:
Install the ST2 to torque wrench as straight as possible.

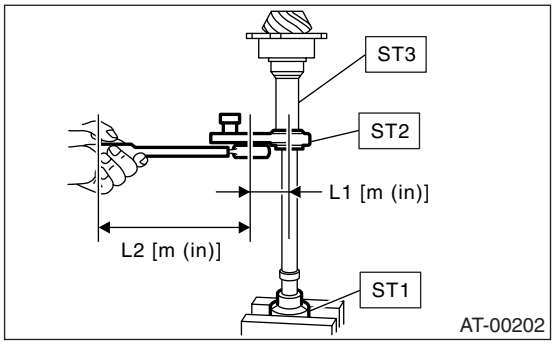

6) Measure the starting torque of bearing. Make sure the starting torque is within the specified range. If the torque is not within specified range, replace the roller bearing.

Starting torque:
7.6 — 38.1 N (0.776 — 3.88 kgf, 1.7 — 8.6 lb)

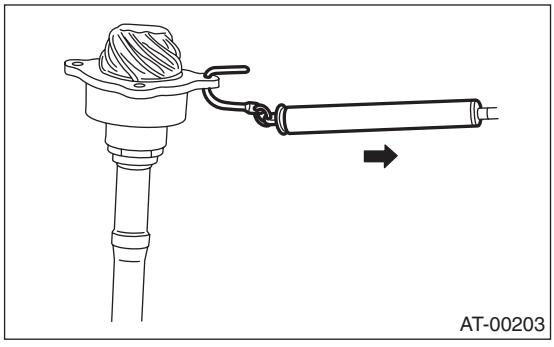

7) Stake the lock nut at two points.
8) Measure the dimension “B” of drive pinion shaft.

ST 398643600 GAUGE

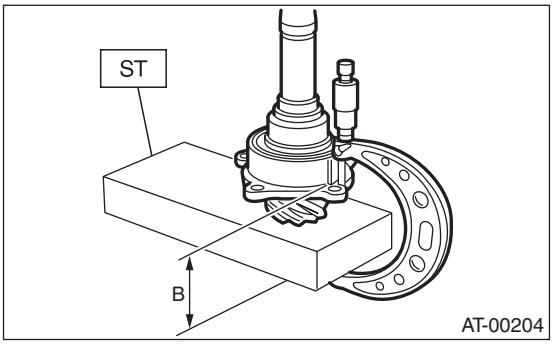

9) Calculate the thickness “t” (mm) of drive pinion shim.
$t = 6.5 \pm 0.0625 - (B - A)$
10) Select three or less shims from following table.

Drive pinion shim	
Part number	Thickness mm (in)
31451AA050	0.150 (0.0059)
31451AA060	0.175 (0.0069)
31451AA070	0.200 (0.0079)
31451AA080	0.225 (0.0089)
31451AA090	0.250 (0.0098)
31451AA100	0.275 (0.0108)

E: INSPECTION

- Make sure that all component parts are free of harmful cut, gouges, and other faults.
- Adjust the teeth alignment. <Ref. to 4AT-94, ADJUSTMENT, Drive Pinion Shaft Assembly.>

F: ADJUSTMENT

1) Remove the liquid gasket completely.
2) Install the oil pump housing assembly to converter case, and secure them with tightening four bolts evenly.

NOTE:
Use an old gasket or an aluminum washer so as not to damage the mating surface of housing.

Tightening torque:
41 N·m (4.2 kgf-m, 30.4 ft-lb)

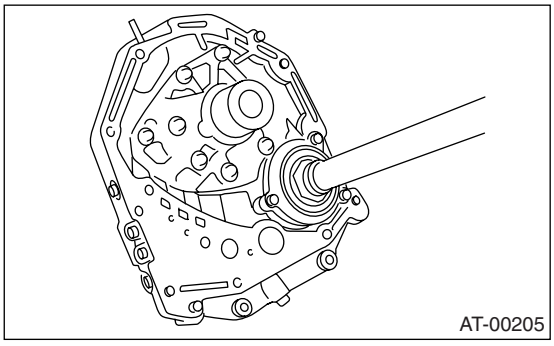

3) Rotate the drive pinion several times using ST1 and ST2.

ST1 498937110 HOLDER
ST2 499787700 WRENCH

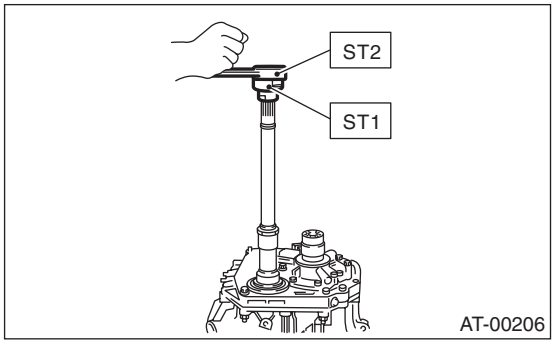

4) Adjust backlash between drive pinion and crown gear. <Ref. to 4AT-101, ADJUSTMENT, Front Differential Assembly.>
5) Apply red lead evenly to the surfaces of three or four teeth on crown gear. Rotate the drive pinion in the forward and reverse directions for several times. Remove the oil pump housing, and check the tooth contact pattern.
If the tooth contact is improper, readjust the backlash or shim thickness. <Ref. to 4AT-101, ADJUSTMENT, Front Differential Assembly.>

- Correct tooth contact

Checking item: Tooth contact pattern is slightly shifted toward to toe side under no-load rotation. [When loaded, contact pattern moves toward heel.]

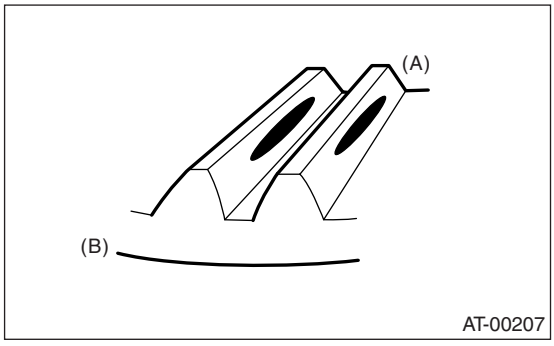

(A) Toe side
(B) Heel side

- Face contact

Checking item: Backlash is too large.
Contact pattern

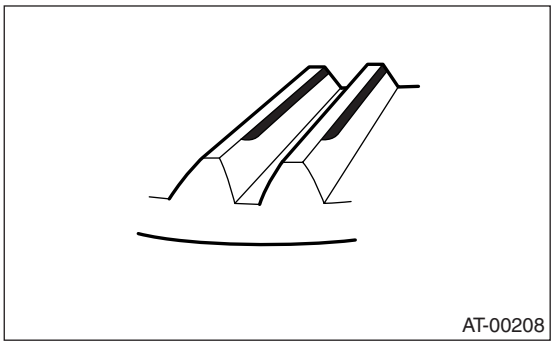

Corrective action: Increase thickness of pinion height adjusting washer in order to bring drive pinion close to driven gear.

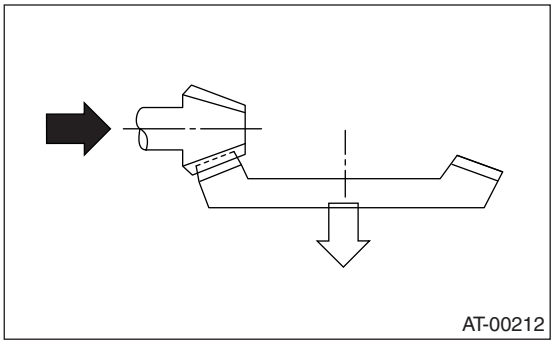

- Flank contact

Checking item: Backlash is too small.
Contact pattern

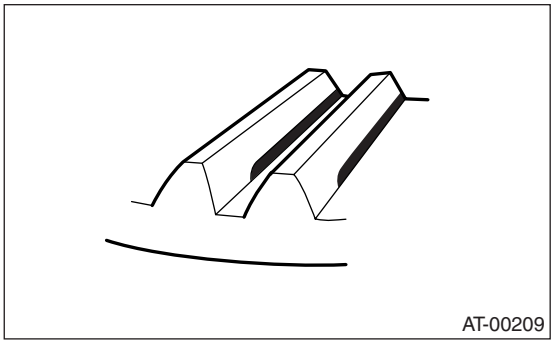

Corrective action: Reduce thickness of pinion height adjusting washer in order to bring drive pinion away from driven gear.

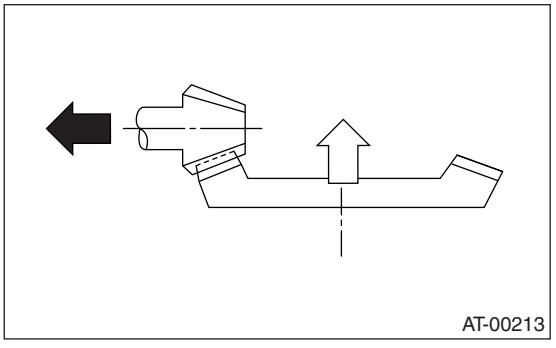

• Toe contact (inside end contact)
Checking item: Contact area is small.
Contact pattern

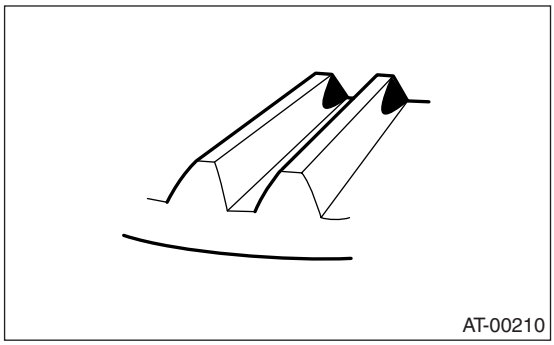

Corrective action: Reduce thickness of pinion height adjusting washer in order to bring drive pinion away from driven gear.

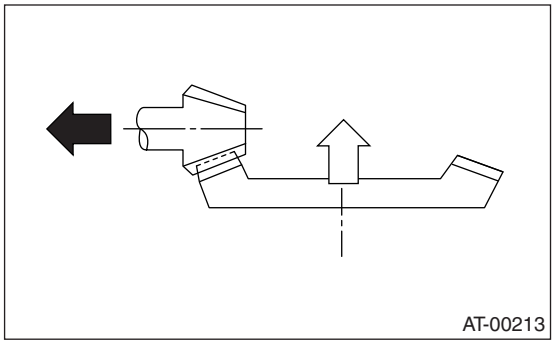

• Heel contact (outside end contact)
Checking item: Contact area is small.
Contact pattern

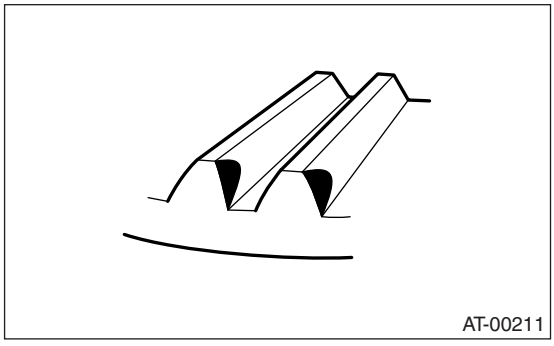

Corrective action: Increase thickness of pinion height adjusting washer in order to bring drive pinion close to driven gear.

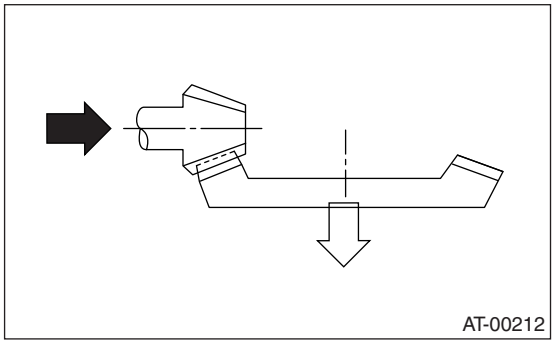

6) If tooth contact is correct, mark the retainer position and loosen it. After fitting a new O-ring and oil seal, screw in the retainer to the marked position. Tighten the lock plate with specified torque.

Tightening torque:
25 N·m (2.5 kgf-m, 18 ft-lb)

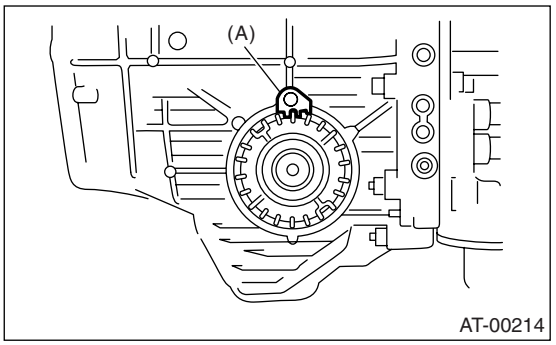

(A) Lock plate

34.Front Differential Assembly

A: REMOVAL

1) Remove the transmission assembly from vehicle. <Ref. to 4AT-37, REMOVAL, Automatic Transmission Assembly.>
2) Pull out the torque converter assembly. <Ref. to 4AT-72, REMOVAL, Torque Converter Assembly.>
3) Remove the input shaft.

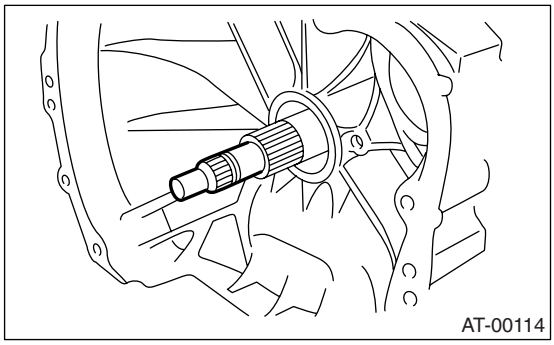

4) Lift up the lever on rear side of transmission harness connector, and then remove it from the stay.
5) Remove the inhibitor switch from the stay.
6) Remove the oil charge pipe. <Ref. to 4AT-71, REMOVAL, Oil Charge Pipe.>
7) Remove the oil cooler inlet and outlet pipes. <Ref. to 4AT-65, REMOVAL, ATF Cooler Pipe and Hose.>
8) Separate the converter case and transmission case. <Ref. to 4AT-85, REMOVAL, Converter Case.>
9) Remove the seal pipe.
10) Remove the differential side retainers using ST.

NOTE:
Hold the differential case assembly by hand to avoid damaging retainer mounting hole of converter case.

ST 499787000 WRENCH ASSY

11) Remove the differential assembly without damaging installation part of retainer.

B: INSTALLATION

1) When installing the differential assembly to case, be careful not to damage the inside of case (particularly, the differential side retainer mating surface).

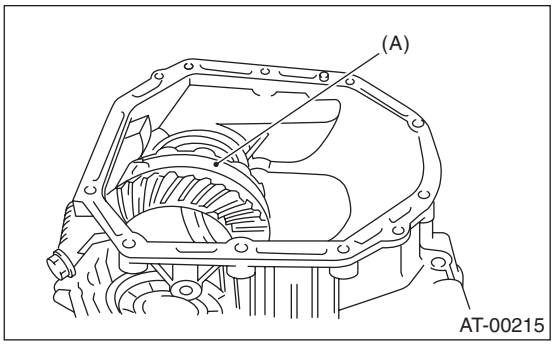

(A) Differential assembly

2) Install the O-ring to left and right side retainer.
3) Install the side retainers using ST. <Ref. to 4AT-101, ADJUSTMENT, Front Differential Assembly.>
ST 18630AA010 WRENCH ASSY

NOTE:
ST 499787000 WRENCH ASSY can be also used.

4) Adjust the front differential backlash. <Ref. to 4AT-101, ADJUSTMENT, Front Differential Assembly.>
5) Install the lock plate.

Tightening torque:
25 N·m (2.5 kgf-m, 18 ft-lb)

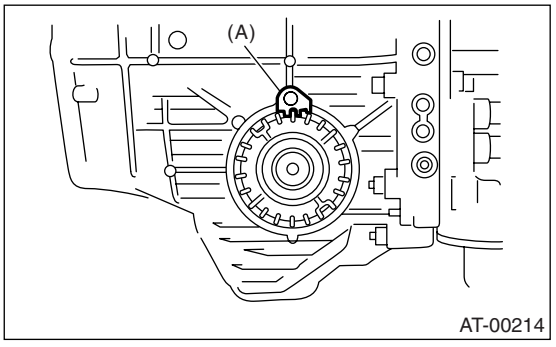

(A) Lock plate

6) Install the new seal pipe to converter case.

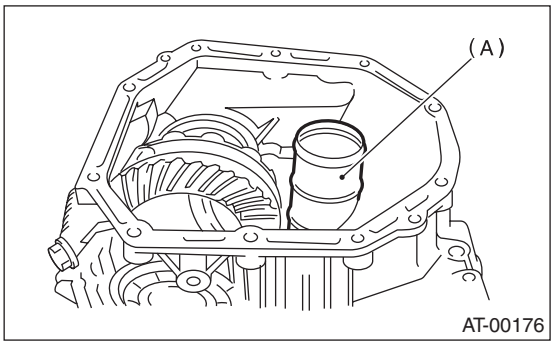

(A) Seal pipe

7) Install the converter case to transmission case. <Ref. to 4AT-85, INSTALLATION, Converter Case.>
8) Insert the inhibitor switch and transmission connector to the stay.

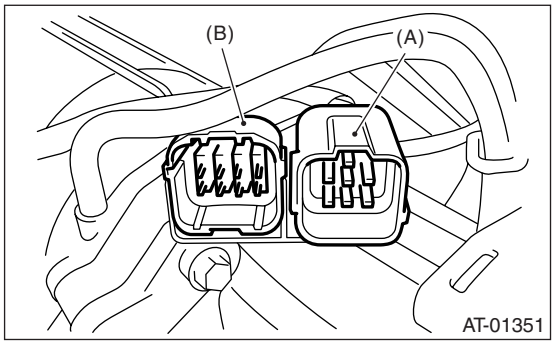

(A) Transmission connector
(B) Inhibitor switch connector

9) Install the oil cooler pipe. <Ref. to 4AT-67, INSTALLATION, ATF Cooler Pipe and Hose.>
10) Install the oil charge pipe with a O-ring. <Ref. to 4AT-71, INSTALLATION, Oil Charge Pipe.>
11) Insert the input shaft with rotating it by hand lightly, and then check the protrusion amount.

Normal protrusion A:
50 — 55 mm (1.97 — 2.17 in)

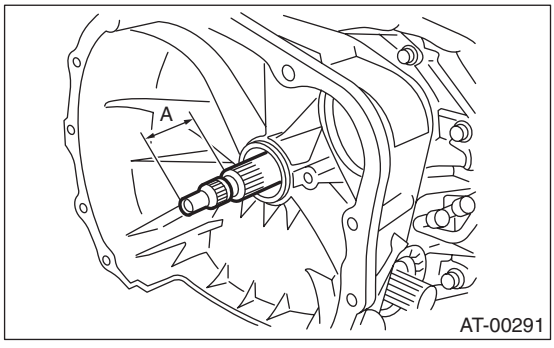

12) Install the torque converter assembly. <Ref. to 4AT-72, INSTALLATION, Torque Converter Assembly.>
13) Install the transmission assembly into vehicle. <Ref. to 4AT-39, INSTALLATION, Automatic Transmission Assembly.>

C: DISASSEMBLY

1. DIFFERENTIAL CASE ASSEMBLY

1) Remove taper roller bearing using ST and press.
ST 498077000 REMOVER

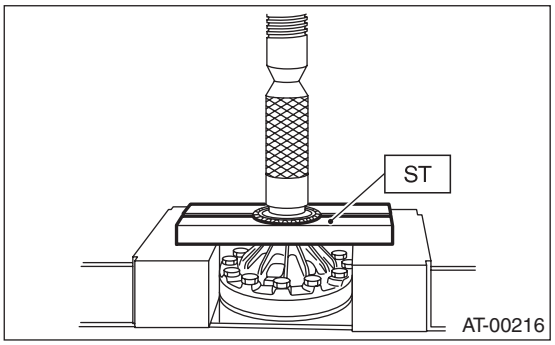

2) Secure the case in a vise and remove the hypoid driven gear tightening bolts, then separate the hypoid driven gear, case (RH) and case (LH).

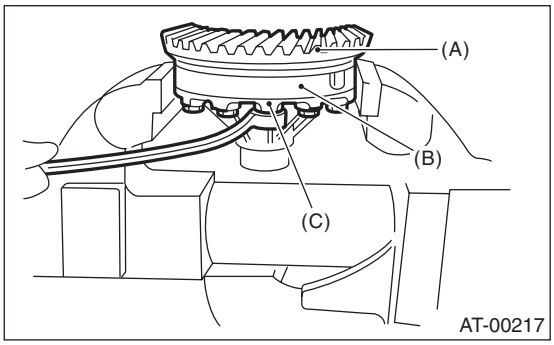

(A) Hypoid driven gear
(B) Differential case (RH)
(C) Differential case (LH)

3) Pull out the straight pin and shaft, and then remove the differential bevel gear, washer and differential bevel pinion.

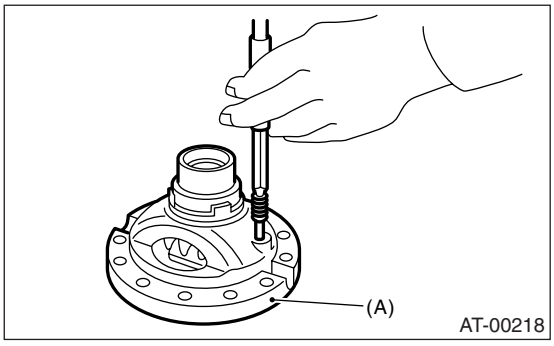

(A) Differential case (RH)

2. SIDE RETAINER

NOTE:
After adjusting the drive pinion backlash and tooth contact, remove and install the oil seal and O-ring.

1) Remove the O-ring.

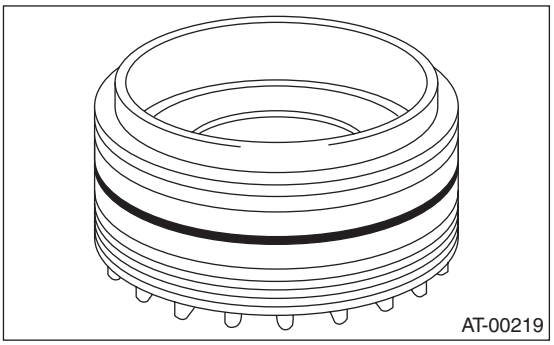

2) Remove the oil seal.

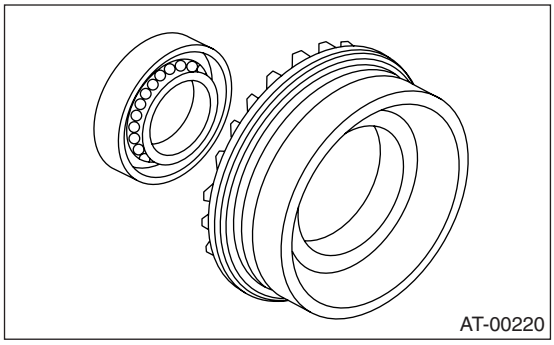

3) Remove the split pin, and then remove the claw.
ST 398527700 PULLER ASSY

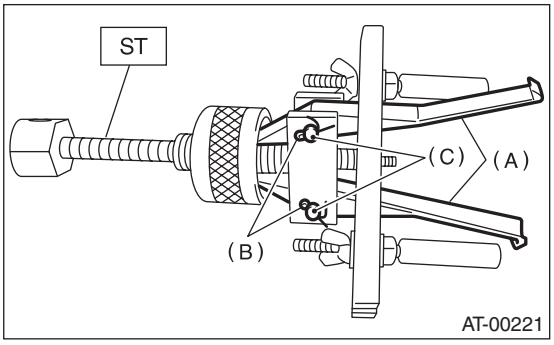

(A) Claw
(B) Split pin
(C) Pin

4) Attach two claws to the outer race, and set the ST to side retainer.
ST 398527700 PULLER ASSY

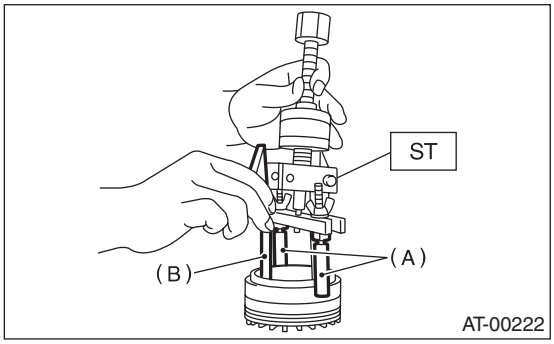

(A) Shaft
(B) Claw

5) Restore the removed claws to original position, and install the pin and split pin.
6) Hold the shaft of ST to avoid removing from side retainer, and then remove the bearing outer race.
ST 398527700 PULLER ASSY

NOTE:
Replace the bearing inner and outer races as a single unit.

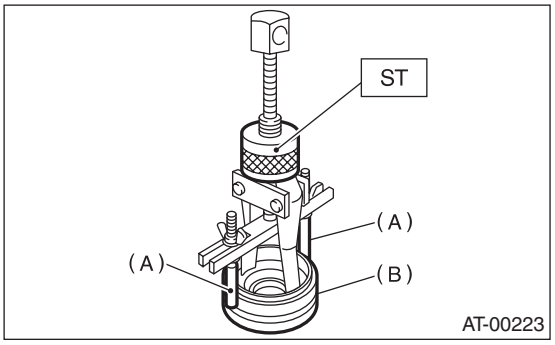

(A) Shaft
(B) Side retainer

D: ASSEMBLY

1. DIFFERENTIAL CASE ASSEMBLY

1) Install the washer, differential bevel gear and differential bevel pinion in differential case (RH). Insert the pinion shaft.

2) Install the straight pin in reverse direction.

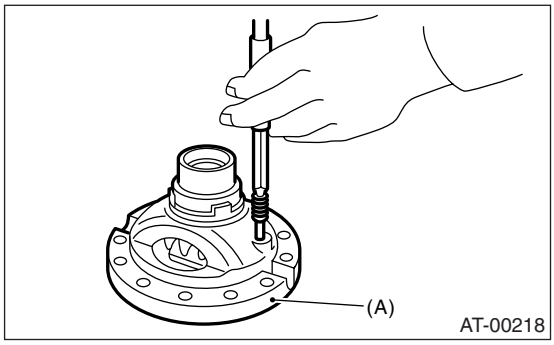

(A) Differential case (RH)

3) Install the washer and differential bevel gear to differential case (LH). Put the differential case (RH) on the case, and then combine the both cases.
4) Install the hypoid driven gear and secure by tightening the bolt.

Tightening torque:
62 N·m (6.3 kgf-m, 45.6 ft-lb)

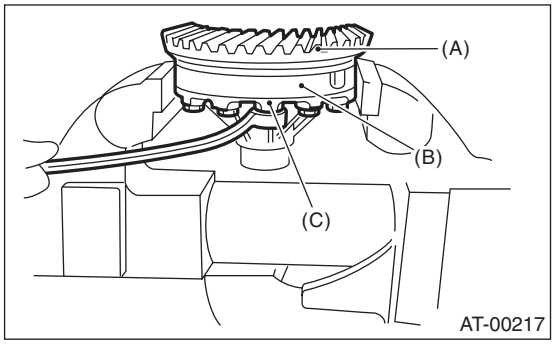

(A) Hypoid driven gear
(B) Differential case (RH)
(C) Differential case (LH)

5) Measurement of backlash (Selection of washer)
(1) Install the SUBARU genuine axle shaft to differential case.

Parts No. 38415AA070 AXLE SHAFT

(2) Measure the gear backlash using ST1 and ST2, and then insert the ST2 from the access window of case.

ST1 498247001 MAGNET BASE
ST2 498247100 DIAL GAUGE

NOTE:
• Measure the backlash by applying a pinion tooth between two bevel gear teeth.
• Fix the bevel pinion gear in place with a screwdriver or similar tool when measuring.

Standard value:
0.13 — 0.18 mm (0.0051 — 0.0071 in)

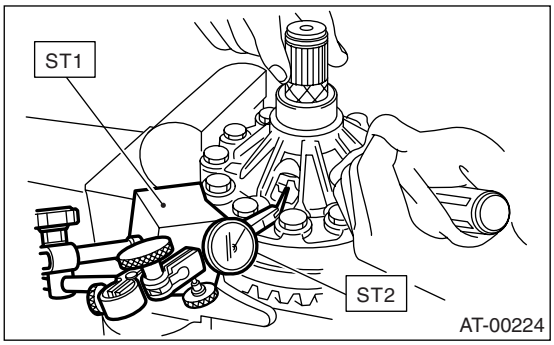

(3) If the backlash is not within specified, select a washer from the table below.

Washer	
Part number	Thickness mm (in)
803038021	0.95 (0.037)
803038022	1.00 (0.039)
803038023	1.05 (0.041)

6) Using the ST, install the taper roller bearing.
ST 398487700 DRIFT

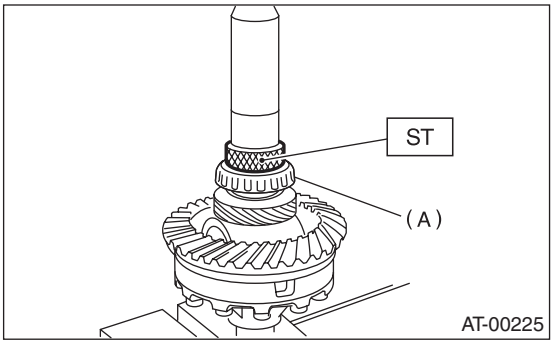

(A) Taper roller bearing

2. SIDE RETAINER

1) Install the bearing outer race to side retainer.
2) Install a new oil seal using ST and hammer.
ST 18675AA000 DIFFERENTIAL SIDE OIL SEAL INSTALLER

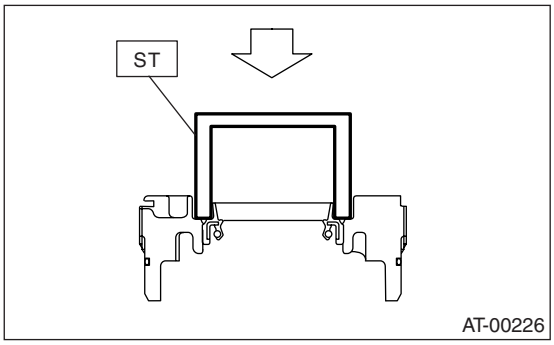

3) Apply gear oil to a new O-ring and install it.

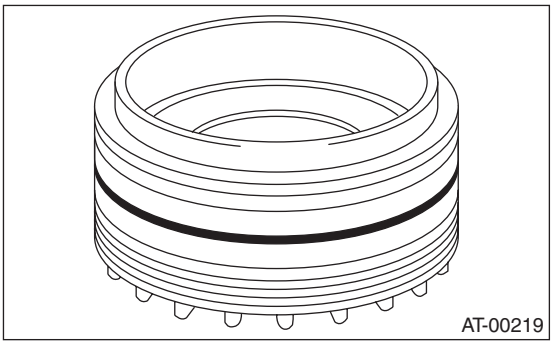

E: INSPECTION

• Check each component for scratches, damage and other faults.
• Measure the backlash, and then adjust it within specification.
<Ref. to 4AT-101, ADJUSTMENT, Front Differential Assembly.>

F: ADJUSTMENT

1) Using the ST, screw-in the retainer until light contact is felt.
ST 18630AA010 WRENCH ASSY

NOTE:
• Screw-in the RH side slightly deeper than the LH side.
• ST 499787000 WRENCH ASSY can be also used.

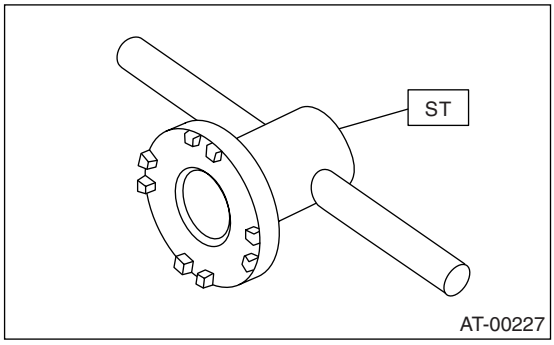

2) Remove the oil pump housing.
3) Remove the liquid gasket completely.
4) Install the oil pump housing assembly to converter case, and secure them with tightening four bolts evenly.

NOTE:
Use an old gasket or an aluminum washer so as not to damage the mating surface of housing.

Tightening torque:
41 N·m (4.2 kgf-m, 30.4 ft-lb)

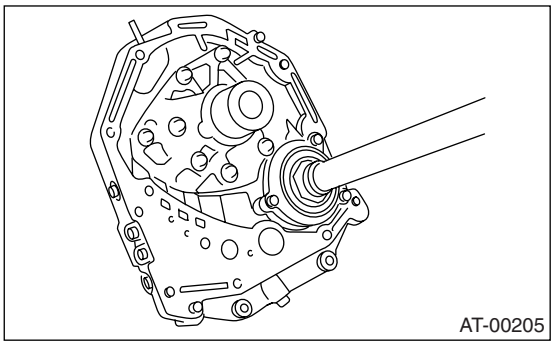

5) Rotate the drive pinion several times using ST1 and ST2.
ST1 498937110 HOLDER
ST2 499787700 WRENCH

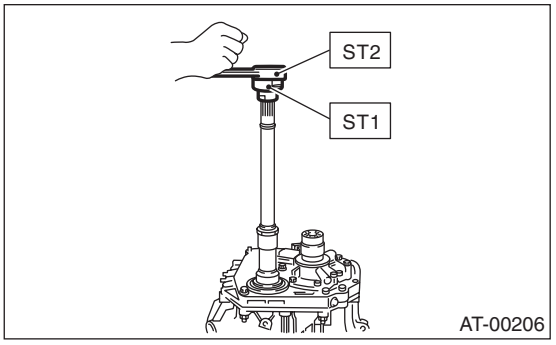

6) Tighten the retainer LH until contact is felt while rotating the shaft. Then loosen the retainer RH. Keep tightening the retainer LH, and loosening the retainer RH until the pinion shaft cannot be turned. This is the “zero” state.

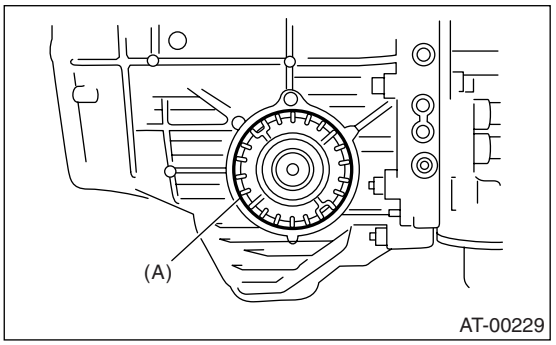

(A) Retainer

7) After the “zero” state is established, back off the retainer LH 3 notches and secure it with the lock plate. Then back off the retainer RH and retighten until it stops. Rotate the drive pinion few times. Tighten the retainer RH 1-3/4 notches further. This sets the preload. Finally, secure the retainer with its lock plate.

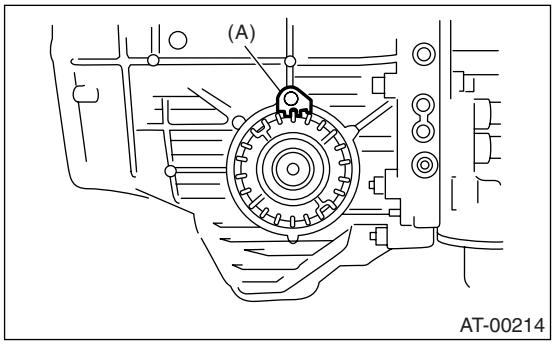

(A) Lock plate

NOTE:
Turning the retainer by one tooth changes the backlash about 0.05 mm (0.0020 in).

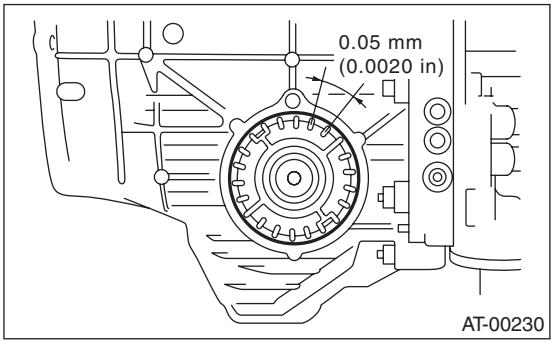

8) Install the SUBARU genuine axle shaft to both side of front differential part.
Parts No. 38415AA000 AXLE SHAFT
9) Turn the drive pinion several times with ST1 and check to see if the backlash is within the specified value with ST2, ST3, ST4 and ST5.
ST1 499787700 WRENCH
ST2 498247001 MAGNET BASE
ST3 498247100 DIAL GAUGE
ST4 499787500 ADAPTER
ST5 498255400 PLATE

Backlash:
0.13 — 0.18 mm (0.0051 — 0.0071 in)

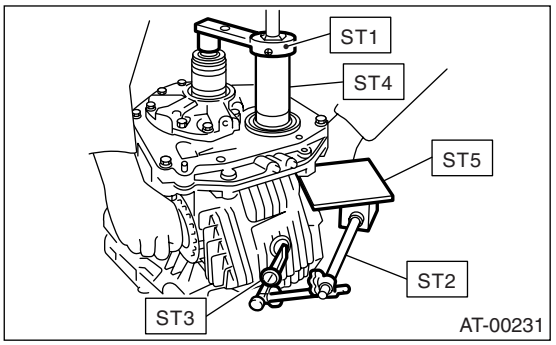

10) Adjust the tooth contact between front differential and drive shaft. <Ref. to 4AT-94, ADJUSTMENT, Drive Pinion Shaft Assembly.>

35.AT Main Case

A: REMOVAL

1) Remove the transmission assembly from vehicle. <Ref. to 4AT-37, REMOVAL, Automatic Transmission Assembly.>
2) Pull out the torque converter assembly. <Ref. to 4AT-72, REMOVAL, Torque Converter Assembly.>
3) Remove the input shaft.

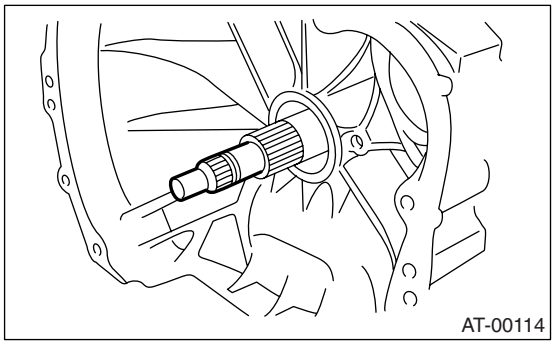

4) Lift up the lever on the rear side of transmission harness connector, and then disconnect it from the stay.
5) Disconnect the inhibitor switch connector from the stay.
6) Disconnect the air breather hose.
7) Remove the oil charge pipe. <Ref. to 4AT-71, REMOVAL, Oil Charge Pipe.>
8) Remove the oil cooler inlet and outlet pipes. <Ref. to 4AT-65, REMOVAL, ATF Cooler Pipe and Hose.>
9) Separate the converter case and transmission case. <Ref. to 4AT-85, REMOVAL, Converter Case.>
10) Remove the oil pump housing.
<Ref. to 4AT-87, REMOVAL, Oil Pump Housing.>
11) Take out the high clutch, thrust needle bearing and reverse clutch assembly.

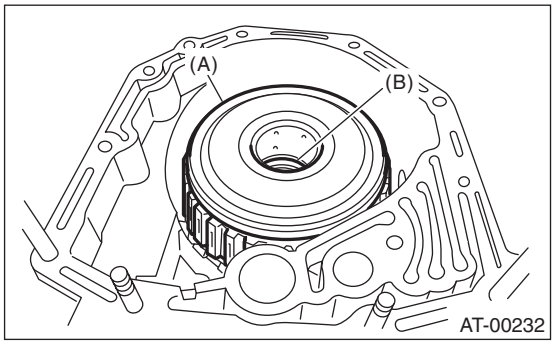

(A) High clutch and reverse clutch ASSY
(B) Thrust needle bearing

12) Take out the high clutch hub and thrust bearing.

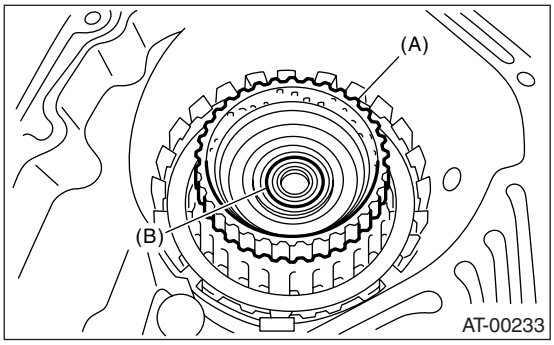

(A) High clutch hub
(B) Thrust needle bearing

13) Take out the front sun gear and thrust needle bearing.

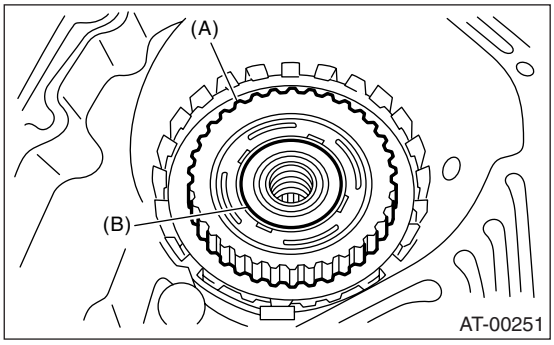

(A) Front sun gear
(B) Thrust needle bearing

14) Pull out the leaf spring without folding.

NOTE:
Remove it while pressing down on lower leaf spring.

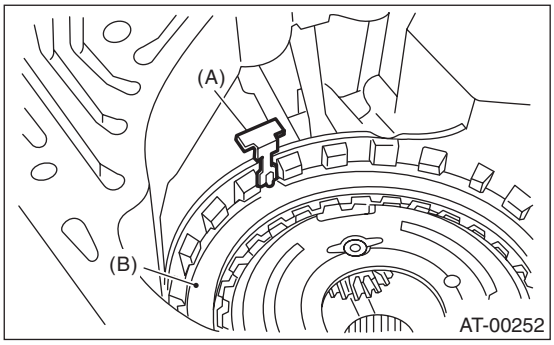

(A) Leaf spring
(B) Retaining plate

15) Remove the snap ring and thrust needle bearing.

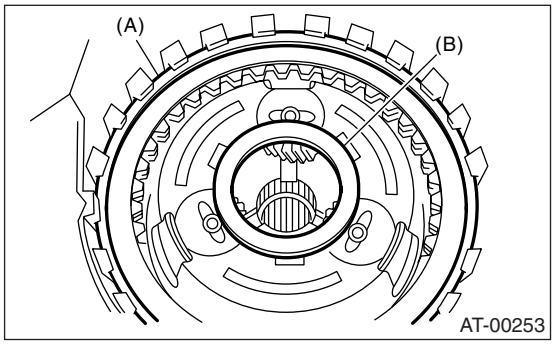

(A) Snap ring
(B) Thrust needle bearing

16) Take out the retaining plate, drive plate and driven plate of 2-4 brake.

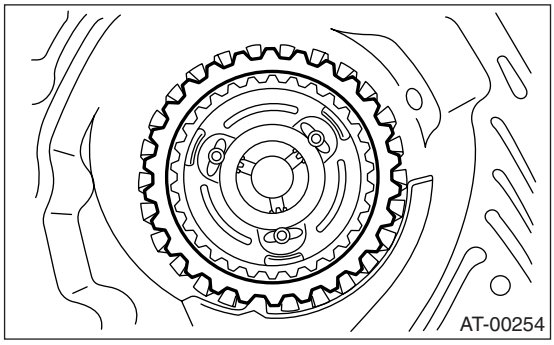

17) Take out the thrust needle bearing, planetary gear assembly and low clutch assembly.

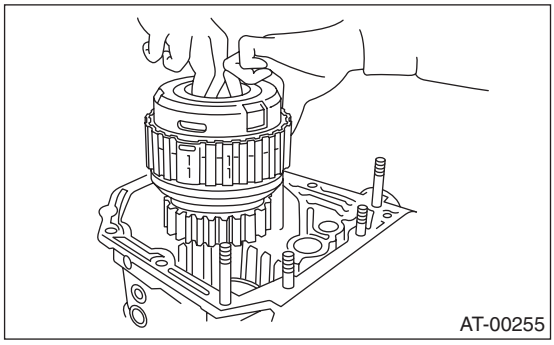

18) Remove the 2-4 brake seal.

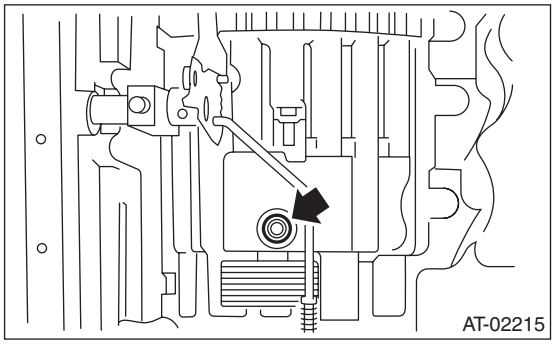

19) Remove the snap ring.

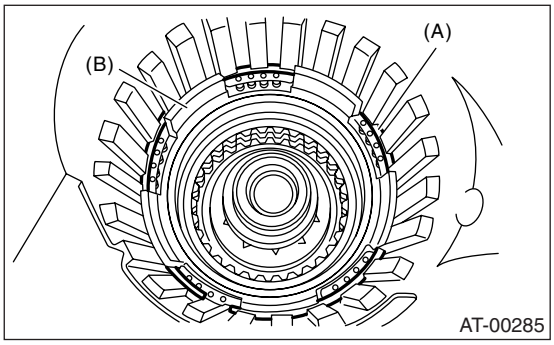

(A) Snap ring
(B) 2-4 brake piston

20) Take out the 2-4 brake return spring.

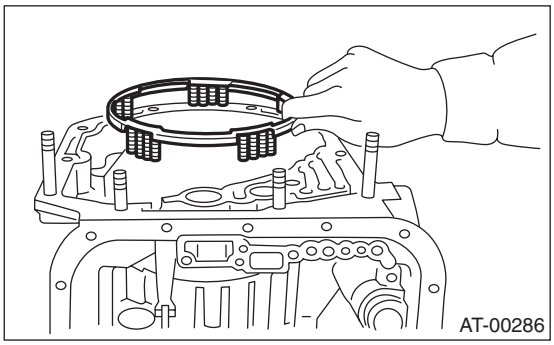

21) Remove the 2-4 brake piston and piston retainer without damaging.

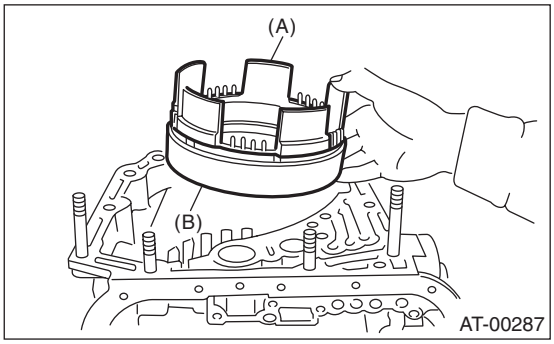

(A) 2-4 brake piston
(B) 2-4 brake piston retainer

22) Pull out the leaf spring without folding.

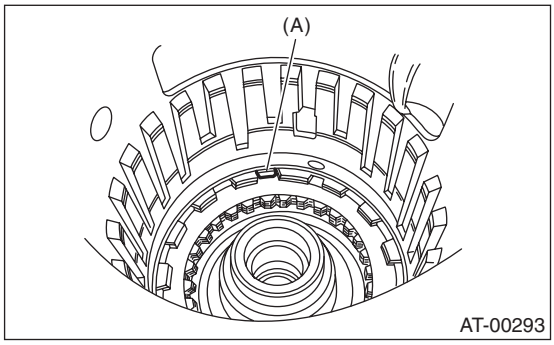

(A) Leaf spring

23) Remove the snap ring.

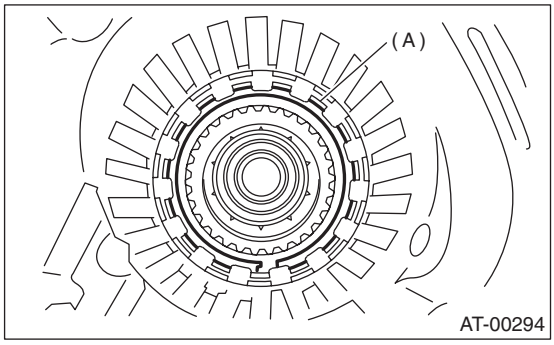

(A) Snap ring

24) Take out the retaining plate, drive plate, driven plate and dish plate.

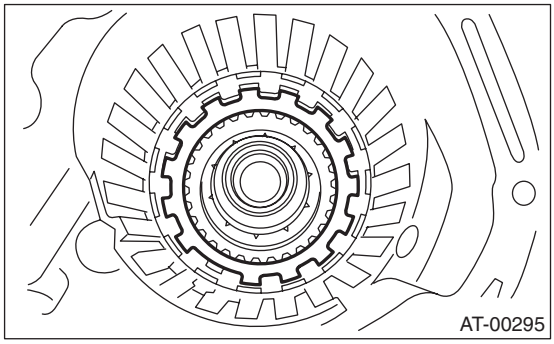

25) Turn the transmission case upside down, and then take out the socket bolts while holding the one-way clutch inner race with hand.

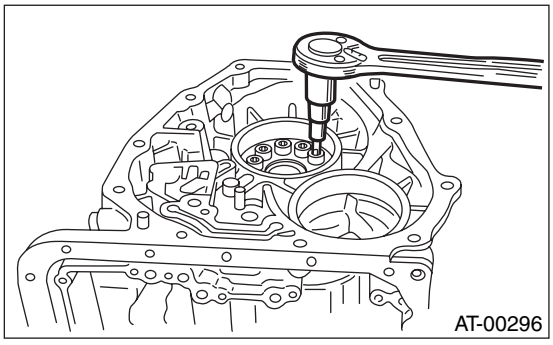

26) Remove the spring retainer.

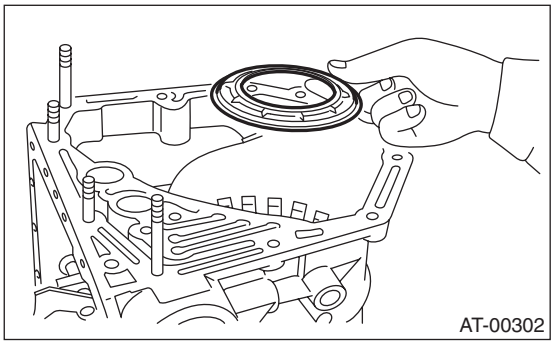

27) Take out the return spring.

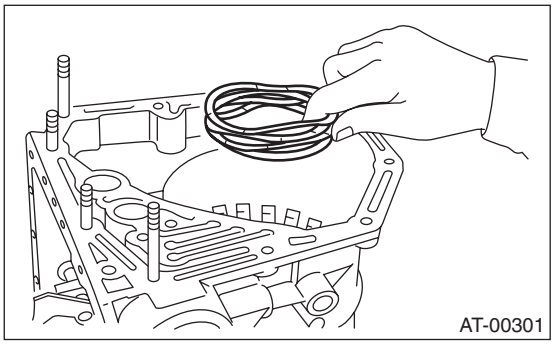

28) Apply compressed air.

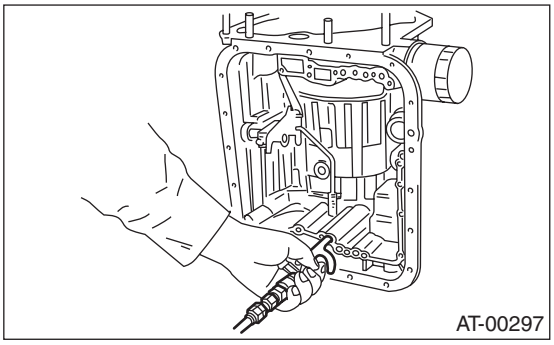

29) Take out the low & reverse piston.

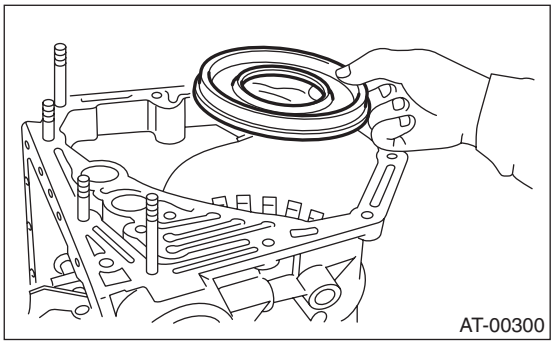

B: INSTALLATION

1) Install the low & reverse brake piston.

NOTE:
- Be careful not to damage the lip seal.

• Apply ATF to the lip.

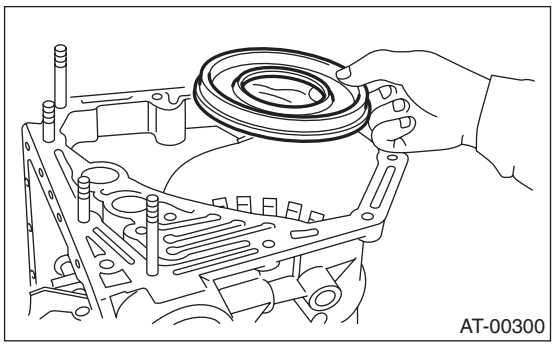

2) Install the return spring.

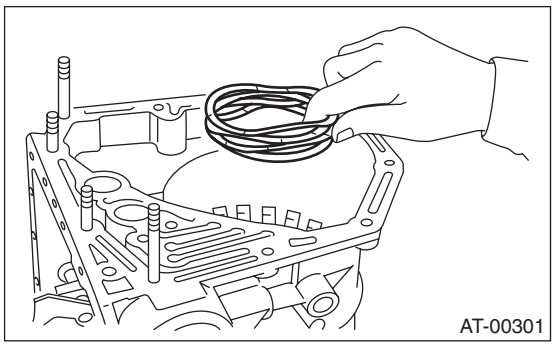

3) Install the spring retainer.

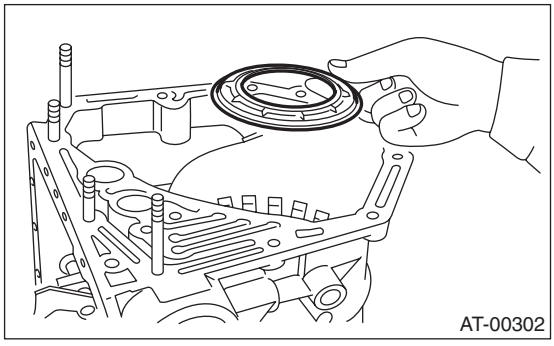

4) Install the one-way clutch inner race, spring retainer and return spring.
5) Tighten the socket bolts evenly from the rear side of transmission case.

Tightening torque:
25 N·m (2.5 kgf-m, 18 ft-lb)

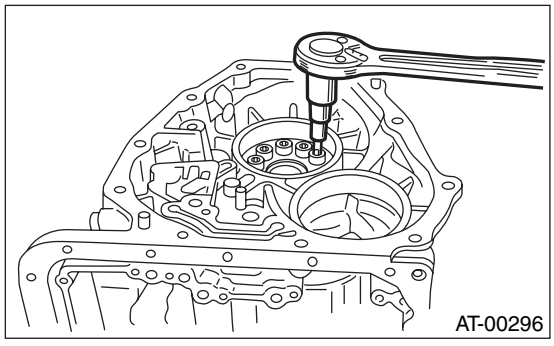

6) Place the front side of transmission body up.
7) Install the thrust needle bearing.
8) Place the dish plate, driven plate, drive plate and retaining plate neatly in this order on surface table.
9) Set the micro gauge to retaining plate, and read its scale.

NOTE:
The value, which is read in the gauge at this time, is zero point.

10) Scale and record the weight “Z” of a flat board which will be put on retaining plate.

NOTE:
• Use a stiff flat board which does not bend against load.
• Use a flat board of its weight less than 83 N (8.5 kgf, 18.7 lb).

11) Put the flat board on retaining plate.

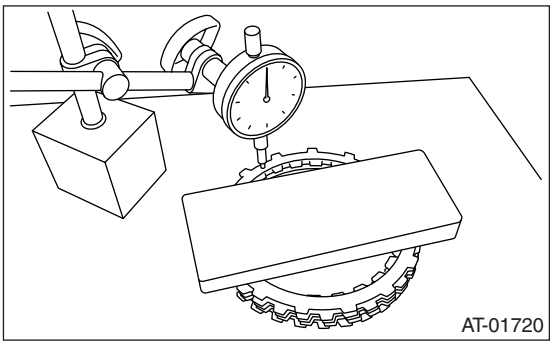

12) Using the following formula, calculate “N” indicated on the push/pull gauge.
N = 83 N (8.5 kgf, 18.7 lb) − Z
N: Value indicated on push/pull gauge
83 N (8.5 kgf, 18.7 lb): Load applied to clutch plate
Z: Flat board weight
13) Press the center of retaining plate applying force of N with push/pull gauge, and then measure and record the height A. Make more than three measurements at even distance and take the average value.

NOTE:
If three points, measure the height every 120°. If four points, measure the height every 90°.

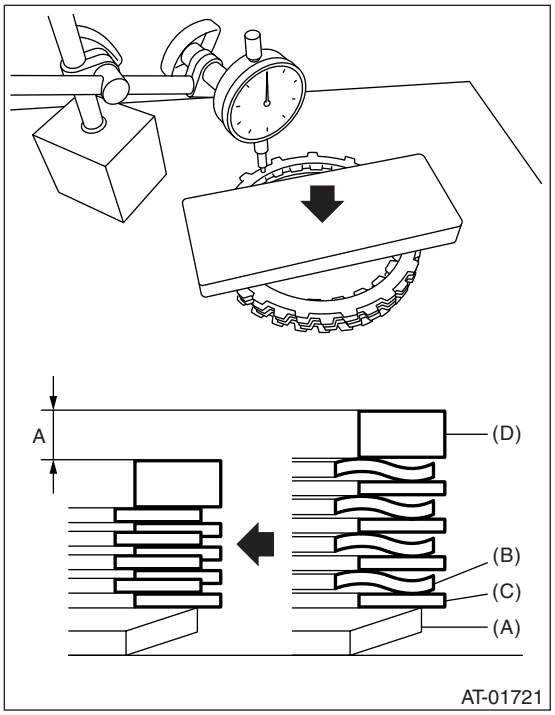

(A) Dish plate
(B) Driven plate
(C) Drive plate
(D) Retaining plate

14) Installation of the low & reverse brake:
Install the dish plate, driven plate and retaining plate, and then secure them with snap ring.

NOTE:
Pay attention to the orientation of dish plate.

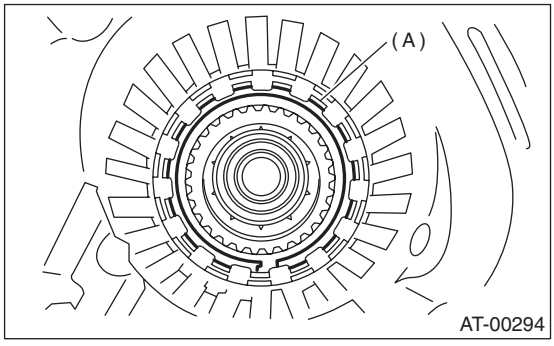

(A) Snap ring

15) Apply compressed air intermittently to check for operation.

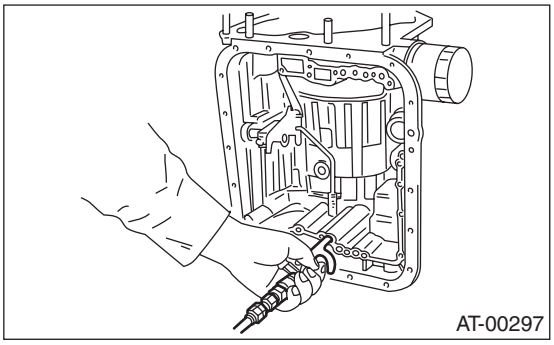

16) Place the same thickness of shim on both sides to prevent the plate from tilting, and then measure and record the clearance B.

NOTE:
Do not press the shim downward with excessive force, or else the waveform of drive plates will be broken down.

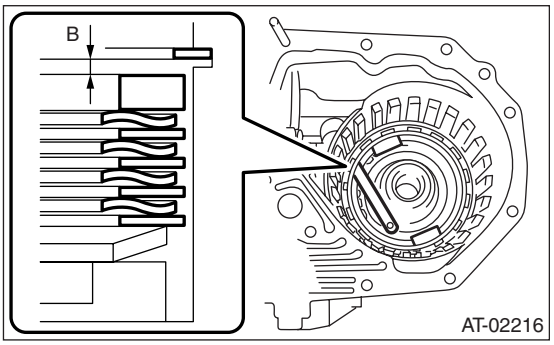

17) Piston stroke calculation
Select the retaining plate within the specification by calculating with A and B dimensions which have been recorded before. If the calculated value exceeds the service limit, replace the drive plate with a new one and adjust it within the specification.
T = A + B
T: Piston stroke
A: Collapse amount of drive plate
B: Clearance between retaining plate and snap ring

Initial standard:
2.15 — 2.65 mm (0.085 — 0.104 in)

Limit thickness:
2.95 mm (0.116 in)

Retaining plate	
Part number	Thickness mm (in)
31667AA420	3.8 (0.150)
31667AA320	4.1 (0.161)
31667AA330	4.4 (0.173)
31667AA340	4.7 (0.185)
31667AA350	5.0 (0.197)
31667AA360	5.3 (0.209)
31667AA370	5.6 (0.220)
31667AA380	5.9 (0.232)

18) Install the leaf spring of low & reverse brake.

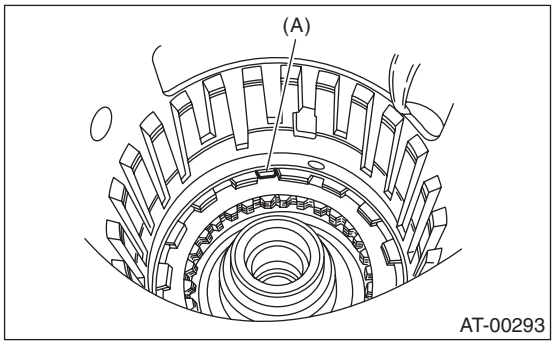

(A) Leaf spring

19) Install the 2-4 brake piston and 2-4 brake retainer by aligning the holes of 2-4 brake retainer and hole of transmission case.

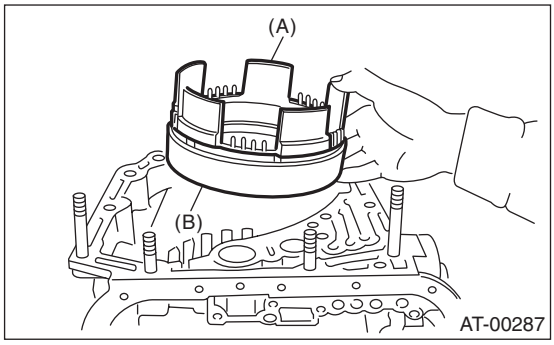

(A) 2-4 brake piston
(B) 2-4 brake piston retainer

20) Install 2-4 brake piston return spring to transmission case.

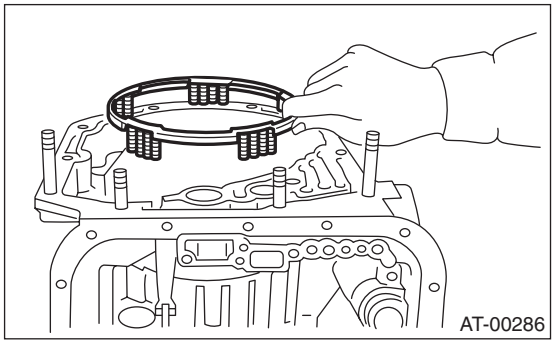

21) Position the snap ring in transmission. Using the ST, press the snap ring into specified place.
ST 498677100 COMPRESSOR

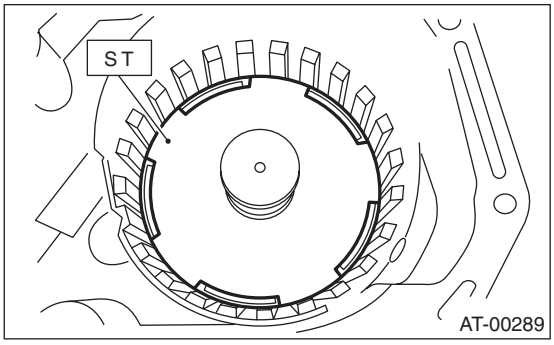

22) Install the planetary gear and low clutch assembly to transmission case.
Install carefully while slowly rotating the low clutch and planetary gear assembly paying special attention not to damage the seal ring.

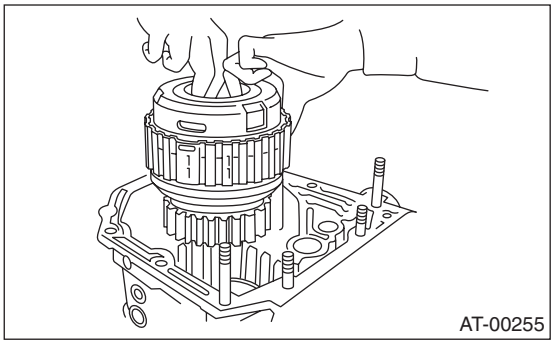

23) Place the dish plate, driven plate, drive plate and retaining plate neatly in this order on surface table.
24) Set the micro gauge to retaining plate, and read its scale.

NOTE:
The value, which is read in the gauge at this time, is zero point.

25) Scale and record the weight “Z” of a flat board which will be put on retaining plate.

NOTE:
• Use a stiff flat board which does not bend against load.
• Use a flat board of its weight less than 100 N (10.2 kgf, 22.5 lb).

26) Put the flat board on retaining plate.

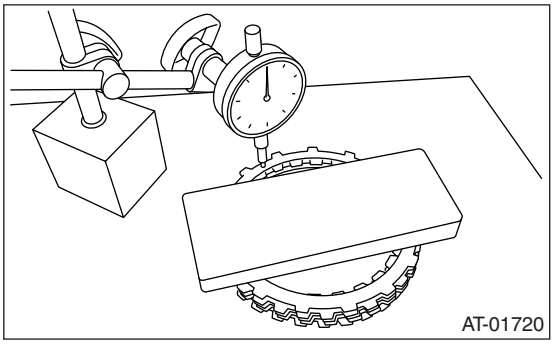

27) Using the following formula, calculate “N” indicated on the push/pull gauge.
N = 100 N (10.2 kgf, 22.5 lb) − Z
N: Value indicated on push/pull gauge
100 N (10.2 kgf, 22.5 lb): Load applied to clutch plate
Z: Flat board weight
28) Press the center of retaining plate applying force of N with push/pull gauge, and then measure and record the height A. Make more than three measurements at even distance and take the average value.

NOTE:
If three points, measure the height every 120°. If four points, measure the height every 90°.

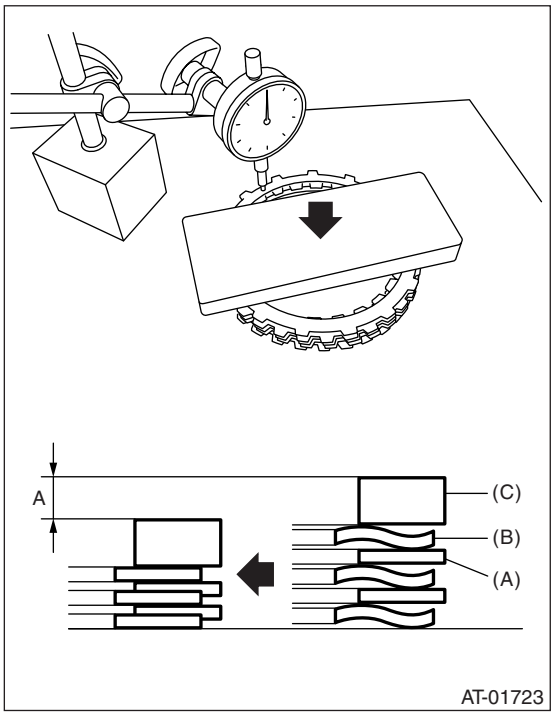

(A) Driven plate
(B) Drive plate
(C) Retaining plate

29) Install the pressure plate, drive plate, driven plate, retaining plate and snap ring.

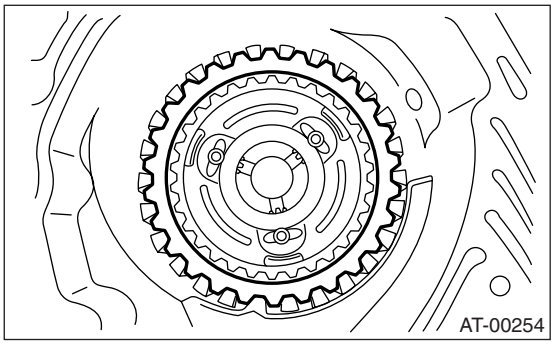

30) Install a new 2-4 brake oil seal to transmission case.

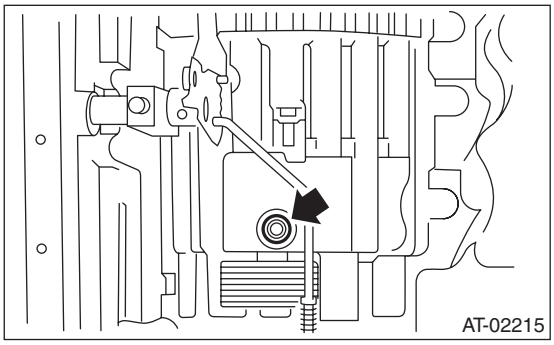

31) After all 2-4 brake component parts have been installed, blow air intermittently and confirm the operation of brake.

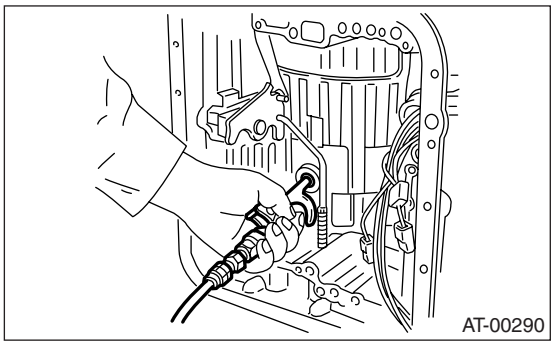

32) Measure and record the clearance B between the retaining plate and snap ring.

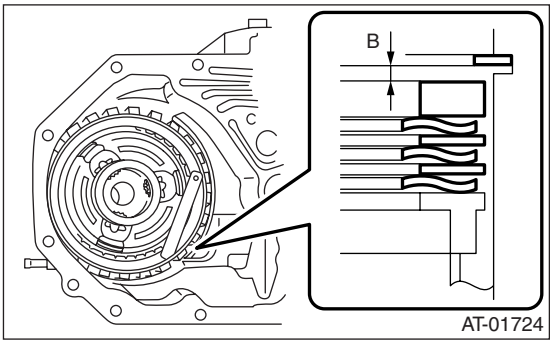

33) Piston stroke calculation
Select the retaining plate within the specification by calculating with A and B dimensions which have been recorded before. If the calculated value exceeds the usage limit, replace the drive plate with a new one and adjust it within the specification.
T = A + B
T: Piston stroke
A: Collapse amount of drive plate
B: Clearance between retaining plate and snap ring

Initial standard:
1.7 — 2.1 mm (0.067 — 0.083 in)

Limit thickness:
2.3 mm (0.091 in)

Retaining plate	
Part number	Thickness mm (in)
31567AA991	5.6 (0.220)
31567AB001	5.8 (0.228)
31567AB011	6.0 (0.236)
31567AB021	6.2 (0.244)
31567AB031	6.4 (0.252)
31567AB041	6.6 (0.260)

34) Be careful not to mistake the location of the leaf spring to be inserted.

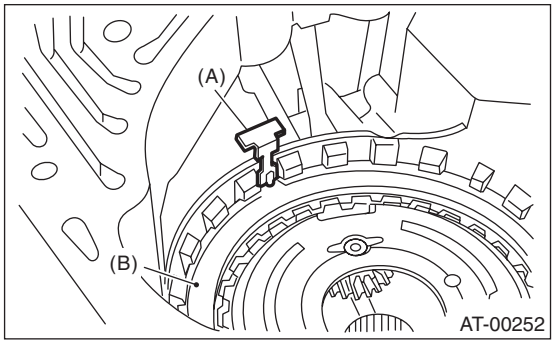

(A) Leaf spring
(B) Retaining plate

35) Install the thrust needle bearing in correct direction.

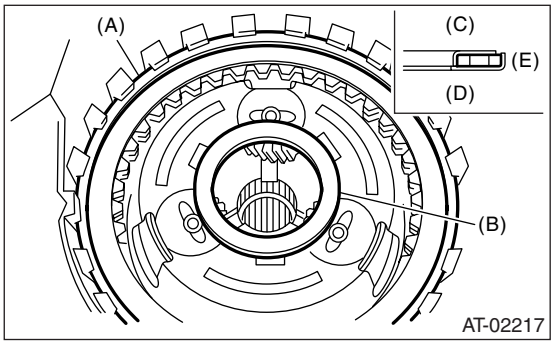

(A) Snap ring
(B) Thrust needle bearing
(C) Upside
(D) Downside
(E) Outside

36) Install the front sun gear and thrust needle bearing.

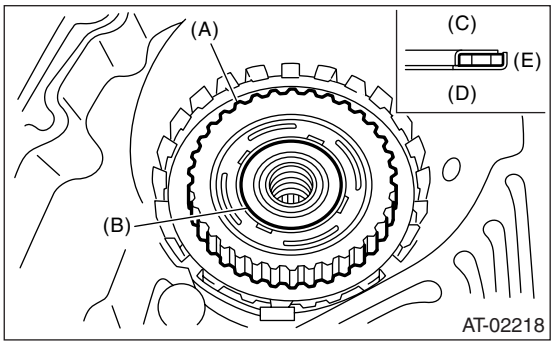

(A) Front sun gear
(B) Thrust needle bearing
(C) Upside
(D) Downside
(E) Outside

37) Install the high clutch hub.
Attach the thrust needle bearing to hub using vaseline, and then install the hub by correctly engaging the splines of the front planetary carrier.

38) Install the thrust needle bearing in proper direction.

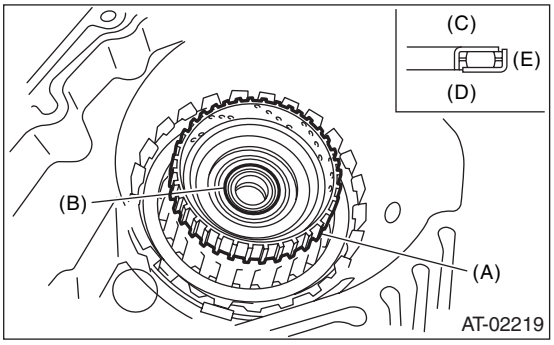

(A) High clutch hub
(B) Thrust needle bearing
(C) Upside
(D) Downside
(E) Outside

39) Install the high clutch assembly.

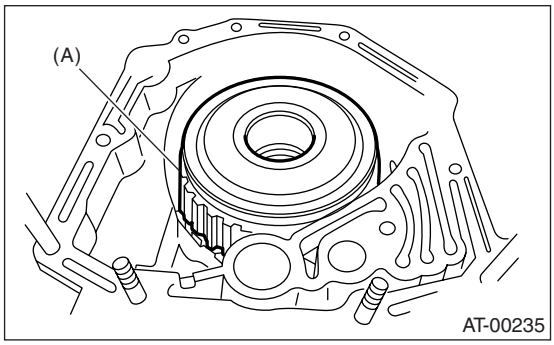

(A) High clutch and reverse clutch ASSY

40) Adjust the total end play. <Ref. to 4AT-91, ADJUSTMENT, Oil Pump Housing.>
41) Install the thrust needle bearing in proper direction.

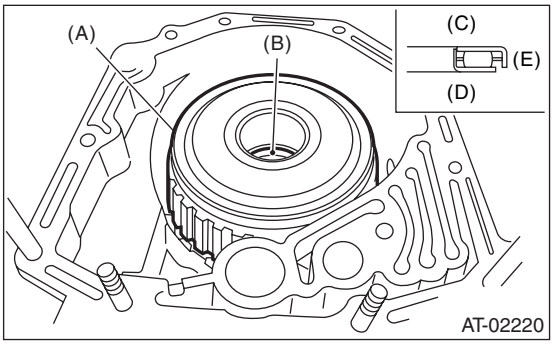

(A) High clutch and reverse clutch ASSY
(B) Thrust needle bearing
(C) Upside
(D) Downside
(E) Outside

42) Install the oil pump housing assembly with a new gasket. <Ref. to 4AT-87, Oil Pump Housing.>
43) Install the converter case into transmission case assembly. <Ref. to 4AT-85, INSTALLATION, Converter Case.>
44) Insert the inhibitor switch and transmission connector to the stay.
45) Install the air breather hose. <Ref. to 4AT-70, INSTALLATION, Air Breather Hose.>

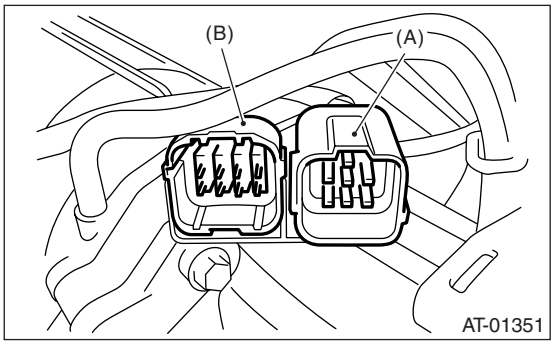

(A) Transmission connector
(B) Inhibitor switch connector

46) Install the oil cooler pipe. <Ref. to 4AT-67, INSTALLATION, ATF Cooler Pipe and Hose.>
47) Install the oil charge pipe with a O-ring. <Ref. to 4AT-71, INSTALLATION, Oil Charge Pipe.>
48) Insert the input shaft with rotating it by hand lightly, and then check the protrusion amount.

Normal protrusion A:
50 — 55 mm (1.97 — 2.17 in)

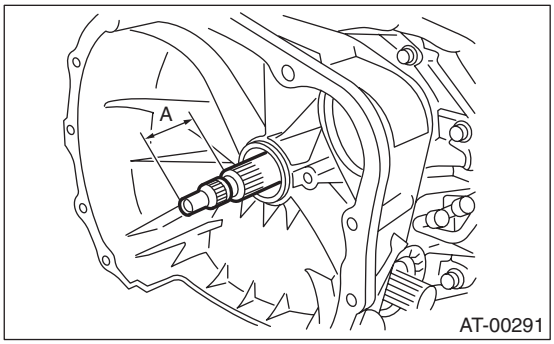

49) Install the torque converter assembly. <Ref. to 4AT-72, INSTALLATION, Torque Converter Assembly.>
50) Install the transmission assembly into vehicle. <Ref. to 4AT-39, INSTALLATION, Automatic Transmission Assembly.>

C: DISASSEMBLY

1. HIGH CLUTCH AND REVERSE CLUTCH

1) Remove the snap ring, and then take out the retaining plate, drive plate and driven plate.

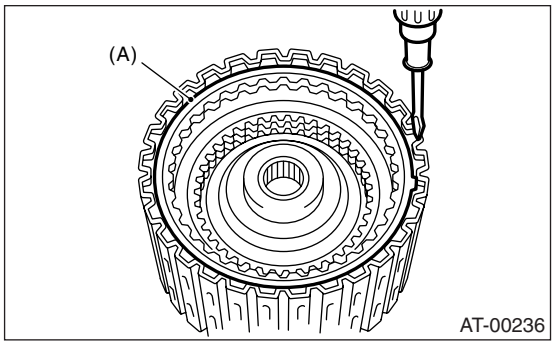

(A) Snap ring

2) Remove the snap ring, and then take out the retaining plate, drive plate and driven plate.

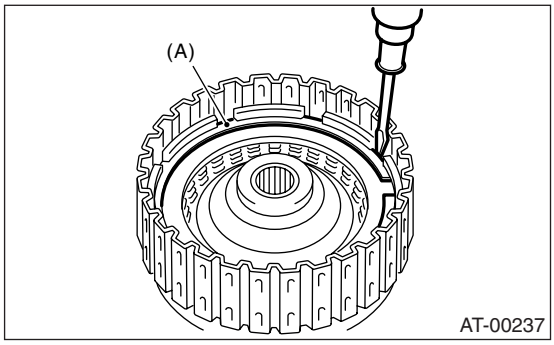

(A) Snap ring

3) Using the ST1 and ST2, remove the snap ring.
ST1 398673600 COMPRESSOR
ST2 498627100 SEAT

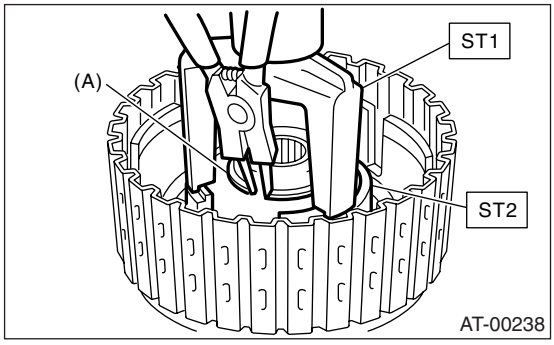

(A) Snap ring

4) Take out the clutch cover, spring retainer, high clutch piston and reverse clutch piston.

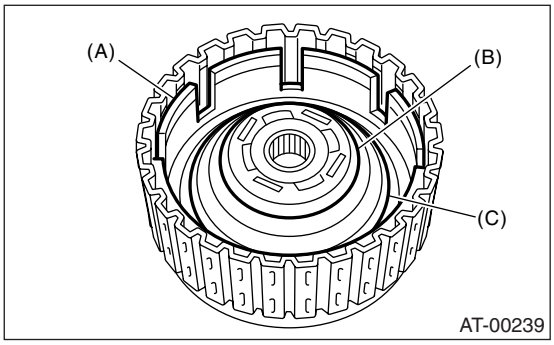

(A) Reverse clutch piston
(B) Cover
(C) Return spring

5) Remove the seal ring and lip seal from the high clutch piston and reverse clutch piston.

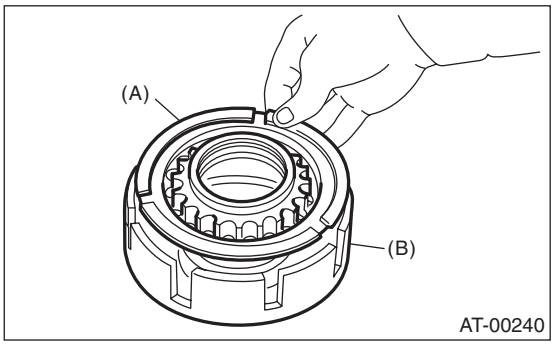

(A) High clutch piston
(B) Reverse clutch piston

2. PLANETARY GEAR AND LOW CLUTCH

1) Remove the snap ring from low clutch drum.

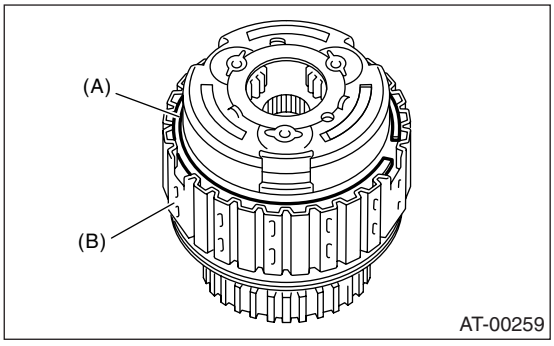

(A) Snap ring
(B) Low clutch dram

2) Take out the front planetary carrier.

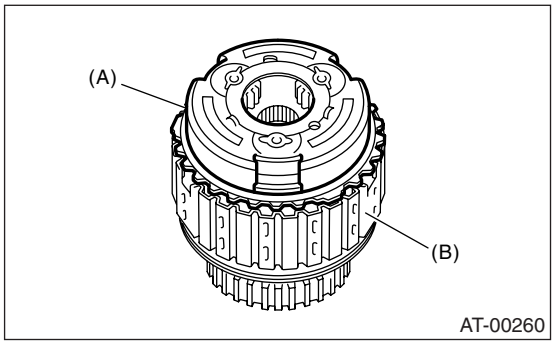

(A) Front planetary carrier
(B) Low clutch dram

3) Take out the rear sun gear.

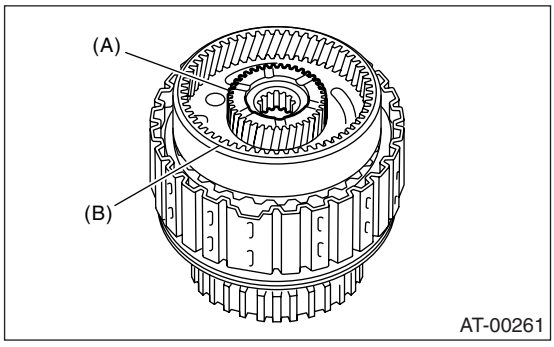

(A) Rear sun gear
(B) Rear planetary carrier

4) Take out the rear planetary carrier, washer and thrust needle bearing.

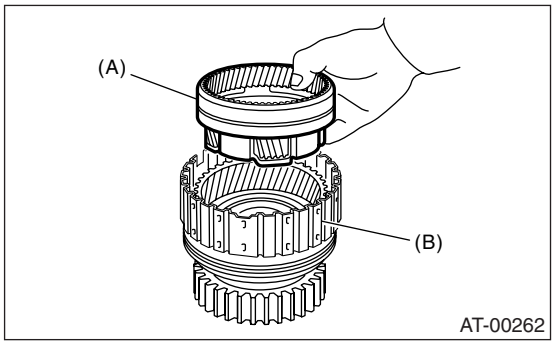

(A) Rear planetary carrier
(B) Low clutch dram

5) Take out the rear internal gear.

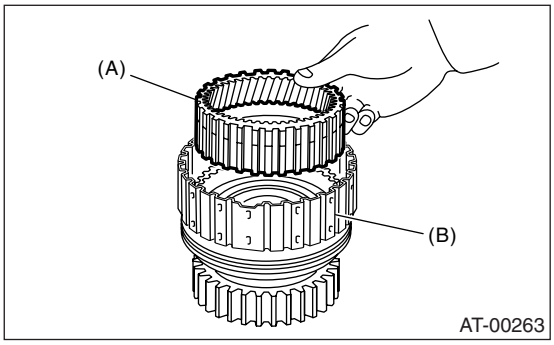

(A) Rear internal gear
(B) Low clutch dram

6) Remove the snap ring from low clutch drum.

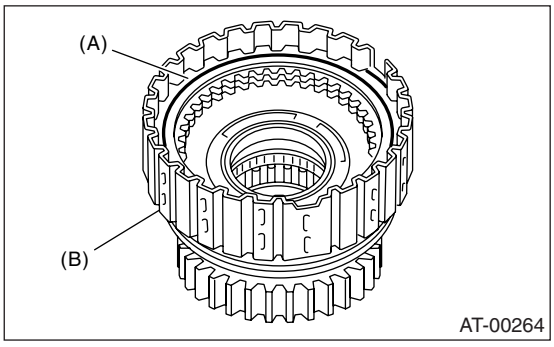

(A) Snap ring
(B) Low clutch dram

7) Compress the spring retainer, and remove the snap ring from low clutch drum using ST1 and ST2.
ST1 498627100 SEAT
ST2 398673600 COMPRESSOR

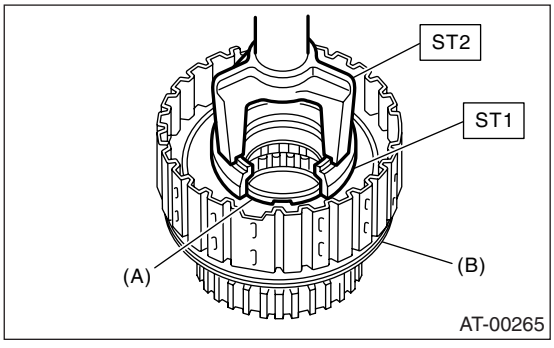

(A) Snap ring
(B) Low clutch dram

8) Remove the one-way clutch. <Ref. to 4AT-103, REMOVAL, AT Main Case.>

9) Install the one-way clutch inner race to low clutch drum, and then apply compressed air to remove the low clutch piston.

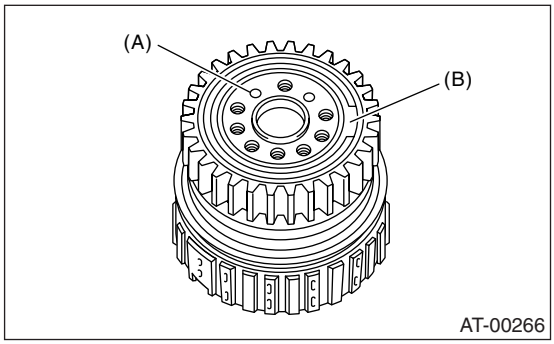

(A) Apply compressed air.
(B) One-way clutch inner race

10) Remove the one-way clutch inner race.
11) Remove the one-way clutch after taking out the snap ring.

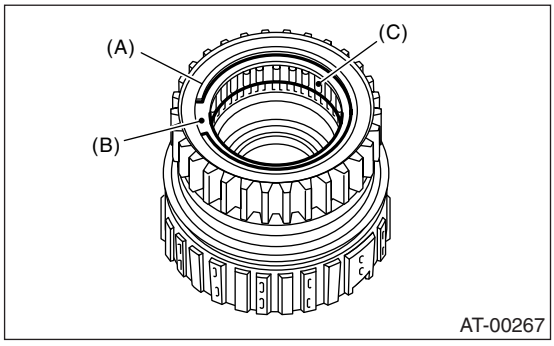

(A) Snap ring
(B) Plate
(C) One-way clutch

12) Remove the needle bearing after taking out the snap ring.

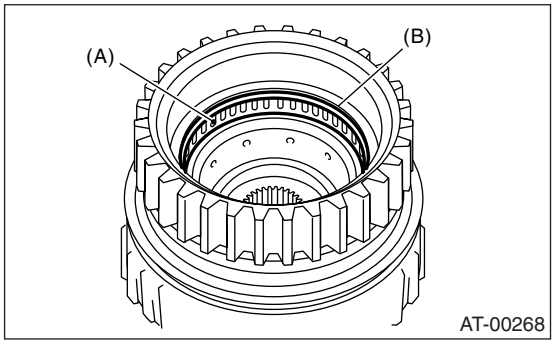

(A) Needle bearing
(B) Snap ring

3. 2-4 BRAKE

Separate the 2-4 brake piston and piston retainer.

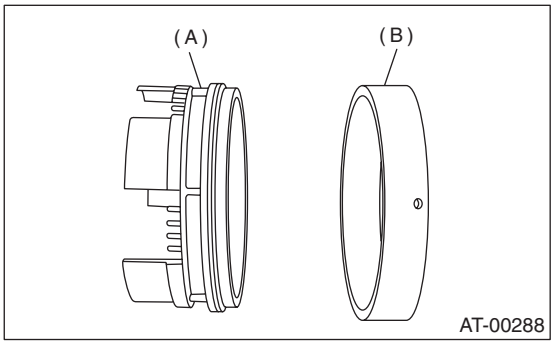

(A) 2-4 brake piston
(B) 2-4 brake piston retainer

4. ONE-WAY CLUTCH INNER RACE

1) Remove the seal ring.

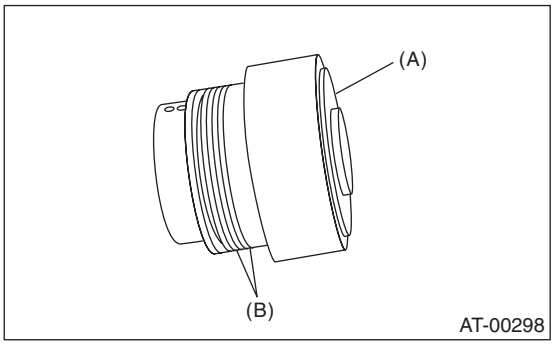

(A) One-way clutch inner race
(B) Seal ring

2) Remove the needle bearing using ST.
ST 398527700 PULLER ASSY

5. ONE-WAY CLUTCH OUTER RACE

1) Remove the one-way clutch after taking out the snap ring.

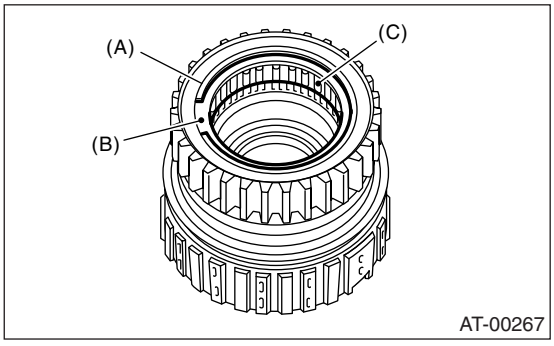

(A) Snap ring
(B) Plate
(C) One-way clutch

2) Remove the needle bearing after taking out the snap ring.

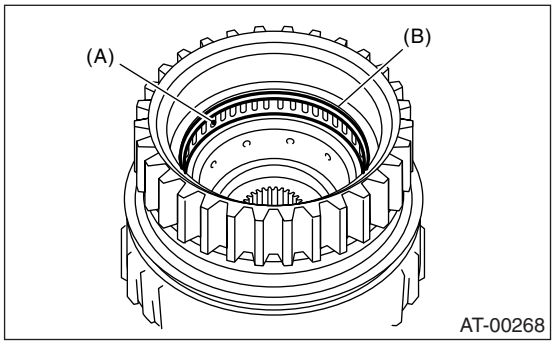

(A) Needle bearing
(B) Snap ring

D: ASSEMBLY

1. HIGH CLUTCH AND REVERSE CLUTCH

1) Install the seal ring and lip seal to the high clutch piston and reverse clutch piston.
2) Install the high clutch piston to reverse clutch piston.

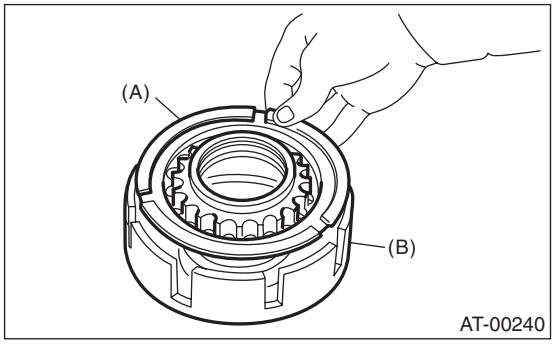

(A) High clutch piston
(B) Reverse clutch piston

3) Install the reverse clutch piston to high clutch drum. Align the groove on reverse clutch piston with the groove on high clutch drum during installation.

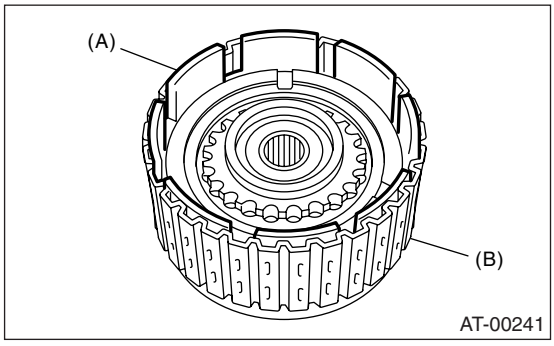

(A) Reverse clutch piston
(B) High clutch drum

4) Install the spring retainer to high clutch piston.

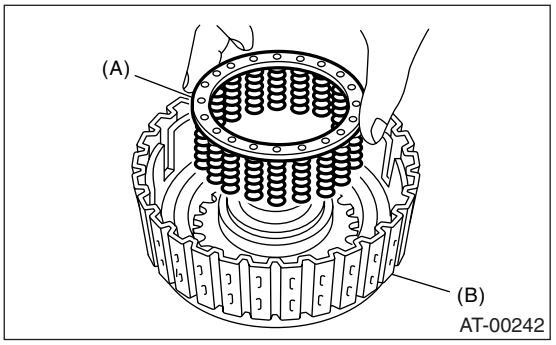

(A) Spring retainer
(B) High clutch drum

5) Install the ST to high clutch piston.
ST 498437000 HIGH CLUTCH PISTON GUIDE

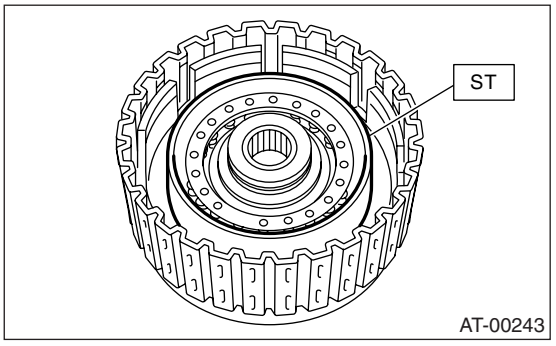

6) Install the cover to high clutch piston without folding the high clutch piston seal.
7) Install the snap ring using ST1 and ST2.
ST1 398673600 COMPRESSOR
ST2 498627100 SEAT
ST3 498437000 HIGH CLUTCH PISTON GUIDE

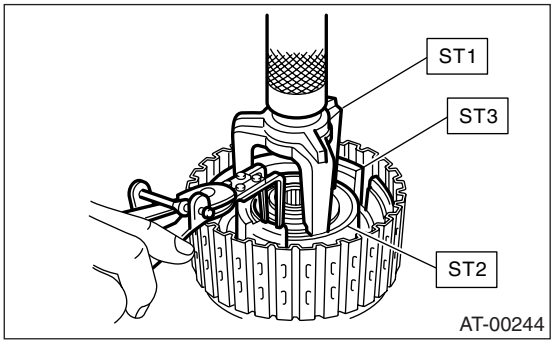

8) Place the dish plate, driven plate, drive plate and retaining plate neatly in this order on surface table.
9) Set the micro gauge to retaining plate, and read its scale.

NOTE:
The value, which is read in the gauge at this time, is zero point.

10) Scale and record the weight “Z” of a flat board which will be put on retaining plate.

NOTE:
• Use a stiff flat board which does not bend against load.
• Use a flat board of its weight less than 250 N (25.5 kgf, 56.2 lb).

11) Put the flat board on retaining plate.

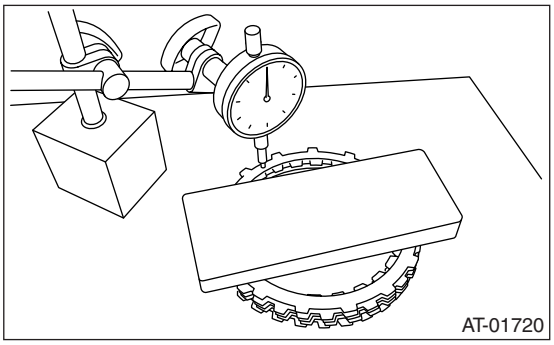

12) Using the following formula, calculate “N” indicated on the push/pull gauge.
N = 250 N (25.5 kgf, 56.2 lb) − Z
N: Value indicated on push/pull gauge
250 N (25.5 kgf, 56.2 lb): Load applied to clutch plate
Z: Flat board weight

13) Press the center of retaining plate applying force of N with push/pull gauge, and then measure and record the height A. Make more than three measurements at even distance and take the average value.

NOTE:
If three points, measure the height every 120°. If four points, measure the height every 90°.

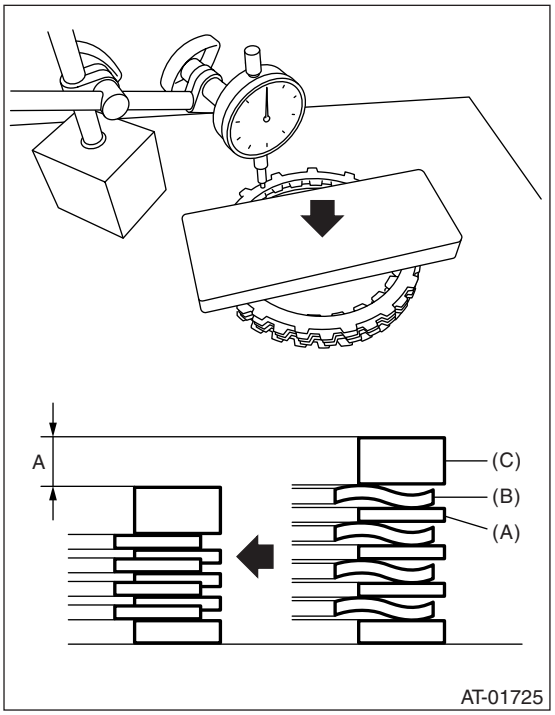

(A) Driven plate
(B) Drive plate
(C) Retaining plate

14) Install the thickest driven plate to piston side, and then install the driven plate, drive plate, retaining plate to high clutch drum.

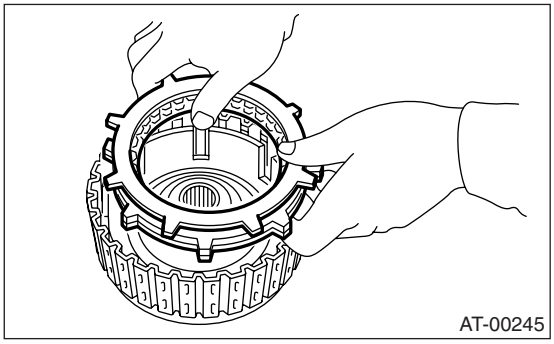

15) Install the snap ring to high clutch drum.

16) Apply compressed air intermittently to check for operation.

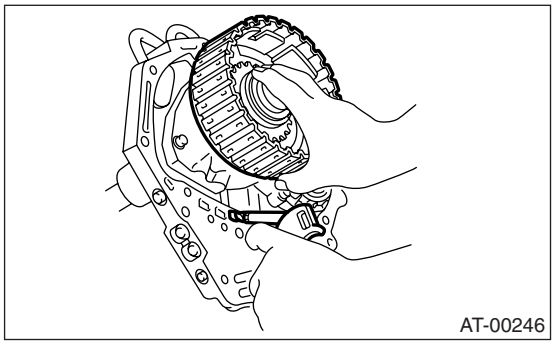

17) Measure and record the clearance B between the retaining plate and snap ring. (High clutch)
At this time, do not press down the retaining plate.

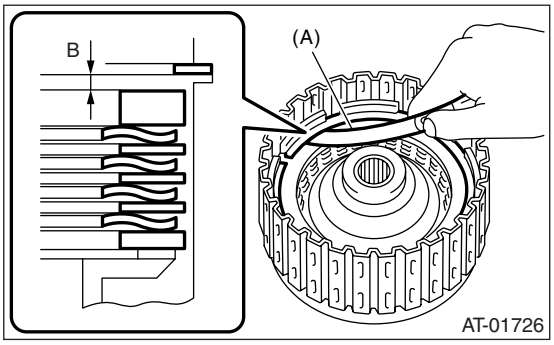

(A) Thickness gauge

18) Piston stroke calculation
Select the retaining plate within the specification by calculating with A and B dimensions which have been recorded before. If the calculated value exceeds the usage limit, replace the drive plate with a new one and adjust it within the specification.
T = A + B
T: Piston stroke
A: Collapse amount of drive plate
B: Clearance between retaining plate and snap ring

Initial standard:
2.0 — 2.3 mm (0.079 — 0.091 in)

Limit thickness:
2.6 mm (0.102 in)

High clutch retaining plate	
Part number	Thickness mm (in)
31567AA710	4.7 (0.185)
31567AA720	4.8 (0.189)
31567AA730	4.9 (0.193)
31567AA740	5.0 (0.197)
31567AA670	5.1 (0.201)
31567AA680	5.2 (0.205)
31567AA690	5.3 (0.209)
31567AA700	5.4 (0.213)

19) Place the dish plate, driven plate, drive plate and retaining plate neatly in this order on surface table.
20) Set the micro gauge to retaining plate, and read its scale.

NOTE:
The value, which is read in the gauge at this time, is zero point.

21) Scale and record the weight “Z” of a flat board which will be put on retaining plate.

NOTE:
• Use a stiff flat board which does not bend against load.
• Use a flat board of its weight less than 150 N (15.3 kgf, 33.7 lb).

22) Put the flat board on retaining plate.

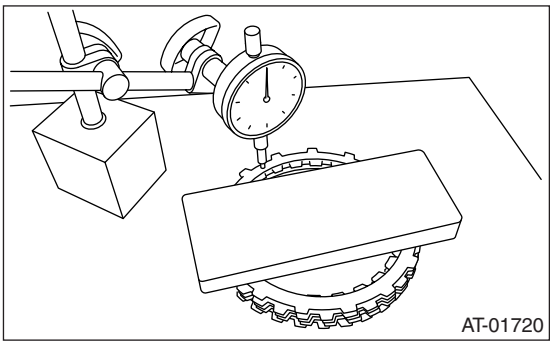

23) Using the following formula, calculate “N” indicated on the push/pull gauge.
N = 150 N (15.3 kgf, 33.7 lb) – Z
N: Value indicated on push/pull gauge
150 N (15.3 kgf, 33.7 lb): Load applied to clutch plate
Z: Flat board weight
24) Press the center of retaining plate applying force of N with push/pull gauge, and then measure and record the height A. Make more than three measurements at even distance and take the average value.

NOTE:
If three points, measure the height every 120°. If four points, measure the height every 90°.

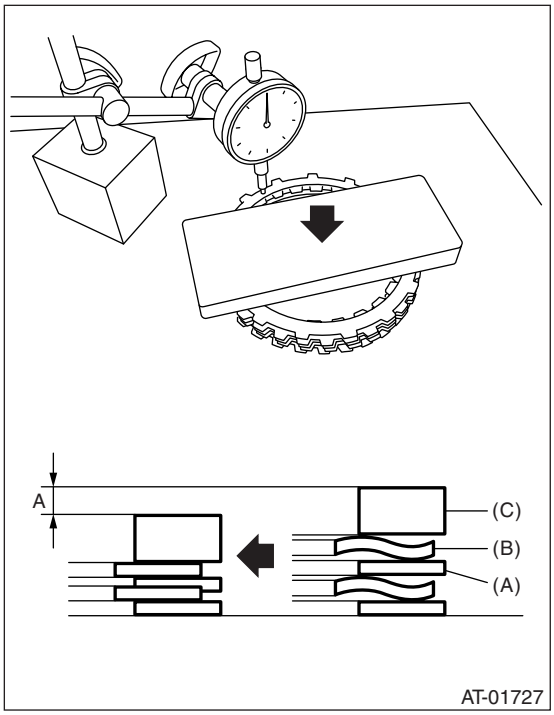

(A) Driven plate
(B) Drive plate
(C) Retaining plate

25) Install the driven plate, drive plate, retaining plate and snap ring.

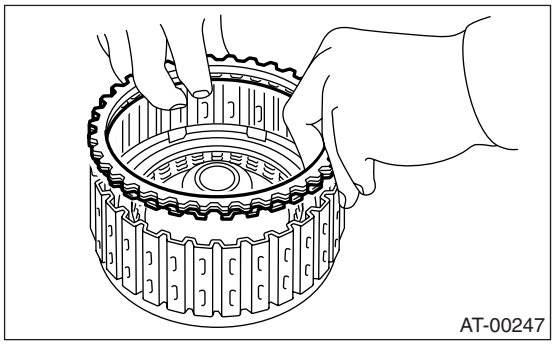

26) Apply compressed air intermittently to check for operation.

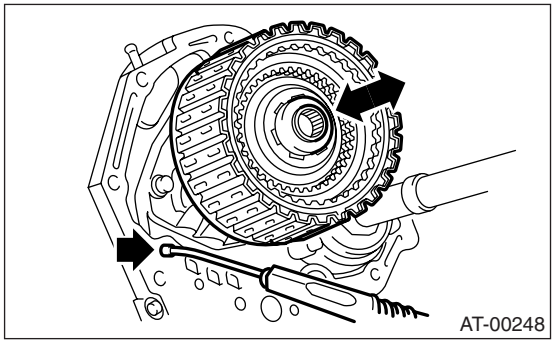

27) Measure and record the clearance B between the retaining plate and snap ring. (Reverse clutch) At this time, do not press down the retaining plate.

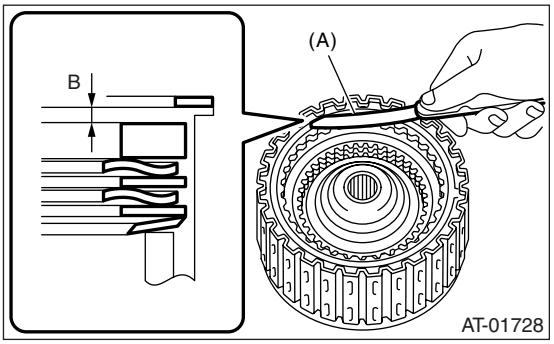

(A) Thickness gauge

28) Piston stroke calculation
Select the retaining plate within the specification by calculating with A and B dimensions which have been recorded before. If the calculated value exceeds the usage limit, replace the drive plate with a new one and adjust it within the specification.
T = A + B
T: Piston stroke
A: Collapse amount of drive plate
B: Clearance between retaining plate and snap ring

Initial standard:
1.1 — 1.4 mm (0.043 — 0.055 in)

Limit thickness:
1.6 mm (0.063 in)

Reverse clutch retaining plate	
Part number	Thickness mm (in)
31567AA910	4.0 (0.157)
31567AA920	4.2 (0.165)
31567AA930	4.4 (0.173)
31567AA940	4.6 (0.181)
31567AA950	4.8 (0.189)
31567AA960	5.0 (0.197)
31567AA970	5.2 (0.205)
31567AA980	5.4 (0.213)

2. PLANETARY GEAR AND LOW CLUTCH

1) Apply ATF to D-ring and install it to low clutch piston.

2) Install the low clutch piston to low clutch drum.

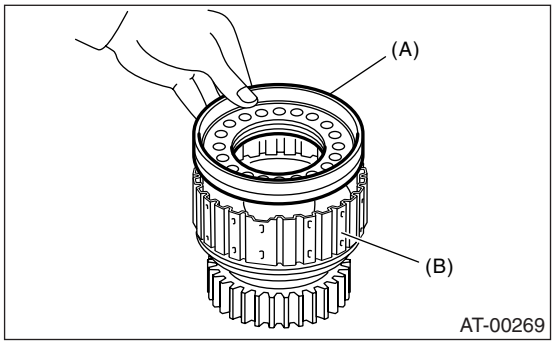

(A) Low clutch piston
(B) Low clutch dram

3) Install the spring retainer to low clutch piston.

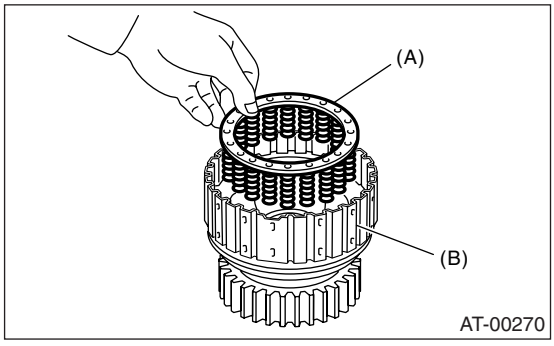

(A) Spring retainer
(B) Low clutch dram

4) Install the ST to low clutch drum.
ST 498437100 LOW CLUTCH PISTON GUIDE

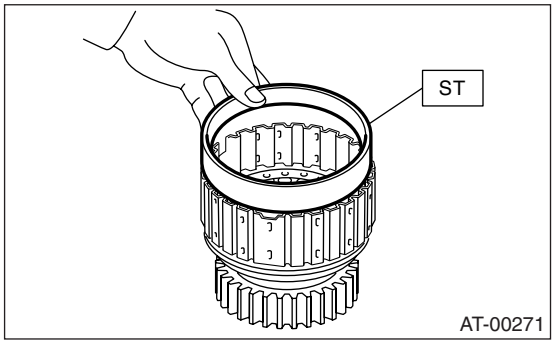

5) Set the cover on the piston with a press using ST1 and ST2, and attach the snap ring. At this time, be careful not to fold the cover seal during installation.
ST1 498627100 SEAT
ST2 398673600 COMPRESSOR
ST3 498437100 LOW CLUTCH PISTON GUIDE

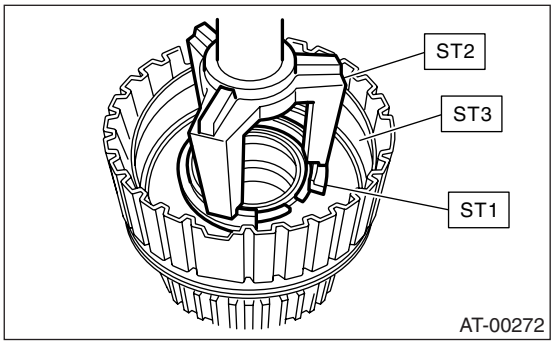

6) Install the dish plate, driven plate and retaining plate, and then secure them with snap ring.

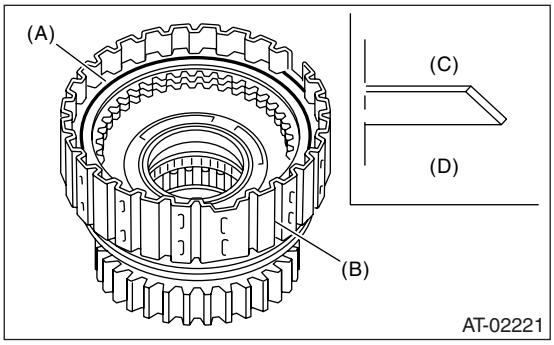

(A) Snap ring
(B) Low clutch dram
(C) Dish plate
(D) Low clutch piston side

7) Check the low clutch for operation.
(1) Remove the one-way clutch. <Ref. to 4AT-103, REMOVAL, AT Main Case.>
(2) Set the one-way clutch inner race, and apply compressed air for checking.

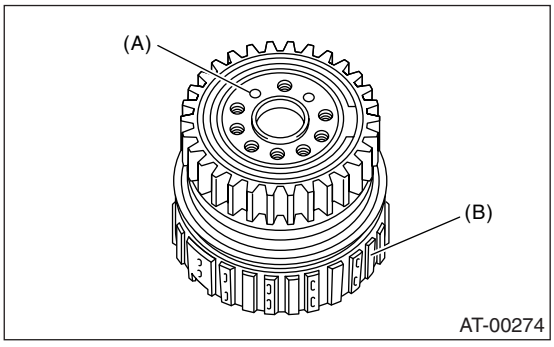

(A) Apply compressed air.
(B) Low clutch dram

8) Check the low clutch clearance.
(1) Place the same thickness of shim on both sides to prevent pressure plate from tilting.
(2) Check the clearance between retaining plate and low clutch operation.

Initial standard:
0.7 — 1.1 mm (0.028 — 0.043 in)

Limit thickness:
1.5 mm (0.059 in)

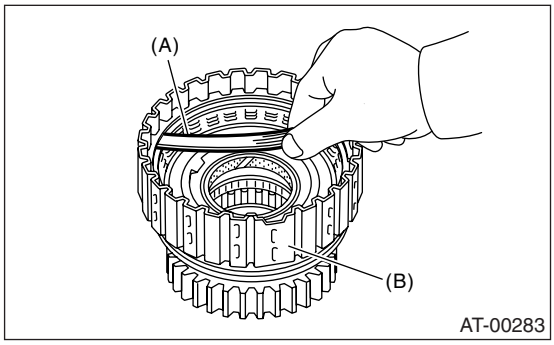

(A) Thickness gauge
(B) Low clutch dram

If the clearance is out of specification, select a suitable retaining plate.

Retaining plate	
Part number	Thickness mm (in)
31567AB050	3.8 (0.150)
31567AB060	4.0 (0.157)
31567AB070	4.2 (0.165)
31567AB080	4.4 (0.173)
31567AB090	4.6 (0.181)

9) Install the washer to rear internal gear.

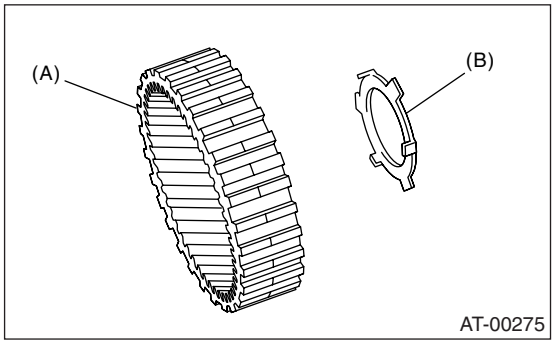

(A) Rear internal gear
(B) Washer

10) Install the rear internal gear.

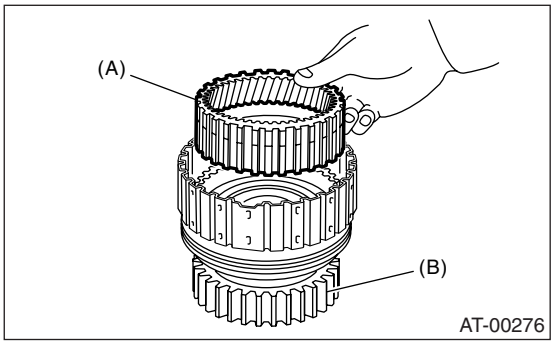

(A) Rear internal gear
(B) Low clutch dram

11) Install the thrust needle bearing in correct direction.

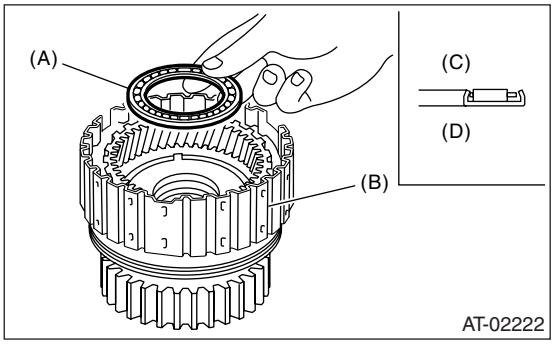

(A) Thrust needle bearing
(B) Low clutch dram
(C) Rear planetary carrier side
(D) Low clutch piston side

12) Install the washer by aligning protrusion of washer and hole of rear planetary carrier.

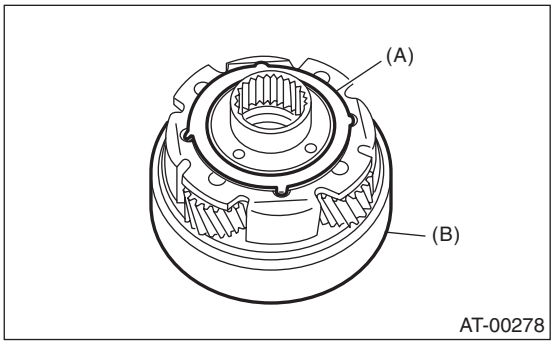

(A) Washer
(B) Rear planetary carrier

13) Install the rear planetary carrier to low clutch drum.

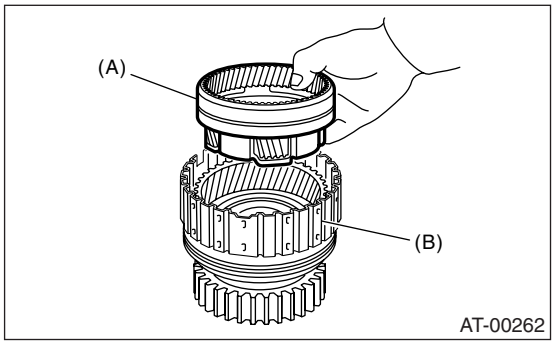

(A) Rear planetary carrier
(B) Low clutch dram

14) Install the thrust needle bearing in correct direction.

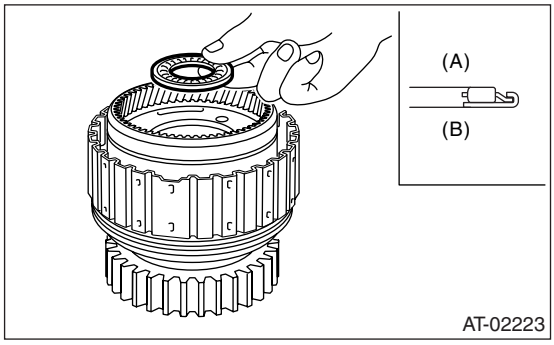

(A) Rear sun gear side
(B) Rear planetary carrier side

15) Install the rear sun gear in proper direction.

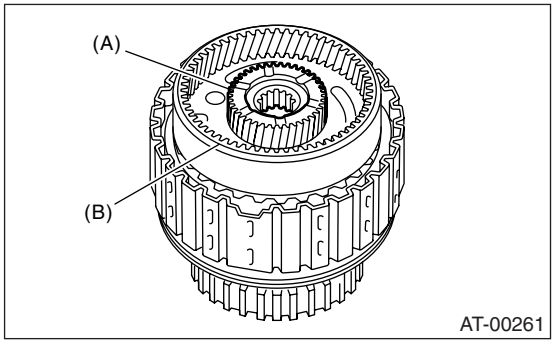

(A) Rear sun gear
(B) Rear planetary carrier

16) Install the thrust needle bearing in proper direction.

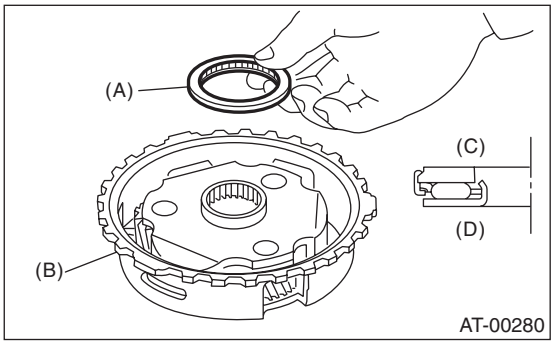

(A) Thrust needle bearing
(B) Front planetary carrier
(C) Rear sun gear side
(D) Front planetary carrier side

17) Install the front planetary carrier to low clutch drum.

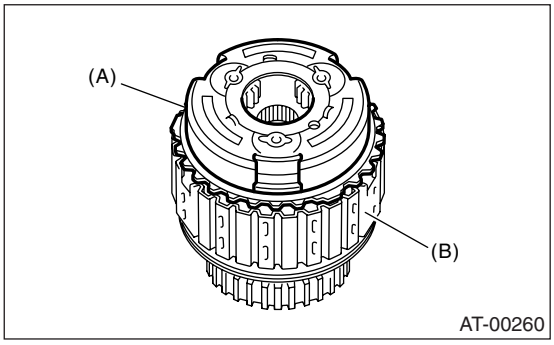

(A) Front planetary carrier
(B) Low clutch dram

18) Install the snap ring to low clutch drum.

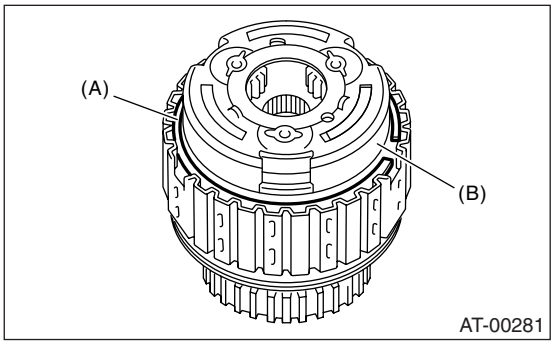

(A) Snap ring
(B) Front planetary carrier

19) Install the needle bearing, and then secure with the snap ring.

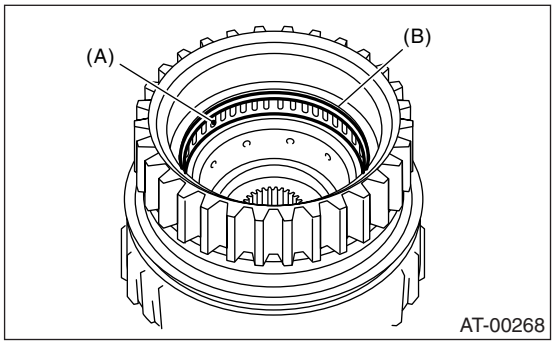

(A) Needle bearing
(B) Snap ring

20) Install the one-way clutch and one-way clutch inner race, and then secure with the snap ring.
21) Set the inner race. Make sure that the clutch locks in the clockwise direction and rotates freely in the counterclockwise direction.

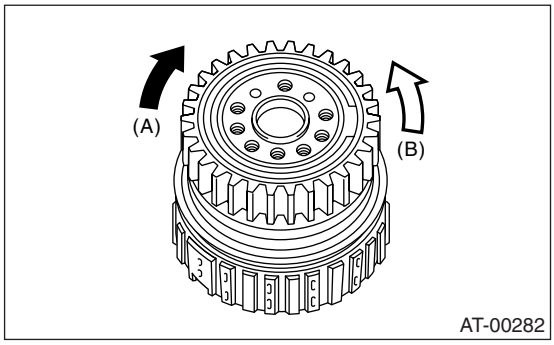

(A) Locked
(B) Free

3. 2-4 BRAKE

1) Apply ATF to D-ring, and install it to 2-4 brake piston.
2) Install the 2-4 brake piston to 2-4 brake piston retainer.

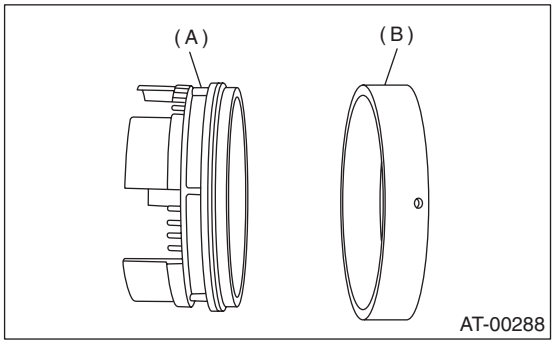

(A) 2-4 brake piston
(B) 2-4 brake piston retainer

4. ONE-WAY CLUTCH INNER RACE

1) Install the needle bearing to inner race using ST and press.
ST 398497701 SEAT

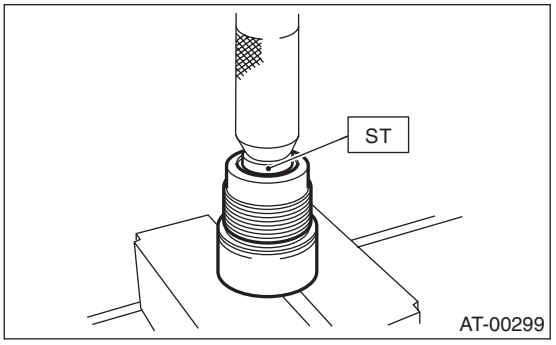

2) Apply vaseline to the groove of inner race and seal ring.
3) Install two seal rings to one-way clutch inner race.

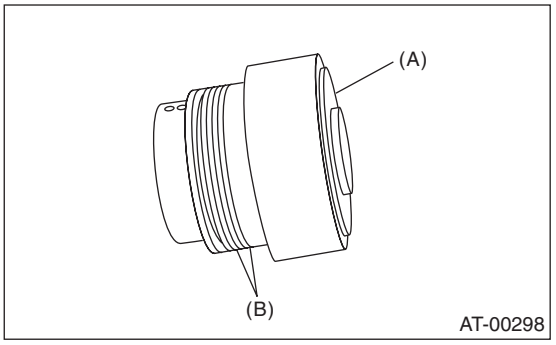

(A) One-way clutch inner race
(B) Seal ring

5. ONE-WAY CLUTCH OUTER RACE

1) Install the needle bearing, and then secure with the snap ring.

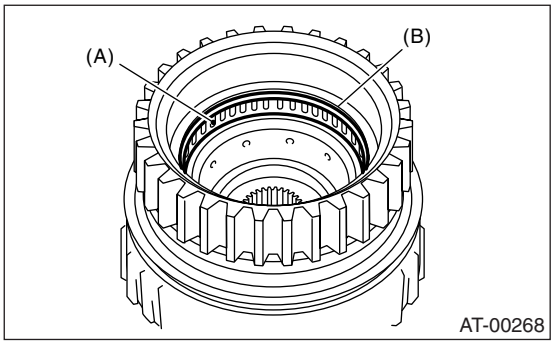

(A) Needle bearing
(B) Snap ring

2) Install the one-way clutch, and then secure with the snap ring.

3) Set the inner race. Make sure that the clutch locks in the clockwise direction and rotates freely in the counterclockwise direction.

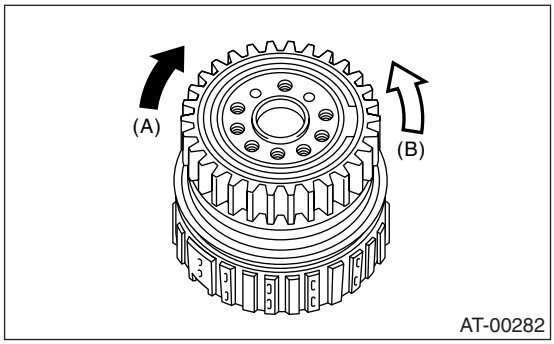

(A) Locked
(B) Free

E: INSPECTION

1. HIGH CLUTCH AND REVERSE CLUTCH

Check the following items:
- Drive plate facing for wear and damage
- Driven plate for discoloration (burned color)
- Snap ring for wear, return spring for setting and breakage, and snap ring retainer for deformation
- Lip seal and D-ring for damage
- Piston and drum check ball for operation
- Adjust the total end play. <Ref. to 4AT-91, ADJUSTMENT, Oil Pump Housing.>

2. PLANETARY GEAR AND LOW CLUTCH

Check the following items:
- Drive plate facing for wear and damage
- Driven plate for discoloration (burned color)
- Snap ring for wear, return spring for setting and breakage, and spring retainer for deformation
- Lip seal and D-ring for damage
- Piston check ball for operation
- Measure the total end play and adjust it within specifications. <Ref. to 4AT-91, ADJUSTMENT, Oil Pump Housing.>

3. 2-4 BRAKE

Check the following items:
- Drive plate facing for wear and damage
- Driven plate for discoloration (burned color)
- Snap ring for wear and spring retainer for deformation
- Lip seal and D-ring for damage
- Measure the total end play and adjust it within specifications. <Ref. to 4AT-91, ADJUSTMENT, Oil Pump Housing.>

4. ONE-WAY CLUTCH

- Make sure the snap ring is not worn and the seal rings are not deformed.
- Measure the total end play and adjust it within specifications. <Ref. to 4AT-91, ADJUSTMENT, Oil Pump Housing.>

5. LOW & REVERSE BRAKE

Check the following items:
- Drive plate facing for wear and damage
- Driven plate for discoloration (burned color)
- Snap ring for wear and spring retainer for deformation

36.Transmission Control Device

A: REMOVAL

1) Remove the transmission assembly from vehicle. <Ref. to 4AT-37, REMOVAL, Automatic Transmission Assembly.>
2) Pull out the torque converter assembly. <Ref. to 4AT-72, REMOVAL, Torque Converter Assembly.>
3) Remove the input shaft.
4) Lift up the lever on the rear side of transmission harness connector, and then remove it from stay.
5) Disconnect the air breather hose. <Ref. to 4AT-70, REMOVAL, Air Breather Hose.>
6) Remove the inhibitor switch connector from stay.
7) Wrap vinyl tape around the nipple attached to the air breather hose.
8) Remove the pitching stopper bracket.
9) Remove the inhibitor switch.

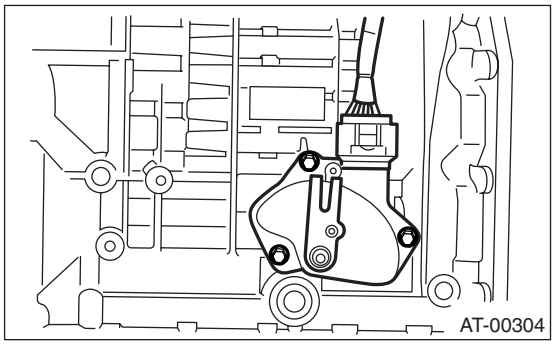

10) Remove the control valve body assembly. <Ref. to 4AT-58, REMOVAL, Control Valve Body.>
11) Pull out the straight pin of manual plate.

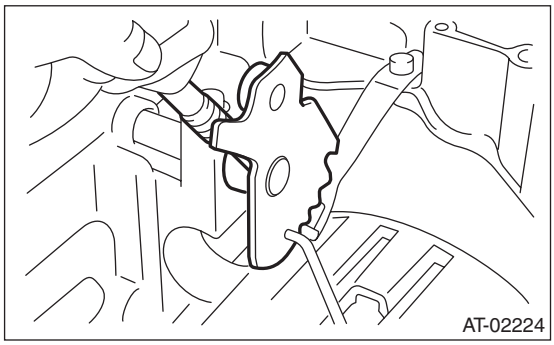

12) Remove the bolts securing select lever, and then remove the select lever, manual plate and parking rod.

NOTE:
Be careful not to damage the lips of press-fitted oil seal in the case.

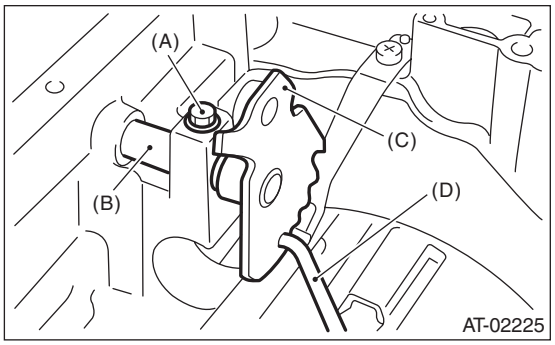

(A) Bolt
(B) Range select lever
(C) Manual plate
(D) Parking rod

13) Remove the detention spring.

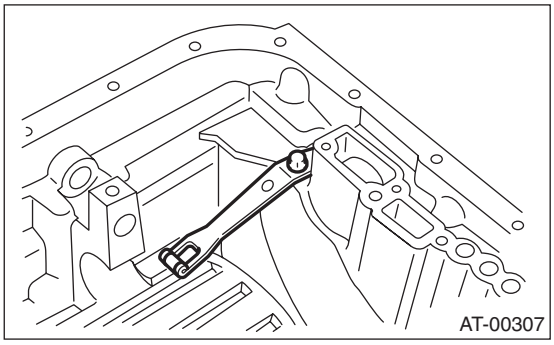

B: INSTALLATION

1) Install the detention spring to transmission case.

Tightening torque:
6 N·m (0.6 kgf-m, 4.3 ft-lb)

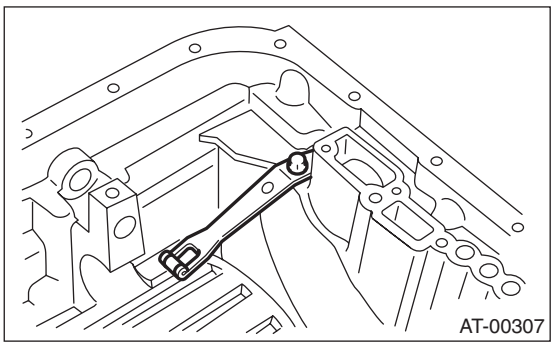

2) Insert the select lever, and then tighten the bolt.

Tightening torque:
6 N·m (0.6 kgf-m, 4.3 ft-lb)

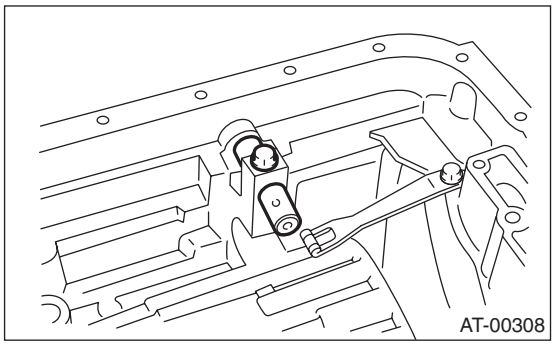

3) Insert the manual plate and parking rod.

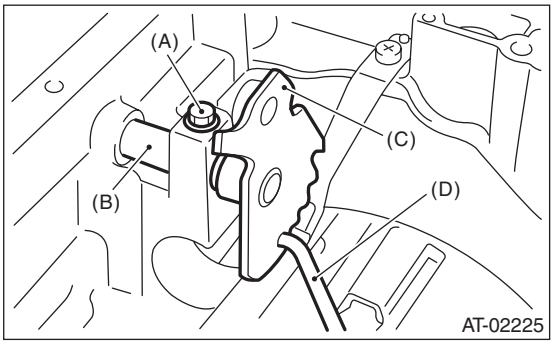

(A) Bolt
(B) Range select lever
(C) Manual plate
(D) Parking rod

4) Insert a new straight pin to manual plate.

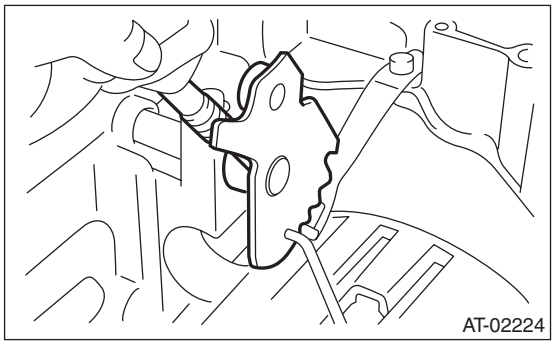

5) Install the oil pan and control valve assembly. <Ref. to 4AT-59, INSTALLATION, Control Valve Body.>
6) Turn over the transmission case to its original position.
7) Install the pitching stopper bracket.

Tightening torque:
41 N·m (4.2 kgf-m, 30.4 ft-lb)

8) Install and adjust the inhibitor switch. <Ref. to 4AT-48, Inhibitor Switch.>
9) Insert the inhibitor switch and transmission connector to the stay.

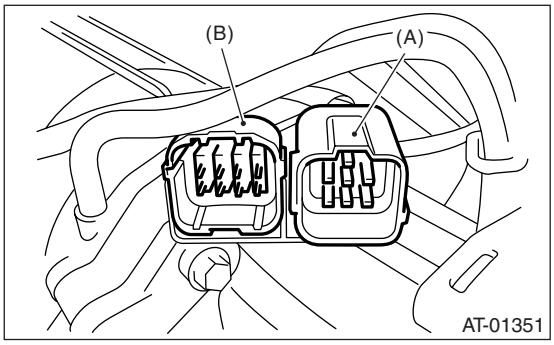

(A) Transmission connector
(B) Inhibitor switch connector

10) Install the air breather hose. <Ref. to 4AT-70, INSTALLATION, Air Breather Hose.>
11) Insert the input shaft with rotating it by hand lightly, and then check the protrusion amount.

Normal protrusion A:
50 — 55 mm (1.97 — 2.17 in)

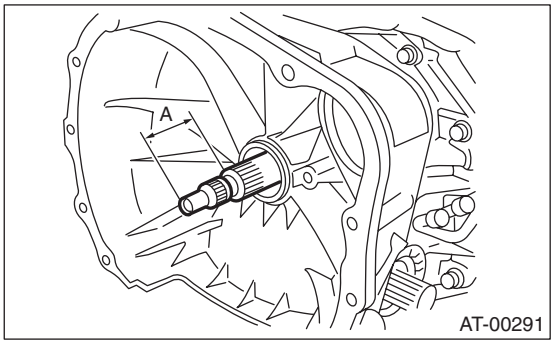

12) Install the torque converter assembly. <Ref. to 4AT-72, INSTALLATION, Torque Converter Assembly.>
13) Install the transmission assembly into the vehicle. <Ref. to 4AT-39, INSTALLATION, Automatic Transmission Assembly.>

C: INSPECTION

Make sure the manual lever and detention spring are not worn or otherwise damaged.

AUTOMATIC TRANSMISSION (DIAGNOSTICS)

4AT(D)(diag)

Page

1. Basic Diagnostic Procedure 2
2. Check List for Interview 4
3. General Description 5
4. Electrical Component Location 7
5. Transmission Control Module (TCM) I/O Signal 11
6. Subaru Select Monitor 14
7. Read Diagnostic Trouble Code (DTC) 17
8. Inspection Mode 18
9. Clear Memory Mode 19
10. SPORT Indicator Light Display 20
11. Diagnostic Procedure for Select Monitor Communication 23
12. List of Diagnostic Trouble Code (DTC) 27
13. Diagnostic Procedure with Diagnostic Trouble Code (DTC) 29
14. Diagnostic Procedure without Diagnostic Trouble Code (DTC) 91
15. Diagnostics with Phenomenon 102

1. Basic Diagnostic Procedure

A: PROCEDURE

	Step	Check	Yes	No
1	**CHECK PRE-INSPECTION.** 1) Ask the customer when and how the trouble occurred using the interview checklist. <Ref. to 4AT(D)(diag)-4, Check List for Interview.> 2) Before performing diagnosis, inspect the following items which might influence the AT problems. • General inspection <Ref. to 4AT(D)(diag)-5, INSPECTION, General Description.> • Disconnection of harness connector • Visual check for harness damage • Oil Leaking • Stall speed test <Ref. to 4AT-32, Stall Test.> • Line pressure test <Ref. to 4AT-35, Line Pressure Test.> • Transfer clutch pressure test <Ref. to 4AT-36, Transfer Clutch Pressure Test.> • Time lag test <Ref. to 4AT-34, Time Lag Test.> • Road test <Ref. to 4AT-31, Road Test.> • Inhibitor switch <Ref. to 4AT-48, Inhibitor Switch.>	Is the unit that might influence the AT problem normal?	Go to step **2.**	Repair or replace each item.
2	**CHECK SPORT INDICATOR LIGHT.** After starting the engine, wait for at least 2 seconds.	Does the SPORT indicator light blink?	Go to step **4.**	Go to step **3.**
3	**CHECK SPORT INDICATOR LIGHT.** 1) Turn the ignition switch to OFF. 2) Check the SPORT indicator light. <Ref. to 4AT(D)(diag)-21, INSPECTION, SPORT Indicator Light Display.> 3) After the ignition switch is turned to “ON”, wait for at least 2 seconds. 4) Start the engine.	Does the SPORT indicator light blink?	Go to step **4.**	Go to step **5.**
4	**CHECK DTC.** Display DTC. NOTE: If the communication function of Subaru Select Monitor cannot be executed normally, check communication circuit. <Ref. to 4AT(D)(diag)-23, COMMUNICATION FOR INITIALIZING IMPOSSIBLE, Diagnostic Procedure for Select Monitor Communication.>	Is DTC displayed?	Go to step **6.** NOTE: Record all DTC.	Go to step **5.**
5	**PERFORM GENERAL DIAGNOSTICS.** 1) Inspect using “Diagnostic Procedure without Diagnostic Trouble Code (DTC)”. <Ref. to 4AT(D)(diag)-91, Diagnostic Procedure without Diagnostic Trouble Code (DTC).> 2) Inspect using “General Diagnostic Chart”. <Ref. to 4AT(D)(diag)-102, Diagnostics with Phenomenon.> 3) Perform the inspection mode. <Ref. to 4AT(D)(diag)-18, Inspection Mode.> 4) Display DTC.	Is DTC displayed?	Go to step **6.**	Finish the diagnosis.

	Step	Check	Yes	No
6	**PERFORM DIAGNOSIS.** 1) Inspect using the “Diagnostic Procedure with Diagnostic Trouble Code (DTC)”. <Ref. to 4AT(D)(diag)-29, Diagnostic Procedure with Diagnostic Trouble Code (DTC).> NOTE: For DTC table, refer to “List of Diagnostic Trouble Code (DTC)”. <Ref. to 4AT(D)(diag)-27, List of Diagnostic Trouble Code (DTC).> 2) Repair the trouble cause. 3) Perform the clear memory mode. 4) Perform the inspection mode. <Ref. to 4AT(D)(diag)-18, Inspection Mode.> 5) Display DTC.	Is DTC displayed?	Inspect using “Diagnostic Procedure with Diagnostic Trouble Code (DTC)”. <Ref. to 4AT(D)(diag)-29, Diagnostic Procedure with Diagnostic Trouble Code (DTC).>	Finish the diagnosis.

2. Check List for Interview

A: CHECK

Check the following items when problem has occurred.

NOTE:
Use copies of this page for interviewing customers.

Customer's name			
Date of sale			
Date of repair			
Trans. model	Transmission	V.I.N.	
Odometer reading	km (miles)		
Frequency	❑ Continuous ❑ Intermittent (times a day)		
Weather	❑ Fine ❑ Cloudy ❑ Rainy ❑ Snowy ❑ Others ( )		
Place	❑ Highland ❑ Suburbs ❑ Inner city ❑ Uphill ❑ Rough road ❑ Others ( )		
Ambient air temperature	❑ Hot ❑ Warm ❑ Cool ❑ Cold		
Vehicle speed	km/h (MPH)		
AT warning light (SPORT indicator light)	❑ Blinks continuously	❑ Not blink	
Select lever position	❑ P ❑ R ❑ N ❑ D ❑ SPORT mode		
Driving condition	❑ Not affected ❑ At racing ❑ When decelerating	❑ At starting ❑ When accelerating ❑ While turning (❑ RH / ❑ LH)	❑ While idling ❑ While cruising
SPORT mode	❑ ON ❑ OFF		
Symptom	❑ No up-shift		
	❑ No down-shift		
	❑ No kick down		
	❑ Vehicle does not move (❑ Any position ❑ Particular position)		
	❑ Lock-up malfunction		
	❑ Noise or vibration		
	❑ Shift shock or slip		
	❑ Select lever does not move		
	❑ Others ( )		

3. General Description

A: CAUTION

• SUPPLEMENTAL RESTRAINT SYSTEM "AIRBAG"

The airbag system wiring harness is routed near the TCM.

CAUTION:

• All airbag system wiring harnesses and connectors are colored yellow. Do not use an electric test equipment on these circuits.

• Be careful not to damage the airbag system wiring harness when performing diagnostics or servicing the TCM.

• MEASUREMENT

When measuring the voltage and resistance of the ECM, TCM or each sensor, use a tapered pin with a diameter of less than 0.64 mm (0.025 in) in order to avoid poor contact. Do not insert a pin of more than 0.65 mm (0.026 in) diameter.

B: INSPECTION

1. BATTERY

Measure the battery voltage and specific gravity of electrolyte.

Standard voltage: 12 V or more

Specific gravity: More than 1.260

2. TRANSMISSION GROUND

Make sure that the ground terminal bolt is tightened securely.

• Chassis side

Tightening torque:
13 N·m (1.3 kgf-m, 9.4 ft-lb)

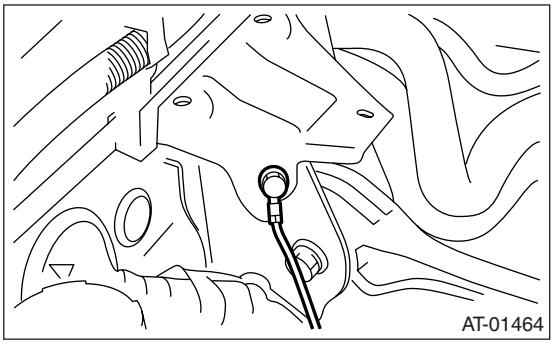

3. ATF LEVEL

Make sure that ATF level is within the specification. <Ref. to 4AT-28, INSPECTION, Automatic Transmission Fluid.>

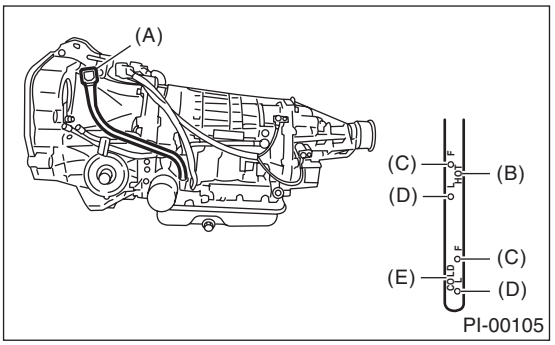

(A) Level gauge
(B) "HOT" side
(C) Upper level
(D) Lower level
(E) "COLD" side

4. FRONT DIFFERENTIAL OIL LEVEL

Make sure the front differential oil level is within the specification. <Ref. to 4AT-30, INSPECTION, Differential Gear Oil.>

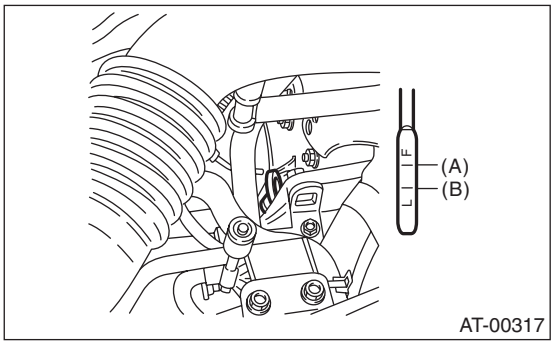

(A) Upper level
(B) Lower level

5. OPERATION OF SHIFT SELECT LEVER

Make sure there is no noise, dragging or contact pattern in each select lever range.

WARNING:
Stop the engine while checking operation of the selector lever.

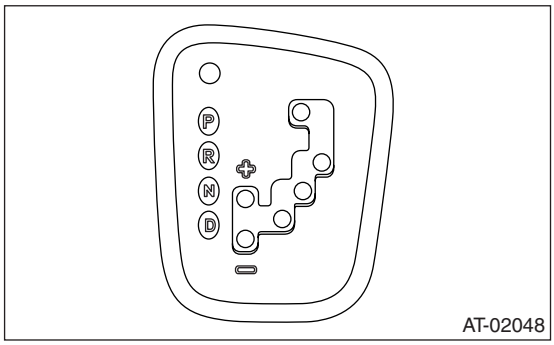

C: PREPARATION TOOL

1. SPECIAL TOOL

ILLUSTRATION	TOOL NUMBER	DESCRIPTION	REMARKS
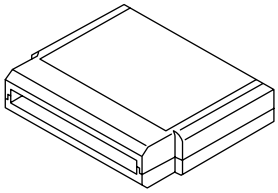 ST24082AA260	24082AA260	CARTRIDGE	Troubleshooting for electrical system.
ST22771AA030	22771AA030	SUBARU SELECT MONITOR KIT	Troubleshooting for electrical system.

2. GENERAL TOOL

TOOL NAME	REMARKS
Circuit tester	Used for measuring resistance, voltage and current.
Oscilloscope	Used for measuring sensor.

4. Electrical Component Location

A: LOCATION

1. CONTROL MODULE

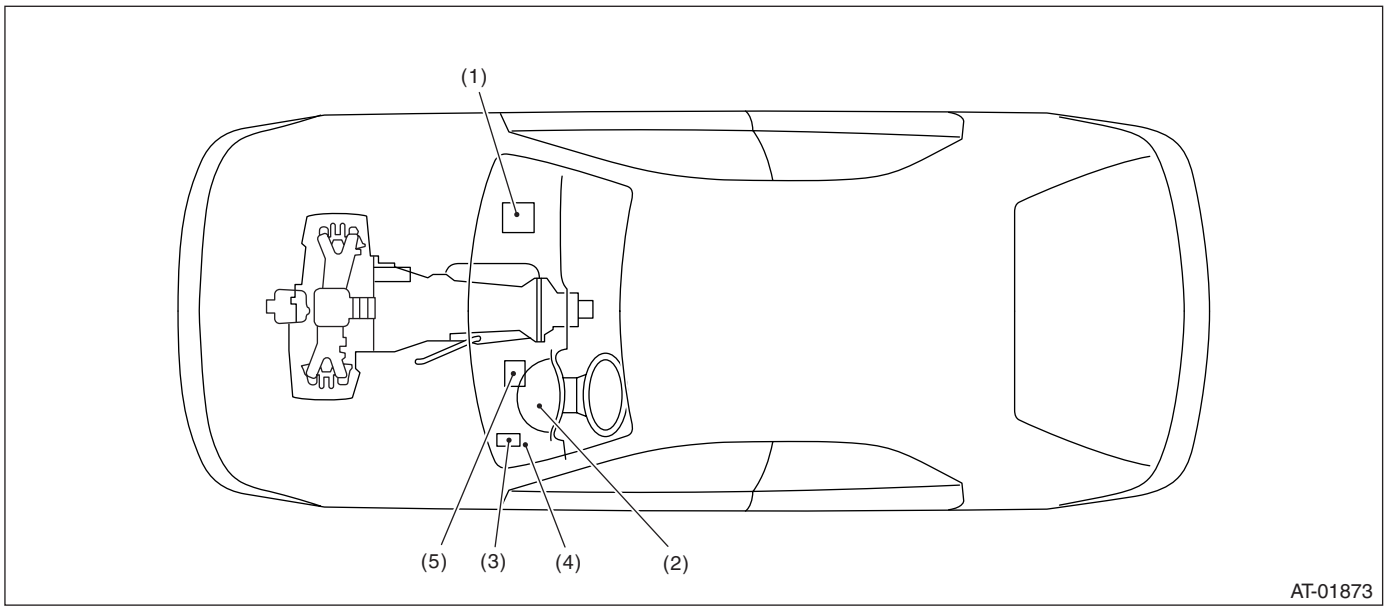

(1) Engine control module (ECM)
(2) SPORT indicator light (AT warning light)
(3) Transmission control module (TCM)
(4) Data link connector
(5) Body integrated unit

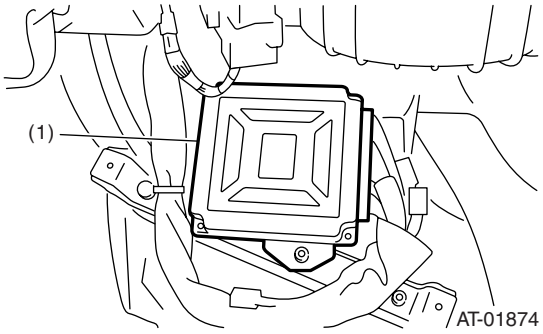

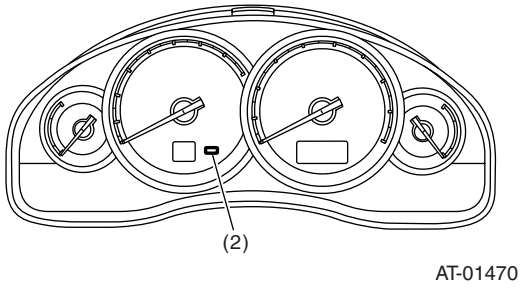

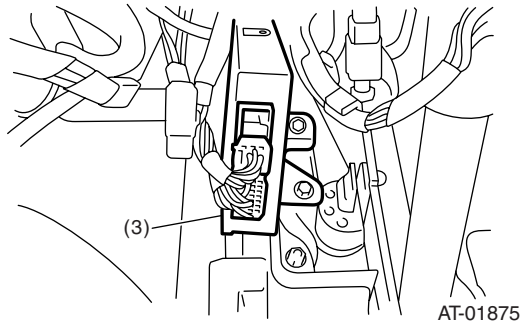

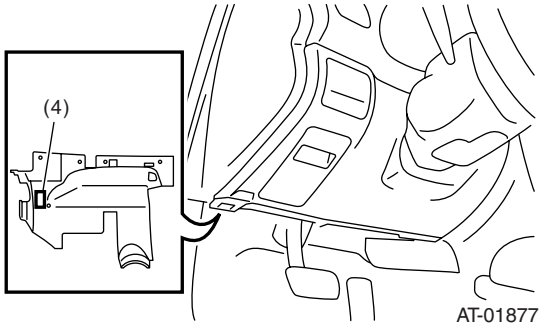

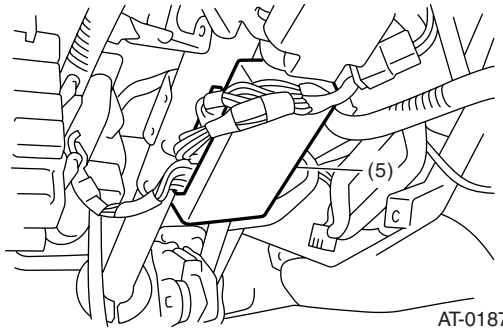

2. SENSOR

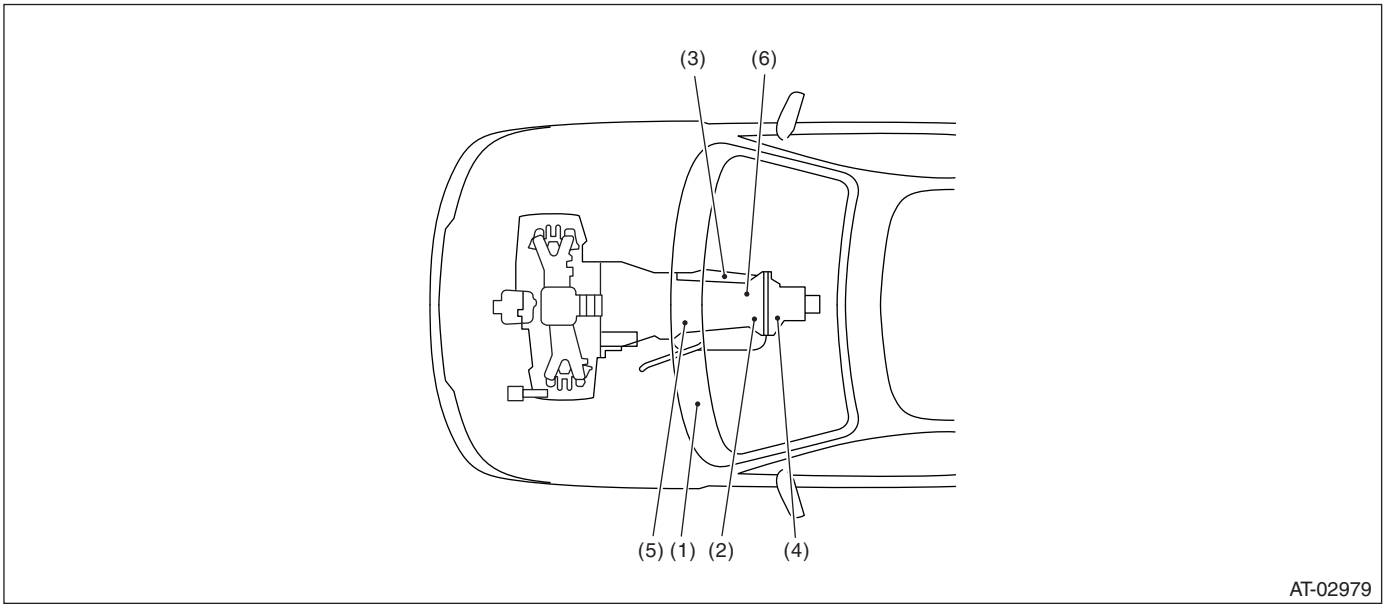

(1) Throttle position sensor
(2) Front vehicle speed sensor
(3) Inhibitor switch
(4) Rear vehicle speed sensor
(5) Torque converter turbine speed sensor
(6) ATF temperature sensor

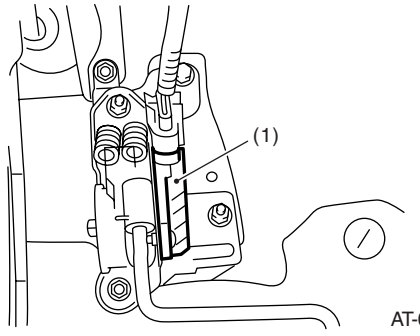

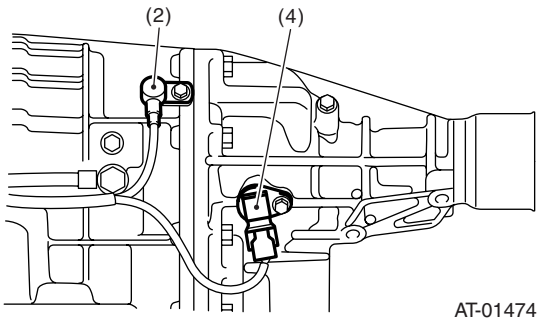

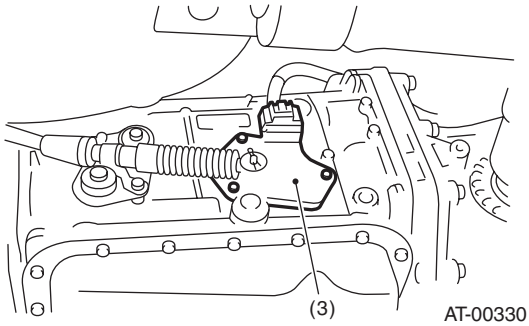

AT-00330

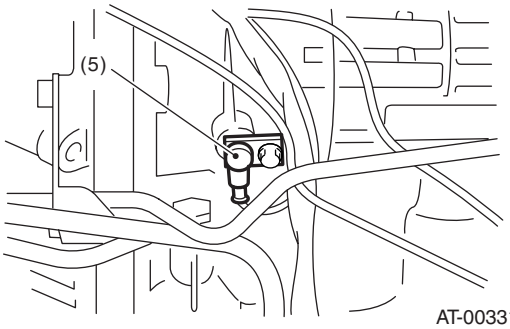

AT-00331

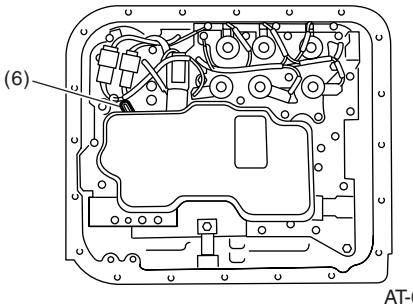

AT-00378

3. SOLENOID

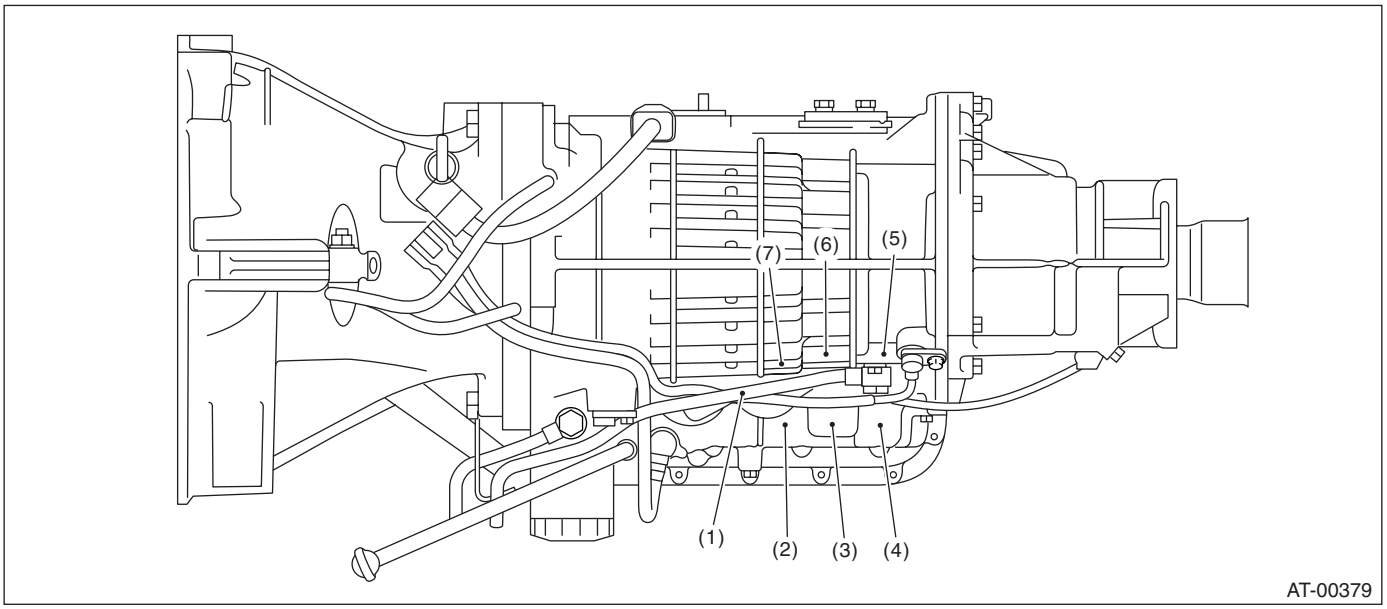

(1) Line pressure linear solenoid
(2) High clutch duty solenoid
(3) 2-4 brake duty solenoid
(4) Low & reverse duty solenoid
(5) Low clutch duty solenoid
(6) Transfer duty solenoid
(7) Lock-up duty solenoid

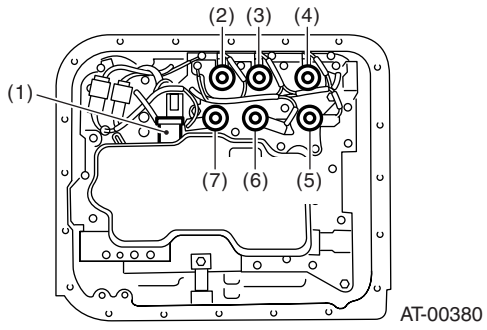

5. Transmission Control Module (TCM) I/O Signal

A: ELECTRICAL SPECIFICATION

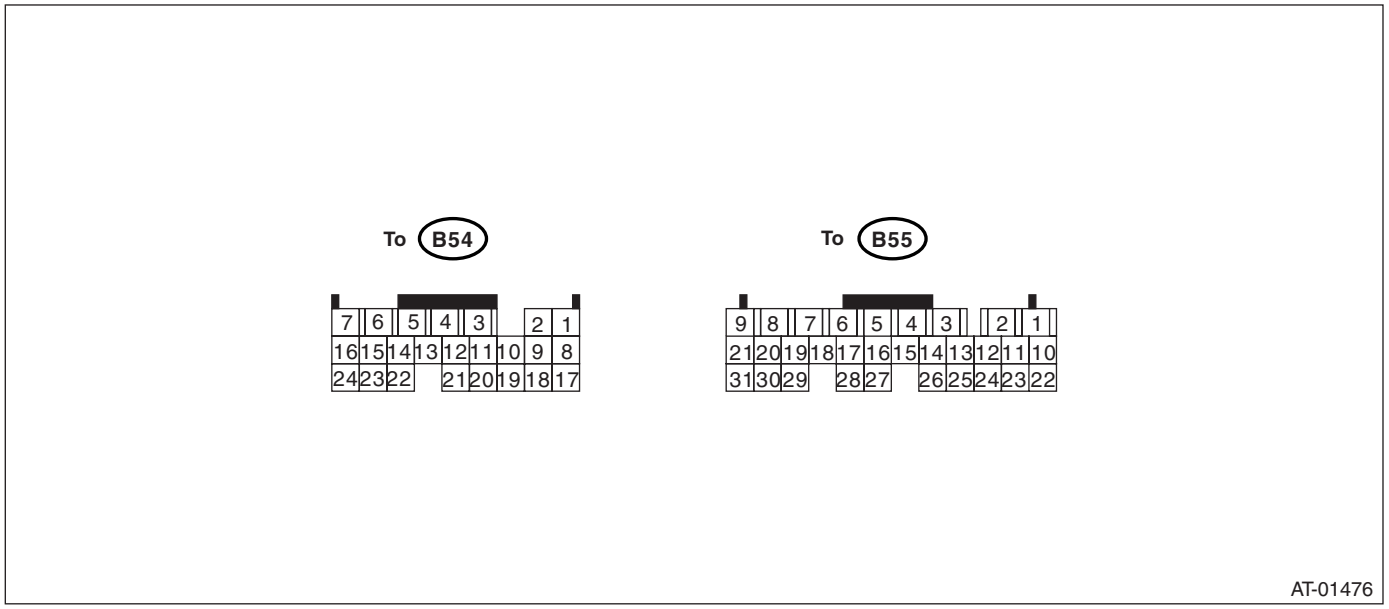

Check with ignition switch ON.						
Item		Connector No.	Terminal No.	Measuring conditions	Voltage (V)	Resistance to chassis ground (Ω)
Back-up power supply		B55	27	Ignition switch OFF	10 — 13	—
			28			
			29			
ACC power supply		B55	16	Ignition switch ACC	10 — 13	—
Ignition power supply		B55	21	Ignition switch ON (with engine OFF)	10 — 13	—
			31			
Inhibitor switch	“P” range switch	B54	5	Selector lever in “P” range	Less than 1	—
				Select lever in any other than “P” range	More than 8	
	“N” range switch	B54	22	Selector lever in “N” range	Less than 1	—
				Selector lever in any other than “N” range	More than 8	
	“R” range switch	B54	14	Selector lever in “R” range	Less than 1	—
				Selector lever in any other than “R” range	More than 8	
	“D” range switch	B54	4	Selector lever in “D” range	Less than 1	—
				Selector lever in any other than “D” range	More than 8	
Accelerator pedal position sensor		B54	19	Throttle fully closed.	More than 0.2	—
				Throttle fully open.	4.6 or less	
Accelerator pedal position sensor power supply		B54	10	Ignition switch ON (with engine OFF)	4.6 — 5.4	—
ATF temperature sensor		B54	21	ATF temperature 20°C (68°F)	3.5 — 4.3	2.5 k — 7.0 k
				ATF temperature 80°C (176°F)	1.0 — 2.2	300 — 800
Rear vehicle speed sensor		B54	24	Vehicle speed at least 20 km/h (12 MPH)	More than 2 (AC range)	—

Check with ignition switch ON.					
Item	Connector No.	Terminal No.	Measuring conditions	Voltage (V)	Resistance to chassis ground (Ω)
Front vehicle speed sensor	B54	6	Vehicle stopped	0	450 — 750
			Vehicle speed at least 20 km/h (12 MPH)	More than 1 (AC range)	
Torque converter turbine speed sensor	B54	7	Engine idling after warm-up (“D” range)	0	450 — 750
			Engine idling after warm-up (“N” range)	More than 1 (AC range)	
Engine speed signal	B54	13	Ignition switch ON (with engine OFF)	Less than 1	—
			Ignition switch ON (engine ON)	More than 5 (AC range)	
Line pressure linear solenoid	B54	20	Ignition switch ON (with engine OFF) Throttle fully closed in “R” range after warm-up.	3.7 — 7.5	4.0 — 8.0
			Ignition switch ON (with engine OFF) Throttle fully open in “R” range after warm-up.	1.4 — 4.9	
Lock-up duty solenoid	B55	5	When lock up occurs.	More than 10.5	2.0 — 6.0
			When lock up is released.	Less than 1	
Transfer duty solenoid	B55	4	“P” or “N” range	Less than 1	2.0 — 6.0
			1st gear	1.7 — 4.0	
2-4 brake duty solenoid	B55	6	“P” or “N” range	More than 10.5	2.0 — 6.0
			2nd or 4th gear	Less than 1	
High clutch duty solenoid	B55	8	3rd or 4th gear	Less than 1	2.0 — 6.0
			“P” or “N” range	More than 10.5	
Low clutch duty solenoid	B55	9	1st or 2nd gear	Less than 1	2.0 — 6.0
			“P” or “N” range	More than 10.5	
Low & reverse duty solenoid	B55	7	“P” or “N” range	More than 10.5	2.0 — 6.0
			Driving at 1st on manual mode (15 km/h (9.3 MPH) or more)	5 — 10	
Front vehicle speed sensor ground	B54	15	—	0	Less than 1
Rear vehicle speed sensor ground	B54	23	—	0	Less than 1
Torque converter turbine speed sensor ground	B54	16	—	0	Less than 1
System ground circuit	B54	17	—	0	Less than 1
	B55	2			
	B55	3			
	B54	8			
Sensor ground line 3	B55	19	—	0	Less than 1
Sensor ground line 4	B54	9	—	0	Less than 1
Range lock signal	B55	18	Vehicle speed in “D” range 0 km/h (0 MPH)	More than 10.5	7 — 18
			Vehicle speed in “D” range 20 km/h (12 MPH)	Less than 1	
Data link signal (Subaru Select Monitor)	B55	12	—	—	—

Check with ignition switch ON.					
Item	Connector No.	Terminal No.	Measuring conditions	Voltage (V)	Resistance to chassis ground (Ω)
CAN communication signal (+)	B54	3	Ignition switch ON	Pulse signal	—
CAN communication signal (–)	B54	12	Ignition switch ON	Pulse signal	—
FWD switch	B55	17	Fuse removed	10.5 or more	—
			Fuse installed	1 or less	

6. Subaru Select Monitor

A: OPERATION

1. READ DIAGNOSTIC TROUBLE CODE (DTC)

1) Prepare the Subaru Select Monitor kit.

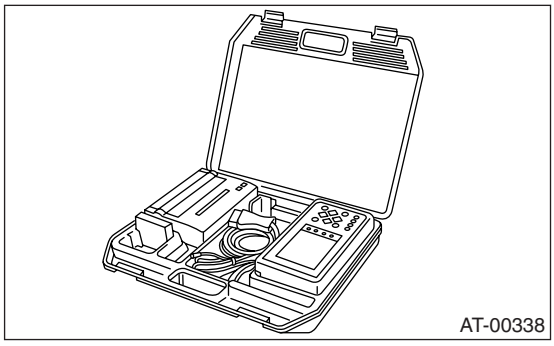

2) Connect the diagnosis cable to Subaru Select Monitor.
3) Insert the cartridge to Subaru Select Monitor. <Ref. to 4AT(D)(diag)-6, PREPARATION TOOL, General Description.>

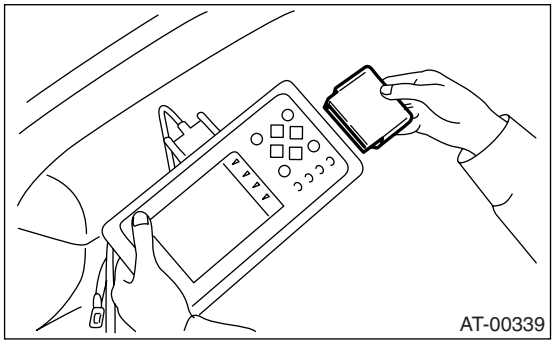

4) Connect the Subaru Select Monitor to data link connector.

(1) Data link connector is located in the lower portion of instrument panel (on the driver's side).

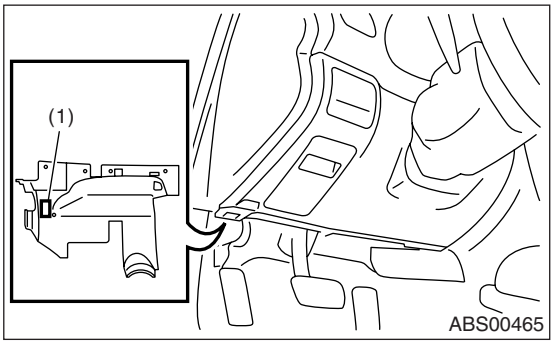

(1) Data link connector

(2) Connect the diagnosis cable to data link connector.

NOTE:
Do not connect scan tools except for Subaru Select Monitor and OBD-II general scan tool.

5) Turn the ignition switch to ON (engine OFF) and Subaru Select Monitor switch to ON.

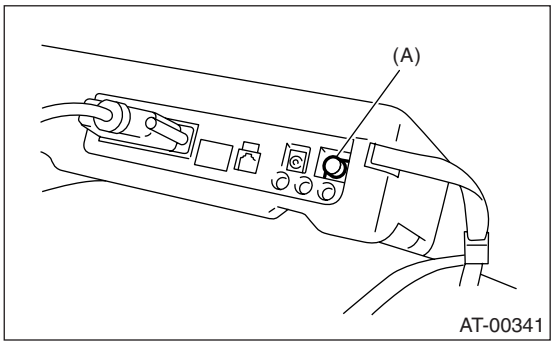

(A) Power switch

6) On the «Main Menu» display screen, select the {Each System Check} and press the [YES] key.
7) On the «System Selection Menu» display screen, select the {Transmission} and press the [YES] key.
8) Press the [YES] key after the information of transmission type is displayed.
9) On the «Transmission Diagnosis» display screen, select the {Diagnosis Code(s) Display} and press [YES] key.

NOTE:
• For details concerning operation procedure, refer to the "SUBARU SELECT MONITOR OPERATION MANUAL".
• For details concerning DTC, refer to the List of Diagnostic Trouble Code (DTC). <Ref. to 4AT(D)(diag)-27, List of Diagnostic Trouble Code (DTC).>

2. READ CURRENT DATA

1) On the «Main Menu» display screen, select the {Each System Check} and press the [YES] key.
2) On the «System Selection Menu» display screen, select the {Transmission} and press the [YES] key.
3) Press the [YES] key after the information of transmission type is displayed.
4) On the «Transmission Diagnosis» display screen, select the {Current Data Display & Save} and press the [YES] key.
5) On the «Transmission Diagnosis» display screen, select the {Data Display} and press the [YES] key.
6) Using the scroll key, scroll the display screen up or down until the desired data is shown.

• A list of the support data is shown in the following table.

Item	Display	Unit of measure
Battery voltage	Battery Voltage	V
Rear vehicle speed sensor signal	Rear Wheel Speed	km/h or MPH
Front vehicle speed sensor signal	Front Wheel Speed	km/h or MPH
Engine speed signal	Engine speed	rpm
Automatic transmission fluid temperature signal	ATF Temp.	°C or °F
Accelerator pedal position sensor	Throttle Sensor Voltage	V
Gear position	Gear Position	—
Line pressure control duty ratio	Line Pressure Duty Ratio	%
Lock up clutch control duty ratio	Lock Up Duty Ratio	%
Transfer clutch control duty ratio	Transfer duty Ratio	%
Accelerator pedal position sensor power supply	Throttle Sensor Power	V
Torque converter turbine speed signal	Turbine Revolution Speed	rpm
2-4 Brake duty ratio	Brake Clutch Duty Ratio	%
Low clutch duty ratio	Low Clutch Duty Ratio	%
High clutch duty ratio	High Clutch Duty Ratio	%
Low & reverse brake duty ratio	L&R B Duty Ratio	%
Accelerator position	Accel. opening angle	%
FWD switch signal	FWD Switch	ON or OFF
Stop light switch signal	Stop Light Switch	ON or OFF
Anti lock brake system signal	ABS Signal	ON or OFF
Parking range signal	P range	ON or OFF
Neutral range signal	N range	ON or OFF
Reverse range signal	R Range Signal	ON or OFF
Drive range signal	D Range Signal	ON or OFF
Automatic transmission diagnosis light output signal	Diagnosis Lamp	ON or OFF
Cruise control signal	Cruise Control Signal	ON or OFF
SPORT indicator light	ATF Temperature Lamp	ON or OFF
Up-shift signal	UP Switch	ON or OFF
Down shift signal	Down Switch	ON or OFF
Sport mode signal	Tiptronic Mode Switch	ON or OFF
Shift lock solenoid signal	Shift Lock Solenoid	ON or OFF

NOTE:
For details concerning operation procedure, refer to the “SUBARU SELECT MONITOR OPERATION MANUAL”.

3. CLEAR MEMORY MODE

1) On the «Main Menu» display screen, select the {Each System Check} and press the [YES] key.
2) On the «System Selection Menu» display screen, select the {Transmission} and press the [YES] key.
3) Press the [YES] key after the information of transmission type is displayed.
4) On the «Transmission Diagnosis» display screen, select the {Clear Memory} and press the [YES] key.

NOTE:
When {Clear Memory 2} is selected and executed, DTC and learned control memory is cleared. If Clear Memory 2 has been performed, execute the learning control. <Ref. to 4AT(D)(diag)-15, FACILITATION OF LEARNING CONTROL, OPERATION, Subaru Select Monitor.>

4. FACILITATION OF LEARNING CONTROL

1) Shift the select lever to “P” range, and apply parking brake.
2) Lift-up the vehicle.
3) Connect the Subaru Select Monitor to data link connector, and then turn the ignition switch to ON.
4) Perform the {Clear Memory 2} using Subaru Select Monitor. <Ref. to 4AT(D)(diag)-15, CLEAR MEMORY MODE, OPERATION, Subaru Select Monitor.>

5) Using Subaru Select Monitor, check that the DTC is not output. <Ref. to 4AT(D)(diag)-14, READ DIAGNOSTIC TROUBLE CODE (DTC), OPERATION, Subaru Select Monitor.>
6) Warm-up the engine until the ATF temperature which is displayed on the Subaru Select Monitor reaches 60 — 90°C (140 — 194°F). <Ref. to 4AT(D)(diag)-14, READ CURRENT DATA, OPERATION, Subaru Select Monitor.>
7) Shift the select lever to “R” range.
8) Turn all switches including headlight, air conditioner, seat heater, rear defogger and etc. to OFF.
9) Wait for 30 seconds with turning ignition key to OFF until ACC goes OFF.
10) Depress the brake pedal fully until the facilitation of learning control is completed when the “Communication Failed!” is displayed on Subaru Select Monitor.
11) Turn the ignition switch to ON.
12) Change Subaru Select Monitor to «Transmission Diagnosis» display screen. <Ref. to 4AT(D)(diag)-14, OPERATION, Subaru Select Monitor.>
13) Check that the Subaru Select Monitor is returned to normal operation.
14) Shift the select lever to “P” range, and then wait for more than 3 seconds.
15) Shift the select lever to “R” range, and then wait for more than 3 seconds.
16) Shift the select lever to “N” range, and then wait for more than 3 seconds.
17) Shift the select lever to “D” range, and then wait for more than 3 seconds.
18) Shift the select lever to “N” range, and then wait for more than 3 seconds.
19) Slowly depress the accelerator pedal fully.
20) Slowly release the accelerator pedal fully.
21) Start the engine, and idle it.
22) Shift the select lever to “D” range.
23) Start the facilitation of learning control. At this time, the SPORT indicator light in the combination meter start blinking at 2 Hz. When the SPORT indicator light does not blink, turn the ignition switch to OFF and repeat the procedures from step 4). When the SPORT indicator light stop blinking at 2 Hz and goes OFF, facilitation of learning control is completed.

NOTE:
When blinking of SPORT indicator light changes from 2 Hz to 4 Hz during facilitation of learning control, repeat the procedure from step 4).

24) Shift the select lever to “N” range, and then turn the ignition switch to OFF.
25) Shift the select lever to “P” range to complete the facilitation of learning control.

7. Read Diagnostic Trouble Code (DTC)

A: OPERATION

Refer to “Subaru Select Monitor” for information about how to display DTC. <Ref. to 4AT(D)(diag)-14, OPERATION, Subaru Select Monitor.>

For details concerning DTCs, refer to “List of Diagnostic Trouble Code (DTC)”. <Ref. to 4AT(D)(diag)-27, List of Diagnostic Trouble Code (DTC).>

NOTE:
DTC can not be read by SPORT indicator light.

8. Inspection Mode

A: PROCEDURE

WARNING:
Observe the traffic law during actual driving.

1) Shift the select lever to “D” range, and then drive the vehicle at 60 km/h (37 MPH) for at least 10 seconds.
2) Drive the vehicle with manual mode.

9. Clear Memory Mode

A: OPERATION

Refer to “Subaru Select Monitor” for information about how to clear DTC.
<Ref. to 4AT(D)(diag)-15, CLEAR MEMORY MODE, OPERATION, Subaru Select Monitor.>

10.SPORT Indicator Light Display

A: OPERATION

When any on-board diagnostics item is malfunctioning, the display on the SPORT indicator light blinks from the time the malfunction is detected after starting the engine until the ignition switch is turned OFF. The malfunctioning part or unit can be determined by a DTC during the on-board diagnostics operation. Problems which occurred previously can also be identified through the memory function. If the SPORT indicator light does not show a problem (although a problem is occurring), the problem can be determined by checking the performance characteristics of each sensor using Subaru Select Monitor. Indicator light signal patterns are as shown in the figure.

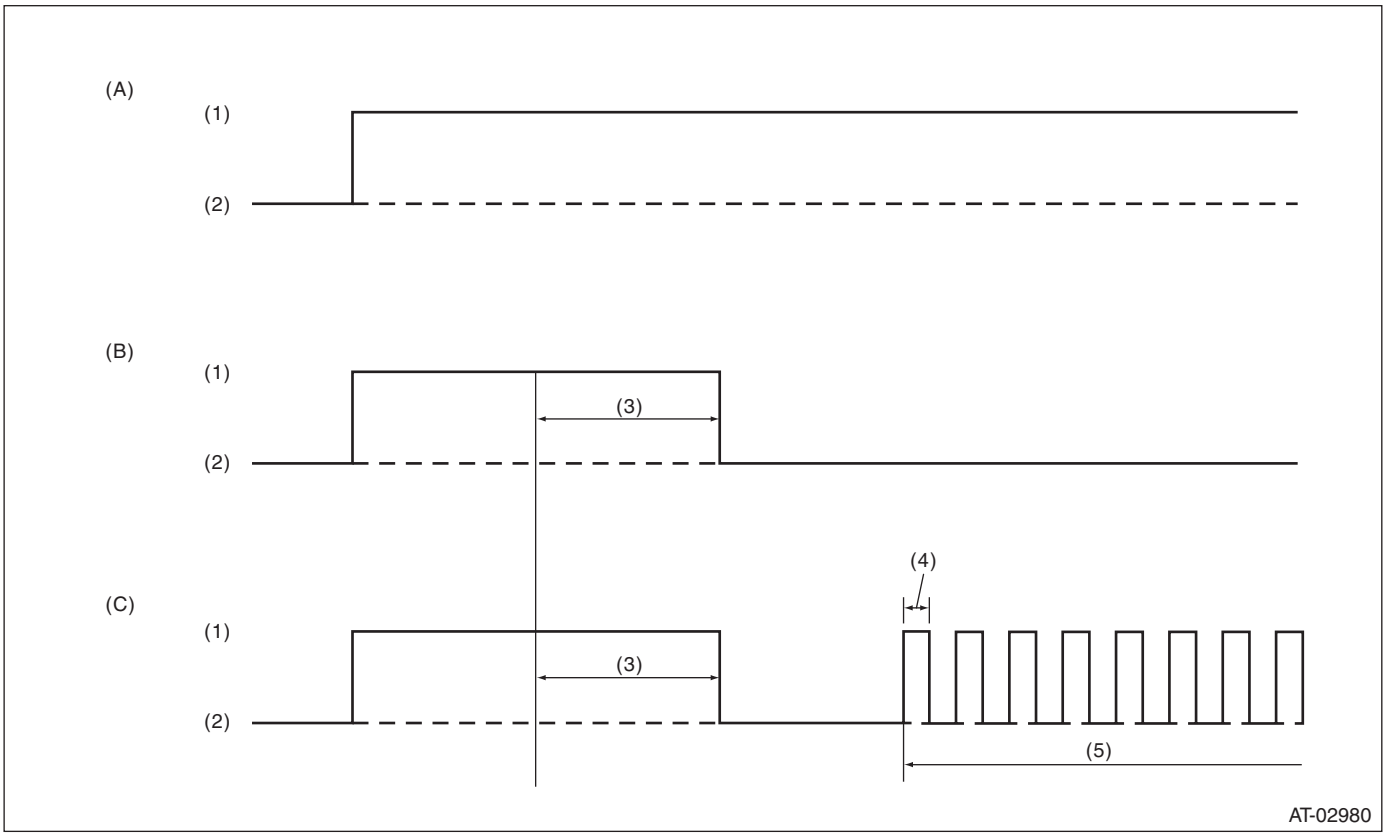

(A)	Ignition switch ON (Engine OFF)	(B)	Normal (Engine ON)	(C)	Faulty (Engine ON)
(1)	ON	(3)	2 seconds	(5)	Blink
(2)	OFF	(4)	0.25 seconds		

Perform the inspection when the SPORT indicator light does not operate correctly. <Ref. to 4AT(D)(diag)-21, INSPECTION, SPORT Indicator Light Display.>

B: INSPECTION

DIAGNOSIS:

SPORT indicator light circuit is open or shorted.

TROUBLE SYMPTOM:

When the ignition switch is turned to ON (engine OFF), SPORT indicator light does not illuminate.

WIRING DIAGRAM:

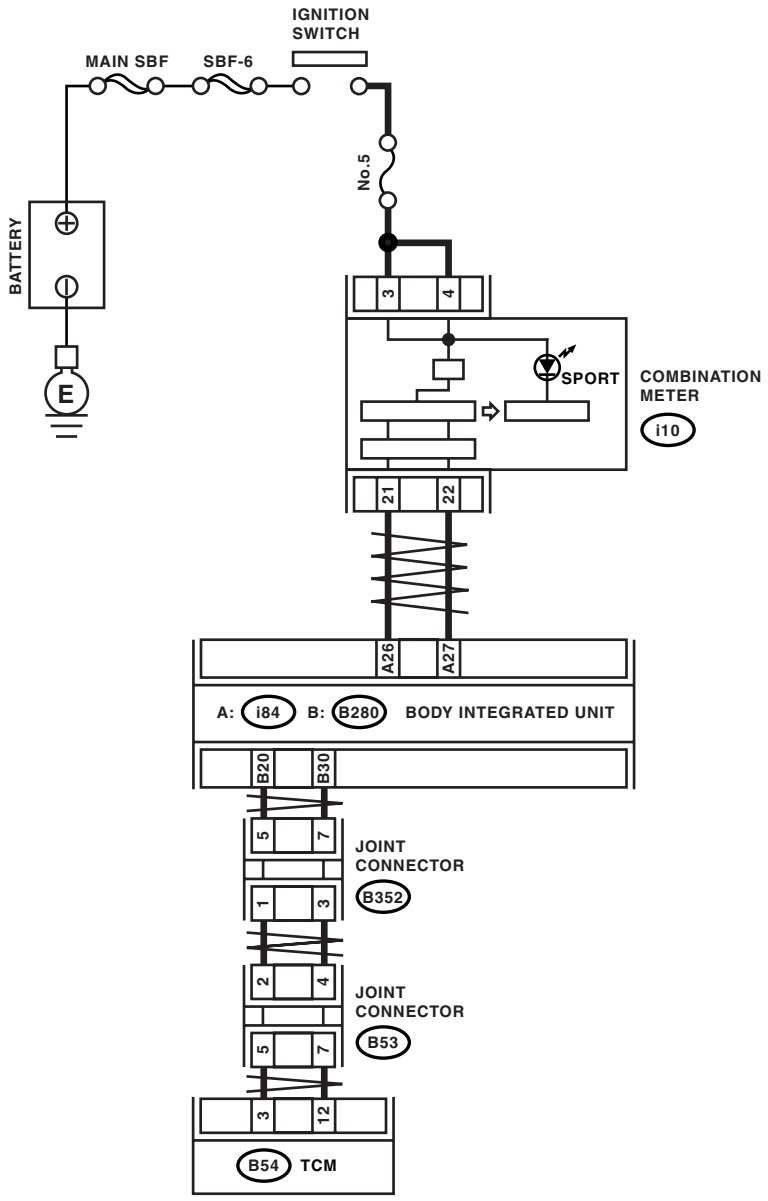

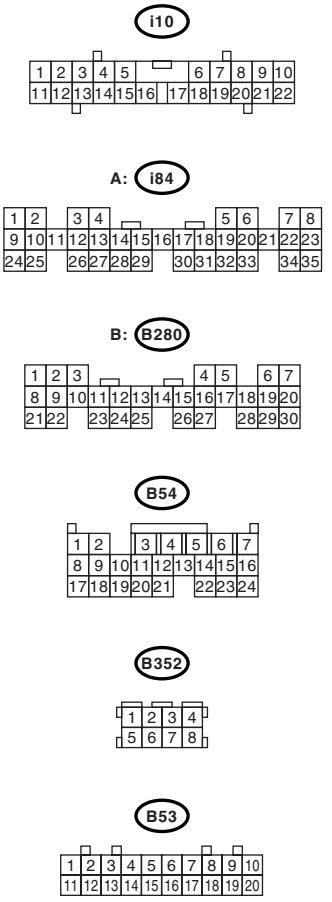

AT-02915

	Step	Check	Yes	No
1	**CHECK SPORT INDICATOR LIGHT.** Turn the ignition switch to ON.	Does the SPORT indicator light illuminate?	Go to step **2.**	Perform the self-diagnosis of combination meter.
2	**CHECK SPORT INDICATOR LIGHT.** After the ignition switch is “ON”, wait for at least 2 seconds.	Does the SPORT indicator light illuminate?	Go to step **3.**	Go to step **4.**
3	**CHECK SPORT INDICATOR LIGHT.** Start the engine.	Does the SPORT indicator light go off?	Normal. Return to Basic Diagnostic Procedure. <Ref. to 4AT(D)(diag)-2, Basic Diagnostic Procedure.>	Go to step **7.**
4	**CHECK SUBARU SELECT MONITOR COMMUNICATION.** Connect the Subaru Select Monitor to data link connector.	Is the communication between Subaru Select Monitor and TCM normal?	Go to step **5.**	Check the power supply ground circuit of TCM and Subaru Select Monitor communication. <Ref. to 4AT(D)(diag)-23, Diagnostic Procedure for Select Monitor Communication.>
5	**CHECK TCM.** Display the current data of TCM using Subaru Select Monitor.	Is the “Diagnosis light” output signal “ON”?	Go to step **6.**	Replace the TCM. <Ref. to 4AT-64, Transmission Control Module (TCM).>
6	**CHECK BODY INTEGRATED UNIT.** Display the current data of body integrated unit using Subaru Select Monitor. <Ref. to LAN(diag)-14, OPERATION, Subaru Select Monitor.>	Is the “SPORT indicator light” input signal “Illuminate”?	Replace the combination meter assembly. <Ref. to IDI-15, Combination Meter.>	Check DTC of body integrated unit. <Ref. to LAN(diag)-14, OPERATION, Subaru Select Monitor.>
7	**CHECK TCM.** Display the current data of TCM using Subaru Select Monitor. <Ref. to 4AT(D)(diag)-14, OPERATION, Subaru Select Monitor.>	Is the “Diagnosis light” output signal “ON”?	Replace the TCM. <Ref. to 4AT-64, Transmission Control Module (TCM).>	Go to step **8.**
8	**CHECK BODY INTEGRATED UNIT.** Display the current data of body integrated unit using Subaru Select Monitor. <Ref. to LAN(diag)-14, OPERATION, Subaru Select Monitor.>	Is the “SPORT indicator light” input signal “Illuminate”?	Check DTC of body integrated unit. Perform the diagnosis according to DTC. <Ref. to LAN(diag)-14, OPERATION, Subaru Select Monitor.>	Perform the self-diagnosis for combination meter. <Ref. to IDI-3, INSPECTION, Combination Meter System.>

11.Diagnostic Procedure for Select Monitor Communication

A: COMMUNICATION FOR INITIALIZING IMPOSSIBLE

DIAGNOSIS:
Faulty harness connector
TROUBLE SYMPTOM:
Subaru Select Monitor communication failure
WIRING DIAGRAM:

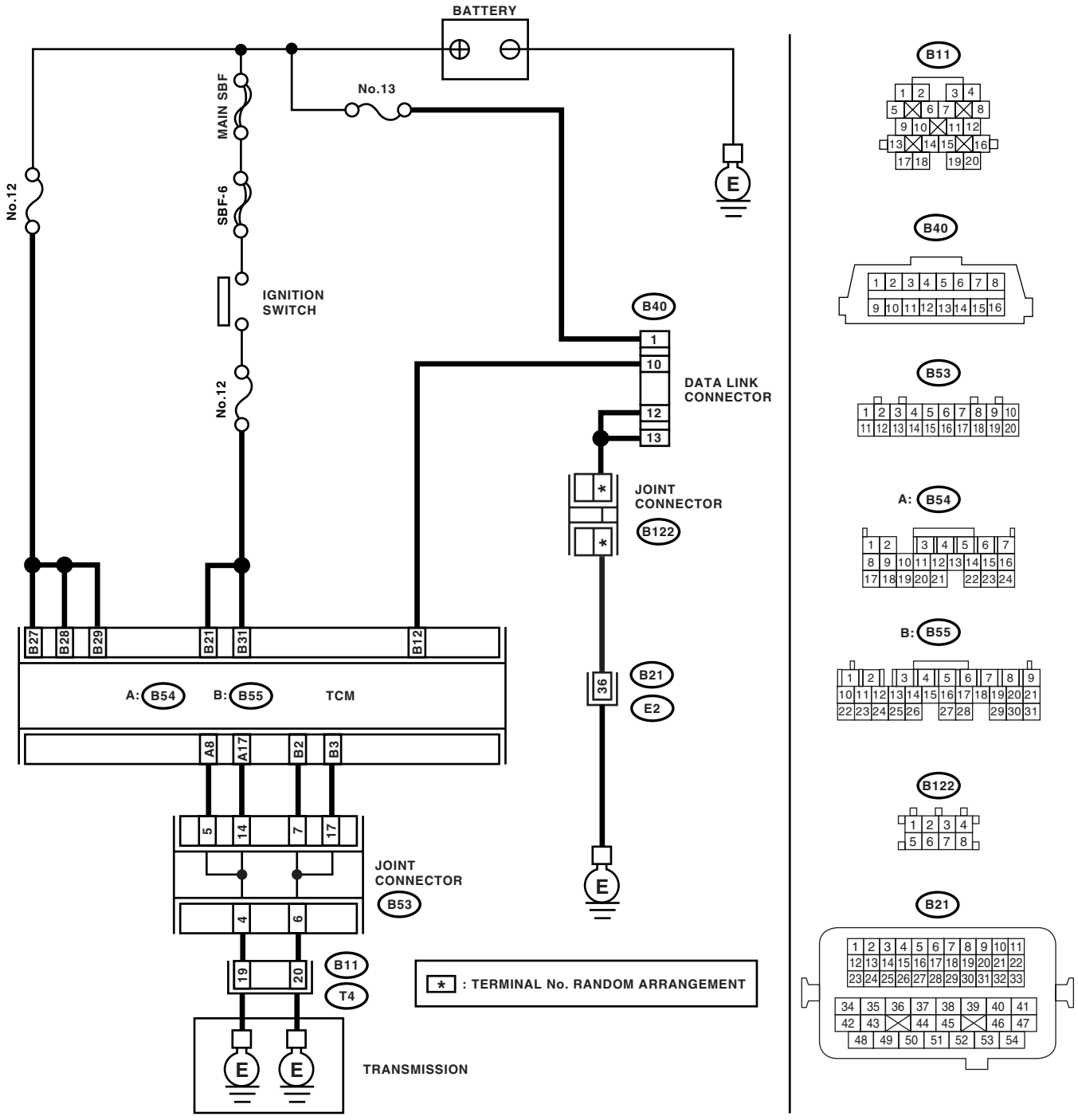

AT-02916

Diagnostic Procedure for Select Monitor Communication

	Step	Check	Yes	No
1	**CHECK INSTALLATION OF TCM CONNECTOR.** Turn the ignition switch to OFF.	Is TCM connector inserted into TCM?	Go to step **2.**	Connect the TCM connector to TCM.
2	**CHECK SUBARU SELECT MONITOR POWER SUPPLY CIRCUIT.** Measure the voltage between data link connector and chassis ground. ***Connector & terminal*** ***(B40) No. 1 (+) — Chassis ground (−):***	Is the voltage more than 10 V?	Go to step **3.**	Repair the harness connector and connector between battery and data link connector, and poor contact in coupling connector.
3	**CHECK SUBARU SELECT MONITOR GROUND CIRCUIT.** 1) Disconnect the connectors from ECM. 2) Measure the resistance of harness connector between data link connector and ECM. ***Connector & terminal*** ***(B40) No. 12 — Chassis ground:***	Is the resistance less than 1 Ω?	Go to step **4.**	Repair the open circuit in harness between data link connector and ECM.
4	**CHECK SUBARU SELECT MONITOR GROUND CIRCUIT.** Measure the resistance of harness connector between data link connector and chassis ground. ***Connector & terminal*** ***(B40) No. 12 — Chassis ground:*** ***(B40) No. 13 — Chassis ground:***	Is the resistance more than 1 MΩ?	Go to step **5.**	Repair the short circuit in harness between data link connector and ground terminal.
5	**CHECK ENGINE GROUND CIRCUIT.** Check engine ground circuit. <Ref. to 4AT(D)(diag)-79, DTC P1708 THROTTLE POSITION SENSOR CIRCUIT LOW INPUT, Diagnostic Procedure with Diagnostic Trouble Code (DTC).>	Is the engine ground circuit normal?	Go to step **6.**	Repair the ground circuit of ECM.
6	**CHECK COMMUNICATION OF SUBARU SELECT MONITOR.** 1) Turn the ignition switch to ON. 2) Using the Subaru Select Monitor, check whether communication to transmission systems can be executed normally.	Are the name of system displayed on Subaru Select Monitor?	Go to step **11.**	Go to step **7.**
7	**CHECK COMMUNICATION OF SUBARU SELECT MONITOR.** 1) Turn the ignition switch to OFF. 2) Disconnect the TCM connector. 3) Check whether communication to engine systems can be executed normally.	Are the name of system displayed on Subaru Select Monitor?	Go to step **9.**	Go to step **8.**
8	**CHECK COMMUNICATION OF SUBARU SELECT MONITOR.** 1) Turn the ignition switch to OFF. 2) Connect the TCM connector. 3) Disconnect the ECM connector and ABSCU&H/U. 4) Check whether communication to transmission systems can be executed normally.	Are the name of system displayed on Subaru Select Monitor?	Inspect the ECM or ABSCU&H/U.	Go to step **9.**

	Step	Check	Yes	No
9	**CHECK HARNESS CONNECTOR BETWEEN EACH CONTROL UNIT AND DATA LINK CONNECTOR.** 1) Turn the ignition switch to OFF. 2) Disconnect the TCM and ECM and ABSCU&H/U connector. 3) Measure the resistance between TCM connector and chassis ground. ***Connector & terminal*** ***(B40) No. 10 — Chassis ground:***	Is the resistance more than 1 MΩ?	Go to step **10.**	Check harness and connector between each control unit and data link connector.
10	**CHECK OUTPUT SIGNAL FOR TCM.** 1) Turn the ignition switch to ON. 2) Measure the voltage between TCM and chassis ground. ***Connector & terminal*** ***(B40) No. 10 (+) — Chassis ground (−):***	Is the voltage more than 1 V?	Check harness and connector between each control unit and data link connector.	Go to step **11.**
11	**CHECK HARNESS CONNECTOR BETWEEN TCM AND DATA LINK CONNECTOR.** Measure the resistance between TCM connector and data link connector. ***Connector & terminal*** ***(B55) No. 12 — (B40) No. 10:***	Is the resistance less than 1 Ω?	Go to step **12.**	Repair the harness and connector between TCM and data link connector.
12	**CHECK TRANSMISSION HARNESS CONNECTOR.**	Is the transmission harness connector connected to bulkhead harness connector?	Go to step **13.**	Connect the bulkhead harness connector to transmission harness connector.
13	**CHECK POOR CONTACT IN CONNECTORS.**	Is there poor contact in control unit power supply and data link connector?	Repair the poor contact.	Go to step **14.**
14	**CHECK POWER SUPPLY OF TCM.** 1) Disconnect the connector from TCM. 2) Turn the ignition switch to ON. 3) Measure the voltage between TCM connector and chassis ground. ***Connector & terminal*** ***(B55) No. 27 (+) — Chassis ground (−):*** ***(B55) No. 28 (+) — Chassis ground (−):*** ***(B55) No. 29 (+) — Chassis ground (−):***	Is the voltage 10 — 13 V?	Go to step **16.**	Go to step **15.**
15	**CHECK FUSE (No. 12).** 1) Turn the ignition switch to OFF. 2) Remove the fuse (No. 12).	Is the fuse (No. 12) blown?	Replace the fuse (No. 12). If the replaced fuse (No. 12) blown out easily, repair the short circuit in harness between fuse (No. 12) and TCM.	Repair the open circuit in harness between fuse (No. 12) and TCM, or fuse (No. 12) and battery, and poor contact in coupling connector.
16	**CHECK IGNITION POWER SUPPLY CIRCUIT.** 1) Turn the ignition switch to ON (engine OFF). 2) Measure the ignition power supply voltage between TCM connector and chassis ground. ***Connector & terminal*** ***(B56) No. 21 (+) — Chassis ground (−):*** ***(B56) No. 31 (+) — Chassis ground (−):***	Is the voltage 10 — 13 V?	Go to step **18.**	Go to step **17.**

	Step	Check	Yes	No
17	**CHECK FUSE (No. 12).** Remove the fuse (No. 12).	Is the fuse (No. 12) blown?	Replace the fuse (No. 12). If the replaced fuse (No. 12) blown out easily, repair the short circuit in harness between fuse (No. 12) and TCM.	Repair the open circuit in harness between fuse (No. 12) and TCM, or fuse (No. 12) and battery, and poor contact in connector.
18	**CHECK HARNESS CONNECTOR BETWEEN TCM AND TRANSMISSION.** 1) Turn the ignition switch to OFF. 2) Disconnect the connector from TCM and transmission. 3) Measure the resistance of harness between TCM and transmission connector. ***Connector & terminal*** ***(B54) No. 8 — (B11) No. 19:*** ***(B54) No. 17 — (B11) No. 19:*** ***(B55) No. 2 — (B11) No. 20:*** ***(B55) No. 3 — (B11) No. 20:***	Is the resistance less than 1 Ω?	Go to step **19.**	Repair the open circuit in harness between TCM and transmission harness connector, and poor contact in connector.
19	**CHECK HARNESS CONNECTOR BETWEEN TRANSMISSION AND TRANSMISSION GROUND.** Measure the resistance of harness between transmission and transmission ground. ***Connector & terminal*** ***(T4) No. 19 — Transmission ground:*** ***(T4) No. 20 — Transmission ground:***	Is the resistance less than 1 Ω?	Go to step **20.**	Repair the open circuit in harness between transmission and transmission ground.
20	**CHECK POOR CONTACT IN CONNECTORS.**	Is there poor contact in TCM power supply, ground and data link connector?	Repair the connector.	Replace the TCM. <Ref. to 4AT-64, Transmission Control Module (TCM).>

12.List of Diagnostic Trouble Code (DTC)

A: LIST

DTC	Item	Content of diagnosis	Reference target
P0705	Transmission Range Sensor Circuit (PRNDL INPUT)	Inhibitor switch malfunction short circuit	<Ref. to 4AT(D)(diag)-29, DTC P0705 TRANSMISSION RANGE SENSOR CIRCUIT (PRNDL INPUT), Diagnostic Procedure with Diagnostic Trouble Code (DTC).>
P0712	Transmission Fluid Temperature Sensor Circuit Low Input	ATF temperature sensor is faulty or input signal circuit is open.	<Ref. to 4AT(D)(diag)-36, DTC P0712 TRANSMISSION FLUID TEMPERATURE SENSOR CIRCUIT LOW INPUT, Diagnostic Procedure with Diagnostic Trouble Code (DTC).>
P0713	Transmission Fluid Temperature Sensor Circuit High Input	ATF temperature sensor is faulty or input signal circuit is shorted.	<Ref. to 4AT(D)(diag)-39, DTC P0713 TRANSMISSION FLUID TEMPERATURE SENSOR CIRCUIT HIGH INPUT, Diagnostic Procedure with Diagnostic Trouble Code (DTC).>
P0715	Torque Converter Turbine Speed Signal Circuit Malfunction	Torque converter turbine speed sensor malfunction, short input signal circuit	<Ref. to 4AT(D)(diag)-42, DTC P0715 INPUT/TURBINE SPEED SENSOR CIRCUIT, Diagnostic Procedure with Diagnostic Trouble Code (DTC).>
P0719	Torque Converter/Brake Switch “B” Circuit Low	Brake switch malfunction, open input signal circuit	<Ref. to 4AT(D)(diag)-44, DTC P0719 TORQUE CONVERTER/BRAKE SWITCH “B” CIRCUIT LOW, Diagnostic Procedure with Diagnostic Trouble Code (DTC).>
P0720	AT Vehicle Speed Sensor Circuit Malfunction	Front vehicle speed sensor malfunction, open or short input signal circuit	<Ref. to 4AT(D)(diag)-46, DTC P0720 OUTPUT SPEED SENSOR CIRCUIT, Diagnostic Procedure with Diagnostic Trouble Code (DTC).>
P0724	Torque Converter/Brake Switch “B” Circuit High	Brake switch malfunction, short input signal circuit	<Ref. to 4AT(D)(diag)-48, DTC P0724 TORQUE CONVERTER/BRAKE SWITCH “B” CIRCUIT HIGH, Diagnostic Procedure with Diagnostic Trouble Code (DTC).>
P0725	Engine Speed Input Circuit Malfunction	Open or short engine speed output signal circuit	<Ref. to 4AT(D)(diag)-50, DTC P0725 ENGINE SPEED INPUT CIRCUIT, Diagnostic Procedure with Diagnostic Trouble Code (DTC).>
P0731	Gear 1 Incorrect Ratio	Vehicle sensor, torque converter turbine speed sensor, or control valve malfunction	<Ref. to 4AT(D)(diag)-51, DTC P0731 GEAR 1 INCORRECT RATIO, Diagnostic Procedure with Diagnostic Trouble Code (DTC).>
P0732	Gear 2 Incorrect Ratio	Vehicle sensor, torque converter turbine speed sensor, or control valve malfunction	<Ref. to 4AT(D)(diag)-51, DTC P0732 GEAR 2 INCORRECT RATIO, Diagnostic Procedure with Diagnostic Trouble Code (DTC).>
P0733	Gear 3 Incorrect Ratio	Vehicle sensor, torque converter turbine speed sensor, or control valve malfunction	<Ref. to 4AT(D)(diag)-51, DTC P0733 GEAR 3 INCORRECT RATIO, Diagnostic Procedure with Diagnostic Trouble Code (DTC).>
P0734	Gear 4 Incorrect Ratio	Vehicle sensor, torque converter turbine speed sensor, or control valve malfunction	<Ref. to 4AT(D)(diag)-51, DTC P0734 GEAR 4 INCORRECT RATIO, Diagnostic Procedure with Diagnostic Trouble Code (DTC).>
P0736	Reverse Incorrect Ratio	Vehicle sensor, torque converter turbine speed sensor, or control valve malfunction	<Ref. to 4AT(D)(diag)-52, DTC P0736 REVERSE INCORRECT RATIO, Diagnostic Procedure with Diagnostic Trouble Code (DTC).>
P0741	Torque Converter Clutch Circuit Performance or Stuck Off	Lock-up clutch is faulty or valve is stuck.	<Ref. to 4AT(D)(diag)-53, DTC P0741 TORQUE CONVERTER CLUTCH CIRCUIT PERFORMANCE OR STUCK OFF, Diagnostic Procedure with Diagnostic Trouble Code (DTC).>

List of Diagnostic Trouble Code (DTC)

DTC	Item	Content of diagnosis	Reference target
P0743	Torque Converter Clutch Circuit Electrical	Lock-up solenoid is faulty or output signal circuit is open or shorted.	<Ref. to 4AT(D)(diag)-54, DTC P0743 TORQUE CONVERTER CLUTCH CIRCUIT ELECTRICAL, Diagnostic Procedure with Diagnostic Trouble Code (DTC).>
P0748	Pressure Control Solenoid “A” Electrical	Line pressure linear solenoid is faulty or output signal circuit is open or shorted.	<Ref. to 4AT(D)(diag)-57, DTC P0748 PRESSURE CONTROL SOLENOID “A” ELECTRICAL, Diagnostic Procedure with Diagnostic Trouble Code (DTC).>
P0753	Shift Solenoid “A” Electrical	Low clutch duty solenoid is faulty or output signal circuit is open or shorted.	<Ref. to 4AT(D)(diag)-59, DTC P0753 SHIFT SOLENOID “A” ELECTRICAL, Diagnostic Procedure with Diagnostic Trouble Code (DTC).>
P0758	Shift Solenoid “B” Electrical	2-4 brake duty solenoid is faulty or output signal circuit is open or shorted.	<Ref. to 4AT(D)(diag)-62, DTC P0758 SHIFT SOLENOID “B” ELECTRICAL, Diagnostic Procedure with Diagnostic Trouble Code (DTC).>
P0763	Shift Solenoid “C” Electrical	High clutch duty solenoid is faulty or output signal circuit is open or shorted.	<Ref. to 4AT(D)(diag)-65, DTC P0763 SHIFT SOLENOID “C” ELECTRICAL, Diagnostic Procedure with Diagnostic Trouble Code (DTC).>
P0768	Shift Solenoid “D” Electrical	Low & reverse clutch duty solenoid is faulty or output signal circuit is open or shorted.	<Ref. to 4AT(D)(diag)-68, DTC P0768 SHIFT SOLENOID “D” ELECTRICAL, Diagnostic Procedure with Diagnostic Trouble Code (DTC).>
P0801	Reverse Inhibit Control Circuit	Range lock solenoid is faulty or output signal circuit is open or shorted.	<Ref. to 4AT(D)(diag)-71, DTC P0801 REVERSE INHIBIT CONTROL CIRCUIT, Diagnostic Procedure with Diagnostic Trouble Code (DTC).>
P1706	AT Vehicle Speed Sensor Circuit Malfunction (Rear Wheel)	Rear vehicle speed sensor is faulty or input signal circuit is open or shorted.	<Ref. to 4AT(D)(diag)-73, DTC P1706 AT VEHICLE SPEED SENSOR CIRCUIT MALFUNCTION (REAR WHEEL), Diagnostic Procedure with Diagnostic Trouble Code (DTC).>
P1707	AT AWD Solenoid Valve	Transfer duty solenoid is faulty or output signal circuit is open or shorted.	<Ref. to 4AT(D)(diag)-76, DTC P1707 AT AWD SOLENOID VALVE CIRCUIT MALFUNCTION, Diagnostic Procedure with Diagnostic Trouble Code (DTC).>
P1708	Throttle Position Sensor Circuit Low Input	Accelerator pedal position sensor is faulty or input signal circuit is open.	<Ref. to 4AT(D)(diag)-79, DTC P1708 THROTTLE POSITION SENSOR CIRCUIT LOW INPUT, Diagnostic Procedure with Diagnostic Trouble Code (DTC).>
P1709	Throttle Position Sensor Circuit High Input	Accelerator pedal position sensor is faulty or input signal circuit is shorted.	<Ref. to 4AT(D)(diag)-82, DTC P1709 THROTTLE POSITION SENSOR CIRCUIT HIGH INPUT, Diagnostic Procedure with Diagnostic Trouble Code (DTC).>
P1714	Throttle Position Sensor Power Supply Circuit	Accelerator pedal position sensor is faulty or input signal circuit is open or shorted.	<Ref. to 4AT(D)(diag)-85, DTC P1714 THROTTLE POSITION SENSOR POWER SUPPLY CIRCUIT, Diagnostic Procedure with Diagnostic Trouble Code (DTC).>
P1718	CAN Communication Circuit	CAN communication circuit is open or shorted.	<Ref. to 4AT(D)(diag)-87, DTC P1718 CAN COMMUNICATION CIRCUIT, Diagnostic Procedure with Diagnostic Trouble Code (DTC).>
P1817	Sports Mode Switch Circuit	manual mode switch is faulty or input signal circuit is open or shorted.	<Ref. to 4AT(D)(diag)-88, DTC P1817 SPORT MODE SWITCH CIRCUIT, Diagnostic Procedure with Diagnostic Trouble Code (DTC).>

13.Diagnostic Procedure with Diagnostic Trouble Code (DTC)

A: DTC P0705 TRANSMISSION RANGE SENSOR CIRCUIT (PRNDL INPUT)

DTC DETECTING CONDITION:

- Inhibitor switch is faulty.
- More than 2 range signal is input.

TROUBLE SYMPTOM:

- Shift characteristics are erroneous.
- Range position of select lever and AT select lever position indicator light on the combination meter is not matched.

WIRING DIAGRAM:

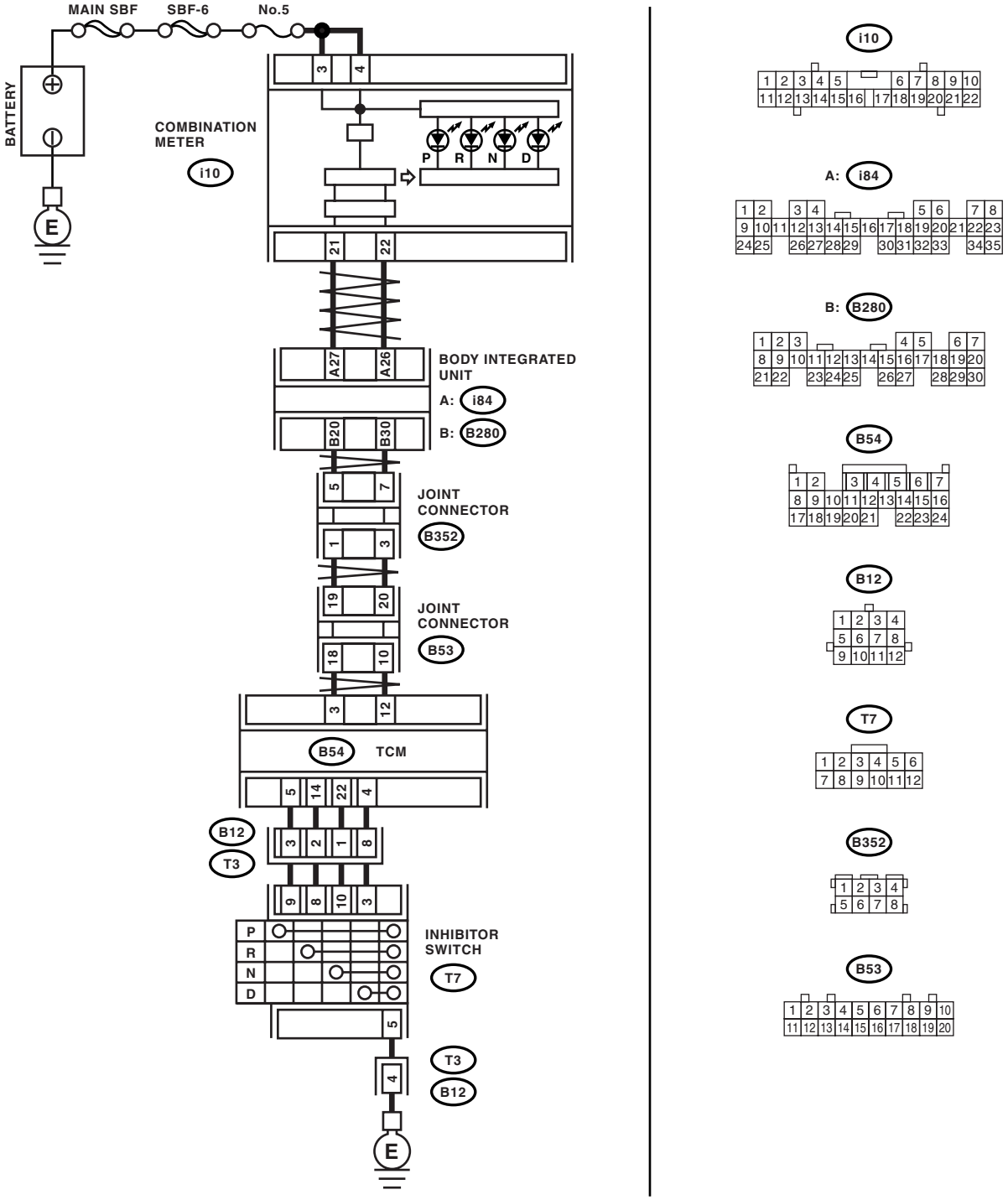

AT-02917

Step		Check	Yes	No
1	**CHECK INDICATOR LIGHT.** 1) Turn the ignition switch to ON. 2) Shift the select lever to "P" range.	Does the "P" range indicator light on combination meter illuminate?	Go to step **2.**	Go to step **12.**
2	**CHECK INDICATOR LIGHT.**	Does the "R" range indicator light on combination meter illuminate?	Go to step **26.**	Go to step **3.**

	Step	Check	Yes	No
3	**CHECK INDICATOR LIGHT.**	Does the “N” range indicator light on combination meter illuminate?	Go to step **33.**	Go to step **4.**
4	**CHECK INDICATOR LIGHT.**	Does the “D” range indicator light on combination meter illuminate?	Go to step **40.**	Go to step **5.**
5	**CHECK “P” RANGE SWITCH.** 1) Connect the Subaru Select Monitor to data link connector. 2) Shift the select lever to “R” range.	Does the “P” range LED of Subaru Select Monitor illuminate?	Go to step **19.**	Go to step **6.**
6	**CHECK INDICATOR LIGHT.**	Does the “R” range indicator light on combination meter illuminate?	Go to step **8.**	Go to step **7.**
7	**CHECK “R” RANGE SWITCH.**	Does the “R” range LED of Subaru Select Monitor illuminate?	Go to step **23.**	Go to step **20.**
8	**CHECK INDICATOR LIGHT.** Shift the select lever to the “N” range.	Does the “P” range indicator light on combination meter illuminate?	Go to step **10.**	Go to step **9.**
9	**CHECK “N” RANGE SWITCH.**	Does the “N” range LED of Subaru Select Monitor illuminate?	Go to step **30.**	Go to step **27.**
10	**CHECK INDICATOR LIGHT.** Shift the select lever to “D” range.	Does the “D” range indicator light on combination meter illuminate?	Even if the SPORT indicator light is blinking, the circuit has returned to normal condition at this time. A temporary poor contact of connector or harness may be the cause. Repair the harness or connector in TCM and transmission.	Go to step **11.**
11	**CHECK “D” RANGE SWITCH.**	Does the “D” range LED of Subaru Select Monitor illuminate?	Go to step **37.**	Go to step **34.**
12	**CHECK HARNESS CONNECTOR BETWEEN INHIBITOR SWITCH AND CHASSIS GROUND.** 1) Turn the ignition switch to OFF. 2) Disconnect the connector from inhibitor switch. 3) Measure the resistance of harness between inhibitor switch and chassis ground. ***Connector & terminal*** ***(T7) No. 5 — Chassis ground:***	Is the resistance more than 1 Ω?	Go to step **13.**	Repair the open circuit in harness between inhibitor switch connector and chassis ground, and poor contact in coupling connector.
13	**CHECK HARNESS CONNECTOR BETWEEN TCM AND INHIBITOR SWITCH.** 1) Turn the ignition switch to OFF. 2) Disconnect the connector from TCM and inhibitor switch. 3) Measure the resistance of harness between TCM and inhibitor switch connector. ***Connector & terminal*** ***(B54) No. 5 — (T7) No. 9:***	Is the resistance less than 1 Ω?	Go to step **14.**	Repair the open circuit in harness between TCM and inhibitor switch connector, and poor contact in coupling connector.

	Step	Check	Yes	No
14	**CHECK INPUT SIGNAL FOR TCM.** 1) Turn the ignition switch to OFF. 2) Connect the connector to TCM and inhibitor switch. 3) Turn the ignition switch to ON. 4) Shift the select lever to "P" range. 5) Measure the voltage between TCM and chassis ground. ***Connector & terminal*** ***(B54) No. 5 (+) — Chassis ground (–):***	Is the voltage less than 1 V?	Go to step **15.**	Go to step **41.**
15	**CHECK INPUT SIGNAL FOR TCM.** 1) Shift the select lever to any range other than "P". 2) Measure the voltage between TCM and chassis ground. ***Connector & terminal*** ***(B54) No. 5 (+) — Chassis ground (–):***	Is the voltage more than 8 V?	Go to step **16.**	Replace the TCM. <Ref. to 4AT-64, Transmission Control Module (TCM).>
16	**CHECK BODY INTEGRATED UNIT.** Read the data of the inhibitor switch from Subaru Select Monitor. <Ref. to LAN(diag)-14, OPERATION, Subaru Select Monitor.>	Is "7" displayed?	Go to step **17.**	Check the body integrated unit.
17	**CHECK BODY INTEGRATED UNIT.** Check DTC of body integrated unit.	Is DTC of CAN communication displayed?	Perform the diagnosis according to DTC.	Go to step **18.**
18	**CHECK COMBINATION METER.** Check the "P" range indicator light. <Ref. to IDI-3, INSPECTION, Combination Meter System.>	Is the "P" range indicator light OK?	Go to step **41.**	Replace the combination meter assembly. <Ref. to IDI-15, Combination Meter.>
19	**CHECK HARNESS CONNECTOR BETWEEN TCM AND INHIBITOR SWITCH.** 1) Turn the ignition switch to OFF. 2) Disconnect the connectors from TCM, inhibitor switch and combination meter. 3) Measure the resistance of harness between TCM connector and chassis ground. ***Connector & terminal*** ***(B54) No. 5 — Chassis ground:***	Is the resistance more than 1 MΩ?	Go to step **42.**	Repair the ground short circuit in "P" range circuit.
20	**CHECK HARNESS CONNECTOR BETWEEN TCM AND INHIBITOR SWITCH.** 1) Turn the ignition switch to OFF. 2) Disconnect the connector from TCM and inhibitor switch. 3) Measure the resistance of harness between TCM and inhibitor switch connector. ***Connector & terminal*** ***(B54) No. 14 — (T7) No. 8:***	Is the resistance less than 1 Ω?	Go to step **21.**	Repair the open circuit in harness between TCM and inhibitor switch connector, and poor contact in coupling connector.
21	**CHECK INPUT SIGNAL FOR TCM.** 1) Turn the ignition switch to OFF. 2) Connect the connector to TCM and inhibitor switch. 3) Turn the ignition switch to ON. 4) Shift the select lever to "R" range. 5) Measure the voltage between TCM and chassis ground. ***Connector & terminal*** ***(B54) No. 14 (+) — Chassis ground (–):***	Is the voltage less than 1 V?	Go to step **22.**	Go to step **41.**

	Step	Check	Yes	No
22	**CHECK INPUT SIGNAL FOR TCM.** 1) Shift the select lever to other than "R" range. 2) Measure the voltage between TCM and chassis ground. ***Connector & terminal*** ***(B54) No. 14 (+) — Chassis ground (−):***	Is the voltage more than 8 V?	Go to step **41.**	Replace the TCM. <Ref. to 4AT-64, Transmission Control Module (TCM).>
23	**CHECK BODY INTEGRATED UNIT.** Read the data of shift position from Subaru Select Monitor. <Ref. to LAN(diag)-14, OPERATION, Subaru Select Monitor.>	Is "6" displayed?	Go to step **24.**	Check the body integrated unit.
24	**CHECK BODY INTEGRATED UNIT.** Check DTC of body integrated unit.	Is DTC of CAN communication displayed?	Perform the diagnosis according to DTC.	Go to step **25.**
25	**CHECK COMBINATION METER.** Check the "R" range indicator light. <Ref. to IDI-3, INSPECTION, Combination Meter System.>	Is the "R" range indicator light OK?	Go to step **41.**	Replace the combination meter assembly. <Ref. to IDI-15, Combination Meter.>
26	**CHECK HARNESS CONNECTOR BETWEEN TCM AND INHIBITOR SWITCH.** 1) Turn the ignition switch to OFF. 2) Disconnect the connectors from TCM, inhibitor switch and combination meter. 3) Measure the resistance of harness between TCM connector and chassis ground. ***Connector & terminal*** ***(B54) No. 14 — Chassis ground:***	Is the resistance more than 1 MΩ?	Go to step **41.**	Repair the ground short circuit in "R" range circuit.
27	**CHECK HARNESS CONNECTOR BETWEEN TCM AND INHIBITOR SWITCH.** 1) Turn the ignition switch to OFF. 2) Disconnect the connector from TCM and inhibitor switch. 3) Measure the resistance of harness between TCM and inhibitor switch connector. ***Connector & terminal*** ***(B54) No. 22 — (T7) No. 10:***	Is the resistance less than 1 Ω?	Go to step **28.**	Repair the open circuit in harness between TCM and inhibitor switch connector, and poor contact in coupling connector.
28	**CHECK INPUT SIGNAL FOR TCM.** 1) Turn the ignition switch to OFF. 2) Connect the connector to TCM and inhibitor switch. 3) Turn the ignition switch to ON. 4) Shift the select lever to "N" range. 5) Measure the voltage between TCM and chassis ground. ***Connector & terminal*** ***(B54) No. 22 (+) — Chassis ground (−):***	Is the voltage less than 1 V?	Go to step **29.**	Go to step **41.**
29	**CHECK INPUT SIGNAL FOR TCM.** 1) Shift the select lever to other than "N" range. 2) Measure the voltage between TCM and chassis ground. ***Connector & terminal*** ***(B54) No. 22 (+) — Chassis ground (−):***	Is the voltage more than 8 V?	Go to step **41.**	Replace the TCM. <Ref. to 4AT-64, Transmission Control Module (TCM).>
30	**CHECK BODY INTEGRATED UNIT.** Read the data of shift position from Subaru Select Monitor. <Ref. to LAN(diag)-14, OPERATION, Subaru Select Monitor.>	Is "5" displayed?	Go to step **31.**	Check the body integrated unit.

	Step	Check	Yes	No
31	**CHECK BODY INTEGRATED UNIT.** Check DTC of body integrated unit.	Is DTC of CAN communication displayed?	Perform the diagnosis according to DTC.	Go to step **32.**
32	**CHECK COMBINATION METER.** Check the “N” range indicator light. <Ref. to IDI-3, INSPECTION, Combination Meter System.>	Is the “N” range indicator light OK?	Go to step **41.**	Replace the combination meter assembly. <Ref. to IDI-15, Combination Meter.>
33	**CHECK HARNESS CONNECTOR BETWEEN TCM AND INHIBITOR SWITCH.** 1) Turn the ignition switch to OFF. 2) Disconnect the connectors from TCM, inhibitor switch and combination meter. 3) Measure the resistance of harness between TCM connector and chassis ground. ***Connector & terminal*** ***(B54) No. 22 — Chassis ground:***	Is the resistance more than 1 MΩ?	Go to step **41.**	Repair the ground short circuit in “N” range circuit.
34	**CHECK HARNESS CONNECTOR BETWEEN TCM AND INHIBITOR SWITCH.** 1) Turn the ignition switch to OFF. 2) Disconnect the connector from TCM and inhibitor switch. 3) Measure the resistance of harness between TCM and inhibitor switch connector. ***Connector & terminal*** ***(B54) No. 4 — (T7) No. 3:***	Is the resistance less than 1 Ω?	Go to step **35.**	Repair the open circuit in harness between TCM and inhibitor switch connector, and poor contact in coupling connector.
35	**CHECK INPUT SIGNAL FOR TCM.** 1) Turn the ignition switch to OFF. 2) Connect the connector to TCM and inhibitor switch. 3) Turn the ignition switch to ON. 4) Shift the select lever to “D” range. 5) Measure the voltage between TCM and chassis ground. ***Connector & terminal*** ***(B54) No. 4 (+) — Chassis ground (−):***	Is the voltage less than 1 V?	Go to step **36.**	Go to step **41.**
36	**CHECK INPUT SIGNAL FOR TCM.** 1) Shift the select lever to other than “D” range. 2) Measure the voltage between TCM and chassis ground. ***Connector & terminal*** ***(B54) No. 4 (+) — Chassis ground (−):***	Is the voltage more than 8 V?	Go to step **41.**	Replace the TCM. <Ref. to 4AT-64, Transmission Control Module (TCM).>
37	**CHECK BODY INTEGRATED UNIT.** Read the data of inhibitor switch from Subaru Select Monitor. <Ref. to LAN(diag)-14, OPERATION, Subaru Select Monitor.>	Is “4” displayed?	Go to step **38.**	Check the body integrated unit.
38	**CHECK BODY INTEGRATED UNIT.** Check DTC of body integrated unit.	Is DTC of CAN communication displayed?	Perform the diagnosis according to the DTC.	Go to step **39.**
39	**CHECK COMBINATION METER.** Check the “D” range indicator light. <Ref. to IDI-3, INSPECTION, Combination Meter System.>	Is the “D” range indicator light OK?	Go to step **41.**	Replace the combination meter assembly. <Ref. to IDI-15, Combination Meter.>

	Step	Check	Yes	No
40	**CHECK HARNESS CONNECTOR BETWEEN TCM AND INHIBITOR SWITCH.** 1) Turn the ignition switch to OFF. 2) Disconnect the connectors from TCM, inhibitor switch and combination meter. 3) Measure the resistance of harness between TCM connector and chassis ground. ***Connector & terminal*** ***(B54) No. 4 — Chassis ground:***	Is the resistance more than 1 MΩ?	Go to step **41.**	Repair the ground short circuit in "D" range circuit.
41	**CHECK POOR CONTACT.**	Is there poor contact in inhibitor switch circuit?	Repair the poor contact.	Go to step **42.**
42	**CHECK INHIBITOR SWITCH.**	Is the inhibitor switch in normal position?	Replace the TCM. <Ref. to 4AT-64, Transmission Control Module (TCM).>	Adjust inhibitor switch and select cable. <Ref. to 4AT-48, Inhibitor Switch.> and <Ref. to CS-24, Select Cable.>

B: DTC P0712 TRANSMISSION FLUID TEMPERATURE SENSOR CIRCUIT LOW INPUT

DTC DETECTING CONDITION:
Input signal circuit of TCM to ATF temperature sensor is open or shorted.
TROUBLE SYMPTOM:
Excessive shift shock
WIRING DIAGRAM:

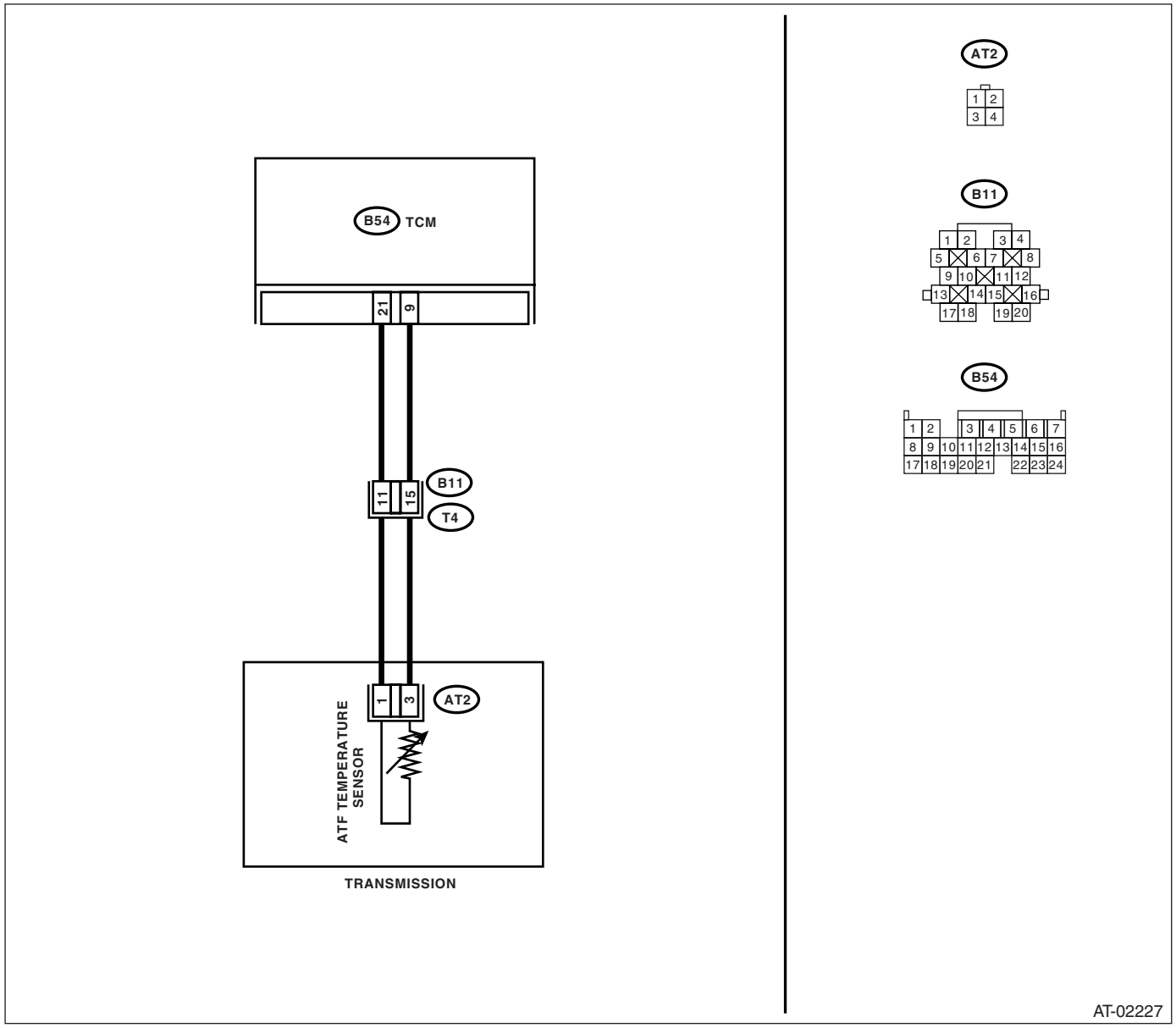

Step		Check	Yes	No
1	**CHECK HARNESS CONNECTOR BETWEEN TCM AND ATF TEMPERATURE SENSOR.** 1) Turn the ignition switch to OFF. 2) Disconnect the connector from transmission and TCM. 3) Measure the resistance of harness between TCM and transmission connector. ***Connector & terminal*** ***(B54) No. 21 — (B11) No. 11:***	Is the resistance less than 1 Ω?	Go to step **2.**	Repair the open circuit in harness between TCM and transmission connector.

	Step	Check	Yes	No
2	**CHECK HARNESS CONNECTOR BETWEEN TCM AND ATF TEMPERATURE SENSOR.** Measure the resistance of harness between TCM and transmission connector. ***Connector & terminal*** ***(B54) No. 9 — (B11) No. 15:***	Is the resistance less than 1 Ω?	Go to step **3.**	Repair the open circuit in harness between TCM and transmission connector.
3	**CHECK ATF TEMPERATURE SENSOR.** 1) Turn the ignition switch to OFF. 2) Connect the connectors to transmission and TCM. 3) Turn the ignition switch to ON and start engine. 4) Warm-up the transmission until the ATF temperature reaches to 80°C (176°F). NOTE: If the ambient temperature is below 0°C (32°F), drive the vehicle until the ATF reaches its operating temperature. 5) Disconnect the connector from transmission. 6) Measure the resistance between transmission connector terminals. ***Connector & terminal*** ***(T4) No. 11 — No. 15:***	Is the resistance 300 — 800 Ω?	Go to step **4.**	Go to step **7.**
4	**CHECK ATF TEMPERATURE SENSOR.** Measure the resistance between transmission connector terminals. ***Connector & terminal*** ***(T4) No. 11 — No. 15:***	Does the resistance value increase while the ATF temperature decreases?	Go to step **5.**	Go to step **7.**
5	**CHECK INPUT SIGNAL FOR TCM USING SUBARU SELECT MONITOR.** 1) Connect the connector to transmission. 2) Connect the Subaru Select Monitor to data link connector. 3) Turn the ignition switch to ON (engine OFF). 4) Read the data of ATF temperature using Subaru Select Monitor.	Does the ATF temperature gradually decrease?	Even if the SPORT indicator light is blinking, the circuit has returned to normal condition at this time. A temporary poor contact of connector or harness may be the cause. Repair the harness or contact in the ATF temperature sensor and transmission connector.	Go to step **6.**
6	**CHECK POOR CONTACT.**	Is there poor contact in ATF temperature sensor circuit?	Repair the poor contact.	Replace the TCM. <Ref. to 4AT-64, Transmission Control Module (TCM).>

	Step	Check	Yes	No
7	**CHECK HARNESS CONNECTOR BETWEEN TRANSMISSION AND ATF TEMPERATURE SENSOR.** 1) Turn the ignition switch to OFF. 2) Disconnect the connector from transmission. 3) Remove the transmission connector from bracket. 4) Lift-up the vehicle and support with rigid racks. NOTE: Raise all wheels off floor. 5) Drain the ATF. **CAUTION:** **Do not drain the ATF until it cools down.** 6) Remove the oil pan, and disconnect the connector from control valve. 7) Measure the resistance of harness between ATF temperature sensor and transmission connector. ***Connector & terminal*** ***(T4) No. 11 — (AT2) No. 1:***	Is the resistance less than 1 Ω?	Go to step **8.**	Repair the open circuit in harness between ATF temperature sensor and transmission connector.
8	**CHECK HARNESS CONNECTOR BETWEEN TRANSMISSION AND ATF TEMPERATURE SENSOR.** Measure the resistance of harness between ATF temperature sensor and transmission connector. ***Connector & terminal*** ***(T4) No. 15 — (AT2) No. 3:***	Is the resistance less than 1 Ω?	Go to step **9.**	Repair the open circuit in harness between ATF temperature sensor and transmission connector.
9	**CHECK HARNESS CONNECTOR BETWEEN TRANSMISSION AND ATF TEMPERATURE SENSOR.** Measure the resistance of harness between transmission connector and transmission ground. ***Connector & terminal*** ***(T4) No. 11 — Transmission ground:***	Is the resistance more than 1 MΩ?	Go to step **10.**	Repair the short circuit in harness between ATF temperature sensor and transmission connector.
10	**CHECK HARNESS CONNECTOR BETWEEN TRANSMISSION AND ATF TEMPERATURE SENSOR.** Measure the resistance of harness between transmission connector and transmission ground. ***Connector & terminal*** ***(T4) No. 15 — Transmission ground:***	Is the resistance more than 1 MΩ?	Replace the control valve body. <Ref. to 4AT-58, Control Valve Body.>	Repair the short circuit in harness between ATF temperature sensor and transmission connector.

C: DTC P0713 TRANSMISSION FLUID TEMPERATURE SENSOR CIRCUIT HIGH INPUT

DTC DETECTING CONDITION:
Input signal circuit of TCM to ATF temperature sensor is shorted.
TROUBLE SYMPTOM:
Excessive shift shock
WIRING DIAGRAM:

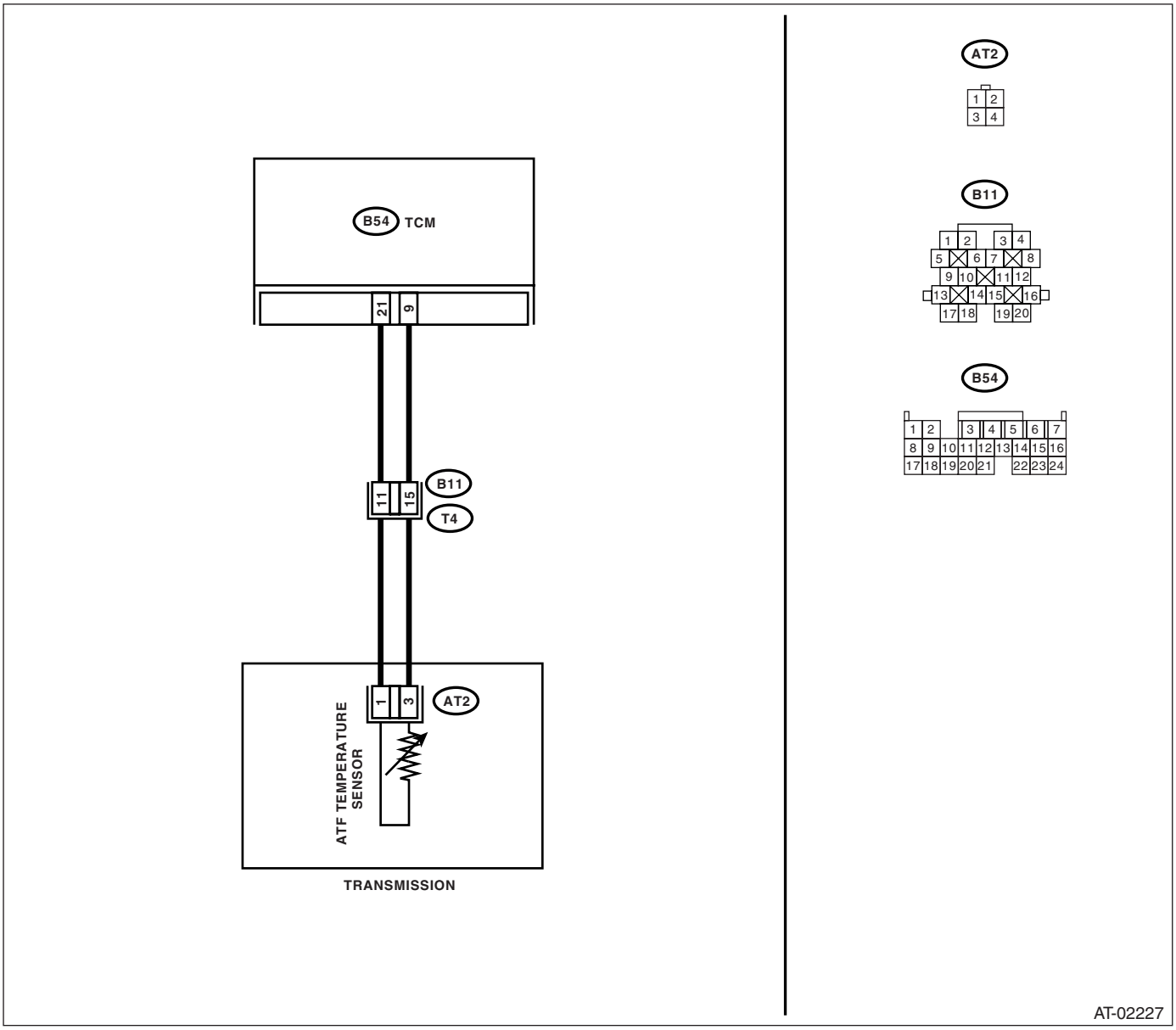

Step		Check	Yes	No
1	**CHECK HARNESS CONNECTOR BETWEEN TCM AND ATF TEMPERATURE SENSOR.** 1) Turn the ignition switch to OFF. 2) Disconnect the connector from TCM. 3) Measure the resistance between TCM connector terminals. ***Connector & terminal (B54) No. 21 — No. 9:***	Is the resistance more than 500 Ω?	Go to step **2.**	Go to step **4.**

	Step	Check	Yes	No
2	**CHECK HARNESS CONNECTOR BETWEEN TCM AND ATF TEMPERATURE SENSOR.** Measure the resistance of harness between TCM connector and chassis ground. ***Connector & terminal*** ***(B54) No. 21 — Chassis ground:***	Is the resistance more than 1 MΩ?	Go to step **3.**	Go to step **4.**
3	**CHECK HARNESS.** Measure the resistance between TCM connector terminals while shaking the harness. ***Connector & terminal*** ***(B54) No. 21 — No. 9:***	Does the resistance change?	Go to step **4.**	Replace the TCM. <Ref. to 4AT-64, Transmission Control Module (TCM).>
4	**CHECK HARNESS CONNECTOR BETWEEN TCM AND ATF TEMPERATURE SENSOR.** 1) Turn the ignition switch to OFF. 2) Disconnect the connector from transmission. 3) Measure the resistance of harness between TCM connector and chassis ground. ***Connector & terminal*** ***(B54) No. 21 — Chassis ground:***	Is the resistance more than 1 MΩ?	Go to step **5.**	Repair the short circuit in harness between TCM and transmission harness.
5	**CHECK HARNESS CONNECTOR BETWEEN TCM AND ATF TEMPERATURE SENSOR.** Measure the resistance of harness between TCM connector and chassis ground. ***Connector & terminal*** ***(B54) No. 9 — Chassis ground:***	Is the resistance more than 1 MΩ?	Go to step **6.**	Repair the short circuit in harness between TCM and transmission harness.
6	**CHECK ATF TEMPERATURE SENSOR.** Measure the resistance between transmission connector terminals. ***Connector & terminal*** ***(T4) No. 11 — No. 15:***	Is the resistance more than 500 Ω?	Even if the SPORT indicator light is blinking, the circuit has returned to normal condition at this time. A temporary short circuit of connector or harness may be the cause. Repair the harness or connector.	Go to step **7.**
7	**CHECK TRANSMISSION HARNESS.** 1) Lift-up the vehicle and place it on rigid racks. 2) Drain the ATF. NOTE: Do not drain the ATF until it cools down. 3) Remove the oil pan. 4) Disconnect the harness connector from control valve. 5) Measure the resistance between ATF temperature sensor connector terminals 6) Measure the resistance between transmission connector and transmission ground. ***Connector & terminal*** ***(T4) No. 11 — Transmission ground:***	Is the resistance more than 1 MΩ?	Go to step **8.**	Replace the transmission harness.
8	**CHECK TRANSMISSION HARNESS.** Measure the resistance between transmission connector and transmission ground, ***Connector & terminal*** ***(T4) No. 15 — Transmission ground:***	Is the resistance more than 1 MΩ?	Go to step **9.**	Replace the transmission harness.

	Step	Check	Yes	No
9	**CHECK ATF TEMPERATURE SENSOR.** Measure the resistance between control valve connector terminals ***Terminal*** ***No. 1 — No. 3:***	Is the resistance more than 500 Ω?	Even if the SPORT indicator light is blinking, the circuit has returned to normal condition at this time. A temporary short circuit of connector or harness may be the cause. Repair the harness or connector.	Replace the control valve body. <Ref. to 4AT-58, Control Valve Body.>

D: DTC P0715 INPUT/TURBINE SPEED SENSOR CIRCUIT

DTC DETECTING CONDITION:

Input signal circuit of TCM is open or shorted.

TROUBLE SYMPTOM:

Excessive shift shock

WIRING DIAGRAM:

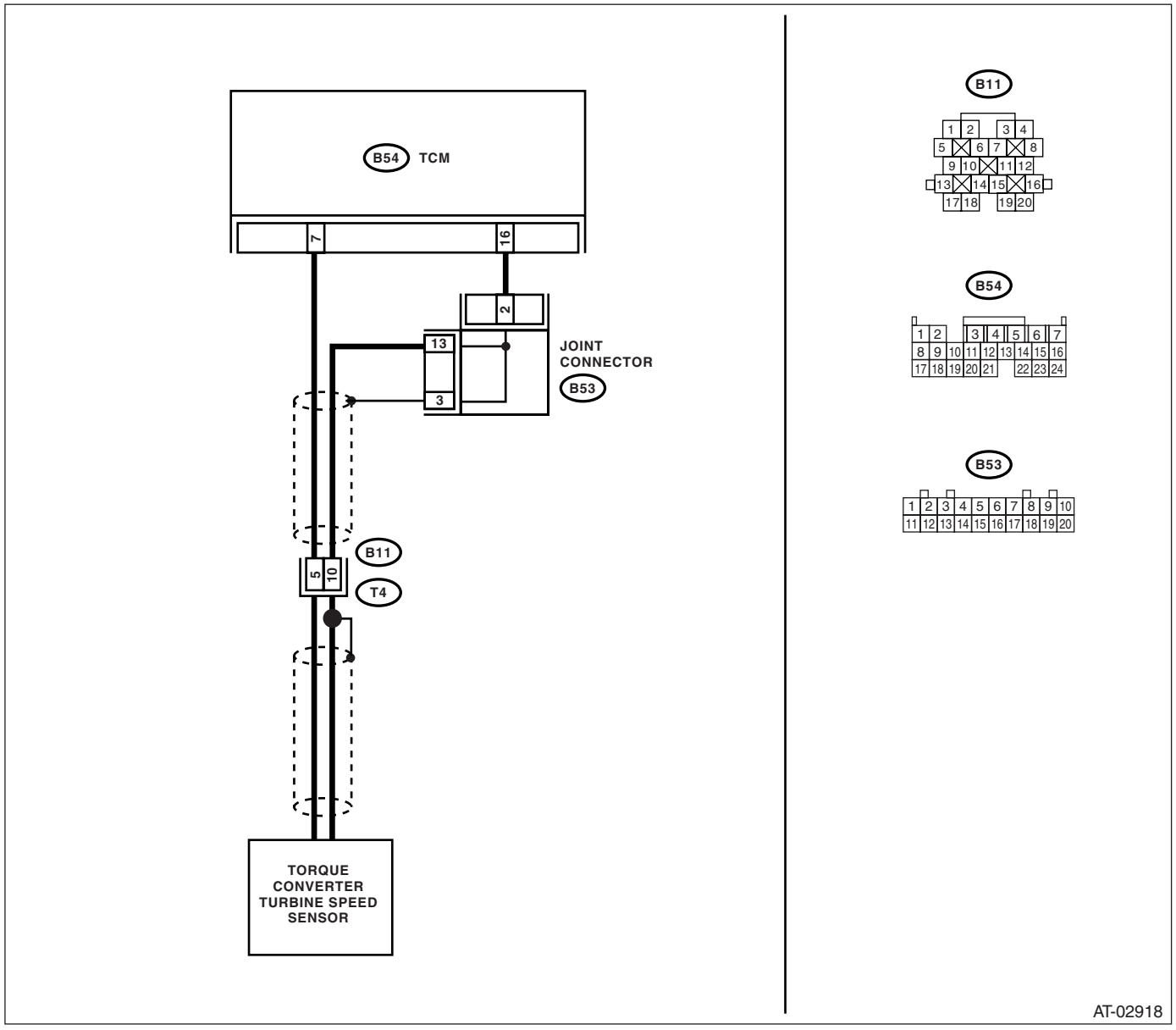

Step		Check	Yes	No
1	**CHECK TORQUE CONVERTER TURBINE SPEED SENSOR.** 1) Turn the ignition switch to OFF. 2) Disconnect the connector from transmission. 3) Measure the resistance between transmission connector receptacle's terminals. ***Connector & terminal (T4) No. 5 — No. 10:***	Is the resistance 450 — 650 Ω?	Go to step **2.**	Replace the torque converter turbine speed sensor. <Ref. to 4AT-55, Torque Converter Turbine Speed Sensor.>

	Step	Check	Yes	No
2	**CHECK HARNESS CONNECTOR BETWEEN TCM AND TRANSMISSION.** 1) Disconnect the connector from TCM. 2) Measure the resistance of harness between TCM and transmission connector. ***Connector & terminal*** ***(B54) No. 7 — (B11) No. 5:***	Is the resistance less than 1 Ω?	Go to step **3.**	Repair the open circuit in harness between TCM and transmission connector.
3	**CHECK HARNESS CONNECTOR BETWEEN TCM AND TRANSMISSION.** Measure the resistance of harness between TCM and transmission connector. ***Connector & terminal*** ***(B54) No. 16 — (B11) No. 10:***	Is the resistance less than 1 Ω?	Go to step **4.**	Repair the open circuit in harness between TCM and transmission connector, and poor contact in connector.
4	**CHECK HARNESS CONNECTOR BETWEEN TCM AND TRANSMISSION.** Measure the resistance of harness between TCM connector and chassis ground. ***Connector & terminal*** ***(B54) No. 16 — Chassis ground:***	Is the resistance more than 1 MΩ?	Go to step **5.**	Repair the short circuit in harness between TCM and transmission connector.
5	**CHECK HARNESS CONNECTOR BETWEEN TCM AND TRANSMISSION.** Measure the resistance of harness between TCM connector and chassis ground. ***Connector & terminal*** ***(B54) No. 7 — Chassis ground:***	Is the resistance more than 1 MΩ?	Go to step **6.**	Repair the short circuit in harness between TCM and transmission connector, and poor contact in connector.
6	**CHECK INPUT SIGNAL FOR TCM USING SUBARU SELECT MONITOR.** 1) Connect the connectors to TCM and transmission. 2) Connect the Subaru Select Monitor to data link connector. 3) Turn the ignition switch to ON, and the Subaru Select Monitor switch to ON. 4) Start the engine. 5) Shift the select lever to “P” or “N” range. 6) Read the data of “Turbine Revolution Speed” using Subaru Select Monitor. • Compare the tachometer with Subaru Select Monitor indications.	Is the revolution value same as the tachometer reading shown on the combination meter?	Even if the SPORT indicator light is blinking, the circuit has returned to normal condition at this time. A temporary poor contact of connector or harness may be the cause. Repair the harness or connector in TCM and transmission.	Go to step **7.**
7	**CHECK POOR CONTACT.**	Is there poor contact in torque converter turbine speed sensor circuit?	Repair the poor contact.	Replace the TCM. <Ref. to 4AT-64, Transmission Control Module (TCM).>

E: DTC P0719 TORQUE CONVERTER/BRAKE SWITCH "B" CIRCUIT LOW

DTC DETECTING CONDITION:

Brake switch malfunction, open input signal circuit

TROUBLE SYMPTOM:

Gear is not shifted down when driving a down hill.

WIRING DIAGRAM:

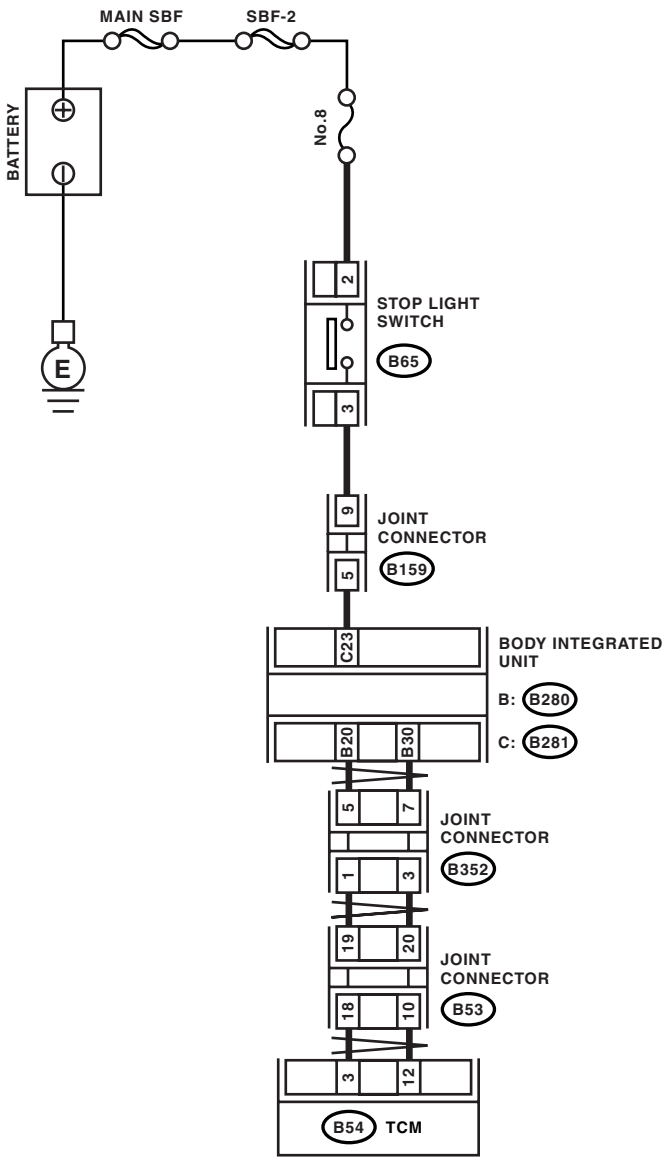

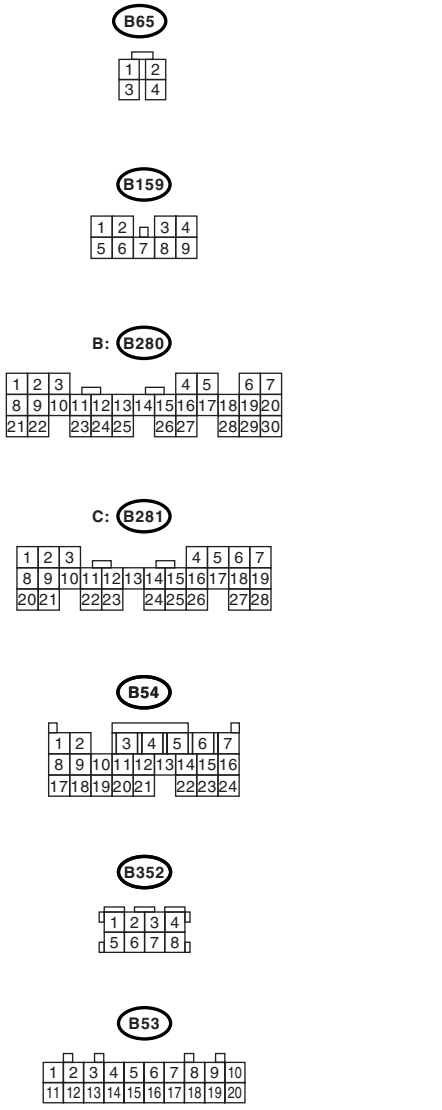

AT-02919

	Step	Check	Yes	No
1	**CHECK DTC.**	Does the DTC of CAN communication appear in the on-board diagnostics test mode?	Perform the diagnosis according to DTC.	Go to step **2.**
2	**CHECK FUSE (No. 8).** 1) Turn the ignition switch to OFF 2) Remove the fuse (No. 8).	Is the fuse (No. 8) blown?	Replace the fuse (No. 8). If the replaced fuse (No. 8) blown out easily, repair the short circuit in harness between fuse (No. 8) and stop light switch.	Go to step **3.**
3	**CHECK BODY INTEGRATED UNIT.** 1) Turn the ignition switch to OFF. 2) Connect the Subaru Select Monitor to data link connector. 3) Turn the ignition switch to ON. (engine OFF) 4) Turn the Subaru Select Monitor switch to ON. 5) Depress the brake pedal. 6) Read the data of “Stop Light Switch” using Subaru Select Monitor. <Ref. to LAN(diag)-14, OPERATION, Subaru Select Monitor.>	Is ON displayed?	Go to step **4.**	Go to step **5.**
4	**CHECK TCM.** Read the data of “Stop Light Switch” using Subaru Select Monitor. <Ref. to 4AT(D)(diag)-14, OPERATION, Subaru Select Monitor.>	Is ON displayed?	A temporary poor contact of connector or harness may be the cause. Check the poor contact.	Replace the TCM. <Ref. to 4AT-64, Transmission Control Module (TCM).>
5	**CHECK BODY INTEGRATED UNIT INPUT SIGNAL.** 1) Depress the brake pedal. 2) Disconnect the connector from body integrated unit. 3) Measure the voltage of harness between body integrated unit and stop light switch. ***Connector & terminal*** ***(B281) No. 23 (+) — (B65) No. 3:***	Is the voltage more than 10 V?	Go to step **8.**	Go to step **6.**
6	**CHECK HARNESS CONNECTOR BETWEEN BODY INTEGRATED UNIT AND STOP LIGHT SWITCH.** 1) Turn the ignition switch to OFF. 2) Disconnect the connector from stop light switch. 3) Measure the resistance of harness between body integrated unit and stop light switch. ***Connector & terminal*** ***(B281) No. 23 — (B65) No. 3:***	Is the resistance less than 1 Ω?	Go to step **7.**	Repair the open circuit of harness between the body integrated unit and stop light switch.
7	**CHECK HARNESS CONNECTOR BETWEEN BODY INTEGRATED UNIT AND STOP LIGHT SWITCH.** Measure the resistance of harness between body integrated unit and stop light switch. ***Connector & terminal*** ***(B281) No. 23 — Chassis ground:***	Is the resistance more than 1 MΩ?	Go to step **8.**	Repair the short circuit of harness between the body integrated unit and stop light switch.
8	**CHECK POOR CONTACT.**	Is there poor contact in input signal of brake switch?	Repair the poor contact.	Check the body integrated unit.

F: DTC P0720 OUTPUT SPEED SENSOR CIRCUIT

DTC DETECTING CONDITION:

- The vehicle speed signal is abnormal.
- The harness connector between TCM and vehicle speed sensor is shorted or open.

TROUBLE SYMPTOM:

Poor driving performance

WIRING DIAGRAM:

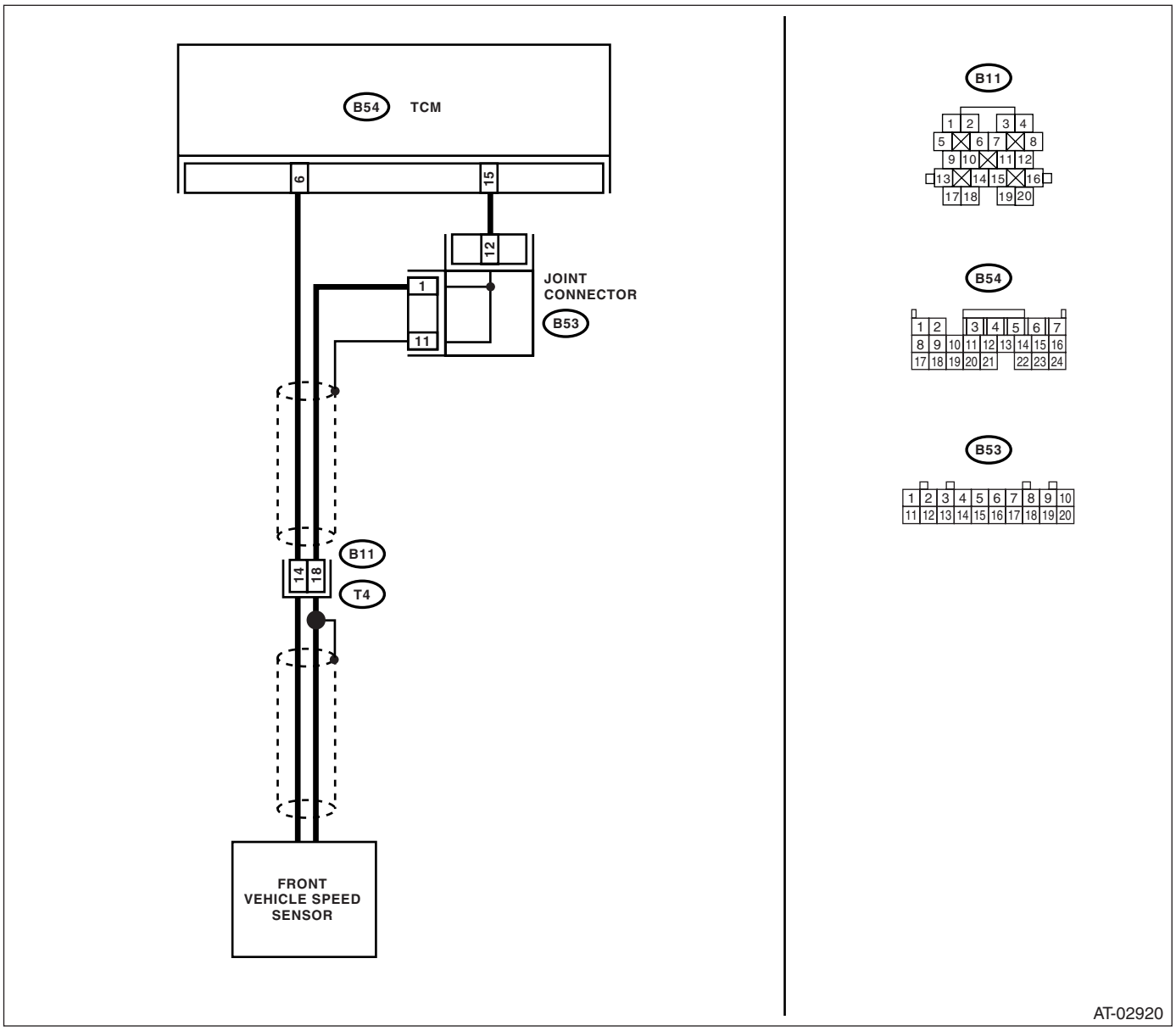

Step		Check	Yes	No
1	**CHECK HARNESS CONNECTOR BETWEEN TCM AND TRANSMISSION.** 1) Turn the ignition switch to OFF. 2) Disconnect the connector from TCM and transmission. 3) Measure the resistance of harness between TCM and transmission connector. ***Connector & terminal*** ***(B54) No. 6 — (B11) No. 14:***	Is the resistance less than 1 Ω?	Go to step **2.**	Repair the open circuit in harness between TCM and transmission connector.

	Step	Check	Yes	No
2	**CHECK HARNESS CONNECTOR BETWEEN TCM AND TRANSMISSION.** Measure the resistance of harness between TCM and transmission connector. ***Connector & terminal*** ***(B54) No. 15 — (B11) No. 18:***	Is the resistance less than 1 Ω?	Go to step **3.**	Repair the open circuit in harness between TCM and transmission connector, and poor contact in coupling connector.
3	**CHECK HARNESS CONNECTOR BETWEEN TCM AND TRANSMISSION.** Measure the resistance of harness between TCM and transmission connector. ***Connector & terminal*** ***(B54) No. 6 — Chassis ground:***	Is the resistance more than 1 MΩ?	Go to step **4.**	Repair the short circuit in harness between TCM and transmission connector.
4	**CHECK HARNESS CONNECTOR BETWEEN TCM AND TRANSMISSION.** Measure the resistance of harness between TCM and transmission connector. ***Connector & terminal*** ***(B54) No. 15 — Chassis ground:***	Is the resistance more than 1 MΩ?	Go to step **5.**	Repair the short circuit in harness between TCM and transmission connector, and poor contact in coupling connector.
5	**CHECK FRONT VEHICLE SPEED SENSOR.** Measure the resistance between transmission connector receptacle's terminals. ***Connector & terminal*** ***(T4) No. 14 — No. 18:***	Is the resistance 450 — 650 Ω?	Go to step **6.**	Replace the front vehicle speed sensor. <Ref. to 4AT-51, Front Vehicle Speed Sensor.>
6	**CHECK INPUT SIGNAL FOR TCM USING SUBARU SELECT MONITOR.** 1) Connect all the connectors. 2) Connect the Subaru Select Monitor to data link connector. 3) Lift-up the vehicle and support with rigid racks. NOTE: Raise all wheels off floor. 4) Turn the ignition switch to ON, and Subaru Select Monitor switch to ON. 5) Start the engine. 6) Read the data of vehicle speed using Subaru Select Monitor. • Compare the speedometer with Subaru Select Monitor indications. • Vehicle speed is indicated either in "km/h" or "MPH". 7) Slowly increase the vehicle speed to 60 km/h (37 MPH). NOTE: The speed difference between front and rear wheels may light the ABS warning light, but this indicates no malfunction. When AT control diagnosis is finished, perform the ABS memory clearance procedure of on-board diagnostics system. <Ref. to ABS(diag)-25, Clear Memory Mode.>	Does the speedometer indication increase as the Subaru Select Monitor front wheel speed data increases?	Even if the SPORT indicator light is blinking, the circuit has returned to normal condition at this time. A temporary poor contact of connector or harness may be the cause. Repair the harness in the front vehicle speed sensor circuit.	Go to step **7.**
7	**CHECK POOR CONTACT.**	Is there poor contact in front vehicle speed sensor circuit?	Repair the poor contact.	Replace the TCM. <Ref. to 4AT-64, Transmission Control Module (TCM).>

G: DTC P0724 TORQUE CONVERTER/BRAKE SWITCH “B” CIRCUIT HIGH

DTC DETECTING CONDITION:

Brake switch malfunction, open input signal circuit

TROUBLE SYMPTOM:

Gear is not shifted down when driving a down hill.

WIRING DIAGRAM:

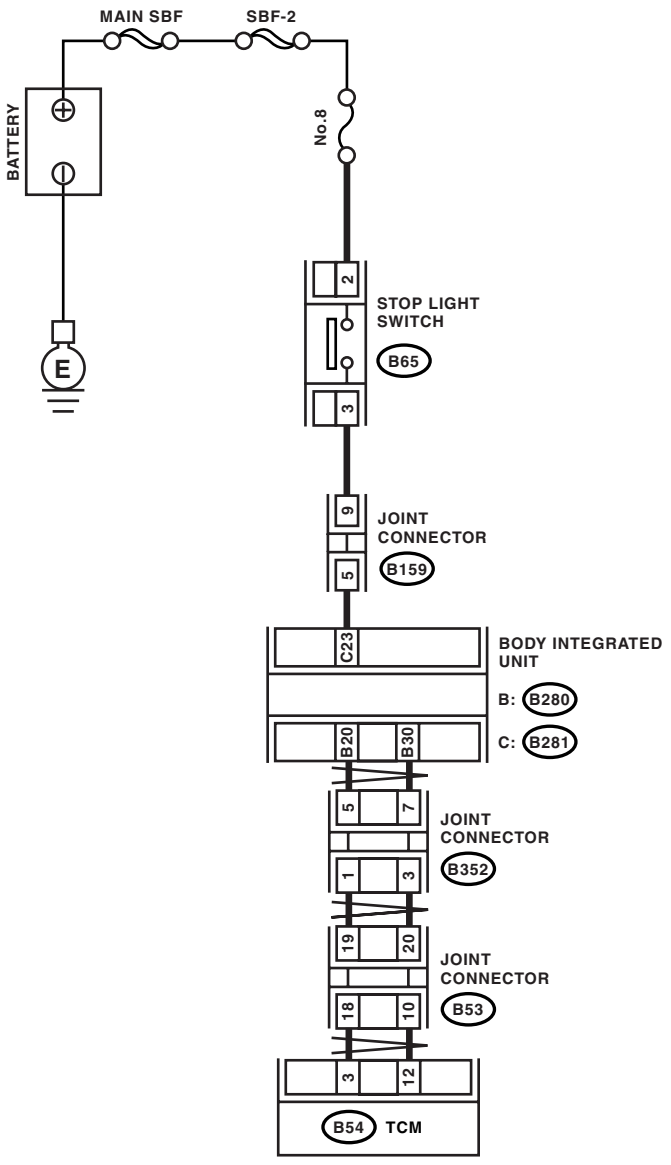

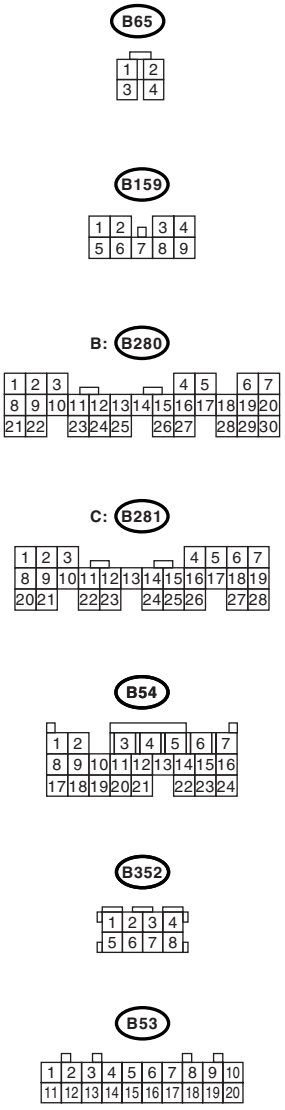

AT-02919

	Step	Check	Yes	No
1	**CHECK DTC.**	Does the DTC of CAN communication appear in the on-board diagnostics test mode?	Perform the diagnosis according to DTC.	Go to step **2.**
2	**CHECK BODY INTEGRATED UNIT.** 1) Turn the ignition switch to OFF. 2) Connect the Subaru Select Monitor to data link connector. 3) Turn the ignition switch to ON. (engine OFF) 4) Turn the Subaru Select Monitor switch to ON. 5) Read the data of “Stop Light Switch” using Subaru Select Monitor. <Ref. to LAN(diag)-14, OPERATION, Subaru Select Monitor.>	Is OFF displayed?	Go to step **3.**	Go to step **4.**
3	**CHECK TCM.** Read the data of “Stop Light Switch” using Subaru Select Monitor. <Ref. to 4AT(D)(diag)-14, OPERATION, Subaru Select Monitor.>	Is OFF displayed?	A temporary poor contact of connector or harness may be the cause. Check the poor contact.	Replace the TCM. <Ref. to 4AT-64, Transmission Control Module (TCM).>
4	**CHECK BODY INTEGRATED UNIT INPUT SIGNAL.** 1) Disconnect harness connector of body integrated unit. 2) Measure the voltage of harness between body integrated unit and stop light switch. ***Connector & terminal*** ***(B281) No. 23 (+) — Chassis ground (−):***	Is the voltage more than 10 V?	Go to step **5.**	Go to step **7.**
5	**CHECK STOP LIGHT SWITCH.** 1) Turn the ignition switch to OFF. 2) Disconnect the connector from stop light switch. 3) Measure the resistance of harness between stop light switch connectors. ***Terminals*** ***No. 2 — No. 3:***	Is the resistance more than 1 MΩ?	Go to step **6.**	Replace the stop light switch.
6	**CHECK HARNESS CONNECTOR BETWEEN BODY INTEGRATED UNIT AND STOP LIGHT SWITCH.** 1) Turn the ignition switch to ON. 2) Measure the voltage of harness between body integrated unit and chassis ground. ***Connector & terminal*** ***(B281) No. 23 (+) — Chassis ground (−):***	Is the voltage less than 1 V?	Go to step **7.**	Repair the short circuit in harness between TCM and stop light switch.
7	**CHECK POOR CONTACT.**	Is there poor contact in input signal of brake switch?	Repair the poor contact.	Check the body integrated unit.

H: DTC P0725 ENGINE SPEED INPUT CIRCUIT

DTC DETECTING CONDITION:

Engine speed input signal circuit is open or shorted.

TROUBLE SYMPTOM:

- No lock-up occurs. (After engine is warmed-up)
- SPORT indicator light remains on when the vehicle speed is “0”.

WIRING DIAGRAM:

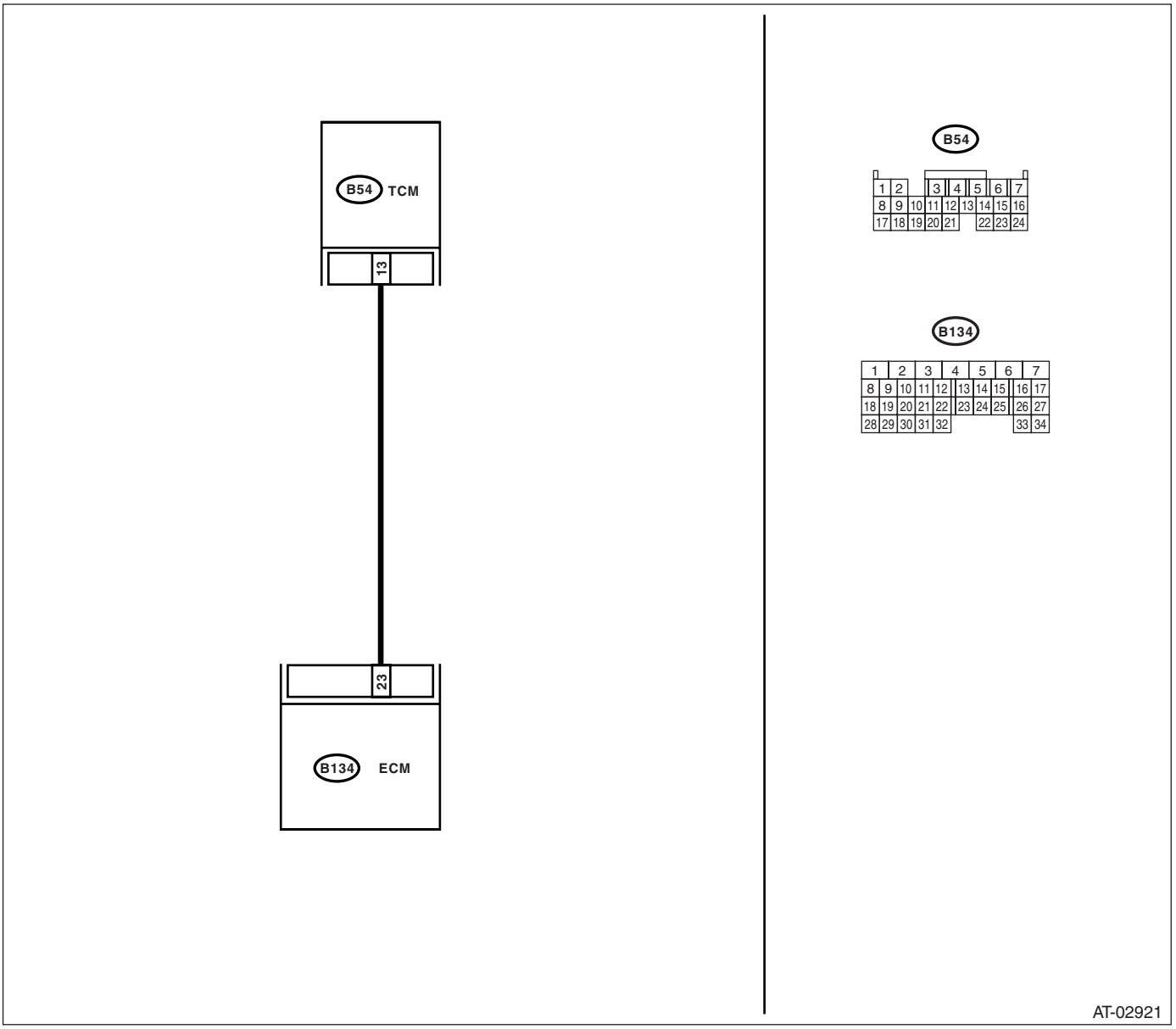

	Step	Check	Yes	No
1	**CHECK HARNESS CONNECTOR BETWEEN TCM AND ECM.** 1) Turn the ignition switch to OFF. 2) Disconnect the connector from TCM and ECM. 3) Measure the resistance of harness between TCM and ECM. ***Connector & terminal*** ***(B54) No. 13 — (B134) No. 23:***	Is the resistance less than 1 Ω?	Go to step **2.**	Repair the open circuit in harness between TCM and ECM connector.

	Step	Check	Yes	No
2	**CHECK HARNESS CONNECTOR BETWEEN TCM AND ECM.** Measure the resistance of harness between TCM connector and chassis ground. ***Connector & terminal*** ***(B54) No. 13 — Chassis ground:***	Is the resistance more than 1 MΩ?	Go to step **3.**	Repair the short circuit in harness between TCM and ECM connector.
3	**CHECK INPUT SIGNAL FOR TCM USING SUBARU SELECT MONITOR.** 1) Connect the connectors to TCM and ECM. 2) Connect the Subaru Select Monitor to data link connector. 3) Start the engine, and turn the Subaru Select Monitor switch to ON. 4) Run the engine at idle. 5) Read the data of engine speed using Subaru Select Monitor. • Display shows the “Engine Speed” signal value sent from ECM.	Is the revolution value same as the tachometer reading shown on the combination meter?	Even if the SPORT indicator light is blinking, the circuit has returned to normal condition at this time. A temporary poor contact of connector or harness may be the cause. Repair the harness or connector in the TCM and ECM.	Go to step **4.**
4	**CHECK POOR CONTACT.**	Is there poor contact in engine speed signal circuit?	Repair the poor contact.	Go to step **5.**
5	**CONFIRM DTC P0725.** Replace the ECM with a new one.	Does the DTC appear again, after the memory has been cleared?	Replace the TCM. <Ref. to 4AT-64, Transmission Control Module (TCM).>	Replace the ECM.

I: DTC P0731 GEAR 1 INCORRECT RATIO

NOTE:
Refer to DTC P0736 for diagnostic procedure. <Ref. to 4AT(D)(diag)-52, DTC P0736 REVERSE INCORRECT RATIO, Diagnostic Procedure with Diagnostic Trouble Code (DTC).>

J: DTC P0732 GEAR 2 INCORRECT RATIO

NOTE:
Refer to DTC P0736 for diagnostic procedure. <Ref. to 4AT(D)(diag)-52, DTC P0736 REVERSE INCORRECT RATIO, Diagnostic Procedure with Diagnostic Trouble Code (DTC).>

K: DTC P0733 GEAR 3 INCORRECT RATIO

NOTE:
Refer to DTC P0736 for diagnostic procedure. <Ref. to 4AT(D)(diag)-52, DTC P0736 REVERSE INCORRECT RATIO, Diagnostic Procedure with Diagnostic Trouble Code (DTC).>

L: DTC P0734 GEAR 4 INCORRECT RATIO

NOTE:
Refer to DTC P0736 for diagnostic procedure. <Ref. to 4AT(D)(diag)-52, DTC P0736 REVERSE INCORRECT RATIO, Diagnostic Procedure with Diagnostic Trouble Code (DTC).>

M: DTC P0736 REVERSE INCORRECT RATIO

DTC DETECTING CONDITION:

Vehicle sensor, torque converter turbine speed sensor or control valve malfunction

TROUBLE SYMPTOM:

- Shift point is too high or too low.
- Excessive shift shock
- Tight corner braking phenomenon is occurred.
- Gear is not shifted to reverse.
- Gear position is held by fail safe function.

	Step	Check	Yes	No
1	**CHECK ACCELERATOR PEDAL POSITION SENSOR.** 1) Connect the Subaru Select Monitor to data link connector. 2) Turn the ignition switch to ON. 3) Read the value of “Accel. opening angle” on Subaru Select Monitor display.	Does the value of accelerator pedal position sensor change from 0% to 100% smoothly when throttle was operated from fully closing to fully opening?	Go to step **2.**	Check the accelerator position sensor circuit. <Ref. to 4AT(D)(diag)-79, DTC P1708 THROTTLE POSITION SENSOR CIRCUIT LOW INPUT, Diagnostic Procedure with Diagnostic Trouble Code (DTC).>
2	**CHECK FRONT VEHICLE SPEED SENSOR.** 1) Lift-up the vehicle and support with rigid racks. 2) Start the engine. 3) Shift the select lever to “D” range and slowly increase vehicle speed. NOTE: The speed difference between front and rear wheels may light the ABS warning light, but this indicates no malfunction. When AT control diagnosis is finished, perform the ABS memory clearance procedure of on-board diagnostics system. <Ref. to ABS(diag)-25, Clear Memory Mode.>	Does the vehicle speed displayed by Subaru Select Monitor almost correspond with vehicle speed indicated by combination meter?	Go to step **3.**	Check the front vehicle speed sensor circuit.
3	**CHECK TORQUE CONVERTER TURBINE SPEED SENSOR.** 1) Shift the select lever to “P” or “N” range. 2) Idle the engine.	Does the turbine speed sensor revolution displayed by Subaru Select Monitor almost correspond with engine revolution indicated by tachometer?	There are malfunctions in TCM, TCM connector poor contact, or transmission assembly mechanical malfunction.	Check the torque converter turbine speed sensor circuit.

N: DTC P0741 TORQUE CONVERTER CLUTCH CIRCUIT PERFORMANCE OR STUCK OFF

DTC DETECTING CONDITION:

- Lock up clutch malfunction
- Locking of bulb

TROUBLE SYMPTOM:

No lock-up occurs.

	Step	Check	Yes	No
1	**CHECK LOCK-UP DUTY SOLENOID CIRCUIT.** Diagnose according to DTC P0743 procedure.	Is there any trouble?	Repair or replace the lock-up duty solenoid circuit.	Go to step **2.**
2	**CHECK INHIBITOR SWITCH CIRCUIT.** Diagnose according to DTC P0705 procedure.	Is there any trouble?	Repair or replace the inhibitor switch circuit.	Go to step **3.**
3	**CHECK STOP LIGHT SWITCH CIRCUIT.** Diagnose according to DTC P0719 and P0724 procedure.	Is there any trouble?	Repair or replace the stop light switch circuit.	Go to step **4.**
4	**CHECK ATF TEMPERATURE SENSOR CIRCUIT.** Diagnose according to DTC P0712 and P0713 procedure.	Is there any trouble?	Repair or replace the ATF temperature sensor circuit.	Go to step **5.**
5	**CHECK ACCELERATOR PEDAL POSITION SENSOR.** 1) Connect the Subaru Select Monitor to data link connector. 2) Turn the ignition switch to ON. 3) Read the value of “Accel. opening angle” on Subaru Select Monitor display.	Does the value of accelerator pedal position sensor change from 0% to 100% smoothly when throttle was operated from fully closing to fully opening?	Go to step **6.**	Check the accelerator pedal position sensor circuit.
6	**CHECK TORQUE CONVERTER TURBINE SPEED SENSOR.** 1) Shift the select lever to “P” or “N” range. 2) Idle the engine.	Does the turbine revolution displayed by Subaru Select Monitor almost correspond with engine revolution indicated by tachometer?	Go to step **7.**	Check the torque converter turbine speed sensor circuit.
7	**CHECK ENGINE SPEED SIGNAL.** Idle the engine.	Does the turbine revolution displayed by Subaru Select Monitor almost correspond with engine revolution indicated by tachometer?	There is transmission assembly mechanical malfunction.	Check the engine speed signal circuit.

O: DTC P0743 TORQUE CONVERTER CLUTCH CIRCUIT ELECTRICAL

DTC DETECTING CONDITION:

Output signal circuit of lock-up duty solenoid is open or shorted.

TROUBLE SYMPTOM:

No lock-up occurs. (After engine is warmed-up)

WIRING DIAGRAM:

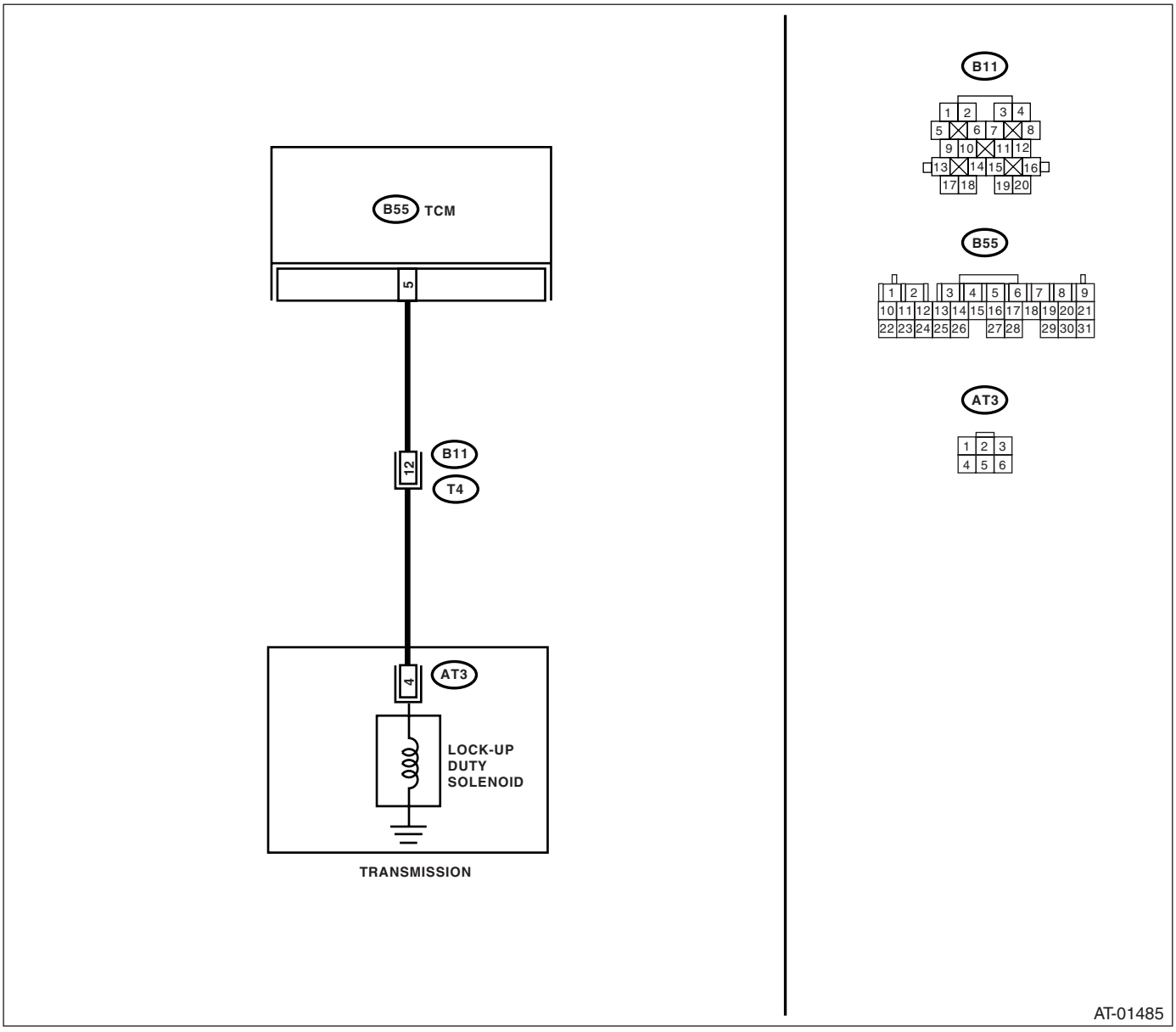

Step		Check	Yes	No
1	**CHECK DTC.**	Do multiple DTC appear in the on-board diagnostics test mode?	Go to another DTC.	Go to step **2.**

	Step	Check	Yes	No
2	**CHECK HARNESS CONNECTOR BETWEEN TCM AND TRANSMISSION.** 1) Turn the ignition switch to OFF. 2) Disconnect the connector from TCM and transmission. 3) Measure the resistance of harness between TCM and transmission connector. ***Connector & terminal*** ***(B55) No. 5 — (B11) No. 12:***	Is the resistance less than 1 Ω?	Go to step **3.**	Repair the open circuit in harness between TCM and transmission connector.
3	**CHECK HARNESS CONNECTOR BETWEEN TCM AND TRANSMISSION.** Measure the resistance of harness connector between TCM and chassis ground. ***Connector & terminal*** ***(B55) No. 5 — Chassis ground:***	Is the resistance more than 1 MΩ?	Go to step **4.**	Repair the short circuit in harness between TCM and transmission connector.
4	**CHECK LOCK-UP DUTY SOLENOID.** Measure the resistance between transmission connector receptacle's terminals. ***Connector & terminal*** ***(T4) No. 12 — No. 20:***	Is the resistance 2.0 — 6.0 Ω?	Go to step **5.**	Go to step **8.**
5	**CHECK OUTPUT SIGNAL EMITTED FROM TCM USING SUBARU SELECT MONITOR.** 1) Connect the connectors to TCM and transmission. 2) Lift-up the vehicle and support with rigid racks. NOTE: Raise all wheels off floor. 3) Connect the Subaru Select Monitor to data link connector. 4) Start the engine, and turn the Subaru Select Monitor switch to ON. 5) Start the engine and warm-up the engine until the ATF temperature is above 80°C (176°F). NOTE: If the ambient temperature is below 0°C (32°F), drive the vehicle until the ATF reaches its operating temperature. 6) Read the data of "Lock-Up duty Ratio" using Subaru Select Monitor. • Lock-up duty solenoid is indicated in "%". 7) Shift the select lever to "D", and slowly increase vehicle speed to 60 km/h (37 MPH). NOTE: The speed difference between front and rear wheels may light the ABS warning light, but this indicates no malfunction. When AT control diagnosis is finished, perform the ABS memory clearance procedure of on-board diagnostics system. <Ref. to ABS(diag)-25, Clear Memory Mode.>	Is the value 95%?	Go to step **6.**	Go to step **7.**

	Step	Check	Yes	No
6	**CHECK OUTPUT SIGNAL EMITTED FROM TCM USING SUBARU SELECT MONITOR.** Return the engine to idling speed, shift the select lever to "N" range and read data. NOTE: The speed difference between front and rear wheels may light the ABS warning light, but this indicates no malfunction. When AT control diagnosis is finished, perform the ABS memory clearance procedure of on-board diagnostics system. <Ref. to ABS(diag)-25, Clear Memory Mode.>	Is the value 5%?	Even if the SPORT indicator light is blinking, the circuit has returned to normal condition at this time. A temporary poor contact of connector or harness may be the cause. Repair the harness or connector in TCM and transmission.	Go to step **7.**
7	**CHECK POOR CONTACT.**	Is there poor contact in lock-up duty solenoid circuit?	Repair the poor contact.	Replace the TCM. <Ref. to 4AT-64, Transmission Control Module (TCM).>
8	**CHECK LOCK-UP DUTY SOLENOID (IN TRANSMISSION).** 1) Disconnect the transmission connector. 2) Drain the ATF. **CAUTION:** **Do not drain the ATF until it cools down.** 3) Remove the oil pan, and disconnect the connector from control valve body. 4) Measure the resistance between lock-up duty solenoid and transmission ground. ***Connector & terminal*** ***(AT3) No. 4 — Transmission ground:***	Is the resistance 2.0 — 6.0 Ω?	Go to step **9.**	Replace the control valve body. <Ref. to 4AT-58, Control Valve Body.>
9	**CHECK HARNESS CONNECTOR BETWEEN LOCK-UP DUTY SOLENOID AND TRANSMISSION.** Measure the resistance of harness between lock-up duty solenoid and transmission connector. ***Connector & terminal*** ***(T4) No. 12 — (AT3) No. 4:***	Is the resistance less than 1 Ω?	Go to step **10.**	Repair the open circuit in harness between TCM and transmission connector.
10	**CHECK HARNESS CONNECTOR BETWEEN LOCK-UP DUTY SOLENOID AND TRANSMISSION.** Measure the resistance of harness between transmission connector and transmission ground. ***Connector & terminal*** ***(T4) No. 12 — Transmission ground:***	Is the resistance more than 1 MΩ?	Even if the SPORT indicator light is blinking, the circuit has returned to normal condition at this time. A temporary poor contact of connector or harness may be the cause. Repair the harness or connector in lock-up duty solenoid and transmission.	Repair the short circuit in harness between lock-up duty solenoid and transmission connector.

P: DTC P0748 PRESSURE CONTROL SOLENOID "A" ELECTRICAL

DTC DETECTING CONDITION:

Output signal circuit of line pressure linear solenoid is open or shorted.

TROUBLE SYMPTOM:

Excessive shift shock

WIRING DIAGRAM:

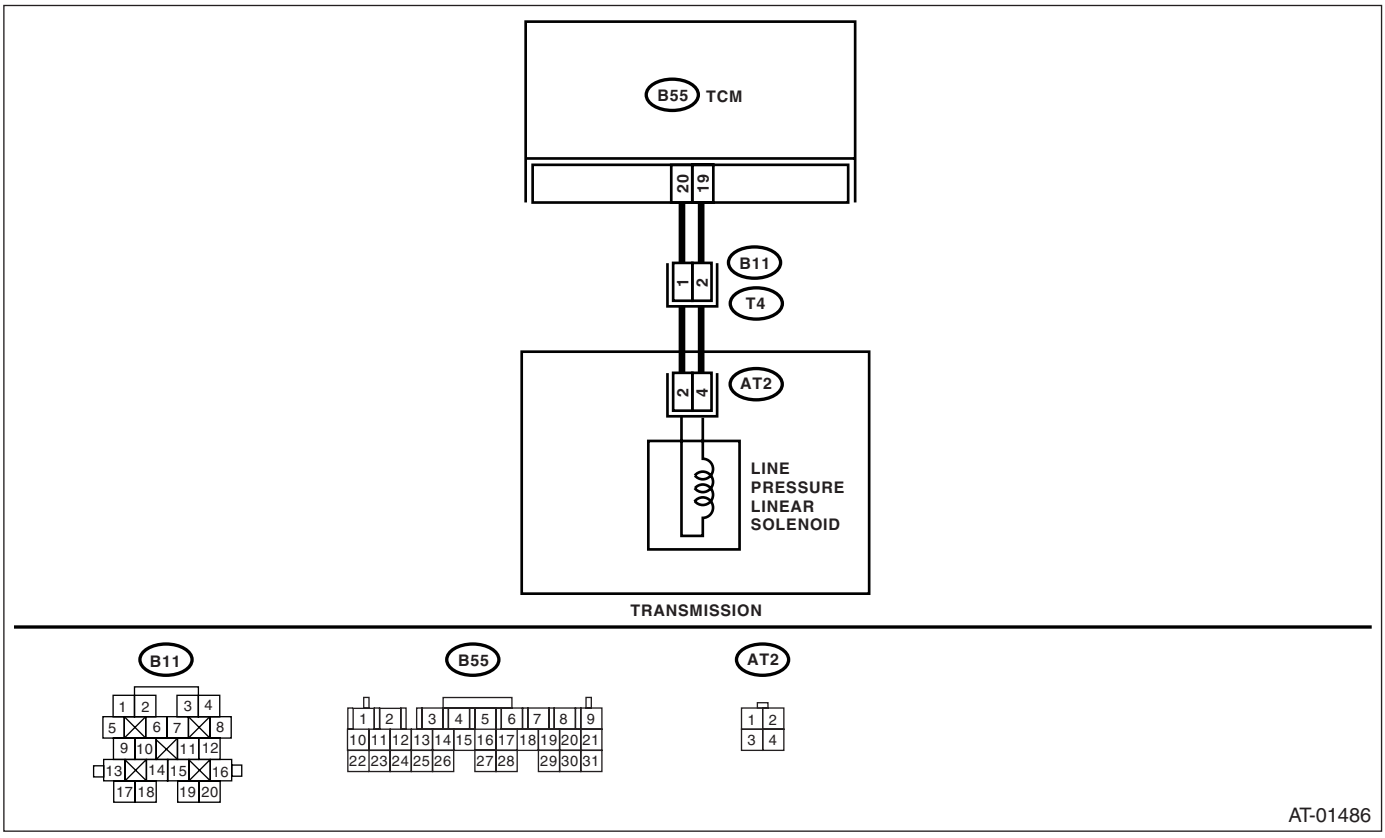

	Step	Check	Yes	No
1	**CHECK HARNESS CONNECTOR BETWEEN TCM AND TRANSMISSION.** 1) Turn the ignition switch to OFF. 2) Disconnect the connector from transmission and TCM. 3) Measure the resistance of harness between TCM and transmission connector. ***Connector & terminal*** ***(B55) No. 19 — (B11) No. 2:*** ***(B55) No. 20 — (B11) No. 1:***	Is the resistance less than 1 Ω?	Go to step **2.**	Repair the open circuit in harness between TCM and transmission connector.
2	**CHECK HARNESS CONNECTOR BETWEEN TCM AND CHASSIS GROUND.** Measure the resistance of harness between TCM connector and chassis ground. ***Connector & terminal*** ***(B55) No. 19 — Chassis ground:*** ***(B55) No. 20 — Chassis ground:***	Is the resistance more than 1 MΩ?	Go to step **3.**	Repair the short circuit in harness between TCM and transmission connector.
3	**CHECK LINE PRESSURE LINEAR SOLENOID.** Measure the resistance between transmission connector receptacle's terminals. ***Connector & terminal*** ***(T4) No. 1 — No. 2:***	Is the resistance 4 — 8 Ω?	Go to step **5.**	Go to step **4.**

	Step	Check	Yes	No
4	**CHECK LINE PRESSURE LINEAR SOLENOID (IN TRANSMISSION).** 1) Remove the transmission connector from bracket. 2) Drain the ATF. **CAUTION:** **Do not drain the ATF until it cools down.** 3) Remove the oil pan, and disconnect the connector from control valve body. 4) Measure the resistance between line pressure linear solenoid connector terminals. ***Connector & terminal*** ***(AT2) No. 2 — No. 4:***	Is the resistance 4 — 8 Ω?	Go to step **5.**	Replace the control valve body. <Ref. to 4AT-58, Control Valve Body.>
5	**CHECK HARNESS CONNECTOR BETWEEN TRANSMISSION AND LINE PRESSURE LINEAR SOLENOID.** Measure the resistance of harness between line pressure linear solenoid and transmission connector. ***Connector & terminal*** ***(T4) No. 2 — (AT2) No. 4:*** ***(T4) No. 1 — (AT2) No. 2:***	Is the resistance less than 1 Ω?	Go to step **6.**	Repair the open circuit in harness between line pressure linear solenoid and transmission connector.
6	**CHECK HARNESS CONNECTOR BETWEEN TRANSMISSION AND LINE PRESSURE LINEAR SOLENOID.** Measure the resistance of harness between transmission connector and transmission ground. ***Connector & terminal*** ***(T4) No. 1 — Transmission ground:*** ***(T4) No. 2 — Transmission ground:***	Is the resistance more than 1 MΩ?	Even if the SPORT indicator light is blinking, the circuit has returned to normal condition at this time. A temporary poor contact of connector or harness may be the cause. Repair the harness or connector in line pressure linear solenoid and transmission.	Repair the short circuit in harness between line pressure linear solenoid and transmission connector.

Q: DTC P0753 SHIFT SOLENOID "A" ELECTRICAL

DTC DETECTING CONDITION:

Output signal circuit of low clutch duty solenoid is open or shorted.

TROUBLE SYMPTOM:

Excessive shift shock

WIRING DIAGRAM:

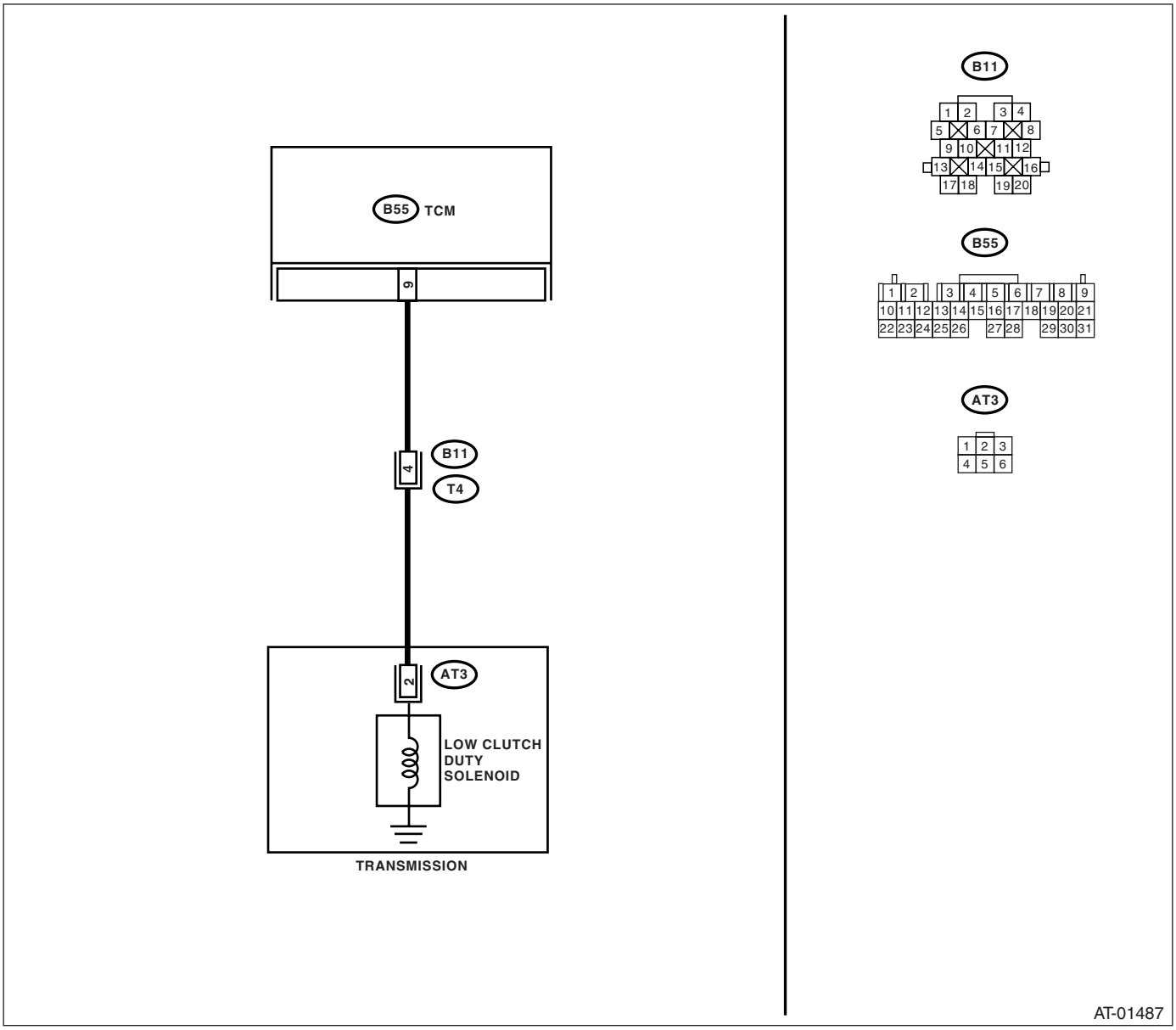

Step		Check	Yes	No
1	**CHECK HARNESS CONNECTOR BETWEEN TCM AND TRANSMISSION.** 1) Turn the ignition switch to OFF. 2) Disconnect the connector from TCM and transmission. 3) Measure the resistance of harness between TCM and transmission connector. ***Connector & terminal*** ***(B55) No. 9 — (B11) No. 4:***	Is the resistance less than 1 Ω?	Go to step **2.**	Repair the open circuit in harness between TCM and transmission connector.

	Step	Check	Yes	No
2	**CHECK HARNESS CONNECTOR BETWEEN TCM AND TRANSMISSION.** Measure the resistance of harness between TCM connector and transmission ground. ***Connector & terminal*** ***(B55) No. 9 — Chassis ground:***	Is the resistance more than 1 MΩ?	Go to step **3.**	Repair the short circuit in harness between TCM and transmission connector.
3	**CHECK LOW CLUTCH DUTY SOLENOID.** Measure the resistance between transmission connector terminals. ***Connector & terminal*** ***(T4) No. 4 — No. 20:***	Is the resistance 2.0 — 6.0 Ω?	Go to step **4.**	Go to step **7.**
4	**CHECK OUTPUT SIGNAL EMITTED FROM TCM USING SUBARU SELECT MONITOR.** 1) Connect the connectors to TCM and transmission. 2) Connect the Subaru Select Monitor to data link connector. 3) Start the engine, and turn the Subaru Select Monitor switch to ON. 4) Warm-up the transmission until the ATF temperature exceed approx. 80°C (176°F). NOTE: If the ambient temperature is below 0°C (32°F), drive the vehicle until ATF reaches its operating temperature. 5) Stop the engine and turn the ignition switch to ON (engine OFF). 6) Shift the select lever to “P” or “N” range, and depress the accelerator pedal. 7) Read the data of “Low Clutch duty Ratio” using Subaru Select Monitor. • Low clutch duty solenoid is indicated in “%”.	Is the value 100%?	Go to step **5.**	Go to step **6.**
5	**CHECK OUTPUT SIGNAL EMITTED FROM TCM USING SUBARU SELECT MONITOR.** 1) Turn the ignition switch to ON (engine OFF). 2) Shift the select lever to “D” range. 3) Read the data of “Low Clutch duty Ratio”.	Is the value 0%?	Even if the SPORT indicator light is blinking, the circuit has returned to normal condition at this time. A temporary poor contact of connector or harness may be the cause. Repair the harness or connector in transmission.	Go to step **6.**
6	**CHECK POOR CONTACT.**	Is there poor contact in low clutch duty solenoid circuit?	Repair the poor contact.	Replace the TCM. <Ref. to 4AT-64, Transmission Control Module (TCM).>

	Step	Check	Yes	No
7	**CHECK LOW CLUTCH DUTY SOLENOID (IN TRANSMISSION).** 1) Remove the transmission connector from bracket. 2) Drain the ATF. **CAUTION:** **Do not drain the ATF until it cools down.** 3) Remove the oil pan, and disconnect the connector from control valve body. 4) Measure the resistance between low clutch duty solenoid connector and transmission ground. ***Connector & terminal*** ***(AT3) No. 2 — Transmission ground:***	Is the resistance 2.0 — 6.0 Ω?	Go to step **8.**	Replace the control valve body. <Ref. to 4AT-58, Control Valve Body.>
8	**CHECK HARNESS CONNECTOR BETWEEN TRANSMISSION AND LOW CLUTCH DUTY SOLENOID.** Measure the resistance of harness between low clutch duty solenoid and transmission connector. ***Connector & terminal*** ***(T4) No. 4 — (AT3) No. 2:***	Is the resistance less than 1 Ω?	Go to step **9.**	Repair the open circuit in harness between low clutch duty solenoid and transmission connector.
9	**CHECK HARNESS CONNECTOR BETWEEN TRANSMISSION AND LOW CLUTCH DUTY SOLENOID.** Measure the resistance of harness between transmission connector and transmission ground. ***Connector & terminal*** ***(T4) No. 4 — Transmission ground:***	Is the resistance more than 1 MΩ?	Even if the SPORT indicator light is blinking, the circuit has returned to normal condition at this time. A temporary poor contact of connector or harness may be the cause. Repair the harness or connector in low clutch duty solenoid and transmission.	Repair the short circuit of harness between low clutch duty solenoid and transmission connector.

R: DTC P0758 SHIFT SOLENOID "B" ELECTRICAL

DTC DETECTING CONDITION:

Output signal circuit of 2-4 brake duty solenoid is open or shorted.

TROUBLE SYMPTOM:

Excessive shift shock

WIRING DIAGRAM:

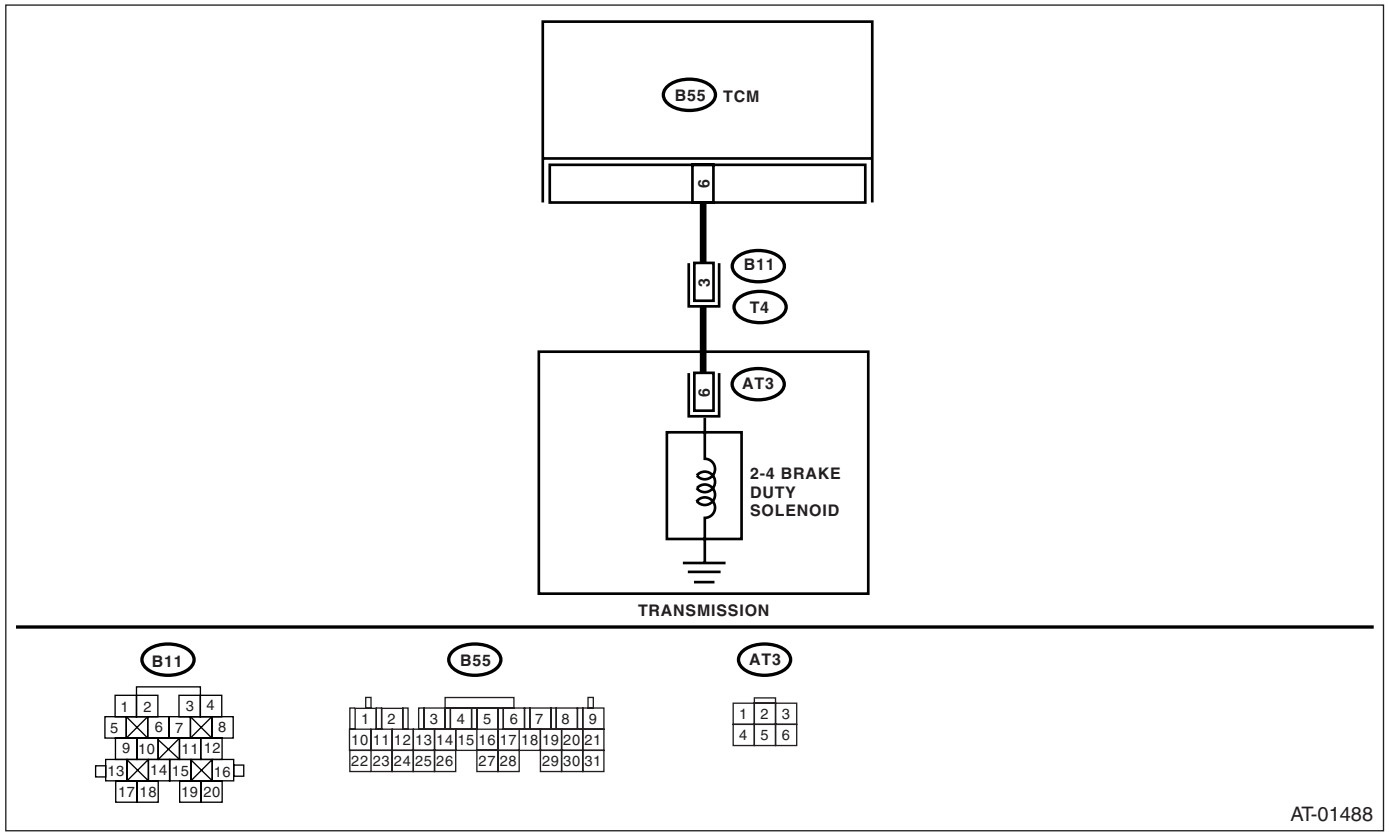

Step		Check	Yes	No
1	**CHECK HARNESS CONNECTOR BETWEEN TCM AND TRANSMISSION.** 1) Turn the ignition switch to OFF. 2) Disconnect the connector from TCM and transmission. 3) Measure the resistance of harness between TCM and transmission connector. ***Connector & terminal*** ***(B55) No. 6 — (B11) No. 3:***	Is the resistance less than 1 Ω?	Go to step **2.**	Repair the open circuit in harness between TCM and transmission connector.
2	**CHECK HARNESS CONNECTOR BETWEEN TCM AND CHASSIS GROUND.** Measure the resistance of harness between TCM connector and chassis ground. ***Connector & terminal*** ***(B55) No. 6 — Chassis ground:***	Is the resistance more than 1 MΩ?	Go to step **3.**	Repair the short circuit in harness between TCM and transmission connector.
3	**CHECK 2-4 BRAKE DUTY SOLENOID.** Measure the resistance between transmission connector terminals. ***Connector & terminal*** ***(T4) No. 3 — No. 20:***	Is the resistance 2.0 — 6.0 Ω?	Go to step **4.**	Go to step **7.**

	Step	Check	Yes	No
4	**CHECK OUTPUT SIGNAL EMITTED FROM TCM USING SUBARU SELECT MONITOR.** 1) Connect all the connectors. 2) Connect the Subaru Select Monitor to data link connector. 3) Start the engine, and turn the Subaru Select Monitor switch to ON. 4) Warm-up the transmission until the ATF temperature exceed approx. 80°C (176°F). NOTE: If the ambient temperature is below 0°C (32°F), drive the vehicle until the ATF reaches its operating temperature. 5) Stop the engine and turn the ignition switch to ON (engine OFF). 6) Shift the select lever to "N" range, and depress the accelerator pedal. 7) Read the data of "Brake Clutch Duty Ratio" using Subaru Select Monitor. • 2-4 brake duty solenoid is indicated in "%".	Is the value 100%?	Go to step **5.**	Go to step **6.**
5	**CHECK OUTPUT SIGNAL EMITTED FROM TCM USING SUBARU SELECT MONITOR.** Shift the select lever to 2nd on manual mode.	Is the value 0%?	Even if the SPORT indicator light is blinking, the circuit has returned to normal condition at this time. A temporary poor contact of connector or harness may be the cause. Repair the harness or connector in TCM and transmission.	Go to step **6.**
6	**CHECK POOR CONTACT.**	Is there poor contact in 2-4 brake duty solenoid circuit?	Repair the poor contact.	Replace the TCM. <Ref. to 4AT-64, Transmission Control Module (TCM).>
7	**CHECK 2-4 BRAKE DUTY SOLENOID (IN TRANSMISSION).** 1) Remove the transmission connector from bracket. 2) Drain the ATF. **CAUTION:** **Do not drain the ATF until it cools down.** 3) Remove the oil pan, and disconnect the connector from 2-4 brake duty solenoid. 4) Measure the resistance of harness between 2-4 brake duty solenoid connector and transmission ground. ***Connector & terminal*** ***(AT3) No. 6 — Transmission ground:***	Is the resistance 2.0 — 6.0 Ω?	Go to step **8.**	Replace the control valve body. <Ref. to 4AT-58, Control Valve Body.>

	Step	Check	Yes	No
8	**CHECK HARNESS CONNECTOR BETWEEN 2-4 BRAKE DUTY SOLENOID AND TRANSMISSION.** Measure the resistance of harness between 2-4 brake duty solenoid and transmission connector. ***Connector & terminal*** ***(T4) No. 3 — (AT12) No. 6:***	Is the resistance less than 1 Ω?	Go to step **9.**	Repair the open circuit in harness between 2-4 brake duty solenoid and transmission connector.
9	**CHECK HARNESS CONNECTOR BETWEEN 2-4 BRAKE DUTY SOLENOID AND TRANSMISSION.** Measure the resistance of harness between transmission connector and transmission ground. ***Connector & terminal*** ***(T4) No. 3 — Transmission ground:***	Is the resistance more than 1 MΩ?	Even if the SPORT indicator light is blinking, the circuit has returned to normal condition at this time. A temporary poor contact of connector or harness may be the cause. Repair the harness or connector in 2-4 brake duty solenoid and transmission.	Repair the short circuit in harness between 2-4 brake duty solenoid and transmission connector.

S: DTC P0763 SHIFT SOLENOID "C" ELECTRICAL

DTC DETECTING CONDITION:

Output signal circuit of high clutch duty solenoid is open or shorted.

TROUBLE SYMPTOM:

Excessive shift shock

WIRING DIAGRAM:

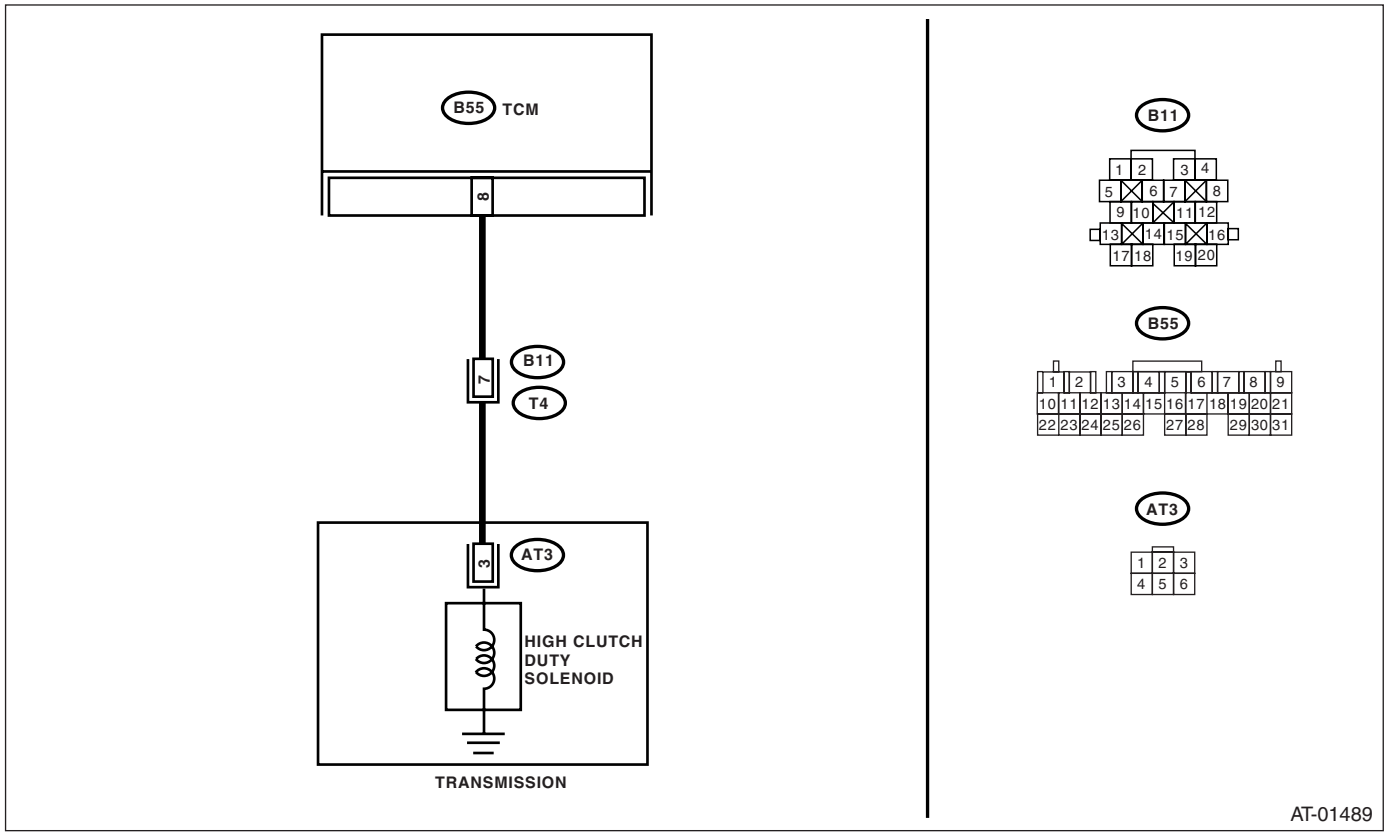

	Step	Check	Yes	No
1	**CHECK HARNESS CONNECTOR BETWEEN TCM AND TRANSMISSION.** 1) Turn the ignition switch to OFF. 2) Disconnect the connector from TCM and transmission. 3) Measure the resistance of harness between TCM and transmission connector. ***Connector & terminal*** ***(B55) No. 8 — (B11) No. 7:***	Is the resistance less than 1 Ω?	Go to step **2.**	Repair the open circuit in harness between TCM and transmission connector.
2	**CHECK HARNESS CONNECTOR BETWEEN TCM AND TRANSMISSION.** Measure the resistance of harness connector between TCM and chassis ground. ***Connector & terminal*** ***(B55) No. 8 — Chassis ground:***	Is the resistance more than 1 MΩ?	Go to step **3.**	Repair the short circuit in harness between TCM and transmission connector.
3	**CHECK HIGH CLUTCH DUTY SOLENOID.** Measure the resistance between transmission connector receptacle's terminals. ***Connector & terminal*** ***(T4) No. 7 — No. 20:***	Is the resistance 2.0 — 6.0 Ω?	Go to step **4.**	Go to step **7.**

	Step	Check	Yes	No
4	**CHECK OUTPUT SIGNAL EMITTED FROM TCM USING SUBARU SELECT MONITOR.** 1) Connect the connectors to TCM and transmission. 2) Lift-up the vehicle and support with rigid racks. NOTE: Raise all wheels off floor. 3) Connect the Subaru Select Monitor to data link connector. 4) Start the engine, and turn the Subaru Select Monitor switch to ON. 5) Start the engine and warm-up the engine until the ATF temperature is above 80°C (176°F). NOTE: If the ambient temperature is below 0°C (32°F), drive the vehicle until the ATF reaches its operating temperature. 6) Read the data of “High Clutch Duty Ratio” using Subaru Select Monitor. • High clutch duty solenoid is indicated in “%”. 7) Shift the select lever to “D”, and slowly increase vehicle speed at 3rd or 4th to measure. NOTE: The speed difference between front and rear wheels may light the ABS warning light, but this indicates no malfunction. When AT control diagnosis is finished, perform the ABS memory clearance procedure of on-board diagnostics system. <Ref. to ABS(diag)-25, Clear Memory Mode.>	Is the value 0%?	Go to step **5.**	Go to step **6.**
5	**CHECK OUTPUT SIGNAL EMITTED FROM TCM USING SUBARU SELECT MONITOR.** Return the engine to idling speed and shift the select lever to “N” range. NOTE: The speed difference between front and rear wheels may light the ABS warning light, but this indicates no malfunction. When AT control diagnosis is finished, perform the ABS memory clearance procedure of on-board diagnostics system. <Ref. to ABS(diag)-25, Clear Memory Mode.>	Is the value 100%?	Even if the SPORT indicator light is blinking, the circuit has returned to normal condition at this time. A temporary poor contact of connector or harness may be the cause. Repair the harness or connector in TCM and transmission.	Go to step **6.**
6	**CHECK POOR CONTACT.**	Is there poor contact in high clutch duty solenoid circuit?	Repair the poor contact.	Replace the TCM. <Ref. to 4AT-64, Transmission Control Module (TCM).>

	Step	Check	Yes	No
7	**CHECK HIGH CLUTCH DUTY SOLENOID (IN TRANSMISSION).** 1) Remove the transmission connector from bracket. 2) Drain the ATF. **CAUTION:** **Do not drain the ATF until it cools down.** 3) Remove the oil pan, and disconnect the connector from control valve body. 4) Measure the resistance between high clutch duty solenoid connector and transmission ground. ***Connector & terminal*** ***(AT3) No. 3 — Transmission ground:***	Is the resistance 2.0 — 6.0 Ω?	Go to step **8.**	Replace the control valve body. <Ref. to 4AT-58, Control Valve Body.>
8	**CHECK HARNESS CONNECTOR BETWEEN HIGH CLUTCH DUTY SOLENOID AND TRANSMISSION.** Measure the resistance of harness between high clutch duty solenoid and transmission connector. ***Connector & terminal*** ***(T4) No. 7 — (AT3) No. 3:***	Is the resistance less than 1 Ω?	Go to step **9.**	Repair the open circuit in harness between TCM and transmission connector.
9	**CHECK HARNESS CONNECTOR BETWEEN HIGH CLUTCH DUTY SOLENOID AND TRANSMISSION.** Measure the resistance of harness between transmission connector and transmission ground. ***Connector & terminal*** ***(T4) No. 7 — Transmission ground:***	Is the resistance more than 1 MΩ?	Even if the SPORT indicator light is blinking, the circuit has returned to normal condition at this time. A temporary poor contact of connector or harness may be the cause. Repair the harness or connector in high clutch duty solenoid and transmission.	Repair the short circuit of harness between high clutch duty solenoid and transmission connector.

T: DTC P0768 SHIFT SOLENOID "D" ELECTRICAL

DTC DETECTING CONDITION:

The output signal circuit of low & reverse duty solenoid is open or shorted.

TROUBLE SYMPTOM:

Gear is not changed.

WIRING DIAGRAM:

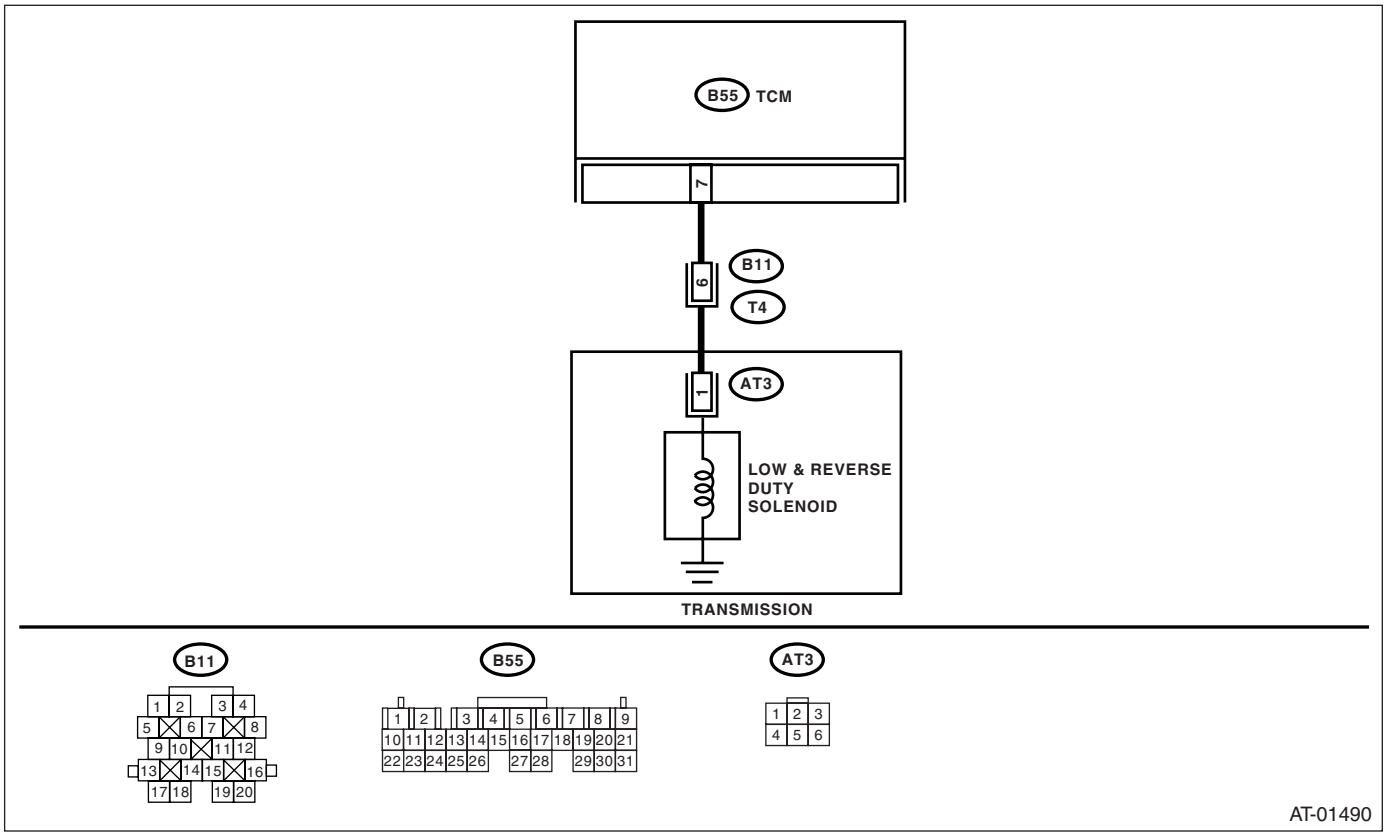

Step		Check	Yes	No
1	**CHECK HARNESS CONNECTOR BETWEEN TCM AND TRANSMISSION.** 1) Turn the ignition switch to OFF. 2) Disconnect the connector from transmission and TCM. 3) Measure the resistance of harness between TCM and transmission connector. ***Connector & terminal*** ***(B55) No. 7 — (B11) No. 6:***	Is the resistance less than 1 Ω?	Go to step **2.**	Repair the open circuit in harness between TCM and transmission connector.
2	**CHECK HARNESS CONNECTOR BETWEEN TCM AND CHASSIS GROUND.** Measure the resistance of harness between TCM connector and chassis ground. ***Connector & terminal*** ***(B55) No. 7 — Chassis ground:***	Is the resistance more than 1 MΩ?	Go to step **3.**	Repair the short circuit in harness between TCM and transmission connector.
3	**CHECK LOW & REVERSE DUTY SOLENOID.** Measure the resistance between transmission connector terminals. ***Connector & terminal*** ***(T4) No. 6 — No. 20:***	Is the resistance 2.0 — 6.0 Ω?	Go to step **4.**	Go to step **7.**

	Step	Check	Yes	No
4	**CHECK OUTPUT SIGNAL EMITTED FROM TCM USING SUBARU SELECT MONITOR.** 1) Connect all the connectors. 2) Connect the Subaru Select Monitor to data link connector. 3) Start the engine, and turn the Subaru Select Monitor switch to ON. 4) Warm-up the transmission until the ATF temperature is above approx. 80°C (176°F). NOTE: If the ambient temperature is below 0°C (32°F), drive the vehicle until the ATF reaches its operating temperature. 5) Stop the engine and turn the ignition switch to ON (engine OFF). 6) Shift the select lever to the "N" range. 7) Read the data of "L&R B duty ratio" using Subaru Select Monitor. • Low & reverse duty solenoid is indicated in "%".	Is the value 100%?	Go to step **5.**	Go to step **6.**
5	**CHECK OUTPUT SIGNAL EMITTED FROM TCM USING SUBARU SELECT MONITOR.** 1) Lift-up the vehicle and support with rigid racks. NOTE: Raise all wheels off floor. 2) Shift the select lever to manual mode, and then hold it on 1st. Slowly increase the vehicle speed up to 15 km/h (9 MPH), and then return the accelerator pedal. NOTE: The speed difference between front and rear wheels may light the ABS warning light, but this indicates no malfunction. When AT control diagnosis is finished, perform the ABS memory clearance procedure of on-board diagnostics system. <Ref. to ABS(diag)-25, Clear Memory Mode.> 3) Read the data of "L&R B duty ratio".	Is the value 55%?	Even if the SPORT indicator light is blinking, the circuit has returned to normal condition at this time. A temporary poor contact of connector or harness may be the cause. Repair the harness or connector in TCM and transmission.	Go to step **6.**
6	**CHECK POOR CONTACT.**	Is there poor contact in low & reverse duty solenoid circuit?	Repair the poor contact.	Replace the TCM. <Ref. to 4AT-64, Transmission Control Module (TCM).>
7	**CHECK LOW & REVERSE DUTY SOLENOID (IN TRANSMISSION).** 1) Remove the transmission connector from bracket. 2) Drain the ATF. **CAUTION:** **Do not drain the ATF until it cools down.** 3) Remove the oil pan, and disconnect the connector from control valve body. 4) Measure the resistance between low & reverse duty solenoid connector and transmission ground. ***Connector & terminal*** ***(AT3) No. 1 — Transmission ground:***	Is the resistance 2.0 — 6.0 Ω?	Go to step **8.**	Replace the control valve body. <Ref. to 4AT-58, Control Valve Body.>

	Step	Check	Yes	No
8	**CHECK HARNESS CONNECTOR BETWEEN TRANSMISSION AND LOW & REVERSE DUTY SOLENOID.** Measure the resistance of harness between low & reverse duty solenoid and transmission connector. ***Connector & terminal*** ***(T4) No. 6 — (AT3) No. 1:***	Is the resistance less than 1 Ω?	Go to step **9.**	Repair the open circuit in harness between low & reverse duty solenoid and transmission connector.
9	**CHECK HARNESS CONNECTOR BETWEEN TRANSMISSION AND LOW & REVERSE DUTY SOLENOID.** Measure the resistance of harness between transmission connector and transmission ground. ***Connector & terminal*** ***(T4) No. 6 — Transmission ground:***	Is the resistance more than 1 MΩ?	Even if the SPORT indicator light is blinking, the circuit has returned to normal condition at this time. A temporary poor contact of connector or harness may be the cause. Repair the harness or connector in low & reverse duty solenoid and transmission.	Repair the short circuit in harness between low & reverse brake solenoid and transmission connector.

U: DTC P0801 REVERSE INHIBIT CONTROL CIRCUIT

DTC DETECTING CONDITION:

Shift lock solenoid malfunction, open or short reverse inhibitor control circuit

TROUBLE SYMPTOM:

- Gear is shifted from “N” range to “R” range during driving at 20 km/h (12 MPH) or more.
- Gear cannot be shifted from “N” range to “R” range.

WIRING DIAGRAM:

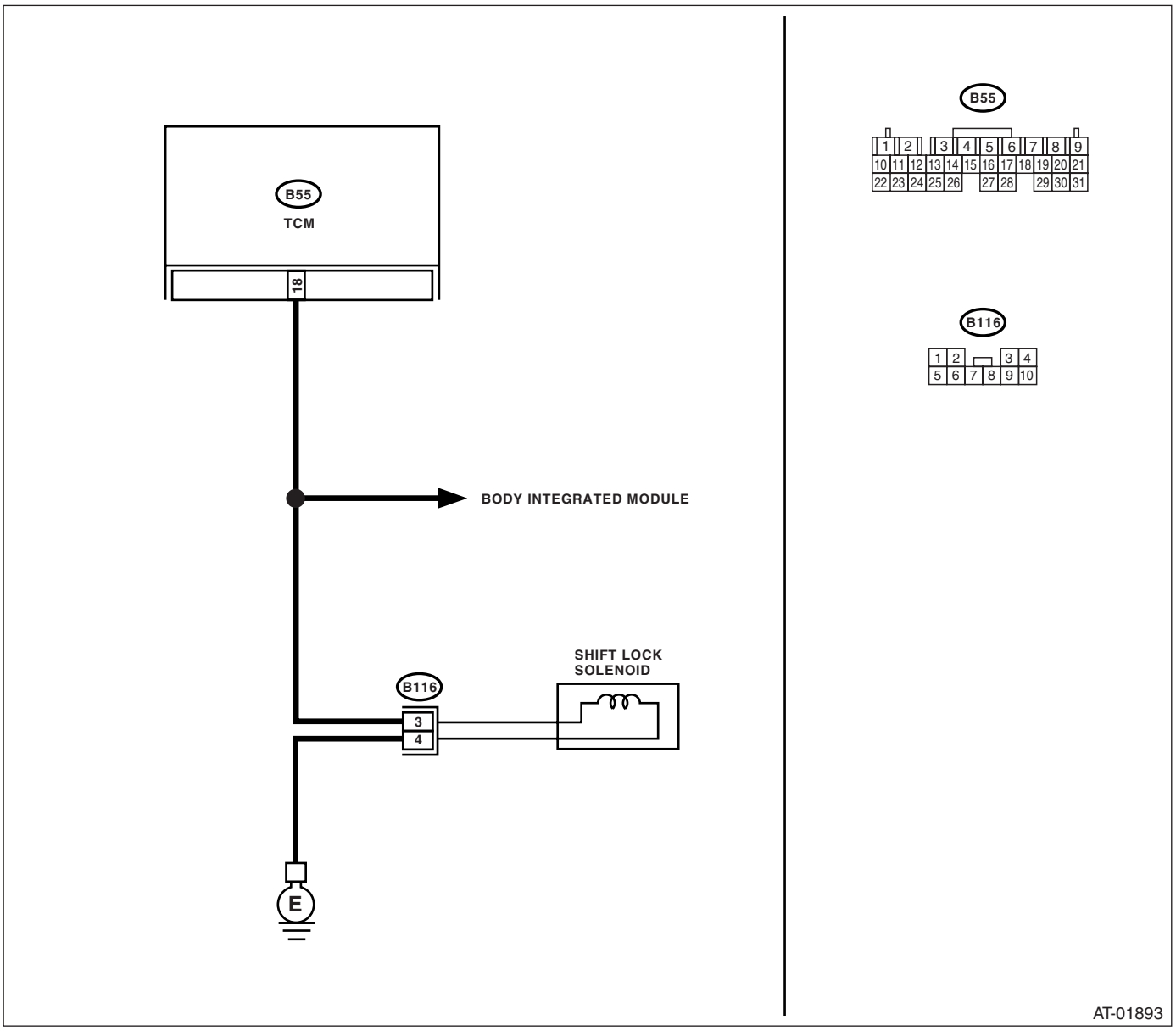

Step		Check	Yes	No
1	**CHECK HARNESS CONNECTOR BETWEEN TCM AND SHIFT LOCK SOLENOID.** 1) Turn the ignition switch to OFF. 2) Disconnect the connector from TCM and shift lock solenoid. 3) Measure the resistance of harness between TCM and shift lock solenoid connector. ***Connector & terminal*** ***(B55) No. 18 — (B116) No. 3:***	Is the resistance less than 1 Ω?	Go to step **2.**	Repair the open circuit in harness between TCM and shift lock solenoid connector.

	Step	Check	Yes	No
2	**CHECK HARNESS CONNECTOR BETWEEN TCM AND SHIFT LOCK SOLENOID.** Measure the resistance of harness between TCM and chassis ground. ***Connector & terminal*** ***(B55) No. 18 — Chassis ground:***	Is the resistance more than 1 MΩ?	Go to step **3.**	Repair the short circuit in harness between TCM and shift lock solenoid connector.
3	**CHECK HARNESS BETWEEN SHIFT LOCK SOLENOID AND CHASSIS GROUND TERMINAL.** Measure the resistance of harness between shift lock solenoid and chassis ground. ***Connector & terminal*** ***(B116) No. 4 — Chassis ground:***	Is the resistance less than 1 Ω?	Go to step **4.**	Repair the open circuit in harness between chassis ground and shift lock solenoid connector.
4	**CHECK SHIFT LOCK SOLENOID.** Measure the resistance of shift lock solenoid terminals. ***Connector & terminal*** ***(B116) No. 3 — No. 4:***	Is the resistance 12 — 18 Ω?	Go to step **5.**	Replace the shift lock solenoid.
5	**CHECK OUTPUT SIGNAL FOR TCM.** 1) Connect all the connectors. 2) Turn the ignition switch to ON. 3) Shift the select lever to “D” range. 4) Measure the voltage between TCM and chassis ground. ***Connector & terminal*** ***(B55) No. 18 (+) — Chassis ground (−):***	Is the voltage more than 10.5 V?	Go to step **6.**	Go to step **7.**
6	**CHECK OUTPUT SIGNAL FOR TCM.** 1) Lift-up the vehicle and support with rigid racks. NOTE: Raise all wheels off floor. 2) Start the engine. 3) Shift the select lever to “D” range and slowly increase vehicle speed to 20 km/h (12 MPH). NOTE: The speed difference between front and rear wheels may light the ABS warning light, but this indicates no malfunction. When AT control diagnosis is finished, perform the ABS memory clearance procedure of on-board diagnostics system. <Ref. to ABS(diag)-25, Clear Memory Mode.> 4) Measure the voltage between TCM and chassis ground. ***Connector & terminal*** ***(B55) No. 18 (+) — Chassis ground (−):***	Is the voltage less than 1 V?	Even if the SPORT indicator light is blinking, the circuit has returned to normal condition at this time. A temporary poor contact of connector or harness may be the cause. Repair the harness or connector in reverse inhibitor control circuit.	Go to step **7.**
7	**CHECK POOR CONTACT.**	Is there poor contact in the reverse inhibitor control circuit?	Repair the poor contact.	Replace the TCM. <Ref. to 4AT-64, Transmission Control Module (TCM).>

V: DTC P1706 AT VEHICLE SPEED SENSOR CIRCUIT MALFUNCTION (REAR WHEEL)

DTC DETECTING CONDITION:

Input signal circuit of TCM is open or shorted.

TROUBLE SYMPTOM:

No lock-up or occurring tight corner braking phenomenon

WIRING DIAGRAM:

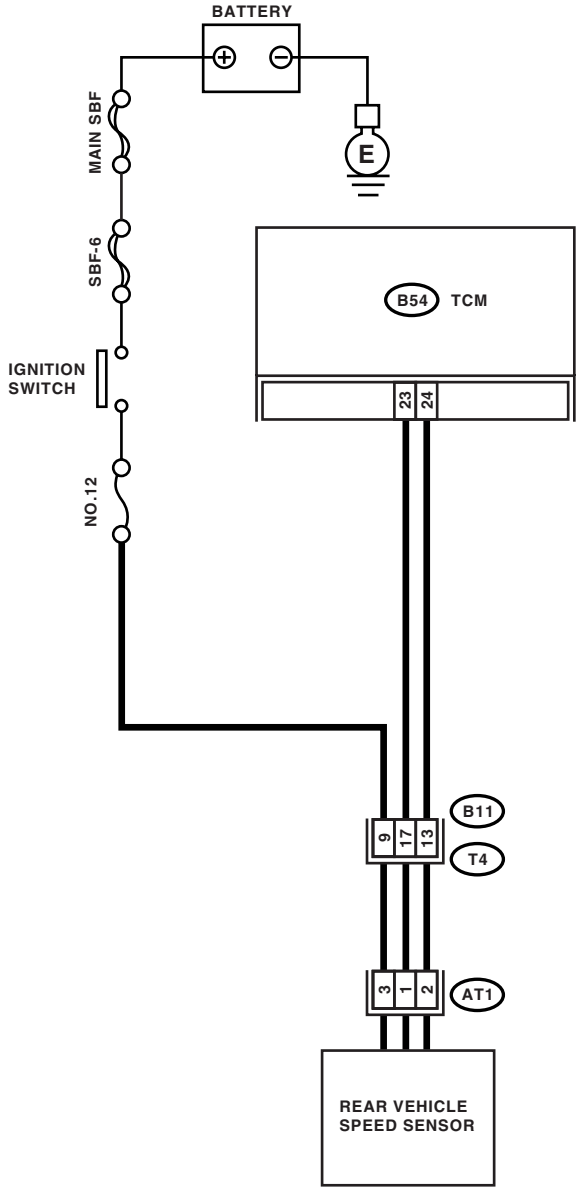

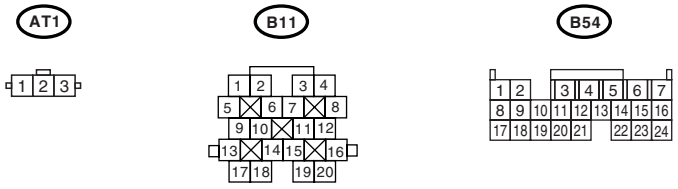

AT-03019

	Step	Check	Yes	No
1	**CHECK IGNITION POWER SUPPLY CIRCUIT.** 1) Turn the ignition switch to OFF. 2) Disconnect the connector from rear vehicle speed sensor. Turn the ignition switch to ON. 3) Measure the ignition power supply voltage between rear vehicle speed sensor connector and transmission ground. ***Connector & terminal*** ***(AT1) No. 3 (+) — Transmission ground (–):***	Is the voltage more than 10 V?	Go to step **2.**	Check the harness between rear vehicle speed sensor and battery for open circuit, short or poor contact. Repair the harness if required.
2	**CHECK HARNESS CONNECTOR BETWEEN TCM AND TRANSMISSION.** 1) Turn the ignition switch to OFF. 2) Measure the resistance of harness between TCM and rear vehicle speed sensor connector. ***Connector & terminal*** ***(B54) No. 23 — (AT1) No. 1:***	Is the resistance less than 1 Ω?	Go to step **3.**	Repair the open circuit or poor contact of connector in harness between TCM and rear vehicle speed sensor connector.
3	**CHECK HARNESS CONNECTOR BETWEEN TCM AND TRANSMISSION.** Measure the resistance of harness between TCM and rear vehicle speed sensor connector. ***Connector & terminal*** ***(B54) No. 24 — (AT1) No. 2:***	Is the resistance less than 1 Ω?	Go to step **4.**	Repair the open circuit or poor contact of connector in harness between TCM and rear vehicle speed sensor connector.
4	**CHECK HARNESS CONNECTOR BETWEEN TCM AND TRANSMISSION.** Measure the resistance of harness between TCM connector and chassis ground. ***Connector & terminal*** ***(B54) No. 23 — Chassis ground:***	Is the resistance more than 1 MΩ?	Go to step **5.**	Repair the short circuit in harness between TCM and rear vehicle speed sensor connector.
5	**CHECK HARNESS CONNECTOR BETWEEN TCM AND TRANSMISSION.** Measure the resistance of harness between TCM connector and chassis ground. ***Connector & terminal*** ***(B54) No. 24 — Chassis ground:***	Is the resistance more than 1 MΩ?	Go to step **6.**	Repair the short circuit in harness between TCM and rear vehicle speed sensor connector.
6	**PREPARE OSCILLOSCOPE.**	Do you have an oscilloscope?	Go to step **8.**	Go to step **7.**

	Step	Check	Yes	No
7	**CHECK INPUT SIGNAL FOR TCM.** 1) Connect the connectors to TCM and transmission. 2) Lift-up the vehicle and support with rigid racks. NOTE: Raise all wheels off floor. 3) Start the engine and set vehicle in 20 km/h (12 MPH) condition. NOTE: The speed difference between front and rear wheels may light the ABS warning light, but this indicates no malfunction. When AT control diagnosis is finished, perform the ABS memory clearance procedure of on-board diagnostics system. <Ref. to ABS(diag)-25, Clear Memory Mode.> 4) Measure the AC voltage between TCM connector terminals. ***Connector & terminal*** ***(B54) No. 24 (+) — No. 23 (−):***	Is the voltage approx. more than 2 V?	Go to step **9.**	Replace the rear vehicle speed sensor.
8	**CHECK INPUT SIGNAL FOR TCM USING OSCILLOSCOPE.** 1) Connect the connectors to TCM and transmission. 2) Lift-up the vehicle and support with rigid racks. NOTE: Raise all wheels off floor. 3) Set the oscilloscope to TCM connector terminals. ***Connector & terminal*** ***Positive probe; (B54) No. 24:*** ***Ground lead; (B54) No. 23:*** 4) Start the engine and set vehicle in 20 km/h (12 MPH) condition. NOTE: The speed difference between front and rear wheels may light the ABS warning light, but this indicates no malfunction. When AT control diagnosis is finished, perform the ABS memory clearance procedure of on-board diagnostics system. <Ref. to ABS(diag)-25, Clear Memory Mode.> 5) Measure the signal voltage indicated on oscilloscope.	Is the pulse voltage approx. 5 V?	Go to step **9.**	Replace the rear vehicle speed sensor.
9	**CHECK POOR CONTACT.**	Is there poor contact in rear vehicle speed sensor circuit?	Repair the poor contact.	Replace the TCM. <Ref. to 4AT-64, Transmission Control Module (TCM).>

W: DTC P1707 AT AWD SOLENOID VALVE CIRCUIT MALFUNCTION

DTC DETECTING CONDITION:

Output signal circuit of transfer duty solenoid is open or shorted.

TROUBLE SYMPTOM:

- Tight corner braking phenomenon is occurred.
- Front wheel slips on the slippery road.

WIRING DIAGRAM:

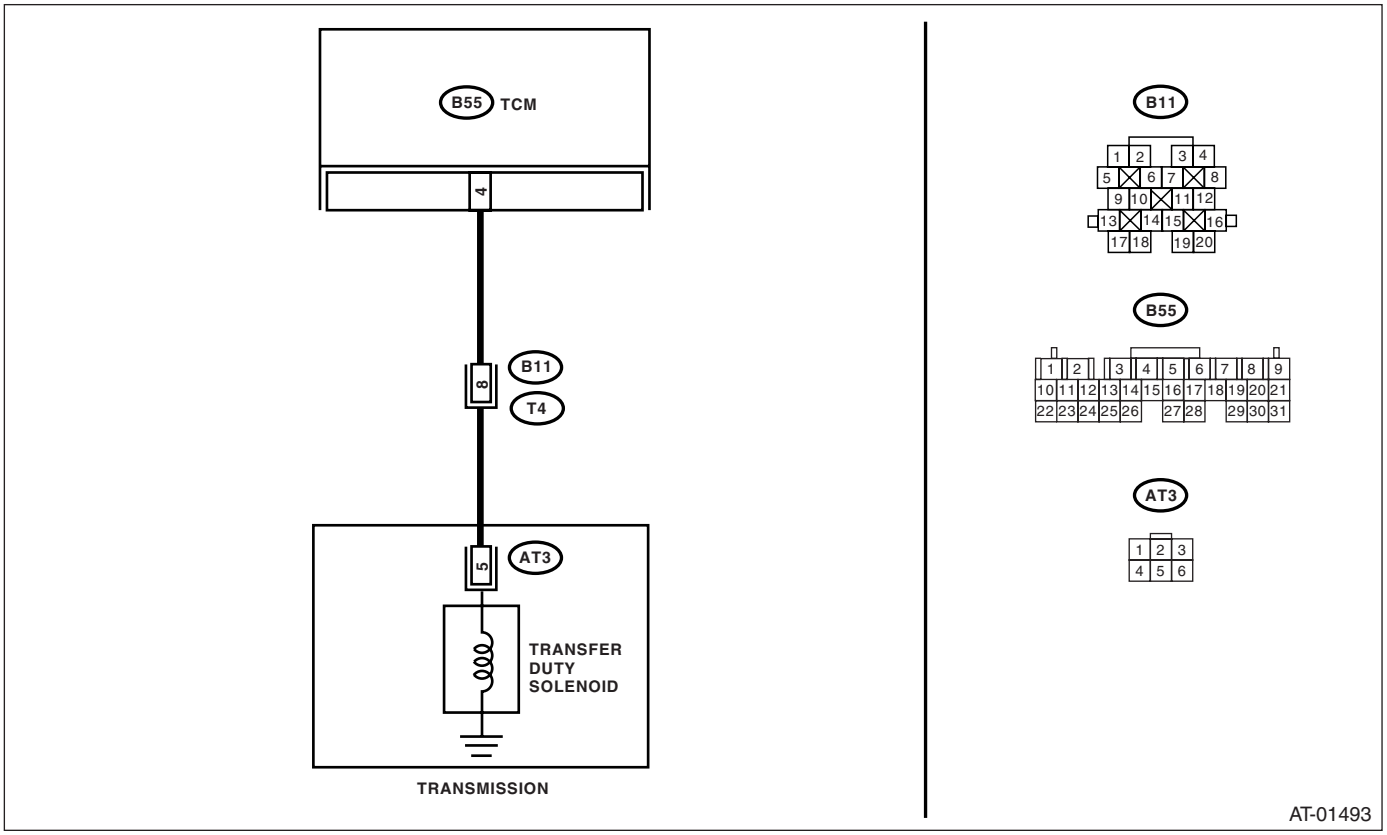

	Step	Check	Yes	No
1	**CHECK HARNESS CONNECTOR BETWEEN TCM AND TRANSMISSION.** 1) Turn the ignition switch to OFF. 2) Disconnect the connector from TCM and transmission. 3) Measure the resistance of harness between TCM and transmission connector. ***Connector & terminal*** ***(B55) No. 4 — (B11) No. 8:***	Is the resistance less than 1 Ω?	Go to step **2.**	Repair the open circuit in harness between TCM and transmission connector.
2	**CHECK HARNESS CONNECTOR BETWEEN TCM AND TRANSMISSION.** Measure the resistance harness connector between TCM and chassis ground. ***Connector & terminal*** ***(B55) No. 4 — Chassis ground:***	Is the resistance more than 1 MΩ?	Go to step **3.**	Repair the short circuit in harness between TCM and transmission connector.
3	**CHECK TRANSFER DUTY SOLENOID.** Measure the resistance between transmission connector and transmission terminals. ***Connector & terminal*** ***(T4) No. 8 — No. 20:***	Is the resistance 2.0 — 6.0 Ω?	Go to step **4.**	Go to step **7.**

	Step	Check	Yes	No
4	**CHECK OUTPUT SIGNAL EMITTED FROM TCM USING SUBARU SELECT MONITOR.** 1) Connect the connectors to TCM and transmission. 2) Connect the Subaru Select Monitor to data link connector. 3) Turn the ignition switch to ON (engine OFF) and Subaru Select Monitor switch to ON. 4) Shift the select lever to "N" range, and fully close the throttle pedal. (Vehicle speed is 0 km/h (0 MPH)) 5) Read the data of "Transfer duty Ratio" using Subaru Select Monitor. • Transfer duty solenoid is indicated in "%".	Is the value approx. 5%?	Go to step **5.**	Go to step **6.**
5	**CHECK OUTPUT SIGNAL EMITTED FROM TCM USING SUBARU SELECT MONITOR.** 1) Shift the select lever to "D" range. 2) Read the data of "Transfer duty Ratio" using Subaru Select Monitor. • Transfer duty solenoid is indicated in "%".	Is the value 18 — 35%?	Even if the SPORT indicator light is blinking, the circuit has returned to normal condition at this time. A temporary poor contact of connector or harness may be the cause. Repair the harness or connector in TCM and transmission.	Go to step **6.**
6	**CHECK POOR CONTACT.**	Is there poor contact in transfer duty solenoid circuit?	Repair the poor contact.	Replace the TCM. <Ref. to 4AT-64, Transmission Control Module (TCM).>
7	**CHECK TRANSFER DUTY SOLENOID (IN TRANSMISSION).** 1) Lift-up the vehicle and support with rigid racks. NOTE: Raise all wheels off floor. 2) Drain the ATF. **CAUTION:** **Do not drain the ATF until it cools down.** 3) Remove the extension case, and disconnect the connector from transfer duty solenoid. 4) Measure the resistance between transfer duty solenoid connector and transmission ground. ***Connector & terminal*** ***(AT3) No. 5 — Transmission ground:***	Is the resistance 2.0 — 6.0 Ω?	Go to step **8.**	Replace the control valve body. <Ref. to 4AT-58, Control Valve Body.>
8	**CHECK HARNESS CONNECTOR BETWEEN TRANSFER DUTY SOLENOID AND TRANSMISSION.** Measure the resistance of harness between transfer duty solenoid and transmission connector. ***Connector & terminal*** ***(T4) No. 8 — (AT3) No. 5:***	Is the resistance less than 1 Ω?	Go to step **9.**	Repair the open circuit in harness between transfer duty solenoid and transmission connector.

	Step	Check	Yes	No
9	**CHECK HARNESS CONNECTOR BETWEEN TRANSFER DUTY SOLENOID AND TRANSMISSION.** Measure the resistance of harness between transmission connector and transmission ground. ***Connector & terminal*** ***(T4) No. 8 — Transmission ground:***	Is the resistance more than 1 MΩ?	Even if the SPORT indicator light is blinking, the circuit has returned to normal condition at this time. A temporary poor contact of connector or harness may be the cause. Repair the harness or poor contact in the transfer duty solenoid and transmission.	Repair the short circuit in harness between transfer duty solenoid and transmission connector.

X: DTC P1708 THROTTLE POSITION SENSOR CIRCUIT LOW INPUT

DTC DETECTING CONDITION:

The input signal circuit of accelerator pedal position sensor is open or shorted.

TROUBLE SYMPTOM:

- Shift point is too high or too low.
- Excessive shift shock
- Tight corner braking phenomenon is occurred.

WIRING DIAGRAM:

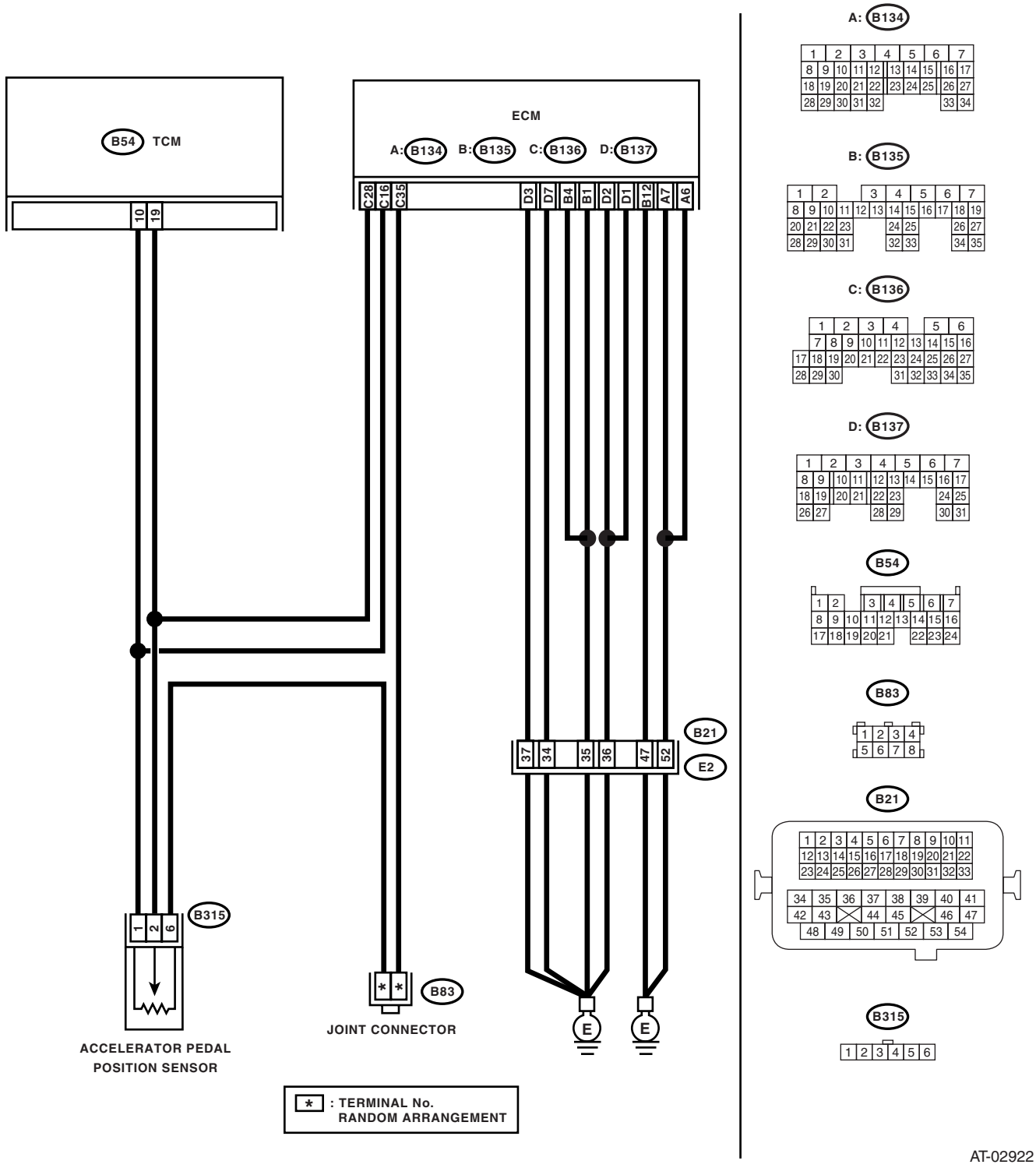

	Step	Check	Yes	No
1	**CHECK ENGINE GROUND TERMINALS.**	Have engine ground terminals been tightened securely?	Go to step **2.**	Tighten the engine ground terminals.
2	**CHECK GROUND CIRCUIT FOR ECM.** 1) Turn the ignition switch to OFF. 2) Disconnect the connector from ECM. 3) Measure the resistance of harness between ECM and engine ground. ***Connector & terminal*** ***(B134) No. 7 — Engine ground:*** ***(B134) No. 6 — Engine ground:*** ***(B135) No. 1 — Engine ground:*** ***(B135) No. 4 — Engine ground:*** ***(B135) No. 12 — Engine ground:*** ***(B137) No. 1 — Engine ground:*** ***(B137) No. 2 — Engine ground:*** ***(B137) No. 3 — Engine ground:*** ***(B137) No. 7 — Engine ground:***	Is the resistance less than 5 Ω?	Go to step **3.**	Repair the open circuit in harness between ECM connector and engine grounding terminal.
3	**CHECK ACCELERATOR PEDAL POSITION SENSOR.** 1) Disconnect the connectors from accelerator pedal position sensor. 2) Measure the resistance between accelerator pedal position sensor connector receptacle's terminals. ***Connector & terminal*** ***No. 1 — No. 6:***	Is the resistance 0.75 — 3.15 kΩ?	Go to step **4.**	Replace the accelerator pedal position sensor.
4	**CHECK ACCELERATOR PEDAL POSITION SENSOR.** Measure the resistance between accelerator pedal position sensor connector receptacle's terminals. ***Connector & terminal*** ***No. 6 — No. 2:***	Is the resistance 0.15 — 0.63 kΩ?	Go to step **5.**	Replace the accelerator pedal position sensor.
5	**CHECK HARNESS CONNECTOR BETWEEN TCM AND ACCELERATOR PEDAL POSITION SENSOR.** 1) Disconnect the connector from TCM. 2) Measure the resistance of harness between TCM and accelerator pedal position sensor connector. ***Connector & terminal*** ***(B54) No. 19 — (B315) No. 2:***	Is the resistance less than 1 Ω?	Go to step **6.**	Repair the open circuit in harness between TCM and accelerator pedal position sensor connector, and poor contact in coupling connector.
6	**CHECK HARNESS CONNECTOR BETWEEN TCM AND ACCELERATOR PEDAL POSITION SENSOR.** Measure the resistance of harness between TCM connector and chassis ground. ***Connector & terminal*** ***(B54) No. 19 — Chassis ground:***	Is the resistance more than 1 MΩ?	Go to step **7.**	Repair the short circuit in harness between TCM and accelerator pedal position sensor connector.
7	**CHECK HARNESS CONNECTOR BETWEEN ECM AND ACCELERATOR PEDAL POSITION SENSOR.** 1) Remove the connector from ECM. 2) Measure the resistance of harness between the accelerator pedal position sensor connector and chassis ground. ***Connector & terminal*** ***(B315) No. 6 — Chassis ground:***	Is the resistance more than 1 MΩ?	Go to step **8.**	Repair the short circuit in harness between ECM and accelerator pedal position sensor.

	Step	Check	Yes	No
8	**CHECK INPUT SIGNAL FOR TCM USING SUBARU SELECT MONITOR.** 1) Connect the connectors to TCM, accelerator pedal position sensor, and ECM. 2) Connect the Subaru Select Monitor to data link connector. 3) Turn the ignition switch to ON (engine OFF). 4) Turn the Subaru Select Monitor switch to ON. 5) Fully close the throttle. 6) Read the data of “Throttle Sensor Voltage” using Subaru Select Monitor. • Accelerator pedal position sensor input signal is indicated.	Is the voltage more than 0.2 V?	Even if the SPORT indicator light is blinking, the circuit has returned to normal condition at this time. A temporary poor contact of connector or harness may be the cause. Repair the harness or connector in accelerator pedal position sensor circuit.	Go to step **9.**
9	**CHECK POOR CONTACT.**	Is there poor contact in accelerator pedal position sensor circuit?	Repair the poor contact.	Replace the TCM. <Ref. to 4AT-64, Transmission Control Module (TCM).>

Y: DTC P1709 THROTTLE POSITION SENSOR CIRCUIT HIGH INPUT

DTC DETECTING CONDITION:

The input signal circuit of accelerator pedal position sensor is shorted.

TROUBLE SYMPTOM:

- Shift point is too high or too low.
- Excessive shift shock
- Tight corner braking phenomenon is occurred.

WIRING DIAGRAM:

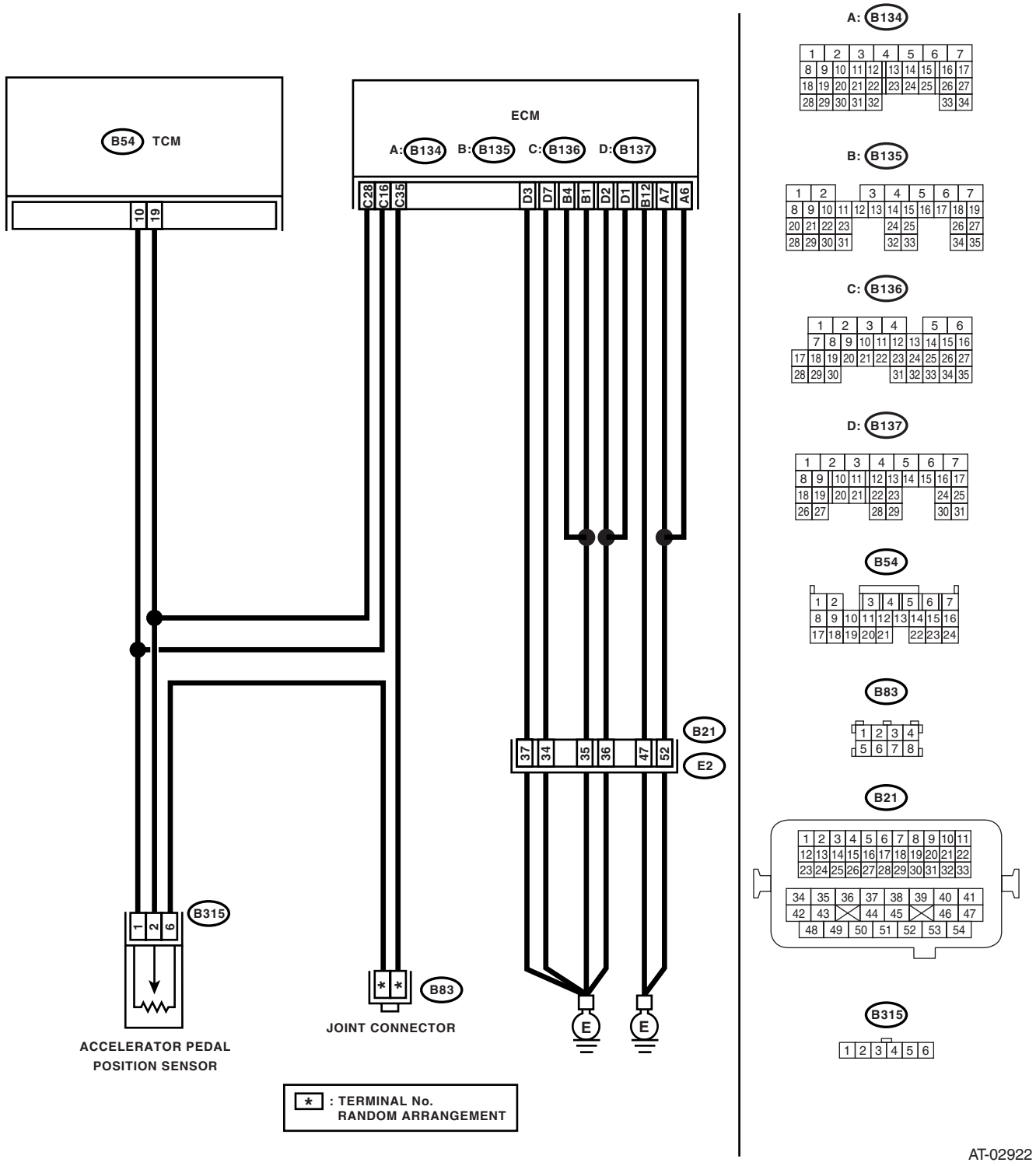

	Step	Check	Yes	No
1	**CHECK ENGINE GROUND TERMINALS.**	Have engine ground terminals been tightened securely?	Go to step **2.**	Tighten the engine ground terminals.
2	**CHECK GROUND CIRCUIT FOR ECM.** 1) Turn the ignition switch to OFF. 2) Disconnect the connector from ECM. 3) Measure the resistance of harness between ECM and engine ground. ***Connector & terminal*** ***(B134) No. 7 — Engine ground:*** ***(B134) No. 6 — Engine ground:*** ***(B135) No. 1 — Engine ground:*** ***(B135) No. 4 — Engine ground:*** ***(B135) No. 12 — Engine ground:*** ***(B137) No. 1 — Engine ground:*** ***(B137) No. 2 — Engine ground:*** ***(B137) No. 3 — Engine ground:*** ***(B137) No. 7 — Engine ground:***	Is the resistance less than 5 Ω?	Go to step **3.**	Repair the open circuit in harness between ECM connector and engine grounding terminal.
3	**CHECK ACCELERATOR PEDAL POSITION SENSOR.** 1) Disconnect the connectors from accelerator pedal position sensor. 2) Measure the resistance between accelerator pedal position sensor connector receptacle's terminals. ***Connector & terminal*** ***No. 1 — No. 6:***	Is the resistance 0.75 — 3.15 kΩ?	Go to step **4.**	Replace the accelerator pedal position sensor.
4	**CHECK ACCELERATOR PEDAL POSITION SENSOR.** Measure the resistance between accelerator pedal position sensor connector receptacle's terminals. ***Connector & terminal*** ***No. 2 — No. 6:***	Is the resistance 0.15 — 1.05 kΩ?	Go to step **5.**	Replace the accelerator pedal position sensor.
5	**CHECK HARNESS CONNECTOR BETWEEN TCM AND ACCELERATOR PEDAL POSITION SENSOR.** 1) Disconnect the connector from TCM. 2) Measure the resistance of harness between TCM connector and chassis ground. ***Connector & terminal*** ***(B54) No. 19 — Chassis ground:***	Is the resistance more than 1 MΩ?	Go to step **6.**	Repair the short circuit in harness between TCM and accelerator pedal position sensor connector.
6	**CHECK HARNESS CONNECTOR BETWEEN ECM AND ACCELERATOR PEDAL POSITION SENSOR.** 1) Remove the connector from ECM. 2) Measure the resistance of harness between ECM connector and accelerator pedal position sensor connector. ***Connector & terminal*** ***(B135) No. 6 — (B136) No. 35:***	Is the resistance less than 1 Ω?	Go to step **7.**	Repair the open circuit in harness between ECM and accelerator pedal position sensor.

	Step	Check	Yes	No
7	**CHECK INPUT SIGNAL FOR TCM USING SUBARU SELECT MONITOR.** 1) Connect the connectors to TCM, accelerator pedal position sensor and ECM. 2) Connect the Subaru Select Monitor to data link connector. 3) Turn the ignition switch to ON (engine OFF). 4) Turn the Subaru Select Monitor switch to ON. 5) Fully open the throttle. 6) Read the data of “Throttle Sensor Voltage” using Subaru Select Monitor. • Accelerator pedal position sensor input signal is indicated.	Is the voltage less than 4.6 V?	Go to step **8.**	Even if the SPORT indicator light is blinking, the circuit has returned to normal condition at this time. A temporary poor contact of connector or harness may be the cause. Repair the harness or connector in accelerator pedal position sensor circuit.
8	**CHECK POOR CONTACT.**	Is there poor contact in accelerator pedal position sensor circuit?	Repair the poor contact.	Replace the TCM. <Ref. to 4AT-64, Transmission Control Module (TCM).>

Z: DTC P1714 THROTTLE POSITION SENSOR POWER SUPPLY CIRCUIT

DTC DETECTING CONDITION:

The power supply circuit of accelerator pedal position sensor is open or shorted.

TROUBLE SYMPTOM:

- Shift point is too high or too low.
- Excessive shift shock
- Tight corner braking phenomenon is occurred.

WIRING DIAGRAM:

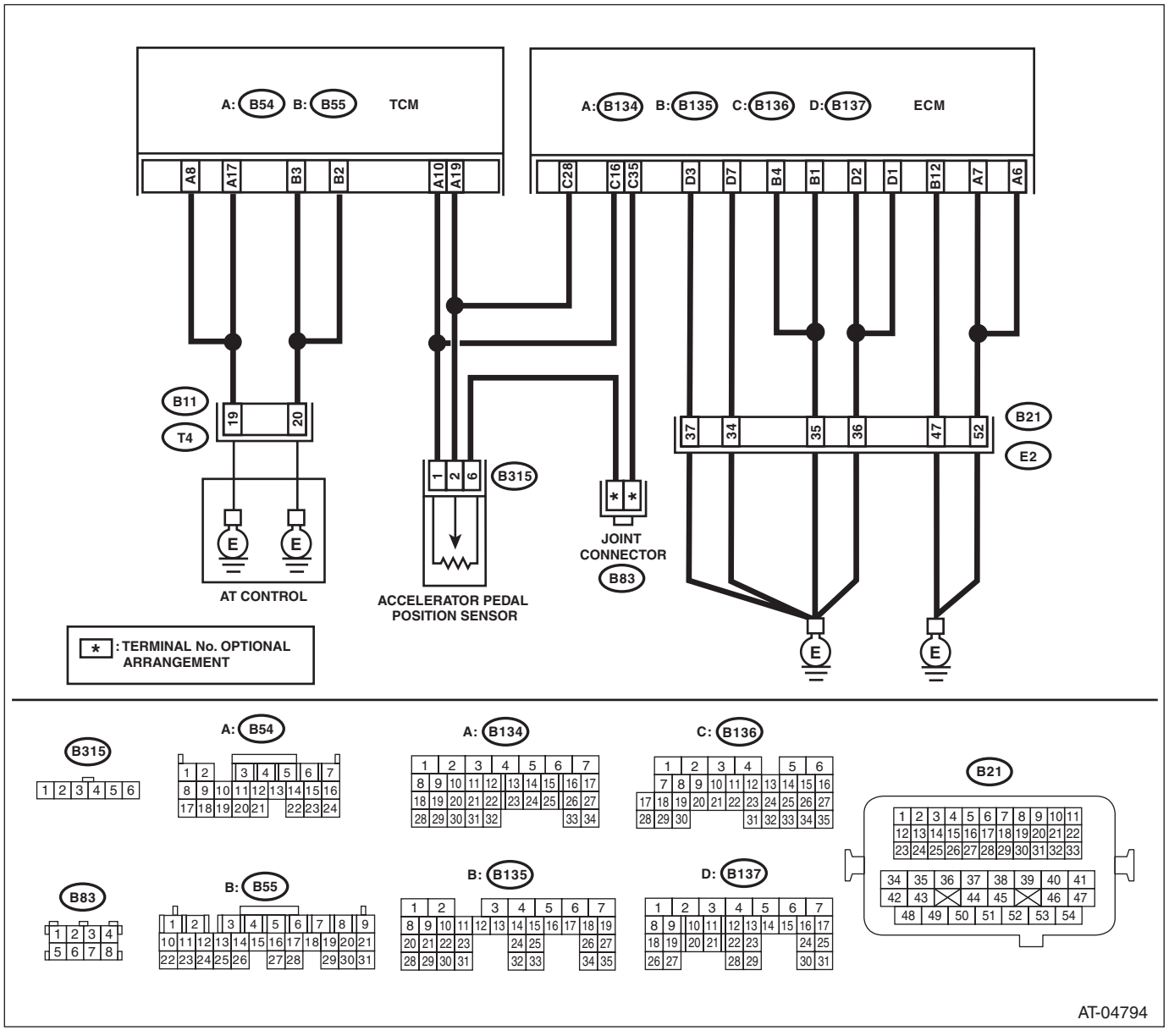

Step		Check	Yes	No
1	**CHECK TCM SIGNAL.** 1) Connect the Subaru Select Monitor to the data link connector. 2) Turn the ignition switch to ON. 3) Read the data of “Throttle Sensor Power” using Subaru Select Monitor.	Is the value less than 4.75 V?	Go to step **2.**	Go to step **5.**

	Step	Check	Yes	No
2	**CHECK HARNESS CONNECTOR BETWEEN TCM AND ACCELERATOR PEDAL POSITION SENSOR.** 1) Turn the ignition switch to OFF. 2) Disconnect the connector from TCM. 3) Measure the resistance of harness between TCM and accelerator pedal position sensor connector. ***Connector & terminal*** ***(B54) No. 10 — (B315) No. 1:***	Is the resistance less than 1 Ω?	Go to step **3.**	Repair the open circuit of harness between TCM and accelerator pedal position sensor connector, and poor contact of connector.
3	**CHECK HARNESS CONNECTOR BETWEEN TCM AND ECM.** 1) Disconnect the connector from ECM. 2) Measure the resistance of harness between TCM and ECM connector. ***Connector & terminal*** ***(B54) No. 10 — (B136) No. 16:***	Is the resistance less than 1 Ω?	Go to step **4.**	Repair the open circuit of harness between TCM and ECM connector, and poor contact of connector.
4	**CHECK HARNESS CONNECTOR AMONG TCM, ACCELERATOR PEDAL POSITION SENSOR AND ECM.** Measure the resistance of harness between TCM connector and chassis ground. ***Connector & terminal*** ***(B54) No. 10 — Chassis ground:***	Is the resistance 1 MΩ or more?	Go to step **5.**	Repair the short circuit of harness among TCM, accelerator pedal position sensor and ECM connector.
5	**CHECK HARNESS CONNECTOR BETWEEN TCM CONNECTOR AND TRANSMISSION GROUND.** 1) Disconnect the connector from transmission. 2) Measure the resistance of harness between TCM and transmission connector. ***Connector & terminal*** ***(B54) No. 8 — (B11) No. 19:*** ***(B54) No. 17 — (B11) No. 19:*** ***(B55) No. 2 — (B11) No. 20:*** ***(B55) No. 3 — (B11) No. 20:***	Is the resistance less than 1 Ω?	Go to step **6.**	Repair the open circuit of harness between TCM and transmission connector, and poor contact of connector.
6	**CHECK CIRCUIT BETWEEN TRANSMISSION CONNECTOR AND TRANSMISSION GROUND.** Measure the resistance of harness between transmission connector and transmission case. ***Connector & terminal*** ***(B11) No. 19 — Transmission ground:*** ***(B11) No. 20 — Transmission ground:***	Is the resistance less than 1 Ω?	Go to step **7.**	Repair the open circuit of harness between transmission connector and transmission ground, poor contact of connector and insufficient tightening of ground bolt.

	Step	Check	Yes	No
7	**CHECK ECM POWER SUPPLY AND GROUND LINE.** Check ECM power supply circuit and ground circuit. <Ref. to EN(H4SO)(diag)-60, CHECK POWER SUPPLY AND GROUND LINE OF ENGINE CONTROL MODULE (ECM), Diagnostics for Engine Starting Failure.> <Ref. to EN(H4SO U5)(diag)-63, CHECK POWER SUPPLY AND GROUND LINE OF ENGINE CONTROL MODULE (ECM), Diagnostics for Engine Starting Failure.> <Ref. to EN(H4DOTC)(diag)-62, CHECK POWER SUPPLY AND GROUND LINE OF ENGINE CONTROL MODULE (ECM), Diagnostics for Engine Starting Failure.> <Ref. to EN(H6DO)(diag)-60, CHECK POWER SUPPLY AND GROUND LINE OF ENGINE CONTROL MODULE (ECM), Diagnostics for Engine Starting Failure.>	Is there any abnormal condition?	Repair the malfunction of ECM power supply circuit and ground circuit.	Replace the TCM. <Ref. to 4AT-64, Transmission Control Module (TCM).>

AA:DTC P1718 CAN COMMUNICATION CIRCUIT

NOTE:
Refer to “Body Integrated Unit” for diagnosis of P1718. <Ref. to LAN(diag)-2, Basic Diagnostic Procedure.>

AB:DTC P1817 SPORT MODE SWITCH CIRCUIT

DTC DETECTING CONDITION:

Input signal circuit of SPORT shift switch is open or shorted.

TROUBLE SYMPTOM:

- The manual mode is not engaged.
- The SPORT indicator light does not illuminate.
- No SPORT mode occurs.

WIRING DIAGRAM:

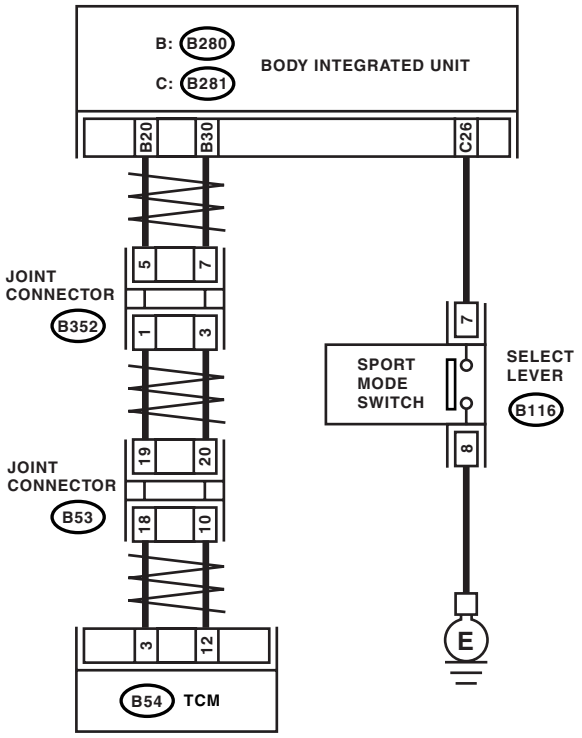

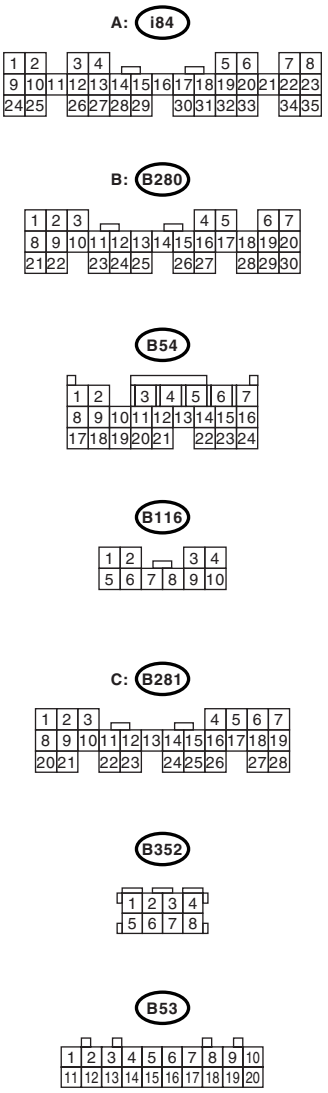

AT-02923

	Step	Check	Yes	No
1	**CHECK BODY INTEGRATED UNIT.** 1) Connect the Subaru Select Monitor to data link connector. 2) Turn the ignition switch to ON. (Engine OFF) 3) Read the DTC of body integrated unit using Subaru Select Monitor. <Ref. to LAN(diag)-14, OPERATION, Subaru Select Monitor.>	Is DTC displayed?	Perform the diagnosis according to DTC.	Go to step **2.**
2	**CHECK INPUT SIGNAL TO BODY INTEGRATED UNIT.** 1) Shift the select lever to “P” range. 2) Read the Tiptronic Mode Switch data of body integrated unit using Subaru Select Monitor. <Ref. to LAN(diag)-14, OPERATION, Subaru Select Monitor.>	Is the OFF displayed?	Go to step **3.**	Go to step **7.**
3	**CHECK INPUT SIGNAL TO BODY INTEGRATED UNIT.** 1) Shift the select lever from “P” to “D” range. 2) Read the Tiptronic Mode Switch data of body integrated unit using Subaru Select Monitor. <Ref. to LAN(diag)-14, OPERATION, Subaru Select Monitor.>	Is the indication per range OFF?	Go to step **4.**	Replace the select lever assembly. <Ref. to CS-20, Select Lever.>
4	**CHECK INPUT SIGNAL TO BODY INTEGRATED UNIT.** 1) Shift the select lever to SPORT mode. 2) Read the Tiptronic Mode Switch data of body integrated unit using Subaru Select Monitor. <Ref. to LAN(diag)-14, OPERATION, Subaru Select Monitor.>	Is the ON displayed?	Go to step **5.**	Replace the select lever assembly. <Ref. to CS-20, Select Lever.>
5	**CHECK INHIBITOR SWITCH.** Shift the select lever from “P” to “D” range.	Is the indication of range position indicator light in combination meter synchronized with position of select lever?	Go to step **6.**	Adjust the inhibitor switch and select cable. <Ref. to 4AT-48, ADJUSTMENT, Inhibitor Switch.> <Ref. to CS-26, ADJUSTMENT, Select Cable.>
6	**CHECK INPUT SIGNAL TO TCM.** 1) Shift the select lever from “P” to “D” range. 2) Read the Tiptronic Mode Switch data of TCM unit using Subaru Select Monitor. <Ref. to 4AT(D)(diag)-14, OPERATION, Subaru Select Monitor.>	Is the indication per range OFF?	Even if the SPORT indicator light is blinking, the circuit has returned to normal condition at this time. A temporary short circuit of connector or harness may be the cause. Repair the harness or connector.	Replace the TCM. <Ref. to 4AT-64, Transmission Control Module (TCM).>
7	**CHECK HARNESS BETWEEN BODY INTEGRATED UNIT AND SPORT SHIFT SWITCH.** 1) Turn the ignition switch to OFF. 2) Disconnect the harness connector from body integrated unit and select lever. 3) Measure the resistance of body integrated unit and chassis ground. ***Connector & terminal*** ***(B281) No. 26 — Chassis ground:***	Is the resistance more than 1 MΩ?	Go to step **8.**	Repair the short circuit in harness between body integrated unit and SPORT shift switch.

	Step	Check	Yes	No
8	**CHECK SPORT SHIFT SWITCH.** 1) Shift the select lever to “P” range. 2) Measure the resistance of SPORT shift switch connector terminals. ***Terminals*** ***No. 7 — No. 8***	Is the resistance more than 1 MΩ?	Check the body integrated unit.	Replace the select lever assembly. <Ref. to CS-20, Select Lever.>

14.Diagnostic Procedure without Diagnostic Trouble Code (DTC)

A: INSPECTION OF FWD SWITCH

DIAGNOSIS:

- The LED does not come on even if FWD switch is ON.
- The FWD signal circuit is open or shorted.

WIRING DIAGRAM:

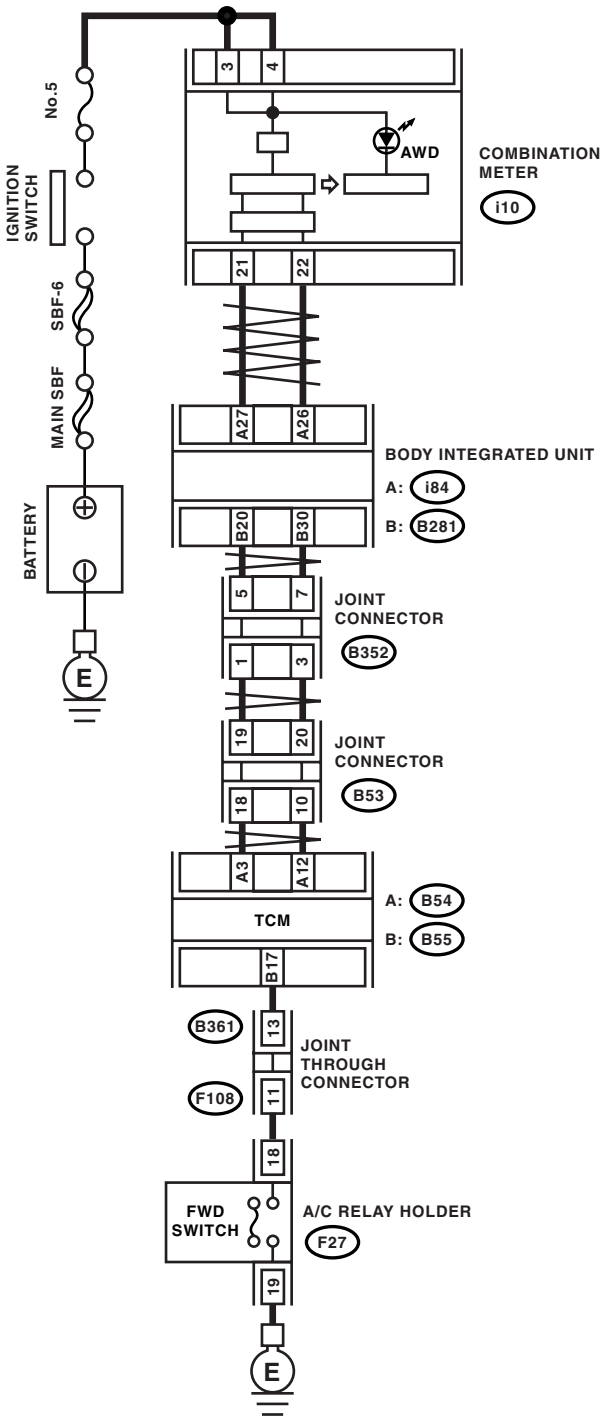

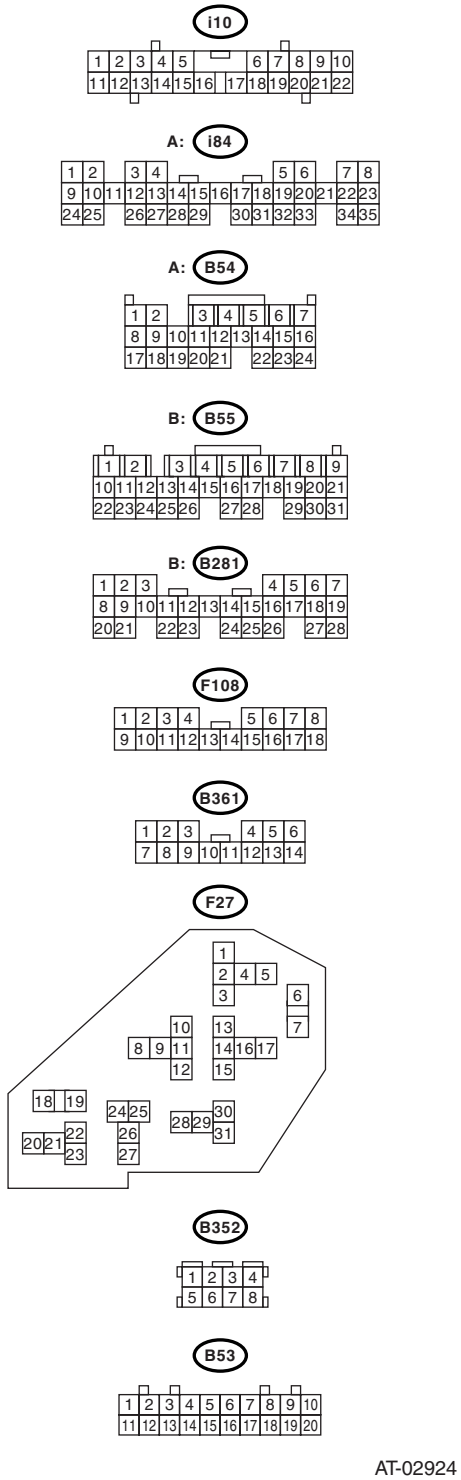

AT-02924

	Step	Check	Yes	No
1	**CHECK SPARE FUSE.**	Is the spare fuse OK?	Go to step **2.**	Replace the fuse.
2	**CHECK FWD SWITCH.** Connect the Subaru Select Monitor to data link connector.	When the fuse is inserted to FWD switch, does the LED light up?	Go to step **3.**	Go to step **4.**
3	**CHECK COMBINATION METER.**	Does the AWD warning light illuminate?	Go to INSPECTION FOR SPORT SHIFT SWITCH. <Ref. to 4AT(D)(diag)-94, INSPECTION OF SPORT SHIFT SWITCH, Diagnostic Procedure without Diagnostic Trouble Code (DTC).>	Go to step **9.**
4	**CHECK HARNESS CONNECTOR BETWEEN TCM AND FWD SWITCH.** 1) Turn the ignition switch to OFF. 2) Disconnect the connector from TCM. 3) Measure the resistance of harness between TCM and FWD switch connector. ***Connector & terminal*** ***(B55) No. 17 — (F27) No. 18:***	Is the resistance less than 1 Ω?	Go to step **5.**	Repair the open circuit in harness between TCM and FWD switch connector.
5	**CHECK HARNESS CONNECTOR BETWEEN FWD SWITCH AND CHASSIS GROUND.** Measure the resistance of harness between FWD switch and chassis ground. ***Connector & terminal*** ***(F27) No. 19 — Chassis ground:***	Is the resistance less than 1 Ω?	Go to step **6.**	Repair the open circuit in harness between FWD switch connector and chassis ground.
6	**CHECK HARNESS CONNECTOR BETWEEN TCM AND FWD SWITCH.** Measure the resistance of harness connector between TCM and body to make sure that circuit does not short. ***Connector & terminal*** ***(B55) No. 17 — Chassis ground:***	Is the resistance more than 1 MΩ?	Go to step **7.**	Repair the short circuit in harness between TCM and FWD switch connector.
7	**CHECK INPUT SIGNAL FOR TCM.** 1) Turn the ignition switch to OFF. 2) Connect the connector to TCM. 3) Turn the ignition switch to ON. 4) Measure the signal voltage for TCM while installing the fuse to FWD switch connector. ***Connector & terminal*** ***(B55) No. 17 (+) — Chassis ground (−):***	Is the voltage less than 1 V?	Go to step **8.**	Go to step **10.**
8	**CHECK INPUT SIGNAL FOR TCM.** Measure the signal voltage for TCM while removing the fuse from FWD switch connector. ***Connector & terminal*** ***(B55) No. 17 (+) — Chassis ground (−):***	Is the voltage more than 10.5 V?	Go to step **9.**	Replace the TCM. <Ref. to 4AT-64, Transmission Control Module (TCM).>
9	**CHECK BODY INTEGRATED UNIT.** Check DTC of body integrated unit.	Is DTC of CAN communication displayed?	Perform the diagnosis according to DTC.	Go to step **10.**
10	**CHECK COMBINATION METER.** Check the AWD warning light. <Ref. to IDI-3, INSPECTION, Combination Meter System.>	Is the AWD warning light OK?	Go to step **11.**	Replace the combination meter assembly. <Ref. to IDI-15, Combination Meter.>

Step		Check	Yes	No
11	CHECK POOR CONTACT.	Is there poor contact in FWD switch circuit?	Repair the poor contact.	Replace the TCM. <Ref. to 4AT-64, Transmission Control Module (TCM).>

B: INSPECTION OF SPORT SHIFT SWITCH

DIAGNOSIS:
Input signal circuit of SPORT shift switch is open or shorted.
TROUBLE SYMPTOM:
Does not shift gears in manual mode.
WIRING DIAGRAM:

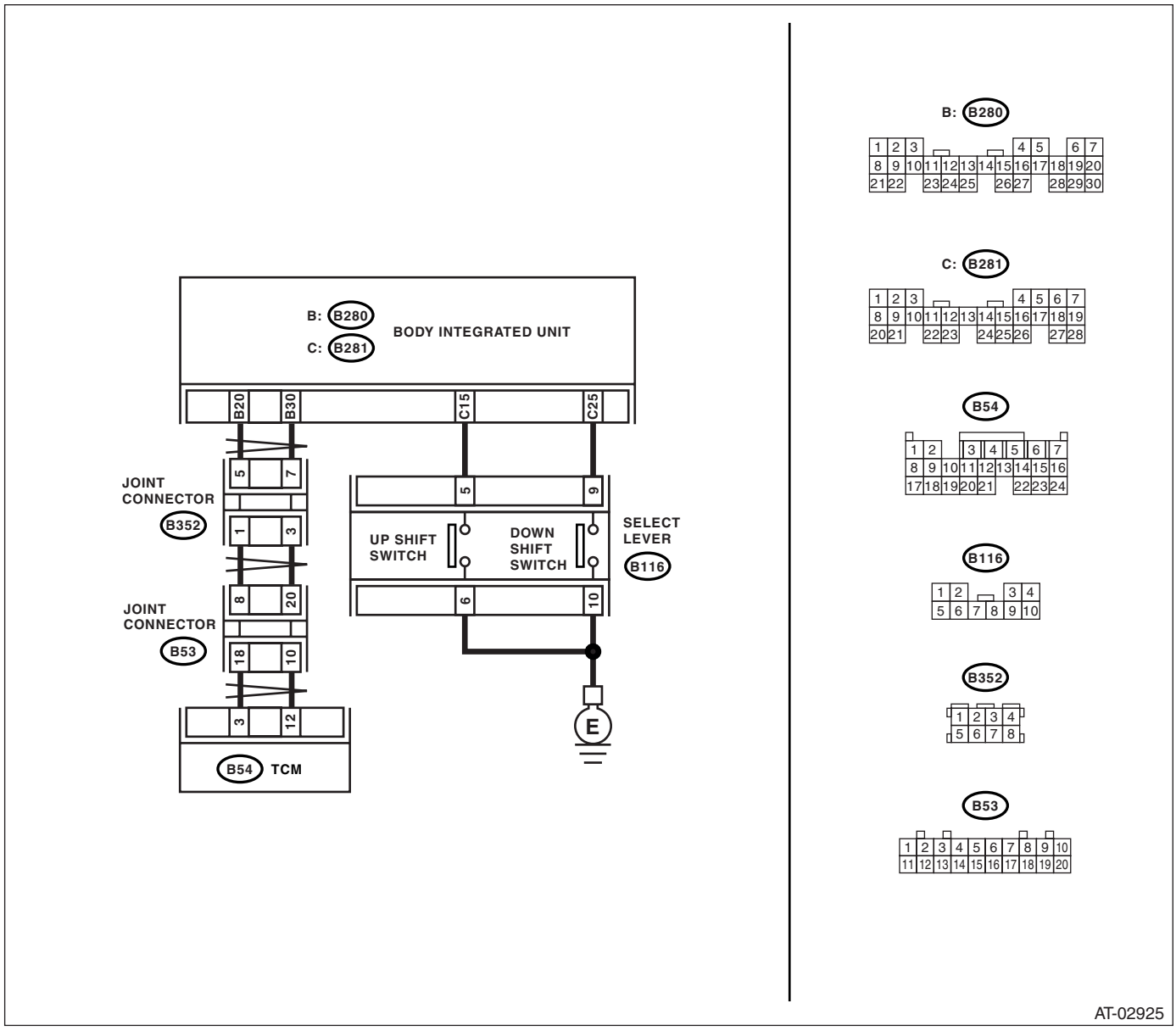

Step		Check	Yes	No
1	**CHECK SPORT SHIFT SWITCH.** 1) Shift the select lever to manual mode. 2) Shift and hold the select lever to up side. 3) Read the “Up Switch” data of TCM using Subaru Select Monitor. <Ref. to 4AT(D)(diag)-14, READ CURRENT DATA, OPERATION, Subaru Select Monitor.>	Is ON displayed?	Go to step **2.**	Go to step **3.**

	Step	Check	Yes	No
2	**CHECK SPORT SHIFT SWITCH.** 1) Shift and hold the select lever to down side. 2) Read the "Down Switch" data of TCM using Subaru Select Monitor.	Is ON displayed?	Go to the procedure "INSPECTION FOR SPORT SHIFT INDICATOR LIGHT". <Ref. to 4AT(D)(diag)-98, INSPECTION OF SPORT SHIFT INDICATOR, Diagnostic Procedure without Diagnostic Trouble Code (DTC).>	Go to step **12.**
3	**CHECK BODY INTEGRATED UNIT.** 1) Turn the ignition switch to ON. 2) Shift and hold the select lever to up side. 3) Read the "TIP UP SW input" data of body integrated unit using Subaru Select Monitor. <Ref. to LAN(diag)-14, OPERATION, Subaru Select Monitor.>	Is ON displayed?	Go to step **4.**	Go to step **5.**
4	**CHECK BODY INTEGRATED UNIT.** Check the DTC of body integrated unit. <Ref. to LAN(diag)-14, OPERATION, Subaru Select Monitor.>	Is DTC of CAN communication displayed?	Perform the diagnosis according to DTC.	Check the TCM.
5	**CHECK SPORT SHIFT SWITCH GROUND CIRCUIT.** 1) Turn the ignition switch to OFF. 2) Disconnect the connector from SPORT shift switch. 3) Measure the resistance of harness between SPORT shift switch connector and chassis ground. ***Connector & terminal*** ***(B116) No. 6 — Chassis ground:***	Is the resistance less than 1 Ω?	Go to step **6.**	Repair the open circuit in harness between SPORT shift switch and chassis ground.
6	**CHECK SPORT SHIFT SWITCH.** Measure the resistance between SPORT shift switch terminals. ***Connector & terminal*** ***(B116) No. 6 — No. 5:***	Is the resistance more than 1 MΩ?	Go to step **7.**	Replace the guide plate assembly.
7	**CHECK SPORT SHIFT SWITCH.** 1) Shift and hold the select lever to up side. 2) Measure the resistance between SPORT shift switch terminals. ***Connector & terminal*** ***(B116) No. 6 — No. 5:***	Is the resistance less than 1 Ω?	Go to step **8.**	Replace the guide plate assembly.
8	**CHECK HARNESS CONNECTOR BETWEEN BODY INTEGRATED UNIT AND SPORT SHIFT SWITCH.** 1) Disconnect the connector from body integrated unit. 2) Measure the resistance of harness between body integrated unit and SPORT shift switch connector. ***Connector & terminal*** ***(B116) No. 5 — (B281) No. 15:***	Is the resistance less than 1 Ω?	Go to step **9.**	Repair the open circuit in harness between SPORT shift switch connector and TCM connector, or poor contact in coupling connector.

	Step	Check	Yes	No
9	**CHECK HARNESS CONNECTOR BETWEEN TCM AND SPORT SHIFT SWITCH.** Measure the resistance of harness between SPORT shift switch connector and chassis ground. ***Connector & terminal*** ***(B116) No. 5 — Chassis ground:***	Is the resistance more than 1 MΩ?	Go to step **10.**	Repair the short circuit in harness between SPORT shift switch connector and TCM connector.
10	**CHECK INPUT SIGNAL TO BODY INTEGRATED UNIT.** 1) Connect all the connectors. 2) Turn the ignition switch to ON (engine OFF). 3) Check the signal voltage for body integrated unit. ***Connector & terminal*** ***(B281) No. 15 (+) — Chassis ground (–):***	Is the voltage 1.5 — 8 V?	Go to step **11.**	Replace the body integrated unit.
11	**CHECK INPUT SIGNAL TO BODY INTEGRATED UNIT.** 1) Shift and hold the select lever to up side. 2) Check the signal voltage for body integrated unit. ***Connector & terminal*** ***(B281) No. 15 (+) — Chassis ground (–):***	Is the voltage less than 1 V?	Go to step **21.**	Replace the body integrated unit.
12	**CHECK BODY INTEGRATED UNIT.** 1) Turn the ignition switch to ON. 2) Shift and hold the select lever to down side. 3) Read the “TIP DOWN SW input” switch data of body integrated unit using Subaru Select Monitor. <Ref. to LAN(diag)-14, OPERATION, Subaru Select Monitor.>	Is ON displayed?	Go to step **13.**	Go to step **14.**
13	**CHECK BODY INTEGRATED UNIT.** Check the DTC of body integrated unit.	Is DTC of CAN communication displayed?	Perform the diagnosis according to DTC.	Check the TCM.
14	**CHECK SPORT SHIFT SWITCH CIRCUIT.** 1) Turn the ignition switch to OFF. 2) Disconnect the connector from SPORT shift switch. 3) Measure the resistance of harness between SPORT shift switch connector and chassis ground. ***Connector & terminal*** ***(B116) No. 10 (+) — Chassis ground (–):***	Is the resistance less than 1 Ω?	Go to step **15.**	Repair the open circuit in harness between SPORT shift switch and chassis ground.
15	**CHECK SPORT SHIFT SWITCH.** Measure the resistance between SPORT shift switch terminals. ***Connector & terminal*** ***(B116) No. 10 — No. 9:***	Is the resistance more than 1 MΩ?	Go to step **16.**	Replace the guide plate assembly.
16	**CHECK SPORT SHIFT SWITCH.** 1) Shift and hold the select lever to down side. 2) Measure the resistance between SPORT shift switch terminals. ***Connector & terminal*** ***(B116) No. 10 — No. 9:***	Is the resistance less than 1 Ω?	Go to step **17.**	Replace the guide plate assembly.

	Step	Check	Yes	No
17	**CHECK HARNESS CONNECTOR BETWEEN BODY INTEGRATED UNIT AND SPORT SHIFT SWITCH.** 1) Disconnect the connector from body integrated unit. 2) Measure the resistance of harness between body integrated unit and SPORT shift switch connector. ***Connector & terminal*** ***(B116) No. 9 — (B281) No. 25:***	Is the resistance less than 1 Ω?	Go to step **18.**	Repair the open circuit in harness between SPORT shift switch connector and TCM connector, or poor contact in coupling connector.
18	**CHECK HARNESS CONNECTOR BETWEEN BODY INTEGRATED UNIT AND SPORT SHIFT SWITCH.** Measure the resistance of harness between SPORT shift switch connector and chassis ground. ***Connector & terminal*** ***(B116) No. 9 — Chassis ground:***	Is the resistance more than 1 MΩ?	Go to step **19.**	Repair the short circuit in harness between SPORT shift switch connector and TCM connector.
19	**CHECK THE INPUT SIGNAL TO BODY INTEGRATED UNIT.** 1) Connect all the connectors. 2) Turn the ignition switch to ON (engine OFF). 3) Check the signal voltage for body integrated unit. ***Connector & terminal*** ***(B281) No. 25 (+) — Chassis ground (−):***	Is the voltage 1.5 — 8 V?	Go to step **20.**	Go to step **21.**
20	**CHECK THE INPUT SIGNAL TO BODY INTEGRATED UNIT.** 1) Shift and hold the select lever to down side. 2) Check the signal voltage for body integrated unit. ***Connector & terminal*** ***(B281) No. 25 (+) — Chassis ground (−):***	Is the voltage less than 1 V?	Go to step **21.**	Replace the body integrated unit. <Ref. to 4AT-64, Transmission Control Module (TCM).>
21	**CHECK POOR CONTACT.**	Is there poor contact in SPORT shift switch circuit?	Repair the poor contact.	A temporary poor contact of SPORT shift switch connector or harness.

C: INSPECTION OF SPORT SHIFT INDICATOR

DIAGNOSIS:

Output signal circuit of SPORT shift indicator is open or shorted.

TROUBLE SYMPTOM:

- SPORT shift indicator does not display or remains displayed.
- SPORT shift indicator display does not change.

WIRING DIAGRAM:

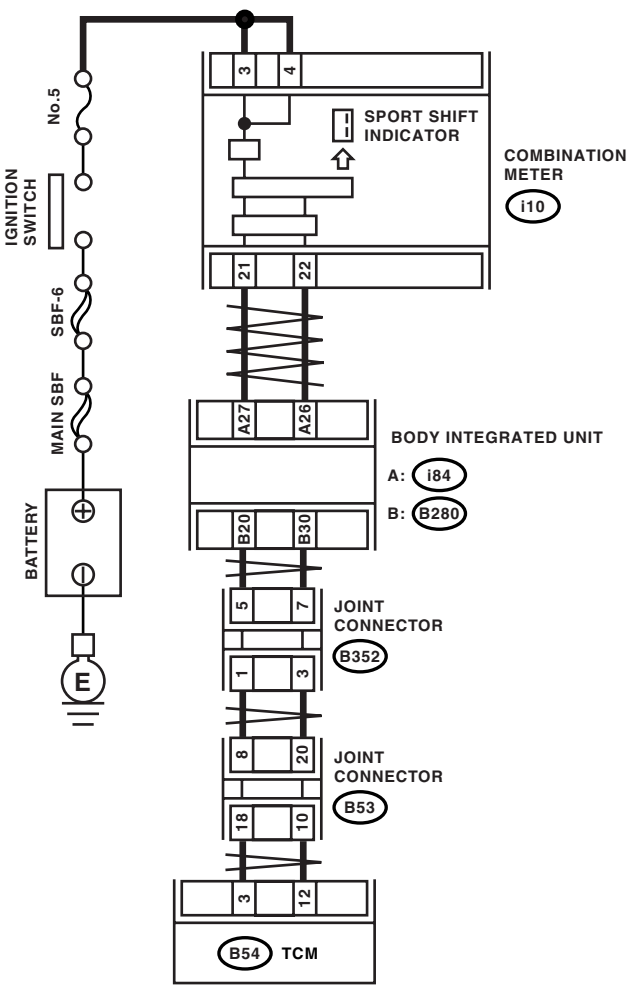

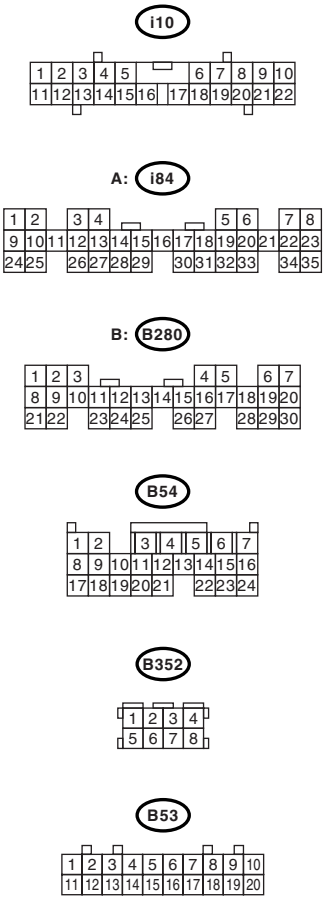

AT-02926

	Step	Check	Yes	No
1	**CHECK BODY INTEGRATED UNIT.** Check DTC of body integrated unit.	Is DTC of CAN communication displayed?	Perform the diagnosis according to DTC.	Go to step **2.**
2	**CHECK TCM.** 1) Turn the ignition switch to OFF. 2) Connect the Subaru Select Monitor to data link connector. 3) Turn the ignition switch to ON. (Engine OFF) 4) Turn Subaru Select Monitor switch to ON. 5) Shift the select lever to manual mode side. 6) Read the “Gear Position” data of TCM using Subaru Select Monitor.	Is the gear position 1?	Go to step **3.**	Replace the TCM. <Ref. to 4AT-64, Transmission Control Module (TCM).>
3	**CHECK TCM.** 1) Up-shift the select lever. 2) Read the “Gear Position” data of TCM using Subaru Select Monitor.	Is the gear position 2?	Go to step **4.**	Replace the TCM. <Ref. to 4AT-64, Transmission Control Module (TCM).>
4	**CHECK BODY INTEGRATED UNIT.** Read the data of SPORT shift gear position using Subaru Select Monitor.	Is the SPORT shift gear position 2?	Go to step **5.**	Check the body integrated unit.
5	**CHECK COMBINATION METER.** <Ref. to IDI-3, INSPECTION, Combination Meter System.>	Is the SPORT shift indicator OK?	Check the buzzer. <Ref. to 4AT(D)(diag)-102, Diagnostics with Phenomenon.>	Replace the combination meter assembly. <Ref. to IDI-15, Combination Meter.>

D: INSPECTION OF BUZZER

DIAGNOSIS:
Output signal circuit of buzzer is open or shorted.
TROUBLE SYMPTOM:
Buzzer remains sounded.
WIRING DIAGRAM:

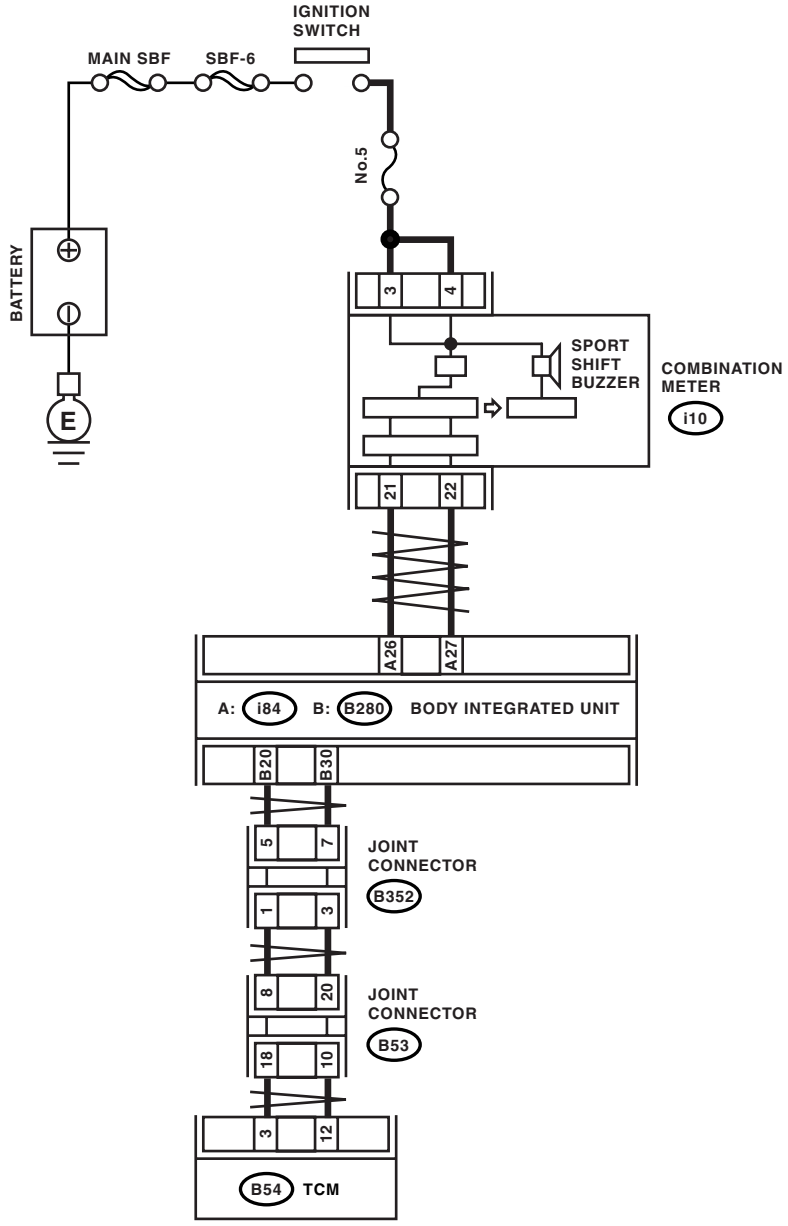

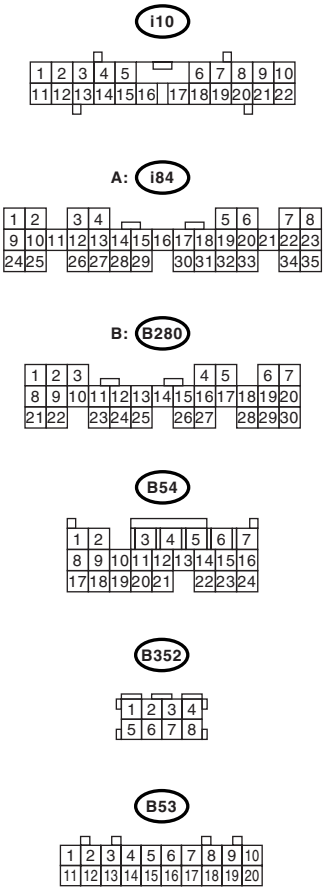

AT-02927

	Step	Check	Yes	No
1	**CHECK BODY INTEGRATED UNIT.** 1) Turn the ignition switch to OFF. 2) Connect the Subaru Select Monitor to data link connector. 3) Turn the ignition switch to ON. (Engine OFF) 4) Turn Subaru Select Monitor switch to ON. 5) Read the data of “SPORT shift (buzzer)” of body integrated unit using Subaru Select Monitor.	Is the SPORT shift buzzer display “ON”?	Replace the TCM. <Ref. to 4AT-64, Transmission Control Module (TCM).>	Go to step **2.**
2	**CHECK COMBINATION METER.** <Ref. to IDI-3, INSPECTION, Combination Meter System.>	Is the buzzer OK?	Perform Diagnostics with Phenomenon. <Ref. to 4AT(D)(diag)-102, Diagnostics with Phenomenon.>	Replace the combination meter assembly. <Ref. to IDI-15, Combination Meter.>

15.Diagnostics with Phenomenon

A: INSPECTION

Symptom	Problem parts
Starter does not operate when select lever is in “P” or “N” range. Starter operates when select lever is in “R” or “D” range.	• Inhibitor switch • Select cable • Select lever • Starter motor and harness
Abnormal noise when select lever is in “P” or “N”.	• Strainer • Transfer duty solenoid • Oil pump • Drive plate • ATF level too high or too low
Hissing noise occurs during standing start.	• Strainer • ATF level too high or too low
Noise occurs while driving in “D1”.	• Final gear • Planetary gear • Reduction gear • Differential gear oil level too high or too low
Noise occurs while driving in “D2”.	
Noise occurs while driving in “D3”.	• Final gear • Low & reverse brake • Reduction gear • Differential gear oil level too high or too low
Noise occurs while driving in “D4”.	• Final gear • Low & reverse brake • Planetary gear • Reduction gear • Differential gear oil level too high or too low
Vehicle moves when select lever is in “N”.	• Select cable • Inhibitor switch • TCM • Low clutch
Shock occurs when select lever is shifted from “N” to “D” range.	• Accelerator pedal position sensor • ATF temperature sensor • Line pressure linear solenoid • Low clutch duty solenoid • Low clutch • TCM • Harness • Control valve • ATF deterioration
Excessive time lag occurs when select lever is shifted from “N” to “D” range.	• Control valve • Low clutch • Line pressure linear solenoid • Seal ring • Front gasket of transmission case
Shock occurs when select lever is shifted from “N” to “R” range.	• Accelerator pedal position sensor • ATF temperature sensor • Line pressure linear solenoid • TCM • Harness • Control valve • ATF deterioration
Excessive time lag occurs when select lever is shifted from “N” to “R” range.	• Control valve • Low & reverse clutch • Reverse clutch • Line pressure linear solenoid • Seal ring • Front gasket of transmission case

Symptom	Problem parts
Vehicle does not start in any shift range. (Engine stalls)	• Parking brake mechanism • Planetary gear
Vehicle does not start in any shift range. (Engine operates)	• Strainer • Line pressure linear solenoid • Control valve • Drive pinion • Hypoid gear • Axle shaft • Differential gear • Oil pump • Input shaft • Output shaft • Planetary gear • Drive plate • ATF level too low. • Front gasket of transmission case
Vehicle does not start in “R” range only. (Engine operates)	• Select cable • Select lever • Line pressure linear solenoid • Control valve • Low & reverse clutch • Reverse clutch
Vehicle does not start in “R” range only. (Engine stalls)	• Low clutch • 2-4 brake • Planetary gear • Parking brake mechanism
Vehicle does not start in “D” range. (Engine operates)	• Low clutch • One-way clutch
Vehicle does not start in “D” range. (Engine stalls)	• Reverse clutch
Vehicle does not start in “R” range only. (Engine operates)	• Control valve
Acceleration during standing start is poor. (High rpm stall)	• Control valve • Low clutch • Reverse clutch • ATF level too low. • ATF deterioration • Front gasket of transmission case • Differential gear oil level too high or too low
Acceleration during standing start is poor. (Low rpm stall)	• Oil pump • Torque converter one-way clutch • Engine performance
Acceleration is poor when select lever is in “D” range. (Normal rpm stall)	• TCM • Control valve • High clutch • 2-4 brake • Planetary gear
Acceleration is poor when select lever is in “R” range. (Normal rpm stall)	• Control valve • High clutch • 2-4 brake • Planetary gear
No shift occurs from 1st to 2nd gear.	• TCM • Rear vehicle speed sensor • Front vehicle speed sensor • Accelerator pedal position sensor • Control valve • 2-4 brake
No shift occurs from 2nd to 3rd gear.	• TCM • Control valve • High clutch

Symptom	Problem parts
No shift occurs from 3rd to 4th gear.	• TCM • ATF temperature sensor • Control valve • 2-4 brake
Engine brake is not effected when select lever is shifted from 4th gear to 3rd gear.	• Inhibitor switch • TCM • Accelerator pedal position sensor • Control valve
Engine brake is not effected when select lever is shifted from 3rd gear to 2nd gear.	• Control valve
Engine brake is not effected when select lever is shifted from 2nd gear to 1st gear.	• Control valve • Low & reverse brake
Shift characteristics are erroneous.	• Inhibitor switch • TCM • Front vehicle speed sensor • Rear vehicle speed sensor • Accelerator pedal position sensor • Control valve • Ground
No lock-up occurs.	• TCM • Accelerator pedal position sensor • ATF temperature sensor • Control valve • Lock-up facing • Engine speed signal
Parking brake is not effected.	• Select cable • Select lever • Parking mechanism
Shift lever cannot be moved or is hard to move from “P” range.	
ATF spurts out.	• ATF level too high.
Differential oil spurts out.	• Differential gear oil level too high.
Differential oil level changes excessively.	• Seal pipe • Double oil seal
Odor is produced from ATF supply pipe.	• High clutch • 2-4 brake • Low & reverse clutch • Reverse clutch • Lock-up facing • ATF deterioration
Shock occurs from 1st to 2nd gear.	• TCM • Torque converter turbine speed sensor • Accelerator pedal position sensor • 2-4 brake duty solenoid • ATF temperature sensor • Line pressure linear solenoid • Control valve • 2-4 brake • ATF deterioration • Engine performance • Low & reverse duty solenoid
Slippage occurs from 1st to 2nd gear.	• TCM • Accelerator pedal position sensor • 2-4 brake duty solenoid • ATF temperature sensor • Line pressure linear solenoid • Control valve • 2-4 brake

Symptom	Problem parts
Shock occurs from 2nd to 3rd gear.	• TCM • Torque converter turbine speed sensor • Accelerator pedal position sensor • 2-4 brake duty solenoid • ATF temperature sensor • Line pressure linear solenoid • Low & reverse duty solenoid • Control valve • High clutch • 2-4 brake • ATF deterioration • Engine performance • High clutch duty solenoid
Slippage occurs from 2nd to 3rd gear.	• TCM • Accelerator pedal position sensor • 2-4 brake duty solenoid • ATF temperature sensor • Line pressure linear solenoid • Control valve • High clutch • 2-4 brake • Low & reverse duty solenoid
Shock occurs from 3rd to 4th gear.	• TCM • Torque converter turbine speed sensor • Accelerator pedal position sensor • 2-4 brake duty solenoid • ATF temperature sensor • Line pressure linear solenoid • Control valve • Low clutch duty solenoid • 2-4 brake • ATF deterioration • Engine performance
Slippage occurs from 3rd to 4th gear.	• TCM • Accelerator pedal position sensor • 2-4 brake duty solenoid • ATF temperature sensor • Line pressure linear solenoid • Control valve • 2-4 brake
Shock occurs when select lever is shifted from 3rd gear to 2nd gear.	• TCM • Torque converter turbine speed sensor • Accelerator pedal position sensor • ATF temperature sensor • Line pressure linear solenoid • Control valve • 2-4 brake duty solenoid • 2-4 brake • ATF deterioration • High clutch duty solenoid
Shock occurs when select lever is shifted from 2nd gear to 1st gear.	• TCM • Torque converter turbine speed sensor • Accelerator pedal position sensor • ATF temperature sensor • Line pressure linear solenoid • Control valve • Low & reverse clutch • ATF deterioration • 2-4 brake duty solenoid • Low & reverse brake duty solenoid

Symptom	Problem parts
Shock occurs when accelerator pedal is released at medium speeds.	• TCM • Accelerator pedal position sensor • ATF temperature sensor • Line pressure linear solenoid • Control valve • Lock-up damper • Engine performance
Vibration occurs during straight-forward operation.	• TCM • Lock-up duty solenoid • Lock-up facing • Lock-up damper
Vibration occurs during turns. (tight corner braking phenomenon)	• TCM • Front vehicle speed sensor • Rear vehicle speed sensor • Accelerator pedal position sensor • ATF temperature sensor • Transfer clutch • Transfer valve • Transfer duty solenoid • ATF deterioration • Harness
Front wheel slippage occurs during standing starts.	• TCM • Front vehicle speed sensor • Accelerator pedal position sensor • ATF temperature sensor • Control valve • Transfer clutch • Transfer valve • Transfer pipe • Transfer duty solenoid
Vehicle is not set in FWD mode.	• TCM • Transfer clutch • Transfer valve • Transfer duty solenoid
Select lever is hard to move.	• Select cable • Select lever • Detent spring • Manual plate
Select lever is excessively hard to move. (Unreasonable resistance)	• Detent spring • Manual plate
Select lever slips out of operation during acceleration or while driving on rough terrain.	• Select cable • Select lever • Detent spring • Manual plate
Manual mode is not engaged.	• SPORT shift switch • TCM • Body integrated unit
Gear does not change though the select lever is operated in manual mode.	• Up shift switch • Down shift switch • TCM • Body integrated unit

AUTOMATIC TRANSMISSION

5AT

		Page
1.	General Description	2
2.	Automatic Transmission Fluid	27
3.	Differential Gear Oil	29
4.	Road Test	30
5.	Stall Test	31
6.	Time Lag Test	33
7.	Line Pressure Test	34
8.	Transfer Clutch Pressure Test	36
9.	Automatic Transmission Assembly	38
10.	Transmission Mounting System	46
11.	Extension Case Oil Seal	48
12.	Differential Side Retainer Oil Seal	49
13.	Inhibitor Switch	50
14.	Front Vehicle Speed Sensor	51
15.	Rear Vehicle Speed Sensor	53
16.	Turbine Speed Sensor 1	56
17.	Control Valve Body	57
18.	ATF Filter	59
19.	Transmission Control Module (TCM)	60
20.	Lateral G Sensor	61
21.	ATF Cooler Pipe and Hose	62
22.	Air Breather Hose	65
23.	Oil Charge Pipe	66
24.	Torque Converter Assembly	67
25.	Drive Plate	68
26.	Extension Case and Intermediate Case	69
27.	Transfer Clutch	71
28.	Rear Drive Shaft	73
29.	Reduction Driven Gear	74
30.	Center Differential Carrier	76
31.	Parking Pawl	78
32.	Converter Case	80
33.	Oil Pump Cover	82
34.	Drive Pinion Shaft Assembly	85
35.	Front Differential Assembly	90
36.	AT Main Case	95
37.	Transmission Control Device	105

1. General Description

A: SPECIFICATION

1. TORQUE CONVERTER CLUTCH

Model	Turbo	Non-turbo
Type	Symmetric, 3 element, single stage, 2 phase torque converter	
Stall torque ratio	2.0	1.9
Nominal diameter	250 mm (9.84 in)	
Stall speed (at sea level)	3,100 — 3,500 rpm	2,400 — 2,800 rpm
One-way clutch	Sprague type one-way clutch	

2. OIL PUMP

Type	Internal gear fixed displacement pump	
Driving method	Driven by engine	
Number of teeth	Inner rotor	9
	Outer rotor	10

3. TRANSMISSION CONTROL ELEMENT

Type	5-forward, 1-reverse, double-row planetary gears
Multi-plate clutch	3 sets
Multi-plate brake	4 sets
One-way clutch (sprague type)	3 sets

4. TRANSMISSION GEAR RATIO

1st	3.540
2nd	2.264
3rd	1.471
4th	1.000
5th	0.834
Rev	2.370

5. PLANETARY GEAR AND PLATE

Model	Turbo	Non-turbo
Tooth number of front internal gear	106	
Tooth number of front carrier	28	
Tooth number of front sun gear	50	
Tooth number of mid internal gear	78	
Tooth number of mid carrier	18	
Tooth number of mid sun gear	42	
Tooth number of rear internal gear	110	
Tooth number of rear carrier	24	
Tooth number of rear sun gear	62	
Drive plate number of front brake	2	
Drive plate number of input clutch	6	5
Drive plate number of high & low reverse clutch	4	4
Drive plate number of direct clutch	5	
Drive plate number of reverse brake	5	6
Drive plate number of forward brake	5	4
Drive plate number of low coast brake	3	

6. SELECTOR POSITION

P (Park)	Transmission in neutral, output member immovable, and engine start possible
R (Reverse)	Transmission in reverse for backing
N (Neutral)	Transmission in neutral and engine start possible
D (Drive)	Automatic gear change 1st ← → 2nd ← → 3rd ← → 4th ← → 5th
Manual mode (+)	Manual gear change 1st → 2nd → 3rd → 4th → 5th
Manual mode (–)	Manual gear change 1st ← 2nd ← 3rd ← 4th ← 5th
Control method	Wire cable type

7. HYDRAULIC CONTROL & LUBRICATION

Type	Electronic/hydraulic control [5 forward speed changes by electrical signals of vehicle speed and accelerator (throttle) opening]
Fluid	Specified fluid: SUBARU ATF (Part No. K0140Y0700) Recommended fluid: IDEMITSU ATF HP Castrol Transmax J NOTE: Using of recommended fluid is permitted only on the area where the specified is not available.
Fluid capacity ℓ (US qt, Imp qt)	9.6 — 10.0 (10.1 — 10.6, 8.4 — 8.8)
Lubrication system	Forced feed lubrication with oil pump

8. COOLING & HARNESS

Cooling system	Liquid-cooled cooler incorporated in radiator
Transmission harness	20 + 8 poles

9. TRANSFER

Model	2.5 L	3.0 L
Transfer type	Variable torque distribution (VTD)	
Drive & driven plate number of transfer clutch	4	3
Reduction gear ratio	1.000 (41/41)	

10.FINAL REDUCTION

Model	2.5 L Turbo	3.0 NA (OUTBACK)	2.5 Turbo (OUTBACK)
Front final reduction gear ratio	3.272		3.583

11.RECOMMENDED GEAR OIL

Lubrication oil	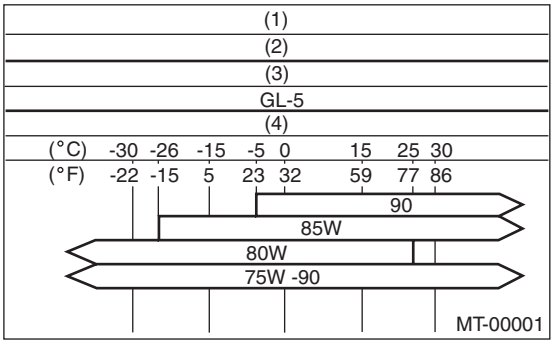 (1) Item (2) Front differential gear oil (3) API standard (4) SAE viscosity No. and applicable temperature
Front differential gear oil capacity ℓ (US qt, Imp qt)	1.3 — 1.5 (1.4 — 1.6, 1.1 — 1.3)

B: COMPONENT

1. TORQUE CONVERTER CLUTCH & TRANSMISSION ASSEMBLY

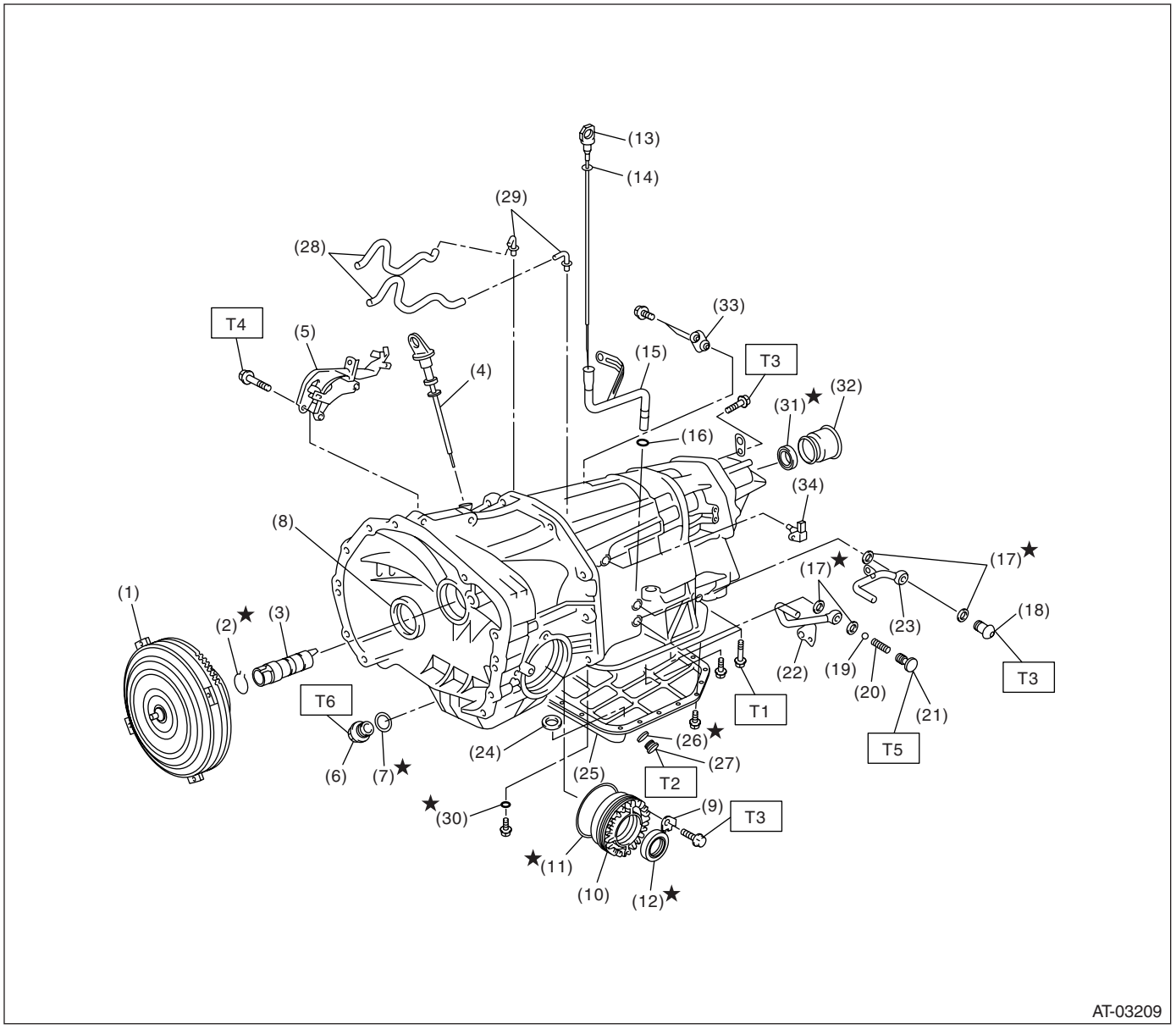

(1)	Torque converter ASSY	(15)	Oil charge pipe	(29)	Nipple
(2)	Circlip	(16)	O-ring	(30)	O-ring
(3)	Oil pump shaft	(17)	Gasket	(31)	Oil seal
(4)	Differential oil level gauge	(18)	Union screw	(32)	Dust cover
(5)	Pitching stopper bracket	(19)	Ball	(33)	Floating bracket
(6)	Differential oil drain plug	(20)	Spring	(34)	Turbine speed sensor 1
(7)	Gasket	(21)	Union screw		
(8)	Oil seal	(22)	ATF outlet pipe		
(9)	Lock plate	(23)	ATF inlet pipe		
(10)	Side retainer	(24)	Magnet		
(11)	O-ring	(25)	Oil pan		
(12)	Oil seal	(26)	Gasket		
(13)	ATF level gauge	(27)	ATF drain plug		
(14)	O-ring	(28)	Breather hose		

Tightening torque: N·m (kgf-m, ft-lb)	
T1:	*5 (0.5, 3.7)*
T2:	*20 (2.0, 14.8)*
T3:	*25 (2.5, 18)*
T4:	*40 (4.1, 29.5)*
T5:	*45 (4.6, 33.2)*
T6:	*70 (7.1, 51.6)*

2. OIL PUMP & FRONT BRAKE

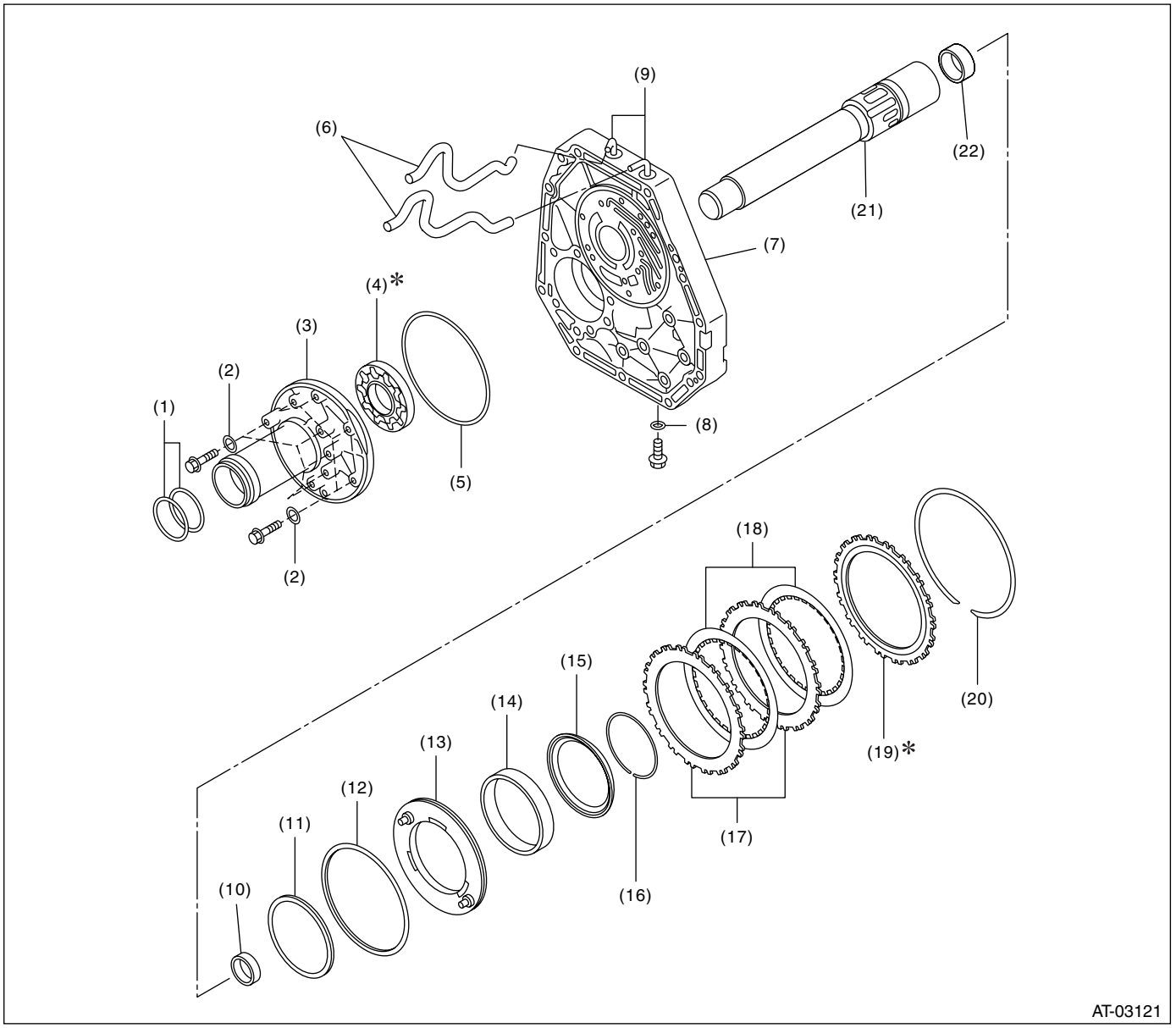

(1) O-ring
(2) Washer
(3) Oil pump housing
(4) Oil pump rotor
(5) O-ring
(6) Air breather hose
(7) Oil pump cover
(8) O-ring
(9) Nipple
(10) Needle bearing
(11) D-ring (Inner)
(12) D-ring (Outer)
(13) Front brake piston
(14) Return spring
(15) Retainer
(16) Snap ring
(17) Driven plate
(18) Drive plate
(19) Retainer plate
(20) Snap ring
(21) Stator shaft
(22) Needle bearing

3. FRONT PLANETARY CARRIER and MIDDLE & REAR PLANETARY CARRIER

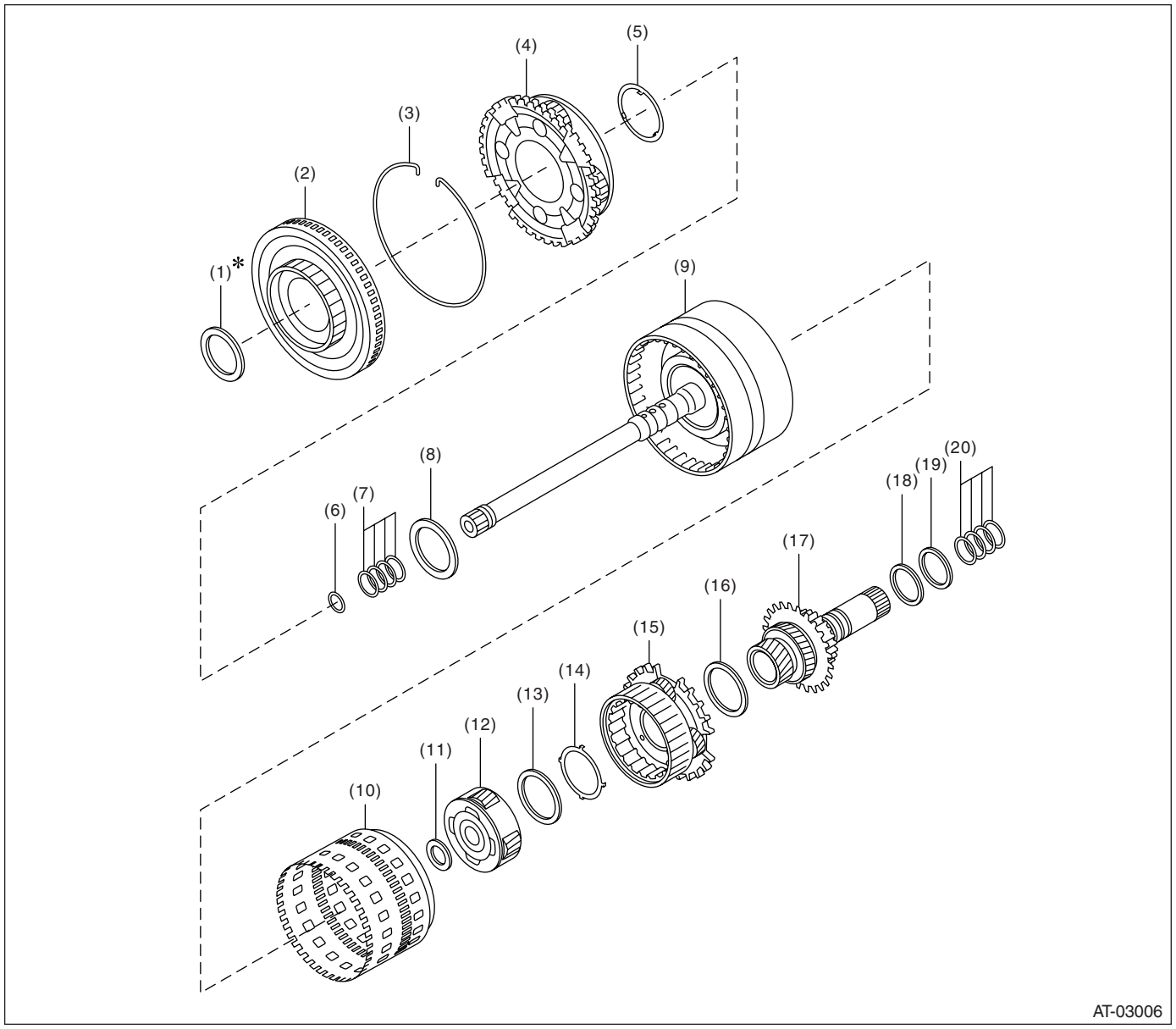

(1) Thrust bearing
(2) Front sun gear ASSY
(3) Snap ring
(4) Front carrier ASSY
(5) Race bearing
(6) O-ring
(7) Seal ring
(8) Thrust bearing
(9) Input clutch ASSY
(10) Rear internal gear ASSY
(11) Thrust bearing
(12) Middle carrier ASSY
(13) Thrust bearing
(14) Race bearing
(15) Rear carrier ASSY
(16) Thrust bearing
(17) Middle & rear sun gear ASSY
(18) Washer
(19) Thrust bearing
(20) Seal ring

4. DIRECT CLUTCH and HIGH & LOW REVERSE CLUTCH

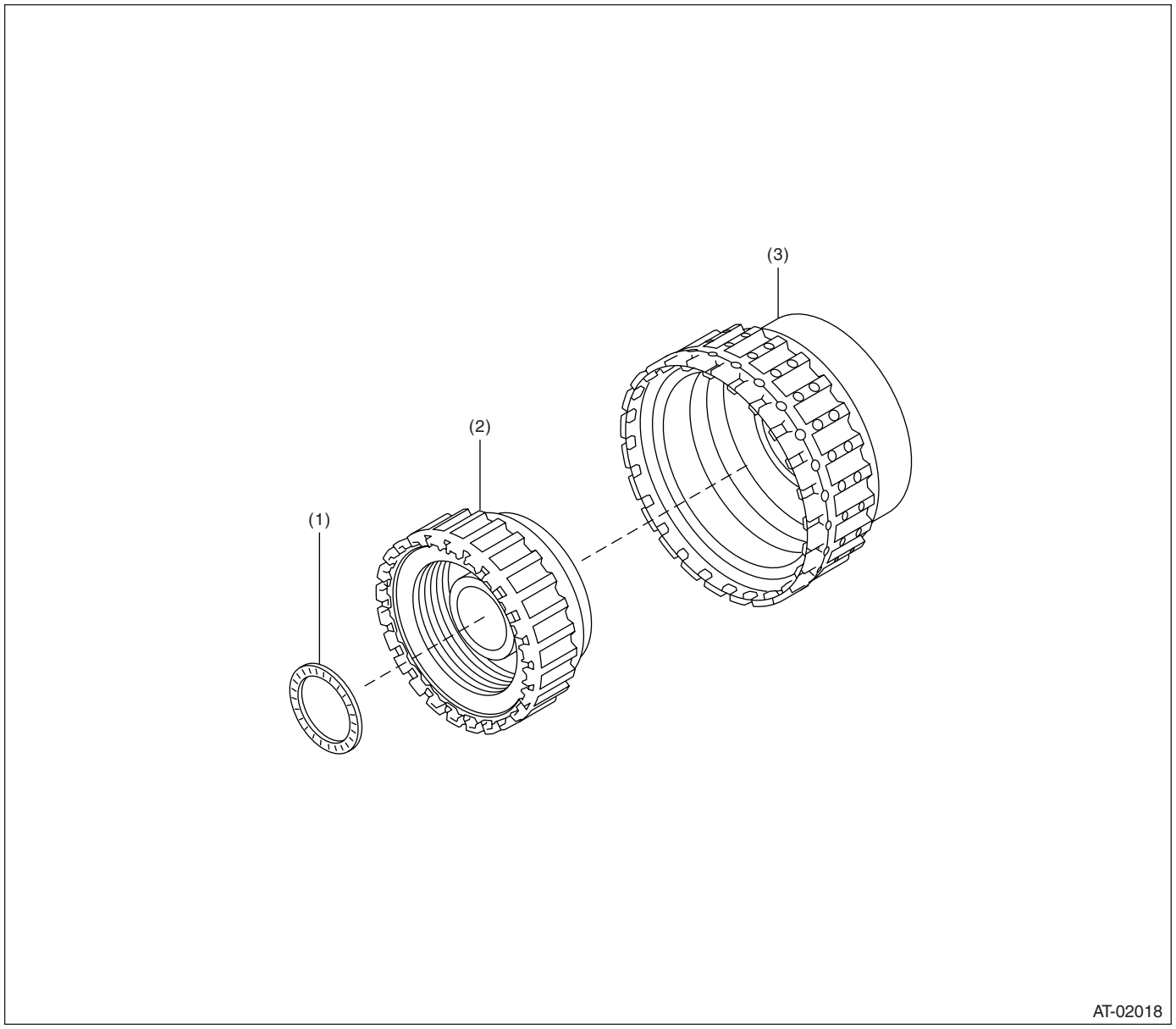

(1) Thrust bearing
(2) High & low reverse clutch ASSY
(3) Direct clutch ASSY

5. REVERSE BRAKE

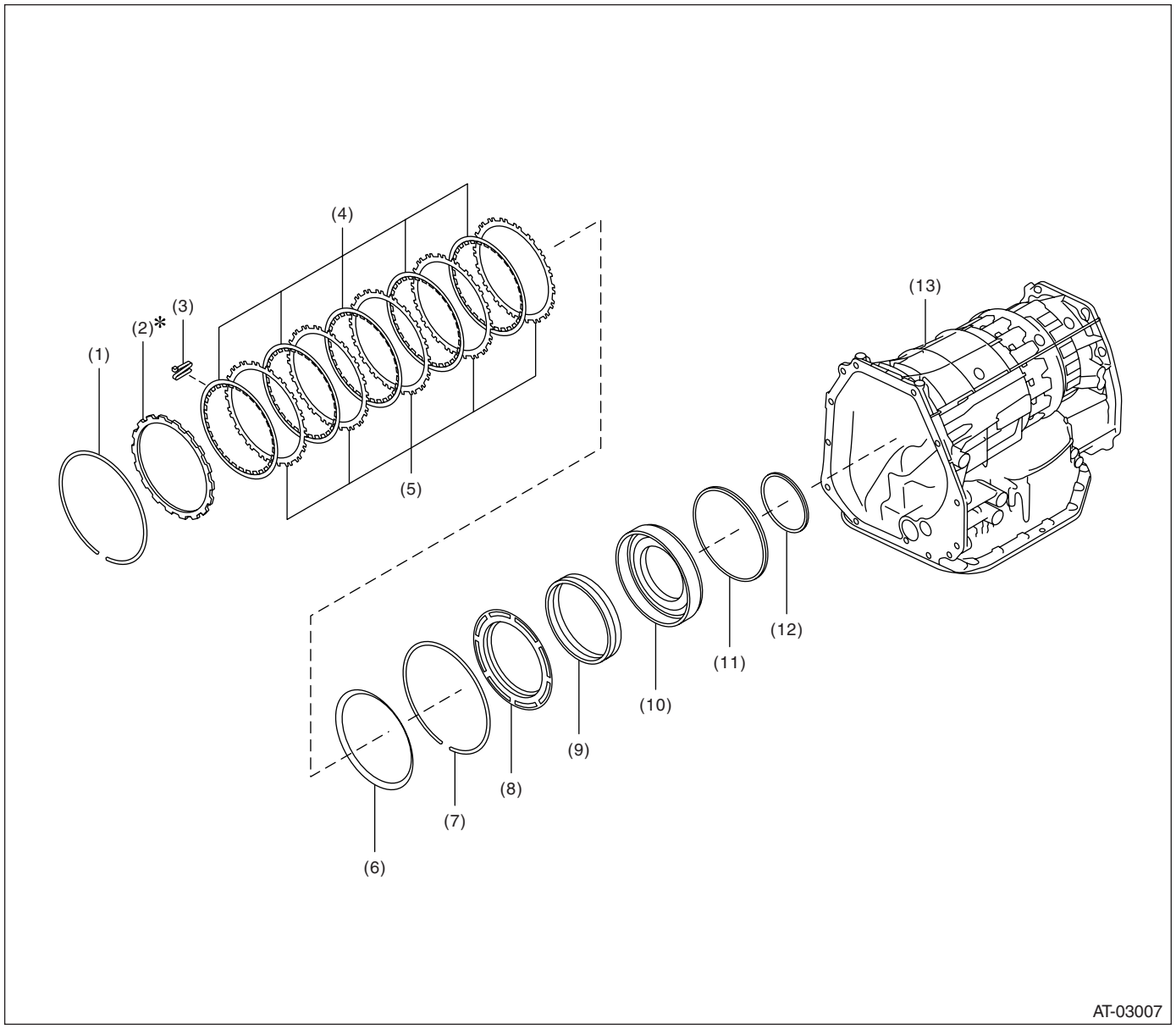

(1) Snap ring
(2) Retainer plate
(3) Leaf spring
(4) Drive plate
(5) Driven plate
(6) Dish plate
(7) Snap ring
(8) Retainer
(9) Leaf spring
(10) Reverse brake piston
(11) D-ring (Outer)
(12) D-ring (Inner)
(13) AT main case

6. SHORT AT ASSEMBLY

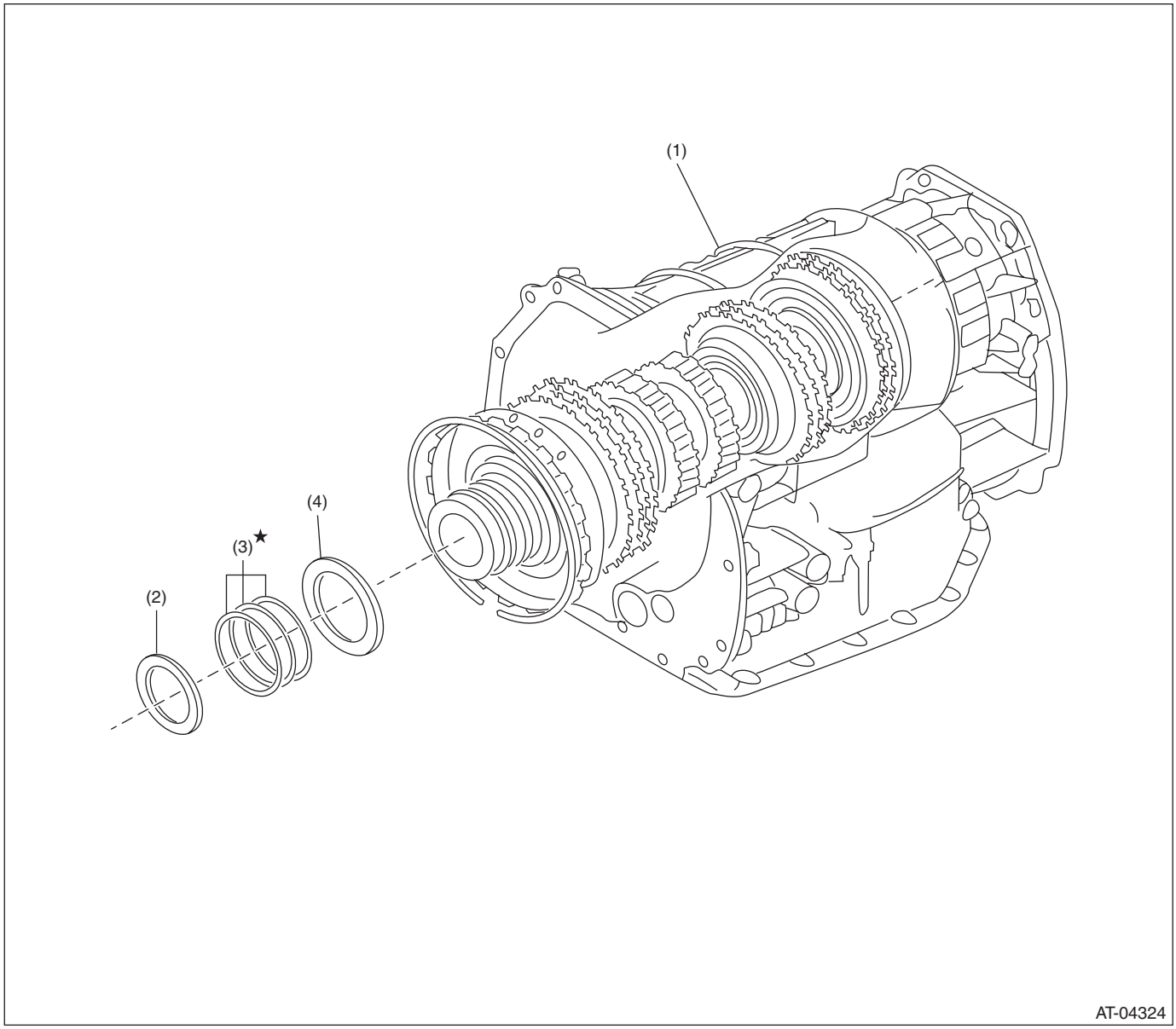

(1) Short AT ASSY (non-disassembled)
(2) Thrust bearing
(3) Seal ring
(4) Thrust bearing

7. CONTROL VALVE & TRANSMISSION HARNESS

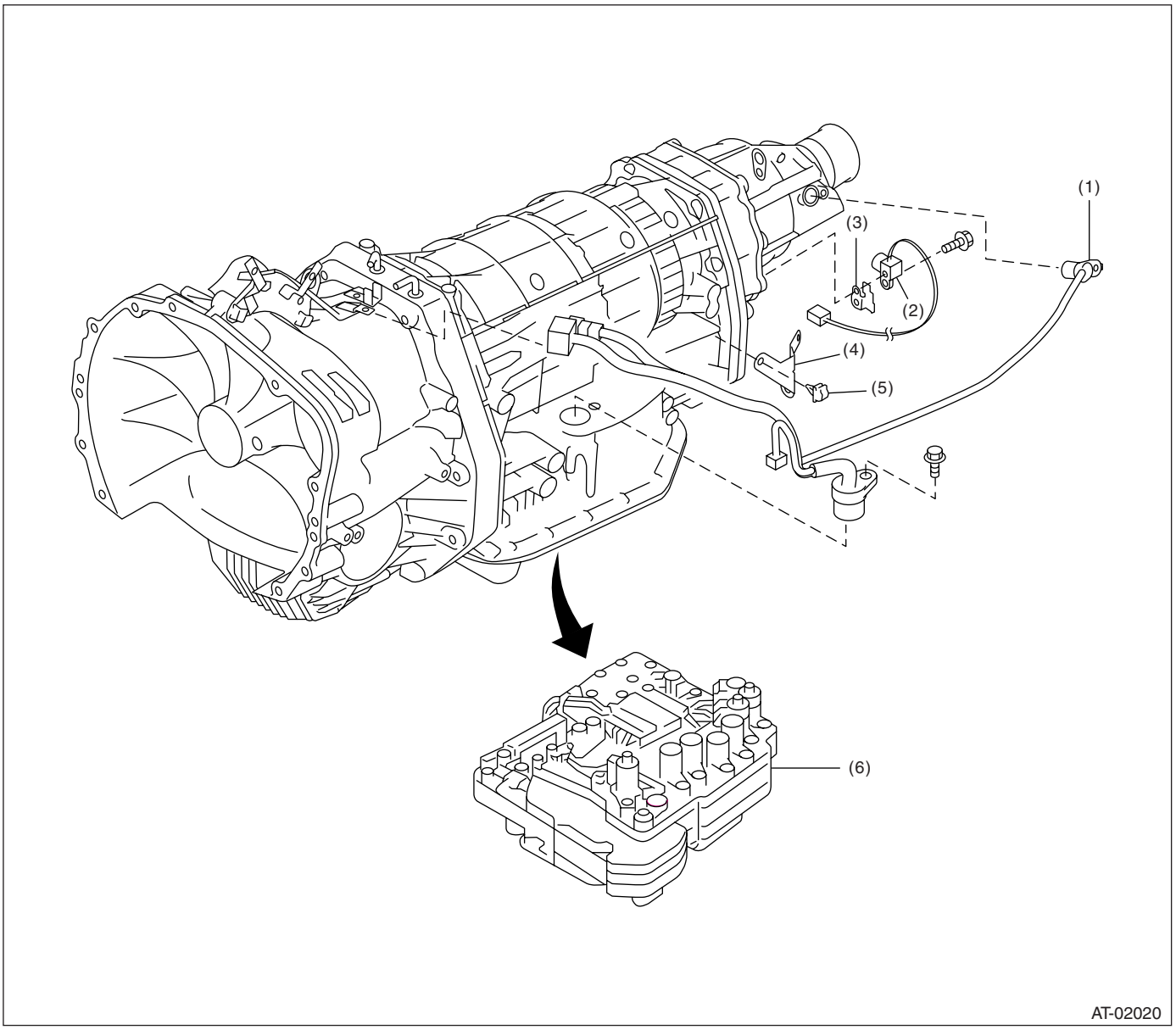

(1) Transmission harness ASSY
(2) Front vehicle speed sensor
(3) Sensor cover
(4) Harness bracket
(5) Clip
(6) Control valve ASSY

8. DIFFERENTIAL GEAR

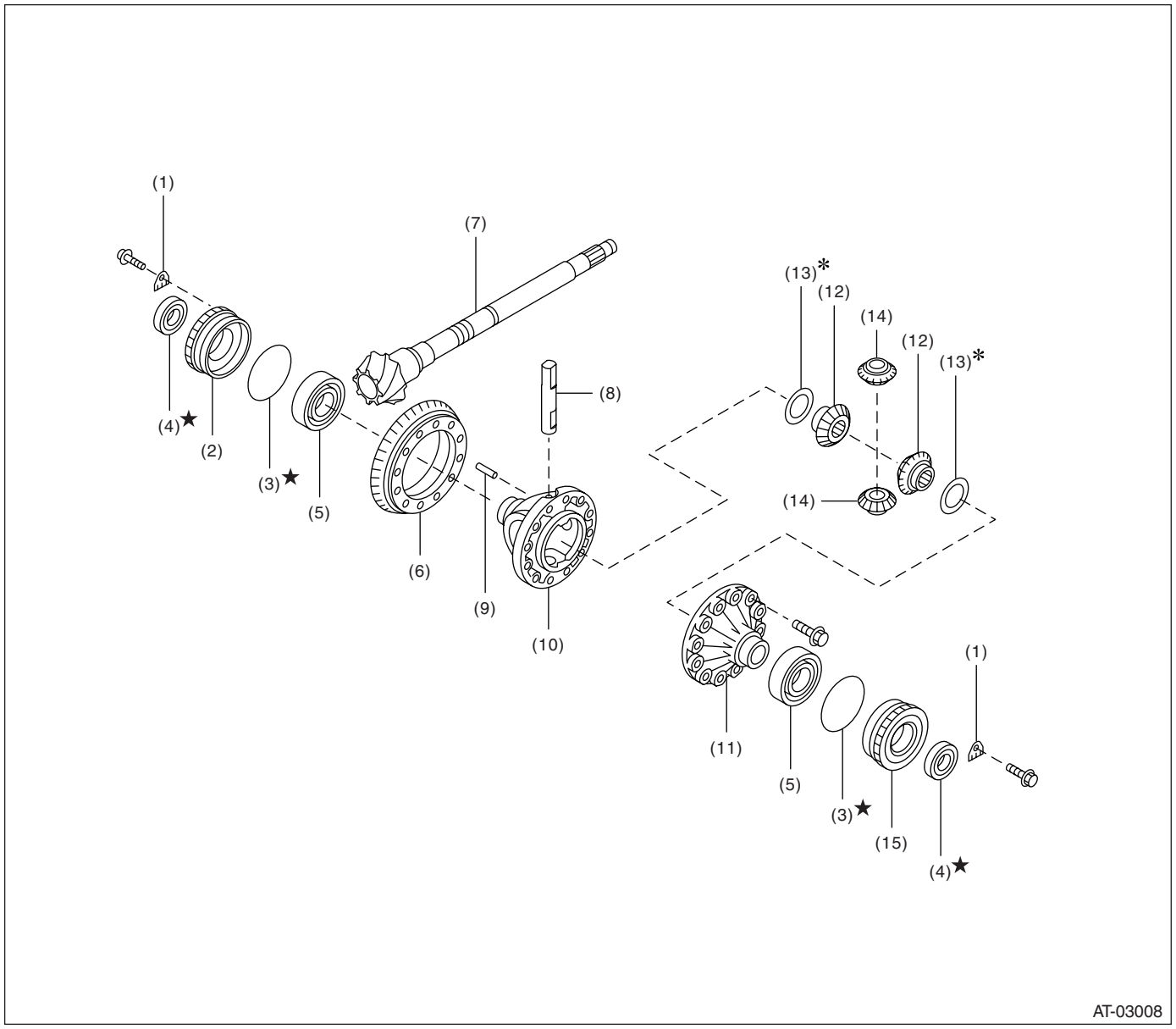

(1) Retainer plate RH
(2) Differential side retainer RH
(3) O-ring
(4) Oil seal
(5) Taper roller bearing
(6) Hypoid driven gear
(7) Drive pinion shaft
(8) Pinion shaft
(9) Straight pin
(10) Differential case RH
(11) Differential case LH
(12) Differential bevel gear
(13) Washer
(14) Differential bevel pinion
(15) Differential side retainer LH

9. TRANSFER CASE, EXTENSION CASE & REDUCTION GEAR

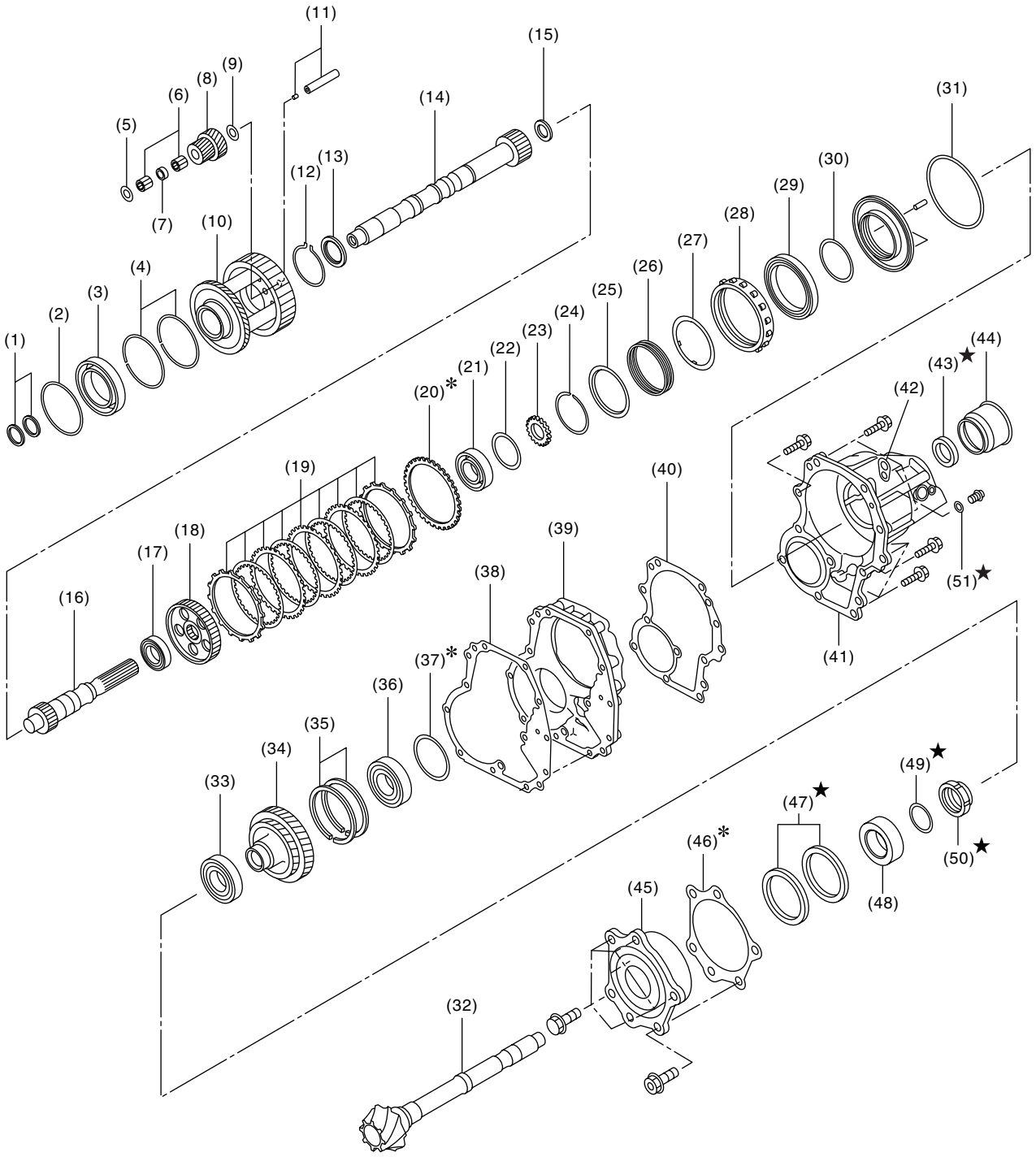

AT-03009

(1) Seal ring
(2) Reduction gear shim
(3) Ball bearing
(4) Snap ring
(5) Planetary pinion washer
(6) Needle bearing
(7) Spacer
(8) Pinion gear
(9) Washer
(10) Planetary carrier ASSY
(11) Planetary pinion shaft ASSY
(12) Snap ring
(13) Thrust bearing
(14) Intermediate shaft
(15) Thrust washer
(16) Rear drive shaft
(17) Ball bearing
(18) Transfer clutch hub
(19) Transfer clutch plate
(20) Driven plate No. 3.
(21) Ball bearing
(22) Rear drive shaft shim
(23) Revolution gear
(24) Snap ring
(25) Clutch spring retainer
(26) Return spring
(27) Spring retainer
(28) Pressure plate
(29) Ball bearing
(30) O-ring
(31) C-ring
(32) Drive pinion shaft
(33) Ball bearing
(34) Reduction driven gear
(35) Snap ring
(36) Ball bearing
(37) Shim
(38) Gasket
(39) Intermediate case
(40) Shim
(41) Extension case
(42) Transmission hanger
(43) Oil seal
(44) Dust cover
(45) Taper roller bearing
(46) Drive pinion shim
(47) Oil seal
(48) Drive pinion collar
(49) O-ring
(50) Lock nut
(51) O-ring

10.TRANSMISSION CONTROL DEVICE & PARKING SUPPORT

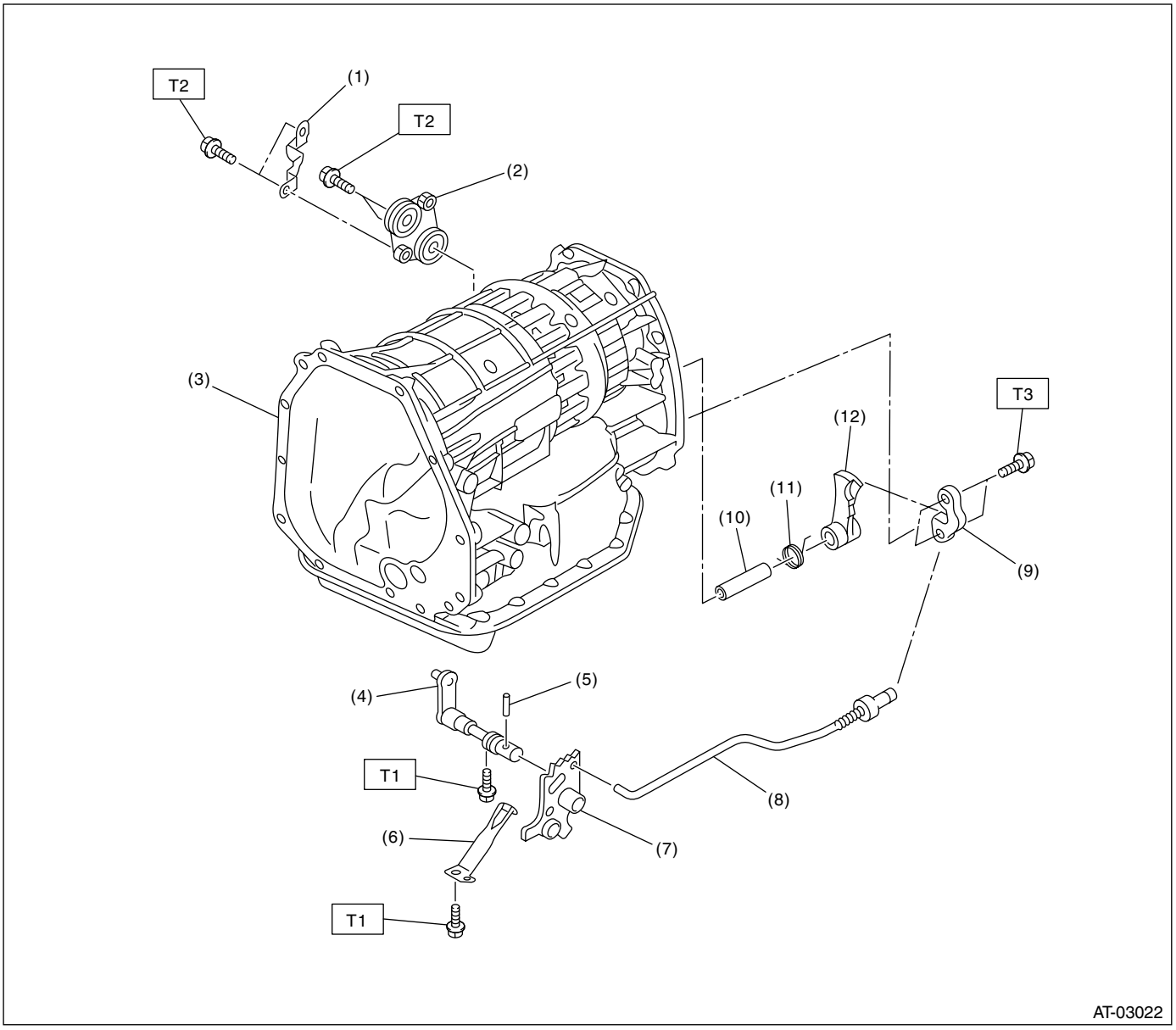

(1) Bracket
(2) Floating bracket
(3) AT main case
(4) Range select lever
(5) Straight pin
(6) Detent spring
(7) Manual plate
(8) Parking rod
(9) Parking support actuator
(10) Parking pawl shaft
(11) Return spring
(12) Parking pawl

Tightening torque: N·m (kgf-m, ft-lb)
T1: 6 (0.6, 4.4)
T2: 25 (2.5, 18)
T3: <Ref. to 5AT-78, Parking Pawl.>

11.TRANSMISSION CONTROL MODULE

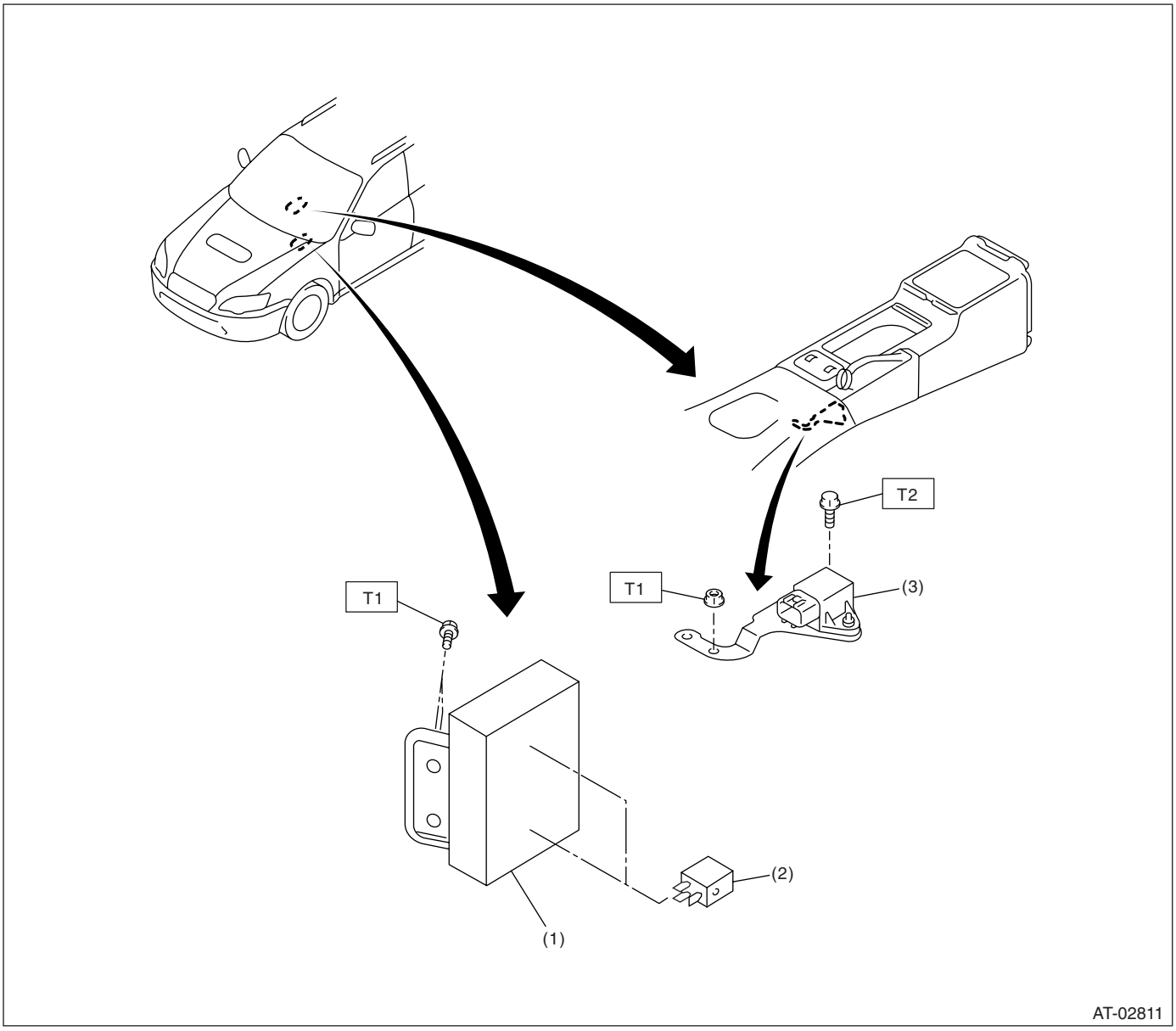

(1) Transmission control module (TCM)
(2) Relay
(3) Lateral G sensor

Tightening torque: N·m (kgf-m, ft-lb)
T1: 7.5 (0.76, 5.5)
T2: 18 (1.8, 13.3)

12.TRANSMISSION MOUNTING

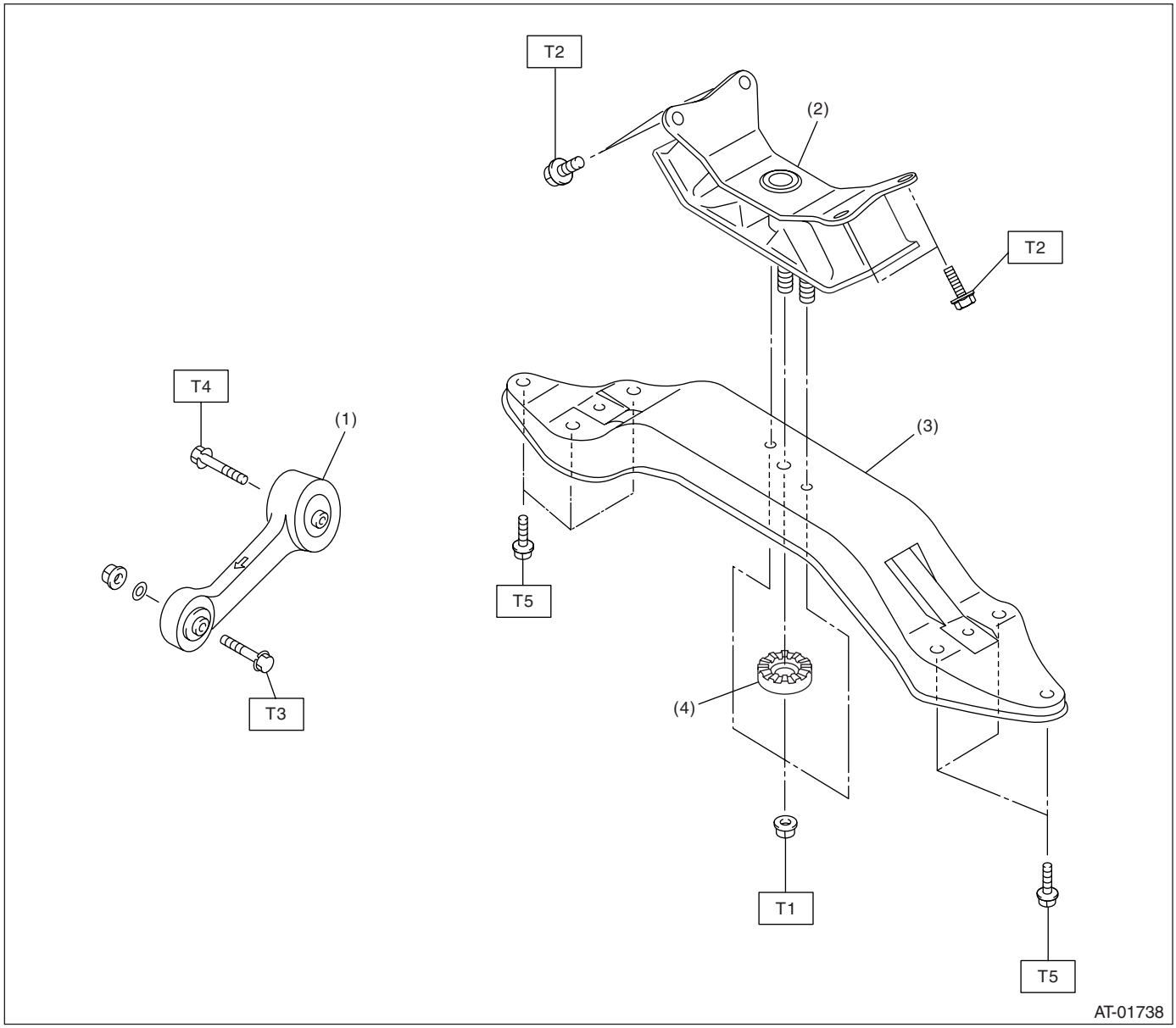

(1) Pitching stopper
(2) Rear cushion rubber
(3) Crossmember
(4) Stopper

Tightening torque: N·m (kgf-m, ft-lb)
T1: 35 (3.6, 26)
T2: 40 (4.1, 29.5)
T3: 50 (5.1, 36.9)
T4: 58 (5.9, 42.8)
T5: 75 (7.6, 55.3)

C: CAUTION

• Wear work clothing, including a cap, protective goggles, and protective shoes during operation.
• Remove contamination including dirt and corrosion before removal, installation or disassembly.
• Keep the disassembled parts in order and protect them from dust and dirt.
• Until the oil pan is removed, do not place with the oil pan side facing up to prevent foreign matter from entering the valve body.
• Before removal, installation or disassembly, be sure to clarify the failure. Avoid unnecessary removal, disassembly and replacement.
• When disassembling the case and other light alloy parts, disassemble them by slightly tapping with a plastic hammer. Do not pry it apart with a screwdriver or other tool.
• Be careful not to burn yourself, because each part on the vehicle is hot after running.
• Use SUBARU genuine gear oil, grease etc. or the equivalent. Do not mix them with that of another grade or from other manufacturers.
• Be sure to tighten fasteners including bolts and nuts to the specified torque.
• Place shop jacks or rigid racks at the specified points.
• Apply gear oil onto sliding or revolution surfaces before installation.
• Replace deformed or otherwise damaged snap rings with new ones.
• Before installing O-rings or oil seals, apply sufficient amount of ATF fluid to avoid damage and deformation.
• Be careful not to incorrectly install or fail to install O-rings, snap rings and other such parts.
• Before securing a part on a vice, place cushioning material such as wood blocks, aluminum plate, or cloth between the part and the vice.
• Avoid damaging the mating surface of the case.
• Before applying liquid gasket, completely remove the old seal.

D: PREPARATION TOOL

1. SPECIAL TOOL

ILLUSTRATION	TOOL NUMBER	DESCRIPTION	REMARKS
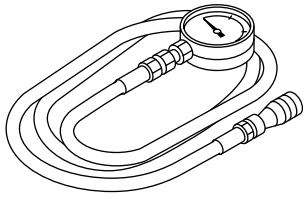 ST-498575400	498575400	OIL PRESSURE GAUGE ASSY	Used for measuring oil pressure.
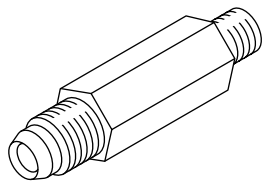 ST-498897200	498897200	ADAPTER	• Used with oil pump cover installed on when measuring line pressure. • Used with extension case installed on when measuring transfer clutch pressure.

ILLUSTRATION	TOOL NUMBER	DESCRIPTION	REMARKS
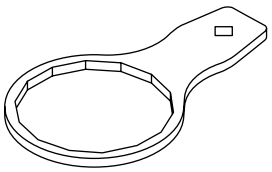 ST-498545400	498545400	FILTER WRENCH	Used for removing and installing ATF filter.
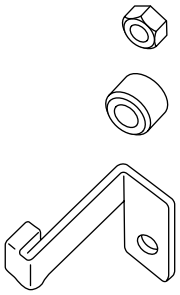 ST-498277200	498277200	STOPPER SET	Used for removing and installing automatic transmission assembly to engine.
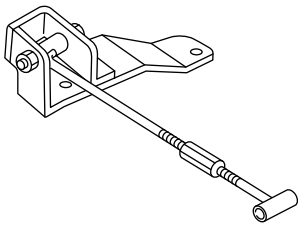 ST41099AC000	41099AC000	ENGINE SUPPORT ASSEMBLY	Used for supporting engine.
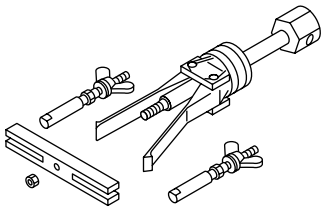 ST-398527700	398527700	PULLER ASSY	• Used for removing extension case roller bearing. • Used for removing extension oil seal. • Used for removing front differential side retainer bearing outer race. • Used for removing front differential side retainer oil seal.

ILLUSTRATION	TOOL NUMBER	DESCRIPTION	REMARKS
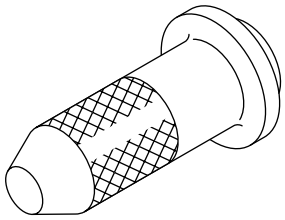 ST-498057300	498057300	INSTALLER	Used for installing extension oil seal.
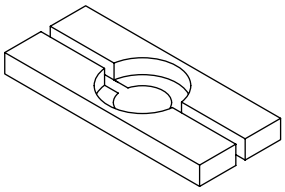 ST-498077000	498077000	REMOVER	Used for removing differential taper roller bearing.
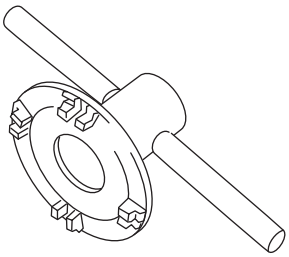 ST18630AA010	18630AA010 (Newly adopted tool)	WRENCH COMPL RETAINER	Used for removing and installing differential side retainer.
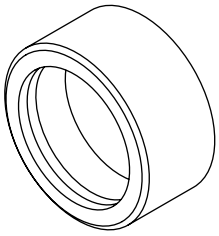 ST-398487700	398487700	DRIFT	Used for installing front differential taper roller bearing.

ILLUSTRATION	TOOL NUMBER	DESCRIPTION	REMARKS
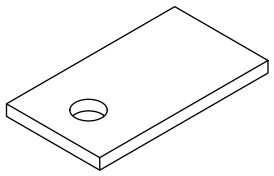 ST-498255400	498255400	PLATE	Used for measuring backlash of hypoid gear.
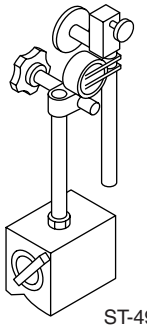 ST-498247001	498247001	MAGNET BASE	• Used for measuring gear backlash. • Used with DIAL GAUGE (498247100).
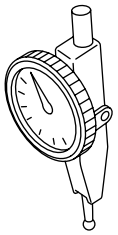 ST-498247100	498247100	DIAL GAUGE	• Used for measuring gear backlash. • Used with MAGNET BASE (498247001).
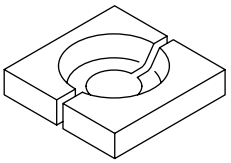 ST-498517000	498517000	REPLACER	Used for removing front roller bearing.

ILLUSTRATION	TOOL NUMBER	DESCRIPTION	REMARKS
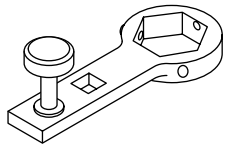 ST-499787700	499787700	WRENCH	Used for removing and installing drive pinion lock nut.
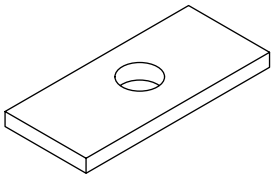 ST-398643600	398643600	GAUGE	Used for measuring total end play, extension end play and drive pinion height.
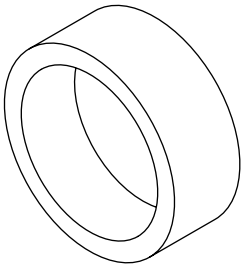 ST-378744300	378744300	PISTON GUIDE	Used for measuring height from mating surface of intermediate case to pressure plate.
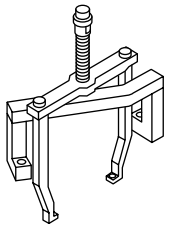 ST-499737100	499737100	PULLER SET	Used for removing reduction drive gear assembly.

ILLUSTRATION	TOOL NUMBER	DESCRIPTION	REMARKS
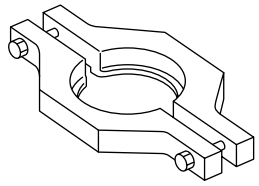 ST-498077600	498077600	REMOVER	Used for removing ball bearing.
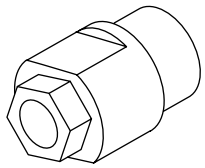 ST18667AA010	18667AA010 (Newly adopted tool)	HOLDER	• Used for removing and installing drive pinion lock nut. • Used as a handle to rotate gear when checking tooth contact.
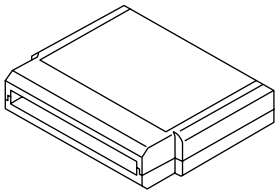 ST24082AA260	24082AA260	CARTRIDGE	Troubleshooting for electrical system.
ST22771AA030	22771AA030	SUBARU SELECT MONITOR KIT	Troubleshooting for electrical system.

ILLUSTRATION	TOOL NUMBER	DESCRIPTION	REMARKS
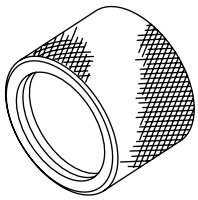 ST18675AA000	18675AA000	DIFFERENTIAL SIDE OIL SEAL INSTALLER	Used for installing differential side retainer oil seal.
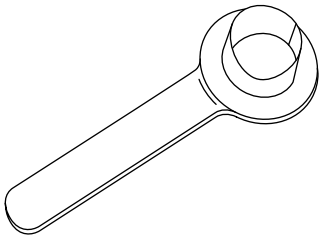 ST28399SA010	28399SA010	OIL SEAL PROTECTOR	Used for protecting oil seal when installing front drive shaft.
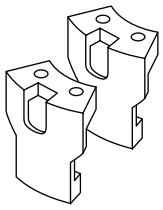 ST18680AA000	18680AA000 (Newly adopted tool)	HOLDER GEAR	Used for removing reduction driven gear assembly. (2-piece)
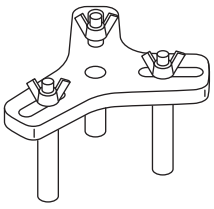 ST18762AA000	18762AA000 (Newly adopted tool)	COMPRESSOR SPECIAL TOOL	Used for disassembling multiplate clutch for shift transmission.

ILLUSTRATION	TOOL NUMBER	DESCRIPTION	REMARKS
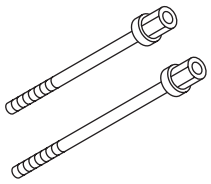 ST18763AA000	18763AA000 (Newly adopted tool)	COMPRESSOR SHAFT	Used for disassembling multiplate clutch for shift transmission.
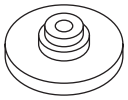 ST18765AA000	18765AA000 (Newly adopted tool)	COMPRESSOR SUPPORT	Used for disassembling multiplate clutch for shift transmission.
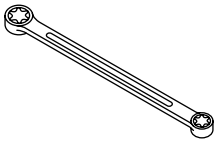 ST18676AA020	18676AA020 (Newly adopted tool)	TORX® WRENCH	Used for disassembling torque converter case.
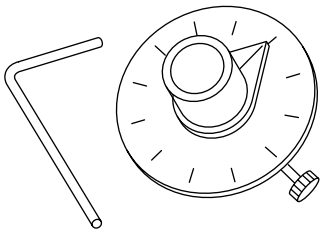 ST18854AA000	18854AA000	ANGLE GAUGE	• Used for tightening parking support. • Used for installing the drive plate.

ILLUSTRATION	TOOL NUMBER	DESCRIPTION	REMARKS
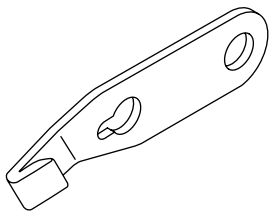 ST-498497100	498497100	CRANKSHAFT STOPPER	Used for stopping the drive plate rotation when removing and installing the drive plate.
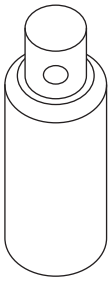 ST18679AA000	18679AA000 (Newly adopted tool)	ADJUSTER	Used for adjusting position when tightening parking support.
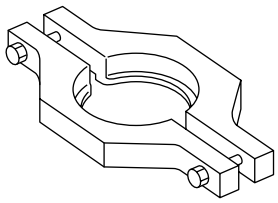 ST-498077300	498077300	REMOVER	Used for removing ball bearing of reduction driven gear.
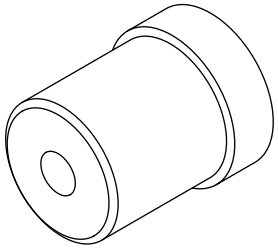 ST-499587100	499587100	OIL SEAL INSTALLER	Used for installing oil seal.

ILLUSTRATION	TOOL NUMBER	DESCRIPTION	REMARKS
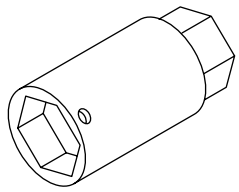 ST-499787500	499787500	ADAPTER	Used for removing and installing drive pinion lock nut.
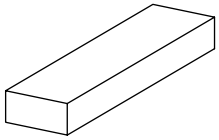 ST-499575400	499575400	GAUGE	Used for measuring height of total end play.

2. GENERAL TOOL

TOOL NAME	REMARKS
Depth gauge	Used for measuring transmission end play.
Thickness gauge	Used for measuring clearance of clutch, brake and oil pump.
Micro meter	Used for measuring thickness of drive pinion.
Spring balance	Used for measuring starting torque of drive pinion.
Circuit tester	Used for measuring resistance and voltage.
TORX® T70	Used for removing and installing differential gear oil drain plug.
Snap ring pliers	Used for removing and installing each snap ring.

2. Automatic Transmission Fluid

A: INSPECTION

NOTE:
The level of ATF varies with fluid temperature. Pay attention to the ATF temperature when checking ATF level.

1) Raise the ATF temperature by driving a distance of 5 to 10 km (3 to 6 miles). Otherwise, idle the engine to raise ATF temperature to 70 to 80°C (158 to 176°F) on Subaru Select Monitor. <Ref. to 5AT(diag)-15, READ CURRENT DATA, OPERATION, Subaru Select Monitor.>
2) Park the vehicle on a level surface.
3) After selecting all positions (P, R, N, D), set the select lever in "P" range. Measure the ATF level with engine idling for one or two minutes.

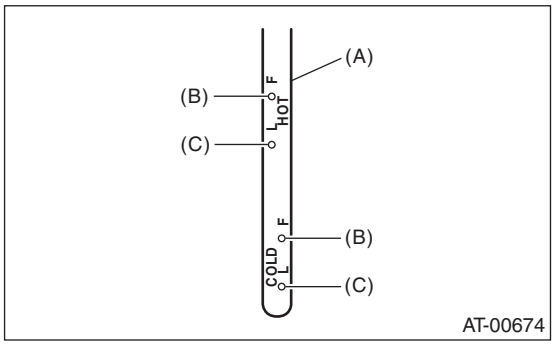

(A) ATF level gauge
(B) Upper level
(C) Lower level

4) Make sure that the ATF level is between upper and lower marks at HOT side.
5) If the ATF level is below the lower marks, add recommended ATF until the fluid level is between upper and lower marks.

CAUTION:
- **Use care not to exceed the upper level.**
- **When the transmission is cold, be careful not to add ATF to the upper level on HOT side. Overfilling of ATF may cause oil splashing.**

6) Raise the ATF temperature by driving a distance of 5 to 10 km (3 to 6 miles). Otherwise, idle the engine to raise ATF temperature to 70 to 80°C (158 to 176°F) on Subaru Select Monitor. <Ref. to 5AT(diag)-15, READ CURRENT DATA, OPERATION, Subaru Select Monitor.>
7) Check the ATF for leaks.
Visually check for leaks in the transmission. If there are leaks, replace the gasket, oil seals, plugs or other parts.

B: REPLACEMENT

1) Lift-up the vehicle.
2) Remove the ATF drain plug to drain ATF.

CAUTION:
Directly after the vehicle has been running or the engine has been long idle running, the ATF is hot. Be careful not to burn yourself.

3) Check the condition of ATF.
<Ref. to 5AT-28, CONDITION CHECK, Automatic Transmission Fluid.>
4) Tighten the ATF drain plug.

NOTE:
Use a new gasket.

Tightening torque:
20 N·m (2.0 kgf-m, 14.8 ft-lb)

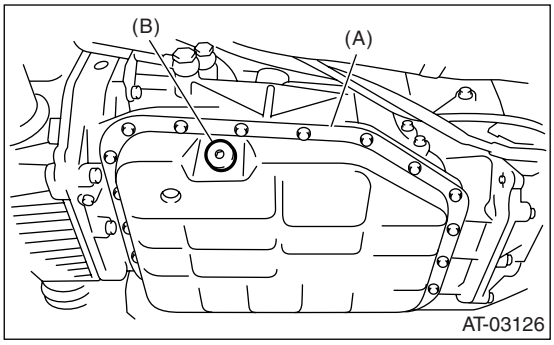

(A) Oil pan
(B) ATF drain plug

5) Lower the vehicle.
6) Pour ATF from the oil charge pipe.

Specified fluid:
SUBARU ATF (Part No. K0140Y0700)

Recommended fluid:
IDEMITSU ATF HP
Castrol Transmax J

NOTE:
Using of recommended fluid is permitted only on the area where the specified is not available.

Capacity:
Fill the same amount of ATF drained.

Capacity when transmission is overhauled:
9.6 — 10.0 ℓ (10.1 — 10.6 US qt, 8.4 — 8.8 Imp qt)

7) Check the level and leaks of ATF.
<Ref. to 5AT-27, INSPECTION, Automatic Transmission Fluid.>

C: CONDITION CHECK

NOTE:
When replacing ATF, check the inside condition of transmission body by inspecting the drained ATF.

Fluid condition	Trouble and possible cause	Corrective action
Large amount of metallic pieces are found.	Excessive wear of the internal of the transmission body	Replace ATF and check if AT operates correctly.
Thick and varnish-form fluid.	Burned clutch and etc.	Replace ATF and check if AT or vehicle for faulty.
Clouded fluid or bubbles are found in fluid.	Water mixed in fluid	Replace ATF and check the water entering point.

3. Differential Gear Oil

A: INSPECTION

1) Park the vehicle on a level surface.
2) Remove the collector cover.
3) Remove the oil level gauge and wipe it clean.
4) Reinsert the level gauge all the way. Be sure that the level gauge is correctly inserted and in the proper orientation.
5) Remove the oil level gauge again, and check the level of differential gear oil. If the differential gear oil level is below “L” line, add oil to bring the level up to “F” line.

NOTE:
To prevent overfilling the differential gear oil, do not add oil above “F” line.

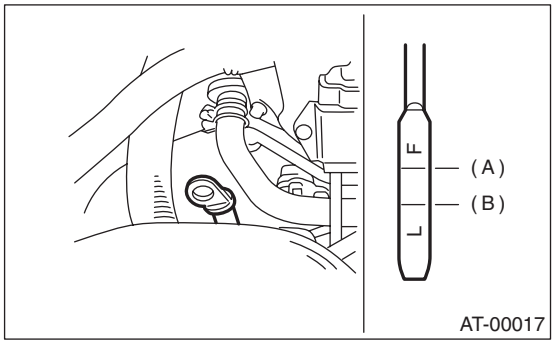

(A) Upper level
(B) Lower level

B: REPLACEMENT

1) Lift-up the vehicle.
2) Remove the differential gear oil drain plug using TORX® BIT T70, and the drain the differential gear oil.

CAUTION:
• Directly after the vehicle has been running or the engine has been long idle running, the differential gear oil is hot. Be careful not to burn yourself.
• Be careful not to spill the differential gear oil on exhaust pipe to prevent it from emitting smoke or fire. When the differential gear oil is spilled on exhaust pipe, wipe it away completely.

3) Tighten the differential gear oil drain plug using TORX® BIT T70.

Tightening torque:
70 N·m (7.1 kgf-m, 51.6 ft-lb)

NOTE:
Use a new gasket.

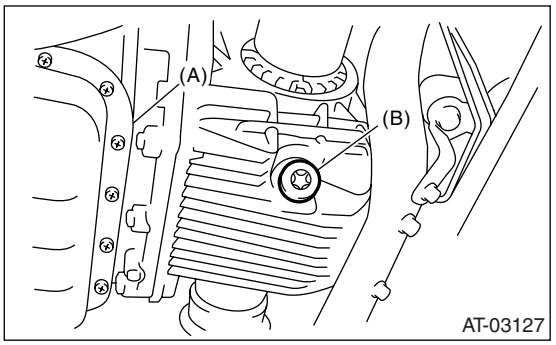

(A) Oil pan
(B) Differential gear oil drain plug

4) Lower the vehicle.
5) Pour gear oil into the gauge hole.

Recommended gear oil:
<Ref. to 5AT-3, RECOMMENDED GEAR OIL, SPECIFICATION, General Description.>

Gear oil capacity:
1.3 — 1.5 ℓ (1.4 — 1.6 US qt, 1.1 — 1.3 Imp qt)

6) Check the level of differential gear oil.
<Ref. to 5AT-29, INSPECTION, Differential Gear Oil.>

4. Road Test

A: INSPECTION

1. GENERAL PRECAUTION

Road tests should be conducted to properly diagnose the condition of automatic transmission.

NOTE:
When performing the test, do not exceed posted speed limit.

2. D RANGE SHIFT FUNCTION

Check shifting between 1st ←→ 2nd ←→ 3rd ←→ 4th ←→ 5th while driving on normal city streets.

3. D RANGE SHIFT SHOCK

Check the shock level when shifting up during normal driving.

4. KICK-DOWN FUNCTION

Check kick-down for each gear. Also check the kick-down shock level.

5. ENGINE BRAKE OPERATION

- Check the 4th gear engine brake when shifting down from 5th to 4th range while driving in 5th gear of manual mode [50 to 60 km/h (31 to 37 MPH)].
- Check the 3rd gear engine brake when shifting down from 4th to 3rd range while driving in 4th gear of manual mode [50 to 60 km/h (31 to 37 MPH)].
- Check the 2nd gear engine brake when shifting down from 3rd to 2nd range while driving in 3rd gear of manual mode [40 to 50 km/h (25 to 31 MPH)].
- Check the 1st gear engine brake when shifting down from 2nd to 1st range while driving in 2nd gear of manual mode [20 to 30 km/h (12 to 19 MPH)].

6. P RANGE OPERATION

Stop the vehicle on an uphill grade of 5% or more and shift to “P” range. Check that the vehicle does not move when the parking brake is released.

7. NOISE & VIBRATION

Check for unusual sounds and vibration while driving and during shifting.

8. OIL LEAKAGE

After the driving test, inspect for oil leaks from the transmission body.

5. Stall Test

A: INSPECTION

NOTE:
The stall test is of extreme importance in diagnosing the condition of automatic transmission and engine. It should be conducted to measure the engine stall speeds in “R” and “2nd of manual mode”.
Purposes of the stall test:

- To check the operation of automatic transmission clutch.
- To check the operation of torque converter clutch.
- To check engine performance.

1) Check that the throttle valve opens fully.
2) Check that the engine oil level is correct.
3) Check that the coolant level is correct.
4) Check that the ATF level is correct.
5) Check that the differential gear oil level is correct.
6) Raise the ATF temperature to 70 to 80°C (158 to 176°F) by driving a distance of 5 to 10 km (3 to 6 miles). Confirm the ATF temperature on Subaru Select Monitor. <Ref. to 5AT(diag)-15, READ CURRENT DATA, OPERATION, Subaru Select Monitor.>
7) Place the wheel chocks at the front and rear of all wheels and apply the parking brake.
8) Move the manual linkage to ensure it operates properly, and then set “2nd on manual mode”.

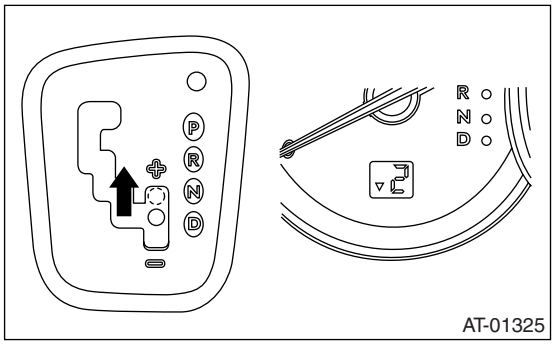

9) While depressing the brake pedal strongly, depress the accelerator pedal gradually.
10) When the engine speed is stabilized, quickly record that speed and release the accelerator pedal.
11) Shift the select lever to “N” range, and cool down the engine by idling it for more than one minute.
12) Perform the procedure for “R” range in the same way as “2nd on manual mode”.

NOTE:

- Do not continue the stall test for MORE THAN FIVE SECONDS at a time (from fully closed throttle to fully open throttle until stall speed reading). Engine oil and ATF to deteriorate and the clutch and brake to be adversely affected.
- Be sure to cool down the engine for at least one minute with the select lever set in “P” or “N” range and with the idle speed lower than 1,200 rpm after performing stall test.
- If the stall speed is higher than the specified range, attempt to finish the stall test in as short a time as possible, in order to prevent the automatic transmission from sustaining damage.

Stall speed (at sea level):
TURBO MODEL
3,100 — 3,500 rpm
NON-TURBO MODEL
2,400 — 2,800 rpm

Stall Test

Stall speed (at sea level)	Range	Possible faulty part
Less than standard	R	• Engine • One-way clutch of the torque converter clutch
More than standard	2nd gear of manual mode	• Line pressure too low • Forward brake • Forward brake one-way clutch • Direct clutch • 3rd one-way clutch
	R	• Line pressure too low • Reverse clutch
Within standard	2nd gear of manual mode	• Reverse clutch • One-way clutch of the torque converter
	R	• Forward brake • Forward brake one-way clutch • Direct clutch • 3rd one-way clutch • One-way clutch of the torque converter

6. Time Lag Test

A: INSPECTION

NOTE:
When the select lever is shifted while the engine is idling, there will be a certain time elapse or lag before the shock can be felt. Using this, check the condition of forward brake, reverse brake, 1st one-way clutch, forward one-way clutch and 3rd one-way clutch.

- Perform the test at normal operation fluid temperature 70 — 80°C (158 — 176°F).
- Be sure to allow a one minute interval between tests.
- Make three measurements and take the average value.

1) Fully apply the parking brake.
2) Start the engine.
Check the idling speed (A/C OFF).
3) Shift the select lever from “N” to “D” range. Using a stop watch, measure the time-lag which takes from shifting the lever until the shock is felt.

Time-lag
Standard: 1.2 sec. or less

If “N” → “D” time-lag is longer than specified:
- Line pressure too low
- Forward brake worn
- One-way clutch not operating properly

4) In the same manner, measure the time lag for “N” → “R”.

Time-lag
Standard: 1.5 sec. or less

If “N” → “R” time lag is longer than specified:
- Line pressure too low
- Reverse brake worn

7. Line Pressure Test

A: MEASUREMENT

NOTE:
If the clutch or brake shows a sign of slippage, or shifting interval is not correct, the line pressure should be checked.

- Excessive shocks during up-shift may be due to the line pressure being too high.
- Slippage or inability to operate the vehicle may, in most cases, be due to loss of oil pressure for the operation of the clutch, brake or control valve.

1) Set the vehicle on a lift.
2) Remove the under cover.
3) Remove the test plug and install the ST.

ST 498897200 OIL PRESSURE ADAPTER

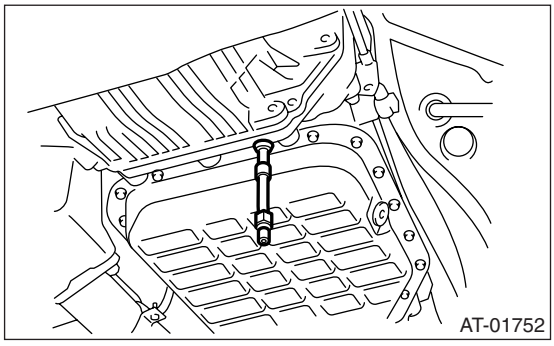

4) Set the ST1 and ST2.

ST1 498897200 OIL PRESSURE ADAPTER
ST2 498575400 OIL PRESSURE GAUGE ASSY

5) Lower the vehicle, and pull the ST1 and ST2 into vehicle.

ST1 498897200 OIL PRESSURE ADAPTER
ST2 498575400 OIL PRESSURE GAUGE ASSY

6) Connect the Subaru Select Monitor to data link connector and read the current data. <Ref. to 5AT(diag)-15, READ CURRENT DATA, OPERATION, Subaru Select Monitor.>
   (1) Start the engine.
   (2) Turn the Subaru Select Monitor switch to ON.
   (3) On the «Main Menu» display screen, select the {Each System Check} and press the [YES] key.
   (4) On the «System Selection Menu» display screen, select the {Transmission} and press the [YES] key.
   (5) Press the [YES] key after the information of transmission type has been displayed.
   (6) On the «Transmission Diagnosis» display screen, select the {Current Data Display/Save}, and then press the [YES] key.
   (7) On the «Transmission Diagnosis» display screen, select the {Data Display} and press the [YES] key.
   (8) Using the scroll key, display the “P/L solenoid target oil pressure”.

7) Perform the line pressure test.

NOTE:
• Do not perform the line pressure test for more than 5 seconds at a time. It makes engine oil and ATF deteriorate and the clutch and brake to be adversely affected.
• Be sure to cool down the engine for at least one minute with the select lever set in “P” or “N” range and with the idle speed lower than 1,200 rpm after performing line pressure test.
• Adjust the throttle valve angle in order to obtain the “P/L solenoid target pressure” displayed on the Subaru Select Monitor.

Range of the selector lever	Throttle valve angle	ATF temperature condition	“P/L Solenoid Target Pressure” displayed on the Subaru Select Monitor kPa	Standard line pressure kPa (kg/cm^2, psi)
D	Full closed	45 — 55°C (104 — 131 °F)	490	385 — 555 (3.93 — 5.66, 55.8 — 80.5)
	Full open		1,370	1,235 — 1,475 (12.59 — 15.04, 179.1 — 213.9)
R	Full closed		1,370	1,530 — 1,925 (15.60 — 19.6, 221.9 — 279.2)

8. Transfer Clutch Pressure Test

A: INSPECTION

1) Lift-up the vehicle.
2) Remove the heat shield cover securing bolts to slide the heat shield cover.

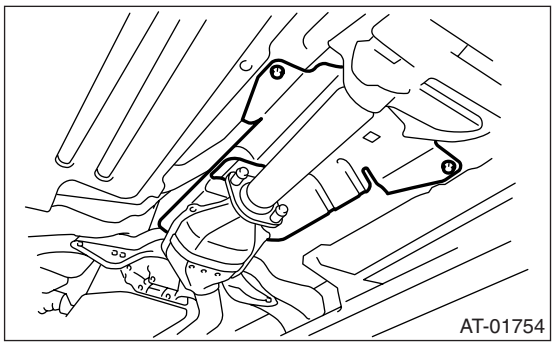

3) Remove the test plug and install the ST.
ST 498897200 OIL PRESSURE ADAPTER

CAUTION:
Be careful not to cut your arm with the heat shield cover when removing the test plug and installing the ST.

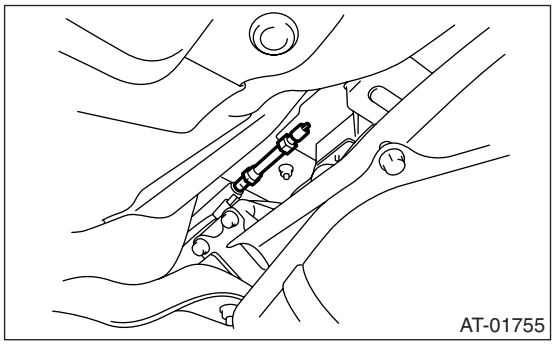

4) Set the ST1 and ST2.
ST1 498897200 OIL PRESSURE ADAPTER
ST2 498575400 OIL PRESSURE GAUGE ASSY

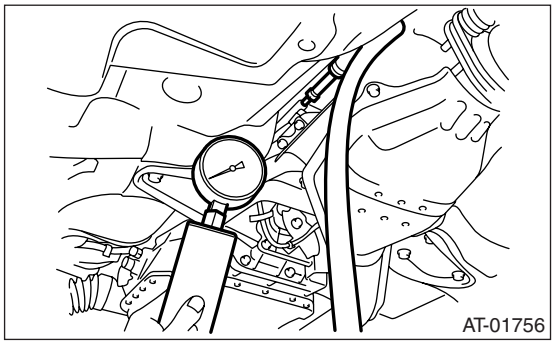

5) Lower the vehicle, and pull the ST1 and ST2 into vehicle.
ST1 498897200 OIL PRESSURE ADAPTER
ST2 498575400 OIL PRESSURE GAUGE ASSY

6) Connect the Subaru Select Monitor to data link connector and read the current data. <Ref. to 5AT(diag)-15, READ CURRENT DATA, OPERATION, Subaru Select Monitor.>
(1) Start the engine.
(2) Turn the Subaru Select Monitor switch to ON.
(3) On the «Main Menu» display screen, select the {Each System Check} and press the [YES] key.
(4) On the «System Selection Menu» display screen, select the {Transmission} and press the [YES] key.
(5) Press the [YES] key after the information of transmission type has been displayed.
(6) On the «Transmission Diagnosis» display screen, select the {Current Data Display/Save}, and then press the [YES] key.
(7) On the «Transmission Diagnosis» display screen, select the {Data Display} and press the [YES] key.
(8) Using the scroll key, display the “T/F solenoid target oil pressure”.

7) Perform the transfer clutch pressure test.

NOTE:
• Do not perform the transfer clutch pressure test for more than 5 seconds at a time. It makes engine oil and ATF deteriorate and the clutch and brake to be adversely affected.
• Be sure to cool down the engine for at least one minute with the select lever set in “P” or “N” range and with the idle speed lower than 1,200 rpm after performing transfer clutch pressure test.
• Adjust the throttle valve angle in order to obtain the “T/F solenoid target pressure” displayed on the Subaru Select Monitor.

Range of the selector lever	Throttle valve angle	ATF temperature condition	“T/F Solenoid Target Pressure” displayed on the Subaru Select Monitor kPa	Standard line pressure kPa (kg/cm^2, psi)
D	Full open	45 — 55°C (104 — 131 °F)	900	800 — 915 (8.16 — 9.33, 116.0 — 132.7)
	Partial throttle		500	400 — 535 (4.08 — 5.46, 58.0 — 77.6)
N	Full closed		0	0 — 50 (0 — 0.51, 0 — 7.3)

9. Automatic Transmission Assembly

A: REMOVAL

1) Set the vehicle on a lift.
2) Fully open the front hood and support with the hood stay.
3) Disconnect the ground cable from battery.
4) Remove the collector cover.
5) Remove the intercooler. (Turbo model) <Ref. to IN(H4DOTC)-12, REMOVAL, Intercooler.>
6) Remove the air intake chamber. (Non-turbo model) <Ref. to IN(H6DO)-7, REMOVAL, Air Intake Chamber.>
7) Remove the air cleaner case. (Non-turbo model) <Ref. to IN(H6DO)-5, REMOVAL, Air Cleaner Case.>
8) Remove the air breather hose. <Ref. to 5AT-65, REMOVAL, Air Breather Hose.>
9) Remove the starter. <Ref. to SC(H4SO)-6, REMOVAL, Starter.>
10) Disconnect the following connectors.
- Turbo model
  (1) Transmission harness connectors

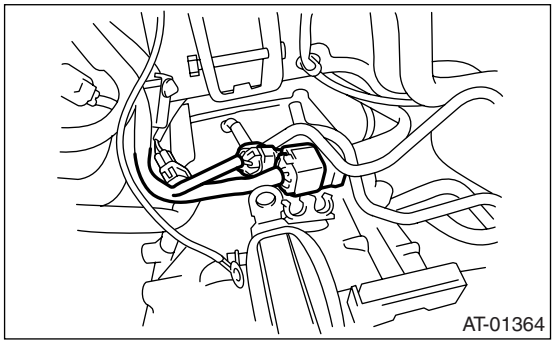

  (2) Front oxygen (A/F) sensor

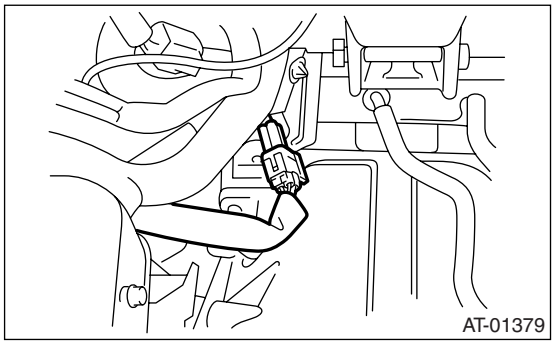

- Non-turbo model

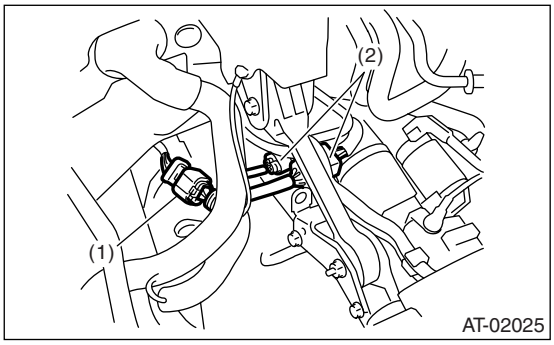

(1) Front oxygen (A/F) sensor
(2) Transmission harness connector

11) Remove the intercooler stay and engine hanger rear. (Turbo model)

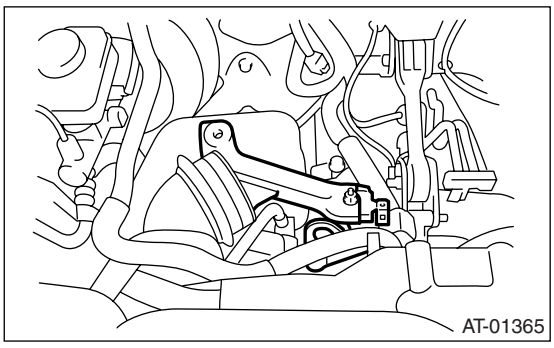

12) Disconnect the engine harness connectors, and then remove the engine hanger rear. (Non-turbo model)

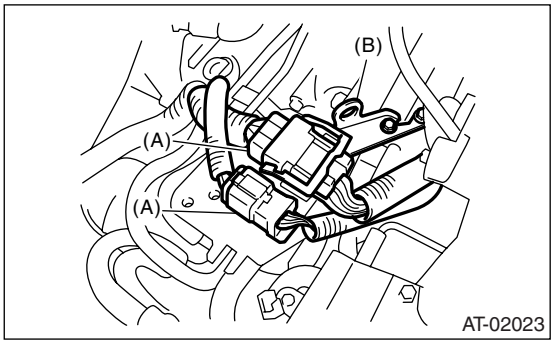

(A) Engine harness connectors
(B) Engine hanger rear

13) Remove the water by-pass pipe. (Turbo model)

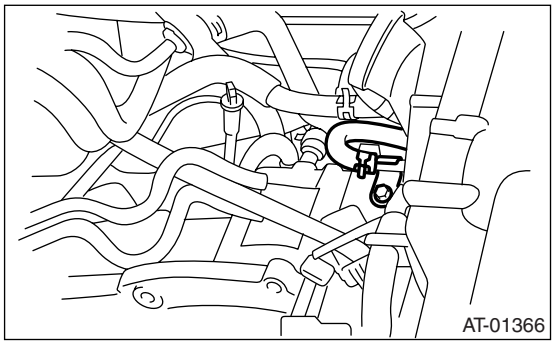

14) Separate the torque converter from drive plate.
(1) Remove the service hole plug.
(2) Remove the bolts which hold torque converter to drive plate.
(3) Remove the four bolts by rotating the clamp pulley a little at a time.
(4) Make sure the torque converter moves freely by rotating with finger through the starter installation hole.

CAUTION:
Be careful not to drop bolts into converter housing.

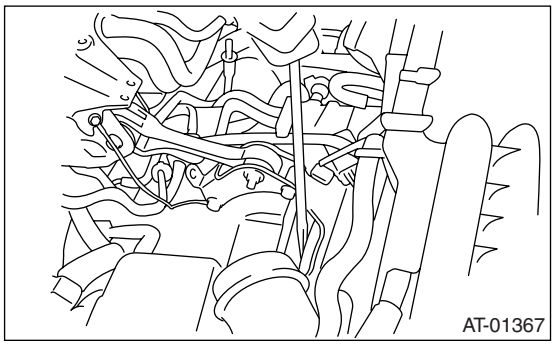

15) Install the ST to converter case.
ST 498277200 STOPPER SET

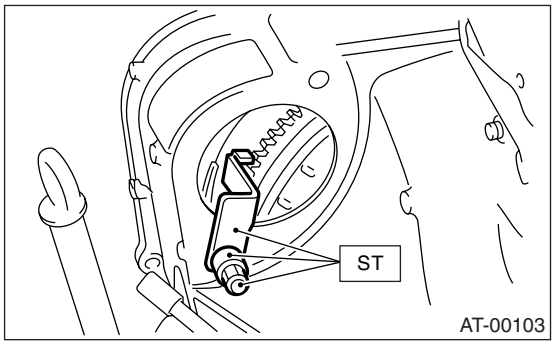

16) Remove the pitching stopper.

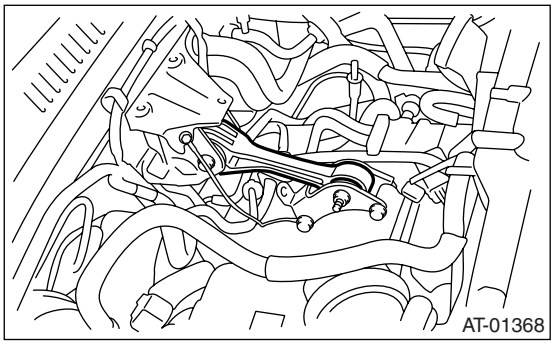

17) Remove the pitching stopper bracket.

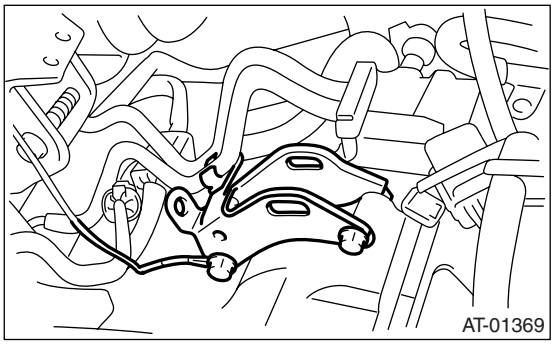

18) Set the ST.
ST 41099AC000 ENGINE SUPPORT ASSEMBLY

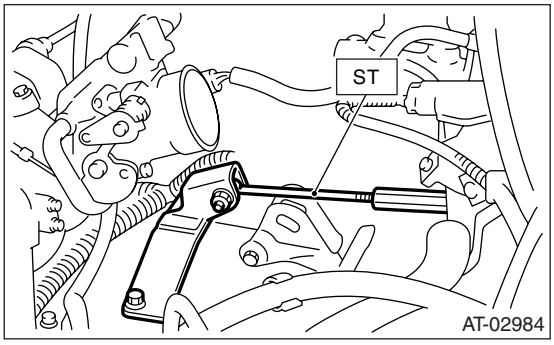

19) Remove the air intake duct. (Turbo model) <Ref. to IN(H4DOTC)-9, REMOVAL, Air Intake Duct.>
20) Remove the air cleaner case. (Turbo model) <Ref. to IN(H4DOTC)-8, REMOVAL, Air Cleaner Case.>

21) Remove the transmission mounting bolt (upper side).

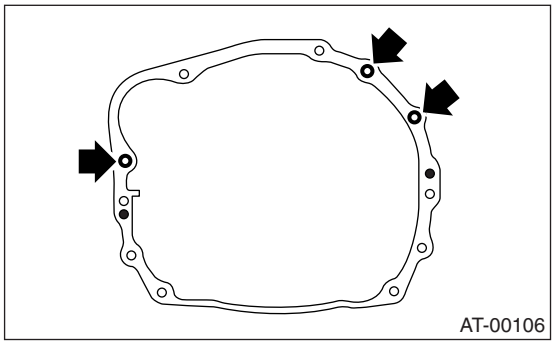

22) Lift-up the vehicle. (Turbo model)
23) Remove the under cover. (Turbo model)
24) Remove the center exhaust pipe, rear exhaust pipe and muffler. (Turbo model) <Ref. to EX(H4DOTC)-8, REMOVAL, Center Exhaust Pipe.> <Ref. to EX(H4DOTC)-12, REMOVAL, Rear Exhaust Pipe.> <Ref. to EX(H4DOTC)-13, REMOVAL, Muffler.>
25) Remove the front exhaust pipe, rear exhaust pipe and muffler. (Non-turbo model) <Ref. to EX(H6DO)-4, REMOVAL, Front Exhaust Pipe.> <Ref. to EX(H6DO)-7, REMOVAL, Rear Exhaust Pipe.> <Ref. to EX(H6DO)-9, REMOVAL, Muffler.>
26) Remove the heat shield cover.

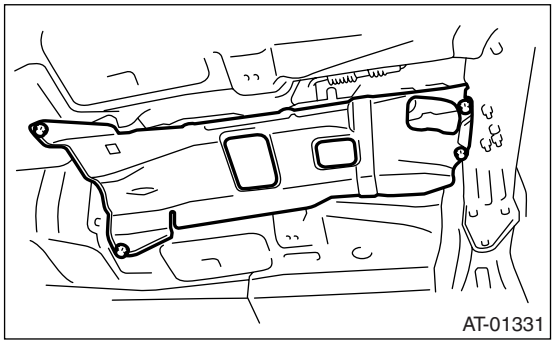

27) Remove the ATF drain plug to drain ATF.

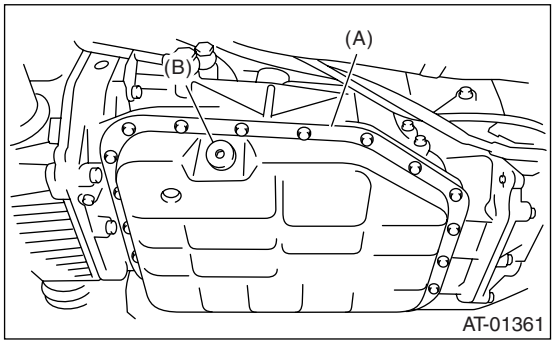

(A) Oil pan
(B) Drain plug

28) Remove the oil charge pipe.

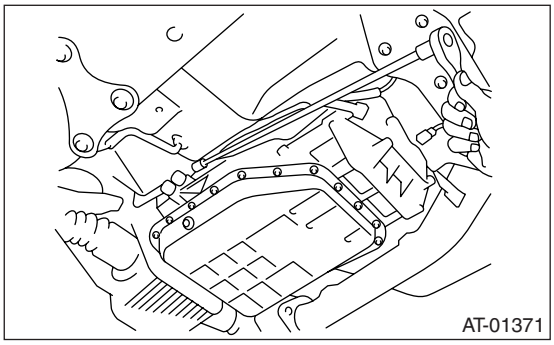

29) Disconnect the connector from turbine speed sensor 1.

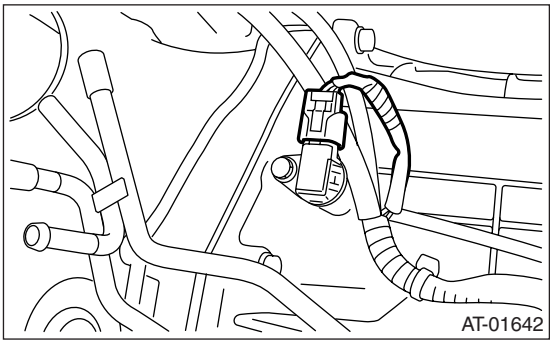

30) Remove the turbine speed sensor 1 connector mounting bolt and rotate the sensor by 180°.

CAUTION:
Failure to follow this procedure may cause the interference between vehicle body and sensor while removing/installing transmission, resulting in damage.

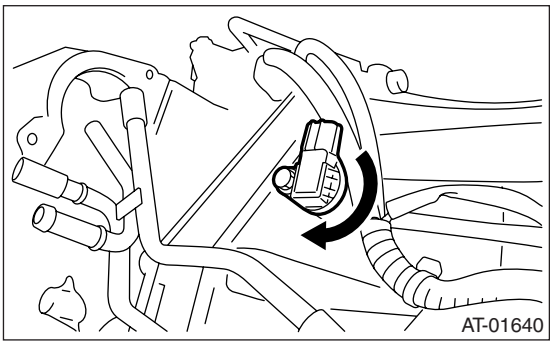

31) Remove the propeller shaft. <Ref. to DS-10, REMOVAL, Propeller Shaft.>
32) Remove the shift select cable. <Ref. to CS-24, REMOVAL, Select Cable.>

33) Disconnect the hose from the ATF inlet and outlet pipes.

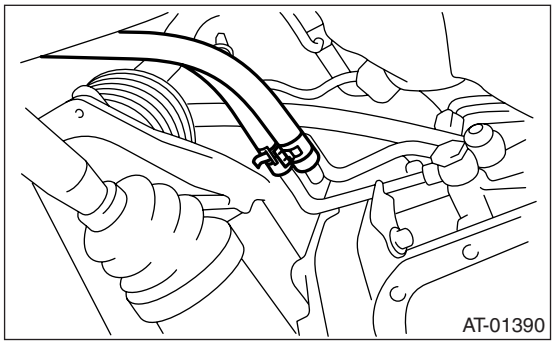

34) Remove the front crossmember support plate. <Ref. to FS-14, REMOVAL, Front Crossmember Support Plate.>
35) Remove the two clutch housing cover securing bolts.

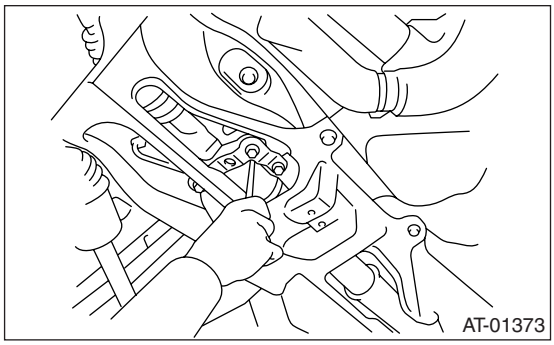

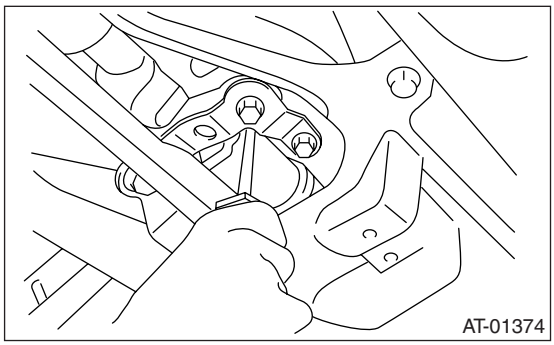

36) Remove the front stabilizer bracket. <Ref. to FS-15, REMOVAL, Front Stabilizer.>
37) Remove the bolts which secure front ball joint to the housing. <Ref. to FS-16, REMOVAL, Front Ball Joint.>
38) Pull out the drive shaft from transmission.

39) Set the transmission jack under the transmission.

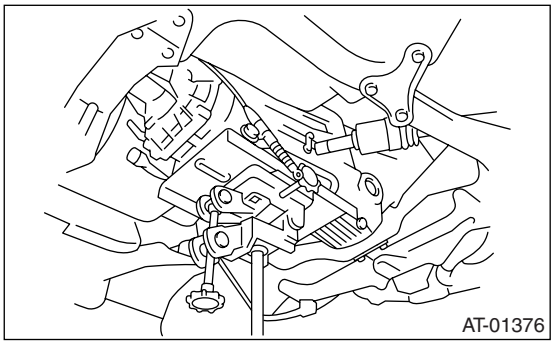

40) Remove the rear crossmember.

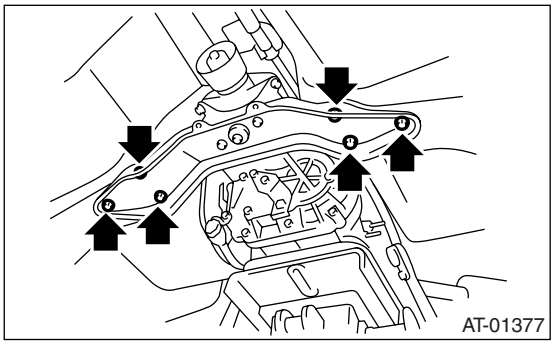

41) Remove the transmission mounting bolt (lower side).

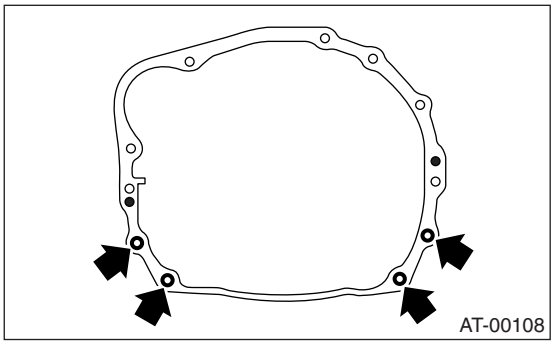

42) Remove the transmission.

NOTE:
• Turn the engine support assembly from the vehicle under body to the left (to shorten the engine support length), and lower the rear of the engine for easy disassembly.
• Be careful not to allow breather pipe and etc. to touch the vehicle body when detaching the automatic transmission assembly by pulling it backward.

B: INSTALLATION

1) Install the ST to converter case.
ST 498277200 STOPPER SET

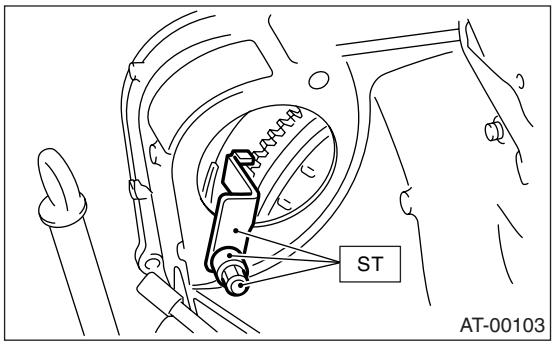

2) Install the transmission onto engine.
(1) Lift up the transmission gradually using a transmission jack.
(2) Engage them at splines.
3) Install the engine mounting bolt (lower side).

Tightening torque:
50 N·m (5.1 kgf-m, 36.9 ft-lb)

4) Install the transmission rear crossmember.

Tightening torque:
75 N·m (7.6 kgf-m, 55.3 ft-lb)

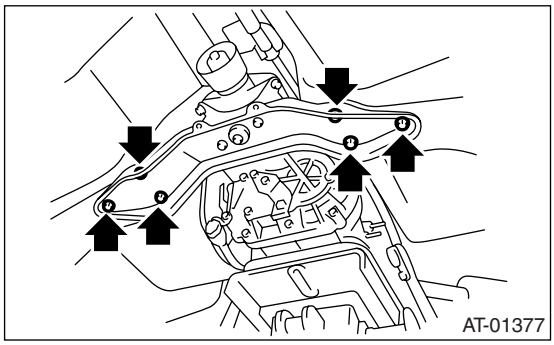

5) Take off the transmission jack.
6) Lower the vehicle.
7) Install the engine mounting bolt (upper side).

Tightening torque:
50 N·m (5.1 kgf-m, 36.9 ft-lb)

8) Remove the ST from converter case.
ST 498277200 STOPPER SET
9) Install the starter. <Ref. to SC(H4SO)-6, INSTALLATION, Starter.>
10) Install the torque converter to drive plate.
(1) Install the bolts which hold torque converter to drive plate.
(2) Install all four bolts by rotating the crank pulley a little at a time.
(3) Install the service hole.

Tightening torque:
25 N·m (2.5 kgf-m, 18 ft-lb)

11) Remove the ST and install the pitching stopper bracket.

Tightening torque:
40 N·m (4.1 kgf-m, 29.5 ft-lb)

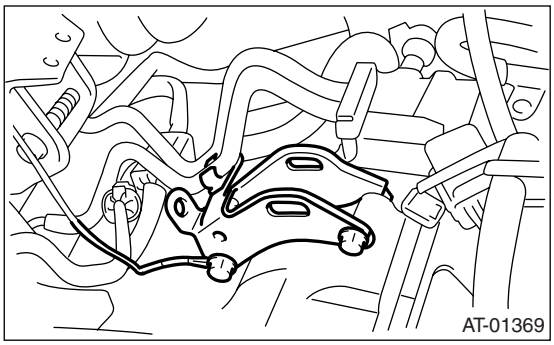

12) Install the pitching stopper.

Tightening torque:
T1: 50 N·m (5.1 kgf-m, 36.9 ft-lb)
T2: 58 N·m (5.9 kgf-m, 42.8 ft-lb)

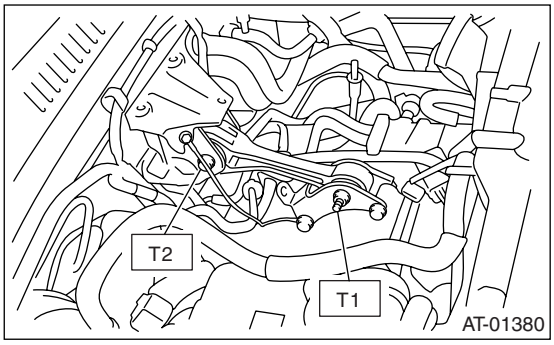

13) Lift-up the vehicle.
14) Replace the front differential side retainer oil seal.
(1) Remove the oil seal by using flat tip screwdriver and etc.
(2) Fit a new oil seal using ST.
ST 18675AA000 DIFFERENTIAL SIDE OIL SEAL INSTALLER

NOTE:
- Apply oil to the oil seal lips.
- Always replace the differential side oil seal after extracting front drive shaft from the transmission.

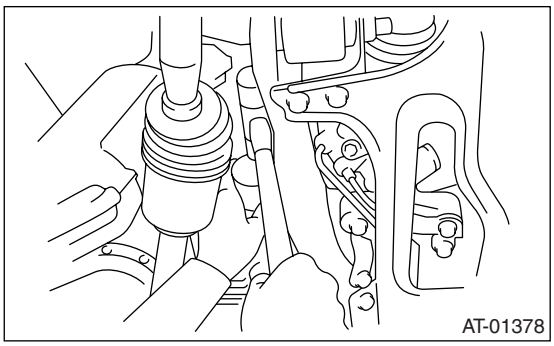

15) Apply grease to the oil seal lips.

16) Set the ST to the side retainer.
ST 28399SA000 OIL SEAL PROTECTOR

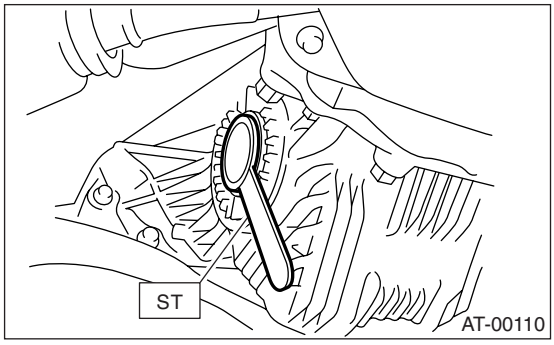

17) Install the front drive shaft into transmission.

NOTE:
Replace the circlip of drive shaft with a new one.

18) Install the front drive shaft into transmission, remove the ST and insert the drive shaft securely.
ST 28399SA000 OIL SEAL PROTECTOR

19) Install the inlet and outlet hoses to the ATF inlet and outlet pipes.

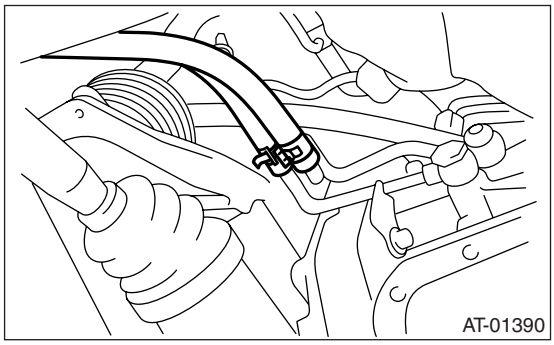

20) Insert the ball joint into housing. <Ref. to FS-16, INSTALLATION, Front Ball Joint.>

21) Install the front stabilizer bracket. <Ref. to FS-15, INSTALLATION, Front Stabilizer.>

22) Screw the securing bolts for clutch housing cover.

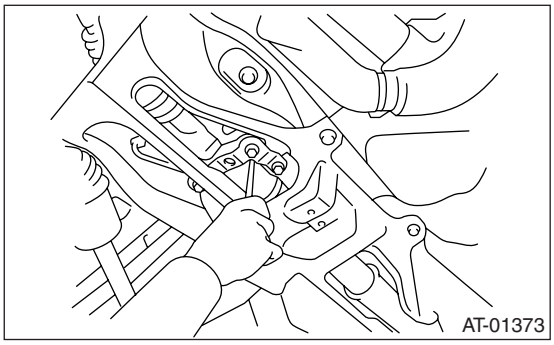

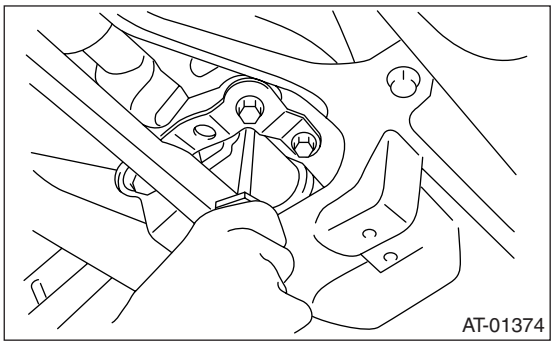

23) Install the front crossmember support plate. <Ref. to FS-14, INSTALLATION, Front Crossmember Support Plate.>

24) Install the propeller shaft. <Ref. to DS-11, INSTALLATION, Propeller Shaft.>

25) Install the shift select cable. <Ref. to CS-25, INSTALLATION, Select Cable.>

26) Install the turbine speed sensor 1 and harness, and then connect the connector.

Tightening torque:
7 N·m (0.7 kgf-m, 5.2 ft-lb)

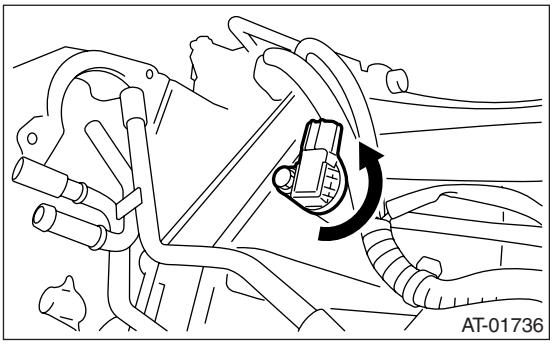

27) Install the oil charge pipe.

Tightening torque:
41 N·m (4.2 kgf-m, 30.2 ft-lb)

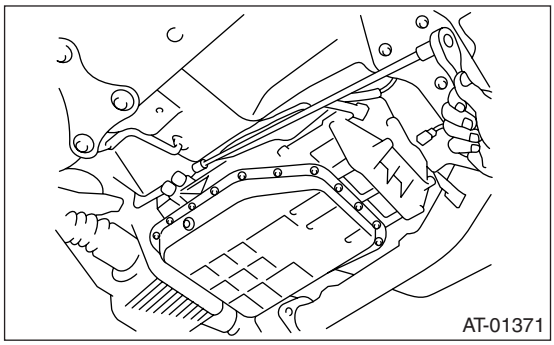
AT-01371

28) Install the heat shield cover.

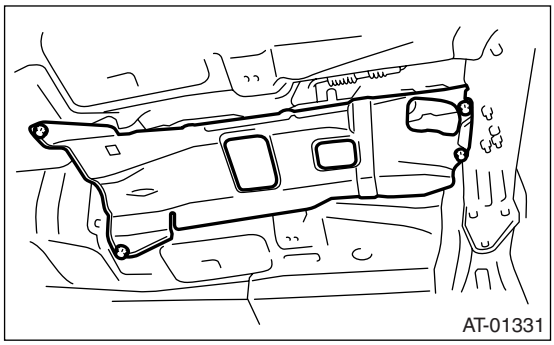
AT-01331

29) Install the center exhaust pipe, rear exhaust pipe and muffler. (Turbo model) <Ref. to EX(H4DOTC)-9, INSTALLATION, Center Exhaust Pipe.> <Ref. to EX(H4DOTC)-12, INSTALLATION, Rear Exhaust Pipe.> <Ref. to EX(H4DOTC)-13, INSTALLATION, Muffler.>
30) Install the front exhaust pipe, rear exhaust pipe and muffler. (Non-turbo model) <Ref. to EX(H6DO)-5, INSTALLATION, Front Exhaust Pipe.> <Ref. to EX(H6DO)-7, INSTALLATION, Rear Exhaust Pipe.> <Ref. to EX(H6DO)-9, INSTALLATION, Muffler.>
31) Install the under cover.
32) Lower the vehicle.
33) Install the air cleaner hose.
<Ref. to IN(H4DOTC)-8, INSTALLATION, Air Cleaner Case.>
34) Install the air intake duct.
<Ref. to IN(H4DOTC)-9, INSTALLATION, Air Intake Duct.>
35) Connect the following connectors.

- Turbo model
  (1) Transmission harness connectors

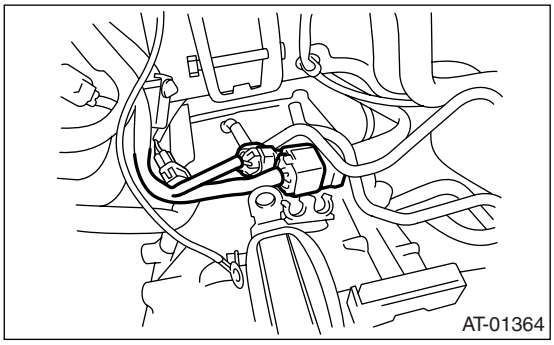
AT-01364

(2) Front oxygen (A/F) sensor

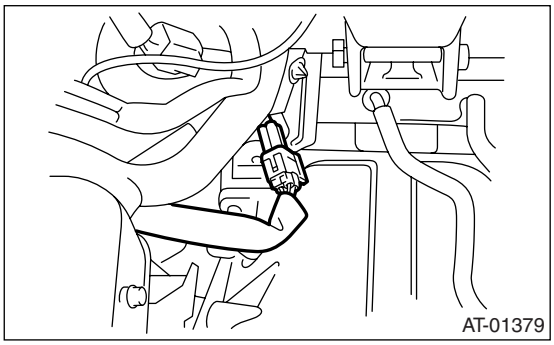
AT-01379

- Non-turbo model

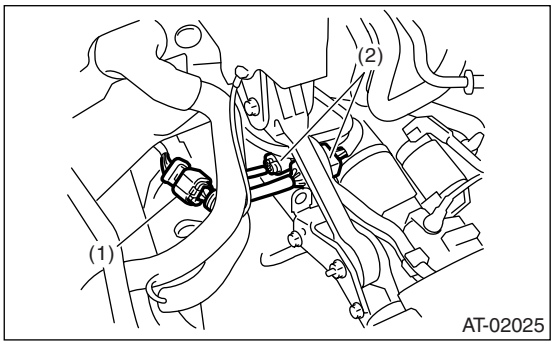

AT-02025

(1) Front oxygen (A/F) sensor
(2) Transmission harness connector

36) Install the intercooler stay RH and engine hanger rear. (Turbo model)

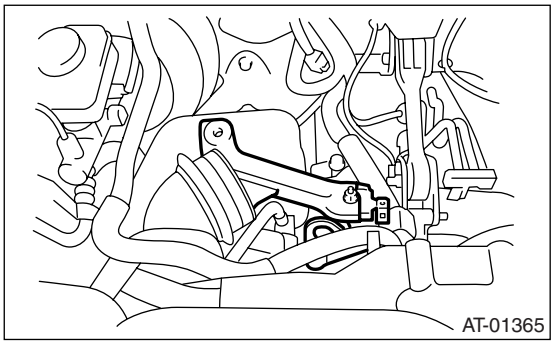
AT-01365

37) Install the engine hanger rear, and then connect the engine harness connector. (Non-turbo model)

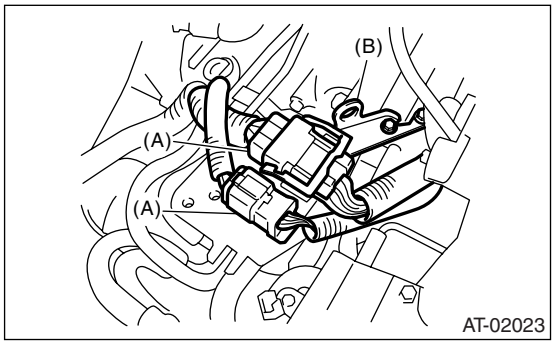

(A) Engine harness connectors
(B) Engine hanger rear

38) Install the water by-pass pipe. (Turbo model)

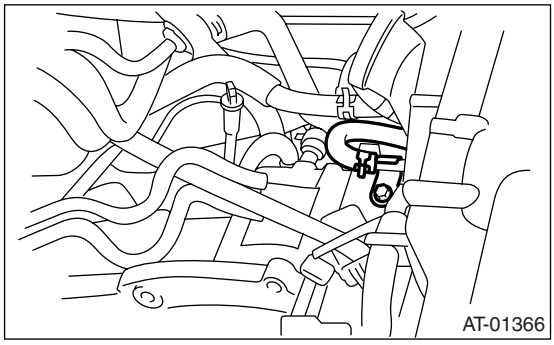

39) Pour ATF from the oil charge pipe. <Ref. to 5AT-27, REPLACEMENT, Automatic Transmission Fluid.>
40) Install the air breather hose. <Ref. to 5AT-65, INSTALLATION, Air Breather Hose.>
41) Install the intercooler. (Turbo model) <Ref. to IN(H4DOTC)-12, INSTALLATION, Intercooler.>
42) Install the air intake chamber. (Non-turbo model) <Ref. to IN(H6DO)-7, INSTALLATION, Air Intake Chamber.>
43) Install the air cleaner case. (Non-turbo model) <Ref. to IN(H6DO)-5, INSTALLATION, Air Cleaner Case.>
44) Install the collector cover.
45) Connect the battery ground cable to battery.
46) Perform the Clear Memory 2. <Ref. to 5AT(diag)-17, CLEAR MEMORY MODE, OPERATION, Subaru Select Monitor.>
(1) Connect the Subaru Select Monitor to data link connector.
(2) Turn the ignition switch to ON (engine OFF) and turn Subaru Select Monitor switch to ON.
(3) Ensure that the select lever is in “P” range.
(4) On the «Main Menu» display screen, select the {Each System Check} and press the [YES] key.
(5) On the «System Selection Menu» display screen, select the {Transmission} and press the [YES] key.
(6) Press the [YES] key after the information of transmission type has been displayed.
(7) On the «Transmission Diagnosis» display screen, select the {Clear Memory 2} and press the [YES] key.
47) Perform the inspection with driving the vehicle at the end of repair work and make sure there is no faulty as below;
- Excessive shift shock
- Oil leakage from transmission proper and etc.
- Occurrence of noise caused by interference etc.

NOTE:
If excessive shift shock is felt, execute the advance operation of learning control. <Ref. to 5AT(diag)-21, PROCEDURE, Learning Control.>

10.Transmission Mounting System

A: REMOVAL

1. PITCHING STOPPER

1) Disconnect the ground cable from battery.
2) Remove the intercooler. (Turbo model)
<Ref. to IN(H4DOTC)-12, REMOVAL, Intercooler.>
3) Remove the air intake chamber. (Non-turbo model) <Ref. to IN(H6DO)-7, REMOVAL, Air Intake Chamber.>
4) Remove the pitching stopper.

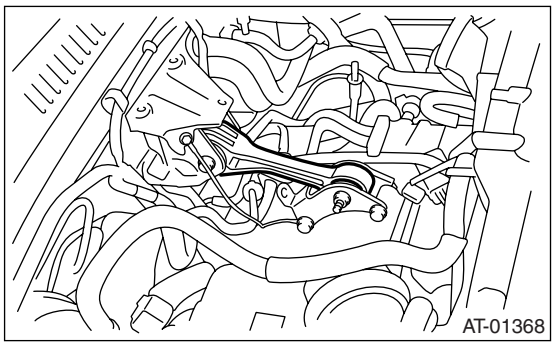

2. TRANSMISSION REAR CROSSMEMBER & REAR CUSHION RUBBER

1) Disconnect the ground cable from battery.
2) Jack-up the vehicle and support it with rigid racks.
3) Remove the center exhaust pipe, rear exhaust pipe and muffler. (Turbo model)
<Ref. to EX(H4DOTC)-8, REMOVAL, Center Exhaust Pipe.> <Ref. to EX(H4DOTC)-12, REMOVAL, Rear Exhaust Pipe.> <Ref. to EX(H4DOTC)-13, REMOVAL, Muffler.>
4) Remove the front exhaust pipe, rear exhaust pipe and muffler. (Non-turbo model) <Ref. to EX(H6DO)-4, REMOVAL, Front Exhaust Pipe.> <Ref. to EX(H6DO)-7, REMOVAL, Rear Exhaust Pipe.> <Ref. to EX(H6DO)-9, REMOVAL, Muffler.>
5) Remove the heat shield cover.
6) Set the transmission jack under the transmission. Make sure that the support plate of transmission jack does not touch the oil pan.
7) Remove the transmission rear crossmember.

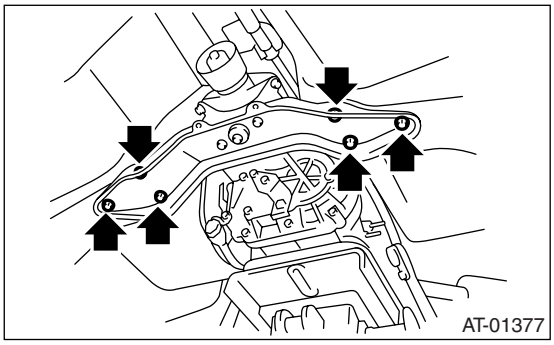

8) Remove the rear cushion rubber from transmission.

B: INSTALLATION

1. PITCHING STOPPER

1) Install the pitching stopper.

Tightening torque:
T1: 50 N·m (5.1 kgf-m, 36.9 ft-lb)
T2: 58 N·m (5.9 kgf-m, 42.8 ft-lb)

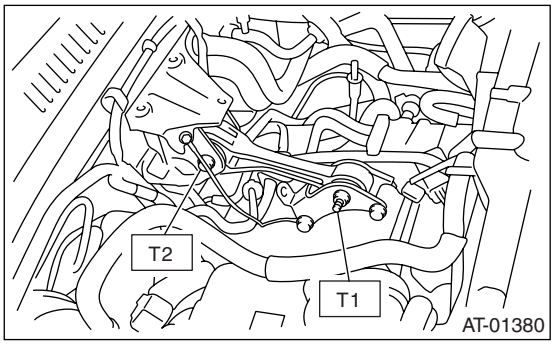

2) Install the intercooler. (Turbo model)
<Ref. to IN(H4DOTC)-12, INSTALLATION, Intercooler.>
3) Install the air intake chamber. (Non-turbo model)
<Ref. to IN(H6DO)-7, INSTALLATION, Air Intake Chamber.>
4) Connect the battery ground cable to battery.

2. TRANSMISSION REAR CROSSMEMBER & REAR CUSHION RUBBER

1) Install the rear cushion rubber to transmission.

Tightening torque:
35 N·m (3.6 kgf-m, 26 ft-lb)

2) Install the crossmember.

Tightening torque:
75 N·m (7.6 kgf-m, 55.3 ft-lb)

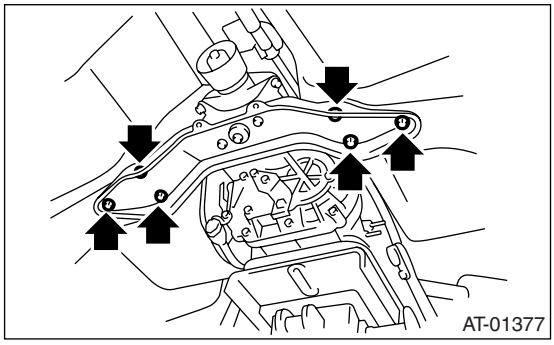

3) Remove the transmission jack.
4) Install the heat shield cover.
5) Install the center exhaust pipe, rear exhaust pipe and muffler. (Turbo model)
<Ref. to EX(H4DOTC)-9, INSTALLATION, Center Exhaust Pipe.> <Ref. to EX(H4DOTC)-12, INSTALLATION, Rear Exhaust Pipe.> <Ref. to EX(H4DOTC)-13, INSTALLATION, Muffler.>
6) Install the front exhaust pipe, rear exhaust pipe and muffler. (Non-turbo model) <Ref. to EX(H6DO)-5, INSTALLATION, Front Exhaust Pipe.> <Ref. to EX(H6DO)-7, INSTALLATION, Rear Exhaust Pipe.> <Ref. to EX(H6DO)-9, INSTALLATION, Muffler.>
7) Connect the battery ground cable to battery.

C: INSPECTION

Repair or replace parts if the results of the inspection below are not satisfied.

1. PITCHING STOPPER

Check pitching stopper for bends or damage. Ensure there are no cracks, hardening or damage on rubbers.

2. TRANSMISSION REAR CROSSMEMBER & REAR CUSHION RUBBER

Check the crossmember for bends or damage. Ensure there are no cracks, hardening, or damage on cushion rubbers.

11.Extension Case Oil Seal

A: INSPECTION

Inspect there is no ATF leakage from the joint of transmission and propeller shaft. If so, replace the oil seal. <Ref. to 5AT-48, REPLACEMENT, Extension Case Oil Seal.>

B: REPLACEMENT

1) Lift-up the vehicle.
2) Clean the transmission exterior.
3) Remove the ATF drain plug to drain ATF.

CAUTION:
Directly after the vehicle has been running or the engine has been long idle running, the ATF is hot. Be careful not to burn yourself.

4) Tighten the ATF drain plug.

NOTE:
Use a new gasket.

Tightening torque:
20 N·m (2.0 kgf-m, 14.8 ft-lb)

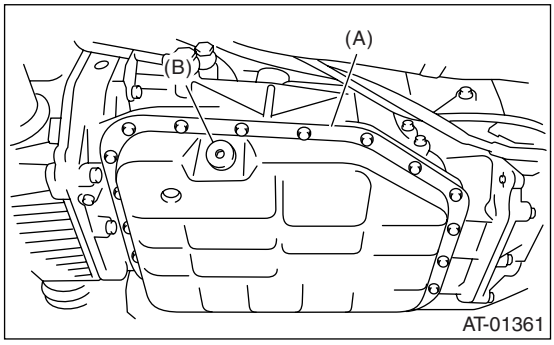

(A) Oil pan
(B) ATF drain plug

5) Remove the rear exhaust pipe and muffler. (Turbo model)
<Ref. to EX(H4DOTC)-12, REMOVAL, Rear Exhaust Pipe.> <Ref. to EX(H4DOTC)-13, REMOVAL, Muffler.>
6) Remove the rear exhaust pipe and muffler. (Non-turbo model) <Ref. to EX(H6DO)-7, REMOVAL, Rear Exhaust Pipe.> <Ref. to EX(H6DO)-9, REMOVAL, Muffler.>
7) Remove the heat shield cover.

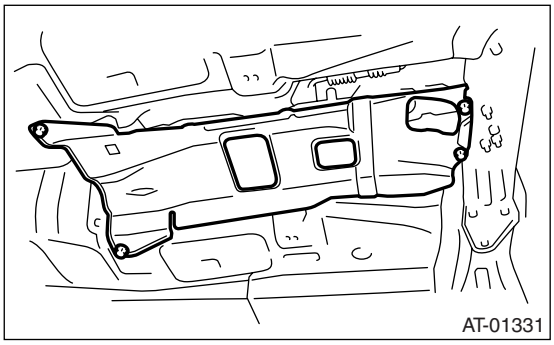

8) Remove the propeller shaft. <Ref. to DS-10, REMOVAL, Propeller Shaft.>
9) Using the ST, remove the oil seal.
ST 398527700 PULLER ASSY
10) Using the ST, install the oil seal.
ST 498057300 INSTALLER
11) Install the propeller shaft. <Ref. to DS-11, INSTALLATION, Propeller Shaft.>
12) Install the heat shield cover.

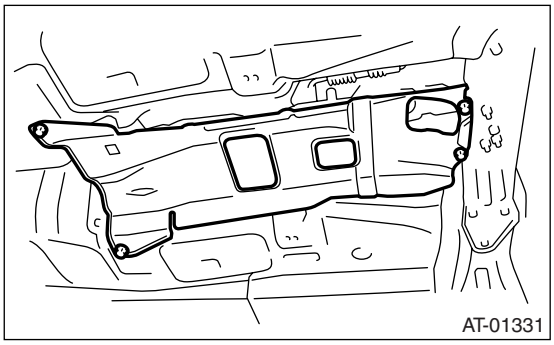

13) Install the rear exhaust pipe and muffler. (Turbo model)
<Ref. to EX(H4DOTC)-12, INSTALLATION, Rear Exhaust Pipe.> <Ref. to EX(H4DOTC)-13, INSTALLATION, Muffler.>
14) Install the rear exhaust pipe and muffler. (Non-turbo model) <Ref. to EX(H6DO)-7, INSTALLATION, Rear Exhaust Pipe.> <Ref. to EX(H6DO)-9, INSTALLATION, Muffler.>
15) Pour ATF into the oil charge pipe.

Specified fluid:
SUBARU ATF (Part No. K0140Y0700)

Recommended fluid:
IDEMITSU ATF HP
Castrol Transmax J

NOTE:
Use of recommended fluid is permitted only on the area where the specified is not available.

Capacity:
Fill the same amount of ATF drained.

16) Check the level and leaks of ATF. <Ref. to 5AT-27, Automatic Transmission Fluid.>

12. Differential Side Retainer Oil Seal

A: INSPECTION

Check the leakage of gear oil from differential side retainer oil seal part. If there is oil leakage, replace the oil seal.

B: REPLACEMENT

1) Lift-up the vehicle.
2) Remove the front exhaust pipe and center exhaust pipe. (Turbo model) <Ref. to EX(H4DOTC)-6, REMOVAL, Front Exhaust Pipe.> <Ref. to EX(H4DOTC)-8, REMOVAL, Center Exhaust Pipe.>
3) Remove the front exhaust pipe. (Non-turbo model) <Ref. to EX(H6DO)-4, REMOVAL, Front Exhaust Pipe.>
4) Remove the differential gear oil drain plug using TORX® BIT T70 to drain differential gear oil.

CAUTION:
• Directly after the vehicle has been running or the engine has been long idle running, the differential gear oil is hot. Be careful not to burn yourself.
• Be careful not to spill the differential gear oil on exhaust pipe to prevent it from emitting smoke or fire. When the differential gear oil is spilled on exhaust pipe, wipe it away completely.

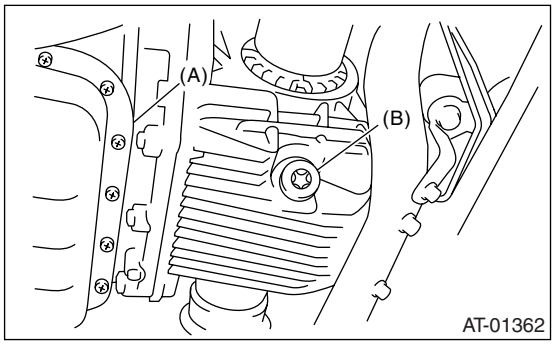

(A) Oil pan
(B) Differential gear oil drain plug

5) Tighten the differential gear oil drain plug.

NOTE:
Use a new gasket.

Tightening torque:
44 N·m (4.5 kgf-m, 32.5 ft-lb)

6) Separate the front drive shaft from transmission. <Ref. to DS-22, REMOVAL, Front Drive Shaft.>
7) Remove the differential side retainer oil seal using driver wrapped with vinyl tape or etc.
8) Using the ST, install the differential side retainer oil seal by slightly tapping with hammer.

ST 18675AA000 DIFFERENTIAL SIDE OIL SEAL INSTALLER

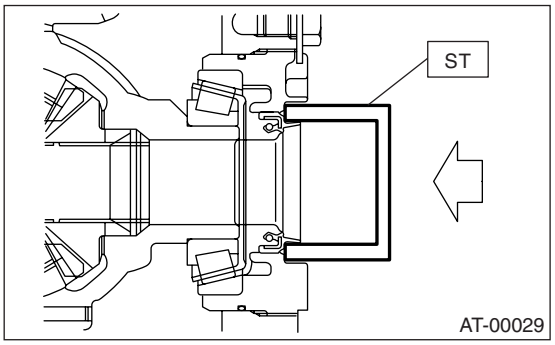

9) Apply oil to the oil seal lips.
10) Install the front drive shaft. <Ref. to DS-22, INSTALLATION, Front Drive Shaft.>
11) Install the front and center exhaust pipes. (Turbo model) <Ref. to EX(H4DOTC)-6, INSTALLATION, Front Exhaust Pipe.> <Ref. to EX(H4DOTC)-9, INSTALLATION, Center Exhaust Pipe.>
12) Install the front exhaust pipe. (Non-turbo model) <Ref. to EX(H6DO)-5, INSTALLATION, Front Exhaust Pipe.>
13) Lower the vehicle.
14) Pour gear oil into the gauge hole.

Recommended gear oil:
<Ref. to 5AT-3, RECOMMENDED GEAR OIL, SPECIFICATION, General Description.>

Gear oil capacity:
1.3 — 1.5 ℓ (1.4 — 1.6 US qt, 1.1 — 1.3 Imp qt)

15) Check the level of differential gear oil. <Ref. to 5AT-29, INSPECTION, Differential Gear Oil.>

13.Inhibitor Switch

A: INSPECTION

Inhibitor switch cannot be checked, because the inhibitor switch is installed on control valve assembly. When the malfunction occurs, refer to 5AT (Diagnosis) section. <Ref. to 5AT(diag)-33, DTC P0705 TRANSMISSION RANGE SENSOR CIRCUIT (PRNDL INPUT), Diagnostic Procedure with Diagnostic Trouble Code (DTC).>

14.Front Vehicle Speed Sensor

A: REMOVAL

1) Remove the transmission assembly from vehicle. <Ref. to 5AT-38, REMOVAL, Automatic Transmission Assembly.>
2) Remove the rear vehicle speed sensor.

NOTE:
Secure the harness of the rear vehicle speed sensor to the transmission proper using wire etc.

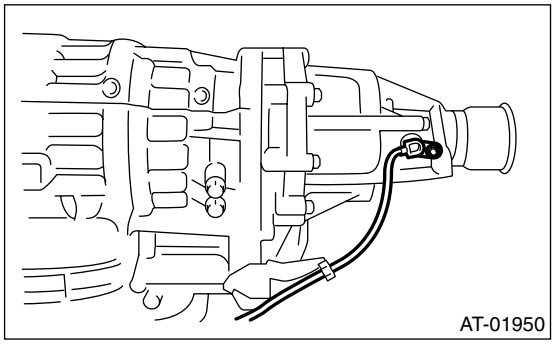
AT-01950

3) Remove the extension case.

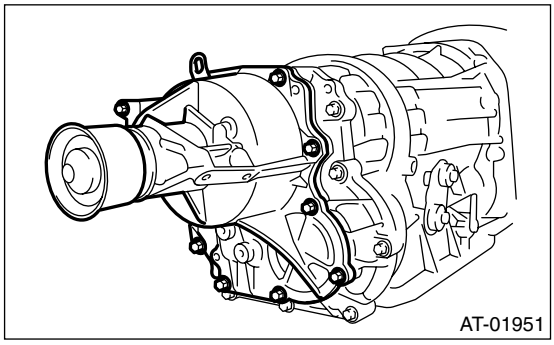
AT-01951

4) Remove the intermediate case.

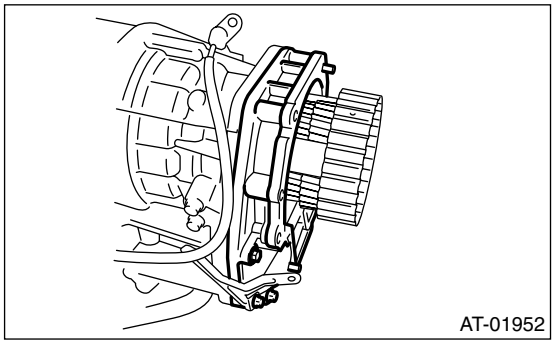
AT-01952

5) Remove the center differential carrier. <Ref. to 5AT-76, REMOVAL, Center Differential Carrier.>
6) Lay along the transmission case, and then remove the oil pan.
7) Remove the old gasket on the oil pan and transmission case completely.
8) Disconnect the front vehicle speed sensor connector.

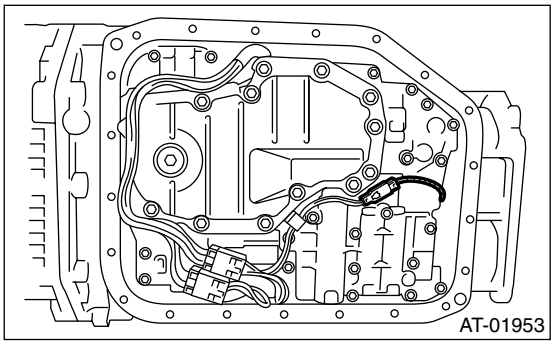
AT-01953

9) Remove the front vehicle speed sensor securing bolt.

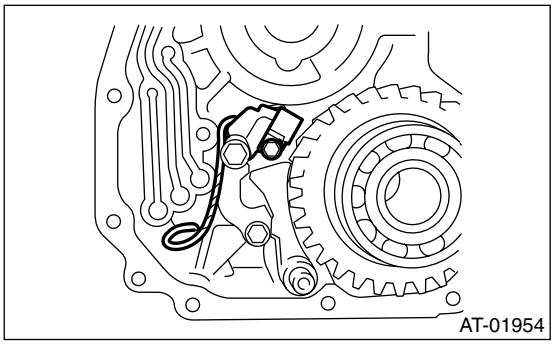
AT-01954

10) Remove the front vehicle speed sensor through the hole of the AT transmission main case.

B: INSTALLATION

1) Install the front vehicle speed sensor.

Tightening torque:
7 N·m (0.7 kgf-m, 5.2 ft-lb)

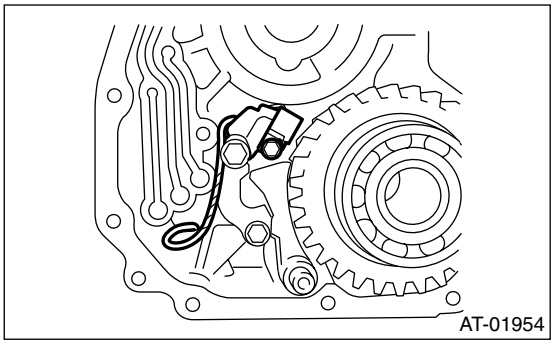
AT-01954

2) Connect the front vehicle speed sensor connector.
3) Apply proper amount of liquid gasket to the entire oil pan mating surface.

Liquid gasket:
THREE BOND 1217B (Part No. K0877YA020)

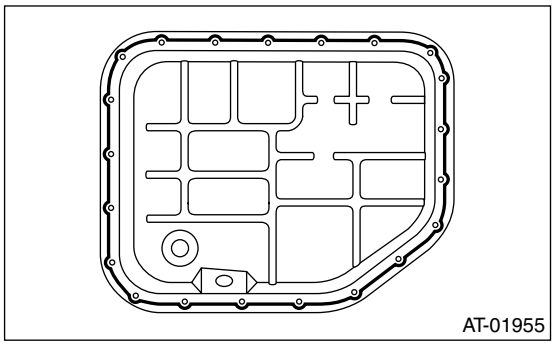

4) Install the oil pan by equally tightening the bolts.

Tightening torque:
5 N·m (0.5 kgf-m, 3.7 ft-lb)

5) Install the center differential carrier. <Ref. to 5AT-76, INSTALLATION, Center Differential Carrier.>
6) Install the intermediate case.

Tightening torque:
25 N·m (2.5 kgf-m, 18 ft-lb)

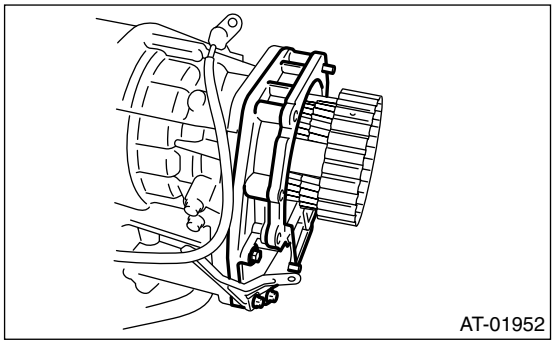

7) Install the extension case.

Tightening torque:
25 N·m (2.5 kgf-m, 18 ft-lb)

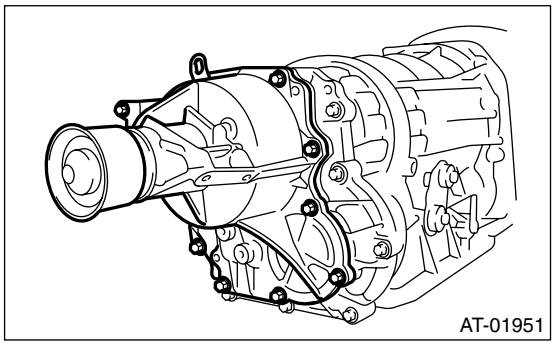

8) Install the rear vehicle speed sensor.

Tightening torque:
7 N·m (0.7 kgf-m, 5.2 ft-lb)

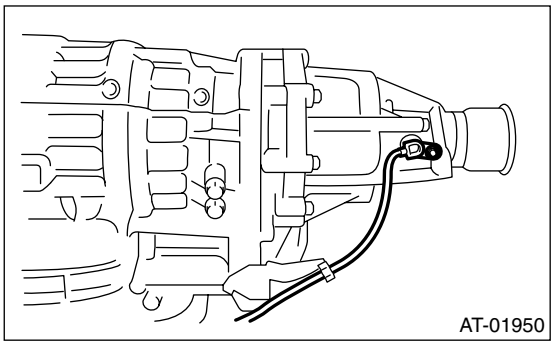

9) Install the transmission assembly into the vehicle. <Ref. to 5AT-42, INSTALLATION, Automatic Transmission Assembly.>
10) Pour ATF from the oil charge pipe. <Ref. to 5AT-27, REPLACEMENT, Automatic Transmission Fluid.>
11) Check the level and leaks of the ATF. <Ref. to 5AT-27, INSPECTION, Automatic Transmission Fluid.>

15.Rear Vehicle Speed Sensor

A: REMOVAL

1) Set the vehicle on a lift.
2) Disconnect the ground cable from battery.
3) Remove the intercooler. (Turbo model)
<Ref. to IN(H4DOTC)-12, REMOVAL, Intercooler.>
4) Remove the air intake chamber. (Non-turbo model) <Ref. to IN(H6DO)-7, REMOVAL, Air Intake Chamber.>
5) Disconnect the following connectors.

- Turbo model
  (1) Transmission harness connectors

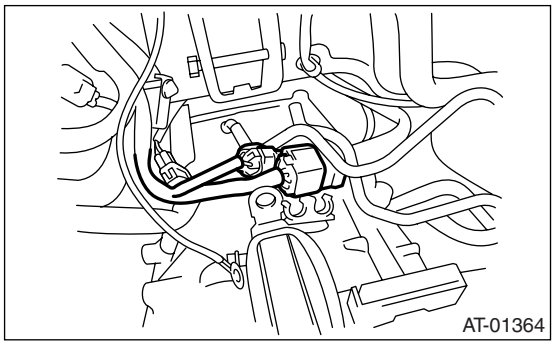

  (2) Front oxygen (A/F) sensor

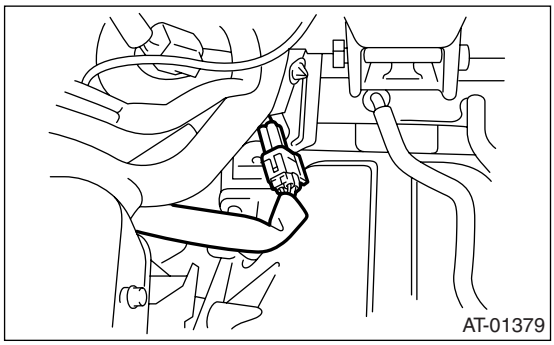

- Non-turbo model

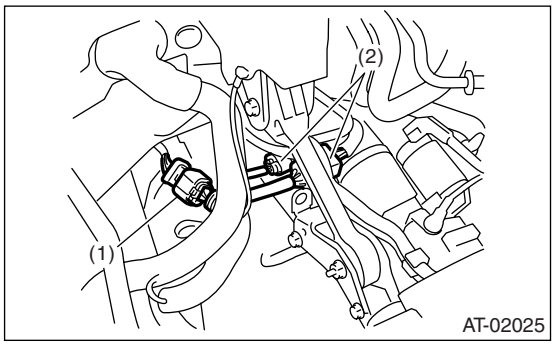

(1) Front oxygen (A/F) sensor
(2) Transmission harness connector

6) Remove the transmission harness connector and front oxygen (A/F) sensor connector from the stay.
7) Lift-up the vehicle.
8) Clean the transmission exterior.
9) Drain ATF completely. <Ref. to 5AT-27, REPLACEMENT, Automatic Transmission Fluid.>
10) Remove the center exhaust pipe, rear exhaust pipe and muffler. (Turbo model) <Ref. to EX(H4DOTC)-8, REMOVAL, Center Exhaust Pipe.> <Ref. to EX(H4DOTC)-12, REMOVAL, Rear Exhaust Pipe.> <Ref. to EX(H4DOTC)-13, REMOVAL, Muffler.>
11) Remove the rear exhaust pipe and muffler. (Non-turbo model) <Ref. to EX(H6DO)-7, REMOVAL, Rear Exhaust Pipe.> <Ref. to EX(H6DO)-9, REMOVAL, Muffler.>
12) Remove the heat shield cover.
13) Remove the propeller shaft. <Ref. to DS-10, REMOVAL, Propeller Shaft.>
14) Place the transmission jack under transmission.

NOTE:
Make sure that the support plate of transmission jack does not touch the crossmember.

15) Remove the transmission rear crossmember bolt.

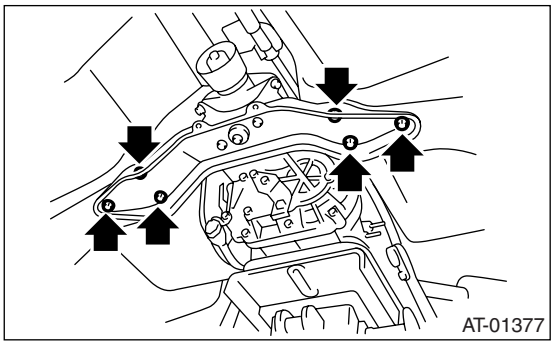

16) Lower the transmission jack.

NOTE:
Do not separate the transmission jack and transmission.

17) Remove the oil charge pipe. <Ref. to 5AT-66, REMOVAL, Oil Charge Pipe.>
18) Remove the ATF cooler inlet and outlet pipes.

NOTE:
When removing the outlet pipe, be careful not to lose the ball and spring used with retaining screw.

19) Disconnect the connector from turbine speed sensor 1.

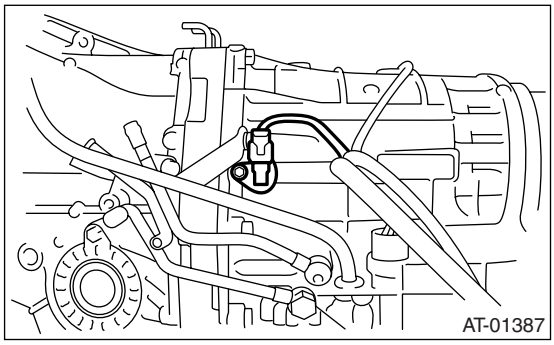

20) Remove the rear vehicle speed sensor.

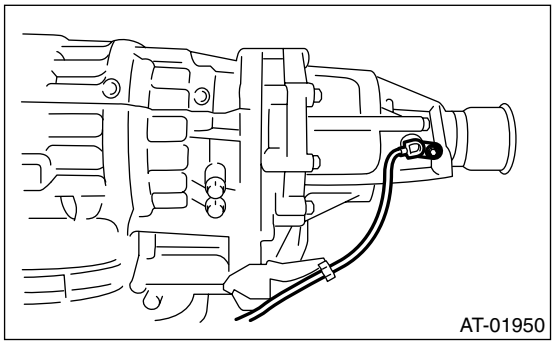

21) Remove the oil pan.
22) Disconnect the control valve connector and front vehicle speed sensor connector.

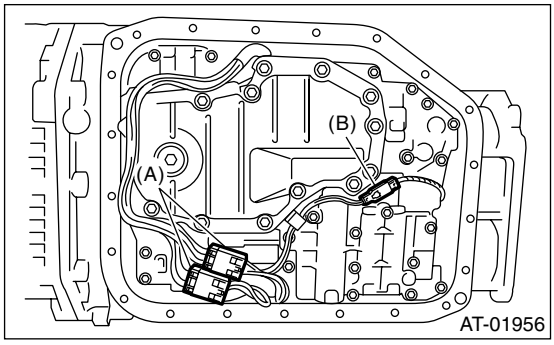

(A) Control valve connector
(B) Front vehicle speed sensor connector

23) Remove the control valve body.

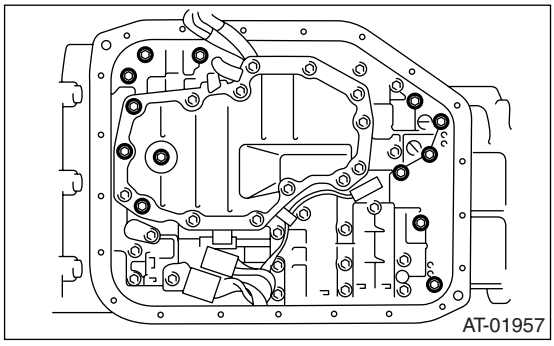

24) Remove the bolt securing harness of transmission main case.

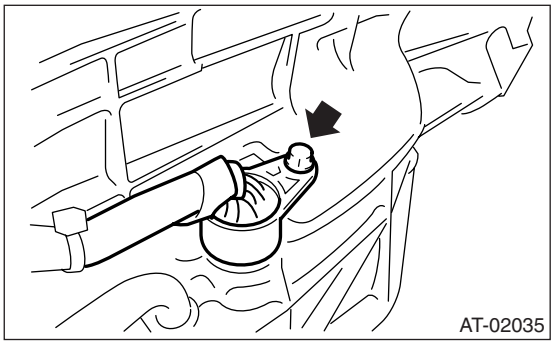

25) Remove the harness assembly.

B: INSTALLATION

1) Pass the harness assembly through the hole in transmission case.

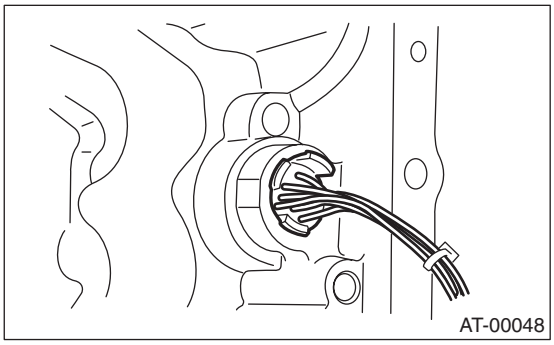

2) Install the securing bolt of transmission main case.

Tightening torque:
7 N·m (0.7 kgf-m, 5.2 ft-lb)

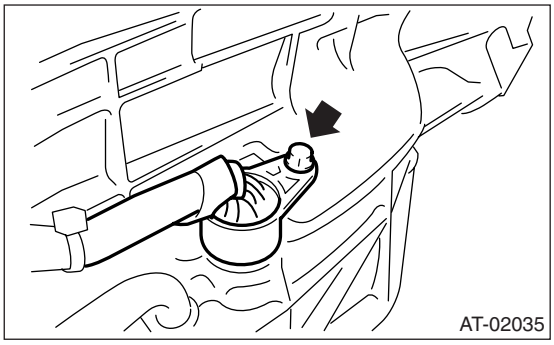

3) Install the control valve body.

Tightening torque:
8 N·m (0.8 kgf-m, 5.8 ft-lb)

NOTE:
Be careful not to catch harness in.

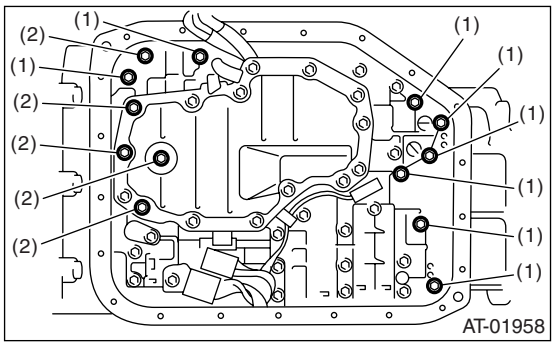

(1) 58 mm (2.28 in)
(2) 65 mm (2.56 in)

4) Connect the control valve connector and front vehicle speed sensor connector.

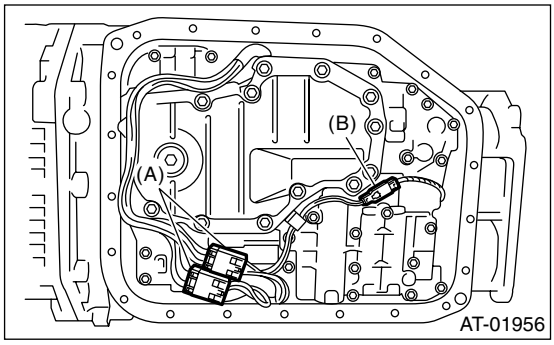

(A) Control valve connector
(B) Front vehicle speed sensor connector

5) Apply proper amount of liquid gasket to the entire oil pan mating surface.

Liquid gasket:
THREE BOND 1217B (Part No. K0877YA020)

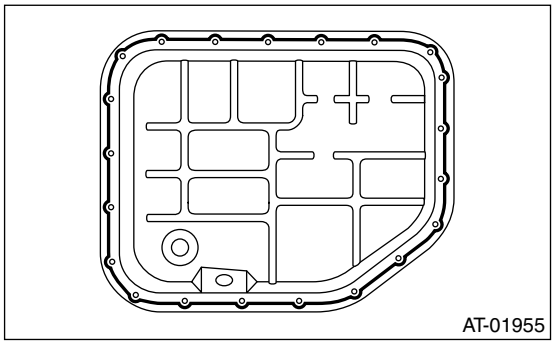

6) Install the oil pan by equally tightening the bolts.

Tightening torque:
5 N·m (0.5 kgf-m, 3.7 ft-lb)

7) Install the rear vehicle speed sensor and turbine speed sensor 1, and then fasten the harness.

Tightening torque:
7 N·m (0.7 kgf-m, 5.2 ft-lb)

8) Install a new aluminum washer and oil cooler pipe.

Tightening torque:
25 N·m (2.5 kgf-m, 18 ft-lb)

9) Install the oil charge pipe. <Ref. to 5AT-66, INSTALLATION, Oil Charge Pipe.>
10) Install the transmission rear crossmember bolt.

Tightening torque:
70 N·m (7.1 kgf-m, 51.6 ft-lb)

11) Install the propeller shaft. <Ref. to DS-11, INSTALLATION, Propeller Shaft.>
12) Install the heat shield cover.
13) Install the center exhaust pipe, rear exhaust pipes and muffler. (Turbo model)
<Ref. to EX(H4DOTC)-9, INSTALLATION, Center Exhaust Pipe.> <Ref. to EX(H4DOTC)-12, INSTALLATION, Rear Exhaust Pipe.> <Ref. to EX(H4DOTC)-13, INSTALLATION, Muffler.>
14) Install the rear exhaust pipe and muffler. (Non-turbo model) <Ref. to EX(H6DO)-7, INSTALLATION, Rear Exhaust Pipe.> <Ref. to EX(H6DO)-9, INSTALLATION, Muffler.>
15) Lower the vehicle.
16) Install the transmission connector to the stay, and then connect the connector.
17) Install the intercooler. (Turbo model) <Ref. to IN(H4DOTC)-12, INSTALLATION, Intercooler.>
18) Install the air intake chamber. (Non-turbo model) <Ref. to IN(H6DO)-7, INSTALLATION, Air Intake Chamber.>
19) Pour ATF through the oil charge pipe. <Ref. to 5AT-27, REPLACEMENT, Automatic Transmission Fluid.>
20) Check the level and leaks of ATF. <Ref. to 5AT-27, INSPECTION, Automatic Transmission Fluid.>
21) Execute the learning control promotion. <Ref. to 5AT(diag)-21, PROCEDURE, Learning Control.>

16.Turbine Speed Sensor 1

A: REMOVAL

1) Lift-up the vehicle.
2) Remove the intercooler. (Turbo model) <Ref. to IN(H4DOTC)-12, REMOVAL, Intercooler.>
3) Remove the air intake chamber. (Non-turbo model) <Ref. to IN(H6DO)-7, REMOVAL, Air Intake Chamber.>
4) Disconnect the turbine speed sensor 1 connector.

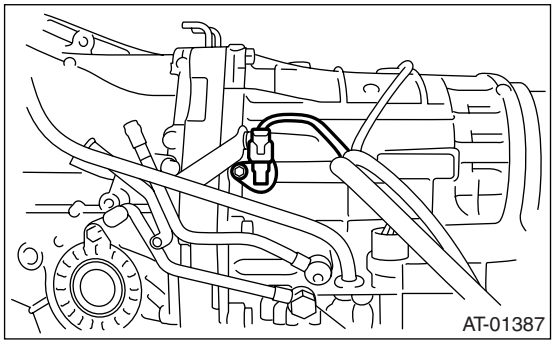

5) Remove the turbine speed sensor 1.

B: INSTALLATION

1) Install the turbine speed sensor 1.

Tightening torque:
7 N·m (0.7 kgf-m, 5.2 ft-lb)

2) Connect the turbine speed sensor 1 connector.

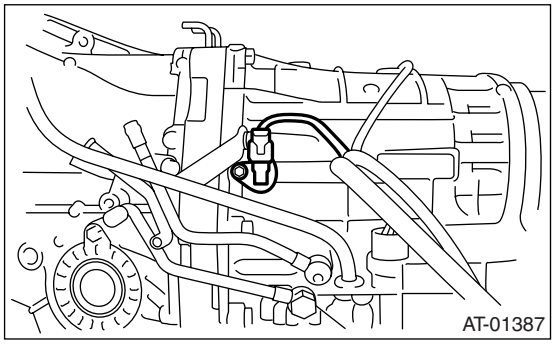

3) Install the intercooler. (Turbo model) <Ref. to IN(H4DOTC)-12, INSTALLATION, Intercooler.>
4) Install the air intake chamber. (Non-turbo model) <Ref. to IN(H6DO)-7, INSTALLATION, Air Intake Chamber.>

17.Control Valve Body

A: REMOVAL

1) Set the vehicle on a lift.
2) Disconnect the ground cable from battery.
3) Lift-up the vehicle.
4) Clean the transmission exterior.
5) Remove the ATF drain plug to drain ATF.

CAUTION:
Directly after the vehicle has been running or the engine has been long idle running, the ATF is hot. Be careful not to burn yourself.

6) Tighten the ATF drain plug.

NOTE:
Use a new gasket.

Tightening torque:
25 N·m (2.5 kgf-m, 18 ft-lb)

7) Remove the oil pan.

CAUTION:
Be sure to prevent the entering of dust and other foreign matters into oil pan.

8) Remove the magnet.

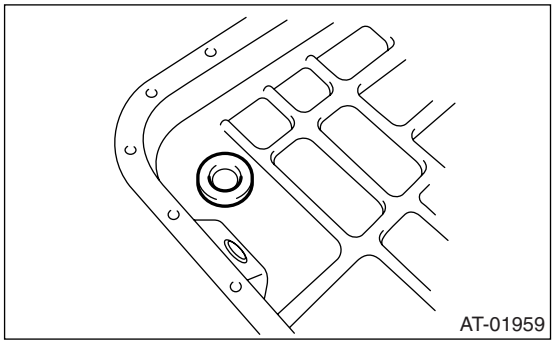

9) Clean the magnet.
10) Completely remove the remaining liquid gasket on the transmission case and oil pan.
11) Disconnect the control valve connector and front vehicle speed sensor connector.

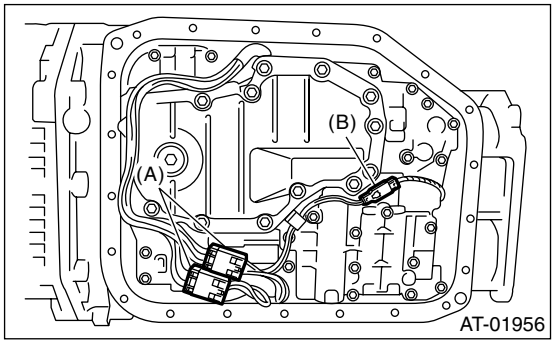

(A) Control valve connector
(B) Front vehicle speed sensor connector

12) Remove the control valve body.

NOTE:
Replace the control valve body as assembly, because it is non-disassemble part.

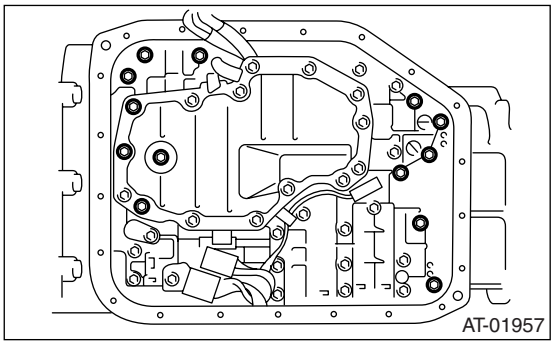

B: INSTALLATION

1) Check the control valve body for dust and other foreign matters.
2) Install the control valve body to transmission by equally tightening the bolts.

Tightening torque:
8 N·m (0.8 kgf-m, 5.8 ft-lb)

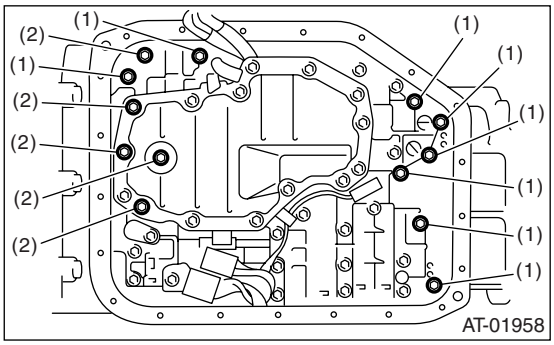

(1) 58 mm (2.28 in)
(2) 65 mm (2.56 in)

3) Connect the control valve connector.

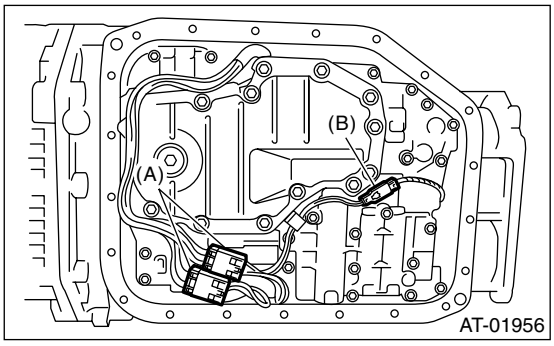

(A) Control valve connector
(B) Front vehicle speed sensor connector

4) Attach the magnet at the specified position of oil pan.

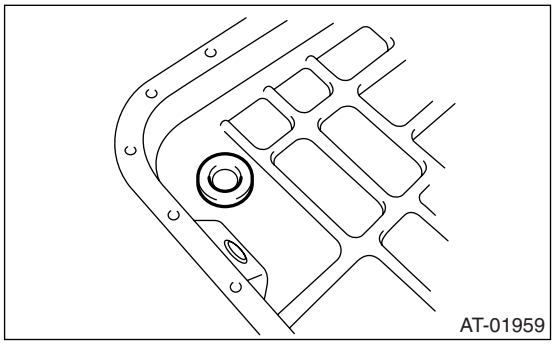

5) Apply liquid gasket to the oil pan.

Liquid gasket:
THREE BOND 1217B (Part No. K0877YA020)

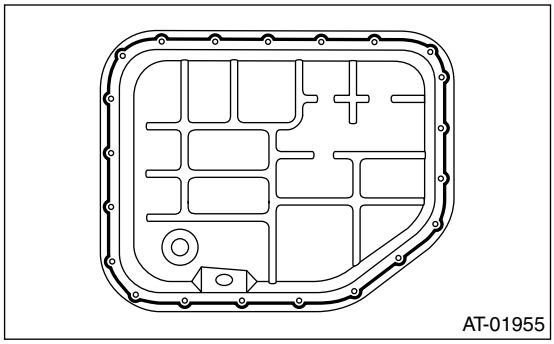

6) Install the oil pan by equally tightening the bolts.

Tightening torque:
5 N·m (0.5 kgf-m, 3.7 ft-lb)

7) Pour ATF through the oil charge pipe.

Specified and recommended fluid:
<Ref. to 5AT-2, SPECIFICATION, General Description.>

Capacity:
Fill the same amount of the drained ATF.

8) Check the ATF level.
<Ref. to 5AT-27, Automatic Transmission Fluid.>
9) Perform the Clear Memory 2. <Ref. to 5AT(diag)-17, CLEAR MEMORY MODE, OPERATION, Subaru Select Monitor.>
10) Perform the inspection with driving the vehicle at the end of repair work, and make sure there is no faulty as below;

- Excessive shift shock
- Oil leakage from transmission body and etc.
- Occurrence of noise caused by interference etc.

NOTE:
If excessive shift shock is felt, execute the advance operation of learning control. <Ref. to 5AT(diag)-21, PROCEDURE, Learning Control.>

C: INSPECTION

Check each parts for holes, damages or other foreign matters.

18.ATF Filter

A: REMOVAL

NOTE:
ATF filter is maintenance free.

1) Disconnect the ground cable from battery and remove the battery from vehicle.

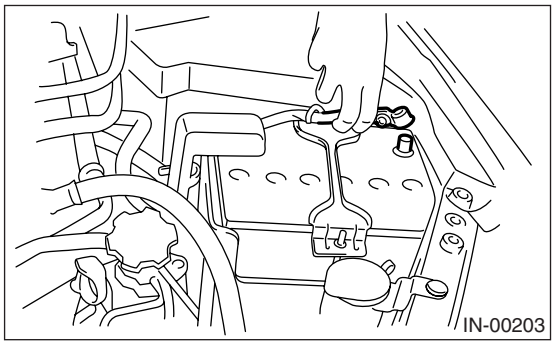

2) Remove the harness securing bracket.

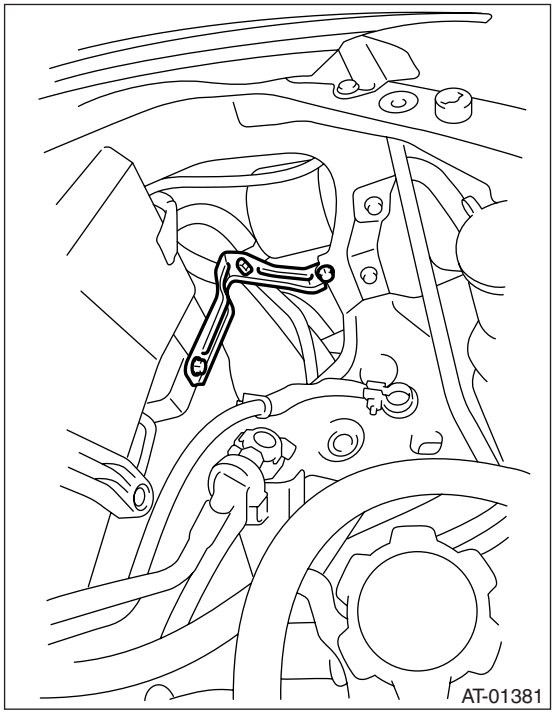

3) Using the ST, remove the ATF filter.
ST 498545400 OIL FILTER WRENCH

B: INSTALLATION

1) Apply a thin coat of ATF to the oil seal part of new ATF filter.
2) Install the ATF filter. Turn it by hand, being careful not to damage oil seal.
3) Tighten the ATF filter using ST.
Calculate the ATF filter tightening torque using following formula.
$T2 = L2/(L1 + L2) \times T1$
T1: 14 N·m (1.4 kgf-m, 10.1 ft-lb)
[Required torque setting]
T2: Tightening torque
L1: ST length 78 mm (3.07 in)
L2: Torque wrench length
Example:

Torque wrench length mm (in)	Tightening torque N·m (kgf-m, ft-lb)
100 (3.94)	7.7 (0.79, 5.7)
150 (5.91)	9.0 (0.92, 6.7)
200 (7.87)	10 (1.0, 7.4)

NOTE:
Align the ST with torque wrench while tightening the ATF filter.

ST 498545400 OIL FILTER WRENCH
4) Fill ATF.
5) Inspect the level of ATF. <Ref. to 5AT-27, Automatic Transmission Fluid.>
6) Install the harness securing bracket.
7) Install the battery.

C: INSPECTION

Check for rust, hole, ATF leaks and other damage. Replace the part if any defect is found from the inspection.

19.Transmission Control Module (TCM)

A: REMOVAL

1) Disconnect the ground cable from battery.
2) Remove the lower cover and then disconnect the connector.
3) Disconnect the connector from TCM.

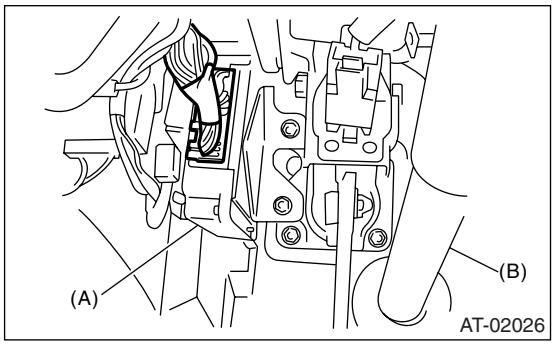

(A) Transmission control module (TCM)
(B) Steering column

4) Remove the relay from TCM body.
5) Remove the TCM.

B: INSTALLATION

1) Install the relay to TCM body.
2) Install the TCM.

Tightening torque:
7.5 N·m (0.76 kgf-m, 5.5 ft-lb)

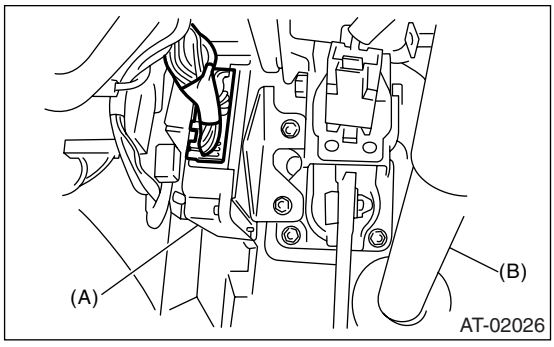

(A) Transmission control module (TCM)
(B) Steering column

3) Connect the connector to TCM.
4) Install in the reverse order of removal.
5) Perform the Clear Memory 2. <Ref. to 5AT(diag)-17, CLEAR MEMORY MODE, OPERATION, Subaru Select Monitor.>
6) Perform the inspection with driving the vehicle at the end of repair work, and make sure there is no faulty as below;

- Excessive shift shock
- Oil leakage from transmission proper and etc.
- Occurrence of noise caused by interference etc.

NOTE:
If excessive shift shock is felt, execute the advance operation of learning control. <Ref. to 5AT(diag)-21, PROCEDURE, Learning Control.>

20.Lateral G Sensor

A: REMOVAL

1) Remove the console box. <Ref. to EI-53, REMOVAL, Console Box.>
2) Disconnect the connector from lateral G sensor.

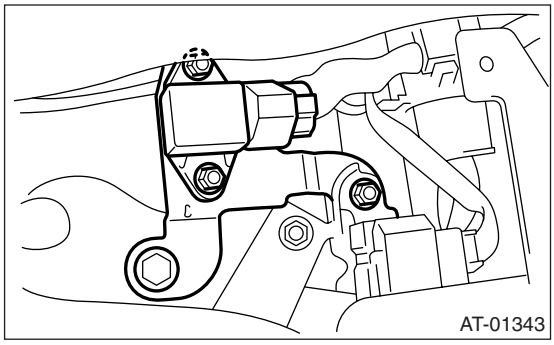

3) Remove the lateral G sensor.

B: INSTALLATION

Install in the reverse order of removal.

Tightening torque:
T1: 7.5 N·m (0.76 kgf-m, 5.5 ft-lb)
T2: 18 N·m (1.8 kgf-m, 13.3 ft-lb)

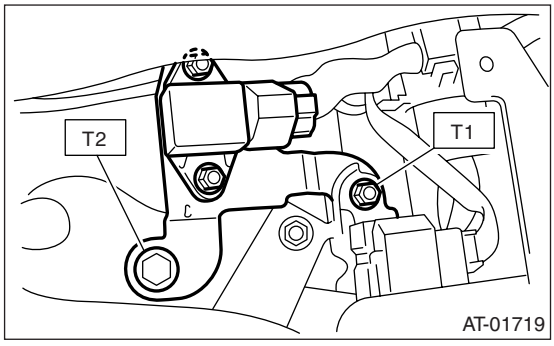

21.ATF Cooler Pipe and Hose

A: REMOVAL

1) Set the vehicle on a lift.
2) Remove the battery.
3) Lift-up the vehicle.
4) Remove the under cover.
5) Remove the radiator under cover.

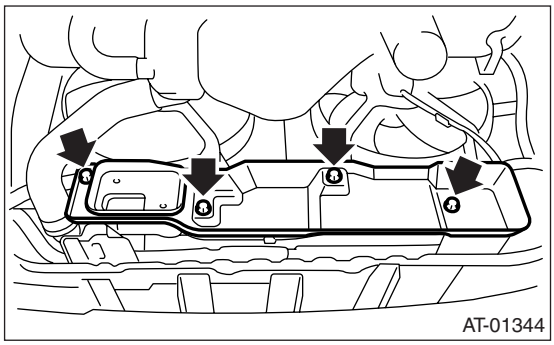

6) Disconnect the ATF cooler hose from radiator.

NOTE:
- Do not use a screwdriver or other pointed tools.
- When hard to remove the hose, wrap the hose with cloth to prevent from damaging, and then turn with pliers and pull out with hand straightly.

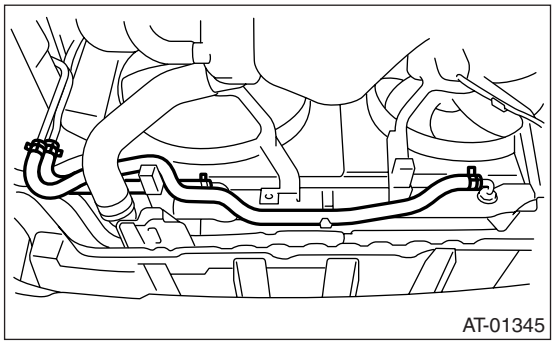

7) Disconnect the ATF cooler hoses from pipes.

NOTE:
- Do not use a screwdriver or other pointed tools.
- When hard to remove the hose, wrap the hose with cloth to prevent from damaging, and then turn with pliers and pull out with hand straightly.

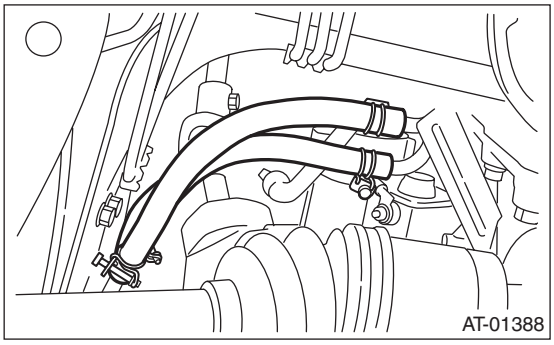

8) Disconnect the ATF cooler pipe from frame.

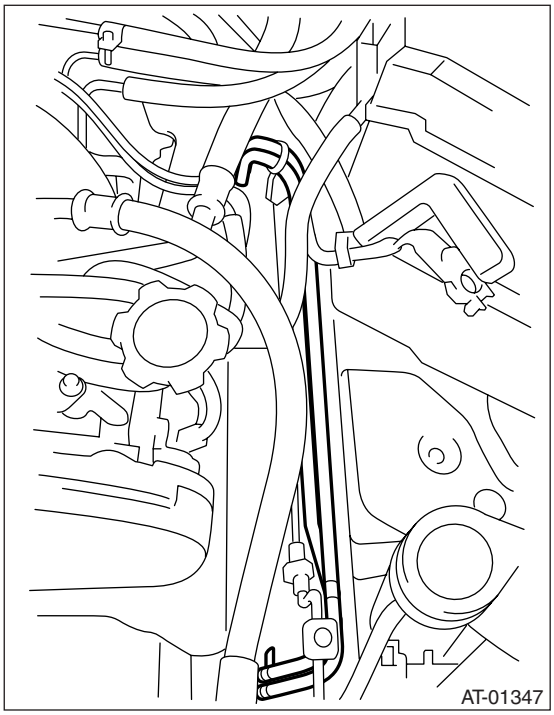

9) Remove the oil cooler inlet and outlet pipes.

NOTE:
When disconnecting the outlet pipe, be careful not to lose the ball and spring used with retaining screw.

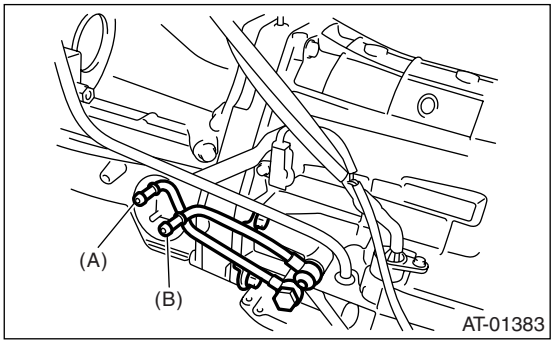

(A) Outlet pipe
(B) Inlet pipe

B: INSTALLATION

1) Install the oil cooler inlet and outlet pipes with new washer.

Tightening torque:
T1: 25 N·m (2.5 kgf-m, 18 ft-lb)
T2: 41 N·m (4.2 kgf-m, 30.4 ft-lb)
T3: 45 N·m (4.6 kgf-m, 33.2 ft-lb)

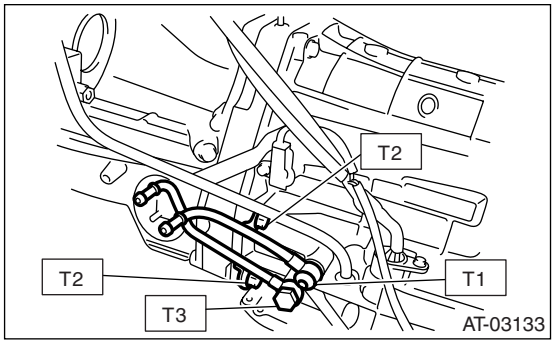

2) Install the ATF cooler pipe to frame.

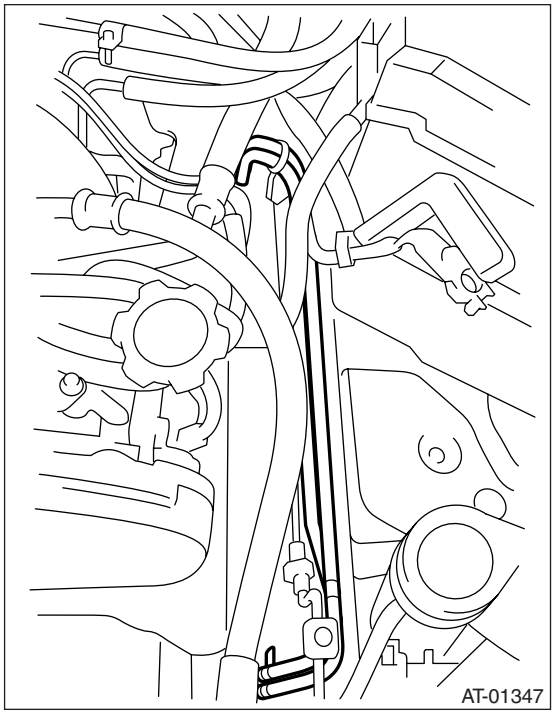

3) Connect the ATF cooler hose to pipe on the transmission side.

NOTE:
• Install so that the hose is not folded over, excessively bent or twisted.
• Be careful to insert the hose to the specified position.

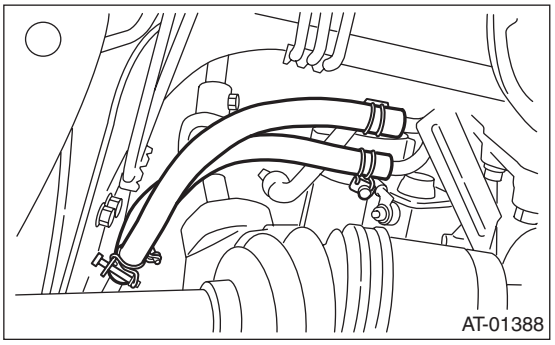

4) Connect the ATF cooler hose to pipe on radiator side.

NOTE:
• Install so that the hose is not folded over, excessively bent, or twisted.
• Be careful to insert the hose to the specified position.

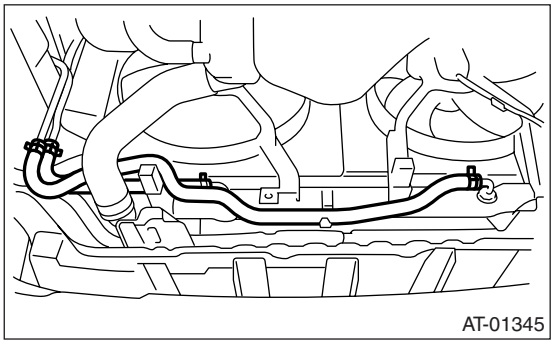

5) Install the radiator under cover.
Tightening torque:
4.9 N·m (0.5 kgf-m, 3.6 ft-lb)

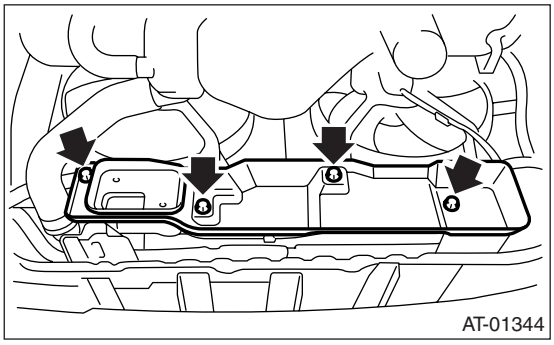

6) Install the under cover.
7) Install the battery.
8) Fill ATF. <Ref. to 5AT-27, Automatic Transmission Fluid.>

NOTE:
Make sure there are no ATF leaks in joints between the transmission, radiator, pipes, and hoses.

C: INSPECTION

Repair or replace any defective hoses, pipes, clamps, and washers found from the inspection below.

1) Check for ATF leaks in joints between the transmission, radiator, pipes, and hoses.
2) Check for deformed clamps.
3) Lightly bend the hose and check for cracks in the surface and other damages.
4) Pinch the hose with your fingers and check for poor elasticity. Also check for poor elasticity in the parts where the clamp was installed by pressing with your fingernail.
5) Check for peeling, cracks, and deformation at the tip of the hose.

22.Air Breather Hose

A: REMOVAL

1) Remove the intercooler. (Turbo model) <Ref. to IN(H4DOTC)-12, REMOVAL, Intercooler.>
2) Remove the air intake chamber. (Non-turbo model) <Ref. to IN(H6DO)-7, REMOVAL, Air Intake Chamber.>
3) Disconnect the air breather hose.

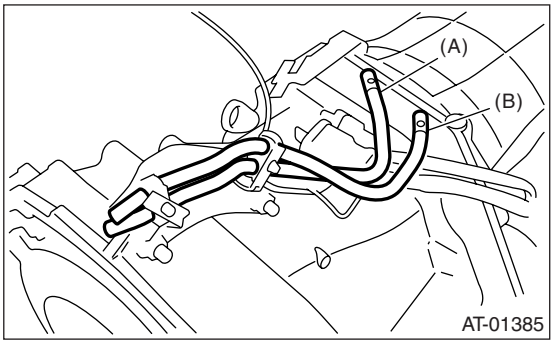

(A) Air breather hose (Transmission case)
(B) Air breather hose (Oil pump cover)

B: INSTALLATION

1) Connect the air breather hose.

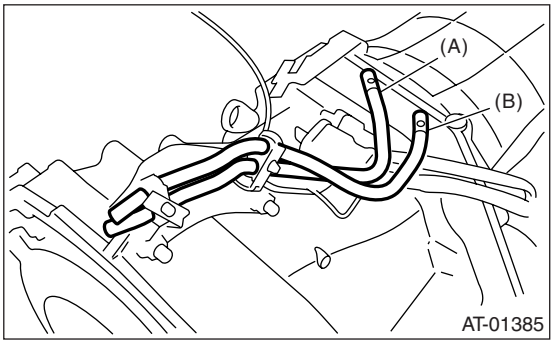

(A) Air breather hose (Transmission case)
(B) Air breather hose (Oil pump cover)

2) Install the intercooler. (Turbo model) <Ref. to IN(H4DOTC)-12, INSTALLATION, Intercooler.>
3) Install the air intake chamber. (Non-turbo model) <Ref. to IN(H6DO)-7, INSTALLATION, Air Intake Chamber.>

C: INSPECTION

Make sure the hose is not cracked or clogged.

23.Oil Charge Pipe

A: REMOVAL

1) Remove the intercooler. (Turbo model) <Ref. to IN(H4DOTC)-12, REMOVAL, Intercooler.>
2) Remove the air intake chamber. (Non-turbo model) <Ref. to IN(H6DO)-7, REMOVAL, Air Intake Chamber.>
3) Remove the oil charge pipe, and then remove the O-ring from flange side.

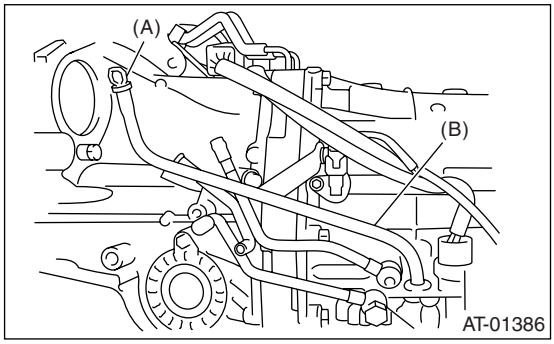

(A) Oil level gauge
(B) Oil charge pipe

B: INSTALLATION

1) Install the oil charge pipe with a new O-ring.

Tightening torque:
41 N·m (4.2 kgf-m, 30.4 ft-lb)

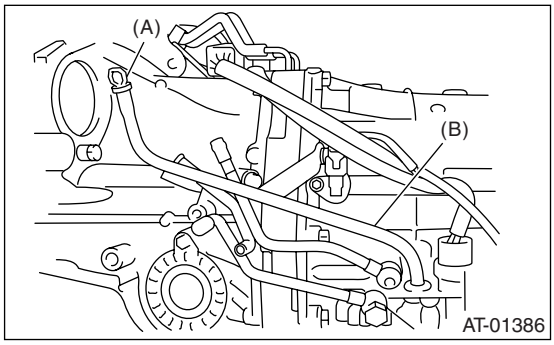

(A) Oil level gauge
(B) Oil charge pipe

2) Install the intercooler. (Turbo model) <Ref. to IN(H4DOTC)-12, INSTALLATION, Intercooler.>
3) Install the air intake chamber. (Non-turbo model) <Ref. to IN(H6DO)-7, INSTALLATION, Air Intake Chamber.>

C: INSPECTION

Make sure the oil charge pipe is not deformed or damaged.

24.Torque Converter Assembly

A: REMOVAL

1) Remove the transmission assembly from vehicle. <Ref. to 5AT-38, REMOVAL, Automatic Transmission Assembly.>
2) Pull out the torque converter and oil pump shaft horizontally.

NOTE:
• Be sure not to scratch the inside of bush in oil pump shaft.
• Be careful that the oil pump shaft may drawn out simultaneously.

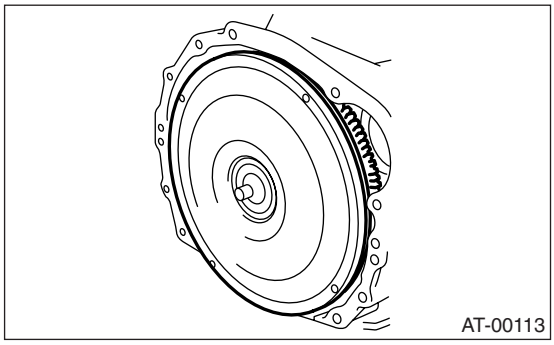

3) Remove the oil pump shaft from torque converter as necessary.

B: INSTALLATION

1) When the oil pump shaft is removed, install the shaft to torque converter.

NOTE:
Make sure the clip is firmly inserted.

2) Install the oil pump shaft to torque converter, and then make sure that the clip is secured on groove.
3) Apply ATF to the revolution and sliding surface oil pump shaft.
4) Holding the torque converter assembly by hand, lightly rotate the torque converter assembly to engage the oil pump rotor.
5) Check the protruding dimension of the torque converter assembly.

Dimension A:
Less than 8 mm (0.31 in)

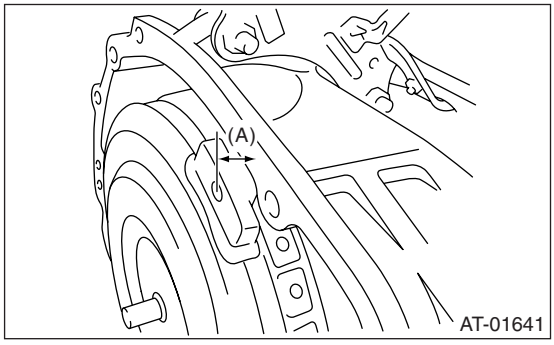

(A) Dimension A

6) Install the transmission assembly into the vehicle. <Ref. to 5AT-42, INSTALLATION, Automatic Transmission Assembly.>

C: INSPECTION

Make sure the ring gear and protrusion of torque converter end are not deformed or damaged.

25.Drive Plate

A: REMOVAL

1) Remove the transmission assembly from the vehicle. <Ref. to 5AT-38, REMOVAL, Automatic Transmission Assembly.>
2) Use the ST to lock the crankshaft, and remove the drive plate.
ST 498497100 CRANKSHAFT STOPPER

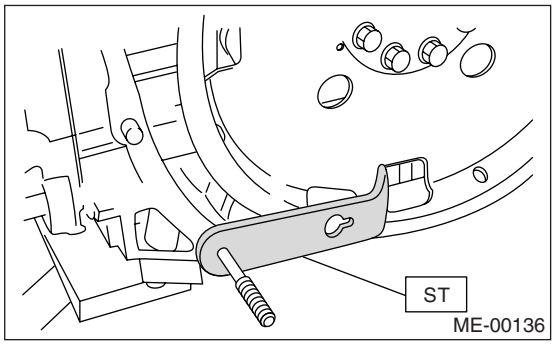

B: INSTALLATION

1) Temporarily tighten the drive plate.
2) Using the ST, lock the crankshaft.
ST 498497100 CRANKSHAFT STOPPER

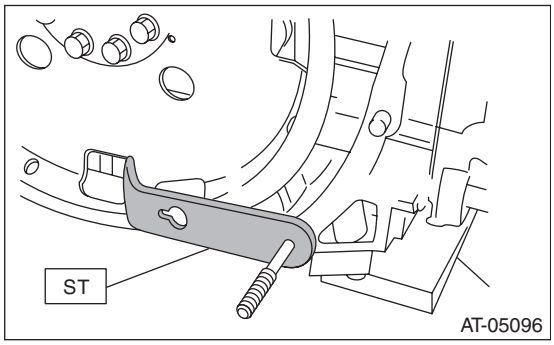

3) Tighten the drive plate in three stages. (turbo model)
(1) Tighten the drive plate mounting bolt.

Tightening torque:
10 N·m (1.0 kgf-m, 7.4 ft-lb)

(2) Additionally tighten the drive plate mounting bolts.

Tightening torque:
40 N·m (4.1 kgf-m, 29.5 ft-lb)

(3) While checking the tightening angle with the ST, further tighten the drive plate mounting bolts.

Tightening angle:
30°±5°

ST 18854AA000 ANGLE GAUGE

4) Tighten the drive plate to the specified torque. (non-turbo model)

NOTE:
Tighten the drive plate mounting bolts gradually. Each bolt should be tightened in a crisscross order.

Tightening torque:
81 N·m (8.3 kgf-m, 59.7 ft-lb)

5) Install the transmission assembly to the vehicle. <Ref. to 5AT-42, INSTALLATION, Automatic Transmission Assembly.>

26.Extension Case and Intermediate Case

A: REMOVAL

1) Remove the transmission assembly.
<Ref. to 5AT-38, REMOVAL, Automatic Transmission Assembly.>
2) Remove the rear vehicle speed sensor.

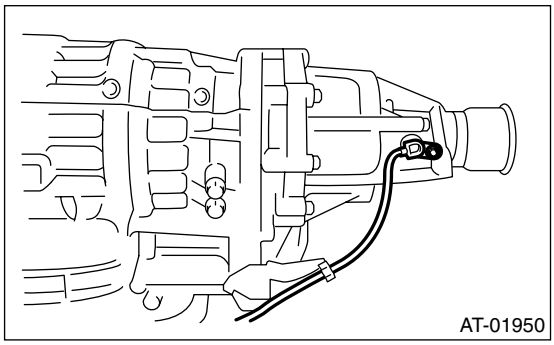
AT-01950

3) Separate the extension case and intermediate case.

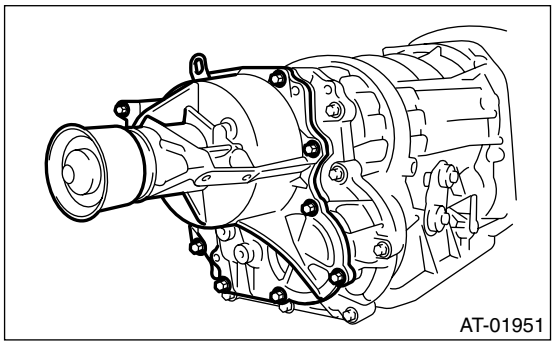
AT-01951

4) Separate the intermediate case and transmission main case.

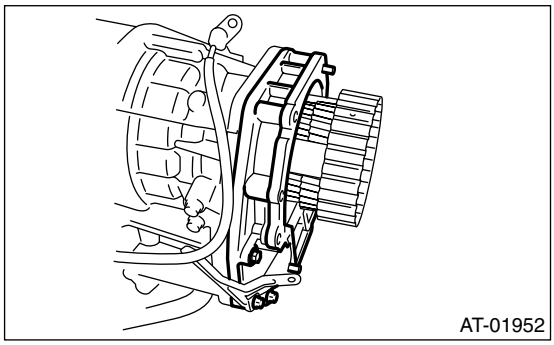
AT-01952

B: INSTALLATION

1) Secure the intermediate case to transmission main case.

Tightening torque:
25 N·m (2.5 kgf-m, 18 ft-lb)

NOTE:
Use a new gasket.

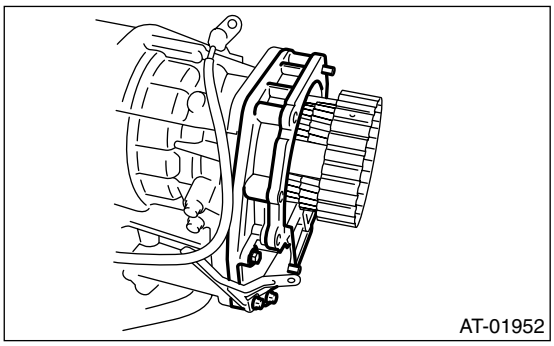
AT-01952

2) Attach the selected reduction driven gear shim to end surface of reduction driven gear with vaseline. <Ref. to 5AT-75, ADJUSTMENT, Reduction Driven Gear.>
3) Install the extension case to intermediate case.

NOTE:
Use a new gasket.

Tightening torque:
25 N·m (2.5 kgf-m, 18 ft-lb)

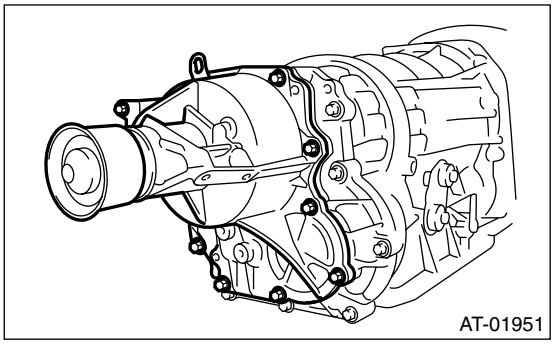
AT-01951

4) Install the rear vehicle speed sensor.

Tightening torque:
7 N·m (0.7 kgf-m, 5.2 ft-lb)

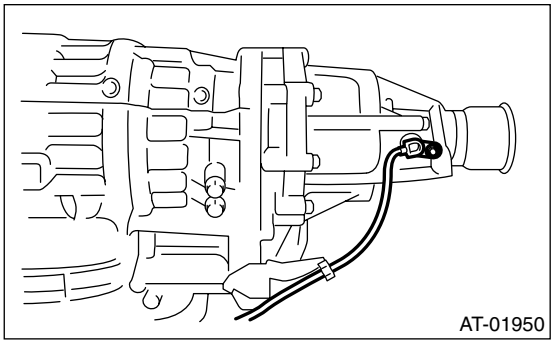
AT-01950

5) Install the transmission assembly.
<Ref. to 5AT-42, INSTALLATION, Automatic Transmission Assembly.>

C: DISASSEMBLY

1) Take out the transfer clutch and multi-plate clutch hub assembly by lightly tapping the end of rear drive shaft.

NOTE:
Be careful not to damage the oil seal of extension.

2) Remove snap ring using ST and press.
ST 18762AA000 COMPRESSOR SPECIAL TOOL

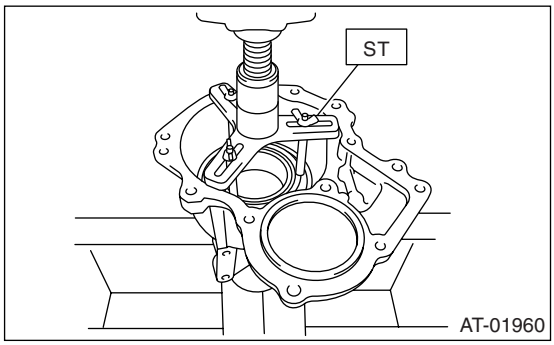

3) Supply compressed air to remove the clutch piston.

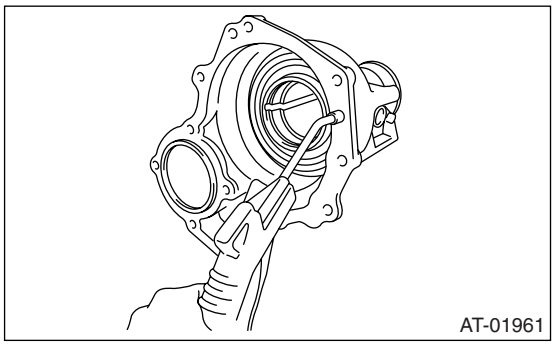

4) Remove the dust cover from extension case.
5) Remove the oil seal from extension case.

D: ASSEMBLY

1) Press-fit new oil seal using ST and press.
ST 498057300INSTALLER
2) Press-fit the dust cover.
3) Insert the transfer clutch assembly, spring retainer, return spring and clutch spring retainer.

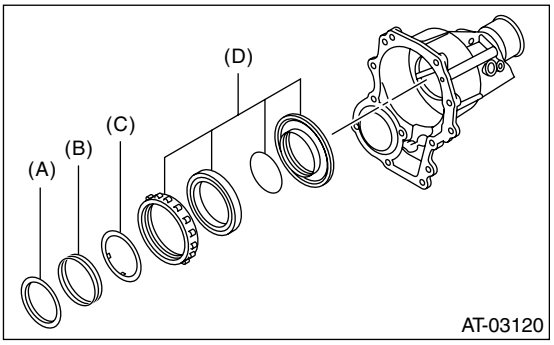

(A) Clutch spring retainer
(B) Return spring
(C) Spring retainer
(D) Transfer clutch piston assembly

4) Using the ST and compressor, install the snap ring.
ST 18762AA000 COMPRESSOR SPECIAL TOOL

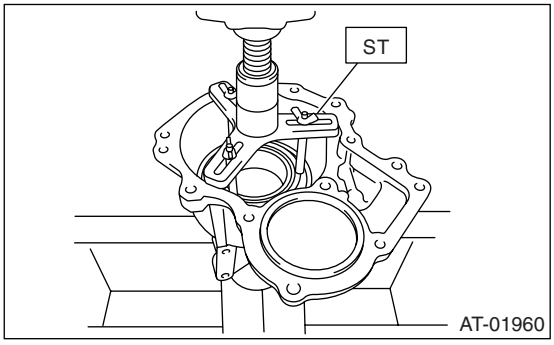

5) Install the transfer clutch. <Ref. to 5AT-71, INSTALLATION, Transfer Clutch.>

NOTE:
For 3-transfer clutch model, make sure the press plate is included.

6) Install the multi-plate hub assembly.

E: INSPECTION

- Use compressed air to make sure the extension case routes are not clogged and not leaks.
- Measure the extension end play and adjust it to within specifications.

<Ref. to 5AT-71, ADJUSTMENT, Transfer Clutch.>

27.Transfer Clutch

A: REMOVAL

1) Remove the transmission assembly from vehicle. <Ref. to 5AT-38, REMOVAL, Automatic Transmission Assembly.>
2) Remove the extension case, and then remove the transfer clutch. <Ref. to 5AT-69, REMOVAL, Extension Case and Intermediate Case.> <Ref. to 5AT-70, DISASSEMBLY, Extension Case and Intermediate Case.>

B: INSTALLATION

1) Select the rear drive shaft shim. <Ref. to 5AT-71, ADJUSTMENT, Transfer Clutch.>
2) Select the driven plate No. 3. <Ref. to 5AT-71, ADJUSTMENT, Transfer Clutch.>
3) Install the extension case and intermediate case. <Ref. to 5AT-69, INSTALLATION, Extension Case and Intermediate Case.>
4) Install the transmission assembly into vehicle. <Ref. to 5AT-42, INSTALLATION, Automatic Transmission Assembly.>

C: INSPECTION

- Inspect the drive plate facing for wear and damage.
- Inspect the snap ring for wear; return spring for permanent distortion, breakage and deformation.
- Check that the D-ring is not damaged.
- Inspect the extension end play and adjust it to within specifications. <Ref. to 5AT-71, ADJUSTMENT, Transfer Clutch.>

D: ADJUSTMENT

1. SELECTION OF REAR DRIVE SHAFT SHIM

1) Insert the rear drive shaft into the reduction drive gear and center differential assembly.

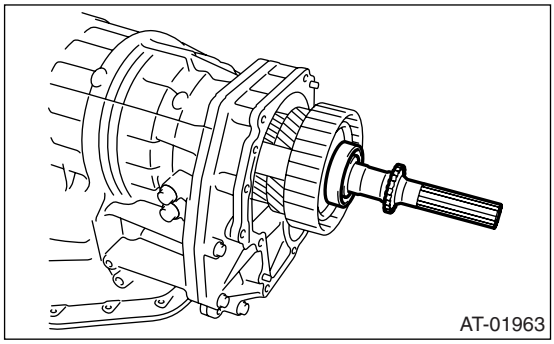

2) Using the ST, measure the depth “A”, which is from mating surface of extension case to ball bearing outer ring contact surface.

ST 398643600 GAUGE

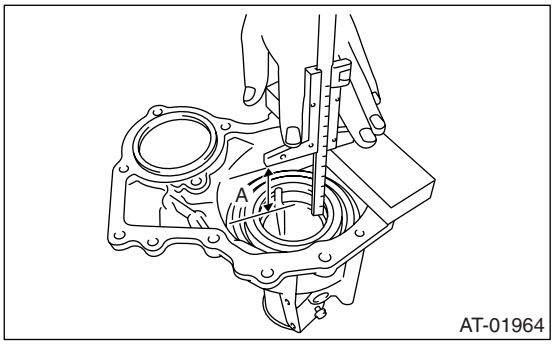

A Measured value

3) Using the ST, measure the height “B” from the intermediate case mating surface to ball bearing outer ring contact surface.
ST 398643600 GAUGE

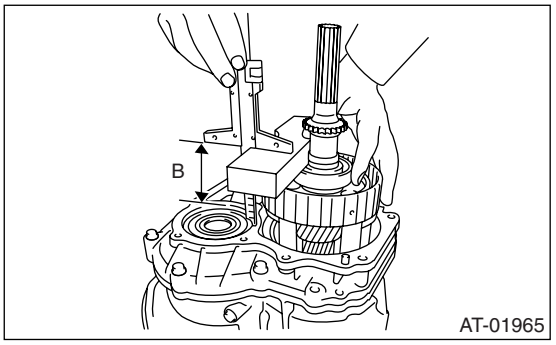

B Measured value

4) Calculation formula:
When clearances are 0.05 mm (0.0020 in):
T (mm) = A – (B – 0.28) – 0.05
[T (in) = A – (B – 0.011) – 0.0020]
When clearances are 0.25 mm (0.0098 in):
T (mm) = A – (B – 0.28) – 0.25
[T (in) = A – (B – 0.011) – 0.0098]

Specification:
0.05 — 0.25 mm (0.0020 — 0.0098 in)

A: Depth from end of extension case to ball bearing outer ring contact surface
B: Height from end of intermediate case to ball bearing outer ring contact surface
T: Shim thickness

NOTE:
Calculation formula for “T” is applied when measuring using ST (398643600 GAUGE). When not using ST, apply following.
When clearances are 0.05 mm (0.0020 in):
T (mm) = (A – α) – ((B – β) – 0.28) – 0.05
[T (in) = (A – α) – ((B – β) – 0.011) – 0.0020]
When clearances are 0.25 mm (0.0098 in):
T (mm) = (A – α) – ((B – β) – 0.28) – 0.25

[T (in) = (A – α) – ((B – β) – 0.011) – 0.0098]
T: Shim thickness
A: Depth from end of extension case to ball bearing outer ring contact surface
B: Height from end of intermediate case to ball bearing outer ring contact surface
α: Collar thickness used when measuring "A"
β: Collar thickness used when measuring "B"
0.28 (0.011): Gasket thickness (Unit mm (in))

Adjustment shim	
Part Number	Thickness mm (in)
33281AA040	0.2 (0.008)
33281AA050	0.5 (0.020)
33281AA060	0.3 (0.012)

2. SELECTION OF DRIVEN PLATE No. 3

1) Install the drive plate and driven plate to center differential carrier.
2) Measure the depth "A" from the mating surface of extension case to multi-plate clutch (LSD) piston.

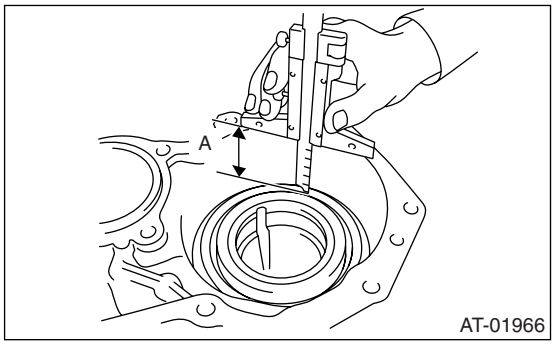

3) Using the ST, measure the height "B" from the intermediate case mating surface to end of ST, and then subtract the thickness of ST (piston guide) (50 mm (1.97 in)) from measured value.
ST 398744300 PISTON GUIDE

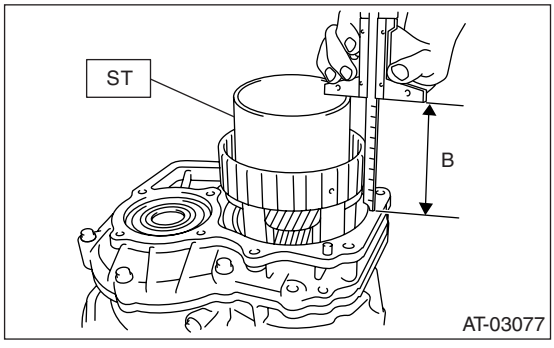

4) Calculation formula:
When clearances are 0.2 mm (0.008 in):
T (mm) = A – B + 0.08
[T (in) = A – B + 0.0031]
When clearances are 0.6 mm (0.024 in):
T (mm) = A – B + 0.32
[T (in) = A – B + 0.0126]
T: Thickness of driven plate No. 3
A: Depth from mating surface of extension case to multi-plate clutch (LSD) piston
B: Height from mating surface of intermediate case to end surface of ST

Specification:
0.2 — 0.6 mm (0.008 — 0.024 in)

NOTE:
Calculation formula for "T" is applied when measuring using ST (398643600 GAUGE, 398744300 PISTON GUIDE). When not using ST, apply following.
When clearances are 0.2 mm (0.008 in):
T (mm) = A – (B – α – 0.28) – 0.2
[T (in) = A – (B – α – 0.011) – 0.008]
When clearances are 0.6 mm (0.024 in):
T (mm) = A – (B – α – 0.28) – 0.6
[T (in) = A – (B – α – 0.011) – 0.024]

T: Thickness of driven plate No. 3
A: Depth from mating surface of extension case to multi-plate clutch (LSD) piston
B: Height from mating surface of intermediate case to end surface of tool as substitution for ST
α: Tool thickness used when measuring "B"
0.28 (0.011): Gasket thickness (Unit mm (in))

If out of specification, select the driven plate No. 3 to adjust within the specification.

Driven plate No. 3.	
Part No.	Thickness mm (in)
31589AA041	1.6 (0.063)
31589AA050	2.0 (0.079)
31589AA060	2.4 (0.094)
31589AA070	2.8 (0.110)

28.Rear Drive Shaft

A: REMOVAL

1) Remove the transmission assembly from vehicle. <Ref. to 5AT-38, REMOVAL, Automatic Transmission Assembly.>
2) Remove the rear vehicle speed sensor, and then remove the extension case. <Ref. to 5AT-69, REMOVAL, Extension Case and Intermediate Case.>
3) Pull out the rear drive shaft from center differential assembly.

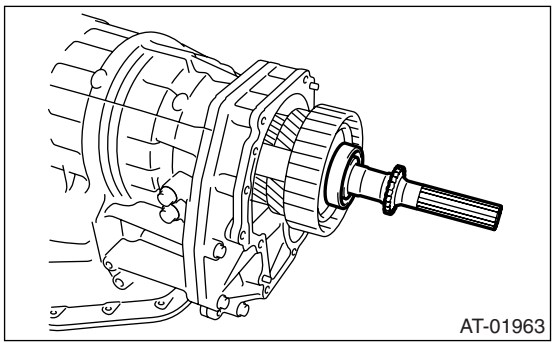

4) Remove the drive plate and driven plate.

B: INSTALLATION

1) Select the appropriate shim. <Ref. to 5AT-71, ADJUSTMENT, Transfer Clutch.>
2) Install drive plate and driven plate.
3) Insert the rear drive shaft into the center differential assembly.
4) Combine the extension case, and then install the rear vehicle speed sensor. <Ref. to 5AT-69, INSTALLATION, Extension Case and Intermediate Case.>
5) Install the transmission assembly into vehicle. <Ref. to 5AT-42, INSTALLATION, Automatic Transmission Assembly.>

C: DISASSEMBLY

1) Using a press, remove the revolution gear.

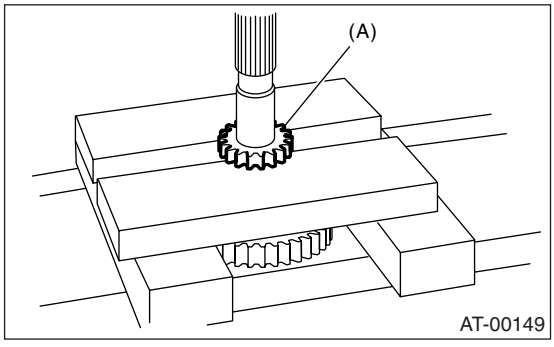

(A) Revolution gear

2) Using a press, remove the front and rear side ball bearings, and clutch hub.

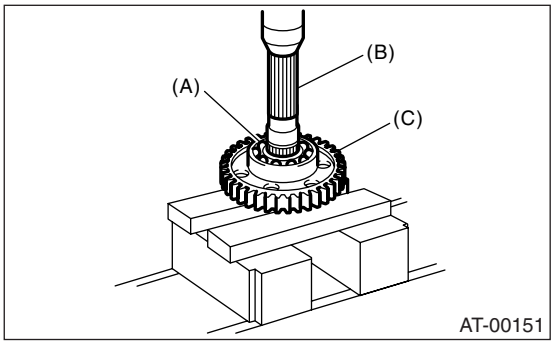

(A) Rear ball bearing
(B) Rear drive shaft
(C) Clutch hub

D: ASSEMBLY

Assemble in the reverse order of disassembly.

NOTE:
• Use new ball bearings and revolution gear.
• Make sure the clutch hub is oriented in the correct direction.

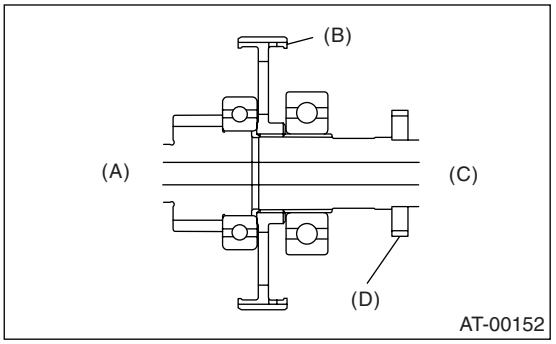

(A) Front side
(B) Clutch hub
(C) Rear side
(D) Revolution gear

E: INSPECTION

• Check each parts for holes, damages or other foreign matters.
• Inspect the extension end play and adjust it to within specifications. <Ref. to 5AT-71, ADJUSTMENT, Transfer Clutch.>

29.Reduction Driven Gear

A: REMOVAL

1) Remove the transmission assembly from vehicle. <Ref. to 5AT-38, REMOVAL, Automatic Transmission Assembly.>
2) Remove the rear vehicle speed sensor, and then separate the extension case and intermediate case from transmission case. <Ref. to 5AT-69, REMOVAL, Extension Case and Intermediate Case.>
3) Remove the center differential carrier. <Ref. to 5AT-76, REMOVAL, Center Differential Carrier.>
4) Set the select lever to “P” range.
5) Using the ST1 and ST2, extract the reduction driven gear.
ST1 499737100 PULLER SET
ST2 18680AA000 GEAR HOLDER

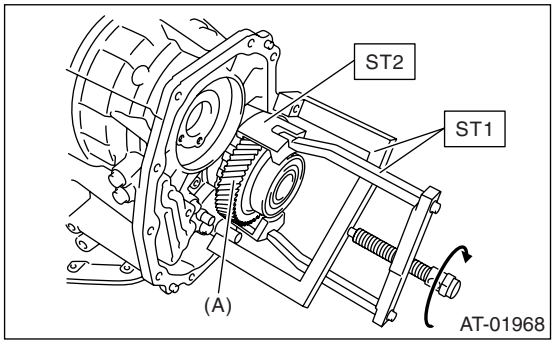

(A) Reduction driven gear

B: INSTALLATION

1) Set the select lever to “P” range.
2) Use a plastic hammer to install reduction driven gear assembly.
3) Select the reduction gear shim. <Ref. to 5AT-75, ADJUSTMENT, Reduction Driven Gear.>
4) Connect the transmission case, extension case and intermediate case, and install the rear wheel speed sensor. <Ref. to 5AT-69, INSTALLATION, Extension Case and Intermediate Case.>
5) Install the transmission assembly into vehicle. <Ref. to 5AT-42, INSTALLATION, Automatic Transmission Assembly.>

C: DISASSEMBLY

1) Remove the ball bearing from reduction driven gear using ST.
ST 498077300 REMOVER

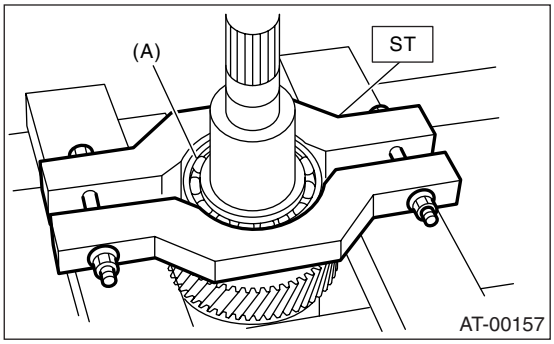

(A) Ball bearing

2) Remove the ball bearing on reverse side with the same procedure in step 1).

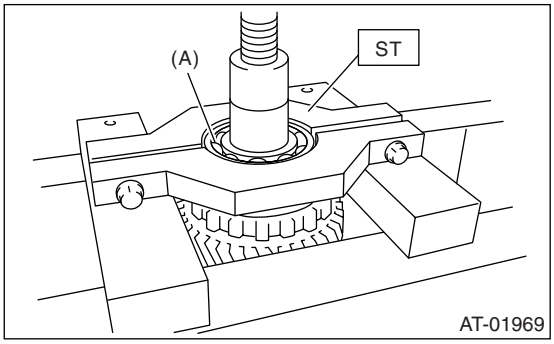

3) Remove the snap ring from reduction driven gear.

D: ASSEMBLY

1) Install the snap ring to reduction driven gear.
2) Install the new ball bearing to reduction driven gear using press.

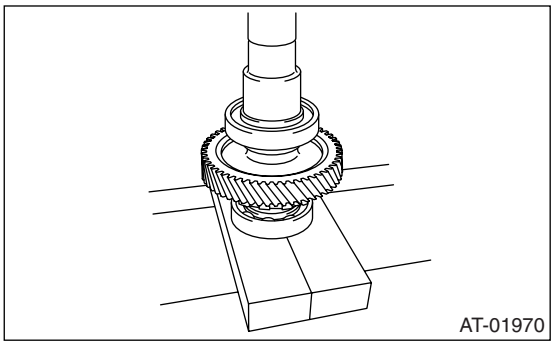

(A) Ball bearing

3) Install the ball bearing on reverse side with the same procedure in step 2).

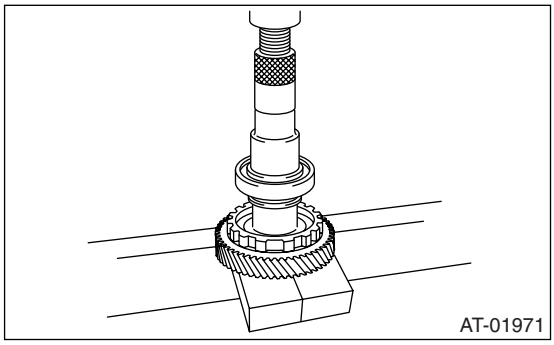

E: INSPECTION

Make sure the ball bearing and gear are not deformed or damaged.

F: ADJUSTMENT

1) Using depth gauge, measure depth “A” from mating surface of extension case to ball bearing on rear end of reduction driven gear.

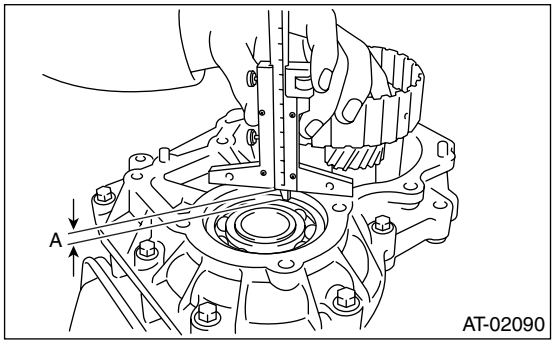

2) Using a depth gauge, measure the height “B” from mating surface of extension case to ball bearing inside low part of extension case.

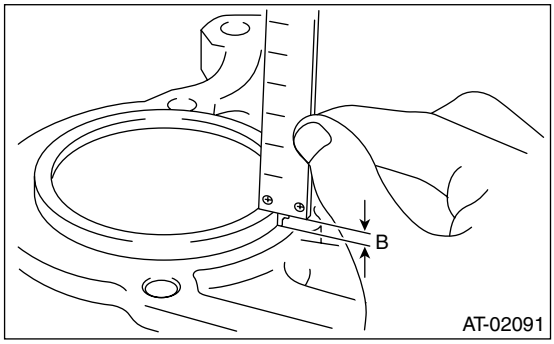

3) Calculation formula:
Select the ball bearing from the table to adjust clearances within 0.05 — 0.25 mm (0.0020 — 0.098 in).
When clearances are 0.05 mm (0.0020 in):
T (mm) = A − B + 0.23
[T (in) = A − B + 0.0091]
When clearances are 0.25 mm (0.0098 in):
T (mm) = A − B + 0.03
[T (in) = A − B +0.0011]
T: Shim clearance
A: Depth from mating surface of extension case to ball bearing outer ring end surface
B: Height from mating surface of extension case to ball bearing inside low part

Reduction gear shim	
Part Number	Thickness mm (in)
31288AA030	0.2 (0.008)
31288AA050	0.5 (0.020)
31288AA060	0.3 (0.012)

30.Center Differential Carrier

A: REMOVAL

1) Remove the transmission assembly from vehicle. <Ref. to 5AT-38, REMOVAL, Automatic Transmission Assembly.>
2) Remove the rear wheel speed sensor, and separate the extension case and intermediate case from transmission case. <Ref. to 5AT-69, REMOVAL, Extension Case and Intermediate Case.>
3) Pull out the rear drive shaft. <Ref. to 5AT-73, REMOVAL, Rear Drive Shaft.>
4) Pull out the center differential carrier assembly.

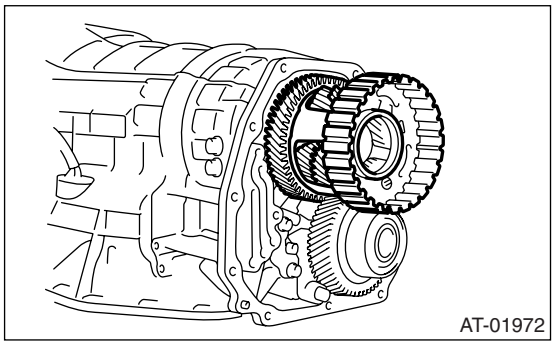

5) Pull out the shim(s) from transmission case.

B: INSTALLATION

1) Install the center differential assembly with the shim(s).

NOTE:
Press-fit it to the bottom of bearing shoulder completely.

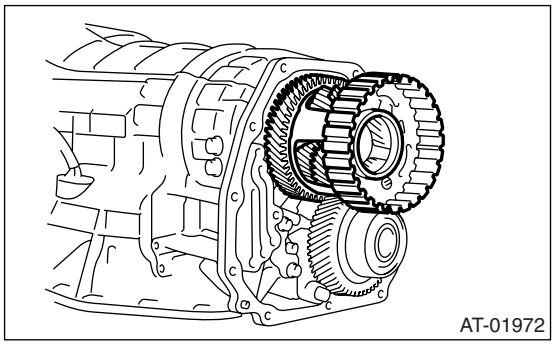

2) Insert the rear drive shaft. <Ref. to 5AT-73, INSTALLATION, Rear Drive Shaft.>
3) Connect the transmission case, extension case and intermediate case, and install the rear wheel speed sensor. <Ref. to 5AT-69, INSTALLATION, Extension Case and Intermediate Case.>
4) Install the transmission assembly into vehicle. <Ref. to 5AT-42, INSTALLATION, Automatic Transmission Assembly.>

C: DISASSEMBLY

1) Remove the seal ring.

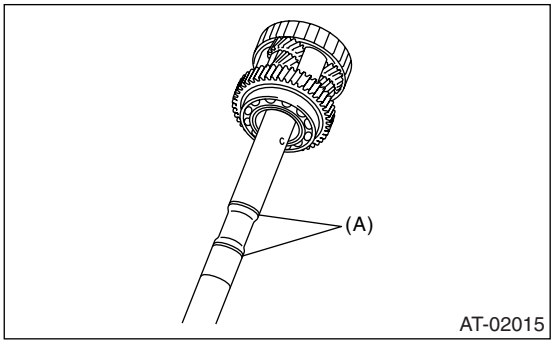

(A) Seal ring

2) Using a press and ST, remove the ball bearing.
ST 498077600 REMOVER

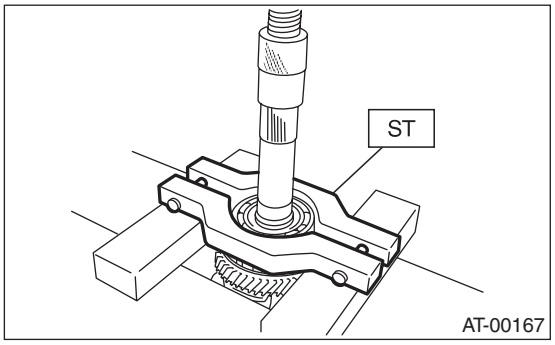

3) Remove the snap ring, and pull out the shaft from center differential assembly.

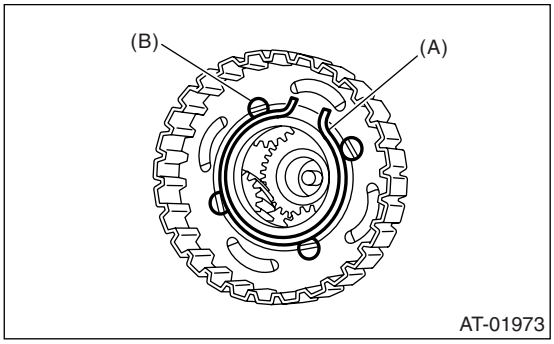

(A) Snap ring
(B) Shaft

4) Remove the thrust washers, pinion gears and washers from center differential assembly.

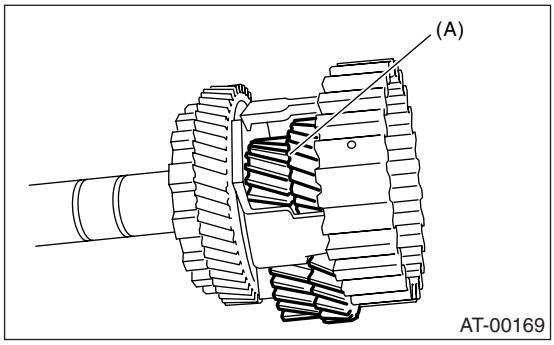

(A) Pinion gear

5) Pull out the intermediate shaft and thrust bearing.

D: ASSEMBLY

1) Install the thrust washer onto intermediate shaft.
2) Install the thrust bearing onto intermediate shaft.
3) Install the pinion gears and washers.
4) Insert the shaft into the center differential assembly.
5) Install the snap ring.
6) Using a press, install a new ball bearing into the center differential assembly.
ST 498077000 REMOVER

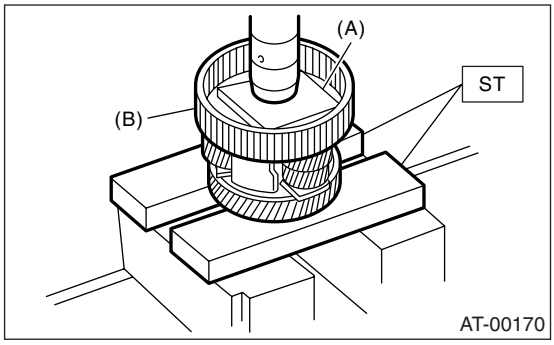

(A) Plate
(B) Center differential carrier

7) Apply vaseline onto the seal ring outer surface and shaft grooves.
8) Install a new seal rings.

E: INSPECTION

• Check each parts for holes, damages or other foreign matters.
• Inspect the extension end play and adjust it to within specifications. <Ref. to 5AT-71, ADJUSTMENT, Transfer Clutch.>

31.Parking Pawl

A: REMOVAL

1) Remove the transmission assembly from vehicle. <Ref. to 5AT-38, REMOVAL, Automatic Transmission Assembly.>
2) Remove the extension case and intermediate case. <Ref. to 5AT-69, REMOVAL, Extension Case and Intermediate Case.>
3) Remove the center differential carrier. <Ref. to 5AT-76, REMOVAL, Center Differential Carrier.>
4) Remove the parking support actuator.

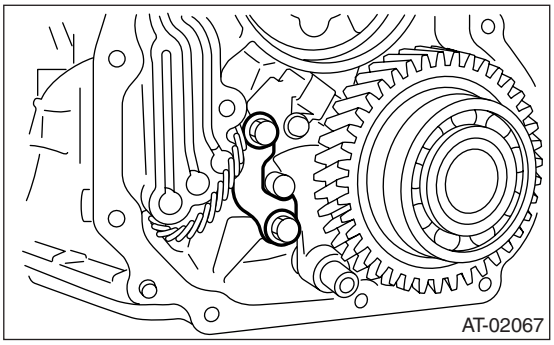

5) Remove the parking pawl, parking pawl shaft and return spring.

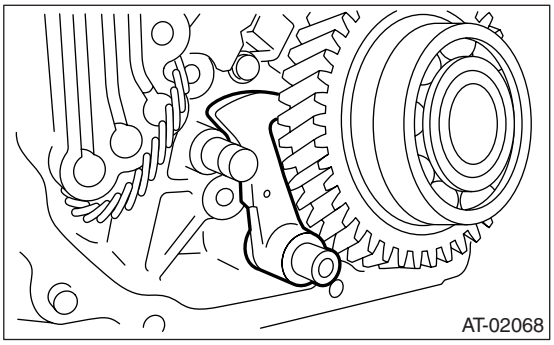

B: INSTALLATION

1) Set the transmission to “N” range.
2) Install the parking pawl, parking pawl shaft and return spring.

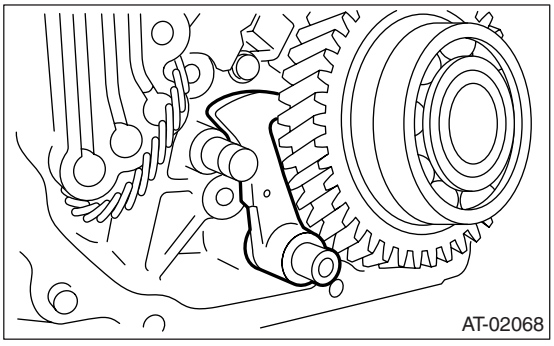

3) Temporarily secure the parking support actuator.
4) Set the ST between parking pawl and parking support actuator.

ST 18679AA000 ADJUSTER

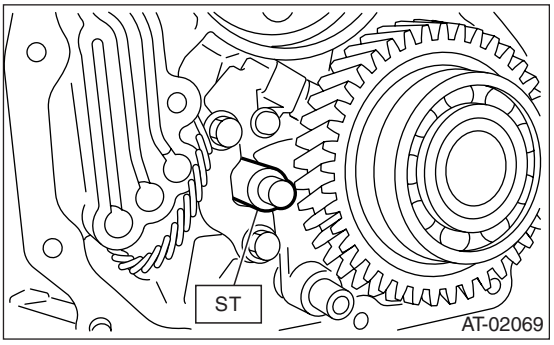

5) Tighten the securing bolts while pressing parking support actuator with finger.

Tightening torque:
10±2 N·m (1.0±0.2 kgf-m, 7.4±1.5 ft-lb)

CAUTION:
Press the reduction driven gear and parking pawl in top condition.

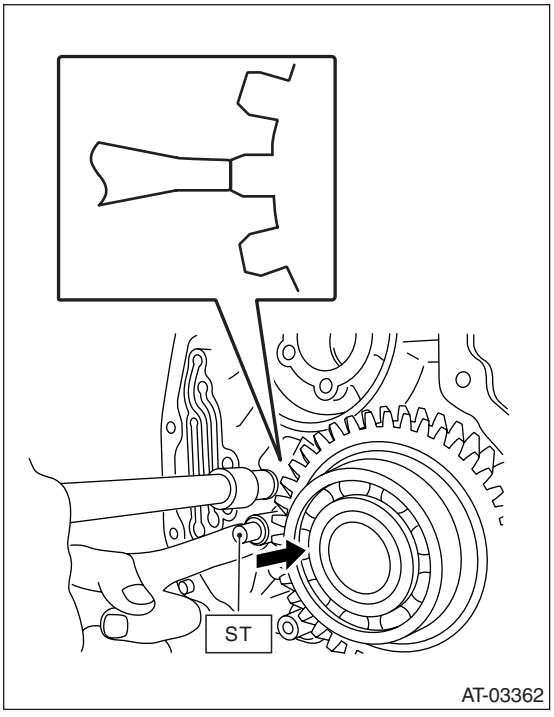

6) Using the ST, tighten the bolts which tightened in step 4) with specified angle.

Tightening angle:
18°±2°

ST 18679AA000 ADJUSTER
ST 18854AA000 ANGLE GAUGE

NOTE:
Do not use extension as much as possible.

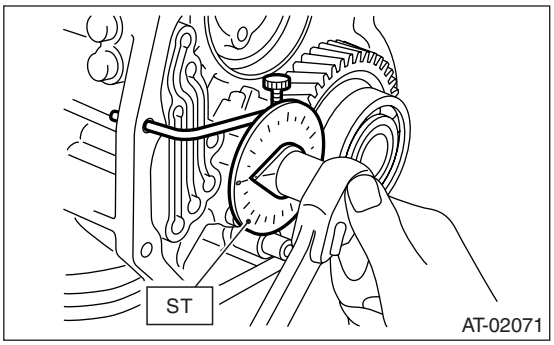

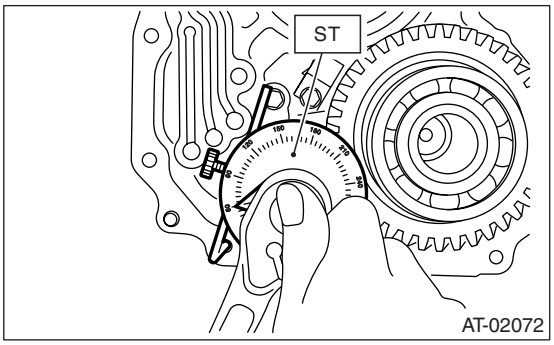

7) Install the center differential carrier. <Ref. to 5AT-76, INSTALLATION, Center Differential Carrier.>
8) Install the extension case and intermediate case. <Ref. to 5AT-69, INSTALLATION, Extension Case and Intermediate Case.>
9) Install the transmission assembly into vehicle. <Ref. to 5AT-42, INSTALLATION, Automatic Transmission Assembly.>

C: INSPECTION

Make sure that the tab of parking pawl on reduction driven gear is not worn or otherwise damaged.

32.Converter Case

A: REMOVAL

1) Remove the transmission assembly from vehicle. <Ref. to 5AT-38, REMOVAL, Automatic Transmission Assembly.>
2) Remove the torque converter assembly. <Ref. to 5AT-67, REMOVAL, Torque Converter Assembly.>
3) Remove the transmission harness connector from stay.
4) Remove the turbine speed sensor 1. <Ref. to 5AT-56, REMOVAL, Turbine Speed Sensor 1.>
5) Remove the oil charge pipe. <Ref. to 5AT-66, REMOVAL, Oil Charge Pipe.>
6) Remove the ATF filter inlet and outlet pipes. <Ref. to 5AT-59, REMOVAL, ATF Filter.>
7) Remove the converter case aligning bolt.
8) Lay along the transmission body, and then remove the oil pan.
9) Remove the three converter case aligning bolts (TORX®).
ST 18676AA020 TORX® WRENCH

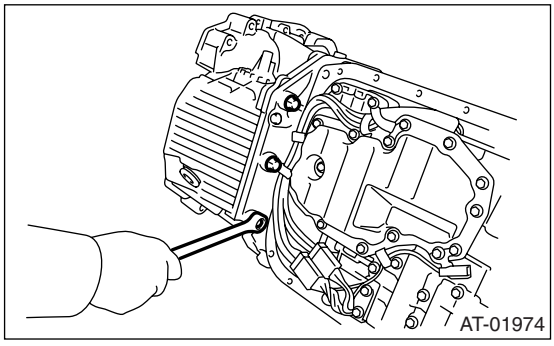

10) Separate the converter case by lightly tapping with plastic hammer.
11) Remove the differential assembly. <Ref. to 5AT-90, REMOVAL, Front Differential Assembly.>
12) Remove the oil seal from converter case.

B: INSTALLATION

1) Check the appearance of each component and clean them.
2) Press-fit the oil seal to converter case using ST.
ST 499587100 OIL SEAL INSTALLER

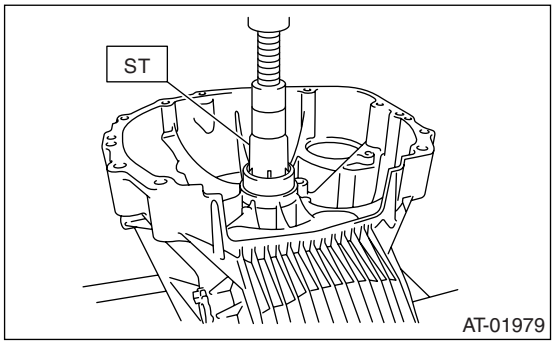

3) Install the differential assembly to case. <Ref. to 5AT-90, INSTALLATION, Front Differential Assembly.>
4) Install the left and right side retainers. <Ref. to 5AT-93, ADJUSTMENT, Front Differential Assembly.>
5) Apply proper amount of liquid gasket to the entire matching surface of converter case.

Liquid gasket:
THREE BOND 1215 (Part No. 004403007)

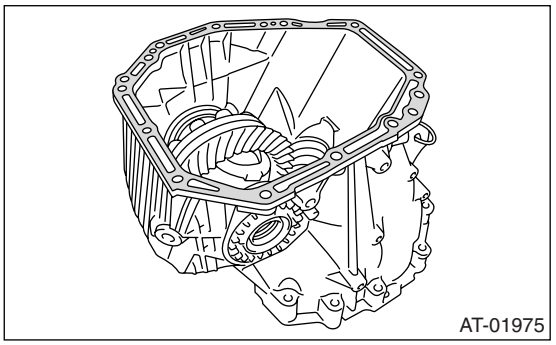

6) Install the converter case assembly without damaging bushing and oil seal.

Tightening torque:
41 N·m (4.2 kgf-m, 30.4 ft-lb)

7) Install the three converter case aligning bolts (TORX®).
ST 18676AA020 TORX® WRENCH

Tightening torque:
41 N·m (4.2 kgf-m, 30.4 ft-lb)

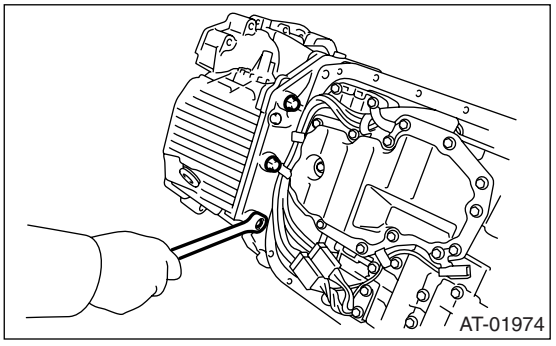

8) Apply proper amount of liquid gasket to the entire oil pan mating surface, and then install it.

Liquid gasket:
THREE BOND 1217B (Part No. K0877YA020)

Tightening torque:
5 N·m (0.5 kgf-m, 3.7 ft-lb)

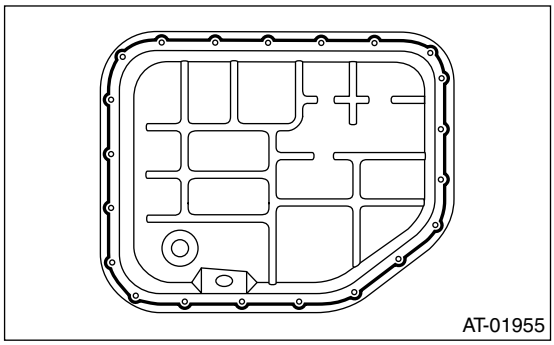

9) Install the transmission harness connector to the stay.
10) Install the air breather hose. <Ref. to 5AT-65, INSTALLATION, Air Breather Hose.>
11) Install the ATF filter pipe. <Ref. to 5AT-59, INSTALLATION, ATF Filter.>
12) Install the oil charge pipe with O-ring. <Ref. to 5AT-66, INSTALLATION, Oil Charge Pipe.>
13) Install the torque converter assembly. <Ref. to 5AT-67, INSTALLATION, Torque Converter Assembly.>
14) Install the transmission assembly into vehicle. <Ref. to 5AT-42, INSTALLATION, Automatic Transmission Assembly.>

C: INSPECTION

Measure the backlash, and then adjust it within specification. <Ref. to 5AT-87, ADJUSTMENT, Drive Pinion Shaft Assembly.>

33.Oil Pump Cover

A: REMOVAL

1) Remove the transmission assembly from vehicle. <Ref. to 5AT-38, REMOVAL, Automatic Transmission Assembly.>
2) Pull out the torque converter assembly. <Ref. to 5AT-67, REMOVAL, Torque Converter Assembly.>
3) Remove the transmission harness connector from stay.
4) Remove the oil charge pipe. <Ref. to 5AT-66, REMOVAL, Oil Charge Pipe.>
5) Remove the ATF filter inlet and outlet pipes. <Ref. to 5AT-59, REMOVAL, ATF Filter.>
6) Separate the converter case and transmission case part. <Ref. to 5AT-80, REMOVAL, Converter Case.>
7) Remove the oil pump cover aligning bolt, and then separate it from the AT main case by lightly tapping with plastic hammer.

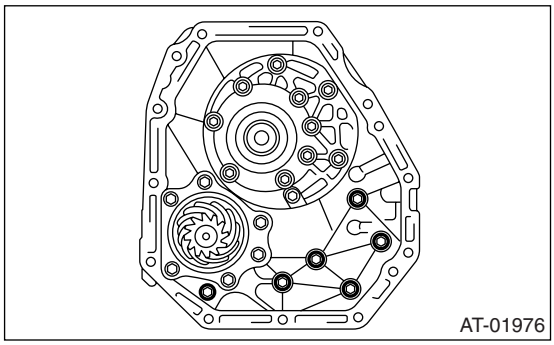

B: INSTALLATION

1) Secure the oil pump cover.

Tightening torque:
41 N·m (4.2 kgf-m, 30.4 ft-lb)

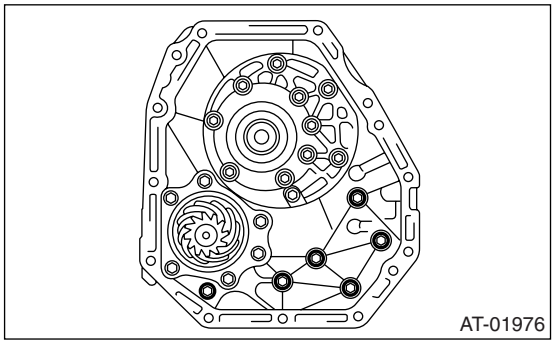

2) Install the converter case assembly into transmission case assembly. <Ref. to 5AT-67, INSTALLATION, Torque Converter Assembly.>
3) Install the transmission harness connector to the stay.
4) Install the ATF filter pipe. <Ref. to 5AT-59, INSTALLATION, ATF Filter.>
5) Install the oil charge pipe with O-ring. <Ref. to 5AT-66, INSTALLATION, Oil Charge Pipe.>
6) Install the torque converter assembly. <Ref. to 5AT-67, INSTALLATION, Torque Converter Assembly.>
7) Install the transmission assembly into vehicle. <Ref. to 5AT-42, INSTALLATION, Automatic Transmission Assembly.>

C: DISASSEMBLY

1. FRONT BRAKE

1) Remove the snap ring.

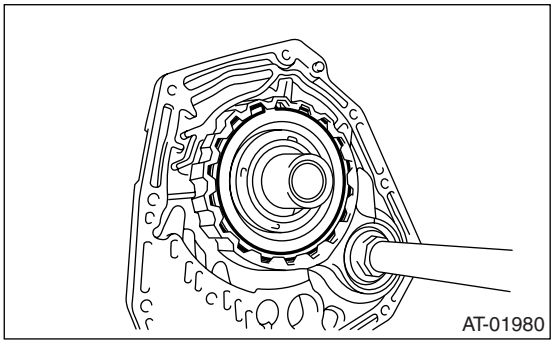

2) Remove the retainer plate, drive plate and driven plate.
3) Remove the snap ring using ST1, ST2 and ST3.

ST1	18762AA000	COMPRESSOR SPECIAL TOOL
ST2	18765AA000	COMPRESSOR SUPPORT
ST3	18763AA000	COMPRESSOR SHAFT

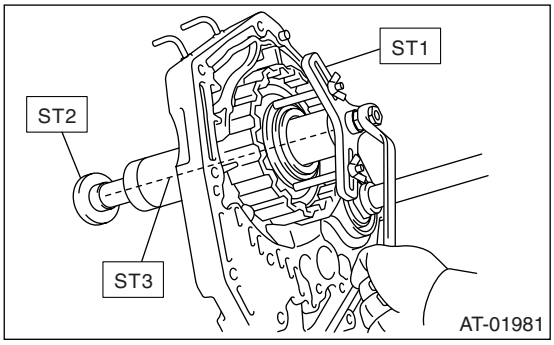

4) Remove the retainer and return spring.
5) Remove the front brake piston by blowing compressed air.

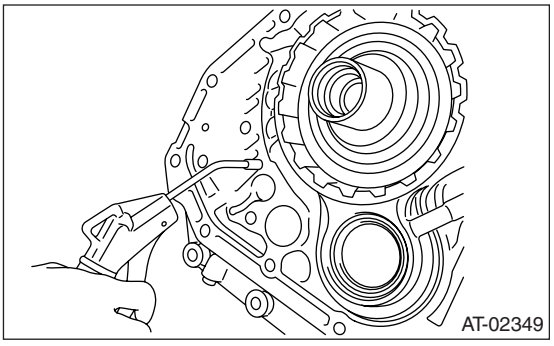

6) Remove the D-ring from front brake piston.

2. OIL PUMP

1) Take out the oil pump housing.

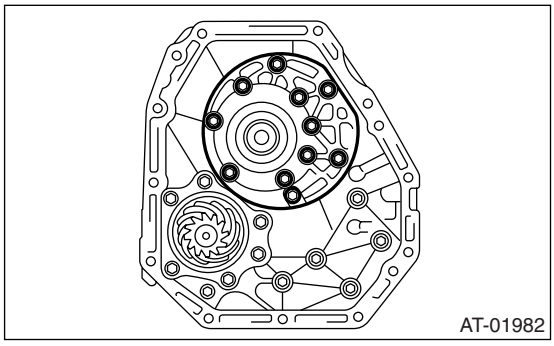

2) Take out the oil pump body.

D: ASSEMBLY

1. FRONT BRAKE

1) Apply ATF to D-ring, and then install it to the front brake piston.
2) Install the front brake piston to oil pump cover.

NOTE:
Install by aligning the "▲" mark on front brake piston surface with the oil pump cover rib.

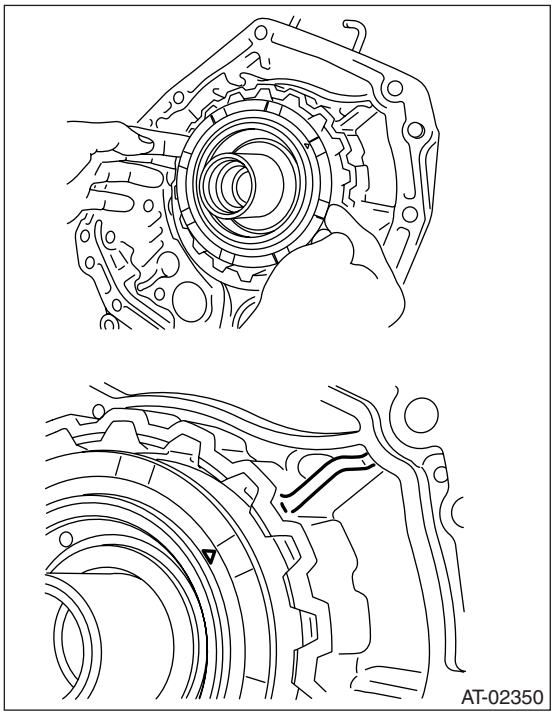

3) Install the retainer and return spring.
4) Install the front brake piston assembly using ST1, ST2 and ST3.

ST1 18762AA000 COMPRESSOR SPECIAL TOOL
ST2 18765AA000 COMPRESSOR SUPPORT
ST3 18763AA000 COMPRESSOR SHAFT

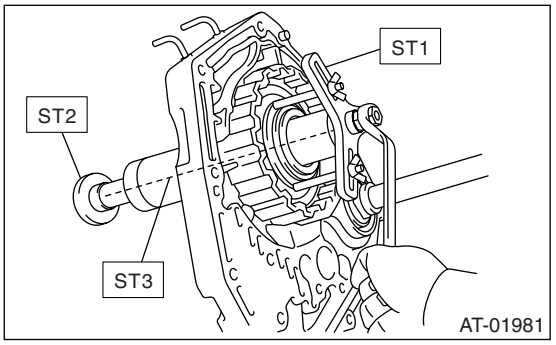

5) Install the genuine driven plate instead of retainer plate, temporarily assemble the drive plate and driven plate.
Part No. 31536AA290 DRIVEN PLATE
6) Install the snap ring.

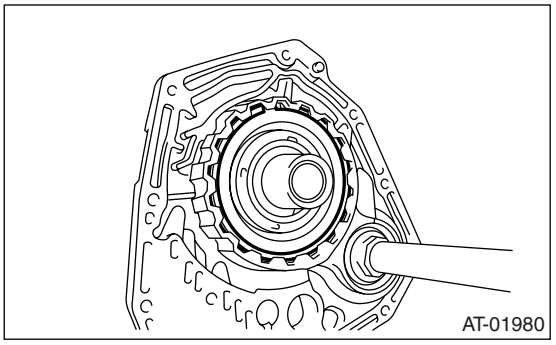

7) Measure the clearance between retainer plate and snap ring, and then select a suitable retainer plate from table.

Front brake clearance standard value:
0.7 — 1.1 mm (0.028 — 0.043 in)

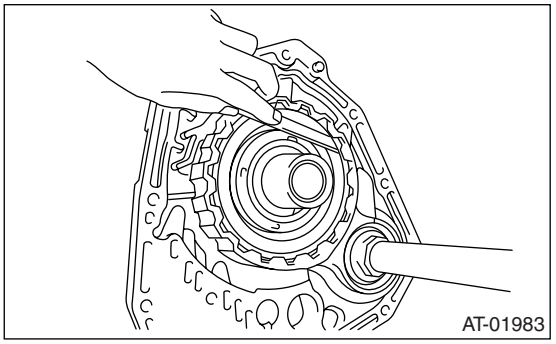

Front brake retainer plate	
Part Number	Thickness mm (in)
31567AB130	3.4 (0.134)
31567AB140	3.6 (0.142)
31567AB150	3.8 (0.150)
31567AB160	4.0 (0.157)

8) Remove the snap ring, replace the drive plate which used in measurement of clearance with retainer plate, and then reassemble.

2. OIL PUMP

1) Apply ATF to oil pump assembly, and then install it to oil pump housing.
2) Install the O-ring to oil pump cover.
3) Install the oil pump housing to oil pump housing cover.

Tightening torque:
10 N·m (1.0 kgf-m, 7.4 ft-lb)

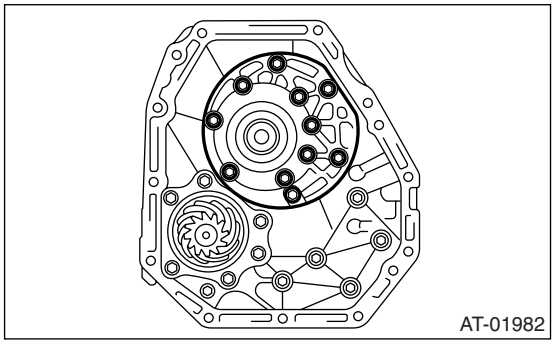

E: INSPECTION

1. FRONT BRAKE

Check the following items:
- Drive plate facing for wear and damage
- Snap ring for wear, return spring for damage, and retainer for damage
- Piston for damage
- D-ring for damage

2. OIL PUMP

Check the following items:
- Oil pump cover and oil seal for breakage or damage
- Oil pump body for scratch or damage

1) Check seal ring and oil seal for breaks or damages.
2) Check other parts for dents or abnormalities.
3) Selection of oil pump rotor assembly
   (1) Tip clearance
   Install the inner rotor and outer rotor to oil pump housing. With rotor gears facing each other, measure the crest-to-crest clearance.

Tip clearance:
0.02 — 0.15 mm (0.0008 — 0.0059 in)

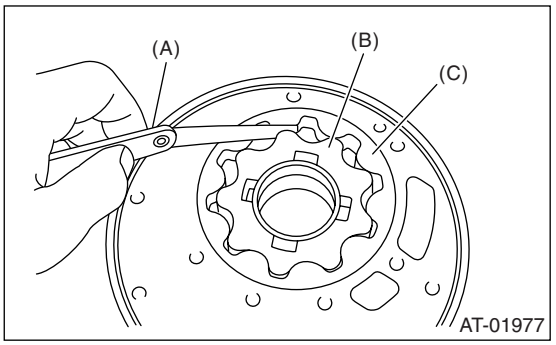

(A) Thickness gauge
(B) Inner rotor
(C) Outer rotor

(2) Side clearance
Set a depth gauge to oil pump housing, then measure the oil pump housing-to-rotor clearance.

Side clearance:
0.02 — 0.045 mm (0.0008 — 0.0018 in)

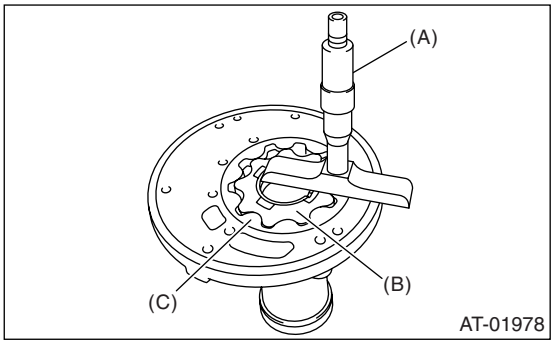

(A) Depth gauge
(B) Inner rotor
(C) Outer rotor

(3) If the depth and/or side clearance are not within the specifications, replace the rotor assembly.

Oil pump rotor ASSY	
Part Number	Thickness mm (in)
15008AA130	11.37 — 11.38 (0.4476 — 0.4480)
15008AA140	11.38 — 11.39 (0.4480 — 0.4484)
15008AA150	11.39 — 11.40 (0.4484 — 0.4488)

Measure the total end play and adjust it within specifications. <Ref. to 5AT-103, ADJUSTMENT, AT Main Case.>

34.Drive Pinion Shaft Assembly

A: REMOVAL

1) Remove the transmission assembly from vehicle. <Ref. to 5AT-38, REMOVAL, Automatic Transmission Assembly.>
2) Pull out the torque converter assembly. <Ref. to 5AT-67, REMOVAL, Torque Converter Assembly.>
3) Remove the transmission harness connector from stay.
4) Disconnect the air breather hose. <Ref. to 5AT-65, REMOVAL, Air Breather Hose.>
5) Remove the oil charge pipe. <Ref. to 5AT-66, REMOVAL, Oil Charge Pipe.>
6) Remove the ATF filter inlet and outlet pipes. <Ref. to 5AT-59, REMOVAL, ATF Filter.>
7) Separate the converter case and transmission case part. <Ref. to 5AT-80, REMOVAL, Converter Case.>
8) Remove the drive pinion shaft mounting bolt, and then remove the drive shaft assembly from oil pump cover.

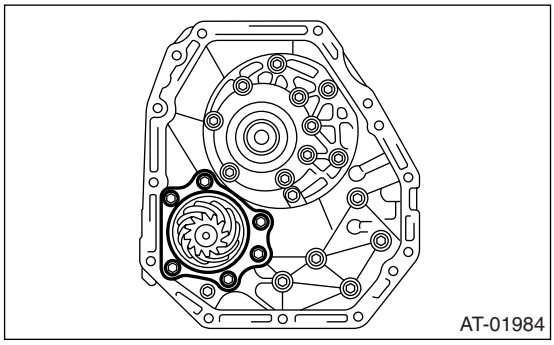

9) Remove the oil pump cover from AT main case. <Ref. to 5AT-82, Oil Pump Cover.>

B: INSTALLATION

1) Assemble the drive pinion assembly to oil pump cover.

NOTE:
Be careful not to bend the shim.

Tightening torque:
70 N·m (7.1 kgf-m, 51.6 ft-lb)

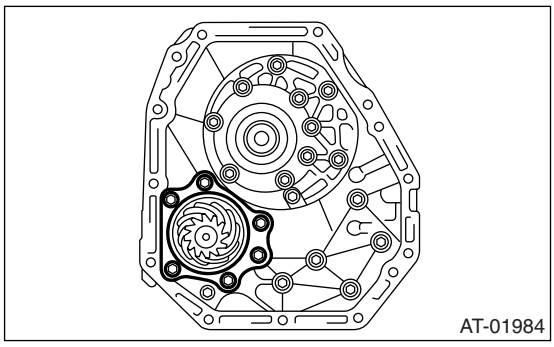

2) Adjust the tooth contact between drive pinion shaft assembly and front differential side gear. <Ref. to 5AT-87, ADJUSTMENT, Drive Pinion Shaft Assembly.>
3) Combine the converter case with transmission case. <Ref. to 5AT-80, INSTALLATION, Converter Case.>
4) Install the transmission harness connector to the stay.
5) Install the ATF filter pipe. <Ref. to 5AT-59, INSTALLATION, ATF Filter.>
6) Install the oil charge pipe with O-ring.
7) Install the torque converter assembly. <Ref. to 5AT-67, INSTALLATION, Torque Converter Assembly.>
8) Install the transmission assembly into vehicle. <Ref. to 5AT-42, INSTALLATION, Automatic Transmission Assembly.>

C: DISASSEMBLY

1) Remove the caulking part of lock nut, and then remove the lock nut with holding rear spline part of the shaft using ST1 and ST2. Pull out the drive pinion collar.

ST1	18667AA010	HOLDER
ST2	499787700	WRENCH
ST3	499787500	ADAPTER

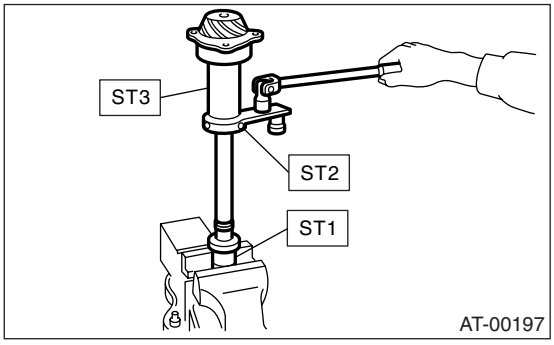

2) Remove the O-ring.
3) Separate the rear roller bearing and outer race from the shaft using press.

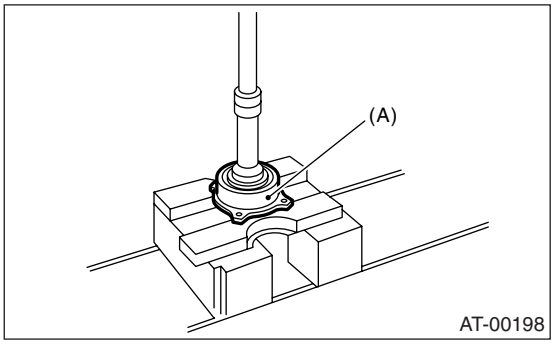

(A) Outer race

4) Separate the front roller bearing from the shaft using press and ST.

ST 498517000 REPLACER

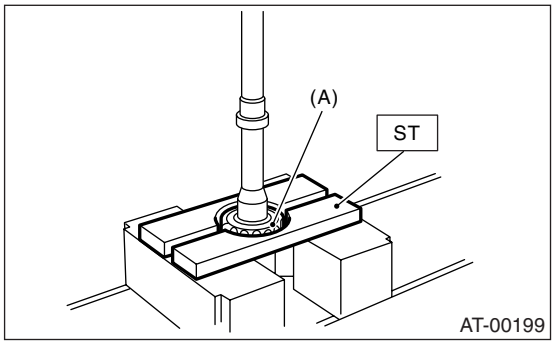

(A) Front roller bearing

D: ASSEMBLY

1) Measure the dimension “A” of drive pinion shaft.
ST 398643600 GAUGE

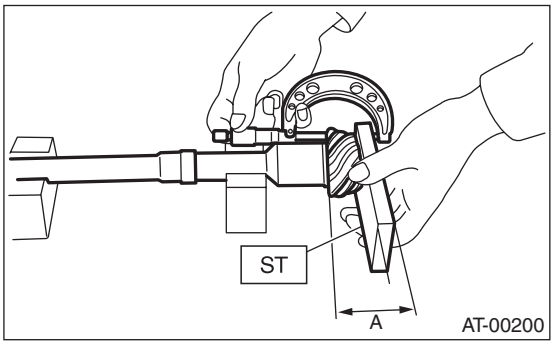

2) Using a press, press-fit the new roller bearing into specified position.

NOTE:
If excessive force is applied to roller bearing, the roller bearing will not turn easily.

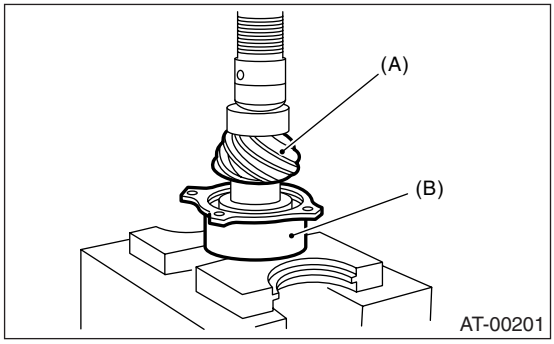

(A) Drive pinion shaft
(B) Roller bearing

3) After fitting a new O-ring to the shaft, attach the drive pinion collar to shaft.
4) Install the lock washer to drive pinion shaft in proper direction.
5) Tighten new lock nuts using ST1, ST2 and ST3. Calculate the lock washer and lock nut specifications using following formula.
$T2 = L2/(L1 + L2) \times T1$

T1: 116 N·m (11.8 kgf-m, 85.3 ft-lb)
[Required torque setting]
T2: Tightening torque
L1: ST2 length 0.072 m (2.83 in)
L2: Torque wrench length
Example:

Torque wrench length m (in)	Tightening torque N·m (kgf-m, ft-lb)
0.4 (15.75)	98 (10.0, 72)
0.45 (17.72)	100 (10.2, 73.8)
0.5 (19.69)	101 (10.3, 74.5)
0.55 (21.65)	102 (10.4, 75)

ST1 18667AA010 HOLDER
ST2 499787700 WRENCH
ST3 499787500 ADAPTER

NOTE:
Install the ST2 to torque wrench as straight as possible.

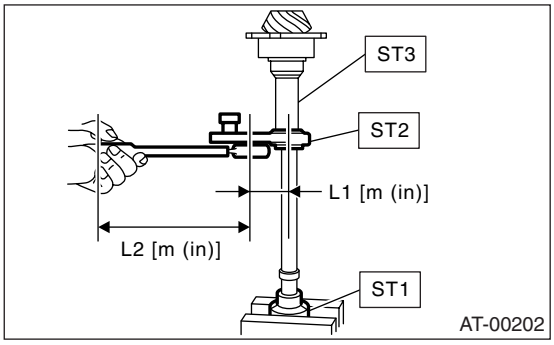

6) Measure the starting torque of bearing. Make sure the starting torque is within the specified range. If the torque is not within specified range, replace the roller bearing.

Starting torque:
7.6 — 38.1 N (0.776 — 3.88 kgf, 1.7 — 8.6 lb)

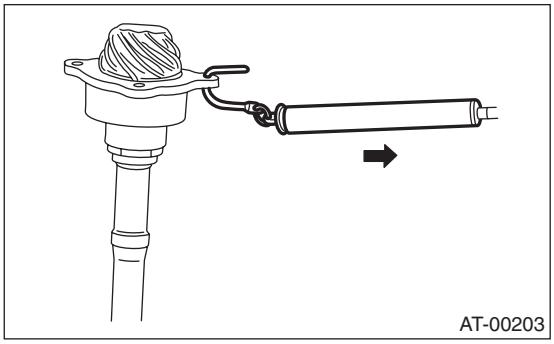

7) Stake the caulking of lock nut at two points.
8) Measure the dimension “B” of drive pinion shaft.

ST 398643600 GAUGE

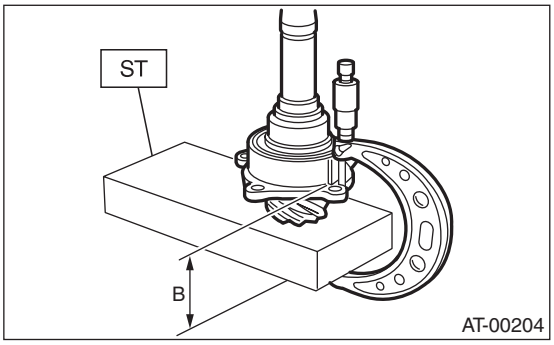

9) Calculate the thickness “t” (mm) of drive pinion shim.
$t = 6.5 \pm 0.0625 - (B - A)$
10) Select three or less shims from following table.

Drive pinion shim	
Part Number	Thickness mm (in)
31451AA180	0.150 (0.0059)
31451AA190	0.175 (0.0069)
31451AA200	0.200 (0.0079)
31451AA210	0.225 (0.0089)
31451AA220	0.250 (0.0098)
31451AA230	0.275 (0.0108)

E: INSPECTION

- Make sure that all component parts are free of scratch, hole and other faults.
- Adjust the teeth alignment. <Ref. to 5AT-87, ADJUSTMENT, Drive Pinion Shaft Assembly.>

F: ADJUSTMENT

1) Remove the liquid gasket completely from mating surfaces.
2) Install the converter case to oil pump cover, and secure them with tightening four bolts evenly.

NOTE:
Use an old gasket or aluminum washer so as not to damage the mating surface of housing.

Tightening torque:
41 N·m (4.2 kgf-m, 30.4 ft-lb)

3) Rotate the drive pinion several times using ST1 and ST2.
ST1 18667AA010 HOLDER
ST2 499787700 WRENCH

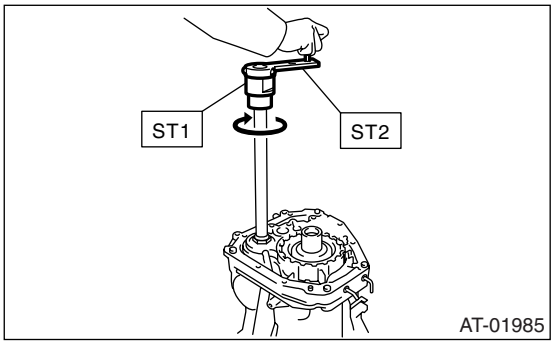

4) Adjust the backlash between drive pinion and hypoid driven gear. <Ref. to 5AT-93, ADJUSTMENT, Front Differential Assembly.>
5) Apply red lead evenly to the surfaces of three or four teeth on hypoid driven gear. Rotate the drive pinion in the leftward and rightward for several times. Remove the oil pump cover, and check the tooth contact pattern.
If the tooth contact is improper, readjust the backlash or shim thickness. <Ref. to 5AT-93, ADJUSTMENT, Front Differential Assembly.>
- Correct tooth contact

Checking item: Tooth contact pattern is slightly shifted toward to toe side under no-load rotation. [When loaded, contact pattern moves toward heel.]

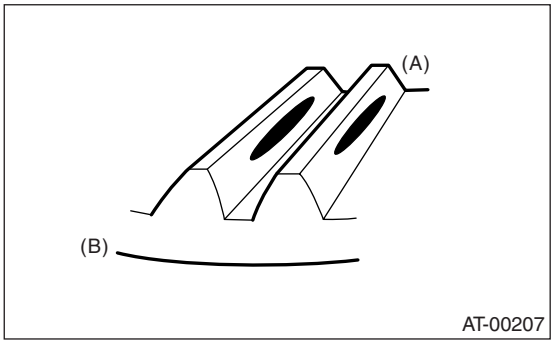

(A) Toe side
(B) Heel side

- Face contact

Checking item: Backlash is too large.
Contact pattern

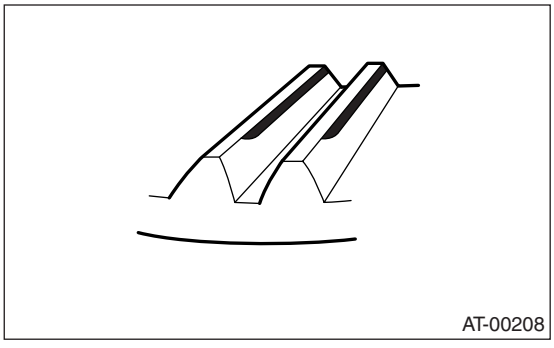

Corrective action: Increase thickness of drive pinion height adjusting shim in order to bring drive pinion close to hypoid driven gear.

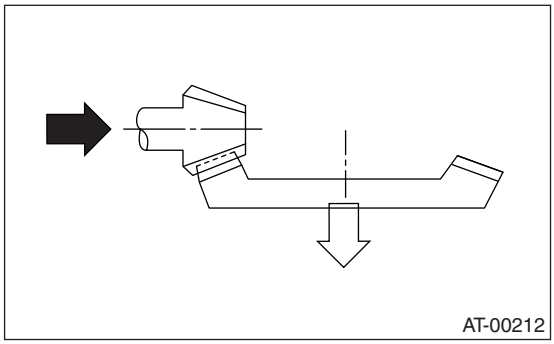

- Flank contact

Checking item: Backlash is too small.
Contact pattern

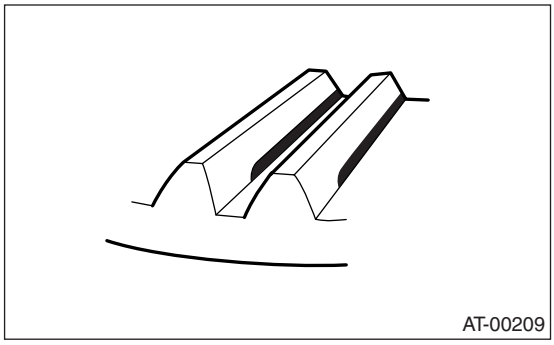

Corrective action: Reduce thickness of drive pinion height adjusting shim in order to bring drive pinion away from hypoid driven gear.

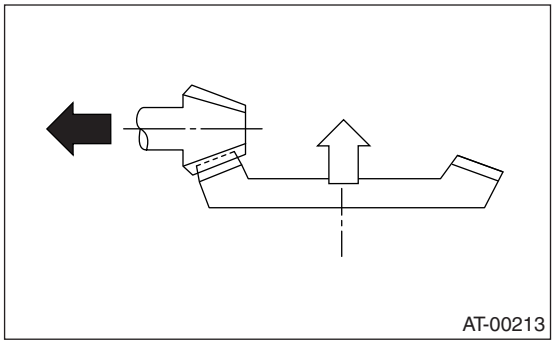

- Toe contact (inside end contact)

Checking item: Contact areas are too small
Contact pattern

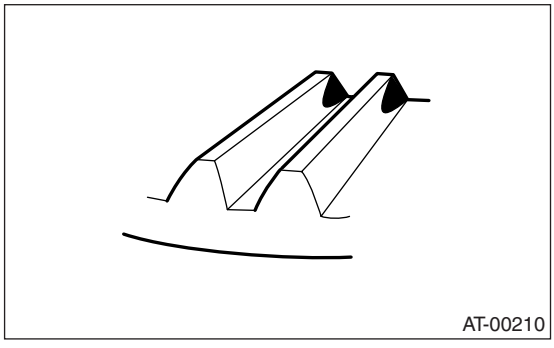

Corrective action: Reduce thickness of drive pinion height adjusting shim in order to bring drive pinion away from hypoid driven gear.

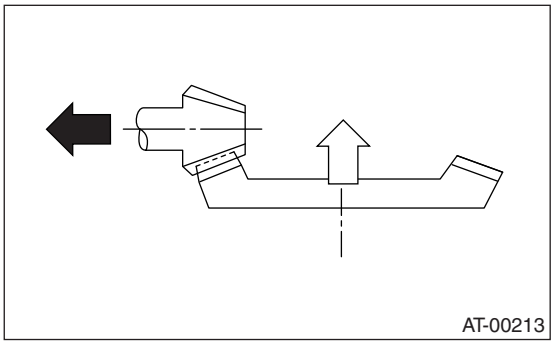

- Heel contact (outside end contact)

Checking item: Contact areas are too small
Contact pattern

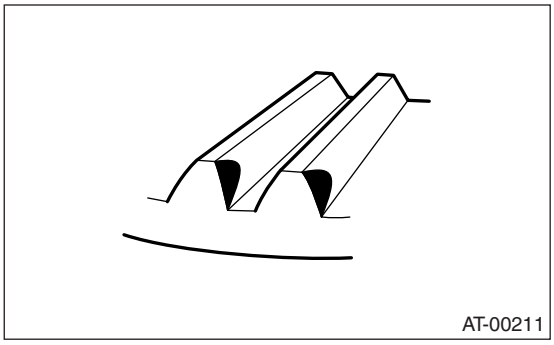

Corrective action: Increase thickness of drive pinion height adjusting shim in order to bring drive pinion close to hypoid driven gear.

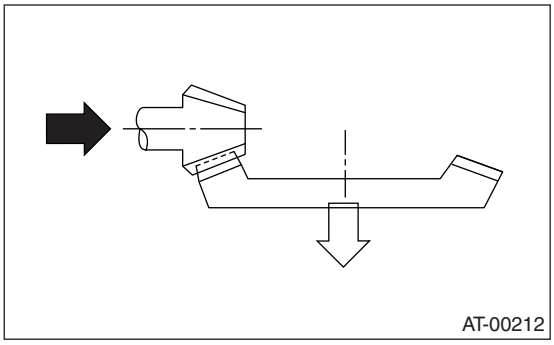

6) If tooth contact is correct, mark the retainer position and loosen it. After fitting a new O-ring and oil seal, screw in the retainer to the marked position. Tighten the lock plate with specified torque.

Tightening torque:
25 N·m (2.5 kgf-m, 18 ft-lb)

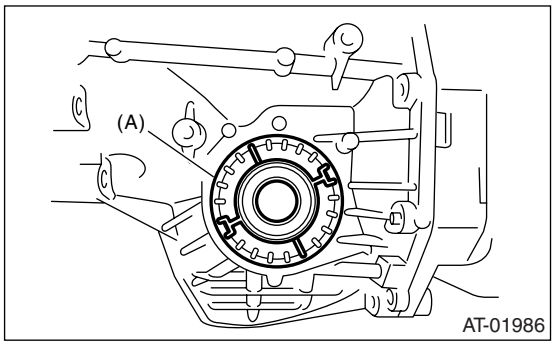

(A) Lock plate

35.Front Differential Assembly

A: REMOVAL

1) Remove the transmission assembly from vehicle. <Ref. to 5AT-38, REMOVAL, Automatic Transmission Assembly.>
2) Pull out the torque converter assembly. <Ref. to 5AT-67, REMOVAL, Torque Converter Assembly.>
3) Remove the transmission harness connector from stay.
4) Remove the oil charge pipe. <Ref. to 5AT-66, REMOVAL, Oil Charge Pipe.>
5) Remove the ATF filter inlet and outlet pipes. <Ref. to 5AT-59, REMOVAL, ATF Filter.>
6) Separate the converter case and transmission case. <Ref. to 5AT-80, REMOVAL, Converter Case.>
7) Remove the differential side retainers using ST.

NOTE:
Hold the differential case assembly by hand to avoid damaging the retainer mounting hole of converter case.

ST 18630AA010 WRENCH COMPL RETAINER

8) Remove the differential assembly without damaging the installation part of retainer.

B: INSTALLATION

1) When installing the differential assembly to case, be careful not to damage the inside of case (particularly, the differential side retainer mating surface).

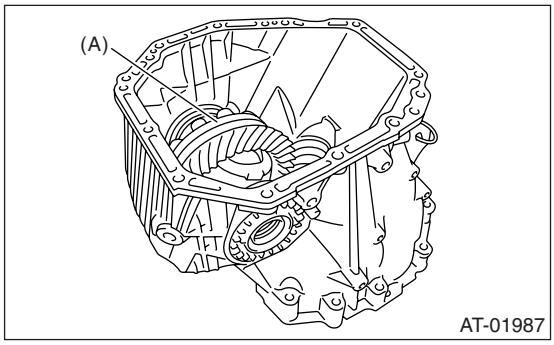

(A) Differential ASSY

2) Install the O-ring to left and right side retainer.
3) Install the side retainers using ST. <Ref. to 5AT-90, REMOVAL, Front Differential Assembly.>

ST 18630AA010 WRENCH COMPL RETAINER

4) Adjust the front differential backlash. <Ref. to 5AT-93, ADJUSTMENT, Front Differential Assembly.>
5) Install the lock plate.

Tightening torque:
25 N·m (2.5 kgf-m, 18 ft-lb)

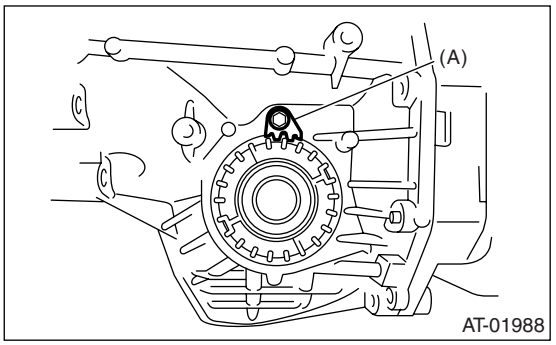

(A) Lock plate

6) Install the converter case to transmission case. <Ref. to 5AT-80, INSTALLATION, Converter Case.>
7) Install the transmission harness connector to the stay.
8) Install the ATF filter pipe. <Ref. to 5AT-59, INSTALLATION, ATF Filter.>
9) Install the oil charge pipe with a O-ring. <Ref. to 5AT-66, INSTALLATION, Oil Charge Pipe.>
10) Install the torque converter assembly. <Ref. to 5AT-67, INSTALLATION, Torque Converter Assembly.>
11) Install the transmission assembly into vehicle. <Ref. to 5AT-42, INSTALLATION, Automatic Transmission Assembly.>

C: DISASSEMBLY

1. DIFFERENTIAL CASE ASSEMBLY

1) Remove the taper roller bearing using ST and press.

ST 498077000 REMOVER

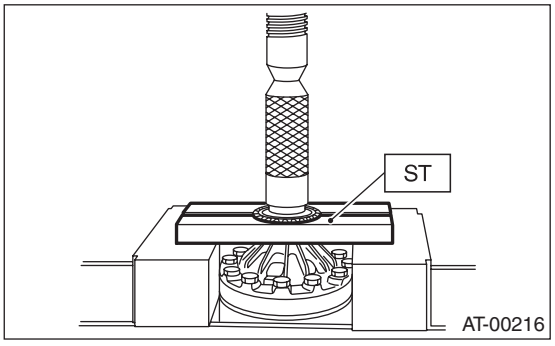

2) Secure the case in a vise and remove the hypoid driven gear tightening bolts, then separate the hypoid driven gear case (RH) and case (LH).

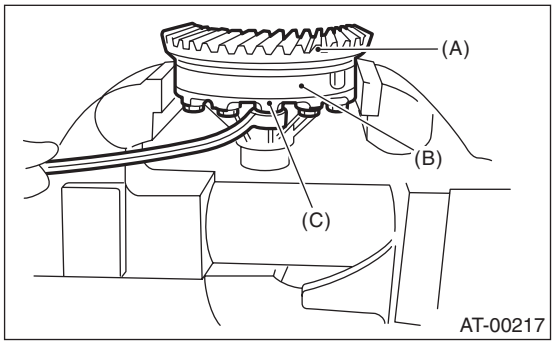

(A) Hypoid driven gear
(B) Differential case (RH)
(C) Differential case (LH)

3) Pull out the straight pin and shaft, and then remove the differential bevel gear, washer and differential bevel pinion.

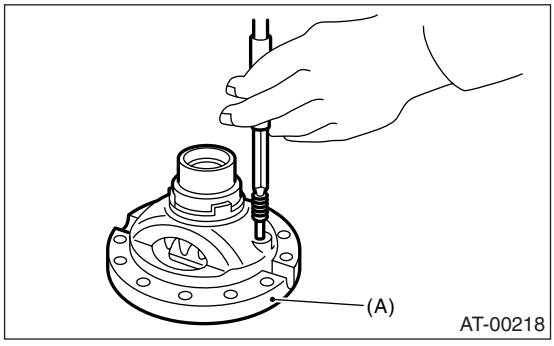

(A) Differential case (RH)

2. SIDE RETAINER

NOTE:
After adjusting the drive pinion backlash and tooth contact, remove and install the oil seal and O-ring.

1) Remove the O-ring.

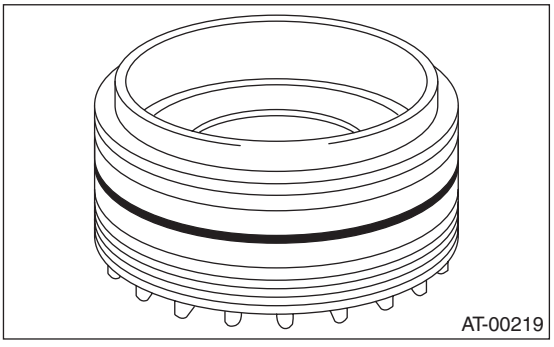

2) Remove the oil seal.

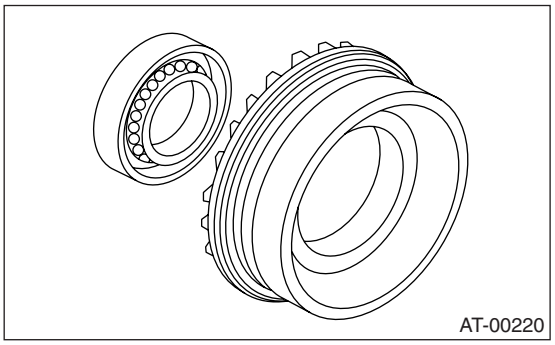

3) Remove the split pin, and then remove the claw.
ST 398527700 PULLER ASSY

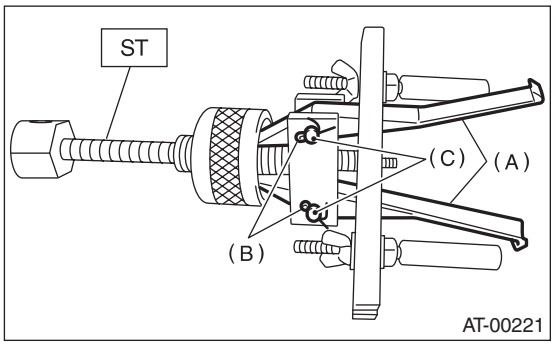

(A) Claw
(B) Split pin
(C) Pin

4) Attach two claws to the outer race, and set the ST to side retainer.
ST 398527700 PULLER ASSY

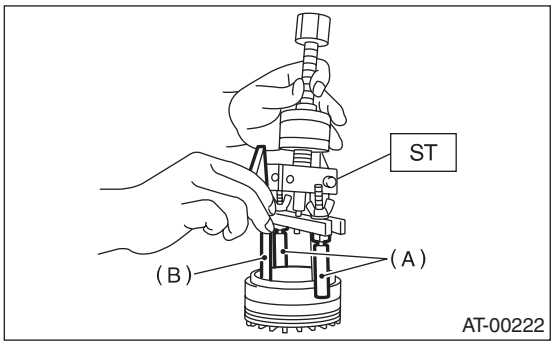

(A) Shaft
(B) Claw

5) Restore the removed claws to original position, and install the pin and split pin.
6) Hold the shaft of ST to avoid removing from side retainer, and then remove the bearing outer race.
ST 398527700 PULLER ASSY

NOTE:
Replace the bearing inner and outer races as a single unit.

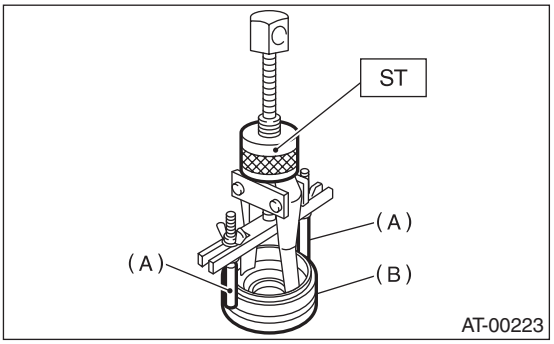

(A) Shaft
(B) Side retainer

D: ASSEMBLY

1. DIFFERENTIAL CASE ASSEMBLY

1) Install the washer, differential bevel gear and differential bevel pinion in the differential case (RH). Insert the pinion shaft.
2) Install the straight pin in reverse direction.

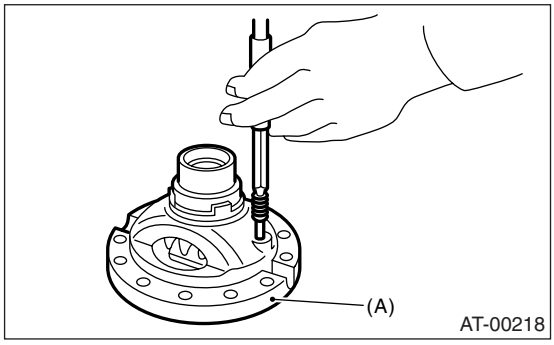

(A) Differential case (RH)

3) Install the washer and differential bevel gear to differential case (LH). Put the differential case (RH) on the case, and then combine the both cases.
4) Install the hypoid driven gear and secure by tightening the bolt.

Tightening torque:
62 N·m (6.3 kgf-m, 45.6 ft-lb)

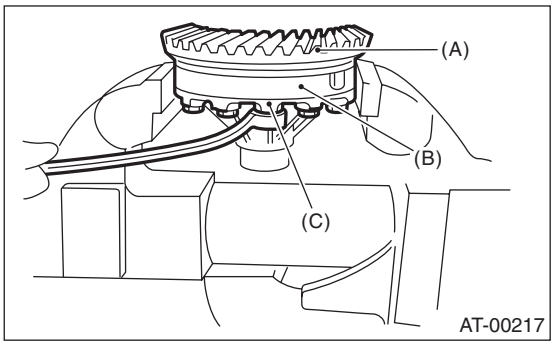

(A) Hypoid driven gear
(B) Differential case (RH)
(C) Differential case (LH)

5) Measurement of backlash (Selection of washer)
(1) Install the SUBARU genuine axle shaft to differential case.
Parts No. 38415AA070AXLE SHAFT
(2) Measure the gear backlash using ST1 and ST2, and then insert the ST2 from the access window of case.
ST1 498247001 MAGNET BASE
ST2 498247100 DIAL GAUGE

NOTE:
• Measure the backlash by applying a pinion tooth between two bevel gear teeth.
• Fix the bevel pinion gear in place with a screwdriver or similar tool when measuring.

Standard value:
0.13 — 0.18 mm (0.0051 — 0.0071 in)

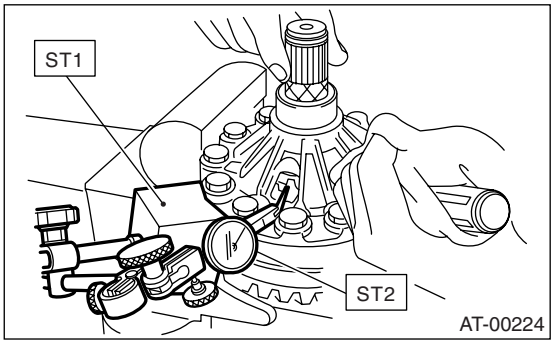

(3) If the backlash is not within specifications, select a washer from the table below.

Washer	
Part Number	Thickness mm (in)
803038021	0.95 (0.037)
803038022	1.00 (0.039)
803038023	1.05 (0.041)

6) Using the ST, install the taper roller bearing.
ST 398487700 DRIFT

2. SIDE RETAINER

NOTE:
Install the oil seal and O-ring of side retainer after the adjustment of backlash and tooth contact.

1) Install the bearing outer race to side retainer.
2) Fit a new oil seal using ST.
ST 18675AA000 DIFFERENTIAL SIDE OIL SEAL INSTALLER

NOTE:
Apply oil to the oil seal lips.

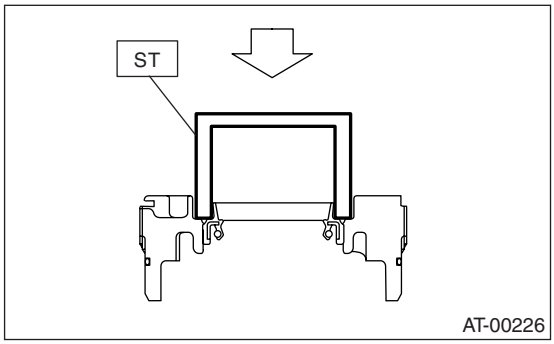

3) Install a new O-ring.

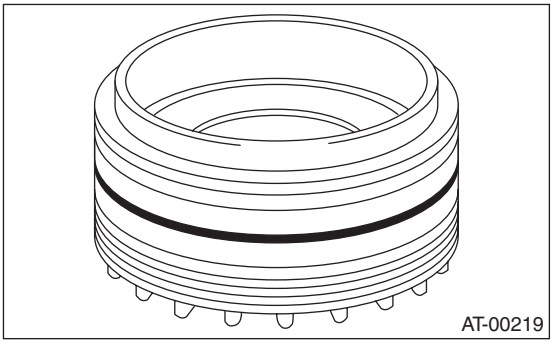

E: INSPECTION

• Check each component for scratches, damage and other faults.
• Measure the backlash, and then adjust it within specification.
<Ref. to 5AT-93, ADJUSTMENT, Front Differential Assembly.>

F: ADJUSTMENT

1) Using the ST, screw-in the retainer until light contact is felt.

NOTE:
Screw-in the RH side slightly deeper than the LH side.

ST 18630AA010 WRENCH ASSY

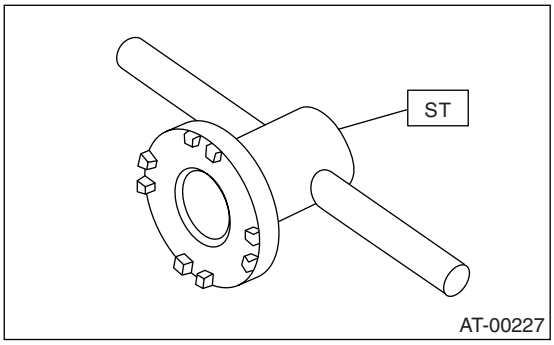

2) Remove the oil pump cover.
3) Remove the liquid gasket from the mating surface completely.
4) Install the oil pump cover to converter case, and secure them with tightening four bolts evenly.

NOTE:
Use an old gasket or aluminum washer so as not to damage the mating surface of housing.

Tightening torque:
41 N·m (4.2 kgf-m, 30.4 ft-lb)

5) Rotate the drive pinion ten times or more using ST1 and ST2.
ST1 18667AA010 HOLDER
ST2 499787700 WRENCH

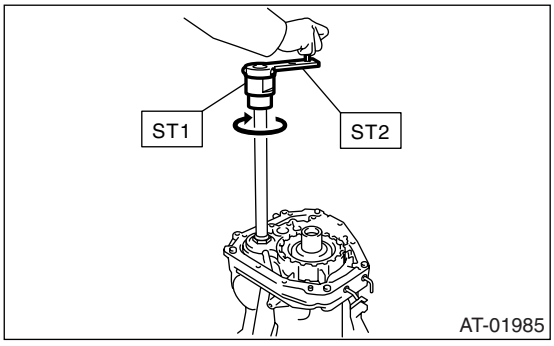

6) Tighten the retainer LH until contact is felt while rotating the shaft. Then loosen the retainer RH. Keep tightening the retainer LH, and loosening the retainer RH until the pinion shaft cannot be turned. This is the “zero” state.

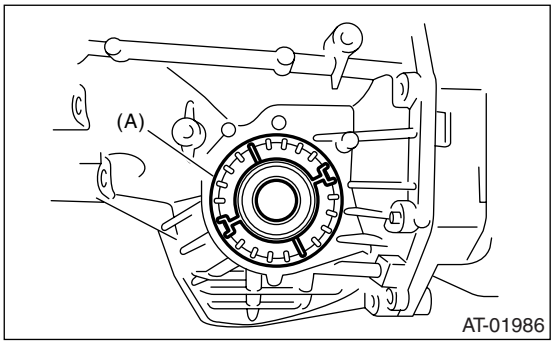

(A) Retainer

7) After the “zero” state is established, back off the retainer LH 3 notches and secure it with the lock plate. Then back off the retainer RH and retighten until it stops. Rotate the drive pinion few times. Tighten the retainer RH 1-3/4 notches further. This sets the preload. Finally, secure the retainer with its lock plate.

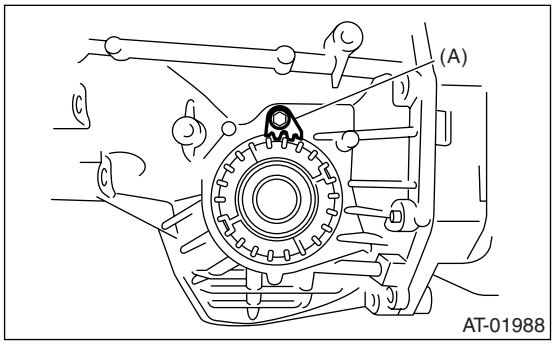

(A) Lock plate

NOTE:
Turning the retainer by one tooth changes the backlash about 0.05 mm (0.0020 in).

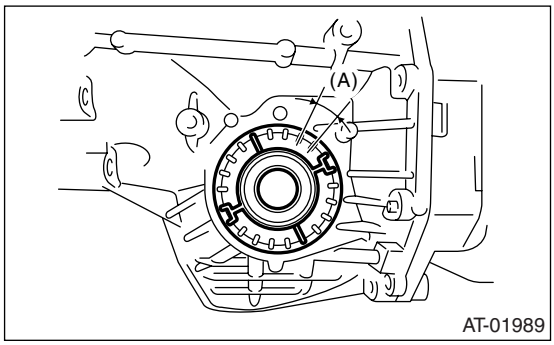

(A) 0.05 mm (0.0020 in)

8) Turn the drive pinion several times with ST1 and check to see if the backlash is within the specified value with ST2, ST3, ST4 and ST5.

ST1	499787700	WRENCH
ST2	498247001	MAGNET BASE
ST3	498247100	DIAL GAUGE
ST4	499787500	ADAPTER
ST5	498255400	PLATE

Backlash:
0.13 — 0.18 mm (0.0051 — 0.0071 in)

9) Adjust the tooth contact between front differential and drive shaft. <Ref. to 5AT-87, ADJUSTMENT, Drive Pinion Shaft Assembly.>

36.AT Main Case

A: REMOVAL

1) Remove the transmission assembly from vehicle. <Ref. to 5AT-38, REMOVAL, Automatic Transmission Assembly.>
2) Pull out the torque converter assembly. <Ref. to 5AT-67, REMOVAL, Torque Converter Assembly.>
3) Remove the transmission harness connector from stay.
4) Disconnect the air breather hose.
5) Remove the oil charge pipe. <Ref. to 5AT-66, REMOVAL, Oil Charge Pipe.>
6) Remove the ATF filter inlet and outlet pipes. <Ref. to 5AT-59, REMOVAL, ATF Filter.>
7) Remove the extension case and intermediate case. <Ref. to 5AT-69, REMOVAL, Extension Case and Intermediate Case.>
8) Remove the center differential carrier. <Ref. to 5AT-76, REMOVAL, Center Differential Carrier.>
9) Remove the reduction driven gear. <Ref. to 5AT-74, REMOVAL, Reduction Driven Gear.>
10) Separate the converter case and transmission case. <Ref. to 5AT-80, REMOVAL, Converter Case.>
11) Remove the control valve body. <Ref. to 5AT-57, REMOVAL, Control Valve Body.>
12) Remove the oil pump cover.
<Ref. to 5AT-82, REMOVAL, Oil Pump Cover.>

NOTE:
The input clutch pack assembly and front sun gear assembly are also removed together.

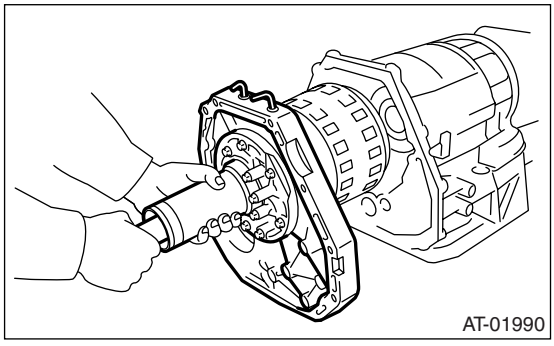
AT-01990

13) Remove the needle bearing of the mid carrier assembly.

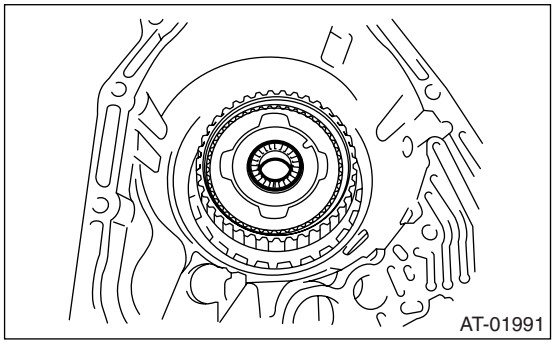
AT-01991

14) Remove the mid carrier assembly.

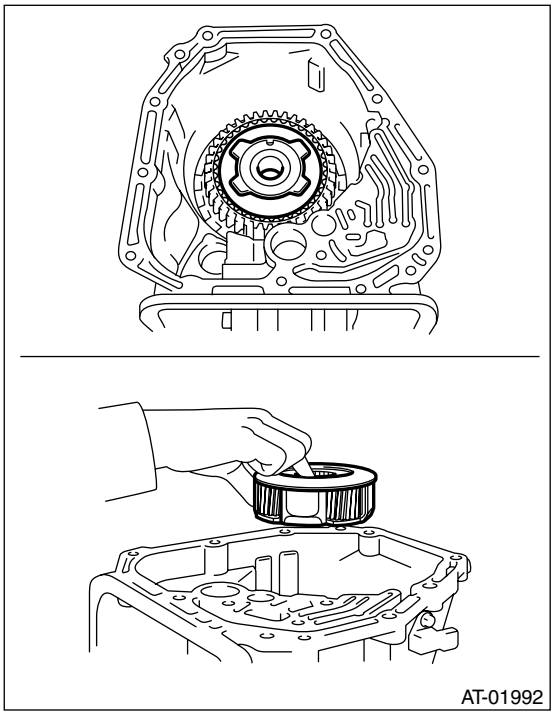
AT-01992

15) Remove the rear carrier assembly.

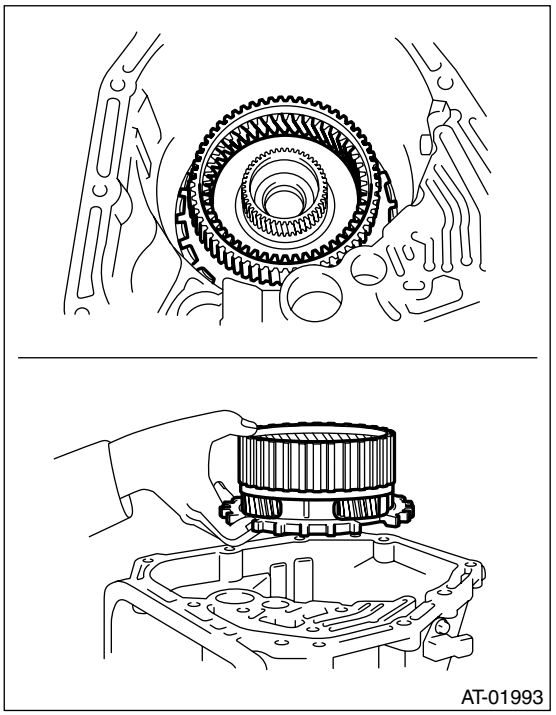
AT-01993

16) Remove the mid & rear sun gear assembly.

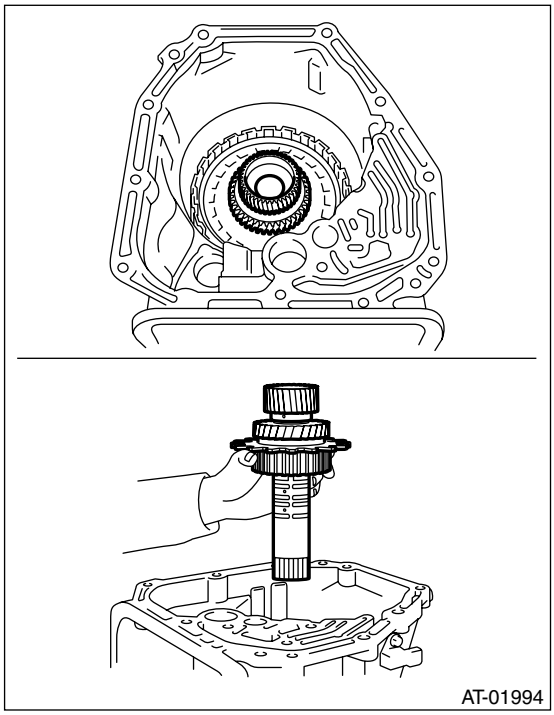

17) Remove the thrust needle bearing of high & low reverse clutch.

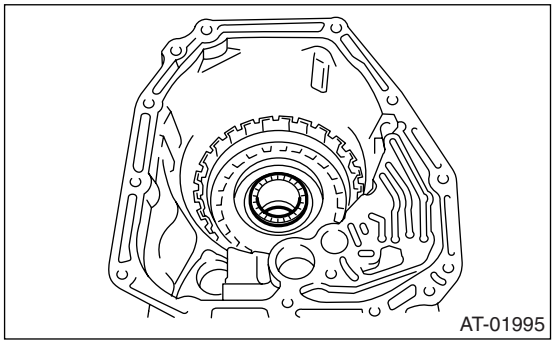

18) Remove the high & low reverse clutch assembly.

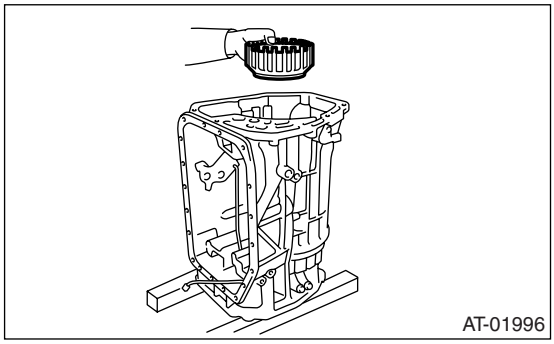

19) Remove the direct clutch assembly.

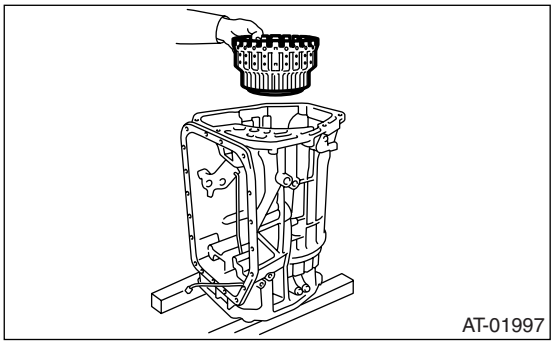

20) Remove the snap ring of reverse brake.

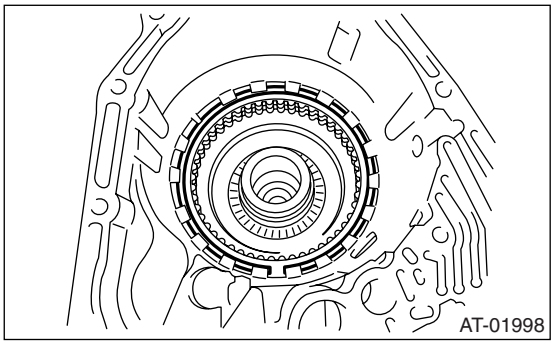

21) Remove the retaining plate.
22) Remove the leaf spring.

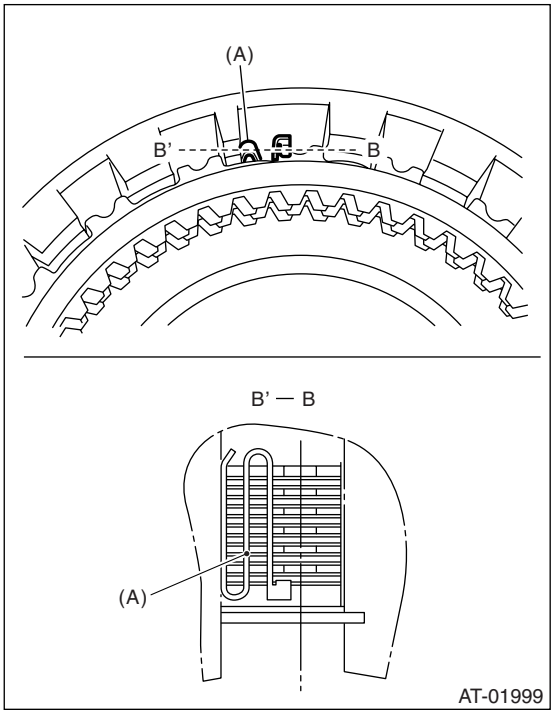

(A) Leaf spring

23) Take out the drive plate, driven plate and dish plate.
24) Remove the snap ring of the spring retainer of reverse brake.

ST1 18762AA000 COMPRESSOR SPECIAL TOOL
ST2 18765AA000 COMPRESSOR SUPPORT
ST3 18763AA000 COMPRESSOR SHAFT

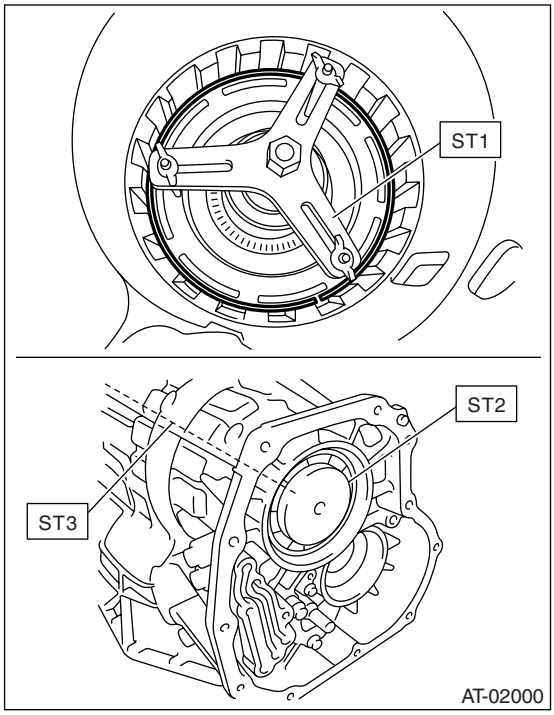

25) Remove the spring retainer.

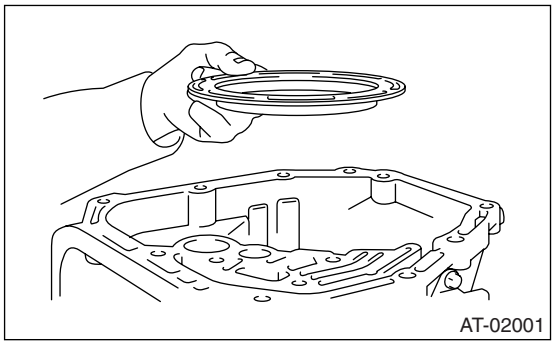

26) Remove the return spring.

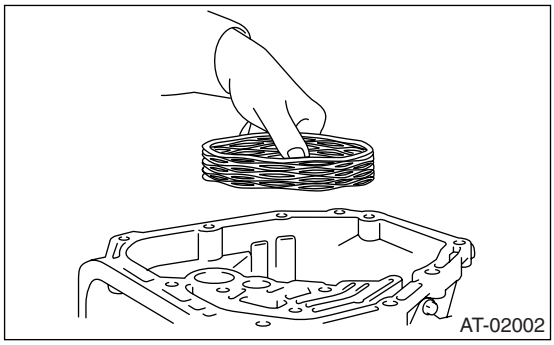

27) Apply compressed air.

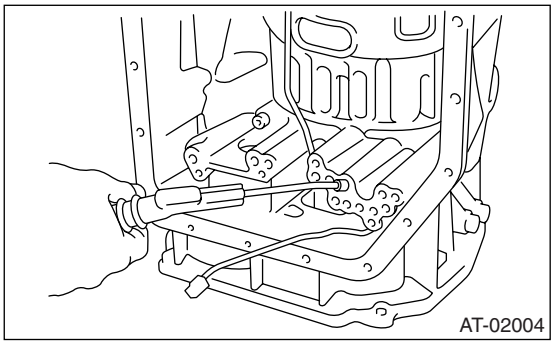

28) Remove the reverse brake piston.

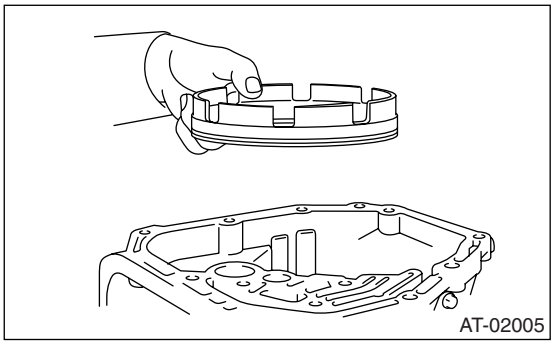

29) Remove the thrust bearings and seal rings.

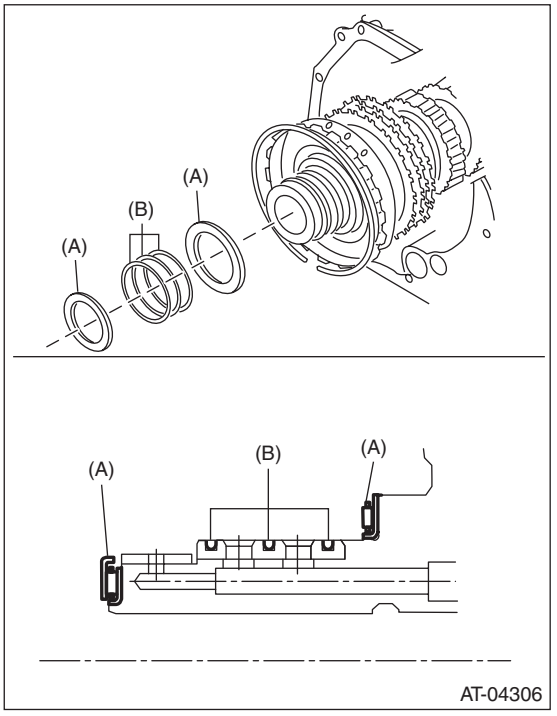

(A) Thrust bearing
(B) Seal ring

B: INSTALLATION

1) Apply ATF to new seal rings.
2) Install the thrust bearings and new seal rings to the drum support.

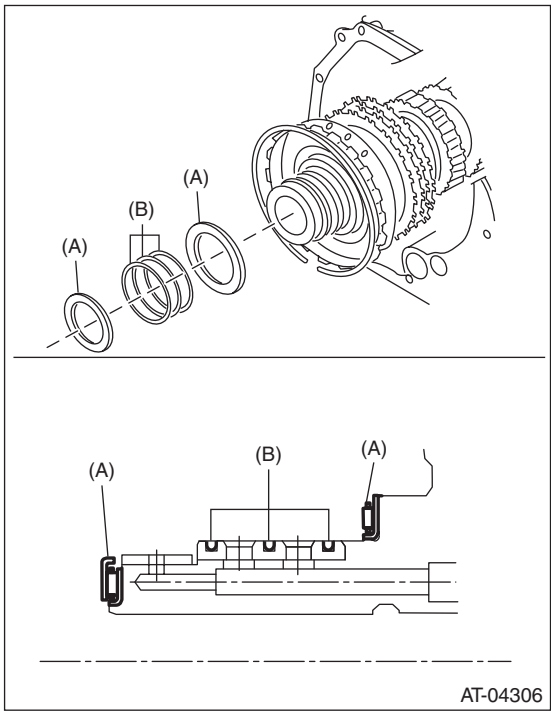

(A) Thrust bearing
(B) Seal ring

3) Install the reverse brake piston.

NOTE:
Apply ATF onto the piston sliding surface.

ST1 18762AA000 COMPRESSOR SPECIAL TOOL
ST2 18765AA000 COMPRESSOR SUPPORT
ST3 18763AA000 COMPRESSOR SHAFT

4) Install the return spring.

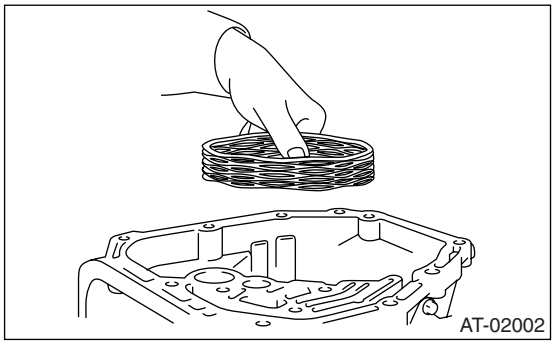

5) Install the spring retainer and snap ring.

ST1 18762AA000 COMPRESSOR SPECIAL TOOL
ST2 18765AA000 COMPRESSOR SUPPORT
ST3 18763AA000 COMPRESSOR SHAFT

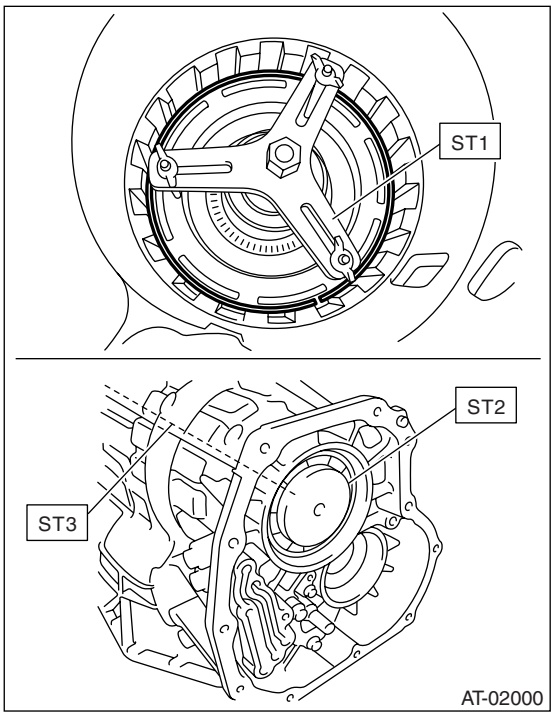

6) Install the dish plate.

NOTE:
When installing, make sure that the identification mark is facing the front side of transmission.

7) Install the drive plate and driven plate.

8) Install the leaf spring.

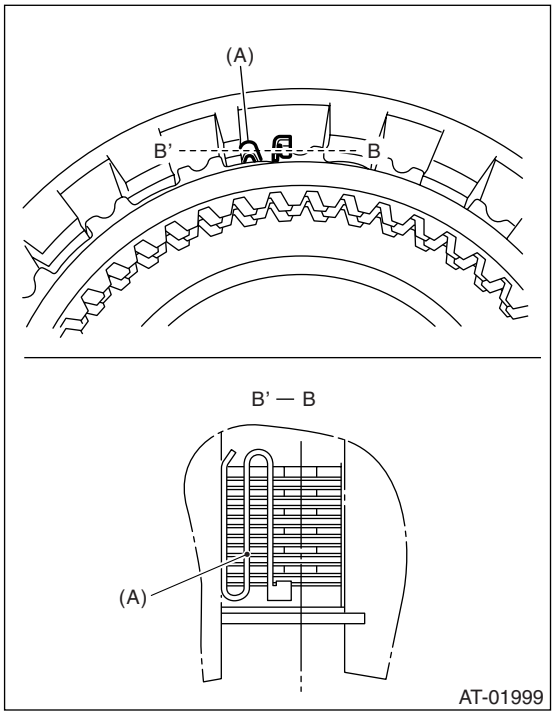

(A) Leaf spring

9) Install the retaining plate.
10) Install the snap ring of reverse brake.

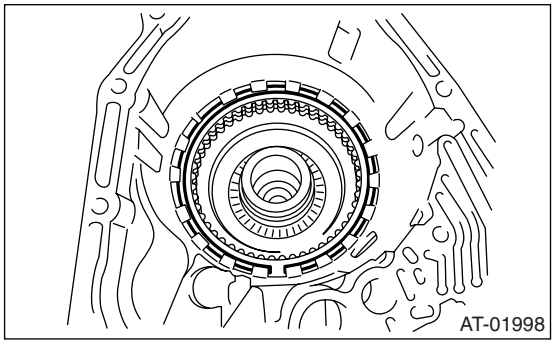

11) Perform the clearance check of reverse brake.
(1) Measure the clearance between retainer plate and snap ring using thickness gauge.

Standard value:
0.7 — 1.1 mm (0.028 — 0.043 in)

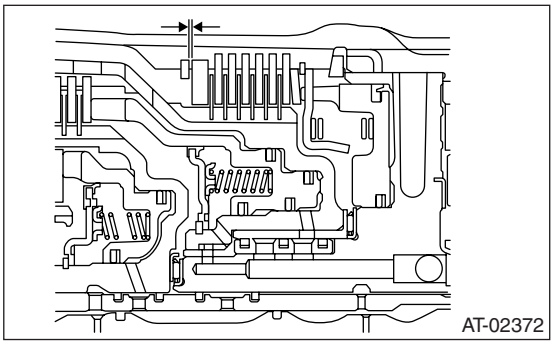

(2) If the clearance is out of specification, select a suitable retainer plate from following table and assemble it.

Retainer plate	
Part Number	Thickness mm (in)
31567AB100	4.2 (0.165)
31567AB170	4.4 (0.173)
31567AB180	4.6 (0.181)
31567AB190	4.8 (0.189)
31567AB200	5.0 (0.197)

12) Install the direct clutch assembly.

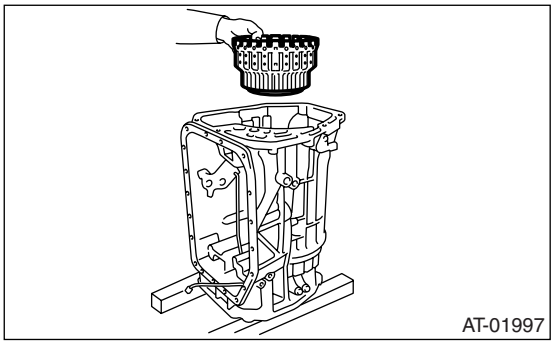

13) Install the high & low reverse clutch assembly.

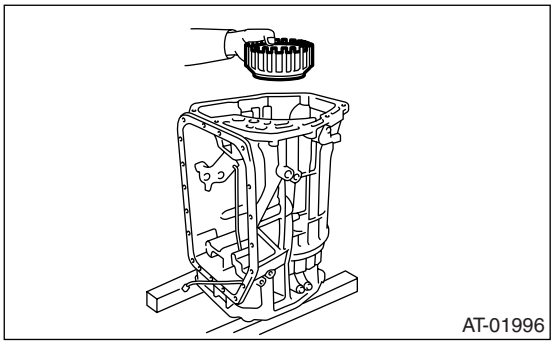

14) Install the thrust needle bearing of high & low reverse clutch.

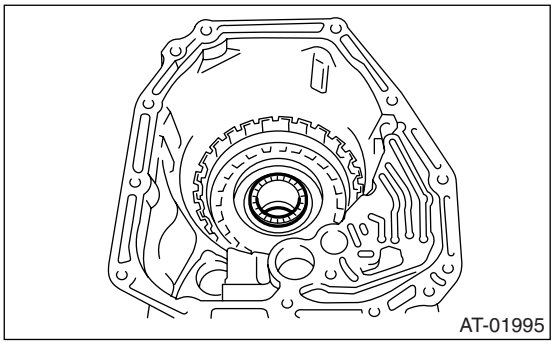

15) Install the middle & rear sun gear assembly.

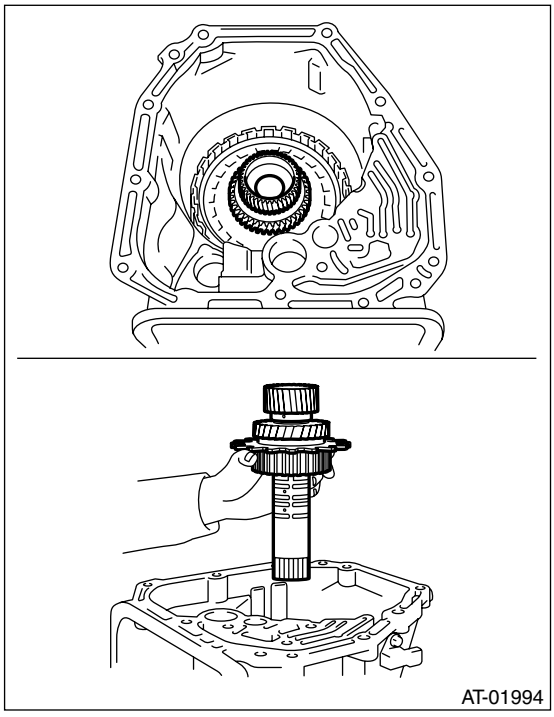

16) Install the rear carrier assembly.

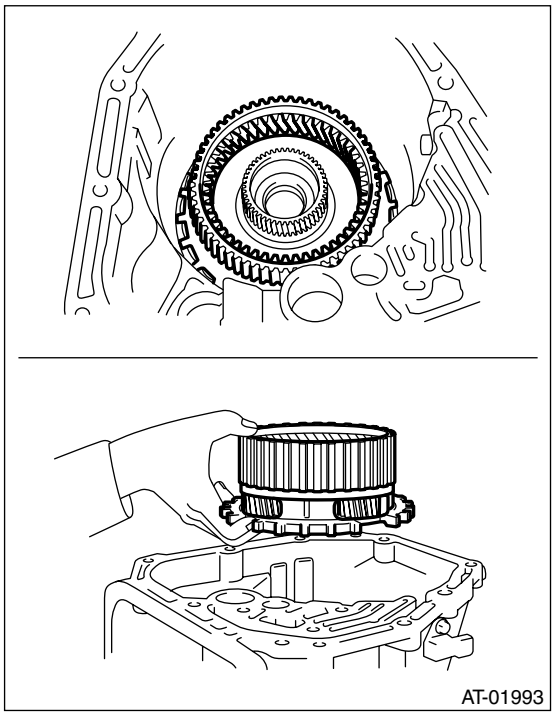

17) Install the middle carrier assembly.

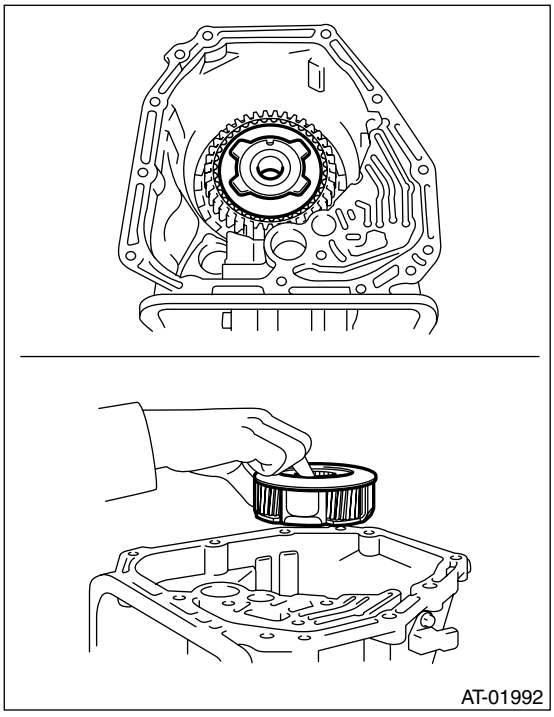

18) Install the thrust needle bearing of middle carrier assembly.

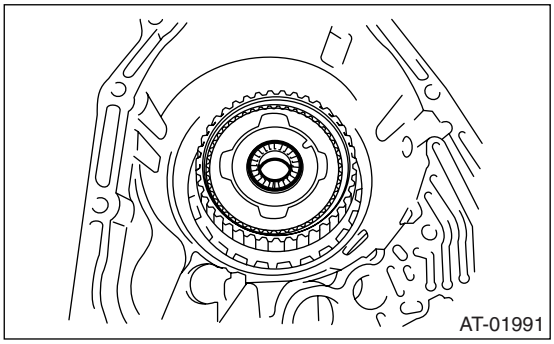

19) Measure the total end play, and select the bearing. <Ref. to 5AT-103, ADJUSTMENT, AT Main Case.>

20) Install the impact clutch pack assembly to oil pump cover.

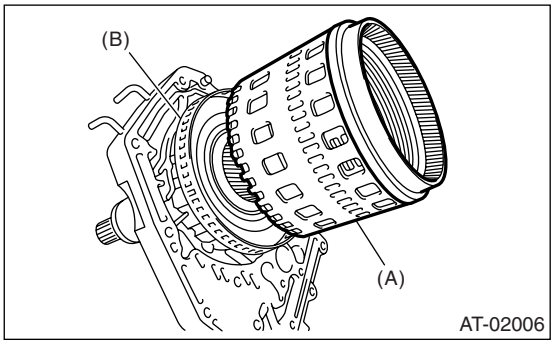

(A) Impact clutch pack ASSY
(B) Front sun gear ASSY

21) Turn the transmission sideways.
22) Install the oil pump cover.
(1) Apply ATF to the O-ring of input clutch shaft.
(2) Install the oil pump cover to AT main case while supporting the input clutch shaft and oil pump housing by hand.

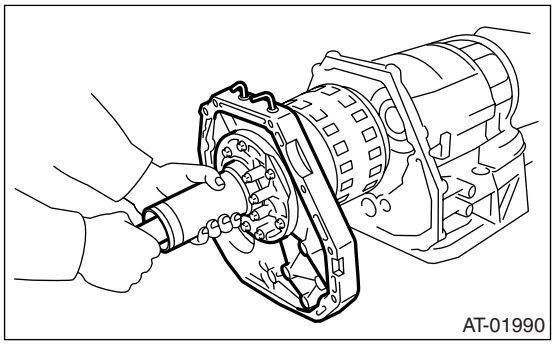
AT-01990

(3) Make sure the rear end of drive pinion shaft is engaged to the spline of reduction driven gear.

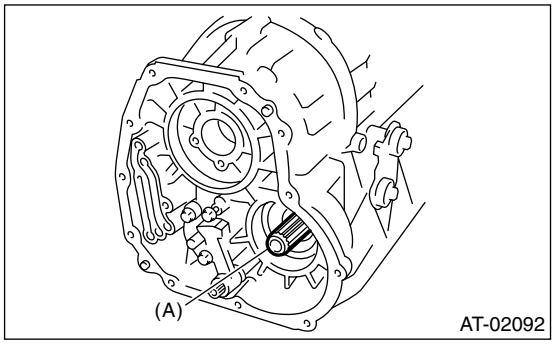

AT-02092

(A) Drive pinion shaft

(4) Using a cloth, protect the input clutch shaft and rotate to engage the spline of input clutch and rear carrier using pliers.

NOTE:
Work with pressing oil pump cover.

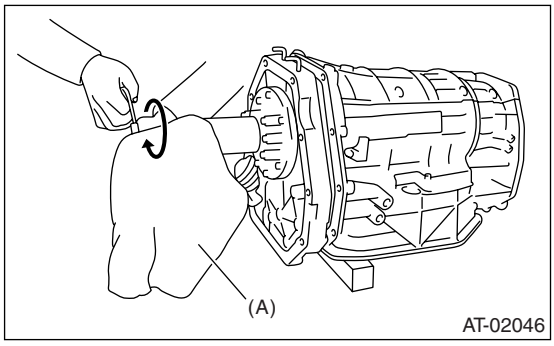

AT-02046

(A) Cloth

(5) Combine the oil pump cover with transmission main case.

Tightening torque:
41 N·m (4.2 kgf-m, 30.4 ft-lb)

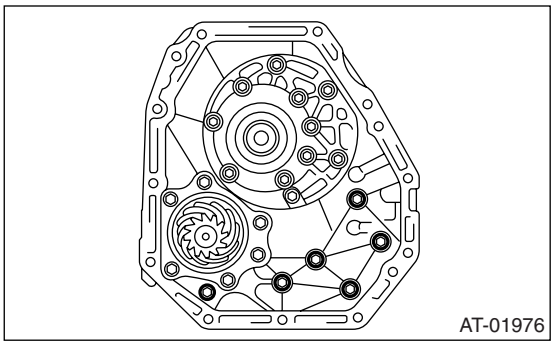
AT-01976

23) Install the center differential carrier. <Ref. to 5AT-76, INSTALLATION, Center Differential Carrier.>
24) Install the reduction driven gear. <Ref. to 5AT-74, INSTALLATION, Reduction Driven Gear.>
25) Install the extension case and intermediate case. <Ref. to 5AT-69, INSTALLATION, Extension Case and Intermediate Case.>
26) Install the control valve body. <Ref. to 5AT-57, INSTALLATION, Control Valve Body.>
27) Install the converter case assembly into transmission case assembly. <Ref. to 5AT-80, INSTALLATION, Converter Case.>
28) Install the air breather hose. <Ref. to 5AT-65, INSTALLATION, Air Breather Hose.>
29) Install the ATF filter pipe. <Ref. to 5AT-59, INSTALLATION, ATF Filter.>
30) Install the oil charge pipe with O-ring. <Ref. to 5AT-66, INSTALLATION, Oil Charge Pipe.>
31) Install the torque converter assembly. <Ref. to 5AT-67, INSTALLATION, Torque Converter Assembly.>
32) Install the transmission assembly into vehicle. <Ref. to 5AT-42, INSTALLATION, Automatic Transmission Assembly.>
33) Perform the Clear Memory 2. <Ref. to 5AT(diag)-17, CLEAR MEMORY MODE, OPERATION, Subaru Select Monitor.>
34) Perform the inspection with driving the vehicle at the end of repair work, and make sure there is no faulty as below;
- Excessive shift shock
- Oil leakage from transmission body and etc.
- Occurrence of noise caused by interference etc.

NOTE:
If excessive shift shock is felt, execute the advance operation of learning control. <Ref. to 5AT(diag)-21, PROCEDURE, Learning Control.>

C: DISASSEMBLY

1. INPUT CLUTCH PACK ASSY

1) Remove the front sun gear.

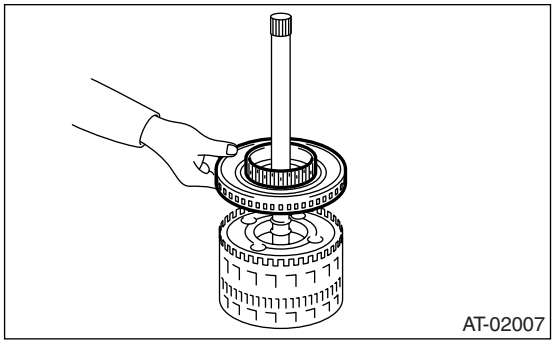

2) Remove the snap ring, and then remove the front carrier.

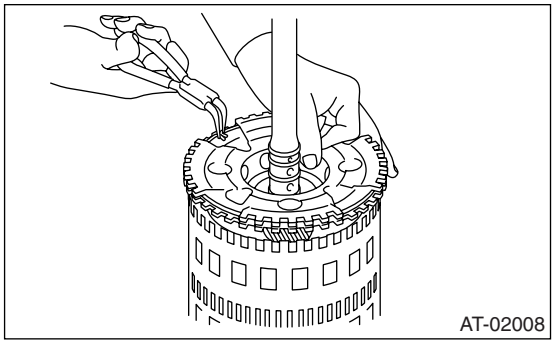

3) Remove the input clutch assembly from rear internal gear.

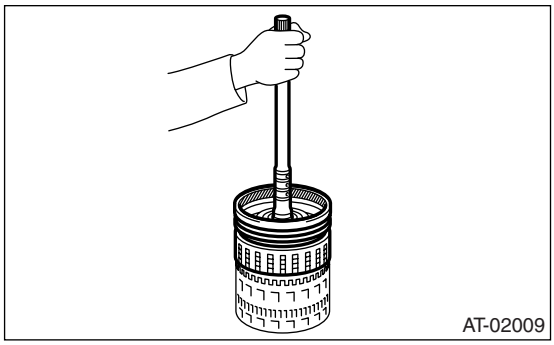

D: ASSEMBLY

1. INPUT CLUTCH PACK ASSY

1) Assemble the input clutch assembly to rear internal gear.

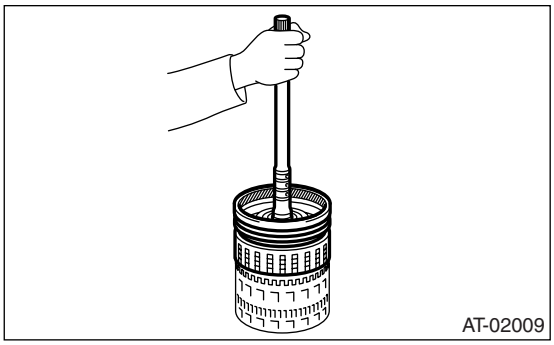

2) Install the front carrier, and then install the snap ring.

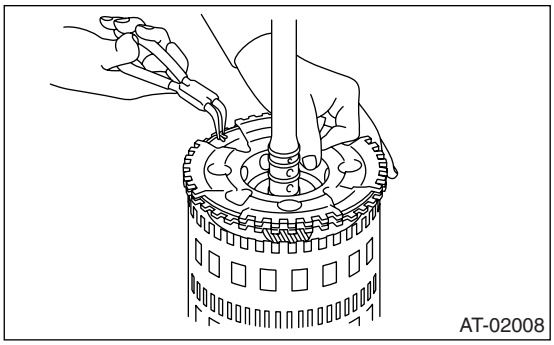

3) Install the front sun gear.

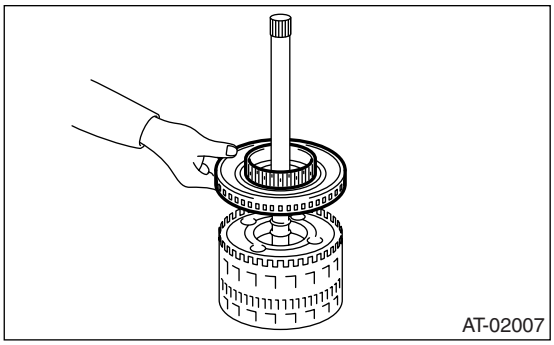

E: INSPECTION

1. FRONT, MIDDLE & REAR PLANETARY CARRIER ASSY

Inspect the followings:

- Visually inspect the tooth surface of planetary gear, and replace with new one if damaged, broken or excessively worn.
- Inspect the planetary carrier body for damage or brakeage.

2. INPUT CLUTCH

Check for damage of drive plate, driven plate and snap ring, and replace them as input clutch assembly if damaged.

3. HIGH & LOW REVERSE CLUTCH ASSEMBLY

Check the clearance of high & low reverse clutch.
Measure the clearance “L” between snap ring and retaining plate using thickness gauge. If the measured value is out of specification, replace them as high & low reverse clutch assembly.

Standard value:
1.8 — 2.2 mm (0.070 — 0.087 in)

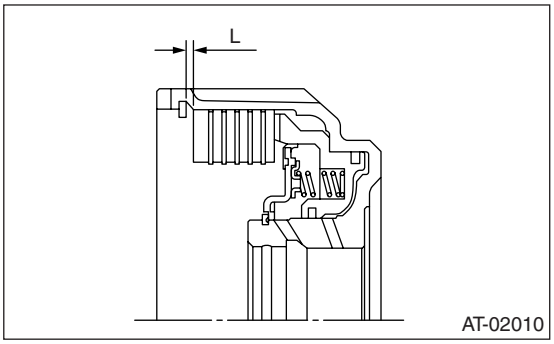

4. DIRECT CLUTCH ASSEMBLY

Check the clearance of direct clutch.
Measure the clearance “L” between snap ring and retaining plate using thickness gauge. If the measured value is out of specification, replace them as direct clutch assembly.

Standard value:
0.6 — 1.0 mm (0.024 — 0.039 in)

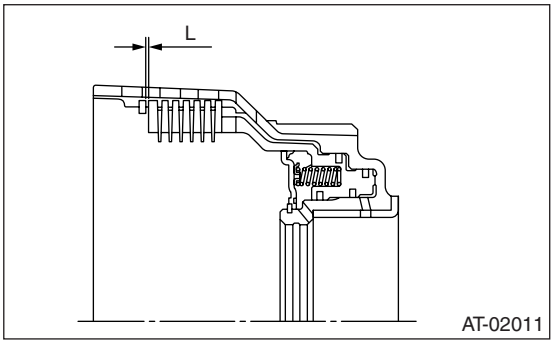

5. REVERSE BRAKE

Check the following items:
- Drive plate facing for wear and damage
- Snap ring for wear, return spring for breakage, and spring retainer for deformation
- Lip seal and D-ring for damage
- Piston operation

F: ADJUSTMENT

1) Using the ST, measure the height “A” from AT main case mating surface to convex surface of oil pump cover.
ST 499575400 GAUGE

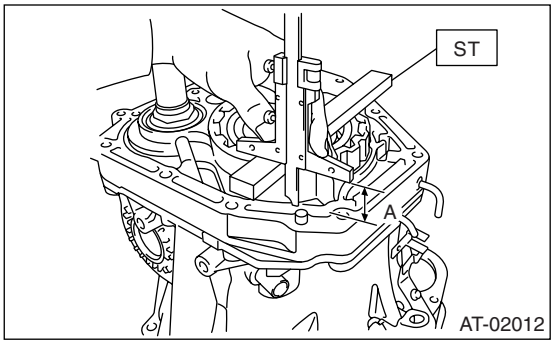

2) Using the ST, measure the depth “B” from the convex surface of oil pump cover to thrust bearing transferring surface.
ST 499575400 GAUGE

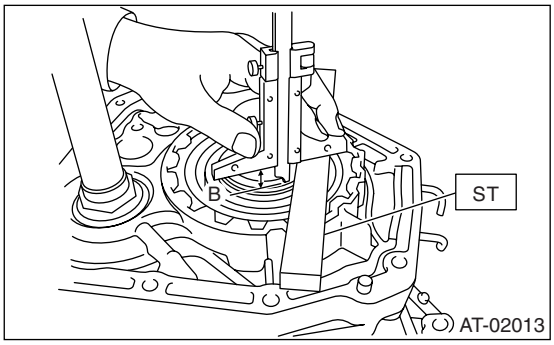

3) Calculate the measured value on step 1) and 2), and then set the calculated value as “C”
Calculation formula: C = A − B
4) Using the ST, measure the depth “D” from AT main case mating surface to thrust bearing transferring surface of front sun gear.
ST 499575400 GAUGE

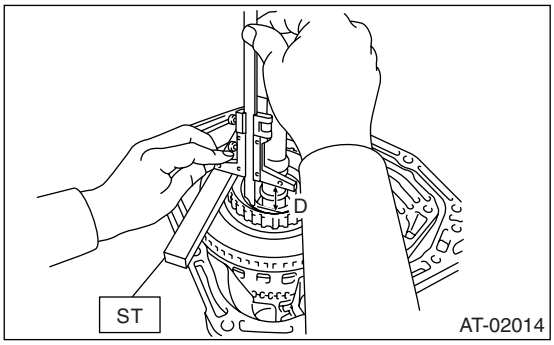

5) Set the value as “E” which subtract the thickness of ST GAUGE from measured value on step 4).
Calculation formula: E (mm) = D − 15
[E (in) = D − 0.59]

6) Calculation formula:
Select a thrust bearing from the table to adjust clearance within 0.25 — 0.55 mm (0.0098 — 0.022 in).
When clearances are 0.25 mm (0.0098 in):
T (mm) = E − C + 0.03
[T (in) = E − C + 0.0012]
When clearances are 0.55 mm (0.022 in):
T (mm) = E − C − 0.27
[T (in) = E − C − 0.012]

T: Thrust bearing clearance
C: Distance from oil pump cover mating surface to rear end of oil pump cover
E: Depth from mating surface of AT main case to bearing surface of front sun gear

Example:
When the A is 39.50 mm (1.56 in), B is going to be 16.20 mm (0.64 in), so the C would be 23.30 mm (0.92 in) by calculation.
When the D is 41.90 mm (1.65 in), subtract the thickness of ST GAUGE from D, and then the value E would be 26.90 mm (1.06 in).
Calculation when clearance is 0.25 mm (0.0098 in)
T (mm) = 26.90 − 23.30 + 0.03 = 3.63
[T (in) = 1.059 − 0.917 + 0.0012 = 0.143]
Calculation formula when clearances are 0.55 mm (0.022 in)
T (mm) = 26.90 − 23.30 − 0.27 = 3.33
[T (in) = 1.059 − 0.917 − 0.012 = 0.131]

According to the calculation, the value “T” would be 3.33 — 3.63 mm (0.131 — 0.143 in), therefore select the thrust bearing with the thickness of 3.4 mm (0.134 in) or 3.6 mm (0.142 in) thrust bearing from the table.

NOTE:
Calculation formula for “T” is applied when measuring using ST (499575400 GAUGE). In the calculation without using ST, insert the thickness of collar to calculate value “E” on step 5).

Thrust bearing	
Part No.	Thickness mm (in)
806548020	3.2 (0.126)
606548030	3.4 (0.134)
806548040	3.6 (0.142)
806548050	3.8 (0.150)
806548060	4.0 (0.157)
806548070	4.2 (0.165)

37.Transmission Control Device

A: REMOVAL

1) Remove the transmission assembly from vehicle. <Ref. to 5AT-38, REMOVAL, Automatic Transmission Assembly.>
2) Pull out the torque converter assembly. <Ref. to 5AT-67, REMOVAL, Torque Converter Assembly.>
3) Lift-up the lever on rear side of transmission harness connector, and then disconnect it from stay.
4) Disconnect the air breather hose. <Ref. to 5AT-65, REMOVAL, Air Breather Hose.>
5) Wrap vinyl tape around the nipple attached to the air breather hose.
6) Remove the pitching stopper bracket.
7) Remove the control valve body assembly. <Ref. to 5AT-57, REMOVAL, Control Valve Body.>
8) Pull out the straight pin of manual plate.

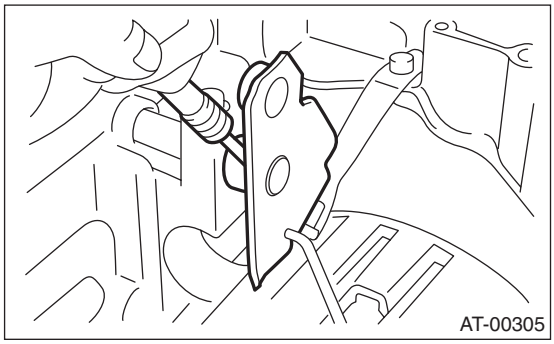

9) Remove the bolts securing select lever, and then remove the select lever, manual plate and parking rod.

NOTE:
Be careful not to damage the lips of press-fitted oil seal in the case.

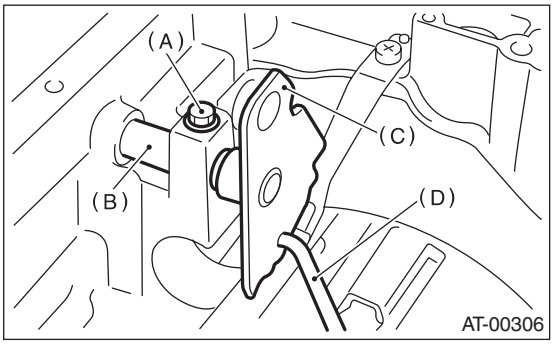

(A) Bolt
(B) Range select lever
(C) Manual plate
(D) Parking rod

10) Remove the detention spring.

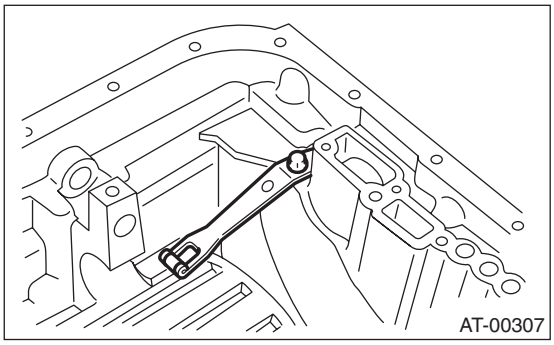

B: INSTALLATION

1) Install the detention spring to transmission case.

Tightening torque:
6 N·m (0.6 kgf-m, 4.4 ft-lb)

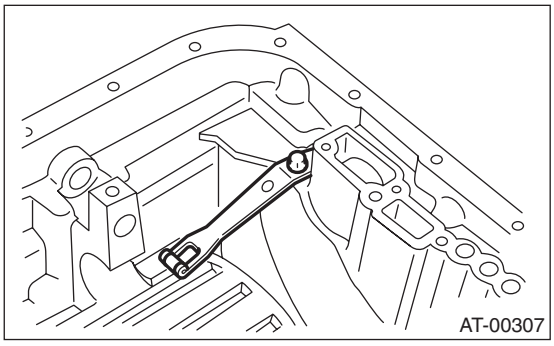

2) Insert the select lever, and then tighten the bolt.

Tightening torque:
6 N·m (0.6 kgf-m, 4.4 ft-lb)

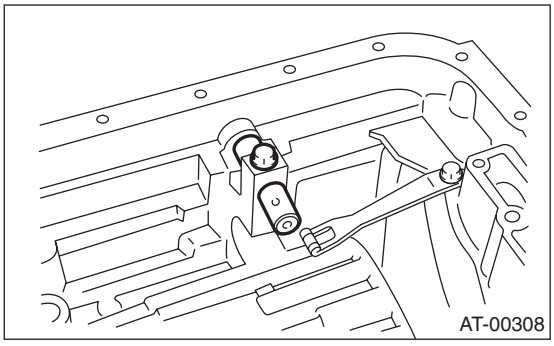

3) Insert the manual plate and parking rod.

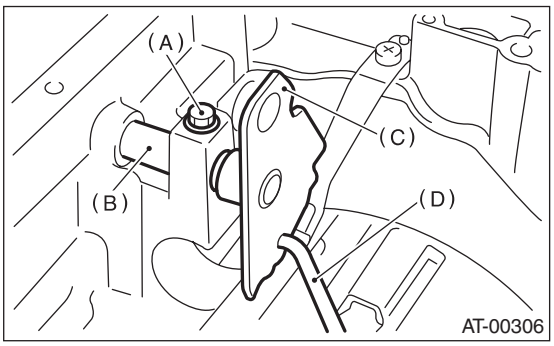

(A) Bolt
(B) Range select lever
(C) Manual plate
(D) Parking rod

4) Insert the spring pin to manual plate.

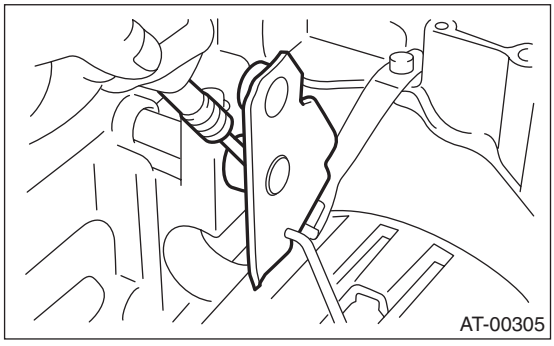

5) Install the oil pan and control valve assembly. <Ref. to 5AT-57, INSTALLATION, Control Valve Body.>
6) Install the pitching stopper bracket.

Tightening torque:
41 N·m (4.2 kgf-m, 30.4 ft-lb)

7) Insert the transmission connector to the stay.
8) Install the air breather hose. <Ref. to 5AT-65, INSTALLATION, Air Breather Hose.>
9) Install the torque converter assembly. <Ref. to 5AT-67, INSTALLATION, Torque Converter Assembly.>
10) Install the transmission assembly into vehicle. <Ref. to 5AT-42, INSTALLATION, Automatic Transmission Assembly.>

C: INSPECTION

Make sure the manual lever and detention spring are not worn or otherwise damaged.

AUTOMATIC TRANSMISSION (DIAGNOSTICS) 5AT(diag)

		Page
1.	Basic Diagnostic Procedure	2
2.	Check List for Interview	4
3.	General Description	5
4.	Electrical Component Location	7
5.	Transmission Control Module (TCM) I/O Signal	11
6.	Subaru Select Monitor	15
7.	Read Diagnostic Trouble Code (DTC)	18
8.	Inspection Mode	19
9.	Clear Memory Mode	20
10.	Learning Control	21
11.	SPORT Indicator Light Display	22
12.	Diagnostic Procedure for Select Monitor Communication	25
13.	List of Diagnostic Trouble Code (DTC)	29
14.	Diagnostic Procedure with Diagnostic Trouble Code (DTC)	33
15.	Diagnostic Procedure without Diagnostic Trouble Code (DTC)	123
16.	General Diagnostic Table	132

1. Basic Diagnostic Procedure

A: PROCEDURE

	Step	Check	Yes	No
1	**CHECK PRE-INSPECTION.** 1) Ask the customer when and how the trouble occurred using the interview checklist. <Ref. to 5AT(diag)-4, Check List for Interview.> 2) Before performing diagnosis, inspect the following items which might influence the AT problems. • General inspection <Ref. to 5AT(diag)-5, INSPECTION, General Description.> • Oil Leakage • Stall speed test <Ref. to 5AT-31, Stall Test.> • Line Pressure Test <Ref. to 5AT-34, Line Pressure Test.> • Transfer Clutch Pressure Test <Ref. to 5AT-36, Transfer Clutch Pressure Test.> • Time Lag Test <Ref. to 5AT-33, Time Lag Test.> • Road Test <Ref. to 5AT-30, Road Test.> • Inhibitor Switch <Ref. to 5AT-50, Inhibitor Switch.>	Is the unit that might influence the AT problem normal?	Go to step **2.**	Repair or replace each item.
2	**CHECK SPORT INDICATOR LIGHT.** After the ignition switch is turned to “ON”, wait for at least 2 seconds.	Does the SPORT indicator light illuminate?	Go to step **4.**	Go to step **3.**
3	**CHECK SPORT INDICATOR LIGHT.** 1) Turn the ignition switch to OFF. 2) Check the SPORT indicator light. <Ref. to 5AT(diag)-23, INSPECTION, SPORT Indicator Light Display.> 3) After the ignition switch is turned to ON, wait for at least 2 seconds.	Does the SPORT indicator light blink?	Go to step **4.**	Go to step **5.**
4	**CHECK DTC.** Read the DTC. <Ref. to 5AT(diag)-18, OPERATION, Read Diagnostic Trouble Code (DTC).> NOTE: If the communication function of the Subaru Select Monitor cannot be executed normally, check the communication circuit. <Ref. to 5AT(diag)-25, COMMUNICATION FOR INITIALIZING IMPOSSIBLE, Diagnostic Procedure for Select Monitor Communication.>	Is DTC displayed?	Go to step **6.** NOTE: Record all DTC.	Go to step **5.**
5	**PERFORM THE GENERAL DIAGNOSTICS.** 1) Inspect using “Diagnostic Procedure without Diagnostic Trouble Code (DTC)”. <Ref. to 5AT(diag)-123, Diagnostic Procedure without Diagnostic Trouble Code (DTC).> 2) Perform clear memory mode. 3) Perform the inspection mode. <Ref. to 5AT(diag)-19, Inspection Mode.> 4) Display DTC.	Is DTC displayed?	Go to step **6.**	Inspect using “General Diagnostic Table”. <Ref. to 5AT(diag)-132, General Diagnostic Table.>

	Step	Check	Yes	No
6	**PERFORM THE DIAGNOSIS.** 1) Inspect using the “Diagnostic Procedure with Diagnostic Trouble Code (DTC)”. <Ref. to 5AT(diag)-33, Diagnostic Procedure with Diagnostic Trouble Code (DTC).> NOTE: For DTC table, refer to “List of Diagnostic Trouble Code (DTC)”. <Ref. to 5AT(diag)-29, List of Diagnostic Trouble Code (DTC).> 2) Repair the trouble cause. 3) Perform clear memory mode. 4) Perform the inspection mode. <Ref. to 5AT(diag)-19, Inspection Mode.> 5) Display DTC.	Is DTC displayed?	Inspect using the “Diagnostic Procedure with Diagnostic Trouble Code (DTC)”. <Ref. to 5AT(diag)-33, Diagnostic Procedure with Diagnostic Trouble Code (DTC).>	Inspect using “General Diagnostic Table”. <Ref. to 5AT(diag)-132, General Diagnostic Table.>

2. Check List for Interview

A: CHECK

Check the following items when problem has occurred.

NOTE:
Use copies of this page for interviewing customers.

Customer's name			
Date of sale			
Date of repair			
Trans. model	TRANSMISSION	V.I.N.	
Odometer reading	km (miles)		
Symptom	❑ No up-shift		
	❑ No down-shift		
	❑ No kick down		
	❑ Vehicle does not move (❑ Any position ❑ Particular position)		
	❑ Lock-up malfunction		
	❑ Noise or vibration		
	❑ Shift shock or slip		
	❑ Select lever does not move		
	❑ Others ( )		
Frequency	❑ Continuous ❑ Intermittent (times a day)		
Weather	❑ Fine ❑ Cloudy ❑ Rainy ❑ Snowy ❑ Others ( )		
Place	❑ Highland ❑ Suburbs ❑ Inner city ❑ Uphill ❑ Rough road ❑ Others ( )		
Ambient air temperature	❑ Hot ❑ Warm ❑ Cool ❑ Cold		
Vehicle speed	km/h (MPH)		
AT warning light (SPORT indicator light)	❑ Blinks continuously	❑ Not blink	
Select lever position	❑ P ❑ R ❑ N ❑ D ❑ Manual mode		
Driving condition	❑ Not affected ❑ At racing ❑ When decelerating	❑ At starting ❑ When accelerating ❑ While turning (❑ RH / ❑ LH)	❑ While idling ❑ While cruising
Manual mode	❑ ON ❑ OFF		

3. General Description

A: CAUTION

• Supplemental Restraint System

The airbag system wiring harness is routed near the TCM.

CAUTION:

• All airbag system wiring harnesses and connectors are colored yellow. Do not use an electric test equipment on these circuits.

• Be careful not to damage the airbag system wiring harness when performing diagnostics and servicing the TCM.

• Measurement

When measuring the voltage and resistance of the ECM, TCM or each sensor, use a tapered pin with a diameter of less than 0.64 mm (0.025 in) in order to avoid poor contact. Do not insert a pin more than 0.65 mm (0.026 in) diameter.

B: INSPECTION

1. BATTERY

Measure battery voltage and specific gravity of electrolyte.

Standard voltage: 12 V or more

Specific gravity: More than 1.260

2. TRANSMISSION GROUND

Make sure that the ground terminal bolt is tightened securely.

• Chassis side

Tightening torque:
13 N·m (1.3 kgf-m, 9.4 ft-lb)

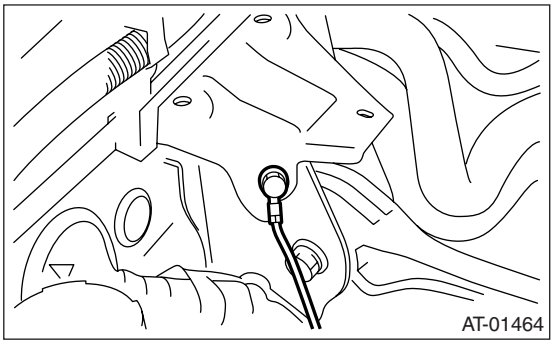

3. ATF LEVEL

Make sure that ATF level is in the specification. <Ref. to 5AT-27, INSPECTION, Automatic Transmission Fluid.>

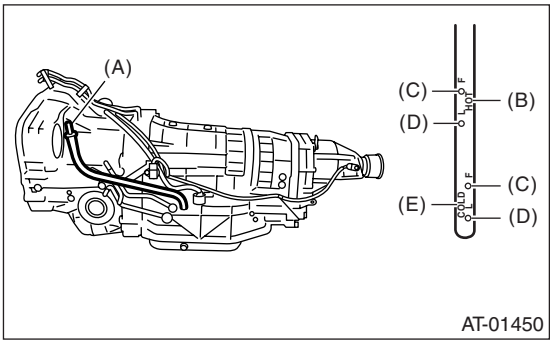

(A) Level gauge
(B) Check position when “HOT”
(C) Upper level
(D) Lower level
(E) Check position when “COLD”

4. FRONT DIFFERENTIAL OIL LEVEL

Make sure the front differential oil level is in the specification. <Ref. to 5AT-29, INSPECTION, Differential Gear Oil.>

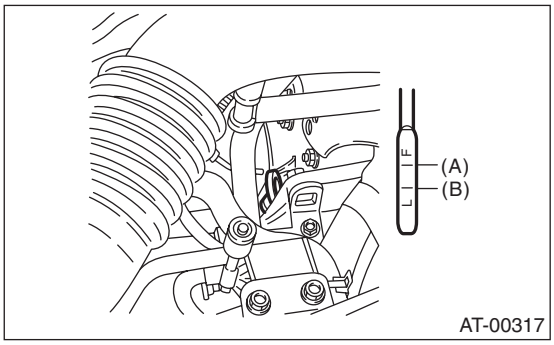

(A) Upper level
(B) Lower level

5. OPERATION OF SHIFT SELECT LEVER

Make sure there is no noise, dragging or contact pattern in each select lever range.

WARNING:
Stop the engine while checking operation of the select lever.

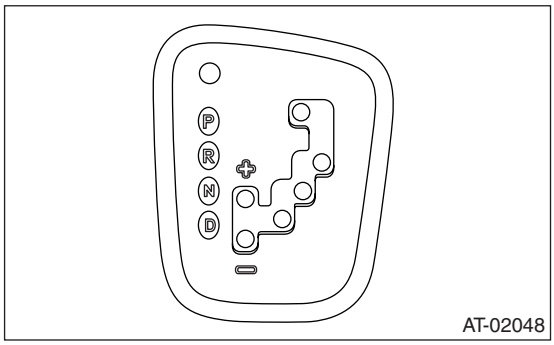

C: PREPARATION TOOL

1. SPECIAL TOOL

ILLUSTRATION	TOOL NUMBER	DESCRIPTION	REMARKS
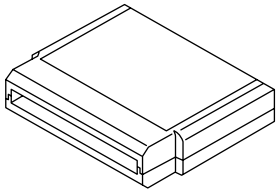 ST24082AA260	24082AA260	CARTRIDGE	Troubleshooting for electrical system.
ST22771AA030	22771AA030	SUBARU SELECT MONITOR KIT	Troubleshooting for electrical system.

2. GENERAL TOOL

TOOL NAME	REMARKS
Circuit tester	Used for measuring resistance, voltage and current.
Oscilloscope	Used for measuring sensor.

4. Electrical Component Location

A: LOCATION

1. CONTROL MODULE

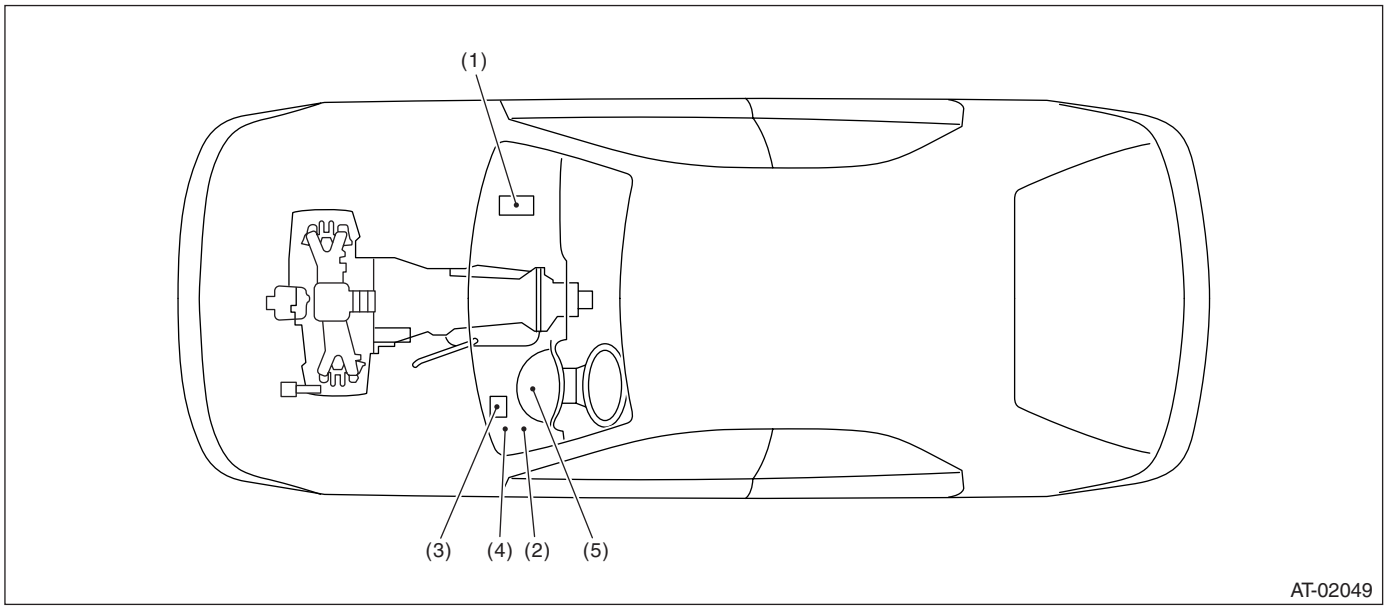

(1) Engine control module (ECM)
(2) SPORT indicator light (AT warning light)
(3) Transmission control module (TCM)
(4) Data link connector
(5) Body integrated unit

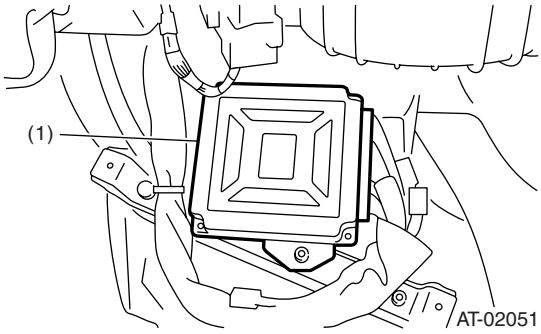

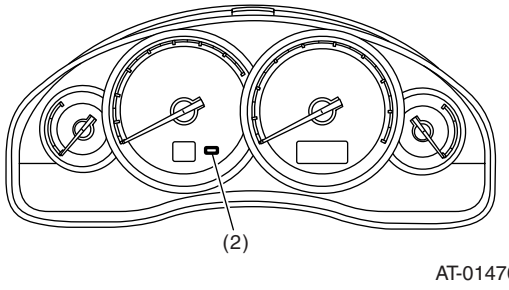

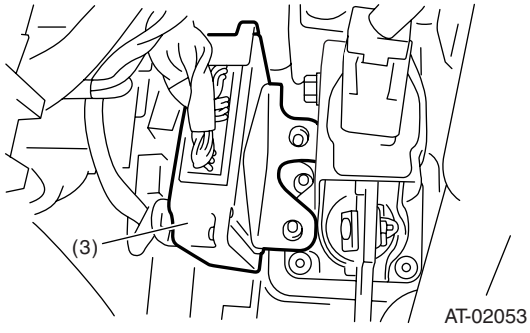

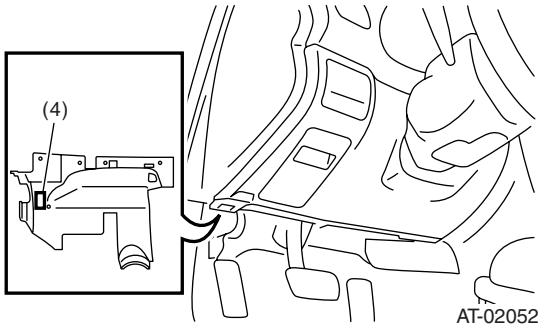

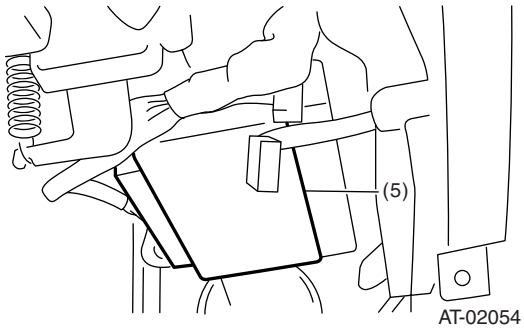

2. SENSOR

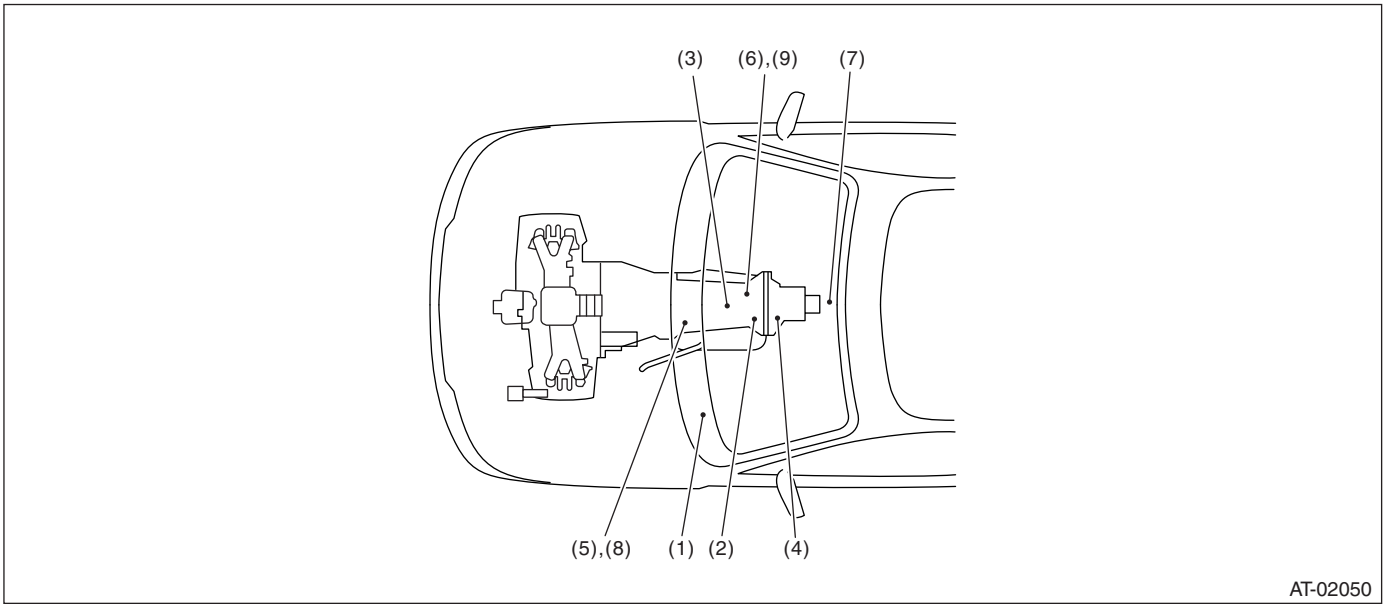

(1) Accelerator pedal position sensor
(2) Front vehicle speed sensor
(3) Inhibitor switch
(4) Rear vehicle speed sensor
(5) Turbine speed sensor 1
(6) ATF temperature sensor 1
(7) Lateral G sensor
(8) Turbine speed sensor 2
(9) ATF temperature sensor 2

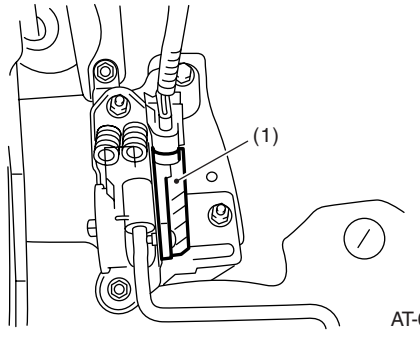

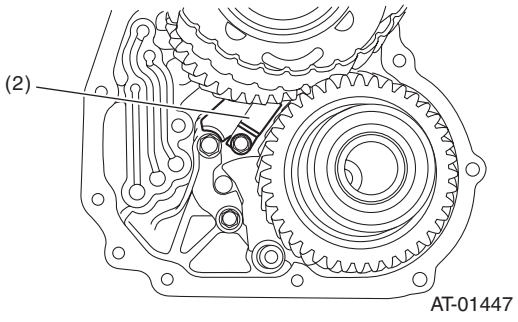

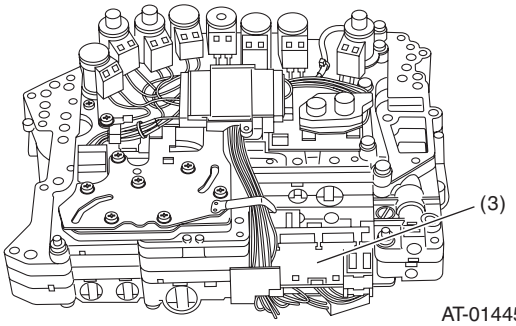

AT-01445

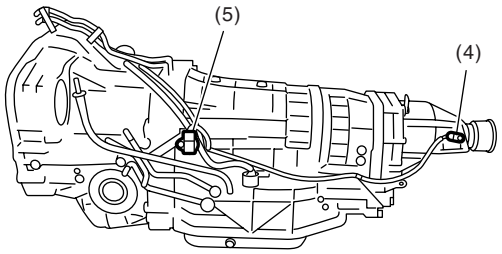

AT-01448

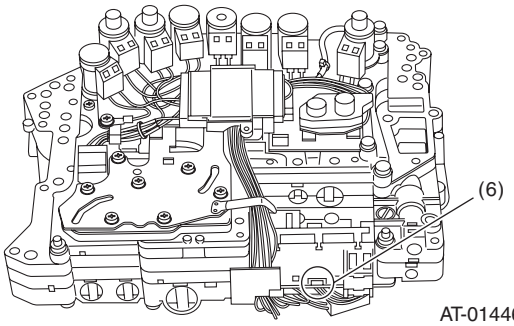

AT-01446

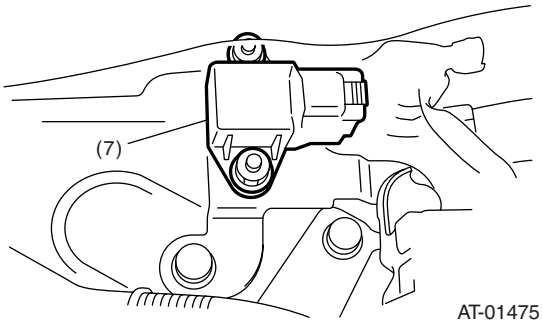

AT-01475

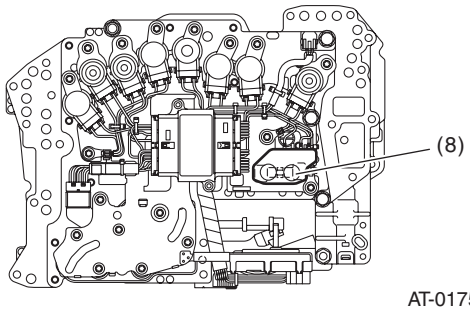

AT-01759

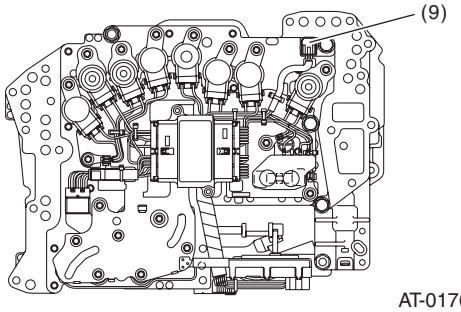

AT-01760

3. SOLENOID

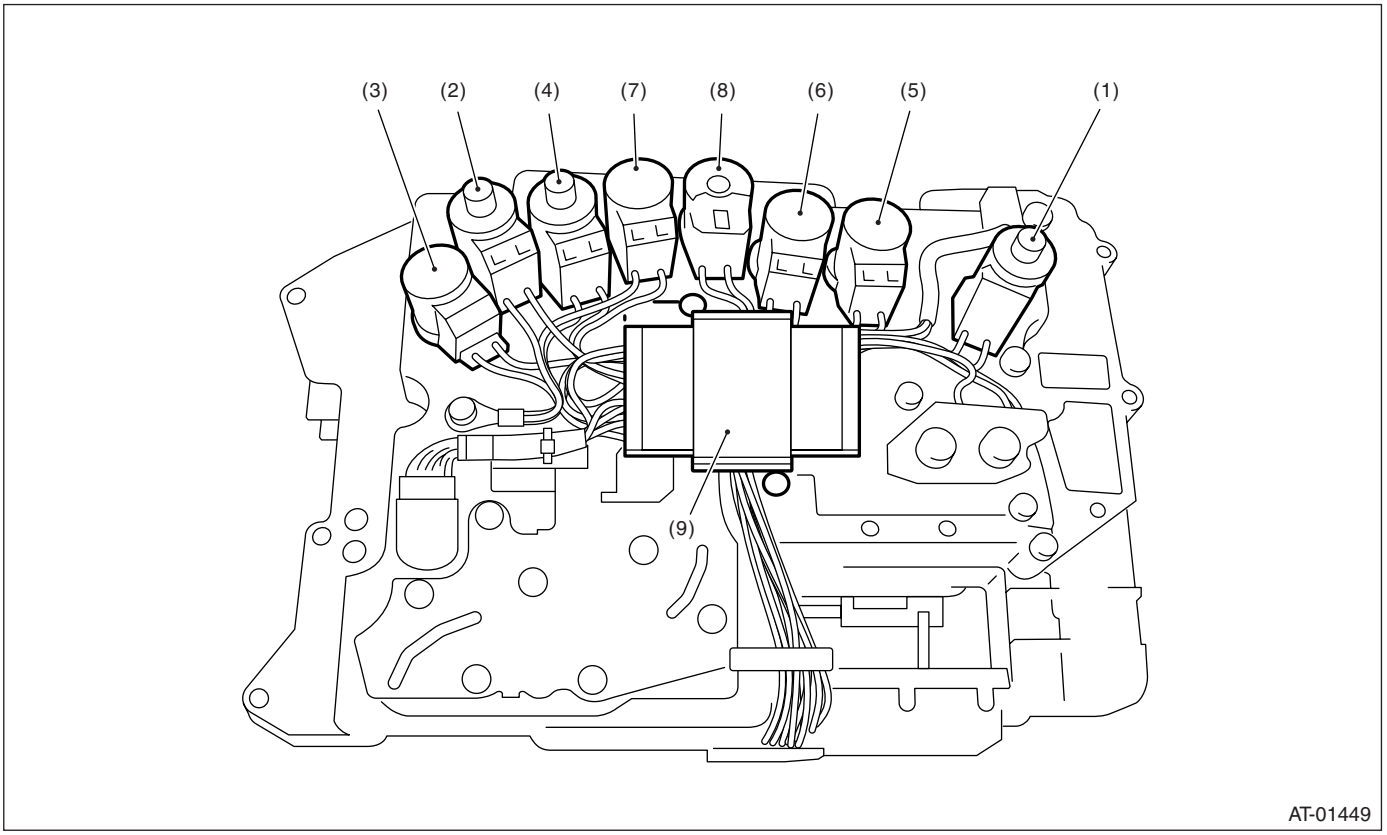

(1) High & low reverse clutch solenoid
(2) Direct clutch solenoid
(3) Front brake solenoid
(4) Input clutch solenoid
(5) Line pressure solenoid
(6) Lock up solenoid
(7) Transfer solenoid
(8) Low coast brake solenoid
(9) Memory box

5. Transmission Control Module (TCM) I/O Signal

A: ELECTRICAL SPECIFICATION

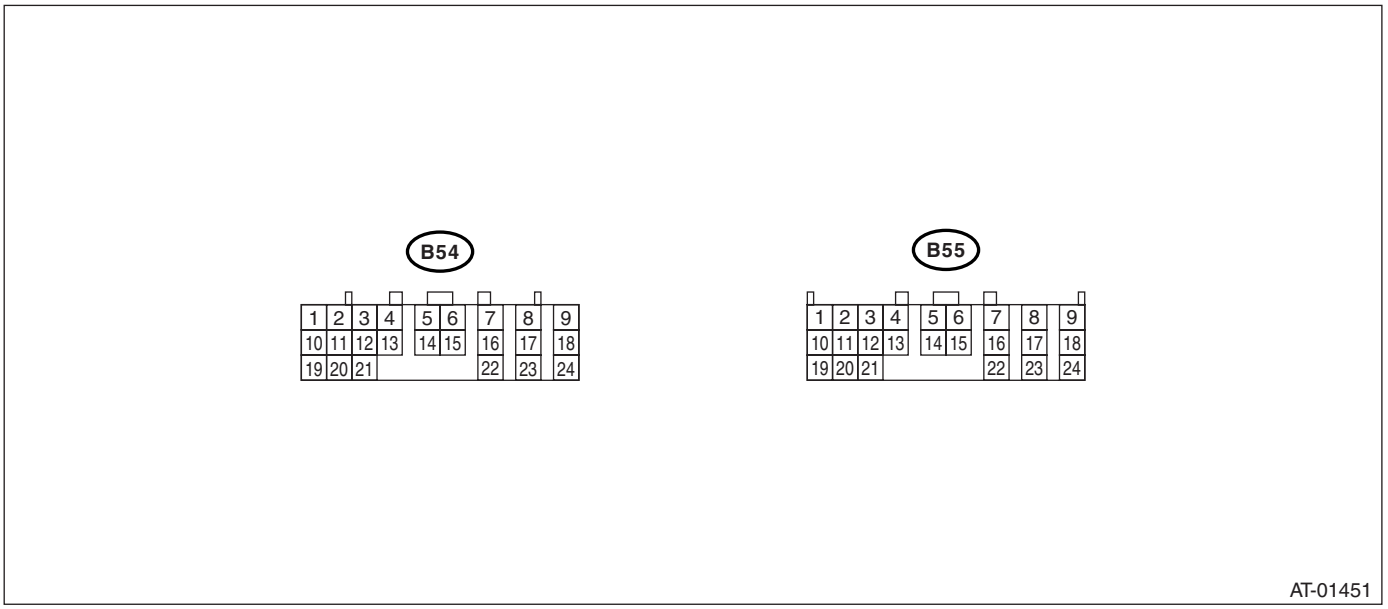

NOTE:
The measurement should perform after warming up.

Item	Connector No.	Terminal No.	Measuring conditions	Measured value	Measure the resistance between terminal and chassis ground.	Remarks
P/L solenoid output	B54	9	Engine ON, "P" range, Accelerator OFF, Brake ON	Approx. 4.0 — 6.0 V	3 — 9 Ω (ATF temperature 20°C (68°F))	Driving frequency 750 — 850 Hz
			Manual mode 1st, Accelerator OFF, Brake ON	Approx. 2.0 — 4.0 V		
PVIGN power supply	B54	8	Ignition switch ON	Power supply voltage	—	
		7	Ignition switch ON	Power supply voltage	—	
I/C oil pressure switch input	B54	6	—	—	—	The condition of I/C oil pressure switch cannot be read by the tester.
Power GND	B54	5	Always	Approx. 0 V	—	
CAN communication line (+)	B54	4	—	—	—	
CAN communication line (–)	B54	3	—	—	—	
ATF temperature sensor 1 input	B54	2	Ignition switch ON	2.5 — 2.9 V (ATF temperature 20°C (68°F)) 0.8 — 1.0 V (ATF temperature 80°C (176°F))	4.0 — 5.0 kΩ (ATF temperature 20°C (68°F)) 0.7 — 0.9 kΩ (ATF temperature 80°C (176°F))	

Item	Connector No.	Terminal No.	Measuring conditions	Measured value	Measure the resistance between terminal and chassis ground.	Remarks
Battery power supply	B54	1	Always	Power supply voltage	—	
I/C solenoid output	B54	18	While driving at 1st — 3rd of manual mode	Approx. 5.5 — 7.5 V	3 — 9 Ω (ATF temperature 20°C (68°F))	Driving frequency 750 — 850 Hz
			While driving at 4th or 5th of manual mode	Approx. 0 V		
H&LR/C solenoid output	B54	17	While driving at 2nd of manual mode	Approx. 5.5 — 7.5 V	3 — 9 Ω (ATF temperature 20°C (68°F))	Driving frequency 750 — 850 Hz
			While driving at 3rd — 5th of manual mode	Approx. 0 V		
Control valve power supply output	B54	16	Ignition switch ON	Power supply voltage	—	
			Ignition switch OFF	Approx. 0 V		
LC/B solenoid output	B54	15	While driving at 1st — 2nd of manual mode	Power supply voltage	5 — 17 Ω (ATF temperature 25°C (77°F))	
			While driving at 3rd — 5th of manual mode	Approx. 0 V		
Power GND	B54	14	Always	Approx. 0 V	—	
Analog GND (Sensor GND)	B54	13	Always	Approx. 0 V	—	
LC/B oil pressure switch input	B54	12	—	—	—	The condition of LC/B oil pressure switch cannot be read by the tester.
ATF temperature sensor 2 input	B54	11	Ignition switch ON	2.3 — 2.7 V (ATF temperature 20°C (68°F)) 0.6 — 0.8 V (ATF temperature 80°C (176°F))	3.0 — 3.6 kΩ (ATF temperature 20°C (68°F)) 0.4 — 0.6 kΩ (ATF temperature 80°C (176°F))	
PVIGN power supply relay output	B54	10	Ignition switch ON	0 — 1.5 V	—	
Fr/B solenoid output	B54	24	While driving at other than 4th of manual mode	Approx. 4.5 — 6.5 V	3 — 9 Ω (ATF temperature 20°C (68°F))	Driving frequency 750 — 850 Hz
			While driving at 4th of manual mode	Approx. 0 V		
L/U solenoid output	B54	23	When lock-up	Approx. 3.5 — 5.5 V	3 — 9 Ω (ATF temperature 20°C (68°F))	Driving frequency 750 — 850 Hz
			When not lock-up	Approx. 0 V		
D/C solenoid output	B54	22	While driving at 1st or 5th of manual mode	Approx. 5.5 — 7.5 V	3 — 9 Ω (ATF temperature 20°C (68°F))	Driving frequency 750 — 850 Hz
			While driving at 2nd — 4th of manual mode	Approx. 0 V		
D/C oil pressure switch input	B54	21	—	—	—	The condition of D/C oil pressure switch cannot be read by the tester.
Subaru Select Monitor communication line	B54	20	—	—	—	

Item	Connector No.	Terminal No.	Measuring conditions	Measured value	Measure the resistance between terminal and chassis ground.	Remarks
Control GND	B54	19	Always	Approx. 0 V	—	
H&LR/C oil pressure switch input	B55	8	While driving at 2nd of manual mode	Power supply voltage	—	
			While driving at 3rd — 5th of manual mode	Approx. 0 V		
Front vehicle speed sensor input	B55	7	While driving at 2nd and 20 km/h (12 MPH) of manual mode	Approx. 140 — 170 rpm	—	
			While driving at 4th and 80 km/h (50 MPH) of manual mode	Approx. 560 — 680 rpm		
Lateral G sensor power supply	B55	6	Ignition switch ON	4.75 — 5.25 V	—	
Lateral G sensor signal input	B55	5	Ignition switch ON, Engine ON, Flat value	2.0 — 3.0 V	—	
Inhibitor switch 1 input	B55	4	Ignition switch ON, “P” range	4.0 — 5.0 V	—	
			Ignition switch ON, “N” range	1.5 V or less		
Inhibitor switch 2 input	B55	3	Ignition switch ON, “P” range	4.0 — 5.0 V	—	
			Ignition switch ON, “D” range	1.5 V or less		
Accessory power supply	B55	2	Accessory switch ON	Power supply voltage	—	
			Accessory switch OFF	Approx. 0 V		
Ignition power supply	B55	1	Ignition switch ON	Power supply voltage	—	
			Ignition switch OFF	Approx. 0 V		
Rear vehicle speed sensor input	B55	18	While driving at 2nd and 20 km/h (12 MPH) of manual mode	Approx. 190 — 230 rpm	—	
			While driving at 4th and 80 km/h (50 MPH) of manual mode	Approx. 760 — 920 rpm		
Fr/B oil pressure switch input	B55	17	Ignition switch ON, Engine ON, While driving at other than 4th	Approx. 0 V	—	
			Ignition switch ON, Engine ON, While driving at 4th	Power supply voltage		
Turbine speed sensor 1 input	B55	16	2nd of manual mode, Turbine speed sensor is 2,000 rpm (Read from Subaru Select Monitor)	Approx. 0 rpm	—	
			4th of manual mode, Turbine speed sensor is 2,000 rpm (Read from Subaru Select Monitor)	Approx. 1,900 — 2,100 rpm		

Item	Connector No.	Terminal No.	Measuring conditions	Measured value	Measure the resistance between terminal and chassis ground.	Remarks
Range lock solenoid output	B55	15	Ignition switch ON, While stopping at “D” range	About Power Supply Voltage – 1.2 V	7 — 21 Ω	
			Ignition switch ON, Vehicle speed at least 20 km/h (12 MPH)	Approx. 0 V		
Inhibitor switch 3 input	B55	14	Ignition switch ON, “R” range	4.0 — 5.0 V	—	
			Ignition switch ON, “D” range	1.5 V or less		
Inhibitor switch 4 input	B55	13	Ignition switch ON, “P” range	4.0 — 5.0 V	—	
			Ignition switch ON, “D” range	1.5 V or less		
Control valve communication line	B55	12	—	—	—	
Back-up light relay output	B55	11	Ignition switch ON, “R” range	1.5 V	Approx. 90 — 110 Ω (ATF temperature 25°C (77°F))	
			Ignition switch ON, Other than “R” range	Power supply voltage		
Ignition power supply	B55	10	Ignition switch ON	Power supply voltage	—	
			Ignition switch OFF	Approx. 0 V		
AWD solenoid output	B55	23	Engine ON, “P” range or “N” range, Accelerator OFF	Approx. 0 V	3 — 9 Ω (ATF temperature 20°C (68°F))	Driving frequency 750 — 850 Hz
			Engine ON, “D” range, Accelerator OFF, Brake ON	Approx. 2.0 — 3.0 V		
Turbine speed sensor 2 input	B55	22	2nd of manual mode, Turbine speed sensor is 2,000 rpm (Read from Subaru Select Monitor)	Approx. 1,300 — 1,500 rpm	—	
			4th of manual mode, Turbine speed sensor is 2,000 rpm (Read from Subaru Select Monitor)	Approx. 1,900 — 2,100 rpm		
Control GND	B55	21	Always	Approx. 0 V	—	
Inhibitor switch 3 open circuit monitor input	B55	20	Ignition switch ON, “R” range	4.0 — 5.0 V	—	
			Ignition switch ON, “D” range	Less than 1.5 V		
PN signal output	B55	19	Ignition switch ON, Other than “P” range or “N” range	Power supply voltage	—	ECM should be connected correctly
			Ignition switch ON, “P” range or “N” range	0 — 1.0 V	—	

6. Subaru Select Monitor

A: OPERATION

1. READ DIAGNOSTIC TROUBLE CODE (DTC)

1) Prepare the Subaru Select Monitor kit.

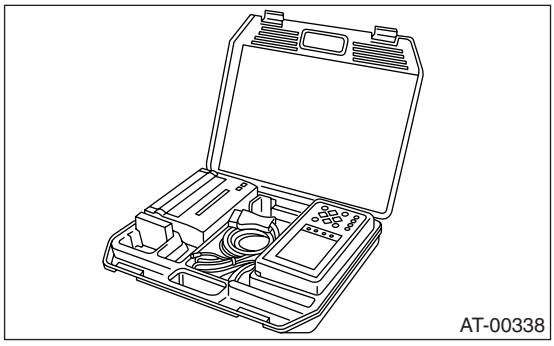

2) Connect the diagnosis cable to Subaru Select Monitor.
3) Insert the cartridge to Subaru Select Monitor. <Ref. to 5AT(diag)-6, PREPARATION TOOL, General Description.>

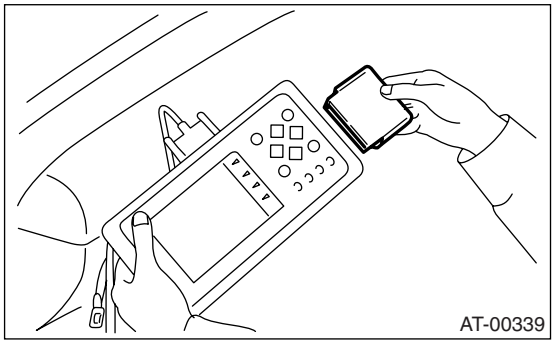

4) Connect the Subaru Select Monitor to data link connector.

(1) Data link connector is located in the lower portion of the instrument panel (on the driver's side).

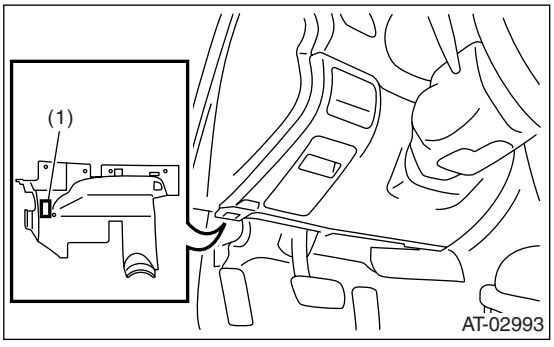

(1) Data link connector

(2) Connect the diagnosis cable to data link connector.

NOTE:
Do not connect scan tools except for Subaru Select Monitor.

5) Turn ignition switch to ON (engine OFF) and turn on the Subaru Select Monitor.

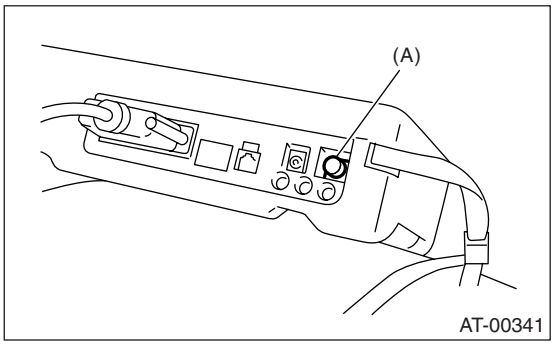

(A) Power switch

6) On the «Main Menu» display screen, select the {Each System Check} and press the [YES] key.
7) On the «System Selection Menu» display screen, select the {Transmission} and press the [YES] key.
8) Press the [YES] key after the information of transmission type is displayed.
9) On the «Transmission Diagnosis» display screen, select the {Diagnosis Code(s) Display} and press [YES] key.

NOTE:
• For details concerning operation procedure, refer to the "SUBARU SELECT MONITOR OPERATION MANUAL".
• For details concerning DTCs, refer to the List of Diagnostic Trouble Code (DTC). <Ref. to 5AT(diag)-29, List of Diagnostic Trouble Code (DTC).>

2. READ CURRENT DATA

1) On the «Main Menu» display screen, select the {Each System Check} and press the [YES] key.
2) On the «System Selection Menu» display screen, select the {Transmission} and press the [YES] key.
3) Press the [YES] key after the information of transmission type is displayed.
4) On the «Transmission Diagnosis» display screen, select the {Current Data Display & Save} and press the [YES] key.
5) On the «Transmission Diagnosis» display screen, select the {Data Display} and press the [YES] key.
6) Using the scroll key, scroll the display screen up or down until the desired data is shown.

- A list of the support data is shown in the following table.

Item	Display	Unit of measure
Engine speed signal	Engine speed	rpm
Battery voltage	Battery Voltage	V
Accel. Pedal Position Sensor	Accel. opening angle	%
Front vehicle speed sensor signal	Front Wheel Speed	km/h
Gear position	Gear Position	—
Turbine speed sensor signal	Turbine Revolution Speed	rpm
Rear vehicle speed sensor signal	Rear Wheel Speed	km/h
Lateral G sensor	Lateral G sensor	V
ATF Temperature Sensor 1 Signal	ATF Temp.	°C
ATF Temperature Sensor 2 Signal	ATF Temperature 2	°C
Turbine speed sensor 1 signal	AT Turbine Speed 1	rpm
Turbine speed sensor 2 signal	AT Turbine Speed 2	rpm
High & Low Reverse Clutch Solenoid Indicator Current	H&LR/C Solenoid Current	A
Direct Clutch Solenoid Indicator Current	D/C Solenoid Current	A
Front Brake Solenoid Indicator Current	F/B Solenoid Current	A
Input Clutch Solenoid Indicator Current	I/C Solenoid Current	A
Line Pressure Solenoid Indicator Current	P/L Solenoid Current	A
Lock-up Solenoid Indicator Current	L/U Solenoid Current	A
Transfer Solenoid Indicator Current	AWD Sol. Current	A
High & Low Reverse Clutch Solenoid Target Oil Pressure	H&LR/C Solenoid Pressure	kPa
Direct Clutch Solenoid Target Oil Pressure	D/C Solenoid Pressure	kPa
Front Brake Solenoid Target Oil Pressure	F/B Solenoid Pressure	kPa
Input Clutch Solenoid Target Oil Pressure	I/C Solenoid Pressure	kPa
Line Pressure Solenoid Target Oil Pressure	P/L Solenoid Pressure	kPa
Lock-up Solenoid Target Oil Pressure	L/U Solenoid Pressure	kPa
Transfer Solenoid Target Oil Pressure	4WD Solenoid Pressure	kPa
Ignition switch	Ignition Switch	ON Input or OFF Input
Tip signal	Tip Mode Switch	ON or OFF
Cruise control On signal	Cruise Control Signal	ON or OFF
Tip Down Shift Signal	Down Switch	ON or OFF
Stop light switch signal	Stop Light Switch	ON or OFF
Tip Up Shift Signal	Up Switch	ON or OFF
Drive range signal	D Range Signal	ON or OFF
Reverse range signal	R Range Signal	ON or OFF
Diagnosis Light Output Signal	Diagnosis Lamp	ON or OFF
Shift lock solenoid signal	Shift lock solenoid	ON or OFF
Parking range signal	“P” Range	ON or OFF
P/N Range Output Signal	P/N Signal	ON or OFF
Neutral range signal	“N” Range	ON or OFF
Inhibitor Switch 1 Input Signal	Inhibitor SW1	High or Low
Inhibitor Switch 2 Input Signal	Inhibitor SW2	High or Low
Inhibitor Switch 3 Input Signal	Inhibitor SW3	High or Low
Inhibitor Switch 4 Input Signal	Inhibitor SW4	High or Low
Inhibitor Switch 3 Monitor Input Signal	Inhibitor SW3 Monitor	High or Low
Back Lamp relay output signal	Back Lamp relay	ON or OFF
High & Low Reverse Clutch Fluid Pressure Switch Input Signal	H&LR/C Fluid Pressure	ON or OFF
Direct Clutch Fluid Pressure Switch Input Signal	D/C Fluid Pressure	ON or OFF
Front Brake Fluid Pressure Switch Input Signal	Fr/B Fluid Pressure	ON or OFF
Input Clutch Fluid Pressure Switch Input Signal	I/C Fluid Pressure	ON or OFF
Low Coast Brake Fluid Pressure Switch Input Signal	LC/B Fluid Pressure	ON or OFF

Item	Display	Unit of measure
Low Coast Brake Solenoid Input Signal	LC/B Solenoid	ON or OFF

NOTE:
For details concerning operation procedure, refer to the “SUBARU SELECT MONITOR OPERATION MANUAL”.

3. CLEAR MEMORY MODE

NOTE:
To clear the previous DTC, use {Clear Memory}, and to clear the learned value, use {Clear Memory 2}.

1) Check that the select lever is in “P” range.
2) On the «Main Menu» display screen, select the {Each System Check} and press the [YES] key.
3) On the «System Selection Menu» display screen, select the {Transmission} and press the [YES] key.
4) Press the [YES] key after the information of transmission type is displayed.
5) On the «Transmission Diagnosis» display screen, select the {Clear Memory} and press the [YES] key.

NOTE:
If {Clear Memory 2} is selected and performed, DTC may not be cleared.

6) When the ‘Done’ are shown on the display screen, turn off the Subaru Select Monitor and turn the ignition switch to OFF. To turn the ignition switch ON again, wait for more than 10 seconds.

NOTE:
For details concerning operation procedure, refer to the “SUBARU SELECT MONITOR OPERATION MANUAL”.

7. Read Diagnostic Trouble Code (DTC)

A: OPERATION

Refer to “Subaru Select Monitor” for information about how to obtain and understand the DTC. <Ref. to 5AT(diag)-15, OPERATION, Subaru Select Monitor.>

NOTE:
DTC can not be read by SPORT indicator light.

8. Inspection Mode

A: PROCEDURE

WARNING:
Observe the traffic law during driving the public road.

1) Shift the select lever to “D” range, and then drive the vehicle with changing the gear from 1st to 5th.
2) When driving the vehicle at 5th speed of “D” range, set the gear to manual mode and drive the vehicle with shifting down using “–” of steering switch or “–” of select lever from 5th → 4th, 4th → 3rd, 3rd → 2nd, 2nd → 1st.

NOTE:
At shifting down, drive the vehicle at least 10 seconds in each speed.

3) Shift the select lever to “R” range and drive the vehicle for more than 2 seconds.

9. Clear Memory Mode

A: OPERATION

Use “Subaru Select Monitor” to clear DTC. <Ref. to 5AT(diag)-17, CLEAR MEMORY MODE, OPERATION, Subaru Select Monitor.>

NOTE:
DTC cannot be cleared without using Subaru Select Monitor.

10.Learning Control

A: GENERAL DESCRIPTION

Be sure to perform the {Clear Memory 2} only when the following services have been performed. And when the shifting shock is occurred during the total check with vehicle driving, perform the learning with following procedures. <Ref. to 5AT(diag)-17, CLEAR MEMORY MODE, OPERATION, Subaru Select Monitor.>

- Replacement of TCM
- Replacement of transmission assembly
- Replacement of each clutch
- Replacement of control valve body

CAUTION:
When {Clear Memory 2} is executed, DTC may not be cleared.

B: PROCEDURE

1) Turn the ignition switch to ON.
2) Turn the air conditioner switch to OFF.
3) Turn the headlight switch to OFF.
4) Turn the rear defogger switch to OFF.
5) Start the engine.
6) Connect the Subaru Select Monitor to the vehicle.
7) Drive the vehicle for 5 — 10 km (3 — 6 miles) to warm up ATF temperature more than 70 °C (158 °F).
8) While the throttle opening angle on Subaru Select Monitor indicates within specified range, shift the gear from 1st → 2nd, 2nd → 3rd, 3rd → 4th while driving the vehicle at “D” range. <Ref. to 5AT(diag)-15, READ CURRENT DATA, OPERATION, Subaru Select Monitor.>

Throttle opening angle:
Turbo model
10%±2%
Non-turbo model
12.5%±2%

9) While the throttle opening angle on Subaru Select Monitor indicates within specified range, shift the gear from 4th → 5th with the vehicle at “D” range.

Throttle opening angle:
Turbo model
12.5%±2%
Non-turbo model
15.5%±2%

10) Repeat the steps 8) — 9) until reducing of shifting shock was felt.
11) If reducing of shifting shock is not felt after 5 cycles, recheck that the learning conditions (throttle opening angle, ATF temperature, etc.) are as specified and recheck that other parts are normal.

11.SPORT Indicator Light Display

A: OPERATION

When any on-board diagnostics item is malfunctioning, the display on the SPORT indicator light blinks from the time the malfunction is detected after starting the engine until the ignition switch is turned OFF. The malfunctioning part or unit can be determined by the DTC during on-board diagnostics operation. Problems which occurred previously can also be identified through the memory function. If the SPORT indicator light does not show a problem (although a problem is occurring), the problem can be determined by checking the performance characteristics of each sensor using the Subaru Select Monitor. Indicator light signal pattern is as shown in the figure.
When the SPORT indicator light does not operate normally but no DTC is stored, perform the SPORT indicator light inspection. <Ref. to 5AT(diag)-23, INSPECTION, SPORT Indicator Light Display.>

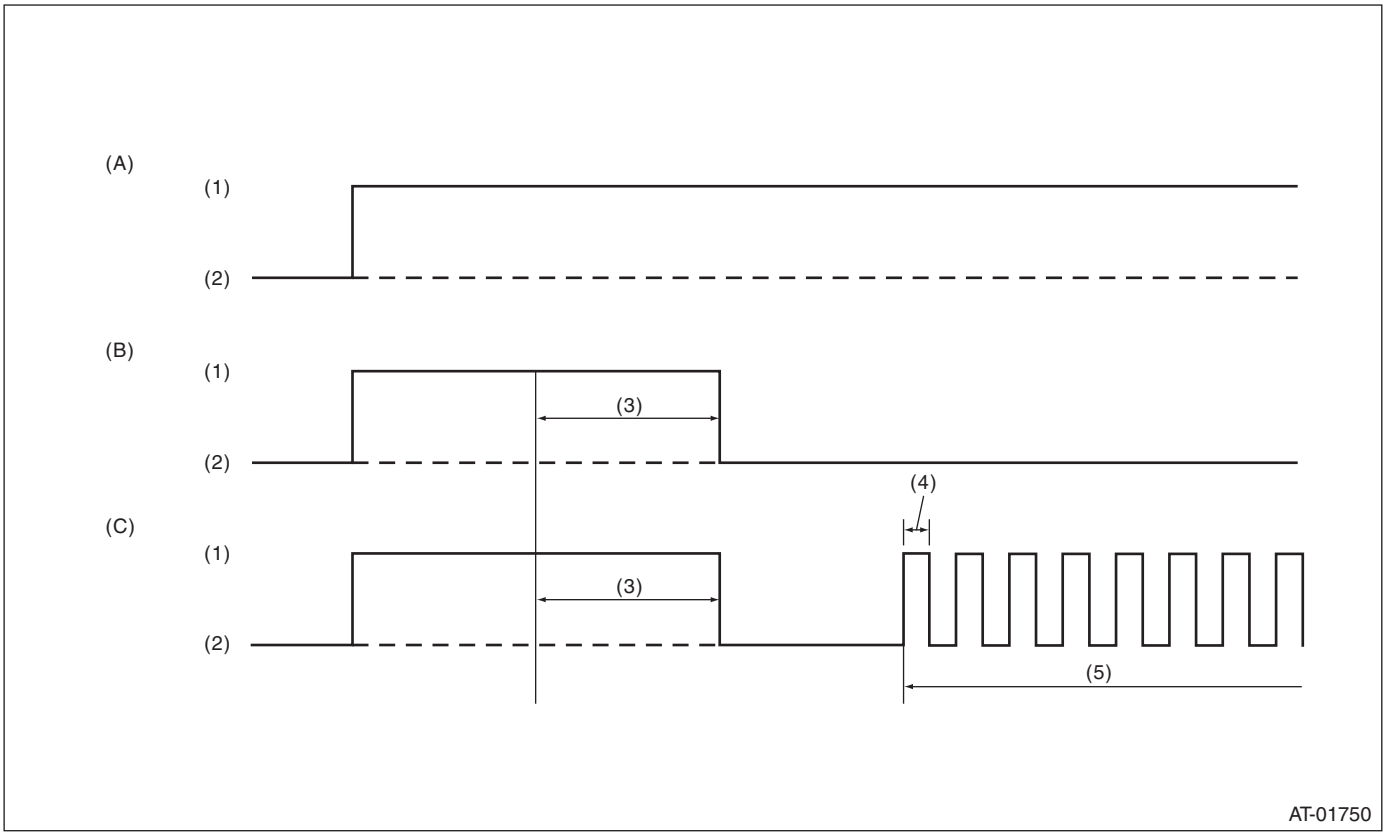

(A) Ignition switch (Engine OFF)
(B) Normal (Engine ON)
(C) Faulty (Engine ON)
(1) ON
(2) OFF
(3) 2 sec.
(4) 0.25 sec.
(5) Blink

B: INSPECTION

DIAGNOSIS:
SPORT indicator light circuit is open or shorted.
TROUBLE SYMPTOM:
When the ignition switch is turned to ON (engine OFF), SPORT indicator light does not illuminate.
WIRING DIAGRAM:

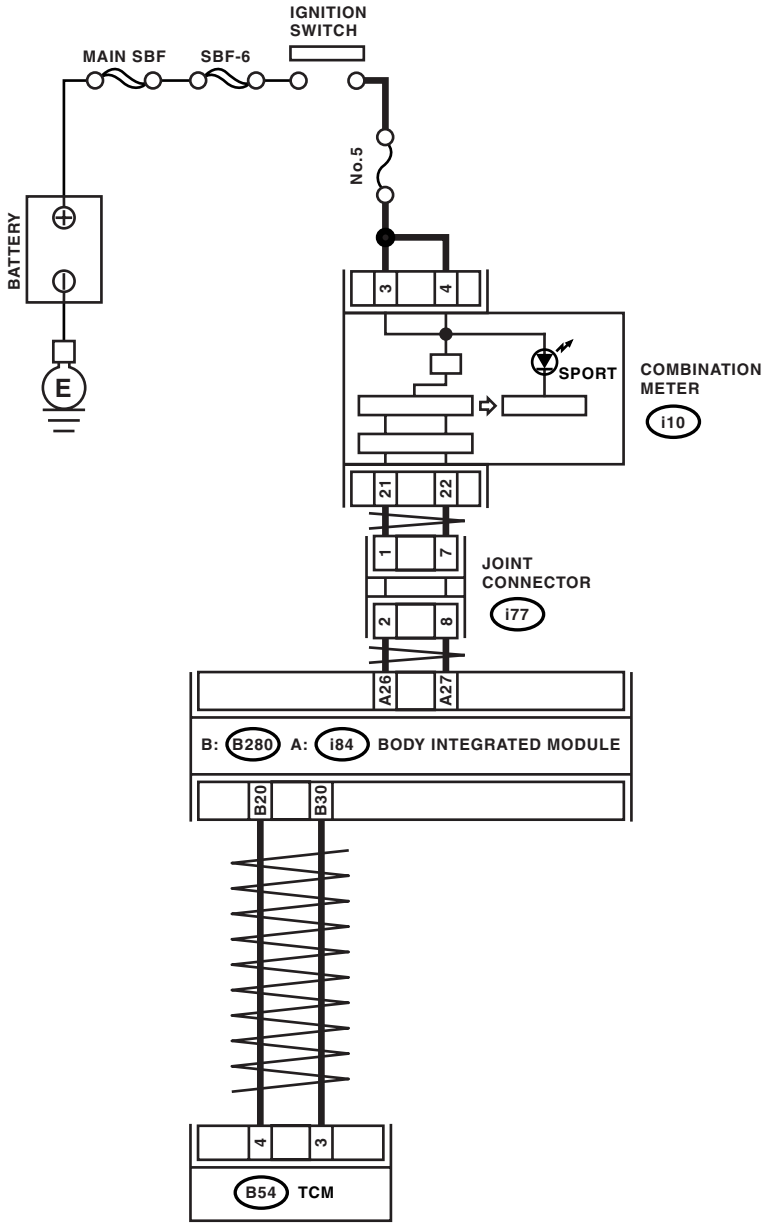

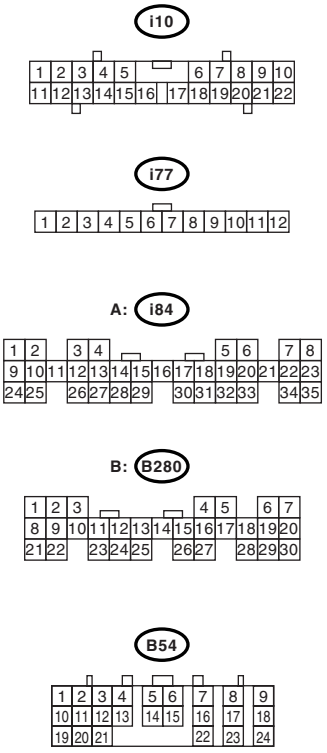

AT-03172

SPORT Indicator Light Display

	Step	Check	Yes	No
1	**CHECK SPORT INDICATOR LIGHT.** Turn the ignition switch to ON.	Does the SPORT indicator light illuminate?	Go to step **2.**	Perform the self-diagnosis of combination meter.
2	**CHECK SPORT INDICATOR LIGHT.** After the ignition switch is “ON”, wait for at least 2 seconds.	Does the SPORT indicator light illuminate?	Go to step **3.**	Go to step **4.**
3	**CHECK SPORT INDICATOR LIGHT.** Start the engine.	Does the SPORT indicator light go off?	Normal. Go back to “Basic Diagnosis Procedure”. <Ref. to 5AT(diag)-2, Basic Diagnostic Procedure.>	Go to step **7.**
4	**CHECK SUBARU SELECT MONITOR COMMUNICATION.** Connect the Subaru Select Monitor to data link connector.	Is the communication between Subaru Select Monitor and TCM normal?	Go to step **5.**	Check the TCM power supply ground circuit and Subaru Select Monitor communication. <Ref. to 5AT(diag)-25, Diagnostic Procedure for Select Monitor Communication.>
5	**CHECK TCM.** Display the current data of TCM using Subaru Select Monitor.	Is “Diagnosis light” output signal set to “ON”?	Go to step **6.**	Replace the TCM. <Ref. to 5AT-60, Transmission Control Module (TCM).>
6	**CHECK BODY INTEGRATED UNIT.** Display the current data of body integrated unit using Subaru Select Monitor. <Ref. to LAN(diag)-14, OPERATION, Subaru Select Monitor.>	Is “SPORT light” input signal set to “ON”?	Replace the combination meter assembly. <Ref. to IDI-15, Combination Meter.>	Check DTC of body integrated unit. <Ref. to LAN(diag)-14, OPERATION, Subaru Select Monitor.>
7	**CHECK TCM.** 1) Start the engine. 2) Display the current data of TCM using Subaru Select Monitor. <Ref. to 5AT(diag)-15, OPERATION, Subaru Select Monitor.>	Is “Diagnosis light” output signal set to “ON”?	Replace the TCM. <Ref. to 5AT-60, Transmission Control Module (TCM).>	Go to step **8.**
8	**CHECK BODY INTEGRATED UNIT.** Display the current data of body integrated unit using Subaru Select Monitor. <Ref. to LAN(diag)-14, OPERATION, Subaru Select Monitor.>	Is “SPORT light” input signal set to “ON”?	Check DTC of body integrated unit. Perform the diagnosis according to DTC. <Ref. to LAN(diag)-14, OPERATION, Subaru Select Monitor.>	Perform the self-diagnosis for combination meter. <Ref. to IDI-3, INSPECTION, Combination Meter System.>

12.Diagnostic Procedure for Select Monitor Communication

A: COMMUNICATION FOR INITIALIZING IMPOSSIBLE

DIAGNOSIS:
Faulty harness connector
TROUBLE SYMPTOM:
Subaru Select Monitor communication failure
WIRING DIAGRAM:

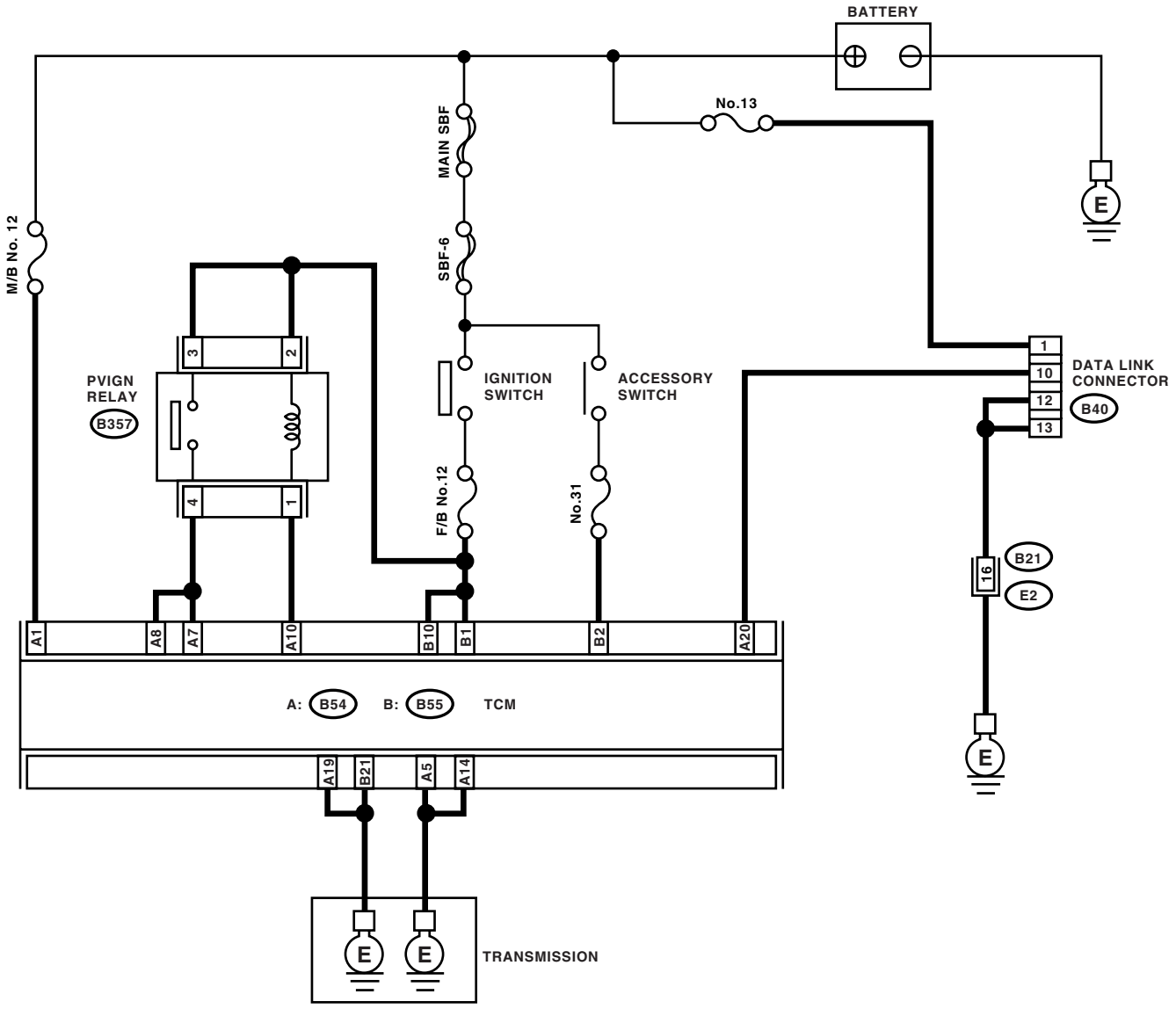

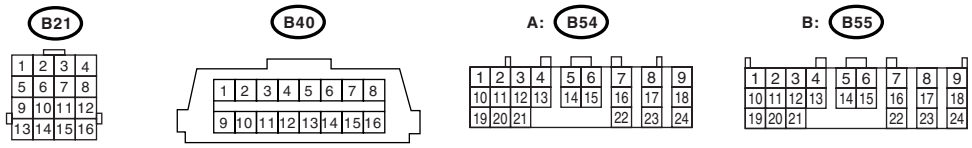

AT-03173

Diagnostic Procedure for Select Monitor Communication

	Step	Check	Yes	No
1	**CHECK SUBARU SELECT MONITOR POWER SUPPLY CIRCUIT.** Measure the voltage between data link connector and chassis ground. ***Connector & terminal*** ***(B40) No. 1 (+) — Chassis ground (–):***	Is the voltage more than 10 V?	Go to step **2.**	Repair harness connector and connector between battery and data link connector, and poor contact in coupling connector.
2	**CHECK SUBARU SELECT MONITOR GROUND CIRCUIT.** Measure the resistance of harness between data link connector and chassis ground. ***Connector & terminal*** ***(B40) No. 12 — Chassis ground:*** ***(B40) No. 13 — Chassis ground:***	Is the resistance less than 1 Ω?	Go to step **3.**	Repair the open circuit in harness between data link connector and ground terminal, and poor contact in coupling connector.
3	**CHECK COMMUNICATION OF SUBARU SELECT MONITOR.** 1) Turn the ignition switch to ON. 2) Using the Subaru Select Monitor, check whether communication to transmission systems can be executed normally.	Are the name and year of system displayed on Subaru Select Monitor?	Go to step **8.**	Go to step **4.**
4	**CHECK COMMUNICATION OF SUBARU SELECT MONITOR.** 1) Turn the ignition switch to OFF. 2) Disconnect the TCM connector. 3) Turn the ignition switch to ON. 4) Check whether communication to engine systems can be executed normally.	Are the name and year of system displayed on Subaru Select Monitor?	Go to step **6.**	Go to step **5.**
5	**CHECK COMMUNICATION OF SUBARU SELECT MONITOR.** 1) Turn the ignition switch to OFF. 2) Connect the TCM connector. 3) Disconnect the ECM connector. 4) Turn the ignition switch to ON. 5) Check whether communication to transmission systems can be executed normally.	Are the name and year of system displayed on Subaru Select Monitor?	Inspect the ECM.	Go to step **6.**
6	**CHECK HARNESS CONNECTOR BETWEEN EACH CONTROL UNIT AND DATA LINK CONNECTOR.** 1) Turn the ignition switch to OFF. 2) Disconnect the TCM and ECM connector. 3) Measure the resistance between TCM connector and chassis ground. ***Connector & terminal*** ***(B40) No. 10 — Chassis ground:***	Is the resistance more than 1 MΩ?	Go to step **7.**	Check harness and connector between each control unit and data link connector.
7	**CHECK OUTPUT SIGNAL OF TCM.** 1) Turn the ignition switch to ON. 2) Measure the voltage between TCM and chassis ground. ***Connector & terminal*** ***(B40) No. 10 (+) — Chassis ground (–):***	Is the voltage more than 1 V?	Check harness and connector between each control unit and data link connector.	Go to step **8.**
8	**CHECK HARNESS CONNECTOR BETWEEN TCM AND DATA LINK CONNECTOR.** Measure the resistance between TCM connector and data link connector. ***Connector & terminal*** ***(B54) No. 20 — (B40) No. 10:***	Is the resistance less than 1 Ω?	Go to step **9.**	Check the harness and connector between TCM and data link connector.

	Step	Check	Yes	No
9	**CHECK INSTALLATION OF TCM CONNECTOR.** Turn the ignition switch to OFF.	Is TCM connector connected to TCM?	Go to step **10.**	Connect the TCM connector to TCM.
10	**CHECK INSTALLATION OF TRANSMISSION HARNESS CONNECTOR.**	Is the transmission harness connector connected to bulkhead harness connector?	Go to step **11.**	Connect the bulkhead harness connector to transmission harness connector.
11	**CHECK POOR CONTACT IN CONNECTORS.**	Is there poor contact in control unit power supply and data link connector?	Repair the poor contact.	Go to step **12.**
12	**CHECK POWER SUPPLY OF TCM.** 1) Disconnect the connector from TCM. 2) Turn the ignition switch to ON. 3) Measure the voltage between TCM connector and chassis ground. ***Connector & terminal*** ***(B54) No. 1 (+) — Chassis ground (–):***	Is the voltage 10 — 13 V?	Go to step **15.**	Go to step **13.**
13	**CHECK FUSE (No. 32).** 1) Turn the ignition switch to OFF. 2) Remove the fuse (No. 32).	Is the fuse (No. 32) blown out?	Go to step **14.**	Repair the open circuit in harness between fuse (No. 32) and TCM, or fuse (No. 32) and battery, and poor contact in coupling connector.
14	**CHECK HARNESS.** Measure the resistance between TCM connector and chassis ground. ***Connector & terminal*** ***(B54) No. 1 — Chassis ground:***	Is the resistance less than 10 Ω?	Replace the fuse (No. 32). If the replaced fuse (No. 32) has blown out easily, repair the short circuit in harness between fuse (No. 32) and TCM.	Replace the fuse (No. 32).
15	**CHECK IGNITION POWER SUPPLY CIRCUIT.** 1) Turn the ignition switch to ON (engine OFF). 2) Measure the ignition power supply voltage between TCM connector and chassis ground. ***Connector & terminal*** ***(B55) No. 1 (+) — Chassis ground (–):*** ***(B55) No. 10 (+) — Chassis ground (–):***	Is the voltage 10 — 13 V?	Go to step **17.**	Go to step **16.**
16	**CHECK FUSE (No. 12).** Remove the fuse (No. 12).	Is the fuse (No. 12) blown out?	Replace the fuse (No. 12). If the replaced fuse (No. 12) has blown out easily, repair the short circuit in harness between fuse (No. 12) and TCM.	Repair the open circuit in harness between fuse (No. 12) and TCM, or fuse (No. 12) and battery, and poor contact in coupling connector.

	Step	Check	Yes	No
17	**CHECK HARNESS CONNECTOR BETWEEN TCM AND TRANSMISSION.** 1) Turn the ignition switch to OFF. 2) Disconnect the connectors from TCM and transmission. 3) Measure the resistance of harness between TCM and transmission connector. ***Connector & terminal*** ***(B54) No. 19 — Chassis ground:*** ***(B55) No. 21 — Chassis ground:*** ***(B54) No. 5 — Chassis ground:*** ***(B54) No. 14 — Chassis ground:***	Is the resistance more than 1 MΩ?	Go to step **18.**	Repair the short circuit in harness between TCM and transmission harness connector, and poor contact in coupling connector.
18	**CHECK POOR CONTACT IN CONNECTORS.**	Is there poor contact in TCM power supply, ground and data link connector?	Repair the connector.	Replace the TCM. <Ref. to 5AT-60, Transmission Control Module (TCM).>

13.List of Diagnostic Trouble Code (DTC)

A: LIST

DTC	Item	Content of diagnosis	Reference target
P0705	Transmission Range Sensor Circuit (PRNDL Input)	Inhibitor switch malfunction, open or short circuit	<Ref. to 5AT(diag)-33, DTC P0705 TRANSMISSION RANGE SENSOR CIRCUIT (PRNDL INPUT), Diagnostic Procedure with Diagnostic Trouble Code (DTC).>
P0712	Transmission Fluid Temperature Sensor Circuit Low Input	ATF temperature sensor 1 malfunction, open input signal circuit	<Ref. to 5AT(diag)-37, DTC P0712 TRANSMISSION FLUID TEMPERATURE SENSOR CIRCUIT LOW INPUT, Diagnostic Procedure with Diagnostic Trouble Code (DTC).>
P0713	Transmission Fluid Temperature Sensor Circuit High Input	ATF temperature sensor 1 malfunction, short input signal circuit	<Ref. to 5AT(diag)-40, DTC P0713 TRANSMISSION FLUID TEMPERATURE SENSOR CIRCUIT HIGH INPUT, Diagnostic Procedure with Diagnostic Trouble Code (DTC).>
P0715	Input/Turbine Speed Sensor Circuit	Turbine speed sensor 1 malfunction, short input signal circuit	<Ref. to 5AT(diag)-42, DTC P0715 INPUT/TURBINE SPEED SENSOR CIRCUIT, Diagnostic Procedure with Diagnostic Trouble Code (DTC).>
P0719	Torque Converter/Brake Switch “B” Circuit Low	Brake switch malfunction, open input signal circuit, body integrated unit malfunction, CAN communication malfunction	<Ref. to 5AT(diag)-45, DTC P0719 TORQUE CONVERTER/BRAKE SWITCH “B” CIRCUIT LOW, Diagnostic Procedure with Diagnostic Trouble Code (DTC).>
P0720	Output Speed Sensor Circuit	Front wheel speed sensor is faulty or input signal circuit, ground, power supply is open or shorted.	<Ref. to 5AT(diag)-47, DTC P0720 OUTPUT SPEED SENSOR CIRCUIT, Diagnostic Procedure with Diagnostic Trouble Code (DTC).>
P0724	Torque Converter/Brake Switch “B” Circuit High	Brake switch malfunction, short circuit of input signal, body integrated unit malfunction, CAN communication malfunction	<Ref. to 5AT(diag)-50, DTC P0724 TORQUE CONVERTER/BRAKE SWITCH “B” CIRCUIT HIGH, Diagnostic Procedure with Diagnostic Trouble Code (DTC).>
P0725	Engine Speed Input Circuit	Open or short engine speed output signal circuit, ECM malfunction, CAN communication malfunction	<Ref. to 5AT(diag)-52, DTC P0725 ENGINE SPEED INPUT CIRCUIT, Diagnostic Procedure with Diagnostic Trouble Code (DTC).>
P0731	Gear 1 Incorrect Ratio	Vehicle sensor, turbine speed sensor, control valve malfunction or shift clutch malfunction	<Ref. to 5AT(diag)-52, DTC P0731 GEAR 1 INCORRECT RATIO, Diagnostic Procedure with Diagnostic Trouble Code (DTC).>
P0732	Gear 2 Incorrect Ratio	Vehicle sensor, turbine speed sensor, control valve malfunction or shift clutch malfunction	<Ref. to 5AT(diag)-52, DTC P0732 GEAR 2 INCORRECT RATIO, Diagnostic Procedure with Diagnostic Trouble Code (DTC).>
P0733	Gear 3 Incorrect Ratio	Vehicle sensor, turbine speed sensor, or shift clutch malfunction	<Ref. to 5AT(diag)-52, DTC P0733 GEAR 3 INCORRECT RATIO, Diagnostic Procedure with Diagnostic Trouble Code (DTC).>
P0734	Gear 4 Incorrect Ratio	Vehicle sensor, turbine speed sensor, or shift clutch malfunction	<Ref. to 5AT(diag)-52, DTC P0734 GEAR 4 INCORRECT RATIO, Diagnostic Procedure with Diagnostic Trouble Code (DTC).>
P0735	Gear 5 Incorrect Ratio	Vehicle sensor, turbine speed sensor, or shift clutch malfunction	<Ref. to 5AT(diag)-52, DTC P0735 GEAR 5 INCORRECT RATIO, Diagnostic Procedure with Diagnostic Trouble Code (DTC).>
P0736	Reverse Incorrect Ratio	Vehicle sensor, turbine speed sensor, or shift clutch malfunction	<Ref. to 5AT(diag)-53, DTC P0736 REVERSE INCORRECT RATIO, Diagnostic Procedure with Diagnostic Trouble Code (DTC).>
P0741	Torque Converter Clutch Circuit Performance or Stuck Off	Lock-up clutch is faulty or valve is stuck.	<Ref. to 5AT(diag)-54, DTC P0741 TORQUE CONVERTER CLUTCH CIRCUIT PERFORMANCE OR STUCK OFF, Diagnostic Procedure with Diagnostic Trouble Code (DTC).>

DTC	Item	Content of diagnosis	Reference target
P0743	Torque Converter Clutch Circuit Electrical	L/U solenoid circuit malfunction or L/U solenoid body malfunction	<Ref. to 5AT(diag)-55, DTC P0743 TORQUE CONVERTER CLUTCH CIRCUIT ELECTRICAL, Diagnostic Procedure with Diagnostic Trouble Code (DTC).>
P0748	Pressure Control Solenoid “A” Electrical	Line pressure solenoid circuit malfunction or line pressure solenoid body malfunction	<Ref. to 5AT(diag)-57, DTC P0748 PRESSURE CONTROL SOLENOID “A” ELECTRICAL, Diagnostic Procedure with Diagnostic Trouble Code (DTC).>
P0751	Shift Solenoid “A” Performance or Stuck Off	Shift Solenoid “A” performance malfunction	<Ref. to 5AT(diag)-59, DTC P0751 SHIFT SOLENOID “A” PERFORMANCE OR STUCK OFF, Diagnostic Procedure with Diagnostic Trouble Code (DTC).>
P0753	Shift Solenoid “A” Electrical	Fr/B solenoid circuit malfunction or Fr/B solenoid body malfunction	<Ref. to 5AT(diag)-62, DTC P0753 SHIFT SOLENOID “A” ELECTRICAL, Diagnostic Procedure with Diagnostic Trouble Code (DTC).>
P0756	Shift Solenoid “B” Performance or Stuck Off	Shift Solenoid “B” Performance malfunction	<Ref. to 5AT(diag)-64, DTC P0756 SHIFT SOLENOID “B” PERFORMANCE OR STUCK OFF, Diagnostic Procedure with Diagnostic Trouble Code (DTC).>
P0758	Shift Solenoid “B” Electrical	I/C solenoid circuit malfunction or I/C solenoid body malfunction	<Ref. to 5AT(diag)-67, DTC P0758 SHIFT SOLENOID “B” ELECTRICAL, Diagnostic Procedure with Diagnostic Trouble Code (DTC).>
P0761	Shift Solenoid “C” Performance or Stuck Off	H&LR/C solenoid malfunction	<Ref. to 5AT(diag)-69, DTC P0761 SHIFT SOLENOID “C” PERFORMANCE OR STUCK OFF, Diagnostic Procedure with Diagnostic Trouble Code (DTC).>
P0763	Shift Solenoid “C” Electrical	H&LR/C solenoid circuit malfunction or H&LR/C solenoid body malfunction	<Ref. to 5AT(diag)-72, DTC P0763 SHIFT SOLENOID “C” ELECTRICAL, Diagnostic Procedure with Diagnostic Trouble Code (DTC).>
P0766	Shift Solenoid “D” Performance or Stuck Off	D/C solenoid malfunction	<Ref. to 5AT(diag)-74, DTC P0766 SHIFT SOLENOID “D” PERFORMANCE OR STUCK OFF, Diagnostic Procedure with Diagnostic Trouble Code (DTC).>
P0768	Shift Solenoid “D” Electrical	D/C solenoid circuit malfunction or D/C solenoid body malfunction	<Ref. to 5AT(diag)-77, DTC P0768 SHIFT SOLENOID “D” ELECTRICAL, Diagnostic Procedure with Diagnostic Trouble Code (DTC).>
P0771	Shift Solenoid “E” Performance or Stuck Off	LC/B solenoid malfunction	<Ref. to 5AT(diag)-79, DTC P0771 SHIFT SOLENOID “E” PERFORMANCE OR STUCK OFF, Diagnostic Procedure with Diagnostic Trouble Code (DTC).>
P0773	Shift Solenoid “E” Electrical	• LC/B solenoid circuit malfunction or LC/B solenoid body malfunction • OFF malfunction of PVIGN relay circuit or relay body	<Ref. to 5AT(diag)-82, DTC P0773 SHIFT SOLENOID “E” ELECTRICAL, Diagnostic Procedure with Diagnostic Trouble Code (DTC).>
P0801	Reverse Inhibit Control Circuit	• Shift lock solenoid is faulty or output signal circuit is open or shorted. • Brown out of TCM+B fuse	<Ref. to 5AT(diag)-85, DTC P0801 REVERSE INHIBIT CONTROL CIRCUIT, Diagnostic Procedure with Diagnostic Trouble Code (DTC).>
P0817	Starter Disable Circuit	• PN signal output circuit is open or shorted. • ECM Source Voltage Is Abnormal • Brown out of TCM+B fuse	<Ref. to 5AT(diag)-87, DTC P0817 STARTER DISABLE CIRCUIT, Diagnostic Procedure with Diagnostic Trouble Code (DTC).>
P0882	PVIGN Power Supply Circuit (Low)	PVIGN relay output circuit is open, shorted or relay malfunction	<Ref. to 5AT(diag)-89, DTC P0882 TCM POWER INPUT SIGNAL LOW, Diagnostic Procedure with Diagnostic Trouble Code (DTC).>

DTC	Item	Content of diagnosis	Reference target
P0957	Backup Light Relay Circuit Low	Back-up relay output circuit is open, shorted or relay OFF malfunction	<Ref. to 5AT(diag)-91, DTC P0957 BACKUP LIGHT RELAY CIRCUIT LOW, Diagnostic Procedure with Diagnostic Trouble Code (DTC).>
P0958	Backup Light Relay Circuit High	Back-up relay output circuit is open, shorted or relay ON malfunction	<Ref. to 5AT(diag)-93, DTC P0958 BACKUP LIGHT RELAY CIRCUIT HIGH, Diagnostic Procedure with Diagnostic Trouble Code (DTC).>
P1601	TCM Communication Malfunction	Communication Failure between TCM and Memory Box	<Ref. to 5AT(diag)-95, DTC P1601 TCM DATA COMMUNICATION FAILURE, Diagnostic Procedure with Diagnostic Trouble Code (DTC).>
P1706	AT Vehicle Speed Sensor Circuit Malfunction (Rear Wheel)	Rear wheel speed sensor is faulty or input circuit, ground, power supply is open or shorted.	<Ref. to 5AT(diag)-97, DTC P1706 AT VEHICLE SPEED SENSOR CIRCUIT MALFUNCTION (REAR WHEEL), Diagnostic Procedure with Diagnostic Trouble Code (DTC).>
P1707	AT AWD Solenoid Valve Circuit Malfunction	AWD solenoid circuit malfunction or AWD solenoid body malfunction	<Ref. to 5AT(diag)-100, DTC P1707 AT AWD SOLENOID VALVE CIRCUIT MALFUNCTION, Diagnostic Procedure with Diagnostic Trouble Code (DTC).>
P1710	Torque Converter Turbine 2 Speed Signal Circuit 2 Malfunction	Torque converter sensor 2 malfunction, input circuit, ground, power open, short circuit	<Ref. to 5AT(diag)-102, DTC P1710 TORQUE CONVERTER TURBINE 2 SPEED SIGNAL CIRCUIT 2 MALFUNCTION, Diagnostic Procedure with Diagnostic Trouble Code (DTC).>
P1716	ATF Temp. Sensor 2 Circuit Low	ATF temperature sensor 2 malfunction, open input signal circuit	<Ref. to 5AT(diag)-105, DTC P1716 ATF TEMP. SENSOR 2 CIRCUIT LOW, Diagnostic Procedure with Diagnostic Trouble Code (DTC).>
P1717	ATF Temp. Sensor 2 Circuit High	ATF temperature sensor 2 malfunction, short input signal circuit	<Ref. to 5AT(diag)-108, DTC P1717 ATF TEMP. SENSOR 2 CIRCUIT HIGH, Diagnostic Procedure with Diagnostic Trouble Code (DTC).>
P1718	AT CAN Communication Circuit	CAN communication line bus off is open, EUM short circuit, ABS/VDCCM, integrated CU malfunction	<Ref. to 5AT(diag)-110, DTC P1718 AT CAN COMMUNICATION CIRCUIT, Diagnostic Procedure with Diagnostic Trouble Code (DTC).>
P1760	Lateral Acceleration Sensor Performance Problem	Lateral G sensor malfunction	<Ref. to 5AT(diag)-110, DTC P1760 LATERAL ACCELERATION SENSOR PERFORMANCE PROBLEM, Diagnostic Procedure with Diagnostic Trouble Code (DTC).>
P1761	Lateral Acceleration Sensor Circuit Low	Lateral G sensor is faulty, input signal circuit is open or CAN communication is malfunction.	<Ref. to 5AT(diag)-113, DTC P1761 LATERAL ACCELERATION SENSOR CIRCUIT LOW, Diagnostic Procedure with Diagnostic Trouble Code (DTC).>
P1762	Lateral Acceleration Sensor Circuit High	Lateral G sensor is faulty or input signal circuit is shorted.	<Ref. to 5AT(diag)-116, DTC P1762 LATERAL ACCELERATION SENSOR CIRCUIT HIGH, Diagnostic Procedure with Diagnostic Trouble Code (DTC).>
P1798	Gear 1 Engine Brake	Malfunction of clutch oil pressure related to 1st engine brake, solenoid current malfunction	<Ref. to 5AT(diag)-119, DTC P1798 GEAR 1 ENGINE BRAKE, Diagnostic Procedure with Diagnostic Trouble Code (DTC).>
P1799	Interlock	Malfunction of clutch oil pressure which emit interlock, solenoid current malfunction	<Ref. to 5AT(diag)-119, DTC P1799 INTERLOCK, Diagnostic Procedure with Diagnostic Trouble Code (DTC).>
P1817	SPORTS Mode Switch Circuit (Manual Switch)	Manual mode switch is open or shorted, or switch malfunction	<Ref. to 5AT(diag)-120, DTC P1817 SPORT MODE SWITCH CIRCUIT (MANUAL SWITCH), Diagnostic Procedure with Diagnostic Trouble Code (DTC).>
P1840	Transmission Fluid Pressure Sensor/Switch A Circuit	Fr/B oil pressure switch is open or shorted, or switch malfunction	<Ref. to 5AT(diag)-122, DTC P1840 TRANSMISSION FLUID PRESSURE SENSOR/SWITCH A CIRCUIT, Diagnostic Procedure with Diagnostic Trouble Code (DTC).>

DTC	Item	Content of diagnosis	Reference target
P1842	Transmission Fluid Pressure Sensor/Switch C Circuit	I/C oil pressure switch is open or shorted, or switch malfunction	<Ref. to 5AT(diag)-122, DTC P1842 TRANSMISSION FLUID PRESSURE SENSOR/SWITCH C CIRCUIT, Diagnostic Procedure with Diagnostic Trouble Code (DTC).>
P1843	Transmission Fluid Pressure Sensor/Switch D Circuit	D/C oil pressure switch is open or shorted, or switch malfunction	<Ref. to 5AT(diag)-122, DTC P1843 TRANSMISSION FLUID PRESSURE SENSOR/SWITCH D CIRCUIT, Diagnostic Procedure with Diagnostic Trouble Code (DTC).>
P1844	Transmission Fluid Pressure Sensor/Switch E Circuit	H&LR/C oil pressure switch is open or shorted, or switch malfunction	<Ref. to 5AT(diag)-122, DTC P1844 TRANSMISSION FLUID PRESSURE SENSOR/SWITCH E CIRCUIT, Diagnostic Procedure with Diagnostic Trouble Code (DTC).>

14.Diagnostic Procedure with Diagnostic Trouble Code (DTC)

A: DTC P0705 TRANSMISSION RANGE SENSOR CIRCUIT (PRNDL INPUT)

DTC DETECTING CONDITION:

The inhibitor switch is open or shorted.

TROUBLE SYMPTOM:

- Shift characteristics are erroneous.
- Shift indicator light does not match with select lever.
- Shift indicator light does not illuminate.
- N-D, N-R shock occur.

WIRING DIAGRAM:

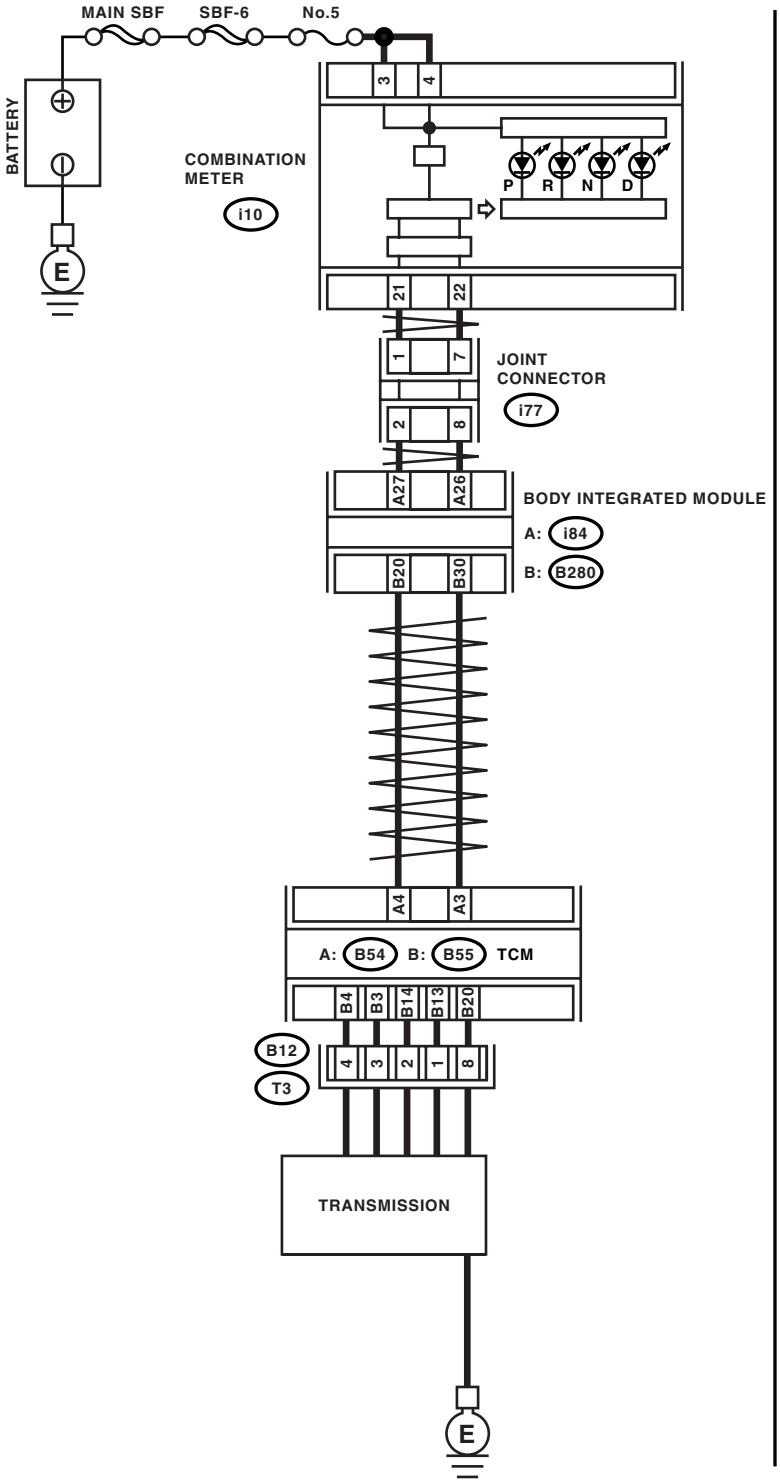

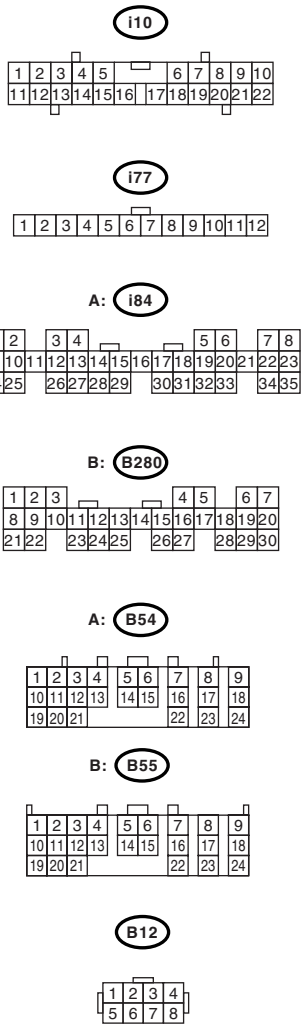

AT-03174

Step	Check	Yes	No
1 **CHECK DTC OF TCM.**	Is DTC of AT CAN communication circuit displayed?	Perform the diagnosis according to DTC.	Go to step **2.**

	Step	Check	Yes	No
2	**CHECK INHIBITOR SWITCH.** 1) Shift the select lever to "P" range. 2) Check input signal of inhibitor SW 1 — 4 and inhibitor SW 3 monitor using Subaru Select Monitor.	Are all indications High?	Go to step **4.**	Go to step **3.**
3	**CHECK HARNESS CONNECTOR BETWEEN TCM AND TRANSMISSION.** 1) Turn the ignition switch to OFF. 2) Disconnect the connectors from TCM and transmission. 3) Measure the resistance between TCM connector and chassis ground about the item which indicated Low on step 3. ***Connector & terminal*** ***(B55) No. 4 — Chassis ground:*** ***(B55) No. 3 — Chassis ground:*** ***(B55) No. 14 — Chassis ground:*** ***(B55) No. 13 — Chassis ground:*** ***(B55) No. 20 — Chassis ground:***	Is the resistance more than 1 MΩ?	Go to step **6.**	Repair the short circuit in harness between TCM connector and chassis ground.
4	**CHECK INHIBITOR SWITCH.** 1) Shift the select lever to "D" range. 2) Check input signal of inhibitor SW 1 — 4 and inhibitor SW 3 monitor using Subaru Select Monitor.	Are all indications Low?	Go to step **6.**	Go to step **5.**
5	**CHECK HARNESS CONNECTOR BETWEEN TCM AND TRANSMISSION.** 1) Turn the ignition switch to OFF. 2) Disconnect the connectors from TCM and transmission. 3) Measure the resistance of harness between TCM and transmission connector about the item which indicated High on step 5. ***Connector & terminal*** ***(B55) No. 4 — (B12) No. 4:*** ***(B55) No. 3 — (B12) No. 3:*** ***(B55) No. 14 — (B12) No. 2:*** ***(B55) No. 13 — (B12) No. 1:*** ***(B55) No. 20 — (B12) No. 8:***	Is the resistance less than 1 Ω?	Go to step **6.**	Repair the open circuit in harness between TCM connector and transmission connector.
6	**CHECK INPUT SIGNAL FOR TCM USING CIRCUIT TESTER.** 1) Turn the ignition switch to OFF. 2) Disconnect the transmission connector (B12). 3) Connect the TCM connector. 4) Turn the ignition switch to ON. 5) Measure the voltage between TCM terminals. ***Connector & terminal*** ***(B55) No. 4 — (B54) No. 19:*** ***(B55) No. 3 — (B54) No. 19:*** ***(B55) No. 14 — (B54) No. 19:*** ***(B55) No. 13 — (B54) No. 19:*** ***(B55) No. 20 — (B54) No. 19:***	Is the voltage 4 — 6 V for the inhibitor SW 1 — 4? Is the voltage 3.5 — 5.5 V for the inhibitor SW 3 monitor?	Go to step **8.**	Go to step **7.**

	Step	Check	Yes	No
7	**CHECK TCM I/O SIGNAL.** Check I/O signal of power supply, ground and PVIGN power supply relay. <Ref. to 5AT(diag)-11, ELECTRICAL SPECIFICATION, Transmission Control Module (TCM) I/O Signal.>	Is TCM I/O signal OK?	Replace the TCM. <Ref. to 5AT-60, Transmission Control Module (TCM).>	Repair the open or short circuit for power supply and ground. Perform the diagnosis according to DTC for PVIGN power supply relay.
8	**CHECK HARNESS CONNECTOR BETWEEN TRANSMISSION AND CONTROL VALVE BODY.** 1) Turn the ignition switch to OFF. 2) Disconnect the connector from transmission. 3) Remove the transmission connector from bracket. 4) Lift-up the vehicle and place it on rigid racks. NOTE: Raise all wheels off floor. 5) Drain the ATF. **CAUTION:** **Do not drain the ATF until it cools down.** 6) Remove the oil pan, and disconnect the connector from control valve body connector. 7) Measure the resistance between transmission connector and control valve body connector. ***Connector & terminal*** ***(T3) No. 4 — (T5) No. 6:*** ***(T3) No. 3 — (T5) No. 5:*** ***(T3) No. 2 — (T5) No. 4:*** ***(T3) No. 1 — (T5) No. 3:*** ***(T3) No. 8 — (T5) No. 2:***	Is the resistance less than 1 Ω?	Go to step **9.**	Repair the open circuit in harness between control valve body connector and transmission connector.
9	**CHECK HARNESS CONNECTOR BETWEEN TRANSMISSION AND CONTROL VALVE BODY.** Measure the resistance between transmission ground and control valve body connector. ***Connector & terminal*** ***(T5) No. 6 — Transmission ground:*** ***(T5) No. 5 — Transmission ground:*** ***(T5) No. 4 — Transmission ground:*** ***(T5) No. 3 — Transmission ground:*** ***(T5) No. 2 — Transmission ground:***	Is the resistance more than 1 MΩ?	Go to step **10.**	Repair the short circuit in harness between control valve body connector and transmission connector.
10	**CHECK POOR CONTACT.**	Is there any poor contact in inhibitor SW 1 — 4 or inhibitor SW 3 monitor circuit?	Repair the poor contact.	Replace the control valve body. <Ref. to 5AT-57, Control Valve Body.>

B: DTC P0712 TRANSMISSION FLUID TEMPERATURE SENSOR CIRCUIT LOW INPUT

DTC DETECTING CONDITION:
Input signal circuit of TCM to ATF temperature sensor 1 is opened.
TROUBLE SYMPTOM:
Excessive shift shock
WIRING DIAGRAM:

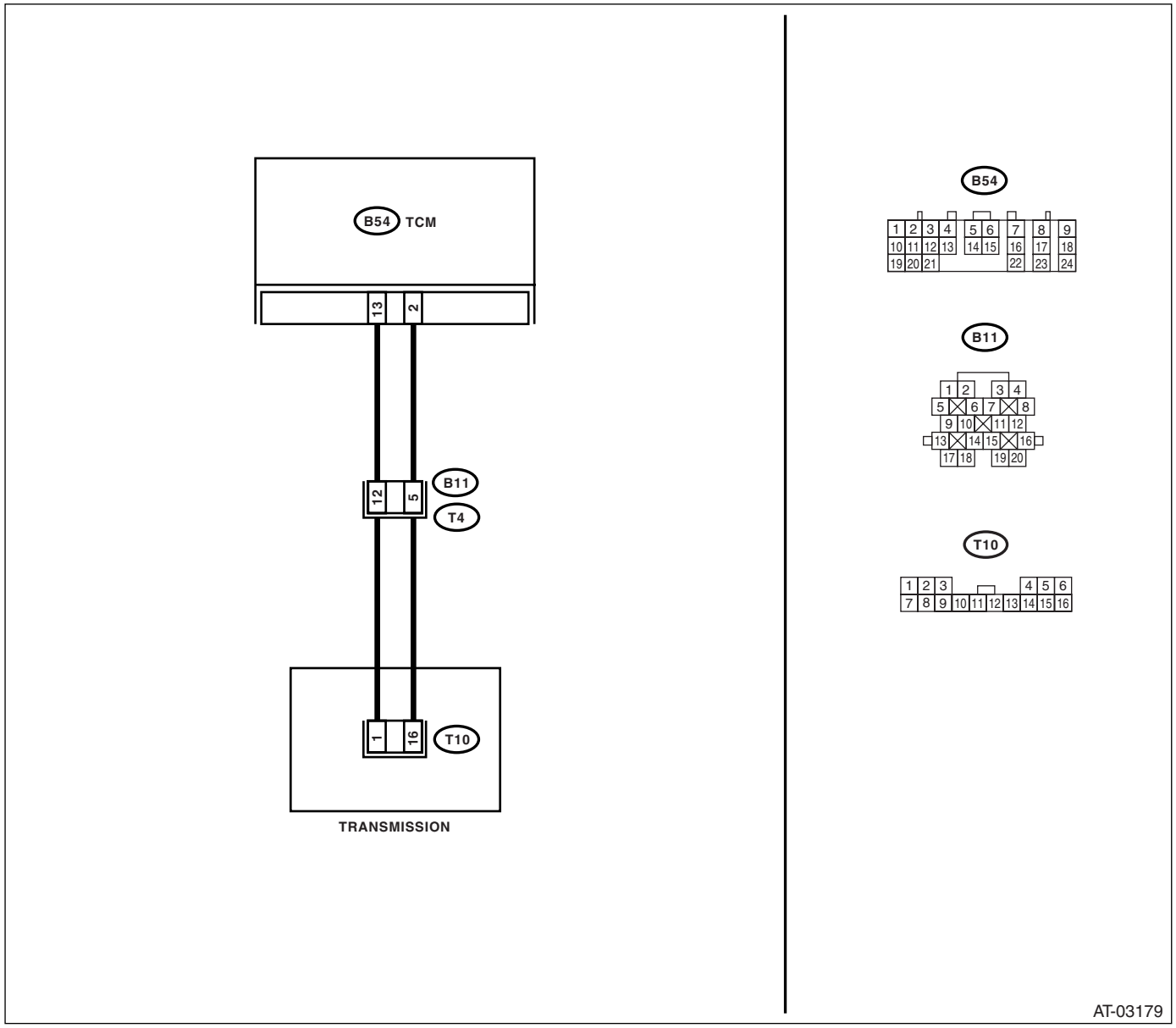

Step		Check	Yes	No
1	**CHECK HARNESS CONNECTOR BETWEEN TCM AND TRANSMISSION.** 1) Turn the ignition switch to OFF. 2) Disconnect the connectors from TCM and transmission. 3) Measure the resistance of harness between TCM and transmission connector. ***Connector & terminal*** ***(B54) No. 13 — (B11) No. 12:*** ***(B54) No. 2 — (B11) No. 5:***	Is the resistance less than 1 Ω?	Go to step **2.**	Repair the open circuit in harness between TCM and transmission connector.

	Step	Check	Yes	No
2	**CHECK ATF TEMPERATURE SENSOR.** 1) Turn the ignition switch to OFF. 2) Connect the connectors to transmission and TCM. 3) Turn the ignition switch to ON and start engine. 4) Warm-up the transmission until the ATF temperature reaches to 80°C (176°F). NOTE: If the ambient temperature is below 0°C (32°F), drive the vehicle until the ATF reaches its operating temperature. 5) Disconnect the connector from transmission. 6) Measure the resistance between transmission connector terminals. ***Connector & terminal*** ***(T4) No. 5 — (T4) No. 12:***	Is the resistance 500 — 1,200 Ω?	Go to step **3.**	Go to step **5.**
3	**CHECK ATF TEMPERATURE SENSOR.** Measure the resistance between transmission connector terminals. ***Connector & terminal*** ***(T4) No. 5 — (T4) No. 12:***	Does the resistance value increase while the ATF temperature decreases?	Go to step **4.**	Go to step **5.**
4	**CHECK INPUT SIGNAL FOR TCM USING SUBARU SELECT MONITOR.** 1) Connect the connector. 2) Turn the ignition switch to ON (engine OFF). 3) Read the ATF temperature using Subaru Select Monitor.	Does the ATF temperature gradually decrease?	Even if the SPORT indicator lights blinks, the system is in normal condition. A temporary poor contact of connector or harness may be the cause. Repair the poor contact of harness between ATF temperature sensor and transmission connector.	Go to step **6.**

	Step	Check	Yes	No
5	**CHECK HARNESS CONNECTOR BETWEEN TRANSMISSION AND CONTROL VALVE BODY.** 1) Turn the ignition switch to OFF. 2) Disconnect the connector from transmission. 3) Remove the transmission connector from bracket. 4) Lift-up the vehicle and place it on rigid racks. NOTE: Raise all wheels off floor. 5) Drain the ATF. **CAUTION:** **Do not drain the ATF until it cools down.** 6) Remove the oil pan, and disconnect the connector from control valve body connector. 7) Measure the resistance between transmission connector and control valve body connector. ***Connector & terminal*** ***(T4) No. 12 — (T10) No. 1:*** ***(T4) No. 5 — (T10) No. 16:***	Is the resistance less than 1 Ω?	Replace the control valve body. <Ref. to 5AT-57, Control Valve Body.>	Repair the open circuit in harness between control valve body connector and transmission connector.
6	**CHECK POOR CONTACT.**	Is there poor contact in ATF temperature sensor circuit 1?	Repair the poor contact.	Replace the TCM. <Ref. to 5AT-60, Transmission Control Module (TCM).>

C: DTC P0713 TRANSMISSION FLUID TEMPERATURE SENSOR CIRCUIT HIGH INPUT

DTC DETECTING CONDITION:
Input signal circuit of TCM to ATF temperature sensor 1 is shorted.
TROUBLE SYMPTOM:
Excessive shift shock
WIRING DIAGRAM:

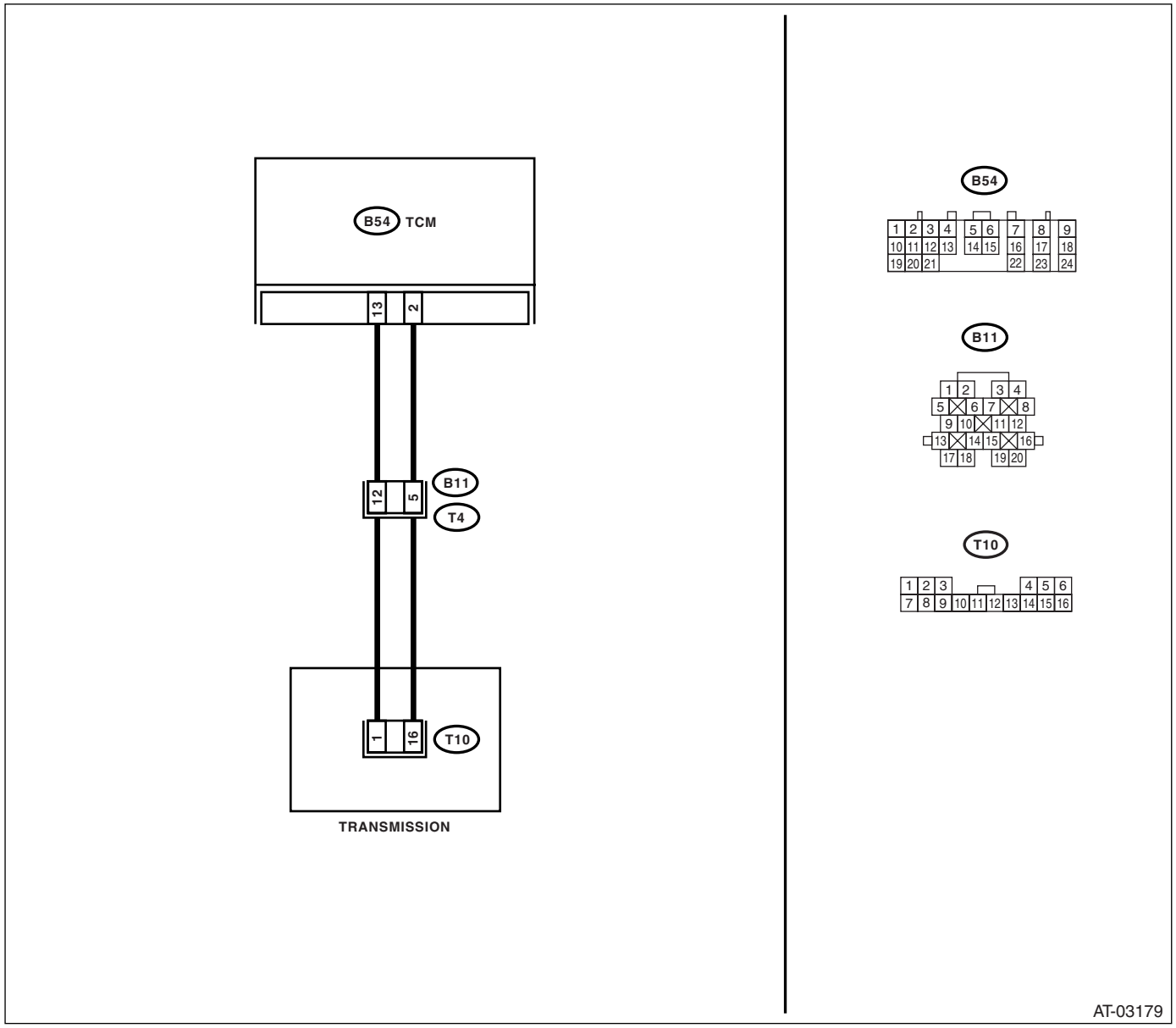

Step		Check	Yes	No
1	**CHECK HARNESS CONNECTOR BETWEEN TCM AND TRANSMISSION.** 1) Turn the ignition switch to OFF. 2) Disconnect the connectors from TCM and transmission. 3) Measure the resistance of harness between TCM connector and chassis ground. ***Connector & terminal*** ***(B54) No. 13 — Chassis ground:*** ***(B54) No. 2 — Chassis ground:***	Is the resistance more than 1 MΩ?	Go to step **2.**	Repair the short circuit in harness between TCM and transmission connector.

	Step	Check	Yes	No
2	**CHECK ATF TEMPERATURE SENSOR.** 1) Turn the ignition switch to OFF. 2) Connect the connectors to transmission and TCM. 3) Turn the ignition switch to ON and start engine. 4) Warm-up the transmission until the ATF temperature reaches to 80°C (176°F). NOTE: If the ambient temperature is below 0°C (32°F), drive the vehicle until the ATF reaches its operating temperature. 5) Disconnect the connector from transmission. 6) Measure the resistance between transmission connector terminals. ***Connector & terminal*** ***(T4) No. 5 — (T4) No. 12:***	Is the resistance 500 — 1,200 Ω?	Go to step **3.**	Go to step **5.**
3	**CHECK ATF TEMPERATURE SENSOR.** Measure the resistance between transmission connector terminals. ***Connector & terminal*** ***(T4) No. 5 — (T4) No. 12:***	Does the resistance value increase while the ATF temperature decreases?	Go to step **4.**	Go to step **5.**
4	**CHECK INPUT SIGNAL FOR TCM USING SUBARU SELECT MONITOR.** 1) Connect the connector. 2) Turn the ignition switch to ON (engine OFF). 3) Read the ATF temperature using Subaru Select Monitor.	Does the ATF temperature gradually decrease?	Even if the SPORT indicator lights blinks, the system is in normal condition. A temporary poor contact of connector or harness may be the cause. Repair the poor contact of harness between ATF temperature sensor and transmission connector.	Go to step **6.**
5	**CHECK HARNESS CONNECTOR BETWEEN TRANSMISSION AND CONTROL VALVE BODY.** 1) Turn the ignition switch to OFF. 2) Disconnect the connector from transmission. 3) Remove the transmission connector from bracket. 4) Lift-up the vehicle and place it on rigid racks. NOTE: Raise all wheels off floor. 5) Drain the ATF. **CAUTION:** **Do not drain the ATF until it cools down.** 6) Remove the oil pan, and disconnect the connector from control valve body connector. 7) Measure the resistance between chassis ground and control valve body connector. ***Connector & terminal*** ***(T10) No. 1 — Chassis ground:*** ***(T10) No. 16 — Chassis ground:***	Is the resistance more than 1 MΩ?	Replace the control valve body. <Ref. to 5AT-57, Control Valve Body.>	Repair the short circuit in harness between control valve body connector and transmission connector.

Step	Check	Yes	No
6 CHECK POOR CONTACT.	Is there poor contact in ATF temperature sensor circuit 1?	Repair the poor contact.	Replace the TCM. <Ref. to 5AT-60, Transmission Control Module (TCM).>

D: DTC P0715 INPUT/TURBINE SPEED SENSOR CIRCUIT

DTC DETECTING CONDITION:

Input signal circuit of TCM is open or shorted.

TROUBLE SYMPTOM:

- Excessive shift shock
- Does not shift to 5th

WIRING DIAGRAM:

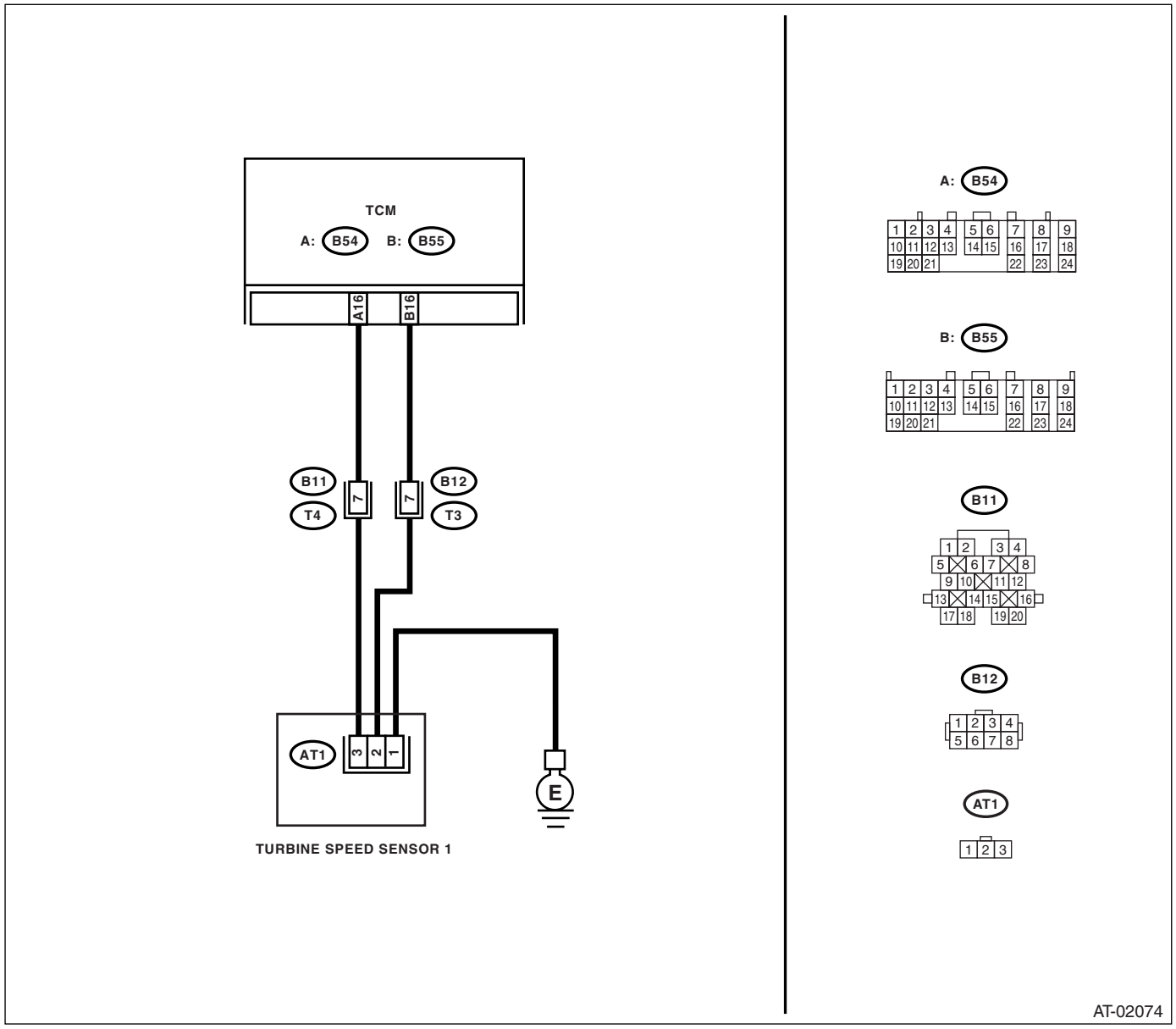

	Step	Check	Yes	No
1	**CHECK HARNESS CONNECTOR BETWEEN TCM AND TRANSMISSION.** 1) Turn the ignition switch to OFF. 2) Disconnect the connectors from TCM and transmission. 3) Measure the resistance of harness between TCM and transmission connector. ***Connector & terminal*** ***(B55) No. 16 — (B12) No. 7:*** ***(B54) No. 16 — (B11) No. 7:***	Is the resistance less than 1 Ω?	Go to step **2.**	Repair the open circuit in harness between TCM and transmission connector.
2	**CHECK HARNESS CONNECTOR BETWEEN TCM AND TRANSMISSION.** Measure the resistance of harness between TCM connector and chassis ground. ***Connector & terminal*** ***(B55) No. 16 — Chassis ground:*** ***(B54) No. 16 — Chassis ground:***	Is the resistance more than 1 MΩ?	Go to step **3.**	Repair the short circuit in harness between TCM and chassis ground.
3	**CHECK TCM POWER SUPPLY OUTPUT.** 1) Connect the TCM connector. (Transmission connector is disconnected) 2) Turn the ignition switch to ON. (engine OFF) 3) Measure the voltage between TCM connector and chassis ground. ***Connector & terminal*** ***(B54) No. 16 (+) — Chassis ground (−):***	Is the voltage 10 — 13 V?	Go to step **4.**	Go to step **5.**
4	**CHECK TURBINE SPEED SENSOR INPUT CIRCUIT OF TCM.** Measure the voltage between TCM connector terminals. ***Connector & terminal*** ***(B55) No. 16 (+) — (B54) No. 19 (−):***	Is the voltage 4 — 6 V?	Go to step **6.**	Go to step **5.**
5	**CHECK TCM I/O SIGNAL.** Check I/O signal of power supply, ground and PVIGN power supply relay. <Ref. to 5AT(diag)-11, ELECTRICAL SPECIFICATION, Transmission Control Module (TCM) I/O Signal.>	Is TCM I/O signal OK?	Replace the TCM. <Ref. to 5AT-60, Transmission Control Module (TCM).>	Repair the open or short circuit for power supply and ground. Perform the diagnosis according to DTC for PVIGN power supply relay.
6	**CHECK HARNESS ASSEMBLY (TURBINE SPEED SENSOR GROUND).** Check the installing condition of ground connecting harness of harness assembly (used for both of turbine speed sensor 1, rear vehicle speed sensor).	Is the ground connecting harness connected to transmission body securely? And there are no excessive damages on harness and terminal?	Go to step **7.**	If the poor installation of ground occurs, install it securely. Replace the transmission assembly when the harness or terminal is damaged. <Ref. to 5AT-38, Automatic Transmission Assembly.>

	Step	Check	Yes	No
7	**CHECK HARNESS ASSEMBLY.** 1) Turn the ignition switch to OFF. 2) Disconnect the connector from transmission. 3) Disconnect the connector from turbine speed sensor 1. 4) Measure the resistance between transmission connector and turbine speed sensor 1 connector. ***Connector & terminal*** ***(T4) No. 7 — (AT1) No. 3:*** ***(T3) No. 7 — (AT1) No. 2:*** ***(AT1) No. 1 — Chassis ground:***	Is the resistance less than 1 Ω?	Go to step **8.**	Repair the open circuit in harness between TCM and transmission connector, and poor contact in coupling connector.
8	**CHECK HARNESS ASSEMBLY.** Measure the resistance between transmission connector and chassis ground. ***Connector & terminal*** ***(T4) No. 7 — Chassis ground:*** ***(T3) No. 7 — Chassis ground:***	Is the resistance more than 1 MΩ?	Go to step **9.**	Repair the short circuit in harness between TCM and transmission connector.
9	**CHECK INPUT SIGNAL FOR TCM USING SUBARU SELECT MONITOR.** 1) Connect all the connectors. 2) Lift-up the vehicle and support with rigid racks. NOTE: Raise all wheels off floor. 3) Start the engine, and set the vehicle in 4th speed driving condition of manual mode. NOTE: Turbine speed sensor 1 signal can be measured only on 4th speed. 4) Read the current data of turbine speed sensor 1 using the Subaru Select Monitor. <Ref. to 5AT(diag)-15, READ CURRENT DATA, OPERATION, Subaru Select Monitor.> NOTE: The speed difference between front and rear wheels may light the ABS warning light, but this indicates no malfunction. When AT control diagnosis is finished, perform the ABS memory clearance procedure of on-board diagnostics system. <Ref. to ABS(diag)-25, Clear Memory Mode.>	Does the value of the turbine speed sensor 1 change depending on the acceleration, deceleration and shifting range of the vehicle?	Even if the SPORT indicator lights blinks, the system is in normal condition. A temporary poor contact of connector or harness may be the cause. Repair the poor contact of harness between the ATF temperature sensor and transmission connector.	Replace the turbine speed sensor 1. <Ref. to 5AT-56, Turbine Speed Sensor 1.>

E: DTC P0719 TORQUE CONVERTER/BRAKE SWITCH “B” CIRCUIT LOW

DTC DETECTING CONDITION:

Brake switch malfunction, open input signal circuit

TROUBLE SYMPTOM:

- Brake down control is not operated at SPORT mode.
- No lock-up occurs at braking.

WIRING DIAGRAM:

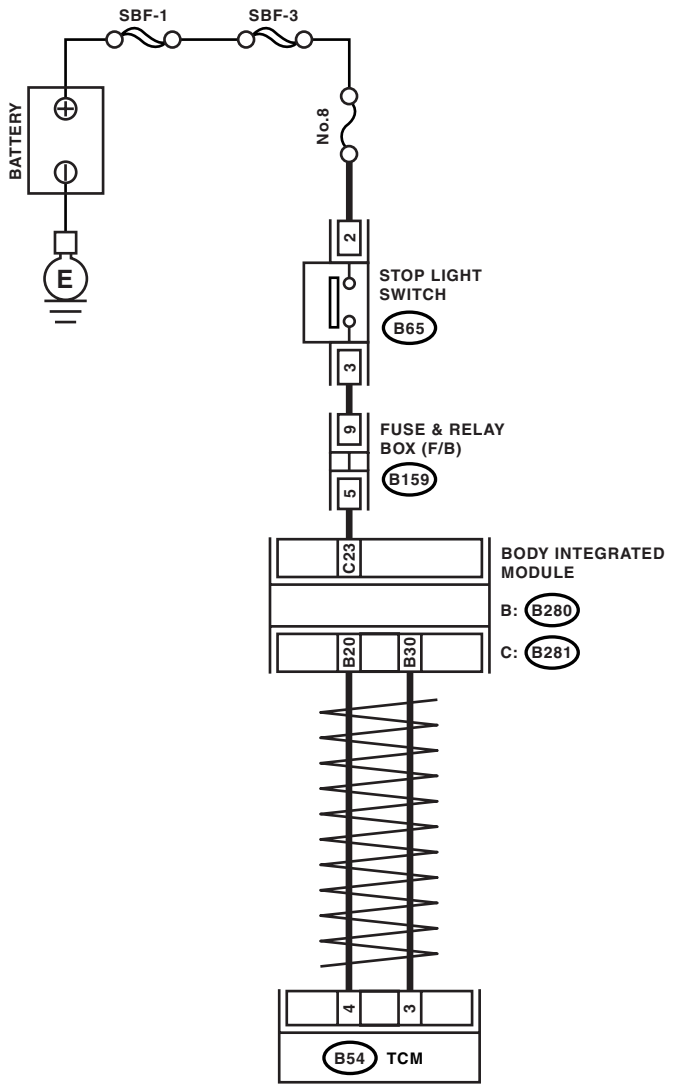

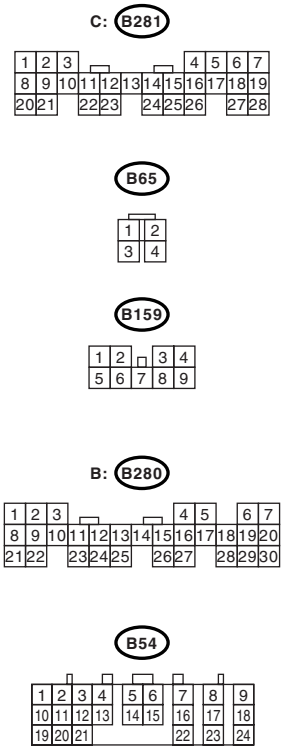

AT-03211

	Step	Check	Yes	No
1	**CHECK DTC.**	Is any of following DTC displayed? / AT CAN Communication Circuit / Output Speed Sensor Circuit / AT Vehicle Speed Sensor Circuit Malfunction (Rear Wheel)	Perform the diagnosis according to DTC.	Go to step **2.**
2	**CHECK BODY INTEGRATED UNIT.** 1) Turn the ignition switch to OFF. 2) Connect the Subaru Select Monitor to data link connector. 3) Turn the ignition switch to ON. (engine OFF) 4) Turn the Subaru Select Monitor switch to ON. 5) Depress the brake pedal. 6) Read the data of brake pedal switch using Subaru Select Monitor. <Ref. to LAN(diag)-14, OPERATION.>	Is the ON displayed?	Go to step **3.**	Go to step **4.**
3	**CHECK TCM.** Read the data of brake pedal switch using Subaru Select Monitor. <Ref. to 5AT(diag)-15, OPERATION, Subaru Select Monitor.>	Is the ON displayed?	A temporary poor contact of connector or harness may be the cause. Check the poor contact.	Replace the TCM <Ref. to 5AT-60, Transmission Control Module (TCM).>
4	**CHECK BODY INTEGRATED UNIT INPUT SIGNAL.** 1) Disconnect the connector from body integrated unit. 2) Depress the brake pedal. 3) Measure the voltage between body integrated unit connector and chassis ground. ***Connector & terminal*** ***(B281) No. 23 (+) — Chassis ground (−):***	Is the voltage more than 10 V?	Go to step **7.**	Go to step **5.**
5	**CHECK HARNESS CONNECTOR BETWEEN BODY INTEGRATED UNIT AND STOP LIGHT SWITCH.** 1) Turn the ignition switch to OFF. 2) Disconnect the connector from stop light switch. 3) Measure the resistance of harness between body integrated unit and stop light switch. ***Connector & terminal*** ***(B281) No. 23 — (B65) No. 3:***	Is the resistance less than 1 Ω?	Go to step **6.**	Repair the open circuit of harness between the body integrated unit and stop light switch.
6	**CHECK HARNESS CONNECTOR BETWEEN BODY INTEGRATED UNIT AND STOP LIGHT SWITCH.** Measure the resistance of harness between body integrated unit connector and stop light switch. ***Connector & terminal*** ***(B281) No. 23 — Chassis ground:***	Is the resistance more than 1 MΩ?	Go to step **7.**	Repair the short circuit of harness between the body integrated unit and stop light switch.
7	**CHECK POOR CONTACT.**	Is there poor contact in input signal of brake switch?	Repair the poor contact.	Check the body integrated unit.

F: DTC P0720 OUTPUT SPEED SENSOR CIRCUIT

DTC DETECTING CONDITION:

- AT vehicle speed signal is abnormal.
- The harness connector between TCM and vehicle speed sensor is in short or open.

TROUBLE SYMPTOM:

- Deterioration of shifting quality
- Poor driving performance

WIRING DIAGRAM:

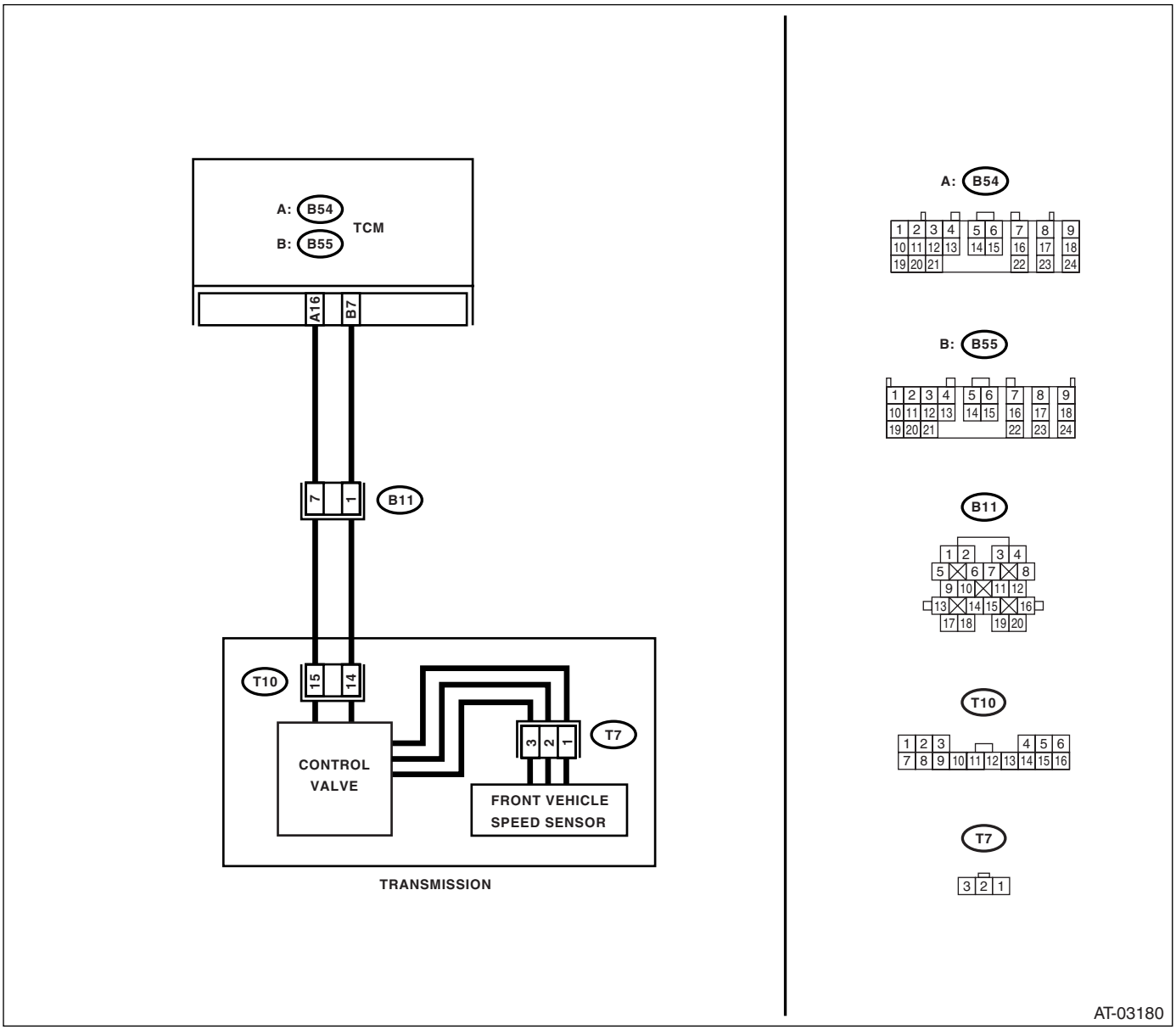

	Step	Check	Yes	No
1	**CHECK HARNESS CONNECTOR BETWEEN TCM AND TRANSMISSION.** 1) Turn the ignition switch to OFF. 2) Disconnect the connectors from TCM and transmission. 3) Measure the resistance of harness between TCM and transmission connector. ***Connector & terminal*** ***(B54) No. 16 — (B11) No. 7:*** ***(B55) No. 7 — (B11) No. 1:***	Is the resistance less than 1 Ω?	Go to step **2.**	Repair the open circuit in harness between TCM and transmission connector.
2	**CHECK HARNESS CONNECTOR BETWEEN TCM AND TRANSMISSION.** Measure the resistance of harness between TCM connector and chassis ground. ***Connector & terminal*** ***(B54) No. 16 — Chassis ground:*** ***(B55) No. 7 — Chassis ground:***	Is the resistance more than 1 MΩ?	Go to step **3.**	Repair the short circuit in harness between TCM and chassis ground.
3	**CHECK TCM POWER SUPPLY OUTPUT.** 1) Connect the connector to TCM. (Transmission connector is disconnected) 2) Turn the ignition switch to ON. (engine OFF) 3) Measure the voltage between TCM connector and chassis ground. ***Connector & terminal*** ***(B54) No. 16 (+) — Chassis ground (−):***	Is the voltage 10 — 13 V?	Go to step **4.**	Go to step **5.**
4	**CHECK TURBINE SPEED SENSOR INPUT CIRCUIT OF TCM.** Measure the voltage between TCM connector terminals. ***Connector & terminal*** ***(B55) No. 7 (+) — (B54) No. 19 (−):***	Is the voltage 4 — 6 V?	Go to step **6.**	Go to step **5.**
5	**CHECK TCM I/O SIGNAL.** Check I/O signal of power supply, ground and PVIGN power supply relay. <Ref. to 5AT(diag)-11, ELECTRICAL SPECIFICATION, Transmission Control Module (TCM) I/O Signal.>	Is TCM I/O signal OK?	Replace the TCM. <Ref. to 5AT-60, Transmission Control Module (TCM).>	Repair the open or short circuit for power supply and ground. Perform the diagnosis according to DTC for PVIGN power supply relay.
6	**CHECK INPUT SIGNAL FOR TCM USING SUBARU SELECT MONITOR.** 1) Connect all the connectors. 2) Lift-up the vehicle and support with rigid racks. NOTE: Raise all wheels off floor. 3) Start the engine, and drive it. 4) Read the current data of front wheel speed using Subaru Select Monitor. <Ref. to 5AT(diag)-15, READ CURRENT DATA, OPERATION, Subaru Select Monitor.> NOTE: The speed difference between front and rear wheels may light the ABS warning light, but this indicates no malfunction. When AT control diagnosis is finished, perform the ABS memory clearance procedure of on-board diagnostics system. <Ref. to ABS(diag)-25, Clear Memory Mode.>	Does the value of the front wheel speed change depending on the acceleration and deceleration of the vehicle?	Even if the SPORT indicator lights blinks, the system is in normal condition. A temporary poor contact of connector or harness may be the cause. Repair the poor contact of harness between the ATF temperature sensor and transmission connector.	Go to step **7.**

	Step	Check	Yes	No
7	**CHECK HARNESS CONNECTOR BETWEEN TRANSMISSION AND CONTROL VALVE BODY.** 1) Turn the ignition switch to OFF. 2) Disconnect the connector from transmission. 3) Remove the transmission connector from bracket. 4) Lift-up the vehicle and place it on rigid racks. NOTE: Raise all wheels off floor. 5) Drain the ATF. **CAUTION:** **Do not drain the ATF until it cools down.** 6) Remove the oil pan, and disconnect the connector from control valve body connector. 7) Measure the resistance between transmission connector and control valve body connector. ***Connector & terminal*** ***(B11) No. 7 — (T10) No. 15:*** ***(B11) No. 1 — (T10) No. 14:***	Is the resistance less than 1 Ω?	Go to step **8.**	Repair the open circuit in harness between control valve body connector and transmission connector.
8	**CHECK HARNESS CONNECTOR BETWEEN TRANSMISSION AND CONTROL VALVE BODY.** Measure the resistance between transmission ground and control valve body connector. ***Connector & terminal*** ***(T10) No. 15 — Transmission ground:*** ***(T10) No. 14 — Transmission ground:***	Is the resistance more than 1 MΩ?	Go to step **9.**	Repair the short circuit in harness between transmission connector and transmission ground.
9	**CHECK HARNESS CONNECTOR BETWEEN CONTROL VALVE BODY AND VEHICLE SPEED SENSOR.** 1) Disconnect the connector from vehicle speed sensor. 2) Measure the resistance of harness between control valve body connector and vehicle speed sensor connector. ***Connector & terminal*** ***(T10) No. 15 — (T7) No. 3:*** ***(T10) No. 14 — (T7) No. 2:*** ***(T7) No. 1 — Transmission ground:***	Is the resistance less than 1 Ω?	Go to step **10.**	Replace the control valve body. <Ref. to 5AT-57, Control Valve Body.>
10	**CHECK HARNESS CONNECTOR BETWEEN CONTROL VALVE BODY AND VEHICLE SPEED SENSOR.** Measure the resistance of harness between control valve body connector and transmission ground. ***Connector & terminal*** ***(T10) No. 15 — Transmission ground:*** ***(T10) No. 14 — Transmission ground:***	Is the resistance more than 1 MΩ?	Replace the vehicle speed sensor.	Replace the control valve body. <Ref. to 5AT-57, Control Valve Body.>

G: DTC P0724 TORQUE CONVERTER/BRAKE SWITCH “B” CIRCUIT HIGH

DTC DETECTING CONDITION:

Brake switch malfunction, open input signal circuit

TROUBLE SYMPTOM:

Gear is not shifted down when climbing a hill.

WIRING DIAGRAM:

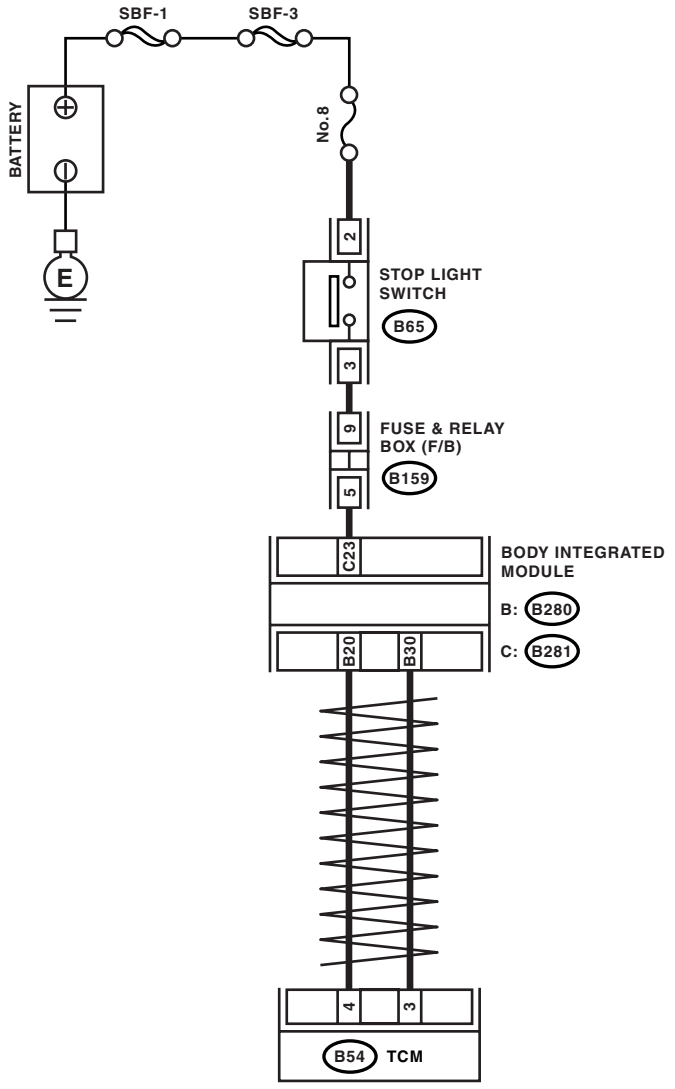

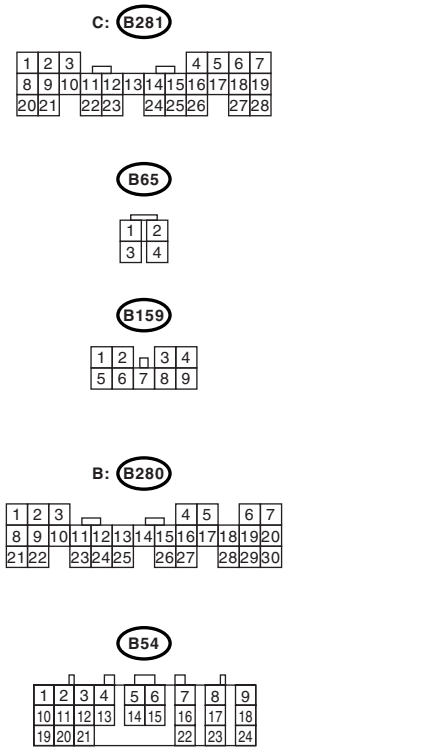

AT-03211

	Step	Check	Yes	No
1	**CHECK DTC.**	Is any of following DTC detected? / AT CAN Communication Circuit / Output Speed Sensor Circuit / AT Vehicle Speed Sensor Circuit Malfunction (Rear Wheel)	Perform the diagnosis according to DTC.	Go to step **2.**
2	**CHECK BODY INTEGRATED UNIT.** 1) Turn the ignition switch to OFF. 2) Connect the Subaru Select Monitor to data link connector. 3) Turn the ignition switch to ON. (engine OFF) 4) Turn the Subaru Select Monitor switch to ON. 5) Read the data of brake pedal switch using Subaru Select Monitor. <Ref. to 5AT(diag)-15, OPERATION, Subaru Select Monitor.>	Is OFF displayed?	Go to step **3.**	Go to step **4.**
3	**CHECK TCM.** Read the data of brake pedal switch using Subaru Select Monitor. <Ref. to 5AT(diag)-15, OPERATION, Subaru Select Monitor.>	Is OFF displayed?	A temporary poor contact of connector or harness may be the cause. Check the poor contact.	Replace the TCM <Ref. to 5AT-60, Transmission Control Module (TCM).>
4	**CHECK BODY INTEGRATED UNIT INPUT SIGNAL.** 1) Disconnect the connector from body integrated unit. 2) Measure the voltage between body integrated unit connector and chassis ground. ***Connector & terminal*** ***(B281) No. 23 (+) — Chassis ground (–):***	Is the voltage more than 10 V?	Go to step **5.**	Go to step **7.**
5	**CHECK STOP LIGHT SWITCH.** 1) Turn the ignition switch to OFF. 2) Disconnect the connector from stop light switch. 3) Measure the resistance of harness between stop light switch connectors. ***Terminals*** ***No. 2 — No. 3:***	Is the resistance more than 1 MΩ?	Go to step **6.**	Replace stop light switch.
6	**CHECK HARNESS CONNECTOR BETWEEN BODY INTEGRATED UNIT AND STOP LIGHT SWITCH.** 1) Turn the ignition switch to ON. 2) Measure the voltage of harness between the body integrated unit connector and chassis ground. ***Connector & terminal*** ***(B281) No. 23 (+) — Chassis ground (–):***	Is the voltage less than 1 V?	Go to step **7.**	Repair the short circuit in harness between TCM and stop light switch.
7	**CHECK POOR CONTACT.**	Is there poor contact in input signal of brake switch?	Repair the poor contact.	Check the body integrated unit.

H: DTC P0725 ENGINE SPEED INPUT CIRCUIT

DTC DETECTING CONDITION:
Information of engine speed is not correctly received from ECM.
TROUBLE SYMPTOM:
No lock-up (after engine warm-up).

	Step	Check	Yes	No
1	**CHECK DTC OF ECM.**	Is DTC of AT CAN communication circuit detected?	Perform the diagnosis according to DTC.	Go to step **2.**
2	**CHECK DTC OF TCM.**	Is DTC of AT CAN communication circuit detected?	Perform the diagnosis according to DTC.	Go to step **3.**
3	**CHECK DTC OF TCM.**	Is any of following DTC detected? / Output Speed Sensor Circuit / AT Vehicle Speed Sensor Circuit Malfunction (Rear Wheel)	Perform the diagnosis according to DTC.	Replace the TCM. <Ref. to 5AT-60, Transmission Control Module (TCM).>

I: DTC P0731 GEAR 1 INCORRECT RATIO

NOTE:
Refer to DTC P0736 for diagnostic procedure. <Ref. to 5AT(diag)-53, DTC P0736 REVERSE INCORRECT RATIO, Diagnostic Procedure with Diagnostic Trouble Code (DTC).>

J: DTC P0732 GEAR 2 INCORRECT RATIO

NOTE:
Refer to DTC P0736 for diagnostic procedure. <Ref. to 5AT(diag)-53, DTC P0736 REVERSE INCORRECT RATIO, Diagnostic Procedure with Diagnostic Trouble Code (DTC).>

K: DTC P0733 GEAR 3 INCORRECT RATIO

NOTE:
Refer to DTC P0736 for diagnostic procedure. <Ref. to 5AT(diag)-53, DTC P0736 REVERSE INCORRECT RATIO, Diagnostic Procedure with Diagnostic Trouble Code (DTC).>

L: DTC P0734 GEAR 4 INCORRECT RATIO

NOTE:
Refer to DTC P0736 for diagnostic procedure. <Ref. to 5AT(diag)-53, DTC P0736 REVERSE INCORRECT RATIO, Diagnostic Procedure with Diagnostic Trouble Code (DTC).>

M: DTC P0735 GEAR 5 INCORRECT RATIO

NOTE:
Refer to DTC P0736 for diagnostic procedure. <Ref. to 5AT(diag)-53, DTC P0736 REVERSE INCORRECT RATIO, Diagnostic Procedure with Diagnostic Trouble Code (DTC).>

N: DTC P0736 REVERSE INCORRECT RATIO

DTC DETECTING CONDITION:

Vehicle speed sensor, turbine speed sensor or control valve malfunction

TROUBLE SYMPTOM:

- Shift point is too high or too low.
- Excessive shift shock
- Tight corner “braking” phenomenon is occurred.
- Gear is not shifted to reverse.
- Gear position is held by fail safe function.
- Vehicle does not run.

	Step	Check	Yes	No
1	**CHECK DTC OF TCM.**	Is DTC P1799 displayed at the same time?	Perform the diagnosis according to DTC.	Go to step **2.**
2	**CHECK DTC OF TCM.**	Is any of the DTC P0751, P0756, P0761, P0766 displayed at the same time?	Perform the diagnosis according to DTC.	Go to step **3.**
3	**CHECK DTC OF TCM.**	Is any of the DTC P0705, P0715, P0720, P1706, P1710 displayed at the same time?	Perform the diagnosis according to DTC.	Go to step **4.**
4	**CHECK TURBINE SPEED.** Check the indication of Subaru Select Monitor.	Is the indication changes according to acceleration, braking and shifting?	Go to step **5.**	Perform the diagnosis according to DTC P0715, P1710.
5	**CHECK FRONT AND REAR VEHICLE SPEED SENSOR.**	Does the value of Subaru Select Monitor mostly match with indication of speed meter?	Go to step **6.**	Perform the diagnosis according to DTC P0720, P1706.
6	**CHECK INHIBITOR SWITCH.**	Does the value of Subaru Select Monitor match with value of meter indicator?	Go to step **7.**	Perform the diagnosis according to DTC P0705.
7	**CHECK DTC OF TCM.** 1) Perform the clear memory mode. 2) Perform the inspection mode. <Ref. to 5AT(diag)-19, PROCEDURE, Inspection Mode.>	Is DTC displayed?	Perform the diagnosis according to DTC.	Go to step **8.**
8	**DRIVING CHECK.** Perform the road test. <Ref. to 5AT-30, INSPECTION, Road Test.> NOTE: When performing the test, do not exceed posted speed limit.	Is malfunction corrected?	Temporary poor contact occurs. Check that the harness connector has no faulty.	Replace the transmission assembly.

O: DTC P0741 TORQUE CONVERTER CLUTCH CIRCUIT PERFORMANCE OR STUCK OFF

DTC DETECTING CONDITION:

- Lock up clutch malfunction
- Locking of bulb

TROUBLE SYMPTOM:

No lock-up occurs. (After engine is warmed-up)

	Step	Check	Yes	No
1	**CHECK DTC OF TCM.**	Is any of following DTC detected? / AT CAN Communication Circuit / Engine Speed Input Circuit / Input/Turbine Speed Sensor Circuit / Torque Converter Turbine 2 Speed Signal Circuit 2 Malfunction	Perform the diagnosis according to each DTC.	Go to step **2.**
2	**CHECK DTC OF TCM.** 1) Perform the clear memory mode. <Ref. to 5AT(diag)-17, CLEAR MEMORY MODE, OPERATION, Subaru Select Monitor.> 2) Read DTC.	Is DTC displayed?	Perform the diagnosis according to DTC.	Go to step **3.**
3	**CHECK INHIBITOR SWITCH CIRCUIT.** Diagnose according to DTC P0705 procedure.	Is there any trouble?	Repair or replace the inhibitor switch circuit.	Go to step **4.**
4	**CHECK STOP LIGHT SWITCH CIRCUIT.** Diagnose according to DTC P0719 and P0724 procedure.	Is there any trouble?	Repair or replace the stop light switch circuit.	Go to step **5.**
5	**CHECK ATF TEMPERATURE SENSOR CIRCUIT.** Diagnose according to DTC P0712, P0713, P1716 and P1717 procedure.	Is there any trouble?	Repair or replace the ATF temperature sensor circuit.	There are malfunctions in TCM, TCM connector poor contact or transmission assembly mechanical malfunction.

P: DTC P0743 TORQUE CONVERTER CLUTCH CIRCUIT ELECTRICAL

DTC DETECTING CONDITION:

The output signal circuit of lock up solenoid is open or shorted.

TROUBLE SYMPTOM:

No lock-up (after engine warm-up)

WIRING DIAGRAM:

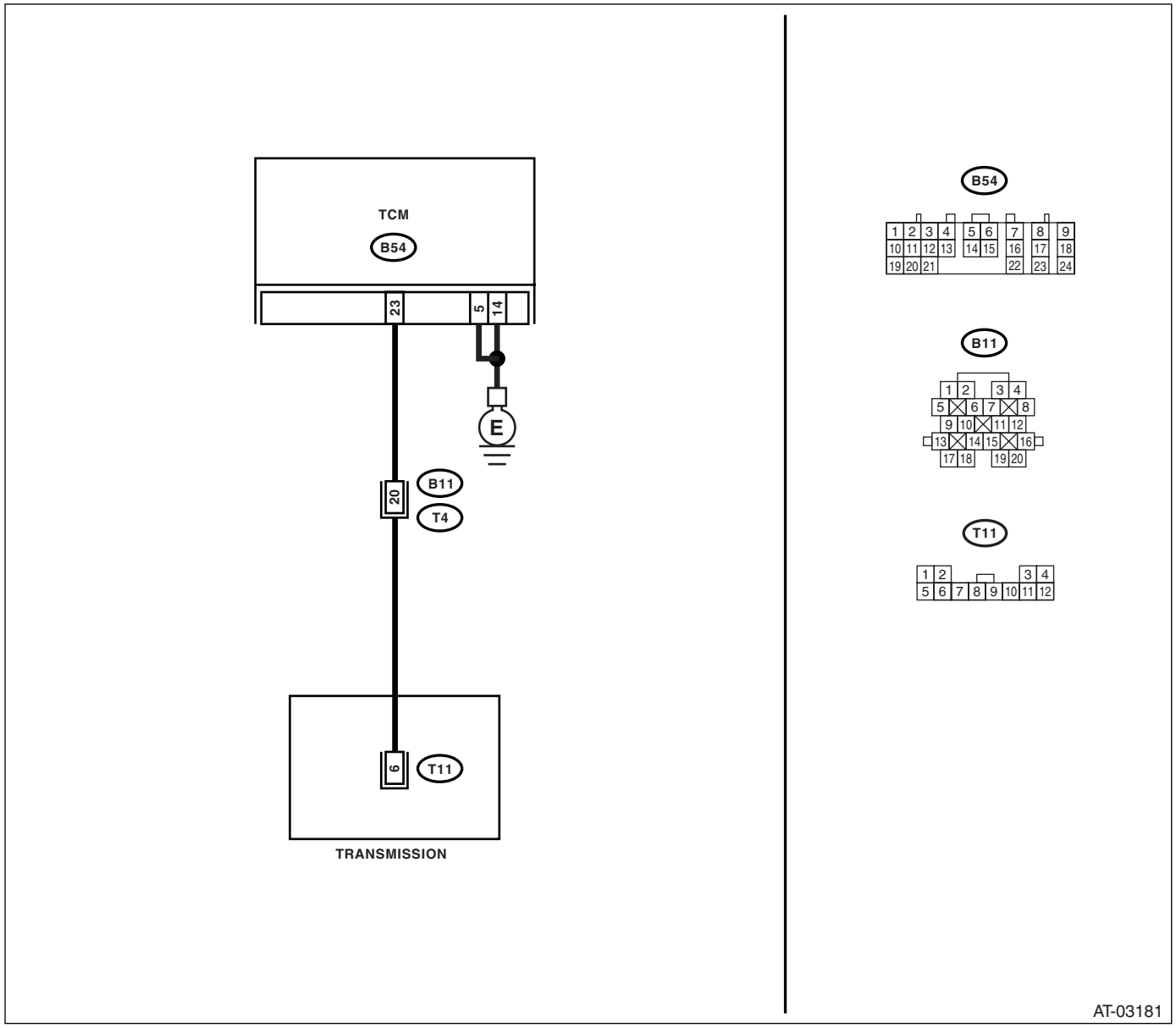

	Step	Check	Yes	No
1	**CHECK HARNESS CONNECTOR BETWEEN TCM AND TRANSMISSION.** 1) Turn the ignition switch to OFF. 2) Disconnect the connectors from TCM and transmission. 3) Measure the resistance of harness between TCM and transmission connector. ***Connector & terminal*** ***(B54) No. 23 — (B11) No. 20:*** ***(B54) No. 5 — Chassis ground:*** ***(B54) No. 14 — Chassis ground:***	Is the resistance less than 1 Ω?	Go to step **2.**	Repair the open circuit in harness between TCM connector and transmission connector.
2	**CHECK HARNESS CONNECTOR BETWEEN TCM AND CHASSIS GROUND.** Measure resistance of harness between TCM connector and chassis ground. ***Connector & terminal*** ***(B54) No. 23 — Chassis ground:***	Is the resistance more than 1 MΩ?	Go to step **3.**	Repair the short circuit in harness between TCM connector and transmission connector.
3	**CHECK HARNESS CONNECTOR BETWEEN TRANSMISSION AND CONTROL VALVE BODY.** 1) Turn the ignition switch to OFF. 2) Disconnect the connector from transmission. 3) Remove the transmission connector from bracket. 4) Lift-up the vehicle and place it on rigid racks. 5) Drain the ATF. 6) Remove the oil pan, and disconnect the control valve body connector. 7) Measure the resistance between transmission connector and control valve body connector. ***Connector & terminal*** ***(T4) No. 20 — (T11) No. 6:***	Is the resistance less than 1 Ω?	Go to step **4.**	Repair the open circuit in harness between control valve body connector and transmission connector.
4	**CHECK HARNESS CONNECTOR BETWEEN TRANSMISSION AND CONTROL VALVE BODY.** Measure the resistance between chassis ground and control valve body connector. ***Connector & terminal*** ***(T11) No. 6 — Chassis ground:***	Is the resistance more than 1 MΩ?	Go to step **5.**	Repair the short circuit in harness between control valve body connector and transmission ground.
5	**CHECK LOCK-UP SOLENOID.** Measure the resistance between transmission ground and control valve body connector. ***Connector & terminal*** ***(T11) No. 6 — Transmission ground:***	Is the resistance 3 — 9 Ω?	Go to step **6.**	Replace the control valve body. <Ref. to 5AT-57, Control Valve Body.>
6	**CHECK POOR CONTACT.** Check that there are no poor contact in TCM connector, transmission connector and control valve body connector.	Is there any loosing terminal, entering foreign matter, damaging connector body?	Repair the poor contact.	Go to step **7.**
7	**CHECK AFTER REPAIR.** 1) Perform the clear memory mode. 2) Drive for a while, read the DTC, and verify that there is no faulty.	Is DTC displayed?	Replace the TCM. <Ref. to 5AT-60, Transmission Control Module (TCM).>	Temporary poor contact or open circuit occurs. Recheck that the harness connector has no faulty.

Q: DTC P0748 PRESSURE CONTROL SOLENOID “A” ELECTRICAL

DTC DETECTING CONDITION:

Output signal circuit of line pressure solenoid is open or shorted.

TROUBLE SYMPTOM:

Excessive shift shock

WIRING DIAGRAM:

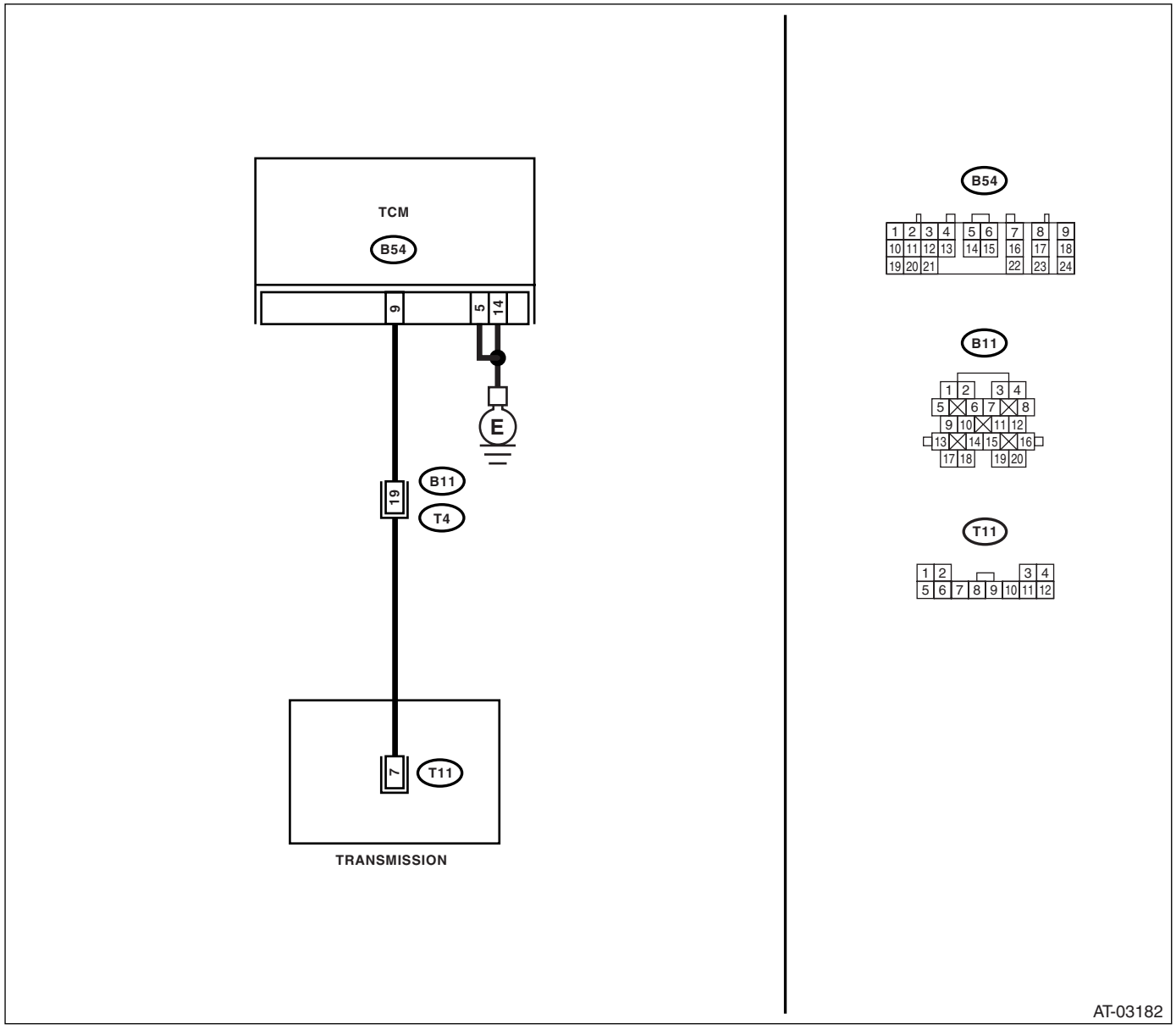

	Step	Check	Yes	No
1	**CHECK HARNESS CONNECTOR BETWEEN TCM AND TRANSMISSION.** 1) Turn the ignition switch to OFF. 2) Disconnect the connectors from TCM and transmission. 3) Measure the resistance of harness between TCM and transmission connector. ***Connector & terminal*** ***(B54) No. 9 — (B11) No. 19:*** ***(B54) No. 5 — Chassis ground:*** ***(B54) No. 14 — Chassis ground:***	Is the resistance less than 1 Ω?	Go to step **2.**	Repair the open circuit in harness between TCM connector and transmission connector.
2	**CHECK HARNESS CONNECTOR BETWEEN TCM AND CHASSIS GROUND.** Measure the resistance between TCM connector and chassis ground. ***Connector & terminal*** ***(B54) No. 9 — Chassis ground:***	Is the resistance more than 1 MΩ?	Go to step **3.**	Repair the short circuit in harness between TCM connector and transmission connector.
3	**CHECK HARNESS CONNECTOR BETWEEN TRANSMISSION AND CONTROL VALVE BODY.** 1) Turn the ignition switch to OFF. 2) Disconnect the connector from transmission. 3) Remove the transmission connector from bracket. 4) Lift-up the vehicle and place it on rigid racks. 5) Drain the ATF. 6) Remove the oil pan, and disconnect the control valve body connector. 7) Measure the resistance between transmission connector and control valve body connector. ***Connector & terminal*** ***(T4) No. 19 — (T11) No. 7:***	Is the resistance less than 1 Ω?	Go to step **4.**	Repair the open circuit in harness between control valve body connector and transmission connector.
4	**CHECK HARNESS CONNECTOR BETWEEN TRANSMISSION AND CONTROL VALVE BODY.** Measure the resistance between transmission ground and control valve body connector. ***Connector & terminal*** ***(T11) No. 7 — Chassis ground:***	Is the resistance more than 1 MΩ?	Go to step **5.**	Repair the short circuit in harness between control valve body connector and transmission ground.
5	**CHECK LINE PRESSURE SOLENOID.** Measure the resistance between transmission ground and control valve body connector. ***Connector & terminal*** ***(T11) No. 7 — Transmission ground:***	Is the resistance 3 — 9 Ω?	Go to step **6.**	Replace the control valve body. <Ref. to 5AT-57, Control Valve Body.>
6	**CHECK POOR CONTACT.** Check that there are no poor contact in TCM connector, transmission connector and control valve body connector.	Is there any loosing terminal, entering foreign matter, damaging connector body?	Repair the poor contact.	Go to step **7.**
7	**CHECK AFTER REPAIR.** 1) Perform the clear memory mode. 2) Drive for a while, read the DTC, and verify that there is no faulty.	Is DTC displayed?	Replace the TCM. <Ref. to 5AT-60, Transmission Control Module (TCM).>	Temporary poor contact or open circuit occurs. Recheck that the harness connector has no faulty.

R: DTC P0751 SHIFT SOLENOID "A" PERFORMANCE OR STUCK OFF

DTC DETECTING CONDITION:

Output signal of front brake solenoid does not match with oil pressure.

TROUBLE SYMPTOM:

Locked to 4th or 5th gear.

WIRING DIAGRAM:

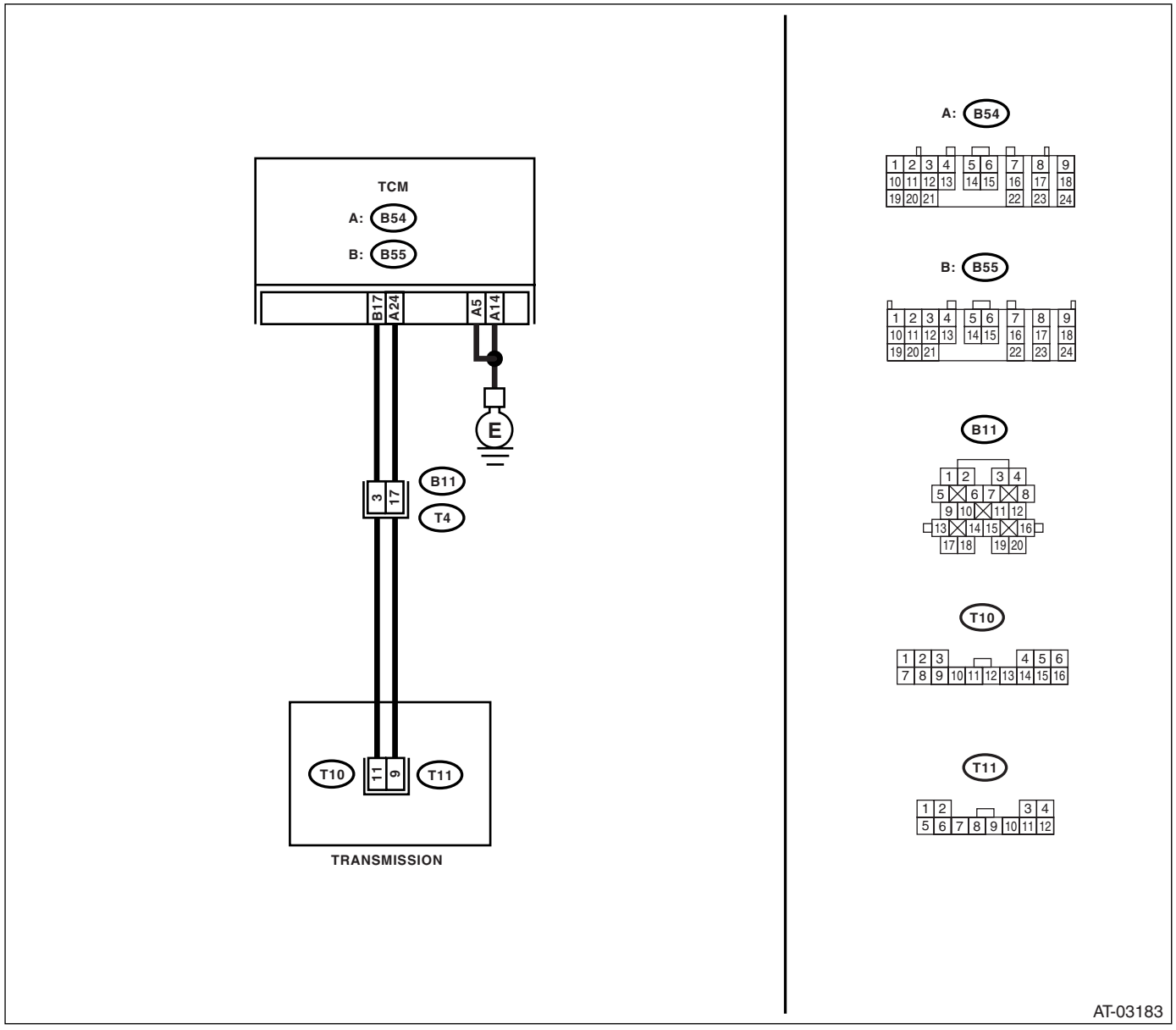

	Step	Check	Yes	No
1	**CHECK HARNESS CONNECTOR BETWEEN TCM AND TRANSMISSION.** 1) Turn the ignition switch to OFF. 2) Disconnect the connectors from TCM and transmission. 3) Measure the resistance of harness between TCM and transmission connector. ***Connector & terminal*** ***(B54) No. 24 — (B11) No. 17:*** ***(B55) No. 17 — (B11) No. 3:*** ***(B54) No. 5 — Chassis ground:*** ***(B54) No. 14 — Chassis ground:***	Is the resistance less than 1 Ω?	Go to step **2.**	Repair the open circuit in harness between TCM and transmission connector.
2	**CHECK HARNESS CONNECTOR BETWEEN TCM AND CHASSIS GROUND.** Measure resistance of harness between TCM connector and chassis ground. ***Connector & terminal*** ***(B54) No. 24 — Chassis ground:*** ***(B55) No. 17 — Chassis ground:***	Is the resistance more than 1 MΩ?	Go to step **3.**	Repair the short circuit in harness between TCM and transmission connector.
3	**CHECK INPUT SIGNAL FOR TCM USING SUBARU SELECT MONITOR.** 1) Connect all the connectors. 2) Turn the ignition switch to ON. (engine OFF) 3) Check input signal of Fr/B oil pressure SW.	Is OFF displayed?	Go to step **4.**	Go to step **7.**
4	**CHECK INPUT SIGNAL FOR TCM USING SUBARU SELECT MONITOR.** 1) Turn the ignition switch to OFF. 2) Turn the ignition switch to ON. (engine ON) 3) Shift to 4th speed with checking current gear position using Subaru Select Monitor. 4) Check input signal of Fr/B oil pressure SW.	Is OFF displayed?	Go to step **5.**	Replace the control valve body. <Ref. to 5AT-57, Control Valve Body.>
5	**CHECK INPUT SIGNAL FOR TCM USING SUBARU SELECT MONITOR.** 1) Turn the ignition switch to OFF. 2) Turn the ignition switch to ON. (engine ON) 3) Shift to 1st speed with checking current gear position using Subaru Select Monitor. 4) Check input signal of Fr/B oil pressure SW.	Is the ON displayed?	Even if the SPORT indicator lights blinks, the system is in normal condition. A temporary poor contact of connector or harness may be the cause. Repair the poor contact of harness in the solenoid output and oil pressure SW input.	Go to step **6.**

	Step	Check	Yes	No
6	**CHECK HARNESS CONNECTOR BETWEEN TRANSMISSION AND CONTROL VALVE BODY.** 1) Turn the ignition switch to OFF. 2) Disconnect the connector from transmission. 3) Remove the transmission connector from bracket. 4) Lift-up the vehicle and place it on rigid racks. 5) Drain the ATF. 6) Remove the oil pan, and disconnect the control valve body connector. 7) Measure the resistance between transmission connector and control valve body connector. ***Connector & terminal*** ***(B11) No. 17 — (T11) No. 9:*** ***(B11) No. 3 — (T10) No. 11:***	Is the resistance less than 1 Ω?	Replace the control valve body. <Ref. to 5AT-57, Control Valve Body.>	Repair the open circuit in harness between control valve body connector and transmission connector.
7	**CHECK HARNESS CONNECTOR BETWEEN TRANSMISSION AND CONTROL VALVE BODY.** 1) Turn the ignition switch to OFF. 2) Disconnect the connector from transmission. 3) Remove the transmission connector from bracket. 4) Lift-up the vehicle and place it on rigid racks. 5) Drain the ATF. 6) Remove the oil pan, and disconnect the control valve body connector. 7) Measure the resistance between transmission ground and control valve body connector. ***Connector & terminal*** ***(T11) No. 9 — Transmission ground:*** ***(T10) No. 11 — Transmission ground:***	Is the resistance more than 1 MΩ?	Replace the control valve body. <Ref. to 5AT-57, Control Valve Body.>	Repair the short circuit in harness between control valve body connector and transmission connector.

S: DTC P0753 SHIFT SOLENOID “A” ELECTRICAL

DTC DETECTING CONDITION:

Output signal circuit of front brake solenoid is open or shorted.

TROUBLE SYMPTOM:

Locked to 4th or 5th gear.

WIRING DIAGRAM:

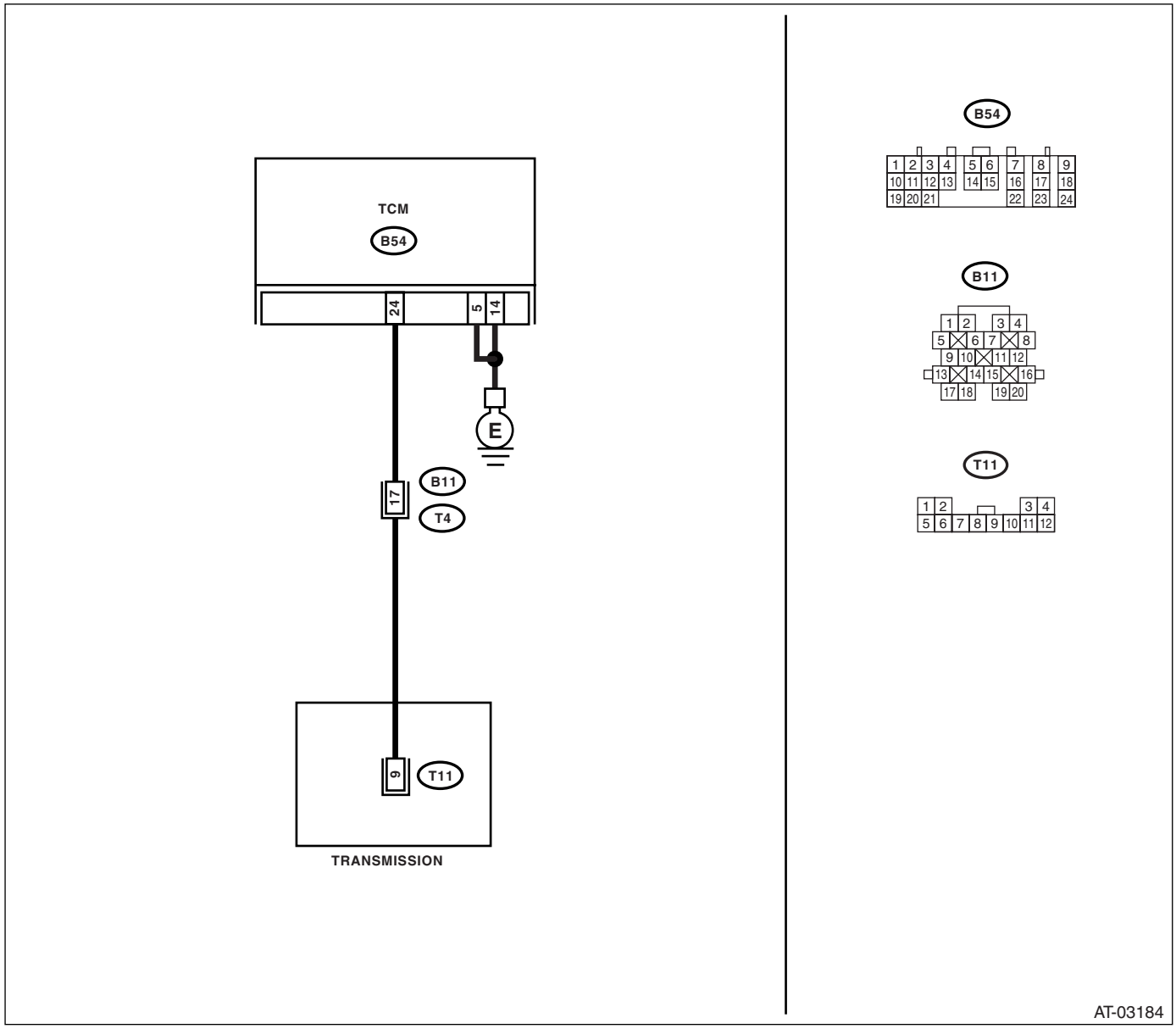

	Step	Check	Yes	No
1	**CHECK HARNESS CONNECTOR BETWEEN TCM AND TRANSMISSION.** 1) Turn the ignition switch to OFF. 2) Disconnect the connectors from TCM and transmission. 3) Measure the resistance of harness between TCM and transmission connector. ***Connector & terminal*** ***(B54) No. 24 — (B11) No. 17:*** ***(B54) No. 5 — Chassis ground:*** ***(B54) No. 14 — Chassis ground:***	Is the resistance less than 1 Ω?	Go to step **2.**	Repair the open circuit in harness between TCM connector and transmission connector.
2	**CHECK HARNESS CONNECTOR BETWEEN TCM AND CHASSIS GROUND.** Measure resistance of harness between TCM connector and chassis ground. ***Connector & terminal*** ***(B54) No. 24 — Chassis ground:***	Is the resistance more than 1 MΩ?	Go to step **3.**	Repair the short circuit in harness between TCM connector and transmission connector.
3	**CHECK HARNESS CONNECTOR BETWEEN TRANSMISSION AND CONTROL VALVE BODY.** 1) Turn the ignition switch to OFF. 2) Disconnect the connector from transmission. 3) Remove the transmission connector from bracket. 4) Lift-up the vehicle and place it on rigid racks. 5) Drain the ATF. 6) Remove the oil pan, and disconnect the control valve body connector. 7) Measure the resistance between transmission connector and control valve body connector. ***Connector & terminal*** ***(T4) No. 17 — (T11) No. 9:***	Is the resistance less than 1 Ω?	Go to step **4.**	Repair the open circuit in harness between control valve body connector and transmission connector.
4	**CHECK HARNESS CONNECTOR BETWEEN TRANSMISSION AND CONTROL VALVE BODY.** Measure the resistance between transmission ground and control valve body connector. ***Connector & terminal*** ***(T11) No. 9 — Transmission ground:***	Is the resistance more than 1 MΩ?	Go to step **5.**	Repair the short circuit in harness between control valve body and transmission connector.
5	**CHECK FRONT BRAKE SOLENOID.** Measure the resistance between transmission ground and control valve body connector. ***Connector & terminal*** ***(T11) No. 9 — Transmission ground:***	Is the resistance 3 — 9 Ω?	Go to step **6.**	Replace the control valve body. <Ref. to 5AT-57, Control Valve Body.>
6	**CHECK POOR CONTACT.** Check that there are no poor contact in TCM connector, transmission connector and control valve body connector.	Is there any loosing terminal, entering foreign matter, damaging connector body?	Repair the poor contact.	Go to step **7.**
7	**CHECK AFTER REPAIR.** 1) Perform the clear memory mode. 2) Drive for a while, read the DTC, and verify that there is no faulty.	Is DTC displayed?	Replace the TCM. <Ref. to 5AT-60, Transmission Control Module (TCM).>	Temporary poor contact or open circuit occurs. Recheck that the harness connector has no faulty.

T: DTC P0756 SHIFT SOLENOID "B" PERFORMANCE OR STUCK OFF

DTC DETECTING CONDITION:

Output signal value of input clutch solenoid and oil pressure does not match.

TROUBLE SYMPTOM:

Locked to 4th gear.

WIRING DIAGRAM:

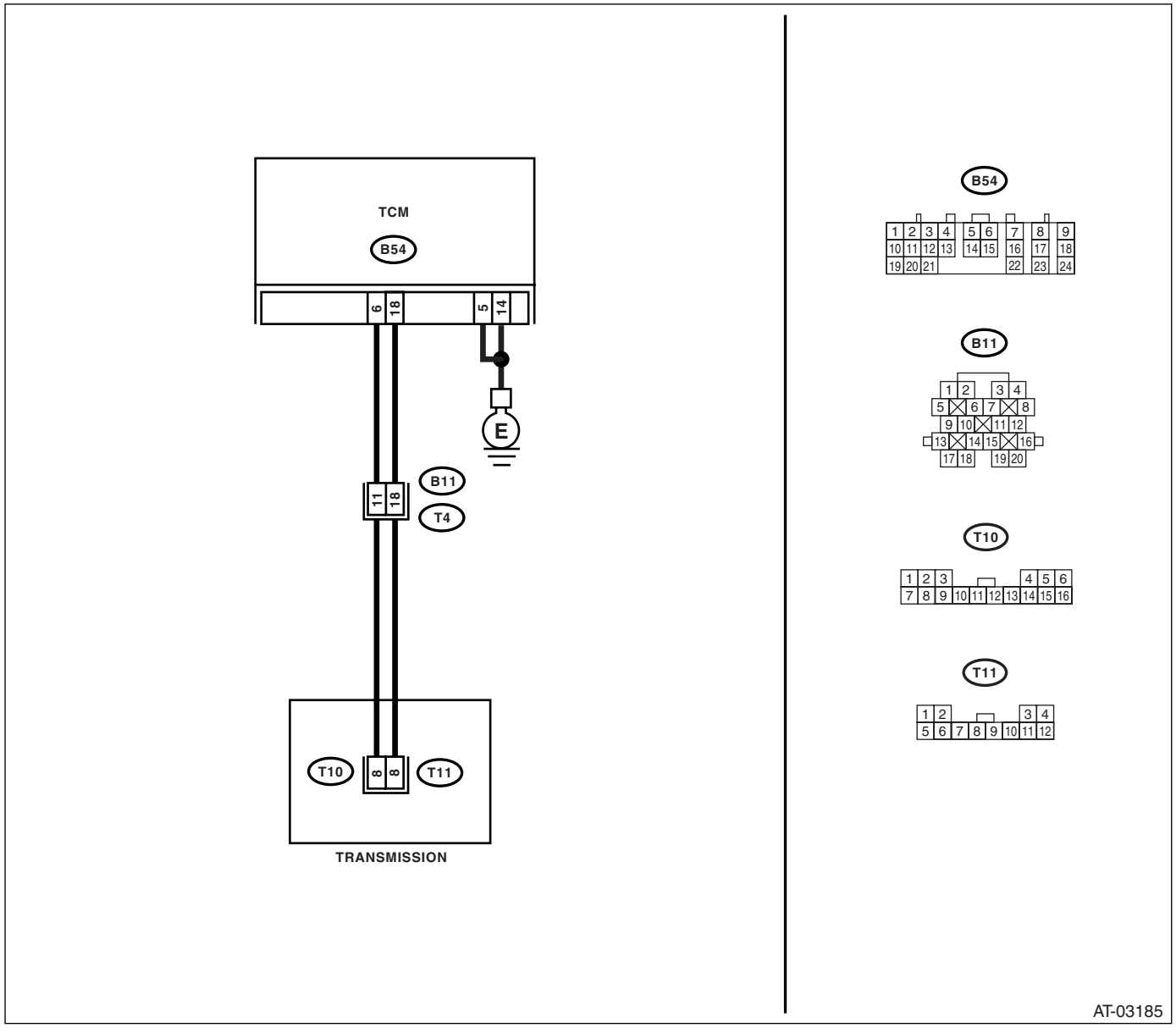

	Step	Check	Yes	No
1	**CHECK HARNESS CONNECTOR BETWEEN TCM AND TRANSMISSION.** 1) Turn the ignition switch to OFF. 2) Disconnect the connectors from TCM and transmission. 3) Measure the resistance of harness between TCM and transmission connector. ***Connector & terminal*** ***(B54) No. 18 — (B11) No. 18:*** ***(B54) No. 6 — (B11) No. 11:*** ***(B54) No. 5 — Chassis ground:*** ***(B54) No. 14 — Chassis ground:***	Is the resistance less than 1 Ω?	Go to step **2.**	Repair the open circuit in harness between TCM and transmission connector.
2	**CHECK HARNESS CONNECTOR BETWEEN TCM AND CHASSIS GROUND.** Measure resistance of harness between TCM connector and chassis ground. ***Connector & terminal*** ***(B54) No. 18 — Chassis ground:*** ***(B54) No. 6 — Chassis ground:***	Is the resistance more than 1 MΩ?	Go to step **3.**	Repair the short circuit in harness between TCM and transmission connector.
3	**CHECK INPUT SIGNAL FOR TCM USING SUBARU SELECT MONITOR.** 1) Connect all the connectors. 2) Turn the ignition switch to ON. (engine OFF) 3) Check input signal of I/C oil pressure SW.	Is OFF displayed?	Go to step **4.**	Go to step **7.**
4	**CHECK INPUT SIGNAL FOR TCM USING SUBARU SELECT MONITOR.** 1) Turn the ignition switch to OFF. 2) Turn the ignition switch to ON. (engine ON) 3) Shift to “D” range and brake ON (1st) with checking current gear position using Subaru Select Monitor. 4) Check input signal of I/C oil pressure SW.	Is OFF displayed?	Go to step **5.**	Replace the control valve body. <Ref. to 5AT-57, Control Valve Body.>
5	**CHECK INPUT SIGNAL FOR TCM USING SUBARU SELECT MONITOR.** 1) Turn the ignition switch to OFF. 2) Turn the ignition switch to ON. (engine ON) 3) Drive the vehicle on 4th speed of “D” range with checking current gear position using Subaru Select Monitor. 4) Check input signal of I/C oil pressure SW.	Is the ON displayed?	Even if the SPORT indicator lights blinks, the system is in normal condition. A temporary poor contact of connector or harness may be the cause. Repair the poor contact of harness in the solenoid output and oil pressure SW input.	Go to step **6.**

	Step	Check	Yes	No
6	**CHECK HARNESS CONNECTOR BETWEEN TRANSMISSION AND CONTROL VALVE BODY.** 1) Turn the ignition switch to OFF. 2) Disconnect the connector from transmission. 3) Remove the transmission connector from bracket. 4) Lift-up the vehicle and place it on rigid racks. 5) Drain the ATF. 6) Remove the oil pan, and disconnect the control valve body connector. 7) Measure the resistance between transmission connector and control valve body connector. ***Connector & terminal*** ***(T4) No. 18 — (T11) No. 8:*** ***(T4) No. 11 — (T10) No. 8:***	Is the resistance less than 1 Ω?	Replace the control valve body. <Ref. to 5AT-57, Control Valve Body.>	Repair the open circuit in harness between control valve body connector and transmission connector.
7	**CHECK HARNESS CONNECTOR BETWEEN TRANSMISSION AND CONTROL VALVE BODY.** 1) Turn the ignition switch to OFF. 2) Disconnect the connector from transmission. 3) Remove the transmission connector from bracket. 4) Lift-up the vehicle and place it on rigid racks. 5) Drain the ATF. 6) Remove the oil pan, and disconnect the control valve body connector. 7) Measure the resistance between transmission ground and control valve body connector. ***Connector & terminal*** ***(T4) No. 18 — Transmission ground:*** ***(T4) No. 11 — Transmission ground:***	Is the resistance more than 1 MΩ?	Replace the control valve body. <Ref. to 5AT-57, Control Valve Body.>	Repair the short circuit in harness between control valve body connector and transmission connector.

U: DTC P0758 SHIFT SOLENOID "B" ELECTRICAL

DTC DETECTING CONDITION:

Output signal circuit of input clutch solenoid is open or shorted.

TROUBLE SYMPTOM:

Locked to 4th gear.

WIRING DIAGRAM:

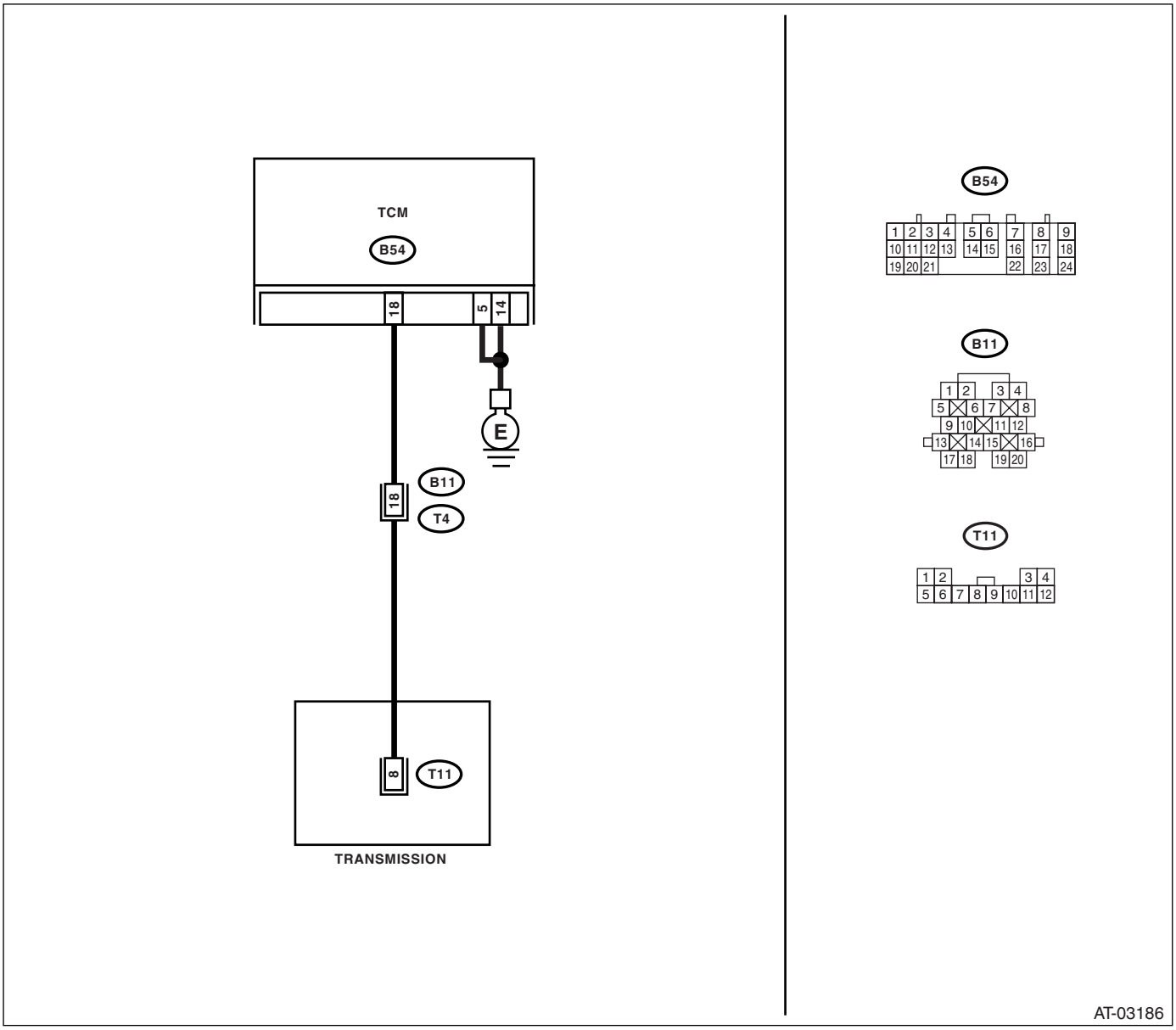

Step		Check	Yes	No
1	**CHECK HARNESS CONNECTOR BETWEEN TCM AND TRANSMISSION.** 1) Turn the ignition switch to OFF. 2) Disconnect the connectors from TCM and transmission. 3) Measure the resistance of harness between TCM and transmission connector. ***Connector & terminal*** ***(B54) No. 18 — (B11) No. 18:*** ***(B54) No. 5 — Chassis ground:*** ***(B54) No. 14 — Chassis ground:***	Is the resistance less than 1 Ω?	Go to step **2.**	Repair the open circuit in harness between TCM and transmission connector.

	Step	Check	Yes	No
2	**CHECK HARNESS CONNECTOR BETWEEN TCM AND BODY HARNESS.** Measure resistance of harness between TCM connector and body harness. ***Connector & terminal*** ***(B54) No. 18 — Chassis ground:***	Is the resistance more than 1 MΩ?	Go to step **3.**	Repair the short circuit in harness between TCM and transmission connector.
3	**CHECK HARNESS CONNECTOR BETWEEN TRANSMISSION AND CONTROL VALVE BODY.** 1) Turn the ignition switch to OFF. 2) Disconnect the connector from transmission. 3) Remove the transmission connector from bracket. 4) Lift-up the vehicle and place it on rigid racks. 5) Drain the ATF. 6) Remove the oil pan, and disconnect the control valve body connector. 7) Measure the resistance between transmission connector and control valve body connector. ***Connector & terminal*** ***(T4) No. 18 — (T11) No. 8:***	Is the resistance less than 1 Ω?	Go to step **4.**	Repair the open circuit in harness between control valve body connector and transmission connector.
4	**CHECK HARNESS CONNECTOR BETWEEN TRANSMISSION AND CONTROL VALVE BODY.** Measure the resistance between chassis ground and control valve body connector. ***Connector & terminal*** ***(T11) No. 8 — Chassis ground:***	Is the resistance more than 1 MΩ?	Go to step **5.**	Repair the short circuit in harness between control valve body connector and transmission connector.
5	**CHECK INPUT CLUTCH SOLENOID.** Measure the resistance between transmission ground and control valve body connector. ***Connector & terminal*** ***(T11) No. 8 — Transmission ground:***	Is the resistance 3 — 9 Ω?	Go to step **6.**	Replace the control valve body. <Ref. to 5AT-57, Control Valve Body.>
6	**CHECK POOR CONTACT.** Check that there are no poor contact in TCM connector, transmission connector and control valve body connector.	Is there any loosing terminal, entering foreign matter, damaging connector body?	Repair the poor contact.	Go to step **7.**
7	**CHECK AFTER REPAIR.** 1) Perform the clear memory mode. 2) Drive for a while, read the DTC, and verify that there is no faulty.	Is DTC displayed?	Replace the TCM. <Ref. to 5AT-60, Transmission Control Module (TCM).>	Temporary poor contact or open circuit occurs. Recheck that the harness connector has no faulty.

V: DTC P0761 SHIFT SOLENOID "C" PERFORMANCE OR STUCK OFF

DTC DETECTING CONDITION:

Output signal value of high & low reverse clutch solenoid and oil pressure does not match.

TROUBLE SYMPTOM:

Locked to 4th gear.

WIRING DIAGRAM:

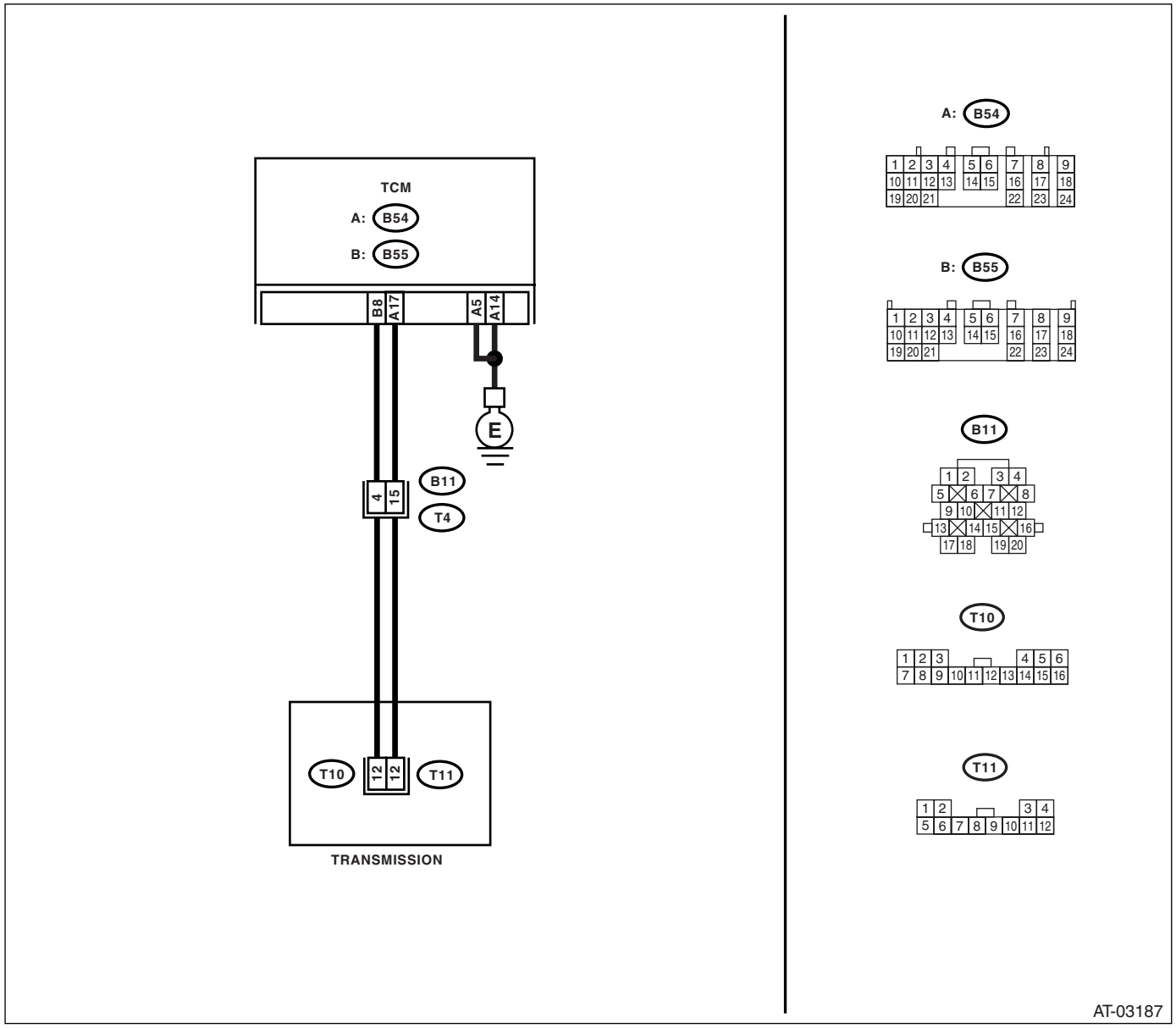

	Step	Check	Yes	No
1	**CHECK HARNESS CONNECTOR BETWEEN TCM AND TRANSMISSION.** 1) Turn the ignition switch to OFF. 2) Disconnect the connectors from TCM and transmission. 3) Measure the resistance of harness between TCM and transmission connector. ***Connector & terminal*** ***(B54) No. 17 — (B11) No. 15:*** ***(B55) No. 8 — (B11) No. 4:*** ***(B54) No. 5 — Chassis ground:*** ***(B54) No. 14 — Chassis ground:***	Is the resistance less than 1 Ω?	Go to step **2.**	Repair the open circuit in harness between TCM and transmission connector.
2	**CHECK HARNESS CONNECTOR BETWEEN TCM AND CHASSIS GROUND.** Measure resistance of harness between TCM connector and chassis ground. ***Connector & terminal*** ***(B54) No. 17 — Chassis ground:*** ***(B55) No. 8 — Chassis ground:***	Is the resistance more than 1 MΩ?	Go to step **3.**	Repair the short circuit in harness between TCM and transmission connector.
3	**CHECK INPUT SIGNAL FOR TCM USING SUBARU SELECT MONITOR.** 1) Connect all the connectors. 2) Turn the ignition switch to ON. (engine OFF) 3) Check input signal of H&LR/C oil pressure SW.	Is OFF displayed?	Go to step **4.**	Go to step **7.**
4	**CHECK INPUT SIGNAL FOR TCM USING SUBARU SELECT MONITOR.** 1) Turn the ignition switch to OFF. 2) Turn the ignition switch to ON. (engine ON) 3) Drive the vehicle on 2nd speed of “D” range with checking current gear position using Subaru Select Monitor. 4) Check input signal of H&LR/C oil pressure SW.	Is OFF displayed?	Go to step **5.**	Replace the control valve body. <Ref. to 5AT-57, Control Valve Body.>
5	**CHECK INPUT SIGNAL FOR TCM USING SUBARU SELECT MONITOR.** 1) Turn the ignition switch to OFF. 2) Turn the ignition switch to ON. (engine ON) 3) Shift to “D” range and brake ON (1st) with checking current gear position using Subaru Select Monitor. 4) Check input signal of H&LR/C oil pressure SW.	Is the ON displayed?	Even if the SPORT indicator lights blinks, the system is in normal condition. A temporary poor contact of connector or harness may be the cause. Repair the poor contact of harness in the solenoid output and oil pressure SW input.	Go to step **6.**

	Step	Check	Yes	No
6	**CHECK HARNESS CONNECTOR BETWEEN TRANSMISSION AND CONTROL VALVE BODY.** 1) Turn the ignition switch to OFF. 2) Disconnect the connector from transmission. 3) Remove the transmission connector from bracket. 4) Lift-up the vehicle and place it on rigid racks. 5) Drain the ATF. 6) Remove the oil pan, and disconnect the control valve body connector. 7) Measure the resistance between transmission connector and control valve body connector. ***Connector & terminal*** ***(T4) No. 15 — (T11) No. 12:*** ***(T4) No. 4 — (T10) No. 12:***	Is the resistance less than 1 Ω?	Replace the control valve body. <Ref. to 5AT-57, Control Valve Body.>	Repair the open circuit in harness between control valve body connector and transmission connector.
7	**CHECK HARNESS CONNECTOR BETWEEN TRANSMISSION AND CONTROL VALVE BODY.** 1) Turn the ignition switch to OFF. 2) Disconnect the connector from transmission. 3) Remove the transmission connector from bracket. 4) Lift-up the vehicle and place it on rigid racks. 5) Drain the ATF. 6) Remove the oil pan, and disconnect the control valve body connector. 7) Measure the resistance between transmission ground and control valve body connector. ***Connector & terminal*** ***(T4) No. 15 — Transmission ground:*** ***(T4) No. 4 — Transmission ground:***	Is the resistance more than 1 MΩ?	Replace the control valve body. <Ref. to 5AT-57, Control Valve Body.>	Repair the short circuit in harness between control valve body connector and transmission connector.

W: DTC P0763 SHIFT SOLENOID “C” ELECTRICAL

DTC DETECTING CONDITION:

Output signal circuit of high & low reverse clutch solenoid is open or shorted.

TROUBLE SYMPTOM:

Locked to 4th gear.

WIRING DIAGRAM:

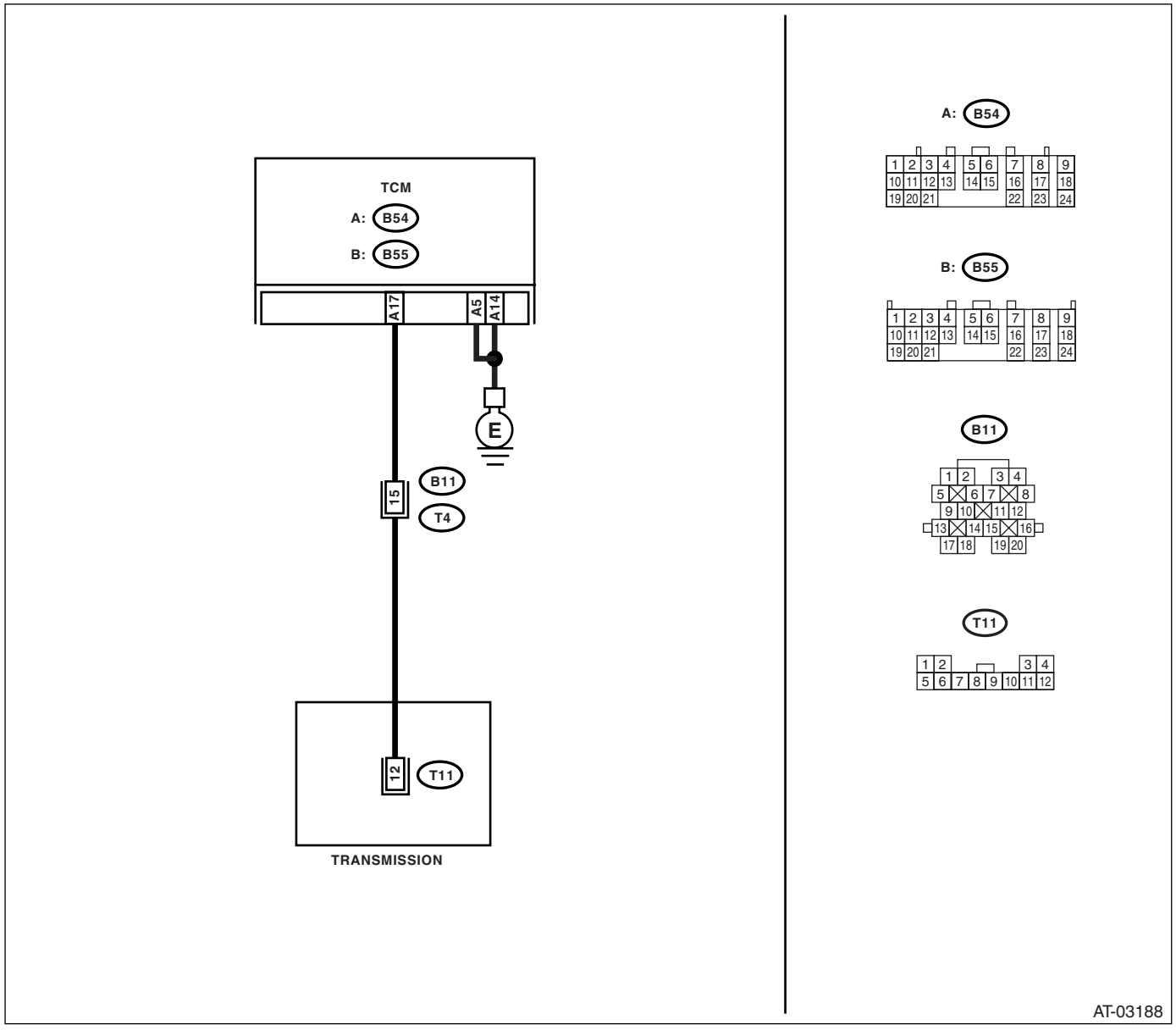

	Step	Check	Yes	No
1	**CHECK HARNESS CONNECTOR BETWEEN TCM AND TRANSMISSION.** 1) Turn the ignition switch to OFF. 2) Disconnect the connectors from TCM and transmission. 3) Measure the resistance of harness between TCM and transmission connector. ***Connector & terminal*** ***(B54) No. 17 — (B11) No. 15:*** ***(B54) No. 5 — Chassis ground:*** ***(B54) No. 14 — Chassis ground:***	Is the resistance less than 1 Ω?	Go to step **2.**	Repair the open circuit in harness between TCM connector and transmission connector.
2	**CHECK HARNESS CONNECTOR BETWEEN TCM AND CHASSIS GROUND.** Measure resistance of harness between TCM connector and chassis ground. ***Connector & terminal*** ***(B54) No. 17 — Chassis ground:***	Is the resistance more than 1 MΩ?	Go to step **3.**	Repair the short circuit in harness between TCM connector and transmission connector.
3	**CHECK HARNESS CONNECTOR BETWEEN TRANSMISSION AND CONTROL VALVE BODY.** 1) Turn the ignition switch to OFF. 2) Disconnect the connector from transmission. 3) Remove the transmission connector from bracket. 4) Lift-up the vehicle and place it on rigid racks. 5) Drain the ATF. 6) Remove the oil pan, and disconnect the control valve body connector. 7) Measure the resistance between transmission connector and control valve body connector. ***Connector & terminal*** ***(T4) No. 15 — (T11) No. 12:***	Is the resistance less than 1 Ω?	Go to step **4.**	Repair the open circuit in harness between control valve body connector and transmission connector.
4	**CHECK HARNESS CONNECTOR BETWEEN TRANSMISSION AND CONTROL VALVE BODY.** Measure the resistance of harness connector between control valve body connector and chassis ground. ***Connector & terminal*** ***(T11) No. 12 — Chassis ground:***	Is the resistance more than 1 MΩ?	Go to step **5.**	Repair the open circuit in harness between control valve body connector and transmission ground.
5	**CHECK HIGH & LOW REVERSE CLUTCH SOLENOID.** Measure the resistance between transmission ground and control valve body connector. ***Connector & terminal*** ***(T11) No. 12 — Transmission ground:***	Is the resistance 3 — 9 Ω?	Go to step **6.**	Replace the control valve body. <Ref. to 5AT-57, Control Valve Body.>
6	**CHECK POOR CONTACT.** Check that there are no poor contact in TCM connector, transmission connector and control valve body connector.	Is there any loosing terminal, entering foreign matter, damaging connector body?	Repair the poor contact.	Go to step **7.**
7	**CHECK AFTER REPAIR.** 1) Perform the clear memory mode. 2) Drive for a while, read the DTC, and verify that there is no faulty.	Is DTC displayed?	Replace the TCM. <Ref. to 5AT-60, Transmission Control Module (TCM).>	Temporary poor contact or open circuit occurs. Recheck that the harness connector has no faulty.

X: DTC P0766 SHIFT SOLENOID “D” PERFORMANCE OR STUCK OFF

DTC DETECTING CONDITION:

Output signal value of direct clutch solenoid and oil pressure does not match.

TROUBLE SYMPTOM:

Locked to 4th gear.

WIRING DIAGRAM:

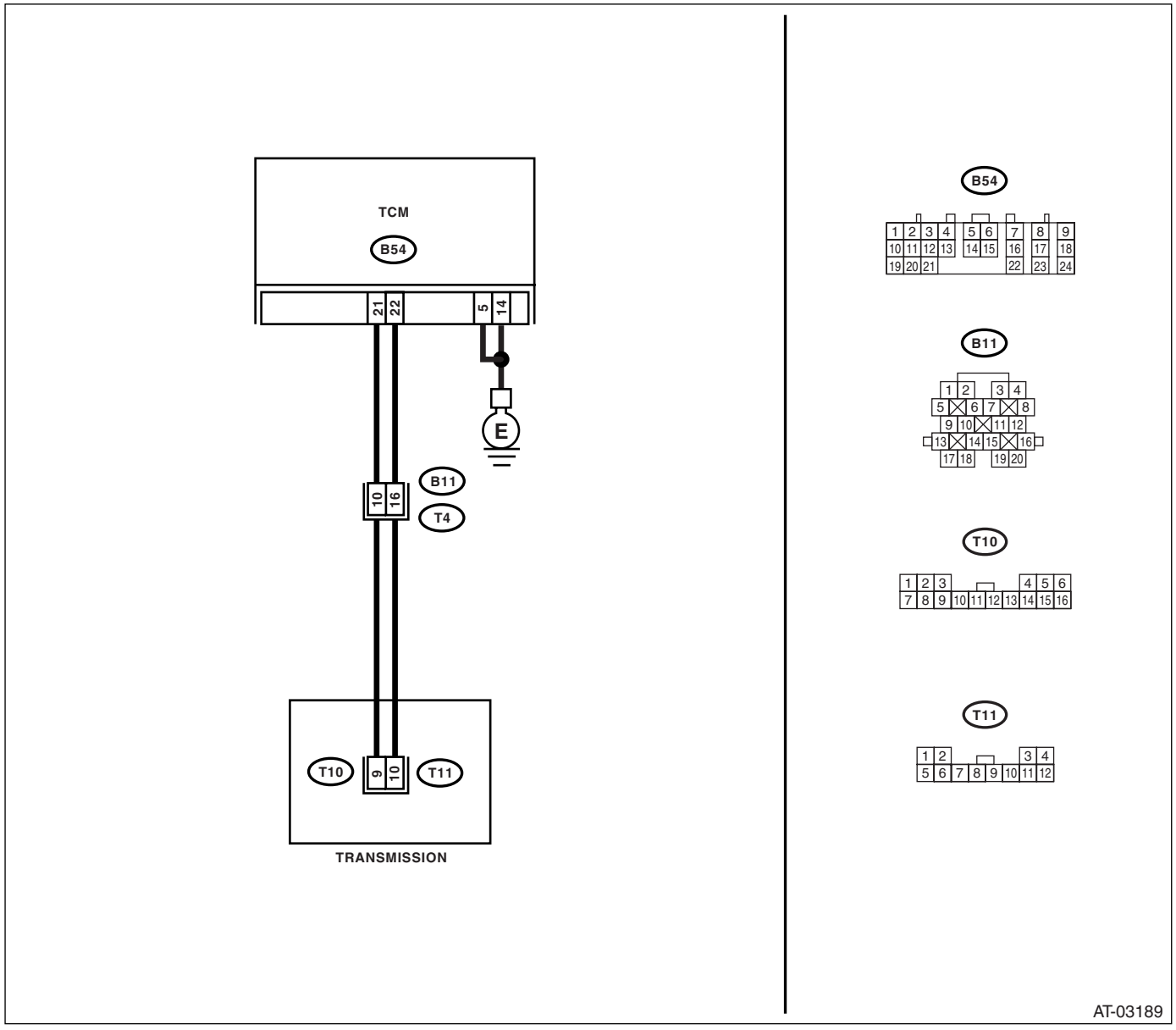

	Step	Check	Yes	No
1	**CHECK HARNESS CONNECTOR BETWEEN TCM AND TRANSMISSION.** 1) Turn the ignition switch to OFF. 2) Disconnect the connectors from TCM and transmission. 3) Measure the resistance of harness between TCM and transmission connector. ***Connector & terminal*** ***(B54) No. 22 — (B11) No. 16:*** ***(B54) No. 21 — (B11) No. 10:*** ***(B54) No. 5 — Chassis ground:*** ***(B54) No. 14 — Chassis ground:***	Is the resistance less than 1 Ω?	Go to step **2.**	Repair the open circuit in harness between TCM and transmission connector.
2	**CHECK HARNESS CONNECTOR BETWEEN TCM AND BODY HARNESS.** Measure resistance of harness between TCM connector and body harness. ***Connector & terminal*** ***(B54) No. 22 — Chassis ground:*** ***(B54) No. 21 — Chassis ground:***	Is the resistance more than 1 MΩ?	Go to step **3.**	Repair the short circuit in harness between TCM and transmission connector.
3	**CHECK INPUT SIGNAL FOR TCM USING SUBARU SELECT MONITOR.** 1) Connect all the connectors. 2) Turn the ignition switch to ON. (engine OFF) 3) Check input signal of D/C oil pressure SW.	Is OFF displayed?	Go to step **4.**	Go to step **7.**
4	**CHECK INPUT SIGNAL FOR TCM USING SUBARU SELECT MONITOR.** 1) Turn the ignition switch to OFF. 2) Turn the ignition switch to ON. (engine ON) 3) Shift to “D” range and brake ON (1st) with checking current gear position using Subaru Select Monitor. 4) Check input signal of D/C oil pressure SW.	Is OFF displayed?	Go to step **5.**	Replace the control valve body. <Ref. to 5AT-57, Control Valve Body.>
5	**CHECK INPUT SIGNAL FOR TCM USING SUBARU SELECT MONITOR.** 1) Turn the ignition switch to OFF. 2) Turn the ignition switch to ON. (engine ON) 3) Shift to 2nd speed of manual mode and brake ON with checking current gear position using Subaru Select Monitor. 4) Check input signal of D/C oil pressure SW.	Is the ON displayed?	Even if the SPORT indicator lights blinks, the system is in normal condition. A temporary poor contact of connector or harness may be the cause. Repair the poor contact of harness in the solenoid output and oil pressure SW input.	Go to step **6.**

	Step	Check	Yes	No
6	**CHECK HARNESS CONNECTOR BETWEEN TRANSMISSION AND CONTROL VALVE BODY.** 1) Turn the ignition switch to OFF. 2) Disconnect the connector from transmission. 3) Remove the transmission connector from bracket. 4) Lift-up the vehicle and place it on rigid racks. 5) Drain the ATF. 6) Remove the oil pan, and disconnect the control valve body connector. 7) Measure the resistance between transmission connector and control valve body connector. ***Connector & terminal*** ***(T4) No. 16 — (T11) No. 10:*** ***(T4) No. 10 — (T10) No. 9:***	Is the resistance less than 1 Ω?	Replace the control valve body. <Ref. to 5AT-57, Control Valve Body.>	Repair the open circuit in harness between control valve body connector and transmission connector.
7	**CHECK HARNESS CONNECTOR BETWEEN TRANSMISSION AND CONTROL VALVE BODY.** 1) Turn the ignition switch to OFF. 2) Disconnect the connector from transmission. 3) Remove the transmission connector from bracket. 4) Lift-up the vehicle and place it on rigid racks. 5) Drain the ATF. 6) Remove the oil pan, and disconnect the control valve body connector. 7) Measure the resistance between chassis ground and control valve body connector. ***Connector & terminal*** ***(T11) No. 10 — Chassis ground:*** ***(T10) No. 9 — Chassis ground:***	Is the resistance more than 1 MΩ?	Replace the control valve body. <Ref. to 5AT-57, Control Valve Body.>	Repair the short circuit in harness between control valve body connector and transmission connector.

Y: DTC P0768 SHIFT SOLENOID "D" ELECTRICAL

DTC DETECTING CONDITION:

The output signal circuit of direct clutch solenoid is open or shorted.

TROUBLE SYMPTOM:

Locked to 4th gear.

WIRING DIAGRAM:

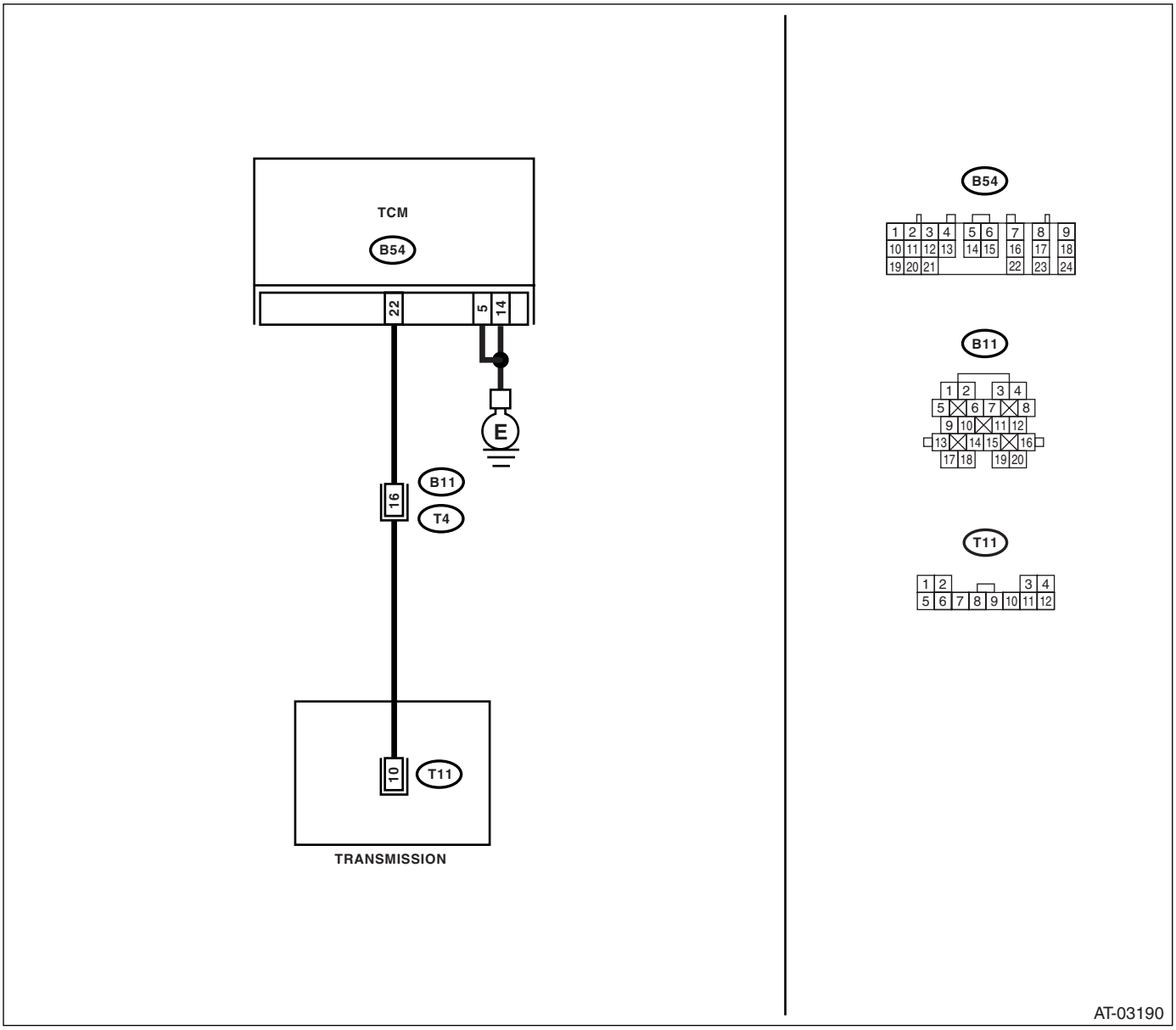

Step		Check	Yes	No
1	**CHECK HARNESS CONNECTOR BETWEEN TCM AND TRANSMISSION.** 1) Turn the ignition switch to OFF. 2) Disconnect the connectors from TCM and transmission. 3) Measure the resistance of harness between TCM and transmission connector. ***Connector & terminal*** ***(B54) No. 22 — (B11) No. 16:*** ***(B54) No. 5 — Chassis ground:*** ***(B54) No. 14 — Chassis ground:***	Is the resistance less than 1 Ω?	Go to step **2.**	Repair the open circuit in harness between TCM connector and transmission connector.

	Step	Check	Yes	No
2	**CHECK HARNESS CONNECTOR BETWEEN TCM AND CHASSIS GROUND.** Measure resistance of harness between TCM connector and chassis ground. ***Connector & terminal*** ***(B54) No. 22 — Chassis ground:***	Is the resistance more than 1 MΩ?	Go to step **3.**	Repair the short circuit in harness between TCM connector and transmission connector.
3	**CHECK HARNESS CONNECTOR BETWEEN TRANSMISSION AND CONTROL VALVE BODY.** 1) Turn the ignition switch to OFF. 2) Disconnect the connector from transmission. 3) Remove the transmission connector from bracket. 4) Lift-up the vehicle and place it on rigid racks. 5) Drain the ATF. 6) Remove the oil pan, and disconnect the control valve body connector. 7) Measure the resistance between transmission connector and control valve body connector. ***Connector & terminal*** ***(T4) No. 16 — (T11) No. 10:***	Is the resistance less than 1 Ω?	Go to step **4.**	Repair the open circuit in harness between control valve body connector and transmission connector.
4	**CHECK HARNESS CONNECTOR BETWEEN TRANSMISSION AND CONTROL VALVE BODY.** Measure the resistance between chassis ground and control valve body connector. ***Connector & terminal*** ***(T11) No. 10 — Chassis ground:***	Is the resistance more than 1 MΩ?	Go to step **5.**	Repair the short circuit in harness between control valve body connector and transmission ground.
5	**CHECK DIRECT CLUTCH SOLENOID.** Measure the resistance of harness connector between control valve body connector and transmission ground. ***Connector & terminal*** ***(T11) No. 10 — Transmission ground:***	Is the resistance 3 — 9 Ω?	Go to step **6.**	Replace the control valve body. <Ref. to 5AT-57, Control Valve Body.>
6	**CHECK POOR CONTACT.** Check that there are no poor contact in TCM connector, transmission connector and control valve body connector.	Is there any loosing terminal, entering foreign matter, damaging connector body?	Repair the poor contact.	Go to step **7.**
7	**CHECK AFTER REPAIR.** 1) Perform the clear memory mode. 2) Drive for a while, read the DTC, and verify that there is no faulty.	Is DTC displayed?	Replace the TCM. <Ref. to 5AT-60, Transmission Control Module (TCM).>	Temporary poor contact or open circuit occurs. Recheck that the harness connector has no faulty.

Z: DTC P0771 SHIFT SOLENOID "E" PERFORMANCE OR STUCK OFF

DTC DETECTING CONDITION:

Output signal value of low coast brake solenoid and oil pressure does not match.

TROUBLE SYMPTOM:

- Locked to 2nd gear.
- Engine brake does not function at 1st or 2nd of manual mode.

WIRING DIAGRAM:

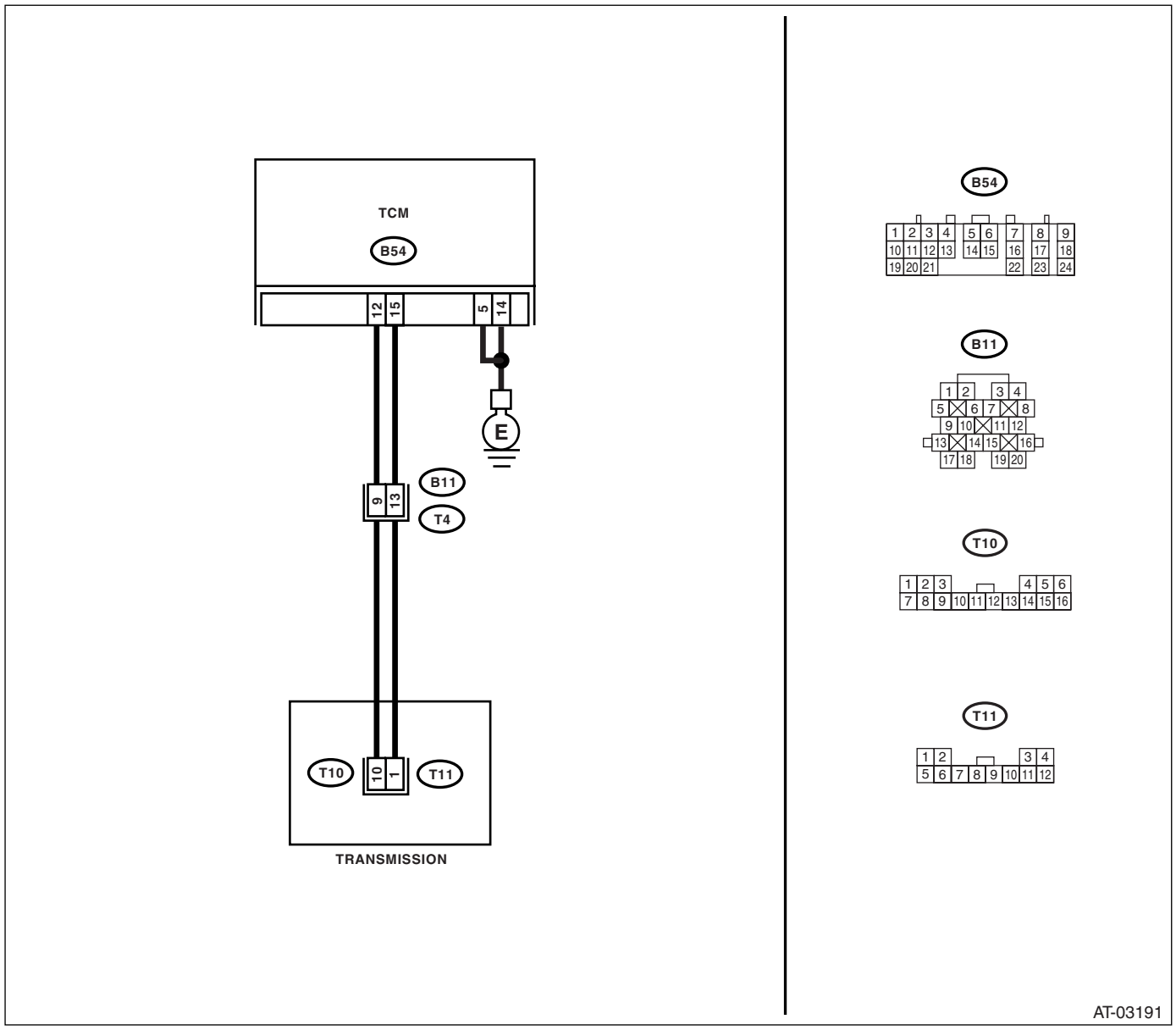

	Step	Check	Yes	No
1	**CHECK HARNESS CONNECTOR BETWEEN TCM AND TRANSMISSION.** 1) Turn the ignition switch to OFF. 2) Disconnect the connectors from TCM and transmission. 3) Measure the resistance of harness between TCM and transmission connector. ***Connector & terminal*** ***(B54) No. 15 — (B11) No. 13:*** ***(B54) No. 12 — (B11) No. 9:*** ***(B54) No. 5 — Chassis ground:*** ***(B54) No. 14 — Chassis ground:***	Is the resistance less than 1 Ω?	Go to step **2.**	Repair the open circuit in harness between TCM and transmission connector.
2	**CHECK HARNESS CONNECTOR BETWEEN TCM AND CHASSIS GROUND.** Measure the resistance between TCM connector and chassis ground. ***Connector & terminal*** ***(B54) No. 15 — Chassis ground:*** ***(B54) No. 12 — Chassis ground:***	Is the resistance more than 1 MΩ?	Go to step **3.**	Repair the short circuit in harness between TCM and transmission connector.
3	**CHECK INPUT SIGNAL FOR TCM USING SUBARU SELECT MONITOR.** 1) Connect all the connectors. 2) Turn the ignition switch to ON. (engine OFF) 3) Check input signal of LC/B oil pressure SW.	Is OFF displayed?	Go to step **4.**	Go to step **7.**
4	**CHECK INPUT SIGNAL FOR TCM USING SUBARU SELECT MONITOR.** 1) Turn the ignition switch to OFF. 2) Turn the ignition switch to ON. (engine ON) 3) Shift to 3rd speed with checking current gear position using Subaru Select Monitor. 4) Check input signal of LC/B oil pressure SW.	Is OFF displayed?	Go to step **5.**	Replace the control valve body. <Ref. to 5AT-57, Control Valve Body.>
5	**CHECK INPUT SIGNAL FOR TCM USING SUBARU SELECT MONITOR.** 1) Turn the ignition switch to OFF. 2) Turn the ignition switch to ON. (engine ON) 3) Drive the vehicle on 2nd speed of manual mode 15 km/h (9 MPH) with checking current gear position using Subaru Select Monitor. 4) Check input signal of LC/B oil pressure SW.	Is the ON displayed?	Even if the SPORT indicator lights blinks, the system is in normal condition. A temporary poor contact of connector or harness may be the cause. Repair the poor contact of harness in the solenoid output and oil pressure SW input.	Go to step **6.**

	Step	Check	Yes	No
6	**CHECK HARNESS CONNECTOR BETWEEN TRANSMISSION AND CONTROL VALVE BODY.** 1) Turn the ignition switch to OFF. 2) Disconnect the connector from transmission. 3) Remove the transmission connector from bracket. 4) Lift-up the vehicle and place it on rigid racks. 5) Drain the ATF. 6) Remove the oil pan, and disconnect the control valve body connector. 7) Measure the resistance between transmission connector and control valve body connector. ***Connector & terminal*** ***(T4) No. 13 — (T11) No. 1:*** ***(T4) No. 9 — (T10) No. 10:***	Is the resistance less than 1 Ω?	Replace the control valve body. <Ref. to 5AT-57, Control Valve Body.>	Repair the open circuit in harness between control valve body connector and transmission connector.
7	**CHECK HARNESS CONNECTOR BETWEEN TRANSMISSION AND CONTROL VALVE BODY.** 1) Turn the ignition switch to OFF. 2) Disconnect the connector from transmission. 3) Remove the transmission connector from bracket. 4) Lift-up the vehicle and place it on rigid racks. 5) Drain the ATF. 6) Remove the oil pan, and disconnect the control valve body connector. 7) Measure the resistance between chassis ground and control valve body connector. ***Connector & terminal*** ***(T11) No. 1 — Chassis ground:*** ***(T10) No. 10 — Chassis ground:***	Is the resistance more than 1 MΩ?	Replace the control valve body. <Ref. to 5AT-57, Control Valve Body.>	Repair the short circuit in harness between control valve body connector and transmission connector.

AA:DTC P0773 SHIFT SOLENOID “E” ELECTRICAL

DTC DETECTING CONDITION:

Output signal circuit of low coast brake solenoid is open or shorted.

TROUBLE SYMPTOM:

- Locked to 2nd gear.
- Engine brake does not function at 1st or 2nd of manual mode.

WIRING DIAGRAM:

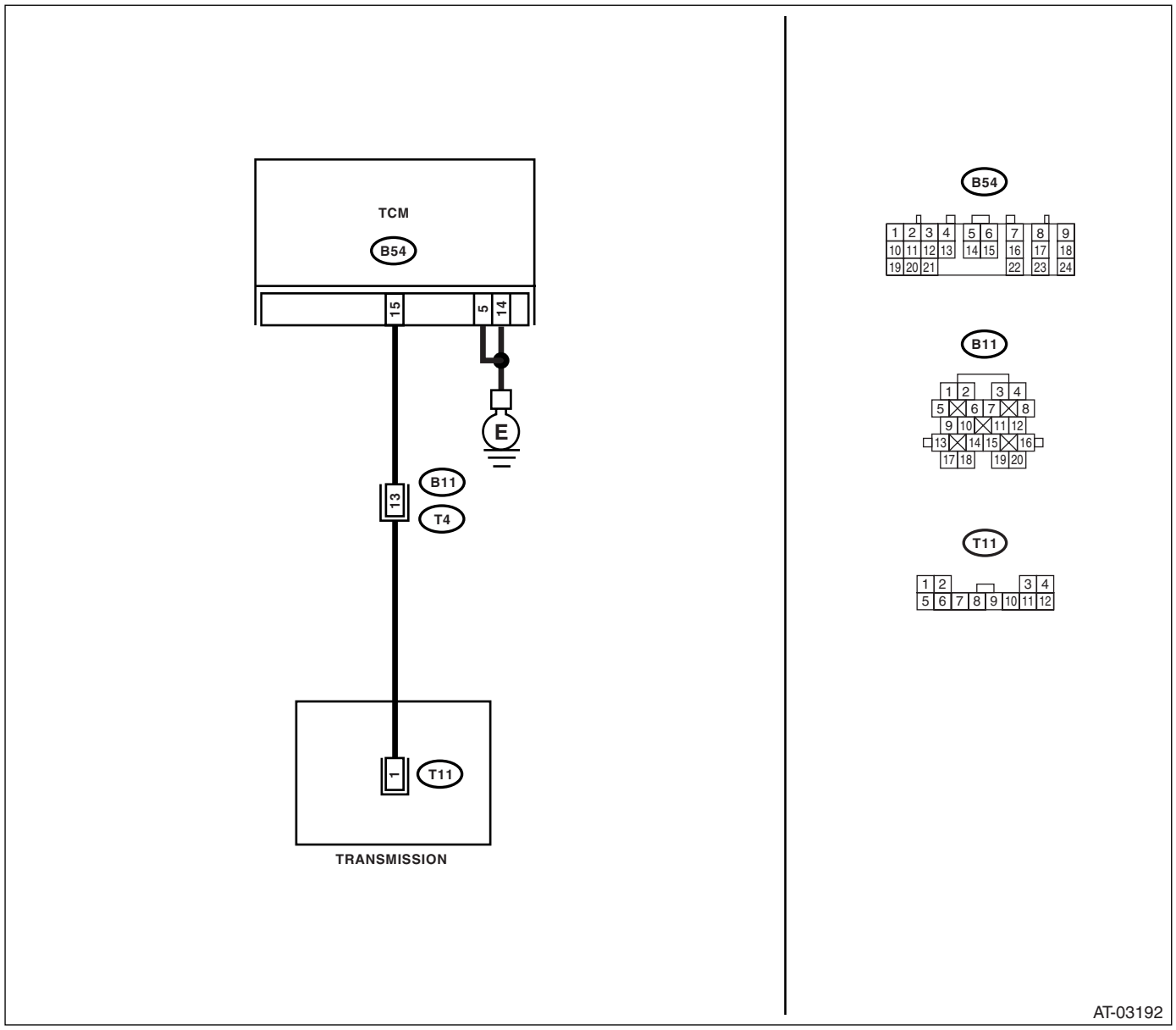

	Step	Check	Yes	No
1	**CHECK DTC OF TCM.**	Is DTC of PVIGN relay detected?	Perform the diagnosis according to DTC.	Go to step **2.**
2	**CHECK HARNESS CONNECTOR BETWEEN TCM AND TRANSMISSION.** 1) Turn the ignition switch to OFF. 2) Disconnect the connectors from TCM and transmission. 3) Measure the resistance of harness between TCM and transmission connector. ***Connector & terminal*** ***(B54) No. 15 — (B11) No. 13:*** ***(B54) No. 5 — Chassis ground:*** ***(B54) No. 14 — Chassis ground:***	Is the resistance less than 1 Ω?	Go to step **3.**	Repair the open circuit in harness between TCM connector and transmission connector.
3	**CHECK HARNESS CONNECTOR BETWEEN TCM AND BODY HARNESS.** Measure resistance of harness between TCM connector and body harness. ***Connector & terminal*** ***(B54) No. 15 — Chassis ground:***	Is the resistance more than 1 MΩ?	Go to step **4.**	Repair the short circuit in harness between TCM connector and transmission connector.
4	**CHECK HARNESS CONNECTOR BETWEEN TRANSMISSION AND CONTROL VALVE BODY.** 1) Turn the ignition switch to OFF. 2) Disconnect the connector from transmission. 3) Remove the transmission connector from bracket. 4) Lift-up the vehicle and place it on rigid racks. 5) Drain the ATF. 6) Remove the oil pan, and disconnect the control valve body connector. 7) Measure the resistance between transmission connector and control valve body connector. ***Connector & terminal*** ***(T4) No. 13 — (T11) No. 1:***	Is the resistance less than 1 Ω?	Go to step **5.**	Repair the open circuit in harness between control valve body connector and transmission connector.
5	**CHECK HARNESS CONNECTOR BETWEEN TRANSMISSION AND CONTROL VALVE BODY.** Measure the resistance between chassis ground and control valve body connector. ***Connector & terminal*** ***(T11) No. 1 — Chassis ground:***	Is the resistance more than 1 MΩ?	Go to step **6.**	Repair the short circuit in harness between control valve body connector and transmission ground.
6	**CHECK LOW COAST BRAKE SOLENOID.** Measure the resistance of harness connector between control valve body connector and transmission ground. ***Connector & terminal*** ***(T11) No. 1 — Transmission ground:***	Is the resistance between 5 — 17 Ω?	Go to step **7.**	Replace the control valve body. <Ref. to 5AT-57, Control Valve Body.>
7	**CHECK POOR CONTACT.** Check that there are no poor contact in TCM connector, transmission connector and control valve body connector.	Is there any loosing terminal, entering foreign matter, damaging connector body?	Repair the poor contact.	Go to step **8.**

	Step	Check	Yes	No
8	**CHECK AFTER REPAIR.** 1) Perform the clear memory mode. 2) Drive for a while, read the DTC, and verify that there is no faulty.	Is DTC displayed?	Replace the TCM. <Ref. to 5AT-60, Transmission Control Module (TCM).>	Perform the diagnosis according to DTC P0882. <Ref. to 5AT(diag)-89, DTC P0882 TCM POWER INPUT SIGNAL LOW, Diagnostic Procedure with Diagnostic Trouble Code (DTC).>

AB:DTC P0801 REVERSE INHIBIT CONTROL CIRCUIT

DTC DETECTING CONDITION:

Shift lock solenoid malfunction, open or short reverse inhibitor control circuit

TROUBLE SYMPTOM:

- Gear is shifted from “N” range to “R” range during driving at 20 km/h 12 MPH) or more.
- Gear can not be shifted from “N” range to “R” range though the vehicle is parked.

WIRING DIAGRAM:

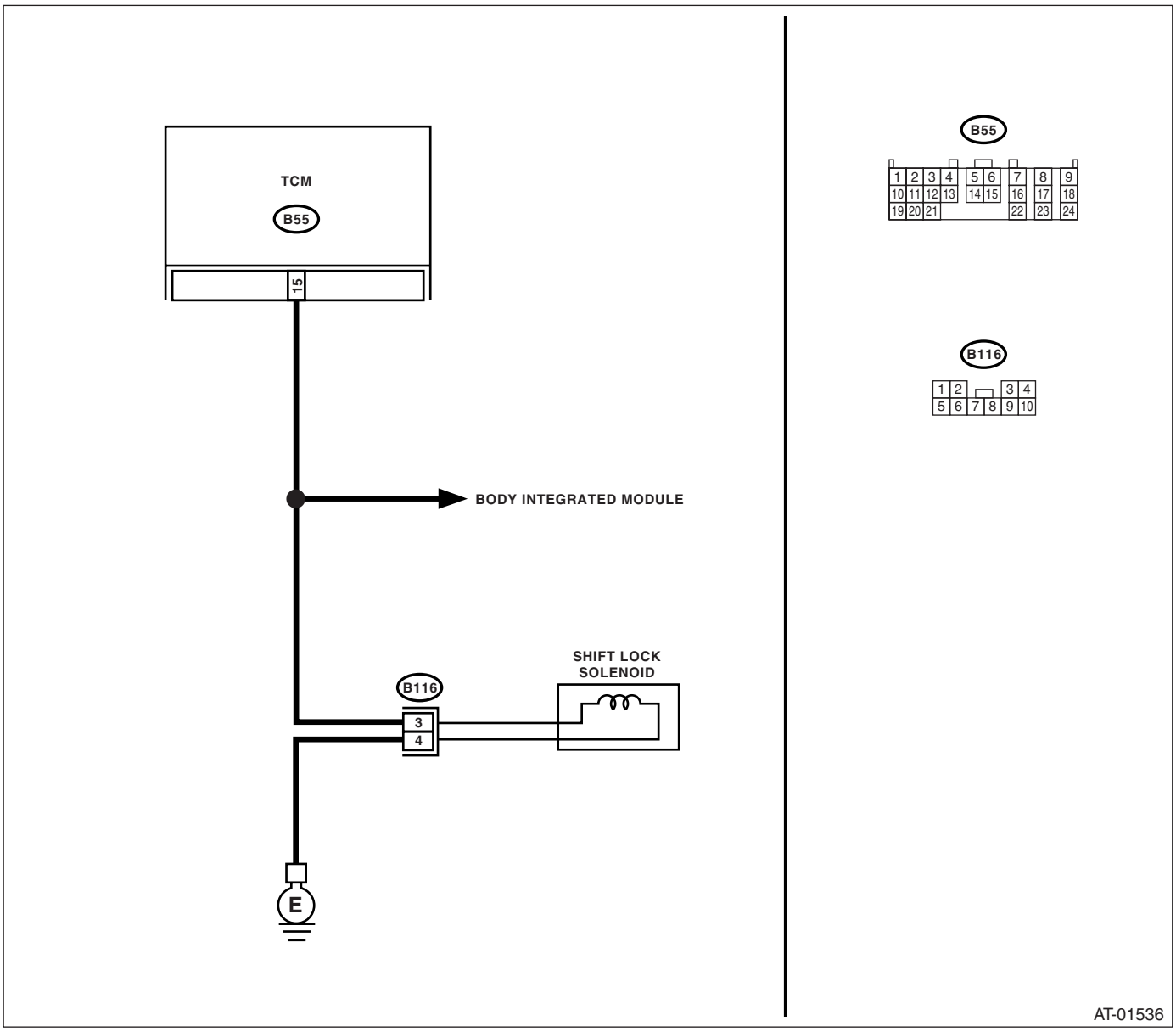

Step		Check	Yes	No
1	**CHECK FUSE.** 1) Turn the ignition switch to OFF. 2) Remove the fuse M/B (No. 12).	Is the fuse M/B (No. 12) blown out?	Replace the fuse M/B (No. 12). If the replaced fuse has blown out easily, repair the short circuit in harness between fuse M/B (No. 12) and TCM.	Go to step **2.**

	Step	Check	Yes	No
2	**CHECK OUTPUT SIGNAL OF TCM.** 1) Turn the ignition switch to ON. 2) With the brake pedal depressed, shift the select lever to “D” range. 3) Measure the voltage between TCM and chassis ground. ***Connector & terminal*** ***(B55) No. 15 (+) — Chassis ground (−):***	Is the voltage more than 10.5 V?	Go to step **3.**	Replace the TCM. <Ref. to 5AT-60, Transmission Control Module (TCM).>
3	**CHECK HARNESS CONNECTOR BETWEEN TCM AND SHIFT LOCK SOLENOID.** 1) Turn the ignition switch to OFF. 2) Disconnect the connector from TCM and shift lock solenoid. 3) Measure the resistance of harness between TCM and shift lock solenoid connector. ***Connector & terminal*** ***(B55) No. 15 — (B116) No. 3:***	Is the resistance less than 1 Ω?	Go to step **4.**	Repair the open circuit in harness between TCM and shift lock solenoid connector.
4	**CHECK HARNESS CONNECTOR BETWEEN TCM AND SHIFT LOCK SOLENOID.** Measure the voltage of harness between TCM and chassis ground. ***Connector & terminal*** ***(B55) No. 15 — Chassis ground:***	Is the resistance more than 1 MΩ?	Go to step **5.**	Repair the short circuit in harness between TCM and shift lock solenoid connector.
5	**CHECK HARNESS BETWEEN SHIFT LOCK SOLENOID AND CHASSIS GROUND TERMINAL.** Measure the resistance of harness between shift lock solenoid and chassis ground. ***Connector & terminal*** ***(B116) No. 4 — Chassis ground:***	Is the resistance less than 1 Ω?	Go to step **6.**	Repair the open circuit in harness between chassis ground and shift lock solenoid connector.
6	**CHECK SHIFT LOCK SOLENOID.** Measure the resistance of shift lock solenoid terminals. ***Connector & terminal*** ***(B116) No. 3 — No. 4:***	Is the resistance 7 — 21 Ω?	Go to step **7.**	Replace the shift lock solenoid.
7	**CHECK OUTPUT SIGNAL OF TCM.** 1) Lift-up the vehicle and support with rigid racks. NOTE: Raise all wheels off floor. 2) Start the engine. 3) Shift the select lever to “D” range and slowly increase vehicle speed to 20 km/h (12 MPH). NOTE: The speed difference between front and rear wheels may light the ABS warning light, but this indicates no malfunction. When AT control diagnosis is finished, perform the ABS memory clearance procedure of on-board diagnostics system. <Ref. to ABS(diag)-25, Clear Memory Mode.> 4) Measure the voltage between TCM and chassis ground. ***Connector & terminal*** ***(B55) No. 15 (+) — Chassis ground (−):***	Is the voltage less than 1 V?	Even if the SPORT indicator lights up, the circuit has returned to normal condition at this time. A temporary poor contact of connector or harness may be the cause. Repair harness or connector in reverse inhibitor control circuit.	Go to step **8.**

Step	Check	Yes	No
8 CHECK POOR CONTACT.	Is there poor contact in the reverse inhibitor control circuit?	Repair the poor contact.	Replace the TCM. <Ref. to 5AT-60, Transmission Control Module (TCM).>

AC:DTC P0817 STARTER DISABLE CIRCUIT

DTC DETECTING CONDITION:

Open or short in P/N signal output circuit

TROUBLE SYMPTOM:

- Engine can be started on other than “P” or “N” range
- Engine can not be started on “P” or “N” range

WIRING DIAGRAM:

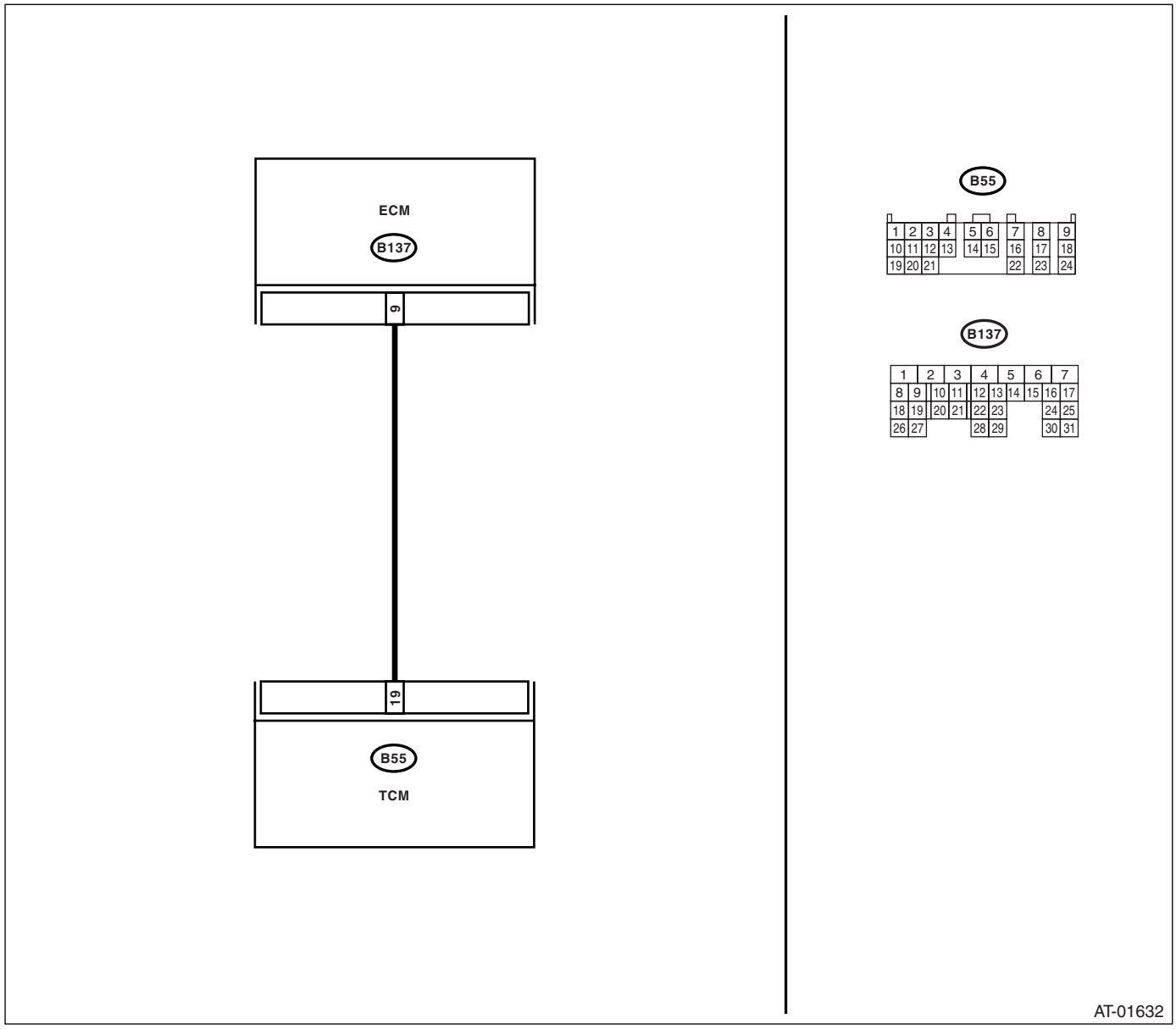

	Step	Check	Yes	No
1	**CHECK DTC OF TCM.**	Is DTC of Transmission Range Sensor Circuit (PRNDL Input) circuit detected?	Perform the diagnosis according to DTC.	Go to step **2.**
2	**CHECK ECM.**	Is the communication between Subaru Select Monitor and ECM normal?	Go to step **3.**	Perform the diagnosis according to DTC concerning ECM.
3	**CHECK FUSE (No. 32).** 1) Turn the ignition switch to OFF. 2) Remove the fuse.	Is the fuse (No. 32) blown out?	Replace the fuse (No. 32). If the replaced fuse (No. 32) has blown out easily, repair the short circuit in harness between fuse (No. 32) and TCM.	Go to step **4.**
4	**CHECK HARNESS CONNECTOR BETWEEN TCM AND ECM.** 1) Turn the ignition switch to OFF. 2) Disconnect the connectors from TCM and transmission. 3) Measure the resistance of harness between TCM and transmission connector. ***Connector & terminal*** ***(B55) No. 19 — (B137) No. 9:***	Is the resistance less than 1 Ω?	Go to step **5.**	Repair the open circuit in harness between TCM and transmission connector, and poor contact in coupling connector.
5	**CHECK HARNESS CONNECTOR BETWEEN TCM AND ECM.** Measure the resistance of harness between TCM connector and chassis ground. ***Connector & terminal*** ***(B55) No. 19 — Chassis ground:***	Is the resistance more than 1 MΩ?	Go to step **6.**	Repair the short circuit in harness between transmission connector and chassis ground.
6	**CHECK TCM OUTPUT SIGNAL.** 1) Connect the TCM and ECM connector. 2) Turn the ignition switch to ON. (engine OFF) 3) Shift the select lever to “P” range. 4) Measure the voltage between TCM connector and chassis ground. ***Connector & terminal*** ***(B55) No. 19 (+) — Chassis ground (−):***	Is the voltage 1 V or less?	Go to step **7.**	Replace the TCM. <Ref. to 5AT-60, Transmission Control Module (TCM).>
7	**CHECK TCM OUTPUT SIGNAL.** 1) Shift the select lever to “D” range. 2) Measure the voltage between TCM connector and chassis ground. ***Connector & terminal*** ***(B55) No. 19 (+) — Chassis ground (−):***	Is the voltage 10 V or more?	Go to step **8.**	Replace the TCM. <Ref. to 5AT-60, Transmission Control Module (TCM).>
8	**CHECK POOR CONTACT.**	Is there any open or poor contact of connector (loosing terminal, entering foreign matter, damaging connector body)?	Repair the poor contact.	Check neutral circuit inside the ECM.

AD:DTC P0882 TCM POWER INPUT SIGNAL LOW

DTC DETECTING CONDITION:

Malfunction of PVIGN power supply relay or open, short circuit of PVIGN power supply circuit.

TROUBLE SYMPTOM:

Gear is not changed.

WIRING DIAGRAM:

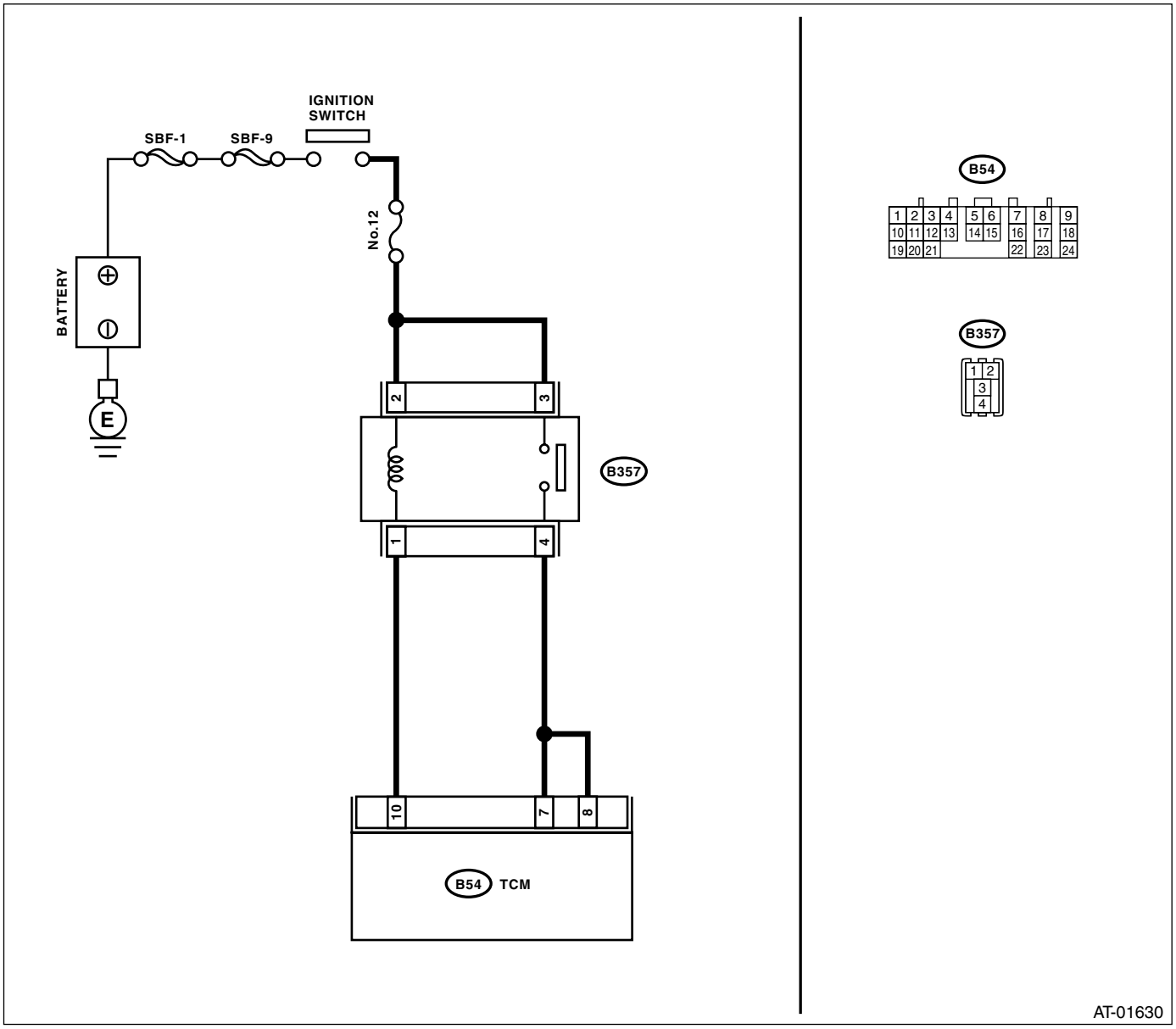

	Step	Check	Yes	No
1	**CHECK FUSE.** 1) Turn the ignition switch to OFF. 2) Remove the SBF 1, SBF 2 and fuse (No. 12), and then check those are not blown out.	Is the fuse blown out?	Replace the fuse. If the replaced fuse has blown out easily, repair the short circuit in harness of each fuse.	Go to step **2.**
2	**CHECK INPUT VOLTAGE FOR PVIGN RELAY.** Measure the voltage between PVIGN relay and chassis ground. ***Connector & terminal*** ***(B357) No. 2 (+) — Chassis ground (−):*** ***(B357) No. 3 (+) — Chassis ground (−):***	Is the voltage 10 — 13 V?	Go to step **3.**	Check open circuit in harness between fuse (No. 12) and PVIGN relay.
3	**CHECK HARNESS BETWEEN PVIGN RELAY OF TCM.** Measure the resistance between TCM connector and PVIGN relay connector. ***Connector & terminal*** ***(B54) No. 10 — (B357) No. 1:*** ***(B54) No. 7 — (B357) No. 4:*** ***(B54) No. 8 — (B357) No. 4:***	Is the resistance less than 1 Ω?	Go to step **4.**	Repair the open circuit of harness.
4	**CHECK PVIGN POWER SUPPLY CIRCUIT.** 1) Turn the ignition switch to ON. (engine OFF) 2) Measure the voltage between TCM connector and chassis ground. ***Connector & terminal*** ***(B54) No. 7 (+) — Chassis ground (−):*** ***(B54) No. 8 (+) — Chassis ground (−):***	Is the voltage 10 — 13 V?	Temporary poor contact. Recheck the harness between TCM and relay. (Lightly move the harness and check that the open or short circuit is not occurred.)	Go to step **5.**
5	**CHECK PVIGN RELAY OUTPUT OF TCM.** Measure the voltage between TCM connector and chassis ground. ***Connector & terminal*** ***(B54) No. 10 (+) — Chassis ground (−):***	Is the voltage less than 1.5 V?	Replace the PVIGN relay.	Replace the TCM. <Ref. to 5AT-60, Transmission Control Module (TCM).>

AE:DTC P0957 BACKUP LIGHT RELAY CIRCUIT LOW

DTC DETECTING CONDITION:

Short circuit of back-up light relay output circuit

TROUBLE SYMPTOM:

Back-up light does not illuminate in “R” range.

WIRING DIAGRAM:

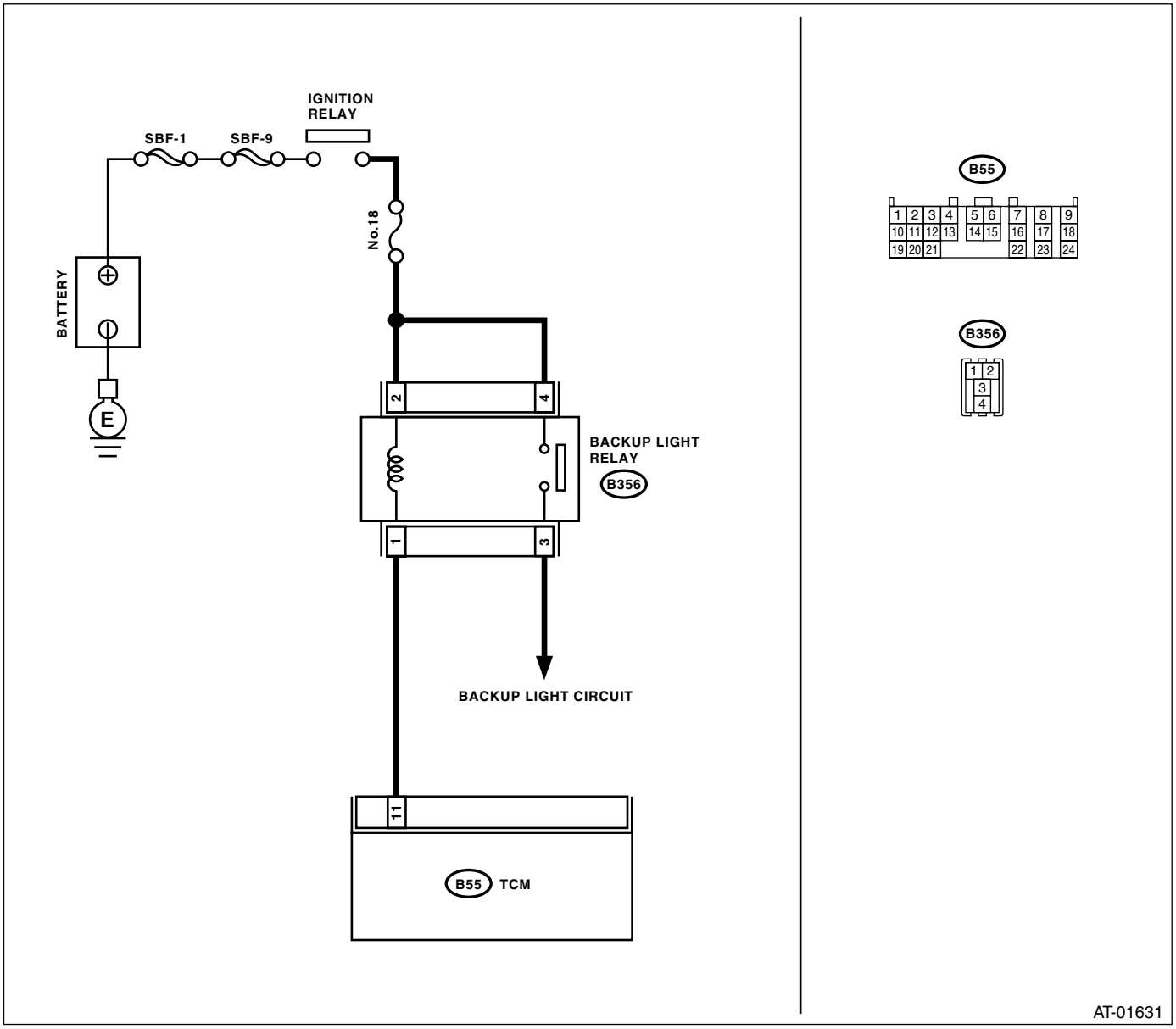

	Step	Check	Yes	No
1	**CHECK DTC OF TCM.**	Is DTC of Transmission Range Sensor Circuit (PRNDL Input) circuit detected?	Perform the diagnosis according to DTC.	Go to step **2.**
2	**CHECK HARNESS CONNECTOR BETWEEN TCM AND BACK-UP LIGHT RELAY.** 1) Turn the ignition switch to OFF. 2) Disconnect the connector from TCM and backup light relay. 3) Measure the resistance of harness between TCM and backup light relay connector. ***Connector & terminal*** ***(B55) No. 11 — (B356) No. 1:***	Is the resistance less than 1 Ω?	Go to step **3.**	Repair the open circuit in harness between TCM and transmission connector, and poor contact in coupling connector.
3	**CHECK HARNESS CONNECTOR BETWEEN TCM AND TRANSMISSION.** Measure the resistance of harness between TCM connector and chassis ground. ***Connector & terminal*** ***(B55) No. 11 — Chassis ground:***	Is the resistance more than 1 MΩ?	Go to step **4.**	Repair the short circuit in harness between TCM and transmission connector.
4	**CHECK TCM OUTPUT SIGNAL.** 1) Turn the ignition switch to ON. (engine OFF) 2) Shift the select lever to “P” range.	Is the voltage more than 10 V?	Go to step **5.**	Replace the TCM. <Ref. to 5AT-60, Transmission Control Module (TCM).>
5	**CHECK TCM OUTPUT SIGNAL.** Shift the select lever to “R” range.	Is the voltage less than 1 V?	Go to step **6.**	Replace the TCM. <Ref. to 5AT-60, Transmission Control Module (TCM).>
6	**CHECK INPUT VOLTAGE FOR BACKUP LIGHT RELAY.** Measure the voltage between back-up light relay and chassis ground.	Is the voltage 10 — 13 V?	Replace the back-up light relay.	Repair open or short circuit in harness between fuse (No. 18) and backup light relay.

AF:DTC P0958 BACKUP LIGHT RELAY CIRCUIT HIGH

DTC DETECTING CONDITION:

Back-up light relay malfunction, or open/short circuit in back-up light relay output circuit

TROUBLE SYMPTOM:

- Back-up light does not illuminate in “R” range.
- Back-up light always illuminate in other than “R” range.

WIRING DIAGRAM:

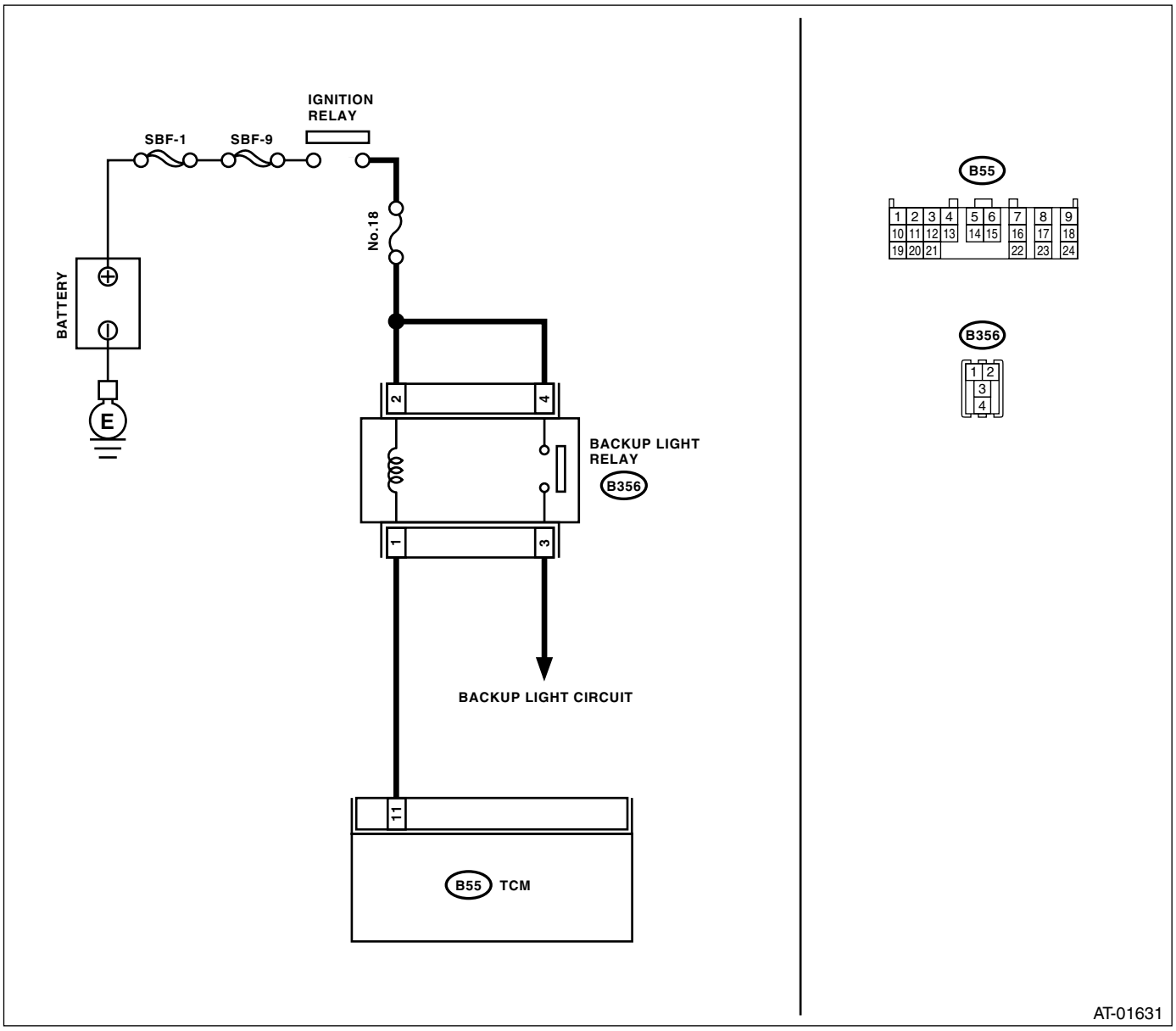

	Step	Check	Yes	No
1	**CHECK DTC OF TCM.**	Is DTC of Transmission Range Sensor Circuit (PRNDL Input) circuit detected?	Perform the diagnosis according to DTC.	Go to step **2.**
2	**CHECK HARNESS CONNECTOR BETWEEN TCM AND BACK-UP LIGHT RELAY.** 1) Turn the ignition switch to OFF. 2) Disconnect the connector from TCM and back-up light relay. 3) Measure the resistance of harness between TCM and back-up light relay connector. ***Connector & terminal*** ***(B55) No. 11 — (B356) No. 1:***	Is the resistance less than 1 Ω?	Go to step **3.**	Repair the open circuit in harness between TCM and transmission connector, and poor contact in coupling connector.
3	**CHECK HARNESS CONNECTOR BETWEEN TCM AND TRANSMISSION.** Measure the resistance of harness between TCM connector and chassis ground. ***Connector & terminal*** ***(B55) No. 11 — Chassis ground:***	Is the resistance more than 1 MΩ?	Go to step **4.**	Repair the short circuit in harness between TCM and transmission connector.
4	**CHECK TCM OUTPUT SIGNAL.** 1) Turn the ignition switch to ON. (engine OFF) 2) Shift the select lever to “P” range.	Is the voltage more than 10 V?	Go to step **5.**	Replace the TCM. <Ref. to 5AT-60, Transmission Control Module (TCM).>
5	**CHECK TCM OUTPUT SIGNAL.** Shift the select lever to “R” range.	Is the voltage less than 1 V?	Go to step **6.**	Replace the TCM. <Ref. to 5AT-60, Transmission Control Module (TCM).>
6	**CHECK INPUT VOLTAGE FOR BACK-UP LIGHT RELAY.** Measure the voltage between back-up light relay and chassis ground.	Is the voltage 10 — 13 V?	Replace the back-up light relay.	Repair open or short circuit in harness between fuse (No. 18) and backup light relay.

AG:DTC P1601 TCM DATA COMMUNICATION FAILURE

DTC DETECTING CONDITION:

Communication does not complete between control valve memory box.

TROUBLE SYMPTOM:

Shifting quality malfunction

WIRING DIAGRAM:

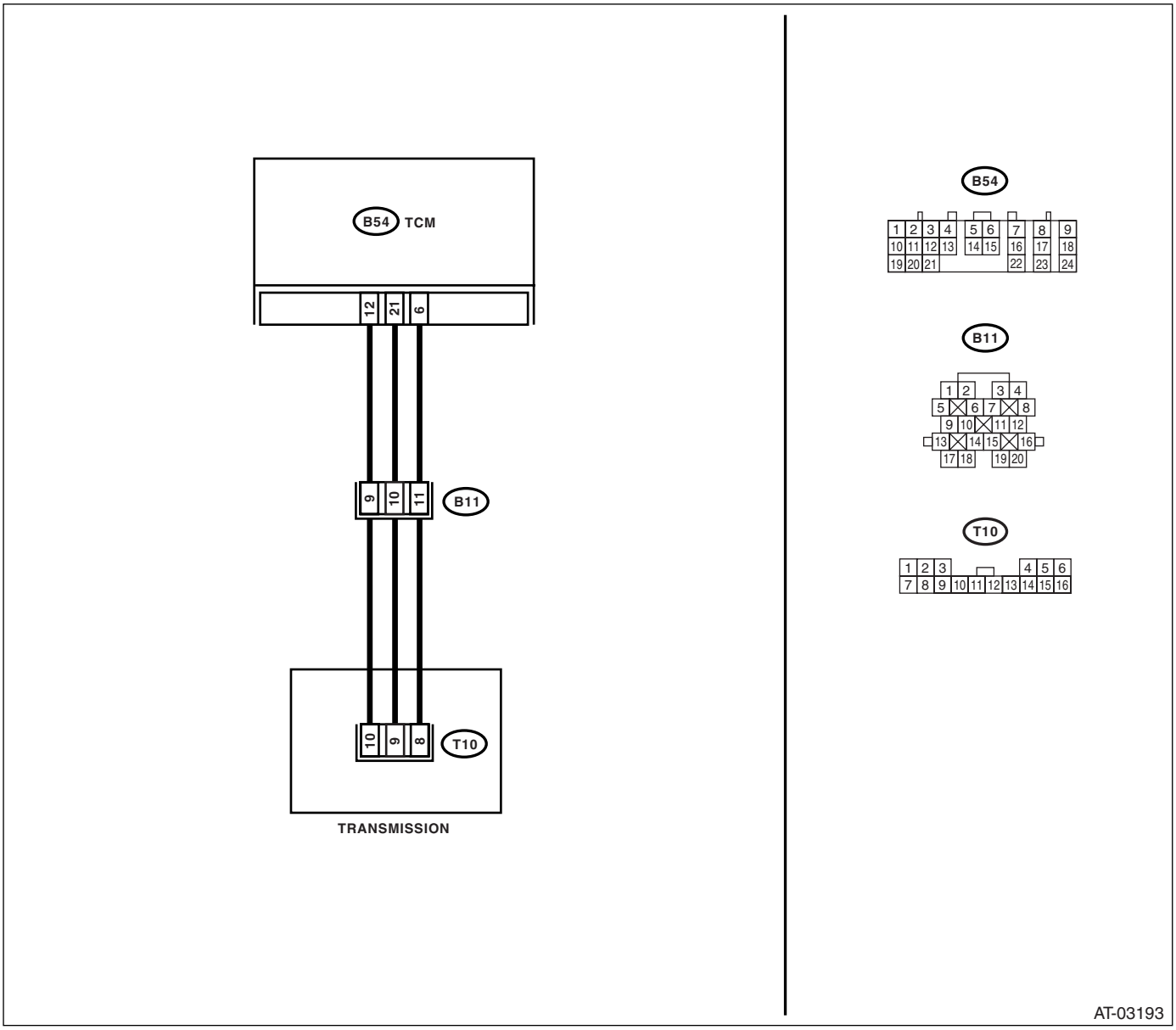

Step		Check	Yes	No
1	**CHECK POOR CONTACT OF TRANSMISSION CONNECTOR.** Check loose connection on TCM connector (B54).	Is there poor contact on connector?	Connect it securely.	Go to step **2.**
2	**CHECK DTC OF TCM.**	Is DTC of oil pressure switch detected?	Perform the diagnosis according to DTC.	Go to step **3.**

	Step	Check	Yes	No
3	**CHECK TCM OUTPUT SIGNAL.** 1) Turn the ignition switch to ON. (engine OFF) 2) Measure the voltage between TCM connector and chassis ground. ***Connector & terminal*** ***(B54) No. 16 (+) — Chassis ground (−):***	Is the voltage 10 — 13 V?	Go to step **4.**	Go to step **5.**
4	**CHECK HARNESS CONNECTOR BETWEEN TCM AND TRANSMISSION.** 1) Turn the ignition switch to OFF. 2) Disconnect the connectors from TCM and transmission. 3) Measure the resistance of harness between TCM and transmission connector. ***Connector & terminal*** ***(B54) No. 12 — (B11) No. 9:*** ***(B54) No. 21 — (B11) No. 10:*** ***(B54) No. 6 — (B11) No. 11:***	Is the resistance less than 1 Ω?	Go to step **5.**	Repair the open circuit in harness between TCM and transmission connector, and poor contact in coupling connector.
5	**CHECK HARNESS CONNECTOR BETWEEN TCM AND TRANSMISSION.** Measure the resistance of harness between TCM connector and chassis ground. ***Connector & terminal*** ***(B54) No. 12 — Chassis ground:*** ***(B54) No. 21 — Chassis ground:*** ***(B54) No. 6 — Chassis ground:***	Is the resistance more than 1 MΩ?	Go to step **6.**	Repair the short circuit in harness between TCM and transmission connector.
6	**CHECK HARNESS CONNECTOR BETWEEN TRANSMISSION CONNECTOR AND CONTROL VALVE BODY CONNECTOR.** Measure the resistance between transmission connector and control valve body connector. ***Connector & terminal*** ***(B54) No. 9 — (T10) No. 10:*** ***(B54) No. 10 — (T10) No. 9:*** ***(B54) No. 11 — (T10) No. 8:***	Is the resistance less than 1 Ω?	Go to step **7.**	Repair the open circuit in harness between control valve body connector and transmission connector.
7	**CHECK HARNESS CONNECTOR BETWEEN TRANSMISSION CONNECTOR AND CONTROL VALVE BODY CONNECTOR.** Measure the resistance between transmission connector and chassis ground. ***Connector & terminal*** ***(B54) No. 9 — Chassis ground:*** ***(B54) No. 10 — Chassis ground:*** ***(B54) No. 11 — Chassis ground:***	Is the resistance more than 1 MΩ?	Go to step **8.**	Repair the short circuit in harness between control valve body connector and transmission connector.
8	**CHECK POOR CONTACT.** NOTE: Data communication malfunction is detected when the malfunction occurred on inspection area above while transmission assembly is replacing or “Clear Memory 2” is performing. When the repair is performed with following diagnosis above, perform the “Clear Memory 2”, and then recheck that the DTC of TCM data communication malfunction is not detected.	Is there any open or poor contact of connector (loosing terminal, entering foreign matter, damaging connector body)?	Repair the poor contact.	Replace the transmission assembly. <Ref. to 5AT-38, Automatic Transmission Assembly.>

AH:DTC P1706 AT VEHICLE SPEED SENSOR CIRCUIT MALFUNCTION (REAR WHEEL)

DTC DETECTING CONDITION:

Input signal circuit of TCM is open or shorted.

TROUBLE SYMPTOM:

- Shifting quality malfunction
- Tight corner braking phenomenon is occurred.

WIRING DIAGRAM:

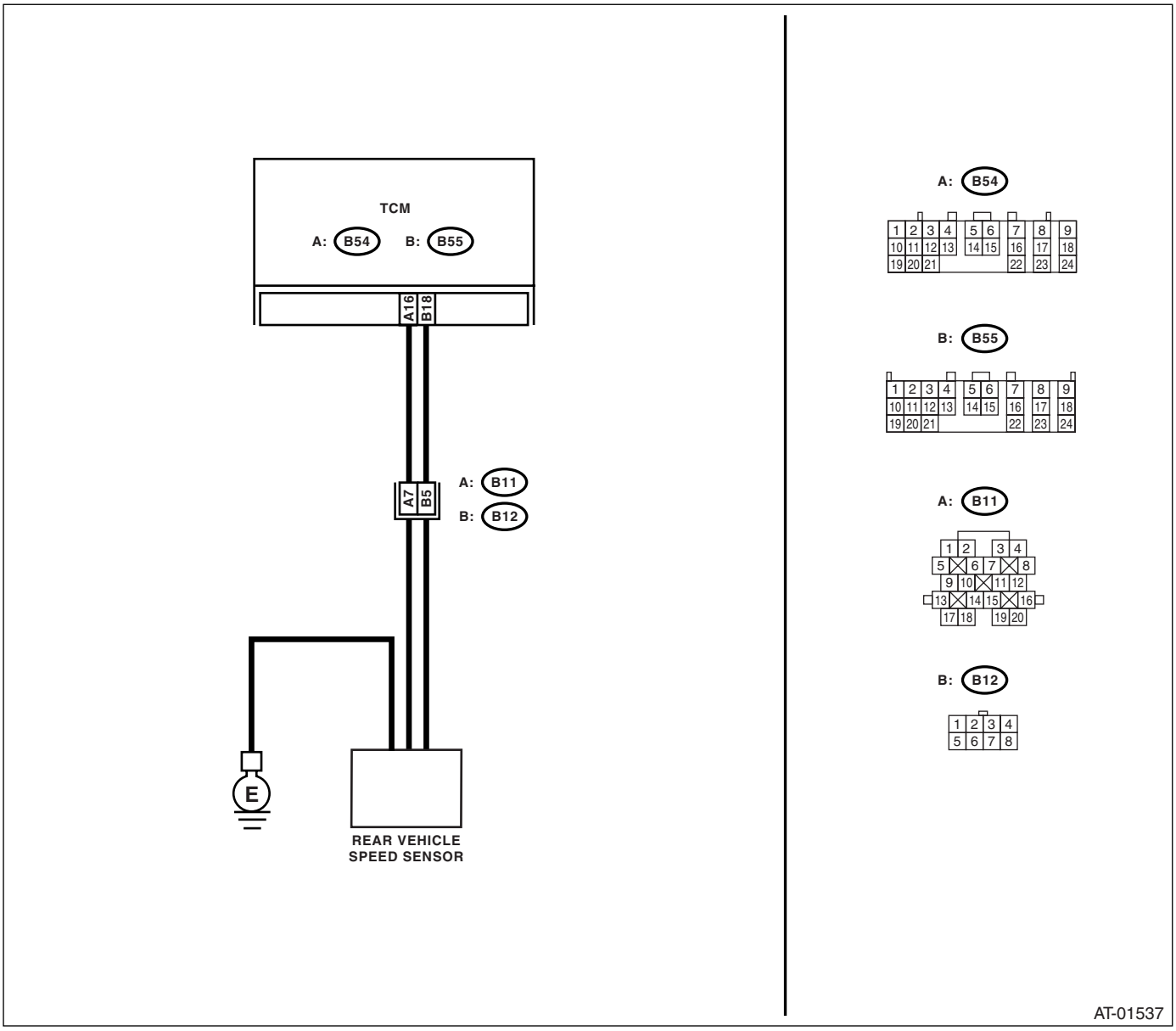

	Step	Check	Yes	No
1	**CHECK HARNESS CONNECTOR BETWEEN TCM AND TRANSMISSION.** 1) Turn the ignition switch to OFF. 2) Disconnect the connectors from TCM and transmission. 3) Measure the resistance of harness between TCM and transmission connector. ***Connector & terminal*** ***(B54) No. 16 — (B11) No. 7:*** ***(B55) No. 18 — (B12) No. 5:***	Is the resistance less than 1 Ω?	Go to step **2.**	Repair the open circuit in harness between TCM and transmission connector.
2	**CHECK HARNESS CONNECTOR BETWEEN TCM AND TRANSMISSION.** Measure the resistance of harness between TCM connector and chassis ground. ***Connector & terminal*** ***(B54) No. 16 — Chassis ground:*** ***(B55) No. 18 — Chassis ground:***	Is the resistance more than 1 MΩ?	Go to step **3.**	Repair the short circuit in harness between TCM and chassis ground.
3	**CHECK TCM POWER SUPPLY OUTPUT.** 1) Connect the connector to TCM. (Transmission connector is disconnected) 2) Turn the ignition switch to ON. (engine OFF) 3) Measure the voltage between TCM connector and chassis ground. ***Connector & terminal*** ***(B54) No. 16 (+) — Chassis ground (−):***	Is the voltage 10 — 13 V?	Go to step **4.**	Go to step **5.**
4	**CHECK TURBINE SPEED SENSOR INPUT CIRCUIT OF TCM.** Measure the voltage between TCM connector terminals. ***Connector & terminal*** ***(B55) No. 18 (+) — (B54) No. 19 (−):***	Is the voltage 4 — 6 V?	Go to step **6.**	Go to step **5.**
5	**CHECK TCM I/O SIGNAL.** Check TCM I/O signal of power supply, ground and PVIGN power supply relay. <Ref. to 5AT(diag)-11, ELECTRICAL SPECIFICATION, Transmission Control Module (TCM) I/O Signal.>	Is TCM I/O signal OK?	Replace the TCM. <Ref. to 5AT-60, Transmission Control Module (TCM).>	Repair the open or short circuit for power supply and ground. Perform the diagnosis according to DTC for PVIGN power supply relay.
6	**CHECK HARNESS ASSEMBLY (TURBINE SPEED SENSOR GROUND).** Check the installing condition of ground connecting harness (used for both of turbine speed sensor 1, rear vehicle speed sensor).	Is the ground connecting harness installed to transmission body correctly, or the harness and connector terminals not damaged?	Go to step **7.**	When the poor installation of ground connecting harness, install it securely. Replace the transmission assembly when the harness is damaged. <Ref. to 5AT-38, Automatic Transmission Assembly.>

	Step	Check	Yes	No
7	**CHECK INPUT SIGNAL FOR TCM USING SUBARU SELECT MONITOR.** 1) Connect all the connectors. 2) Lift-up the vehicle and support with rigid racks. NOTE: Raise all wheels off floor. 3) Start the engine, and drive the vehicle. 4) Read the current data of front wheel speed using Subaru Select Monitor. <Ref. to 5AT(diag)-15, OPERATION, Subaru Select Monitor.> NOTE: The speed difference between front and rear wheels may light the ABS warning light, but this indicates no malfunction. When AT control diagnosis is finished, perform the ABS memory clearance procedure of on-board diagnostics system. <Ref. to ABS(diag)-25, Clear Memory Mode.>	Does the value of the front wheel speed depending on the acceleration and deceleration of the vehicle?	Even if the SPORT indicator lights blinks, the system is in normal condition. A temporary poor contact of connector or harness may be the cause. Repair harness or contact in the ATF temperature sensor and transmission connector.	Replace the transmission harness.

AI: DTC P1707 AT AWD SOLENOID VALVE CIRCUIT MALFUNCTION

DTC DETECTING CONDITION:

Output signal circuit of transfer solenoid is open or shorted.

TROUBLE SYMPTOM:

- Tight corner braking phenomenon is occurred.
- Drivability getting worse.

WIRING DIAGRAM:

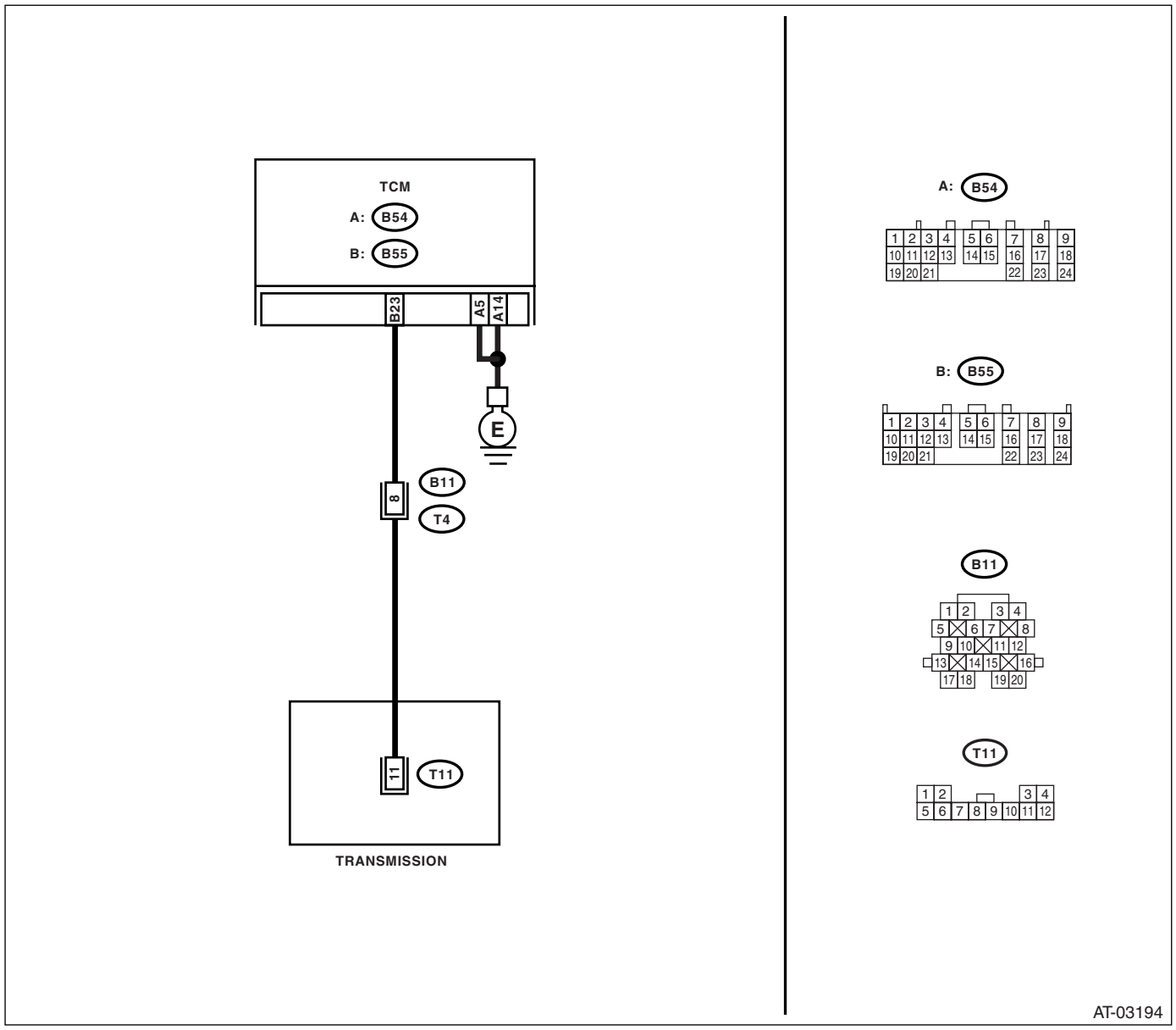

	Step	Check	Yes	No
1	**CHECK HARNESS CONNECTOR BETWEEN TCM AND TRANSMISSION.** 1) Turn the ignition switch to OFF. 2) Disconnect the connectors from TCM and transmission. 3) Measure the resistance of harness between TCM and transmission connector. ***Connector & terminal*** ***(B55) No. 23 — (B11) No. 8:*** ***(B54) No. 5 — Chassis ground:*** ***(B54) No. 14 — Chassis ground:***	Is the resistance less than 1 Ω?	Go to step **2.**	Repair the open circuit in harness between TCM connector and transmission connector.
2	**CHECK HARNESS CONNECTOR BETWEEN TCM AND CHASSIS GROUND.** Measure resistance of harness between TCM connector and chassis ground. ***Connector & terminal*** ***(B55) No. 23 — Chassis ground:***	Is the resistance more than 1 MΩ?	Go to step **3.**	Repair the short circuit in harness between TCM connector and transmission connector.
3	**CHECK HARNESS CONNECTOR BETWEEN TRANSMISSION AND CONTROL VALVE BODY.** 1) Turn the ignition switch to OFF. 2) Disconnect the connector from transmission. 3) Remove the transmission connector from bracket. 4) Lift-up the vehicle and place it on rigid racks. 5) Drain the ATF. 6) Remove the oil pan, and disconnect the control valve body connector. 7) Measure the resistance between transmission connector and control valve body connector. ***Connector & terminal*** ***(T4) No. 8 — (T11) No. 11:***	Is the resistance less than 1 Ω?	Go to step **4.**	Repair the open circuit in harness between control valve body connector and transmission connector.
4	**CHECK HARNESS CONNECTOR BETWEEN TRANSMISSION AND CONTROL VALVE BODY.** Measure the resistance between transmission ground and control valve body connector. ***Connector & terminal*** ***(T11) No. 11 — Transmission ground:***	Is the resistance more than 1 MΩ?	Go to step **5.**	Repair the short circuit in harness between control valve body connector and transmission ground.
5	**AWD SOLENOID CURRENT.** Measure the resistance between transmission ground and control valve body connector. ***Connector & terminal*** ***(T11) No. 11 — Transmission ground:***	Is the resistance 3 — 9 Ω?	Go to step **6.**	Replace the control valve body. <Ref. to 5AT-57, Control Valve Body.>
6	**CHECK POOR CONTACT.** Check that there are no poor contact in TCM connector, transmission connector and control valve body connector.	Is there any loosing terminal, entering foreign matter, damaging connector body?	Repair the poor contact.	Go to step **7.**
7	**CHECK AFTER REPAIR.** 1) Perform the clear memory mode. 2) Drive for a while, read the DTC, and verify that there is no faulty.	Is DTC displayed?	Replace the TCM. <Ref. to 5AT-60, Transmission Control Module (TCM).>	Temporary poor contact or open circuit occurs. Recheck that the harness connector has no faulty.

AJ:DTC P1710 TORQUE CONVERTER TURBINE 2 SPEED SIGNAL CIRCUIT 2 MALFUNCTION

DTC DETECTING CONDITION:

Input signal circuit of TCM is open or shorted.

TROUBLE SYMPTOM:

- Excessive shift shock
- Does not shift to 5th.

WIRING DIAGRAM:

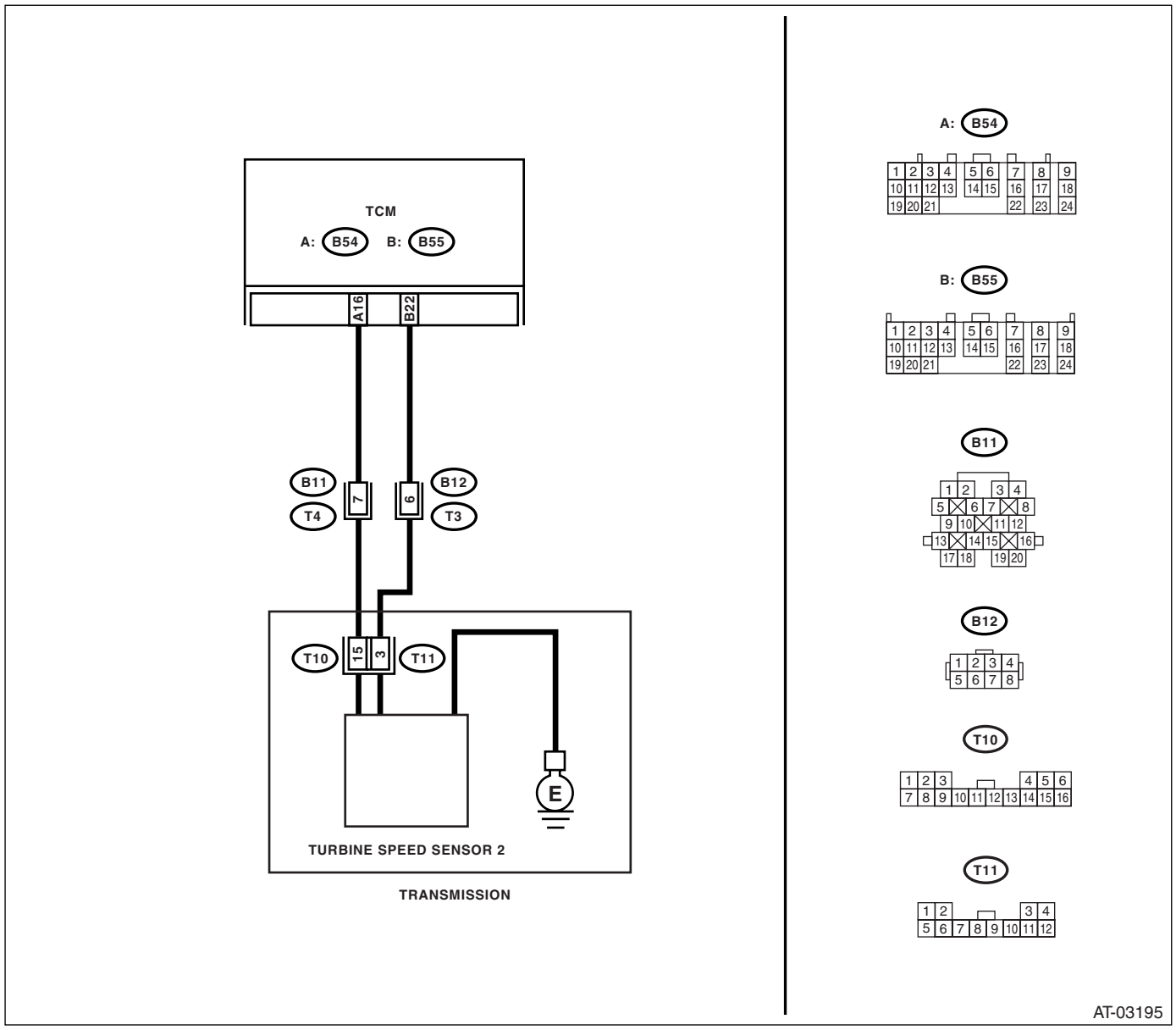

	Step	Check	Yes	No
1	**CHECK HARNESS CONNECTOR BETWEEN TCM AND TRANSMISSION.** 1) Turn the ignition switch to OFF. 2) Disconnect the connectors from TCM and transmission. 3) Measure the resistance of harness between TCM and transmission connector. ***Connector & terminal*** ***(B55) No. 22 — (B12) No. 6:*** ***(B54) No. 16 — (B11) No. 7:***	Is the resistance less than 1 Ω?	Go to step **2.**	Repair the open circuit in harness between TCM and transmission connector.
2	**CHECK HARNESS CONNECTOR BETWEEN TCM AND TRANSMISSION.** Measure the resistance of harness between TCM connector and chassis ground. ***Connector & terminal*** ***(B55) No. 22 — Chassis ground:*** ***(B54) No. 16 — Chassis ground:***	Is the resistance more than 1 MΩ?	Go to step **3.**	Repair the short circuit in harness between TCM and transmission connector.
3	**CHECK TCM POWER SUPPLY OUTPUT.** 1) Connect the connector to TCM. (Transmission connector is disconnected) 2) Turn the ignition switch to ON. (engine OFF) 3) Measure the voltage between TCM connector and chassis ground. ***Connector & terminal*** ***(B54) No. 16 (+) — (B54) No. 19 (–):***	Is the voltage 10 — 13 V?	Go to step **4.**	Go to step **5.**
4	**CHECK TURBINE SPEED SENSOR INPUT CIRCUIT OF TCM.** Measure the voltage between TCM connector terminals. ***Connector & terminal*** ***(B55) No. 22 (+) — (B54) No. 19 (–):***	Is the voltage 4 — 6 V?	Go to step **6.**	Go to step **5.**
5	**CHECK TCM I/O SIGNAL.** Check TCM I/O signal of power supply, ground and PVIGN power supply relay. <Ref. to 5AT(diag)-11, ELECTRICAL SPECIFICATION, Transmission Control Module (TCM) I/O Signal.>	Is I/O signal OK?	Replace the TCM. <Ref. to 5AT-60, Transmission Control Module (TCM).>	Repair the open or short circuit for power supply and ground. Perform the diagnosis according to DTC for PVIGN power supply relay.

	Step	Check	Yes	No
6	**CHECK INPUT SIGNAL FOR TCM USING SUBARU SELECT MONITOR.** 1) Connect all the connectors. 2) Lift-up the vehicle and support with rigid racks. NOTE: Raise all wheels off floor. 3) Start the engine, and set the vehicle in 1st speed driving condition of manual mode. 4) Read the current data of torque converter turbine speed 2 using the Subaru Select Monitor. <Ref. to 5AT(diag)-15, OPERATION, Subaru Select Monitor.> NOTE: The speed difference between front and rear wheels may light the ABS warning light, but this indicates no malfunction. When AT control diagnosis is finished, perform the ABS memory clearance procedure of on-board diagnostics system. <Ref. to ABS(diag)-25, Clear Memory Mode.>	Does the value of the turbine speed sensor 2 change depending on the acceleration, deceleration and shifting gear of the vehicle?	Even if the SPORT indicator lights blinks, the system is in normal condition. A temporary poor contact of connector or harness may be the cause. Repair the poor contact in harness of turbine speed sensor 2 and transmission connector.	Go to step **7.**
7	**CHECK HARNESS CONNECTOR BETWEEN TRANSMISSION AND CONTROL VALVE BODY.** 1) Turn the ignition switch to OFF. 2) Disconnect the connector from transmission. 3) Remove the transmission connector from bracket. 4) Lift-up the vehicle and place it on rigid racks. NOTE: Raise all wheels off floor. 5) Drain the ATF. **CAUTION:** **Do not drain the ATF until it cools down.** 6) Remove the oil pan, and disconnect the connector from control valve body connector. 7) Measure the resistance between transmission connector and control valve body connector. ***Connector & terminal*** ***(T3) No. 6 — (T11) No. 3:*** ***(T4) No. 7 — (T10) No. 15:***	Is the resistance less than 1 Ω?	Go to step **8.**	Repair the open circuit in harness between control valve body connector and transmission connector.
8	**CHECK HARNESS CONNECTOR BETWEEN TRANSMISSION AND CONTROL VALVE BODY.** Measure the resistance between transmission ground and control valve body connector. ***Connector & terminal*** ***(T11) No. 3 — Transmission ground:*** ***(T10) No. 15 — Transmission ground:***	Is the resistance more than 1 MΩ?	Replace the control valve body. <Ref. to 5AT-57, Control Valve Body.>	Repair the short circuit in harness between transmission connector and transmission ground.

AK:DTC P1716 ATF TEMP. SENSOR 2 CIRCUIT LOW

DTC DETECTING CONDITION:

Input signal circuit of TCM to ATF temperature sensor 2 is open or shorted.

TROUBLE SYMPTOM:

Excessive shift shock

WIRING DIAGRAM:

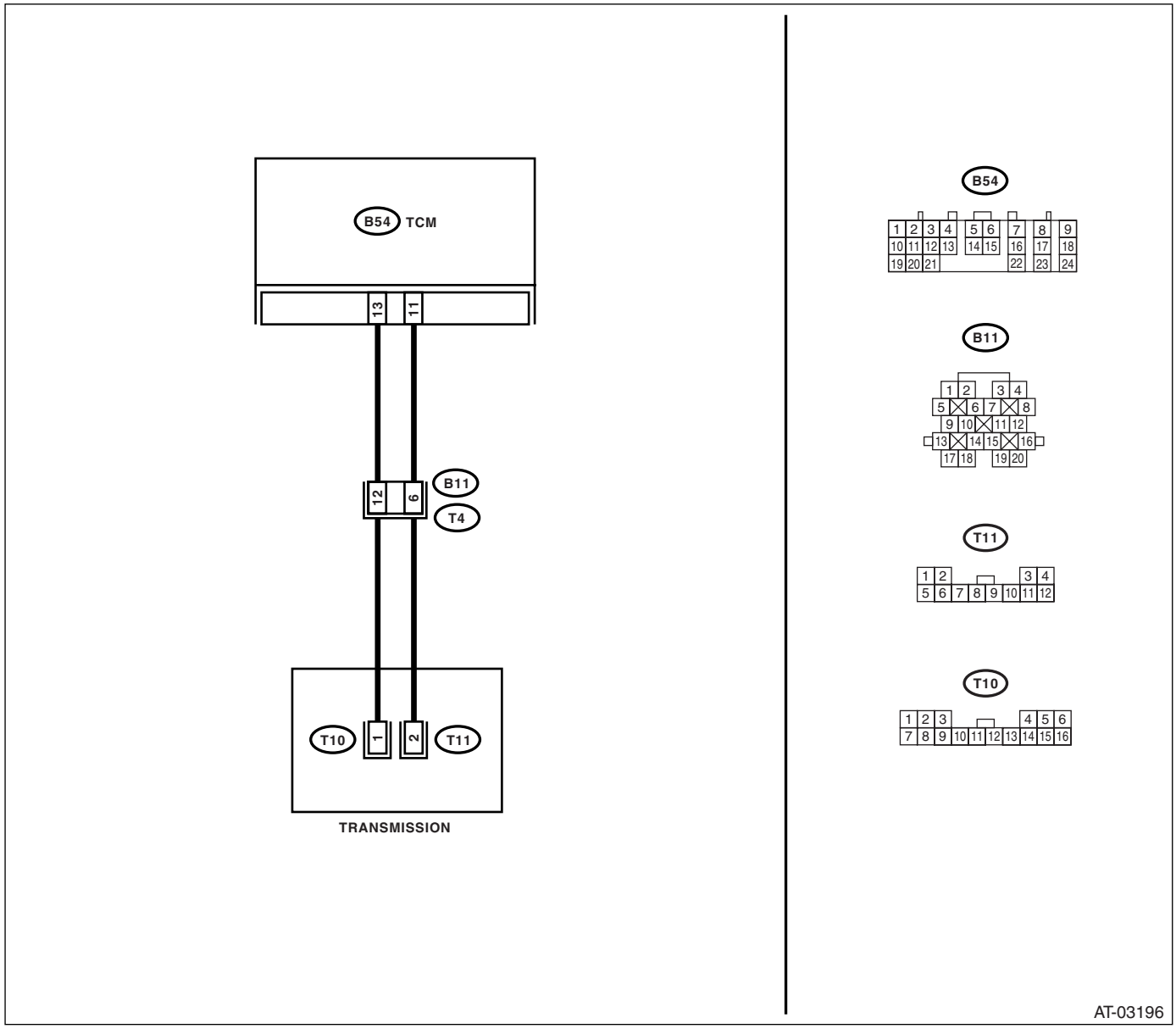

	Step	Check	Yes	No
1	**CHECK HARNESS CONNECTOR BETWEEN TCM AND TRANSMISSION.** 1) Turn the ignition switch to OFF. 2) Disconnect the connectors from TCM and transmission. 3) Measure the resistance of harness between TCM and transmission connector. ***Connector & terminal*** ***(B54) No. 13 — (B11) No. 12:*** ***(B54) No. 11 — (B11) No. 6:***	Is the resistance less than 1 Ω?	Go to step **2.**	Repair the open circuit in harness between TCM and transmission connector.
2	**CHECK ATF TEMPERATURE SENSOR.** 1) Turn the ignition switch to OFF. 2) Connect the connectors to transmission and TCM. 3) Turn the ignition switch to ON and start engine. 4) Warm-up the transmission until the ATF temperature reaches to 80°C (176°F). NOTE: If the ambient temperature is below 0°C (32°F), drive the vehicle until the ATF reaches its operating temperature. 5) Disconnect the connector from transmission. 6) Measure the resistance between transmission connector terminals. ***Connector & terminal*** ***(T4) No. 6 — (T4) No. 12:***	Is the resistance 300 — 700 Ω?	Go to step **3.**	Go to step **5.**
3	**CHECK ATF TEMPERATURE SENSOR.** Measure the resistance between transmission connector terminals. ***Connector & terminal*** ***(T4) No. 6 — (T4) No. 12:***	Does the resistance value increase while the ATF temperature decreases?	Go to step **4.**	Go to step **5.**
4	**CHECK INPUT SIGNAL FOR TCM USING SUBARU SELECT MONITOR.** 1) Connect the connector. 2) Turn the ignition switch to ON. (engine OFF) 3) Read the ATF temperature using Subaru Select Monitor.	Does the ATF temperature gradually decrease?	Even if the SPORT indicator lights blinks, the system is in normal condition. A temporary poor contact of connector or harness may be the cause. Repair harness or contact in the ATF temperature sensor and transmission connector.	Go to step **6.**

	Step	Check	Yes	No
5	**CHECK HARNESS CONNECTOR BETWEEN TRANSMISSION AND CONTROL VALVE BODY.** 1) Turn the ignition switch to OFF. 2) Disconnect the connector from transmission. 3) Remove the transmission connector from bracket. 4) Lift-up the vehicle and place it on rigid racks. NOTE: Raise all wheels off floor. 5) Drain the ATF. **CAUTION:** **Do not drain the ATF until it cools down.** 6) Remove the oil pan, and disconnect the connector from control valve body connector. 7) Measure the resistance between transmission connector and control valve body connector. ***Connector & terminal*** ***(T4) No. 12 — (T10) No. 1:*** ***(T4) No. 6 — (T11) No. 2:***	Is the resistance less than 1 Ω?	Replace the control valve body. <Ref. to 5AT-57, Control Valve Body.>	Repair the open circuit in harness between control valve body connector and transmission connector.
6	**CHECK POOR CONTACT.** Check poor contact of ATF temperature sensor 1 circuit.	Is there poor contact?	Repair the poor contact.	Replace the TCM. <Ref. to 5AT-60, Transmission Control Module (TCM).>

AL:DTC P1717 ATF TEMP. SENSOR 2 CIRCUIT HIGH

DTC DETECTING CONDITION:

Input signal circuit of TCM to ATF temperature sensor 2 is open or shorted.

TROUBLE SYMPTOM:

Excessive shift shock

WIRING DIAGRAM:

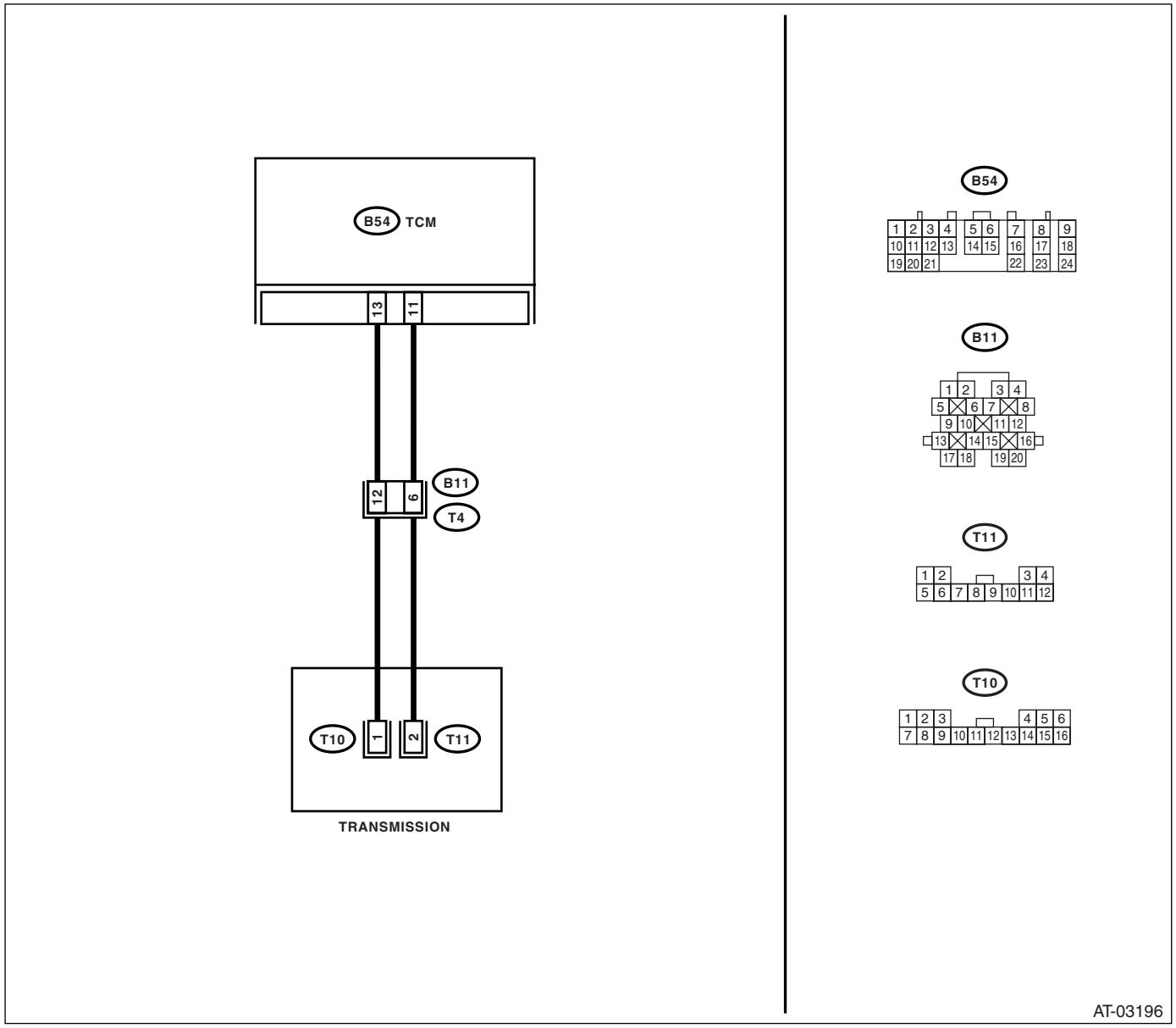

Step		Check	Yes	No
1	**CHECK HARNESS CONNECTOR BETWEEN TCM AND TRANSMISSION.** 1) Turn the ignition switch to OFF. 2) Disconnect the connectors from TCM and transmission. 3) Measure the resistance of harness between TCM connector and chassis ground. ***Connector & terminal*** ***(B54) No. 13 — (B11) No. 12:*** ***(B54) No. 11 — (B11) No. 6:***	Is the resistance more than 1 MΩ?	Go to step **2.**	Repair the short circuit in harness between TCM and transmission connector.

	Step	Check	Yes	No
2	**CHECK ATF TEMPERATURE SENSOR.** 1) Turn the ignition switch to OFF. 2) Connect the connectors to transmission and TCM. 3) Turn the ignition switch to ON and start engine. 4) Warm-up the transmission until the ATF temperature reaches to 80°C (176°F). NOTE: If the ambient temperature is below 0°C (32°F), drive the vehicle until the ATF reaches its operating temperature. 5) Disconnect the connector from transmission. 6) Measure the resistance between transmission connector terminals. ***Connector & terminal*** ***(T4) No. 6 — (T4) No. 12:***	Is the resistance 300 — 700 Ω?	Go to step **3.**	Go to step **5.**
3	**CHECK ATF TEMPERATURE SENSOR.** Measure the resistance between transmission connector terminals. ***Connector & terminal*** ***(T4) No. 6 — (T4) No. 12:***	Does the resistance value increase while the ATF temperature decreases?	Go to step **4.**	Go to step **5.**
4	**CHECK INPUT SIGNAL FOR TCM USING SUBARU SELECT MONITOR.** 1) Connect the connector. 2) Turn the ignition switch to ON. (engine OFF) 3) Read the ATF temperature using Subaru Select Monitor.	Does the ATF temperature gradually decrease?	Even if the SPORT indicator lights blinks, the system is in normal condition. A temporary poor contact of connector or harness may be the cause. Repair harness or contact in the ATF temperature sensor and transmission connector.	Go to step **6.**
5	**CHECK HARNESS CONNECTOR BETWEEN TRANSMISSION AND CONTROL VALVE BODY.** 1) Turn the ignition switch to OFF. 2) Disconnect the connector from transmission. 3) Remove the transmission connector from bracket. 4) Lift-up the vehicle and place it on rigid racks. NOTE: Raise all wheels off floor. 5) Drain the ATF. **CAUTION:** **Do not drain the ATF until it cools down.** 6) Remove the oil pan, and disconnect the connector from control valve body connector. 7) Measure the resistance between transmission ground and control valve body connector. ***Connector & terminal*** ***(T10) No. 1 — Chassis ground:*** ***(T11) No. 2 — Chassis ground:***	Is the resistance more than 1 MΩ?	Replace the control valve body. <Ref. to 5AT-57, Control Valve Body.>	Repair the short circuit in harness between control valve body connector and transmission connector.

	Step	Check	Yes	No
6	**CHECK POOR CONTACT.** Check poor contact of ATF temperature sensor 1 circuit.	Is there poor contact?	Repair the poor contact.	Replace the TCM. <Ref. to 5AT-60, Transmission Control Module (TCM).>

AM:DTC P1718 AT CAN COMMUNICATION CIRCUIT

NOTE:
For DTC P1718 AT CAN Communication circuit, Refer to “LAN System”. <Ref. to LAN(diag)-14, READ DIAGNOSTIC TROUBLE CODE (DTC), OPERATION, Subaru Select Monitor.>

AN:DTC P1760 LATERAL ACCELERATION SENSOR PERFORMANCE PROBLEM

DTC DETECTING CONDITION:
Faulty lateral G sensor output voltage
WIRING DIAGRAM:

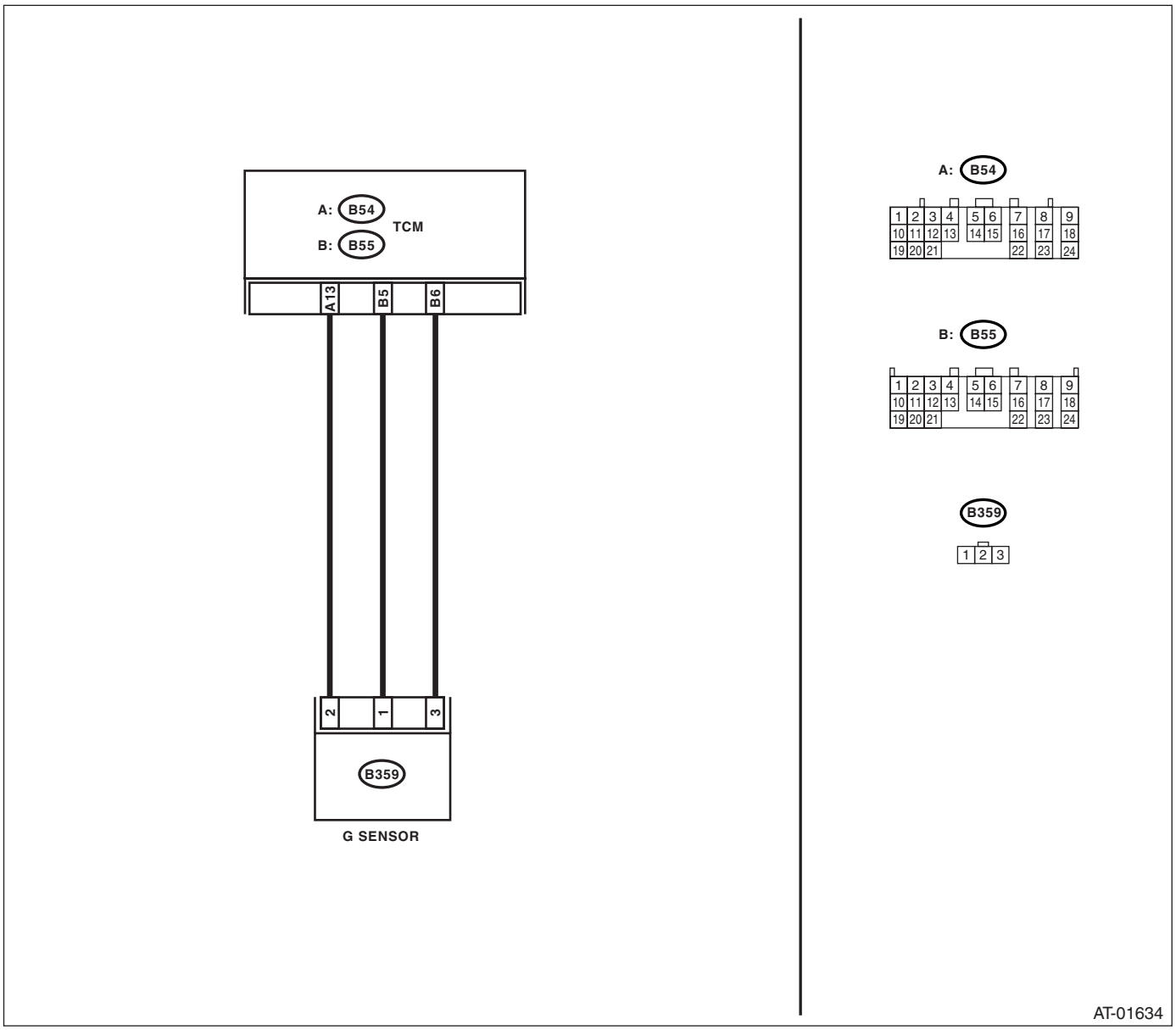

	Step	Check	Yes	No
1	**CONFIRM WQUIPMENT OF VEHICLE.**	Is VDC equipped with the vehicle? And is there VDC OFF switch in the instrument panel?	Go to step **2.**	Go to step **4.**
2	**CHECK DTC OF TCM.**	Is DTC of AT CAN communication detected?	Perform the diagnosis according to DTC.	Go to step **3.**
3	**CHECK DTC OF ABS.**	Is DTC of ABS detected?	Perform the diagnosis according to DTC of ABS	Temporary poor contact occurs. Recheck the harness and connector for faulty.
4	**CHECK OUTPUT OF LATERAL G SENSOR USING SUBARU SELECT MONITOR.** 1) Select {Current Data Display & Save} in Subaru Select Monitor. 2) Read the Subaru Select Monitor display.	Is the value on display 2.3 — 2.7 V when the vehicle is on a level?	Go to step **5.**	Go to step **10.**
5	**CHECK OUTPUT OF LATERAL G SENSOR USING SUBARU SELECT MONITOR.** 1) Turn the ignition switch to OFF. 2) Remove the console box. 3) Remove the lateral G sensor from vehicle. (Do not disconnect connector.) 4) Turn the ignition switch to ON. 5) Select {Current Data Display & Save} in Subaru Select Monitor. 6) Read the Subaru Select Monitor display.	Is the value on display 3.3 — 4.3 V when lateral G sensor is inclined to the right to 90°?	Go to step **6.**	Replace the lateral G sensor. <Ref. to 5AT-61, Lateral G Sensor.>
6	**CHECK OUTPUT OF LATERAL G SENSOR USING SUBARU SELECT MONITOR.** Read the Subaru Select Monitor display.	Is the value on display 0.7 — 1.7 V when lateral G sensor is inclined to the left to 90°?	Go to step **7.**	Replace the lateral G sensor. <Ref. to 5AT-61, Lateral G Sensor.>
7	**CHECK POOR CONTACT IN CONNECTOR.** Turn the ignition switch to OFF.	Is there poor contact in connector between TCM and lateral G sensor?	Repair the connector.	Go to step **8.**
8	**CHECK ABSCM&H/U.** 1) Connect all the connectors. 2) Perform the clear memory mode. 3) Perform the inspection mode. 4) Read the DTC.	Is the same DTC displayed?	Replace the TCM. <Ref. to 5AT-60, Transmission Control Module (TCM).>	Go to step **9.**
9	**CHECK OTHER DTC DETECTION.**	Is any other DTC displayed?	Perform the diagnosis according to DTC.	Temporary poor contact occurs.
10	**CHECK OPEN CIRCUIT IN LATERAL G SENSOR OUTPUT HARNESS AND GROUND HARNESS.** 1) Turn the ignition switch to OFF. 2) Disconnect the connector from TCM. 3) Measure the resistance between TCM connector terminals. ***Connector & terminal*** ***(B54) No. 13 — (B55) No. 6:***	Is the resistance 5.0 — 6.0 kΩ?	Go to step **11.**	Repair the harness connector between lateral G sensor and TCM.

	Step	Check	Yes	No
11	**CHECK LATERAL G SENSOR.** 1) Remove the console box. 2) Remove the lateral G sensor from vehicle. 3) Connect the connector to lateral G sensor. 4) Connect the connector to ABSCM&H/U. 5) Turn the ignition switch to ON. 6) Measure the voltage between lateral G sensor connector terminals. ***Connector & terminal*** ***(B359) No. 3 (+) — No. 2 (–):***	Is the voltage 2.3 — 2.7 V when lateral G sensor is horizontal?	Go to step **12.**	Replace the lateral G sensor. <Ref. to 5AT-61, Lateral G Sensor.>
12	**CHECK LATERAL G SENSOR.** Measure the voltage between lateral G sensor connector terminals. ***Connector & terminal*** ***(B359) No. 3 (+) — No. 2 (–):***	Is the voltage 3.3 — 4.3 V when lateral G sensor is inclined to the right to 90°?	Go to step **13.**	Replace the lateral G sensor. <Ref. to 5AT-61, Lateral G Sensor.>
13	**CHECK LATERAL G SENSOR.** Measure the voltage between lateral G sensor connector terminals. ***Connector & terminal*** ***(B359) No. 3 (+) — No. 2 (–):***	Is the voltage 0.7 — 1.7 V when lateral G sensor is inclined to the left to 90°?	Go to step **14.**	Replace the lateral G sensor. <Ref. to 5AT-61, Lateral G Sensor.>
14	**CHECK ABSCM&H/U.** 1) Turn the ignition switch to OFF. 2) Connect all the connectors. 3) Perform the clear memory mode. 4) Perform the inspection mode. 5) Read the DTC.	Is the same DTC displayed?	Replace the TCM. <Ref. to 5AT-60, Transmission Control Module (TCM).>	Go to step **15.**
15	**CHECK OTHER DTC DETECTION.**	Is any other DTC displayed?	Perform the diagnosis according to DTC.	Temporary poor contact occurs.

AO:DTC P1761 LATERAL ACCELERATION SENSOR CIRCUIT LOW

DTC DETECTING CONDITION:

- Lateral G sensor is open or output voltage is faulty. (Model without VDC)
- CAN communication malfunction (Model with VDC)

WIRING DIAGRAM:

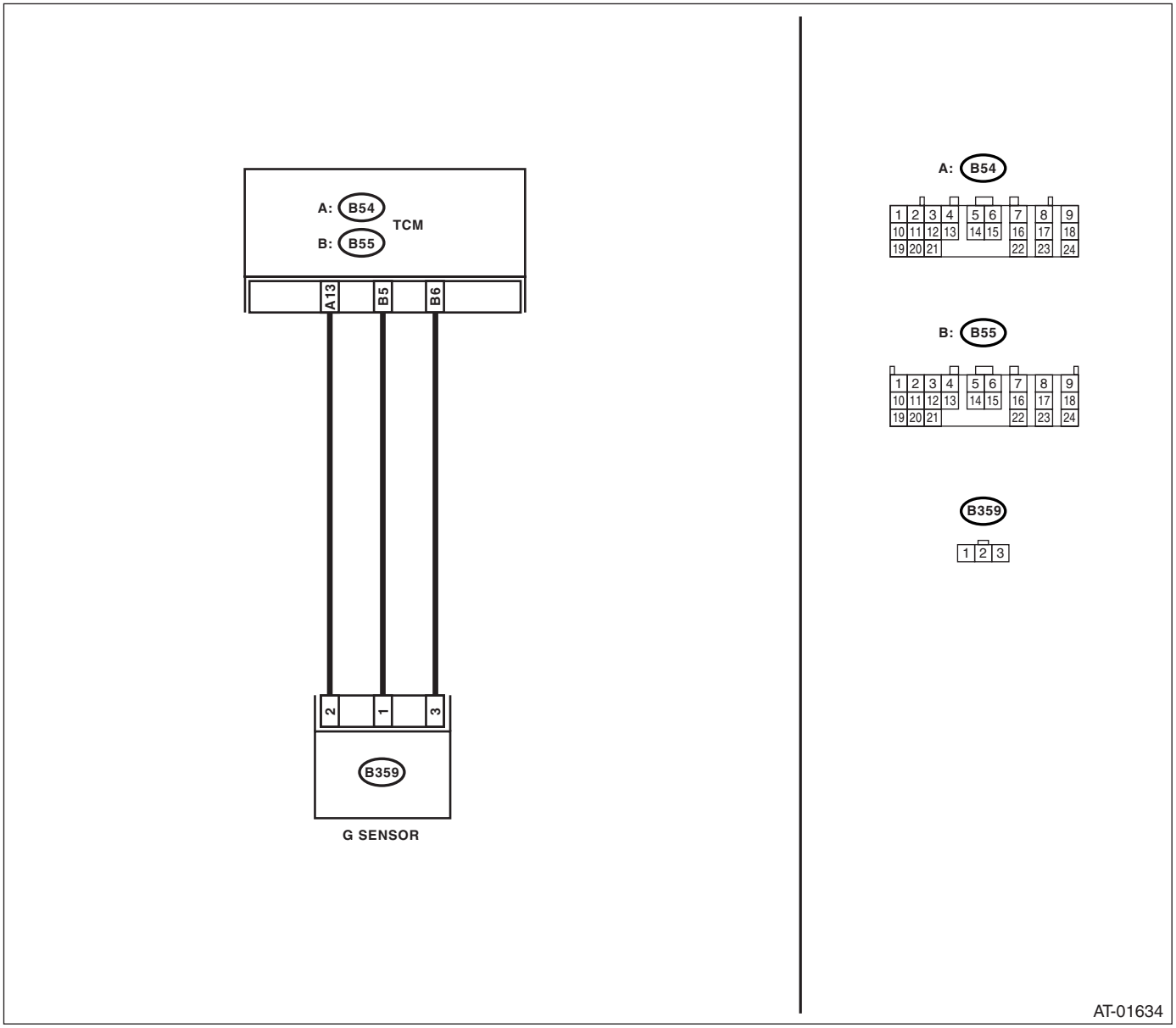

Step		Check	Yes	No
1	**CONFIRM WQUIPMENT OF VEHICLE.**	Is VDC equipped with the vehicle? And is there VDC OFF switch in the instrument panel?	Go to step **2.**	Go to step **4.**
2	**CHECK DTC OF TCM.**	Is DTC of AT CAN communication detected?	Perform the diagnosis according to DTC.	Go to step **3.**
3	**CHECK DTC OF ABS.**	Is DTC of ABS detected?	Perform the diagnosis according to DTC of ABS	Temporary poor contact occurs. Recheck the harness and connector for faulty.

	Step	Check	Yes	No
4	**CHECK OUTPUT OF LATERAL G SENSOR USING SUBARU SELECT MONITOR.** 1) Select {Current Data Display & Save} in Subaru Select Monitor. 2) Read the lateral G sensor output on Subaru Select Monitor display.	Is the value on display 2.3 — 2.7 V when the lateral G sensor is in horizontal position?	Go to step **5.**	Go to step **8.**
5	**CHECK POOR CONTACT IN CONNECTOR.** Turn the ignition switch to OFF.	Is there poor contact in connector between TCM and lateral G sensor?	Repair the connector.	Go to step **6.**
6	**CHECK ABSCM&H/U.** 1) Connect all the connectors. 2) Perform the clear memory mode. 3) Perform the inspection mode. 4) Read the DTC.	Is the same DTC displayed?	Replace the TCM. <Ref. to 5AT-60, Transmission Control Module (TCM).>	Go to step **7.**
7	**CHECK OTHER DTC DETECTION.**	Is any other DTC displayed?	Perform the diagnosis according to DTC.	Temporary poor contact occurs.
8	**CHECK OPEN CIRCUIT IN LATERAL G SENSOR OUTPUT HARNESS AND GROUND HARNESS.** 1) Turn the ignition switch to OFF. 2) Disconnect the connector from TCM. 3) Measure the resistance between TCM connector terminals. ***Connector & terminal*** ***(B54) No. 13 — (B55) No. 6:***	Is the resistance 5.0 — 6.0 kΩ?	Go to step **9.**	Repair the harness connector between lateral G sensor and TCM.
9	**CHECK GROUND SHORT OF HARNESS.** Measure the resistance between TCM connector and chassis ground. ***Connector & terminal*** ***(B54) No. 13 — Chassis ground:***	Is the resistance more than 1 MΩ?	Go to step **10.**	Repair the harness between lateral G sensor and TCM. Replace the TCM. <Ref. to 5AT-60, Transmission Control Module (TCM).>
10	**CHECK LATERAL G SENSOR.** 1) Remove the console box. 2) Remove the lateral G sensor from vehicle. 3) Connect the connector to lateral G sensor. 4) Connect the connector to the TCM. 5) Turn the ignition switch to ON. 6) Measure the voltage between lateral G sensor connector terminals. ***Connector & terminal*** ***(B359) No. 3 (+) — No. 2 (−):***	Is the voltage 2.3 — 2.7 V when lateral G sensor is horizontal?	Go to step **11.**	Replace the lateral G sensor. <Ref. to 5AT-61, Lateral G Sensor.>
11	**CHECK LATERAL G SENSOR.** Measure the voltage between lateral G sensor connector terminals. ***Connector & terminal*** ***(B359) No. 3 (+) — No. 2 (−):***	Is the voltage 3.3 — 4.3 V when lateral G sensor is inclined to the right to 90°?	Go to step **12.**	Replace the lateral G sensor. <Ref. to 5AT-61, Lateral G Sensor.>
12	**CHECK LATERAL G SENSOR.** Measure the voltage between lateral G sensor connector terminals. ***Connector & terminal*** ***(B359) No. 3 (+) — No. 2 (−):***	Is the voltage 0.7 — 1.7 V when lateral G sensor is inclined to the left to 90°?	Go to step **13.**	Replace the lateral G sensor. <Ref. to 5AT-61, Lateral G Sensor.>

	Step	Check	Yes	No
13	**CHECK TCM.** 1) Turn the ignition switch to OFF. 2) Connect all the connectors. 3) Perform the clear memory mode. 4) Perform the inspection mode. 5) Read the DTC.	Is the same DTC displayed?	Replace the TCM. <Ref. to 5AT-60, Transmission Control Module (TCM).>	Go to step **14.**
14	**CHECK OTHER DTC DETECTION.**	Is any other DTC displayed?	Perform the diagnosis according to DTC.	Temporary poor contact occurs.

AP:DTC P1762 LATERAL ACCELERATION SENSOR CIRCUIT HIGH

DTC DETECTING CONDITION:

Faulty lateral G sensor output voltage

WIRING DIAGRAM:

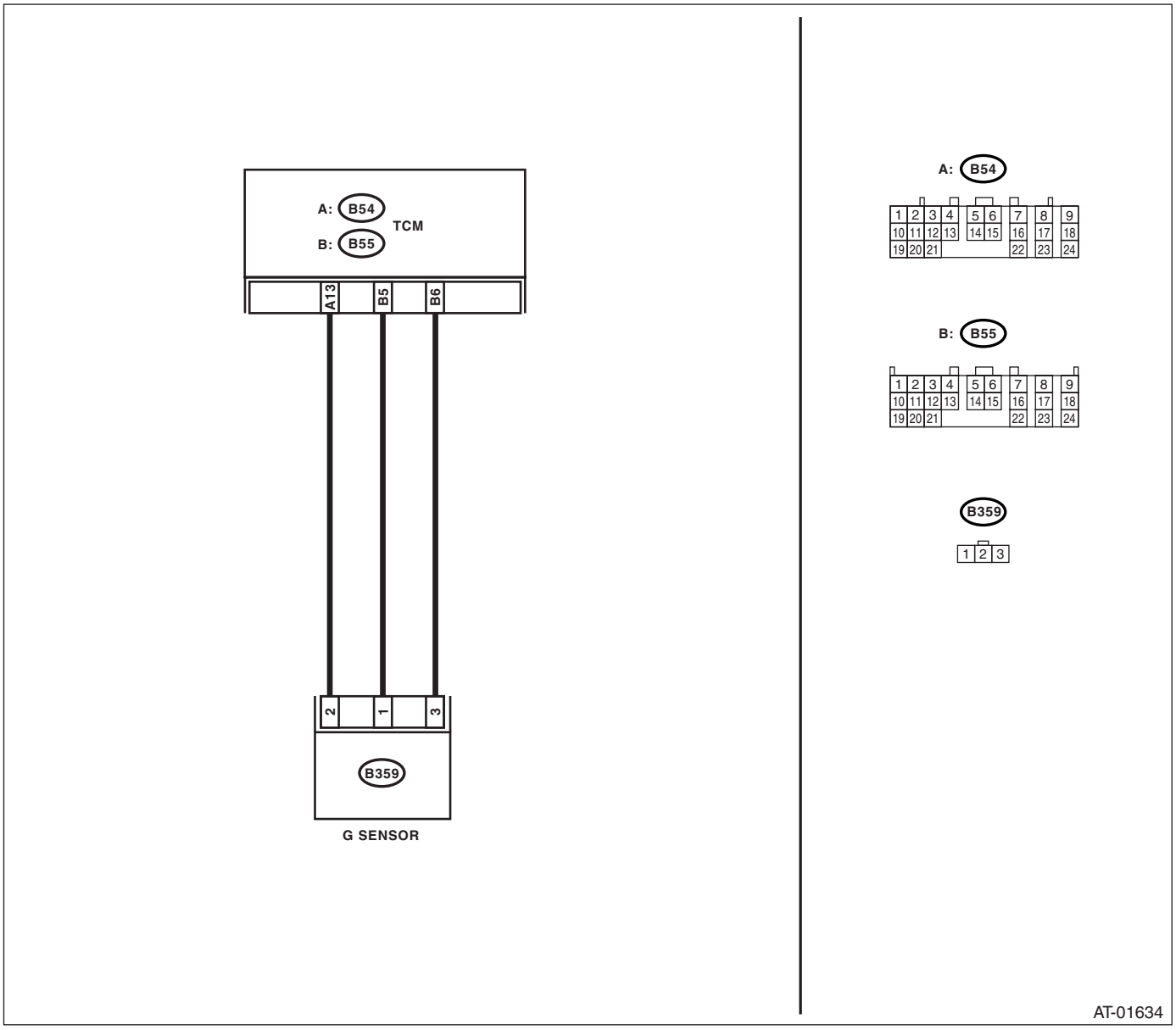

	Step	Check	Yes	No
1	**CONFIRM WQUIPMENT OF VEHICLE.**	Is VDC equipped with the vehicle? And is there VDC OFF switch in the instrument panel?	Go to step **2.**	Go to step **4.**
2	**CHECK DTC OF TCM.**	Is DTC of AT CAN communication detected?	Perform the diagnosis according to DTC.	Go to step **3.**
3	**CHECK DTC OF ABS.**	Is DTC of ABS detected?	Perform the diagnosis according to DTC of ABS	Temporary poor contact occurs. Recheck the harness and connector for faulty.

	Step	Check	Yes	No
4	**CHECK OUTPUT OF LATERAL G SENSOR USING SUBARU SELECT MONITOR.** 1) Select {Current Data Display & Save} in Subaru Select Monitor. 2) Read the lateral G sensor output on Subaru Select Monitor display.	Is the value on display 2.3 — 2.7 V when the lateral G sensor is in horizontal position?	Go to step **5.**	Go to step **8.**
5	**CHECK POOR CONTACT IN CONNECTOR.**	Is there poor contact in connector between TCM and lateral G sensor?	Repair the connector.	Go to step **6.**
6	**CHECK ABSCM&H/U.** 1) Connect all the connectors. 2) Perform the clear memory mode. 3) Perform the inspection mode. 4) Read the DTC.	Is the same DTC displayed?	Replace the TCM. <Ref. to 5AT-60, Transmission Control Module (TCM).>	Go to step **7.**
7	**CHECK OTHER DTC DETECTION.**	Is any other DTC displayed?	Perform the diagnosis according to DTC.	Temporary poor contact occurs.
8	**CHECK CONDITIONAL INFORMATION WHEN FAULTY.** Read the lateral G sensor output on Subaru Select Monitor display.	Is the reading on monitor display 4.65 V or more?	Go to step **9.**	Go to step **15.**
9	**CHECK OPEN CIRCUIT IN LATERAL G SENSOR OUTPUT HARNESS AND GROUND HARNESS.** 1) Turn the ignition switch to OFF. 2) Disconnect the connector from TCM. 3) Measure the resistance between TCM connector terminals. ***Connector & terminal*** ***(B55) No. 5 — No. 1:***	Is the resistance 4.3 — 4.9 kΩ?	Go to step **10.**	Repair the harness connector between lateral G sensor and ABSCM&H/U.
10	**CHECK BATTERY SHORT OF HARNESS.** 1) Turn the ignition switch to OFF. 2) Remove the console box. 3) Disconnect the connector from lateral G sensor. 4) Disconnect the connector from TCM. 5) Measure the voltage between TCM connector and chassis ground. ***Connector & terminal*** ***(B55) No. 6 (+) — Chassis ground (−):***	Is the voltage less than 1 V?	Go to step **11.**	Repair the harness between lateral G sensor and TCM.
11	**CHECK BATTERY SHORT OF HARNESS.** 1) Turn the ignition switch to ON. 2) Measure the voltage between TCM connector and chassis ground. ***Connector & terminal*** ***(B55) No. 6 (+) — Chassis ground (−):***	Is the voltage less than 1 V?	Go to step **12.**	Repair the harness between lateral G sensor and TCM.
12	**CHECK POOR CONTACT IN CONNECTOR.**	Is there poor contact in connector between TCM and lateral G sensor?	Repair the connector.	Go to step **13.**
13	**CHECK TCM.** 1) Connect all the connectors. 2) Perform the clear memory mode. 3) Perform the inspection mode. 4) Read the DTC.	Is the same DTC displayed?	Replace the TCM. <Ref. to 5AT-60, Transmission Control Module (TCM).>	Go to step **14.**
14	**CHECK OTHER DTC DETECTION.**	Is any other DTC displayed?	Perform the diagnosis according to DTC.	Temporary poor contact occurs.

	Step	Check	Yes	No
15	**CHECK INPUT VOLTAGE OF LATERAL G SENSOR.** 1) Turn the ignition switch to OFF. 2) Remove the console box. 3) Remove the lateral G sensor from vehicle. (Do not disconnect connector.) 4) Turn the ignition switch to ON. 5) Measure the voltage between lateral G sensor connector terminals. ***Connector & terminal*** ***(B359) No. 1 (+) — No. 2 (–):***	Is the voltage 4.75 — 5.25 V?	Go to step **16.**	Repair the harness connector between lateral G sensor and TCM.
16	**CHECK OPEN CIRCUIT IN LATERAL G SENSOR OUTPUT HARNESS AND GROUND HARNESS.** 1) Turn the ignition switch to OFF. 2) Disconnect the connector from TCM. 3) Measure the resistance between TCM connector terminals. ***Connector & terminal*** ***(B55) No. 5 — No. 6:***	Is the resistance 5.0 — 5.6 kΩ?	Go to step **17.**	Repair the harness connector between lateral G sensor and TCM.
17	**CHECK LATERAL G SENSOR.** 1) Connect the connector to lateral G sensor. 2) Connect the connector to the TCM. 3) Turn the ignition switch to ON. 4) Measure the voltage between lateral G sensor connector terminals. ***Connector & terminal*** ***(B359) No. 3 (+) — No. 2 (–):***	Is the voltage between 2.3 and 2.7 V when lateral G sensor is horizontal?	Go to step **18.**	Replace the lateral G sensor. <Ref. to 5AT-61, Lateral G Sensor.>
18	**CHECK LATERAL G SENSOR.** Measure the voltage between lateral G sensor connector terminals. ***Connector & terminal*** ***(B359) No. 3 (+) — No. 2 (–):***	Is the voltage between 3.3 — 4.3 V when lateral G sensor is inclined to the right to 90°?	Go to step **19.**	Replace the lateral G sensor. <Ref. to 5AT-61, Lateral G Sensor.>
19	**CHECK LATERAL G SENSOR.** Measure the voltage between lateral G sensor connector terminals. ***Connector & terminal*** ***(B359) No. 3 (+) — No. 2 (–):***	Is the voltage 0.7 — 1.7 V when lateral G sensor is inclined to the left to 90°?	Go to step **20.**	Replace the lateral G sensor. <Ref. to 5AT-61, Lateral G Sensor.>
20	**CHECK POOR CONTACT IN CONNECTOR.** Turn the ignition switch to OFF.	Is there poor contact in connector between TCM and lateral G sensor?	Repair the connector.	Go to step **21.**
21	**CHECK ABSCM&H/U.** 1) Connect all the connectors. 2) Perform the clear memory mode. 3) Perform the inspection mode. 4) Read the DTC.	Is the same DTC displayed?	Replace the TCM. <Ref. to 5AT-60, Transmission Control Module (TCM).>	Go to step **22.**
22	**CHECK OTHER DTC DETECTION.**	Is any other DTC displayed?	Perform the diagnosis according to DTC.	Temporary poor contact occurs.

AQ:DTC P1798 GEAR 1 ENGINE BRAKE

NOTE:
Refer to DTC P0771 for diagnostic procedure.<Ref. to 5AT(diag)-79, DTC P0771 SHIFT SOLENOID “E” PERFORMANCE OR STUCK OFF, Diagnostic Procedure with Diagnostic Trouble Code (DTC).>

AR:DTC P1799 INTERLOCK

DTC DETECTING CONDITION:
Perform the interlock judgment when the specified interlock patterns are detected in the oil pressure switch pattern other than shifting.

TROUBLE SYMPTOM:
Locked to 2nd, 4th or 5th gear depending on the vehicle condition at the time of diagnosis.

	Step	Check	Yes	No
1	**CHECK DTC OF TCM.**	Is any of the DTC P0751, P0756, P0761, P0766, P0771 displayed at the same time with P1799?	Perform the diagnosis according to DTC.	Go to step **2.**
2	**CHECK DTC P0756, P0766.**	Perform the diagnosis according to DTC P0756, P0766. Is any malfunction detected?	Perform the diagnosis according to DTC and repair it.	Go to step **3.**
3	**DRIVING CHECK.** 1) Turn the ignition switch OFF. 2) Then restart the engine, and perform the driving check according to the inspection mode.<Ref. to 5AT(diag)-19, PROCEDURE, Inspection Mode.>	Is the same DTC displayed again?	Check the DTC. Then when proceed again to step 3, replace the transmission assembly.<Ref. to 5AT-38, Automatic Transmission Assembly.>	Temporary poor contact occurs. Recheck that the harness connector has no faulty.

AS:DTC P1817 SPORT MODE SWITCH CIRCUIT (MANUAL SWITCH)

DTC DETECTING CONDITION:

Input signal circuit of SPORT mode and manual mode switch is open or shorted.

TROUBLE SYMPTOM:

- Can not set to manual mode.
- "SPORT" light illuminates when shifting to "N" → "D" range.

WIRING DIAGRAM:

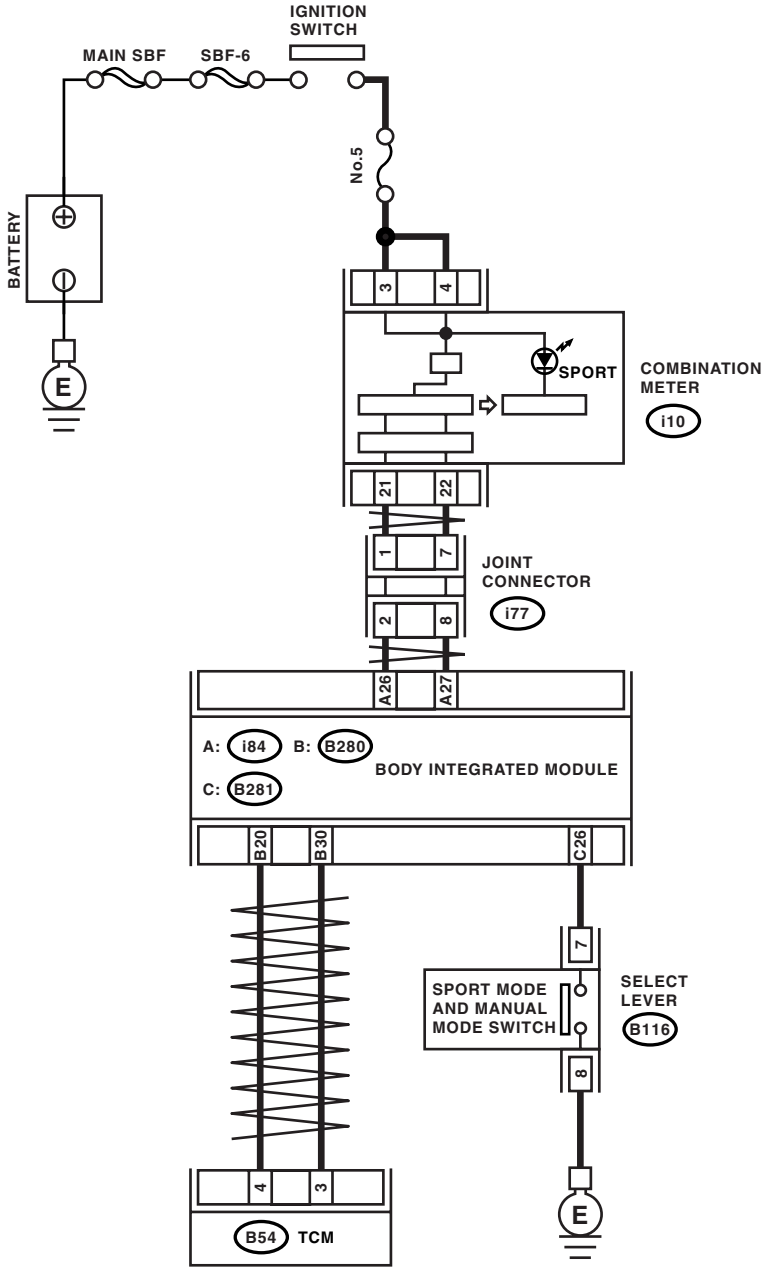

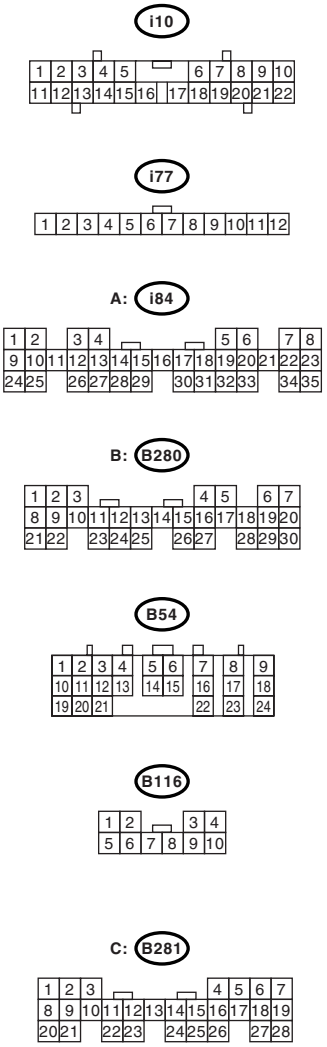

AT-03176

	Step	Check	Yes	No
1	**CHECK BODY INTEGRATED UNIT.** 1) Connect the Subaru Select Monitor to data link connector. 2) Turn the ignition switch to ON. (engine OFF) 3) Read the DTC of body integrated unit using Subaru Select Monitor. <Ref. to LAN(diag)-14, OPERATION, Subaru Select Monitor.>	Is DTC displayed?	Perform the diagnosis according to DTC.	Go to step **2.**
2	**CHECK BODY INTEGRATED UNIT INPUT SIGNAL.** 1) Shift the select lever to “P” range. 2) Read the TIP mode SW data of body integrated unit using Subaru Select Monitor. <Ref. to LAN(diag)-14, OPERATION, Subaru Select Monitor.>	Is OFF displayed?	Go to step **3.**	Go to step **7.**
3	**CHECK BODY INTEGRATED UNIT INPUT SIGNAL.** 1) Shift the select lever from “P” to “D” range. 2) Read the TIP mode SW data of body integrated unit using Subaru Select Monitor. <Ref. to LAN(diag)-14, OPERATION, Subaru Select Monitor.>	Is the indication on each range OFF?	Go to step **4.**	Replace the select lever assembly. <Ref. to CS-20, Select Lever.>
4	**CHECK BODY INTEGRATED UNIT INPUT SIGNAL.** 1) Shift the select lever to manual mode. 2) Shift the select lever to other than “D” range. 3) Read the TIP mode SW data of body integrated unit using Subaru Select Monitor. <Ref. to LAN(diag)-14, OPERATION, Subaru Select Monitor.>	Is OFF displayed?	Go to step **5.**	Replace the select lever assembly. <Ref. to CS-20, Select Lever.>
5	**CHECK DTC OF TCM.**	Is DTC of Transmission Range Sensor Circuit (PRNDL Input) and AT CAN communication circuit displayed?	Perform the diagnosis according to each DTC.	Go to step **6.**
6	**CHECK TCM INPUT SIGNAL.** 1) Shift the select lever from “P” to “D” range. 2) Read the TIP mode SW data of TCM using Subaru Select Monitor. <Ref. to 5AT(diag)-15, OPERATION, Subaru Select Monitor.>	Is the indication on each range OFF?	Even if the SPORT indicator lights blinks, the circuit is in normal condition. A temporary poor contact of connector or harness may be the cause.	Replace the TCM. <Ref. to 5AT-60, Transmission Control Module (TCM).>
7	**CHECK HARNESS BETWEEN BODY INTEGRATED UNIT AND SPORT MODE AND MANUAL MODE SWITCH.** 1) Turn the ignition switch to OFF. 2) Disconnect harness connector from body integrated unit and select lever. 3) Measure the harness resistance between the body integrated unit and chassis ground. ***Connector & terminal*** ***(B281) No. 26 — Chassis ground:***	Is the resistance more than 1 MΩ?	Go to step **8.**	Repair the short circuit of harness between the body integrated unit and SPORT mode and manual mode switch.

	Step	Check	Yes	No
8	**CHECK SPORT MODE AND MANUAL MODE SWITCH.** 1) Shift the select lever to "P" range. 2) Measure the resistance between harness connector terminals of SPORT mode and manual mode switch. ***Terminals*** ***(B116) No. 7 — No. 8:***	Is the resistance more than 1 MΩ?	Check the body integrated unit.	Replace the select lever assembly. <Ref. to CS-20, Select Lever.>

AT:DTC P1840 TRANSMISSION FLUID PRESSURE SENSOR/SWITCH A CIRCUIT

DTC DETECTING CONDITION:
Front brake oil pressure switch malfunction
TROUBLE SYMPTOM:
Excessive shift shock

NOTE:
Refer to DTC P0751 for diagnostic procedure. <Ref. to 5AT(diag)-59, DTC P0751 SHIFT SOLENOID "A" PERFORMANCE OR STUCK OFF, Diagnostic Procedure with Diagnostic Trouble Code (DTC).>

AU:DTC P1842 TRANSMISSION FLUID PRESSURE SENSOR/SWITCH C CIRCUIT

DTC DETECTING CONDITION:
Input clutch oil pressure switch malfunction
TROUBLE SYMPTOM:
Excessive shift shock

NOTE:
Refer to DTC P0756 for diagnostic procedure. <Ref. to 5AT(diag)-64, DTC P0756 SHIFT SOLENOID "B" PERFORMANCE OR STUCK OFF, Diagnostic Procedure with Diagnostic Trouble Code (DTC).>

AV:DTC P1843 TRANSMISSION FLUID PRESSURE SENSOR/SWITCH D CIRCUIT

DTC DETECTING CONDITION:
Direct clutch oil pressure switch malfunction
TROUBLE SYMPTOM:
Excessive shift shock

NOTE:
Refer to DTC P0766 for diagnostic procedure. <Ref. to 5AT(diag)-74, DTC P0766 SHIFT SOLENOID "D" PERFORMANCE OR STUCK OFF, Diagnostic Procedure with Diagnostic Trouble Code (DTC).>

AW:DTC P1844 TRANSMISSION FLUID PRESSURE SENSOR/SWITCH E CIRCUIT

DTC DETECTING CONDITION:
High & low reverse clutch oil pressure switch malfunction
TROUBLE SYMPTOM:
Excessive shift shock

NOTE:
Refer to DTC P0761 for diagnostic procedure. <Ref. to 5AT(diag)-69, DTC P0761 SHIFT SOLENOID "C" PERFORMANCE OR STUCK OFF, Diagnostic Procedure with Diagnostic Trouble Code (DTC).>

15.Diagnostic Procedure without Diagnostic Trouble Code (DTC)

A: CHECK MANUAL MODE SWITCH

DIAGNOSIS:

Input signal circuit of manual mode switch is open or shorted.

TROUBLE SYMPTOM:

Does not shift on manual mode.

WIRING DIAGRAM:

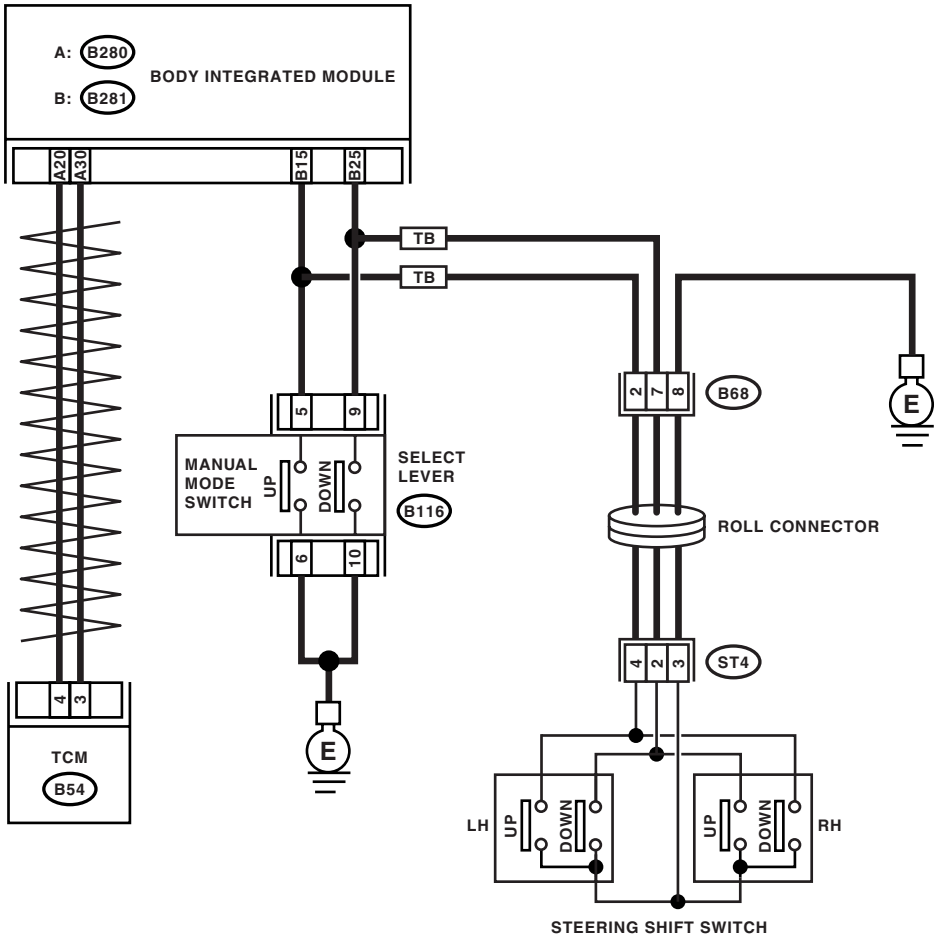

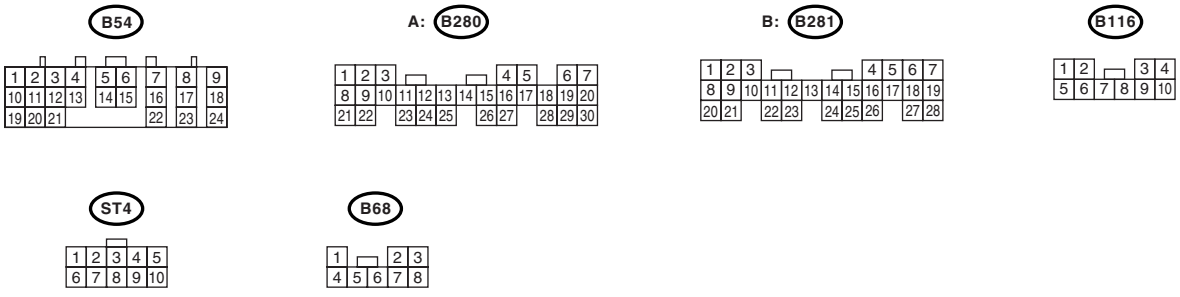

AT-03197

	Step	Check	Yes	No
1	**CHECK BODY INTEGRATED UNIT.** 1) Perform the ON/OFF operation on manual mode switch. 2) Read the data of manual mode switch signal using Subaru Select Monitor.	Both ON/OFF can be detected normally?	Go to step **2.**	Go to step **7.**
2	**CHECK DTC OF BODY INTEGRATED UNIT.**	Is DTC of CAN detected?	Perform the diagnosis according to DTC.	Go to step **3.**
3	**CHECK TCM.** 1) Perform the ON/OFF operation on manual mode switch. 2) Read the data of manual mode switch signal using Subaru Select Monitor.	Both ON/OFF can be detected normally?	Go to step **4.**	Go to step **5.**
4	**CHECK TIP INDICATOR ON COMBINATION METER.**	Is the TIP indicator OK?	Go to step **6.**	Replace the combination meter assembly. <Ref. to IDI-15, Combination Meter.>
5	**CHECK DTC OF TCM.**	Is DTC of CAN detected?	Perform the diagnosis according to DTC.	Replace the TCM. <Ref. to 5AT-60, Transmission Control Module (TCM).>
6	**CHECK DTC OF METER.**	Is DTC of CAN detected?	Perform the diagnosis according to DTC.	Replace the meter.
7	**CHECK MANUAL MODE SWITCH GROUND CIRCUIT.** 1) Turn the ignition switch to OFF. 2) Disconnect the connector from manual mode switch. 3) Measure the resistance of harness between manual mode switch connector and chassis ground. ***Connector & terminal*** ***(B116) No. 6 — Chassis ground:***	Is the resistance less than 1 Ω?	Go to step **8.**	Repair the open circuit in harness between manual mode switch and chassis ground.
8	**CHECK MANUAL MODE SWITCH.** Measure the resistance between the manual mode switch terminals. ***Connector & terminal*** ***(B116) No. 6 — No. 5:***	Is the resistance more than 1 MΩ?	Go to step **9.**	Replace the guide plate assembly.
9	**CHECK MANUAL MODE SWITCH.** 1) Shift the select lever to manual mode. 2) Measure the resistance between the manual mode switch terminals. ***Connector & terminal*** ***(B116) No. 6 — No. 5:***	Is the resistance less than 1 Ω?	Go to step **10.**	Replace the guide plate assembly.
10	**CHECK HARNESS CONNECTOR BETWEEN BODY INTEGRATED UNIT AND MANUAL MODE SWITCH.** 1) Disconnect the connector from body integrated unit. 2) Measure the resistance of harness between the body integrated unit and manual mode switch connector. ***Connector & terminal*** ***(B116) No. 5 — (B281) No. 15:***	Is the resistance less than 1 Ω?	Go to step **11.**	Repair the open circuit in harness between manual mode switch connector and TCM connector, or poor contact in coupling connector.

	Step	Check	Yes	No
11	**CHECK HARNESS CONNECTOR BETWEEN BODY INTEGRATED UNIT AND MANUAL MODE SWITCH.** 1) Disconnect the connector from body integrated unit. 2) Measure the resistance of harness between manual mode switch connector and chassis ground. ***Connector & terminal*** ***(B116) No. 5 — Chassis ground:***	Is the resistance more than 1 MΩ?	Go to step **12.**	Repair the short circuit in harness between manual mode switch connector and TCM connector.
12	**CHECK INPUT SIGNAL FOR TCM.** 1) Connect all the connectors. 2) Turn the ignition switch to ON (engine OFF). 3) Measure the signal voltage for TCM. ***Connector & terminal*** ***(B281) No. 15 (+) — Chassis ground (–):***	Is the voltage more than 9 V?	Go to step **13.**	Replace the body integrated unit. <Ref. to SL-54, Body Integrated Unit.>
13	**CHECK INPUT SIGNAL FOR TCM.** 1) Shift and hold the select lever to up side. 2) Measure the signal voltage for TCM. ***Connector & terminal*** ***(B281) No. 15 (+) — Chassis ground (–):***	Is the voltage less than 1 V?	Go to step **14.**	Replace the body integrated unit. <Ref. to SL-54, Body Integrated Unit.>
14	**CHECK MANUAL MODE SWITCH GROUND CIRCUIT.** 1) Turn the ignition switch to OFF. 2) Disconnect the connector from manual mode switch. 3) Measure the resistance of harness between manual mode switch connector and chassis ground. ***Connector & terminal*** ***(B116) No. 10 — Chassis ground:***	Is the resistance less than 1 Ω?	Go to step **15.**	Repair the open circuit in harness between manual mode switch and chassis ground.
15	**CHECK MANUAL MODE SWITCH.** Measure the resistance between the manual mode switch terminals. ***Connector & terminal*** ***(B116) No. 10 — No. 9:***	Is the resistance more than 1 MΩ?	Go to step **16.**	Replace the guide plate assembly.
16	**CHECK MANUAL MODE SWITCH.** 1) Shift the select lever to manual mode. 2) Measure the resistance between the manual mode switch terminals. ***Connector & terminal*** ***(B116) No. 10 — No. 9:***	Is the resistance less than 1 Ω?	Go to step **17.**	Replace the guide plate assembly.
17	**CHECK HARNESS CONNECTOR BETWEEN BODY INTEGRATED UNIT AND MANUAL MODE SWITCH.** 1) Disconnect the connector from body integrated unit. 2) Measure the resistance of harness between the body integrated unit and manual mode switch connector. ***Connector & terminal*** ***(B116) No. 9 — (B281) No. 25:***	Is the resistance less than 1 Ω?	Go to step **18.**	Repair the open circuit in harness between manual mode switch connector and body integrated unit connector, or poor contact in coupling connector.

	Step	Check	Yes	No
18	**CHECK HARNESS CONNECTOR BETWEEN BODY INTEGRATED UNIT AND MANUAL MODE SWITCH.** 1) Disconnect the steering roll connector. 2) Measure the resistance of harness between manual mode switch connector and chassis ground. ***Connector & terminal*** ***(B116) No. 9 — Chassis ground:***	Is the resistance more than 1 MΩ?	Go to step **19.**	Repair the short circuit of harness between the manual mode switch connector and body integrated unit connector.
19	**CHECK THE INPUT SIGNAL TO BODY INTEGRATED UNIT.** 1) Connect all the connectors. 2) Turn the ignition switch to ON (engine OFF). 3) Check the signal voltage for body integrated unit. ***Connector & terminal*** ***(B281) No. 25 (+) — Chassis ground (–):***	Is the voltage more than 9 V?	Go to step **20.**	Replace the body integrated unit. <Ref. to SL-54, Body Integrated Unit.>
20	**CHECK THE INPUT SIGNAL TO BODY INTEGRATED UNIT.** 1) Shift and hold the select lever to up side. 2) Check the signal voltage for body integrated unit. ***Connector & terminal*** ***(B281) No. 25 (+) — Chassis ground (–):***	Is the voltage less than 1 V?	Go to step **21.**	Replace the body integrated unit. <Ref. to SL-54, Body Integrated Unit.>
21	**CHECK STEERING SHIFT SWITCH GROUND CIRCUIT.** 1) Turn the ignition switch to OFF. 2) Disconnect the connector from steering roll connector. 3) Measure the resistance of harness between steering roll connector and chassis ground. ***Connector & terminal*** ***(ST3) No. 3 — Chassis ground:***	Is the resistance less than 1 Ω?	Go to step **22.**	Repair the open circuit in harness between steering roll connector and chassis ground.
22	**CHECK STEERING SHIFT SWITCH.** Measure the resistance between steering roll connector terminals. ***Connector & terminal*** ***(ST3) No. 2 — No. 3:***	Is the resistance more than 1 MΩ?	Go to step **23.**	Replace the steering roll connector or steering shift switch. Or repair the poor contact in connector.
23	**CHECK STEERING SHIFT SWITCH.** 1) Press and hold the steering shift switch to + side. 2) Measure the resistance between the steering shift switch terminals. ***Connector & terminal*** ***(ST3) No. 2 — No. 3:***	Is the resistance less than 1 Ω?	Go to step **24.**	Replace the steering roll connector or steering shift switch. Or repair the poor contact in connector.
24	**CHECK HARNESS CONNECTOR BETWEEN BODY INTEGRATED UNIT AND STEERING ROLL CONNECTOR.** 1) Disconnect the connector from body integrated unit. 2) Measure the resistance of harness between the body integrated unit connector and steering roll connector. ***Connector & terminal*** ***(B281) No. 15 — (B68) No. 2:***	Is the resistance less than 1 Ω?	Go to step **25.**	Repair the open circuit in harness between body integrated unit connector and steering roll connector, or poor contact in connector.

	Step	Check	Yes	No
25	**CHECK HARNESS CONNECTOR BETWEEN BODY INTEGRATED UNIT AND STEERING ROLL CONNECTOR.** 1) Disconnect the connector from body integrated unit. 2) Measure the resistance of harness between the body integrated unit connector and steering roll connector. ***Connector & terminal*** ***(B281) No. 25 — (B68) No. 6:***	Is the resistance less than 1 Ω?	Go to step **26.**	Repair the open circuit in harness between body integrated unit connector and steering roll connector, or poor contact in connector.
26	**CHECK POOR CONTACT.**	Is there poor contact in manual mode switch circuit?	Repair the poor contact.	A temporary poor contact of manual mode switch connector or harness

B: INSPECTION OF SPORT SHIFT INDICATOR LIGHT

DIAGNOSIS:

Output signal circuit of SPORT shift indicator light is open or shorted.

TROUBLE SYMPTOM:

- SPORT shift indicator light does not illuminate or remains illuminated.
- SPORT shift indicator light display does not change.

WIRING DIAGRAM:

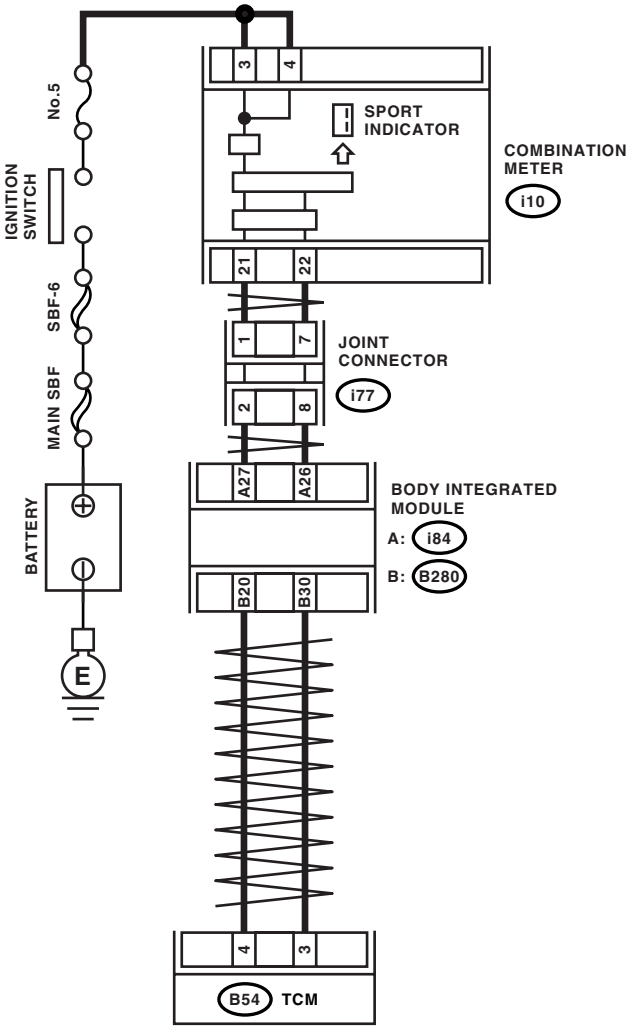

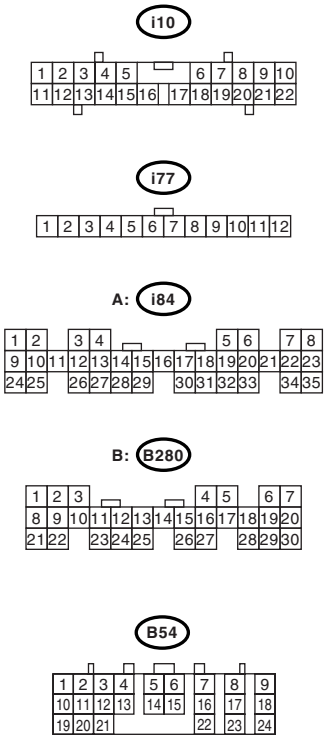

AT-03177

	Step	Check	Yes	No
1	**CHECK BODY INTEGRATED UNIT.** Check DTC of body integrated unit.	Is DTC of AT CAN communication circuit displayed?	Perform the diagnosis according to DTC.	Go to step **2.**
2	**CHECK TCM.** Check DTC of TCM.	Is DTC of AT CAN communication circuit displayed?	Perform the diagnosis according to DTC.	Go to step **3.**
3	**CHECK TCM.** 1) Turn the ignition switch to OFF. 2) Connect the Subaru Select Monitor to data link connector. 3) Turn the ignition switch to ON. (engine OFF) 4) Turn the Subaru Select Monitor switch to ON. 5) Shift the select lever to manual mode side, and then shift down the select lever. 6) Read the indicator.	Is gear position 1 and "▲" displayed?	Go to step **4.**	Replace the TCM. <Ref. to 5AT-60, Transmission Control Module (TCM).>
4	**CHECK TCM.** 1) Shift up the select lever. 2) Read the indicator.	Is gear position 2 and "▼" displayed?	Go to step **5.**	Replace the TCM. <Ref. to 5AT-60, Transmission Control Module (TCM).>
5	**CHECK BODY INTEGRATED UNIT.** Read the data of gear position using Subaru Select Monitor.	Is SPORT shift gear position 2?	Go to step **6.**	Check the body integrated unit. <Ref. to SL-54, Body Integrated Unit.>
6	**CHECK COMBINATION METER.**	Is the SPORT shift indicator OK?	Refer to "General Diagnostic Table". <Ref. to 5AT(diag)-132, General Diagnostic Table.>	Replace the combination meter assembly. <Ref. to IDI-15, Combination Meter.>

C: INSPECTION OF BUZZER

DIAGNOSIS:
Output signal circuit of buzzer is open or shorted.
TROUBLE SYMPTOM:
Buzzer remains beeping.
WIRING DIAGRAM:

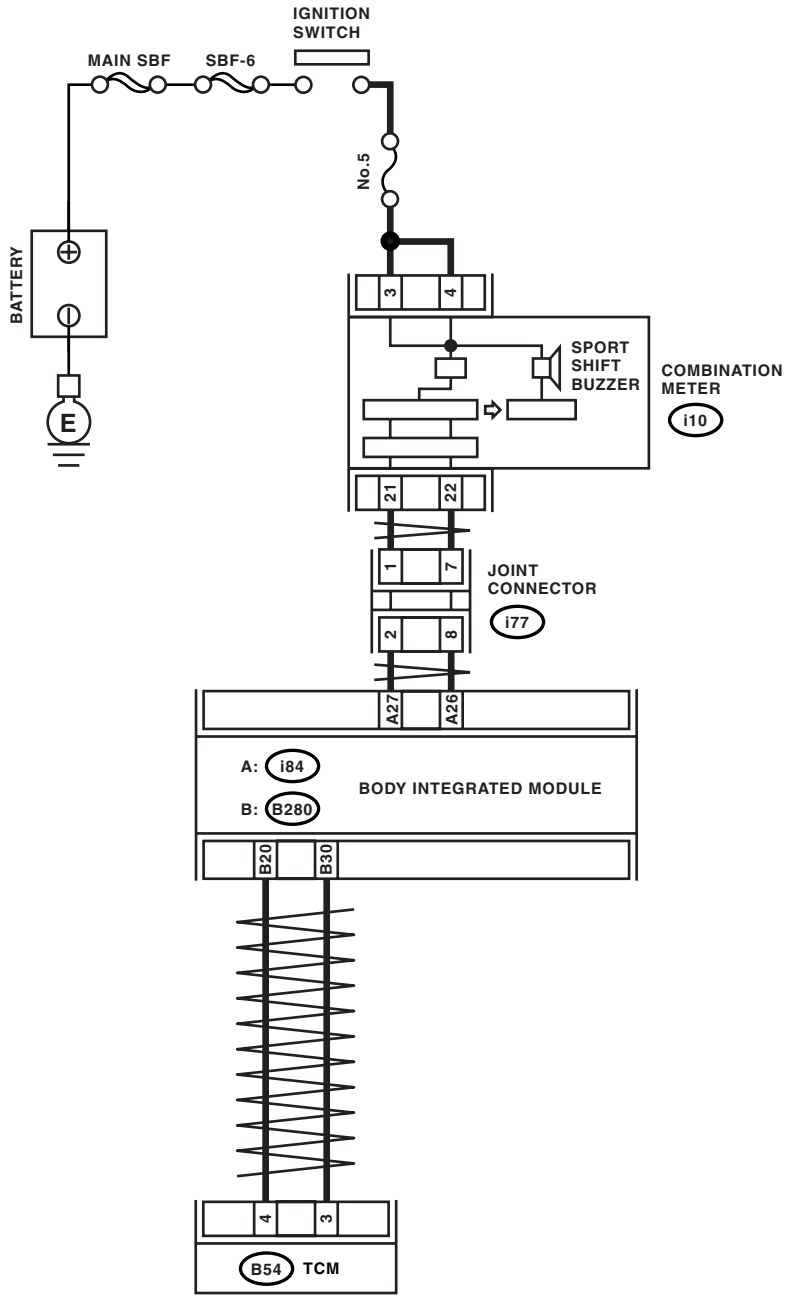

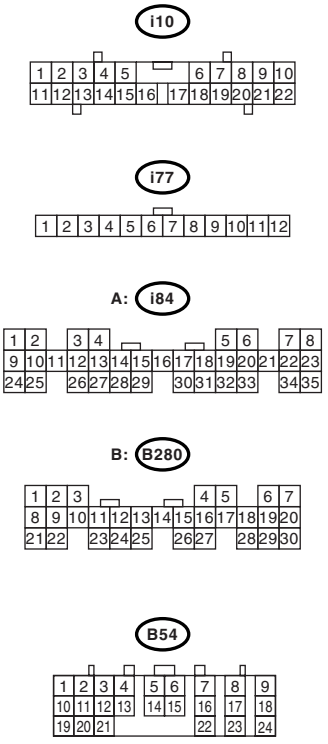

AT-03178

	Step	Check	Yes	No
1	**CHECK BODY INTEGRATED UNIT.** Check DTC of body integrated unit.	Is DTC of CAN communication displayed?	Perform the diagnosis according to DTC.	Go to step **2.**
2	**CHECK TCM.** Check DTC of TCM.	Is DTC of CAN communication displayed?	Perform the diagnosis according to DTC.	Go to step **3.**
3	**CHECK BUZZER STOP.** Disconnect the connector (B54).	Does the buzzer stop?	Replace the TCM. <Ref. to 5AT-60, Transmission Control Module (TCM).>	Go to step **4.**
4	**CHECK BODY INTEGRATED UNIT.** 1) Turn the ignition switch to OFF. 2) Connect the Subaru Select Monitor to data link connector. 3) Turn the ignition switch to ON. (engine OFF) 4) Turn the Subaru Select Monitor switch to ON. 5) Read the data of SPORT shift buzzer using Subaru Select Monitor.	Is the SPORT shift buzzer display “ON”?	Replace the body integrated unit. <Ref. to SL-54, Body Integrated Unit.>	Go to step **5.**
5	**CHECK COMBINATION METER.**	Is the buzzer OK?	Refer to “General Diagnostic Table”. <Ref. to 5AT(diag)-132, General Diagnostic Table.>	Replace the combination meter assembly. <Ref. to IDI-15, Combination Meter.>

16.General Diagnostic Table

A: INSPECTION

Symptom	Problem parts
Shifting vehicle speed is low on “D” range.	• Vehicle speed sensor 1 and Vehicle speed sensor 2 • Accelerator pedal position sensor • Throttle position sensor • ATF temperature sensor • CAN communication signal
Shifting vehicle speed is high on “D” range.	• Vehicle speed sensor 1 and Vehicle speed sensor 2 • Accelerator pedal position sensor • Throttle position sensor • CAN communication signal • Brake switch signal • Lateral G sensor • ATF temperature sensor
Excessive shock. (“N” → “D” range)	• Engine idle speed • Engine speed signal • Accelerator pedal position sensor • Throttle position sensor • Control cable adjustment • ATF temperature sensor • Oil pressure switch 1 and Front brake solenoid valve • CAN communication signal • Fluid level and condition • TCM power supply • PVIGN relay
Excessive shift shock on 1st of “D” range → 2nd of “D” range or “1st of manual mode” → “2nd of manual mode”.	• Accelerator pedal position sensor • Throttle position sensor • Control cable adjustment • Oil pressure switch 4 and Direct clutch solenoid valve • CAN communication signal • Engine speed signal • Turbine speed sensor 1 and Turbine speed sensor 2 • Vehicle speed sensor 1 and Vehicle speed sensor 2 • Fluid level and condition
Excessive shift shock on 2nd of “D” range → 3rd of “D” range or “2nd of manual mode” → “3rd of manual mode”.	• Accelerator pedal position sensor • Throttle position sensor • Control cable adjustment • Oil pressure switch 5 and High & low reverse clutch solenoid valve • CAN communication signal • Engine speed signal • Turbine speed sensor 1 and Turbine speed sensor 2 • Vehicle speed sensor 1 and Vehicle speed sensor 2 • Fluid level and condition
Excessive shift shock on 3rd of “D” range → 4th of “D” range or “3rd of manual mode” → “4th of manual mode”.	• Accelerator pedal position sensor • Throttle position sensor • Control cable adjustment • Oil pressure switch 3 and Input clutch solenoid valve • CAN communication signal • Engine speed signal • Turbine speed sensor 1 and Turbine speed sensor 2 • Vehicle speed sensor 1 and Vehicle speed sensor 2 • Fluid level and condition

Symptom	Problem parts
Excessive shift shock on 4th of “D” range → 5th of “D” range or “4th of manual mode” → “5th of manual mode”.	• Accelerator pedal position sensor • Throttle position sensor • Control cable adjustment • Oil pressure switch 1 and Front brake solenoid valve • CAN communication signal • Engine speed signal • Turbine speed sensor 1 and Turbine speed sensor 2 • Vehicle speed sensor 1 and Vehicle speed sensor 2 • Fluid level and condition
Excessive shock at kick down.	• Accelerator pedal position sensor • Throttle position sensor • Control cable adjustment • CAN communication signal • Engine speed signal • Turbine speed sensor 1 and Turbine speed sensor 2 • Vehicle speed sensor 1 and Vehicle speed sensor 2 • Fluid level and condition
Excessive shock at shift up.	• Accelerator pedal position sensor • Throttle position sensor • Control cable adjustment • Engine speed signal • CAN communication signal • Turbine speed sensor 1 and Turbine speed sensor 2 • Vehicle speed sensor 1 and Vehicle speed sensor 2 • Fluid level and condition
Excessive shock at lock up.	• Accelerator pedal position sensor • Throttle position sensor • Control cable adjustment • Engine speed signal • CAN communication signal • Turbine speed sensor 1 and Turbine speed sensor 2 • Lock up solenoid valve • Vehicle speed sensor 1 and Vehicle speed sensor 2 • Fluid level and condition
Excessive shock at engine brake.	• Accelerator pedal position sensor • Throttle position sensor • Control cable adjustment • CAN communication signal • Fluid level and condition • Line pressure • Low coast brake solenoid valve
Judder is occurred at lock up.	• Fluid level and condition • Engine speed signal • Turbine speed sensor 1 and Turbine speed sensor 2 • Vehicle speed sensor 1 and Vehicle speed sensor 2 • Accelerator pedal position sensor • Throttle position sensor • Lock up solenoid valve • ATF temperature sensor 1 and 2
Noise at “R”, “N” and “D” range.	• Fluid level and condition • Engine speed signal • ATF temperature sensor 1 and 2
Hold at “D” range or 1st on manual mode.	• Fluid level and condition • Vehicle speed sensor 1 and Vehicle speed sensor 2 • Direct clutch solenoid valve • Line pressure • Up switch signal • CAN communication signal • Accelerator pedal position sensor

Symptom	Problem parts
Hold at “D” range or 2nd on manual mode.	• Fluid level and condition • Vehicle speed sensor 1 and Vehicle speed sensor 2 • Low coast brake solenoid valve • Line pressure • Up switch signal • Down switch signal • CAN communication signal • Accelerator pedal position sensor
Hold at “D” range or 3rd on manual mode.	• Fluid level and condition • Vehicle speed sensor 1 and Vehicle speed sensor 2 • Line pressure • Up switch signal • Down switch signal • CAN communication signal • Accelerator pedal position sensor
Hold at “D” range or 4th on manual mode.	• Fluid level and condition • Vehicle speed sensor 1 and Vehicle speed sensor 2 • Oil pressure switch 3 and Input clutch solenoid valve • Oil pressure switch 4 and Direct clutch solenoid valve • Oil pressure switch 5 and High & low reverse clutch solenoid valve • Low coast brake solenoid valve • Front brake solenoid valve • Line pressure • Up switch signal • Down switch signal • CAN communication signal • Accelerator pedal position sensor • TCM power supply • PVIGN relay
Hold at “D” range or 5th on manual mode.	• Fluid level and condition • Vehicle speed sensor 1 and Vehicle speed sensor 2 • Oil pressure switch 1 and Front brake solenoid valve • Line pressure • Down switch signal • CAN communication signal • Accelerator pedal position sensor
Gear does not shift 1st of “D” range → 2nd of “D” range or “1st of manual mode” → “2nd of manual mode”.	• Fluid level and condition • Vehicle speed sensor 1 and Vehicle speed sensor 2 • Oil pressure switch 4 and Direct clutch solenoid valve • Line pressure • Up switch • CAN communication signal • Accelerator pedal position sensor
Gear does not shift 2nd of “D” range → 3rd of “D” range or “2nd of manual mode” → “3rd of manual mode”.	• Fluid level and condition • Vehicle speed sensor 1 and Vehicle speed sensor 2 • Oil pressure switch 5 and High & low reverse clutch solenoid valve • Line pressure • Up switch signal • CAN communication signal • Accelerator pedal position sensor
Gear does not shift 3rd of “D” range → 4th of “D” range or “3rd of manual mode” → “4th of manual mode”.	• Fluid level and condition • Vehicle speed sensor 1 and Vehicle speed sensor 2 • Oil pressure switch 3 and Input clutch solenoid valve • Oil pressure switch 1 and Front brake solenoid valve • Line pressure • Up switch signal • CAN communication signal • Accelerator pedal position sensor

Symptom	Problem parts
Gear does not shift 4th of “D” range → 5th of “D” range or “4th of manual mode” → “5th of manual mode”.	• Fluid level and condition • Vehicle speed sensor 1 and Vehicle speed sensor 2 • Oil pressure switch 1 and Front brake solenoid valve • Oil pressure switch 4 and Direct clutch solenoid valve • Turbine speed sensor 1 and Turbine speed sensor 2 • ATF temperature sensor • Line pressure • Up switch signal • CAN communication signal • Accelerator pedal position sensor
Gear does not shift down to 4th on “D” range or manual mode.	• Fluid level and condition • Vehicle speed sensor 1 and Vehicle speed sensor 2 • Oil pressure switch 1 and Front brake solenoid valve • Oil pressure switch 4 and Direct clutch solenoid valve • Line pressure • Down switch signal • CAN communication signal • Accelerator pedal position sensor
Gear does not shift down to 3rd on “D” range or manual mode.	• Fluid level and condition • Vehicle speed sensor 1 and Vehicle speed sensor 2 • Oil pressure switch 3 and Input clutch solenoid valve • Oil pressure switch 1 and Front brake solenoid valve • Line pressure • Down switch signal • CAN communication signal • Accelerator pedal position sensor • TCM power supply • PVIGN relay
Gear does not shift down to 2nd on “D” range or manual mode.	• Fluid level and condition • Vehicle speed sensor 1 and Vehicle speed sensor 2 • Oil pressure switch 5 and High & low reverse clutch solenoid • Line pressure • Down switch signal • CAN communication signal • Accelerator pedal position sensor
Gear does not shift down to 1st on “D” range or manual mode.	• Fluid level and condition • Vehicle speed sensor 1 and Vehicle speed sensor 2 • Oil pressure switch 4 and Direct clutch solenoid valve • Line pressure • Down switch signal • CAN communication signal • Accelerator pedal position sensor
No lock-up occurs.	• Fluid level and condition • Line pressure • Engine speed signal • Turbine speed sensor 1 and Turbine speed sensor 2 • Lock up solenoid valve • CAN communication signal • ATF temperature sensor 1 and 2 • Accelerator pedal position sensor • Brake switch signal • Range signal
No shift shock occurred when shifting 1st of “D” range → 2nd of “D” range or “1st of manual mode” → “2nd of manual mode”. Or clutch slipping occurred.	• Fluid level and condition • Vehicle speed sensor 1 and Vehicle speed sensor 2 • Oil pressure switch 4 and Direct clutch solenoid valve • Line pressure • CAN communication signal

Symptom	Problem parts
No shift shock occurred when shifting 2nd of “D” range → 3rd of “D” range or “2nd of manual mode” → “3rd of manual mode”. Or clutch slipping occurred.	• Fluid level and condition • Vehicle speed sensor 1 and Vehicle speed sensor 2 • Oil pressure switch 5 and High & low reverse clutch solenoid valve • Line pressure • CAN communication signal
No shift shock occurred when shifting 3rd of “D” range → 4th of “D” range or “3rd of manual mode” → “4th of manual mode”. Or clutch slipping occurred.	• Fluid level and condition • Vehicle speed sensor 1 and Vehicle speed sensor 2 • Oil pressure switch 3 and Input clutch solenoid valve • Oil pressure switch 1 and Front brake solenoid valve • Line pressure • CAN communication signal
No shift shock occurred when shifting 4th of “D” range → 5th of “D” range or “4th of manual mode” → “5th of manual mode”. Or clutch slipping occurred.	• Fluid level and condition • Vehicle speed sensor 1 and Vehicle speed sensor 2 • Oil pressure switch 1 and Front brake solenoid valve • Oil pressure switch 4 and Direct clutch solenoid valve • Line pressure • Accelerator pedal position sensor • Throttle position sensor
Engine skids when shifting 5th of “D” range → 4th of “D” range or “5th of manual mode” → “4th of manual mode”. Or slipping occurred.	• Fluid level and condition • Vehicle speed sensor 1 and Vehicle speed sensor 2 • Oil pressure switch 1 and Front brake solenoid valve • Oil pressure switch 4 and Direct clutch solenoid valve • Line pressure • Accelerator pedal position sensor • Throttle position sensor
Engine skids when shifting 4th of “D” range → 3rd of “D” range or “4th of manual mode” → “3rd of manual mode”. Or slipping occurred.	• Fluid level and condition • Vehicle speed sensor 1 and Vehicle speed sensor 2 • Oil pressure switch 3 and Input clutch solenoid valve • Oil pressure switch 1 and Front brake solenoid valve • Line pressure • Accelerator pedal position sensor • Throttle position sensor
Engine skids when shifting 3rd of “D” range → 2nd of “D” range or “3rd of manual mode” → “2nd of manual mode”. Or slipping occurred.	• Fluid level and condition • Vehicle speed sensor 1 and Vehicle speed sensor 2 • Oil pressure switch 5 and High & low reverse clutch solenoid valve • Oil pressure switch 4 and Direct clutch solenoid valve • Line pressure • Accelerator pedal position sensor • Throttle position sensor
Engine skids when shifting 2nd of “D” range → 1st of “D” range or “2nd of manual mode” → “1st of manual mode”. Or slipping occurred.	• Fluid level and condition • Vehicle speed sensor 1 and Vehicle speed sensor 2 • Oil pressure switch 4 and Direct clutch solenoid valve • Line pressure • Accelerator pedal position sensor • Throttle position sensor
Engine brake does not function at 5th → 4th of manual mode.	• Inhibitor switch • Fluid level and condition • Control cable adjustment • Manual mode switch • Oil pressure switch 1 • Down switch signal
Engine brake does not function at 4th → 3rd of manual mode.	• Inhibitor switch • Fluid level and condition • Control cable adjustment • Manual mode switch • Oil pressure switch 1 and Oil pressure switch 3 • Down switch signal

Symptom	Problem parts
Engine brake does not function at 3rd → 2nd of manual mode.	• Inhibitor switch • Fluid level and condition • Control cable adjustment • Manual mode switch • Oil pressure switch 5 • Low coast brake solenoid valve
Engine brake does not function at 2nd → 1st of manual mode.	• Inhibitor switch • Fluid level and condition • Control cable adjustment • Manual mode switch • Oil pressure switch 4 • Low coast brake solenoid valve
Excessive acceleration failure on “D” range.	• Fluid level and condition • Line pressure • Accelerator pedal position sensor • Throttle position sensor • CAN communication signal • Inhibitor switch • Control cable adjustment • Vehicle speed sensor 1, 2
Excessive acceleration failure on “R” range.	• Fluid level and condition • Line pressure • Accelerator pedal position sensor • Throttle position sensor • Oil pressure switch 5 and High & low reverse clutch solenoid valve • CAN communication signal • Inhibitor switch • Control cable adjustment • Vehicle speed sensor 1, 2
Engine skids when start driving (1st) the vehicle. Or slipping occurred.	• Fluid level and condition • Line pressure • Accelerator pedal position sensor • Throttle position sensor • CAN communication signal
Engine skids when driving at 2nd. Or slipping occurred.	• Fluid level and condition • Line pressure • Accelerator pedal position sensor • Throttle position sensor • CAN communication signal • Oil pressure switch 4 and Direct clutch solenoid valve
Engine skids when driving at 3rd. Or slipping occurred.	• Fluid level and condition • Line pressure • Accelerator pedal position sensor • Throttle position sensor • CAN communication signal • Oil pressure switch 5 and High & low reverse clutch solenoid valve
Engine skids when driving at 4th. Or slipping occurred.	• Fluid level and condition • Line pressure • Accelerator pedal position sensor • Throttle position sensor • CAN communication signal • Oil pressure switch 3 and Input clutch solenoid valve

General Diagnostic Table

Symptom	Problem parts
Engine skids when driving 5th. Or slipping occurred.	• Fluid level and condition • Line pressure • Accelerator pedal position sensor • Throttle position sensor • CAN communication signal • Oil pressure switch 1 and Front brake solenoid valve
Slip at lock up.	• Fluid level and condition • Line pressure • Engine speed signal • Turbine speed sensor 1 and Turbine speed sensor 2 • Lock up solenoid valve • CAN communication signal
Maximum vehicle speed is low.	• Fluid level and condition • Line pressure • Accelerator pedal position sensor • Throttle position sensor • CAN communication signal • Direct clutch solenoid valve • Vehicle speed sensor 1 and 2
There is completely no creep.	• Fluid level and condition • Engine speed signal • CAN communication signal • Oil pressure switch 4 and Direct clutch solenoid valve • Line pressure
Excessive large creep.	• Engine speed signal • CAN communication signal • Oil pressure switch 4
Vehicle cannot be parking condition on “P” range. Parking condition is not released though shifting to other ranges.	• Inhibitor switch • Control cable adjustment
Vehicle can drive on “P” range.	• Inhibitor switch • Fluid level and condition • Control cable adjustment • Line pressure
Vehicle can drive on “N” range.	• Inhibitor switch • Fluid level and condition • Control cable adjustment • Line pressure
Vehicle cannot drive at any range.	• Fluid level and condition • Line pressure • Inhibitor switch • Control cable adjustment • Loosing or damaging of propeller shaft. • Loosing or damaging of drive shaft.
Vehicle cannot drive on “D” range.	• Fluid level and condition • Line pressure • Inhibitor switch • Control cable adjustment • Loosing or damaging of propeller shaft. • Loosing or damaging of drive shaft.
Vehicle cannot drive on “R” range.	• Fluid level and condition • Line pressure • Inhibitor switch • Control cable adjustment • Loosing or damaging of propeller shaft. • Loosing or damaging of drive shaft.

Symptom	Problem parts
Engine cannot start on “P” or “N” range	• Key switch and Starter • Control cable adjustment • Inhibitor switch • CAN communication line • TCM
Engine start other than “P” or “N” range	• Key switch and Starter • Control cable adjustment • Inhibitor switch • TCM
Engine stalls.	• Fluid level and condition • Engine speed signal • Turbine speed sensor 1 and Turbine speed sensor 2 • Lock up solenoid valve • Line pressure
Engine stalls when shifting to “N” → “D” and “R” range.	• Fluid level and condition • Engine speed signal • Turbine speed sensor 1 and Turbine speed sensor 2 • Lock up solenoid valve • Line pressure

MANUAL TRANSMISSION AND DIFFERENTIAL

5MT

		Page
1.	General Description	2
2.	Transmission Gear Oil	24
3.	Manual Transmission Assembly	25
4.	Transmission Mounting System	30
5.	Oil Seal	32
6.	Differential Side Retainer Oil Seal	33
7.	Switches and Harness	34
8.	Preparation for Overhaul	36
9.	Transfer Case and Extension Case Assembly	37
10.	Transfer Drive Gear	41
11.	Transfer Driven Gear	43
12.	Center Differential	45
13.	Reverse Check Sleeve	46
14.	Transmission Case	49
15.	Main Shaft Assembly for Single-Range	52
16.	Drive Pinion Shaft Assembly	57
17.	Front Differential Assembly	65
18.	Reverse Idler Gear	72
19.	Shifter Fork and Rod	74
20.	General Diagnostic Table	77

1. General Description

A: SPECIFICATION

1. MANUAL TRANSMISSION AND DIFFERENTIAL

Model			2.0 L non-turbo		2.5 L turbo	
			Except for OUTBACK	OUTBACK	Except for OUTBACK	OUTBACK
Type			5-forward speeds and 1-reverse			
Transmission gear ratio		1st	3.454		3.166	
		2nd	2.062		1.882	
		3rd	1.448		1.296	
		4th	1.088		0.972	
		5th	0.78	0.871	0.738	
		Reverse	3.333			
Front reduction gear	Final	Type of gear	Hypoid			
		Gear ratio	3.900	4.111	4.111	4.444
Rear reduction gear	Transfer	Type of gear	Helical			
		Gear ratio	1.000			
	Final	Type of gear	Hypoid			
		Gear ratio	3.900	4.111	4.111	4.444
Front differential	Type and number of gear		Straight bevel gear (Bevel pinion: 2, Bevel gear: 2)			
Center differential	Type and number of gear		Straight bevel gear (Bevel pinion: 2, Bevel gear: 2 and viscous coupling)			
Transmission gear oil			GL-5			
Transmission gear oil capacity		Single-range model	3.5 ℓ (3.7 US qt, 3.1 Imp qt)			

2. TRANSMISSION GEAR OIL

Recommended oil:

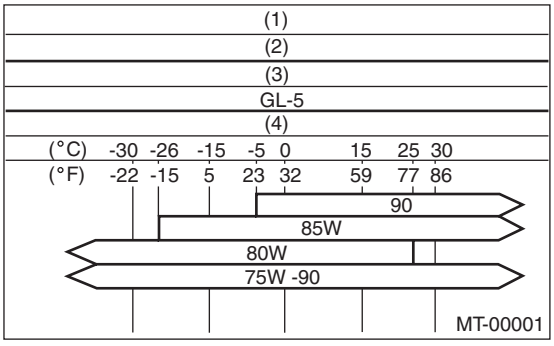

(1) Item
(2) Transmission gear oil
(3) API standard
(4) SAE viscosity No. and applicable temperature

3. TRANSMISSION CASE ASSEMBLY

Drive pinion shim adjustment

Hypoid gear backlash:
0.13 — 0.18 mm (0.0051 — 0.0071 in)

Drive pinion shim			
Part Number	Thickness mm (in)	Part Number	Thickness mm (in)
32295AA031	0.150 (0.0059)	32295AA071	0.250 (0.0098)
32295AA041	0.175 (0.0069)	32295AA081	0.275 (0.0108)
32295AA051	0.200 (0.0079)	32295AA091	0.300 (0.0118)
32295AA061	0.225 (0.0089)	32295AA101	0.500 (0.0197)

Selection of main shaft rear plate

Main shaft rear plate		
Dimension “A” mm (in)	Part Number	Marking
4.00 — 4.13 (0.1575 — 0.1626)	32294AA041	1
3.87 — 3.99 (0.1524 — 0.1571)	32294AA051	2

4. DRIVE PINION ASSEMBLY

Preload adjustment of thrust bearing

Starting torque:
0.3 — 0.8 N·m(0.03 — 0.08 kgf-m, 0.2 — 0.6 ft-lb)

Adjusting washer No. 1	
Part Number	Thickness mm (in)
803025051	3.925 (0.1545)
803025052	3.950 (0.1555)
803025053	3.975 (0.1565)
803025054	4.000 (0.1575)
803025055	4.025 (0.1585)
803025056	4.050 (0.1594)
803025057	4.075 (0.1604)

Adjusting washer No. 2	
Part Number	Thickness mm (in)
803025059	3.850 (0.1516)
803025054	4.000 (0.1575)
803025058	4.150 (0.1634)

5. REVERSE IDLER GEAR

Adjustment of reverse idler gear position

Reverse idler gear to transmission case (LH) wall clearance:
6.0 — 7.5 mm (0.236 — 0.295 in)

Reverse shifter lever		
Part Number	Marking	Remarks
32820AA070	7	Further from case wall
32820AA080	8	Standard
32820AA090	9	Closer to the case wall

After installing a suitable reverse shifter lever, adjust the clearance using washer.

Reverse idler gear to transmission case wall clearance:
0 — 0.5 mm (0 — 0.020 in)

Washer (20.5 × 26 × t)			
Part Number	Thickness mm (in)	Part Number	Thickness mm (in)
803020151	0.4 (0.016)	803020154	1.9 (0.075)
803020152	1.1 (0.043)	803020155	2.3 (0.091)
803020153	1.5 (0.059)	—	—

6. SHIFTER FORK AND ROD

Select suitable shifter forks so that both the coupling sleeve and reverse driven gear are positioned in the center of their synchromesh mechanisms.

Rod end clearance:
A: 3rd-4th — 5th
0.5 — 1.3 mm (0.020 — 0.051 in)
B: 1st-2nd — 3rd-4th
0.4 — 1.4 mm (0.016 — 0.055 in)

1st-2nd shifter fork		
Part Number	Marking	Remarks
32804AA060	1	Approach to 1st gear by 0.2 mm (0.008 in).
32804AA070	No mark	Standard
32804AA080	3	Approach to 2nd gear by 0.2 mm (0.008 in)

3rd-4th shifter fork		
Part Number	Marking	Remarks
32810AA061	1	Approach to 4th gear by 0.2 mm (0.008 in).
32810AA071	No mark	Standard
32810AA101	3	Approach to 3rd gear by 0.2 mm (0.008 in)

5th shifter fork (Non-turbo model)		
Part No.	Mark	Remarks
32812AA201	7	Approach to 5th gear by 0.2 mm (0.008 in)
32812AA211	No mark	Standard
32812AA221	9	Become distant from 5th gear by 0.2 mm (0.008 in)

5th shifter fork (Turbo model)		
Part No.	Mark	Remarks
32812AA231	7	Approach to 5th gear by 0.2 mm (0.008 in)
32812AA241	No mark	Standard
32812AA251	9	Become distant from 5th gear by 0.2 mm (0.008 in)

7. TRANSFER CASE OR REAR CASE

Neutral position adjustment

Adjusting shim	
Part Number	Thickness mm (in)
32190AA000	0.15 (0.0059)
32190AA010	0.30 (0.0118)

Reverse accent shaft		
Part No.	Mark	Remarks
32188AA130	S	Neutral position is closer to 1st.
32188AA140	T	Standard
32188AA150	U	Neutral position is closer to reverse gear.

Reverse check plate adjustment

Reverse check plate			
Part Number	Marking	Angle θ	Remarks
32189AA000	0	28°	Arm stops closer to 5th gear.
32189AA010	1	31°	Arm stops closer to 5th gear.
33189AA020	2	34°	Arm stops in the center.
32189AA030	3	37°	Arm stops closer to reverse gear.
32189AA040	4	40°	Arm stops closer to reverse gear.

8. EXTENSION ASSEMBLY

Preload of the taper roller bearing (amount of standard protrusion):
0.15 — 0.20 mm (0.006 — 0.008 in)

NOTE:
Be sure that the amount of preload is within the standard value.

Thrust washer (50 × 61 × t)	
Part Number	Thickness mm (in)
803050060	0.50 (0.0197)
803050061	0.55 (0.0217)
803050062	0.60 (0.0236)
803050063	0.65 (0.0256)
803050064	0.70 (0.0276)
803050065	0.75 (0.0295)
803050066	0.80 (0.0315)
803050067	0.85 (0.0335)
803050068	0.90 (0.0354)
803050069	0.95 (0.0374)
803050070	1.00 (0.0394)
803050071	1.05 (0.0413)
803050072	1.10 (0.0433)
803050073	1.15 (0.0453)
803050074	1.20 (0.0472)
803050075	1.25 (0.0492)
803050076	1.30 (0.0512)
803050077	1.35 (0.0531)
803050078	1.40 (0.0551)
803050079	1.45 (0.0571)

Thrust washer to center differential side clearance:
0.15 — 0.35 mm (0.0059 — 0.0138 in)

Thrust washer	
Part Number	Thickness mm (in)
803036050	0.9 (0.035)
803036054	1.0 (0.039)
803036051	1.1 (0.043)
803036055	1.2 (0.047)
803036052	1.3 (0.051)
803036056	1.4 (0.055)
803036053	1.5 (0.059)
803036057	1.6 (0.063)
803036058	1.7 (0.067)

9. FRONT DIFFERENTIAL

Bevel gear to pinion backlash:
0.13 — 0.18 mm (0.0051 — 0.0071 in)

Washer (38.1 × 50 × t)			
Part Number	Thickness mm (in)	Part Number	Thickness mm (in)
803038021	0.925 — 0.950 (0.0364 — 0.0374)	803038023	1.025 — 1.050 (0.0404 — 0.0413)
803038022	0.975 — 1.000 (0.0384 — 0.0394)	—	—

10.TRANSFER DRIVE GEAR

Snap ring (Outer-30) to ball bearing clearance:
0.01 — 0.15 mm (0.0004 — 0.0059 in)

Snap ring (Outer-30)	
Part Number	Thickness mm (in)
805030041	1.53 (0.0602)
805030042	1.65 (0.0650)
805030043	1.77 (0.0697)

B: COMPONENT

1. TRANSMISSION CASE

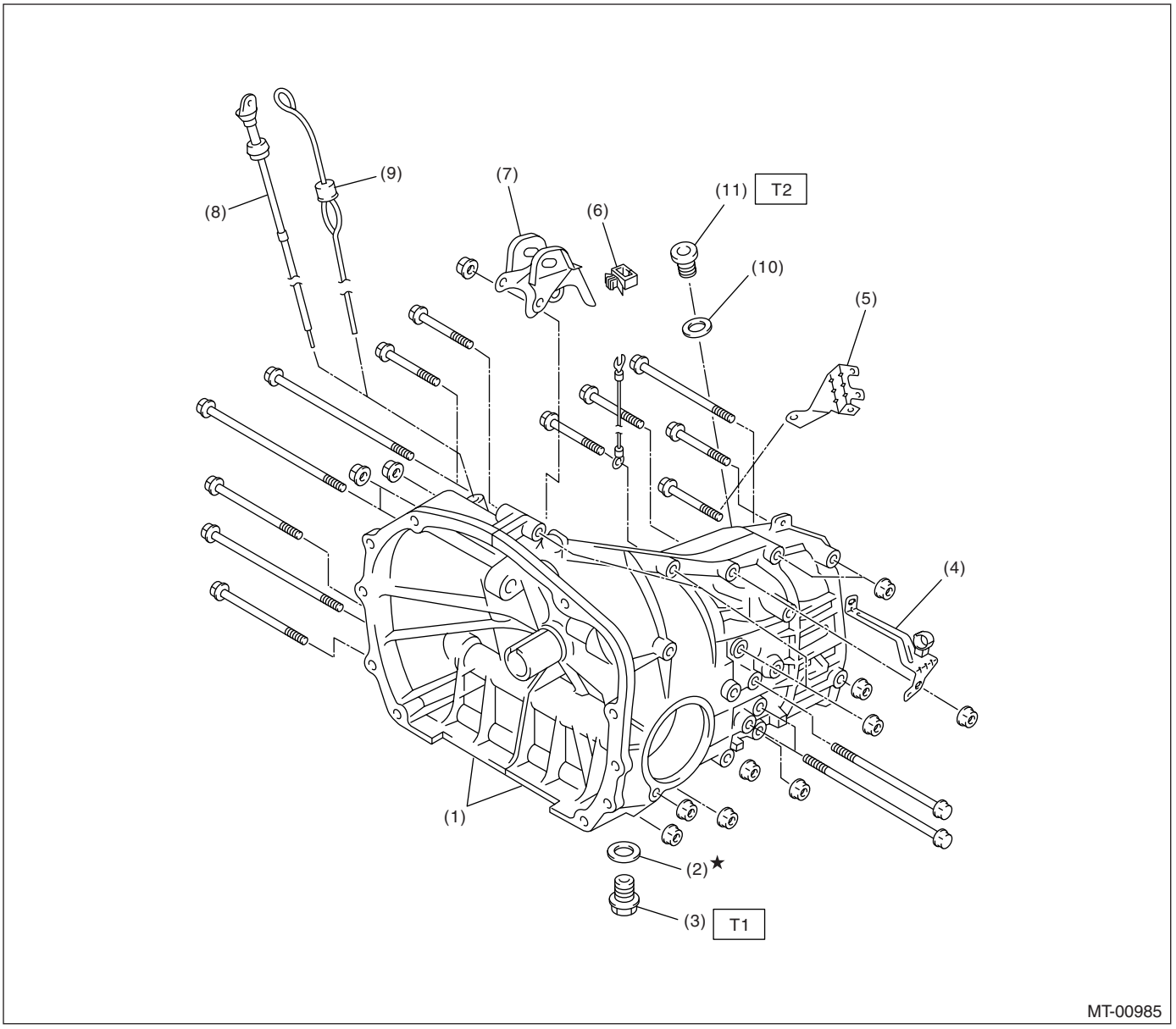

(1)	Transmission case ASSY	(6)	Clamp
(2)	Gasket	(7)	Pitching stopper bracket
(3)	Drain plug	(8)	Oil level gauge (Non-turbo model)
(4)	Harness bracket (Non-turbo model)	(9)	Oil level gauge (Turbo model)
		(10)	Gasket
(5)	Harness bracket (Turbo model)	(11)	Plug

Tightening torque: N·m (kgf-m, ft-lb)
T1: 70 (7.1, 51)
T2: 60 (6.1, 43.7)

- Transmission case tightening torque

	Bolt No.	Bolt size mm	Tightening torque: N·m (kgf-m, ft-lb)
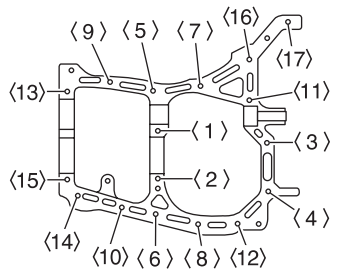 MT-00003	(5) — (15)	8	25 (2.6, 18.5)
	(1) — (4) (16) — (17)	10	39 (4.0, 28.9)

2. DRIVE PINION ASSEMBLY

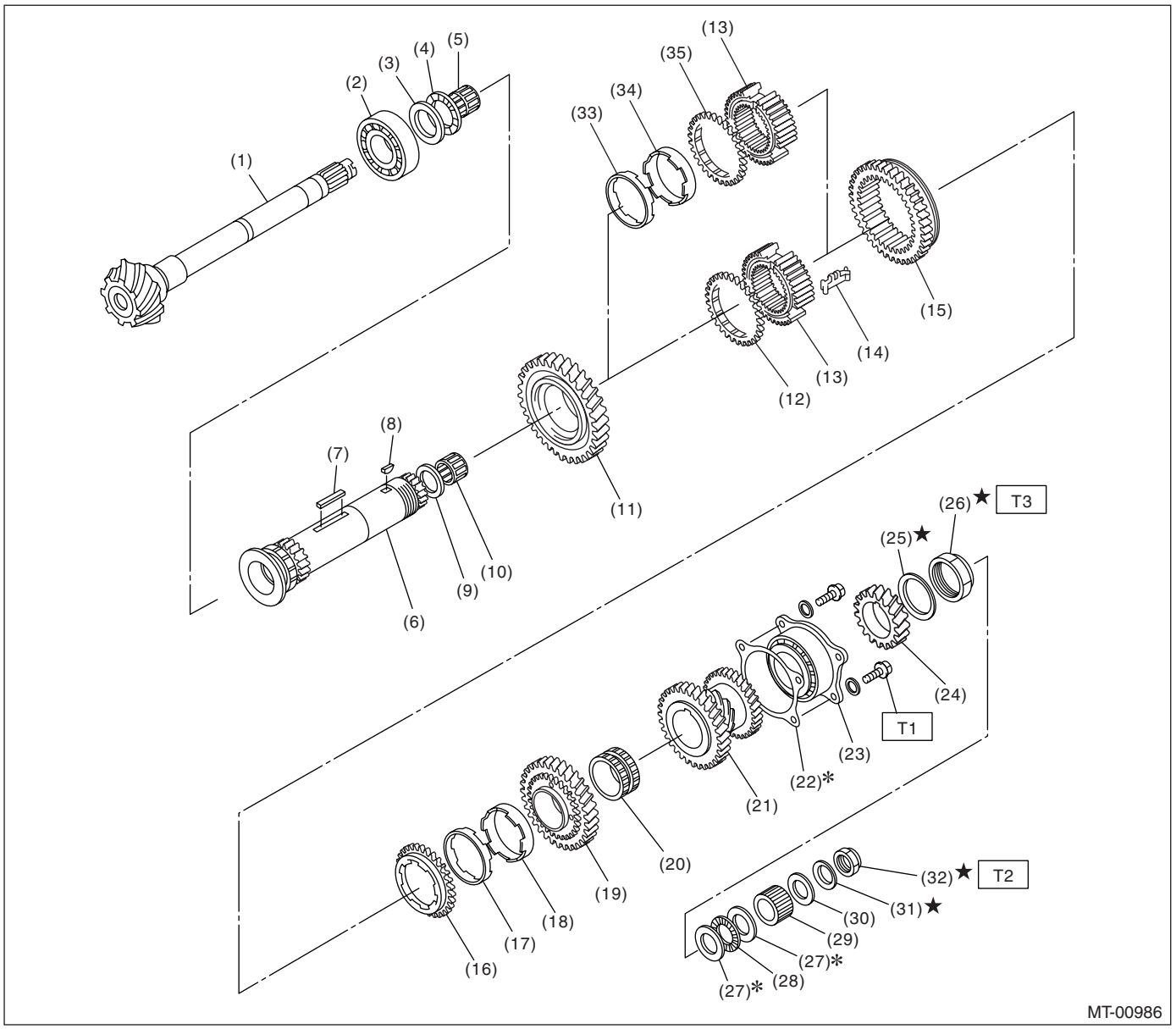

(1) Drive pinion shaft
(2) Roller bearing
(3) Washer
(4) Thrust bearing
(5) Needle bearing
(6) Driven shaft
(7) Key
(8) Woodruff key
(9) Drive pinion collar
(10) Needle bearing
(11) 1st driven gear
(12) Baulk ring (Non-turbo model)
(13) 1st-2nd synchronizer hub
(14) Insert key
(15) Reverse driven gear
(16) Outer baulk ring
(17) Synchro cone
(18) Inner baulk ring
(19) 2nd driven gear
(20) 2nd driven gear bushing
(21) 3rd-4th driven gear
(22) Driven pinion shim
(23) Roller bearing
(24) 5th driven gear
(25) Lock washer
(26) Lock nut
(27) Washer
(28) Thrust bearing
(29) Differential bevel gear sleeve
(30) Washer
(31) Lock washer
(32) Lock nut
(33) Inner baulk ring (Turbo model)
(34) Synchro cone (Turbo model)
(35) Outer baulk ring (Turbo model)

Tightening torque: N·m (kgf-m, ft-lb)
T1: 30.5 (3.1, 22.5)
T2: 120 (12.2, 88.5)
T3: 260 (26.5, 191.7)

3. MAIN SHAFT ASSEMBLY FOR SINGLE-RANGE

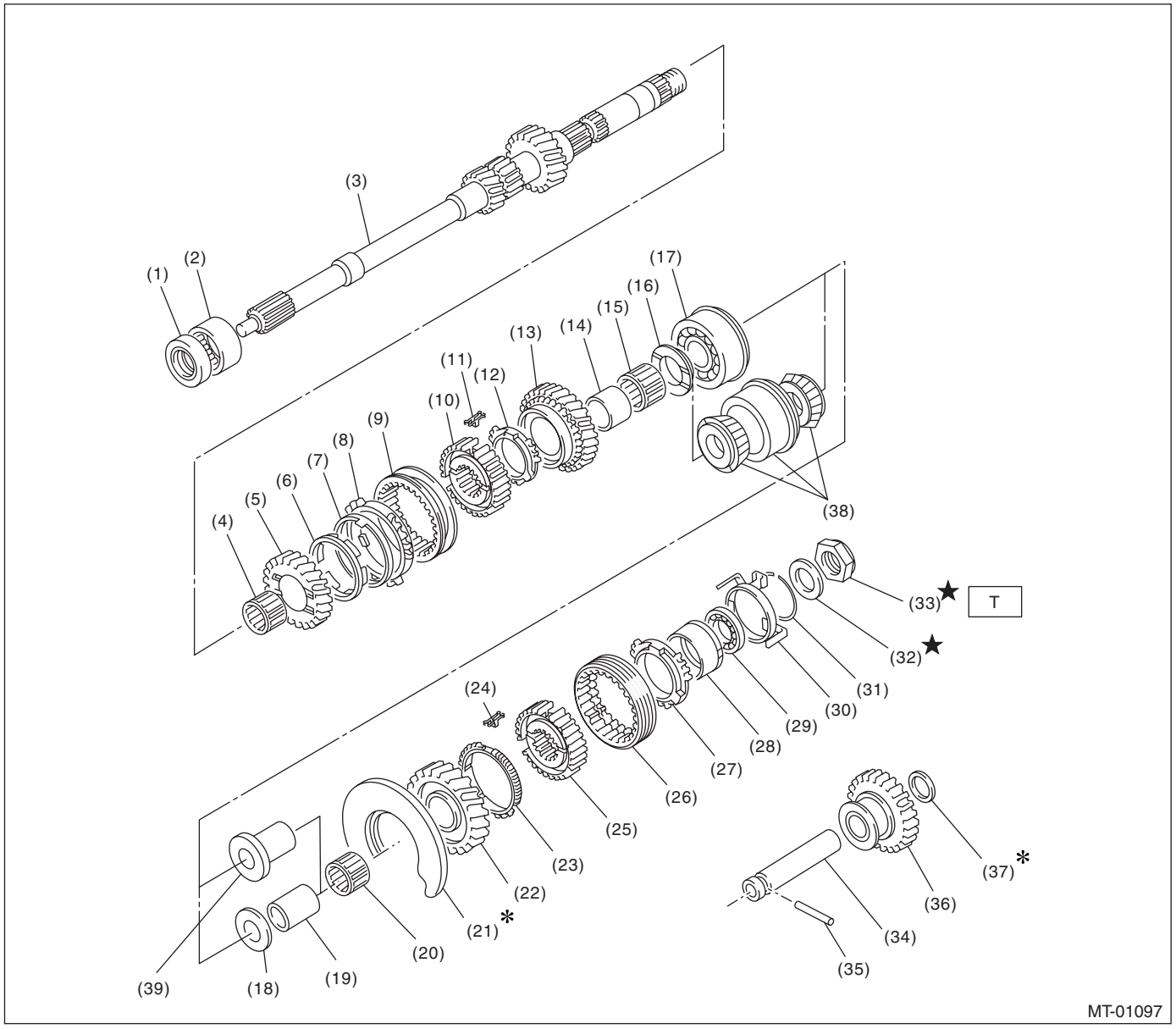

(1) Oil seal
(2) Needle bearing
(3) Transmission main shaft
(4) Needle bearing
(5) 3rd drive gear
(6) Inner baulk ring
(7) 3rd synchro cone
(8) Outer baulk ring
(9) 3rd-4th coupling sleeve
(10) 3rd-4th synchronizer hub
(11) 3rd-4th shifting insert key
(12) 4th baulk ring
(13) 4th drive gear
(14) 4th needle bearing race
(15) Needle bearing
(16) 4th gear thrust washer
(17) Ball bearing (Non-turbo model)
(18) 5th gear thrust washer (Non-turbo model)
(19) 5th needle bearing race (Non-turbo model)
(20) Needle bearing
(21) Main shaft rear plate
(22) 5th drive gear
(23) 5th baulk ring
(24) 5th-Rev shifting insert key
(25) 5th-Rev synchronizer hub
(26) 5th-Rev coupling sleeve
(27) Reverse baulk ring
(28) Reverse synchro cone
(29) Ball bearing
(30) Synchro cone stopper
(31) Snap ring
(32) Lock washer
(33) Lock nut
(34) Reverse idler gear shaft
(35) Straight pin
(36) Reverse idler gear
(37) Washer
(38) Taper roller bearing (Turbo model)
(39) 5th needle bearing race (Turbo model)

Tightening torque: N·m (kgf-m, ft-lb)
T: 120 (12.2, 88.5)

4. SHIFTER FORK AND SHIFTER ROD

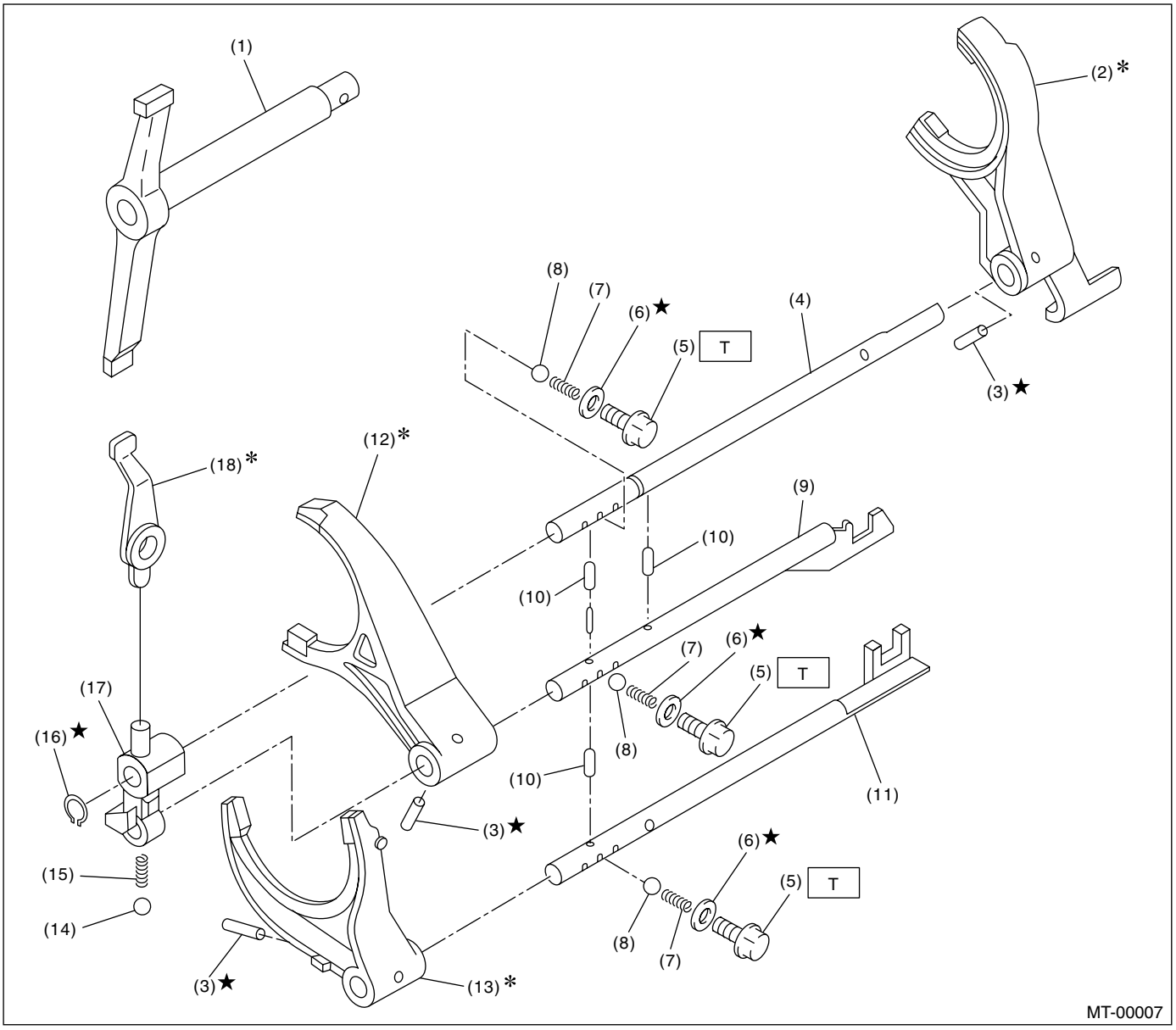

(1) Shifter arm
(2) 5th shifter fork
(3) Straight pin
(4) Reverse fork rod
(5) Checking ball plug
(6) Gasket
(7) Checking ball spring
(8) Ball
(9) 3rd-4th fork rod
(10) Interlock plunger
(11) 1st-2nd fork rod
(12) 3rd-4th shifter fork
(13) 1st-2nd shifter fork
(14) Ball
(15) Spring
(16) Snap ring (Outer)
(17) Reverse fork rod arm
(18) Reverse shifter lever

Tightening torque: N·m (kgf-m, ft-lb)
T: 19.5 (2.0, 14.4)

5. TRANSFER CASE AND EXTENSION

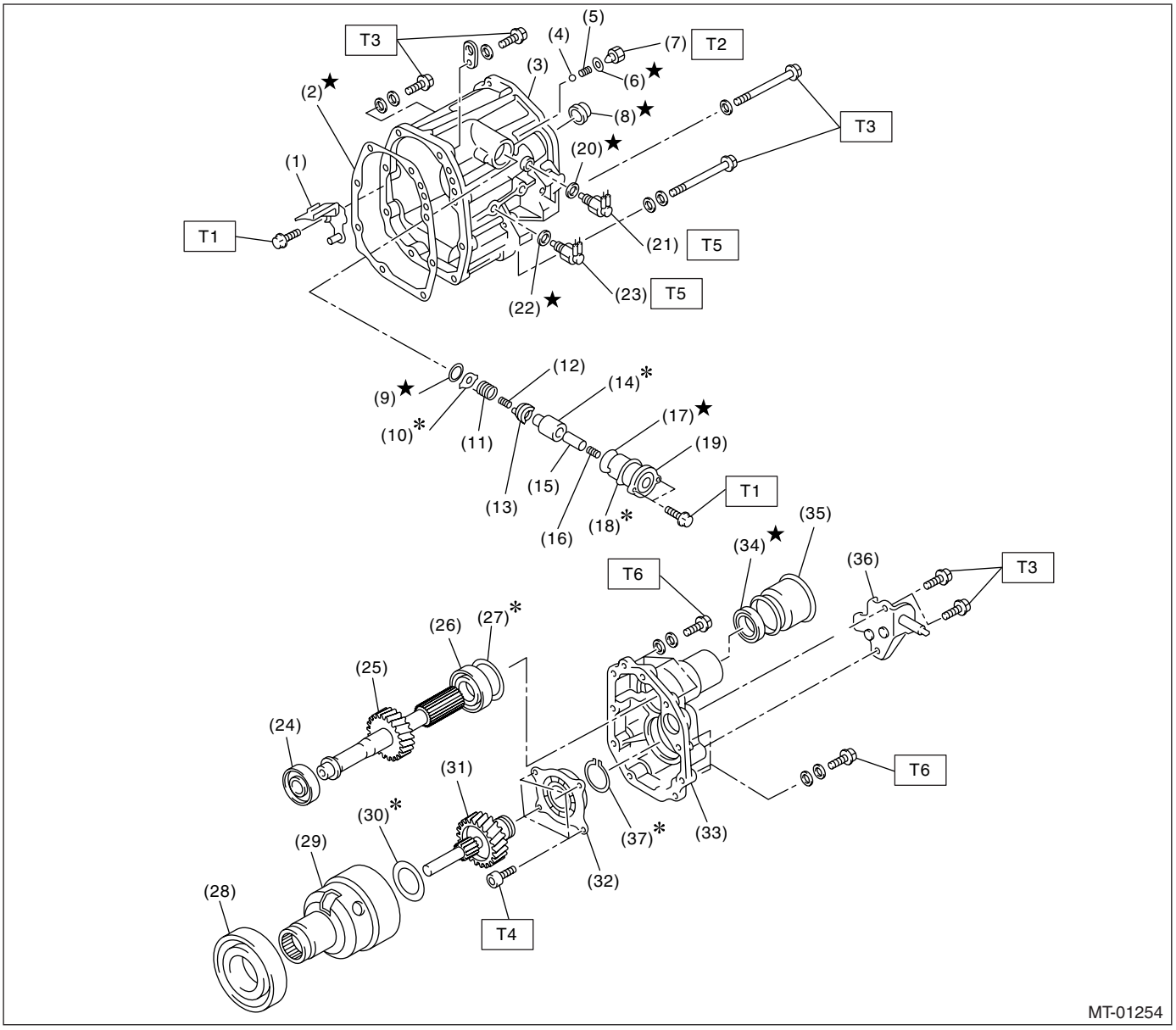

(1) Oil guide
(2) Gasket
(3) Transfer case
(4) Ball
(5) Reverse accent spring
(6) Gasket
(7) Plug
(8) Oil seal
(9) Snap ring (Inner)
(10) Reverse check plate
(11) Reverse check spring
(12) Reverse return spring
(13) Reverse check cam
(14) Reverse accent shaft
(15) Return spring cap
(16) Return spring
(17) O-ring
(18) Adjusting select shim
(19) Reverse check sleeve
(20) Gasket
(21) Neutral position switch
(22) Gasket
(23) Back-up light switch
(24) Roller bearing
(25) Transfer driven gear
(26) Roller bearing
(27) Adjusting washer
(28) Ball bearing
(29) Center differential
(30) Adjusting washer
(31) Transfer drive gear
(32) Ball bearing
(33) Extension case
(34) Oil seal
(35) Dust cover
(36) Shift bracket
(37) Snap ring

Tightening torque: N·m (kgf-m, ft-lb)
T1: 6.4 (0.65, 4.7)
T2: 9.75 (1.0, 7.2)
T3: 24.5 (2.5, 18.1)
T4: 26 (2.7, 20)
T5: 32.3 (3.3, 23.8)
T6: 40 (4.1, 29.7)

6. FRONT DIFFERENTIAL

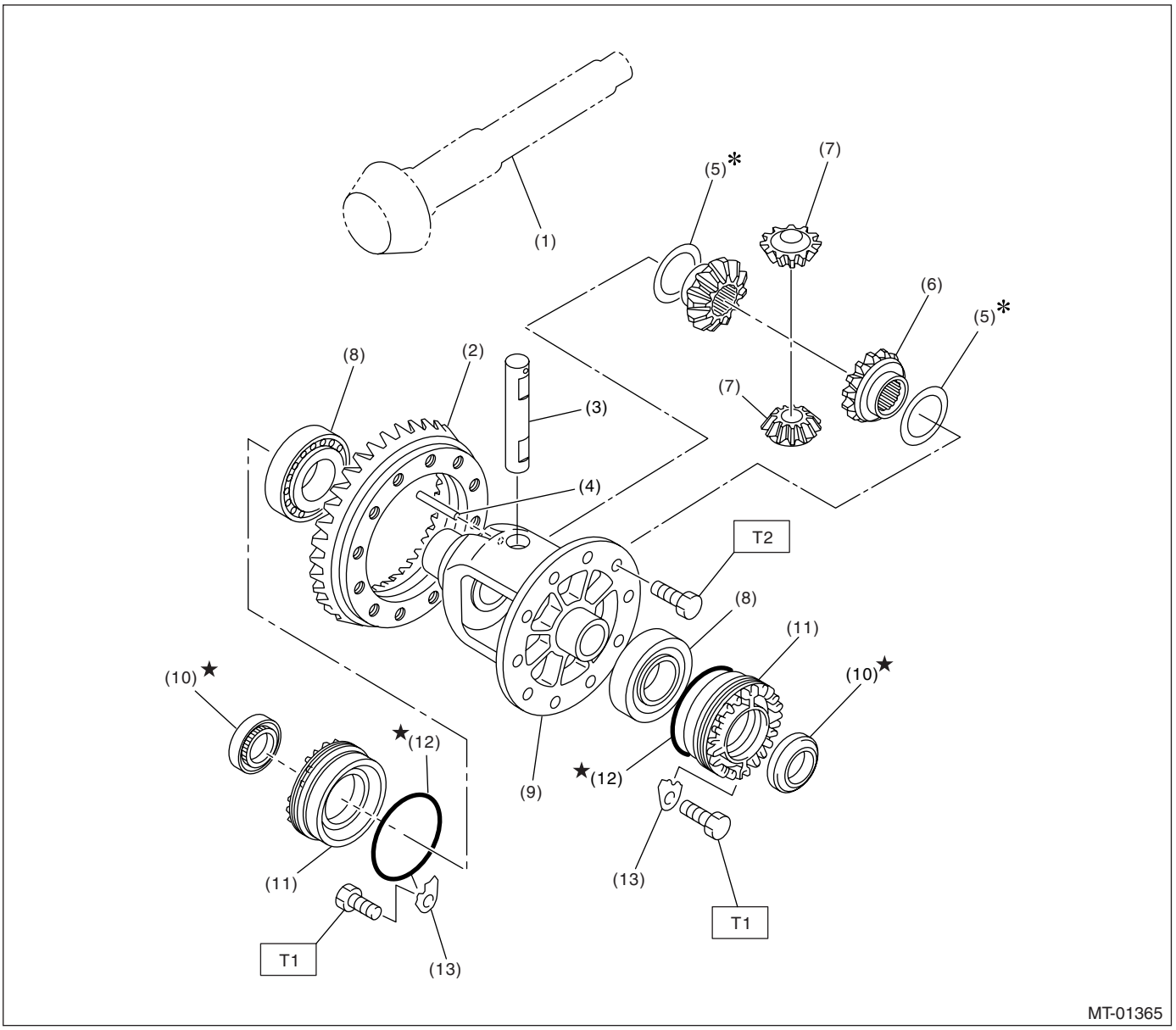

(1) Drive pinion shaft
(2) Hypoid driven gear
(3) Pinion shaft
(4) Straight pin
(5) Washer
(6) Differential bevel gear
(7) Differential bevel pinion
(8) Roller bearing
(9) Differential case
(10) Oil seal
(11) Differential side retainer
(12) O-ring
(13) Retainer lock plate

Tightening torque: N·m (kgf-m, ft-lb)
T1: 25 (2.5, 18.1)
T2: 62 (6.3, 45.6)

7. TRANSMISSION MOUNTING

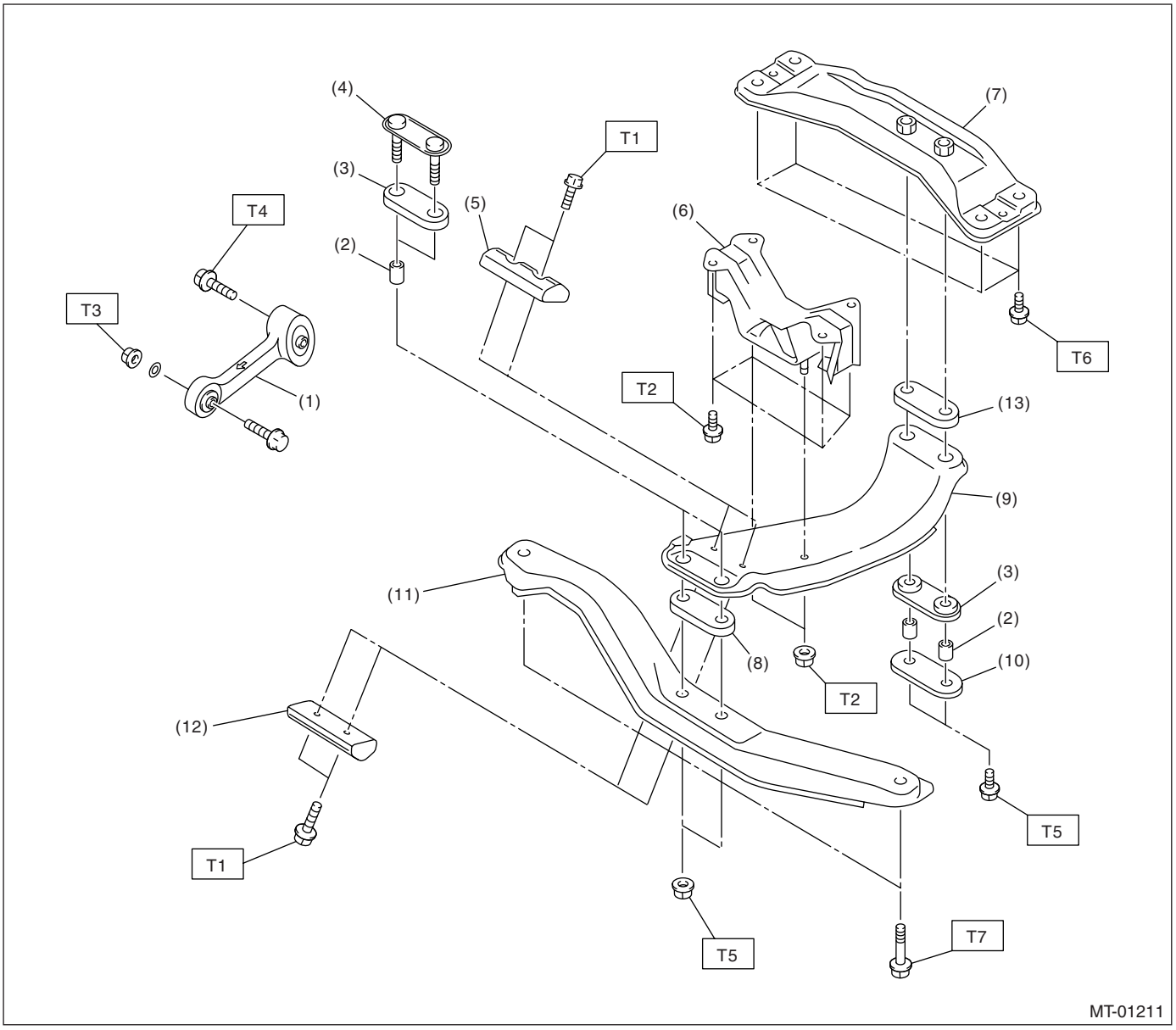

(1)	Pitching stopper	(9)	Center crossmember
(2)	Spacer	(10)	Rear plate
(3)	Cushion rubber	(11)	Front crossmember
(4)	Front plate	(12)	Dynamic damper (Except for U5 model)
(5)	Dynamic damper (U5 model)		
(6)	Rear cushion rubber	(13)	Cushion (crossmember)
(7)	Rear crossmember		
(8)	Cushion D		

Tightening torque: N·m (kgf-m, ft-lb)

T1: 7.5 (0.76, 5.5)
T2: 35 (3.6, 26)
T3: 50 (5.1, 37)
T4: 58 (5.9, 43)
T5: 70 (7.1, 51)
T6: 75 (7.6, 55)
T7: 140 (14.3, 103)

C: CAUTION

• Wear work clothing, including a cap, protective goggles and protective shoes during operation.
• Remove contamination including dirt and corrosion before removal, installation or disassembly.
• Keep the disassembled parts in order and protect them from dust and dirt.
• Before removal, installation or disassembly, be sure to clarify the failure. Avoid unnecessary removal, installation, disassembly and replacement.
• When disassembling the case and other light alloy parts, use a plastic hammer to force it apart. Do not pry it apart with a screwdriver or other tool.
• Be careful not to burn yourself, because each part on the vehicle is hot after running.
• Use SUBARU genuine gear oil, grease etc. or equivalent. Do not mix gear oil, grease etc. with that of another grade or from other manufacturers.
• Be sure to tighten fasteners including bolts and nuts to the specified torque.
• Place shop jacks or rigid racks at the specified points.
• Apply gear oil onto sliding or revolution surfaces before installation.
• Replace deformed or damaged snap rings with new ones.
• Before installing O-rings or oil seals, apply sufficient amount of gear oil to avoid damage and deformation.
• Be careful not to incorrectly install or fail to install O-rings, snap rings and other such parts.
• Before securing a part on a vice, place cushioning material such as wood blocks, aluminum plate or cloth between the part and the vice.
• Avoid damaging the mating surface of the case.
• Before applying sealant, completely remove the old seal.

D: PREPARATION TOOL

1. SPECIAL TOOL

ILLUSTRATION	TOOL NUMBER	DESCRIPTION	REMARKS
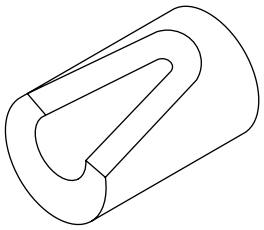 ST-399411700	399411700	ACCENT BALL INSTALLER	Used for installing reverse shifter rail arm.
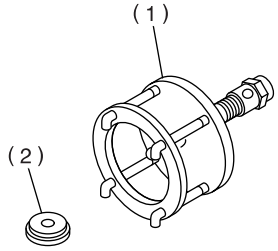 ST-899524100	899524100	PULLER SET	Used for removing and installing roller bearing (Differential). (1) Puller (2) Cap

ILLUSTRATION	TOOL NUMBER	DESCRIPTION	REMARKS
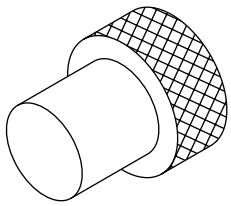 ST-399780104	399780104	WEIGHT	Used for measuring preload on roller bearing.
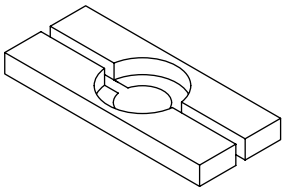 ST-498077000	498077000	REMOVER	Used for removing roller bearing of drive pinion shaft.
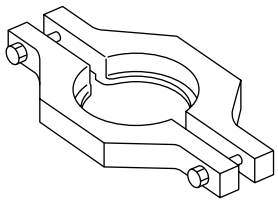 ST-498077300	498077300	CENTER DIFFERENTIAL BEARING REMOVER	Used for removing the center differential cover ball bearing.
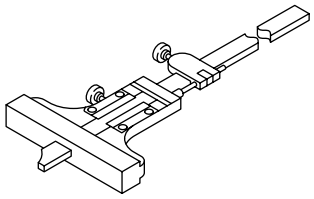 ST-498147001	498147001	DEPTH GAUGE	Used for adjusting main shaft axial end play.

ILLUSTRATION	TOOL NUMBER	DESCRIPTION	REMARKS
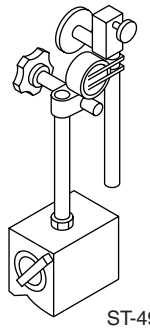 ST-498247001	498247001	MAGNET BASE	• Used for measuring backlash between side gear and pinion, and hypoid gear. • Used with DIAL GAUGE (498247100).
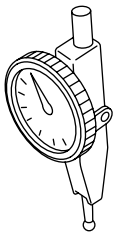 ST-498247100	498247100	DIAL GAUGE	• Used for measuring backlash between side gear and pinion, and hypoid gear. • Used with MAGNET BASE (498247001).
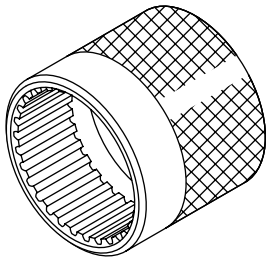 ST-498427100	498427100	STOPPER	Used for securing drive pinion shaft assembly and driven gear assembly when removing lock nut of drive pinion shaft assembly.
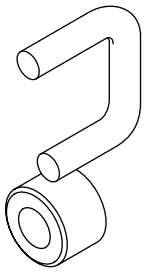 ST-498787100	498787100	MAIN SHAFT STOPPER	Used for removing and installing lock nut of transmission main shaft.

ILLUSTRATION	TOOL NUMBER	DESCRIPTION	REMARKS
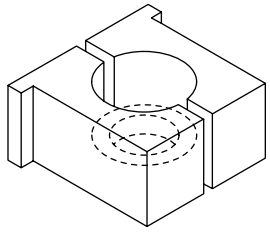 ST-498937000	498937000	TRANSMISSION HOLDER	Used for removing and installing transmission main shaft lock nut.
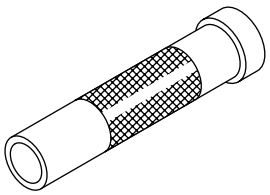 ST-499277100	499277100	BUSHING 1-2 INSTALLER	• Used for installing 1st driven gear thrust plate and 1st-2nd driven gear bushing. • Used for installing roller bearing outer races to differential case.
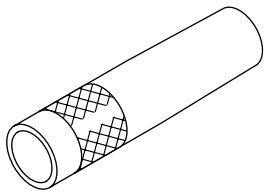 ST-499277200	499277200	INSTALLER	Used for press-fitting 2nd driven gear, roller bearings, and 5th driven gear onto driven shaft.
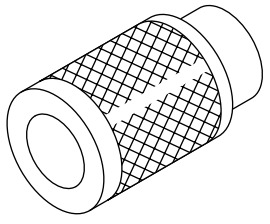 ST-499757002	499757002	INSTALLER	• Used for installing snap ring (OUT 25), and ball bearing (25 × 26 × 17). • Used for installing bearing cone of transfer driven gear (extension core side).

ILLUSTRATION	TOOL NUMBER	DESCRIPTION	REMARKS
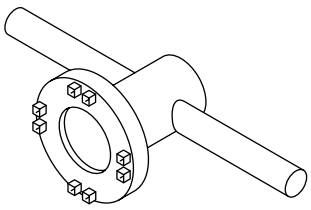 ST-499787000	499787000	WRENCH ASSY	Used for removing and installing differential side retainer.
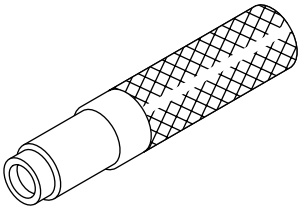 ST-499827000	499827000	PRESS	Used for installing speedometer oil seal when installing speedometer cable to transmission.
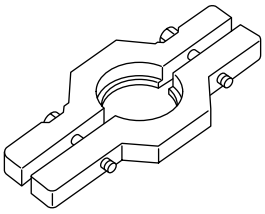 ST-499857000	499857000	5TH DRIVEN GEAR REMOVER	Used for removing 5th driven gear.
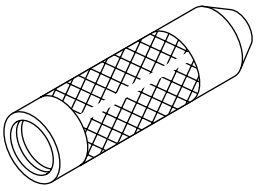 ST-499877000	499877000	RACE 4-5 INSTALLER	• Used for installing 4th needle bearing race and ball bearing onto transmission main shaft. • Used with REMOVER (899714110).

ILLUSTRATION	TOOL NUMBER	DESCRIPTION	REMARKS
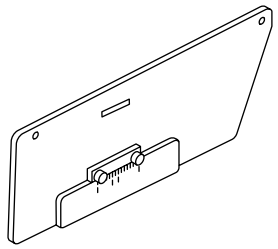 ST-499917500	499917500	DRIVE PINION GAUGE ASSY	Used for adjusting drive pinion shim.
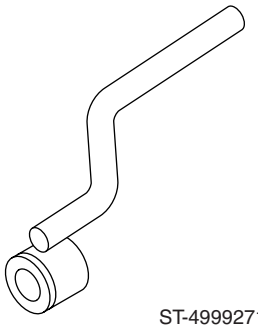 ST-499927100	499927100	HANDLE	Used for fitting transmission main shaft.
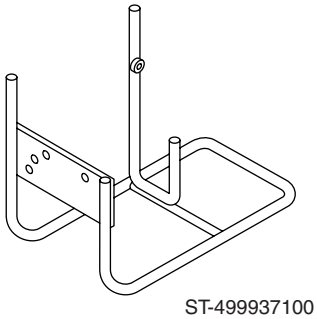 ST-499937100	499937100	TRANSMISSION STAND SET	Used for transmission disassembly and assembly.
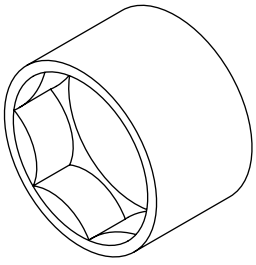 ST-499987003	499987003	SOCKET WRENCH (35)	Used for removing and installing driven pinion lock nut and main shaft lock nut.

ILLUSTRATION	TOOL NUMBER	DESCRIPTION	REMARKS
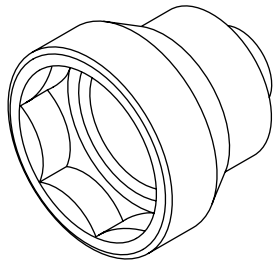 ST-499987300	499987300	SOCKET WRENCH (50)	Used for removing and installing driven gear assembly lock nut.
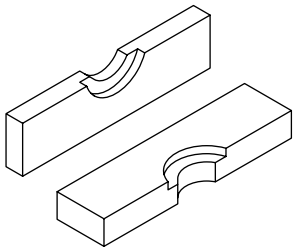 ST-899714110	899714110	REMOVER	Used for installing transmission main shaft drive pinion and rear drive shaft.
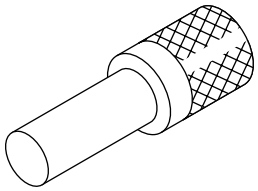 ST-899864100	899864100	REMOVER	Used for removing parts on transmission main shaft and drive pinion.
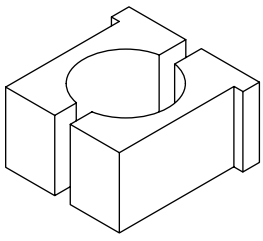 ST-899884100	899884100	HOLDER	Used for tightening lock nut on sleeve.

ILLUSTRATION	TOOL NUMBER	DESCRIPTION	REMARKS
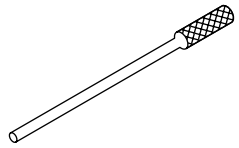 ST-899904100	899904100	REMOVER	Used for removing and installing straight pin.
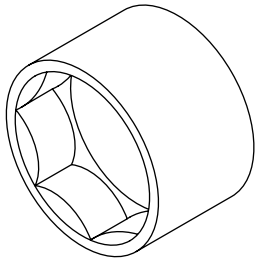 ST-899988608	899988608	SOCKET WRENCH (27)	Used for removing and installing drive pinion lock nut.
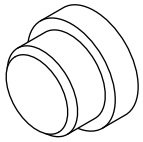 ST-398497701	398497701	ADAPTER	• Used for installing roller bearing onto differential case. • Used with INSTALLER (499277100).
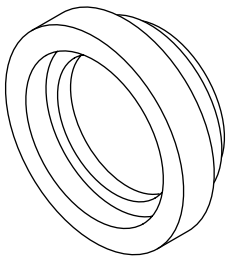 ST-499587000	499587000	INSTALLER	Used for installing driven gears to driven shaft.

ILLUSTRATION	TOOL NUMBER	DESCRIPTION	REMARKS
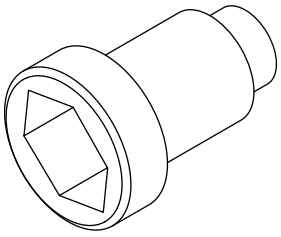 ST-499987100	499987100	SOCKET WRENCH (35)	Used for removing and installing drive pinion lock nut.
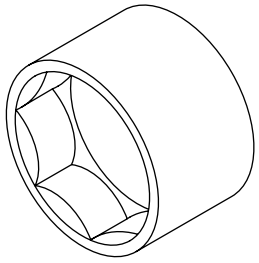 ST-899984103	899984103	SOCKET WRENCH (35)	Used for removing and installing drive pinion lock nut.
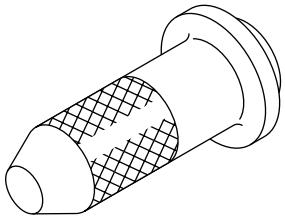 ST-498057300	498057300	INSTALLER	Used for installing extension oil seal.
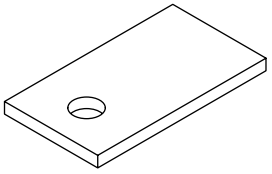 ST-498255400	498255400	PLATE	Used for measuring backlash.

ILLUSTRATION	TOOL NUMBER	DESCRIPTION	REMARKS
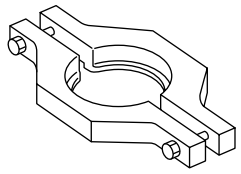 ST-498077400	498077400	SYNCHRONIZER CONE REMOVER	• Used for removing synchronizer cone of main shaft. • Used for removing 5th driven gear of drive pinion shaft.
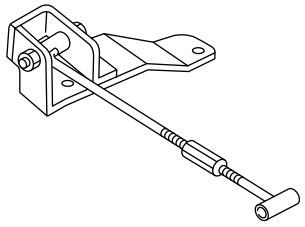 ST41099AC000	41099AC000	ENGINE SUPPORT BRACKET	Used for supporting engine.
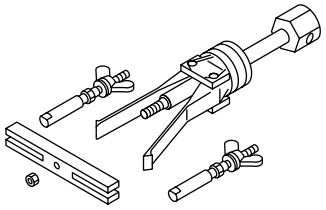 ST-398527700	398527700	PULLER ASSY	Used for removing extension case roller bearing.
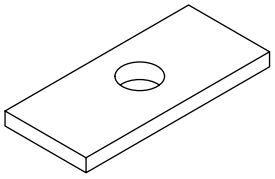 ST-398643600	398643600	GAUGE	Used for measuring total end play, extension end play and drive pinion height.

ILLUSTRATION	TOOL NUMBER	DESCRIPTION	REMARKS
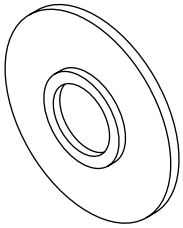 ST-398177700	398177700	INSTALLER	• Used for installing bearing cone of transfer driven gear (transfer case side). • Used for installing ball bearing of transfer drive gear.
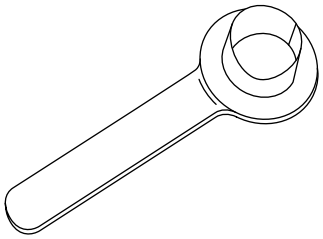 ST28399SA010	28399SA010	FRONT DRIVE SHAFT OIL SEAL PROTECTOR	Used for protecting oil seal from damage when inserting front drive shaft.
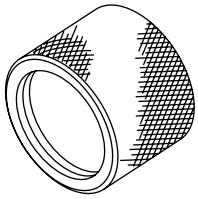 ST18675AA000	18675AA000	DIFFERENTIAL SIDE OIL SEAL INSTALLER	Used for installing differential side retainer oil seal.

2. GENERAL TOOL

TOOL NAME	REMARKS
Circuit tester	Used for measuring resistance, voltage and ampere.

2. Transmission Gear Oil

A: INSPECTION

1) Park the vehicle on a level surface.
2) Turn the ignition switch to OFF, and wait until the engine cools.
3) Remove the oil level gauge and wipe it clean.
4) Reinsert the level gauge all the way. Be sure that the level gauge is correctly inserted and in the proper direction.
5) Pull out the oil level gauge again, and check the oil level. If it is below the lower level, add oil through the oil level gauge hole to bring the level up to the upper level.

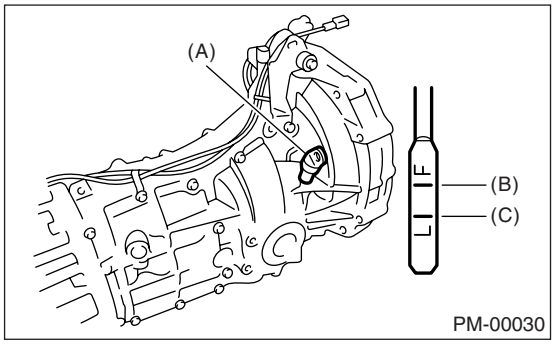

(A) Oil level gauge
(B) Upper level
(C) Lower level

B: REPLACEMENT

1) Pull out the oil level gauge.
2) Lift-up the vehicle.
3) Drain transmission gear oil completely.

CAUTION:
Be careful not to burn yourself, because transmission gear oil becomes extremely hot after running.

NOTE:
• Tighten the transmission gear oil drain plug after draining transmission gear oil.
• Use a new gasket.

Tightening torque:
70 N·m (7.1 kgf-m, 51 ft-lb)

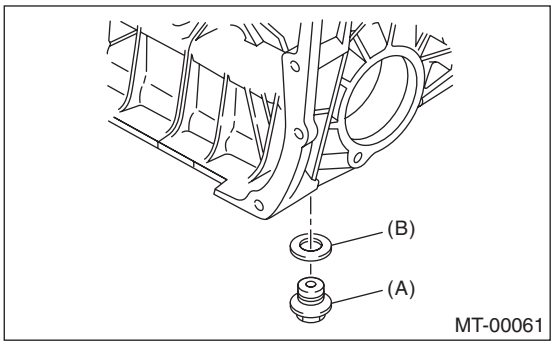

(A) Drain plug
(B) Gasket

4) Lower the vehicle.
5) Pour gear oil through the gauge hole.

Recommended gear oil:
GL-5 (75W-90) or equivalent

Gear oil capacity:
3.5 ℓ (3.7 US qt, 3.1 Imp qt)

6) Check the level of transmission gear oil.

CAUTION:
The level should be within the specified range marked on the gauge.

3. Manual Transmission Assembly

A: REMOVAL

1) Open the front hood fully, and support with stay.
2) Disconnect the ground cable from battery.
3) Drain transmission gear oil completely.
4) Remove the air intake chamber and air cleaner case. (Non-turbo model) <Ref. to IN(H4SO)-9, REMOVAL, Air Intake Chamber.> <Ref. to IN(H4SO)-7, REMOVAL, Air Cleaner Case.>
5) Remove the air intake chamber stay. (Non-turbo model).

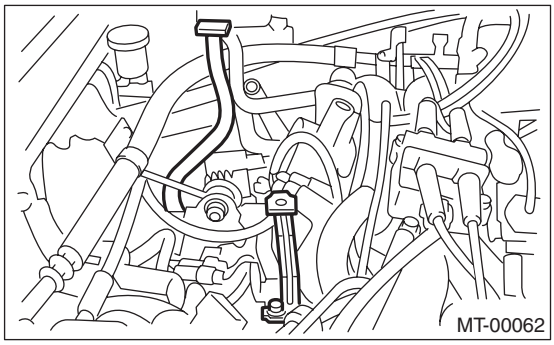

6) Remove the intercooler. (Turbo model) <Ref. to IN(H4DOTC)-12, REMOVAL, Intercooler.>
7) Disconnect the connector of back-up light switch and neutral position switch.

- Non-turbo model

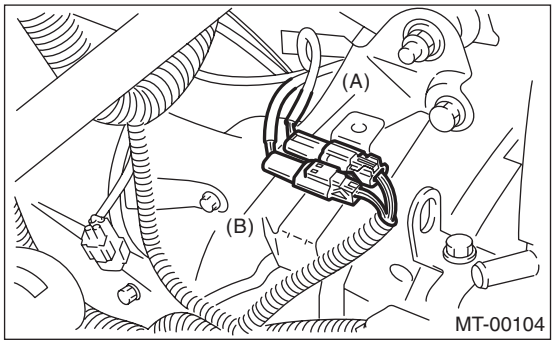

(A) Neutral position switch connector (Brown)
(B) Back-up light switch (Gray)

- Turbo model

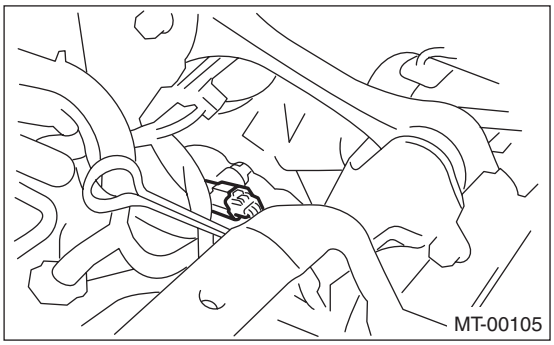

8) Remove the starter. <Ref. to SC(H4SO)-6, REMOVAL, Starter.>
9) Remove the operating cylinder from transmission.

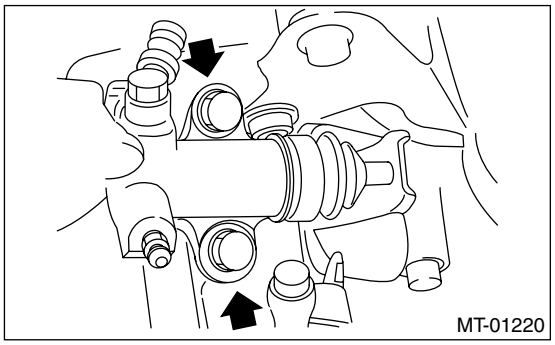

10) Remove the pitching stopper.

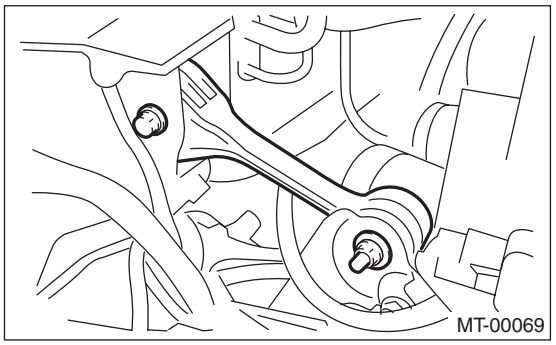

11) Set the ST.
ST 41099AC000 ENGINE SUPPORT ASSY

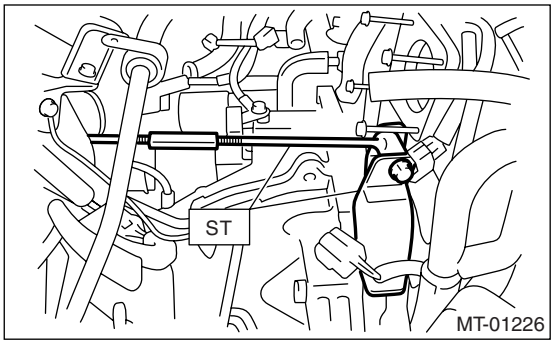

12) Remove the bolts which hold upper side of transmission to engine.

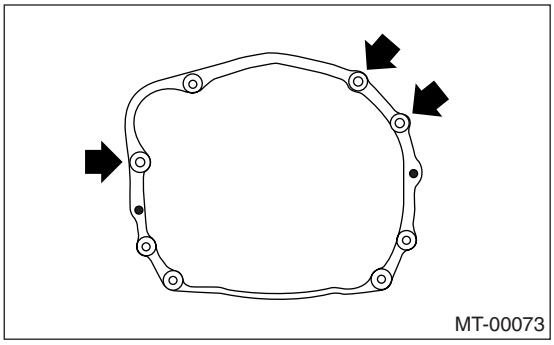

13) Lift-up the vehicle.

14) Remove the front and center exhaust pipes. (Non-turbo model) <Ref. to EX(H4SO)-4, REMOVAL, Front Exhaust Pipe.>
15) Remove the center exhaust pipe. (Turbo model) <Ref. to EX(H4DOTC)-8, REMOVAL, Center Exhaust Pipe.>
16) Remove the rear exhaust pipe and muffler.

CAUTION:
When removing the exhaust pipes, be careful each exhaust pipe does not drop out.

17) Remove the heat shield cover. (if equipped)
18) Remove the propeller shaft. <Ref. to DS-10, REMOVAL, Propeller Shaft.>
19) Remove the gear shift rod and the stay from transmission.
(1) Disconnect the stay from transmission.
(2) Remove the rod from transmission.

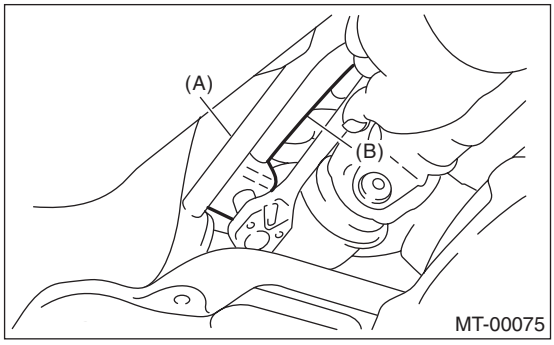

(A) Stay
(B) Rod

20) Remove the stabilizer link from front arm.

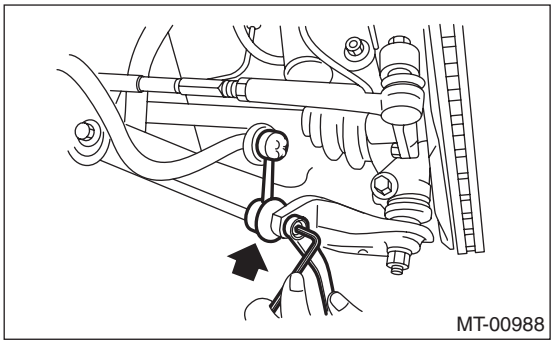

21) Remove the bolt securing ball joint of front arm to housing.

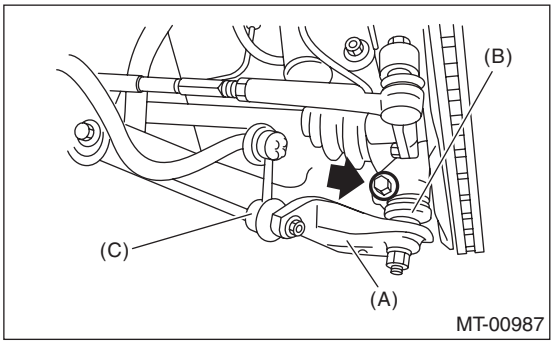

(A) Front arm
(B) Ball joint
(C) Stabilizer link

22) Using the lever, remove the left and right front drive shaft from transmission side.

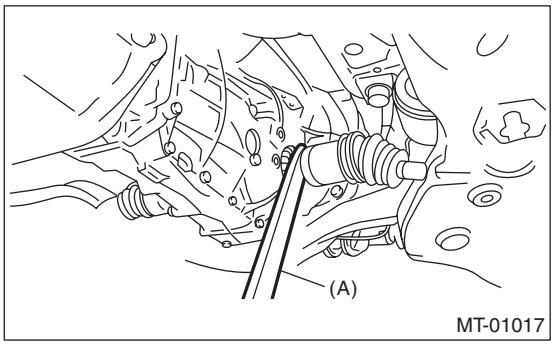

(A) Lever

23) Remove the nuts which hold lower side of transmission to engine.

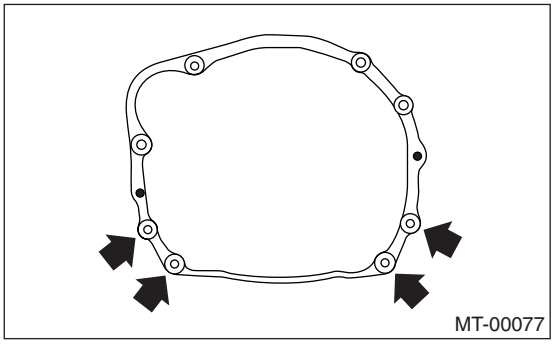

24) Place the transmission jack under transmission.

CAUTION:
Always support transmission case with a transmission jack.

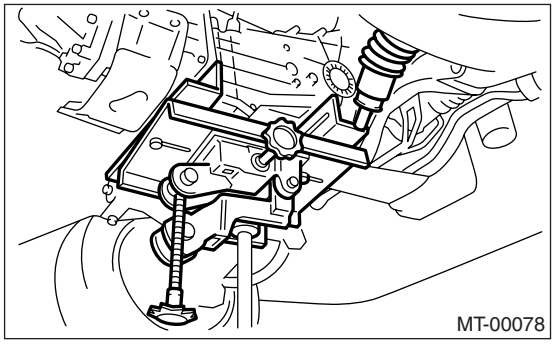

25) Remove the transmission rear crossmember from vehicle.

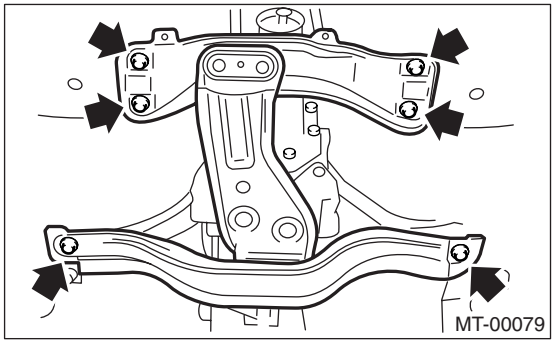

26) Remove the transmission.

NOTE:
(1) Move the transmission jack toward rear until main shaft is withdrawn from clutch disc.
(2) Shrink the turnbuckle of ST while lowering the transmission jack to tilt the engine assembly backward.

27) Separate the transmission assembly from rear cushion rubber.

B: INSTALLATION

1) Install the rear cushion rubber to transmission assembly.

Tightening torque:
35 N·m (3.6 kgf-m, 26 ft-lb)

2) Install the transmission onto engine.
(1) Gradually raise the transmission with transmission jack.
(2) Loosen the turnbuckle of ST to return the engine assembly to its original position.
(3) Engage them at splines.

NOTE:
Be careful not to strike the main shaft against clutch housing cover.

3) Install the transmission rear crossmember.

Tightening torque:
T1: 75 N·m (7.6 kgf-m, 55 ft-lb)
T2: 140 N·m (14.3 kgf-m, 103 ft-lb)

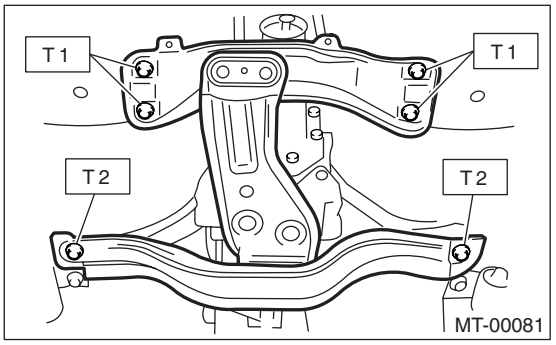

4) Take out the transmission jack.
5) Tighten the nuts which hold lower side of transmission to engine.

Tightening torque:
50 N·m (5.1 kgf-m, 36.9 ft-lb)

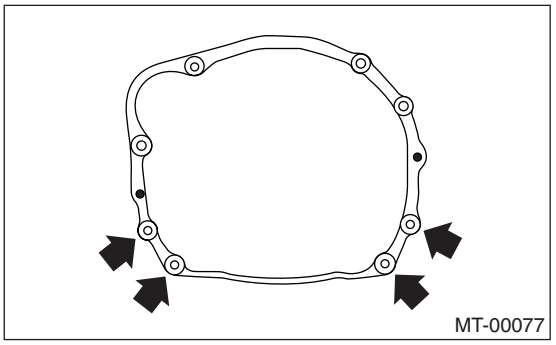

6) Connect the transmission to engine.
(1) Install the starter.
<Ref. to SC(H4SO)-6, INSTALLATION, Starter.>
(2) Tighten the bolts that hold upper side of transmission to engine.

Tightening torque:
50 N·m (5.1 kgf-m, 36.9 ft-lb)

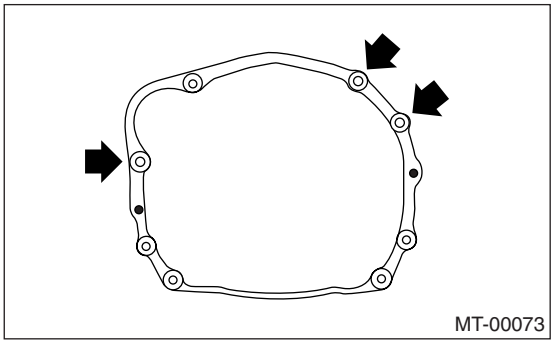

7) Remove the ST.

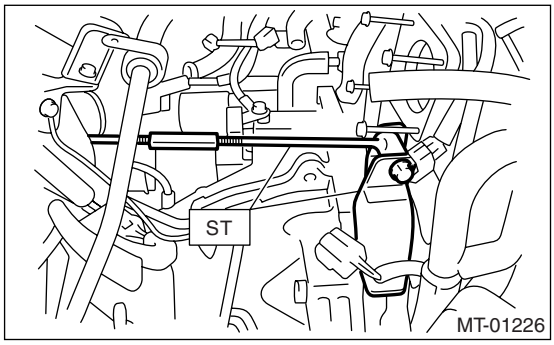

8) Install the pitching stopper.

Tightening torque:
T1: 50 N·m (5.1 kgf-m, 37 ft-lb)
T2: 58 N·m (5.9 kgf-m, 43 ft-lb)

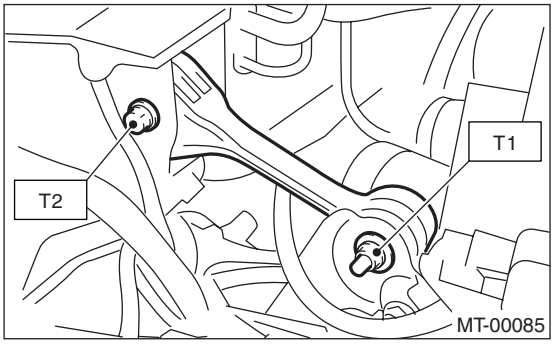

9) Lift-up the vehicle.
10) Install the front drive shaft into transmission.
11) Replace the differential side retainer oil seal. <Ref. to 5MT-33, REPLACEMENT, Differential Side Retainer Oil Seal.>
ST 18675AA000 DIFFERENTIAL SIDE OIL SEAL INSTALLER

NOTE:
Be sure to replace the differential side retainer oil seal after the procedure of removing the front drive shaft.

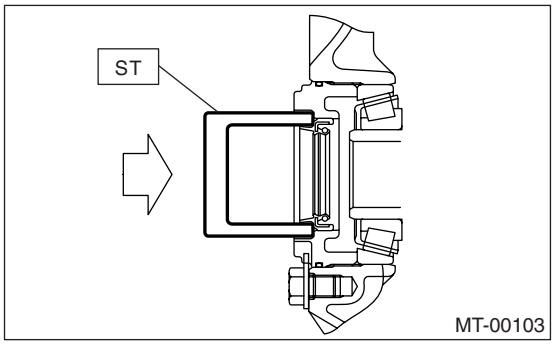

12) Install the front drive shaft into transmission.

ST 28399SA010 FRONT DRIVE SHAFT OIL SEAL PROTECTOR

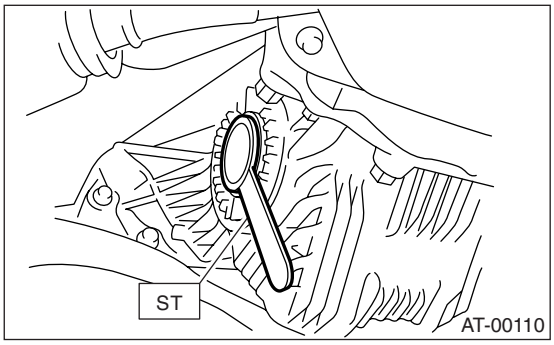

13) Install the ball joint of lower arm.

Tightening torque:
49 N·m (5.0 kgf-m, 36 ft-lb)

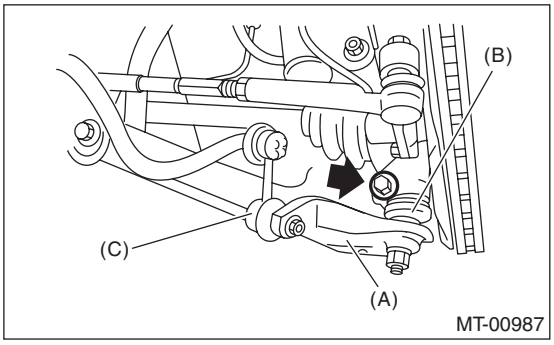

(A) Front arm
(B) Ball joint
(C) Stabilizer link

14) Install the stabilizer link into front arm.

Tightening torque:
45 N·m (4.6 kgf-m, 33.2 ft-lb)

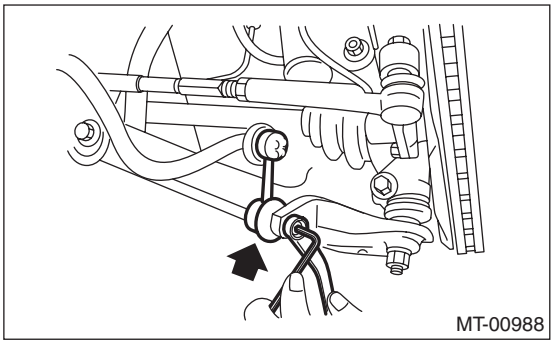

15) Install the gear shift rod and stay.

(1) Install the gear shift rod into transmission.

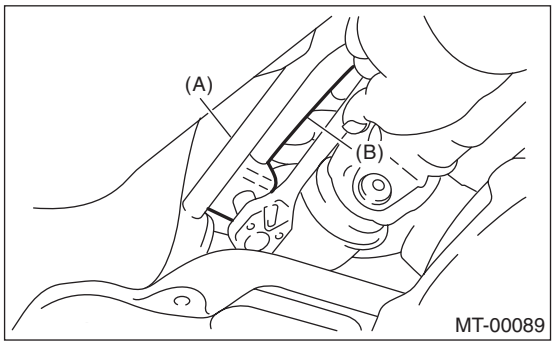

(A) Stay
(B) Rod

(2) Install the stay onto transmission.

16) Install the propeller shaft. <Ref. to DS-11, INSTALLATION, Propeller Shaft.>
17) Install the heat shield cover. (if equipped)
18) Install the rear exhaust pipe and muffler.
19) Install the front and center exhaust pipe. (Non-turbo model).
<Ref. to EX(H4SO)-5, INSTALLATION, Front Exhaust Pipe.>
20) Install the center exhaust pipe. (Turbo model) <Ref. to EX(H4DOTC)-9, INSTALLATION, Center Exhaust Pipe.>
21) Install the operating cylinder.

Tightening torque:
37 N·m (3.8 kgf-m, 27.5 ft-lb)

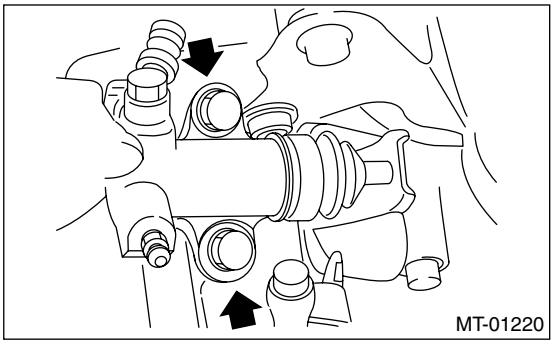

22) Connect the following connectors:
(1) Transmission ground cable

Tightening torque:
13 N·m (1.3 kgf-m, 9.4 ft-lb)

(2) Neutral position switch connector
(3) Back-up light switch connector

23) Fill transmission gear oil through the transmission level gauge hole.
24) Install the air intake chamber stay. (Non-turbo model).

Tightening torque:
16 N·m (1.6 kgf-m, 11.6 ft-lb)

25) Install the air intake chamber and air cleaner case. (Non-turbo model) <Ref. to IN(H4SO)-7, INSTALLATION, Air Cleaner Case.> <Ref. to IN(H4SO)-9, INSTALLATION, Air Intake Chamber.>
26) Install the intercooler. (Turbo model) <Ref. to IN(H4DOTC)-12, INSTALLATION, Intercooler.>
27) Connect the battery ground cable to battery.
28) Take off the vehicle from lift arms.

4. Transmission Mounting System

A: REMOVAL

1. PITCHING STOPPER

1) Disconnect the ground cable from battery.
2) Remove the air intake chamber. (Non-turbo model) <Ref. to IN(H4SO)-9, REMOVAL, Air Intake Chamber.>
3) Remove the air cleaner case. (Non-turbo model) <Ref. to IN(H4SO)-7, REMOVAL, Air Cleaner Case.>
4) Remove the intercooler. (Turbo model) <Ref. to IN(H4DOTC)-12, REMOVAL, Intercooler.>
5) Remove the pitching stopper.

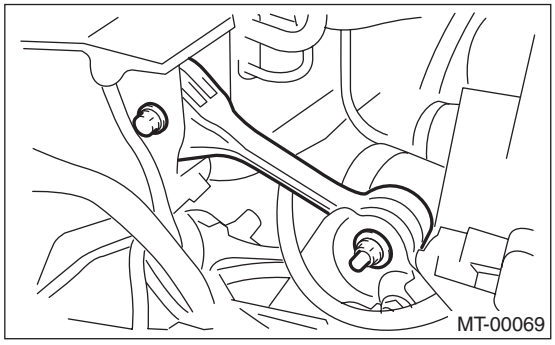

2. CROSSMEMBER AND CUSHION RUBBER

1) Disconnect the ground cable from battery.
2) Lift-up the vehicle.
3) Remove the front exhaust pipe. (Non-turbo model) <Ref. to EX(H4SO)-4, REMOVAL, Front Exhaust Pipe.>
4) Remove the center exhaust pipe. (Turbo model) <Ref. to EX(H4DOTC)-8, REMOVAL, Center Exhaust Pipe.>
5) Remove the rear exhaust pipe and muffler.
6) Remove the heat shield cover. (If equipped)
7) Set the transmission jack under transmission body.

CAUTION:
Always support the transmission case with a transmission jack.

8) Remove the rear crossmember.

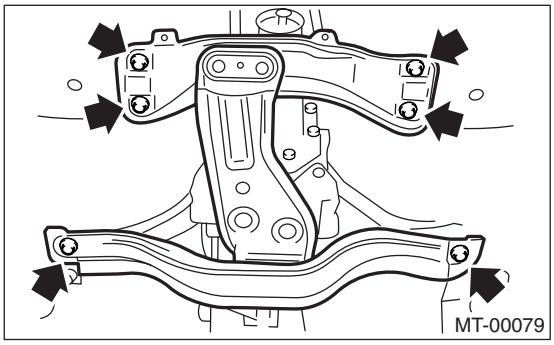

9) Remove the rear cushion rubber.

B: INSTALLATION

1. PITCHING STOPPER

1) Install the pitching stopper.

Tightening torque:
T1: 50 N·m (5.1 kgf-m, 37 ft-lb)
T2: 58 N·m (5.9 kgf-m, 43 ft-lb)

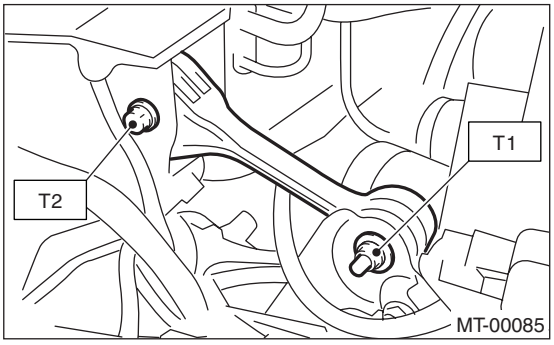

2) Install the air intake chamber and cleaner case. (Non-turbo model) <Ref. to IN(H4SO)-7, INSTALLATION, Air Cleaner Case.> <Ref. to IN(H4SO)-9, INSTALLATION, Air Intake Chamber.>
3) Install the intercooler. (Turbo model) <Ref. to IN(H4DOTC)-12, INSTALLATION, Intercooler.>
4) Connect the battery ground cable to battery.

2. CROSSMEMBER AND CUSHION RUBBER

1) Install the rear cushion rubber.

Tightening torque:
35 N·m (3.6 kgf-m, 26 ft-lb)

2) Install the rear crossmember.

Tightening torque:
T1: 75 N·m (7.6 kgf-m, 55 ft-lb)
T2: 140 N·m (14.3 kgf-m, 103 ft-lb)

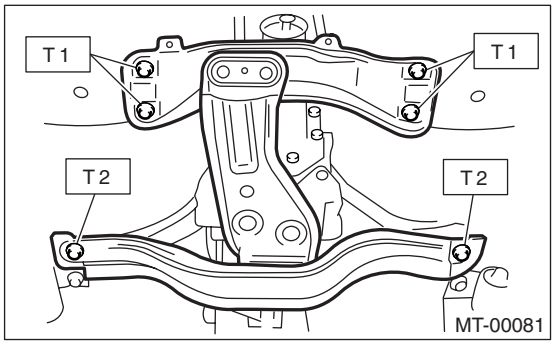

3) Remove the transmission jack.
4) Install the heat shield cover. (If equipped)
5) Install the front exhaust pipe. (Non-turbo model). <Ref. to EX(H4SO)-5, INSTALLATION, Front Exhaust Pipe.>
6) Install the center exhaust pipe. (Turbo model) <Ref. to EX(H4DOTC)-9, INSTALLATION, Center Exhaust Pipe.>
7) Install the rear exhaust pipe and muffler.
8) Lower the vehicle.
9) Connect the battery ground cable to battery.

C: INSPECTION

Perform the following inspection procedures and repair or replace defective parts.

1. PITCHING STOPPER

Check pitching stopper for bends or damage. Check that the rubber is not stiff, cracked, or otherwise damaged.

2. CROSSMEMBER AND CUSHION RUBBER

Check crossmember for bends or damage. Check that the cushion rubber is not stiff, cracked, or otherwise damaged.

5. Oil Seal

A: INSPECTION

Check leakage of gear oil from the oil seal part. If there is oil leakage, replace with a new oil seal.

B: REPLACEMENT

1) Clean the transmission exterior.
2) Drain gear oil completely.

NOTE:
• Tighten the drain plug after draining transmission gear oil.
• Be sure to use a new gasket.

Tightening torque:
70 N·m (7.1 kgf-m, 51 ft-lb)

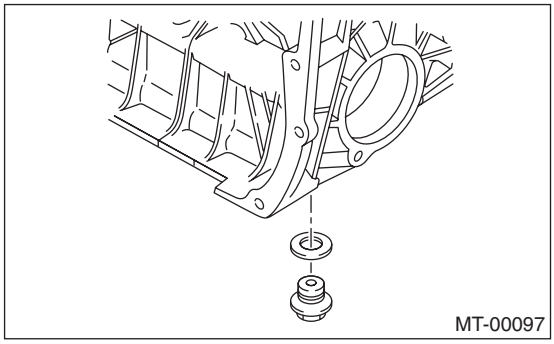

3) Remove the rear exhaust pipe and muffler. <Ref. to EX(H4SO)-8, REMOVAL, Rear Exhaust Pipe.> <Ref. to EX(H4SO)-10, REMOVAL, Muffler.>
4) Remove the heat shield cover. (If equipped)
5) Remove the propeller shaft. <Ref. to DS-10, REMOVAL, Propeller Shaft.>
6) Using the ST, remove the oil seal.
ST 398527700 PULLER ASSY

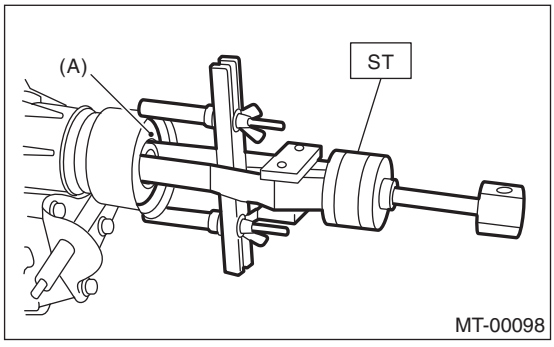

(A) Oil seal

7) Using the ST, install the oil seal.
ST 498057300 INSTALLER

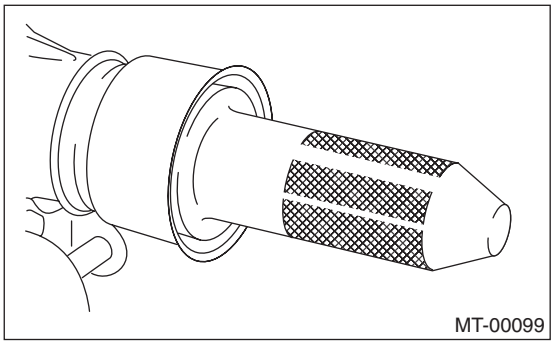

8) Install the propeller shaft. <Ref. to DS-11, INSTALLATION, Propeller Shaft.>
9) Install the heat shield cover. (If equipped)
10) Install the rear exhaust pipe and muffler. <Ref. to EX(H4SO)-8, INSTALLATION, Rear Exhaust Pipe.> <Ref. to EX(H4SO)-10, INSTALLATION, Muffler.>
11) Pour gear oil and check the oil level. <Ref. to 5MT-24, REPLACEMENT, Transmission Gear Oil.>

6. Differential Side Retainer Oil Seal

A: INSPECTION

Check leakage of gear oil from the differential side retainer oil seal part. If there is oil leakage, replace with a new oil seal.

B: REPLACEMENT

1) Lift-up the vehicle.
2) Drain gear oil from differential oil drain plug.

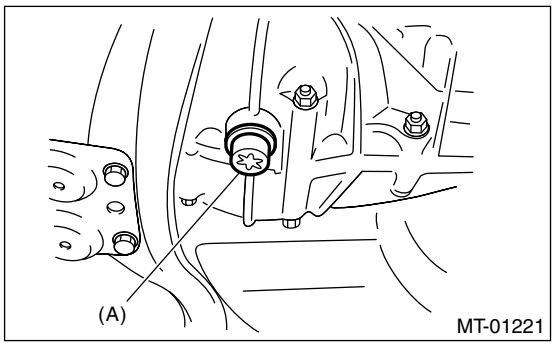

(A) Differential oil drain plug

3) Replace with a new gasket and tighten the differential oil drain plug.

Tightening torque:
70 N·m (7.1 kgf-m, 51 ft-lb)

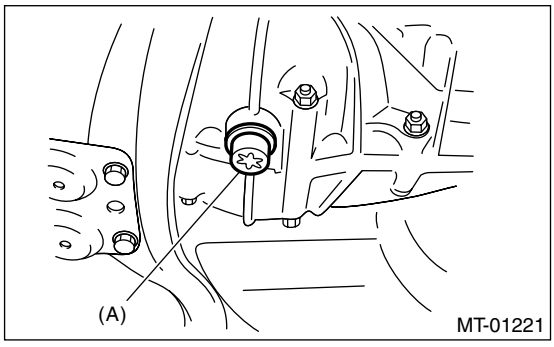

(A) Differential oil drain plug

4) Remove the front and center exhaust pipe.
<Ref. to EX(H4SO)-4, REMOVAL, Front Exhaust Pipe.>
5) Separate the front drive shaft from transmission.
<Ref. to DS-22, REMOVAL, Front Drive Shaft.>
6) Remove the differential side retainer oil seal.

NOTE:
• Be sure to replace the differential side retainer oil seal with a new one after the procedure of removing the front drive shaft from transmission.
• When prying to remove the part using flat tip screwdriver, be careful not to scratch the differential side retainer. ST 398527700 puller assembly may be used for this operation procedure.

7) Using the ST, install the differential side retainer by slightly tapping with a plastic hammer.
ST 18675AA000 DIFFERENTIAL SIDE OIL SEAL INSTALLER

NOTE:
Apply oil to the oil seal lips.

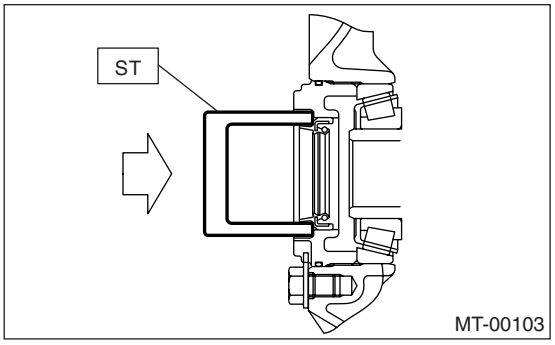

8) Install the front drive shaft. <Ref. to DS-22, INSTALLATION, Front Drive Shaft.>
ST 28399SA010 FRONT DRIVE SHAFT OIL SEAL PROTECTOR
9) Install the front and center exhaust pipe.
<Ref. to EX(H4SO)-5, INSTALLATION, Front Exhaust Pipe.>
10) Lower the vehicle.
11) Pour gear oil through the gauge hole. <Ref. to 5MT-24, REPLACEMENT, Transmission Gear Oil.>

7. Switches and Harness

A: REMOVAL

1. BACK-UP LIGHT SWITCH AND NEUTRAL POSITION SWITCH

1) Disconnect the ground cable from battery.
2) Remove the air intake chamber and cleaner case. (Non-turbo model) <Ref. to IN(H4SO)-7, REMOVAL, Air Cleaner Case.> <Ref. to IN(H4SO)-9, REMOVAL, Air Intake Chamber.>
3) Remove the intercooler. (Turbo model) <Ref. to IN(H4DOTC)-12, REMOVAL, Intercooler.>
4) Disconnect the connectors of back-up light switch and neutral position switch.
- Non-turbo model

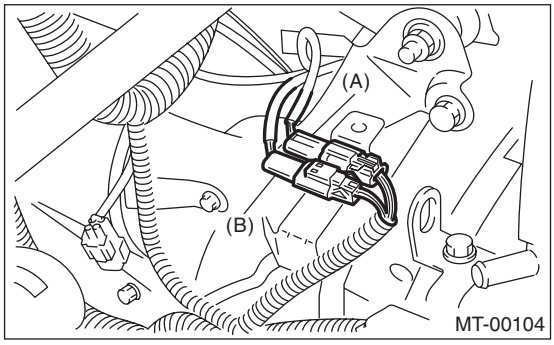

(A) Neutral position switch connector (Brown)
(B) Back-up light switch connector (Gray)

- Turbo model

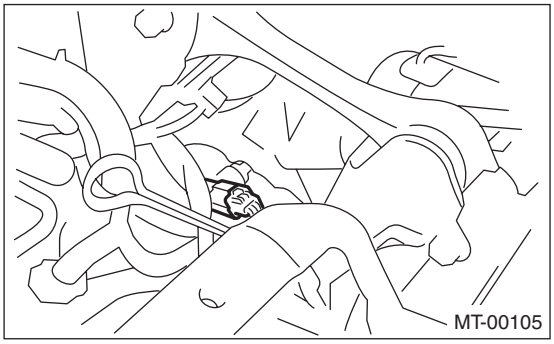

5) Lift-up the vehicle.
6) Remove the back-up light switch and neutral position switch with harness.

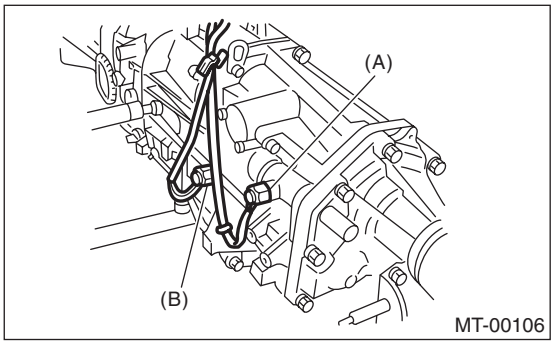

(A) Neutral position switch (Brown)
(B) Back-up light switch (Gray)

B: INSTALLATION

1. BACK-UP LIGHT SWITCH AND NEUTRAL POSITION SWITCH

1) Install the back-up light switch and neutral position switch with harness.

Tightening torque:
32.3 N·m (3.3 kgf-m, 23.8 ft-lb)

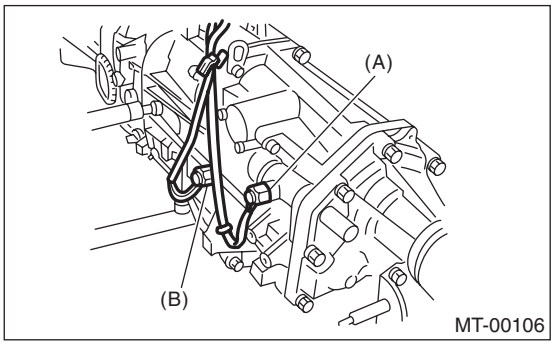

(A) Neutral position switch
(B) Back-up light switch

2) Connect the connectors of back-up light switch and neutral position switch.
3) Install the air intake chamber and cleaner case. (Non-turbo model) <Ref. to IN(H4SO)-7, INSTALLATION, Air Cleaner Case.> <Ref. to IN(H4SO)-9, INSTALLATION, Air Intake Chamber.>
4) Install the intercooler. (Turbo model)
<Ref. to IN(H4DOTC)-12, INSTALLATION, Intercooler.>
5) Connect the battery ground cable to battery.

C: INSPECTION

1. BACK-UP LIGHT SWITCH

Inspect the back-up light switch. <Ref. to LI-6, INSPECTION, Back-up Light System.>

2. NEUTRAL POSITION SWITCH

1) Turn the ignition switch to OFF.
2) Disconnect the connector of neutral position switch.
3) Measure the resistance between neutral position switch terminals.

- Non-turbo model

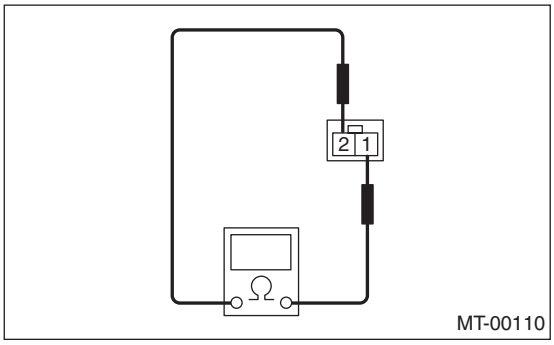

Gear shift position	Terminal No.	Specified resistance
Neutral position	1 and 2	More than 1 MΩ
Other positions		Less than 1 Ω

- Turbo model

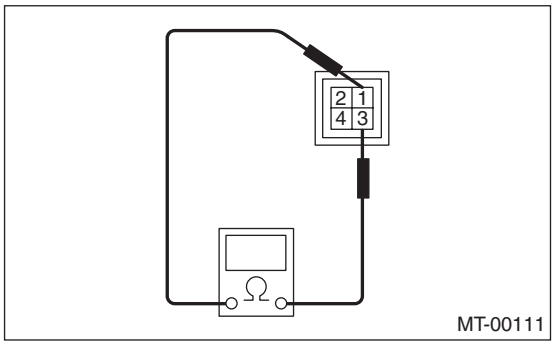

Gear shift position	Terminal No.	Specified resistance
Neutral position	1 and 3	More than 1 MΩ
Other positions		Less than 1 Ω

4) Replace the faulty parts.

8. Preparation for Overhaul

A: PROCEDURE

1) Clean oil, grease, dirt and dust from transmission.
2) Remove the drain plug to drain oil. Tighten the engine oil drain plug after draining.

NOTE:
Use a new gasket.

Tightening torque:
70 N·m (7.1 kgf-m, 51 ft-lb)

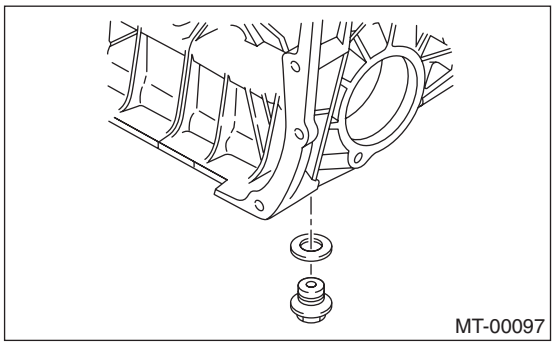

3) Attach the transmission to ST.
ST 499937100 TRANSMISSION STAND

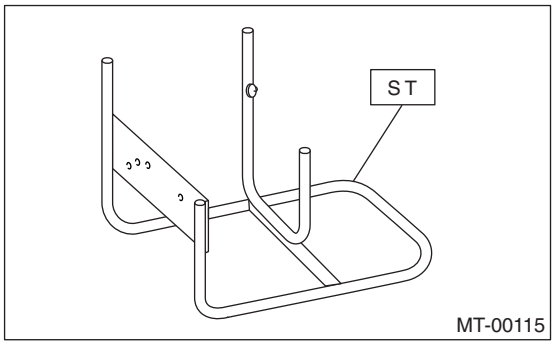

4) Rotating parts should be coated with oil prior to assembly.
5) All disassembled parts, if to be reused, should be reinstalled in the original positions and directions.
6) Always use new ones for gaskets, lock washers and lock nut.
7) Liquid gasket should be applied where specified to prevent leakage.

9. Transfer Case and Extension Case Assembly

A: REMOVAL

1) Remove the manual transmission assembly from vehicle. <Ref. to 5MT-25, REMOVAL, Manual Transmission Assembly.>
2) Remove the back-up light switch and neutral position switch. <Ref. to 5MT-34, REMOVAL, Switches and Harness.>
3) Remove the transfer case with extension case assembly.

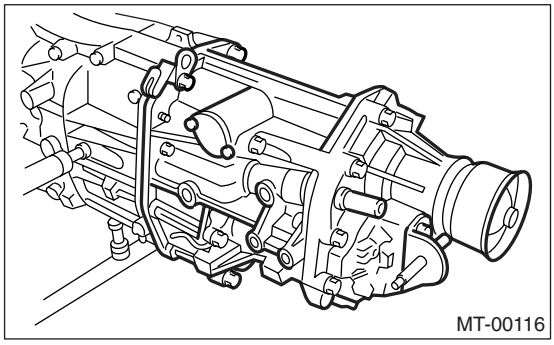
MT-00116

4) Remove the shifter arm.
5) Remove the extension case assembly.

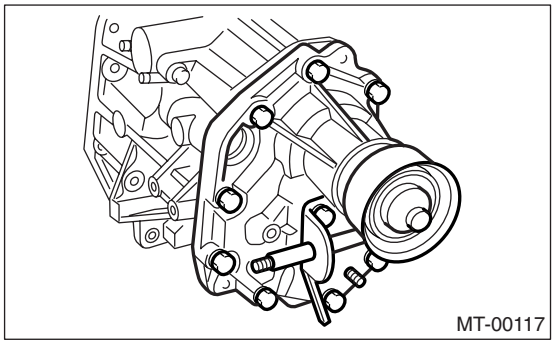
MT-00117

B: INSTALLATION

1) Install the center differential and transfer driven gear into transfer case.

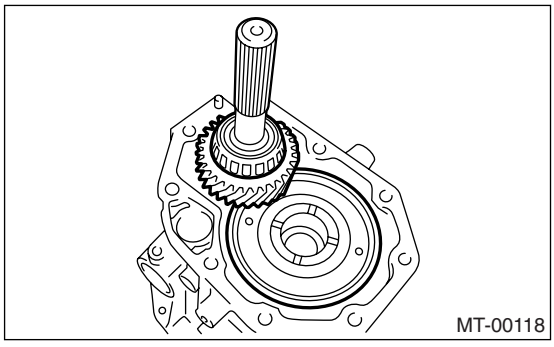
MT-00118

2) Remove the bearing outer race from extension case.

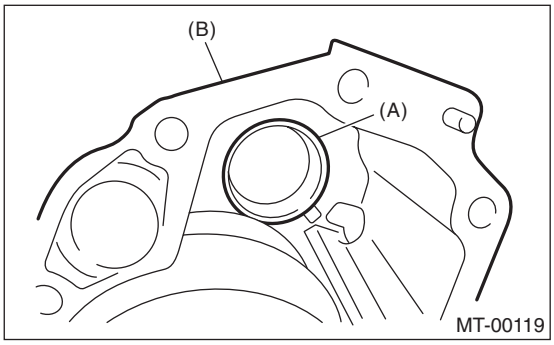

MT-00119

(A) Bearing outer race
(B) Extension case

3) While pressing the bearing outer race horizontally, turn the driven shaft ten rotations.
4) Measure the height “W” between transfer case and taper roller bearing on the transfer driven gear.

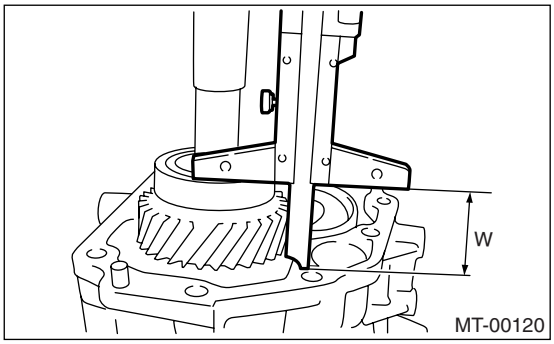

MT-00120

5) Measure the depth “X” on bearing insertion part of extension case.

NOTE:
Measure with bearing outer race and thrust washer removed.

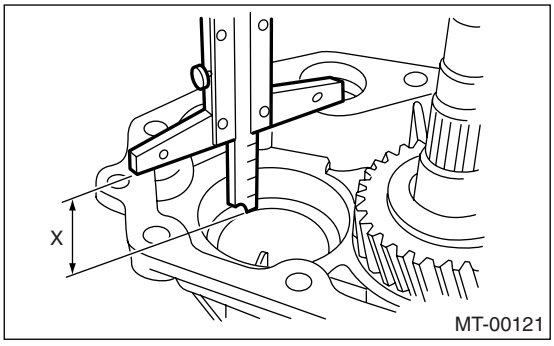

MT-00121

6) Calculate the thrust washer thickness “t” using the following calculation.
t = X – W + 0.15 to 0.20 mm (0.006 to 0.008 in)
7) Select the washer of nearest value in the following table:

Preload of the taper roller bearing (amount of standard protrusion):
0.15 — 0.20 mm (0.006 — 0.008 in)

NOTE:
Be sure that the amount of preload is within the standard value.

Thrust washer (50 × 61 × t)	
Part Number	Thickness mm (in)
803050060	0.50 (0.0197)
803050061	0.55 (0.0217)
803050062	0.60 (0.0236)
803050063	0.65 (0.0256)
803050064	0.70 (0.0276)
803050065	0.75 (0.0295)
803050066	0.80 (0.0315)
803050067	0.85 (0.0335)
803050068	0.90 (0.0354)
803050069	0.95 (0.0374)
803050070	1.00 (0.0394)
803050071	1.05 (0.0413)
803050072	1.10 (0.0433)
803050073	1.15 (0.0453)
803050074	1.20 (0.0472)
803050075	1.25 (0.0492)
803050076	1.30 (0.0512)
803050077	1.35 (0.0531)
803050078	1.40 (0.0551)
803050079	1.45 (0.0571)

8) Fit the thrust washers on transfer drive shaft.
9) Install the bearing outer race into extension case.
10) Measure the depth “S” between transfer case and center differential.
ST 398643600 GAUGE

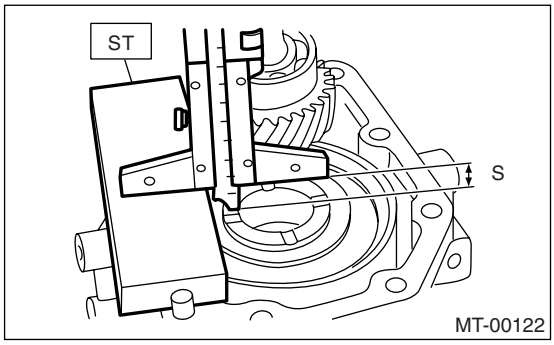

11) Measure the height “T” between extension case and transfer drive gear.
ST 398643600 GAUGE

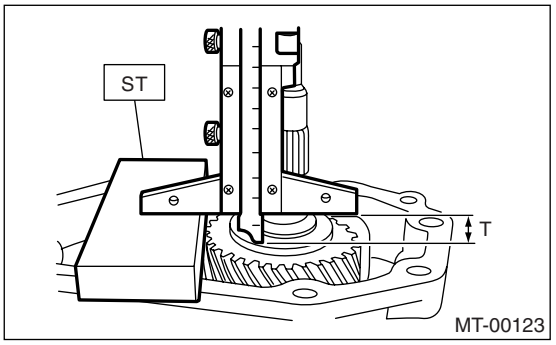

NOTE:
Thickness of ST: 15 mm (0.59 in)
12) Calculate the space “U” using following equation:
U = S + T − 30 mm (1.18 in) [Thickness of ST]
13) Select a suitable washer in the following table:

Standard clearance:
0.15 — 0.35 mm (0.0059 — 0.0138 in)

Thrust washer	
Part Number	Thickness mm (in)
803036050	0.9 (0.035)
803036054	1.0 (0.039)
803036051	1.1 (0.043)
803036055	1.2 (0.047)
803036052	1.3 (0.051)
803036056	1.4 (0.055)
803036053	1.5 (0.059)
803036057	1.6 (0.063)
803036058	1.7 (0.067)

14) Fit the thrust washer on center differential.
15) Apply proper amount of liquid gasket to the transfer case mating surface.

Liquid gasket:
THREE BOND 1215 (Part No. 004403007) or equivalent

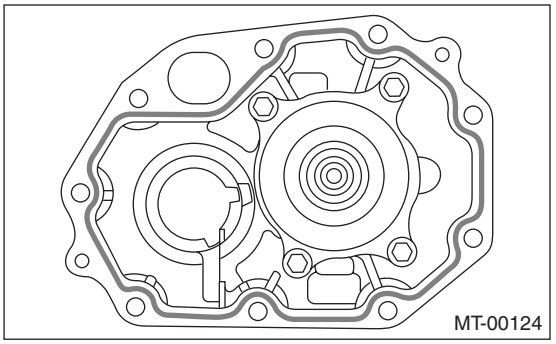

16) Install the extension assembly into transfer case.

Tightening torque:
40 N·m (4.1 kgf-m, 29.7 ft-lb)

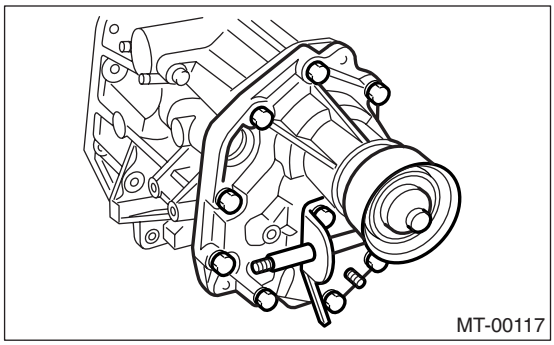
MT-00117

17) Install the shifter arm to transfer case.

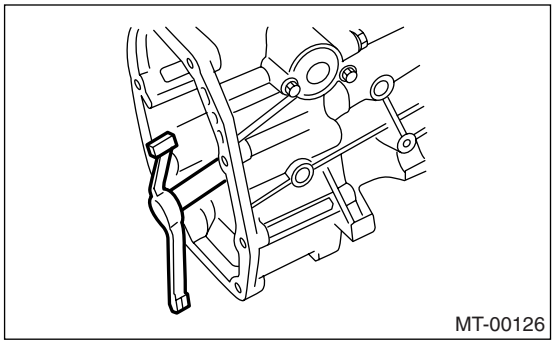
MT-00126

18) Hang the shifter arm on 3rd-4th fork rod.

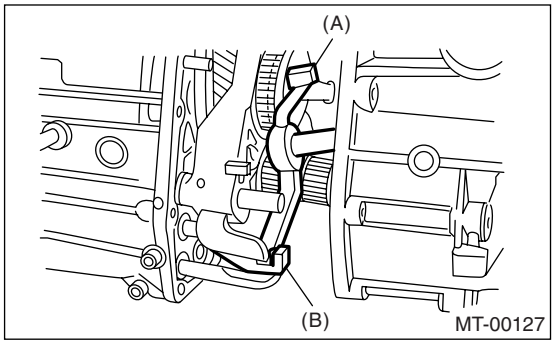

MT-00127

(A) Shifter arm
(B) 3rd-4th fork rod

19) Install the transfer case with extension case assembly to transmission case.

Tightening torque:
24.5 N·m (2.5 kgf-m, 18.1 ft-lb)

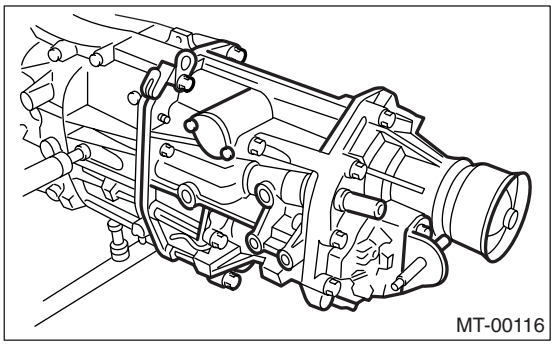
MT-00116

C: DISASSEMBLY

1. TRANSFER CASE

1) Remove the reverse check assembly. <Ref. to 5MT-46, REMOVAL, Reverse Check Sleeve.>
2) Remove the oil guide.

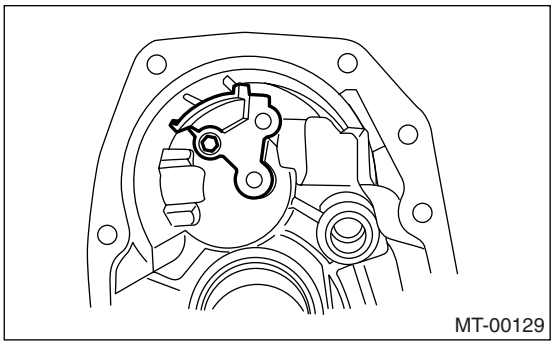
MT-00129

2. EXTENSION CASE

1) Remove the transfer drive gear assembly. <Ref. to 5MT-41, REMOVAL, Transfer Drive Gear.>
2) Remove the shift bracket.

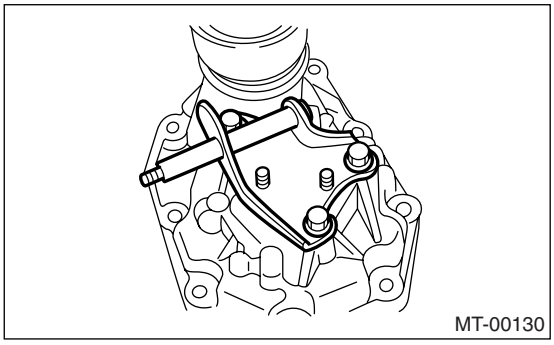
MT-00130

3) Remove the oil seal from extension case. <Ref. to 5MT-32, Oil Seal.>

D: ASSEMBLY

1. EXTENSION CASE

1) Using the ST, install the oil seal to extension case. <Ref. to 5MT-32, Oil Seal.>

NOTE:
Use a new oil seal.

2) Install the shift bracket to extension case.

Tightening torque:
24.5 N·m (2.5 kgf-m, 18.1 ft-lb)

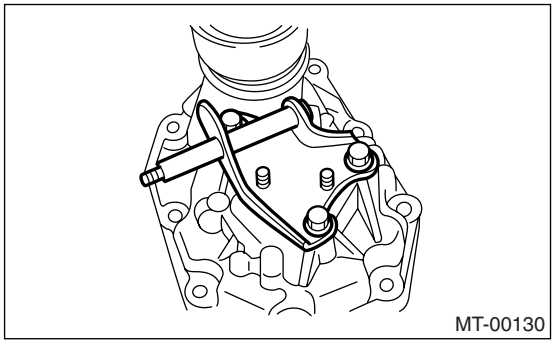

3) Install the transfer drive gear to extension case. <Ref. to 5MT-41, INSTALLATION, Transfer Drive Gear.>

2. TRANSFER CASE

1) Install the oil guide to transfer case.

Tightening torque:
6.4 N·m (0.65 kgf-m, 4.7 ft-lb)

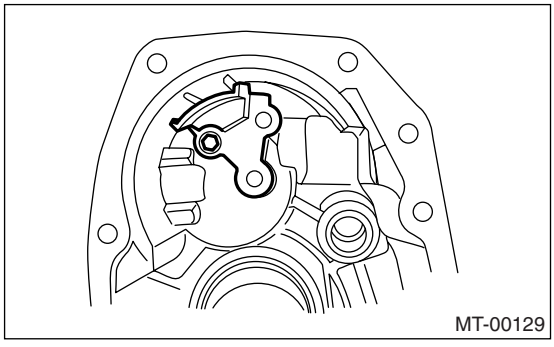

2) Install the reverse check sleeve assembly to transfer case. <Ref. to 5MT-46, INSTALLATION, Reverse Check Sleeve.>

10.Transfer Drive Gear

A: REMOVAL

1) Remove the manual transmission assembly from vehicle. <Ref. to 5MT-25, REMOVAL, Manual Transmission Assembly.>
2) Remove the back-up light switch and neutral position switch. <Ref. to 5MT-34, REMOVAL, Switches and Harness.>
3) Remove the transfer case with extension case assembly. <Ref. to 5MT-37, REMOVAL, Transfer Case and Extension Case Assembly.>
4) Remove the extension case assembly.
5) Remove the transfer driven gear.
6) Remove the transfer drive gear.

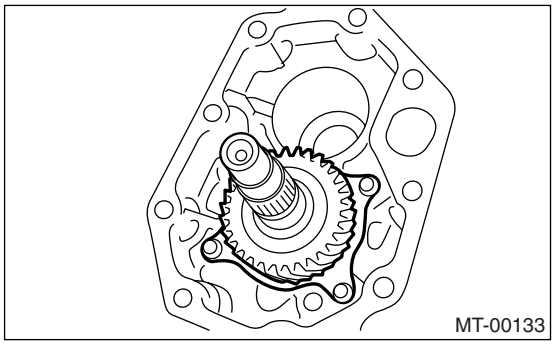
MT-00133

B: INSTALLATION

1) Install the transfer drive gear.

Tightening torque:
26 N·m (2.7 kgf-m, 20 ft-lb)

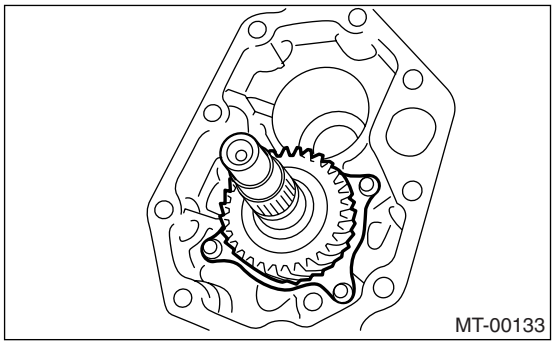
MT-00133

2) Install the transfer driven gear.
3) Install the extension case assembly.
4) Install the transfer case and extension case assembly. <Ref. to 5MT-37, INSTALLATION, Transfer Case and Extension Case Assembly.>
5) Install the back-up light switch and neutral position switch. <Ref. to 5MT-34, INSTALLATION, Switches and Harness.>
6) Install the manual transmission assembly into vehicle. <Ref. to 5MT-27, INSTALLATION, Manual Transmission Assembly.>

C: DISASSEMBLY

1) Remove the snap ring.

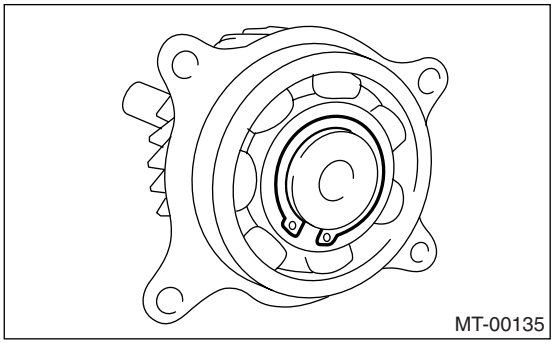
MT-00135

2) Remove the ball bearing.

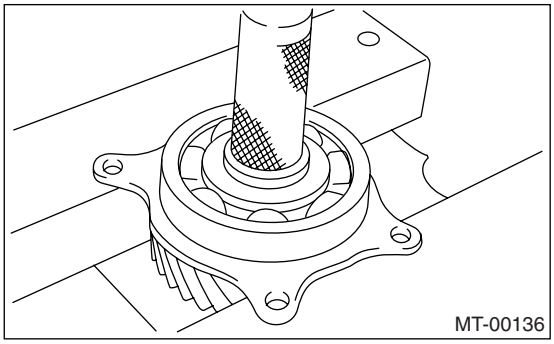
MT-00136

D: ASSEMBLY

1) Set the ST applying to the inner race of bearing to install the drive shaft.
ST 398177700 INSTALLER

NOTE:
Do not apply pressure in excess of 10 kN (1 ton, 1.1 US ton, 1.0 Imp ton).

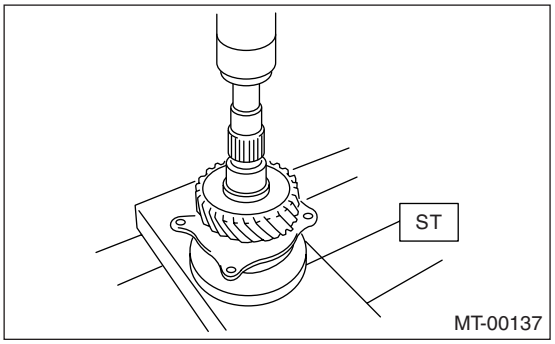

MT-00137

2) Install the snap ring on transfer drive shaft.
3) Inspect the clearance between snap ring and ball bearing. <Ref. to 5MT-41, INSPECTION, Transfer Drive Gear.>

E: INSPECTION

1) Bearings
Replace the bearing in following cases:
- In case of broken or rusty bearings
- In case of worn or damaged bearings
- When the bearings fail to turn smoothly or emit noise in rotation after gear oil lubrication.

2) Drive gear
Replace the drive gear when their tooth surface and shaft are excessively broken or damaged.
3) Measure the clearance between snap ring and inner race of ball bearing with a thickness gauge.

Clearance:
0.01 — 0.15 mm (0.0004 — 0.0059 in)

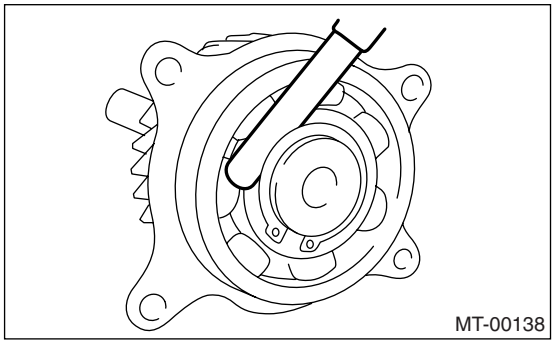

If the measurement is not within specification, select a suitable snap ring and replace it.

Snap ring (Outer-30)	
Part Number	Thickness mm (in)
805030041	1.53 (0.0602)
805030042	1.65 (0.0650)
805030043	1.77 (0.0697)

11.Transfer Driven Gear

A: REMOVAL

1) Remove the manual transmission assembly from vehicle. <Ref. to 5MT-25, REMOVAL, Manual Transmission Assembly.>
2) Remove the back-up light switch and neutral position switch. <Ref. to 5MT-34, REMOVAL, Switches and Harness.>
3) Remove the transfer case with extension case assembly. <Ref. to 5MT-37, REMOVAL, Transfer Case and Extension Case Assembly.>
4) Remove the extension case assembly.
5) Remove the transfer driven gear.

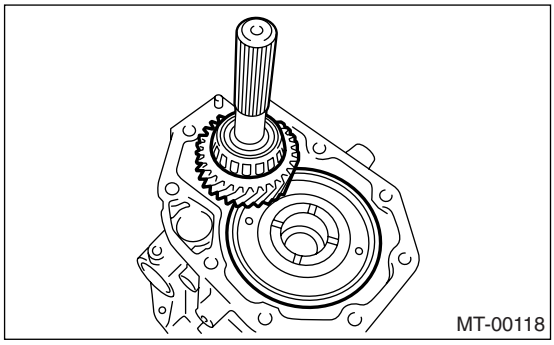

6) Remove the bearing outer races from the extension case and transfer case.

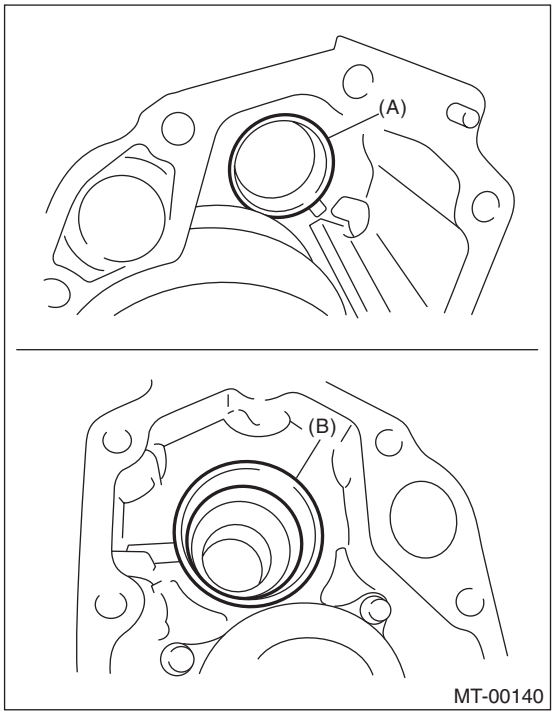

(A) Bearing outer race (Transfer case side)
(B) Bearing outer race (Extension case side)

B: INSTALLATION

1) Install the bearing outer races to the extension case and transfer case.

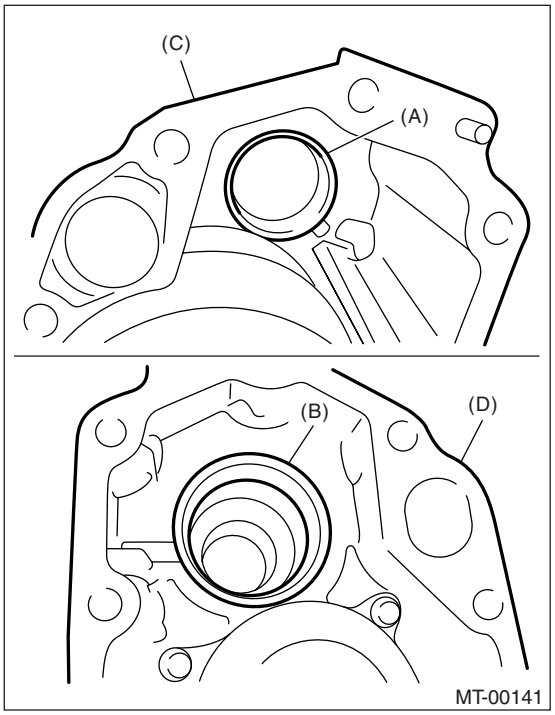

(A) Bearing outer race
(B) Bearing outer race
(C) Transfer case
(D) Extension case

2) Install the transfer driven gear.

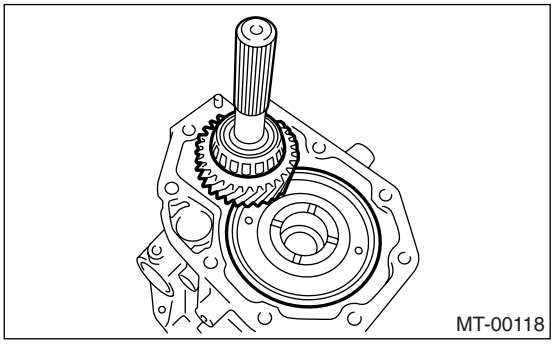

3) Install the transfer case and extension case assembly. <Ref. to 5MT-37, INSTALLATION, Transfer Case and Extension Case Assembly.>
4) Install the back-up light switch and neutral position switch. <Ref. to 5MT-34, INSTALLATION, Switches and Harness.>
5) Install the manual transmission assembly into vehicle. <Ref. to 5MT-27, INSTALLATION, Manual Transmission Assembly.>

C: DISASSEMBLY

1) Using the ST, remove the roller bearing (extension case side).

ST 498077000 REMOVER

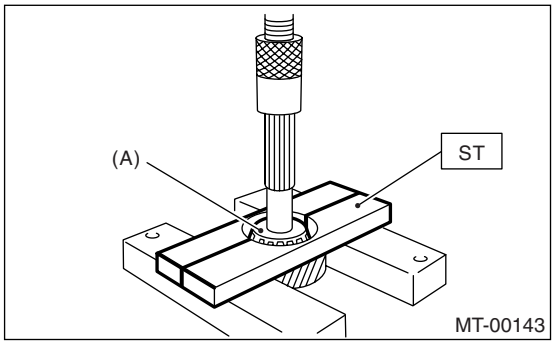

(A) Roller bearing

2) Using the ST1 and ST2, remove the roller bearing (transfer case side).
ST1 498077000 REMOVER
ST2 899864100 REMOVER

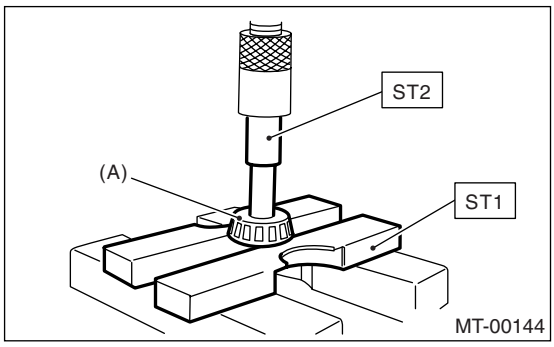

(A) Roller bearing

D: ASSEMBLY

1) Using the ST, install the roller bearing (extension case side).
ST1 398177700 INSTALLER
ST2 899864100 REMOVER

NOTE:
Do not apply pressure in excess of 10 kN (1 ton, 1.1 US ton, 1.0 Imp ton).

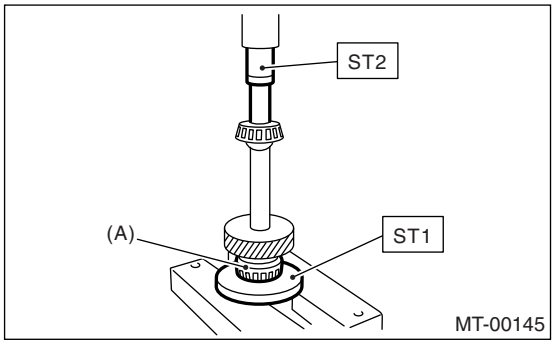

(A) Roller bearing

2) Using the ST, install the roller bearing (transfer case side).
ST 499757002 INSTALLER

NOTE:
Do not apply pressure in excess of 10 kN (1 ton, 1.1 US ton, 1.0 Imp ton).

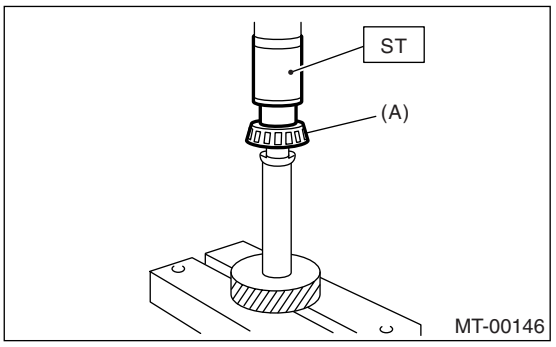

(A) Roller bearing

E: INSPECTION

1) Bearings
Replace the bearing in following cases:
- In case of broken or rusty bearings
- In case of worn or damaged bearings
- When the bearings fail to turn smoothly or emit noise in rotation after gear oil lubrication.

2) Driven gear
Replace the drive gear when their tooth surface and shaft are excessively broken or damaged.

12.Center Differential

A: REMOVAL

1) Remove the manual transmission assembly from vehicle. <Ref. to 5MT-25, REMOVAL, Manual Transmission Assembly.>
2) Remove the transfer case with extension case assembly. <Ref. to 5MT-37, REMOVAL, Transfer Case and Extension Case Assembly.>
3) Remove the extension case assembly. <Ref. to 5MT-37, REMOVAL, Transfer Case and Extension Case Assembly.>
4) Remove the transfer driven gear. <Ref. to 5MT-43, REMOVAL, Transfer Driven Gear.>
5) Remove the center differential.

B: INSTALLATION

1) Install the center differential into transfer case.
2) Install the transfer driven gear. <Ref. to 5MT-43, INSTALLATION, Transfer Driven Gear.>
3) Install the extension case assembly. <Ref. to 5MT-37, INSTALLATION, Transfer Case and Extension Case Assembly.>
4) Install the transfer case with extension case assembly. <Ref. to 5MT-37, INSTALLATION, Transfer Case and Extension Case Assembly.>
5) Install the back-up light switch and neutral position switch. <Ref. to 5MT-34, INSTALLATION, Switches and Harness.>
6) Install the manual transmission assembly into vehicle. <Ref. to 5MT-27, INSTALLATION, Manual Transmission Assembly.>

C: DISASSEMBLY

NOTE:
Center differential is a non-disassembled part which should not be disassembled.

Remove the ball bearing using ST.

NOTE:
Do not reuse the ball bearing.

ST 498077300 CENTER DIFFERENTIAL BEARING REMOVER

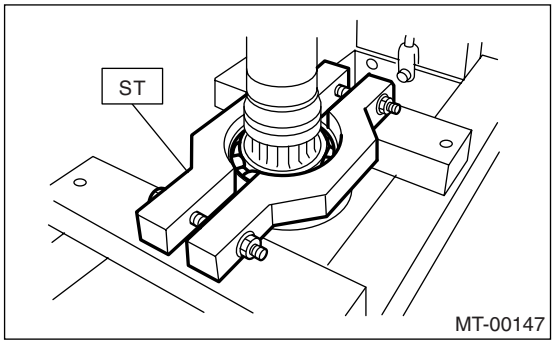

D: ASSEMBLY

Install the ball bearing into center differential assembly.

NOTE:
Do not apply pressure in excess of 10 kN (1 ton, 1.1 US ton, 1.0 Imp ton).

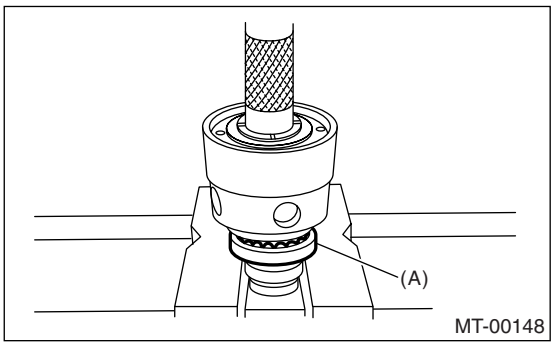

(A) Ball bearing

E: INSPECTION

1) Bearings
Replace the bearing in following cases:
- In case of broken or rusty bearings
- In case of worn or damaged bearings
- When the bearings fail to turn smoothly or emit noise in rotation after gear oil lubrication.
- When bearings have other defects.

2) Center differential
Replace the center differential case assembly if worn or damaged.

13.Reverse Check Sleeve

A: REMOVAL

1) Remove the manual transmission assembly from vehicle. <Ref. to 5MT-25, REMOVAL, Manual Transmission Assembly.>
2) Remove the transfer case with extension case assembly. <Ref. to 5MT-37, REMOVAL, Transfer Case and Extension Case Assembly.>
3) Remove the shifter arm.
4) Remove the plug, spring, washer and reverse check ball.

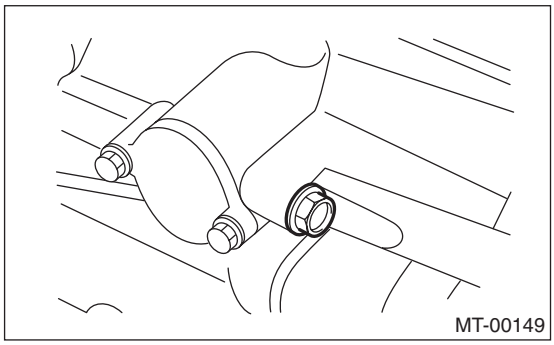
MT-00149

5) Remove the reverse check sleeve.

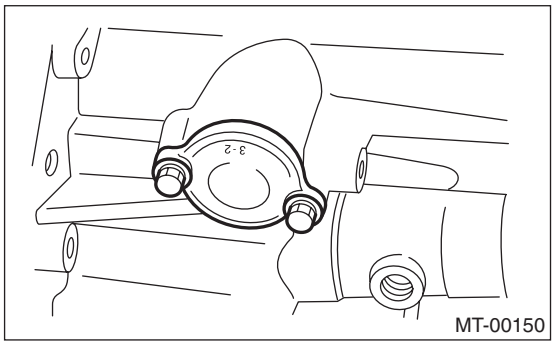
MT-00150

B: INSTALLATION

1) Install the reverse check sleeve.

Tightening torque:
6.4 N·m (0.65 kgf-m, 4.7 ft-lb)

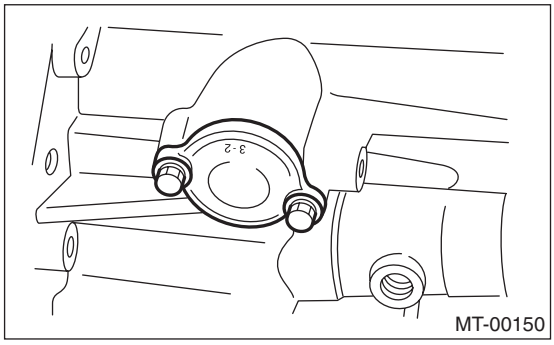
MT-00150

2) Install the ball, spring, washer and plug to transfer case.

Tightening torque:
9.75 N·m (1.0 kgf-m, 7.2 ft-lb)

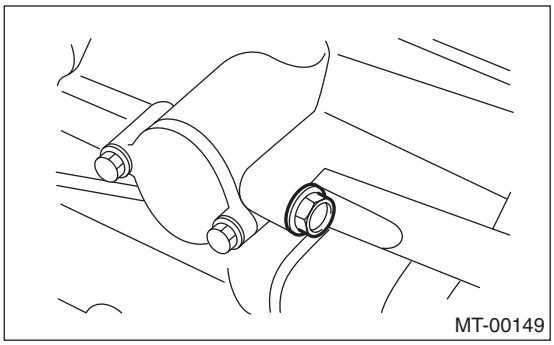
MT-00149

3) Install the shifter arm to transfer case assembly.
4) Install the transfer case with extension case assembly. <Ref. to 5MT-37, INSTALLATION, Transfer Case and Extension Case Assembly.>
5) Install the manual transmission assembly into vehicle. <Ref. to 5MT-27, INSTALLATION, Manual Transmission Assembly.>

C: DISASSEMBLY

1) Cover the reverse check sleeve with a rag, and remove the snap ring using a screwdriver.

NOTE:
Replace the snap ring with a new one if it is deformed or reactive force is weakened.

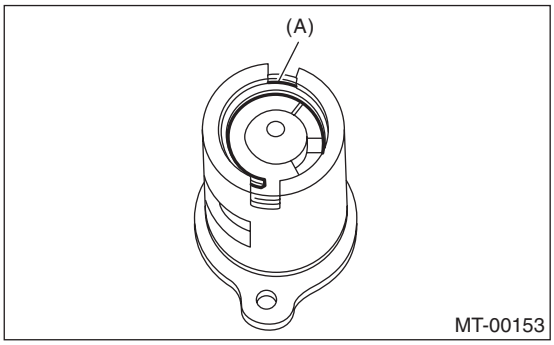

MT-00153

(A) Snap ring

2) Remove the reverse check plate, reverse check spring, reverse check cam, return spring (5th-Rev), reverse accent shaft, return spring cap and return spring (1st-2nd).

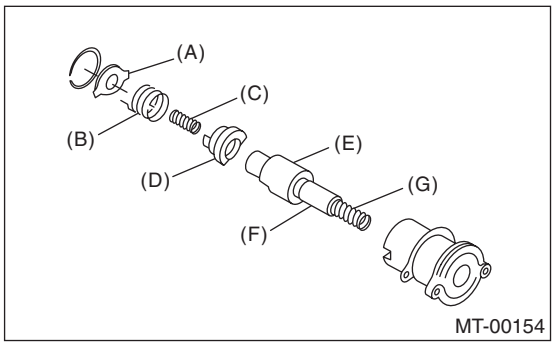

(A) Reverse check plate
(B) Reverse check spring
(C) Return spring (5th-Rev)
(D) Reverse check cam
(E) Reverse accent shaft
(F) Return spring cap
(G) Return spring (1st-2nd)

3) Remove the O-ring.

NOTE:
- Be sure to use a new O-ring.
- Be careful not to break adjusting shim placed between reverse check sleeve assembly and case.

D: ASSEMBLY

1) Install the return spring (1st-2nd), return spring cap, reverse accent shaft, check cam, return spring (5th-Rev.) and reverse check spring onto reverse check sleeve.

NOTE:
Be sure to position the bent section of reverse check spring in the groove in check cam.

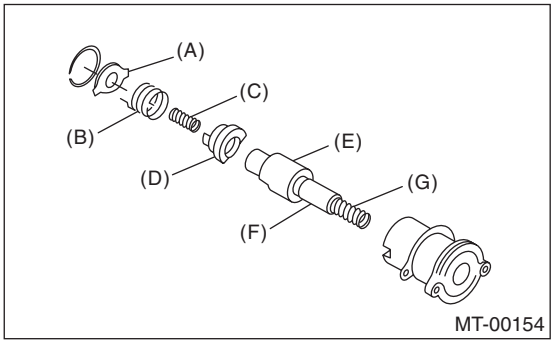

(A) Reverse check plate
(B) Reverse check spring
(C) Return spring (5th-Rev)
(D) Reverse check cam
(E) Reverse accent shaft
(F) Return spring cap
(G) Return spring (1st-2nd)

2) Hook the bent section of reverse check spring over reverse check plate.
3) Rotate the cam so that the protrusion of reverse check cam is at the opening in plate.
4) With cam held in that position, install the reverse check plate onto reverse check sleeve and hold with snap ring.
5) Position the O-ring in the groove in sleeve.

E: INSPECTION

• Make sure the cutout of reverse accent shaft is aligned with the opening in reverse check sleeve.
• Check the cam for smooth rotation by turning with hand.
• Make sure the cam and shaft move all the way toward plate and release.
If the cam does not return properly, replace the reverse check spring. If the shaft does not return, check for scratches on the inner surface of sleeve. If the sleeve is in good order, replace the spring.

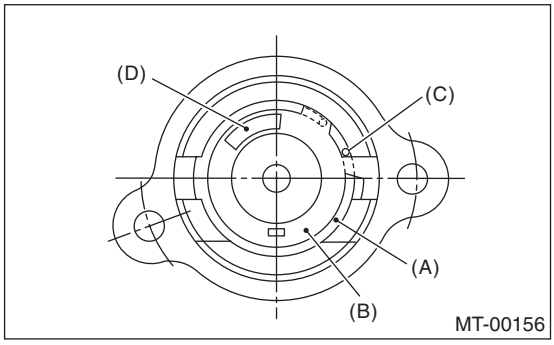

(A) Snap ring
(B) Reverse check plate
(C) Checking spring
(D) Check cam

• Select a suitable reverse accent shaft and reverse check plate. <Ref. to 5MT-48, ADJUSTMENT, Reverse Check Sleeve.>

F: ADJUSTMENT

1. NEUTRAL POSITION ADJUSTMENT

1) Shift the gear into 3rd gear position.
2) Shifter arm turns lightly toward the 1st/2nd gear side but heavily toward the reverse gear side because of the function of return spring, until arm contacts the stopper.
3) Make adjustment so that the heavy stroke (reverse side) is a little more than the light stroke (1st/2nd side).
4) To adjust, remove the bolts holding reverse check sleeve assembly to the case, move the sleeve assembly outward, and place the adjustment shim between sleeve assembly and case to adjust the clearance.

CAUTION:
Be careful not to break O-ring when placing shim(s).

NOTE:
• When the shim is removed, the neutral position will move closer to reverse; when the shim is added, the neutral position will move closer to 1st gear.
• If the shims alone cannot adjust the clearance, replace the reverse accent shaft and re-adjust.

Adjusting shim	
Part Number	Thickness mm (in)
32190AA000	0.15 (0.0059)
32190AA010	0.30 (0.0118)

Reverse accent shaft		
Part No.	Mark	Remarks
32188AA130	S	Neutral position is closer to 1st.
32188AA140	T	Standard
32188AA150	U	Neutral position is closer to reverse gear.

2. REVERSE CHECK PLATE ADJUSTMENT

1) Shift the shifter arm to “5th” and then to reverse to see if reverse check mechanism operates properly.
2) Also check to see if the arm returns to neutral when released from the reverse position. If the arm does not return properly, replace the reverse check plate.

Reverse check plate			
Part Number	(A): No.	Angle θ	Remarks
32189AA000	0	28°	Arm stops closer to 5th gear.
32189AA010	1	31°	Arm stops closer to 5th gear.
32189AA020	2	34°	Arm stops in the center.
32189AA030	3	37°	Arm stops closer to reverse gear.
32189AA040	4	40°	Arm stops closer to reverse gear.

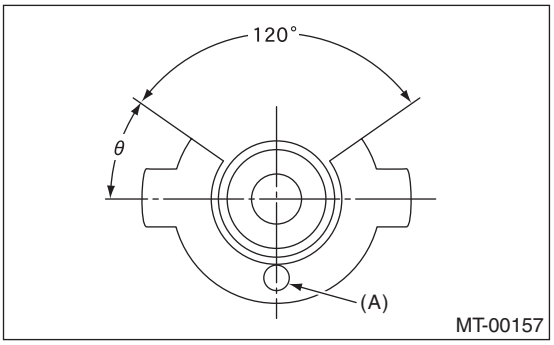

14.Transmission Case

A: REMOVAL

1) Remove the manual transmission assembly from vehicle. <Ref. to 5MT-25, REMOVAL, Manual Transmission Assembly.>
2) Remove the clutch release lever. <Ref. to CL-13, REMOVAL, Release Bearing and Lever.>
3) Remove the transfer case with extension case assembly. <Ref. to 5MT-37, REMOVAL, Transfer Case and Extension Case Assembly.>
4) Remove the bearing mounting bolts.

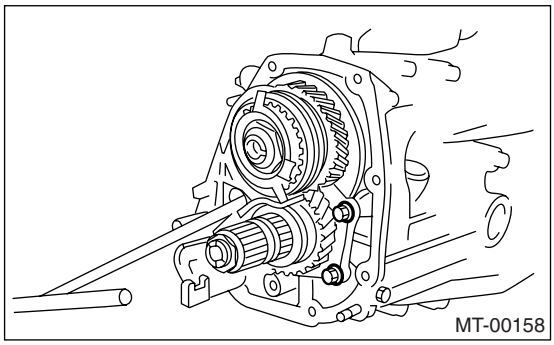

5) Remove the main shaft rear plate.

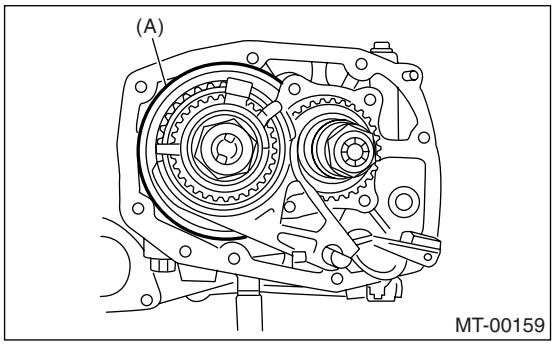

(A) Main shaft rear plate

6) Separate the transmission case into the right and left cases by loosening coupling bolts and nuts.

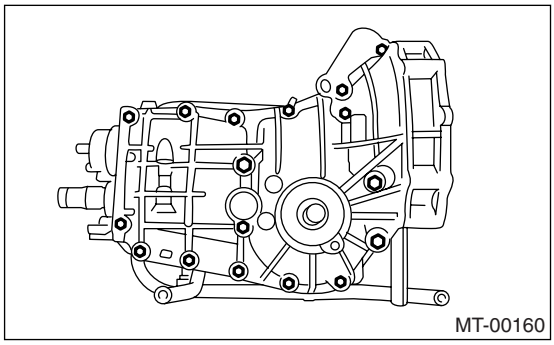

7) Remove the drive pinion shaft assembly from the left side of transmission case.

NOTE:
Use a hammer handle, etc. to remove if too tight.

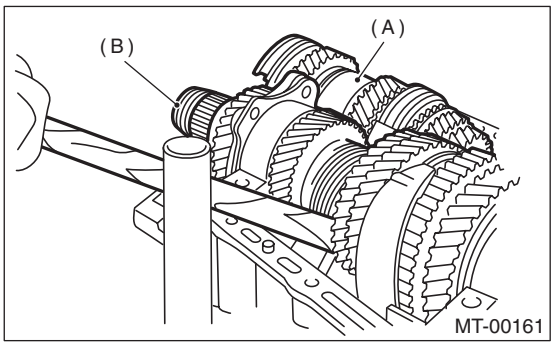

(A) Main shaft ASSY for single-range
(B) Drive pinion shaft ASSY

8) Remove the main shaft assembly for single-range.
9) Remove the front differential assembly.

NOTE:
• Be careful not to confuse right and left roller bearing outer races.
• Be careful not to damage the oil seal of retainer.

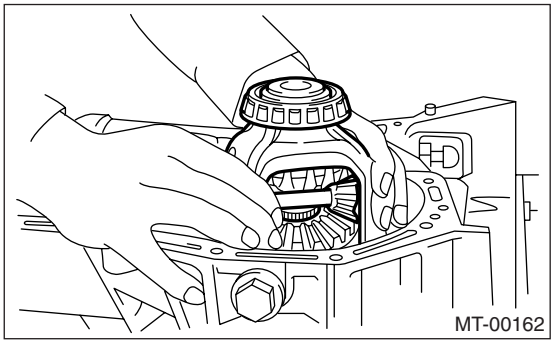

B: INSTALLATION

1) Wipe off grease, oil and dust on the mating surfaces of transmission cases with white gasoline.
2) Install the front differential assembly.
3) Install the main shaft assembly for single-range.
Install the transmission case knock pin into needle bearing knock pin hole.
4) Install the drive pinion shaft assembly.
Install the transmission case knock pin into roller bearing knock pin hole.
5) Apply liquid gasket, and then put the case RH and LH together.

Liquid gasket:
THREE BOND 1215 (Part No. 004403007) or equivalent

6) Tighten seventeen bolts with bracket, clip, etc. as shown in the figure.

NOTE:
Insert the bolts from the bottom and tighten nuts on the top.

Tightening torque:
8 mm bolt
25 N·m (2.5 kgf-m, 18.1 ft-lb)
★ 10 mm bolt
39 N·m (4.0 kgf-m, 28.9 ft-lb)

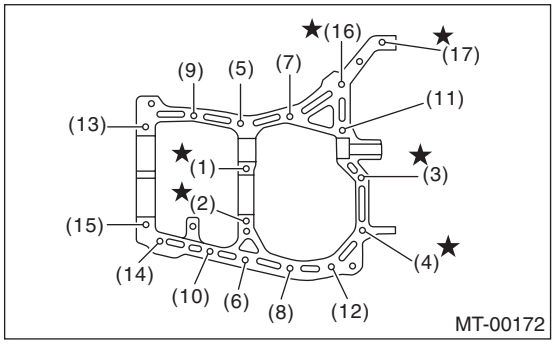

7) Tighten the ball bearing mounting bolts.

Tightening torque:
30 N·m (3.1 kgf-m, 22.1 ft-lb)

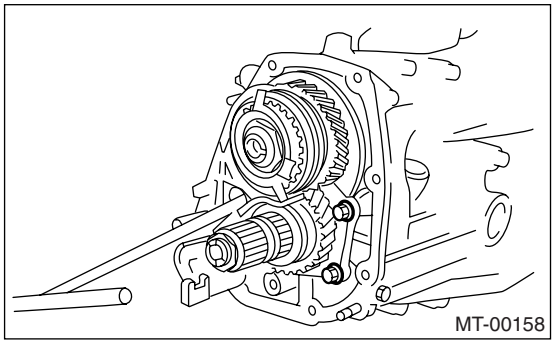

8) Backlash adjustment of hypoid gear and preload adjustment of roller bearing.

NOTE:
Set the ST on drive pinion assembly.
ST 498427100 STOPPER

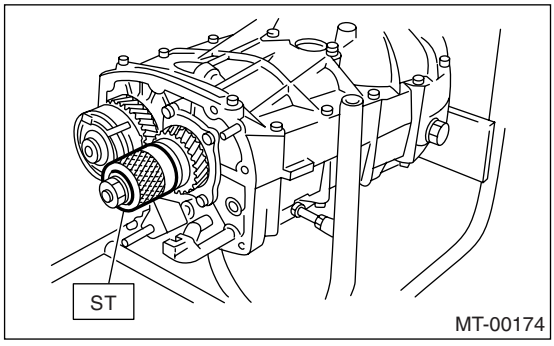

9) Place the transmission with the left side of case facing downward, and put ST1 on bearing cup.
10) Screw the retainer assembly into left case from the bottom with ST2. Fit the ST3 on transmission main shaft. Shift the gear into 4th or 5th and turn the shaft several times. Screw in the retainer while turning ST3 until a slight resistance is felt on ST2.

This is the contact point of hypoid gear and drive pinion shaft. Repeat the above sequence several times to ensure the contact point.
ST1 399780104 WEIGHT
ST2 499787000 WRENCH ASSY
ST3 499927100 HANDLE

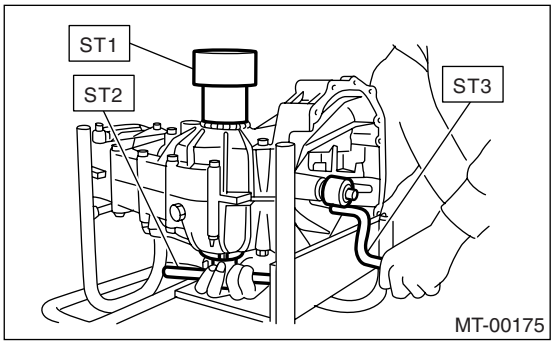

11) Remove the weight, and screw in the retainer without O-ring on the upper side and stop at the point where slight resistance is felt.

NOTE:
At this condition, the backlash between hypoid gear and drive pinion shaft is zero.
ST 499787000 WRENCH ASSY

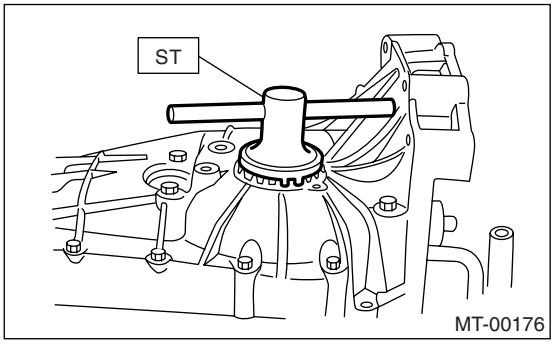

12) Loosen the retainer on the lower side by 3 notches, and turn the retainer on the upper side by the same amount in order to obtain the backlash.
13) Turn in the retainer on the upper side additionally by 1 notch in order to apply preload on taper roller bearing.
14) Install temporarily both the upper and lower lock plates and mark both holder and lock plate for later readjustment.

NOTE:
Install the lock plate upside down if it is hard to install.

15) Turn the transmission main shaft several times while tapping around retainer lightly with plastic hammer.
16) Inspect and adjust the backlash and tooth contact of hypoid gear. <Ref. to 5MT-68, INSPECTION, Front Differential Assembly.>
17) After checking the tooth contact of hypoid gears, remove the lock plate. Then loosen the re-

tainer until the O-ring groove appears. Fit O-ring into the groove and tighten the retainer to the original position.
Install the lock plate.

NOTE:
• Record how many times the retainer is turned while loosening.
• Carry out this job on both upper and lower retainers.

Tightening torque:
T: 25 N·m (2.5 kgf-m, 18.4 ft-lb)

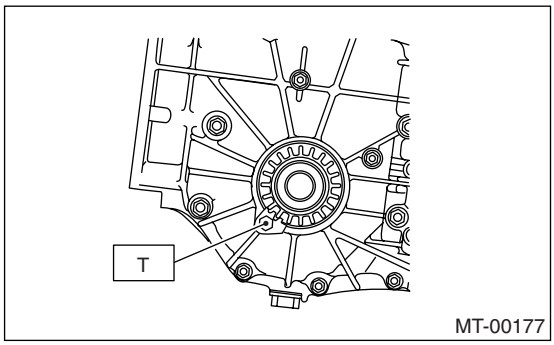

18) Selecting of main shaft rear plate: <Ref. to 5MT-56, ADJUSTMENT, Main Shaft Assembly for Single-Range.>
19) Install the clutch release lever and bearing. <Ref. to CL-13, INSTALLATION, Release Bearing and Lever.>
20) Install the transfer case with extension case assembly. <Ref. to 5MT-37, INSTALLATION, Transfer Case and Extension Case Assembly.>
21) Install the manual transmission assembly into vehicle. <Ref. to 5MT-27, INSTALLATION, Manual Transmission Assembly.>

C: INSPECTION

Check the transmission case for cracks, damage, or oil leaks.

15.Main Shaft Assembly for Single-Range

A: REMOVAL

1) Remove the manual transmission assembly from vehicle. <Ref. to 5MT-25, REMOVAL, Manual Transmission Assembly.>
2) Remove the transfer case with extension case assembly. <Ref. to 5MT-37, REMOVAL, Transfer Case and Extension Case Assembly.>
3) Remove the transmission case. <Ref. to 5MT-49, REMOVAL, Transmission Case.>
4) Remove the drive pinion shaft assembly. <Ref. to 5MT-57, REMOVAL, Drive Pinion Shaft Assembly.>
5) Remove the main shaft assembly for single range.

B: INSTALLATION

1) Install the needle bearing and oil seal onto the front of transmission main shaft assembly for single range.

NOTE:
• Wrap the clutch splined section with vinyl tape to prevent damage to oil seal.
• Apply grease (UNILUBE #2 or equivalent) to the sealing lip of oil seal.
• Use a new oil seal.

2) Install the transmission case knock pin into needle bearing outer race knock pin hole.

NOTE:
Align the end face of seal with surface (A) when installing oil seal.

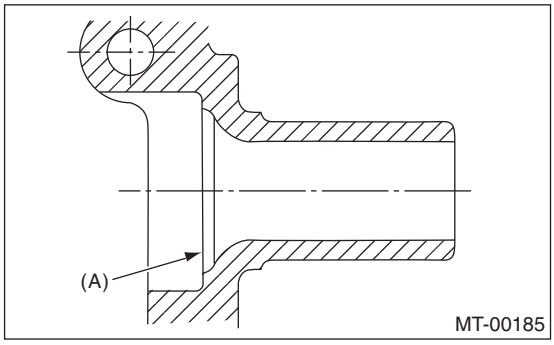

3) Install the drive pinion assembly. <Ref. to 5MT-57, INSTALLATION, Drive Pinion Shaft Assembly.>
4) Install the transmission case. <Ref. to 5MT-49, INSTALLATION, Transmission Case.>
5) Install the transfer case with extension case assembly. <Ref. to 5MT-37, INSTALLATION, Transfer Case and Extension Case Assembly.>
6) Install the manual transmission assembly into vehicle. <Ref. to 5MT-27, INSTALLATION, Manual Transmission Assembly.>

C: DISASSEMBLY

1) Put the vinyl tape around main shaft splines to protect oil seal from damage. Then pull out the oil seal and needle bearing by hand.
2) Remove the lock nut from transmission main shaft assembly for single range.

NOTE:
Unlock the caulking before removing lock nut.

ST1 498937000 TRANSMISSION HOLDER
ST2 499987003 SOCKET WRENCH (35)

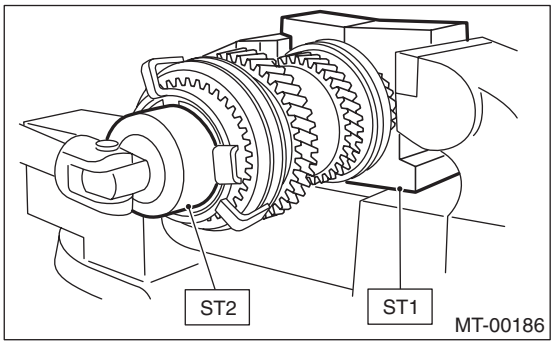

3) Remove the 5th-Rev sleeve & hub assembly, baulk ring, 5th drive gear & needle bearing.

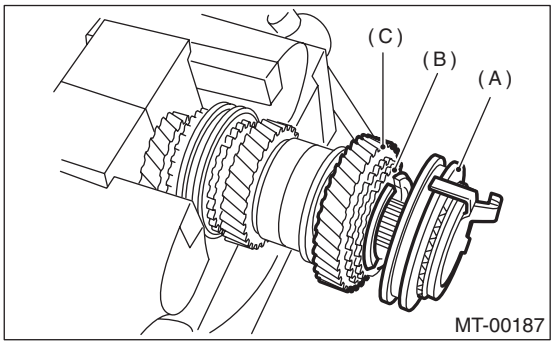

(A) 5th-Rev sleeve & hub ASSY
(B) Baulk ring
(C) 5th drive gear

4) Remove the snap ring and synchro cone stopper from 5th-Rev sleeve & hub assembly.

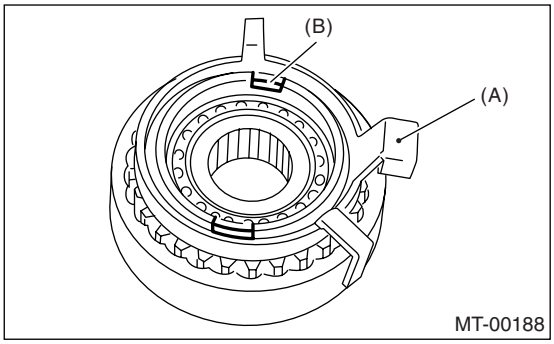

(A) Synchro cone stopper
(B) Snap ring

5) Using the ST1, ST2 and a press, remove the ball bearing, synchro cone and baulk ring (Rev).

NOTE:
• When replacing the sleeve & hub with new ones, replace them as a set.
• Do not disassemble the sleeve & hub, because the aligning position is specified.
• If it is necessary to disassemble, mark the engaging points on the splines beforehand.
• Do not reuse the ball bearing.

ST1 499757002 INSTALLER
ST2 498077400 SYNCHRO CONE REMOVER

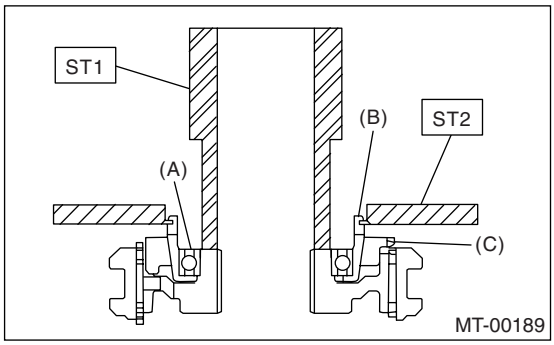

(A) Ball bearing
(B) Synchro cone
(C) Baulk ring

6) Using the ST1 and ST2, remove the rest of parts.

NOTE:
• When replacing the sleeve & hub with new ones, replace them as a set.
• Do not disassemble the sleeve & hub, because the aligning position is specified.
• If it is necessary to disassemble, mark the engaging points on the splines beforehand.

ST1 899864100 REMOVER
ST2 899714110 REMOVER

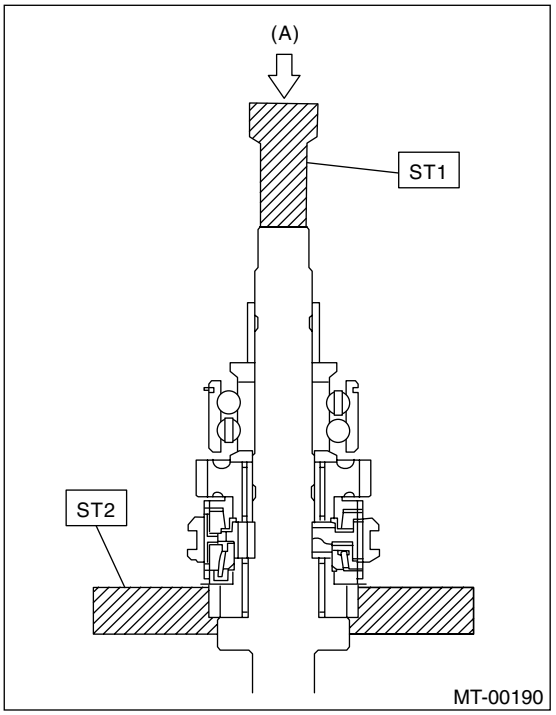

(A) Push

D: ASSEMBLY

1) When the sleeve & hub assemblies have been disassembled, reassemble with aligning each engaging point.

NOTE:
Position open ends of spring 120° apart.

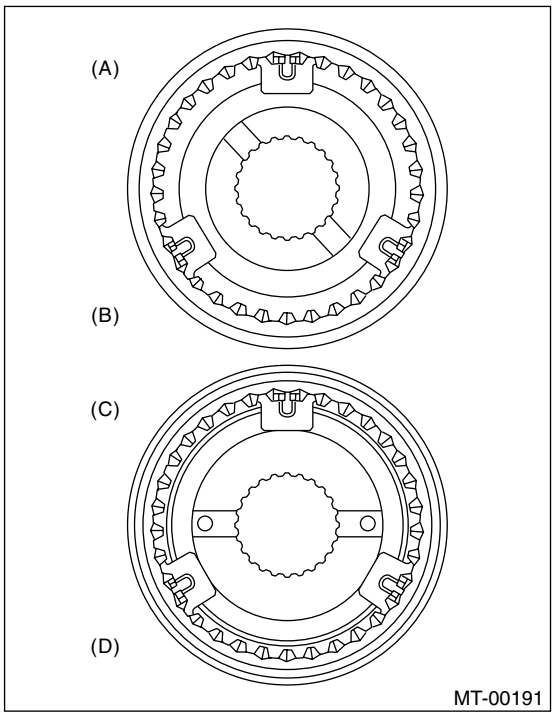

(A) 3rd-4th hub ASSY
(B) 3rd gear side
(C) 5th-Rev hub ASSY
(D) 5th gear side

2) Install the 3rd drive gear, outer baulk ring, synchro cone, inner baulk ring, sleeve & hub assembly for 3rd needle bearing, on the transmission main shaft.

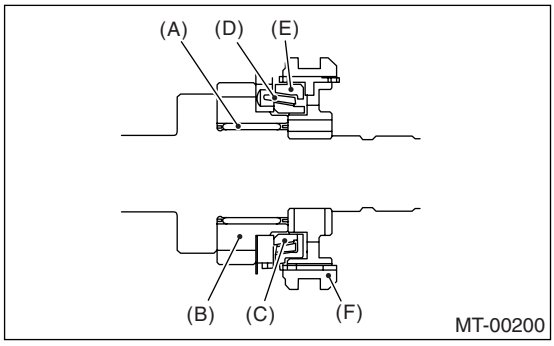

(A) 3rd needle bearing
(B) 3rd drive gear
(C) Inner baulk ring
(D) Synchro cone
(E) Outer baulk ring
(F) Sleeve & hub ASSY

NOTE:
Align the groove in baulk ring with shifting insert.

3) Install the 4th needle bearing race onto transmission main shaft using ST1, ST2 and a press.

NOTE:
Do not apply pressure in excess of 10 kN (1 ton, 1.1 US ton, 1.0 Imp ton).
ST1 899714110 REMOVER
ST2 499877000 RACE 4-5 INSTALLER

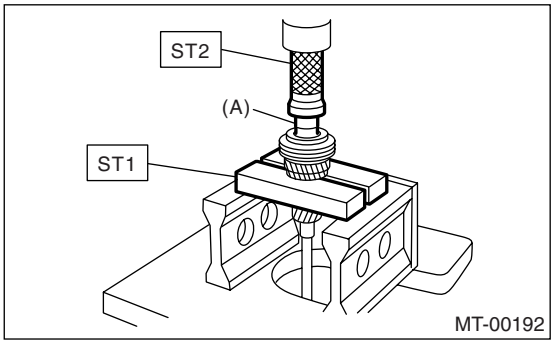

(A) 4th needle bearing race

4) Install the baulk ring, needle bearing, 4th drive gear and 4th gear thrust washer to transmission main shaft.

NOTE:
Align the baulk ring and gear & hub assembly with key groove.

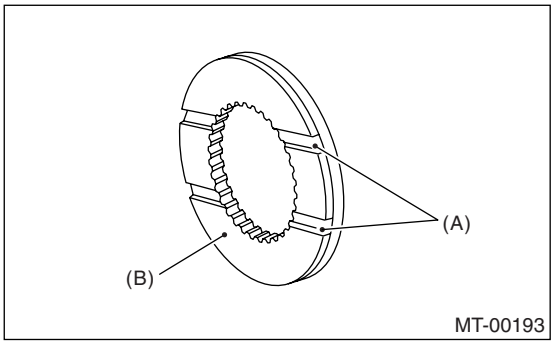

(A) Groove
(B) 4th gear side

5) Press the ball bearing into the rear section of transmission main shaft using ST1, ST2 and a press.

NOTE:
Do not apply pressure in excess of 10 kN (1 ton, 1.1 US ton, 1.0 Imp ton).
ST1 899714110 REMOVER

ST2 499877000 RACE 4-5 INSTALLER

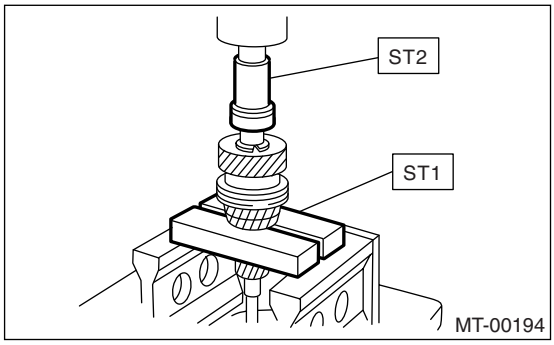

6) Using the ST1 and ST2, install the 5th gear thrust washer and 5th needle bearing race onto the rear section of transmission main shaft.

NOTE:
• Do not apply pressure in excess of 10 kN (1 ton, 1.1 US ton, 1.0 Imp ton).
• Face the thrust washer in the correct direction.

ST1 899714110 REMOVER
ST2 499877000 RACE 4-5 INSTALLER

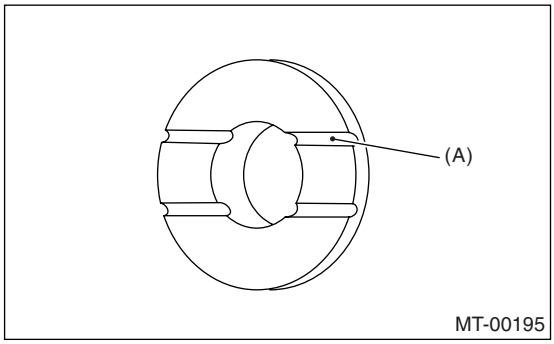

(A) Face this surface to 5th gear side.

7) Install the bearing onto synchro cone.
8) Install the baulk ring and synchro cone onto 5th-Rev sleeve & hub assembly using ST and a press.

NOTE:
• Do not apply pressure in excess of 10 kN (1 ton, 1.1 US ton, 1.0 Imp ton).
• Use new ball bearing.
• Make sure the synchro cone rotates smoothly after press-fitting.

ST 499757002 INSTALLER

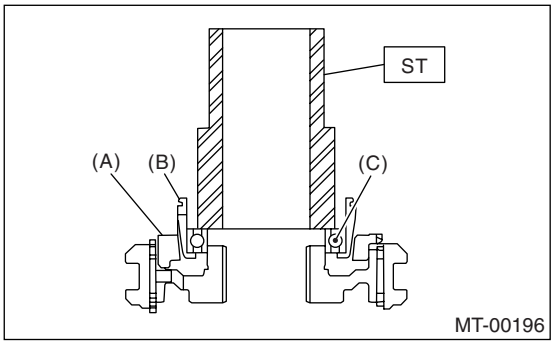

(A) Baulk ring
(B) Synchro cone
(C) Ball bearing

9) Install the synchro cone stopper and snap ring to 5th-Rev sleeve & hub assembly.

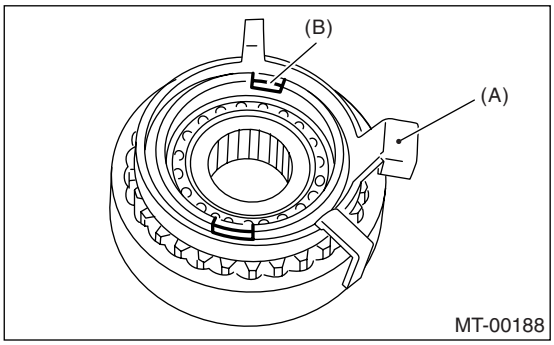

(A) Synchro cone stopper
(B) Snap ring

10) Install the rest of parts to the rear section of transmission main shaft.

NOTE:
Align the groove in baulk ring with shifting insert.

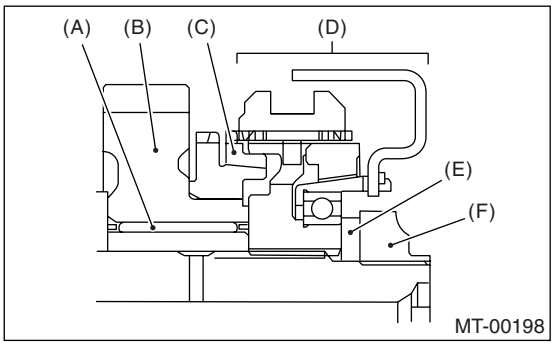

(A) Needle bearing
(B) 5th drive gear
(C) Baulk ring
(D) 5th-Rev sleeve & hub ASSY
(E) Lock washer
(F) Lock nuts

11) Tighten the lock nuts to the specified torque using ST1 and ST2.

NOTE:
Caulk the lock nuts in two places after tightening.

ST1 499987003 SOCKET WRENCH
ST2 498937000 TRANSMISSION HOLDER

Tightening torque:
120 N·m (12.2 kgf-m, 88.5 ft-lb)

E: INSPECTION

Disassembled parts should be washed with unleaded gasoline first and then inspected carefully.

1) Bearings
Replace the bearing in following cases:
• When the bearing balls, outer races and inner races are broken or rusty.
• When the bearing is worn.
• When the bearings fail to turn smoothly or emit noise in rotation after gear oil lubrication.
• When bearings have other defects.

2) Bushing (each gear)
Replace the bushings in following cases:
• When the sliding surface is damaged or abnormally worn.
• When the inner wall is abnormally worn.

3) Gears
• Replace gears with new ones if their tooth surfaces are broken, damaged or excessively worn.
• Correct or replace if the cone that contacts the baulk ring is rough or damaged.
• Correct or replace if the inner surface or end face is damaged.

4) Baulk ring
Replace the ring in following cases:
• When the inner surface and end face is damaged.
• When the ring inner surface is abnormally or partially worn.
• When contact surfaces of the synchronizer ring insert have cracks or abnormally worn.

5) Shifting insert key
Replace the insert key if deformed, excessively worn or defective in any way.

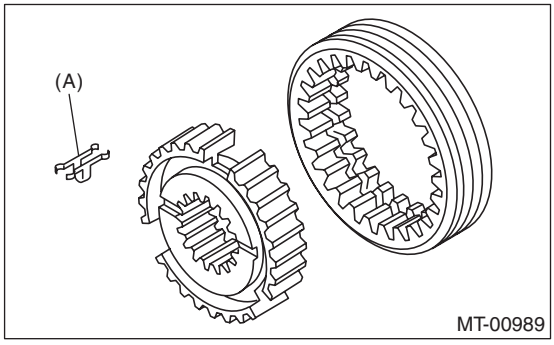

(A) Insert key

6) Oil seal
Replace the oil seal if the lip is deformed, hardened, worn or defective in any way.

7) O-ring
Replace the O-ring if the sealing face is deformed, hardened, damaged, worn or defective in any way.

8) Gearshift mechanism
Repair or replace the gearshift mechanism if excessively worn, bent or defective in any way.

F: ADJUSTMENT

Selection of main shaft rear plate:
Using the ST, measure the amount (A) of ball bearing protrusion from transmission main case surface, and select a suitable plate in the following table.

NOTE:
Before measuring, tap the end of main shaft with a plastic hammer lightly in order to make the clearance zero between the main case surface and moving flange of bearing.

ST 498147001 DEPTH GAUGE

Dimension (A) mm (in)	Part Number	Marking
4.00 — 4.13 (0.1575 — 0.1626)	32294AA041	1
3.87 — 3.99 (0.1524 — 0.1571)	32294AA051	2

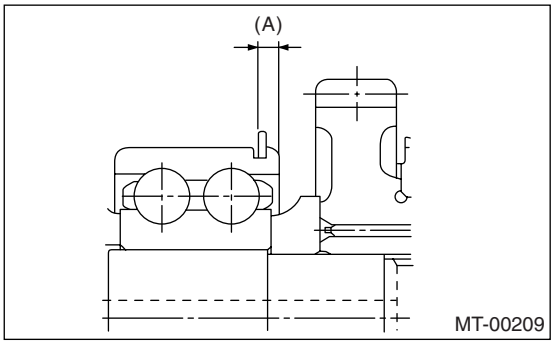

16.Drive Pinion Shaft Assembly

A: REMOVAL

1) Remove the manual transmission assembly from vehicle. <Ref. to 5MT-25, REMOVAL, Manual Transmission Assembly.>
2) Remove the transfer case with extension case assembly. <Ref. to 5MT-37, REMOVAL, Transfer Case and Extension Case Assembly.>
3) Remove the transmission case. <Ref. to 5MT-49, REMOVAL, Transmission Case.>
4) Remove the drive pinion shaft assembly.

NOTE:
Use a hammer handle, etc. to remove if too tight.

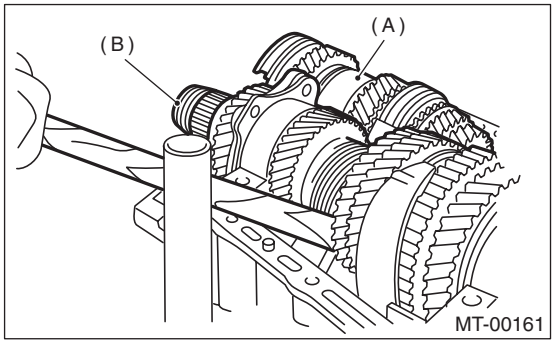

(A) Main shaft ASSY for single-range
(B) Drive pinion shaft ASSY

B: INSTALLATION

1) Remove the differential assembly.
2) Alignment marks/numbers on hypoid gear set:
Use hypoid driven gear of its match number corresponding with upper one on the drive pinion (A).
The figure (B) shows a number for shim adjustment. If no number is shown, the value is zero.

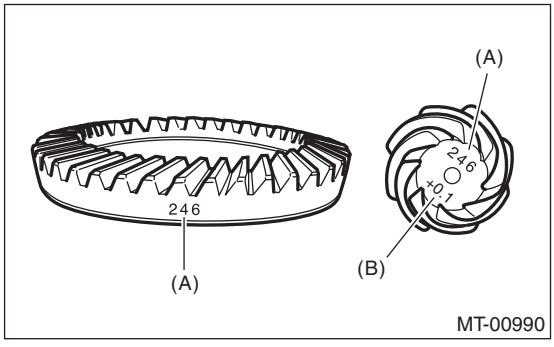

(A) Match number
(B) Number for shim adjustment

3) Place the drive pinion shaft assembly on the transmission main case RH without shim and tighten the bearing mounting bolts.
4) Inspection and adjustment of ST:

NOTE:
• Loosen the two bolts and adjust so that the scale indicates 0.5 correctly when the plate end and the scale end are on the same level.
• Tighten the two bolts.

ST 499917500 DRIVE PINION GAUGE ASSY

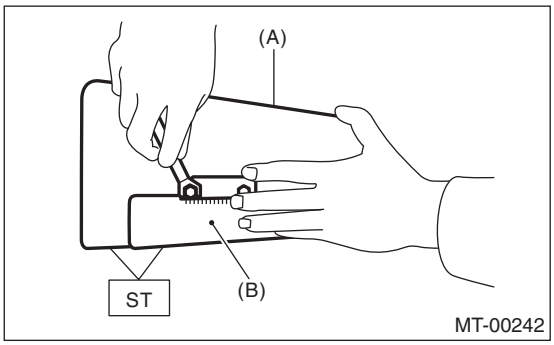

(A) Plate
(B) Scale

5) Position the ST by inserting the knock pin of ST into the knock hole in the transmission case.

ST 499917500 DRIVE PINION GAUGE ASSY

6) Slide the drive pinion gauge scale with finger tip and read the value at the point where it matches with the end face of drive pinion.

ST 499917500 DRIVE PINION GAUGE ASSY

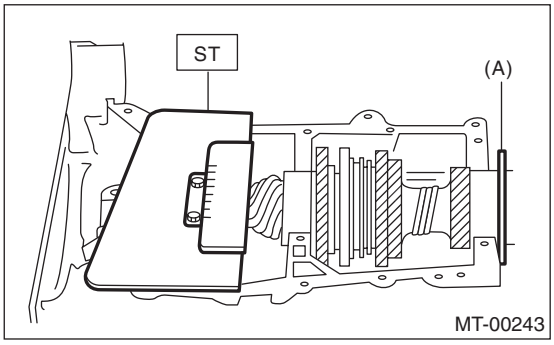

(A) Adjust clearance to zero without shim.

7) The thickness of shim shall be determined by adding the value indicated on drive pinion to the value indicated on the ST. (Add if the number on drive pinion is prefixed by +, and subtract if the number is prefixed by −.)

ST 499917500 DRIVE PINION GAUGE ASSY

8) Select one to three shims in the next table for the value determined as described above, and take the shim(s) which thickness is closest to the said value.

Drive pinion shim	
Part Number	Thickness mm (in)
32295AA031	0.150 (0.0059)
32295AA041	0.175 (0.0069)
32295AA051	0.200 (0.0079)
32295AA061	0.225 (0.0089)
32295AA071	0.250 (0.0098)
32295AA081	0.275 (0.0108)
32295AA091	0.300 (0.0118)
32295AA101	0.500 (0.0197)

9) Install the differential assembly. <Ref. to 5MT-65, INSTALLATION, Front Differential Assembly.>
10) Set the transmission main shaft assembly for single-range and drive pinion assembly in position (So there is no clearance between these two when moved all the way to the front). Inspect the suitable 1st — 2nd, 3rd — 4th and 5th shifter fork so that the coupling sleeve and reverse driven gear are positioned in the center of their synchronizing mechanisms. <Ref. to 5MT-62, INSPECTION, Drive Pinion Shaft Assembly.>
11) Install the transmission case. <Ref. to 5MT-49, INSTALLATION, Transmission Case.>
12) Install the transfer case with extension case assembly. <Ref. to 5MT-37, INSTALLATION, Transfer Case and Extension Case Assembly.>
13) Install the manual transmission assembly to vehicle. <Ref. to 5MT-25, Manual Transmission Assembly.>

C: DISASSEMBLY

NOTE:
Attach a cloth to the end of driven shaft (on the frictional side of thrust needle bearing) to prevent damage during disassembly or reassembly.

1) Unlock the caulking of lock nut. Remove the lock nut using ST1, ST2 and ST3.
ST1 899884100 HOLDER
ST2 498427100 STOPPER
ST3 899988608 SOCKET WRENCH (27)

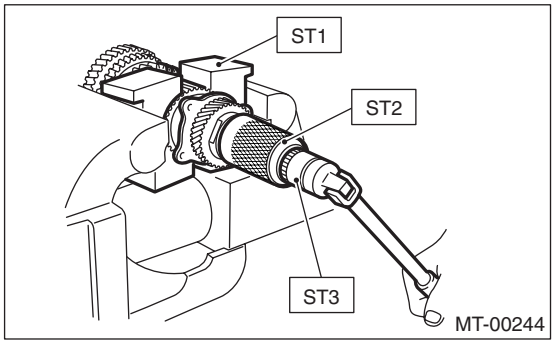

2) Draw out the drive pinion from driven shaft.

Remove the differential bevel gear sleeve, adjusting washer No. 1, adjusting washer No. 2, thrust bearing, needle bearing and drive pinion collar.

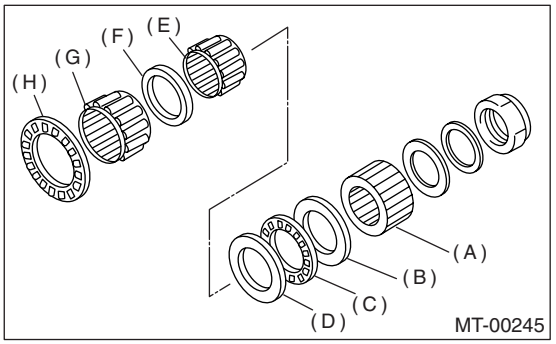

(A) Differential bevel gear sleeve
(B) Washer No. 1 (25 × 37.5 × t)
(C) Thrust bearing (25 × 37.5 × 3)
(D) Washer No. 2 (25 × 37.5 × 4)
(E) Needle bearing (25 × 30 × 20)
(F) Drive pinion collar
(G) Needle bearing (30 × 37 × 23)
(H) Thrust bearing (33 × 50 × 3)

3) Remove the roller bearing and washer using ST and press.

NOTE:
Do not reuse the roller bearing.
ST 498077000 REMOVER

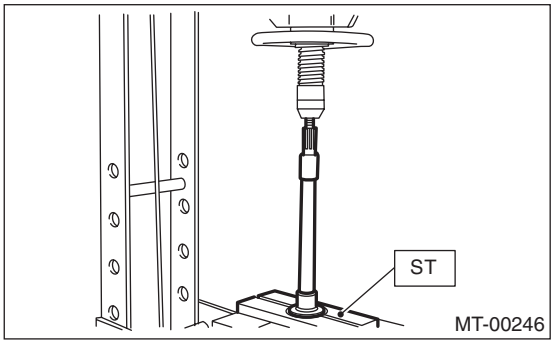

4) Unlock the caulking of lock nut. Remove the lock nut using ST1 and ST2.
ST1 499987300 SOCKET WRENCH (50)
ST2 899884100 HOLDER

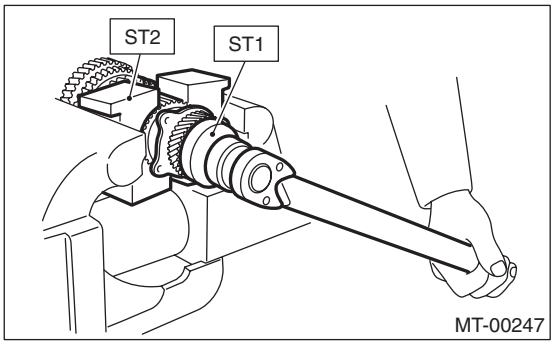

5) Remove the 5th driven gear using ST.

ST 499857000 5TH DRIVEN GEAR REMOVER

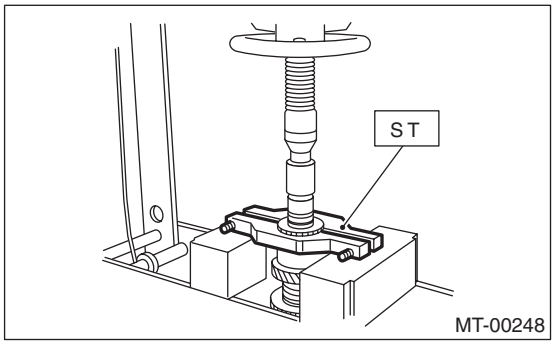

6) Remove the woodruff key.
7) Remove the roller bearing and 3rd-4th driven gear using ST1 and ST2.
ST1 499757002 INSTALLER
ST2 899714110 REMOVER

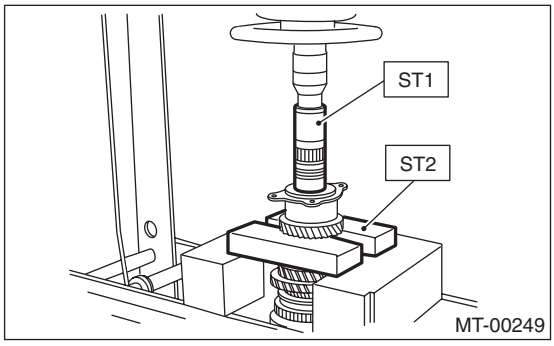

8) Remove the key.
9) Remove the 2nd driven gear, inner baulk ring, synchro cone and outer baulk ring.

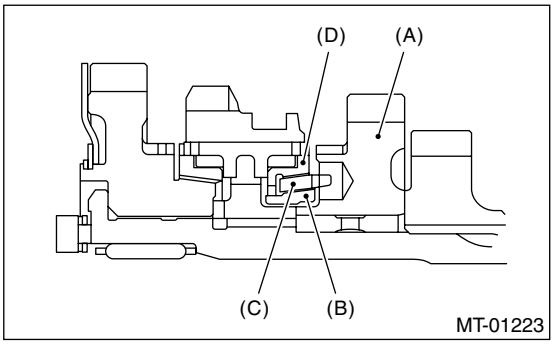

(A) 2nd driven gear
(B) Inner baulk ring
(C) Synchro cone
(D) Outer baulk ring

10) Remove the 1st driven gear, 2nd gear bushing, gear and hub using ST1 and ST2. (Non-turbo model).

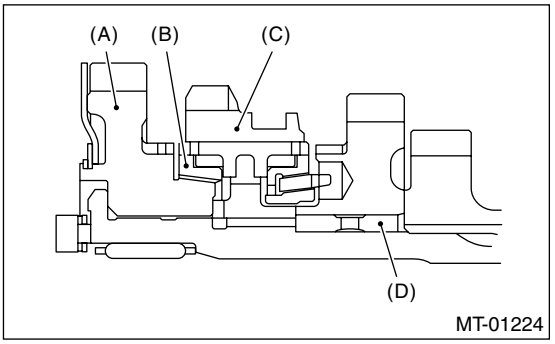

(A) 1st driven gear
(B) Inner baulk ring
(C) Hub
(D) 2nd gear bushing

11) Remove the 1st driven gear, inner baulk ring, synchro cone, outer baulk ring, 2nd gear bushing, gear and hub using ST1 and ST2. (Turbo model)

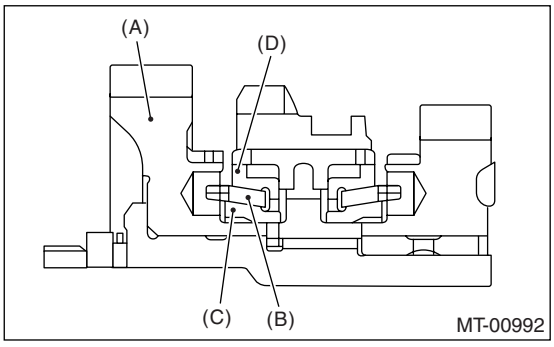

(A) 1st driven gear
(B) Inner baulk ring
(C) Synchro cone
(D) Outer baulk ring

NOTE:
Replace the gear and hub if necessary. Do not disassemble because they must engage at a specified point. If they have to be disassembled, mark the engaging point on the spline beforehand.
ST1 499757002 INSTALLER

ST2 899714110 REMOVER

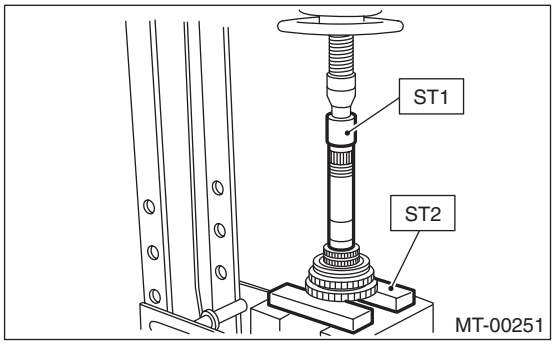

D: ASSEMBLY

1) Install the sleeve and hub assembly by matching alignment marks.

NOTE:
Use the new gear and hub assembly, when replacing the gear or hub.

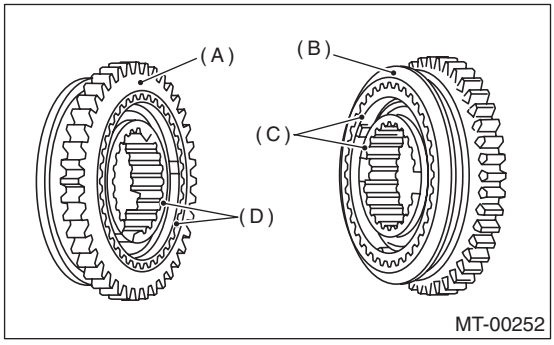

(A) 1st gear side
(B) 2nd gear side
(C) Flush surface
(D) Stepped surface

2) Install the washer to 1st driven gear.
3) Install the 1st driven gear, 1st baulk ring, gear and hub assembly onto driven shaft. (Non-turbo model).

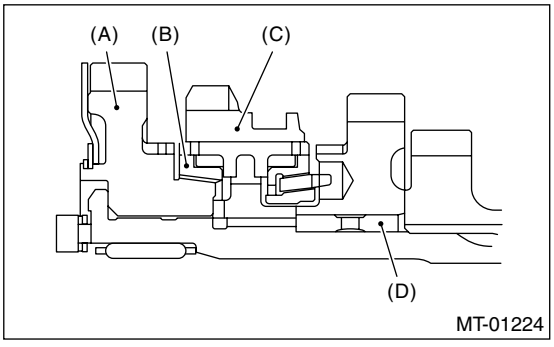

(A) 1st driven gear
(B) 1st baulk ring
(C) Gear and hub ASSY
(D) 2nd gear bushing

4) Install the 1st driven gear, inner baulk ring, synchro cone, outer baulk ring, gear and hub assembly onto driven shaft. (Turbo model)

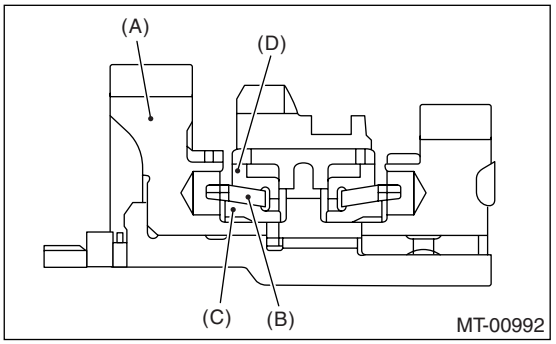

(A) 1st driven gear
(B) Inner baulk ring
(C) Synchro cone
(D) Outer baulk ring

NOTE:
• Take care to install the gear and hub assembly in proper direction.
• Align the baulk ring and gear and hub assembly with key groove.

5) Install the 2nd driven gear bushing onto driven shaft using ST1, ST2 and a press.

NOTE:
• Do not apply pressure in excess of 10 kN (1 ton, 1.1 US ton, 1.0 Imp ton).
• Attach a cloth to the end of driven shaft to prevent damage.
• When press-fitting, align the oil holes of shaft and bushing.

ST1 499277200 INSTALLER
ST2 499587000 INSTALLER

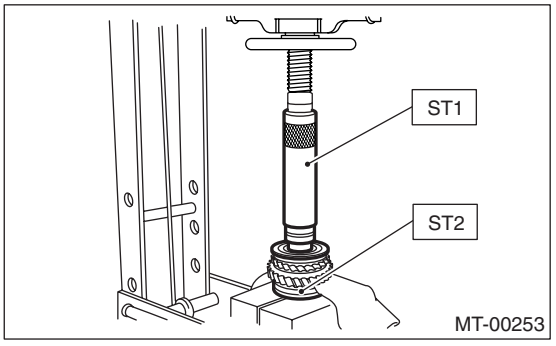

6) Install the 2nd driven gear, inner baulk ring, synchro cone and outer baulk ring, and insert onto driven shaft.

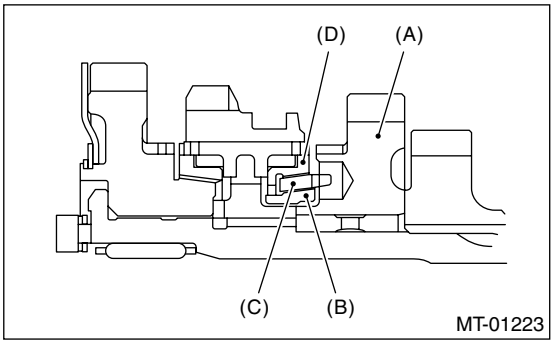

(A) 2nd driven gear
(B) Inner baulk ring
(C) Synchro cone
(D) Outer baulk ring

7) After installing the key on driven shaft, install the 3rd-4th driven gear using ST and press.

NOTE:
• Do not apply pressure in excess of 10 kN (1 ton, 1.1 US ton, 1.0 Imp ton).
• Align the groove in baulk ring with insert.

ST 499277200 INSTALLER

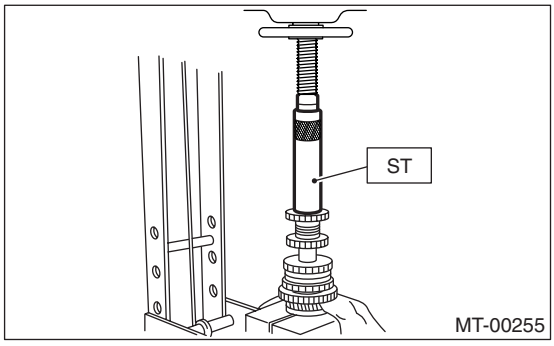

8) Install a set of roller bearings onto the driven shaft using ST and press.

NOTE:
Do not apply pressure in excess of 10 kN (1 ton, 1.1 US ton, 1.0 Imp ton).

ST 499277200 INSTALLER

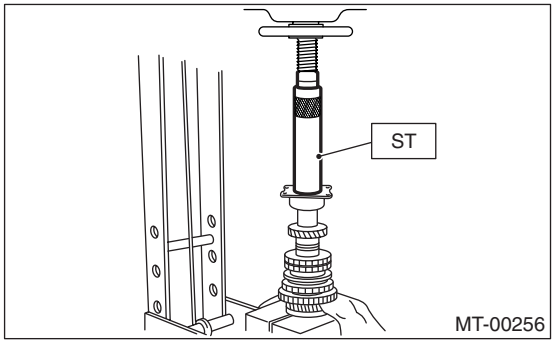

9) Position the woodruff key in groove on the rear of driven shaft. Install the 5th driven gear onto driven shaft using ST and press.

NOTE:
Do not apply pressure in excess of 10 kN (1 ton, 1.1 US ton, 1.0 Imp ton).

ST 499277200 INSTALLER

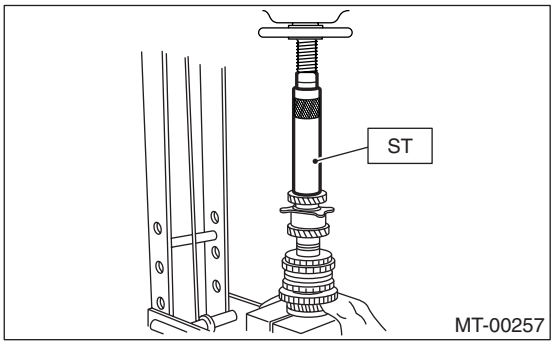

10) Install the lock washer. Install the lock nut and tighten to the specified torque using ST.

ST 499987300 SOCKET WRENCH (50)

Tightening torque:
260 N·m (26.5 kgf-m, 191.7 ft-lb)

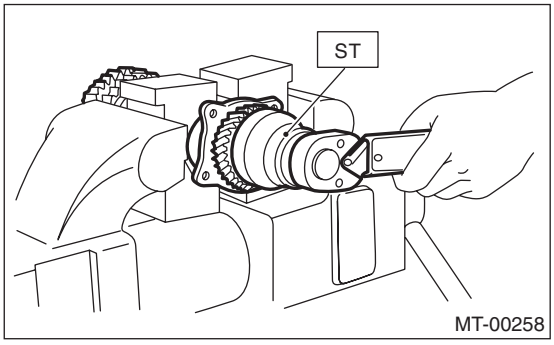

NOTE:
• Stake the caulking of lock nut at two points.
• Using a spring balancer, check that starting torque of roller bearing is 0.1 to 1.5 N (0.01 to 0.15 kgf, 0.02 to 0.33 lbf).

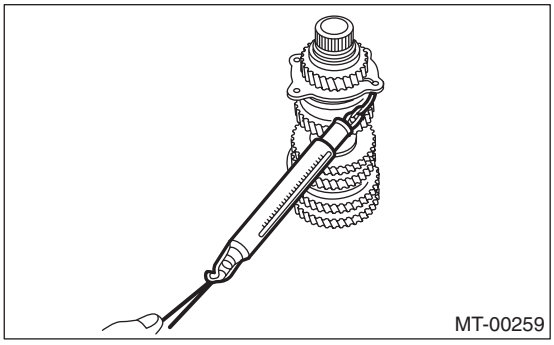

11) Install the roller bearing onto drive pinion.

NOTE:
When installing roller bearing, note its directions (front and rear) because the knock pin hole in outer race is offset.

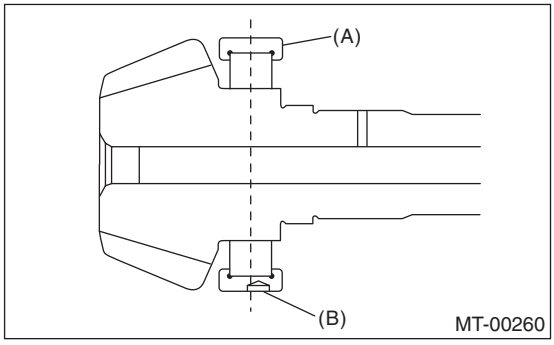

(A) Roller bearing
(B) Knock pin hole

12) Install the washer using ST1, ST2 and a press.

NOTE:
Do not apply pressure in excess of 10 kN (1 ton, 1.1 US ton, 1.0 Imp ton).

ST1 499277100 BUSHING 1-2 INSTALLER
ST2 499277200 INSTALLER

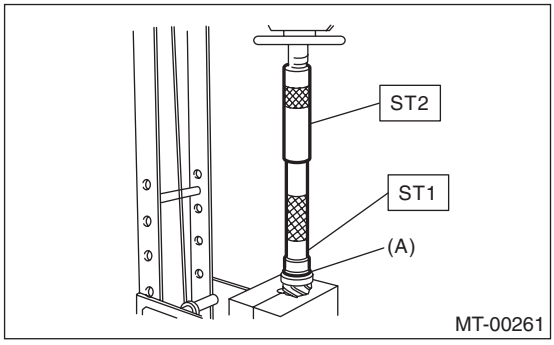

(A) Washer

13) Install the thrust bearing and needle bearing. Install the driven shaft assembly.

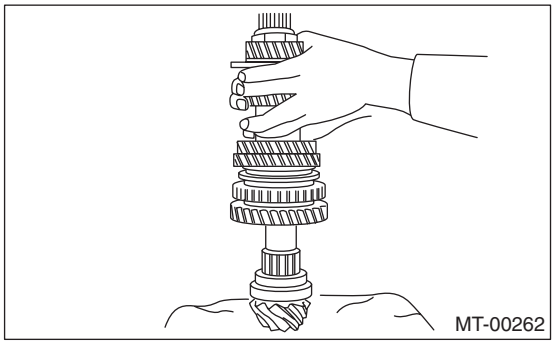

14) Install the drive pinion collar, needle bearing, adjusting washer No. 2, thrust bearing, adjusting washer No. 1 and differential bevel gear sleeve in this order.

NOTE:
Be careful because the spacer must be installed in proper direction.

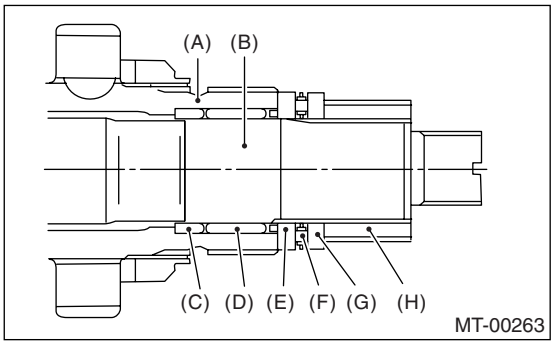

(A) Driven shaft
(B) Drive shaft
(C) Drive pinion collar
(D) Needle bearing (25 × 30 × 20)
(E) Washer No. 2 (25 × 36 × 4)
(F) Thrust bearing (25 × 37.5 × 3)
(G) Washer No. 1 (25 × 36 × t)
(H) Differential bevel gear sleeve

15) Adjust the thrust bearing preload. <Ref. to 5MT-63, THRUST BEARING PRELOAD, ADJUSTMENT, Drive Pinion Shaft Assembly.>

E: INSPECTION

Disassembled parts should be washed with unleaded gasoline first and then inspected carefully.
1) Bearings
Replace the bearing in following cases:
• When the bearing balls, outer races and inner races are broken or rusty.
• When the bearing is worn.
• When the bearings fail to turn smoothly or emit noise in rotation after gear oil lubrication.
• The ball bearing on the rear side of the drive pinion shaft should be checked for smooth rotation before the drive pinion assembly is disassembled. In this case, because a preload is working on the

bearing, its rotation feels like it is slightly dragging unlike other bearings.

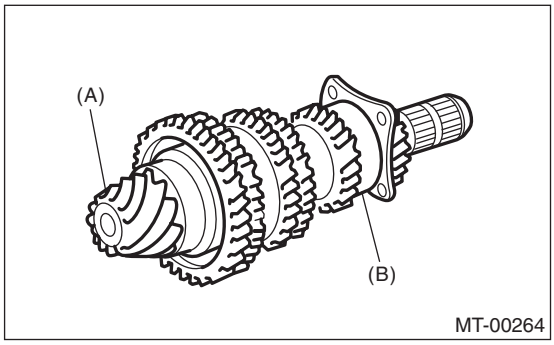

(A) Drive pinion shaft
(B) Ball bearing

• When bearings have other defects:

2) Bushing (each gear)

Replace the bushings in following cases:

• When the sliding surface is damaged or abnormally worn.
• When the inner wall is abnormally worn.

3) Gears

• Replace gears with new ones if their tooth surfaces are broken, damaged or excessively worn.
• Correct or replace if the cone that contacts the baulk ring is rough or damaged.
• Correct or replace if the inner surface or end face is damaged.

4) Baulk ring

Replace the ring in following cases:

• When the inner surface and end face are damaged.
• When the ring inner surface is abnormally or partially worn.
• If the gap between the end faces of ring and the gear splined part is excessively small, check the clearance (A) while pressing the ring against the cone.

Clearance (A):
0.5 — 1.0 mm (0.020 — 0.040 in)

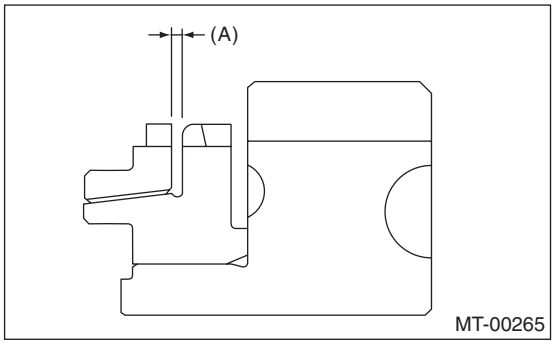

• When the contact surface of synchronizer ring insert is scratched or abnormally worn.

5) Shifting insert key

Replace the insert key if deformed, excessively worn, or defective in any way.

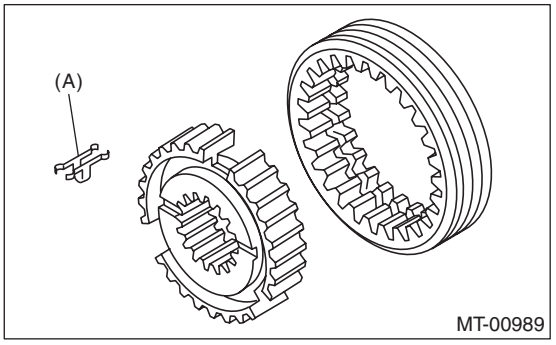

(A) Insert key

6) Oil seal

Replace the oil seal if the lip is deformed, hardened, worn or defective in any way.

7) O-ring

Replace the O-ring if the sealing face is deformed, hardened, damaged, worn, or defective in any way.

F: ADJUSTMENT

1. THRUST BEARING PRELOAD

1) Select a suitable adjusting washer No. 1 to adjust dimension (H) to zero through visual check. Position the washer (18.3 × 30 × 4) and lock washer (18 × 30 × 2) and install the lock nut (18 × 13.5).

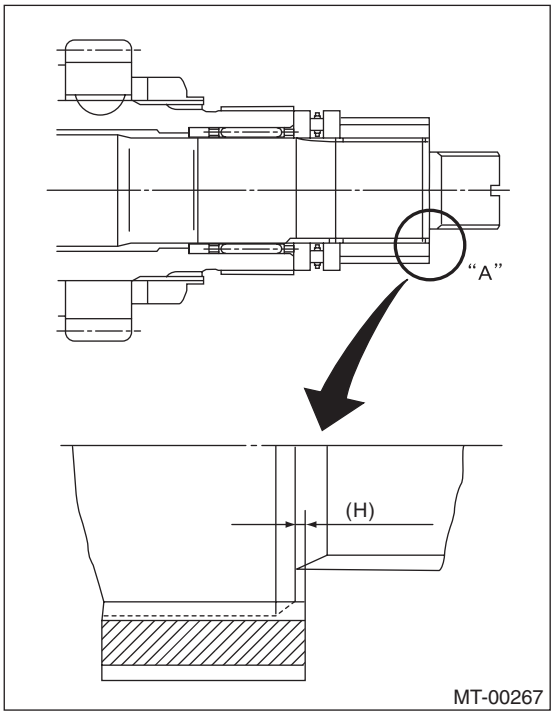

2) Using the ST1, ST2 and ST3, tighten new lock nut to the specified torque.

ST1 899884100 HOLDER
ST2 498427100 STOPPER

ST3 899988608 SOCKET WRENCH (27)

Tightening torque:
120 N·m (12.2 kgf-m, 88.5 ft-lb)

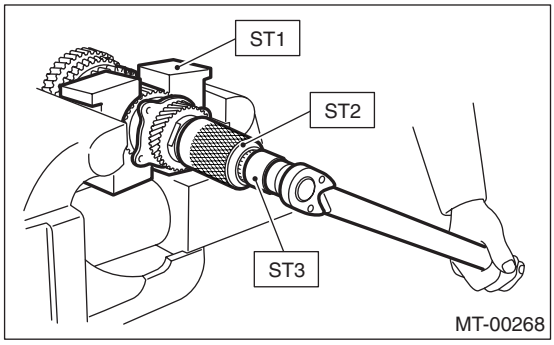

3) After removing the ST2, measure the starting torque using torque driver.
ST1 899884100 HOLDER
ST3 899988608 SOCKET WRENCH (27)

Starting torque:
0.3 — 0.8 N·m (0.03 — 0.08 kgf-m, 0.2 — 0.6 ft-lb)

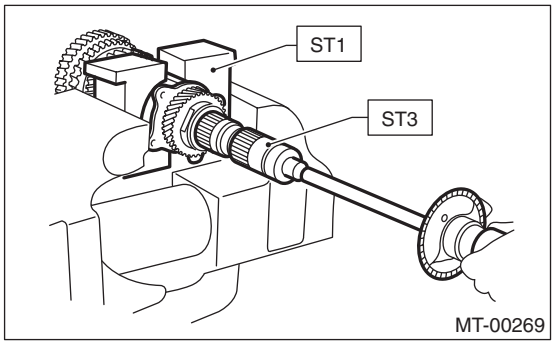

4) If the starting torque is not within the specified limit, select the adjusting washer No. 2 from following table, and recheck the starting torque.

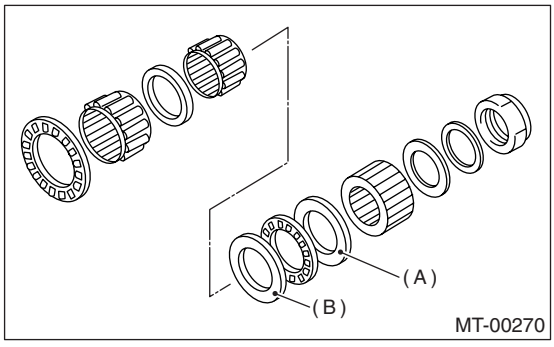

(A) Adjusting washer No. 1
(B) Adjusting washer No. 2

Adjusting washer No. 2	
Part Number	Thickness mm (in)
803025059	3.850 (0.1516)
803025054	4.000 (0.1575)
803025058	4.150 (0.1634)

5) When the specified starting cannot be obtained by the adjusting washer No. 2, select new adjusting washer No. 1 and recheck starting torque.

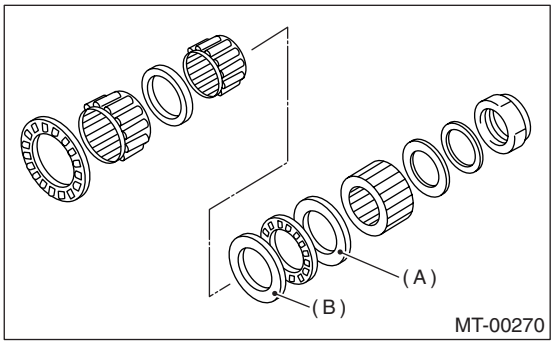

(A) Adjusting washer No. 1
(B) Adjusting washer No. 2

Adjusting washer No. 1	
Part Number	Thickness mm (in)
803025051	3.925 (0.1545)
803025052	3.950 (0.1555)
803025053	3.975 (0.1565)
803025054	4.000 (0.1575)
803025055	4.025 (0.1585)
803025056	4.050 (0.1594)
803025057	4.075 (0.1604)

Starting torque	Dimension H	Washer No. 1
Low	Small	Select thicker one.
High	Large	Select thinner one.

6) Recheck that the starting torque is within specified range, then clinch the lock nut at four positions.

17.Front Differential Assembly

A: REMOVAL

1) Remove the manual transmission assembly from vehicle. <Ref. to 5MT-25, REMOVAL, Manual Transmission Assembly.>
2) Remove the transfer case with extension case assembly. <Ref. to 5MT-37, REMOVAL, Transfer Case and Extension Case Assembly.>
3) Remove the transmission case. <Ref. to 5MT-49, REMOVAL, Transmission Case.>
4) Removes the drive pinion shaft assembly. <Ref. to 5MT-57, REMOVAL, Drive Pinion Shaft Assembly.>
5) Remove the main shaft assembly.
<Ref. to 5MT-52, REMOVAL, Main Shaft Assembly for Single-Range.>
6) Remove the differential assembly.

NOTE:
• Be careful not to confuse right and left roller bearing outer races.
• Be careful not to damage the oil seal of retainer.

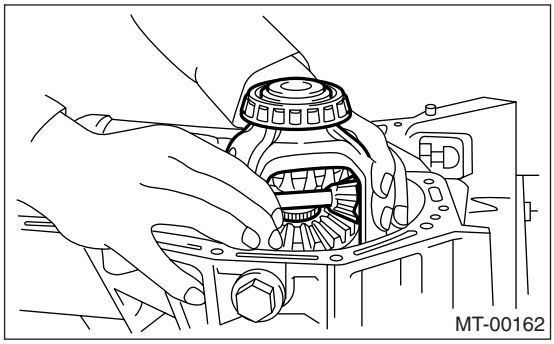

7) Remove the differential side retainers using ST.
ST 499787000 WRENCH ASSY

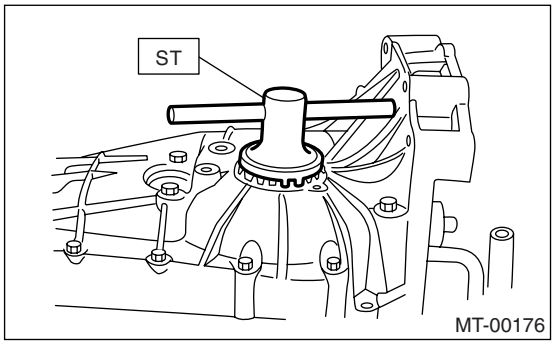

B: INSTALLATION

1) Install the differential side retainers using ST.
ST 499787000 WRENCH ASSY
2) Install the bearing outer race on transmission case.
3) Install the differential assembly.

NOTE:
Be careful not to fold the sealing lip of oil seal.

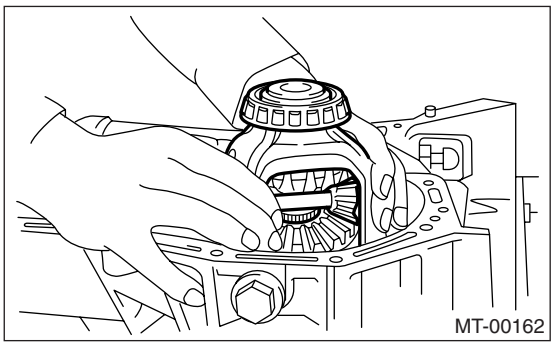

4) Install the main shaft assembly.
<Ref. to 5MT-52, INSTALLATION, Main Shaft Assembly for Single-Range.>
5) Install the drive pinion assembly. <Ref. to 5MT-57, INSTALLATION, Drive Pinion Shaft Assembly.>
6) Install the transmission case. <Ref. to 5MT-49, INSTALLATION, Transmission Case.>
7) Install the transfer case with extension case assembly. <Ref. to 5MT-37, INSTALLATION, Transfer Case and Extension Case Assembly.>
8) Install the manual transmission assembly into vehicle. <Ref. to 5MT-27, INSTALLATION, Manual Transmission Assembly.>

C: DISASSEMBLY

1. DIFFERENTIAL CASE ASSEMBLY

1) Loosen the twelve bolts and remove hypoid driven gear.

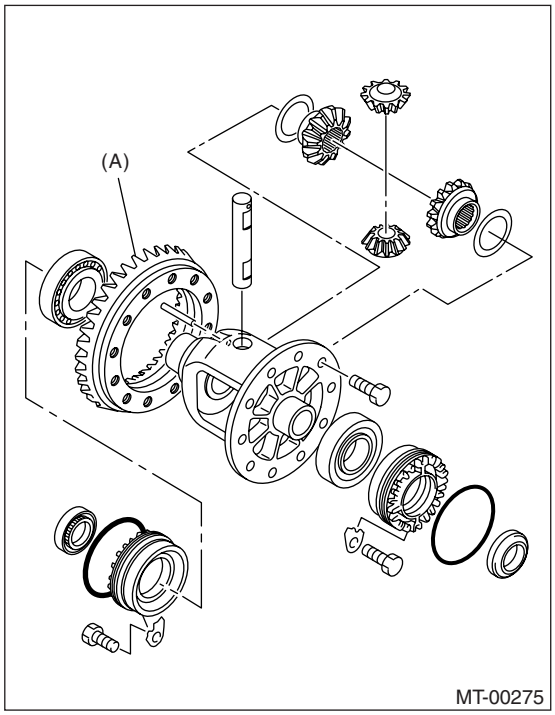

(A) Hypoid driven gear

2) Drive out the straight pin from differential assembly toward hypoid driven gear side.
ST 899904100 REMOVER

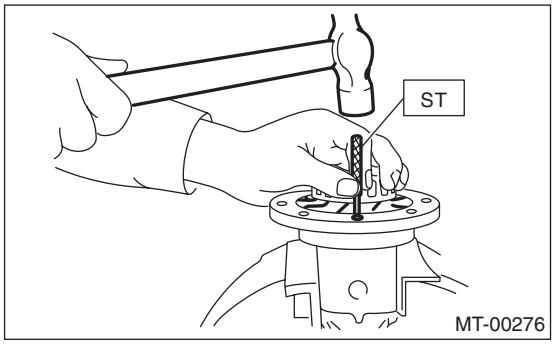

3) Pull out the pinion shaft, and remove the differential bevel pinion, bevel gear and washer.

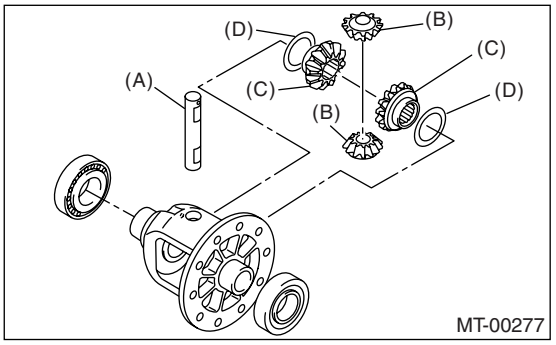

(A) Pinion shaft
(B) Bevel pinion
(C) Bevel gear
(D) Washer

4) Using the ST, remove the roller bearing.
ST 899524100 PULLER SET

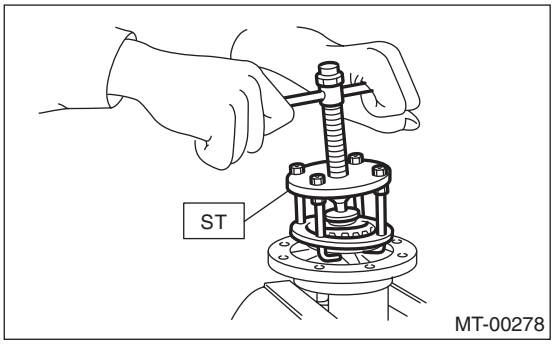

2. SIDE RETAINER

1) Remove the O-ring.

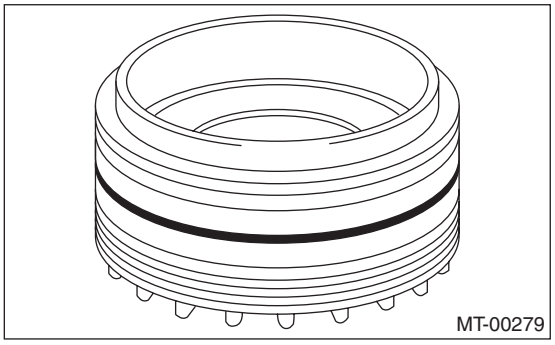

2) Remove the oil seal.

NOTE:
Do not reuse the oil seal. Replace with a new oil seal.

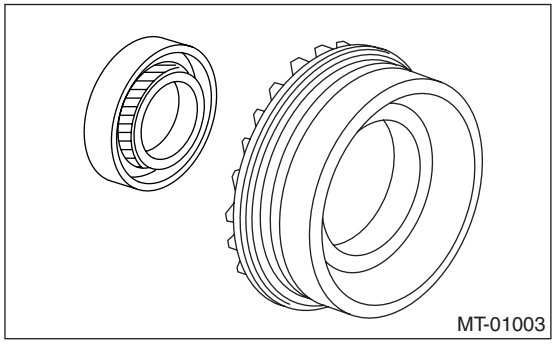

D: ASSEMBLY

1. DIFFERENTIAL CASE ASSEMBLY

1) Install the bevel gear and bevel pinion together with washers, and insert the pinion shaft.

NOTE:
Face the chamfered side of washer toward gear.

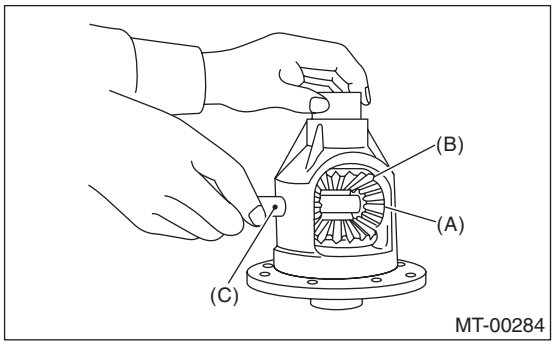

(A) Bevel pinion
(B) Bevel gear
(C) Pinion shaft

2) Measure the backlash between bevel gear and pinion. If it is not within specifications, install a suitable washer to adjust. <Ref. to 5MT-69, ADJUSTMENT, Front Differential Assembly.>

NOTE:
Be sure the pinion gear teeth contacts adjacent gear teeth during measurement.

ST1 498247001 MAGNET BASE
ST2 498247100 DIAL GAUGE

Standard backlash
0.13 — 0.18 mm (0.0051 — 0.0071 in)

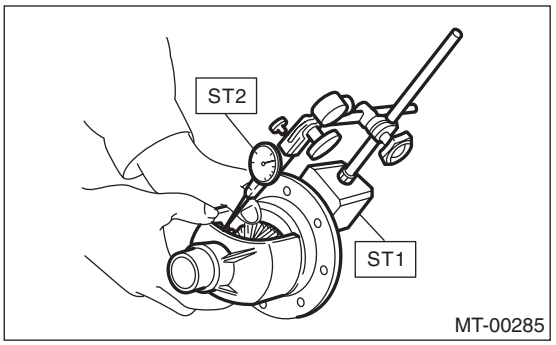

3) Align the pinion shaft and differential case at their holes, and drive the straight pin into holes from the hypoid driven gear side, using ST.

NOTE:
Lock the straight pin after installing.

ST 899904100 REMOVER

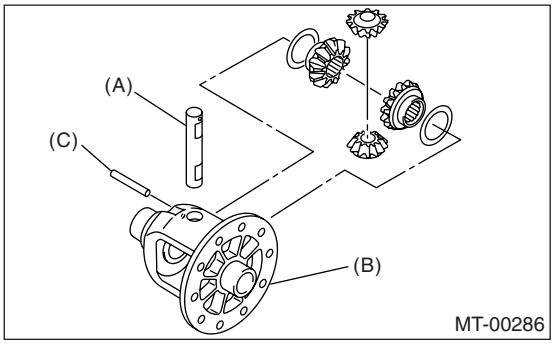

(A) Pinion shaft
(B) Differential case
(C) Straight pin

4) Install the roller bearing to differential case.

NOTE:
• Do not apply pressure in excess of 10 kN (1 ton, 1.1 US ton, 1.0 Imp ton).
• Be careful because the roller bearing outer races are used as a set.

ST1 499277100 BUSHING 1-2 INSTALLER
ST2 398497701 ADAPTER

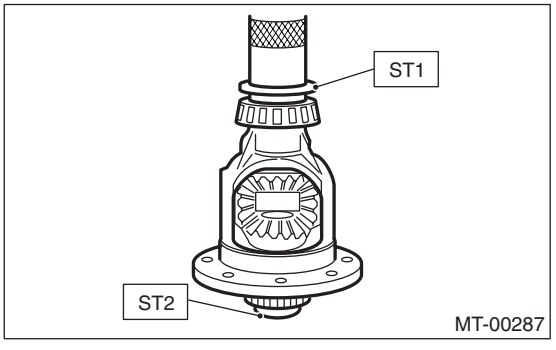

5) Install the hypoid driven gear to differential case using twelve bolts.

Tightening torque:
T: 62 N·m (6.3 kgf-m, 45.6 ft-lb)

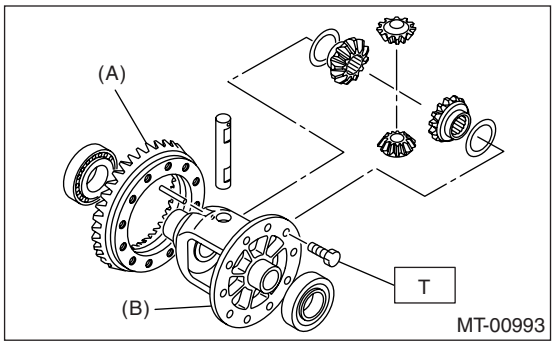

(A) Hypoid driven gear
(B) Differential case

2. SIDE RETAINER

1) Install a new oil seal.
ST 18675AA000 DIFFERENTIAL SIDE OIL SEAL INSTALLER

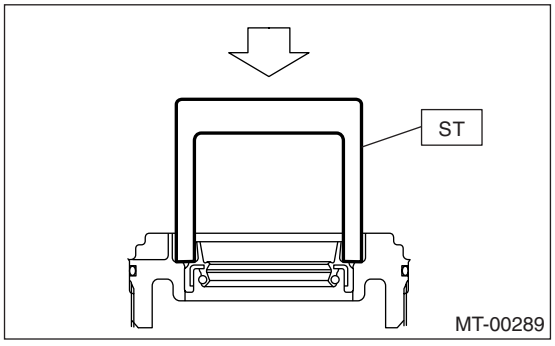

NOTE:
• For press-fitting of oil seal to retainer, make tapping with plastic hammer etc.
• Do not use press.

2) Install a new O-ring.

NOTE:
Do not stretch or damage the O-ring.

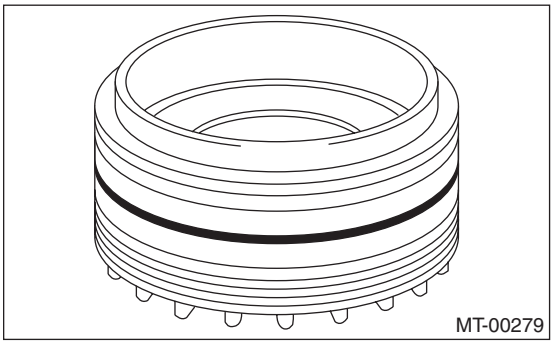

E: INSPECTION

Repair or replace the differential gear in following cases:
• When the hypoid drive gear and drive pinion shaft tooth surface are damaged, excessively worn or seized.
• When the roller bearing on the drive pinion shaft is worn or damaged.
• When there is damage, wear or seizure of the differential bevel pinion, differential bevel gear, washer, pinion shaft and straight pin.
• When the differential case sliding surfaces is worn or damaged.

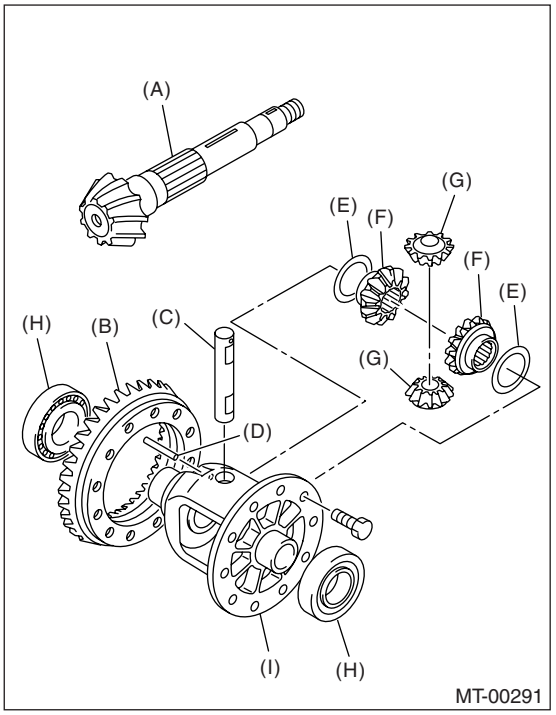

(A) Drive pinion shaft
(B) Hypoid driven gear
(C) Pinion shaft
(D) Straight pin
(E) Washer
(F) Differential bevel gear
(G) Differential bevel pinion
(H) Roller bearing
(I) Differential case

1. BEVEL PINION GEAR BACKLASH

Measure the backlash between bevel gear and pinion. If it is not within specifications, install a suitable washer to adjust.

NOTE:
Be sure the pinion gear teeth contacts adjacent gear teeth during measurement.
ST1 498247001 MAGNET BASE
ST2 498247100 DIAL GAUGE

Standard backlash
0.13 — 0.18 mm (0.0051 — 0.0071 in)

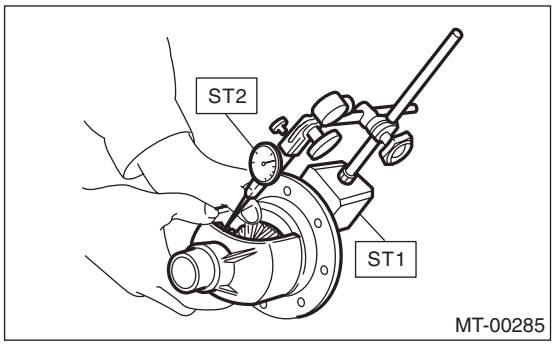

2. HYPOID GEAR BACKLASH

1) Set the ST1, ST2 and ST3. Insert the needle through transmission oil drain plug hole so that the needle comes in contact with the tooth surface on the right corner and check the backlash.
ST1 498247001 MAGNET BASE
ST2 498247100 DIAL GAUGE
ST3 498255400 PLATE
2) Install the SUBARU genuine axle shafts to both side, rotate in the inversion direction so that the gauge contact with the tooth surface and read the dial gauge.
Part No. 38415AA100AXLE SHAFT

Backlash
0.13 — 0.18 mm (0.0051 — 0.0071 in)

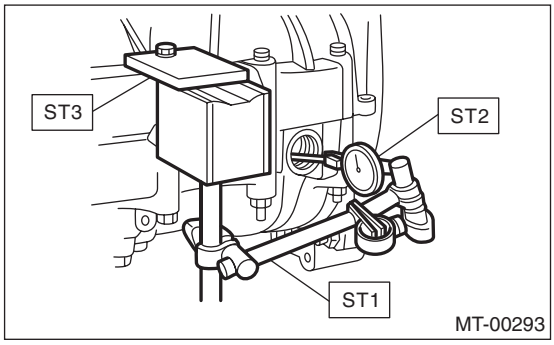

NOTE:
If the backlash is outside the specified range, adjust it by turning the side retainer in right side case.

3. TOOTH CONTACT OF HYPOID GEAR

Check tooth contact of hypoid gear as follows: Apply a uniform thin coat of red lead on both tooth surfaces of 3 or 4 teeth of the hypoid gear. Move the hypoid gear back and forth by turning the transmission main shaft until a definite contact pattern is developed on hypoid gear, and judge whether face contact is correct. If it is inaccurate, make adjustment. <Ref. to 5MT-69, ADJUSTMENT, Front Differential Assembly.>

- Tooth contact is correct.

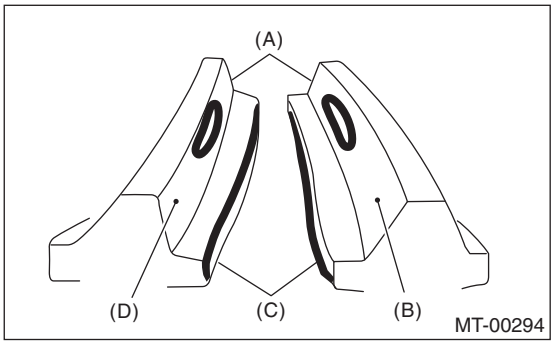

(A) Toe
(B) Coast side
(C) Heel
(D) Drive side

F: ADJUSTMENT

1. BEVEL PINION GEAR BACKLASH

1) Disassemble the front differential. <Ref. to 5MT-65, REMOVAL, Front Differential Assembly.>
2) Select a differential washer from the table and install.

Washer	
Part Number	Thickness mm (in)
803038021	0.925 — 0.950 (0.0364 — 0.0374)
803038022	0.975 — 1.000 (0.0384 — 0.0394)
803038023	1.025 — 1.050 (0.0404 — 0.0413)

3) Adjust until the standard value is obtained.

Backlash:
Standard
0.13 — 0.18 mm (0.0051 — 0.0071 in)

2. HYPOID GEAR BACKLASH

Adjust the backlash by turning holder in the right side case.
ST 499787000 WRENCH ASSY

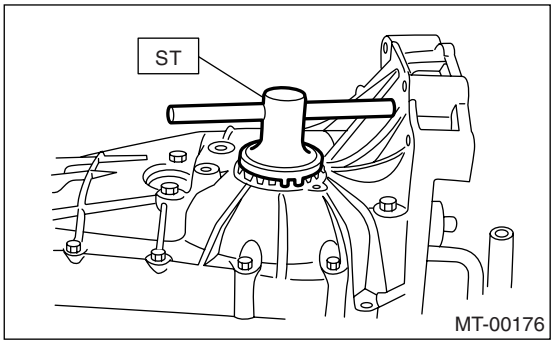

NOTE:
Each time the side retainer rotates one notch, backlash changes by 0.05 mm (0.020 in).

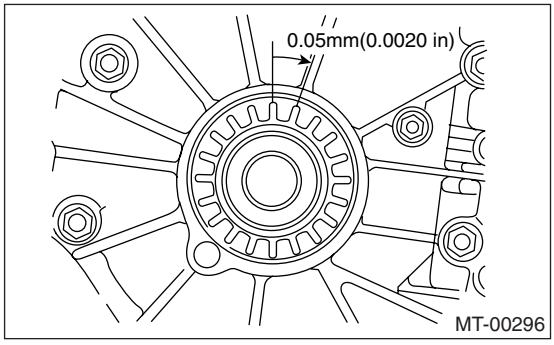

3. TOOTH CONTACT OF HYPOID GEAR

1) Adjust until correct teeth contact is obtained.
2) Check tooth contact as follows.
• Tooth contact
Checking item: Tooth contact pattern is slightly shifted to toe side under no-load rotation. [When loaded, contact pattern moves toward heel.]

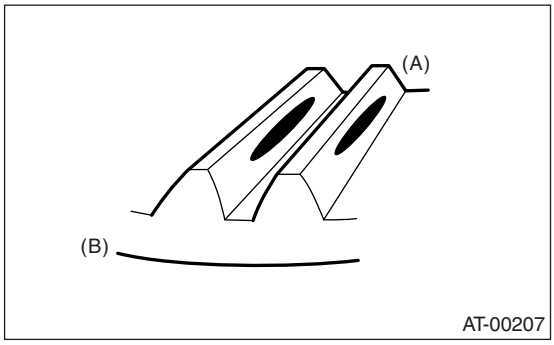

(A) Toe side
(B) Heel side

• Face contact
Checking item: Backlash is too large.
Contact pattern

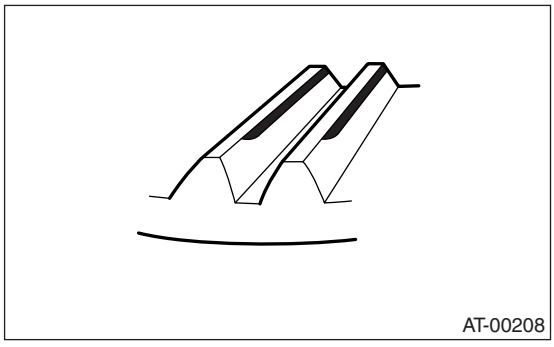

Corrective action: Reduce thickness of pinion height adjusting washer in order to bring drive pinion closer to driven gear.

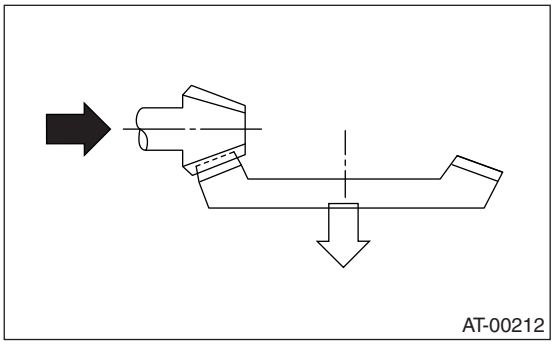

• Flank contact
Checking item: Backlash is too small.
Contact pattern

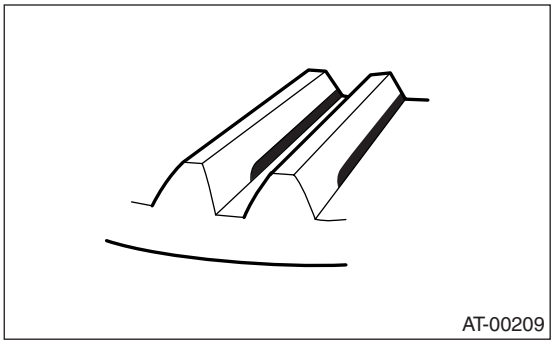

Corrective action: Increase thickness of pinion height adjusting washer in order to bring drive pinion away from driven gear.

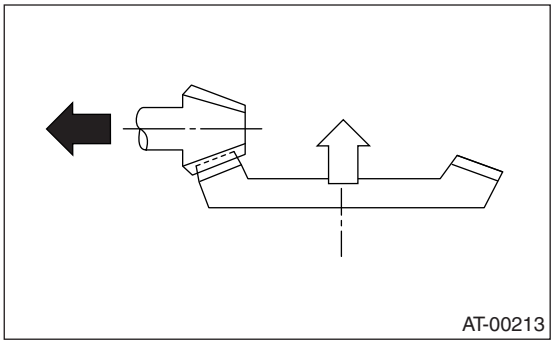

• Toe contact (inside end contact)
Checking item: Contact area is small.
Contact pattern

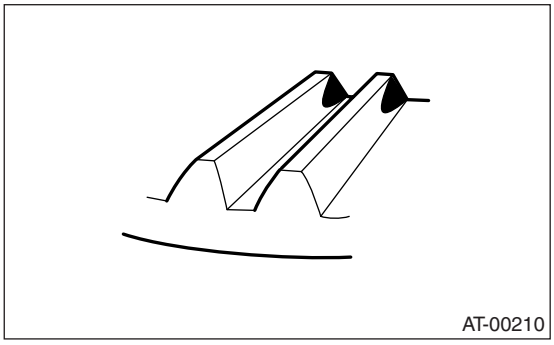

Corrective action: Increase thickness of pinion height adjusting washer in order to bring drive pinion closer to driven gear.

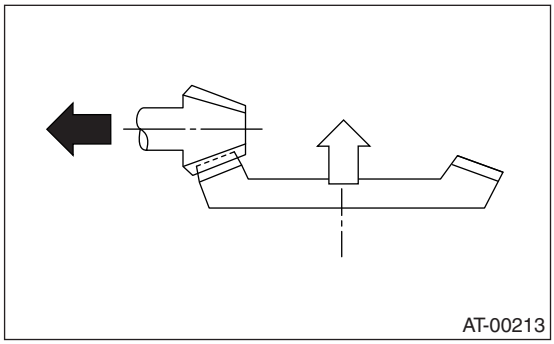

- Heel contact (outside end contact)

Checking item: Contact area is small.

Contact pattern

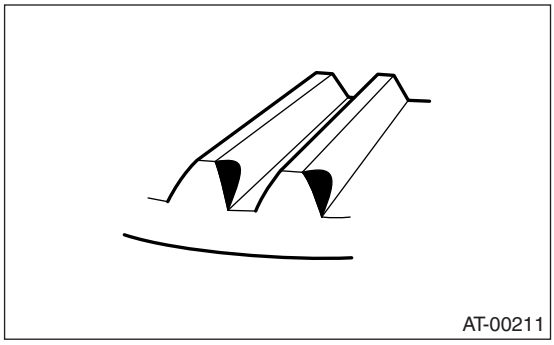

Corrective action: Reduce thickness of pinion height adjusting washer in order to bring drive pinion away from driven gear.

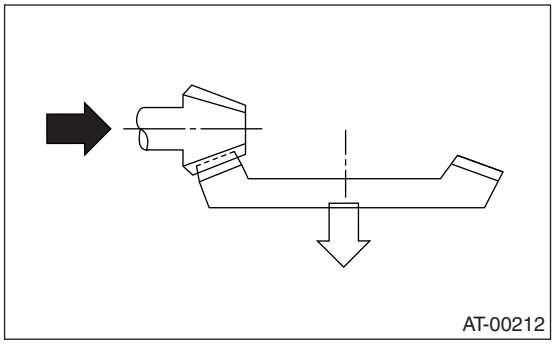

18.Reverse Idler Gear

A: REMOVAL

1) Remove the manual transmission assembly from vehicle. <Ref. to 5MT-25, REMOVAL, Manual Transmission Assembly.>
2) Remove the back-up light switch and neutral position switch. <Ref. to 5MT-34, REMOVAL, Switches and Harness.>
3) Remove the transfer case with extension case assembly. <Ref. to 5MT-37, REMOVAL, Transfer Case and Extension Case Assembly.>
4) Remove the transmission case. <Ref. to 5MT-57, REMOVAL, Drive Pinion Shaft Assembly.>
5) Remove the drive pinion shaft assembly. <Ref. to 5MT-57, REMOVAL, Drive Pinion Shaft Assembly.>
6) Remove the main shaft assembly.
<Ref. to 5MT-52, REMOVAL, Main Shaft Assembly for Single-Range.>
7) Remove the differential assembly. <Ref. to 5MT-65, REMOVAL, Front Differential Assembly.>
8) Remove the shifter forks and rods. <Ref. to 5MT-74, REMOVAL, Shifter Fork and Rod.>
9) Pull out the straight pin, and remove the idler gear shaft, reverse idler gear and washer.

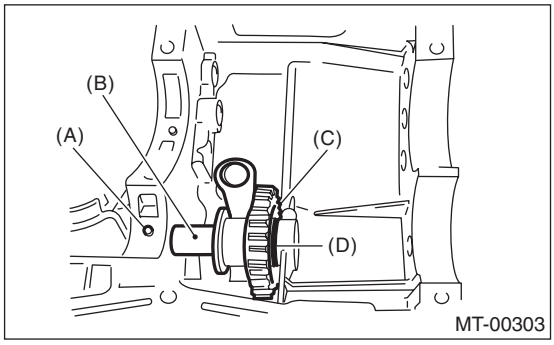

(A) Straight pin
(B) Reverse idler gear shaft
(C) Reverse idler gear
(D) Washer

10) Remove the reverse shifter lever.

B: INSTALLATION

1) Install the reverse shifter lever, reverse idler gear and reverse idler gear shaft, and secure them with straight pin.

NOTE:
Be sure to install the reverse idler shaft from rear side.

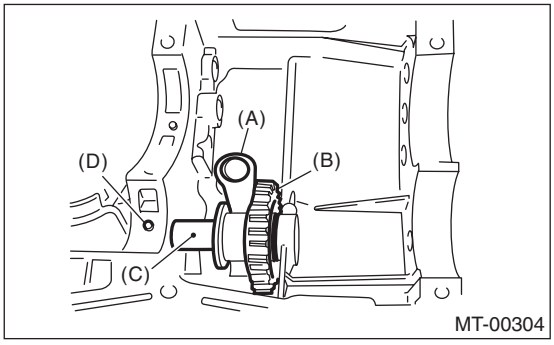

(A) Reverse shifter lever
(B) Reverse idler gear
(C) Reverse idler gear shaft
(D) Straight pin

2) Inspect and adjust the clearance between reverse idler gear and transmission case wall. <Ref. to 5MT-72, INSTALLATION, Reverse Idler Gear.> <Ref. to 5MT-73, ADJUSTMENT, Reverse Idler Gear.>
3) Install the shifter forks and rods. <Ref. to 5MT-74, INSTALLATION, Shifter Fork and Rod.>
4) Install the differential assembly. <Ref. to 5MT-65, INSTALLATION, Front Differential Assembly.>
5) Install the main shaft assembly.
<Ref. to 5MT-52, INSTALLATION, Main Shaft Assembly for Single-Range.>
6) Install the drive pinion shaft assembly. <Ref. to 5MT-57, INSTALLATION, Drive Pinion Shaft Assembly.>
7) Install the transmission case. <Ref. to 5MT-49, INSTALLATION, Transmission Case.>
8) Install the transfer case with extension case assembly. <Ref. to 5MT-37, INSTALLATION, Transfer Case and Extension Case Assembly.>
9) Install the back-up light switch and neutral position switch. <Ref. to 5MT-34, INSTALLATION, Switches and Harness.>
10) Install the manual transmission assembly into vehicle. <Ref. to 5MT-27, INSTALLATION, Manual Transmission Assembly.>

C: INSPECTION

1) Move the reverse shifter rod toward reverse side. Inspect the clearance between reverse idler gear and transmission case wall.
If out of specification, select an appropriate reverse shifter lever and adjust.

Clearance A:
6.0 — 7.5 mm (0.236 — 0.295 in)

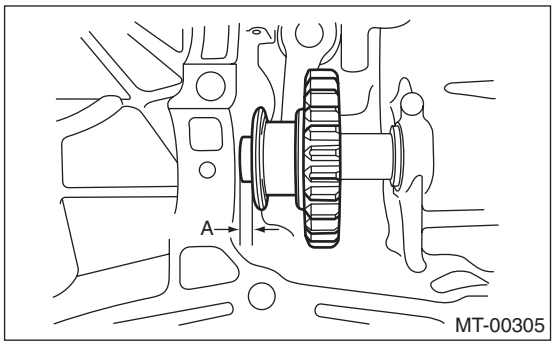

2) After installing a suitable reverse shifter lever, shift into neutral. Inspect the clearance between reverse idler gear and transmission case wall.
If out of specification, select an appropriate washer and adjust.

Clearance:
0 — 0.5 mm (0 — 0.020 in)

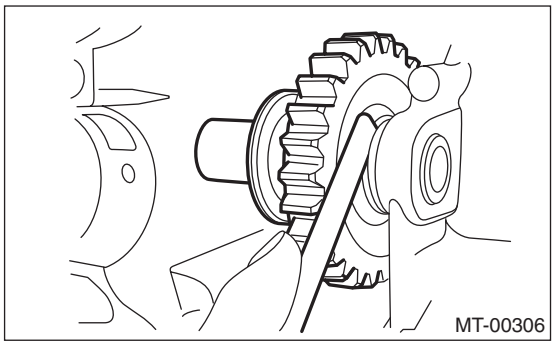

3) Check the reverse idler gear and shaft for damage. Replace if it is damaged.

D: ADJUSTMENT

1) Select an appropriate reverse shifter lever from the table below, and adjust until the gap between reverse idler gear and transmission case wall is within specification.

Clearance A:
6.0 — 7.5 mm (0.236 — 0.295 in)

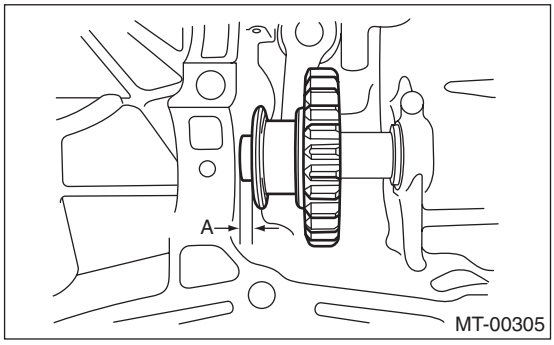

Reverse shifter lever		
Part Number	Marking	Remarks
32820AA070	7	Further from case wall
32820AA080	8	Standard
32820AA090	9	Closer to case wall

2) Select an appropriate washer from the table below, and adjust until the gap between the reverse idler gear and transmission case wall is within specification.

Clearance:
0 — 0.5 mm (0 — 0.020 in)

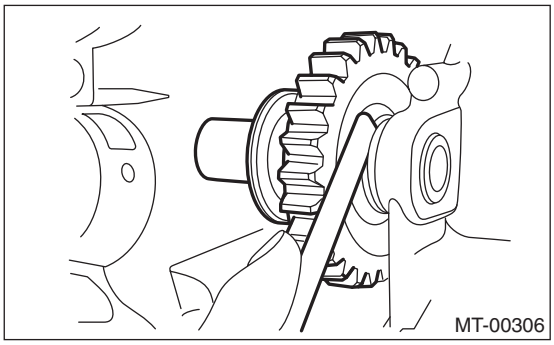

Washer	
Part Number	Thickness mm (in)
803020151	0.4 (0.016)
803020152	1.1 (0.043)
803020153	1.5 (0.059)
803020154	1.9 (0.075)
803020155	2.3 (0.091)

19.Shifter Fork and Rod

A: REMOVAL

1) Remove the manual transmission assembly from vehicle. <Ref. to 5MT-25, REMOVAL, Manual Transmission Assembly.>
2) Remove the back-up light switch and neutral position switch. <Ref. to 5MT-34, REMOVAL, Switches and Harness.>
3) Remove the transfer case with extension case assembly. <Ref. to 5MT-37, REMOVAL, Transfer Case and Extension Case Assembly.>
4) Remove transmission case. <Ref. to 5MT-49, REMOVAL, Transmission Case.>
5) Removes the drive pinion shaft assembly. <Ref. to 5MT-57, REMOVAL, Drive Pinion Shaft Assembly.>
6) Remove the main shaft assembly.
<Ref. to 5MT-52, REMOVAL, Main Shaft Assembly for Single-Range.>
7) Remove the differential assembly. <Ref. to 5MT-65, REMOVAL, Front Differential Assembly.>
8) Drive out the straight pin tapping by ST, and pull out the 5th shifter fork.
ST 398791700 STRAIGHT PIN REMOVER

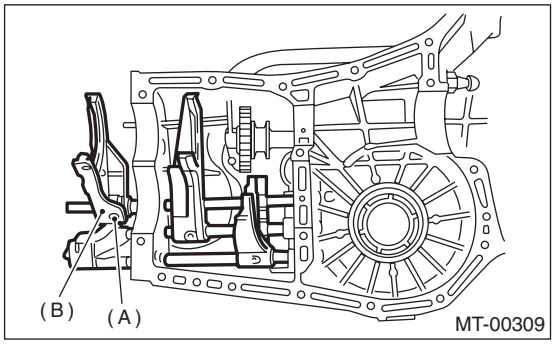

(A) Straight pin
(B) 5th shifter fork

9) Remove the plugs, springs and checking balls.
10) Drive out the straight pin tapping by ST, and pull out the 3-4 fork rod and shifter fork.

NOTE:
When removing a rod, keep other rods in neutral. Also, when pulling out the straight pin, remove it toward the inside of case so that it does not hit against the case.

ST 398791700 STRAIGHT PIN REMOVER

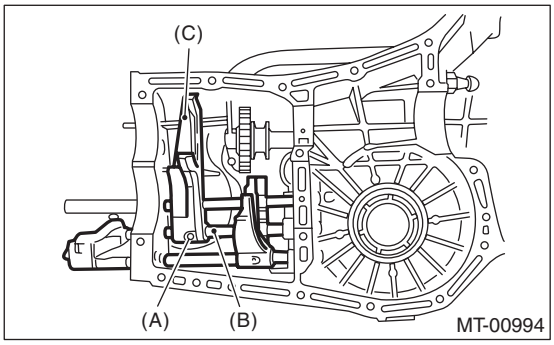

(A) Straight pin
(B) 3-4 fork rod
(C) Shifter fork

11) Drive out the straight pin tapping by ST, and pull out the 1-2 fork rod and shifter fork.
ST 398791700 STRAIGHT PIN REMOVER
12) Remove the outer snap ring, and pull out reverse fork rod from reverse shifter rod arm. Then take out the ball, spring and interlock plunger from rod.
And then remove the rod.

NOTE:
When pulling out reverse shifter rod arm, be careful not to let ball pop out of arm.

13) Remove the reverse shifter lever.

B: INSTALLATION

1) Install the reverse arm fork spring, ball and interlock plunger to reverse fork rod arm. Insert the reverse fork rod into the hole in reverse fork rod arm, and hold it with outer snap ring using ST.

NOTE:
Apply a coat of grease to plunger to prevent it from falling.

ST 399411700 ACCENT BALL INSTALLER
2) Position the ball, spring and new gasket in the reverse shifter rod hole on the left side of transmission case, and tighten the checking ball plug.
3) Install the 1-2 fork rod into 1-2 shifter fork through the hole on the rear of transmission case.
4) Align the holes in rod and fork, and drive new straight pin into these holes using ST.

NOTE:
- Set other rods to neutral.
- Make sure the interlock plunger is on the 3-4 fork rod side.

ST 398791700 STRAIGHT PIN REMOVER
5) Install the interlock plunger onto 3-4 fork rod.

NOTE:
Apply a coat of grease to plunger to prevent it from falling.

6) Install the 3-4 fork rod into 3-4 shifter fork through the hole on the rear of transmission case.
7) Align the holes in rod and fork, and drive new straight pin into these holes.

NOTE:
- Set the reverse fork rod to neutral.
- Make sure the interlock plunger (before installation) is on the reverse fork rod side.

ST 398791700 STRAIGHT PIN REMOVER
8) Install the 5th shifter fork onto the rear of reverse fork rod. Align the holes in the two parts and drive new straight pin into the specified place.
ST 398791700 STRAIGHT PIN REMOVER

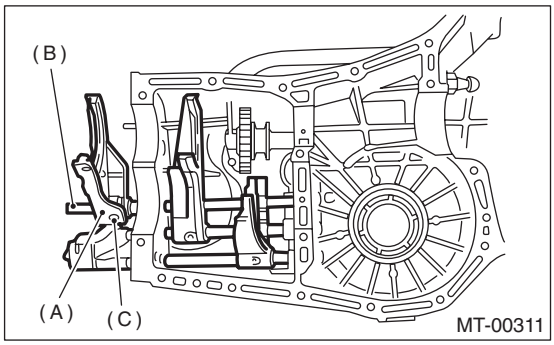

(A) 5th shifter fork
(B) Reverse fork rod
(C) Straight pin

9) Position the balls, checking ball springs and new gaskets into 3-4 and 1-2 rod holes, and install plugs.

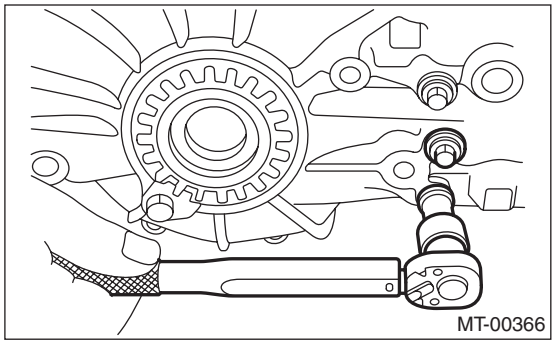

10) Install the differential assembly. <Ref. to 5MT-65, INSTALLATION, Front Differential Assembly.>
11) Install the main shaft assembly.
<Ref. to 5MT-52, INSTALLATION, Main Shaft Assembly for Single-Range.>
12) Install the drive pinion shaft assembly. <Ref. to 5MT-57, INSTALLATION, Drive Pinion Shaft Assembly.>
13) Install the transmission case. <Ref. to 5MT-49, INSTALLATION, Transmission Case.>
14) Install the transfer case with extension case assembly. <Ref. to 5MT-37, INSTALLATION, Transfer Case and Extension Case Assembly.>
15) Install the back-up light switch and neutral position switch. <Ref. to 5MT-34, INSTALLATION, Switches and Harness.>
16) Install the manual transmission assembly into vehicle. <Ref. to 5MT-27, INSTALLATION, Manual Transmission Assembly.>

C: INSPECTION

1) Inspect the fork and rod for damage. Replace if it is damaged.
2) Gearshift mechanism
Repair or replace the gearshift mechanism if excessively worn, bent, or defective in any way.
3) Inspect the clearance between 1st, 2nd driven gear and reverse driven gear. If any clearance is not within specifications, replace the shifter fork as required.

Clearance (a) and (b):
9.5 mm (0.374 in)

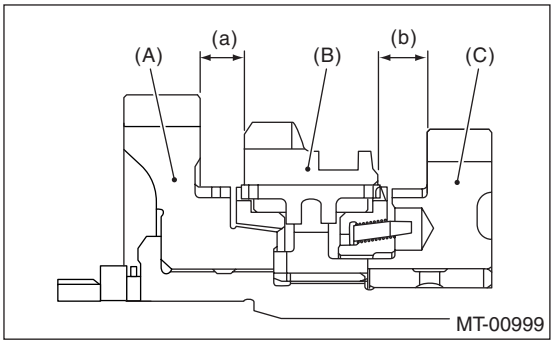

(A) 1st driven gear
(B) Reverse driven gear
(C) 2nd driven gear

1st-2nd shifter fork		
Part Number	Marking	Remarks
32804AA060	1	Approach to 1st gear by 0.2 mm (0.008 in).
32804AA070	—	Standard
32804AA080	3	Become distant from 2nd gear by 0.2 mm (0.008 in).

4) Inspect the clearance between 3rd, 4th drive gear and coupling sleeve. If any clearance is not within specifications, replace the shifter fork as required.

Clearance (a) and (b):
7.3 mm (0.287 in)

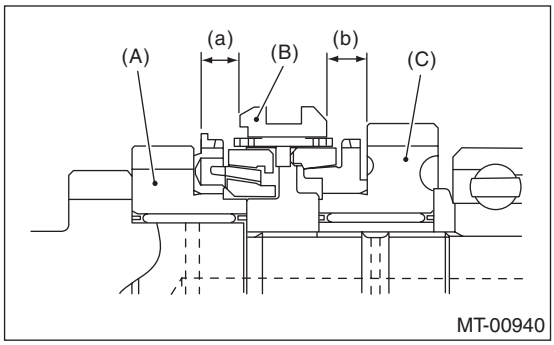

(A) 3rd drive gear
(B) Coupling sleeve
(C) 4th drive gear

3rd-4th shifter fork		
Part Number	Marking	Remarks
32810AA061	1	Approach to 4th gear by 0.2 mm (0.008 in).
32810AA071	—	Standard
32810AA101	3	Become distant from 3rd gear by 0.2 mm (0.008 in).

5) Inspect the clearance between 5th drive gear and coupling sleeve. If any clearance is not within specifications, replace the shifter fork as required.

Clearance (a):
9.3 mm (0.366 in)

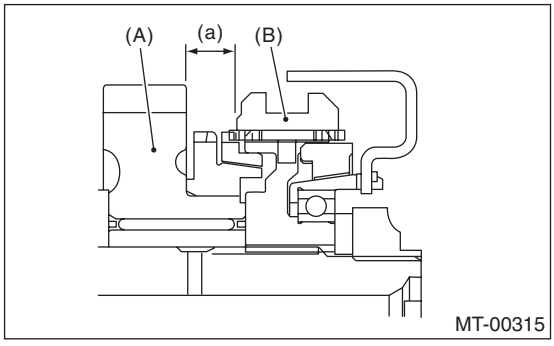

(A) 5th drive gear
(B) Coupling sleeve

5th shifter fork (Non-turbo model)		
Part No.	Mark	Remarks
32812AA201	7	Approach to 5th gear by 0.2 mm (0.008 in)
32812AA211	No mark	Standard
32812AA221	9	Become distant from 5th gear by 0.2 mm (0.008 in)

5th shifter fork (Turbo model)		
Part No.	Mark	Remarks
32812AA231	7	Approach to 5th gear by 0.2 mm (0.008 in)
32812AA241	No mark	Standard
32812AA251	9	Become distant from 5th gear by 0.2 mm (0.008 in)

6) Inspect the rod end clearances (A) and (B). If any clearance is not within specifications, replace the rod or fork as required.

Clearance (A):
3rd-4th — 5th:
0.5 — 1.3 mm (0.020 — 0.051 in)

Clearance (B):
1st-2nd — 3rd-4th
0.4 — 1.4 mm (0.016 — 0.055 in)

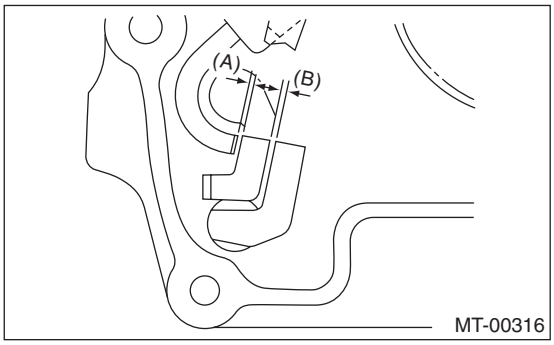

20.General Diagnostic Table

A: INSPECTION

1. MANUAL TRANSMISSION

Symptom	Possible cause	Corrective action
1. Gears are difficult to intermesh. NOTE: The cause for difficulty in shifting gears can be classified into two kinds: one is defective gear shift system and the other is defective transmission. However, if the operation is heavy and engagement of the gears is difficult, defective clutch disengagement may also be responsible. Check whether the clutch is correctly functioning, before checking the gear shift system and transmission.	(a) Worn, damaged or burred chamfer of internal spline of sleeve and reverse driven gear	Replace.
	(b) Worn, damaged or burred chamfer of spline of gears	Replace.
	(c) Worn or scratched bushings	Replace.
	(d) Incorrect contact between synchronizer ring and gear cone, or wear	Rectify or replace.
2. Gear slip-out • Gear slips out when coasting on rough road. • Gear slips out during acceleration.	(a) Defective pitching stopper adjustment	Adjust.
	(b) Loose engine mounting bolts	Tighten or replace.
	(c) Worn fork shifter, broken shifter fork rail spring	Replace.
	(d) Worn or damaged ball bearing	Replace.
	(e) Excessive clearance between splines of synchronizer hub and synchronizer sleeve	Replace.
	(f) Worn tooth step of synchronizer hub (caused by slip-out of 3rd gear)	Replace.
	(g) Worn 1st driven gear and driven shaft	Replace.
	(h) Worn 2nd driven gear and bushing	Replace.
	(i) Worn 3rd drive gear and needle bearing	Replace.
	(j) Worn 3rd drive gear and needle bearing	Replace.
	(k) Worn reverse idler gear and bushing	Replace.
3. Noise emit from transmission. NOTE: If a noise is heard when the vehicle is parked with its engine idling and if a noise ceases when the clutch is disengaged, it may be considered that the noise comes from the transmission.	(a) Insufficient or improper lubrication	Lubricate with specified oil or replace.
	(b) Worn or damaged gears and bearings NOTE: If the trouble is only wear of the tooth surfaces, merely a high roaring noise will occur at high speeds, but if any part is broken, rhythmical knocking sound will be heard even at low speeds.	Replace.

2. DIFFERENTIAL

Symptom	Possible cause	Corrective action
1. Broken differential (case, gear, bearing, etc.) NOTE: Noise will be developed and finally it will become impossible to continue to run due to broken pieces obstructing the gear revolution.	(a) Insufficient or improper oil	Disassemble differential and replace broken components. At the same time check other components for any trouble, and replace if necessary.
	(b) Use of vehicle under severe conditions such as excessive load and improper use of clutch	Readjust bearing preload and backlash and face contact of gears.
	(c) Improper adjustment of taper roller bearing	Adjustment.
	(d) Improper adjustment of drive pinion and hypoid driven gear	Adjustment.
	(e) Excessive backlash due to worn differential side gear, washer or differential pinion under severe operating conditions of the vehicle.	Add recommended oil to the specified level. Do not use vehicle under severe operating conditions.
	(f) Loose hypoid driven gear tightening bolts	Tighten.
2. Differential and hypoid gear noises Troubles of the differential and hypoid gear always appear as noise problems. Therefore noise is the first indication of trouble. However noises from the engine, muffler, tire, exhaust gas, bearing, body, etc. are easily mistaken for the differential noise. Pay special attention to the hypoid gear noise because it is easily confused with other gear noises. There are the following four kinds of noises. • Gear noise when driving: If noise increases as the vehicle speed increases it may be due to insufficient gear oil, incorrect gear engagement, damaged gears, etc. • Gear noise when coasting: Damaged gears due to maladjusted bearings and incorrect shim adjustment. • Bearing noise when driving or coasting: Cracked, broken or rusty bearings • Noise mainly when turning: Noise occurs form differential side gear, differential pinion or differential pinion shaft, etc.	(a) Insufficient oil	Lubricate.
	(b) Improper adjustment of hypoid driven gear and drive pinion	Check tooth contact.
	(c) Worn teeth of hypoid driven gear and drive pinion	Replace as a set. Readjust bearing preload.
	(d) Loose roller bearing	Readjust hypoid driven gear to drive pinion backlash and check tooth contact.
	(e) Distorted hypoid driven gear or differential case	Replace.
	(f) Worn washer and differential pinion shaft	Replace.

CLUTCH SYSTEM

CL

		Page
1.	General Description	2
2.	Clutch Disc and Cover	9
3.	Flywheel	12
4.	Release Bearing and Lever	13
5.	Operating Cylinder	15
6.	Master Cylinder	16
7.	Clutch Pipe and Hose	18
8.	Clutch Fluid	19
9.	Clutch Fluid Air Bleeding	20
10.	Clutch Pedal	21
11.	Clutch Switch	25
12.	General Diagnostic Table	27

1. General Description

A: SPECIFICATION

Model			2.5 L NON-TURBO	2.5 L TURBO
Clutch cover	Diaphragm set load N (kgf, lbf)		5688 (580, 1,279)	8150 (831, 1,832)
Clutch disc	Facing material		Woven	
	Outer diameter × Inner diameter × Thickness mm (in)		225 × 150 × 3.5 (8.86 × 5.91 × 0.14)	240 × 155 × 3.2 (9.45 × 6.10 × 0.13)
	Spline outer diameter mm (in)		25.2 (0.992)	
	Depth of rivet head mm (in)	Standard	1.3 — 1.9 (0.051 — 0.075)	
		Limit of sinking	0.3 (0.012)	
	Limit for deflection mm (in)		0.7 (0.027) at R = 110 (4.33)	1.0 (0.039) at R = 110 (4.33)
Clutch release lever ratio			1.6	
Release bearing			Grease-packed self-aligning	
Clutch pedal	Full stroke mm (in)		130 — 135 (5.12 — 5.31)	
	Free play mm (in)		4 — 13 (0.16 — 0.51)	
Flywheel	Type		Conventional	Dual mass

B: COMPONENT

1. CLUTCH ASSEMBLY

- Non-turbo model

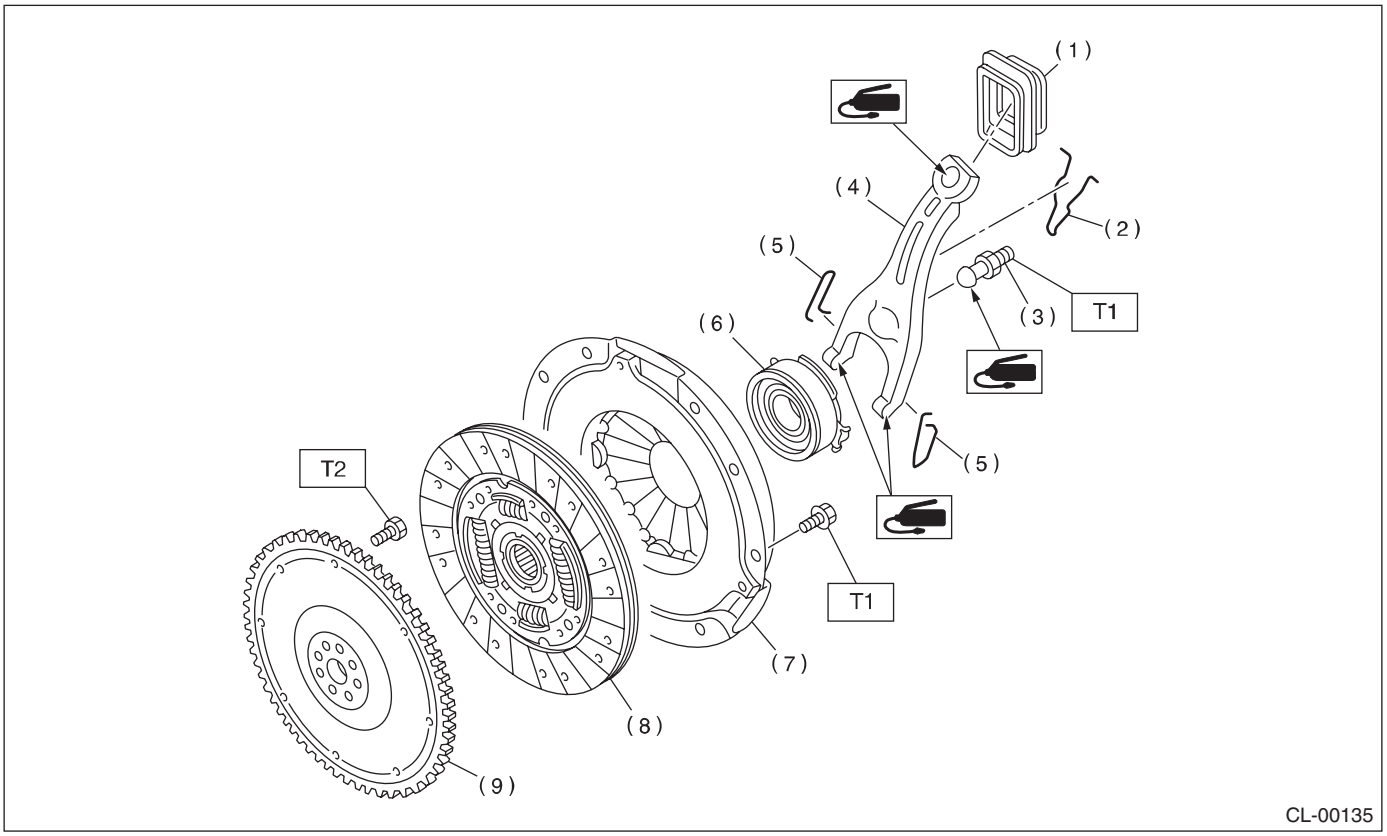

(1) Dust cover
(2) Lever spring
(3) Pivot
(4) Release lever
(5) Clip
(6) Release bearing
(7) Clutch cover
(8) Clutch disc
(9) Conventional flywheel

Tightening torque: N·m (kgf-m, ft-lb)
T1: 16 (1.6, 11.8)
T2: 72 (7.3, 52.8)

- Turbo model

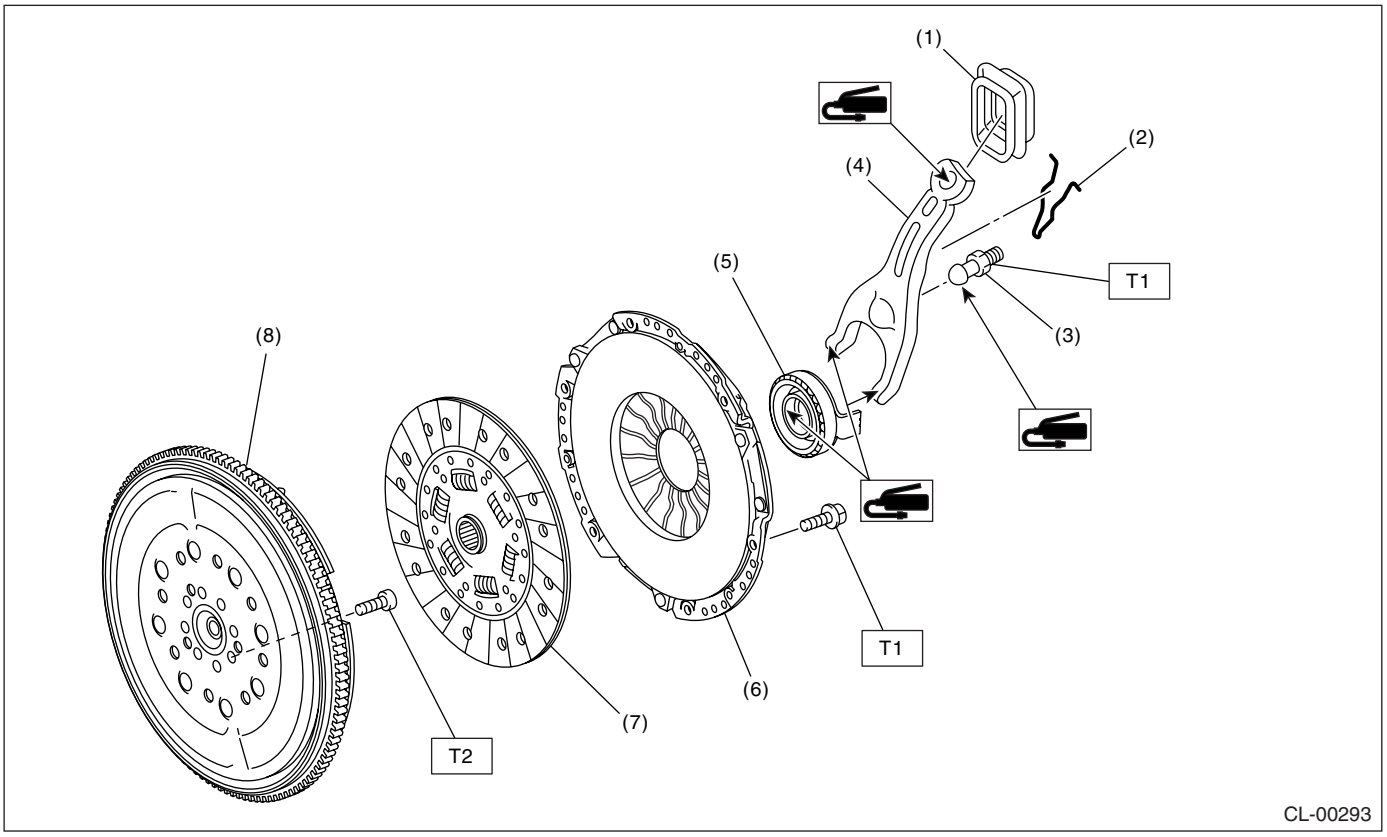

(1) Dust cover
(2) Lever spring
(3) Pivot
(4) Release lever
(5) Release bearing
(6) Clutch cover
(7) Clutch disc
(8) Dual mass flywheel

Tightening torque: N·m (kgf-m, ft-lb)
T1: 16 (1.6, 11.8)
T2: 72 (7.3, 52.8)

2. CLUTCH PIPE AND HOSE

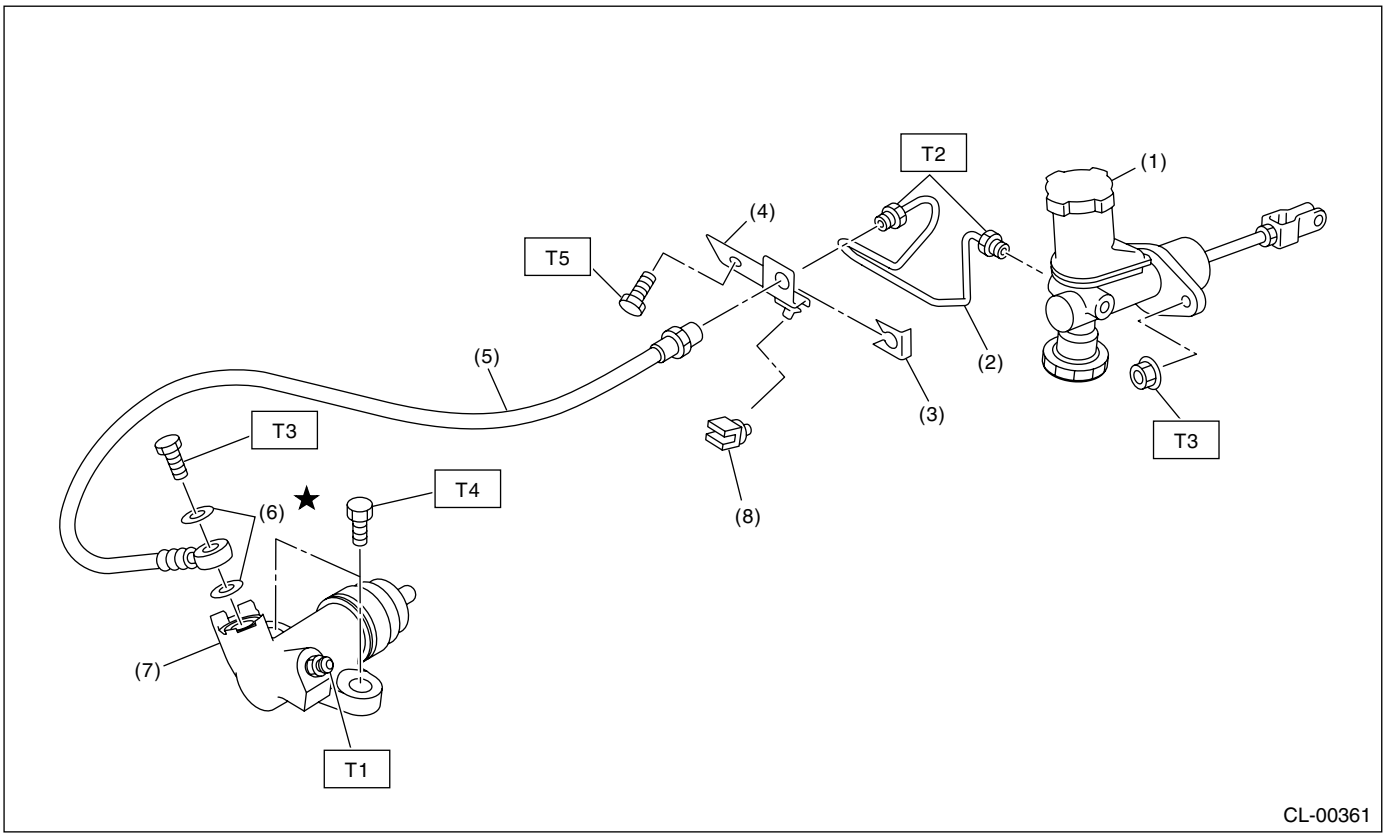

(1) Master cylinder ASSY
(2) Clutch pipe
(3) Clamp
(4) Bracket
(5) Clutch hose
(6) Washer
(7) Operating cylinder
(8) Clip

Tightening torque: N·m (kgf-m, ft-lb)
T1: 8 (0.8, 5.8)
T2: 15 (1.5, 10.8)
T3: 18 (1.8, 13.0)
T4: 37 (3.8, 27.5)
T5: 25 (2.5, 18.4)

3. MASTER CYLINDER

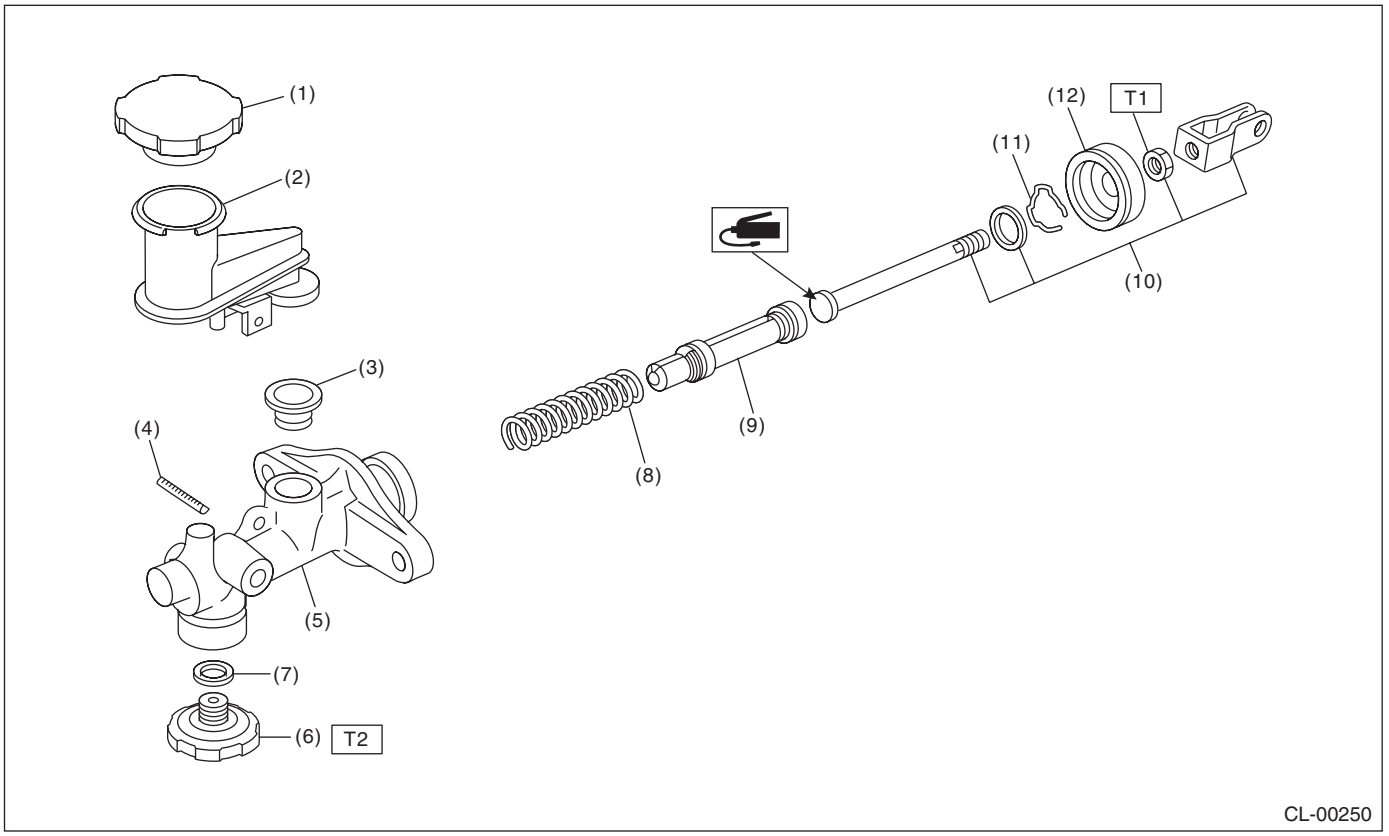

(1)	Reservoir cap	(7)	Gasket
(2)	Reservoir tank	(8)	Return spring
(3)	Oil seal	(9)	Piston
(4)	Straight pin	(10)	Push rod ASSY
(5)	Master cylinder	(11)	Piston stop ring
(6)	Clutch damper	(12)	Cylinder boot

Tightening torque: N·m (kgf-m, ft-lb)
T1: 10 (1.0, 7)
T2: 46.6 (4.75, 34.4)

4. CLUTCH PEDAL

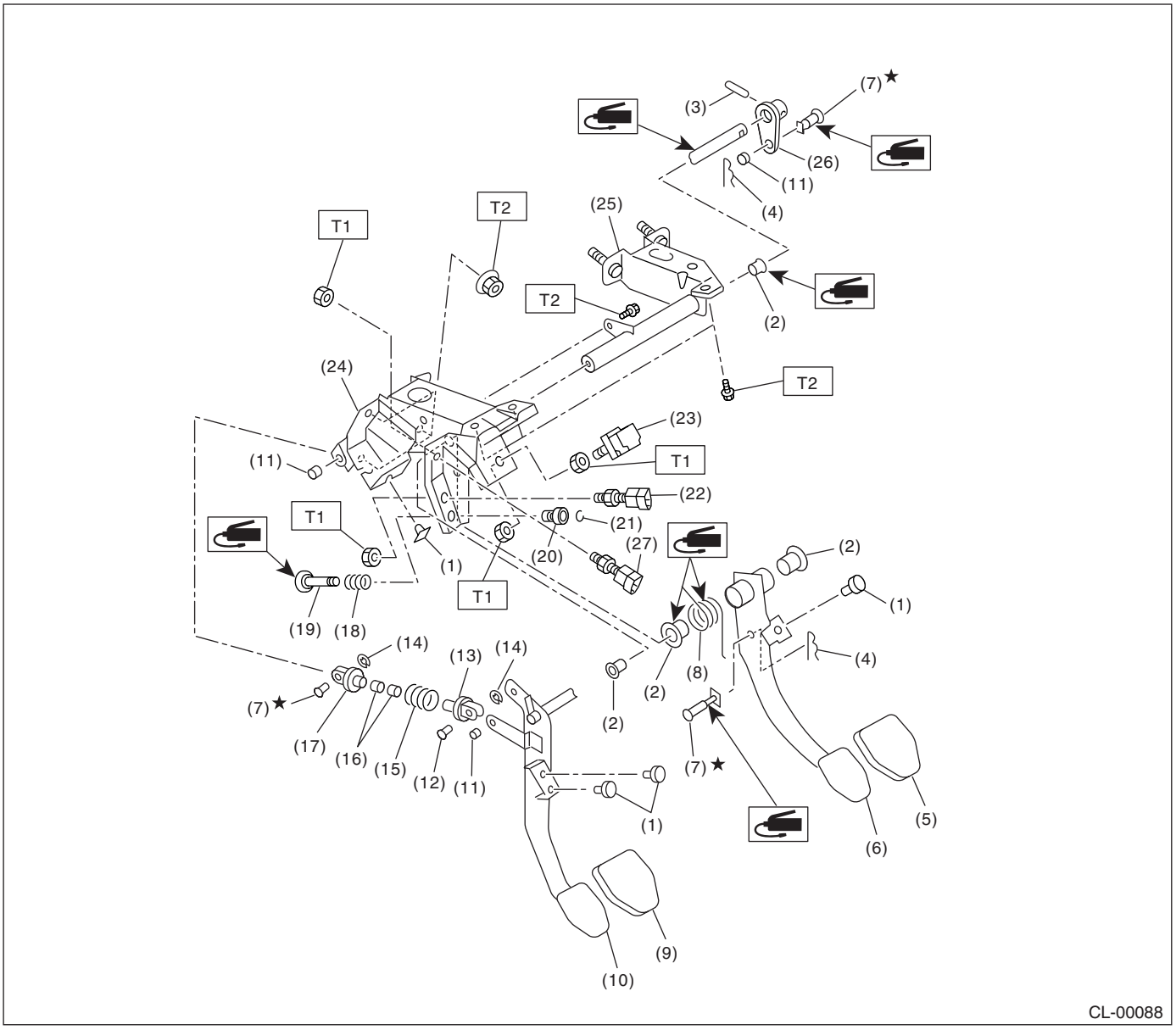

CL-00088

(1) Stopper
(2) Bushing
(3) Spring pin
(4) Snap pin
(5) Brake pedal pad
(6) Brake pedal
(7) Clevis pin
(8) Brake pedal spring
(9) Clutch pedal pad
(10) Clutch pedal
(11) Bushing C
(12) Clutch clevis pin
(13) Assist rod A
(14) Clip
(15) Assist spring
(16) Assist bushing
(17) Assist rod B
(18) Spring S
(19) Rod S
(20) Bushing S
(21) Clip
(22) Clutch switch (Cruise control)
(23) Stop light switch
(24) Pedal bracket
(25) Clutch master cylinder bracket
(26) Lever
(27) Clutch switch (Starter interlock)

Tightening torque: N·m (kgf-m, ft-lb)
T1: 8 (0.8, 5.8)
T2: 18 (1.8, 13.0)

C: CAUTION

• Wear work clothing, including a cap, protective goggles and protective shoes during operation.
• Remove contamination including dirt and corrosion before removal, installation or disassembly.
• Keep the disassembled parts in order and protect them from dust and dirt.
• Before removal, installation or disassembly, be sure to clarify the failure. Avoid unnecessary removal, installation, disassembly and replacement.
• Be careful not to burn yourself, because each part on the vehicle is hot after running.
• Use SUBARU genuine fluid, grease etc. or equivalent. Do not mix fluid, grease, etc. with that of another grade or from other manufacturers.
• Be sure to tighten fasteners including bolts and nuts to the specified torque.
• Place shop jacks or rigid racks at the specified points.
• Apply grease onto sliding or revolution surfaces before installation.
• Before installing O-rings or snap rings, apply sufficient amount of fluid to avoid damage and deformation.
• Before securing a part on a vice, place cushioning material such as wood blocks, aluminum plate or cloth between the part and the vice.
• Keep fluid away from the vehicle body. If any fluid contacts the vehicle body, immediately flush the area with water.

D: PREPARATION TOOL

1. SPECIAL TOOL

ILLUSTRATION	TOOL NUMBER	DESCRIPTION	REMARKS
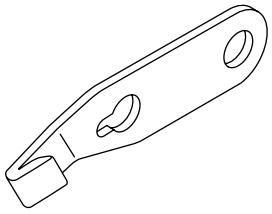 ST-498497100	498497100	CRANKSHAFT STOPPER	Used for stopping rotation of flywheel when loosening/tightening bolt, etc.
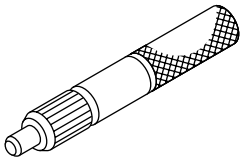 ST-499747100	499747100	CLUTCH DISC GUIDE	Used for installing clutch disc to flywheel.

ILLUSTRATION	TOOL NUMBER	DESCRIPTION	REMARKS
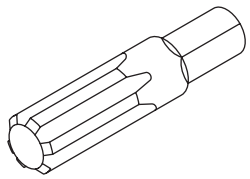 ST-499057000	499057000	TORX® PLUS	Used for removing flywheel (dual mass flywheel type).

2. GENERAL TOOL

TOOL NAME	REMARKS
Circuit tester	Used for measuring resistance, voltage and ampere.
Dial gauge	Used for measuring clutch disc run-out.
Depth gauge	Used for measuring wear of clutch disc.

2. Clutch Disc and Cover

A: REMOVAL

NOTE:
The illustration below is for Turbo model. However, perform the same procedure for Non-turbo model.

1) Remove the transmission assembly from vehicle. <Ref. to 5MT-25, REMOVAL, Manual Transmission Assembly.>
2) Insert the ST on flywheel.
ST 499747100 CLUTCH DISC GUIDE

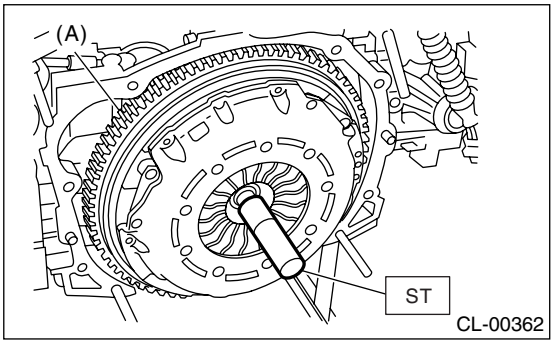

(A) Dual mass flywheel

3) Remove the clutch cover and clutch disc.

NOTE:
• Take care not to allow oil on the clutch disc surface.
• Do not disassemble the clutch cover or clutch disc.
• Be sure to mark alignment marks on the flywheel and clutch cover before removing clutch cover.

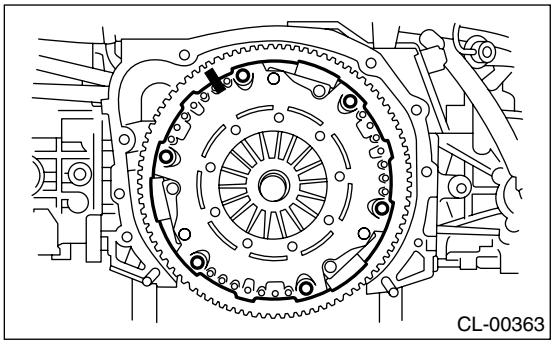

B: INSTALLATION

NOTE:
The illustration below is for Turbo model. However, perform the same procedure for Non-turbo model.

1) Insert the ST into clutch disc and install on the flywheel by inserting the ST end into pilot bearing.

NOTE:
When installing the clutch disc, be careful of its direction.

ST 499747100 CLUTCH DISC GUIDE

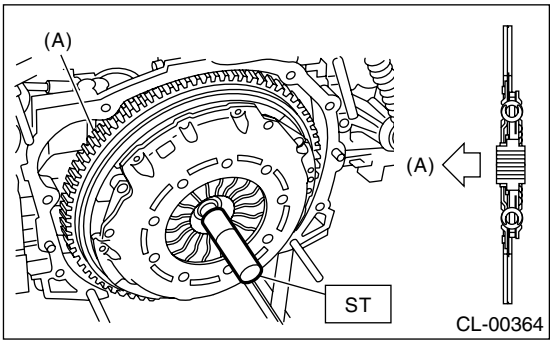

(A) Flywheel side

2) Place the clutch cover on flywheel and tighten the bolts to specified torque.

NOTE:
• When installing the clutch cover to the flywheel, position the clutch cover in order to make the gap between inbalance marks (● paint mark) of flywheel and clutch cover 120° or more. (The inbalance marks show the residual inbalance direction.)
• Note the front and rear of the clutch disc when installing.
• Tighten the clutch cover installing bolts gradually. Each bolt should be tightened to the specified torque in a crisscross order.

Tightening torque:
16 N·m (1.6 kgf-m, 11.8 ft-lb)

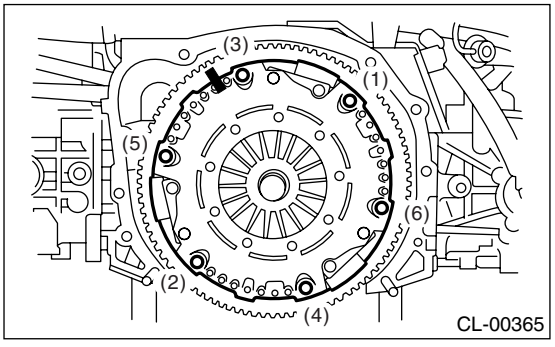

3) Remove the ST.
ST 499747100 CLUTCH DISC GUIDE
4) Install the transmission assembly. <Ref. to 5MT-27, INSTALLATION, Manual Transmission Assembly.>

C: INSPECTION

NOTE:
The illustration below is for Non-turbo model. However, perform the same procedure for Turbo model.

1. CLUTCH DISC

1) Facing wear:
Measure the depth from the surface of facing to rivet head. Replace if the facings are worn locally or worn down to less than the specified value.

Depth of rivet head:
Limit of sinking
0.3 mm (0.012 in)

NOTE:
Do not wash the clutch disc with any cleaning fluid.

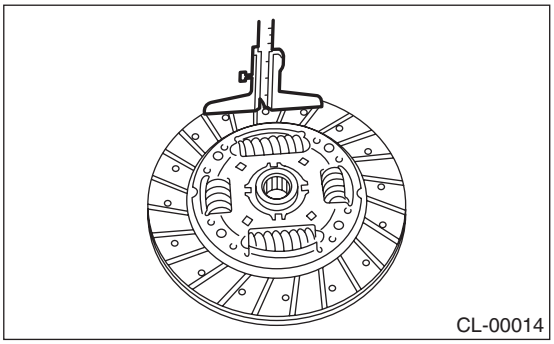

2) Hardened facing:
Replace the clutch disc.
3) Oil leakage on facing:
Replace the clutch disc and inspect the transmission front oil seal, transmission case mating surface, engine rear oil seal and other points for oil leakage.

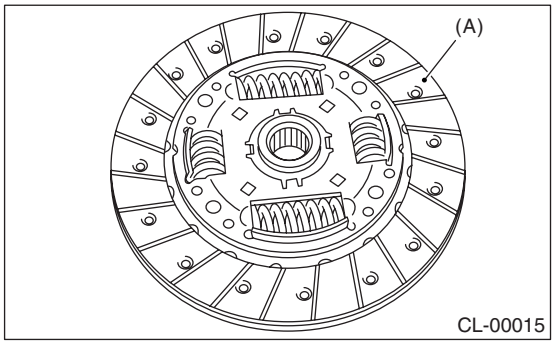

(A) Clutch facing

4) Deflection on facing:
If deflection exceeds the specified value at the outer circumference of facing, replace the clutch disc.
ST 499747100 CLUTCH DISC GUIDE

Limit for deflection:
Turbo model
1.0 mm (0.039 in) at R = 110 mm (4.33 in)
Non-turbo model
0.7 mm (0.027 in) at R = 110 mm (4.33 in)

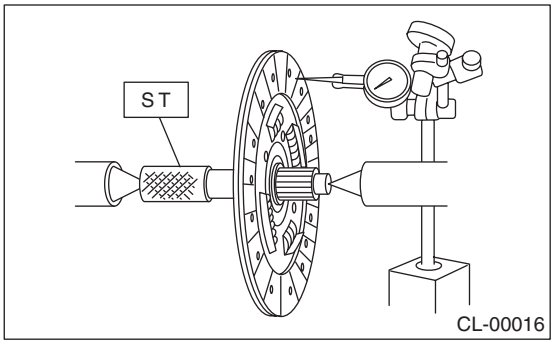

5) If the spline wears, rivets loosen and damper spring is failure, replace the clutch disc.

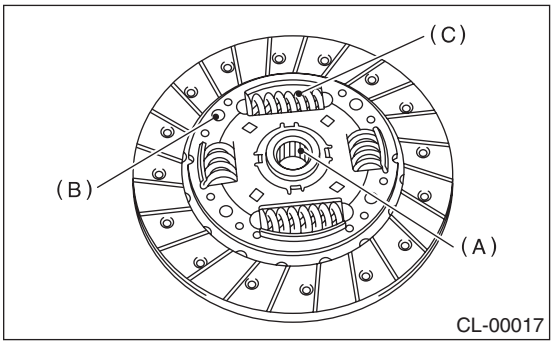

(A) Spline
(B) Rivet
(C) Damper spring

2. CLUTCH COVER

NOTE:
Visually check the following items without disassembling, and replace or repair if defective.
1) Loose thrust rivet
2) Damaged or worn bearing contact area at the center of diaphragm spring

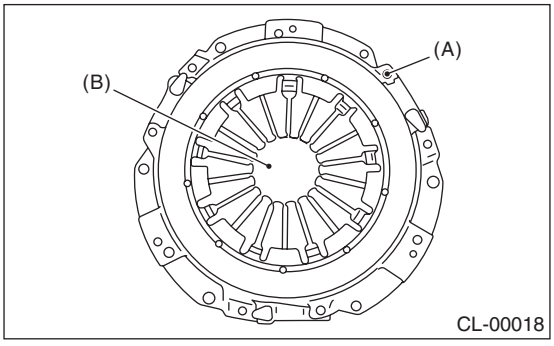

(A) Thrust rivet
(B) Diaphragm spring

3) Damaged or worn disc contact surface of pressure plate
4) Loose strap plate installation area
5) Worn diaphragm sliding area

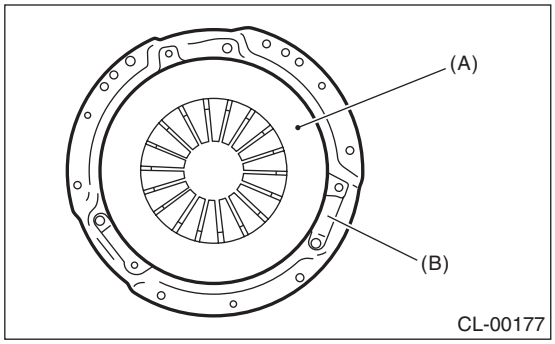

(A) Pressure plate
(B) Strap plate

3. Flywheel

A: REMOVAL

NOTE:
The illustration below is for Turbo model. However, perform the same procedure for Non-turbo model.

1) Remove the transmission assembly. <Ref. to 5MT-25, REMOVAL, Manual Transmission Assembly.>
2) Remove the clutch cover and clutch disc. <Ref. to CL-9, REMOVAL, Clutch Disc and Cover.>
3) Using the ST1 and ST2, remove the flywheel.
ST1 498497100 CRANKSHAFT STOPPER
ST2 499057000 TORX® PLUS

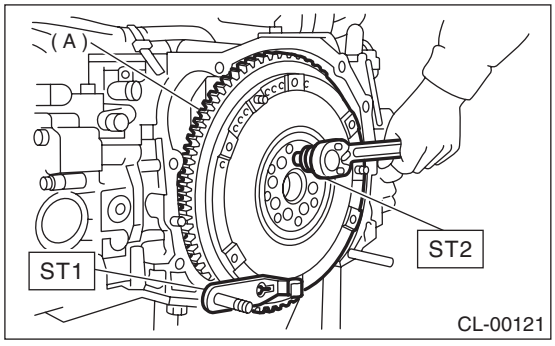

(A) Flywheel

B: INSTALLATION

NOTE:
The illustration below is for Turbo model. However, perform the same procedure for Non-turbo model.

1) Set the flywheel and ST.
ST 498497100 CRANKSHAFT STOPPER

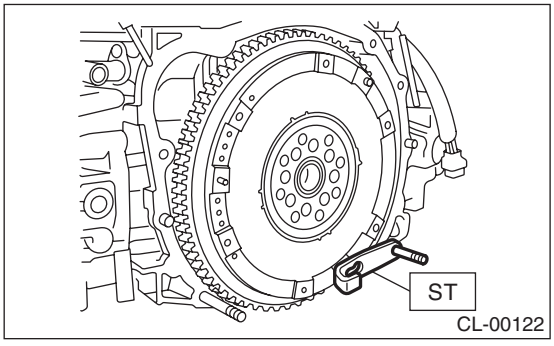

2) Tighten the flywheel mounting bolts to specified torque.
ST 499057000 TORX® PLUS

NOTE:
Tighten the flywheel installing bolts gradually. Each bolt should be tightened to the specified torque in a crisscross order.

Tightening torque:
72 N·m (7.3 kgf-m, 52.8 ft-lb)

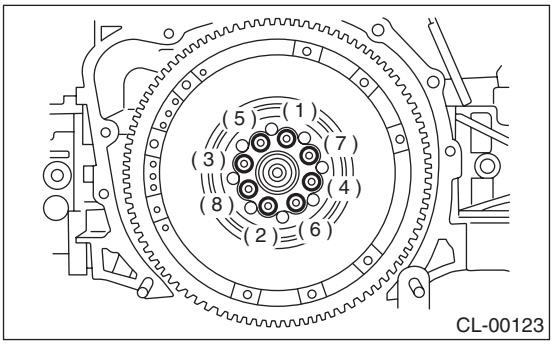

3) Install the clutch disc and cover. <Ref. to CL-9, INSTALLATION, Clutch Disc and Cover.>
4) Install the transmission assembly. <Ref. to 5MT-27, INSTALLATION, Manual Transmission Assembly.>

C: INSPECTION

NOTE:
The illustration below is for Turbo model. However, perform the same procedure for Non-turbo model.

CAUTION:
Since this bearing is grease-sealed and non-lubrication type, do not wash it with gasoline or any solvent.

1) Damage on sliding surface of facing and ring gear:
If defective, replace the flywheel.

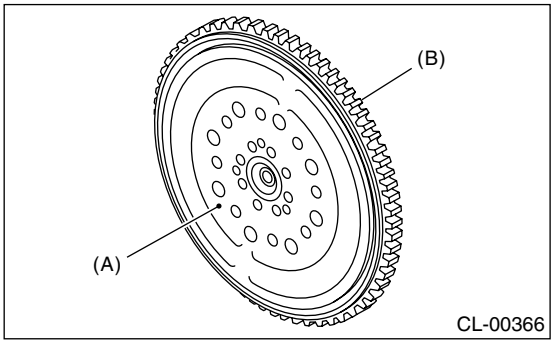

(A) Flywheel
(B) Ring gear

2) Smoothness of rotation
Rotate the ball bearing while applying pressure in thrust direction.
3) If noise or excessive play is noted, replace the flywheel.

4. Release Bearing and Lever

A: REMOVAL

1) Remove the transmission assembly from vehicle body.
<Ref. to 5MT-25, REMOVAL, Manual Transmission Assembly.>
2) Remove the two clips from clutch release lever and remove the release bearing.

CAUTION:
Be careful not to deform the clips.

3) Remove the dust cover.

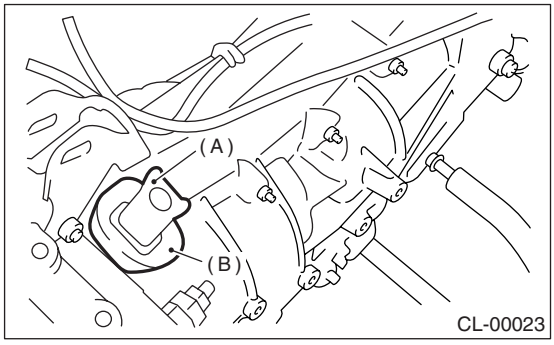

(A) Clutch release lever
(B) Dust cover

4) Remove the lever spring from pivot with a screwdriver by accessing it through the clutch housing release lever hole. Then remove the release lever.

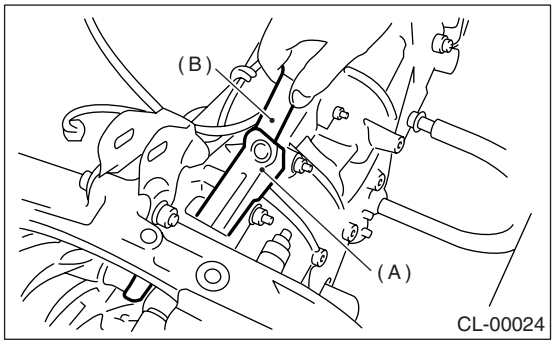

(A) Clutch release lever
(B) Screwdriver

B: INSTALLATION

NOTE:
Before or during installation, lubricate the following points with a light coat of grease.
- Contact surface of lever and pivot
- Contact surface of lever and bearing
- Transmission main shaft spline (Use grease containing molybdenum disulphide.)

1) While pushing the release lever to pivot and twisting it to both sides, fit the lever spring onto the constricted portion of pivot.

NOTE:
- Apply grease (KOPR-KOTE: Part No. 003603001) to the contact point of release lever and operating cylinder.
- Observing from main case hole, check that the lever spring is installed securely.

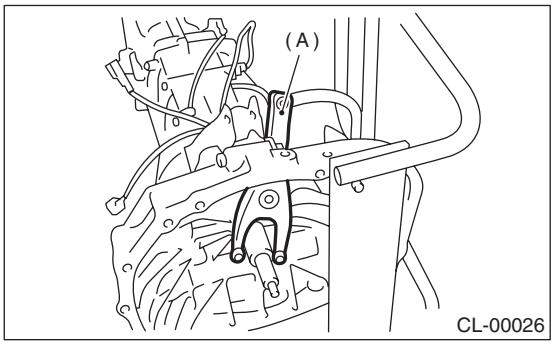

(A) Release lever

2) Place the release bearing and fasten it with two clips.
3) Install the dust cover.

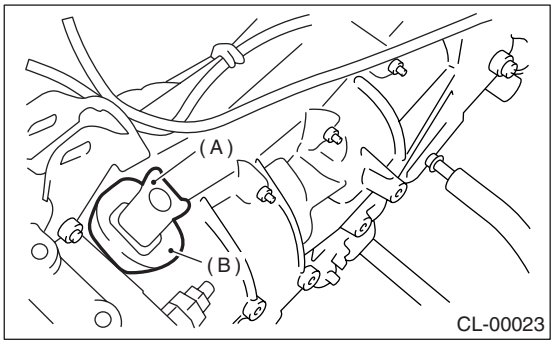

(A) Release lever
(B) Dust cover

4) Check the bearing for smooth movement of with operating release lever.
5) Install the transmission assembly.
<Ref. to 5MT-27, INSTALLATION, Manual Transmission Assembly.>

C: INSPECTION

1. RELEASE BEARING

NOTE:
Since this bearing is grease-sealed and non-lubrication type, do not wash with gasoline or any solvent when servicing the clutch.

1) Check the bearing for smooth movement by applying force to the bearing in radial direction.

Radial direction stroke:
1.6 mm (0.063 in)

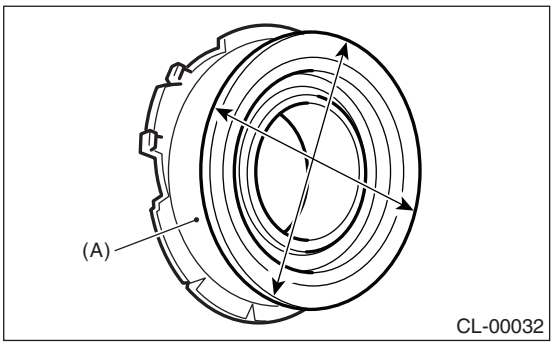

(A) Bearing case

2) Check the bearing for smooth rotation by applying force to the bearing in thrust direction.

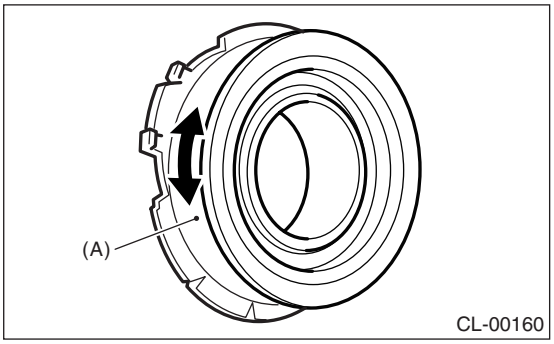

(A) Bearing case

3) Check wear and damage of bearing case surface contacting with lever.

2. RELEASE LEVER

Check the lever pivot portion and contact point with release bearing case for wear.

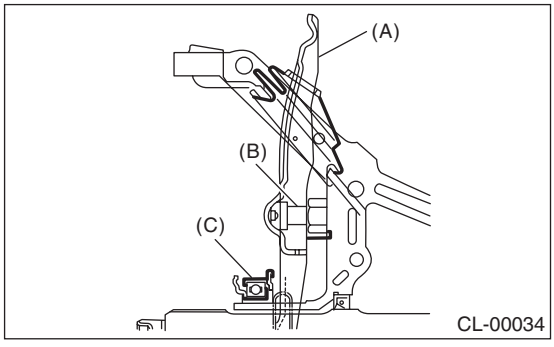

(A) Clutch release lever
(B) Pivot
(C) Clutch release bearing

5. Operating Cylinder

A: REMOVAL

1) Remove the air intake chamber. <Ref. to IN(H4SO)-9, REMOVAL, Air Intake Chamber.>
2) Disconnect the clutch hose from operating cylinder.

CAUTION:
Cover the hose joint to prevent clutch fluid from flowing out.

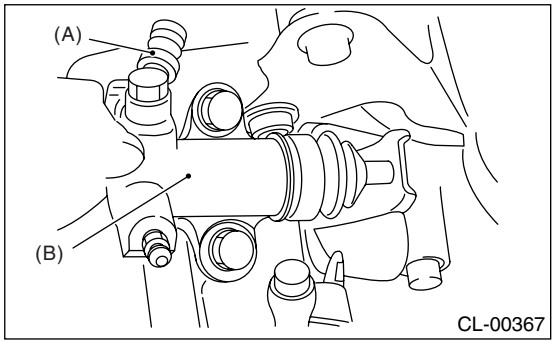

(A) Clutch hose
(B) Operating cylinder

3) Remove the operating cylinder from transmission.

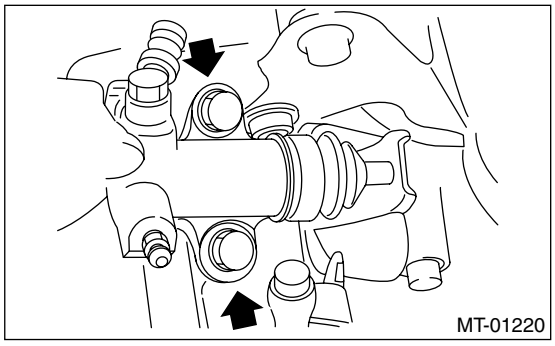

B: INSTALLATION

1) Install in the reverse order of removal.

NOTE:
Before installing the operating cylinder, apply grease (KOPR-KOTE: Part No. 003603001) to the contact point of the release lever and operating cylinder.

Tightening torque:
T1: 18 N·m (1.8 kgf-m, 13.0 ft-lb)
T2: 37 N·m (3.8 kgf-m, 27.5 ft-lb)

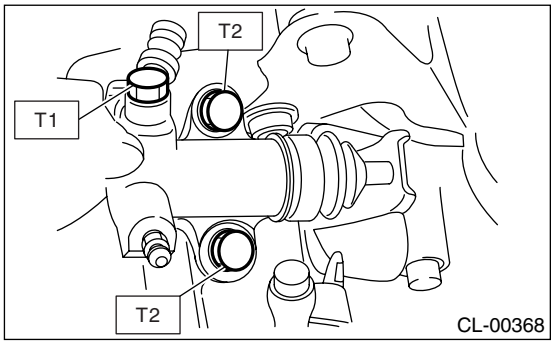

2) After bleeding air from the operating cylinder, ensure that clutch operates properly.
<Ref. to CL-20, Clutch Fluid Air Bleeding.>

C: INSPECTION

1) Check the operating cylinder for damage. If operating cylinder is damaged, replace it.
2) Check the operating cylinder for fluid leakage or damage on boot. If any leakage or damage is found, replace the operating cylinder.

6. Master Cylinder

A: REMOVAL

1) Thoroughly drain the brake fluid from reservoir tank.
2) Remove the snap pin and clevis pin, and then separate the push rod of master cylinder from clutch pedal.

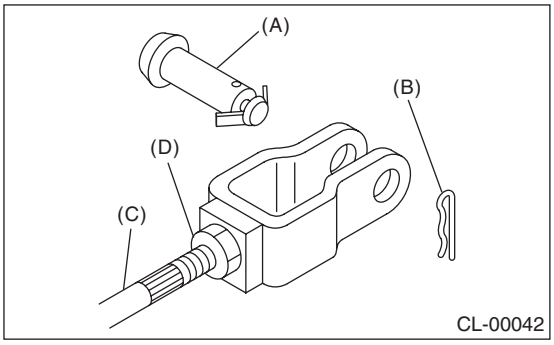

(A) Clevis pin
(B) Snap pin
(C) Push rod
(D) Lock nut

3) Remove the air intake chamber. <Ref. to IN(H4SO)-9, REMOVAL, Air Intake Chamber.>
4) Disconnect the clutch pipes from master cylinder.
5) Remove the master cylinder and reservoir tank as a unit.

CAUTION:
Be careful not to spill the brake fluid. Brake fluid spilt on the vehicle body will harm the paint surface; wipe it off quickly if spilt.

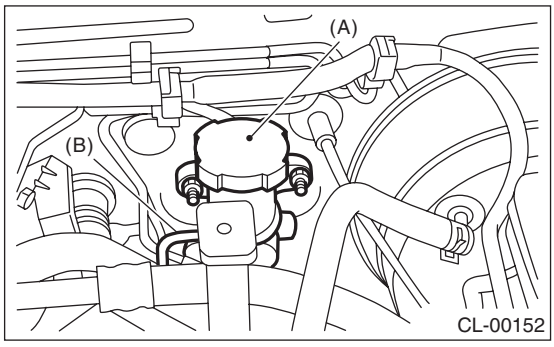

(A) Master cylinder ASSY
(B) Clutch pipe

B: INSTALLATION

1) Install the master cylinder to vehicle, and connect the clutch pipe to master cylinder.

NOTE:
Check that the pipe is routed properly.

Tightening torque:
T1: 15 N·m (1.5 kgf-m, 10.8 ft-lb)
T2: 18 N·m (1.8 kgf-m, 13.0 ft-lb)

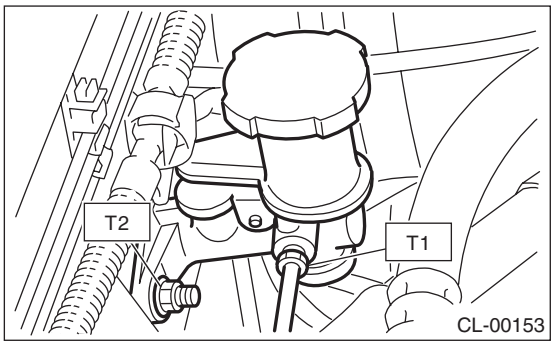

2) Connect the push rod of master cylinder to clutch pedal, and install the clevis pin and snap pin.

NOTE:
Apply grease to the clevis pin.

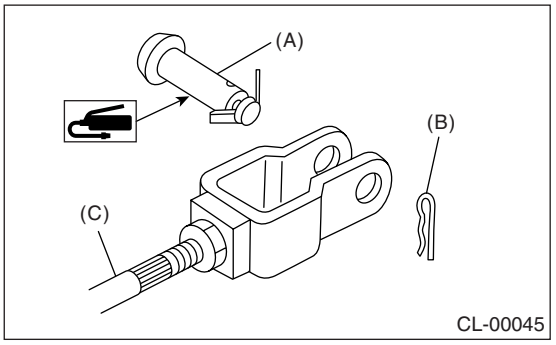

(A) Clevis pin
(B) Snap pin
(C) Push rod

3) After bleeding air from the clutch system, ensure that clutch operates properly. <Ref. to CL-20, Clutch Fluid Air Bleeding.>
4) Install the air intake chamber. <Ref. to IN(H4SO)-9, INSTALLATION, Air Intake Chamber.>

C: DISASSEMBLY

1) Remove the straight pin and reservoir tank.

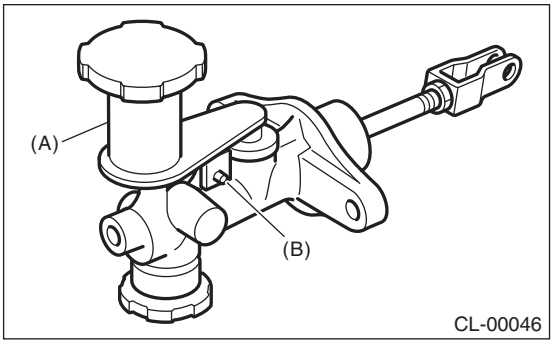

(A) Reservoir tank
(B) Straight pin

2) Remove the oil seal.

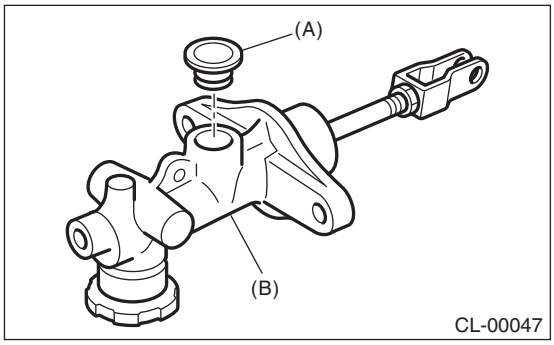

(A) Oil seal
(B) Master cylinder

3) Pull the cylinder boot backward.

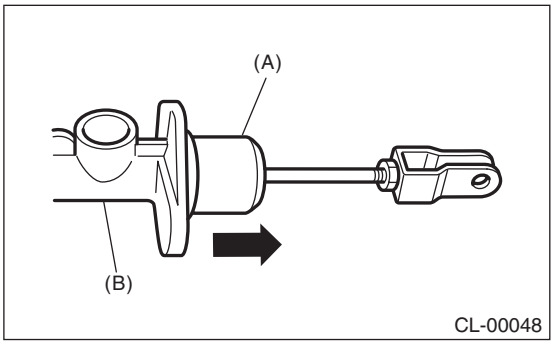

(A) Cylinder boot
(B) Master cylinder

4) Remove the snap ring.

CAUTION:
Be careful to prevent the rod, washer, piston and return spring from flying out when removing the snap ring.

5) Remove the clutch damper.

D: ASSEMBLY

1) Install the clutch damper.

Tightening torque:
46.6 N·m (4.75 kgf-m, 34.4 ft-lb)

2) Apply a coat of grease to the contacting surfaces of the push rod and piston before installation.

Grease:
SILICONE GREASE G40M (Part No. 004404003)

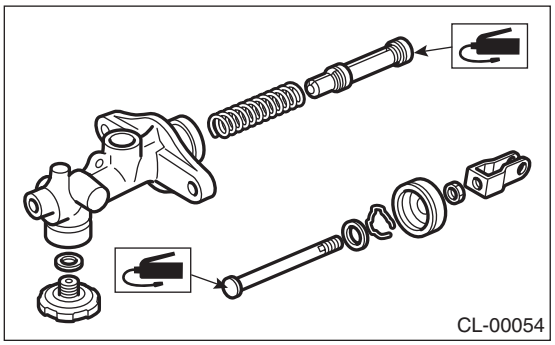

3) Assemble in the reverse order of disassembly.

Tightening torque:
10 N·m (1.0 kgf-m, 7 ft-lb)

E: INSPECTION

If any damage, deformation, wear, swelling, rust or other faults are found on the cylinder, piston, push rod, fluid reservoir, return spring, gasket, clutch damper cylinder boot or hose, replace the faulty part.

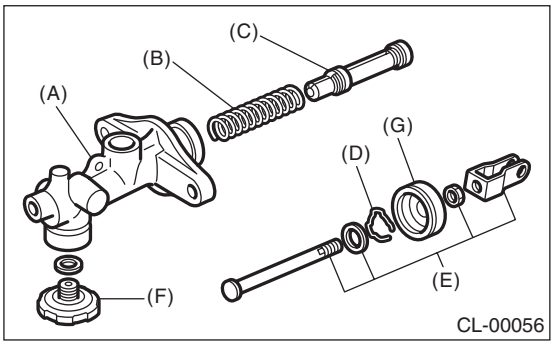

(A) Master cylinder body
(B) Return spring
(C) Piston
(D) Stop ring
(E) Push rod ASSY
(F) Clutch damper
(G) Cylinder boot

7. Clutch Pipe and Hose

A: REMOVAL

1) Remove the air intake chamber. (Non-turbo model) <Ref. to IN(H4SO)-9, REMOVAL, Air Intake Chamber.>
2) Remove the intercooler. (Turbo model) <Ref. to IN(H4DOTC)-12, REMOVAL, Intercooler.>
3) Drain the clutch fluid. <Ref. to CL-19, Clutch Fluid.>
4) Disconnect the clutch pipe from the clutch hose and master cylinder.
5) Pull out the clamp, then remove the clutch hose from bracket.

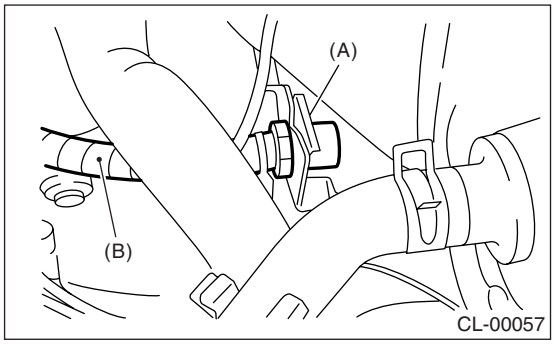

(A) Clamp
(B) Clutch hose

6) Disconnect the hose from operating cylinder.
7) Remove the bracket.

B: INSTALLATION

Install in the reverse order of removal.

NOTE:
Bleed the air of clutch fluid. <Ref. to CL-20, Clutch Fluid Air Bleeding.>

Tightening torque:
T1: 15 N·m (1.5 kgf-m, 10.8 ft-lb)
T2: 18 N·m (1.8 kgf-m, 13.0 ft-lb)
T3: 25 N·m (2.5 kgf-m, 18.4 ft-lb)

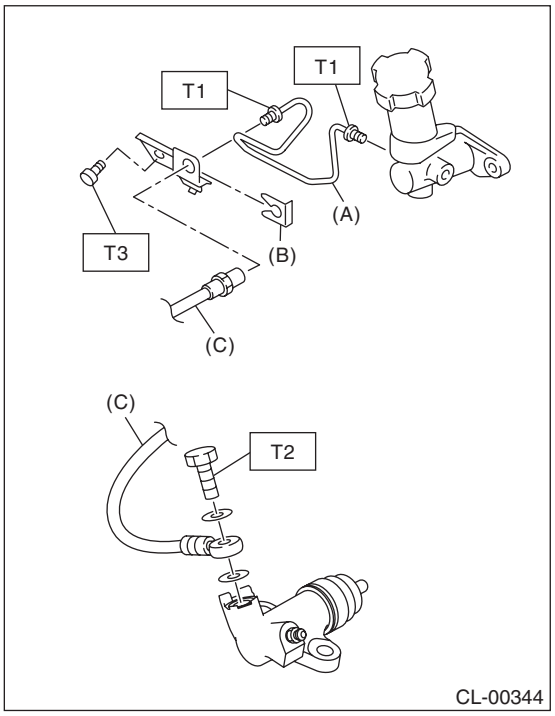

(A) Clutch pipe
(B) Clip
(C) Clutch hose

C: INSPECTION

Check the pipes and hoses for cracks, breakage or damage. Check the joints for fluid leakage. If any crack, breakage, damage or leakage is found, repair or replace the defective pipe or hose.

8. Clutch Fluid

A: INSPECTION

1) Park the vehicle on a level surface.
2) Inspect the fluid level using the scale on the outside of reservoir tank. If the level is below “MIN”, add fluid to bring it up to “MAX”, and also inspect for leakage.

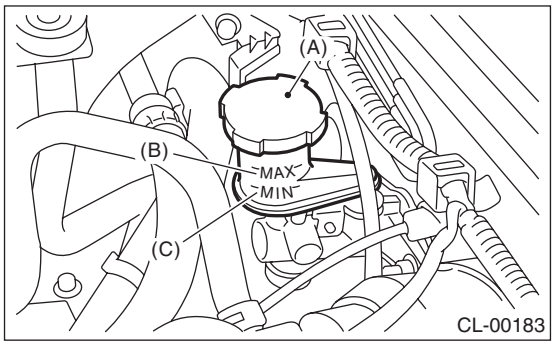

(A) Reservoir tank
(B) MAX. level
(C) MIN. level

B: REPLACEMENT

CAUTION:
• The FMVSS No. 116, fresh DOT3 or 4 brake fluid must be used.
• When loosening bleeder screw, cover the bleeder with cloth to prevent brake fluid from being splashed over surrounding parts.
• Avoid mixing different brands of brake fluid to prevent the quality of fluid from degrading.
• Be careful not to allow dirt or dust to get into the reservoir tank.

NOTE:
• During bleeding operation, keep the clutch reservoir tank filled with brake fluid to eliminate the entry of air.
• Clutch pedal operation must be very slow.
• For convenience and safety, it is advisable to have two people working.
• The amount of brake fluid required is approx. 70 mℓ (2.4 US fl oz, 2.5 Imp fl oz) for total clutch system.

1) Remove the air intake chamber. <Ref. to IN(H4SO)-9, REMOVAL, Air Intake Chamber.>
2) Drain the brake fluid from reservoir tank.
3) Refill the reservoir tank with recommended brake fluid.

Recommended brake fluid:
FMVSS No. 116, fresh DOT3 or 4 brake fluid

4) Drain all contaminated fluid in the same method as air bleeding.

NOTE:
Refill the brake fluid before reservoir tank becomes empty.

9. Clutch Fluid Air Bleeding

A: PROCEDURE

NOTE:
Bleed air from the oil line with help of a co-worker.

1) Remove the air intake chamber. <Ref. to IN(H4SO)-9, REMOVAL, Air Intake Chamber.>
2) Fit one end of a vinyl tube into the air bleeder of operating cylinder and put the other end into a brake fluid container.

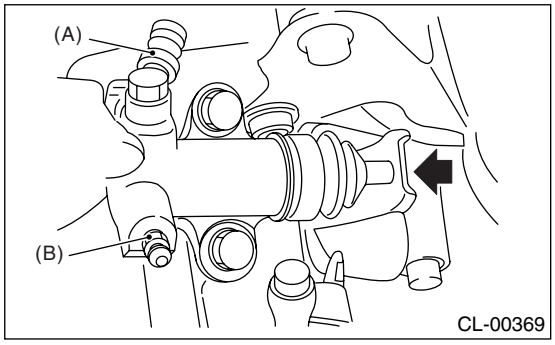

(A) Clutch hose
(B) Air bleeder

3) Slowly depress the clutch pedal and keep it depressed. Then open the air bleeder to discharge air together with the fluid.
Release the air bleeder for 1 or 2 seconds. Next, with the bleeder closed, slowly release the clutch pedal.

CAUTION:
When loosening bleeder screw, cover the bleeder with cloth to prevent brake fluid from being splashed over surrounding parts.

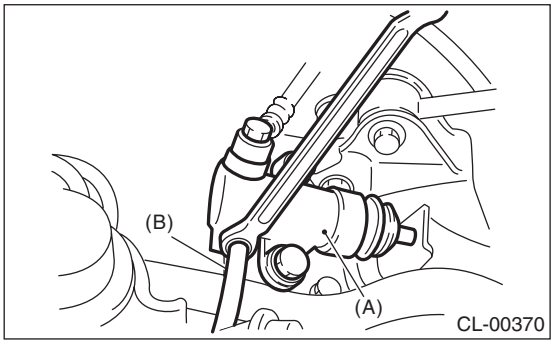

(A) Operating cylinder
(B) Vinyl tube

4) Repeat the procedure 3), until there are no more air bubbles in the vinyl tube.
5) Tighten the air bleeder.

Tightening torque:
T: 8 N·m (0.8 kgf-m, 5.8 ft-lb)

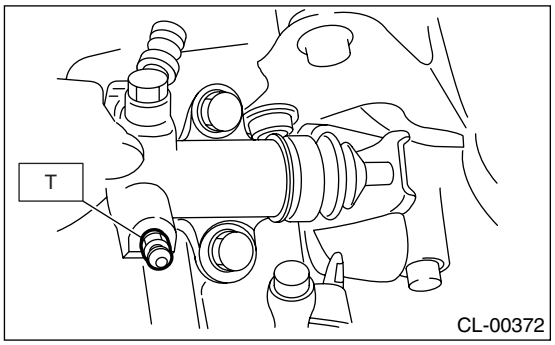

6) After depressing the clutch pedal, make sure that there are no leaks evident in the entire clutch system.
7) After bleeding air from the clutch system, ensure that clutch operates properly.

10.Clutch Pedal

A: REMOVAL

1) Disconnect the ground cable from battery.
2) Remove the steering column. <Ref. to PS-17, REMOVAL, Tilt Steering Column.>
3) Disconnect the connectors from the stop light and clutch switches.
4) Remove the snap pins which secure lever to push rod and operating rod.
5) Remove the clevis pins which secure lever to push rod and operating rod.

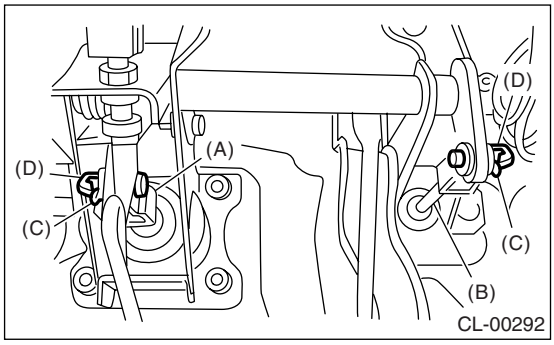

(A) Operating rod
(B) Push rod
(C) Snap pin
(D) Clevis pin

6) Remove the nut which secures clutch master cylinder.

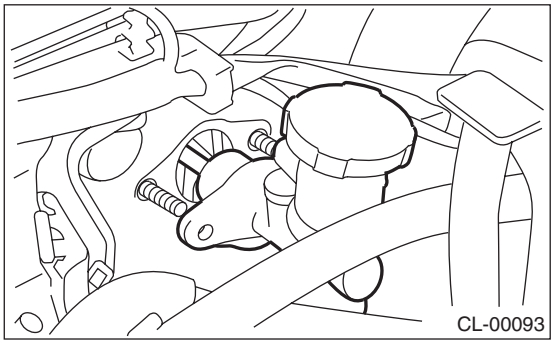

7) Remove the bolts and nuts which secure brake pedal and clutch pedal, and remove the pedal assembly.

B: INSTALLATION

1) Install in the reverse order of removal.

Tightening torque:
T: 18 N·m (1.8 kgf-m, 13.0 ft-lb)

CAUTION:
Always use a new clevis pin.

2) Adjust the clutch pedal after installation. <Ref. to CL-22, ADJUSTMENT, Clutch Pedal.>

C: DISASSEMBLY

1) Remove the clutch switches.
2) Remove the clips, assist spring, rod and bushing.

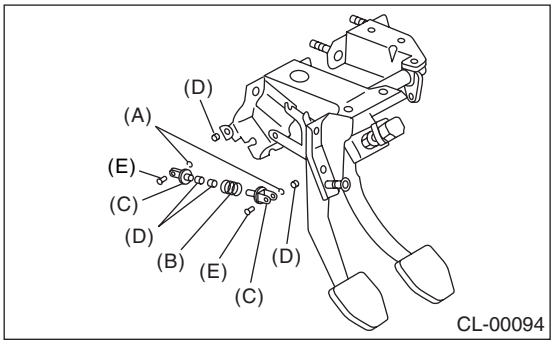

(A) Clip
(B) Assist spring
(C) Assist rod
(D) Bushing
(E) Clevis pin

3) Remove the spring pin and lever.

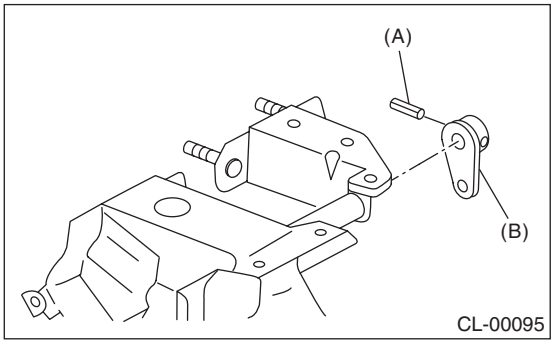

(A) Pin
(B) Lever

4) Remove the clutch pedal and bushings.

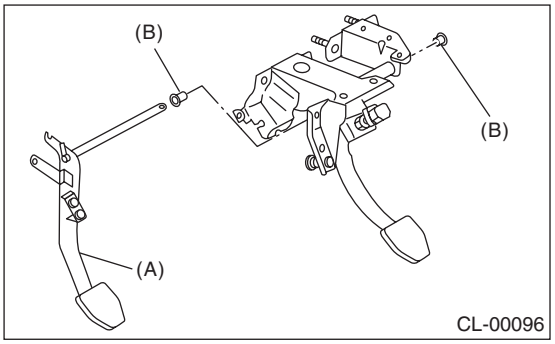

(A) Clutch pedal
(B) Bushing

5) Remove the stopper, clip and rod S, and then remove the spring and bushing S.

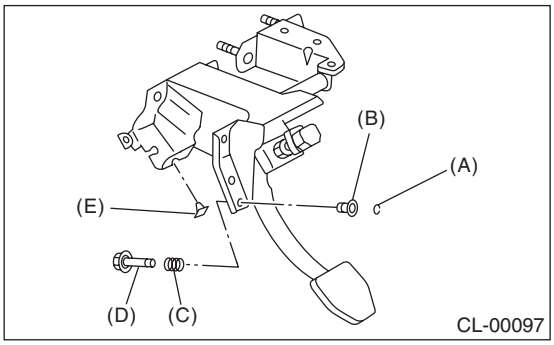

(A) Clip
(B) Bushing S
(C) Spring S
(D) Rod S
(E) Stopper

6) Remove the stoppers from clutch pedal.
7) Remove the clutch pedal pad.

D: ASSEMBLY

1) Temporarily assemble the clutch switch, etc. to pedal bracket.
2) Clean the inside of bores of clutch pedal and brake pedal, and apply grease, and set bushings into bores.
3) Align the bores of pedal bracket, clutch pedal and brake pedal, and then attach the brake pedal return spring, assist rods, spring and bushing.

NOTE:
Clean up the inside of bushings and apply grease before installing spacer.

E: INSPECTION

1. CLUTCH PEDAL

Move the clutch pedal pads in the lateral direction with a force of approximately 10 N (1 kgf, 2 lbf) to ensure the pedal deflection is in specified range.
If excessive deflection is noted, replace the bushings with new ones.

Deflection of clutch pedal:
Service limit
5.0 mm (0.197 in) or less

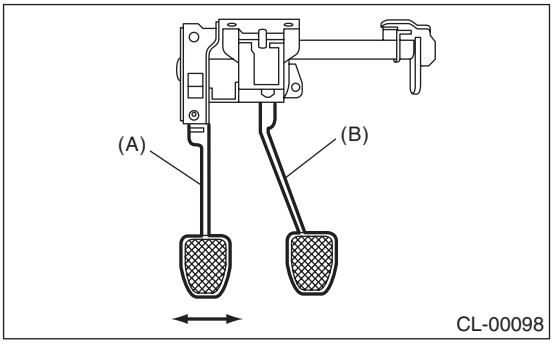

(A) Clutch pedal
(B) Brake pedal

F: ADJUSTMENT

1) Measure the full stroke amount of clutch pedal.

NOTE:
• Measure the length between the seat cushion front end and center portion of clutch pedal.
• Slide the seat at seventh notch from the first notch.

Specified clutch pedal full stroke A:
Non-turbo model:
130 — 135 mm (5.12 — 5.31 in)
Turbo model:
135 — 140 mm (5.31 — 5.51 in)

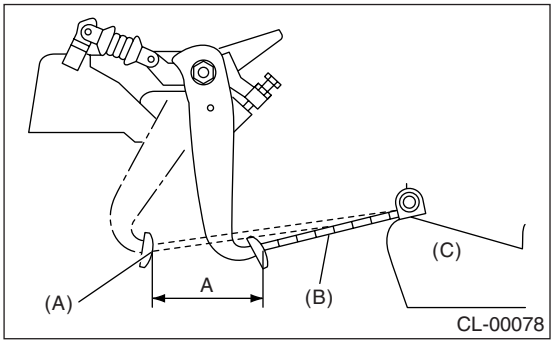

(A) Clutch pedal (Full stroke condition)
(B) Scale
(C) Seat

2) If the clutch pedal stroke is out of specification, loosen the clutch switch lock nut to adjust.

Tightening torque (Clutch switch lock nut):
8 N·m (0.8 kgf-m, 5.8 ft-lb)

3) Loosen the push rod lock nut.

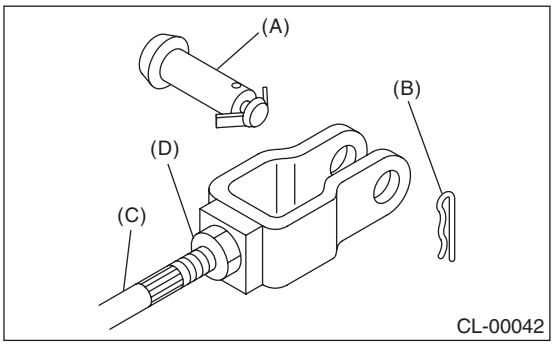

(A) Clevis pin
(B) Snap pin
(C) Push rod
(D) Push rod lock nut

4) Turn the push rod to adjust.
(1) Ensure that the clutch pedal contacts clutch switch, when releasing the clutch pedal.
(2) Ensure that the clutch pedal contacts clutch pedal bracket stopper, when fully depressing the clutch pedal.

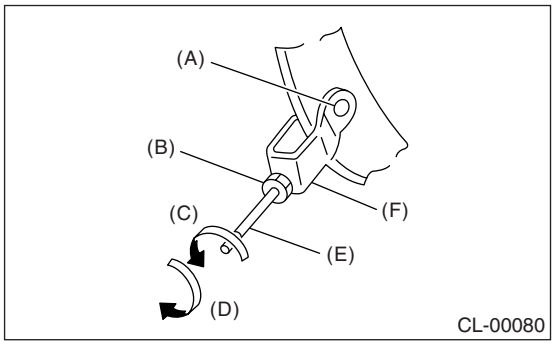

(A) Clevis hole
(B) Push rod lock nut
(C) Shortening direction
(D) Lengthening direction
(E) Push rod
(F) U shaped bracket

5) Turn the push rod counterclockwise to shorten until clearance is made at clutch switch.

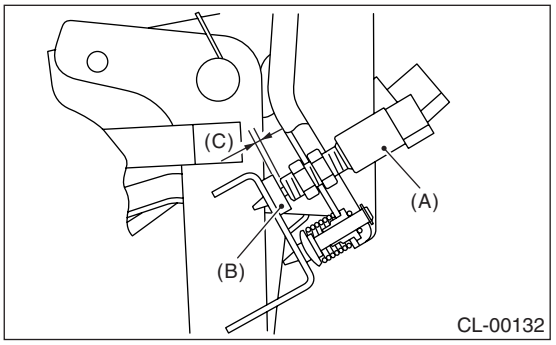

(A) Clutch switch
(B) Stopper
(C) Clearance

6) Turn the push rod clockwise to lengthen until clutch pedal contacts to clutch switch.
7) Turn the push rod further 270° counterclockwise to shorten (arrow direction as shown in the figure).

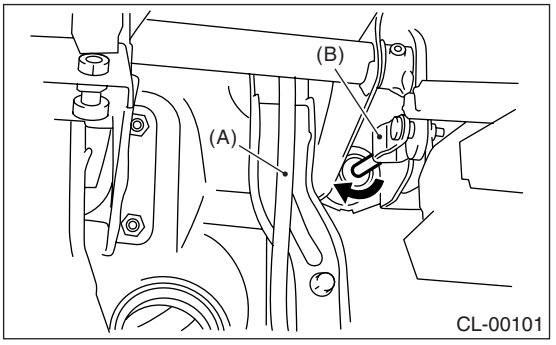

(A) Accelerator pedal
(B) Clevis

8) Move the clevis pin in lateral direction to ensure it moves smoothly.
9) Tighten the push rod lock nut.

Tightening torque:
10 N·m (1.0 kgf-m, 7.2 ft-lb)

10) Depress and release the clutch pedal two or three times to ensure that clutch pedal and release fork operate smoothly. If the clutch pedal and release fork do not operate smoothly, bleed air from the clutch hydraulic system. <Ref. to CL-20, Clutch Fluid Air Bleeding.>
11) Measure the clutch pedal full stroke length again to ensure that it is within specifications. If it is not, repeat adjustment procedures again from the beginning.

Specified clutch pedal full stroke:
Non-turbo model:
130 — 135 mm (5.12 — 5.31 in)
Turbo model:
135 — 140 mm (5.31 — 5.51 in)

12) Move the clevis pin to the left and then to the right. It should move without resistance while it is rattling. If resistance is felt, repeat adjustment procedures again from the beginning.
13) Push the release lever until operating cylinder push rod retracts. Ensure that the clutch fluid level in reservoir tank increases. If the clutch fluid level increases, hydraulic clutch is properly adjusted; if the fluid level does not increase or push rod does not retract, replace the master cylinder with a new one. <Ref. to CL-16, Master Cylinder.>

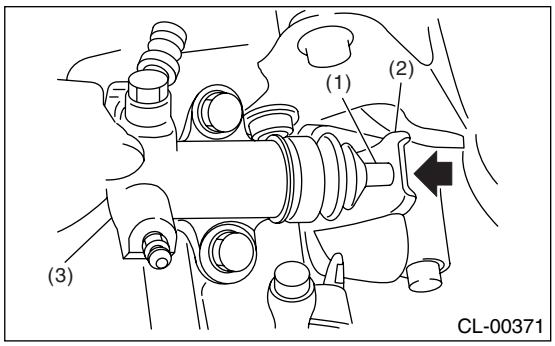

(1) Push rod
(2) Release lever
(3) Operating cylinder

14) Push the release lever until the operating cylinder push rod retracts. Check that the clutch fluid level in reservoir tank increases.

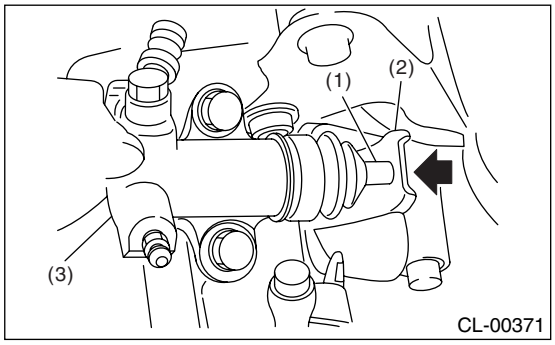

(1) Push rod
(2) Release lever
(3) Operating cylinder

15) If the clutch fluid level increases, hydraulic clutch play is correct.
16) If the clutch fluid level does not increase or push rod does not retract, clutch pedal must be readjusted.
17) Check the fluid level on the outside of the reservoir tank. If the level is below “MIN”, add clutch fluid to bring it up to “MAX”.

Recommended clutch fluid:
FMVSS No. 116, fresh DOT 3 or DOT 4 brake fluid

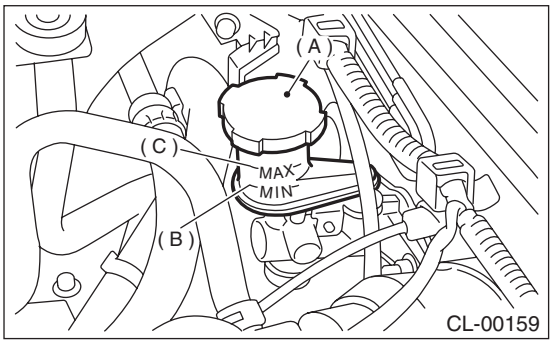

(A) Reservoir tank
(B) Min. level
(C) Max. level

11.Clutch Switch

A: REMOVAL

1) Disconnect the ground cable from battery.
2) Remove the instrument panel lower cover.
3) Disconnect the connector from clutch switch.
4) Remove the clutch switch.

B: INSTALLATION

1. CLUTCH SWITCH (WITH CRUISE CONTROL)

1) Install the clutch switch and clutch pedal stopper so that the gap between them is 0 mm (0 in).

Tightening torque:
8 N·m (0.8 kgf-m, 5.8 ft-lb)

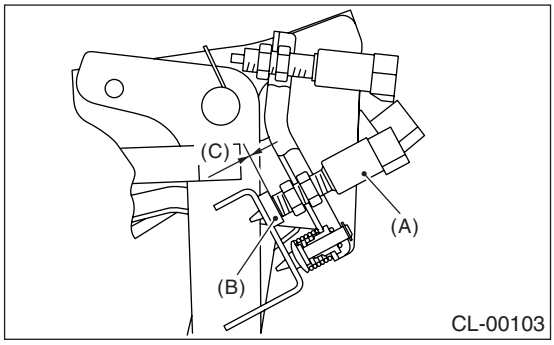

(A) Clutch switch
(B) Stopper
(C) 0 mm (0 in)

2) Measure the stroke of the clutch pedal.

Specified clutch pedal full stroke: A
Non-turbo model
130 — 135 mm (5.12 — 5.31 in)
Turbo model
135 — 140 mm (5.31 — 5.51 in)

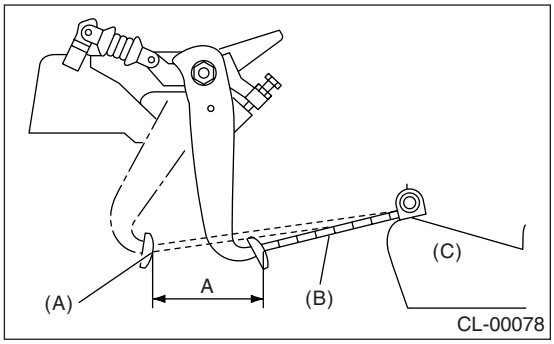

(A) Clutch (Full stroke condition)
(B) Scale
(C) Seat

3) If the clutch pedal stroke is out of specification, adjust the stroke. <Ref. to CL-22, ADJUSTMENT, Clutch Pedal.>
4) Connect the clutch switch connector.

2. CLUTCH SWITCH (STARTER INTERLOCK)

1) Fully depress the clutch pedal.
2) Install the clutch pedal plate and clutch pedal so that the gap between them is 2 — 2.5 mm (0.08 — 0.10 in), and then tighten the lock nut.

Tightening torque:
8 N·m (0.8 kgf-m, 5.8 ft-lb)

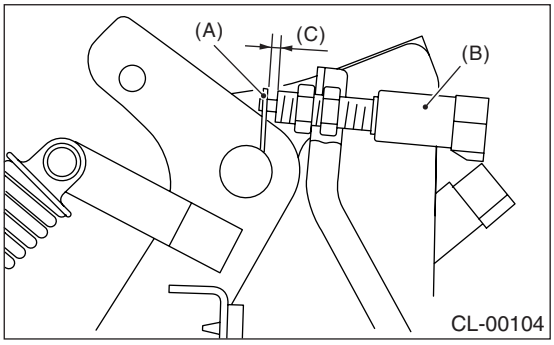

(A) Plate
(B) Clutch pedal
(C) 2 — 2.5 mm (0.08 — 0.10 in)

3) Connect the clutch switch connector.
4) Confirm that the engine does not start when the clutch pedal is released.
5) Confirm that the engine starts when the clutch pedal is fully depressed.

C: INSPECTION

1) Confirm that the engine does not start when the clutch pedal is released. If the engine starts, adjust the clutch switch and inspect the starter interlock circuit.
2) Confirm that the engine starts when the clutch pedal is fully depressed. If the engine does not start, adjust the clutch switch and inspect the starter interlock circuit.
3) Check the clutch switch continuity. If continuity is not as specified, replace the switch.
(1) Disconnect the clutch switch connector.
(2) Measure the resistance between No. 1 and 2 of switch terminal.

Condition	Terminal No.	Specified resistance
When clutch pedal depressed	No. 1 — No. 2	Less than 1 Ω
When clutch pedal not depressed	No. 1 — No. 2	More than 1 MΩ

Clutch switch (Starter interlock)

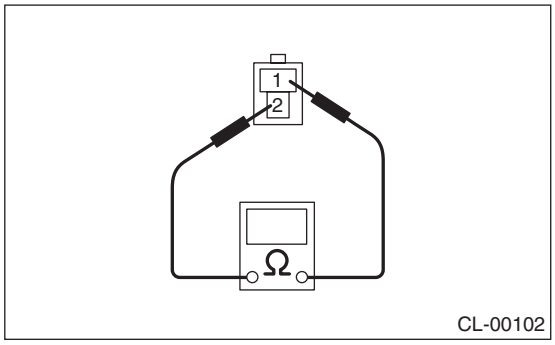

Clutch switch (Cruise control)

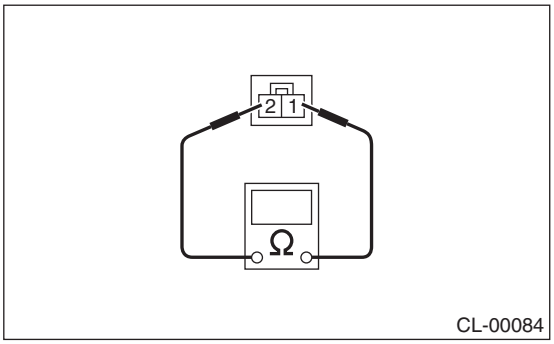

D: ADJUSTMENT

1) Loosen the clutch switch mounting lock nut (Starter interlock).

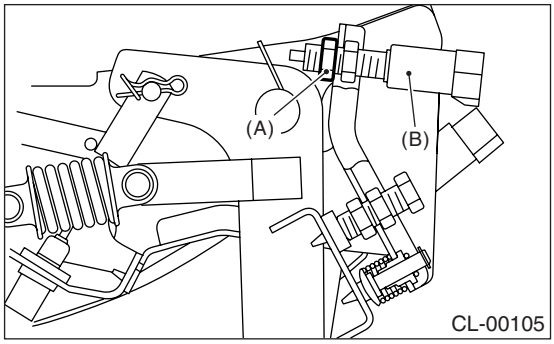

(A) Lock nut
(B) Clutch switch (Starter interlock)

2) Fully depress the clutch pedal.

3) Adjust the clutch pedal plate and clutch switch so that the gap between them is 2 — 2.5 mm (0.08 — 0.10 in).

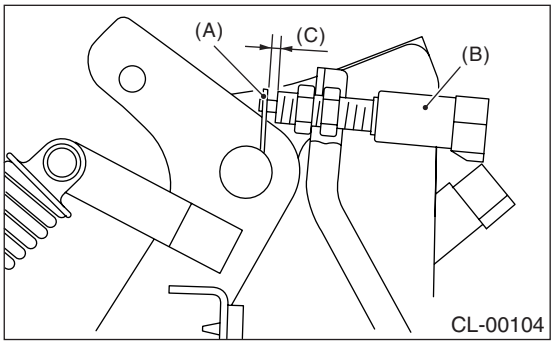

(A) Plate
(B) Clutch switch (Starter interlock)
(C) 2 — 2.5 mm (0.08 — 0.10 in)

4) Tighten the lock nut.

Tightening torque (Clutch stopper nut): 8 N·m (0.8 kgf-m, 5.8 ft-lb)

12.General Diagnostic Table

A: INSPECTION

1. CLUTCH

Symptom	Possible cause	Corrective action
1. Clutch slippage It is hard to perceive clutch slippage in the early stage, but pay attention to the following symptoms. • Engine speeds up when shifting. • High-speed driving is impossible; especially rapid acceleration is impossible and vehicle speed does not increase in proportion to the increase in engine speed. • Power falls, particularly when ascending a slope, and there is a smell of burning of the clutch facing. • Method of testing: Put the vehicle in a stationary condition with parking brake fully applied. Disengage the clutch and shift the transmission gear into the 1st. Gradually allow the clutch to engage while gradually increasing the engine speed. The clutch function is satisfactory if the engine stalls. However, the clutch is slipping if the vehicle does not start off and the engine does not stall.	(a) Clutch facing smeared by oil	Replace.
	(b) Worn clutch facing	Replace.
	(c) Deteriorated diaphragm spring	Replace.
	(d) Distorted pressure plate or flywheel	Rectify or replace.
	(e) Defective release bearing holder	Rectify or replace.
2. Clutch drags. As a symptom of this trouble, a harsh scratching noise develops and control becomes quite difficult when shifting gears. The symptom becomes more apparent when shifting into the 1st gear. However, because much trouble of this sort is due to defective synchronization mechanism, carry out the following tests. • Method of testing: <Ref. to CL-28, DIAGNOSTIC DIAGRAM OF CLUTCH DRAG, INSPECTION, General Diagnostic Table.> It may be judged as insufficient disengagement of clutch if any noise occurs during this test.	(a) Worn or rusty clutch disc hub spline	Replace clutch disc.
	(b) Excessive deflection of clutch disc facing	Rectify or replace.
	(c) Stick of crankshaft pilot needle bearing	Replace.
	(d) Cracked clutch disc facing	Replace.
	(e) Stuck clutch disc (smeared by oil or water)	Replace.
3. Clutch chatters. Clutch chattering is an unpleasant vibration to the whole body when the vehicle is just started with clutch partially engaged.	(a) Adhesion of oil on the facing	Replace clutch disc.
	(b) Weak or broken damper spring	Replace clutch disc.
	(c) Defective facing contact or excessively worn disc	Replace the defective clutch disc.
	(d) Warped pressure plate or flywheel	Rectify or replace.
	(e) Loose disc rivets	Replace clutch disc.
	(f) Loose engine mounting	Retighten or replace mounting.
	(g) Improper adjustment of pitching stopper	Adjustment.
4. Noisy clutch Examine whether the noise is generated when the clutch is disengaged, engaged, or partially engaged.	(a) Broken, worn or unlubricated release bearing	Replace the release bearing.
	(b) Insufficient lubrication of pilot bearing	Replace the pilot bearing.
	(c) Loose clutch disc hub	Replace clutch disc.
	(d) Loose damper spring retainer	Replace clutch disc.
	(e) Deteriorated or broken damper spring	Replace clutch disc.

Symptom	Possible cause	Corrective action
5. Clutch grabs. When starting the vehicle with the clutch partially engaged, the clutch grabs suddenly and the vehicle jumps instead of making a smooth start.	(a) Grease or oil on facing	Replace clutch disc.
	(b) Deteriorated cushioning spring	Replace clutch disc.
	(c) Worn or rusted spline of clutch disc or main shaft	Take off rust, apply grease or replace clutch disc or main shaft.
	(d) Deteriorated or broken damper spring	Replace clutch disc.
	(e) Loose engine mounting	Retighten or replace mounting.
	(f) Deteriorated diaphragm spring	Replace.

2. CLUTCH PEDAL

Trouble	Corrective action
Insufficient pedal play	Adjust pedal free play.
Insufficient clutch pedal free play	Adjust pedal free play.
Excessively worn and damaged pedal shaft and/or bushing	Replace the bushing and/or shaft with a new one.

3. DIAGNOSTIC DIAGRAM OF CLUTCH DRAG

	Step	Check	Yes	No
1	**CHECK GEAR NOISE.** 1) Start the engine. 2) Disengage the clutch and shift quickly from neutral to reverse in idling condition.	Is there any abnormal noise from the transmission gear?	Go to step **2.**	Clutch is normal.
2	**CHECK GEAR NOISE.** Disengage the clutch at idle and shift from neutral to reverse within 0.5 — 1.0 seconds.	Is there any abnormal noise from the transmission gear?	Go to step **3.**	For defective transmission or excessive clutch drag torque; inspect the pilot bearing, clutch disc, transmission and clutch disc hub spline.
3	**CHECK GEAR NOISE.** 1) Disengage the clutch at idle and shift from neutral to reverse within 0.5 — 1.0 seconds. 2) With the clutch disengaged, shift from neutral to reverse, reverse to neutral several times.	Is there any abnormal noise from the transmission gear?	Defect in clutch disengaging. Inspect clutch disc, clutch cover, clutch release and clutch pedal free play.	Clutch and flywheel seizure. Inspect clutch disc, spline of clutch disc hub.

CHASSIS SECTION

This service manual has been prepared to provide SUBARU service personnel with the necessary information and data for the correct maintenance and repair of SUBARU vehicles.
This manual includes the procedures for maintenance, disassembling, reassembling, inspection and adjustment of components and diagnostics for guidance of experienced mechanics.
Please peruse and utilize this manual fully to ensure complete repair work for satisfying our customers by keeping their vehicle in optimum condition. When replacement of parts during repair work is needed, be sure to use SUBARU genuine parts.

All information, illustration and specifications contained in this manual are based on the latest product information available at the time of publication approval.

FRONT SUSPENSION	FS
REAR SUSPENSION	RS
WHEEL AND TIRE SYSTEM	WT
TIRE PRESSURE MONITORING SYSTEM (DIAGNOSTICS)	TPM(diag)
DIFFERENTIALS	DI
TRANSFER CASE	TC
DRIVE SHAFT SYSTEM	DS
ABS	ABS
ABS (DIAGNOSTICS)	ABS(diag)
VEHICLE DYNAMICS CONTROL (VDC)	VDC
VEHICLE DYNAMICS CONTROL (VDC) (DIAGNOSTICS)	VDC(diag)
BRAKE	BR
PARKING BRAKE	PB
POWER ASSISTED SYSTEM (POWER STEERING)	PS

FRONT SUSPENSION

FS

		Page
1.	General Description	2
2.	Wheel Alignment	7
3.	Front Crossmember Support Plate	14
4.	Front Stabilizer	15
5.	Front Ball Joint	16
6.	Front Arm	18
7.	Front Strut	21
8.	Front Crossmember	25
9.	General Diagnostic Table	26

1. General Description

A: SPECIFICATION

	Model		Sedan			Wagon		
			2.5 i	2.5 GT	OUTBACK	2.5 i	2.5 GT	OUTBACK
Front	Wheel arch height [Tolerance: $^{+12\ mm}_{-24\ mm}$ ($^{+0.47\ in}_{-0.94\ in}$)] mm (in)		381 (15.0)		439 (17.3)	381 (15.0)		439 (17.3)
	Camber (Tolerance: ±0°45′ Differences between RH and LH: 45′ or less)		−0°15′		0°40′	−0°15′		0°40′
	Caster (Referential Value)		5°55′		4°55′	5°40′		4°55′
	Steering angle (Tolerance: ±1.5°)	Inner wheel	37.2°		38.0°	37.2°		38.0°
		Outer wheel	33.0°		33.7°	33.0°		33.7°
	Toe-in mm (in)		0±3 (0±0.12) Toe angle (sum of both wheels): 0°±0°15′					
	Kingpin angle (Referential Value)		13°45′		12°05′	13°45′		12°05′
	Diameter of stabilizer mm (in)		20 (0.79)	21 (0.83)		20 (0.79)	21 (0.83)	
Rear	Wheel arch height [Tolerance: $^{+12\ mm}_{-24\ mm}$ ($^{+0.47\ in}_{-0.94\ in}$)] mm (in)		365 (14.4)		438 (17.2)	375 (14.8)		438 (17.2)
	Camber (Tolerance: ±0°45′ Differences between RH and LH: 45′ or less)		−0°40′		−0°10′	−0°30′		−0°10′
	Toe-in mm (in)		*2		*1	*2		*1
	Thrust angle (Tolerance: ±0°30′)		0°					
	Diameter of stabilizer mm (in)		15 (0.59)	16 (0.63)	15 (0.59)		16 (0.63)	15 (0.59)

*1: OUTBACK model
–3 — 0 mm (–0.12 — 0 in) Toe angle (sum of both wheels): –0°15′ — 0°

*2: Except for OUTBACK model
0±3 mm (0±0.12 in) Toe angle (sum of both wheels): 0°±0°15′

NOTE:
• Front and rear toe-ins and front camber can be adjusted. If the toe-in or camber tolerance exceeds specifications, adjust them.
• Other items indicated in the specification table cannot be adjusted. If those items exceed specifications, check suspension parts and connections for deformities; replace with new ones as required.

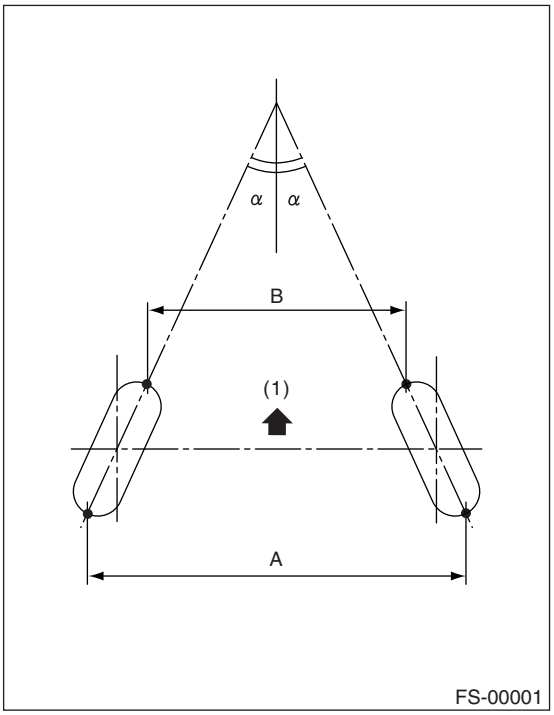

(1) Front
A – B = Positive: Toe-in, Negative: Toe-out
α = Each toe angle

B: COMPONENT

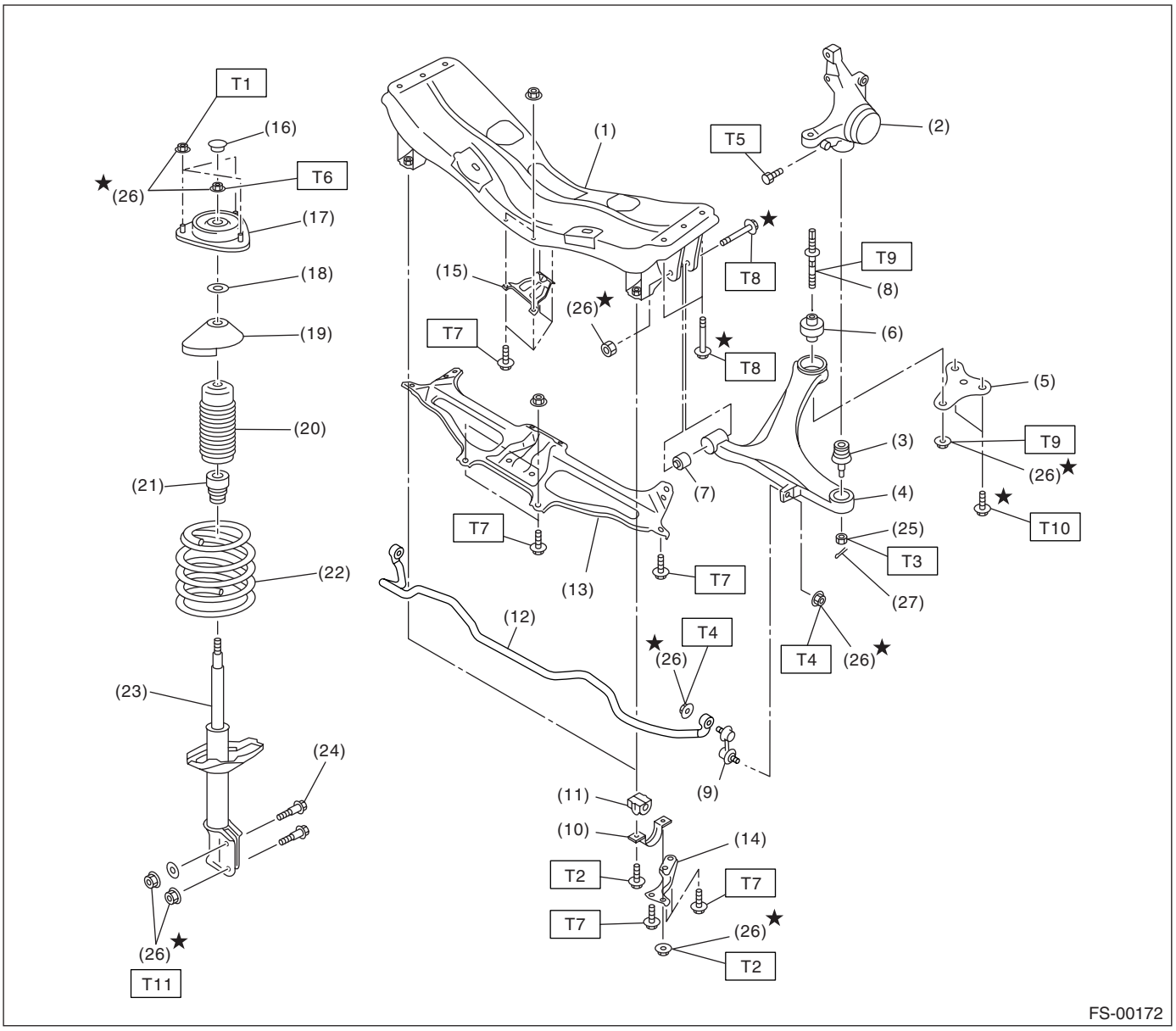

(1) Front crossmember
(2) Housing
(3) Ball joint
(4) Front arm
(5) Support plate
(6) Rear bushing
(7) Front bushing
(8) Stud bolt
(9) Stabilizer link
(10) Bracket
(11) Bushing
(12) Stabilizer
(13) Crossmember support plate (Large type)
(14) Crossmember support plate (Small type)
(15) Jack-up plate
(16) Dust seal
(17) Strut mount
(18) Spacer
(19) Upper spring seat
(20) Dust cover
(21) Helper
(22) Coil spring
(23) Damper strut
(24) Adjusting bolt
(25) Castle nut
(26) Self-locking nut
(27) Cotter pin

Tightening torque: N·m (kgf-m, ft-lb)

T1: 20 (2.0, 14.5)
T2: 25 (2.5, 18.1)
T3: 39 (4.0, 28.8)
T4: 45 (4.6, 33.2)
T5: 50 (5.1, 36.9)
T6: 55 (5.6, 41)
T7: 60 (6.1, 44.3)
T8: 95 (9.7, 70.1)
T9: 110 (11.2, 81.1)
T10: 150 (15.3, 110.6)
T11: 152 (15.5, 112.1)

C: CAUTION

• Wear work clothing, including a cap, protective goggles and protective shoes during operation.
• Before removal, installation or disassembly, be sure to clarify the failure. Avoid unnecessary removal, installation, disassembly and replacement.
• Use SUBARU genuine grease or the equivalent. Do not mix grease, etc. with that of another grade or from other manufacturers.
• Before securing a part on a vice, place cushioning material such as wood blocks, aluminum plate, or cloth between the part and the vice.
• Be sure to tighten fasteners including bolts and nuts to the specified torque.
• Place shop jacks or rigid racks at the specified points.

D: PREPARATION TOOL

1. SPECIAL TOOL

ILLUSTRATION	TOOL NUMBER	DESCRIPTION	REMARKS
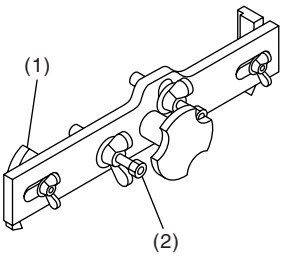 ST-927380002	927380002	ADAPTER	Used as an adapter for camber & caster gauge when measuring camber and caster. (1) 28199AC000 PLATE (2) 28199AC010 BOLT
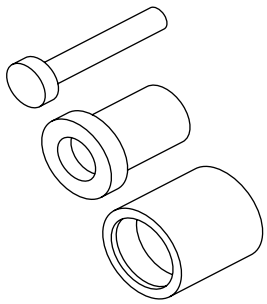 ST-927680000	927680000	INSTALLER & REMOVER SET	Used for replacing the front arm front bushing.
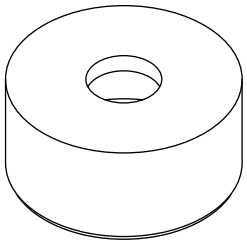 ST20299AG000	20299AG000 (Newly adopted tool)	REMOVER	Used for replacing the front arm rear bushing. Used with BASE (20999AG010).

ILLUSTRATION	TOOL NUMBER	DESCRIPTION	REMARKS
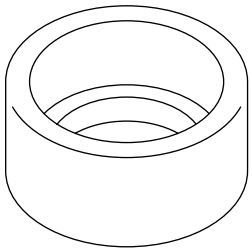 ST20299AG010	20299AG010 (Newly adopted tool)	BASE	Used for replacing the front arm rear bushing. Used with REMOVER (20999AG000).
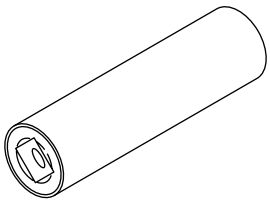 ST20299AG020	20299AG020 (Newly adopted tool)	STUD BOLT SOCKET	Used for removing and installing the stud bolt for front arm installing portion.
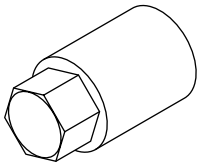 ST20399AG000	20399AG000 (Newly adopted tool)	STRUT MOUNT SOCKET	Used for disassembling and assembling the strut mount.

2. GENERAL TOOL

TOOL NAME	REMARKS
Alignment gauge	Used for wheel alignment measurement.
Turning radius gauge	Used for wheel alignment measurement.
Toe-in gauge	Used for toe-in measurement.
Dial gauge	Used for damper strut measurement.
Coil spring compressor	Used for strut assembly/disassembly.

2. Wheel Alignment

A: INSPECTION

Check the following items before taking wheel alignment measurement.
Check items before taking wheel alignment measurement:

- Tire inflation pressure
- Unbalanced right and left tire wear, size difference
- Tire runout
- Excessive play and wear in ball joint
- Excessive play and wear in tie rod end
- Excessive play in wheel bearing
- Right and left wheel base imbalance
- Deformation and excessive play in steering link
- Deformation and excessive play in suspension parts

Check, adjust and measure the wheel alignment in accordance with the procedures indicated in the figure.

Wheel arch height (front and rear wheels) <Ref. to FS-8, WHEEL ARCH HEIGHT, INSPECTION, Wheel Alignment.>
↓
Camber (front and rear wheels) <Ref. to FS-9, CAMBER, INSPECTION, Wheel Alignment.>
↓
Caster (front wheel) <Ref. to FS-10, CASTER, INSPECTION, Wheel Alignment.>
↓
Steering angle <Ref. to FS-10, STEERING ANGLE, INSPECTION, Wheel Alignment.>
↓
Front wheel toe-in <Ref. to FS-11, FRONT WHEEL TOE-IN, INSPECTION, Wheel Alignment.>
↓
Rear wheel toe-in <Ref. to FS-11, REAR WHEEL TOE-IN, INSPECTION, Wheel Alignment.>
↓
Thrust angle <Ref. to FS-12, THRUST ANGLE, INSPECTION, Wheel Alignment.>

1. WHEEL ARCH HEIGHT

1) Park the vehicle on a level surface.
2) Set the vehicle under “curb weight” condition. (Make the luggage compartment empty, install the spare tire, jack and service tools, and top up the fuel tank.)
3) Set the steering wheel in a straight-ahead position, and stabilize the suspensions by moving the vehicle straight more than 5 m (16 ft).
4) Suspend a thread from wheel arch (point “A” in the figure below) to determine the point directly above the center of wheel.
5) Measure the distance between the point “A” and the center of wheel.

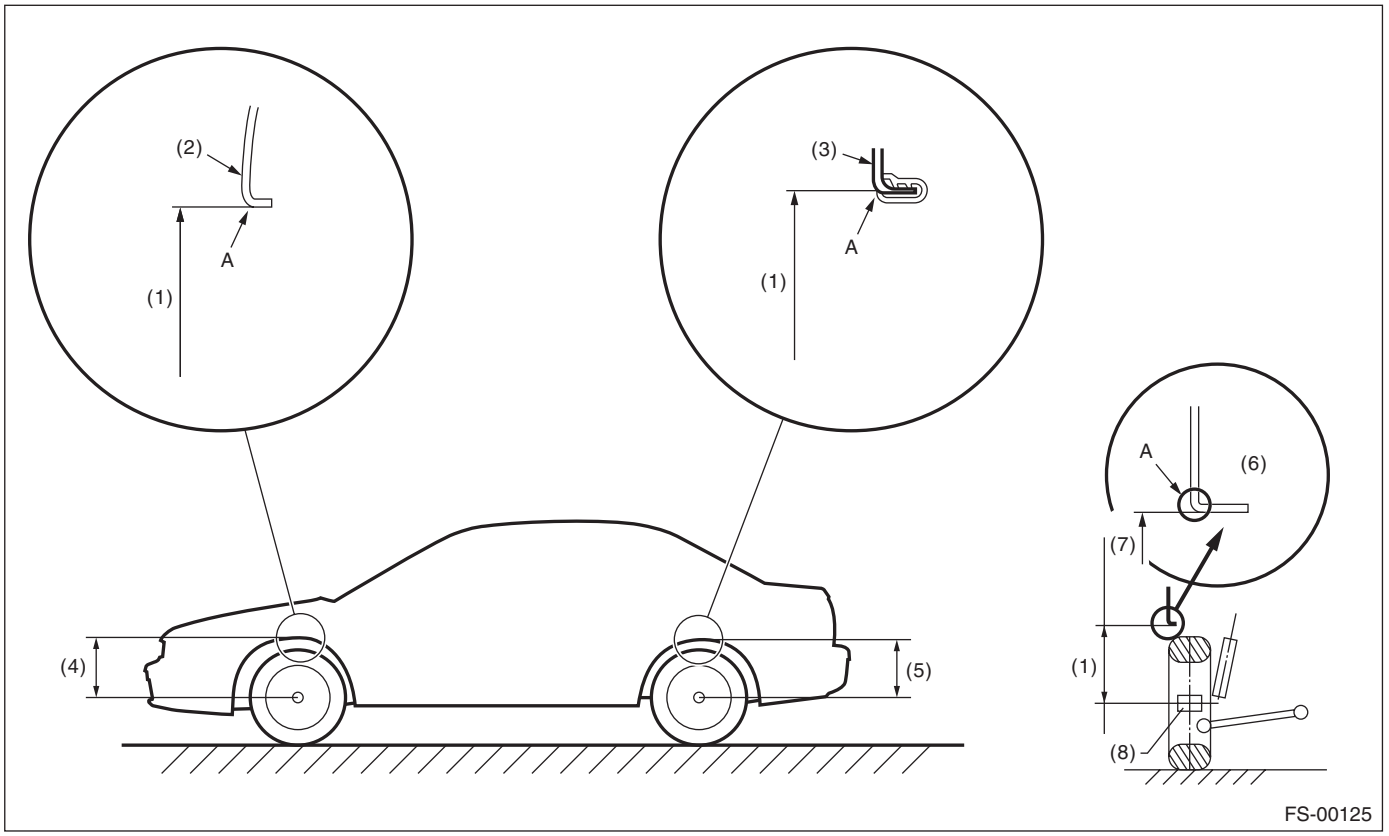

(1) Wheel arch height
(2) Front fender
(3) Rear quarter
(4) Front wheel arch height
(5) Rear wheel arch height
(6) Flange bend line
(7) Point of measurement
(8) Tip end of spindle

Wheel arch height standard value mm (in) (Tolerance: ($^{+12\ mm}_{-24\ mm}$ ($^{+0.47\ in}_{-0.94\ in}$))						
Model	Sedan			Wagon		
	2.5 i	2.5 GT	OUTBACK	2.5 i	2.0 GT	OUTBACK
Front	381 (15.0)		439 (17.3)	381 (15.0)		439 (17.3)
Rear	365 (14.4)		438 (17.2)	375 (14.8)		438 (17.2)

2. CAMBER

• INSPECTION

1) Place the front wheel on turning radius gauge. Make sure the ground contacting surfaces of front and rear wheels are set at the same height.
2) Set the ST into the center of wheel, and then set the wheel alignment gauge.
ST 927380002 ADAPTER

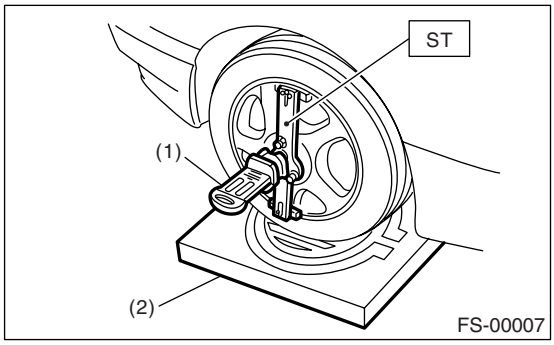

(1) Alignment gauge
(2) Turning radius gauge

3) Measure the camber angle in accordance with the operation manual for wheel alignment gauge.

Model	Camber (Differences between RH and LH: 45′ or less)
2.5 i, 2.5 GT	–0°15′±0°45′
OUTBACK	0°40′±0°45′

• FRONT CAMBER ADJUSTMENT

1) When adjusting the camber, adjust it to the following value.

Model	Camber (Differences between RH and LH: 45′ or less)
2.5 i, 2.5 GT	–0°15′±0°30′
OUTBACK	0°40′±0°30′

2) Loosen the two self-locking nuts located at the lower front portion of strut.

NOTE:
When the adjusting bolt needs to be loosened or tightened, hold its head with a wrench and turn the self-locking nut.

3) Turn the camber adjusting bolt so that the camber is set at specification.

NOTE:
Moving the adjusting bolt by one scale changes the camber by approx. 0°15′.

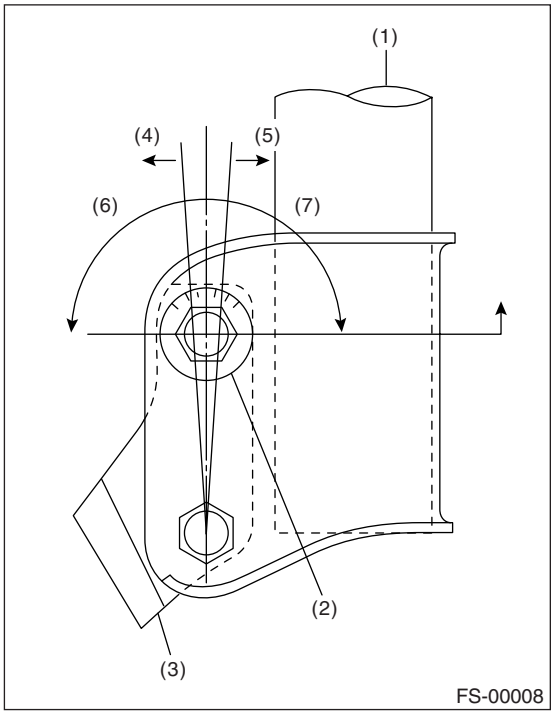

(1) Strut
(2) Adjusting bolt
(3) Housing
(4) Outer
(5) Inner
(6) Camber is increased.
(7) Camber is decreased.

To increase camber:	
Rotate the left side counterclockwise.	Rotate the right side clockwise.
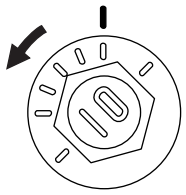 FS-00009	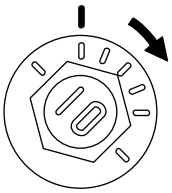 FS-00010

To decrease camber:	
Rotate the left side clockwise.	Rotate the right side counterclockwise.
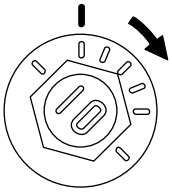 FS-00010	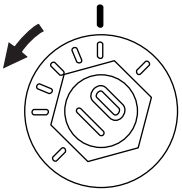 FS-00009

4) Tighten two new self-locking nuts.

Tightening torque:
152 N·m (15.5 kgf-m, 112.1 ft-lb)

3. CASTER

• INSPECTION

1) Place the front wheel on turning radius gauge. Make sure the ground contacting surfaces of front and rear wheels are set at the same height.
2) Set the ST into the center of wheel, and then set the wheel alignment gauge.
ST 927380002 ADAPTER

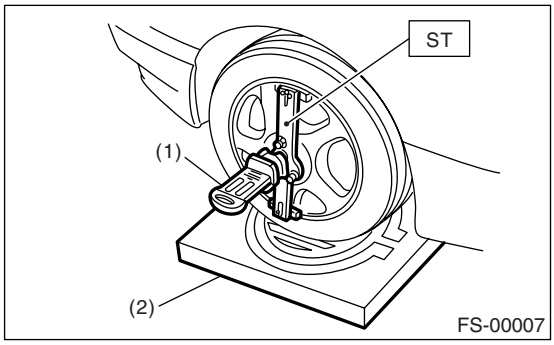

(1) Alignment gauge
(2) Turning radius gauge

3) Measure the caster angle in accordance with the operation manual for wheel alignment gauge.

Model		Caster
Sedan	2.5 i, 2.5 GT	5°55′
	OUTBACK	4°55′
Wagon	2.5 i, 2.5 i. LTD, 2.5 GT	5°40′
	OUTBACK	4°55′

4. STEERING ANGLE

• INSPECTION

1) Place the vehicle on turning radius gauge.
2) While depressing the brake pedal, turn the steering wheel fully to the left and right. With the steering wheel held at each fully turned position, measure both the inner and outer wheel steering angle.

Model	Inner wheel	Outer wheel
OUTBACK	38.0°±1.5°	33.7°±1.5°
2.5 i, 2.5 GT	37.2°±1.5°	33.0°±1.5°

• ADJUSTMENT

1) Turn the tie-rod to adjust the steering angle of both inner and outer wheels.
2) Check the toe-in.

NOTE:
Correct the boot if it is twisted.

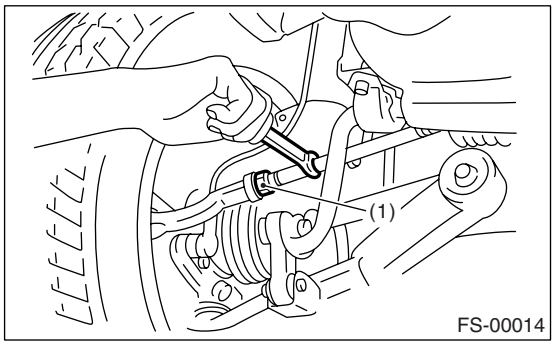

(1) Lock nut

5. FRONT WHEEL TOE-IN

• INSPECTION

Toe-in:
0±3 mm (0±0.12 in)

1) Set the toe-in gauge in the position at wheel axis center height behind the right and left front tires.
2) Measure the distance “A” between the marks which are put on the centers of left and right tires.
3) Move the vehicle forward and rotate the tires 180°.

NOTE:
Be sure to rotate the tires in the forward direction.

4) Measure the distance “B” between the left and right marks. Detect toe-in by the following equation:

A − B = Toe-in

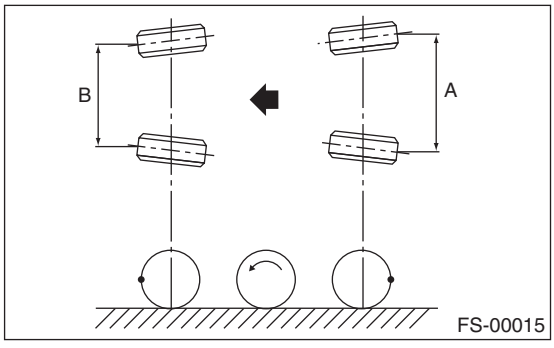

• ADJUSTMENT

When adjusting the toe-in, adjust it to the following value.

Toe-in:
0±2 mm (0±0.08 in)

1) Check that the left and right wheel steering angle is within specifications.
2) Loosen the left and right side steering tie-rod lock nuts.
3) Turn the left and right tie rods equal amounts until the toe-in is at the specification.
Both the left and right tie-rods are right-hand threaded. To increase toe-in, turn both tie-rods clockwise by equal amount (viewing from the inside of vehicle).

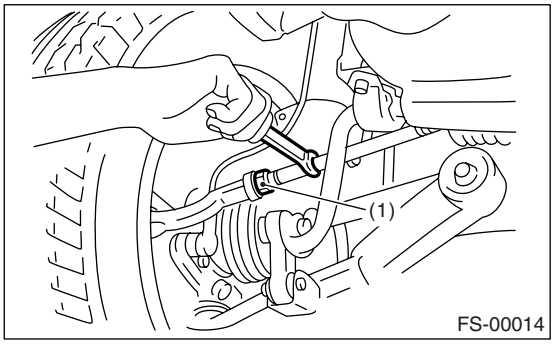

(1) Lock nut

4) Tighten the tie-rod lock nut.

Tightening torque:
85 N·m (8.7 kgf-m, 62.7 ft-lb)

NOTE:
Correct the tie rod boot if it is twisted.

6. REAR WHEEL TOE-IN

• INSPECTION

Toe-in:
OUTBACK model
–3 — 0 mm (–0.12 — 0 in)
Except for OUTBACK model
0±3 mm (0±0.12 in)

Refer to “FRONT WHEEL TOE-IN” for rear toe-in inspection procedure.
<Ref. to FS-11, FRONT WHEEL TOE-IN, INSPECTION, Wheel Alignment.>

• ADJUSTMENT

When adjusting, adjust it to the following value.

Toe-in:
OUTBACK model
–3 — 0 mm (–0.12 — 0 in)
Except for OUTBACK model
0±2 mm (0±0.08 in)

1) Loosen the self-locking nut on the inner side of rear link.

NOTE:
When loosening or tightening the adjusting bolt, hold the bolt head and turn self-locking nut.

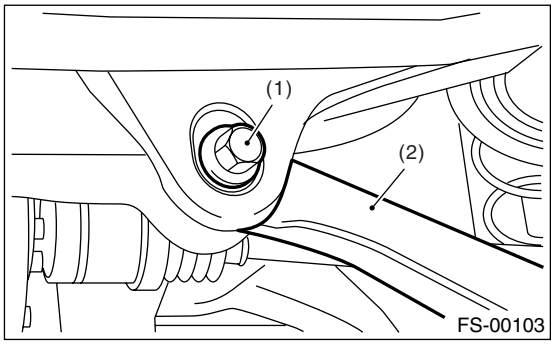

(1) Adjusting bolt
(2) Rear link

2) Turn the adjusting bolt until toe-in is at the specification.

NOTE:
When the left and right wheels are adjusted for toe-in at the same time, the movement of one scale graduation changes toe-in by approx. 0.6 mm (0.02 in).

To increase toe-in:	
Rotate the left side clockwise.	Rotate the right side counterclockwise.
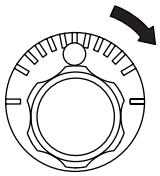 FS-00018	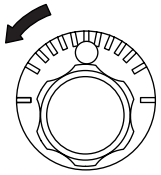 FS-00019

To decrease toe-in:	
Rotate the left side counterclockwise.	Rotate the right side clockwise.
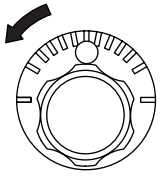 FS-00019	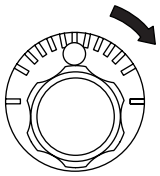 FS-00018

3) Tighten a new self-locking nut.

Tightening torque:
120 N·m (12.2 kgf-m, 88.5 ft-lb)

7. THRUST ANGLE

• INSPECTION

1) Park the vehicle on a level surface.
2) Move the vehicle 3 to 4 meters (10 to 13 feet) directly forward.
3) Draw the center of loci of both the front and rear axles.
4) Measure the distance “L” between center lines of the loci of axles.

Thrust angle:
0°±30′
Less than 30′ when "L" is less than 23 mm (0.9 in).

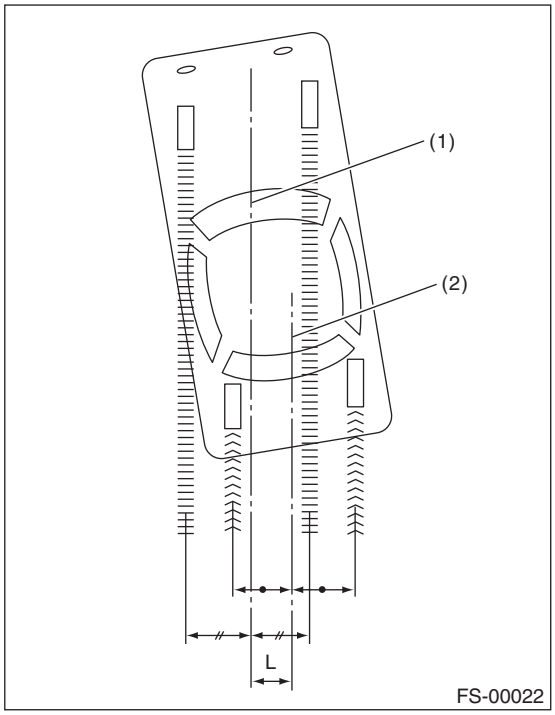

(1) Center line of loci (front axle)
(2) Center line of loci (rear axle)

• ADJUSTMENT

When adjusting, adjust it to the following value.

Thrust angle:
0°±20′
Less than 20′ when "L" is less than 15 mm (0.6 in).

1) Make the thrust angle adjustments by turning the toe-in adjusting bolts of rear suspension equally in the same direction.
2) When one rear wheel is adjusted in a toe-in direction, adjust the other rear wheel equally in toe-out direction, in order to make the thrust angle adjustment.
3) When the left and right adjusting bolts are turned by one graduation, the thrust angle will change approx. 17′ ["L" is approx. 13 mm (0.51 in)].

NOTE:
Thrust angle refers to a mean value of left and right rear wheel toe angles in relation to the vehicle body center line. Vehicle is driven straight in the thrust angle direction while slanting in the oblique direction depending on the degree of the mean thrust angle.

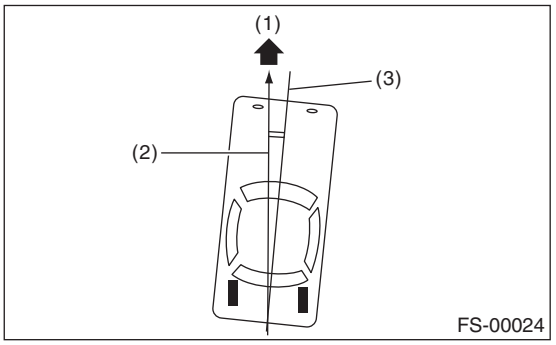

(1) Front
(2) Thrust angle
(3) Body center line

Thrust angle: r = ($\alpha - \beta$)/2
α: Rear RH wheel toe-in angle
β: Rear LH wheel toe-in angle
Use only positive toe-in values from each wheel to substitute for α and β in the equation.

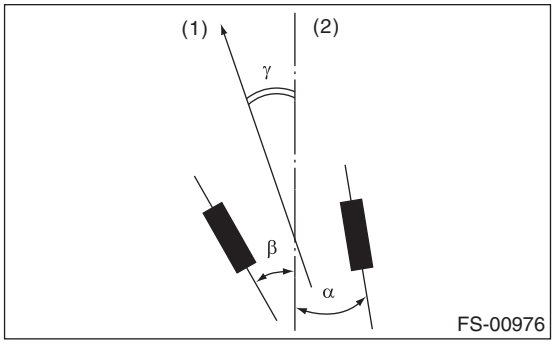

(1) Front
(2) Body center line

3. Front Crossmember Support Plate

A: REMOVAL

1) Lift-up the vehicle.
2) Remove the front under cover. <Ref. to EI-26, REMOVAL, Front Under Cover.>
3) Remove the bolt and remove front crossmember support plate.

- Large type

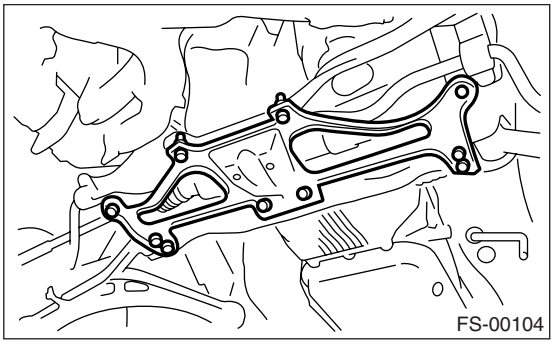

- Small type

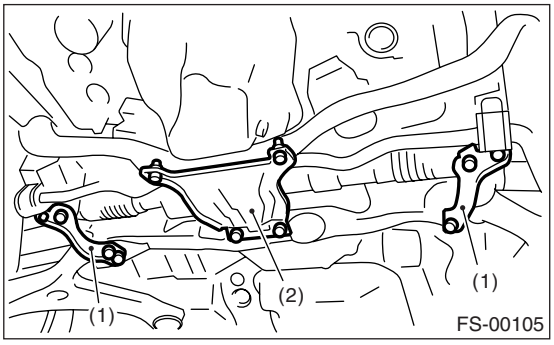

(1) Crossmember support plate
(2) Jack-up plate

B: INSTALLATION

Install in the reverse order of removal.

NOTE:
Tighten the small type crossmember support plate together with stabilizer bracket.
After installing the stabilizer bracket to crossmember, tighten the crossmember support plate together.

Tightening torque:
Crossmember support plate:
60 N·m (6.1 kgf-m, 44.3 ft-lb)
Crossmember support plate (Joint tightening portion of stabilizer bracket):
25 N·m (2.5 kgf-m, 18.1 ft-lb)
Jack-up plate:
60 N·m (6.1 kgf-m, 44.3 ft-lb)

4. Front Stabilizer

A: REMOVAL

1) Lift-up the vehicle, and then remove the front wheels.
2) Remove the front under cover. <Ref. to EI-26, REMOVAL, Front Under Cover.>
3) Remove the front crossmember support plate. <Ref. to FS-14, REMOVAL, Front Crossmember Support Plate.>
4) Remove the stabilizer link.

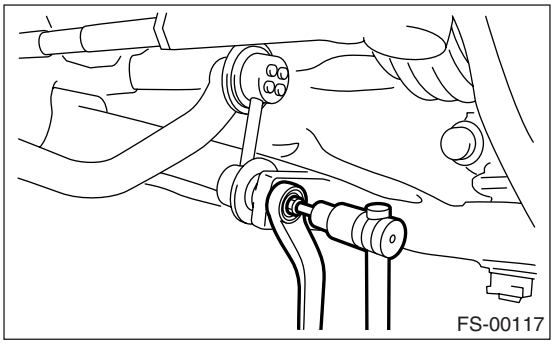

5) Remove the stabilizer bracket.

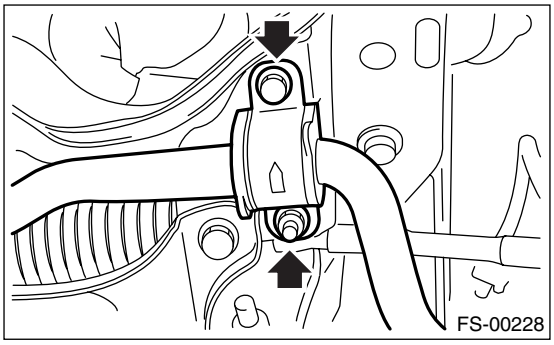

B: INSTALLATION

Install in the reverse order of removal.

NOTE:
- Use a new self-locking nut.
- Ensure that the stabilizer bushing and stabilizer have the same identification colors.
- Install the stabilizer bushing (front crossmember side) while aligning it with the paint mark on stabilizer.
- Stabilizer bracket has an orientation, so install it with the arrow mark faced to the front side of vehicle.

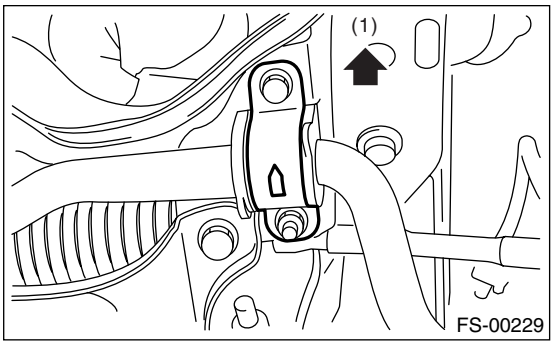

(1) Front side of vehicle

Tightening torque:
Stabilizer link
45 N·m (4.6 kgf-m, 33.2 ft-lb)
Stabilizer bracket
25 N·m (2.5 kgf-m, 18.1 ft-lb)

C: INSPECTION

1) Check the bushing for crack, fatigue or damage.
2) Check the stabilizer link for damage.

5. Front Ball Joint

A: REMOVAL

1) Lift-up the vehicle and remove the front wheels.
2) Remove the both sides of stabilizer bracket.

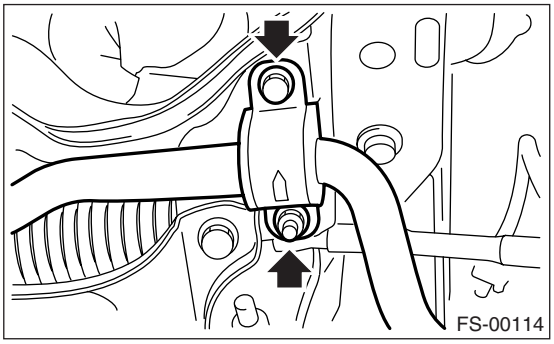

3) Pull out the pin from ball stud, remove the castle nut, and extract the ball stud from front arm.
4) Remove the bolt installing ball joint to housing.

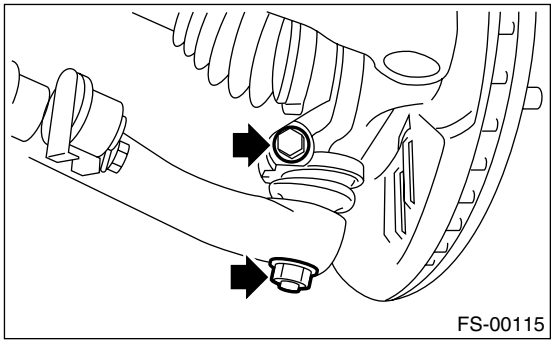

5) Extract the ball joint from housing.

B: INSTALLATION

1) Insert the ball joint into housing.

Tightening torque (Bolt):
50 N·m (5.1 kgf-m, 36.9 ft-lb)

CAUTION:
Do not apply grease to the tapered portion of ball stud.

2) Install the ball joint into front arm.

Tightening torque (Castle nut)
Front arm:
39 N·m (4.0 kgf-m, 28.8 ft-lb)

3) Retighten the castle nut further within 60° until the hole in ball stud is aligned with a slot in castle nut. Then, insert a new cotter pin and bend it around castle nut.
4) Install the stabilizer bracket.

NOTE:
Stabilizer bracket has an orientation, so install it with the arrow mark faced to the front side of vehicle.

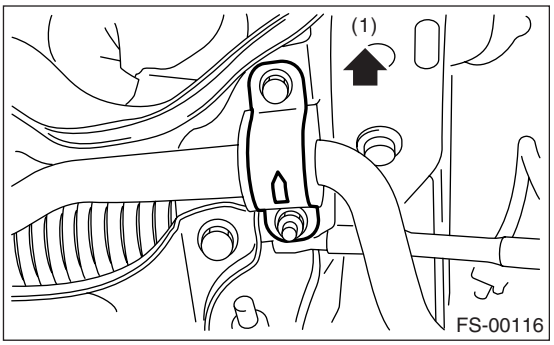

(1) Front side of vehicle

Tightening torque:
25 N·m (2.5 kgf-m, 18.1 ft-lb)

5) Install the front wheels.

C: INSPECTION

1) Measure the play of ball joint by the following procedures. Replace with a new one when the play exceeds specified value.
(1) With 686 N (70 kgf, 154 lb) loaded in direction shown in the figure, measure the dimension ℓ_1.

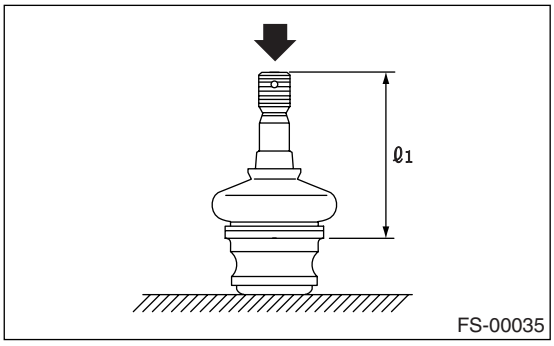

(2) With 686 N (70 kgf, 154 lb) loaded in direction shown in the figure, measure the dimension ℓ_2.

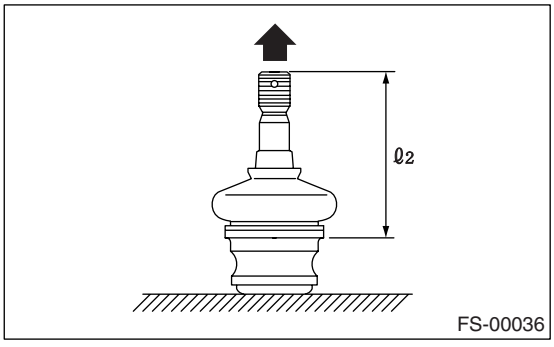

(3) Determine the plays from the following formula. $S = \ell_2 - \ell_1$

(4) Replace with a new one when the play exceeds specified value.

FRONT BALL JOINT
Specified play for replacement S:
Less than 0.3 mm (0.012 in)

2) When the play is within specified value, visually check the dust cover.
3) Remove the ball joint and cover, check them for wear, damage or cracks, and then replace them if any defective part is found.
4) If the dust cover is damaged, replace with a new ball joint.

6. Front Arm

A: REMOVAL

1) Lift-up the vehicle, and then remove the front wheels.
2) Remove the front crossmember support plate. <Ref. to FS-14, REMOVAL, Front Crossmember Support Plate.>
3) Remove the front stabilizer. <Ref. to FS-15, REMOVAL, Front Stabilizer.>
4) Remove the ball joint of front arm.

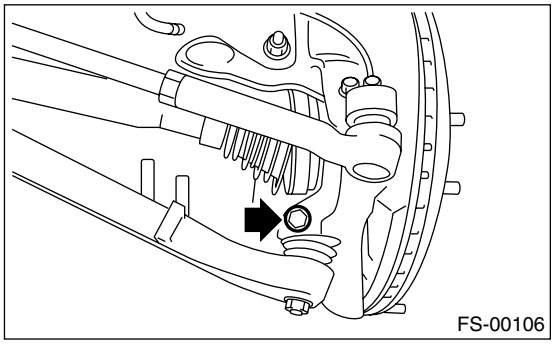
FS-00106

5) Remove the nut securing the front arm to crossmember. (Do not remove the bolt.)

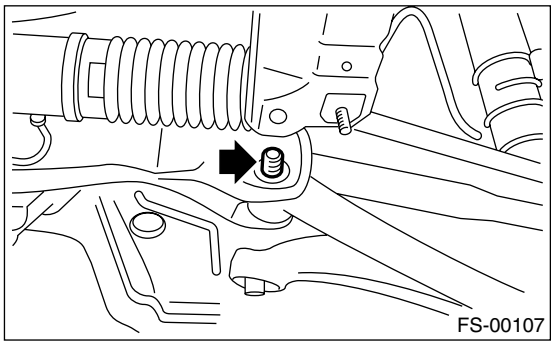
FS-00107

6) Remove the front arm support plate.

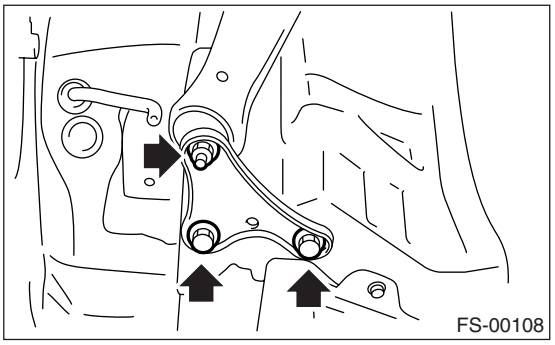
FS-00108

7) Remove the bolt securing the front arm to crossmember and extract the front arm from crossmember.
8) To remove the stud bolt, use ST.
ST 20299AG020 STUD BOLT SOCKET

CAUTION:
Do not remove the stud bolt without necessity. Always replace the parts with new ones when removed.

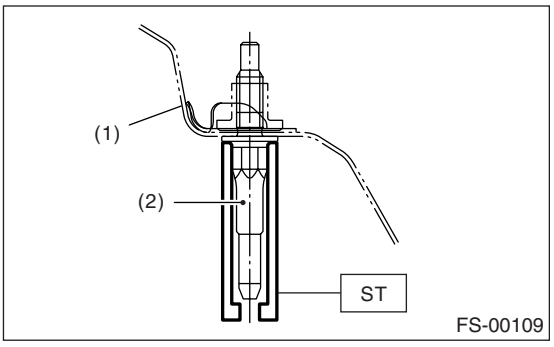

(1) Vehicle body
(2) Stud bolt

B: INSTALLATION

1) Using the ST, install the stud bolt.
ST 20299AG020 STUD BOLT SOCKET

Tightening torque:
110 N·m (11.2 kgf-m, 81.1 ft-lb)

2) Using new bolts and self-locking nuts, temporarily tighten the front arm to crossmember.
3) Secure the front arm to body, and then install the support plate with new bolts and self-locking nuts.

Tightening torque:
Support plate to Front arm:
110 N·m (11.2 kgf-m, 81.1 ft-lb)
Support plate to Body:
150 N·m (15.3 kgf-m, 110.6 ft-lb)

4) Install the ball joint into housing.

Tightening torque:
50 N·m (5.1 kgf-m, 36.9 ft-lb)

5) Install the stabilizer. <Ref. to FS-15, INSTALLATION, Front Stabilizer.>
6) Lower the vehicle from the lift, and tighten the bolt which secures the front arm to crossmember at the state that wheels are in full contact with the ground and the vehicle is curb weight.

Tightening torque:
95 N·m (9.7 kgf-m, 70.1 ft-lb)

NOTE:
Inspect the wheel alignment and adjust if necessary.

C: DISASSEMBLY

1. FRONT BUSHING

Using the ST and a press, remove the front bushing.

ST 927680000 INSTALLER & REMOVER SET

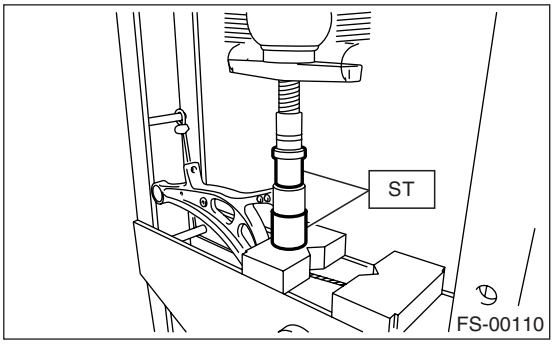

2. REAR BUSHING

1) Scribe an aligning mark on the front arm based on the center of rear bushing recess portion.

CAUTION:
Always put an alignment mark for aligning the position on bushing installation.

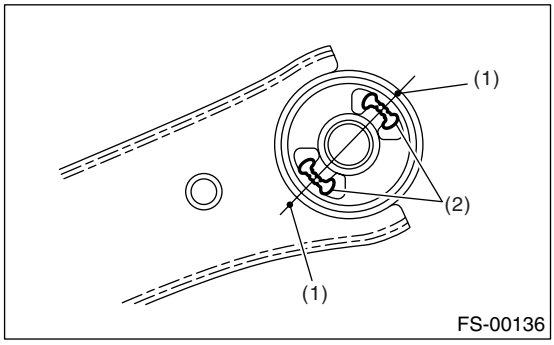

(1) Put an alignment mark.
(2) Recess portion

2) Using the ST and a press, remove the rear bushing.
ST1 20299AG000 REMOVER
ST2 20299AG010 BASE

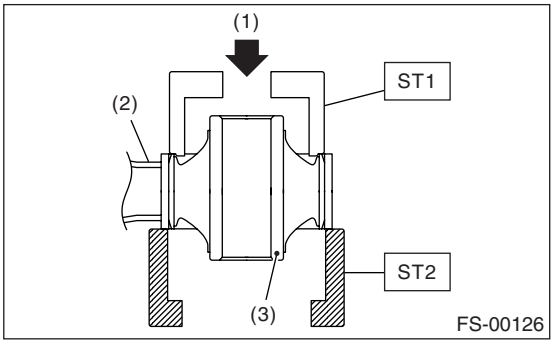

(1) Press
(2) Front arm
(3) Rear bushing

D: ASSEMBLY

1. FRONT BUSHING

Assemble in the reverse order of disassembly.

CAUTION:
Install the front bushing in proper direction as shown in the figure.

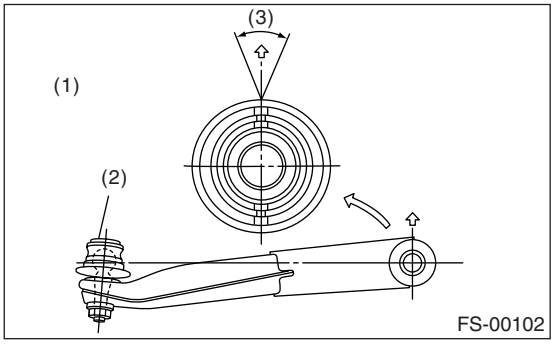

(1) Face the bushing toward the center of ball joint.
(2) Ball joint
(3) ±3°

2. REAR BUSHING

1) Install the rear bushing with its longer inner cylinder faced upward and its shorter one faced downward and protruding part rearward as shown in the figure.

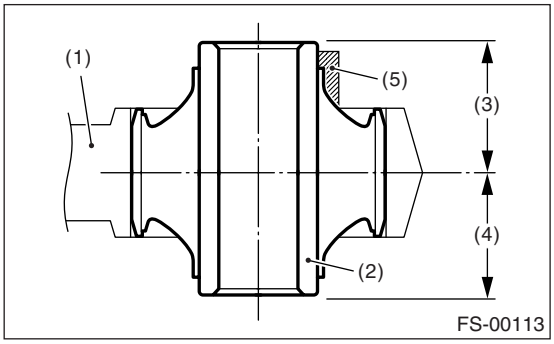

(1) Front arm
(2) Bushing inner cylinder
(3) Longer
(4) Shorter
(5) Protrusion portion

2) Align the center of rear bushing recess portion with the aligning mark on the front arm.

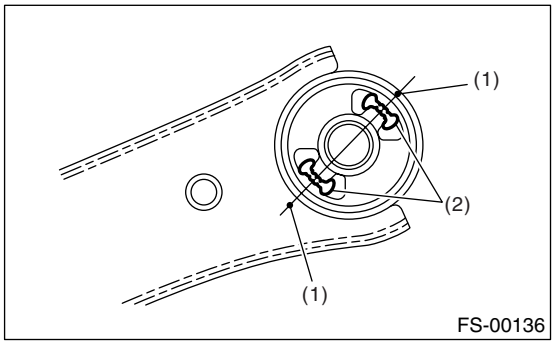

(1) Alignment mark
(2) Recess portion

3) Using the ST and a press, install the rear bushing.
ST1 20299AG000 REMOVER
ST2 20299AG010 BASE

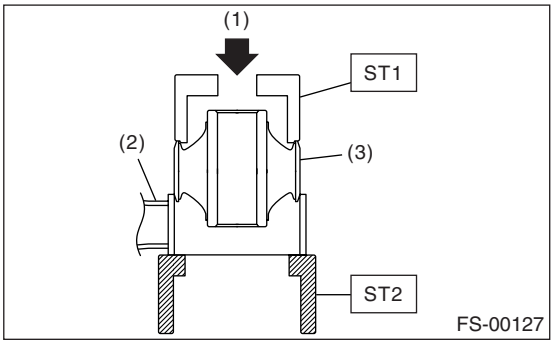

(1) Press
(2) Front arm
(3) Rear bushing

E: INSPECTION

1) Check the front arm for wear, damage or cracks, and correct or replace if defective.
2) Check the bushing for crack, fatigue or damage.

7. Front Strut

A: REMOVAL

1) Lift-up the vehicle, and then remove the front wheels.
2) Scribe an alignment mark on the camber adjusting bolt and strut.
3) Remove the bolt securing brake hose from strut.

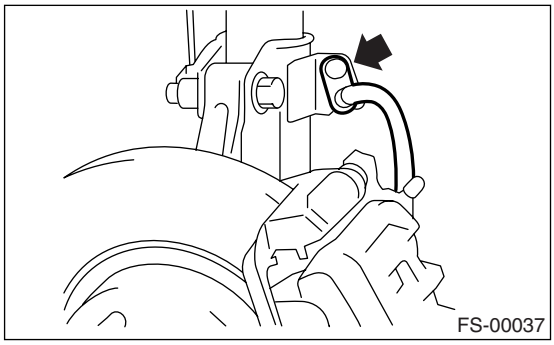

4) Remove the bolt securing ABS wheel speed sensor harness.

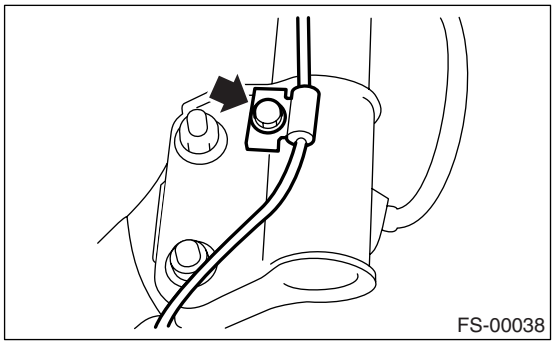

5) Remove the two bolts securing housing to strut.

NOTE:
While holding the head of adjusting bolt, loosen the self-locking nut.

6) Remove the three nuts securing strut mount to body.

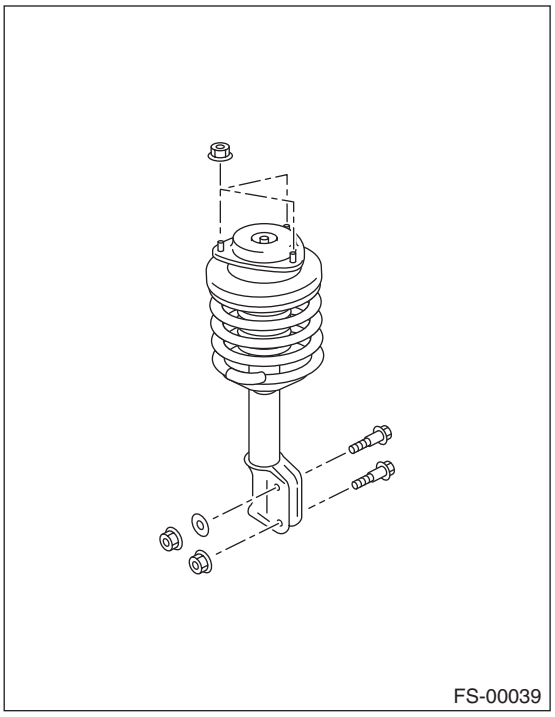

B: INSTALLATION

1) Install the strut mount at the upper side of strut to body, and tighten it with new self-locking nuts.

Tightening torque:
20 N·m (2.0 kgf-m, 14.5 ft-lb)

2) Align alignment marks on the camber adjusting bolt and strut.
Using new self-locking nuts, install the strut to housing.

NOTE:
While holding the head of adjusting bolt, tighten the self-locking nut.

Tightening torque:
152 N·m (15.5 kgf-m, 112.1 ft-lb)

3) Secure the ABS wheel speed sensor harness to strut.

Tightening torque:
33 N·m (3.4 kgf-m, 24.3 ft-lb)

4) Install the bolts which secure the brake hose to strut.

Tightening torque:
33 N·m (3.4 kgf-m, 24.3 ft-lb)

5) Install the front wheels.

NOTE:
Inspect the wheel alignment and adjust if necessary.

C: DISASSEMBLY

1) Using a coil spring compressor, compress the coil spring.

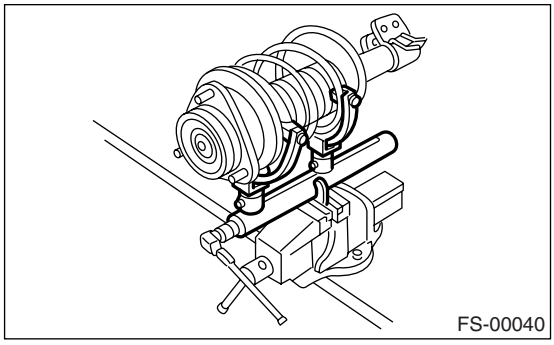

2) Using the ST, remove the self-locking nut.
ST 20399AG000 STRUT MOUNT SOCKET

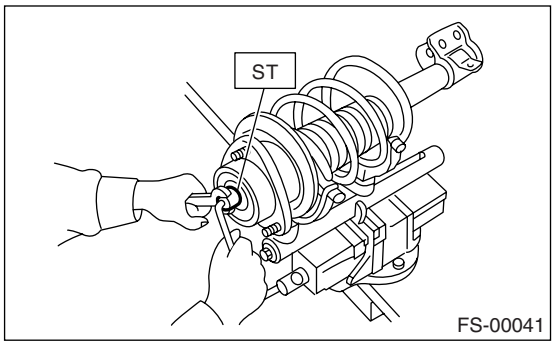

3) Remove the strut mount, spacer and upper spring seat from strut.
4) Gradually decrease the compression force of compressor, and remove the coil spring.
5) Remove the dust cover and helper spring.

D: ASSEMBLY

1) Before installing the coil spring, strut mount, etc. on strut, check for the presence of air in the dampening force generating mechanism of the strut since air prevents proper dampening force production.
2) Check for presence of air
   (1) Place the strut vertically with the piston rod facing up.
   (2) Move the piston rod to the center of its entire stroke.
   (3) While holding the piston rod end with fingertips, move the rod up and down.
   (4) If the piston rod moves at least 10 mm (0.39 in) in the former step, purge air from the strut.
3) Air purging procedure
   (1) Place the strut vertically with the piston rod facing up.
   (2) Fully extend the piston rod.
   (3) With the piston rod fully extended, place the piston rod side down. The strut must stand vertically.
   (4) Fully contract the piston rod.
   (5) Repeat 3 to 4 times from the step (1).

NOTE:
After completely purging air from the strut, be sure to place the strut with the piston rod facing up. If the strut is laid down and set, check for the entry of air in accordance with “Check for presence of air”.

4) Using a coil spring compressor, compress the coil spring.

NOTE:
Make sure that the vertical installing direction of coil spring is as shown in the figure.

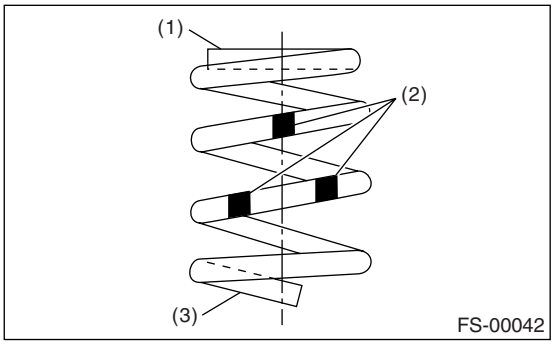

(1) Diameter is small (Upper part)
(2) Identification paint
(3) Diameter is large (Bottom part)

5) Set the coil spring correctly so that its end face fits well into the spring seat as shown in the figure.

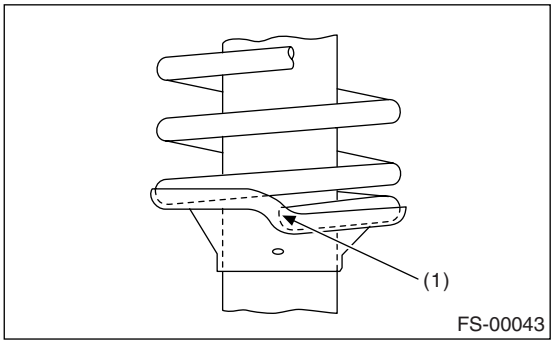

(1) Coil spring end face

6) Install the helper and dust cover to piston rod.
7) Pull the piston rod fully upward, and install the spring seat.

NOTE:
Ensure the upper spring seat is positioned as shown in the figure.

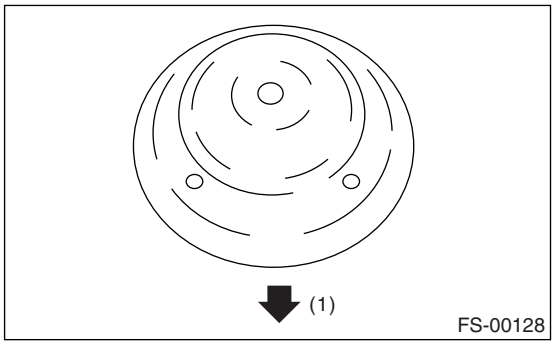

(1) Outside of body

8) Install spacer and the strut mount to piston rod, and tighten a new self-locking nut temporarily.
9) Using a hexagon wrench to prevent strut rod from turning, tighten the new self-locking nut with ST.
ST 20399AG000 STRUT MOUNT SOCKET

Tightening torque:
55 N·m (5.6 kgf-m, 41 ft-lb)

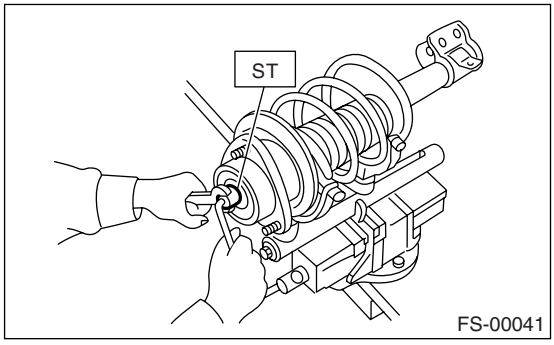

10) Loosen the coil spring carefully.

E: INSPECTION

Check the removed part for wear, damage or cracks, and then repair or replace it if defective.

1. DAMPER STRUT

1) Check for oil leaks.
2) Move the piston rod up and down to check that it operates smoothly without any hitch.
3) Piston rod play

- Measure the play as follows:

Fix the outer shell and fully extend the rod. Set a dial gauge at the end of rod L [10 mm (0.39 in)], and then read the dial gauge indication P_1 while applying a force of W [20 N (2 kgf, 4 lb)] to threaded portion. Apply a force of 20 N (2 kgf, 4 lb) in the opposite direction of “W”, and then read the dial gauge indication P_2.

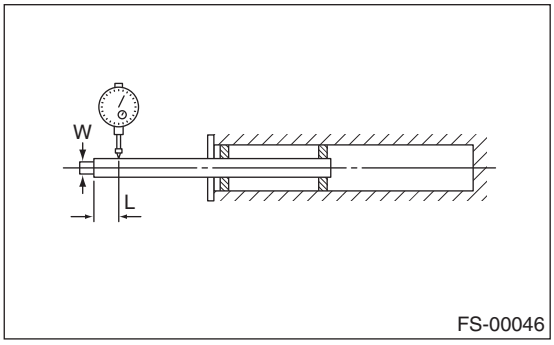

Play limit ($P_1 + P_2$):
0.8 mm (0.031 in)

If the play exceeds limit, replace the strut.

2. STRUT MOUNT

Check the rubber part for deformation, cracks or deterioration, and then replace it with a new one if defective.

3. DUST COVER

If any cracks or damage are found, replace it with a new one.

4. COIL SPRING

If a permanent strain is found, replaced it with a new one.

5. HELPER

Replace it with a new one if cracked or damaged.

F: DISPOSAL

CAUTION:
• Before handling struts, be sure to wear goggles to protect eyes from gas, oil and cutting powder.
• Do not disassemble the strut damper or place into a fire.
• Drill a hole into struts in case of discarding struts filled with gas.

1) Place the strut on a level surface with the piston rod fully expanded.

2) Using a 2 to 3 mm (0.08 to 0.12 in) dia. drill, make holes in areas shown in the figure.

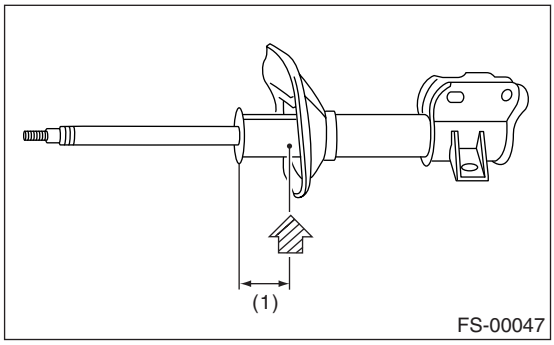

(1) 40 mm (1.57 in)

8. Front Crossmember

A: REMOVAL

1) Lift-up the vehicle, and then remove the front wheels.
2) Remove the front exhaust pipe.
3) Remove the front crossmember support plate. <Ref. to FS-14, REMOVAL, Front Crossmember Support Plate.>
4) Remove the front stabilizer. <Ref. to FS-15, REMOVAL, Front Stabilizer.>
5) Disconnect the tie-rod end from housing.
6) Remove the front arm. <Ref. to FS-18, REMOVAL, Front Arm.>
7) Remove the nuts attaching the engine mount cushion rubber to crossmember.

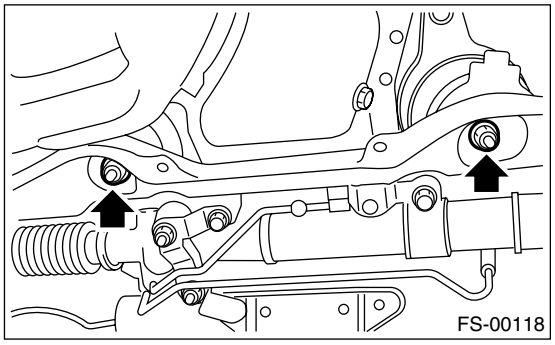
FS-00118

8) Remove the steering universal joint.
9) Disconnect the power steering hose from steering gearbox.
10) Lift the engine approx. 10 mm (0.39 in) using a chain block.
11) Support the crossmember with a jack, remove the bolts securing crossmember to body, and then gradually lower the crossmember with steering gearbox as a unit.

CAUTION:
When removing the crossmember downward, be careful that the tie-rod end does not interfere with drive shaft boot.

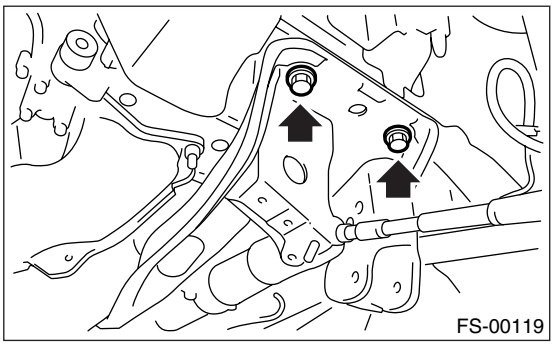
FS-00119

B: INSTALLATION

1) Install in the reverse order of removal.

NOTE:
• Use a new bolt and self-locking nut. For the parts which are not reusable, refer to “COMPONENT”. <Ref. to FS-4, COMPONENT, General Description.>
• Always tighten the bushing in the state that wheels are in full contact with the ground and the vehicle is curb weight.

Tightening torque:
Crossmember to body:
95 N·m (9.7 kgf-m, 70.1 ft-lb)
Engine mounting to crossmember:
85 N·m (8.7 kgf-m, 62.7 ft-lb)
Front arm to Crossmember:
95 N·m (9.7 kgf-m, 70.1 ft-lb)
Front arm to Support plate:
110 N·m (11.2 kgf-m, 81.1 ft-lb)
Support plate to body:
150 N·m (15.3 kgf-m, 110.6 ft-lb)
Tie-rod end to housing:
27.0 N·m (2.75 kgf-m, 19.9 ft-lb)

Retighten the castle nut further within 60° until the hole in ball stud is aligned with a slot in castle nut after tightening in specified torque.
Universal joint:
24 N·m (2.4 kgf-m, 17.4 ft-lb)
Stabilizer bracket:
25 N·m (2.5 kgf-m, 18.1 ft-lb)
Stabilizer link:
45 N·m (4.6 kgf-m, 33.2 ft-lb)
Power steering hose to Steering gearbox:
15 N·m (1.5 kgf-m, 11 ft-lb)

2) Purge air from the power steering system.
3) Inspect the wheel alignment and adjust if necessary.

C: INSPECTION

Check the crossmember for wear, damage or cracks, and then repair or replace if defective.

9. General Diagnostic Table

A: INSPECTION

1. IMPROPER VEHICLE POSTURE OR IMPROPER WHEEL ARCH HEIGHT

Possible cause	Corrective action
(1) Permanent distortion or breakage of coil spring	Replace.
(2) Rough operation of damper strut or shock absorber	Replace.
(3) Installation of wrong strut or shock absorber	Replace with proper parts.
(4) Installation of wrong coil spring	Replace with proper parts.

2. POOR RIDE COMFORT

1) Large rebound shock
2) Rocking of the vehicle continues too long after running over bump and hump
3) Large shock in bumping

Possible cause	Corrective action
(1) Breakage of coil spring	Replace.
(2) Overinflating pressure of tire	Adjust.
(3) Improper wheel arch height	Adjust or replace the coil springs with new ones.
(4) Fault in operation of damper strut or shock absorber	Replace.
(5) Damage or deformation of strut mount or shock absorber mount	Replace.
(6) Unsuitability of maximum or minimum length of damper strut or shock absorber	Replace with proper parts.
(7) Deformation or loss of bushing	Replace.
(8) Deformation or damage of helper in strut assembly or shock absorber	Replace.
(9) Oil leakage of damper strut or shock absorber	Replace.

3. NOISE

Possible cause	Corrective action
(1) Wear or damage of damper strut or shock absorber component parts	Replace.
(2) Loosening of suspension link installing bolt	Tighten to specified torque.
(3) Deformation or loss of bushing	Replace.
(4) Unsuitability of maximum or minimum length of damper strut or shock absorber	Replace with proper parts.
(5) Breakage of coil spring	Replace.
(6) Wear or damage of ball joint	Replace.
(7) Deformation of stabilizer clamp	Replace.

REAR SUSPENSION

RS

		Page
1.	General Description	2
2.	Wheel Alignment	8
3.	Rear Stabilizer	9
4.	Rear Arm	10
5.	Upper Link	14
6.	Rear Shock Absorber	16
7.	Front Link	18
8.	Rear Link	19
9.	Sub Frame Support Arm	21
10.	Sub Frame Support Plate	22
11.	Rear Sub Frame	23
12.	Helper	24
13.	General Diagnostic Table	25

1. General Description

A: SPECIFICATION

Model	Sedan			Wagon		
	2.5 i	2.5 GT	OUTBACK	2.5 i	2.5 GT	OUTBACK
Wheel arch height [Tolerance: $^{+12\,mm}_{-24\,mm}$ mm (in) ($^{+0.47\,in}_{-0.94\,in}$)]	365 (14.4)		438 (17.2)	375 (14.8)		438 (17.2)
Camber (Tolerance: ±0°45′ Differences between RH and LH: 45′ or less)	−0°40′		−0°10′	−0°30′		−0°10′
Toe-in mm (in)	0±3 (0±0.12) Toe angle (sum of both wheels): 0°±0°15′					
Thrust angle (tolerance: ±0°30′)	0°					
Diameter of stabilizer mm (in)	15 (0.59)	16 (0.63)	15 (0.59)	15 (0.59)	16 (0.63)	15 (0.59)

NOTE:
• Front and rear toe-ins and front camber can be adjusted. If the toe-in or camber tolerance exceeds specifications, adjust it.
• Other items indicated in the specification table cannot be adjusted. If other items exceed specifications, check suspension parts and connections for deformation, and replace with new ones as required.

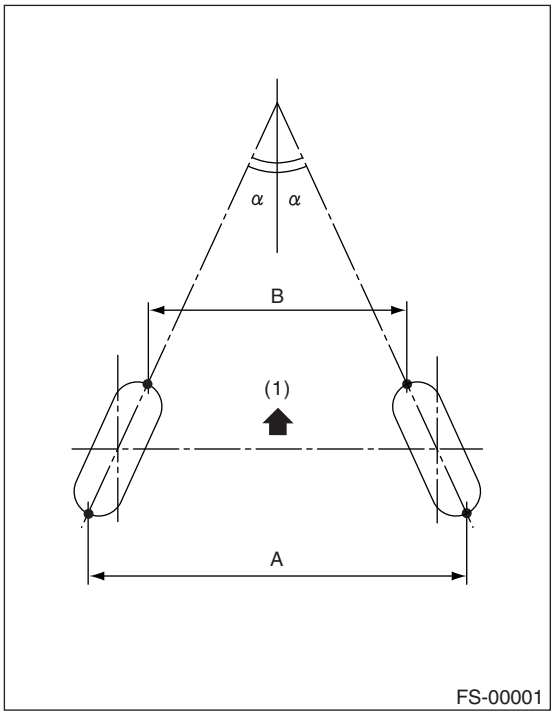

(1) Front
A − B = Positive: Toe-in, Negative: Toe-out
α = Each toe angle

B: COMPONENT

1. REAR SUSPENSION

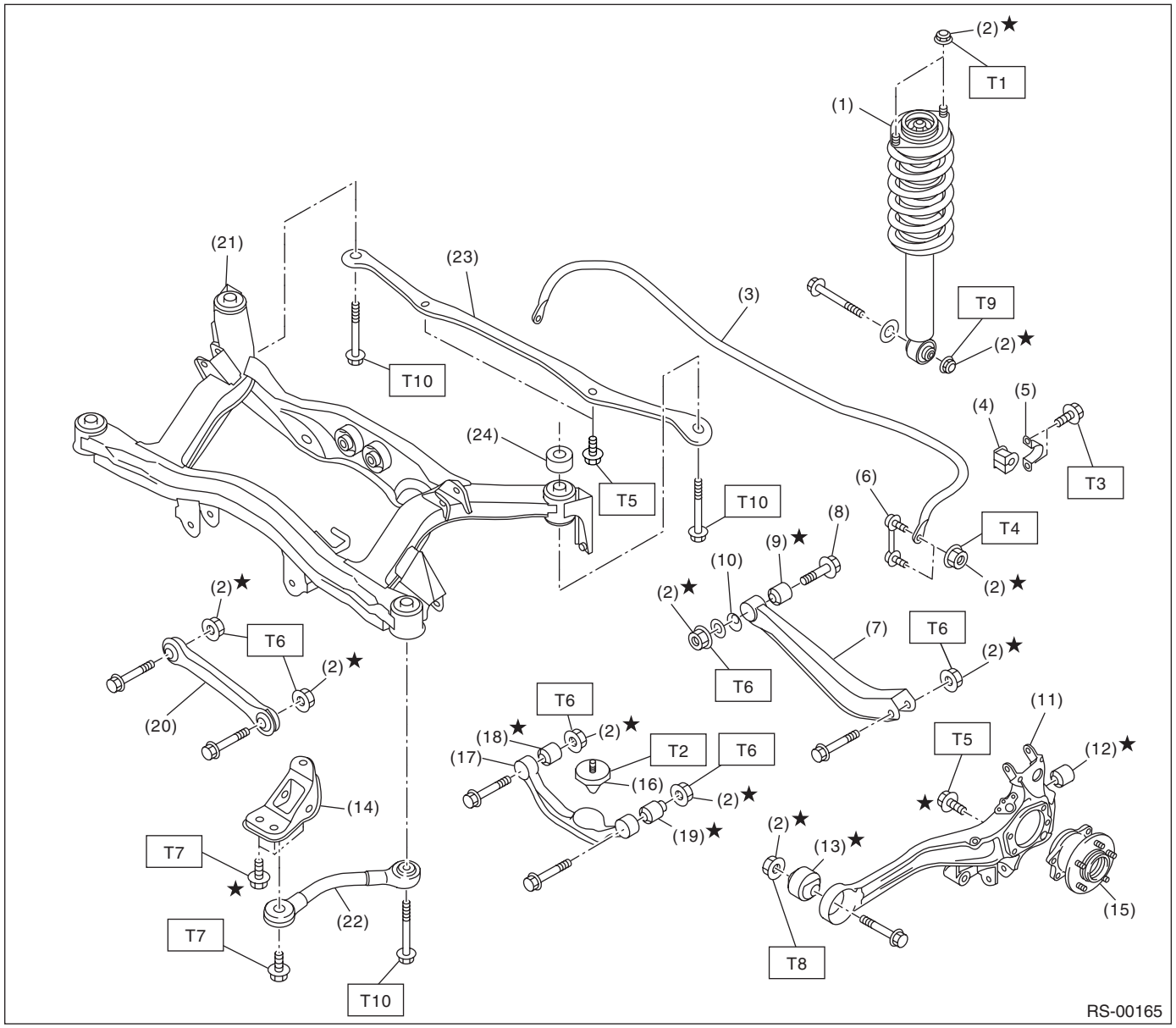

(1)	Shock absorber	(13)	Rear arm front bushing
(2)	Self-locking nut	(14)	Rear arm bracket
(3)	Stabilizer	(15)	Hub bearing unit
(4)	Stabilizer bushing	(16)	Helper
(5)	Bracket	(17)	Upper link
(6)	Stabilizer link	(18)	Upper link bushing (inner side)
(7)	Rear link	(19)	Upper link bushing (outer side)
(8)	Adjusting bolt	(20)	Front link
(9)	Rear link bushing	(21)	Rear sub frame
(10)	Adjusting washer	(22)	Sub frame support arm
(11)	Rear arm	(23)	Sub frame support plate
(12)	Rear arm rear bushing	(24)	Spacer (OUTBACK model)

Tightening torque: N·m (kgf-m, ft-lb)

T1: 30 (3.1, 22.4)
T2: 32 (3.3, 24)
T3: 40 (4.1, 30)
T4: 44 (4.5, 32.5)
T5: 65 (6.6, 48)
T6: 120 (12.2, 89)
T7: 125 (12.7, 92)
T8: 150 (15.3, 111)
T9: 160 (16.3, 118)
T10: 175 (17.8, 129)

2. SHOCK ABSORBER

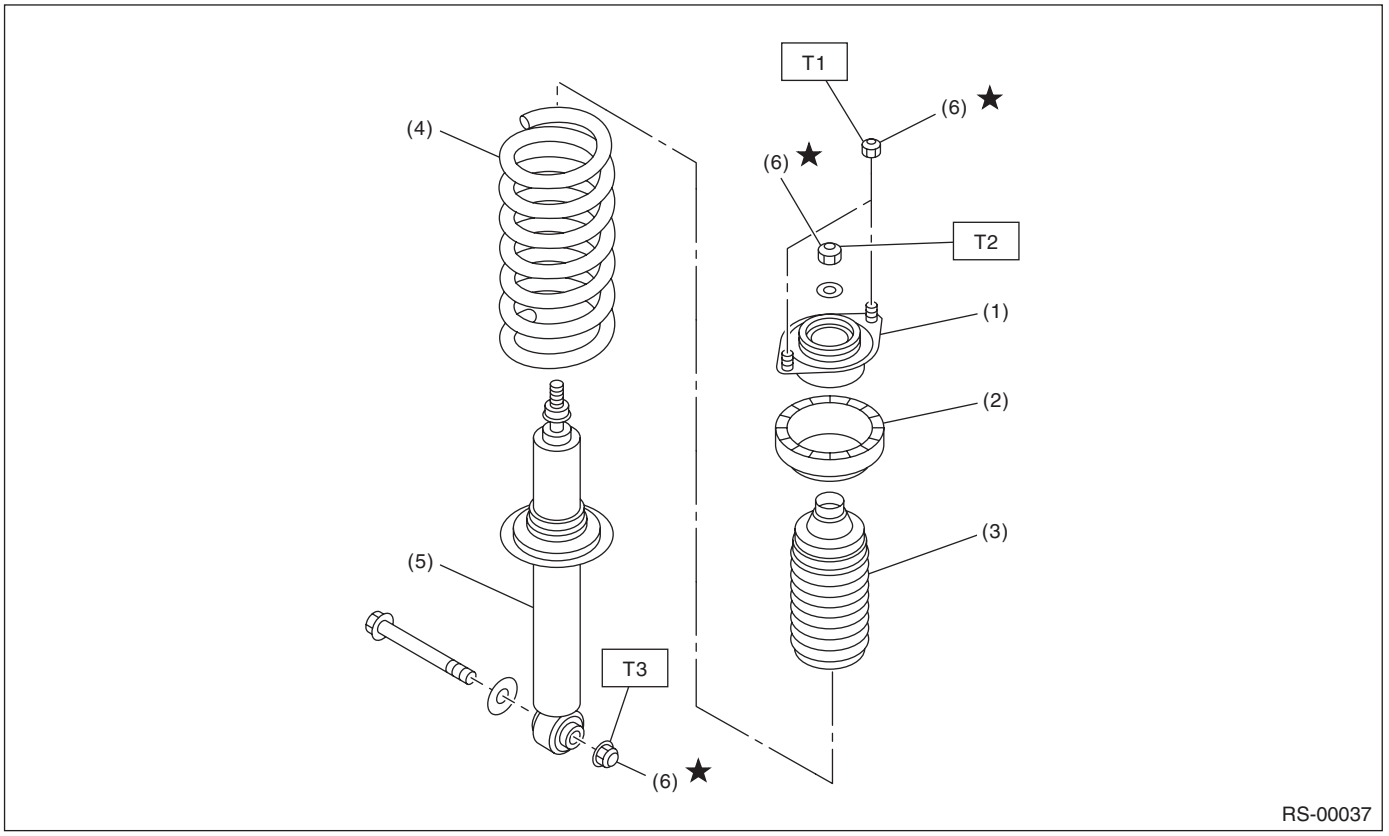

(1) Mount
(2) Upper rubber sheet
(3) Dust cover
(4) Coil spring
(5) Shock absorber
(6) Self-locking nut

Tightening torque: N·m (kgf-m, ft-lb)
T1: 30 (3.1, 22.4)
T2: 35 (3.6, 26)
T3: 160 (16.3, 118)

C: CAUTION

• Wear work clothing, including a cap, protective goggles and protective shoes during operation.
• Before discarding shock absorbers, be sure to bleed gas completely. Also, do not throw away in fire.
• Before removal, installation or disassembly, be sure to clarify the failure. Avoid unnecessary removal, installation, disassembly and replacement.
• Use SUBARU genuine grease etc. or the equivalent. Do not mix grease, etc. with that of another grade or from other manufacturers.
• Before securing a part on a vice, place cushioning material such as wood blocks, aluminum plate, or cloth between the part and the vice.
• Be sure to tighten fasteners including bolts and nuts to specified torque.
• Place shop jacks or rigid racks at the specified points.

D: PREPARATION TOOL

1. SPECIAL TOOL

ILLUSTRATION	TOOL NUMBER	DESCRIPTION	REMARKS
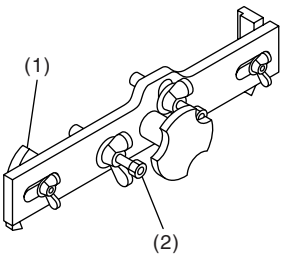 ST-927380002	927380002	ADAPTER	Used for an adapter of camber & caster gauge when measuring the camber and caster. (1) 28199AC000 PLATE (2) 28199AC010 BOLT
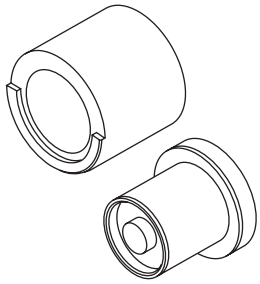 ST20099AE000	20099AE000	INSTALLER & REMOVER	Used for replacing the rear link bushing.
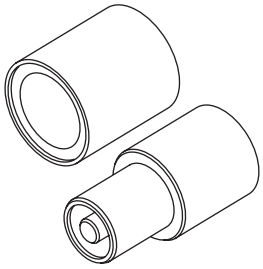 ST20099AE010	20099AE010	INSTALLER & REMOVER	Used for replacing the upper link bushing.
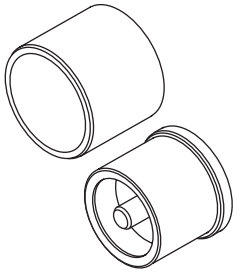 ST20099AE020	20099AE020	INSTALLER & REMOVER SET	Used for replacing the rear arm front bushing.

ILLUSTRATION	TOOL NUMBER	DESCRIPTION	REMARKS
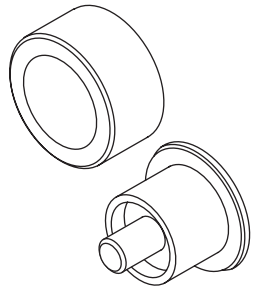 ST20099AE040	20099AE040	INSTALLER & REMOVER SET	Used for replacing rear arm rear bushing.
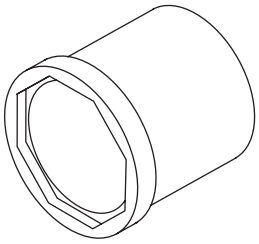 ST20099AE030	20099AE030	HELPER SOCKET WRENCH	Used for replacing helper.
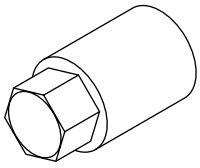 ST20399AG000	20399AG000 (New adopted tool)	STRUT MOUNT SOCKET	Used for removing and installing shock mount.
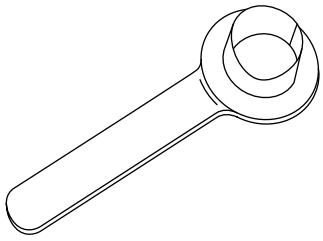 ST28099PA090	28099PA090	OIL SEAL PROTECTOR	• Used for installing rear drive shaft to rear differential. • For oil seal protection

ILLUSTRATION	TOOL NUMBER	DESCRIPTION	REMARKS
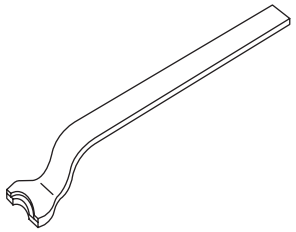 ST28099PA100	28099PA100	REMOVER	Used for removal of DOJ.

2. GENERAL TOOL

TOOL NAME	REMARKS
Alignment gauge	Used for wheel alignment measurement.
Turning radius gauge	Used for wheel alignment measurement.
Toe-in gauge	Used for toe-in measurement.
Transmission jack	Used for removing and installing suspension.
Bearing puller	Used for removing bushing.
Coil spring compressor	Used for disassembling and assembling shock absorber.

2. Wheel Alignment

A: INSPECTION

NOTE:
Measure and adjust the front and rear wheel alignment at a time. Refer to “FS” section for measurement and adjustment of wheel alignment. <Ref. to FS-7, INSPECTION, Wheel Alignment.>

3. Rear Stabilizer

A: REMOVAL

1) Lift-up the vehicle, and then remove the rear wheels.
2) Remove the stabilizer link.

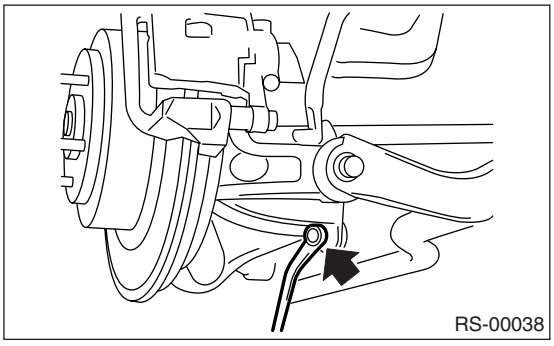

3) Remove the stabilizer bracket.

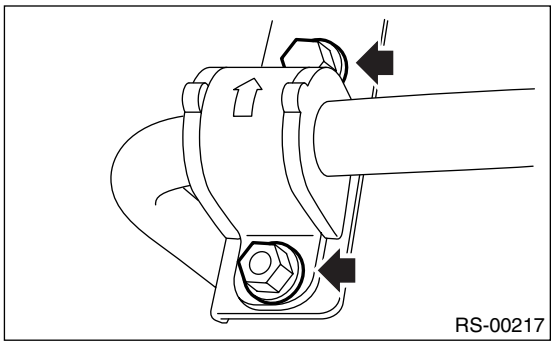

B: INSTALLATION

1) Install in the reverse order of removal.

NOTE:
- Use a new self-locking nut.
- Ensure the stabilizer bushing and stabilizer have the same identification colors.
- To install the stabilizer bushing, align the paint mark end of stabilizer to the end of stabilizer bushing.
- Stabilizer bracket has an orientation, so install it with the arrow mark faced to the upper side of vehicle.

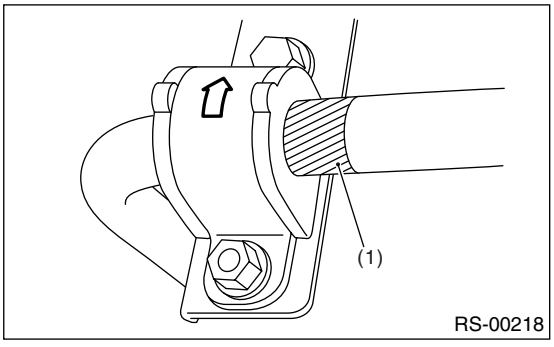

(1) Paint mark

2) Always tighten the stabilizer bushing in the state that wheels are in full contact with the ground and the vehicle is curb weight.

Tightening torque:
Stabilizer link
44 N·m (4.5 kgf-m, 32.5 ft-lb)
Stabilizer bracket
40 N·m (4.1 kgf-m, 30 ft-lb)

C: INSPECTION

1) Check the bushing for crack, fatigue and damage.
2) Check the stabilizer link for damage.

4. Rear Arm

A: REMOVAL

1) Lift-up the vehicle, and then remove the rear wheels.
2) Remove the sub frame support arm.
<Ref. to RS-21, REMOVAL, Sub Frame Support Arm.>
3) Remove the bearing unit.
<Ref. to DS-19, REMOVAL, Rear Hub Unit Bearing.>
4) Hang the back plate from sub frame.

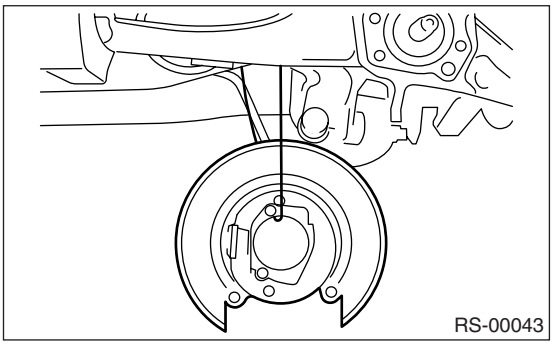
RS-00043

5) Remove the bolts which secure the parking brake cable clamp to rear arm bracket.

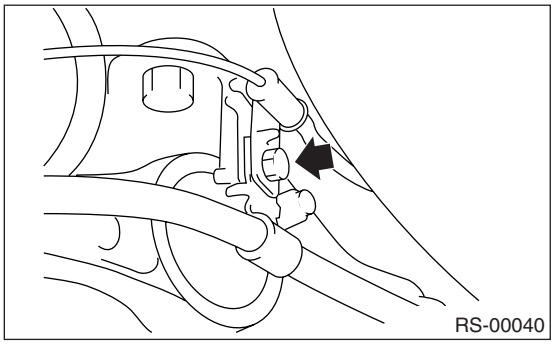
RS-00040

6) Remove the bolt which hold the brake hose bracket and ABS wheel speed sensor bracket to rear arm.

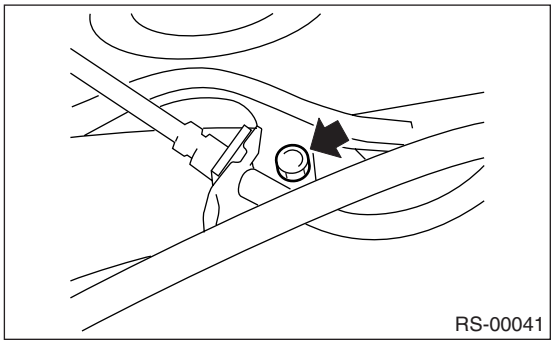
RS-00041

7) Remove the bolts which secure the brake hose bracket to rear arm. Remove the bolts which secure the ABS wheel speed sensor to rear arm.

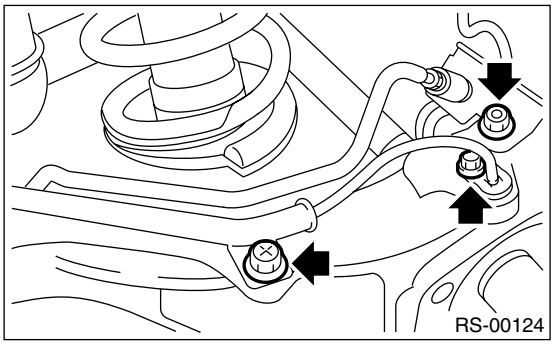
RS-00124

8) Remove the stabilizer link from rear arm.

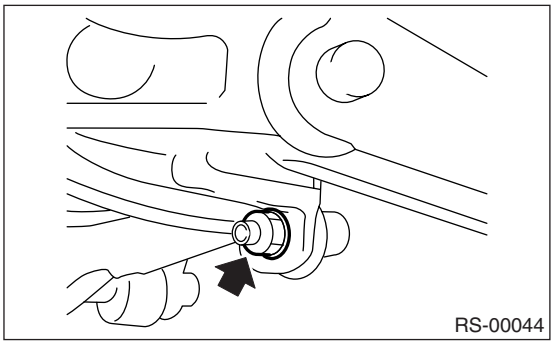
RS-00044

9) Remove the shock absorber from rear arm.

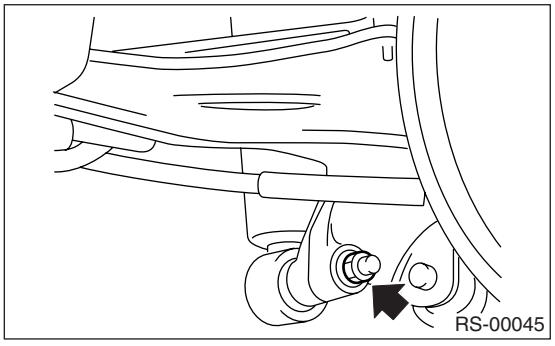
RS-00045

10) Support the rear arm horizontally using a transmission jack.

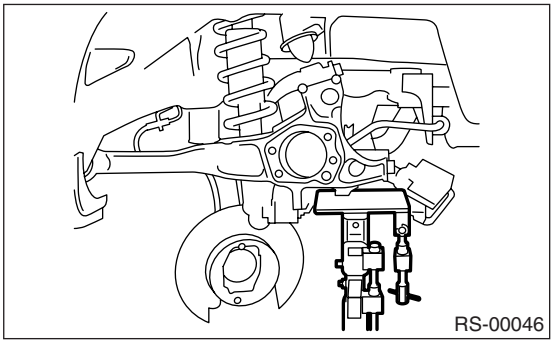
RS-00046

11) Remove the nuts which hold the rear arm to bracket. Remove the rear arm bracket.

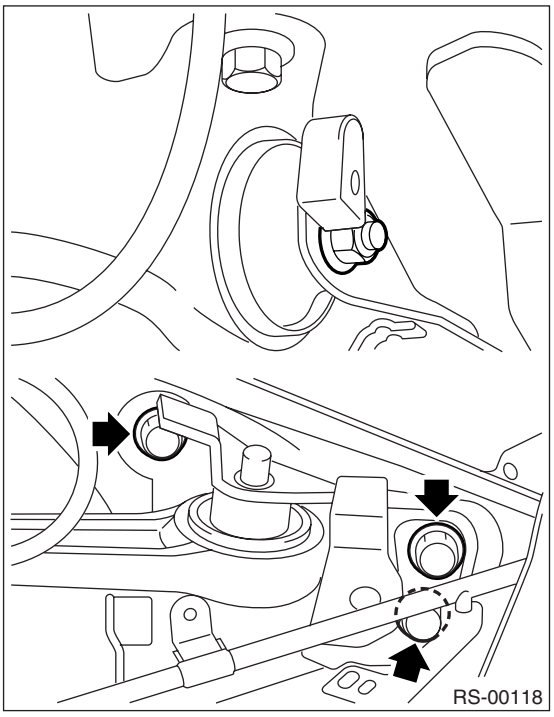

12) Loosen the nut which holds the front link to rear arm.

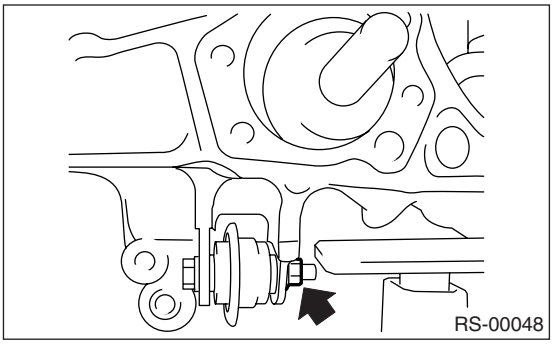

13) Loosen the nut which holds the rear link to rear arm.

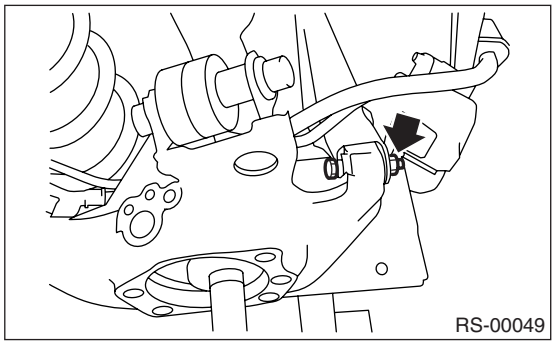

14) Loosen the nut which holds the upper link to rear arm.

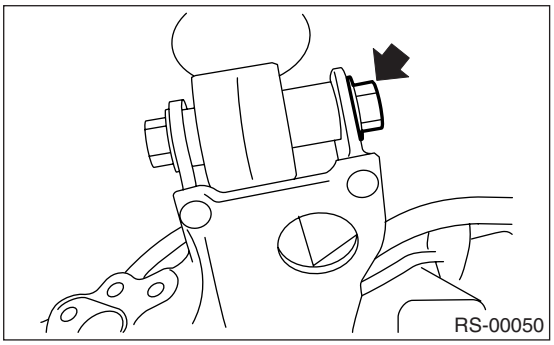

15) Remove the bolt which secures the rear arm to the link, and then remove the rear arm.

B: INSTALLATION

NOTE:
Use a new bolt and self-locking nut. For the parts which are not reusable, refer to “COMPONENT”. <Ref. to RS-3, REAR SUSPENSION, COMPONENT, General Description.>

1) Support the rear arm using a transmission jack.
2) Install the rear arm and temporarily tighten the bolts which hold the rear arm to the link.
3) Install the bearing unit.
<Ref. to DS-20, INSTALLATION, Rear Hub Unit Bearing.>
4) Install the bolts which secure the ABS wheel speed sensor to rear arm.
5) Install the bolts which secure the brake hose to rear arm.
6) Install the bolts which secure the parking brake cable clamp to rear arm bracket.
7) Set the jack which is originally equipped to the vehicle under the upside down situation, and place the jack between rear link and sub frame. Align the installing position of rear shock absorber and rear arm by adjusting the jack position, temporarily tighten the bolt and nut.

CAUTION:
Protect the rear link and sub frame from scratch in the way of putting a cloth between the jack and mating portion.

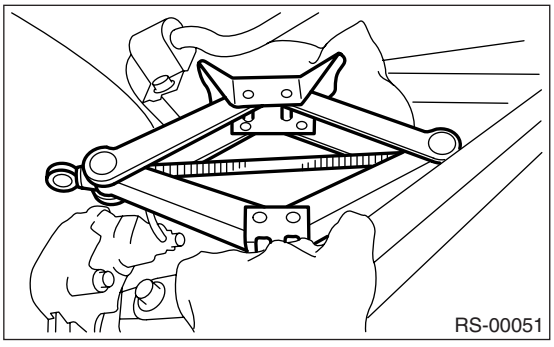

8) Using the transmission jack, support the rear arm horizontally.
9) Tighten the nuts and bolts which hold the rear arm, front link, rear link, upper link and shock absorber.

NOTE:
Always tighten the bushing in the state that wheels are in full contact with the ground and the vehicle is curb weight.

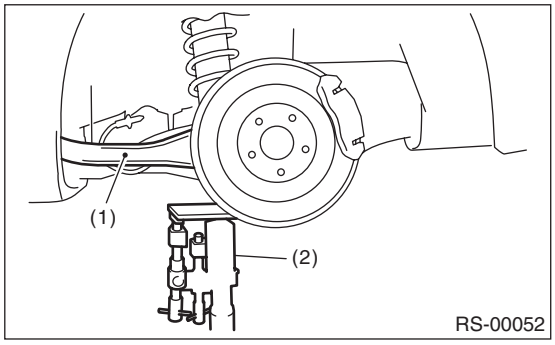

(1) Rear arm
(2) Transmission jack

10) Install the sub frame support arm.

NOTE:
Inspect the wheel alignment and adjust it if necessary.

Tightening torque:
Refer to "COMPONENT" of "General Description" for tightening torque. <Ref. to RS-3, REAR SUSPENSION, COMPONENT, General Description.>

C: DISASSEMBLY

1. FRONT BUSHING

1) Set the ST A with the larger side of its inner diameter turned upward.
2) Set the rear arm with the protruding side of bushing turned upward.
3) Place the ST B on bushing, and push the bushing out.

ST A 20099AE020 INSTALLER & REMOVER SET
ST B 20099AE020 INSTALLER & REMOVER SET

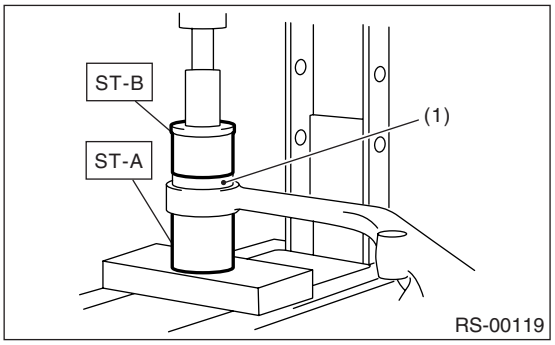

(1) Bushing

2. REAR BUSHING

Using the ST C and bearing puller, press the rear bushing out of place.

ST C 20099AE040 INSTALLER & REMOVER SET

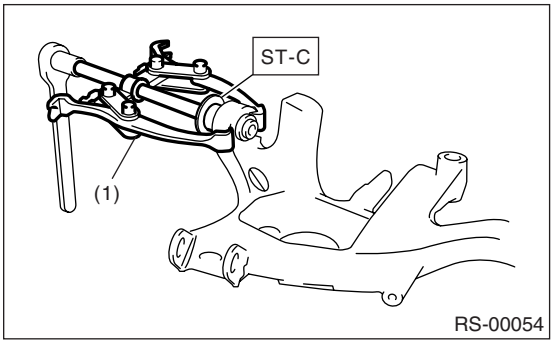

(1) Bearing puller

D: ASSEMBLY

1. FRONT BUSHING

1) Set the ST A with the larger side of its inner diameter turned upward.
2) Set the rear arm with the vehicle inner side of arm turned downward.
3) Place the bushing on rear arm as shown in the figure.
4) Place the ST B on bushing, and press-fit until each edge surface of bushing and rear arm comes to be aligned.

ST A 20099AE020 INSTALLER & REMOVER SET

ST B 20099AE020 INSTALLER & REMOVER SET

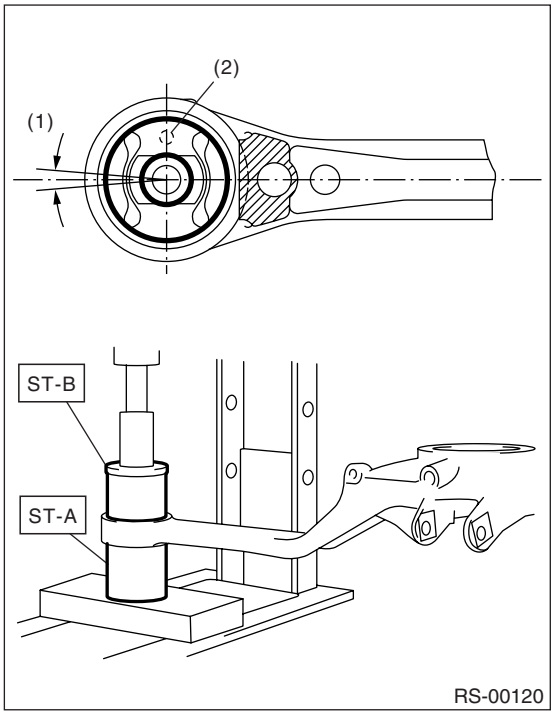

(1) 0±5°
(2) Identification paint: Assemble with the identification paint side faced to the arm inner side.

2. REAR BUSHING

1) Press the bushing into the bore inside of ST D.
2) Set the ST C, ST D and bearing puller in the specified position as shown in the figure, and then press-fit the bush until the outer end of bush and rear end of rear arm in flat.

ST C 20099AE040 INSTALLER & REMOVER SET
ST D 20099AE040 INSTALLER & REMOVER SET

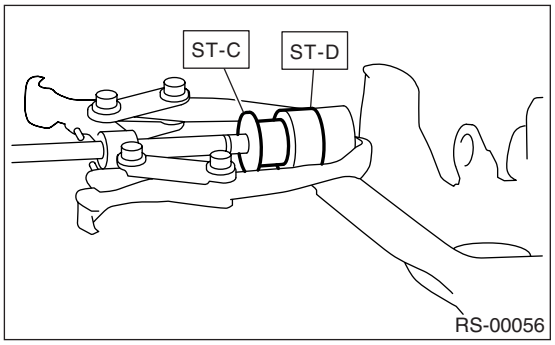

E: INSPECTION

Check the rear arm for bend, corrosion or damage.

5. Upper Link

A: REMOVAL

1) Lift-up the vehicle, and then remove the rear wheels.
2) Using a transmission jack, support the rear arm horizontally.

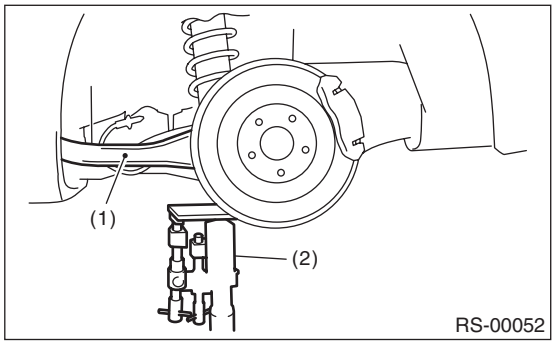

(1) Rear arm
(2) Transmission jack

3) Remove the bolt which secures the upper link to sub frame.

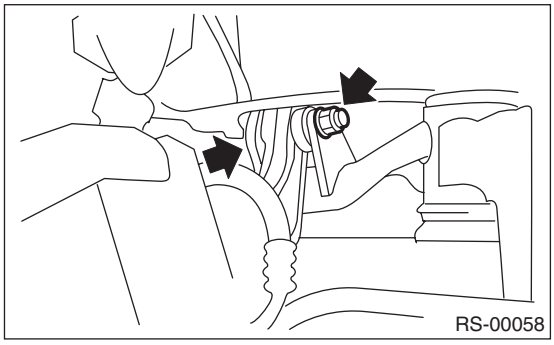

4) Remove the bolts which secure the upper link to rear arm, and then remove the upper link.

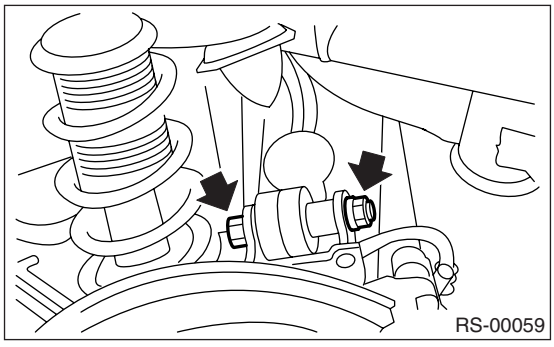

B: INSTALLATION

1) Using a transmission jack, support the rear arm horizontally.
2) Using new self-locking nuts, install the upper link.

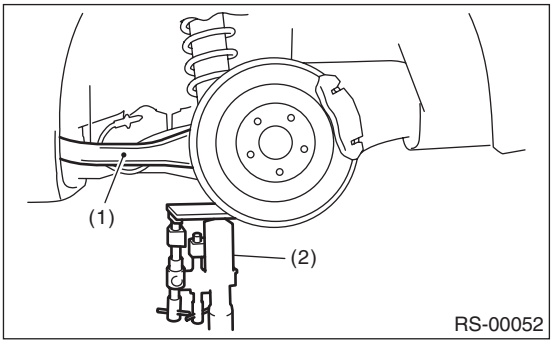

(1) Rear arm
(2) Transmission jack

NOTE:
Inspect the wheel alignment and adjust it if necessary.

Tightening torque:
Upper link to Sub frame
120 N·m (12.2 kgf-m, 89 ft-lb)
Upper link to Rear arm
120 N·m (12.2 kgf-m, 89 ft-lb)

C: DISASSEMBLY

Using the ST, press the bushing out of place.
ST 20099AE010 INSTALLER & REMOVER

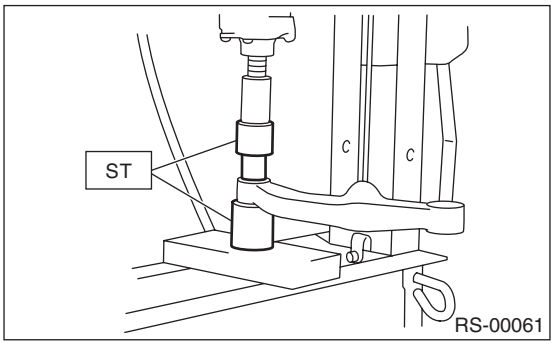

D: ASSEMBLY

Using the ST, press-fit the bushing into place.
ST 20099AE010 INSTALLER & REMOVER

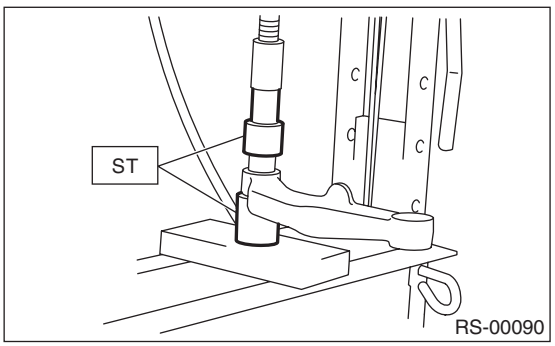

CAUTION:
Outer side bushing has an orientation. Assemble it with the longer protrusion faced to the rear side of vehicle.

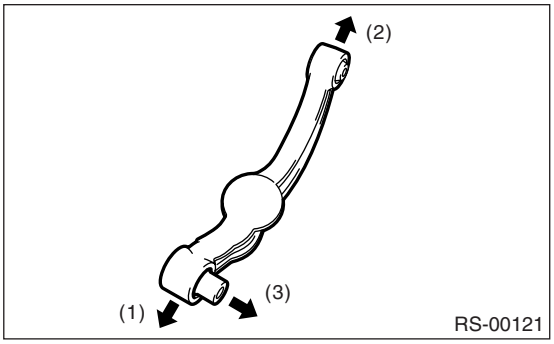

(1) Rear arm
(2) Rear sub frame
(3) Rear side of vehicle

E: INSPECTION

1) Visually check the upper link for damage and deformation.
2) Visually check the bushing for crack, damage and fatigue.

6. Rear Shock Absorber

A: REMOVAL

1) Remove the luggage floor mat. (Wagon model)
2) Roll up the trunk side trim. (Sedan model)
3) Lift-up the vehicle, and then remove the rear wheels.
4) Remove the bolts which secure the shock absorber to rear arm.

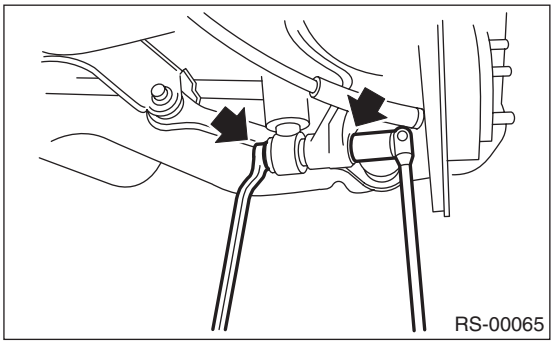

5) Support the shock absorber using a jack.
6) Remove the nuts which secure the shock absorber mount to vehicle.

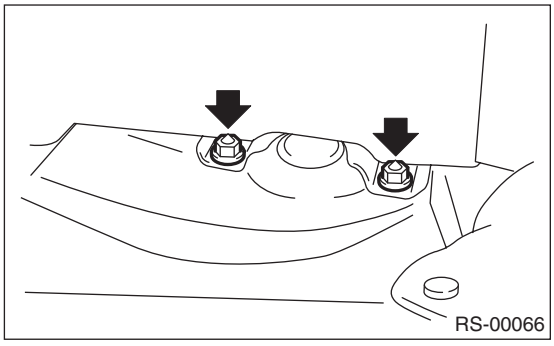

7) Remove the shock absorber.

B: INSTALLATION

1) Support the shock absorber using a jack.
2) Using new self-locking nuts, secure the shock absorber to vehicle.

Tightening torque:
30 N·m (3.1 kgf-m, 22.4 ft-lb)

3) Set the jack which is originally equipped to the vehicle under the upside down situation, and place the jack between rear link and sub frame. Align the installing position of rear shock absorber and rear arm by adjusting the jack position. Using new self-locking nuts, temporary tighten the bolt.

CAUTION:
Protect the rear link and sub frame from scratch in the way of putting a shop cloth between the jack and the mating portion.

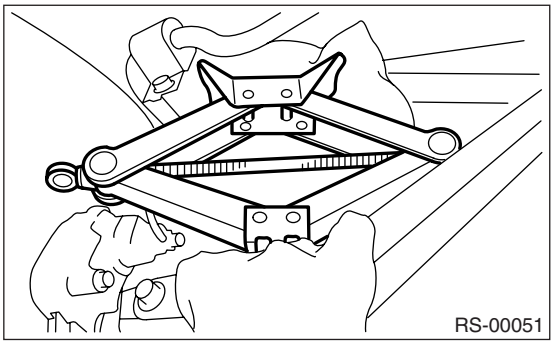

4) Using the transmission jack, support the rear arm horizontally.
5) Using new self-locking nuts, tighten the bolt and nut which secure the shock absorber.

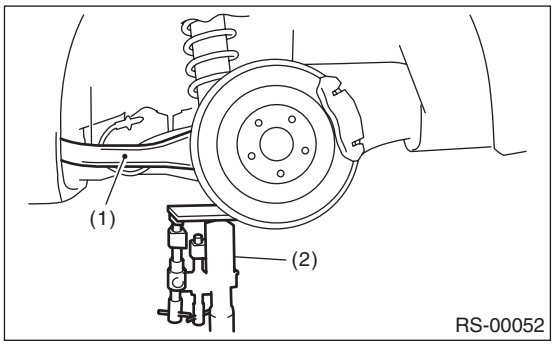

(1) Rear arm
(2) Transmission jack

Tightening torque:
160 N·m (16.3 kgf-m, 118 ft-lb)

6) Install the luggage floor mat. (Wagon model)
7) Set the trunk side trim. (Sedan model)

NOTE:
Check the wheel alignment and adjust it if necessary.

C: DISASSEMBLY

Refer to Front Strut for disassembly procedures.
<Ref. to FS-22, DISASSEMBLY, Front Strut.>

D: ASSEMBLY

Refer to Front Strut for installation procedures.
<Ref. to FS-22, ASSEMBLY, Front Strut.>

E: INSPECTION

Refer to “Front Strut” for inspection procedures.
<Ref. to FS-23, INSPECTION, Front Strut.>

F: DISPOSAL

CAUTION:
• Before handling shock absorbers, be sure to wear goggles to protect eyes from gas, oil and cutting powder.
• Do not disassemble the shock absorber or place it into a fire.
• Drill a hole into shock absorbers in case of discarding shock absorbers filled with gas.

1) Place the shock absorber on a level surface with the piston rod fully expanded.
2) Make a hole into the specified position 30 mm (1.18 in) deep using a drill with 2 to 3 mm (0.08 to 0.12 in) diameter.

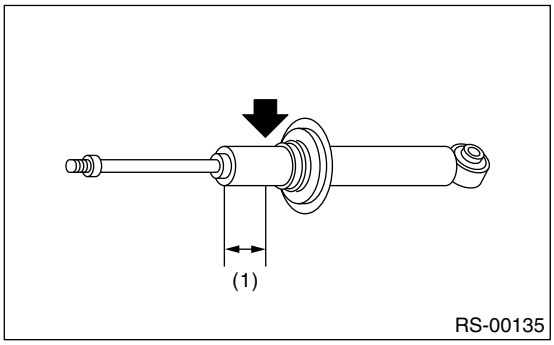

(1) 40 mm (1.57 in)

7. Front Link

A: REMOVAL

1) Lift-up the vehicle, and then remove the rear wheels.
2) Using a transmission jack, support the rear arm horizontally.

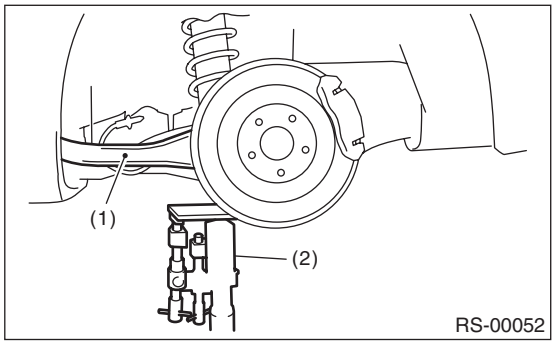

(1) Rear arm
(2) Transmission jack

3) Remove the bolt which secures the front link to sub frame.

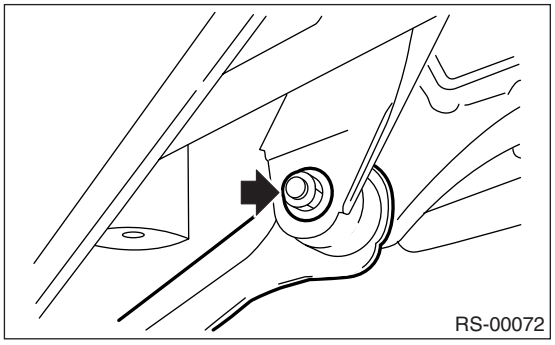

4) Remove the bolt which secures the front link to rear arm, and then remove the front link.

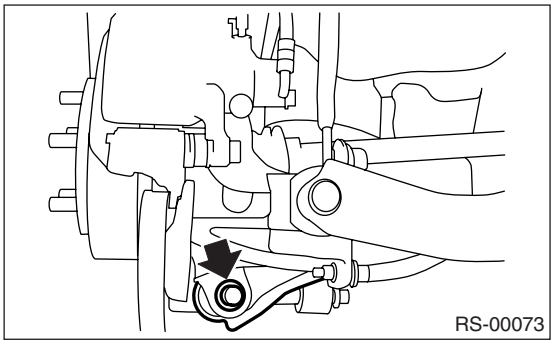

B: INSTALLATION

1) Using a transmission jack, support the rear arm horizontally.
2) Using new self-locking nuts, install the front link.

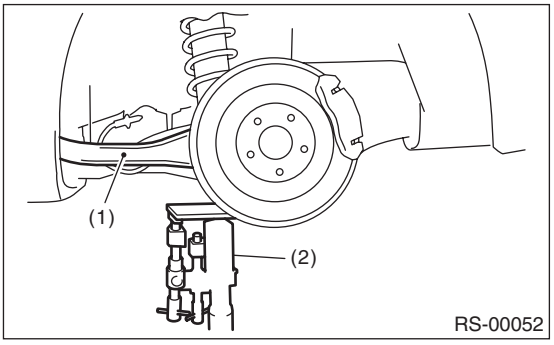

(1) Rear arm
(2) Transmission jack

CAUTION:
Install the front link with the protrusion side faced to the front side of vehicle.

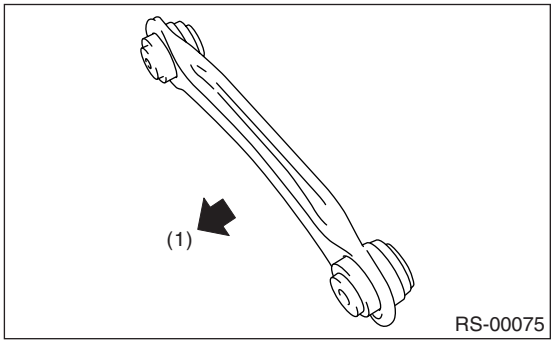

(1) Front

NOTE:
Inspect the wheel alignment and adjust it if necessary.

Tightening torque:
120 N·m (12.2 kgf-m, 89 ft-lb)

C: INSPECTION

Visually check the front link for damage and deformation.

8. Rear Link

A: REMOVAL

1) Lift-up the vehicle, and then remove the rear wheels.
2) Remove the rear stabilizer. <Ref. to RS-9, REMOVAL, Rear Stabilizer.>
3) Using a transmission jack, support the rear arm horizontally.

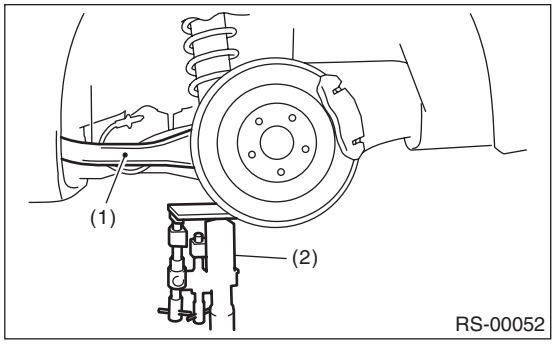

(1) Rear arm
(2) Transmission jack

4) Remove the bolts which secure the rear link to rear arm.

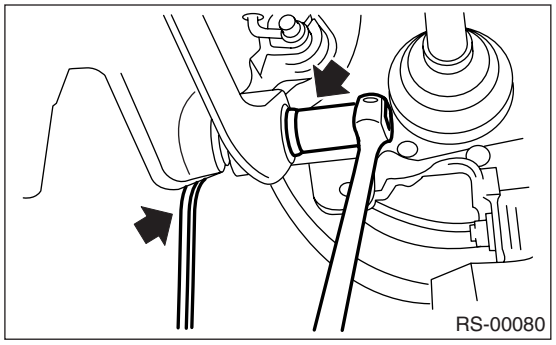

5) Put alignment marks on the rear link adjusting bolt and sub frame.
6) Remove the bolt which secure the rear link to sub frame, and then remove the rear link.

CAUTION:
Loosen the nut with the bolt head secured when loosening the adjusting bolt.

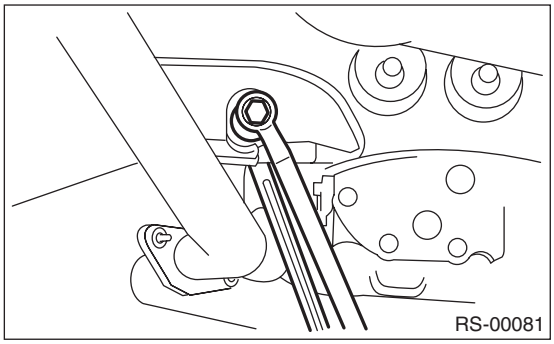

B: INSTALLATION

1) Using a transmission jack, support the rear arm horizontally.
2) Using new self-locking nuts, install the rear link.

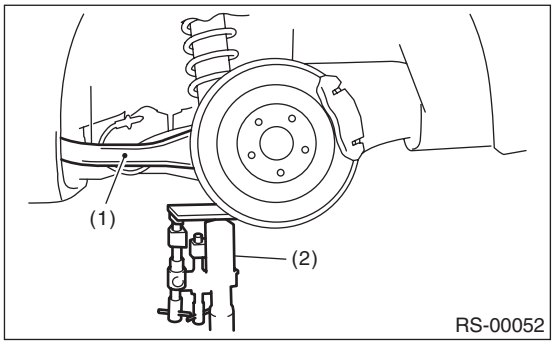

(1) Rear arm
(2) Transmission jack

NOTE:
• Tighten the self-locking nut with the bolt head secured when installing the adjusting bolt.
• Inspect the wheel alignment and adjust it if necessary.

Tightening torque:
Rear link to Sub frame
120 N·m (12.2 kgf-m, 89 ft-lb)
Rear link to Rear arm
120 N·m (12.2 kgf-m, 89 ft-lb)

C: DISASSEMBLY

Using the ST A and ST B, press the bushing out of place.
ST A 20099AE000 INSTALLER & REMOVER
ST B 20099AE000 INSTALLER & REMOVER

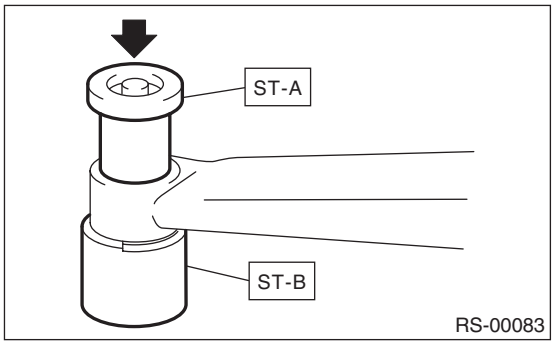

D: ASSEMBLY

Using the ST A and ST B, press-fit the bushing.
ST A 20099AE000 INSTALLER & REMOVER

ST B 20099AE000 INSTALLER & REMOVER

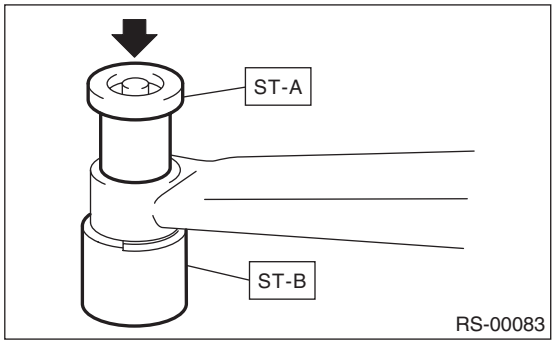

E: INSPECTION

Visually check the rear link for damage and deformation.

9. Sub Frame Support Arm

A: REMOVAL

1) Lift-up the vehicle, and support the rear sub frame with support stand.
2) Remove the sub frame support arm.

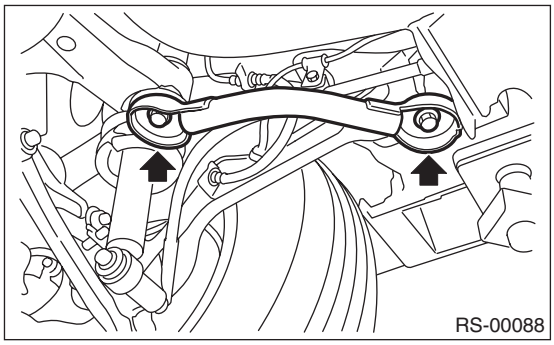

B: INSTALLATION

Install in the reverse order of removal.

Tightening torque:
Sub frame support arm to Rear arm bracket
125 N·m (12.7 kgf-m, 92 ft-lb)
Sub frame support arm to Rear sub frame
175 N·m (17.8 kgf-m, 129 ft-lb)

C: INSPECTION

Visually check the sub frame support arm for damage and deformation.

10.Sub Frame Support Plate

A: REMOVAL

1) Lift-up the vehicle, and support the rear sub frame with support stand.
2) Remove the sub frame support plate.

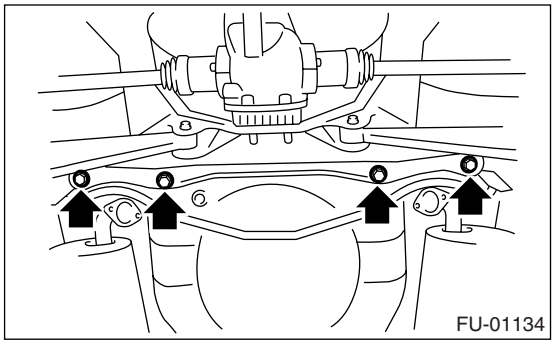

B: INSTALLATION

Install in the reverse order of removal.

Tightening torque:
Support plate to Sub frame
175 N·m (17.8 kgf-m, 129 ft-lb)
Support plate to Body
65 N·m (6.6 kgf-m, 48 ft-lb)

C: INSPECTION

Visually check the support plate for damage.

11.Rear Sub Frame

A: REMOVAL

1) Separate the front exhaust pipe from rear exhaust pipe.
2) Remove the rear exhaust pipe and muffler.
3) Remove the rear differential.
T-type
<Ref. to DI-28, REMOVAL, Rear Differential (T-type).>
VA-type
<Ref. to DI-44, REMOVAL, Rear Differential (VA-type).>
4) Remove the rear stabilizer. <Ref. to RS-9, REMOVAL, Rear Stabilizer.>
5) Remove the bolts which secure the rear shock absorber to rear arm.
6) Support the sub frame using a transmission jack.

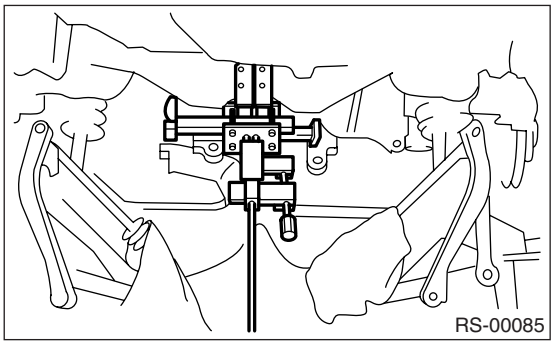

7) Remove the front link from sub frame.
<Ref. to RS-18, REMOVAL, Front Link.>
8) Remove the rear link from sub frame.
<Ref. to RS-19, REMOVAL, Rear Link.>
9) Remove the upper link from sub frame.
<Ref. to RS-14, REMOVAL, Upper Link.>
10) Remove the sub frame support arm.
11) After removing the bolt, remove the sub frame and sub frame support plate from vehicle.

B: INSTALLATION

1) Install in the reverse order of removal.
2) Follow the procedure below for the rear differential installation and tightening torque.
T-type
<Ref. to DI-29, INSTALLATION, Rear Differential (T-type).>
VA-type
<Ref. to DI-45, INSTALLATION, Rear Differential (VA-type).>
3) Using a transmission jack, support the rear arm horizontally. Then tighten the nuts and bolts which hold the rear arm, front link, rear link, upper link and shock absorber.

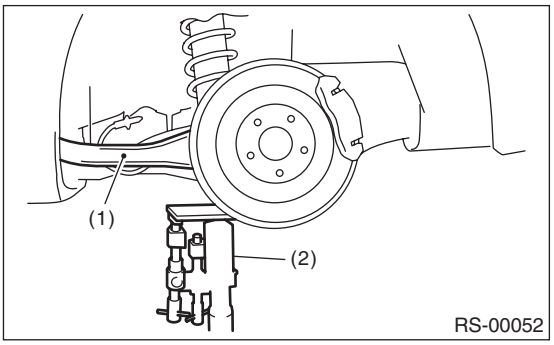

(1) Rear arm
(2) Transmission jack

NOTE:
Check the wheel alignment and adjust it if necessary.

C: INSPECTION

Check the removed parts for wear, damage and crack, and repair or replace them if faulty.

12.Helper

A: REMOVAL

1) Lift-up the vehicle, and then remove the rear wheels.
2) Remove the helper using ST.
ST 20099AE030 HELPER SOCKET WRENCH

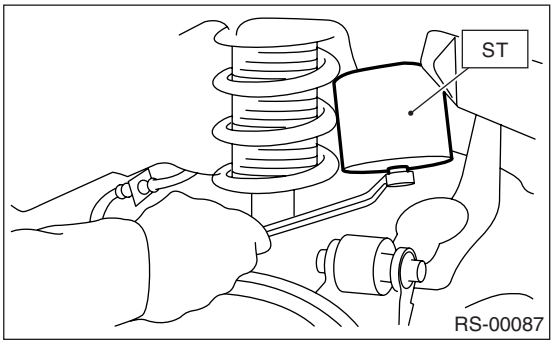

B: INSTALLATION

Install in the reverse order of removal.

Tightening torque:
32 N·m (3.3 kgf-m, 24 ft-lb)

C: INSPECTION

Check the helper for crack, fatigue and damage.

13.General Diagnostic Table

A: INSPECTION

1. IMPROPER VEHICLE POSTURE OR IMPROPER WHEEL ARCH HEIGHT

Possible cause	Corrective action
(1) Permanent distortion or breakage of coil spring	Replace.
(2) Rough operation of damper strut or shock absorber	Replace.
(3) Installation of wrong strut or shock absorber	Replace with proper parts.
(4) Installation of wrong coil spring	Replace with proper parts.

2. POOR RIDE COMFORT

1) Large rebound shock
2) Rocking of the vehicle continues too long after running over bump and hump
3) Large shock in bumping

Possible cause	Corrective action
(1) Breakage of coil spring	Replace.
(2) Overinflating pressure of tire	Adjust.
(3) Improper wheel arch height	Adjust or replace the coil springs with new ones.
(4) Fault in operation of damper strut or shock absorber	Replace.
(5) Damage or deformation of strut mount or shock absorber mount	Replace.
(6) Unsuitability of maximum or minimum length of damper strut or shock absorber	Replace with proper parts.
(7) Deformation or loss of bushing	Replace.
(8) Deformation or damage of helper in strut assembly or shock absorber	Replace.
(9) Oil leakage of damper strut or shock absorber	Replace.

3. NOISE

Possible cause	Corrective action
(1) Wear or damage of damper strut or shock absorber component parts	Replace.
(2) Loosening of suspension link installing bolt	Tighten to the specified torque.
(3) Deformation or loss of bushing	Replace.
(4) Unsuitability of maximum or minimum length of damper strut or shock absorber	Replace with proper parts.
(5) Breakage of coil spring	Replace.
(6) Wear or damage of ball joint	Replace.
(7) Deformation of stabilizer clamp	Replace.

WHEEL AND TIRE SYSTEM

WT

		Page
1.	General Description	2
2.	Tire	5
3.	Steel Wheel	6
4.	Aluminum Wheel	7
5.	Wheel Balancing	8
6.	“T-type” Tire	10
7.	Tire Pressure Monitoring System	11
8.	General Diagnostic Table	13

1. General Description

A: SPECIFICATION

1. WHEEL AND TIRE SIZE

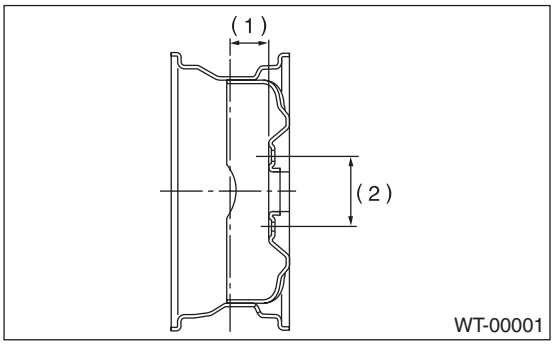

(1) Offset
(2) P.C.D.

Specification		Tire size	Wheel size	Offset mm (in)	P.C.D. mm (in)	Tire inflation pressure kPa (kgf/cm^2, psi)	
						Front wheel	Rear wheel
Sedan	2.5 i, — LTD	P205/55R16 89H	16 × 6 $^1/_2$JJ	55 (2.17)	100 (3.94)	220 (2.2, 32)	210 (2.1, 30)
	2.5 GT, — LTD	215/45ZR17	17 × 7JJ			240 (2.4, 35)	230 (2.3, 33)
	OUTBACK 3.0 R	P225/55R17 95V	17 × 7JJ	48 (1.89)		220 (2.2, 32)	210 (2.1, 30)
Wagon	2.5 i, — LTD	205/55R16 89H	16 × 6 $^1/_2$JJ	55 (2.17)		220 (2.2, 32)	210 (2.1, 30)
	2.5 GT, — LTD	215/45ZR17	17 × 7JJ			240 (2.4, 35)	230 (2.3, 33)
	OUTBACK 2.5 i, — LTD	P225/60R16 97H	16 × 6 $^1/_2$JJ	48 (1.89)		220 (2.2, 32)	210 (2.1, 30)
	OUTBACK 3.0 R, — LTD, — LLB	P225/55R17 95V	17 × 7JJ			220 (2.2, 32)	210 (2.1, 30)
"T-type" Tire	2.5 GT, — LTD	T135/70D17 102M	17 × 4T	40 (1.57)		420 (4.2, 60)	
	2.5 i, — LTD	T135/80R16 101M	16 × 4T	50 (1.97)			
	OUTBACK	T155/70D17 110M	17 × 4T	40 (1.57)			

2. SERVICE DATA

Part	Axial runout	Radial runout
Steel wheel	1.5 mm (0.059 in)	
Aluminum wheel	1.0 mm (0.039 in)	

3. ADJUSTING PARTS

Wheel balancing	Standard	Service limit
Dynamic unbalance	10 g (0.35 oz) or less	

Balance weight part number (Knock-on type weight for steel wheel)	Weight
28101AA001	5 g (0.18 oz)
28101AA011	10 g (0.35 oz)
28101AA021	15 g (0.53 oz)
28101AA031	20 g (0.71 oz)
28101AA041	25 g (0.88 oz)
28101AA051	30 g (1.06 oz)
28101AA061	35 g (1.23 oz)
28101AA071	40 g (1.41 oz)
28101AA081	45 g (1.59 oz)
28101AA091	50 g (1.76 oz)
28101AA101	55 g (1.94 oz)
28101AA111	60 g (2.12 oz)

Balance weight part number (Knock-on type weight for aluminum wheel)	Weight
23141GA462	5 g (0.18 oz)
23141GA472	10 g (0.35 oz)
23141GA482	15 g (0.53 oz)
23141GA492	20 g (0.71 oz)
23141GA502	25 g (0.88 oz)
23141GA512	30 g (1.06 oz)
23141GA522	35 g (1.23 oz)
23141GA532	40 g (1.41 oz)
23141GA542	45 g (1.59 oz)
23141GA552	50 g (1.76 oz)
23141GA562	55 g (1.94 oz)
23141GA572	60 g (2.12 oz)

Balance weight part number (Adhesive type weight for aluminum wheel)	Weight
28101AE00A	5 g (0.18 oz)
28101AE01A	7.5 g (0.26 oz)
28101AE02A	10 g (0.35 oz)
28101AE03A	12.5 g (0.44 oz)
28101AE04A	15 g (0.53 oz)
28101AE05A	17.5 g (0.62 oz)
28101AE06A	20 g (0.71 oz)
28101AE07A	22.5 g (0.79 oz)
28101AE08A	25 g (0.88 oz)
28101AE09A	27.5 g (0.97 oz)
28101AE10A	30 g (1.06 oz)
28101AE11A	32.5 g (1.15 oz)
28101AE12A	35 g (1.23 oz)
28101AE13A	37.5 g (1.32 oz)
28101AE14A	40 g (1.41 oz)
28101AE15A	42.5 g (1.50 oz)
28101AE16A	45 g (1.59 oz)
28101AE17A	47.5 g (1.68 oz)
28101AE18A	50 g (1.76 oz)
28101AE19A	52.5 g (1.85 oz)
28101AE20A	55 g (1.94 oz)
28101AE21A	57.5 g (2.03 oz)
28101AE22A	60 g (2.12 oz)
28101AE23A	62.5 g (2.20 oz)
28101AE24A	65 g (2.29 oz)
28101AE25A	67.5 g (2.38 oz)
28101AE26A	70 g (2.47 oz)
28101AE27A	72.5 g (2.56 oz)
28101AE28A	75 g (2.65 oz)
28101AE29A	77.5 g (2.73 oz)
28101AE30A	80 g (2.82 oz)
28101AE31A	82.5 g (2.91 oz)
28101AE32A	85 g (3.00 oz)
28101AE33A	87.5 g (3.09 oz)
28101AE34A	90 g (3.17 oz)
28101AE35A	92.5 g (3.26 oz)
28101AE36A	95 g (3.35 oz)
28101AE37A	97.5 g (3.44 oz)
28101AE38A	100 g (3.53 oz)
28101AG50A	102.5 g (3.62 oz)
28101AG51A	105 g (3.70 oz)
28101AG52A	107.5 g (3.79 oz)
28101AG53A	110 g (3.88 oz)
28101AG54A	112.5 g (3.97 oz)
28101AG55A	115 g (4.06 oz)
28101AG56A	117.5 g (4.14 oz)
28101AG57A	120 g (4.23 oz)

B: COMPONENT

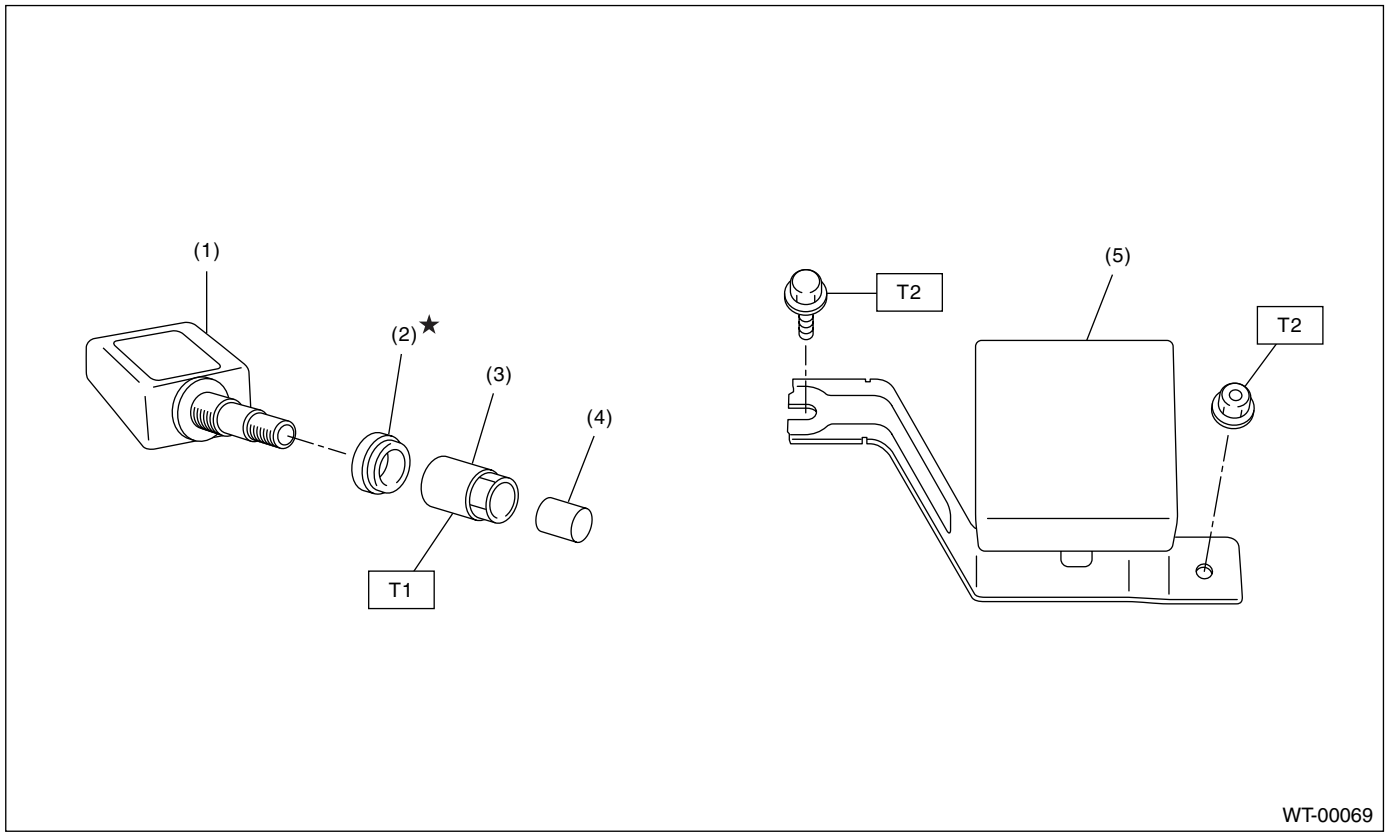

(1) Transmitter
(2) Grommet
(3) Nut
(4) Cap
(5) Tire pressure monitoring control module

Tightening torque: N·m (kgf-m, ft-lb)
T1: 7.5 (0.76, 5.53)
T2: 8 (0.8, 5.8)

C: PREPARATION TOOL

1. GENERAL TOOL

TOOL NAME	REMARKS
Air pressure gauge	Used for measuring tire inflation pressure.
Dial gauge with magnet stand	Used for measuring wheel runout.
Wheel balancer	Used for adjusting wheel balance.

2. Tire

A: INSPECTION

1) Take stones, glass, nails etc. out of the tread groove.
2) Replace the tire if as follows.

CAUTION:
• When replacing a tire, make sure to use only the same size, construction and load range as originally installed.
• Use a tire changer when removing tire from wheel.
• To prevent damaging of transmitter, do not use the bead breaker in the position as shown in the figure. (Model with tire pressure monitoring system)

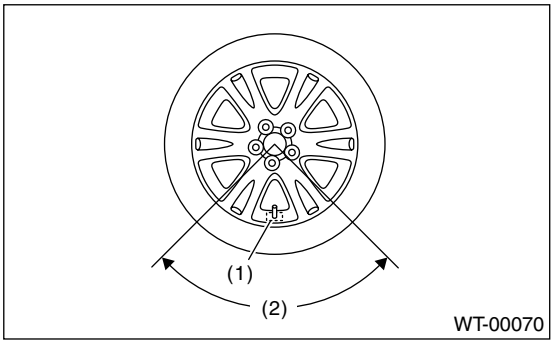

(1) Transmitter
(2) 90° (Do not use bead breaker within this range)

• To prevent damaging of transmitter, set the tire changer boom in the position as shown in the figure.

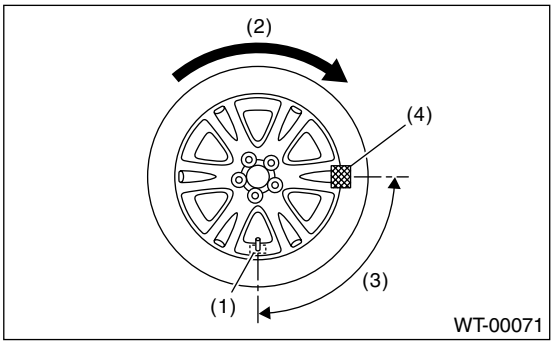

(1) Transmitter
(2) Turn table rotation direction
(3) 90°
(4) Tire changer boom

(1) When large crack on side wall, damage or crack on tread is found.

(2) When the “tread wear indicator” appears as a solid band across the tread.

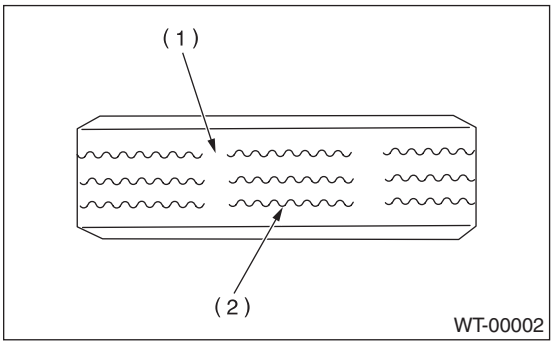

(1) Tread wear indicator
(2) Tire tread

3) When a crack on tire valve is found, replace the tire valve.

1. TIRE ROTATION

Rotate tires periodically (12,500 km/7,500 miles) as shown in the figure, in order to prevent them from uneven wear and to prolong their life.
• Without instruction for the direction of tire rotation

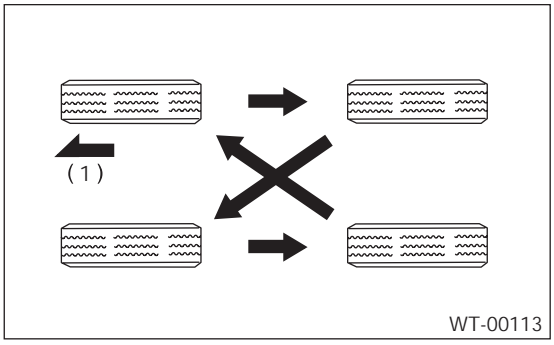

(1) Front

• With instruction for the direction of tire rotation

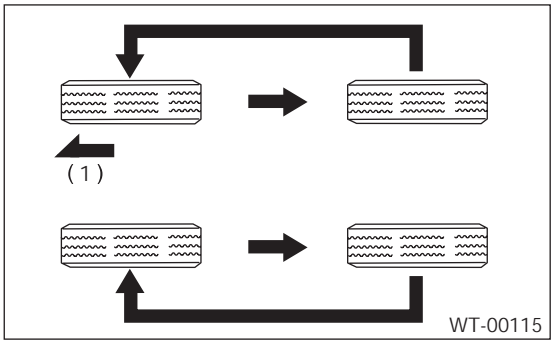

(1) Front

NOTE:
Re-registration of sensor is necessary for the model with tire pressure monitoring system. <Ref. to TPM(diag)-10, REGISTER TRANSMITTER (ID), OPERATION, Subaru Select Monitor.>

3. Steel Wheel

A: REMOVAL

1) Apply the parking brake, and position the select lever to “P” or “LOW”.
2) Set the shop jacks or a lift to specified point, and support the vehicle with its wheels slightly contacting the floor.
3) Loosen the wheel nuts.
4) Raise the vehicle until its wheels take off the ground using a jack or a lift.
5) Remove the wheel nuts and wheels.

NOTE:
• When removing the wheels, prevent hub bolts from damage.
• Place the wheels with their outer sides facing upward to prevent wheels from damage.

B: INSTALLATION

1) Remove dirt from the mating surface of wheel and brake rotor.
2) Attach the wheel to the hub by aligning the wheel bolt hole with the hub bolt.
3) Temporarily attach the wheel nuts to the hub bolts. (In the case of aluminum wheel, use SUBARU genuine wheel nut for aluminum wheel.)
4) Manually tighten the nuts making sure the wheel hub hole is aligned correctly to the guide portion of hub.
5) Tighten the wheel nuts in a diagonal selection to the specified torque. Use a wheel nut wrench.

Wheel nut tightening torque:
110 N·m (11.2 kgf-m, 81.1 ft-lb)

CAUTION:
• Tighten the wheel nuts in two or three steps by gradually increasing the torque and working diagonally, until they reach the specified torque.
• Do not depress the wrench with foot. Always use both hands when tightening.
• Make sure the bolt, nut and the nut seating surface of the wheel are free from oil.

6) If a wheel is removed for replacement or for repair of a puncture, retighten the wheel nuts to the specified torque after running 1,000 km (600 miles).

C: INSPECTION

1) Deformation or damage on the rim may cause air leakage. Check the rim flange for deformation, crack or damage, and repair or replace as necessary.
2) Jack-up the vehicle until wheels clear the floor.
3) Slowly rotate the wheel to check rim “runout” using a dial gauge.

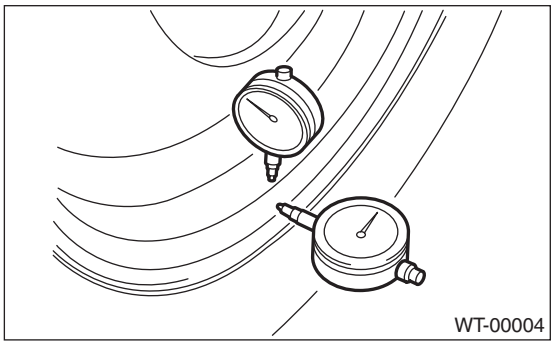

Rim runout:

Axial runout specification	Radial runout specification
1.5 mm (0.059 in)	

4) If the rim runout exceeds specifications, remove the tire from wheel and check runout while attaching the dial gauge to positions shown in the figure.

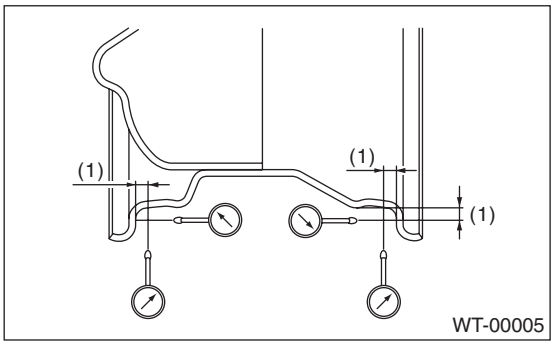

(1) Approx. 7 mm (0.28 in)

5) If the measured runout still exceeds specifications, replace the wheel.

4. Aluminum Wheel

A: REMOVAL

Refer to “Steel Wheel” for removal procedure of aluminum wheels. <Ref. to WT-6, REMOVAL, Steel Wheel.>

B: INSTALLATION

Refer to “Steel Wheel” for installation procedure of aluminum wheels. <Ref. to WT-6, INSTALLATION, Steel Wheel.>

C: INSPECTION

Refer to “Steel Wheel” for inspection procedure of aluminum wheels. <Ref. to WT-6, INSPECTION, Steel Wheel.>

Rim runout:

Axial runout specification	Radial runout specification
1.0 mm (0.039 in)	

D: CAUTION

Aluminum wheels are easily scratched. To maintain their appearance and safety, do the followings:
1) Do not damage the aluminum wheels during removal, installation, wheel balancing, etc. After removing the aluminum wheels, place them on a rubber mat, etc.
2) When washing the aluminum wheel, use neutral synthetic detergent and water. Avoid using the cleanser including abrasive, hard brushes or an automatic car washer.

5. Wheel Balancing

A: ADJUSTMENT

NOTE:
Change the setting of wheel balancer to adhesive type weight as adhesive type weight is adopted for outside balance weight of 16-inch (OUTBACK) and 17-inch wheel.

1) Remove the balance weights.

CAUTION:
- **Be careful not to damage the wheel.**
- **Completely remove the two-sided tape of the adhesive type weight from the wheel.**

2) Using the wheel balancer, measure the wheel balance.

3) Select a weight close to the value measured by wheel balancer.

CAUTION:
Use SUBARU genuine balance weight.

Balance weight part number (Knock-on type weight for steel wheel)	Weight
28101AA001	5 g (0.18 oz)
28101AA011	10 g (0.35 oz)
28101AA021	15 g (0.53 oz)
28101AA031	20 g (0.71 oz)
28101AA041	25 g (0.88 oz)
28101AA051	30 g (1.06 oz)
28101AA061	35 g (1.23 oz)
28101AA071	40 g (1.41 oz)
28101AA081	45 g (1.59 oz)
28101AA091	50 g (1.76 oz)
28101AA101	55 g (1.94 oz)
28101AA111	60 g (2.12 oz)

Balance weight part number (Knock-on type weight for aluminum wheel)	Weight
23141GA462	5 g (0.18 oz)
23141GA472	10 g (0.35 oz)
23141GA482	15 g (0.53 oz)
23141GA492	20 g (0.71 oz)
23141GA502	25 g (0.88 oz)
23141GA512	30 g (1.06 oz)
23141GA522	35 g (1.23 oz)
23141GA532	40 g (1.41 oz)
23141GA542	45 g (1.59 oz)
23141GA552	50 g (1.76 oz)
23141GA562	55 g (1.94 oz)
23141GA572	60 g (2.12 oz)

Balance weight part number (Adhesive type weight for aluminum wheel)	Weight
28101AE00A	5 g (0.18 oz)
28101AE01A	7.5 g (0.26 oz)
28101AE02A	10 g (0.35 oz)
28101AE03A	12.5 g (0.44 oz)
28101AE04A	15 g (0.53 oz)
28101AE05A	17.5 g (0.62 oz)
28101AE06A	20 g (0.71 oz)
28101AE07A	22.5 g (0.79 oz)
28101AE08A	25 g (0.88 oz)
28101AE09A	27.5 g (0.97 oz)
28101AE10A	30 g (1.06 oz)
28101AE11A	32.5 g (1.15 oz)
28101AE12A	35 g (1.23 oz)
28101AE13A	37.5 g (1.32 oz)
28101AE14A	40 g (1.41 oz)
28101AE15A	42.5 g (1.50 oz)
28101AE16A	45 g (1.59 oz)
28101AE17A	47.5 g (1.68 oz)
28101AE18A	50 g (1.76 oz)
28101AE19A	52.5 g (1.85 oz)
28101AE20A	55 g (1.94 oz)
28101AE21A	57.5 g (2.03 oz)
28101AE22A	60 g (2.12 oz)
28101AE23A	62.5 g (2.20 oz)
28101AE24A	65 g (2.29 oz)
28101AE25A	67.5 g (2.38 oz)
28101AE26A	70 g (2.47 oz)
28101AE27A	72.5 g (2.56 oz)
28101AE28A	75 g (2.65 oz)
28101AE29A	77.5 g (2.73 oz)
28101AE30A	80 g (2.82 oz)
28101AE31A	82.5 g (2.91 oz)
28101AE32A	85 g (3.00 oz)
28101AE33A	87.5 g (3.09 oz)
28101AE34A	90 g (3.17 oz)
28101AE35A	92.5 g (3.26 oz)
28101AE36A	95 g (3.35 oz)
28101AE37A	97.5 g (3.44 oz)
28101AE38A	100 g (3.53 oz)
28101AG50A	102.5 g (3.62 oz)
28101AG51A	105 g (3.70 oz)
28101AG52A	107.5 g (3.79 oz)
28101AG53A	110 g (3.88 oz)
28101AG54A	112.5 g (3.97 oz)
28101AG55A	115 g (4.06 oz)
28101AG56A	117.5 g (4.14 oz)
28101AG57A	120 g (4.23 oz)

4) Install the selected weight to the point designated by wheel balancer.

CAUTION:
• Remove grease from adhesive type weight applying surface of wheel.
• Press the adhesive type weight by 25 N (2.5 kgf, 5.6 lb) or more per 5 g (0.18 oz) for 2 seconds at least to attain close contact.
• Make all amounts of the applied adhesive type weight to be 100 g (3.53 oz) or less.
• Make all amounts of the applied adhesive type weight of model with transmitter (tire pressure sensor) to be 120 g (4.23 oz) or less.

5) Using the wheel balancer, measure the wheel balance again. Check that wheel balance is correctly adjusted.

NOTE:
Balance weights of knock-on type weight for aluminum wheel are available for use with any of 15- to 17-inch aluminum wheels.

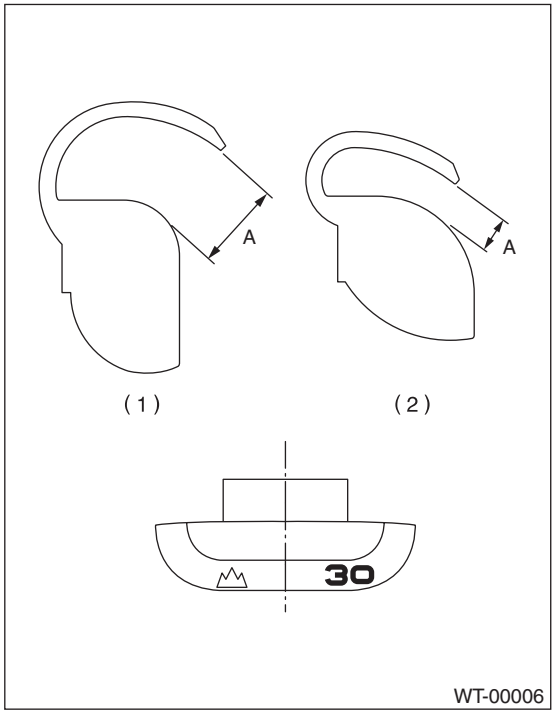

(1) Knock-on type weight for aluminum wheel
(2) Knock-on type weight for steel wheel

Service limit A:
Knock-on type weight for steel wheel:
5 — 25 g (0.18 — 0.88 oz) 2.0 mm (0.08 in)
30 g (1.06 oz) or more 1.8 mm (0.07 in)
Knock-on type weight for aluminum wheel:
5 — 25 g (0.18 — 0.88 oz) 5.0 mm (0.20 in)
30 g (1.06 oz) or more 4.5 mm (0.177 in)

6. "T-type" Tire

A: NOTE

"T-type" tire for temporary use is prepared as a spare tire.

CAUTION:
• Do not drive at a speed greater than 100 km/h (62 MPH).
• For the model with tire pressure monitoring system, the indicator light may blink when running with the "T-type" tire.

B: REPLACEMENT

Refer to "Steel Wheel" for installation procedure of "T-type" tire. <Ref. to WT-6, REMOVAL, Steel Wheel.>

CAUTION:
Replace with a conventional tire as soon as possible since the "T-type" tire is only for temporary use.

C: INSPECTION

1) Check the tire air pressure.

Specifications:
420 kPa (4.2 kg/cm^2, 60 psi)

2) Take the stones, glass, nails, etc. out of the tread groove.
3) Check the tires for deformation, cracks, partial wear or wear.

CAUTION:
Replace the tire with a new one if defective.

7. Tire Pressure Monitoring System

A: REMOVAL

1. TRANSMITTER (TIRE PRESSURE SENSOR)

1) Remove the wheels from vehicle. <Ref. to WT-6, REMOVAL, Steel Wheel.>
2) Bleed air from tire valve.
3) Remove the nut, and drop the transmitter in the tire.

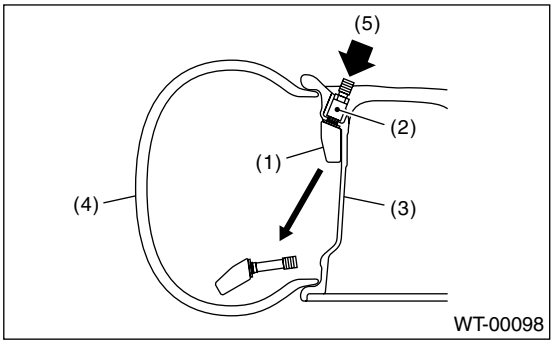

(1) Transmitter
(2) Nut
(3) Wheel
(4) Tire
(5) Push

4) Remove the tires from wheels.

CAUTION:
Use a tire changer when removing tire from wheel.

5) Remove the nut to take out transmitter.

NOTE:
Replace the grommet with a new one when reusing transmitter.

2. TIRE PRESSURE MONITORING CONTROL MODULE

1) Remove the driver's seat. <Ref. to SE-9, REMOVAL, Front Seat.>
2) Turn up the floor mat in the driver's seat area.
3) Remove the connector to remove tire pressure monitoring control module.

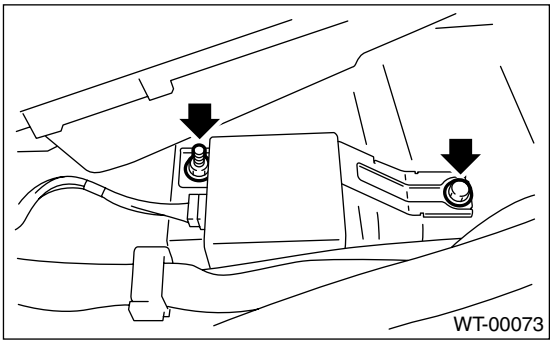

B: INSTALLATION

1. TRANSMITTER (TIRE PRESSURE SENSOR)

1) Install the transmitter to the wheel by aligning it with valve hole, and then tighten with nuts.

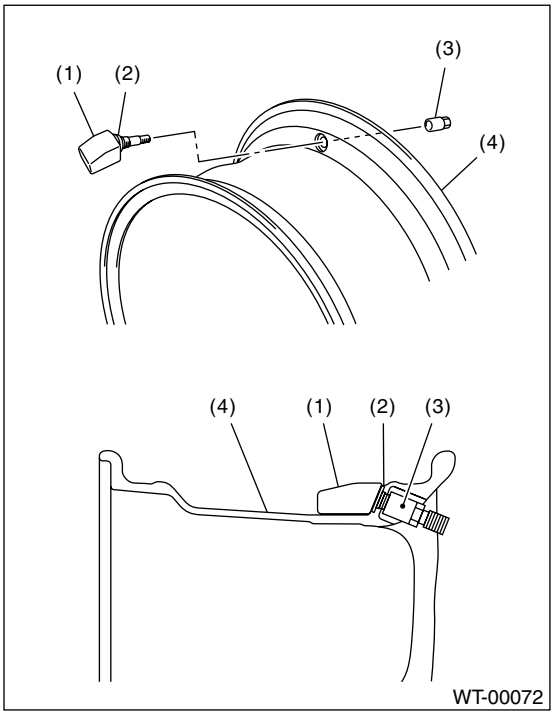

(1) Transmitter
(2) Grommet
(3) Nut
(4) Wheel

Tightening torque:
7.5 N·m (0.76 kgf-m, 5.53 ft-lb)

2) Install the tires to wheels.

CAUTION:
• Use a tire changer when installing tire to wheel.

• To prevent breaking of transmitter, set the tire changer boom in the position as shown in the figure.

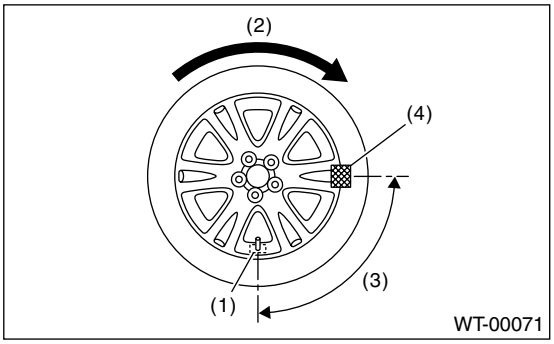

(1) Transmitter
(2) Turn table rotation direction
(3) 90°
(4) Tire changer boom

3) Install the wheels to vehicle. <Ref. to WT-6, INSTALLATION, Steel Wheel.>
4) Register the transmitter ID to tire pressure monitoring control module. <Ref. to TPM(diag)-10, REGISTER TRANSMITTER (ID), OPERATION, Subaru Select Monitor.>

2. TIRE PRESSURE MONITORING CONTROL MODULE

Install in the reverse order of removal.

Tightening torque:
8 N·m (0.8 kgf-m, 5.8 ft-lb)

C: ADJUSTMENT

Re-register the transmitter ID when transmitter has been replaced or tires have been rotated. <Ref. to TPM(diag)-10, REGISTER TRANSMITTER (ID), OPERATION, Subaru Select Monitor.>

8. General Diagnostic Table

A: INSPECTION

Symptom	Possible cause	Corrective action
Wheel wobble.	Improperly inflated tire	Adjust the tire pressure.
	Uneven wear	Check the tire referring to Abnormal tire wear in this table, carry out the procedure and replace the tire.
	Front wheel alignment	Check the front wheel alignments. <Ref. to FS-7, INSPECTION, Wheel Alignment.>
	Rear wheel alignment	Check the rear wheel alignments. <Ref. to RS-8, INSPECTION, Wheel Alignment.>
	Front strut	Check the front strut. <Ref. to FS-23, INSPECTION, Front Strut.>
	Rear shock absorber	Check the rear shock absorber. <Ref. to RS-16, INSPECTION, Rear Shock Absorber.>
	Front axle	Check the front axle. <Ref. to DS-16, INSPECTION, Front Axle.>
	Front hub unit bearing	Check the front hub unit bearing. <Ref. to DS-18, INSPECTION, Front Hub Unit Bearing.>
	Rear hub unit bearing	Check the rear hub unit bearing. <Ref. to DS-21, INSPECTION, Rear Hub Unit Bearing.>
Vehicle is abnormally out of balance.	Improperly inflated tire	Adjust the tire pressure.
	Uneven wear	Check the tire referring to Abnormal tire wear in this table, carry out the procedure and replace the tire.
	Front stabilizer	Check the front stabilizer. <Ref. to FS-15, INSPECTION, Front Stabilizer.>
	Front wheel alignment	Check the front wheel alignments. <Ref. to FS-7, INSPECTION, Wheel Alignment.>
	Rear wheel alignment	Check the rear wheel alignments. <Ref. to RS-8, INSPECTION, Wheel Alignment.>
Abnormal wheel vibration	Improperly inflated tire	Adjust the tire pressure.
	Uneven wear	Check the tire referring to Abnormal tire wear in this table, carry out the procedure and replace the tire.
	Improper wheel balancing	Check the wheel balance. <Ref. to WT-8, ADJUSTMENT, Wheel Balancing.>
	Front axle	Check the front axle. <Ref. to DS-16, INSPECTION, Front Axle.>
	Front hub unit bearing	Check the front hub unit bearing. <Ref. to DS-18, INSPECTION, Front Hub Unit Bearing.>
	Rear hub unit bearing	Check the rear hub unit bearing. <Ref. to DS-21, INSPECTION, Rear Hub Unit Bearing.>

Symptom	Possible cause	Corrective action
Abnormal tire wear	Improperly inflated tire	Adjust the tire pressure.
	Improper wheel balancing	Check the wheel balance. <Ref. to WT-8, ADJUSTMENT, Wheel Balancing.>
	Front wheel alignment	Check the front wheel alignments. <Ref. to FS-7, INSPECTION, Wheel Alignment.>
	Rear wheel alignment	Check the rear wheel alignments. <Ref. to RS-8, INSPECTION, Wheel Alignment.>

TIRE PRESSURE MONITORING SYSTEM (DIAGNOSTICS) TPM(diag)

		Page
1.	Basic Diagnostic Procedure	2
2.	General Description	4
3.	Electrical Component Location	6
4.	Control Module I/O Signal	7
5.	Subaru Select Monitor	9
6.	Read Diagnostic Trouble Code (DTC)	17
7.	Inspection Mode	18
8.	Clear Memory Mode	19
9.	Tire Pressure Warning Light / Trouble Indicator Light Illumination Pattern	20
10.	List of Diagnostic Trouble Code (DTC)	28
11.	Diagnostic Procedure with Diagnostic Trouble Code (DTC)	30
12.	General Diagnostic Table	40

1. Basic Diagnostic Procedure

A: PROCEDURE

CAUTION:
Remove foreign matters (dust, water, oil, etc.) from the tire pressure monitoring control module connector during removal and installation.

NOTE:
To check harness for open or short circuits, shake trouble spot or connector.

	Step	Check	Yes	No
1	**CHECK PRE-INSPECTION.** 1) Ask the customer when the warning light turned on or blinked. 2) Before performing diagnostics, check the components which might affect tire pressure monitoring system problems. <Ref. to TPM(diag)-4, INSPECTION, General Description.>	Is the component that might influence the tire pressure monitoring system problem normal?	Go to step **2.**	Repair or replace each component.
2	**CHECK DIAGNOSTIC TROUBLE CODE (DTC).** 1) Turn the ignition switch to OFF. 2) Connect the Subaru Select Monitor to data link connector. 3) Turn the ignition switch to ON and Subaru Select Monitor to ON. NOTE: If the communication function of the Subaru Select Monitor cannot be executed normally, check the communication circuit. <Ref. to TPM(diag)-12, COMMUNICATION FOR INITIALIZING IMPOSSIBLE, INSPECTION, Subaru Select Monitor.> 4) Read the DTC. <Ref. to TPM(diag)-17, OPERATION, Read Diagnostic Trouble Code (DTC).>	Is DTC displayed?	Go to step **4.**	Go to step **3.**
3	**PERFORM GENERAL DIAGNOSTICS.** 1) Inspect using “General Diagnostic Table”. <Ref. to TPM(diag)-40, General Diagnostic Table.> 2) Perform the clear memory mode. <Ref. to TPM(diag)-10, CLEAR MEMORY, OPERATION, Subaru Select Monitor.> 3) Perform the inspection mode. <Ref. to TPM(diag)-18, Inspection Mode.> 4) Read the DTC. <Ref. to TPM(diag)-9, READ DIAGNOSTIC TROUBLE CODE (DTC), OPERATION, Subaru Select Monitor.> Check that the DTC does not displayed.	After turning the ignition switch to ON, the tire pressure warning light illuminates for about 2 seconds and then goes off.	Finish the diagnosis.	Check in accordance with “Diagnostic Procedure for TPM”. <Ref. to TPM(diag)-15, WITHOUT DTC, INSPECTION, Subaru Select Monitor.>

	Step	Check	Yes	No
4	**PERFORM DIAGNOSIS.** 1) Refer to “List of Diagnostic Trouble Code (DTC)”. 2) Correct the faulty part. 3) Perform the clear memory mode. <Ref. to TPM(diag)-10, CLEAR MEMORY, OPERATION, Subaru Select Monitor.> 4) Perform the drive test. Drive the vehicle at a speed more than 40 km/h (25 MPH) for at least 10 minutes. 5) Read the DTC. <Ref. to TPM(diag)-9, READ DIAGNOSTIC TROUBLE CODE (DTC), OPERATION, Subaru Select Monitor.>	Is DTC displayed?	Repeat step 1 to 4 until no more DTC is shown.	Finish the diagnosis.

2. General Description

A: CAUTION

1. SRS AIRBAG SYSTEM

Airbag system wiring harness is routed near the TPM control module.

CAUTION:
• All air bag system wiring harnesses are colored yellow. Do not use the electrical test equipment on these circuits.
• Be careful not to damage the airbag system wiring harness when servicing the tire pressure monitoring control module.

2. TIRE PRESSURE MONITORING CONTROL MODULE

• If the alteration of tire rotation, the installation position or the replacement of transmitter is performed, ID registration for the transmitter is required. <Ref. to TPM(diag)-10, REGISTER TRANSMITTER (ID), OPERATION, Subaru Select Monitor.>
• If adjustment of tire pressure is performed indoors in winter, the difference between indoor temperature and outdoor temperature is large. When the vehicle is out, tire pressure will go down and tire pressure warning light might operate. To avoid this situation, adjustment of tire pressure need to be slightly high considering the difference between indoor and outdoor temperature.

Temperature °C (°F)	Indoor temperature	15.5 (60)		
	Ambient temperature	−1 (30)	−12 (10)	−23 (−10)
Air pressure kPa (pis)	Front	240 (35)	255 (37)	270 (39)
	Rear	230 (33)	245 (35)	260 (37)

B: INSPECTION

Before performing diagnosis, check the following items which might affect tire pressure monitoring system problems.

1. TIRE

• Inspect that the tire pressure is within the specification while the tire is cool. (Refer to Tire Caution Label.)
• Check the tires for damage or foreign matters stinging.

2. BATTERY

Check that amount of battery fluid, gravity and voltage are within the specifications.

Standard voltage: 12 V or more

Specific gravity: 1.260 or more

C: PREPARATION TOOL

1. SPECIAL TOOL

ILLUSTRATION	TOOL NUMBER	DESCRIPTION	REMARKS
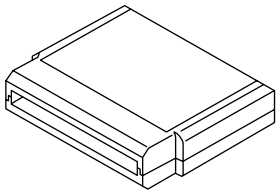 ST24082AA260	24082AA260	CARTRIDGE	Troubleshooting for electrical system.
ST22771AA030	22771AA030	SUBARU SELECT MONITOR KIT	Troubleshooting for electrical system.

2. GENERAL TOOL

TOOL NAME	REMARKS
Circuit tester	Used for measuring resistance, voltage and current.
Transmitter registration tool TPM-00012	Used for transmitter ID registration. Manufacturer: Kent-Moore Item number: J45295

3. Electrical Component Location

A: LOCATION

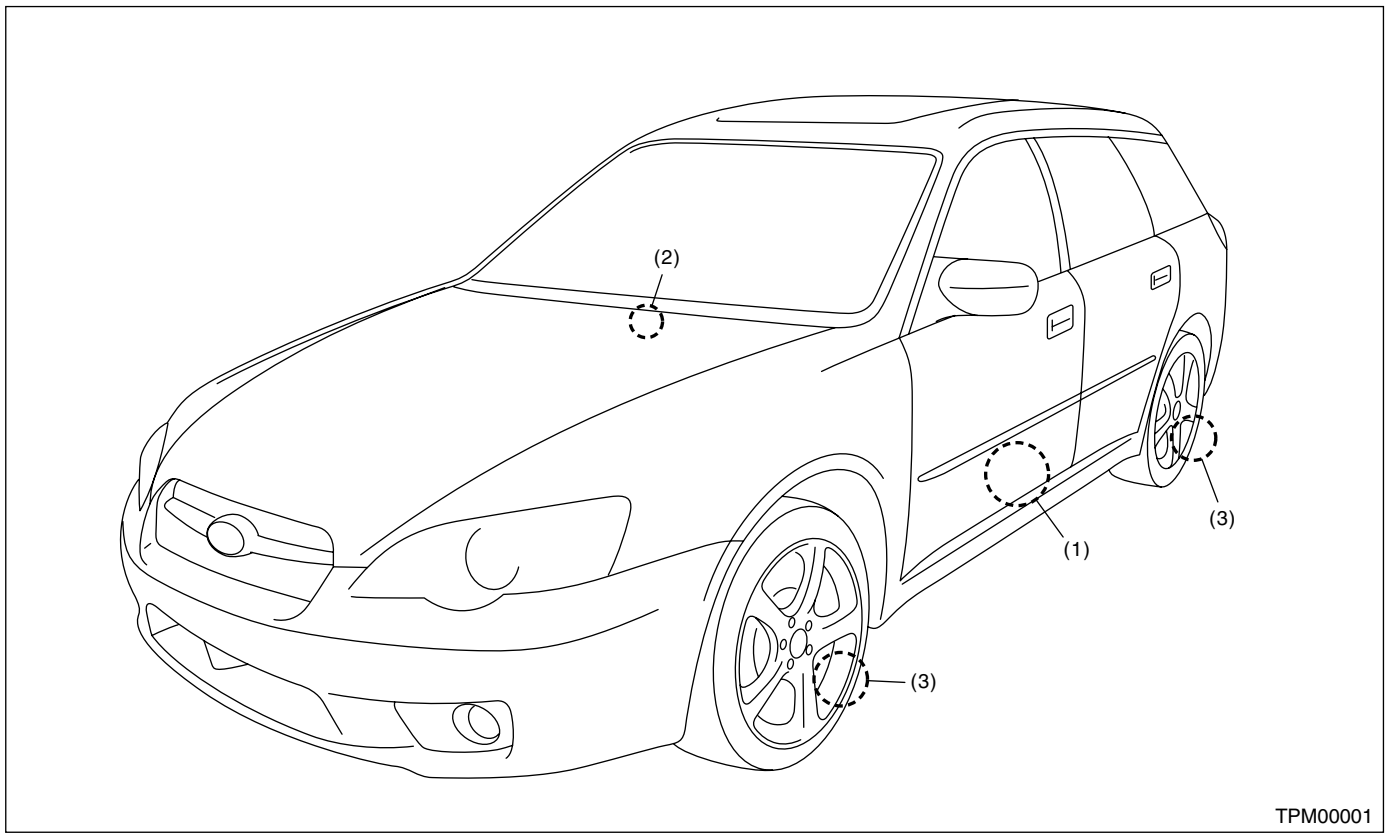

(1) Tire pressure monitoring control module
(2) Tire pressure warning light
(3) Transmitter 1 — 4

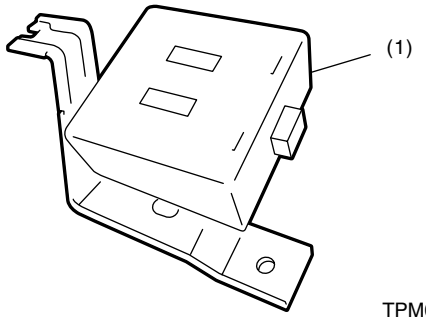

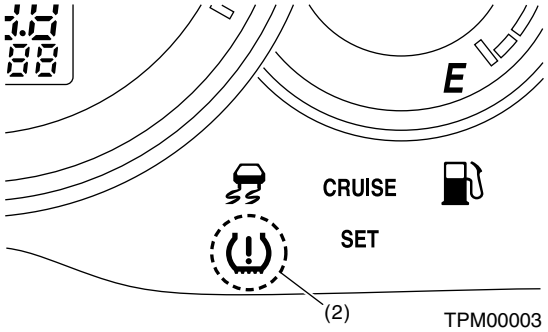

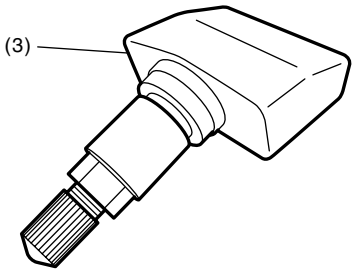

4. Control Module I/O Signal

A: ELECTRICAL SPECIFICATION

Terminal No.	Measured value	Measuring conditions	Remarks
1	Select monitor communication	Serial communication	—
2	Tire pressure warning light output	When malfunction occurs or air pressure reduces	System malfunction: blinks Air pressure reduces: turns on
4	Speed Sensor Signal	While driving (pulse signal)	Change according to vehicle speed
5	Ignition power supply	IG switch ON (Battery voltage)	—
6	Battery power supply	Battery voltage	Always
8	Body integrated unit (hazard output signal).	—	When the hazard turns on.
9	GND	0V (Always)	Always

B: WIRING DIAGRAM

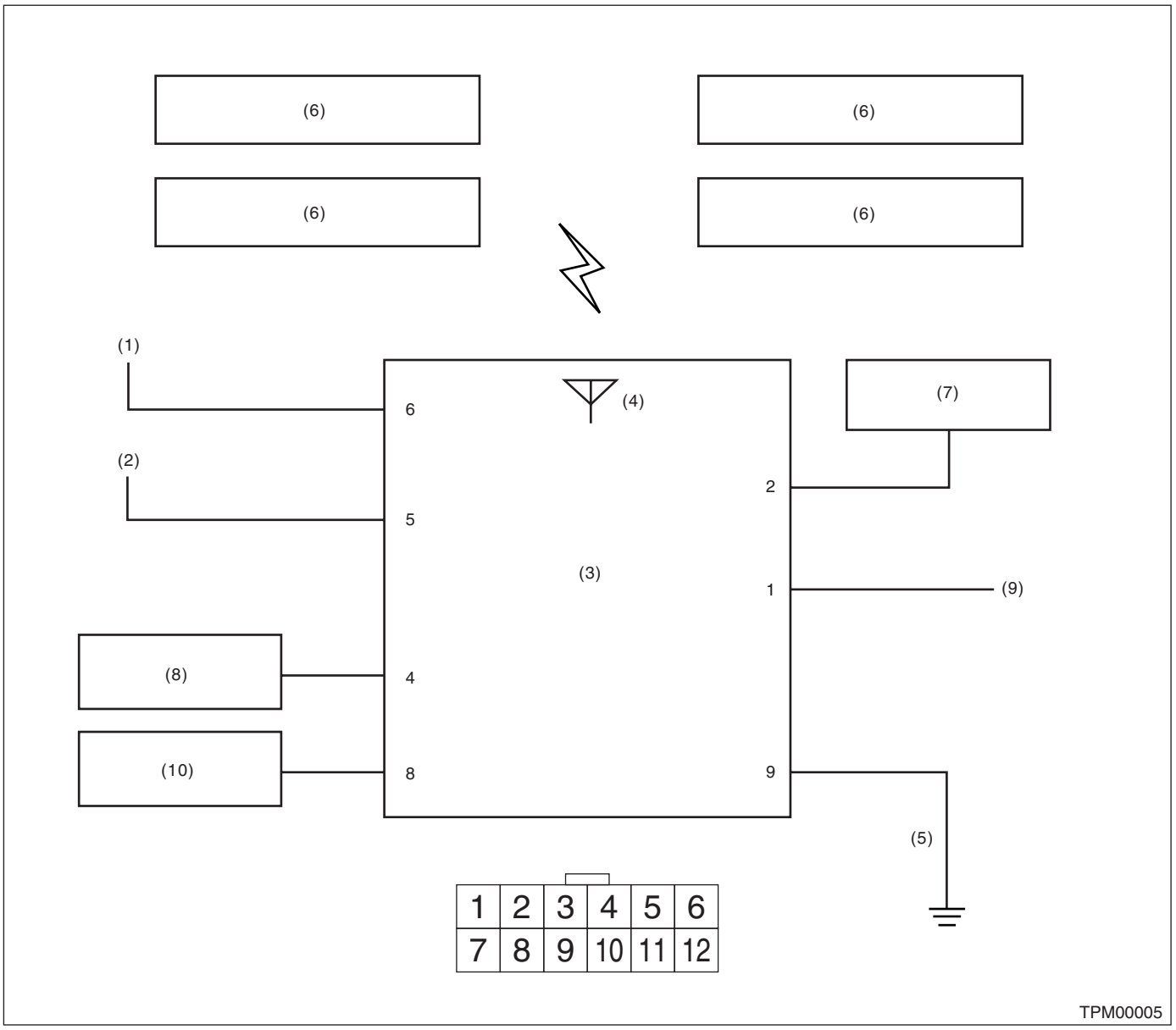

(1) Battery power supply
(2) Ignition power supply
(3) Tire pressure monitoring control module
(4) Antenna
(5) GROUND
(6) Transmitter
(7) Combination Meter
(8) Vehicle speed signal
(9) Subaru Select Monitor
(10) Body Integrated Unit

5. Subaru Select Monitor

A: OPERATION

1. READ DIAGNOSTIC TROUBLE CODE (DTC)

1) Prepare the Subaru Select Monitor kit. <Ref. to TPM(diag)-5, SPECIAL TOOL, PREPARATION TOOL, General Description.>

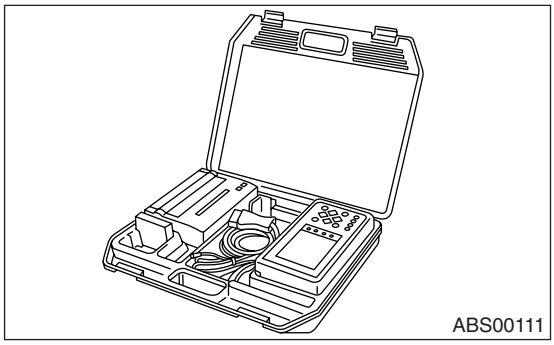

2) Connect the diagnosis cable to Subaru Select Monitor.
3) Insert the cartridge to Subaru Select Monitor. <Ref. to TPM(diag)-5, SPECIAL TOOL, PREPARATION TOOL, General Description.>

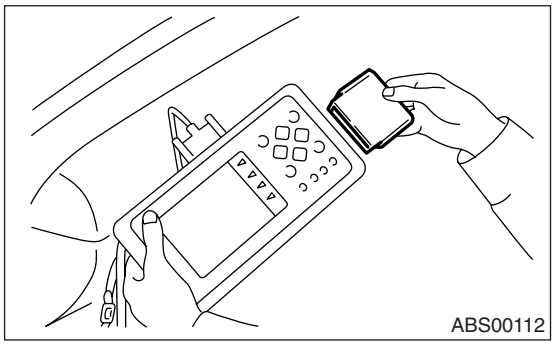

4) Connect the Subaru Select Monitor to data link connector.

(1) Data link connector is located in the lower portion of instrument panel (on the driver's side).

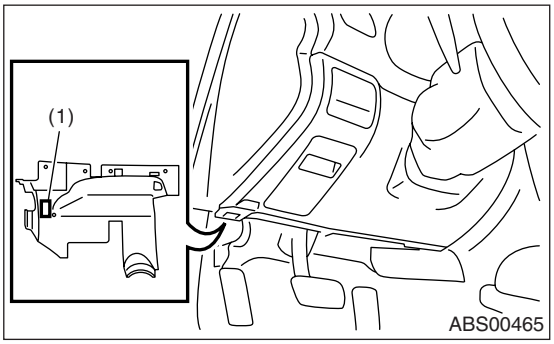

(1) Data Link Connector

(2) Connect the diagnosis cable to data link connector.

CAUTION:
Do not connect the scan tools except for Subaru Select Monitor.

5) Turn the ignition switch to ON (engine OFF) and turn the Subaru Select Monitor switch to ON.

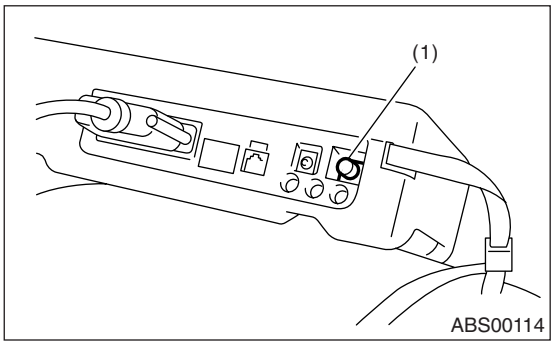

(1) Power switch

6) On the «Main Menu» display screen, select the {Each System Check} and press the [YES] key.
7) On the «System Selection Menu» display screen, select the {Brake Control} and press the [YES] key.
8) Press the [YES] key after the {Model Year} is displayed.
9) On the «Tire pressure monitor diagnosis» display screen, select the {DTC Display} and press the [YES] key.

NOTE:
• For details concerning operation procedure, refer to "SUBARU SELECT MONITOR OPERATION MANUAL".
• For details concerning DTCs, refer to the "List of Diagnostic Trouble Code (DTC)". <Ref. to TPM(diag)-28, List of Diagnostic Trouble Code (DTC).>
• All DTCs which are detected are displayed.
• If a particular DTC is not properly stored in memory (due to a drop in tire pressure monitoring control module power supply, etc.) on the occurrence of a problem, the DTC which is suffixed with a question mark "?" appears on the Subaru Select Monitor display. This shows it may be an unreliable reading.

10) If tire pressure monitoring control module and Subaru Select Monitor cannot communicate, check the communication circuit. <Ref. to TPM(diag)-12, COMMUNICATION FOR INITIALIZING IMPOSSIBLE, INSPECTION, Subaru Select Monitor.>
11) When DTC is not displayed, check the indicator circuit and communication circuit. <Ref. to TPM(diag)-15, WITHOUT DTC, INSPECTION, Subaru Select Monitor.>

2. DATA DISPLAY

1) On the «Main Menu» display screen, select the {Each System Check} and press the [YES] key.
2) On the «System Selection Menu» display screen, select the {Tire Pressure Monitoring} and press the [YES] key.
3) Press the [YES] key after the {Tire Pressure Monitoring} is displayed.
4) On the «Tire pressure monitor diagnosis» display screen, select the {Data Display} and press the [YES] key, then necessary data will be displayed.
• A list of the support data is shown in the following table.

1. Data Monitoring (Analog)

Display	Contents to be monitored	Unit of measure
FR FN Code	LEARN, LOW BAT, OFF, WAKE, RE ME, NORMAL	LEARN: Transmitter ID is sent with transmitter registration tool. LOW BAT: The battery voltage of transmitter is low. OFF: Function of transmitter stops (no data transmission) RE ME: when the tire air changes ±8.4 kPa. WAKE: when data transmission is performed from stop condition. NORMAL: conditions except above-mentioned.
FL FN Code		
RR FN Code		
RL FN Code		
FR tire pressure	Value that data from transmitter is converted into tire pressure is displayed (It may be different from which value that is measured directly.)	kPa, psig, mmHg, inHg
FL tire pressure		kPa, psig, mmHg, inHg
RR tire pressure		kPa, psig, mmHg, inHg
RL tire pressure		kPa, psig, mmHg, inHg
Vehicle Speed	Vehicle speed signal which is input in control module.	km/h, MPH
Pressure warning	The threshold value that tire pressure warning light turns on	kPa, psig, mmHg, inHg
Return pressure	The threshold value that tire pressure warning light turns off	kPa, psig, mmHg, inHg

3. CLEAR MEMORY

1) On the «Main Menu» display screen, select the {2. Each System Check} and press the [YES] key.
2) On the «System Selection Menu» display screen, select the {Tire Pressure Monitoring} and press the [YES] key.
3) Press the [YES] key after the {Tire Pressure Monitoring} is displayed.
4) On the «Tire pressure monitor diagnosis» display screen, select the {Clear Memory} and press the [YES] key.
5) When {Done} and {Turn ignition switch OFF} are shown on the display screen, turn the Subaru Select Monitor and ignition switch to OFF.

NOTE:
For details concerning operation procedure, refer to “SUBARU SELECT MONITOR OPERATION MANUAL”.

4. REGISTER TRANSMITTER (ID)

Perform registration of transmitter under the following situation.
• Transmitter is replaced.
• Position of transmitter is changed (tire rotation is performed).
• Tire pressure monitoring control module is replaced.

NOTE:
• If registration is not successful although registration of transmitter (ID) is performed twice, replace the tire pressure monitoring control module. <Ref. to WT-11, TIRE PRESSURE MONITORING CONTROL MODULE, REMOVAL, Tire Pressure Monitoring System.> <Ref. to WT-12, TIRE PRESSURE MONITORING CONTROL MODULE, INSTALLATION, Tire Pressure Monitoring System.>
• If the ignition switch and power supply of Subaru Select Monitor are turned off or the registration procedure is not performed more than 5 minutes while registration service, registration mode is cancelled.
• While tire rotation, no registration for transmitter (ID) does not affect to performance and function of tire pressure monitoring system. However tire position is not displayed in the Subaru Select Monitor correctly.

1) Adjust all of tire pressure to the specifications.
2) Connect the Subaru Select Monitor, on the «Main Menu» display screen, select the {2. Each System Check} and press the [YES] key.

3) On the «System Selection Menu» display screen, select the {Tire Pressure Monitoring} and press the [YES] key.
4) Press the [YES] key after the {Tire Pressure Monitoring} is displayed.
5) On the «Tire pressure monitor diagnosis» display screen, select the {Transmitter ID regist confirm} and press the [YES] key.
6) {When ID registration mode execute, Registered ID is deleted Proceed?} is displayed then press the [YES] key.
7) Make the transmitter registration tool contact with the side wall near the air valve of FL tire and press the switch to send transmitter ID to tire pressure monitoring control module. (At this time, tire pressure warning light blinks to start the registration procedure.)

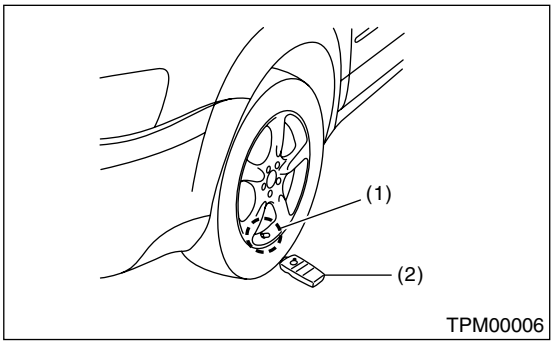

(1) Air valve (transmitter)
(2) Transmitter registration tool

NOTE:
• For order to register transmitter ID, Left Front → Right Front → Right Rear → Left Rear.
• Transmitter registration tool should be contact with side wall near transmitter.
• After registration for each tire completes, hazard light will blink and «ID registration completed» will be displayed in the Select Monitor display screen.
• If registration procedure stop in the halfway (turning ignition switch to OFF, wrong registration order, etc), proceed from step 5)

8) After ID registration is completed, tire pressure warning light turn on for 2 seconds and registration procedure is completed, then display screen will display to transmitter (ID) for Subaru Select Monitor <Ref. to TPM(diag)-11, DISPLAY TRANSMITTER (ID)., OPERATION, Subaru Select Monitor.>
9) Check the registered transmitter ID, and perform the driving check. <Ref. to TPM(diag)-18, PROCEDURE, Inspection Mode.>

5. DISPLAY TRANSMITTER (ID).

1) On the «Main Menu» display screen, select the {Each System Check} and press the [YES] key.
2) On the «System Selection Menu» display screen, select the {Tire Pressure Monitoring} and press the [YES] key.
3) Press the [YES] key after the {Tire Pressure Monitoring} is displayed.
4) On the «Tire pressure monitor diagnosis» display screen, select the {Transmitter ID regist confirm} and press the [YES] key.
5) Select the {Transmitter ID Data Monitor} and press the [YES] key to display transmitter ID.

B: INSPECTION

1. COMMUNICATION FOR INITIALIZING IMPOSSIBLE

DETECTING CONDITION:
Defective harness connector
TROUBLE SYMPTOM:
Communication is impossible between tire pressure monitoring control module and Select Monitor.
WIRING DIAGRAM:

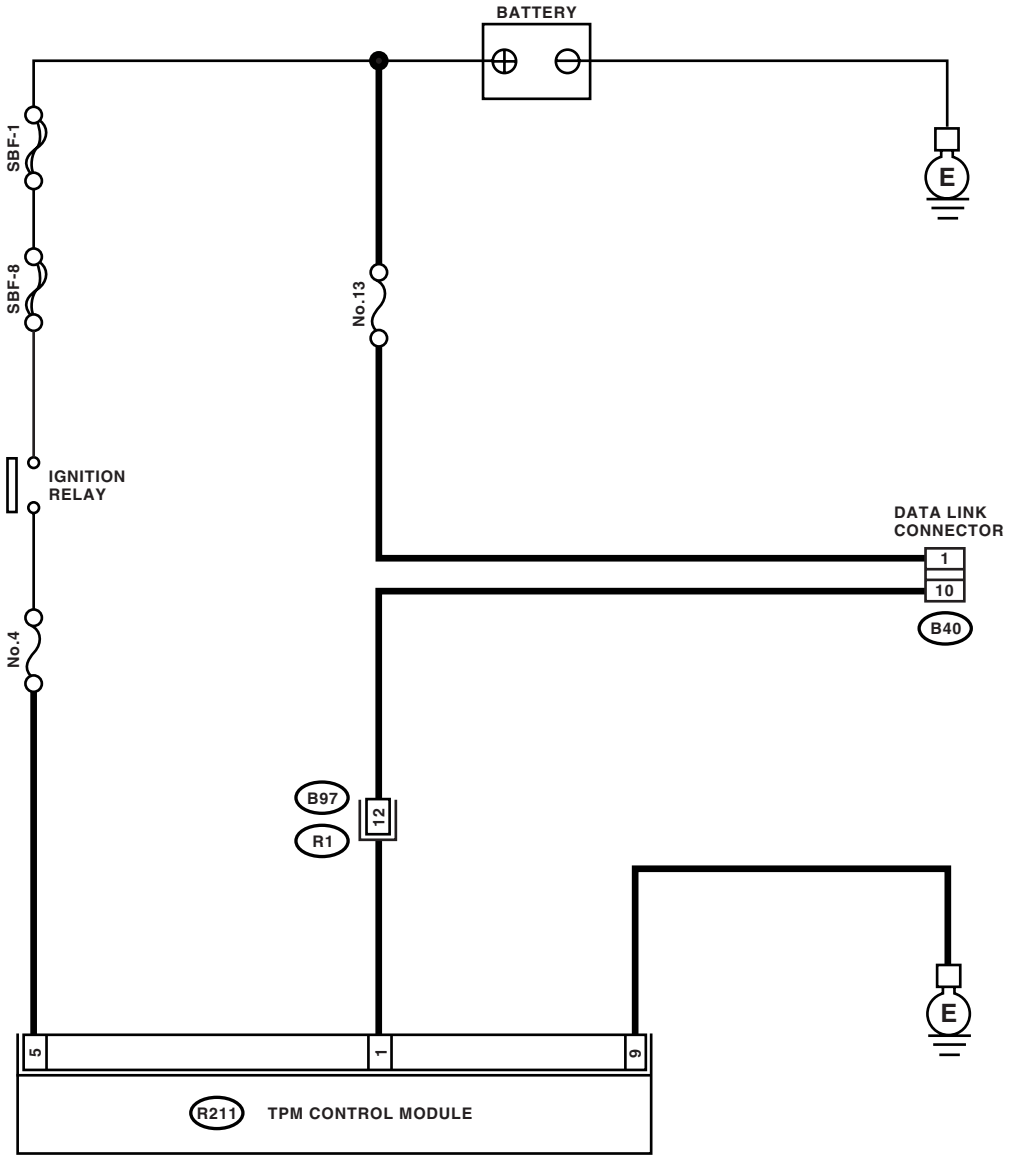

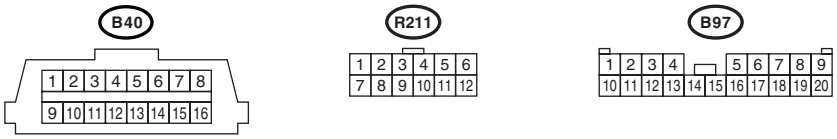

TPM00007

	Step	Check	Yes	No
1	**CHECK IGNITION SWITCH.**	Is the ignition switch ON?	Go to step **2.**	Turn the ignition switch to ON, and select TPM mode using Subaru Select Monitor.
2	**CHECK BATTERY.**	Is the voltage more than 11 V?	Go to step **3.**	Charge or replace the battery.
3	**CHECK BATTERY TERMINAL.**	Is there poor contact at battery terminal?	Replace or tighten the battery terminal.	Go to step **4.**
4	**CHECK SUBARU SELECT MONITOR COMMUNICATION.** 1) Turn the ignition switch to ON. 2) Using the Subaru Select Monitor, check whether communication to other system can be executed normally.	Are the system name and model year displayed on Subaru Select Monitor?	Go to step **8.**	Go to step **5.**
5	**CHECK SUBARU SELECT MONITOR COMMUNICATION.** 1) Turn the ignition switch to OFF. 2) Disconnect tire pressure monitoring control module connector. 3) Turn the ignition switch to ON. 4) Check whether communication to other systems can be executed normally.	Are the system name and model year displayed on Subaru Select Monitor?	Replace tire pressure monitoring control module. <Ref. to WT-11, TIRE PRESSURE MONITORING CONTROL MODULE, REMOVAL, Tire Pressure Monitoring System.> <Ref. to WT-12, TIRE PRESSURE MONITORING CONTROL MODULE, INSTALLATION, Tire Pressure Monitoring System.>	Go to step **6.**
6	**CHECK HARNESS CONNECTOR BETWEEN EACH CONTROL MODULE AND DATA LINK CONNECTOR.** 1) Turn the ignition switch to OFF. 2) Disconnect tire pressure monitoring control module. 3) Measure the resistance between data link connector and chassis ground. ***Connector & terminal*** ***(B40) No. 10 — Chassis ground:***	Is the resistance more than 1 MΩ?	Go to step **7.**	Repair the harness and connector between each control module and data link connector.
7	**CHECK OUTPUT SIGNAL TO TIRE PRESSURE MONITORING CONTROL MODULE.** 1) Turn the ignition switch to ON. 2) Measure the voltage between tire pressure monitoring control module and chassis ground. ***Connector & terminal*** ***(B40) No. 10 (+) — Chassis ground (−):***	Is the voltage less than 1 V?	Go to step **8.**	Repair the harness and connector between each control module and data link connector.
8	**CHECK HARNESS CONNECTOR BETWEEN TIRE PRESSURE MONITORING CONTROL MODULE AND DATA LINK CONNECTOR.** Measure the resistance between tire pressure monitoring control module connector and data link connector. ***Connector & terminal*** ***(R211) No. 1 — (B40) No. 10:***	Is the resistance less than 0.5 Ω?	Go to step **9.**	Repair the harness and connector between tire pressure monitoring control module and data link connector.

	Step	Check	Yes	No
9	**CHECK TIRE PRESSURE MONITORING CONTROL MODULE CONNECTOR.** Turn the ignition switch to OFF.	Is the tire pressure monitoring control module connector inserted into tire pressure monitoring control module until the clamp locks onto it?	Go to step **10.**	Insert tire pressure monitoring control module connector into tire pressure monitoring control module.
10	**CHECK POWER SUPPLY CIRCUIT.** 1) Turn the ignition switch to ON. (Engine OFF) 2) Measure the ignition power voltage between tire pressure monitoring control module connector and chassis ground. ***Connector & terminal*** ***(R211) No. 5 (+) — Chassis ground (−):***	Is the voltage 10 — 15 V?	Go to step **11.**	Repair open circuit in harness between tire pressure monitoring control module and battery.
11	**CHECK HARNESS CONNECTOR BETWEEN TIRE PRESSURE MONITORING CONTROL MODULE AND CHASSIS GROUND.** 1) Turn the ignition switch to OFF. 2) Disconnect connector from tire pressure monitoring control module. 3) Measure the resistance of harness between tire pressure monitoring module and chassis ground. ***Connector & terminal*** ***(R211) No. 9 — Chassis ground:***	Is the resistance less than 0.5 Ω?	Go to step **12.**	Repair open circuit in harness of tire pressure monitoring control module.
12	**CHECK POOR CONTACT IN CONNECTOR.**	Is there poor contact in tire pressure monitoring control module power supply, ground circuit and data link connector?	Repair the connector.	Replace tire pressure monitoring control module only. <Ref. to WT-11, TIRE PRESSURE MONITORING CONTROL MODULE, REMOVAL, Tire Pressure Monitoring System.> <Ref. to WT-12, TIRE PRESSURE MONITORING CONTROL MODULE, INSTALLATION, Tire Pressure Monitoring System.>

2. WITHOUT DTC

DETECTING CONDITION:
- Defective combination meter
- Defective harness

TROUBLE SYMPTOM:
- TIRE PRESSURE WARNING LIGHT DOES NOT GO OFF
- “NO TROUBLE CODE” will be displayed on the Subaru Select Monitor.

NOTE:
When the tire pressure warning light is OFF and “NO TROUBLE CODE” is displayed, the system is in normal condition.

WIRING DIAGRAM:

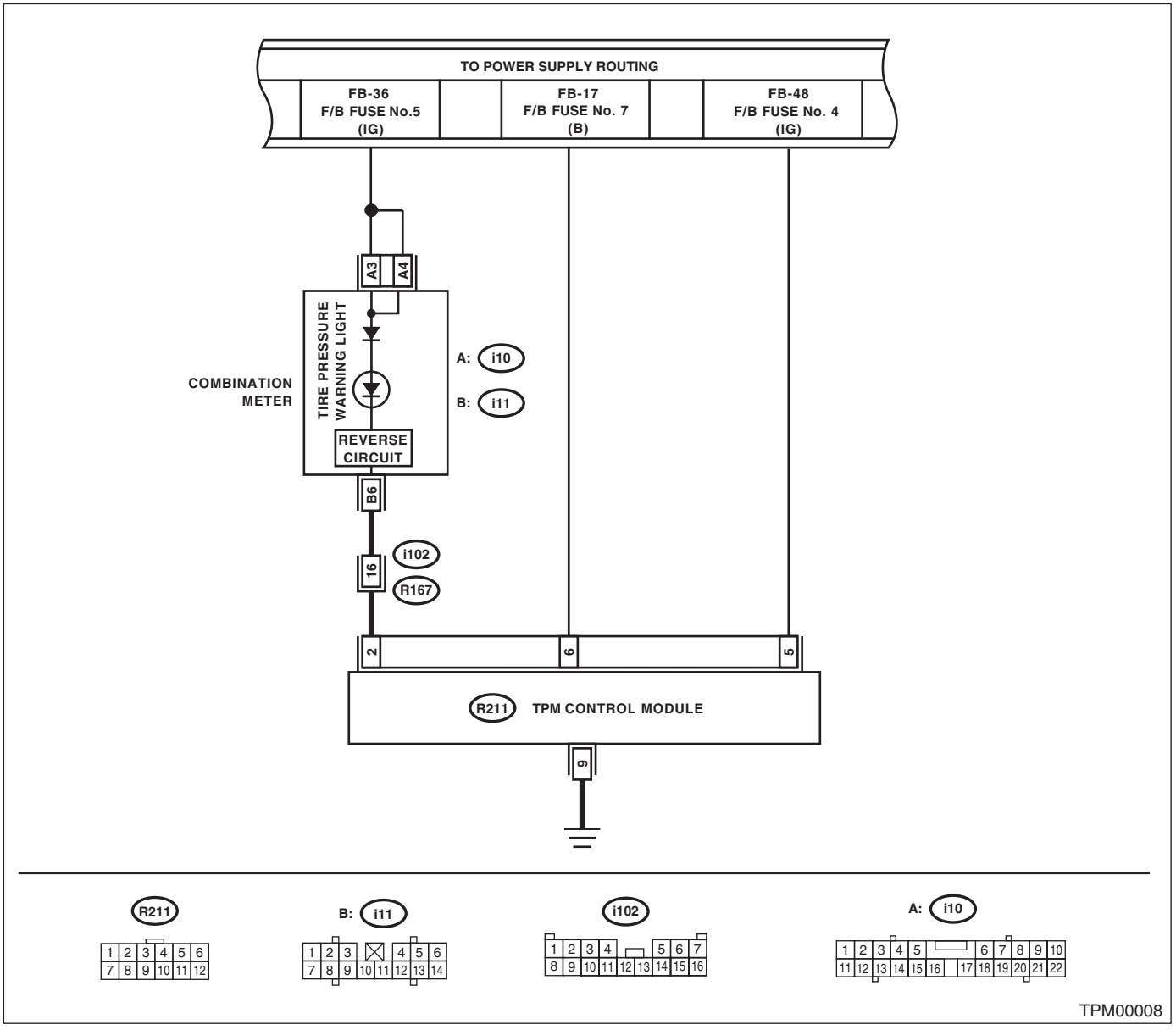

	Step	Check	Yes	No
1	**DATA CHECK SUBARU SELECT MONITOR.** 1) Select {Current Data Display & Save} in Subaru Select Monitor. 2) Read the data for “Tire pressure warning light”	Is “ON” indicated?	Replace tire pressure monitoring control module. <Ref. to WT-11, TIRE PRESSURE MONITORING CONTROL MODULE, REMOVAL, Tire Pressure Monitoring System.> <Ref. to WT-12, TIRE PRESSURE MONITORING CONTROL MODULE, INSTALLATION, Tire Pressure Monitoring System.>	Go to step **2.**
2	**CHECK WIRING HARNESS.** Measure the resistance between tire pressure monitoring control module connector and combination meter connector. ***Connector & terminal*** ***(i11) No. 6 — (R211) No. 2:***	Is the resistance less than 0.5 Ω?	Go to step **3.**	Repair the harness and connector between tire pressure monitoring control module and combination meter.
3	**CHECK POOR CONTACT IN CONNECTOR.**	Is there poor contact in tire pressure monitoring control module connector and combination meter connector?	Repair the connector.	Check the combination meter.

6. Read Diagnostic Trouble Code (DTC)

A: OPERATION

For details about reading of DTCs, refer to the “SUBARU SELECT MONITOR”. <Ref. to TPM(diag)-9, Subaru Select Monitor.>

7. Inspection Mode

A: PROCEDURE

Reproduce the malfunction occurrence condition as possible. Drive the vehicle more than 40 km/h (25 MPH) for 10 minutes.

8. Clear Memory Mode

A: OPERATION

For details concerning DTC clear operation, refer to the “Subaru Select Monitor”. <Ref. to TPM(diag)-9, Subaru Select Monitor.>

9. Tire Pressure Warning Light / Trouble Indicator Light Illumination Pattern

A: INSPECTION

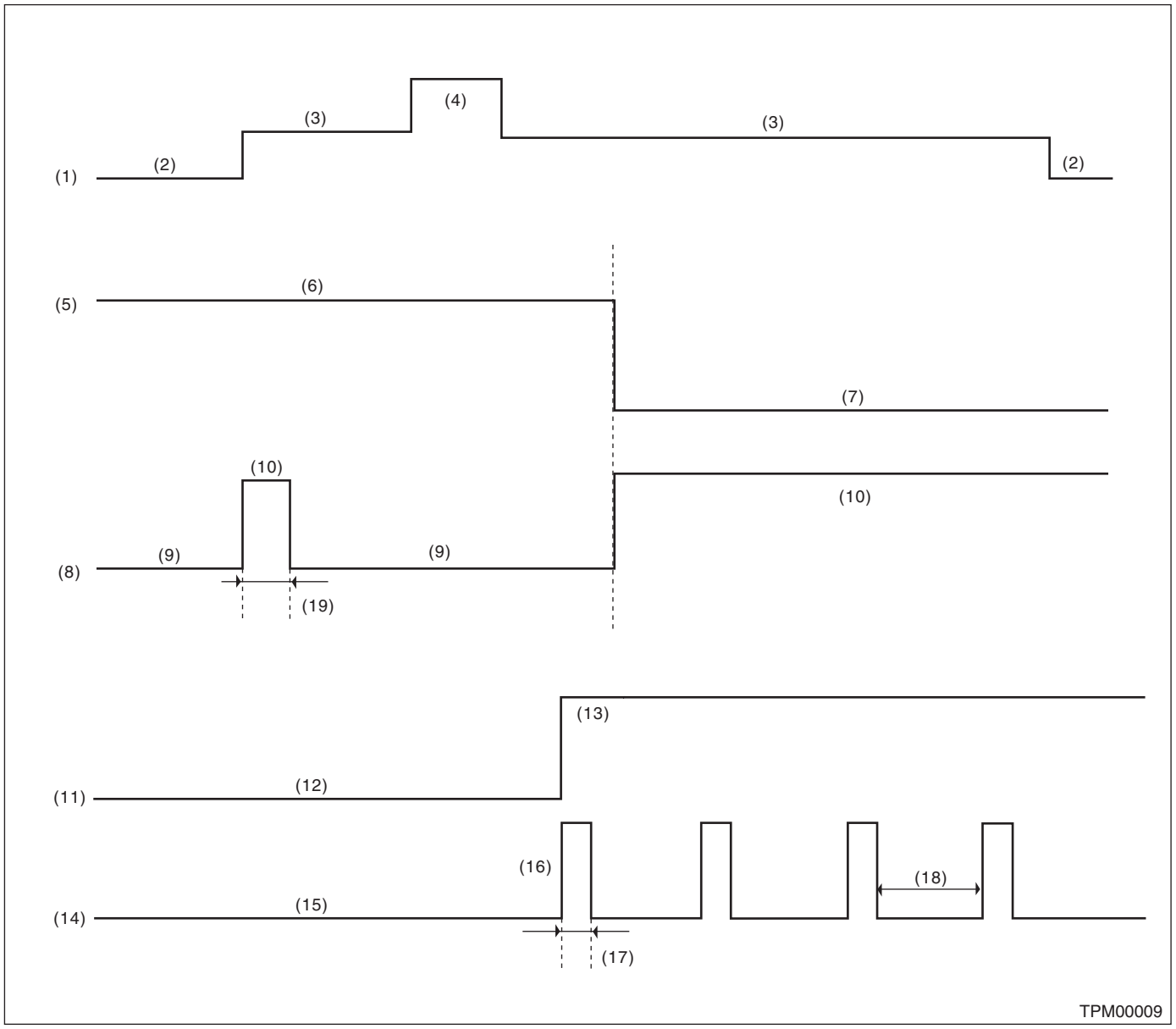

(1) Ignition switch
(2) OFF
(3) ON
(4) Start
(5) Tire pressure
(6) Meet the specification
(7) 180 kPa (1.8 kgf/cm^2, 26 psi) or less
(8) Tire pressure warning light
(9) Light OFF
(10) Light ON
(11) System failure
(12) Normal operation
(13) Defective
(14) Tire pressure warning light
(15) Light OFF
(16) Blink
(17) 1 second
(18) 3 seconds
(19) 2 seconds

1) When the tire pressure warning light does not illuminate in accordance with the illumination pattern, there must be an electrical malfunction.
2) When tire pressure warning light does not go off, check the tire pressure monitoring control module/warning light circuit, combination meter circuit. <Ref. to TPM(diag)-24, TIRE PRESSURE WARNING LIGHT DOES NOT COME OFF, Tire Pressure Warning Light / Trouble Indicator Light Illumination Pattern.>

NOTE:
If problem disappeared while driving at approximately 40 km/h (25 MPH) after tire pressure warning light blinks/illuminates, warning light goes out and tire pressure monitoring system operates correctly. (For reduced air pressure or system malfunction, malfunction occurred in the past will be displayed.)

B: TIRE PRESSURE WARNING LIGHT DOES NOT COME ON

DETECTING CONDITION:

- Defective combination meter
- Defective harness

TROUBLE SYMPTOM:

When the ignition switch is turned to ON (engine OFF), tire pressure warning light does not come on (2 seconds).

WIRING DIAGRAM:

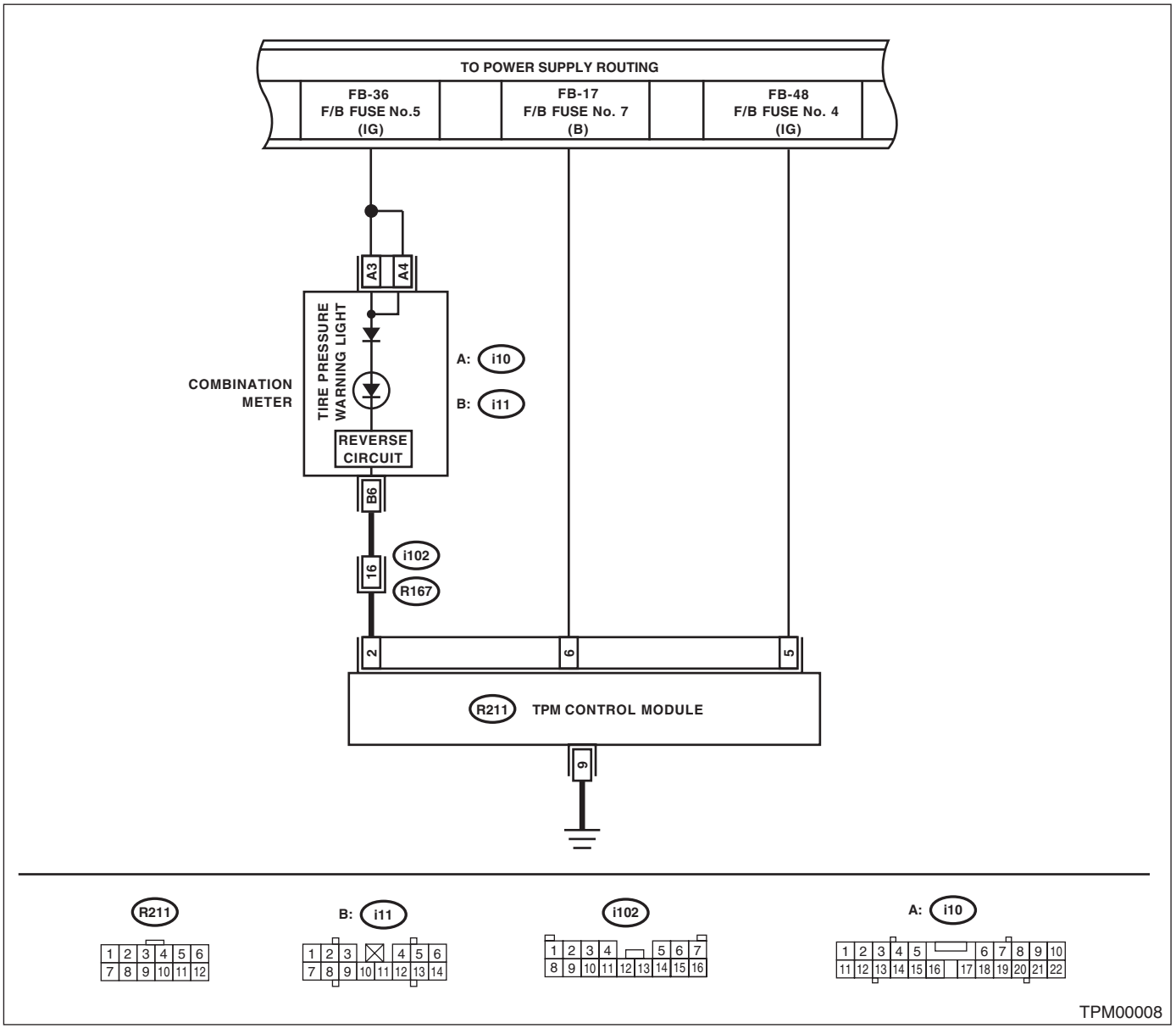

	Step	Check	Yes	No
1	**CHECK DIAGNOSTIC TROUBLE CODE (DTC)** Connect Subaru Select Monitor, read Diagnostic Trouble Code. <Ref. to TPM(diag)-9, READ DIAGNOSTIC TROUBLE CODE (DTC), OPERATION, Subaru Select Monitor.>	Is Diagnostic Trouble Code displayed?	Perform the diagnosis according to DTC. <Ref. to TPM(diag)-28, List of Diagnostic Trouble Code (DTC).>	Go to step **2.**
2	**CHECK DATA OUTPUT.** 1) Select data display of tire pressure monitoring. 2) Confirm that warning light output turns on for 2 seconds immediately after turning ignition switch to ON.	Does warning light output turn on for 2 seconds?	Go to step **3.**	Replace tire pressure monitoring control module. <Ref. to WT-11, TIRE PRESSURE MONITORING CONTROL MODULE, REMOVAL, Tire Pressure Monitoring System.> <Ref. to WT-12, TIRE PRESSURE MONITORING CONTROL MODULE, INSTALLATION, Tire Pressure Monitoring System.>
3	**CHECK HARNESS.** 1) Disconnect tire pressure monitoring control module connector. 2) Using lead line, short the terminal of tire pressure monitoring control module harness connector (R211) to chassis ground and turn ignition switch to ON.	Does the tire pressure warning light illuminate?	Go to step **4.**	Replace tire pressure monitoring control module. <Ref. to WT-11, TIRE PRESSURE MONITORING CONTROL MODULE, REMOVAL, Tire Pressure Monitoring System.> <Ref. to WT-12, TIRE PRESSURE MONITORING CONTROL MODULE, INSTALLATION, Tire Pressure Monitoring System.>
4	**CHECK HARNESS.** 1) Connect tester to terminal No. 2 of tire pressure monitoring control module connector (R211). 2) Turn the ignition switch to ON and measure the voltage between tire pressure monitoring control module connector and chassis ground. ***Connector & terminal*** ***(R211) No. 2 (+) — Chassis ground (−):***	Is the voltage more than 10 V?	Go to step **5.**	Replace the combination meter. <Ref. to IDI-15, REMOVAL, Combination Meter.>
5	**CHECK COMBINATION METER.** 1) Short connector (i11) No. 6 of combination meter to chassis ground. 2) Turn the ignition switch to ON.	Does the tire pressure warning light illuminate?	Go to step **6.**	Repair or replace the harness with open circuit between combination meter and tire pressure monitoring control module.

	Step	Check	Yes	No
6	**CHECK HARNESS.** 1) Disconnect the combination meter connector (i11). 2) Measure the resistance between tire pressure monitoring control module harness connector (i11) and chassis ground. ***Connector & terminal*** ***(i11) No. 6 — Chassis ground:***	Is the resistance less than 1 Ω?	Replace the combination meter. <Ref. to IDI-15, REMOVAL, Combination Meter.>	Repair or replace the harness with open circuit between combination meter and chassis ground.

C: TIRE PRESSURE WARNING LIGHT DOES NOT COME OFF

DETECTING CONDITION:

- Defective combination meter
- Defective harness
- Tire pressure is low.
- Transmitter (ID) is not registered.

TROUBLE SYMPTOM:

Tire pressure warning light does not go off after engine starts.

WIRING DIAGRAM:

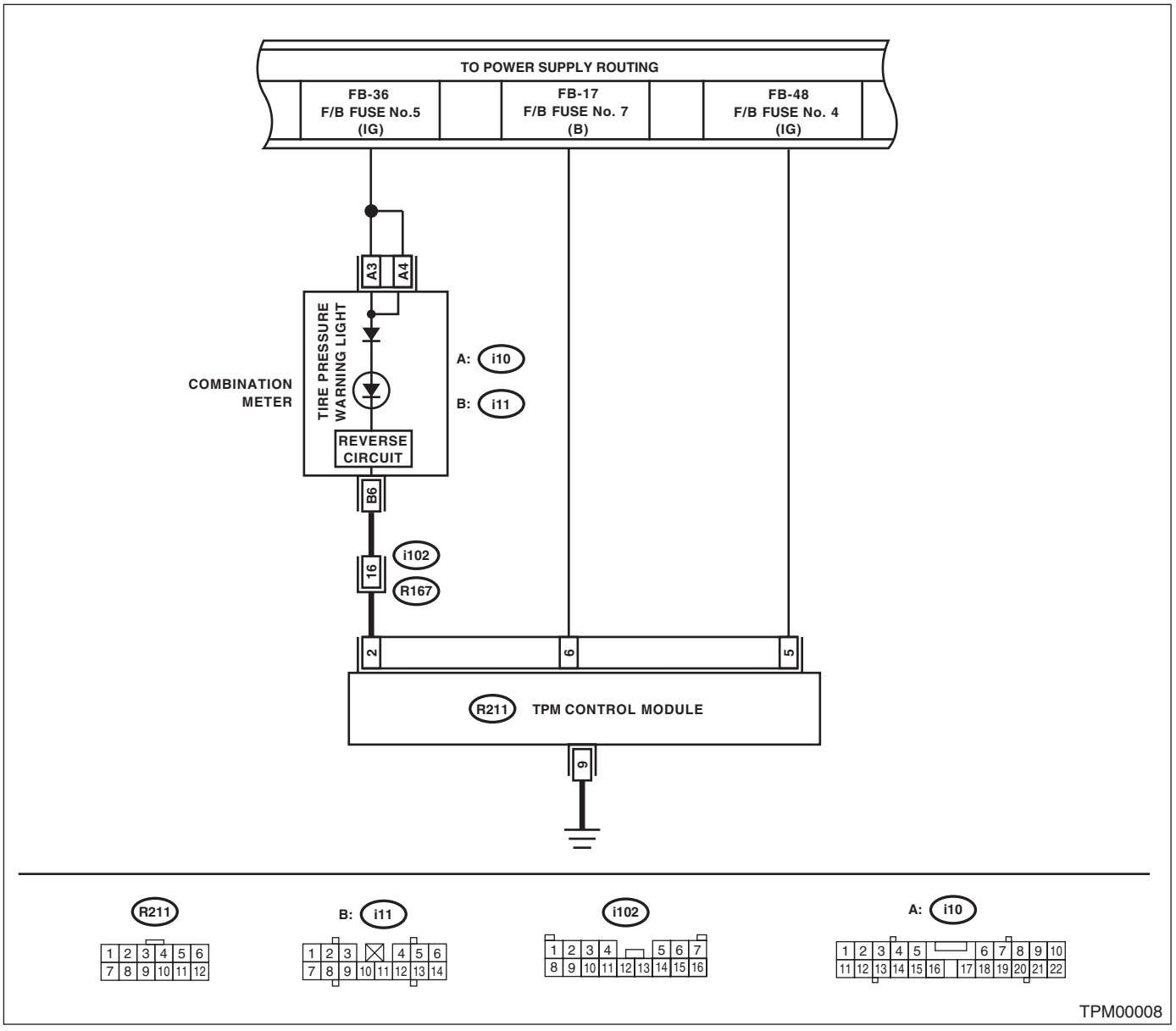

Step		Check	Yes	No
1	**CHECK DIAGNOSTIC TROUBLE CODE (DTC)** Connect Subaru Select Monitor, read Diagnostic Trouble Code. <Ref. to TPM(diag)-9, READ DIAGNOSTIC TROUBLE CODE (DTC), OPERATION, Subaru Select Monitor.>	Is DTC displayed?	Perform the diagnosis according to DTC. <Ref. to TPM(diag)-28, List of Diagnostic Trouble Code (DTC).>	Go to step **2.**

	Step	Check	Yes	No
2	**CHECK TRANSMITTER (ID)** Display the transmitter (ID) of tire pressure monitoring system.	Is transmitter (ID) registered?	Go to step **3.**	Register transmitter ID. <Ref. to TPM(diag)-10, REGISTER TRANSMITTER (ID), OPERATION, Subaru Select Monitor.>
3	**CHECK TRANSMITTER DATA OUTPUT.** 1) Select data display of tire pressure monitoring. 2) Start the engine and check the tire pressure warning light output.	Is the warning light output ON?	Replace tire pressure monitoring control module. <Ref. to WT-11, TIRE PRESSURE MONITORING CONTROL MODULE, REMOVAL, Tire Pressure Monitoring System.> <Ref. to WT-12, TIRE PRESSURE MONITORING CONTROL MODULE, INSTALLATION, Tire Pressure Monitoring System.>	Go to step **4.**
4	**CHECK HARNESS.** 1) Disconnect tire pressure monitoring control module connector. 2) Connect tester to terminal No. 2 of tire pressure monitoring control module connector (R211). 3) Turn the ignition switch to ON and measure the voltage. ***Connector & terminal*** ***(R211) No. 2 (+) — Chassis ground (−):***	Is the voltage more than 10 V?	Go to step **5.**	Replace the combination meter. <Ref. to IDI-15, REMOVAL, Combination Meter.>
5	**CHECK COMBINATION METER.** 1) Short connector (i11) No. 6 of combination meter to chassis ground. 2) Turn the ignition switch to ON.	Does the tire pressure warning light illuminate?	Go to step **6.**	Repair or replace the harness with open circuit between combination meter and tire pressure monitoring control module.
6	**CHECK HARNESS.** 1) Disconnect the combination meter connector (i11). 2) Measure the resistance between terminal No. 2 of tire pressure monitoring control module harness connector (i11) and chassis ground. ***Connector & terminal*** ***(i11) No. 2 — Chassis ground:***	Is the resistance more than 1 MΩ?	Replace the combination meter. <Ref. to IDI-15, REMOVAL, Combination Meter.>	Repair or replace the short circuit in the harness between combination meter connector and tire pressure monitoring control module connector.

D: TIRE PRESSURE WARNING LIGHT IS BLINKING

DETECTING CONDITION:

- Tire pressure monitoring control module is faulty.
- Defective harness
- Transmitter is faulty.

TROUBLE SYMPTOM:

Tire pressure warning light blinks continuously after engine starting.

WIRING DIAGRAM:

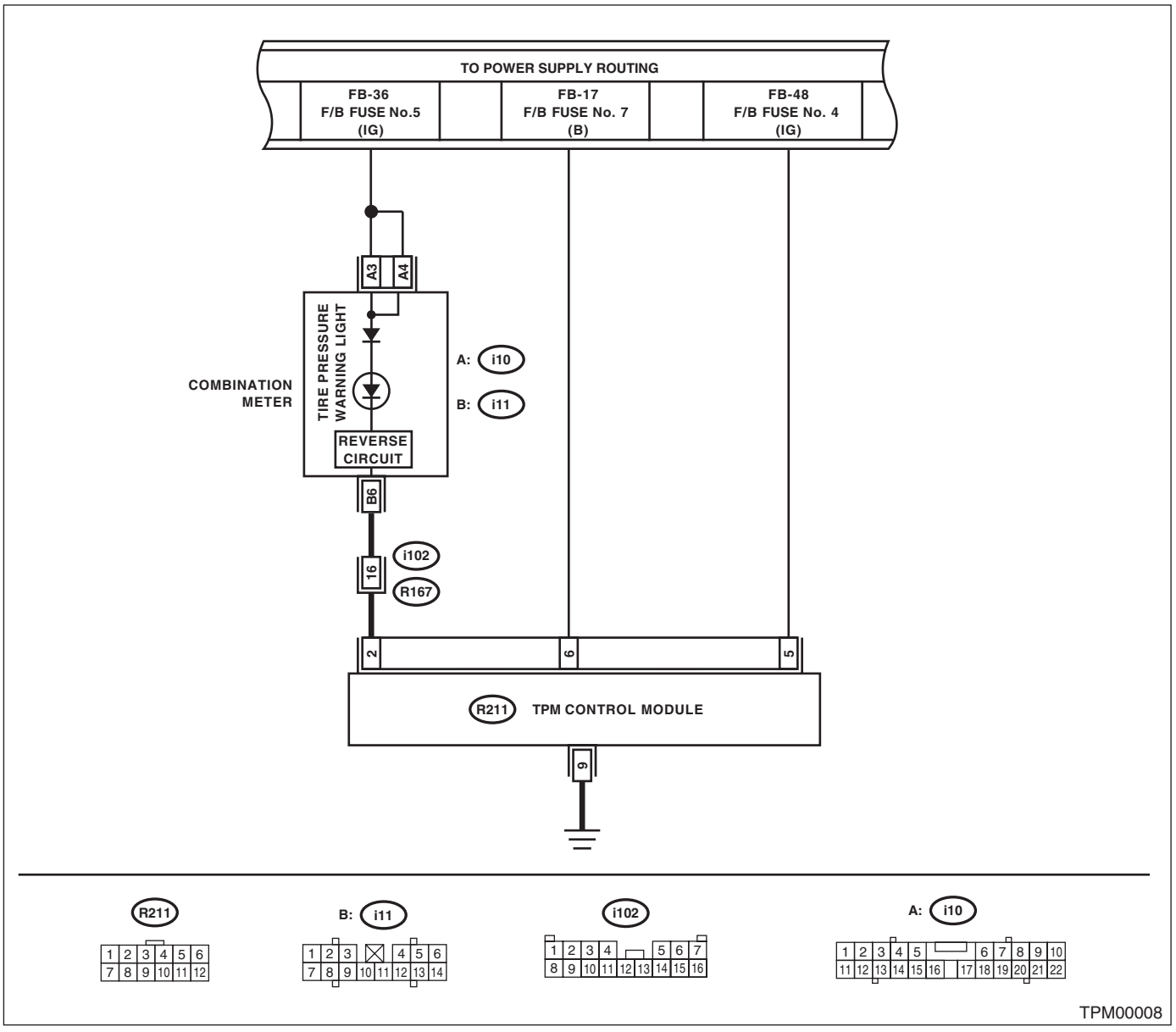

Step		Check	Yes	No
1	**CHECK DIAGNOSTIC TROUBLE CODE (DTC)** Connect Subaru Select Monitor, read Diagnostic Trouble Code. <Ref. to TPM(diag)-9, READ DIAGNOSTIC TROUBLE CODE (DTC), OPERATION, Subaru Select Monitor.>	Is Diagnostic Trouble Code displayed?	Perform the diagnosis according to DTC. <Ref. to TPM(diag)-28, List of Diagnostic Trouble Code (DTC).>	Go to step **2.**

	Step	Check	Yes	No
2	**CHECK HARNESS.** 1) Disconnect tire pressure monitoring control module connector. 2) Short terminal No. 2 of tire pressure monitoring control module harness connector (R211) to chassis ground and turn ignition switch to ON.	Does the tire pressure warning light illuminate?	Go to step **3.**	Replace tire pressure monitoring control module.
3	**CHECK HARNESS.** 1) Connect tester to terminal No. 2 of tire pressure monitoring control module connector (R211). 2) Turn the ignition switch to ON and measure the voltage. ***Connector & terminal*** ***(R211) No. 2 (+) — Chassis ground (−):***	Is the voltage more than 10 V?	Go to step **4.**	Replace the combination meter. <Ref. to IDI-15, REMOVAL, Combination Meter.>
4	**CHECK COMBINATION METER.** 1) Short terminal No. 6 of combination meter connector (i11) to chassis ground. 2) Turn the ignition switch to ON.	Does the tire pressure warning light illuminate?	Go to step **5.**	Harness between combination meter and tire pressure monitoring control module is open. Repair or replace the harness.
5	**CHECK HARNESS.** 1) Disconnect the combination meter connector (i11). 2) Measure the resistance between tire pressure monitoring control module harness connector (i11) and chassis ground. ***Connector & terminal*** ***(i11) No. 6 — Chassis ground:***	Is the resistance more than 1 MΩ?	Replace the combination meter. <Ref. to IDI-15, REMOVAL, Combination Meter.>	Repair or replace the short circuit in the harness between combination meter connector and tire pressure monitoring control module connector.

10.List of Diagnostic Trouble Code (DTC)

A: LIST

DTC	Item	Contents of diagnosis	Remarks
11	FL air pressure decrease	FL tire pressure is reduced.	<Ref. to TPM(diag)-30, DTC 11 FL AIR PRESSURE DECREASE, Diagnostic Procedure with Diagnostic Trouble Code (DTC).>
12	FR air pressure decrease	FR tire pressure is reduced.	<Ref. to TPM(diag)-30, DTC 12 FR AIR PRESSURE DECREASE, Diagnostic Procedure with Diagnostic Trouble Code (DTC).>
13	RR air pressure decrease	RR tire pressure is reduced.	<Ref. to TPM(diag)-30, DTC 13 RR AIR PRESSURE DECREASE, Diagnostic Procedure with Diagnostic Trouble Code (DTC).>
14	RL air pressure decrease	RL tire pressure is reduced.	<Ref. to TPM(diag)-30, DTC 14 RL AIR PRESSURE DECREASE, Diagnostic Procedure with Diagnostic Trouble Code (DTC).>
21	No FL transmitter data	Data cannot be received from FL sensor.	<Ref. to TPM(diag)-31, DTC 21 NO FL TRANSMITTER DATA, Diagnostic Procedure with Diagnostic Trouble Code (DTC).>
22	No FR transmitter data	Data cannot be received from FR sensor.	<Ref. to TPM(diag)-31, DTC 22 NO FR TRANSMITTER DATA, Diagnostic Procedure with Diagnostic Trouble Code (DTC).>
23	No RR transmitter data	Data cannot be received from RR sensor.	<Ref. to TPM(diag)-31, DTC 23 NO RR TRANSMITTER DATA, Diagnostic Procedure with Diagnostic Trouble Code (DTC).>
24	No RL transmitter data	Data cannot be received from RL sensor.	<Ref. to TPM(diag)-32, DTC 24 NO RL TRANSMITTER DATA, Diagnostic Procedure with Diagnostic Trouble Code (DTC).>
31	FL transmit pres data abnormal.	FL sensor data contents are abnormal.	<Ref. to TPM(diag)-33, DTC 31 FL TRANSMIT PRES DATA ABNORMAL, Diagnostic Procedure with Diagnostic Trouble Code (DTC).>
32	FR transmit pres data abnormal.	FR sensor data contents are abnormal.	<Ref. to TPM(diag)-33, DTC 32 FR TRANSMIT PRES DATA ABNORMAL, Diagnostic Procedure with Diagnostic Trouble Code (DTC).>
33	RR transmit pres data abnormal.	RR sensor data contents are abnormal.	<Ref. to TPM(diag)-33, DTC 33 RR TRANSMIT PRES DATA ABNORMAL, Diagnostic Procedure with Diagnostic Trouble Code (DTC).>
34	RL transmit pres data abnormal.	RL sensor data contents are abnormal.	<Ref. to TPM(diag)-34, DTC 34 RL TRANSMIT PRES DATA ABNORMAL, Diagnostic Procedure with Diagnostic Trouble Code (DTC).>
41	FL trans function code abnormal.	Function code has error.	<Ref. to TPM(diag)-35, DTC 41 FL TRANS FUNCTION CODE ABNORMAL, Diagnostic Procedure with Diagnostic Trouble Code (DTC).>

DTC	Item	Contents of diagnosis	Remarks
42	FR trans function code abnormal.	Function code has error.	<Ref. to TPM(diag)-35, DTC 42 FR TRANS FUNCTION CODE ABNORMAL, Diagnostic Procedure with Diagnostic Trouble Code (DTC).>
43	RR trans function code abnormal.	Function code has error.	<Ref. to TPM(diag)-35, DTC 43 RR TRANS FUNCTION CODE ABNORMAL, Diagnostic Procedure with Diagnostic Trouble Code (DTC).>
44	RL trans function code abnormal.	Function code has error.	<Ref. to TPM(diag)-36, DTC 44 RL TRANS FUNCTION CODE ABNORMAL, Diagnostic Procedure with Diagnostic Trouble Code (DTC).>
51	FL transmit battery low voltage.	Transmitter battery voltage is low.	<Ref. to TPM(diag)-37, DTC 51 FL TRANSMIT BATTERY LOW VOLTAGE, Diagnostic Procedure with Diagnostic Trouble Code (DTC).>
52	FR transmit battery low voltage.	Transmitter battery voltage is low.	<Ref. to TPM(diag)-37, DTC 52 FR TRANSMIT BATTERY LOW VOLTAGE, Diagnostic Procedure with Diagnostic Trouble Code (DTC).>
53	RR transmit battery low voltage.	Transmitter battery voltage is low.	<Ref. to TPM(diag)-37, DTC 53 RR TRANSMIT BATTERY LOW VOLTAGE, Diagnostic Procedure with Diagnostic Trouble Code (DTC).>
54	RL transmit battery low voltage.	Transmitter battery voltage is low.	<Ref. to TPM(diag)-37, DTC 54 RL TRANSMIT BATTERY LOW VOLTAGE, Diagnostic Procedure with Diagnostic Trouble Code (DTC).>
61	Vehicle speed is abnormal.	The vehicle speed signal is not input to control module with the vehicle speed more than 25 km/h.	<Ref. to TPM(diag)-38, DTC 61 VEHICLE SPEED IS ABNORMAL, Diagnostic Procedure with Diagnostic Trouble Code (DTC).>

11.Diagnostic Procedure with Diagnostic Trouble Code (DTC)

A: DTC 11 FL AIR PRESSURE DECREASE

NOTE:
For the diagnostic procedure, refer to DTC 14. <Ref. to TPM(diag)-30, DTC 14 RL AIR PRESSURE DECREASE, Diagnostic Procedure with Diagnostic Trouble Code (DTC).>

B: DTC 12 FR AIR PRESSURE DECREASE

NOTE:
For the diagnostic procedure, refer to DTC 14. <Ref. to TPM(diag)-30, DTC 14 RL AIR PRESSURE DECREASE, Diagnostic Procedure with Diagnostic Trouble Code (DTC).>

C: DTC 13 RR AIR PRESSURE DECREASE

NOTE:
For the diagnostic procedure, refer to DTC 14. <Ref. to TPM(diag)-30, DTC 14 RL AIR PRESSURE DECREASE, Diagnostic Procedure with Diagnostic Trouble Code (DTC).>

D: DTC 14 RL AIR PRESSURE DECREASE

DTC DETECTING CONDITION:
If inflation pressure of each tire reduces under specifications (180 kPs (1.8 kgf/cm^2, 26.1 psi) or less).
TROUBLE SYMPTOM:
Tire pressure warning light illuminates.

	Step	Check	Yes	No
1	**CHECK TIRES.** Lift-up the vehicle and check the tires for damage.	Are there crack or damage?	Replace the tire. <Ref. to WT-5, Tire.>	Go to step **2.**
2	**CHECK TIRE.** Check the tire pressure.	Is the tire pressure in the specifications?	Go to step **3.**	Adjust to correct pressure.
3	**CHECK TRANSMITTER.** Drive vehicle more than 40 km/h (25 MPH) and compare the data from transmitter of 4 wheels.	Is there transmitter which shows different data?	Replace transmitter (tire pressure sensor). <Ref. to WT-11, Tire Pressure Monitoring System.>	Go to step **4.**
4	**PERFORM DRIVING TEST.** 1) Perform the clear memory mode. <Ref. to TPM(diag)-10, CLEAR MEMORY, OPERATION, Subaru Select Monitor.> 2) Perform the driving test. <Ref. to TPM(diag)-18, PROCEDURE, Inspection Mode.> 3) Read the Diagnostic Trouble Code (DTC). <Ref. to TPM(diag)-9, READ DIAGNOSTIC TROUBLE CODE (DTC), OPERATION, Subaru Select Monitor.>	Is DTC displayed?	Perform the diagnosis according to DTC. <Ref. to TPM(diag)-28, List of Diagnostic Trouble Code (DTC).>	Finish the diagnosis.

CAUTION:
When driving vehicle to perform driving test, there should be always 2 persons (driver and checker) to check.

E: DTC 21 NO FL TRANSMITTER DATA

NOTE:
For the diagnostic procedure, refer to DTC 24. <Ref. to TPM(diag)-32, DTC 24 NO RL TRANSMITTER DATA, Diagnostic Procedure with Diagnostic Trouble Code (DTC).>

F: DTC 22 NO FR TRANSMITTER DATA

NOTE:
For the diagnostic procedure, refer to DTC 24. <Ref. to TPM(diag)-32, DTC 24 NO RL TRANSMITTER DATA, Diagnostic Procedure with Diagnostic Trouble Code (DTC).>

G: DTC 23 NO RR TRANSMITTER DATA

NOTE:
For the diagnostic procedure, refer to DTC 24. <Ref. to TPM(diag)-32, DTC 24 NO RL TRANSMITTER DATA, Diagnostic Procedure with Diagnostic Trouble Code (DTC).>

H: DTC 24 NO RL TRANSMITTER DATA

DTC DETECTING CONDITION:
Data cannot be received from each transmitter for 10 minutes.

TROUBLE SYMPTOM:
Tire pressure warning light blinks.

	Step	Check	Yes	No
1	**START FL TRANSMITTER.** 1) Connect the Subaru Select Monitor and turn the ignition switch to ON. 2) Select “Transmitter ID”. <Ref. to TPM(diag)-11, DISPLAY TRANSMITTER (ID)., OPERATION, Subaru Select Monitor.> 3) Using transmitter registration tool, send ID from FL transmitter and check “Latest Received ID”.	Is “Latest Received ID” updated?	Go to step **2.**	Replace the FL transmitter.
2	**CHECK FL TRANSMITTER ID.** Check the ID displayed in the latest ID display area and FL registered ID.	Are 2 IDs same?	Go to step **3.**	Record Latest received ID as FL
3	**START FR TRANSMITTER.** Using transmitter registration tool, send ID from FR transmitter and check “Latest Received ID”.	Is “Latest Received ID” updated?	Go to step **4.**	Replace the FR transmitter.
4	**CHECK FR TRANSMITTER ID.** Check the ID displayed in the latest ID display area and FR registered ID.	Are 2 IDs same?	Go to step **5.**	Record Latest received ID as FR Go to step **5.**
5	**START RR TRANSMITTER.** Using transmitter registration tool, send ID from RR transmitter and check “Latest Received ID”.	Is “Latest Received ID” updated?	Go to step **6.**	Replace the RR transmitter.
6	**CHECK RR TRANSMITTER ID.** Check the ID displayed in the latest ID display area and RR registered ID.	Are 2 IDs same?	Go to step **7.**	Record Latest received ID as RR Go to step **7.**
7	**START RL TRANSMITTER.** Using transmitter registration tool, send ID from RL transmitter and check “Latest Received ID”.	Is “Latest Received ID” updated?	Go to step **8.**	Replace the RL transmitter.
8	**CHECK RL TRANSMITTER ID.** Check the ID displayed in the latest ID display area and RL registered ID.	Are 2 IDs same?	Go to step **9.**	Record Latest received ID as RL Go to step **9.**
9	**CHECK MALFUNCTION TRANSMITTER.**	Is ID recorded by this procedure.	Go to step **10.**	Replace transmitter indicated by Diagnostic Trouble Code (DTC).
10	**CHECK MALFUNCTION TRANSMITTER.** Check registered ID for position of transmitter indicated by Diagnostic Trouble Code (DTC).	Is there checked ID in the record?	Replace the transmitter of recorded position.	Replace transmitter indicated by Diagnostic Trouble Code (DTC).

CAUTION:
When driving vehicle to perform driving test, there should be always 2 persons (driver and checker) to check.

I: DTC 31 FL TRANSMIT PRES DATA ABNORMAL

NOTE:
For the diagnostic procedure, refer to DTC 34. <Ref. to TPM(diag)-34, DTC 34 RL TRANSMIT PRES DATA ABNORMAL, Diagnostic Procedure with Diagnostic Trouble Code (DTC).>

J: DTC 32 FR TRANSMIT PRES DATA ABNORMAL

NOTE:
For the diagnostic procedure, refer to DTC 34. <Ref. to TPM(diag)-34, DTC 34 RL TRANSMIT PRES DATA ABNORMAL, Diagnostic Procedure with Diagnostic Trouble Code (DTC).>

K: DTC 33 RR TRANSMIT PRES DATA ABNORMAL

NOTE:
For the diagnostic procedure, refer to DTC 34. <Ref. to TPM(diag)-34, DTC 34 RL TRANSMIT PRES DATA ABNORMAL, Diagnostic Procedure with Diagnostic Trouble Code (DTC).>

L: DTC 34 RL TRANSMIT PRES DATA ABNORMAL

DTC DETECTING CONDITION:

- Data from each transmitter is large variation with former data.
- Pressure over the measurement capacity of transmitter. (Too much pressure)

TROUBLE SYMPTOM:

Tire pressure warning light blinks.

	Step	Check	Yes	No
1	**START FL TRANSMITTER.** 1) Connect the Subaru Select Monitor and turn the ignition switch to ON. 2) Select “Transmitter ID”. <Ref. to TPM(diag)-11, DISPLAY TRANSMITTER (ID)., OPERATION, Subaru Select Monitor.> 3) Using transmitter registration tool, send ID from FL transmitter and check “Latest Received ID”.	Is “Latest Received ID” updated?	Go to step **2.**	Replace the FL transmitter.
2	**CHECK FL TRANSMITTER ID.** Check the ID displayed in the latest ID display area and FL registered ID.	Are 2 IDs same?	Go to step **3.**	Record Latest received ID as FL
3	**START FR TRANSMITTER.** Using transmitter registration tool, send ID from FR transmitter and check “Latest Received ID”.	Is “Latest Received ID” updated?	Go to step **4.**	Replace the FR transmitter.
4	**CHECK FR TRANSMITTER ID.** Check the ID displayed in the latest ID display area and FR registered ID.	Are 2 IDs same?	Go to step **5.**	Record Latest received ID as FR Go to step **5.**
5	**START RR TRANSMITTER.** Using transmitter registration tool, send ID from RR transmitter and check “Latest Received ID”.	Is “Latest Received ID” updated?	Go to step **6.**	Replace the RR transmitter.
6	**CHECK RR TRANSMITTER ID.** Check the ID displayed in the latest ID display area and RR registered ID.	Are 2 IDs same?	Go to step **7.**	Record Latest received ID as RR Go to step **7.**
7	**START RL TRANSMITTER.** Using transmitter registration tool, send ID from RL transmitter and check “Latest Received ID”.	Is “Latest Received ID” updated?	Go to step **8.**	Replace the RL transmitter.
8	**CHECK RL TRANSMITTER ID.** Check the ID displayed in the latest ID display area and RL registered ID.	Are 2 IDs same?	Go to step **9.**	Record Latest received ID as RL Go to step **9.**
9	**CHECK MALFUNCTION TRANSMITTER.**	Is ID recorded by this procedure.	Go to step **10.**	Replace transmitter indicated by Diagnostic Trouble Code (DTC).
10	**CHECK MALFUNCTION TRANSMITTER.** Check registered ID for position of transmitter indicated by Diagnostic Trouble Code (DTC).	Is there checked ID in the record?	Replace the transmitter of recorded position.	Replace transmitter indicated by Diagnostic Trouble Code (DTC).

M: DTC 41 FL TRANS FUNCTION CODE ABNORMAL

NOTE:
For the diagnostic procedure, refer to DTC 44. <Ref. to TPM(diag)-36, DTC 44 RL TRANS FUNCTION CODE ABNORMAL, Diagnostic Procedure with Diagnostic Trouble Code (DTC).>

N: DTC 42 FR TRANS FUNCTION CODE ABNORMAL

NOTE:
For the diagnostic procedure, refer to DTC 44. <Ref. to TPM(diag)-36, DTC 44 RL TRANS FUNCTION CODE ABNORMAL, Diagnostic Procedure with Diagnostic Trouble Code (DTC).>

O: DTC 43 RR TRANS FUNCTION CODE ABNORMAL

NOTE:
For the diagnostic procedure, refer to DTC 44. <Ref. to TPM(diag)-36, DTC 44 RL TRANS FUNCTION CODE ABNORMAL, Diagnostic Procedure with Diagnostic Trouble Code (DTC).>

P: DTC 44 RL TRANS FUNCTION CODE ABNORMAL

DTC DETECTING CONDITION:
Unexpected function code is received from each transmitter

TROUBLE SYMPTOM:
Tire pressure warning light blinks.

	Step	Check	Yes	No
1	**START FL TRANSMITTER.** 1) Connect the Subaru Select Monitor and turn the ignition switch to ON. 2) Select “Transmitter ID”. <Ref. to TPM(diag)-11, DISPLAY TRANSMITTER (ID)., OPERATION, Subaru Select Monitor.> 3) Using transmitter registration tool, send ID from FL transmitter and check “Latest Received ID”.	Is “Latest Received ID” updated?	Go to step **2.**	Replace the FL transmitter.
2	**CHECK FL TRANSMITTER ID.** Check the ID displayed in the latest ID display area and FL registered ID.	Are 2 IDs same?	Go to step **3.**	Record Latest received ID as FL
3	**START FR TRANSMITTER.** Using transmitter registration tool, send ID from FR transmitter and check “Latest Received ID”.	Is “Latest Received ID” updated?	Go to step **4.**	Replace the FR transmitter.
4	**CHECK FR TRANSMITTER ID.** Check the ID displayed in the latest ID display area and FR registered ID.	Are 2 IDs same?	Go to step **5.**	Record Latest received ID as FR Go to step **5.**
5	**START RR TRANSMITTER.** Using transmitter registration tool, Send ID from RR transmitter and check “Latest Received ID”.	Is “Latest Received ID” updated?	Go to step **6.**	Replace the RR transmitter.
6	**CHECK RR TRANSMITTER ID.** Check the ID displayed in the latest ID display area and RR registered ID.	Are 2 IDs same?	Go to step **7.**	Record Latest received ID as RR Go to step **7.**
7	**START RL TRANSMITTER.** Using transmitter registration tool, Send ID from RL transmitter and check “Latest Received ID”.	Is “Latest Received ID” updated?	Go to step **8.**	Replace the RL transmitter.
8	**CHECK RL TRANSMITTER ID.** Check the ID displayed in the latest ID display area and RL registered ID.	Are 2 IDs same?	Go to step **9.**	Record Latest received ID as RL Go to step **9.**
9	**CHECK MALFUNCTION TRANSMITTER.**	Is ID recorded by this procedure.	Go to step **10.**	Replace transmitter indicated by Diagnostic Trouble Code (DTC).
10	**CHECK MALFUNCTION TRANSMITTER.** Check registered ID for position of transmitter indicated by Diagnostic Trouble Code (DTC).	Is there checked ID in the record?	Replace the transmitter of recorded position.	Replace transmitter indicated by Diagnostic Trouble Code (DTC).

Q: DTC 51 FL TRANSMIT BATTERY LOW VOLTAGE

NOTE:
For the diagnostic procedure, refer to DTC 54. <Ref. to TPM(diag)-37, DTC 54 RL TRANSMIT BATTERY LOW VOLTAGE, Diagnostic Procedure with Diagnostic Trouble Code (DTC).>

R: DTC 52 FR TRANSMIT BATTERY LOW VOLTAGE

NOTE:
For the diagnostic procedure, refer to DTC 54. <Ref. to TPM(diag)-37, DTC 54 RL TRANSMIT BATTERY LOW VOLTAGE, Diagnostic Procedure with Diagnostic Trouble Code (DTC).>

S: DTC 53 RR TRANSMIT BATTERY LOW VOLTAGE

NOTE:
For the diagnostic procedure, refer to DTC 54. <Ref. to TPM(diag)-37, DTC 54 RL TRANSMIT BATTERY LOW VOLTAGE, Diagnostic Procedure with Diagnostic Trouble Code (DTC).>

T: DTC 54 RL TRANSMIT BATTERY LOW VOLTAGE

DTC DETECTING CONDITION:
Low battery signal is received from each transmitter for 20 times
TROUBLE SYMPTOM:
Tire pressure warning light blinks.

	Step	Check	Yes	No
1	**CHECK TRANSMITTER.** 1) Replace all transmitter with new one and perform ID registration. 2) Perform the clear memory mode and driving test.	Is the fault eliminated?	Transmitter internal battery is discharged.	Replace tire pressure monitoring control module.

U: DTC 61 VEHICLE SPEED IS ABNORMAL

DTC DETECTING CONDITION:
Vehicle speed function code is received from transmitter however vehicle speed signal cannot be input.

TROUBLE SYMPTOM:
Tire pressure warning light blinks.

WIRING DIAGRAM:

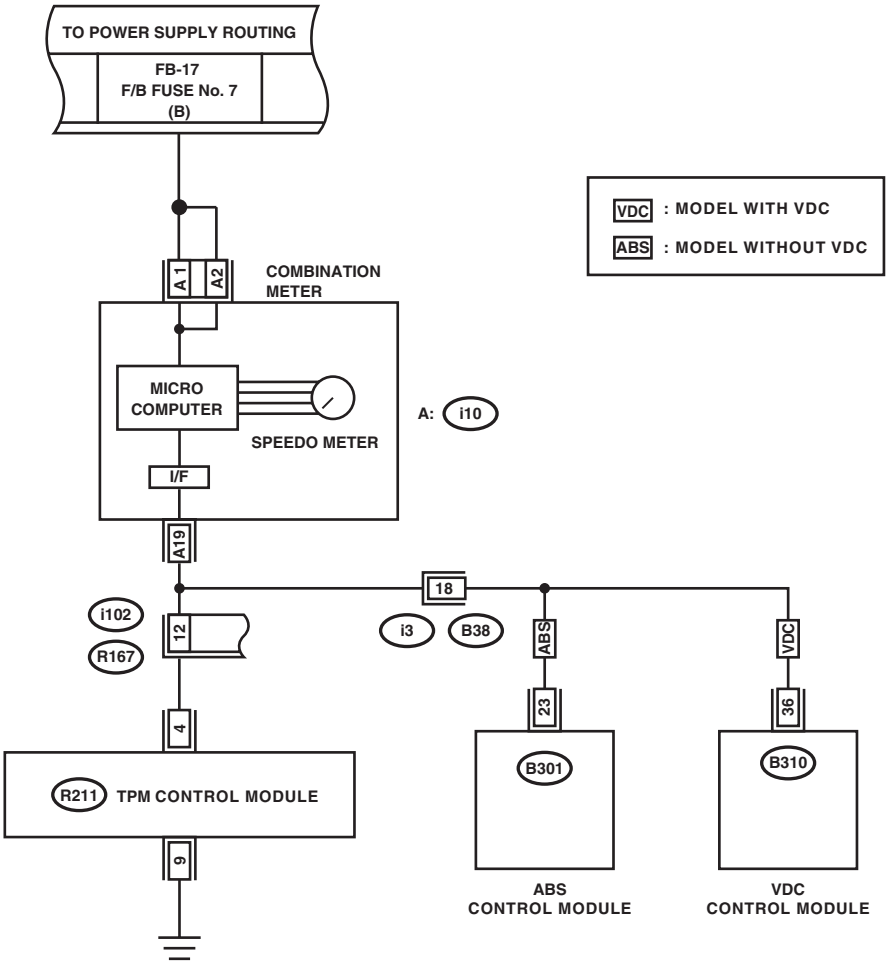

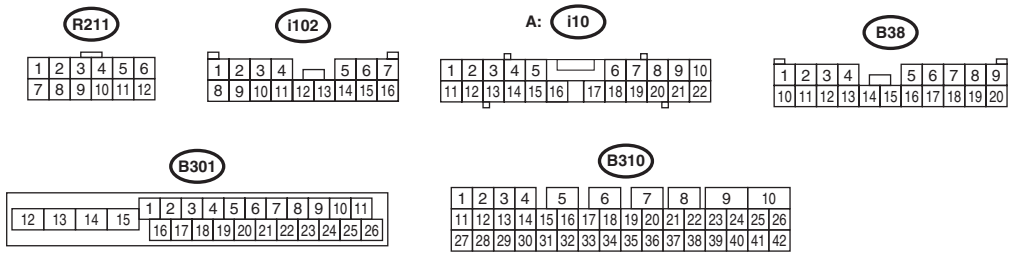

TPM00010

	Step	Check	Yes	No
1	**CHECK TIRE PRESSURE MONITORING CONTROL MODULE.** 1) Connect oscilloscope to terminal No. 4 of tire pressure monitoring control module connector (R211). 2) Lift-up the vehicle and check the vehicle speed signal when driving the vehicle at 40 km/h (25 MPH).	Is vehicle speed signal input?	Replace tire pressure monitoring control module. <Ref. to WT-11, Tire Pressure Monitoring System.>	Go to step **2.**
2	**CHECK HARNESS.** 1) Disconnect the combination meter connector (i10). 2) Connect tester to tire pressure monitoring control module connector (R211) and combination meter connector (i10) and measure the resistance.	Is the resistance less than 0.5 Ω?	Check the combination meter. <Ref. to IDI-15, REMOVAL, Combination Meter.>	Repair or replace the open circuit of the harness.

12.General Diagnostic Table

A: INSPECTION

Symptom		Problem parts
Tire pressure warning light illuminates.	Tire pressure is reduced.	• Improper adjustment of tire pressure. • CHECK FLAT TIRE.
Tire pressure warning light blinks.	TIRE PRESSURE MONITORING SYSTEM HAS MALFUNCTION	• AIR PRESSURE SENSOR MALFUNCTION • AIR PRESSURE SENSOR IS OUT OF BATTERY • Tire pressure monitoring control module is faulty. • Defective vehicle harness
Tire pressure is low however warning light does not illuminate.	TIRE PRESSURE WARNING LIGHT DOES NOT ILLUMINATE	• AIR PRESSURE SENSOR IS FAULTY. • Tire pressure monitoring control module is faulty. • Defective vehicle harness

DIFFERENTIALS

DI

		Page
1.	General Description	2
2.	Differential Gear Oil	25
3.	Front Differential Assembly	27
4.	Rear Differential (T-type)	28
5.	Rear Differential (VA-type)	44
6.	Rear Differential Front Oil Seal	70
7.	Rear Differential Side Oil Seal	72
8.	Rear Differential Front Member	73
9.	General Diagnostic Table	74

1. General Description

A: SPECIFICATION

1. REAR DIFFERENTIAL

When replacing a rear differential assembly, select the correct one according to the following table.

NOTE:
- Using the different rear differential assembly causes the drive line and tires to “drag” or emit noise.
- For option code, refer to “ID” section. <Ref. to ID-2, IDENTIFICATION, Identification.>

Model	Sedan, Wagon			
	2.5 L Non-turbo		2.5 L Turbo	
	MT	AT	MT	AT
Rear differential type	T-type	VA1-type	T-type	VA2-type
Classification	T1	XJ	JP	XU
LSD type	—		Viscous coupling	
Type of gear	Hypoid gear			
Gear ratio (Number of gear teeth)	3.900 (39/10)	4.111 (37/9)		3.272 (36/11)
Oil capacity	0.8 ℓ (0.8 US qt, 0.7 Imp qt)			
Rear differential gear oil	GL-5			

Model	OUTBACK				
	2.5 L Non-turbo		2.5 L Turbo		3.0 L
	MT	AT	MT	AT	
Rear differential type	T-type			VA2-type	
Classification	JE	CD	CF	XW	XU
LSD type	Viscous coupling				
Type of gear	Hypoid gear				
Gear ratio (Number of gear teeth)	4.111 (37/9)	4.444 (40/9)		3.583 (42/12)	3.272 (36/11)
Oil capacity	0.8 ℓ (0.8 US qt, 0.7 Imp qt)				
Rear differential gear oil	GL-5				

2. CLASSIFICATION

Identification label positions are shown in the following figures. For details concerning identification, refer to “ID” section.

- T-type

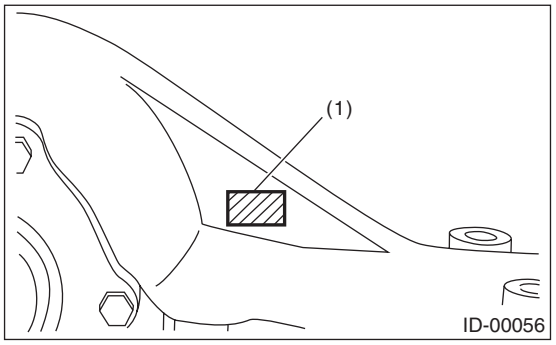

(1) Identification

- VA1-type

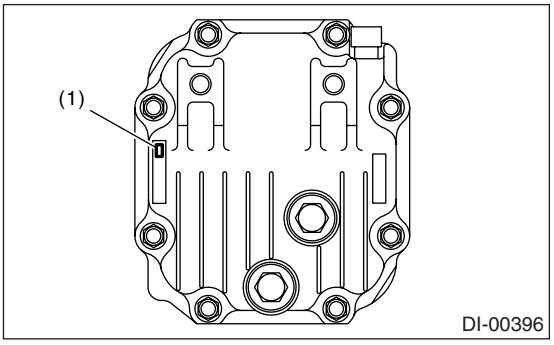

(1) Identification

• VA2-type

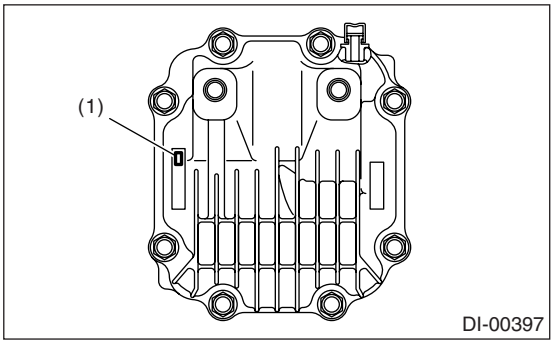

(1) Identification

3. REAR DIFFERENTIAL GEAR OIL

Recommended gear oil:
GL-5 (75W-90)

NOTE:
Each oil manufacturer has its base oil and additives. Thus, do not mix two or more brands.

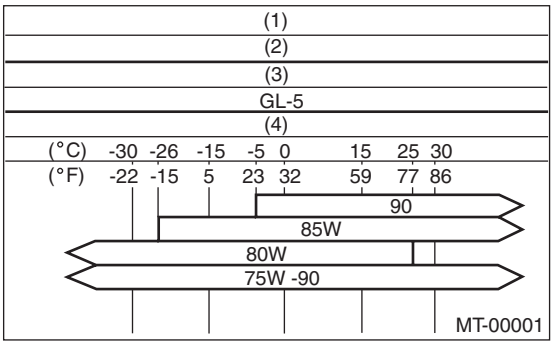

(1) Item
(2) Rear differential gear oil
(3) API classification
(4) SAE viscosity No. and applicable temperature

4. SERVICE DATA

Drive pinion bearing preload (at companion flange bolt hole)	N (kgf, lb)	T-type	18.1 — 38.8 (1.8 — 4.0, 4.1 — 8.7)
		VA-type	12.7 — 32.4 (1.3 — 3.3, 2.9 — 7.3)
Side gear backlash	mm (in)	T-type	0.10 — 0.20 (0.0039 — 0.0079)
		VA1-type only	0.05 — 0.15 (0.0020 — 0.0059)
Side bearing standard width		mm (in)	20.00 (0.7874)
Hypoid driven gear to drive pinion backlash	mm (in)	T-type	0.10 — 0.20 (0.0039 — 0.0079)
		VA-type	0.10 — 0.15 (0.0039 — 0.0059)
Hypoid driven gear runout on its back surface	mm (in)	T-type only	0.05 (0.0020)

5. ADJUSTING PART

• T-type

Drive pinion bearing preload (at companion flange bolt hole)	N (kgf, lb)	18.1 — 38.8 (1.8 — 4.0, 4.1 — 8.7)	
Preload adjusting collar		Part No.	Length mm (in)
		383695201	56.2 (2.213)
		383695202	56.4 (2.220)
		383695203	56.6 (2.228)
		383695204	56.8 (2.236)
		383695205	57.0 (2.244)
		383695206	57.2 (2.252)

Preload adjusting washer	Part No.	Length mm (in)
	383705200	2.59 (0.1020)
	383715200	2.57 (0.1012)
	383725200	2.55 (0.1004)
	383735200	2.53 (0.0996)
	383745200	2.51 (0.0988)
	383755200	2.49 (0.0980)
	383765200	2.47 (0.0972)
	383775200	2.45 (0.0965)
	383785200	2.43 (0.0957)
	383795200	2.41 (0.0949)
	383805200	2.39 (0.0941)
	383815200	2.37 (0.0933)
	383825200	2.35 (0.0925)
	383835200	2.33 (0.0917)
	383845200	2.31 (0.0909)
Pinion height adjusting washer	Part No.	Thickness mm (in)
	383495200	3.09 (0.1217)
	383505200	3.12 (0.1228)
	383515200	3.15 (0.1240)
	383525200	3.18 (0.1252)
	383535200	3.21 (0.1264)
	383545200	3.24 (0.1276)
	383555200	3.27 (0.1287)
	383565200	3.30 (0.1299)
	383575200	3.33 (0.1311)
	383585200	3.36 (0.1323)
	383595200	3.39 (0.1335)
	383605200	3.42 (0.1346)
	383615200	3.45 (0.1358)
	383625200	3.48 (0.1370)
	383635200	3.51 (0.1382)
	383645200	3.54 (0.1394)
	383655200	3.57 (0.1406)
	383665200	3.60 (0.1417)
	383675200	3.63 (0.1429)
	383685200	3.66 (0.1441)
Side gear backlash mm (in)	0.1 — 0.2 (0.0039 — 0.0079)	
Side gear thrust washer (Model without LSD)	Part No.	Thickness mm (in)
	383445201	0.75 — 0.80 (0.0295 — 0.0315)
	383445202	0.80 — 0.85 (0.0315 — 0.0335)
	383445203	0.85 — 0.90 (0.0335 — 0.0354)
Side bearing standard width mm (in)	—	20.00 (0.7874)
Side bearing retainer shim	Part No.	Thickness mm (in)
	383475201	0.20 (0.0079)
	383475202	0.25 (0.0098)
	383475203	0.30 (0.0118)
	383475204	0.40 (0.0157)
	383475205	0.50 (0.0197)
Hypoid driven gear to drive pinion backlash	Limit mm (in)	0.10 — 0.20 (0.0039 — 0.0079)
Hypoid driven gear runout on its back surface		0.05 (0.0020)

• VA1-type

Drive pinion bearing preload (at companion flange bolt hole) N (kgf, lb)	12.7 — 32.4 (1.3 — 3.3, 2.9 — 7.3)	
Preload adjusting collar	Part No.	Length mm (in)
	32288AA040	52.3 (2.059)
	32288AA050	52.5 (2.067)
	31454AA100	52.6 (2.071)
	32288AA060	52.7 (2.075)
	31454AA110	52.8 (2.079)
	32288AA070	52.9 (2.083)
	31454AA120	53.0 (2.087)
	32288AA080	53.1 (2.091)
	32288AA090	53.3 (2.098)
Preload adjusting washer	Part No.	Thickness mm (in)
	38336AA000	1.500 (0.0591)
	38336AA120	1.513 (0.0596)
	38336AA010	1.525 (0.0600)
	38336AA130	1.538 (0.0606)
	38336AA020	1.550 (0.0610)
	38336AA140	1.563 (0.0615)
	38336AA030	1.575 (0.0620)
	38336AA150	1.588 (0.0625)
	38336AA040	1.600 (0.0630)
	38336AA160	1.613 (0.0635)
	38336AA050	1.625 (0.0640)
	38336AA170	1.638 (0.0645)
	38336AA060	1.650 (0.0650)
	38336AA180	1.663 (0.0655)
	38336AA070	1.675 (0.0659)
	38336AA190	1.688 (0.0665)
	38336AA080	1.700 (0.0669)
	38336AA200	1.713 (0.0674)
	38336AA090	1.725 (0.0679)
	38336AA210	1.738 (0.0684)
	38336AA100	1.750 (0.0689)
	38336AA220	1.763 (0.0694)
	38336AA110	1.775 (0.0699)
Pinion height adjusting washer	Part No.	Thickness mm (in)
	32295AA200	0.150 (0.0059)
	32295AA210	0.175 (0.0069)
	32295AA220	0.200 (0.0079)
	32295AA230	0.225 (0.0089)
	32295AA240	0.250 (0.0098)
	32295AA250	0.275 (0.0108)
Side gear backlash mm (in)	0.05 — 0.15 (0.0020 — 0.0059)	
Side gear thrust washer	803135011	0.925 — 0.950 (0.0364 — 0.0374)
	803135012	0.950 — 0.975 (0.0374 — 0.0384)
	803135013	0.975 — 1.000 (0.0384 — 0.0394)
	803135014	1.000 — 1.025 (0.0394 — 0.0404)
	803135015	1.025 — 1.050 (0.0404 — 0.0413)
Hypoid driven gear to drive pinion backlash	Limit mm (in)	0.10 — 0.15 (0.0039 — 0.0059)

• VA2-type

Drive pinion bearing preload (at companion flange bolt hole) N (kgf, lb)	12.7 — 32.4 (1.3 — 3.3, 2.9 — 7.3)	
Preload adjusting collar	Part No.	Length mm (in)
	31454AA250	51.05 (2.010)
	31454AA260	51.25 (2.018)
	31454AA270	51.35 (2.022)
	31454AA280	51.45 (2.026)
	31454AA290	51.55 (2.030)
	31454AA300	51.65 (2.033)
	31454AA310	51.75 (2.037)
	31454AA320	51.85 (2.041)
	31454AA330	52.05 (2.049)
Preload adjusting washer	Part No.	Thickness mm (in)
	38336AA430	1.500 (0.0591)
	38336AA440	1.513 (0.0596)
	38336AA450	1.525 (0.0600)
	38336AA460	1.538 (0.0606)
	38336AA470	1.550 (0.0610)
	38336AA480	1.563 (0.0615)
	38336AA490	1.575 (0.0620)
	38336AA500	1.588 (0.0625)
	38336AA510	1.600 (0.0630)
	38336AA520	1.613 (0.0635)
	38336AA530	1.625 (0.0640)
	38336AA540	1.638 (0.0645)
	38336AA550	1.650 (0.0650)
	38336AA560	1.663 (0.0655)
	38336AA570	1.675 (0.0659)
	38336AA580	1.688 (0.0665)
	38336AA590	1.700 (0.0669)
	38336AA600	1.713 (0.0674)
	38336AA610	1.725 (0.0679)
	38336AA620	1.738 (0.0684)
	38336AA630	1.750 (0.0689)
	38336AA640	1.763 (0.0694)
	38336AA650	1.775 (0.0699)
Pinion height adjusting washer	Part No.	Thickness mm (in)
	32295AA350	0.150 (0.0059)
	32295AA360	0.175 (0.0069)
	32295AA370	0.200 (0.0079)
	32295AA380	0.225 (0.0089)
	32295AA390	0.250 (0.0098)
	32295AA400	0.275 (0.0108)
Hypoid driven gear to drive pinion backlash	Limit mm (in)	0.10 — 0.15 (0.0039 — 0.0059)

B: COMPONENT

1. REAR DIFFERENTIAL WITHOUT LSD (T-TYPE)

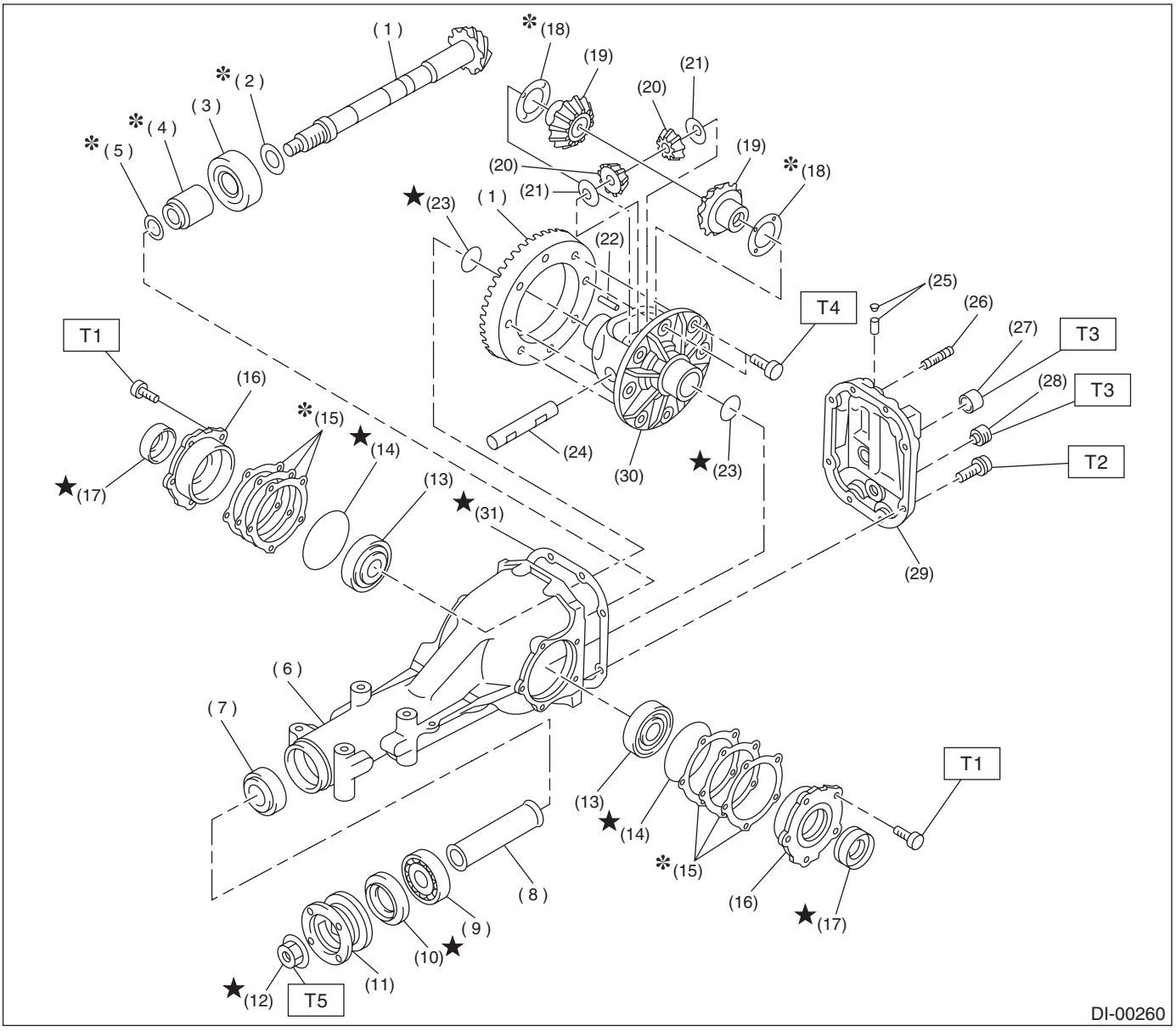

(1)	Hypoid driven gear and drive pinion set	(13)	Side bearing	(26)	Stud bolt
		(14)	O-ring	(27)	Oil filler plug
(2)	Pinion height adjusting washer	(15)	Side bearing retainer shim	(28)	Oil drain plug
(3)	Rear bearing	(16)	Side bearing retainer	(29)	Rear cover
(4)	Bearing preload adjusting collar	(17)	Side oil seal	(30)	Differential case
(5)	Bearing preload adjusting washer	(18)	Side gear thrust washer	(31)	Gasket
(6)	Differential carrier	(19)	Side gear		
(7)	Front bearing	(20)	Pinion mate gear		
(8)	Collar	(21)	Pinion mate gear washer		
(9)	Pilot bearing	(22)	Pinion shaft lock pin		
(10)	Front oil seal	(23)	Snap ring		
(11)	Companion flange	(24)	Pinion mate shaft		
(12)	Self-locking nut	(25)	Air breather cap		

Tightening torque: N·m (kgf-m, ft-lb)	
T1:	*10.3 (1.05, 7.6)*
T2:	*29 (3.0, 21.7)*
T3:	*49 (5.0, 36.2)*
T4:	*105 (10.7, 77.4)*
T5:	*181 (18.5, 134)*

2. REAR DIFFERENTIAL WITH LSD (T-TYPE)

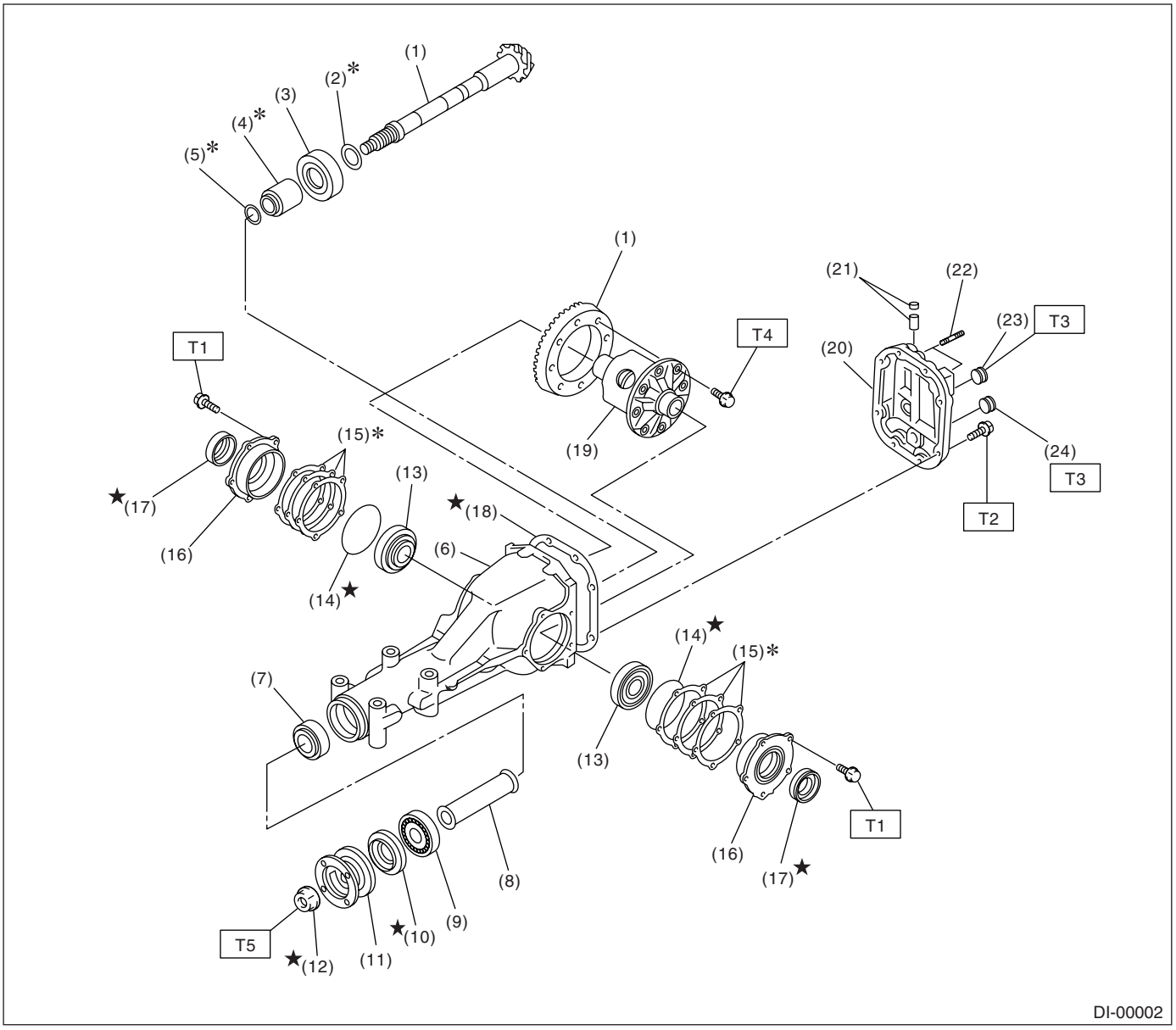

(1) Hypoid driven gear and drive pinion set
(2) Pinion height adjusting washer
(3) Rear bearing
(4) Bearing preload adjusting collar
(5) Bearing preload adjusting washer
(6) Differential carrier
(7) Front bearing
(8) Collar
(9) Pilot bearing
(10) Front oil seal
(11) Companion flange
(12) Self-locking nut
(13) Side bearing
(14) O-ring
(15) Side bearing retainer shim
(16) Side bearing retainer
(17) Side oil seal
(18) Gasket
(19) Differential case ASSY
(20) Rear cover
(21) Air breather cap
(22) Stud bolt
(23) Oil filler plug
(24) Oil drain plug

Tightening torque: N·m (kgf-m, ft-lb)	
T1:	*10.3 (1.05, 7.6)*
T2:	*29 (3.0, 21.7)*
T3:	*49 (5.0, 36.2)*
T4:	*105 (10.7, 77.4)*
T5:	*181 (18.5, 134)*

3. REAR DIFFERENTIAL (VA1-TYPE)

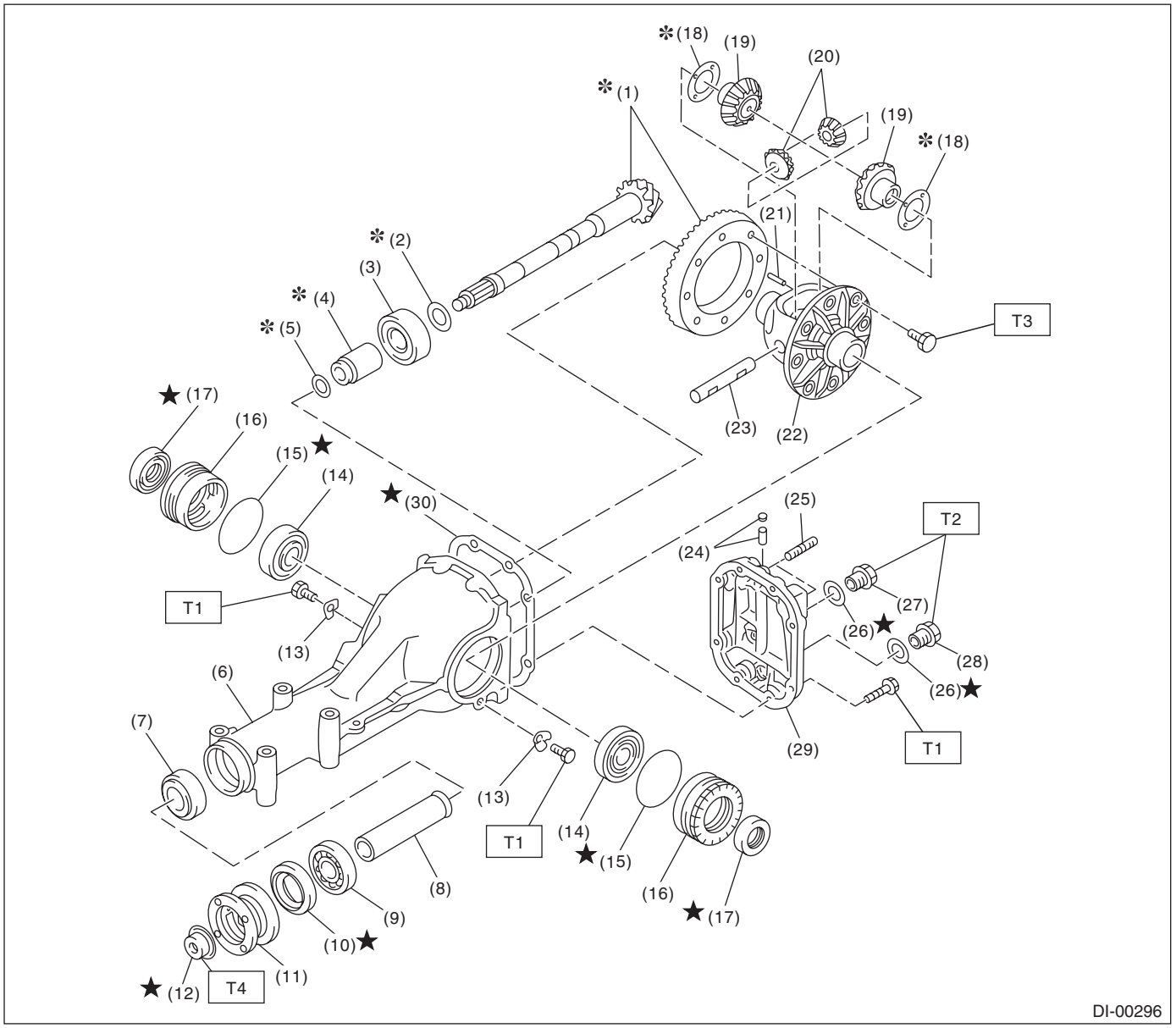

(1) Hypoid driven gear and drive pinion set
(2) Pinion height adjusting washer
(3) Rear bearing
(4) Bearing preload adjusting collar
(5) Bearing preload adjusting washer
(6) Differential carrier
(7) Front bearing
(8) Collar
(9) Pilot bearing
(10) Front oil seal
(11) Companion flange
(12) Self-locking nut
(13) Lock plate
(14) Side bearing
(15) O-ring
(16) Axle shaft holder
(17) Side oil seal
(18) Side gear thrust washer
(19) Side gear
(20) Pinion mate gear
(21) Pinion shaft lock pin
(22) Differential case
(23) Pinion mate shaft
(24) Air breather cap
(25) Stud bolt
(26) Gasket
(27) Oil filler plug
(28) Oil drain plug
(29) Rear cover
(30) Gasket

Tightening torque: N·m (kgf-m, ft-lb)
T1: 25 (2.5, 18.1)
T2: 34 (3.5, 25.3)
T3: 62 (6.3, 45.6)
T4: 191 (19.5, 141)

4. REAR DIFFERENTIAL (VA2-TYPE)

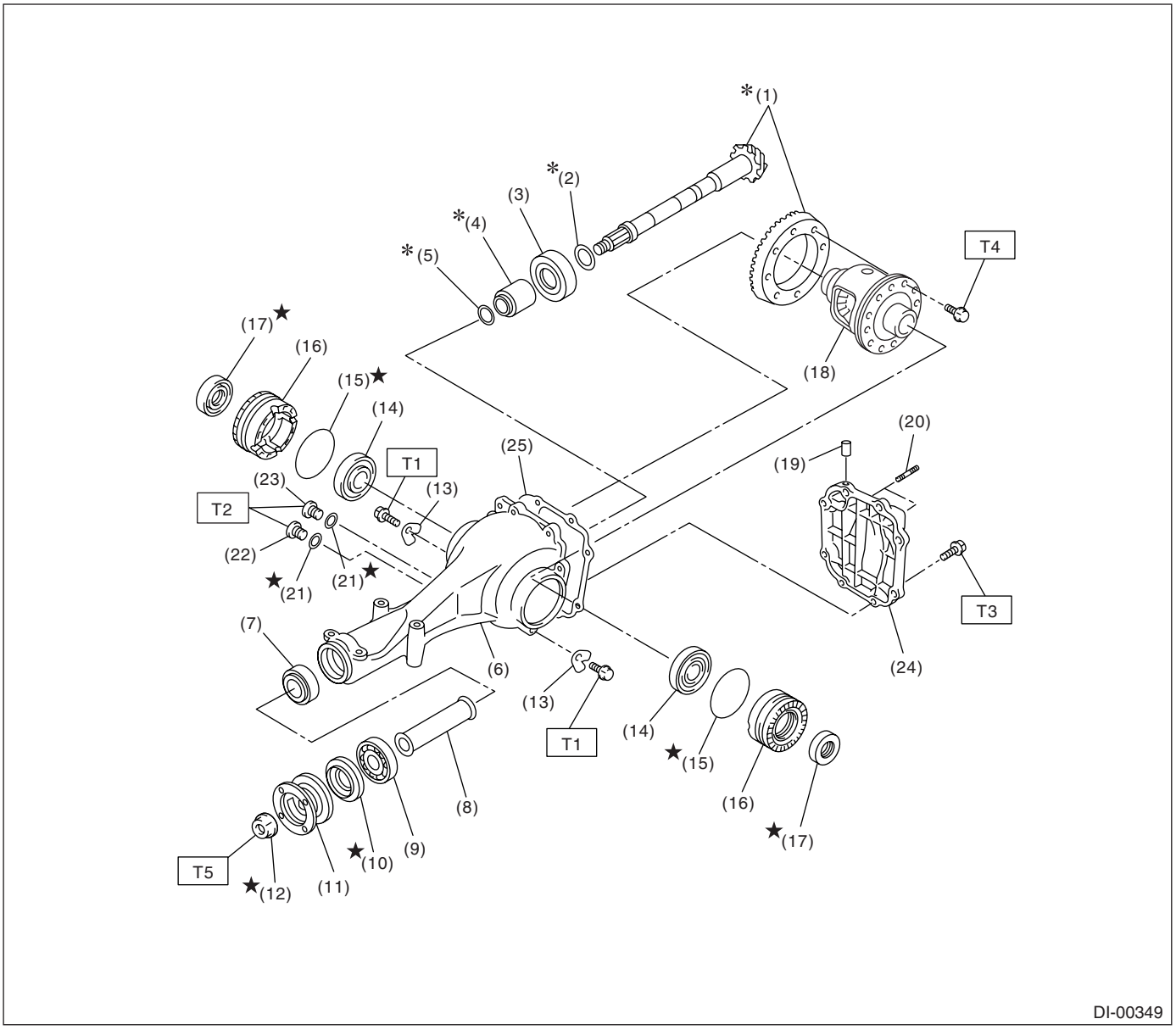

(1) Hypoid driven gear and drive pinion set
(2) Pinion height adjusting washer
(3) Rear bearing
(4) Bearing preload adjusting collar
(5) Bearing preload adjusting washer
(6) Differential carrier
(7) Front bearing
(8) Collar
(9) Pilot bearing
(10) Front oil seal
(11) Companion flange
(12) Self-locking nut
(13) Lock plate
(14) Side bearing
(15) O-ring
(16) Axle shaft holder
(17) Side oil seal
(18) Differential case ASSY
(19) Air breather cap
(20) Stud bolt
(21) Gasket
(22) Oil filler plug
(23) Oil drain plug
(24) Rear cover
(25) Gasket

Tightening torque: N·m (kgf-m, ft-lb)
T1: 25 (2.5, 18.1)
T2: 29 (3.0, 21.4)
T3: 34 (3.5, 25.3)
T4: 62 (6.3, 45.6)
T5: 191 (19.5, 141)

5. REAR DIFFERENTIAL MOUNTING SYSTEM

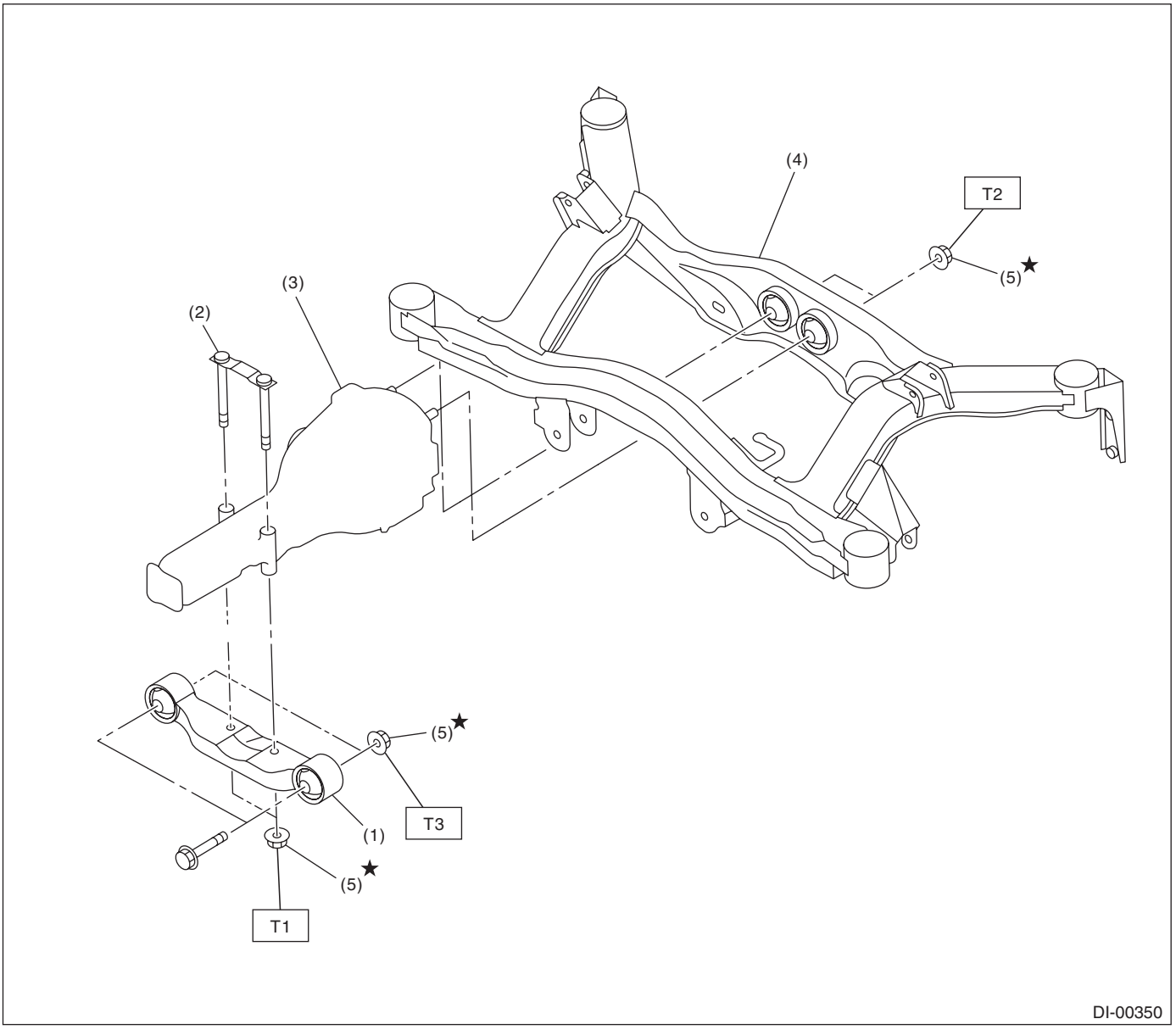

(1) Rear differential front member
(2) Rear differential member plate
(3) Rear differential ASSY
(4) Sub frame
(5) Self-locking nut

Tightening torque: N·m (kgf-m, ft-lb)
T1: 65 (6.6, 48)
T2: 70 (7.1, 51)
T3: 110 (11.2, 81)

C: CAUTION

• Wear work clothing, including a cap, protective goggles and protective shoes during operation.
• Remove contamination including dirt and corrosion before removal, installation or disassembly.
• Keep the disassembled parts in order and protect them from dust and dirt.
• Before removal, installation or disassembly, be sure to clarify the failure. Avoid unnecessary removal, installation, disassembly and replacement.
• Be careful not to burn yourself, because each part on the vehicle is hot after running.
• Use SUBARU genuine gear oil, grease etc. or the equivalent. Do not mix gear oil, grease etc. with that of another grade or from other manufacturers.
• Be sure to tighten fasteners including bolts and nuts to the specified torque.
• Place shop jacks or rigid racks at the specified points.
• Apply gear oil onto sliding or revolution surfaces before installation.
• Before installing O-rings or snap rings, apply sufficient amount of gear oil to avoid damage and deformation.
• Before securing a part on a vice, place cushioning material such as wood blocks, aluminum plate, or shop cloth between the part and the vice.
• Avoid damaging the mating surface of the case.

D: PREPARATION TOOL

1. SPECIAL TOOL

ILLUSTRATION	TOOL NUMBER	DESCRIPTION	REMARKS
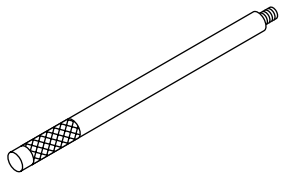 ST-398477701	398477701	HANDLE	Used for installing front and rear bearing cone.
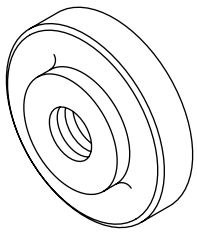 ST-398477702	398477702	DRIFT	• Used for press-fitting the bearing cone of differential carrier (front). • For T-type
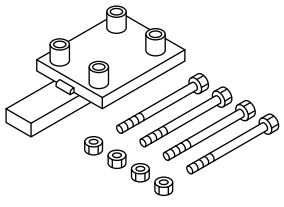 ST-398217700	398217700	ATTACHMENT SET	Stand for rear differential carrier disassembly and assembly.

ILLUSTRATION	TOOL NUMBER	DESCRIPTION	REMARKS
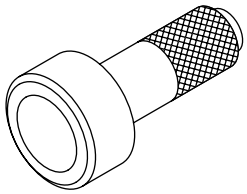 ST-498447120	498447120	INSTALLER	Used for installing front oil seal.
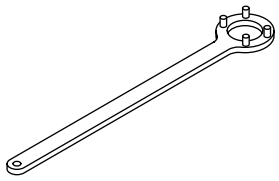 ST-498427200	498427200	FLANGE WRENCH	Used for stopping rotation of companion flange when removing and tightening self-locking nut.
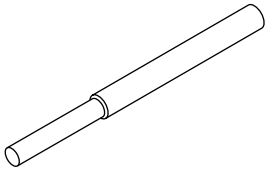 ST-398467700	398467700	DRIFT	• Used for removing pinion, pilot bearing and front bearing cone. • For T-type and VA1-type
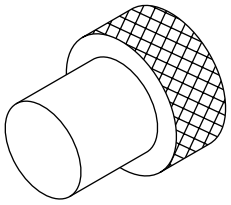 ST-399780104	399780104	WEIGHT	Used for installing front bearing cone and pilot bearing companion flange.

ILLUSTRATION	TOOL NUMBER	DESCRIPTION	REMARKS
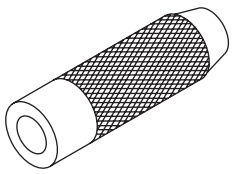 ST-899580100	899580100	INSTALLER	Used for press-fitting front bearing cone and pilot bearing.
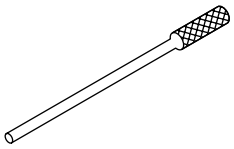 ST-899904100	899904100	STRAIGHT PIN REMOVER	Used for driving out differential pinion shaft lock pin.
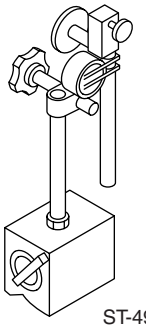 ST-498247001	498247001	MAGNET BASE	• Used for measuring backlash between side gear and pinion, and hypoid gear. • Used with DIAL GAUGE (498247100).
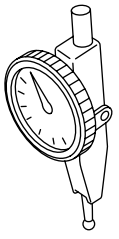 ST-498247100	498247100	DIAL GAUGE	• Used for measuring backlash between side gear and pinion, and hypoid gear. • Used with MAGNET BASE (498247001).

ILLUSTRATION	TOOL NUMBER	DESCRIPTION	REMARKS
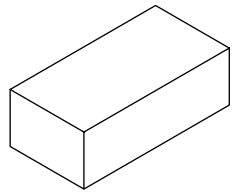 ST-398507704	398507704	BLOCK	• Used for adjusting pinion height and preload. • For T-type and VA1-type
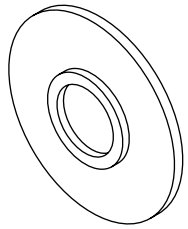 ST-398177700	398177700	INSTALLER	• Used for installing rear bearing cone. • For T-type and VA2-type
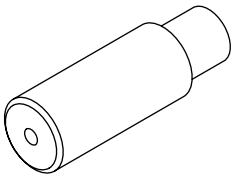 ST-398457700	398457700	ATTACHMENT	• Used for removal of side bearing retainer. • For T-type
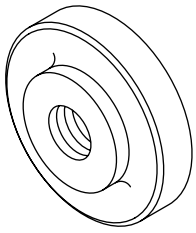 ST-398477703	398477703	DRIFT 2	• Used for press-fitting bearing race (rear) of differential carrier. • For T-type and VA2-type

ILLUSTRATION	TOOL NUMBER	DESCRIPTION	REMARKS
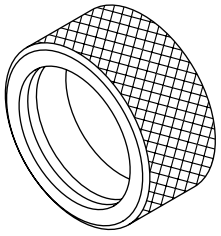 ST-398437700	398437700	DRIFT	• Used for installing side oil seal. • For T-type and VA2-type
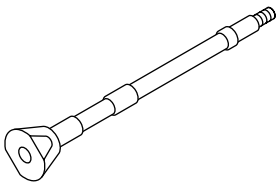 ST-398507702	398507702	DUMMY SHAFT	• Used for adjusting pinion height and preload. • For T-type
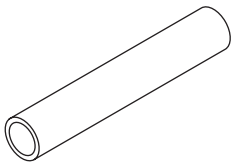 ST-398507703	398507703	DUMMY COLLAR	• Used for adjusting pinion height and preload. • For T-type
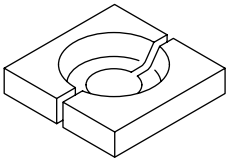 ST-398517700	398517700	REPLACER	• Used for removing rear bearing cone. • For T-type and VA2-type

ILLUSTRATION	TOOL NUMBER	DESCRIPTION	REMARKS
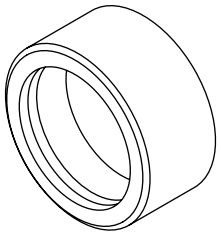 ST-398487700	398487700	DRIFT	• Used for press-fitting side bearing cone. • For T-type and VA2-type
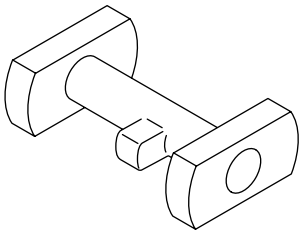 ST-398507701	398507701	DIFFERENTIAL CARRIER GAUGE	• Used for adjusting pinion height. • For T-type
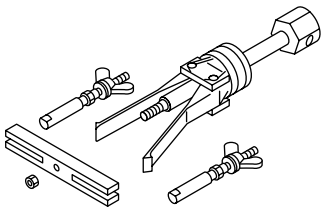 ST-398527700	398527700	PULLER ASSY	• Used for removing front oil seal. • Used for removing side bearing cup. (T-type)
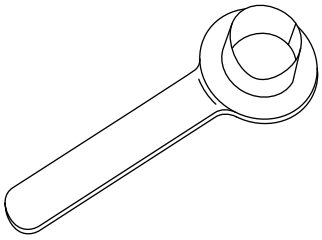 ST28099PA090	28099PA090	OIL SEAL PROTECTOR	• Used for installing the rear drive shaft to rear differential. • For oil seal protection

ILLUSTRATION	TOOL NUMBER	DESCRIPTION	REMARKS
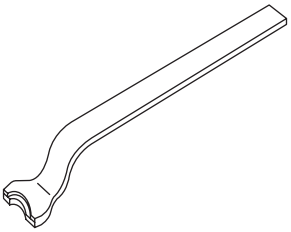 ST28099PA100	28099PA100	DRIVE SHAFT REMOVER	• Used for removing rear drive shaft from rear differential. • For T-type
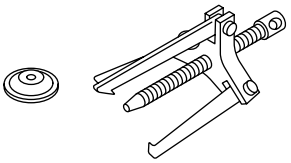 ST-399703600	399703600	PULLER ASSY	Used for removing companion flange.
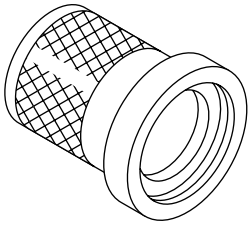 ST-899874100	899874100	INSTALLER	Used for installing companion flange.
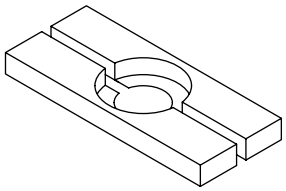 ST-498077000	498077000	REMOVER	• Used for removing side bearing cone from differential. • For VA2-type

ILLUSTRATION	TOOL NUMBER	DESCRIPTION	REMARKS
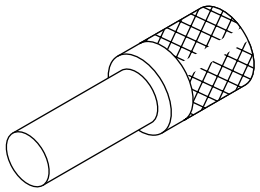 ST-899864100	899864100	REMOVER	Used for removing differential side bearing.
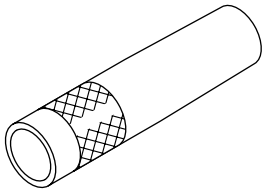 ST-499277200	499277200	INSTALLER	• Used for installing front bearing cone. • For VA2-type
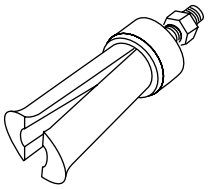 ST18758AA000	18758AA000	PULLER	• Used for removing side bearing cup. • For VA2-type
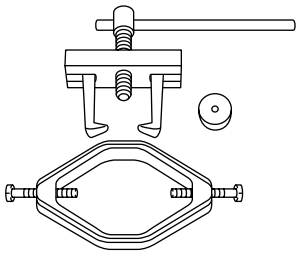 ST18759AA000	18759AA000	PULLER ASSY	• Used for removing differential from side bearing cone. • For T-type

ILLUSTRATION	TOOL NUMBER	DESCRIPTION	REMARKS
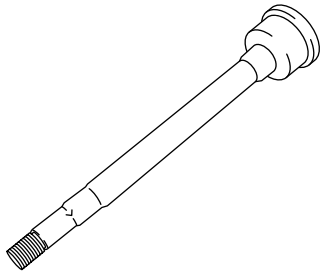 ST18678AA000	18678AA000 (Newly adopted tool)	DUMMY SHAFT	• Used for adjusting pinion height and preload. • For VA2-type
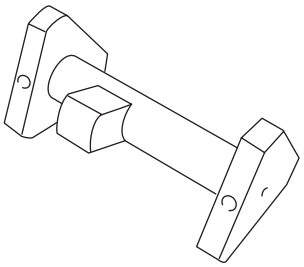 ST18831AA010	18831AA010 (Newly adopted tool)	DIFFERENTIAL CARRIER GAUGE	• Used for adjusting pinion height. • For VA2-type
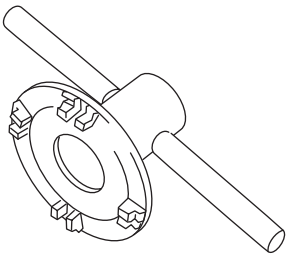 ST18630AA010	18630AA010 (Newly adopted tool)	WRENCH ASSY	• Used for removing and installing side oil seal holder. • For VA2-type NOTE: Also available for VA1-type.
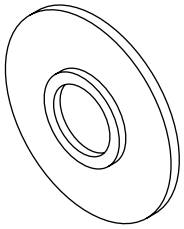 ST-498175500	498175500	INSTALLER	• Used for installing rear bearing cone. • For VA1-type

ILLUSTRATION	TOOL NUMBER	DESCRIPTION	REMARKS
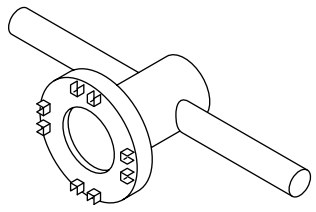 ST-499785500	499785500	WRENCH ASSY	• Used for removing and installing side oil seal holder. • For VA1-type
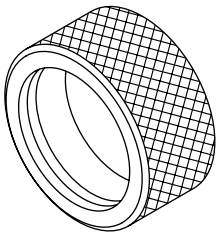 ST-498447100	498447100	INSTALLER	• Used for installing oil seal. • For VA1-type and T-type
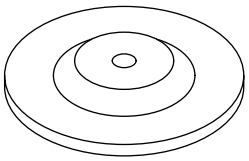 ST-399520105	399520105	SEAT	• Used for removing side bearing cone. • Used with PULLER SET (899524100). • For VA-type
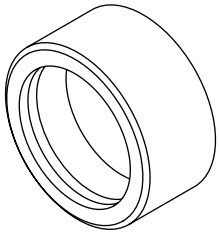 ST-498485400	498485400	DRIFT	• Used for installing side bearing cone. • For VA1-type

ILLUSTRATION	TOOL NUMBER	DESCRIPTION	REMARKS
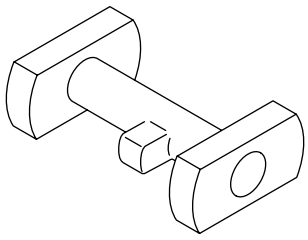 ST-498505501	498505501	DIFFERENTIAL CARRIER GAUGE	• Used for adjusting pinion height. • For VA1-type
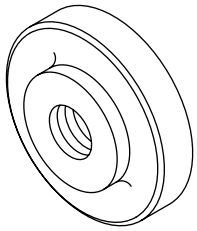 ST-498447110	498447110	DRIFT	• Used for press-fitting the bearing race (front) of differential carrier. • For VA1-type
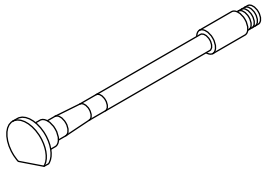 ST-498447150	498447150	DUMMY SHAFT	• Used for adjusting pinion height and preload. • For VA1-type
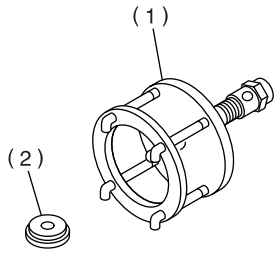 ST-899524100	899524100	PULLER SET	Used for removing side bearing corn of differential. (1) Puller (2) Cap

ILLUSTRATION	TOOL NUMBER	DESCRIPTION	REMARKS
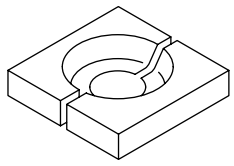 ST-498515500	498515500	REPLACER	• Used for removing rear bearing cone. • For VA1-type
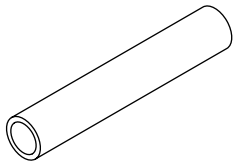 ST32285AA000	32285AA000	DUMMY COLLAR	• Used for adjusting pinion height and preload. • For VA1-type
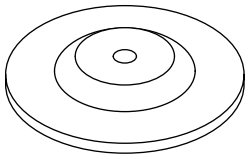 ST-499705404	499705404	SEAT	• Used for removing side bearing race. • Used with PULLER ASSY (499705401). • For VA1-type
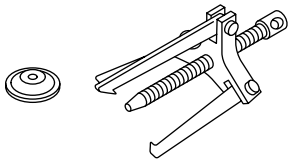 ST-499705401	499705401	PULLER ASSY	• Used for removing side bearing race. • Used with SEAT (499705404). • For VA-type

2. GENERAL PURPOSE TOOL

TOOL NAME	REMARKS
Transmission jack	Used for assembly/disassembly of rear differential.
Puller	Used for removal of side bearing retainer.
Thickness gauge	Used for measuring clearance.
Hexagon wrench	Used for installing and removing filler and drain plug.
Tire lever	Used for removal of rear drive shaft. (VA-type)

2. Differential Gear Oil

A: INSPECTION

1) Remove the filler plug, and then check the gear oil. If it is contaminated or deteriorated, replace the gear oil. <Ref. to DI-25, REPLACEMENT, Differential Gear Oil.>
2) Check that the gear oil level is up to the bottom of filler plug hole. If the level is low, refill up to the bottom of filler plug hole.

- Except for VA2-type

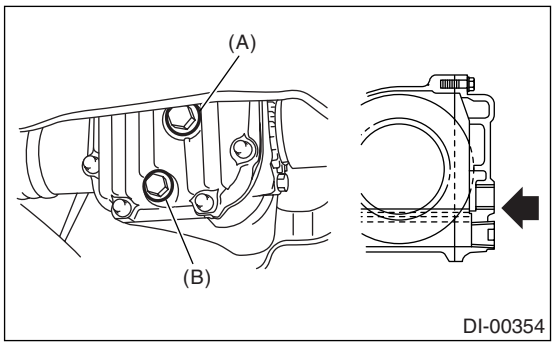

(A) Filler plug
(B) Drain plug

- VA2-type

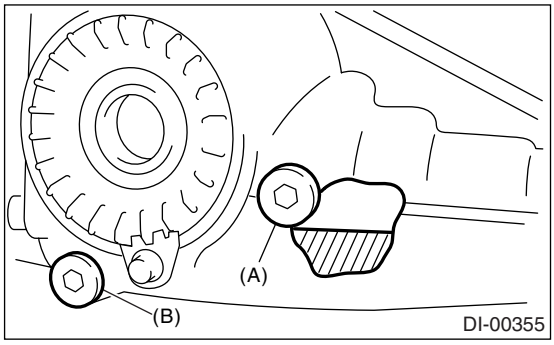

(A) Filler plug
(B) Drain plug

B: REPLACEMENT

1) Jack-up the vehicle and support it with rigid racks.
2) Remove the oil drain plug and filler plug, and drain the gear oil.

CAUTION:
Be careful not to burn your hands, because gear oil becomes extremely hot after running.

- Except for VA2-type

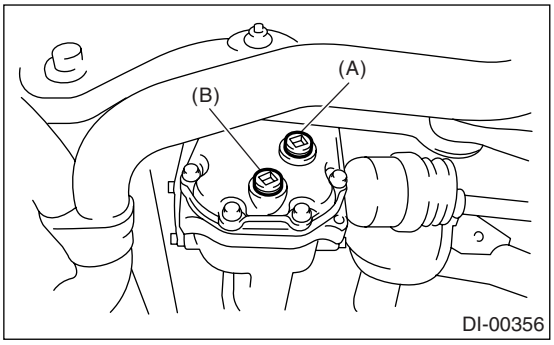

(A) Filler plug
(B) Drain plug

- VA2-type

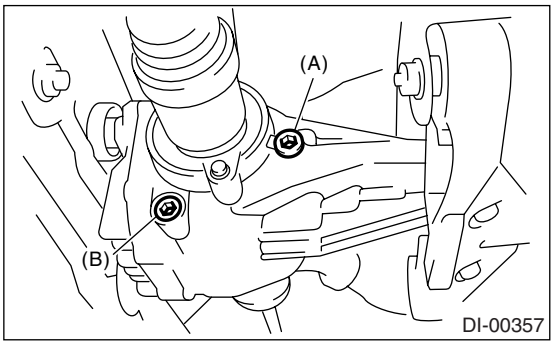

(A) Filler plug
(B) Drain plug

3) Tighten the oil drain plug.

NOTE:
• Apply liquid gasket to the drain plug threads for T-type.

Liquid gasket:
THREE BOND 1105 (Part No. 004403010) or equivalent

- Use a new aluminum gasket for VA1-type.
- Use a new metal gasket for VA2-type.

Tightening torque:
T-type:
49 N·m (5.0 kgf-m, 36.2 ft-lb)
VA1-type:
34 N·m (3.5 kgf-m, 25.3 ft-lb)
VA2-type:
29 N·m (3.0 kgf-m, 21.7 ft-lb)

4) Fill the differential carrier with gear oil to the bottom of filler plug.

NOTE:
• Carefully refill oil while watching the level. Excessive or insufficient oil must be avoided.

Recommended gear oil:
<Ref. to DI-2, SPECIFICATION, General Description.>

Oil capacity:
0.8 ℓ (0.8 US qt, 0.7 Imp qt)

- Except for VA2-type

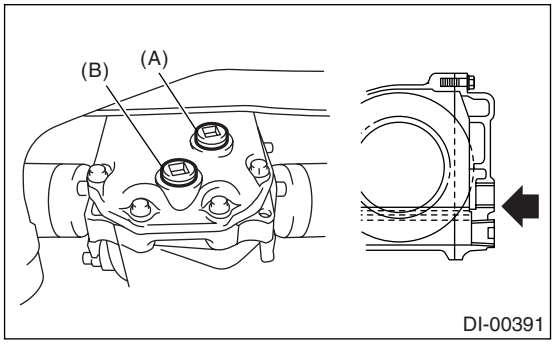

(A) Filler plug
(B) Drain plug

- VA2-type

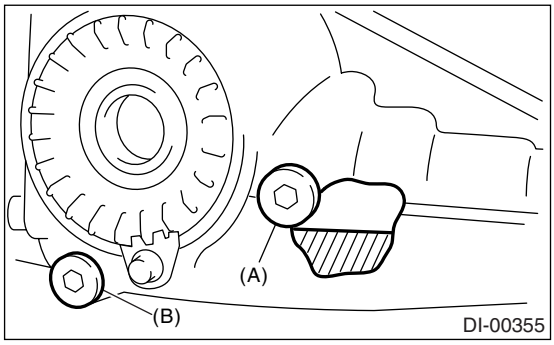

(A) Filler plug
(B) Drain plug

5) Install the filler plug.

NOTE:
- Apply liquid gasket to the filler plug threads for T-type.

Liquid gasket:
THREE BOND 1105 (Part No. 004403010) or equivalent

- Use a new aluminum gasket for VA1-type.
- Use a new metal gasket for VA2-type.

Tightening torque:
T-type:
49 N·m (5.0 kgf-m, 36.2 ft-lb)
VA1-type:
34 N·m (3.5 kgf-m, 25.3 ft-lb)
VA2-type:
29 N·m (3.0 kgf-m, 21.7 ft-lb)

3. Front Differential Assembly

A: NOTE

1. AT MODEL

- 4AT

For front differential of 4AT model, refer to “4AT” section. <Ref. to 4AT-97, Front Differential Assembly.>

- 5AT

For front differential of 5AT model, refer to “5AT” section. <Ref. to 5AT-90, Front Differential Assembly.>

2. MT MODEL

For front differential of manual transmission, refer to “5MT” section. <Ref. to 5MT-65, Front Differential Assembly.>

4. Rear Differential (T-type)

A: REMOVAL

1) Disconnect the ground cable from battery.
2) Move the select lever or gear shift lever to neutral.
3) Loosen the wheel nuts.
4) Release the parking brake.
5) Jack-up the vehicle and support it with rigid racks.
6) Remove the rear wheels.
7) Remove the rear exhaust pipe and muffler.
• 2.5 L SOHC model
<Ref. to EX(H4SO)-8, Rear Exhaust Pipe.> <Ref. to EX(H4SO)-10, Muffler.>
• 2.5 L DOHC turbo model
<Ref. to EX(H4DOTC)-12, Rear Exhaust Pipe.> <Ref. to EX(H4DOTC)-13, Muffler.>
8) Remove the propeller shaft.
<Ref. to DS-10, REMOVAL, Propeller Shaft.>
9) Prepare the transmission jack and band.

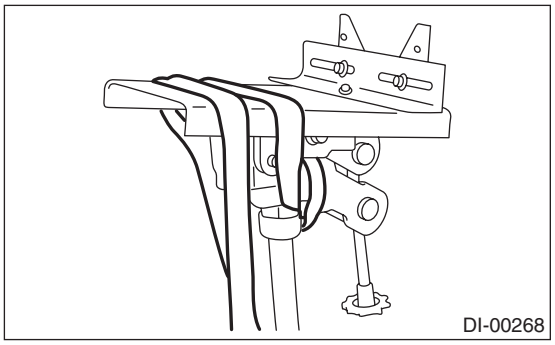
DI-00268

10) Loosen the self-locking nuts which hold the rear differential to rear crossmember.

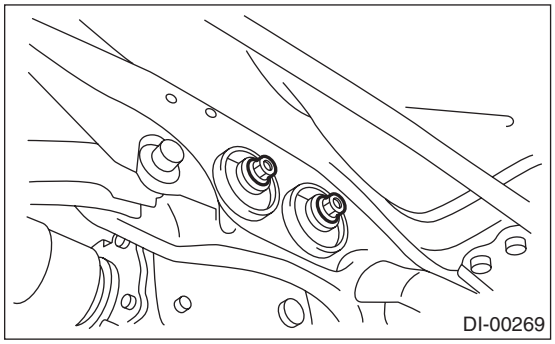
DI-00269

11) Remove the DOJ of rear drive shaft from rear differential using ST.

ST 28099PA100 DRIVE SHAFT REMOVER

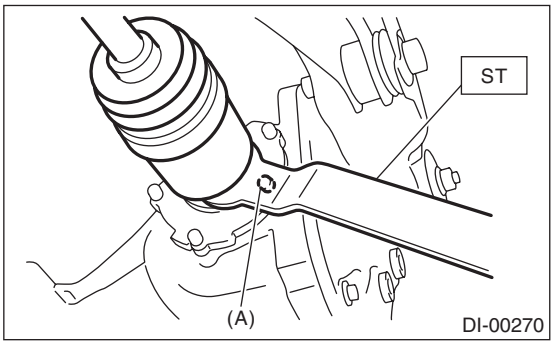

DI-00270

(A) Bolt

12) Remove the rear differential front member.

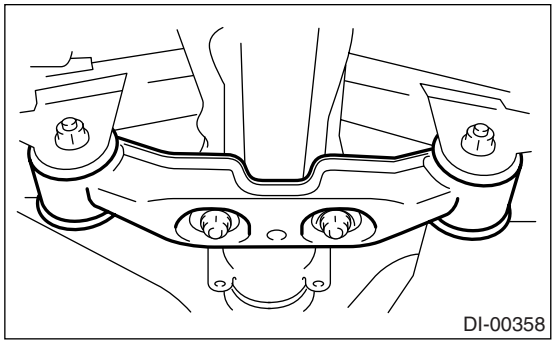
DI-00358

13) Support the rear differential with transmission jack.

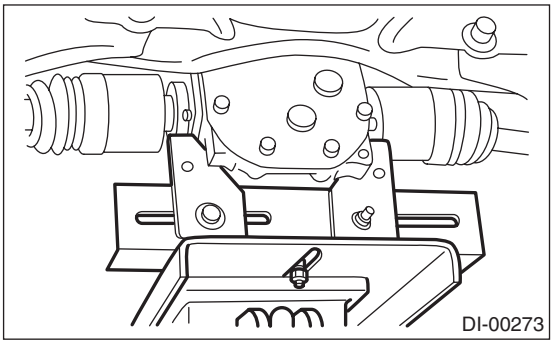
DI-00273

14) Secure the rear differential using band.
15) Remove the self-locking nuts which hold the rear differential to crossmember.
16) Remove the rear differential stud bolt from rear crossmember bushing.

NOTE:
When removing the stud bolt, carefully adjust the angle and location of transmission jack and jack stand, if necessary.

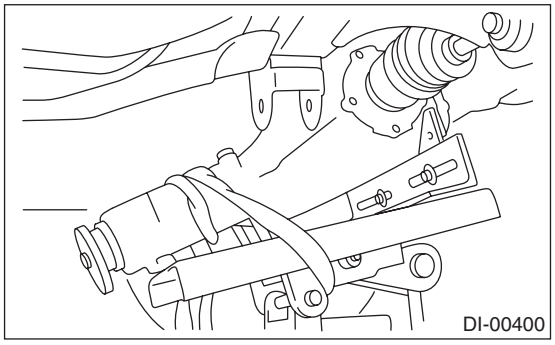

17) Lower the transmission jack stand after removing the rear differential stud bolt from rear crossmember. Rear drive shaft should not come into contact with lateral link bolt.

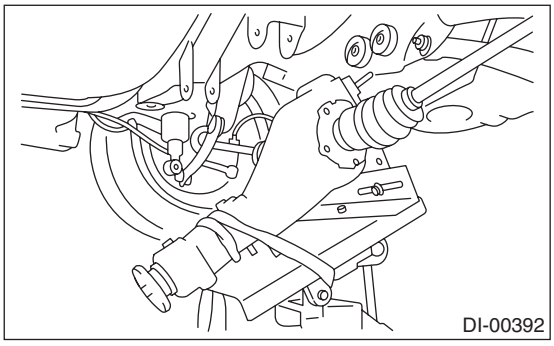

18) Pull out the axle shaft from rear differential.

NOTE:
If it is difficult to remove the axle shaft from rear differential, remove it using ST.

ST 28099PA100 DRIVE SHAFT REMOVER

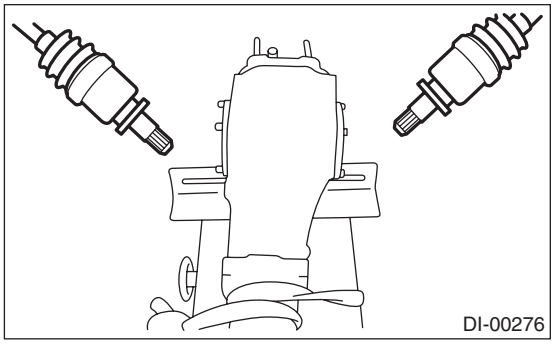

19) Lower the transmission jack.

20) Secure the rear drive shaft to lateral link using wire.

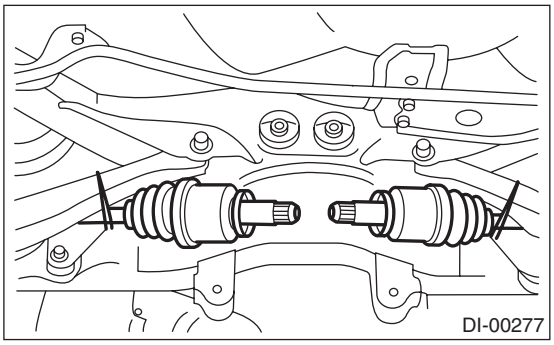

21) Remove the rear differential member plate from rear differential.

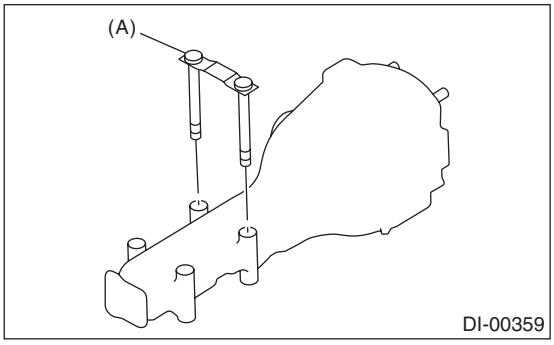

(A) Rear differential member plate

B: INSTALLATION

1) Install the rear differential member plate to rear differential.

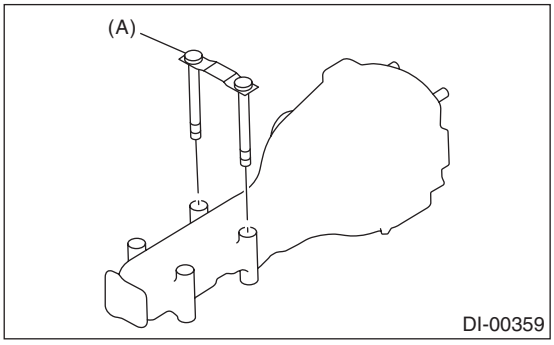

(A) Rear differential member plate

2) Set the rear differential to transmission jack.

NOTE:
Secure the rear differential to transmission jack using band.

3) Install the ST to rear differential.

ST 28099PA090 OIL SEAL PROTECTOR

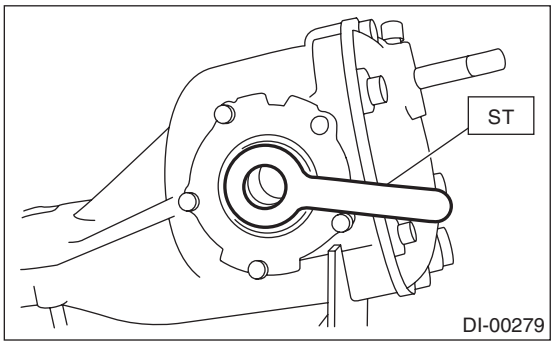

4) Insert the spline shaft until the spline portion comes inside the side oil seal.

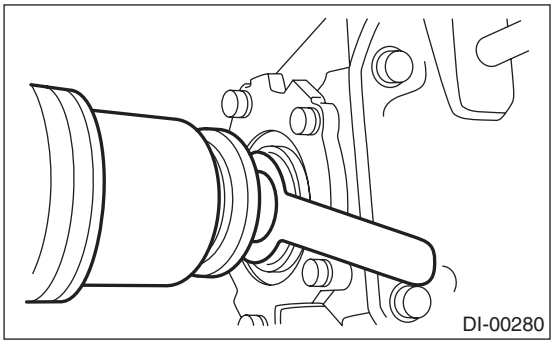

5) Remove ST from rear differential.
ST 28099PA090 OIL SEAL PROTECTOR
6) Push the rear differential to insert the axle shaft into rear differential.

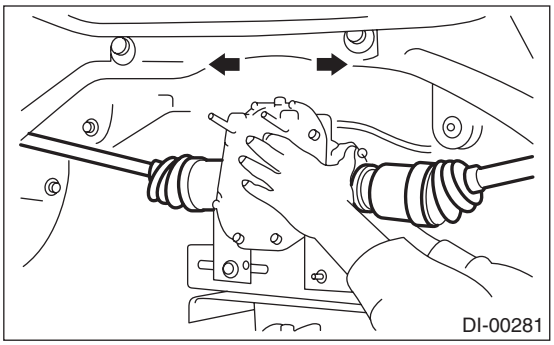

7) Adjust the transmission jack, if necessary, and insert the rear differential stud bolt into rear crossmember bushing properly.

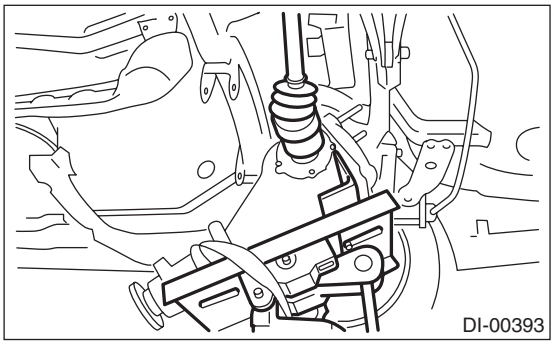

8) After inserting the rear differential stud bolt into rear crossmember bushing, lift up the transmission jack and align the rear differential with its own position.

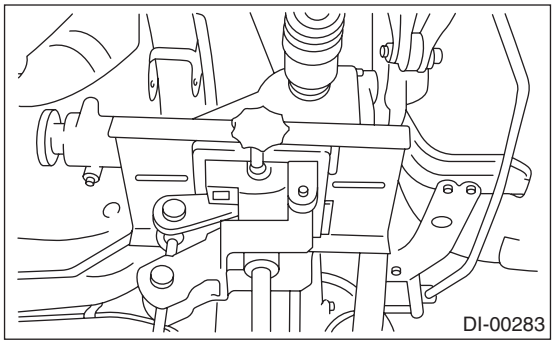

9) Tighten the rear crossmember self-locking nut temporarily.

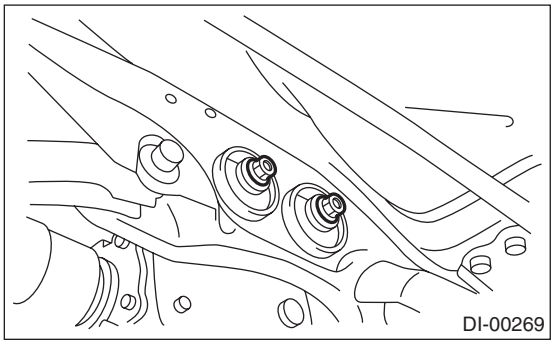

10) Remove the band from rear differential. Lift up the rear differential until the rear differential is separated from the transmission jack.
11) Install the rear differential front member.

Tightening torque:
T1: 65 N·m (6.6 kgf-m, 48 ft-lb)
T2: 110 N·m (11.2 kgf-m, 81 ft-lb)

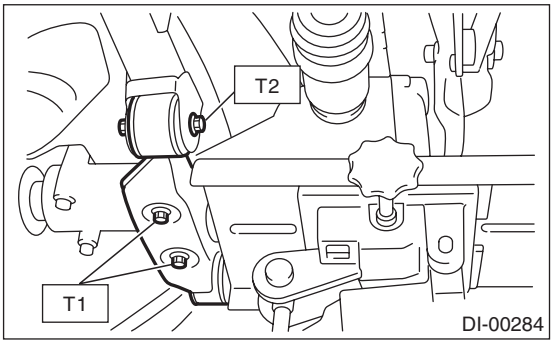

12) Tighten the self-locking nut.

Tightening torque:
70 N·m (7.1 kgf-m, 51 ft-lb)

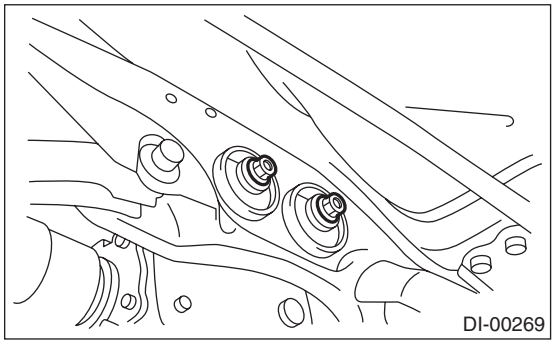

13) Lower the transmission jack.
14) Install the propeller shaft. <Ref. to DS-11, INSTALLATION, Propeller Shaft.>
15) Install the heat shield cover.
16) Install the rear exhaust pipe and muffler.
17) After installing the rear differential carrier to the vehicle, remove the filler plug, and refill the gear oil to the bottom of plug hole.

Oil capacity:
0.8 ℓ (0.8 US qt, 0.7 Imp qt)

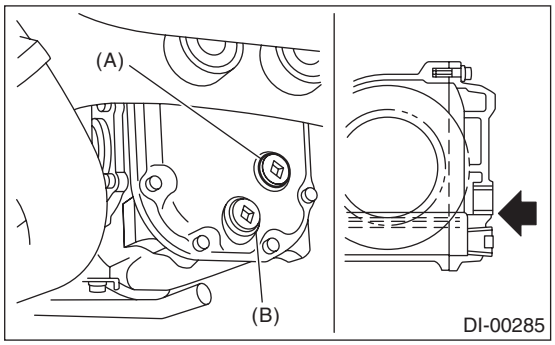

(A) Filler plug
(B) Drain plug

18) Tighten the filler plug.

NOTE:
Apply liquid gasket to the drain plug.

Liquid gasket:
THREE BOND 1105 (Part No. 004403010) or equivalent

Tightening torque:
49 N·m (5.0 kgf-m, 36.2 ft-lb)

C: DISASSEMBLY

To detect the real cause of trouble, inspect the following items before disassembling.
• Tooth contact of hypoid driven gear and drive pinion, and backlash
• Hypoid driven gear runout on its back surface
• Total preload of drive pinion

1) Set the ST on vise and install the differential assembly to ST.
ST 398217700 ATTACHMENT

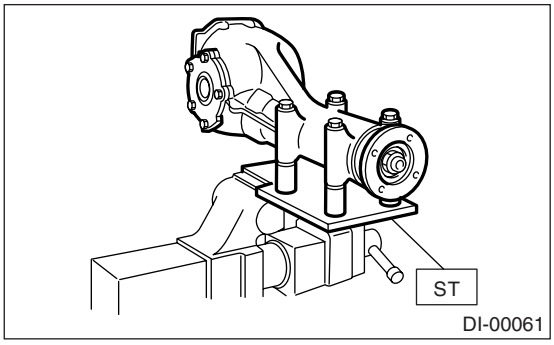

2) Drain the gear oil by removing plug.
3) Remove the air breather cap.

NOTE:
• Do not attempt to replace the air breather cap unless necessary.
• Replace the air breather cap with a new one when removing it.

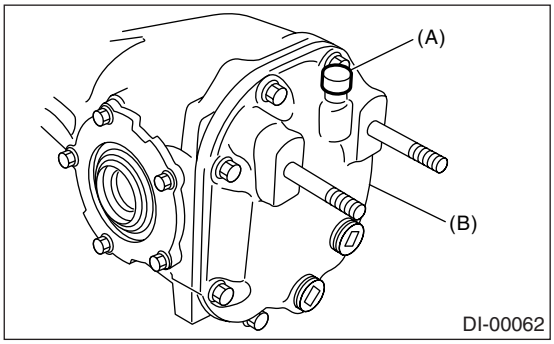

(A) Air breather cap
(B) Rear cover

4) Remove the bolts, and then remove the rear cover.

NOTE:
Remove it by tapping with plastic hammer.

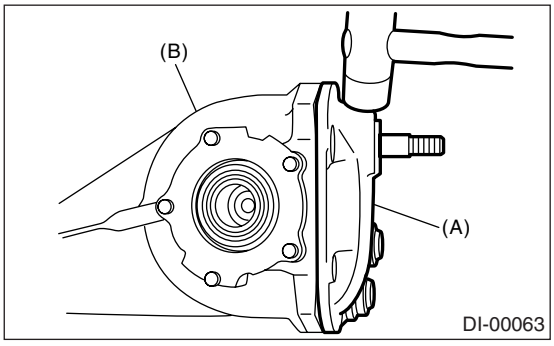

(A) Rear cover
(B) Differential carrier

5) Keep the side bearing retainers RH and LH separately for easier reassembly. Remove the side bearing retainer attaching bolts, set the ST to differential case, and extract the side bearing retainers RH and LH with a puller.

NOTE:
Each shim, which is installed to adjusted the side bearing preload, should be kept together with its mating retainer.

ST 398457700 ATTACHMENT

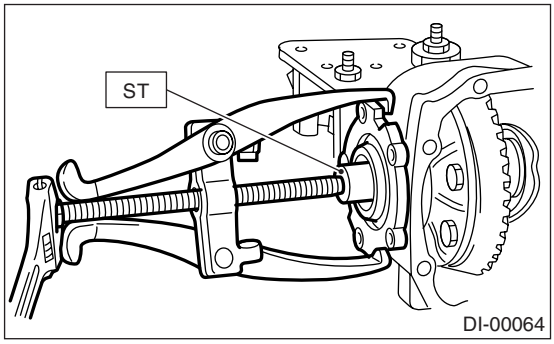

6) Pull out the differential case assembly from differential carrier.

NOTE:
Be careful not to hit the teeth against the case.

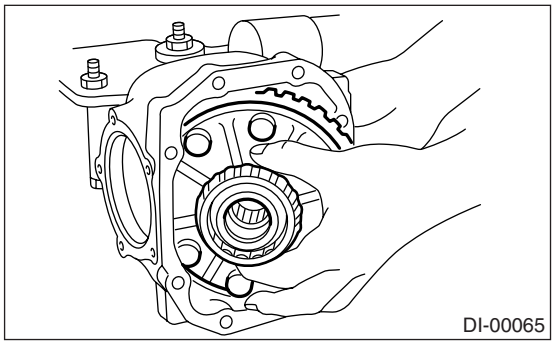

7) When replacing the side bearing, remove the bearing cup from side bearing retainer using ST.

ST 398527700 PULLER ASSY

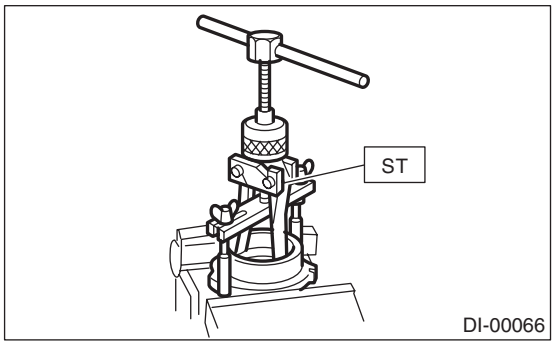

8) Extract the bearing cone with ST.

NOTE:
• Do not attempt to disassemble the parts unless necessary.
• Set the puller so that its claws catch the edge of the bearing cone.
• Never mix up the bearing races RH and LH and cones.

ST 18759AA000 PULLER ASSY

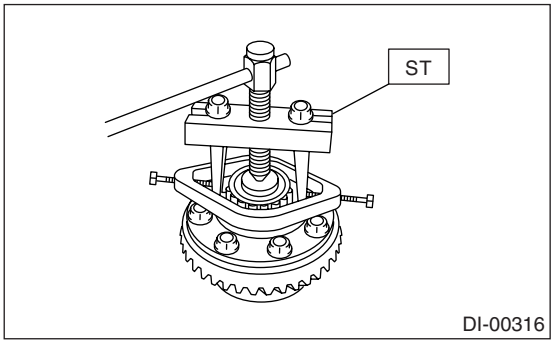

9) Remove the hypoid driven gear by loosening hypoid driven gear bolts.

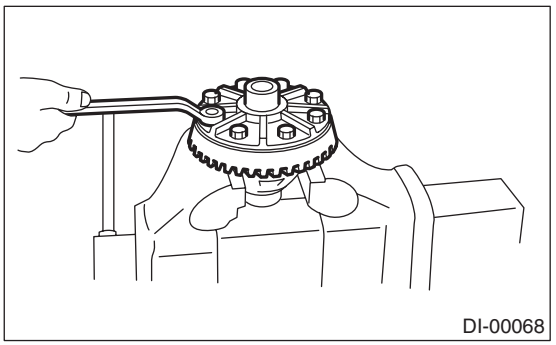

10) Drive out the pinion shaft lock pin from hypoid driven gear side (Model without LSD).

NOTE:
The lock pin is staked at the pin hole end on the differential carrier. Do not drive it out forcibly before removing the stake.

ST 899904100 STRAIGHT PIN REMOVER

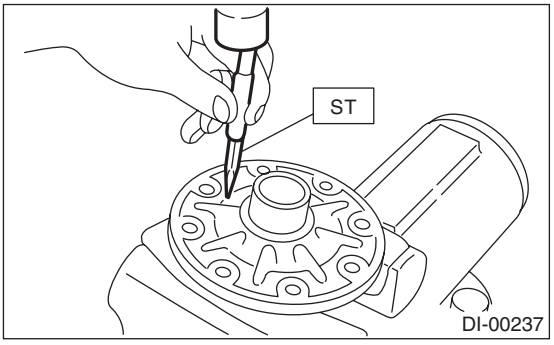

11) Draw out the pinion mate shaft and remove pinion mate gears, side gears and thrust washers. (Model without LSD)

NOTE:
The gears should be marked or kept separated RH and LH, and front and rear as well as thrust washers.

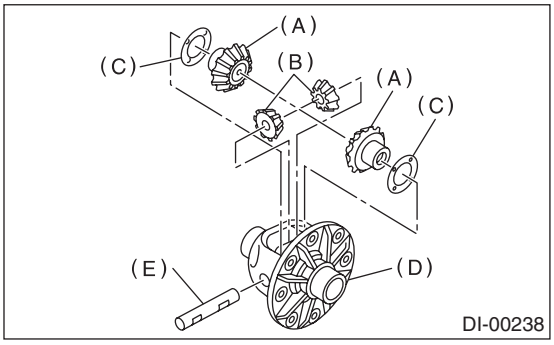

(A) Side gear
(B) Pinion mate gear
(C) Thrust washer
(D) Differential case
(E) Pinion mate shaft

12) Hold the companion flange with ST and remove the self-locking nut.
ST 498427200 FLANGE WRENCH

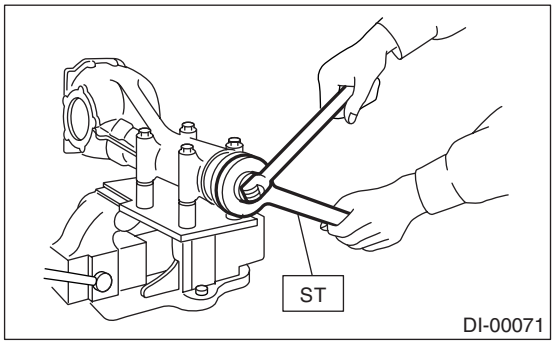

13) Extract the companion flange with a puller.

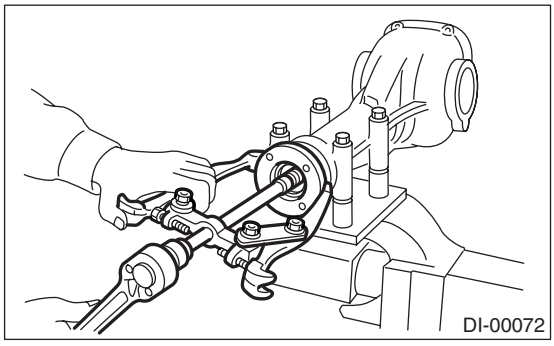

14) Press the end of drive pinion shaft and extract it together with rear bearing cone, pinion height adjusting washer and washer.

NOTE:
Hold the drive pinion so as not to drop it.

ST 398467700 DRIFT

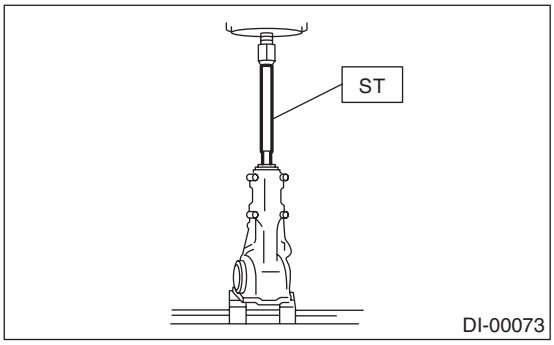

15) Remove the rear bearing cone from drive pinion by supporting the cone with ST.

NOTE:
Place the replacer so that its center-recessed side faces the pinion gear.
ST 398517700 REPLACER

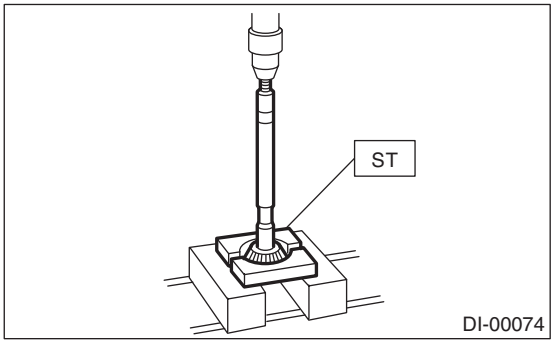

16) Remove the front oil seal from differential carrier using ST.
ST 398527700 PULLER ASSY

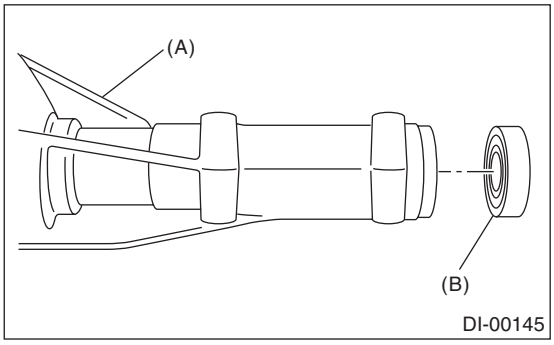

(A) Differential carrier
(B) Front oil seal

17) Remove the pilot bearing together with front bearing cone and collar using ST.

ST 398467700 DRIFT

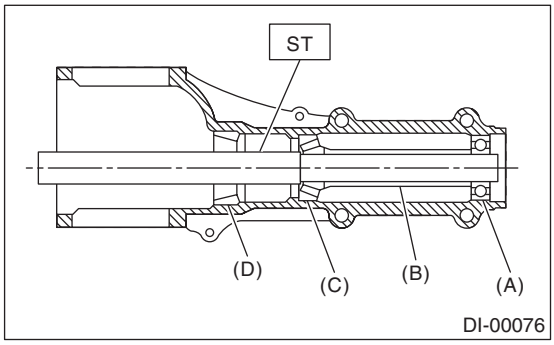

(A) Pilot bearing
(B) Collar
(C) Front bearing
(D) Rear bearing cup

18) When replacing the bearings, hit out the front bearing cup and rear bearing cup in this order out of case using a brass bar.

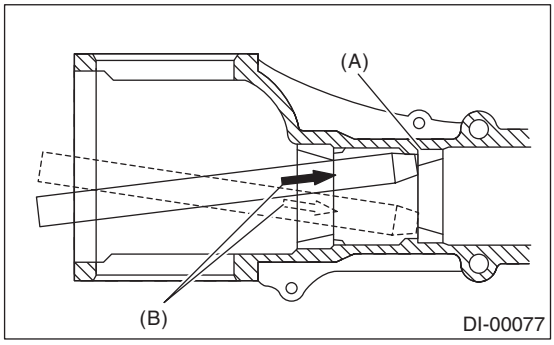

(A) 2 cutouts along diagonal lines
(B) Hit out alternately with brass bar

D: ASSEMBLY

NOTE:
• Assemble in the reverse order of disassembly.
• Check and adjust each part during assembly.
• Keep the shims and washers in order, so that they are not improperly installed.
• Thoroughly clean the surfaces on which the shims, washers and bearings are to be installed.
• Apply gear oil to the bearings and thrust washers when installing them.
• Be careful not to mix up the bearing races RH and LH.
• Use new O-rings and gasket.
• Replace the oil seals with new ones at every disassembly. Apply grease to the lips when installing the oil seals.
• Be careful not to mix up the differential oil seal RH and LH.

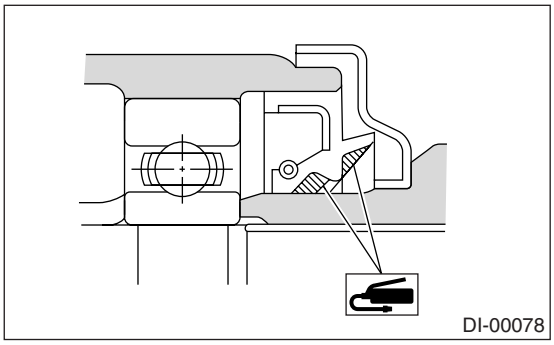

1) Adjusting preload for front and rear bearings:
Adjust the bearing preload with collar and washer between front and rear bearings. Pinion height adjusting washer are not affected by this adjustment. The adjustment must be carried out without oil seal inserted.

(1) Press the rear bearing race into differential carrier with ST1 and ST2.

ST1 398477701 HANDLE
ST2 398477703 DRIFT 2

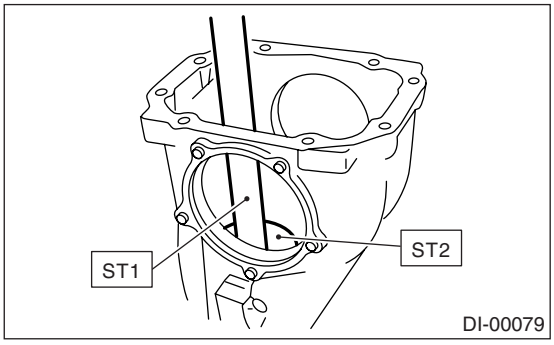

(2) Install the front bearing race to differential carrier using ST1 and ST2.

ST1 398477701 HANDLE
ST2 398477702 DRIFT

(3) Measure and record the thickness of pinion height adjusting washer.

NOTE:
If tooth contact (drive pinion, hypoid driven gear) is normal in the inspection before disassembling, verify that the washer is not deformed, and then re-use the used washer.

(4) Insert the ST1 into carrier with pinion height adjusting washer and rear bearing cone fitted onto it.

NOTE:
Use new rear bearing cone.

(5) Install the preload adjusting collar and washer, front bearing cone, ST2, companion flange, and washer and drive pinion nut.

ST1 398507702 DUMMY SHAFT

ST2 398507703 DUMMY COLLAR

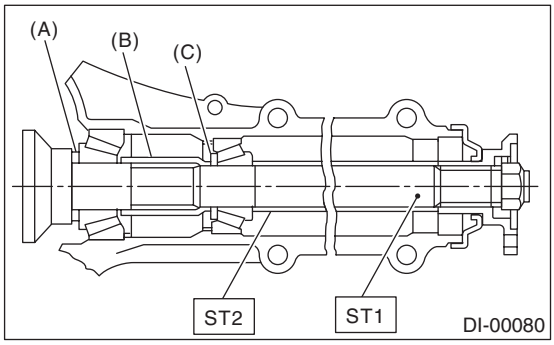

(A) Pinion height adjusting washer
(B) Preload adjusting collar
(C) Preload adjusting washer

(6) Turn the ST1 with hand to smooth the bearing, and tighten the self-locking nut while measuring the preload with spring balance. Select the preload adjusting washer and collar so that the specified preload is obtained when nut is tightened to the specified torque.

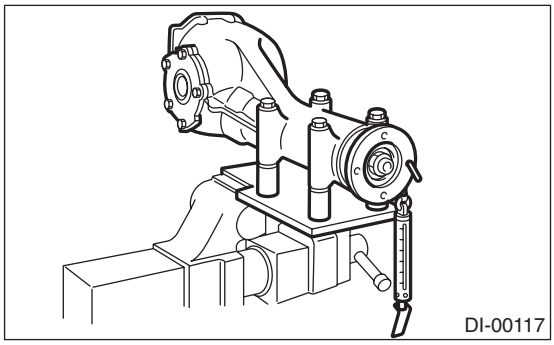

NOTE:
- Use a new self-locking nut.
- Be careful not to give excessive preload.
- When tightening the self-locking nut, lock ST1 with ST2 as shown in the figure.
- Measure the preload in direction of tangent to flange.

ST1 398507702 DUMMY SHAFT
ST2 398507704 BLOCK

Tightening torque:
181 N·m (18.5 kgf-m, 134 ft-lb)

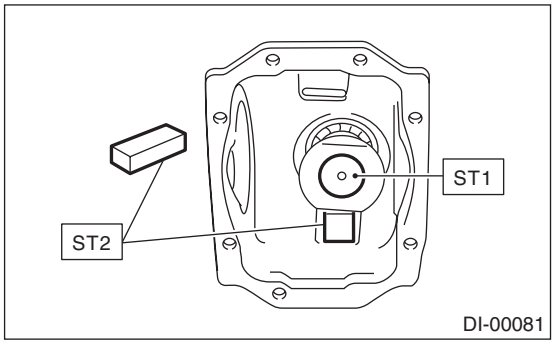

Drive pinion bearing preload
18.1 — 38.8 N (1.8 — 4.0 kgf, 4.1 — 8.7 lb) at companion flange bolt hole

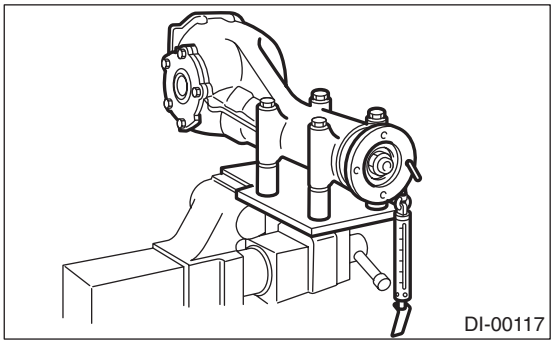

	Part No.	Thickness mm (in)
Preload adjusting washer	383705200	2.59 (0.1020)
	383715200	2.57 (0.1012)
	383725200	2.55 (0.1004)
	383735200	2.53 (0.0996)
	383745200	2.51 (0.0988)
	383755200	2.49 (0.0980)
	383765200	2.47 (0.0972)
	383775200	2.45 (0.0965)
	383785200	2.43 (0.0957)
	383795200	2.41 (0.0949)
	383805200	2.39 (0.0941)
	383815200	2.37 (0.0933)
	383825200	2.35 (0.0925)
	383835200	2.33 (0.0917)
	383845200	2.31 (0.0909)
	Part No.	Length mm (in)
Preload adjusting collar	383695201	56.2 (2.213)
	383695202	56.4 (2.220)
	383695203	56.6 (2.228)
	383695204	56.8 (2.236)
	383695205	57.0 (2.244)
	383695206	57.2 (2.252)

2) Adjusting drive pinion height:
Adjust the drive pinion height with washer installed between the rear bearing cone and the back of pinion gear.
(1) Install the ST2.

ST1 398507702 DUMMY SHAFT
ST2 398507701 DIFFERENTIAL CARRIER GAUGE

ST3 398507703 DUMMY COLLAR

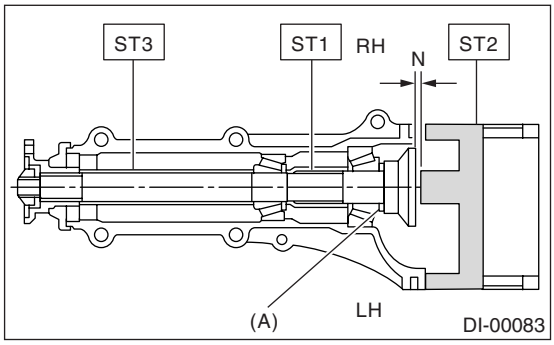

(A) Pinion height adjusting washer

(2) Measure the clearance N between the end of ST2 and the end surface of ST1 by using a thickness gauge.

NOTE:
Make sure there is no clearance between the case and ST2.

ST1 398507702 DUMMY SHAFT
ST2 398507701 DIFFERENTIAL CARRIER GAUGE

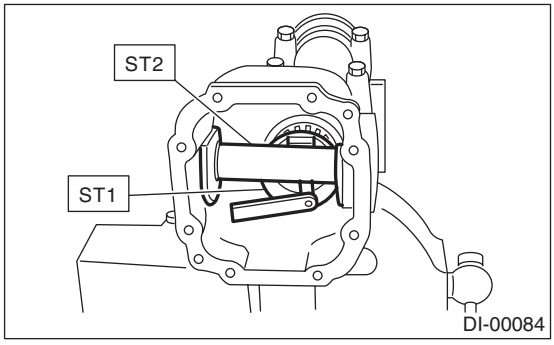

(3) Obtain the thickness of pinion height adjusting washer to be inserted from the following formula, and replace the temporarily installed washer with this one.

$T = To + N - (H \times 0.01) - 0.20$ mm (0.0079 in)

NOTE:
Use copies of this page.

T	Thickness of pinion height adjusting washer mm (in)	
To	Thickness of washer temporally inserted mm (in)	
N	Clearance of thickness gauge mm (in)	
H	Figure marked on drive pinion head	
Memo:		

(Example of calculation)
To = 2.20 mm (0.0866 in) + 1.20 mm (0.0472 in) = 3.40 mm (0.1339 in)
N = 0.23 mm (0.0091 in)
H = + 1
T = 3.40 mm (0.1339 in) + 0.23 mm (0.0091 in) − 0.01 mm (0.0004 in) − 0.20 mm (0.0079 in) = 3.42
Result: Thickness = 3.42 mm (0.1346 in)
Therefore use the pinion height adjusting washer of part number 383605200.

Pinion height adjusting washer	
Part No.	Thickness mm (in)
383495200	3.09 (0.1217)
383505200	3.12 (0.1228)
383515200	3.15 (0.1240)
383525200	3.18 (0.1252)
383535200	3.21 (0.1264)
383545200	3.24 (0.1276)
383555200	3.27 (0.1287)
383565200	3.30 (0.1299)
383575200	3.33 (0.1311)
383585200	3.36 (0.1323)
383595200	3.39 (0.1335)
383605200	3.42 (0.1346)
383615200	3.45 (0.1358)
383625200	3.48 (0.1370)
383635200	3.51 (0.1382)
383645200	3.54 (0.1394)
383655200	3.57 (0.1406)
383665200	3.60 (0.1417)
383675200	3.63 (0.1429)
383685200	3.66 (0.1441)

3) Install the selected pinion height adjusting washer on drive pinion, and press the rear bearing cone into position with ST.

ST 398177700 INSTALLER

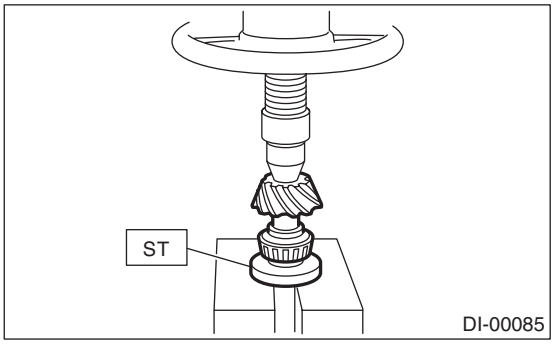

4) Insert the drive pinion into differential carrier, install the selected bearing preload adjusting collar and washer.

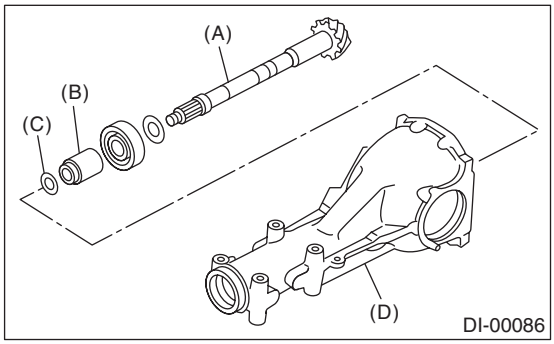

(A) Drive pinion
(B) Bearing preload adjusting collar
(C) Bearing preload adjusting washer
(D) Differential carrier

5) Press-fit the front bearing cone into case with ST1, ST2 and ST3.
ST1 398507703 DUMMY COLLAR
ST2 399780104 WEIGHT
ST3 899580100 INSTALLER

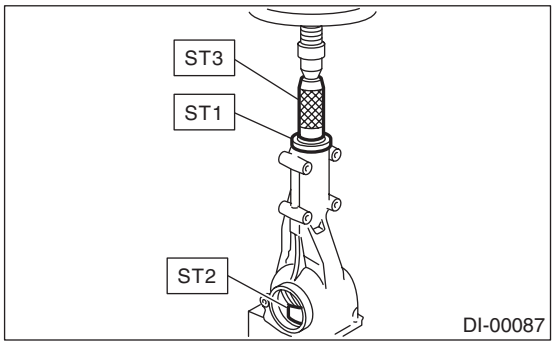

6) Insert the collar, then press-fit the pilot bearing with ST1 and ST2.
ST1 399780104 WEIGHT
ST2 899580100 INSTALLER

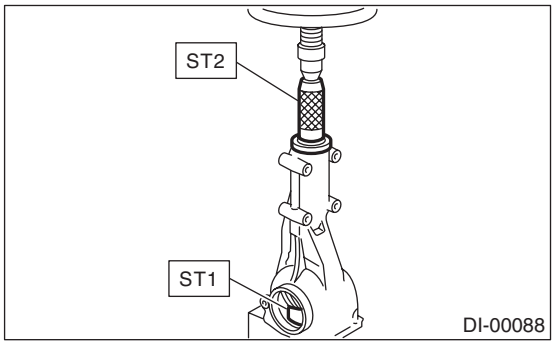

7) Fit a new oil seal with ST.

NOTE:
• Press-fit until end of oil seal is 1 mm (0.04 in) inward from end of carrier.
• Apply grease to the oil seal lips.

ST 498447120 INSTALLER

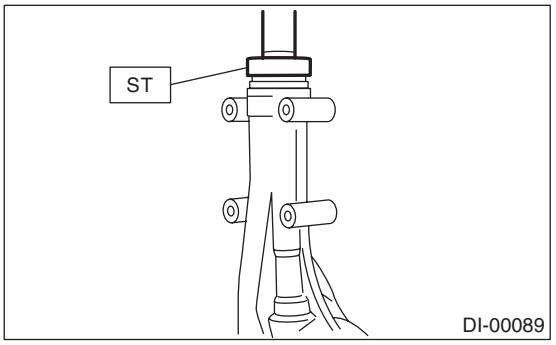

8) Press-fit the companion flange with ST1 and ST2.

NOTE:
Be careful not to damage the bearing.
ST1 899874100 INSTALLER
ST2 399780104 WEIGHT

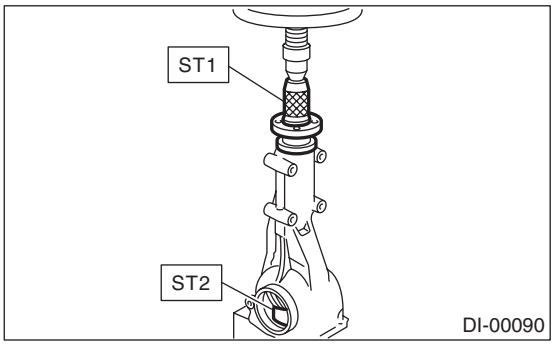

9) Install a new self-locking nut and secure the companion flange using ST and tighten the nut.
ST 498427200 FLANGE WRENCH

Tightening torque:
181 N·m (18.5 kgf-m, 134 ft-lb)

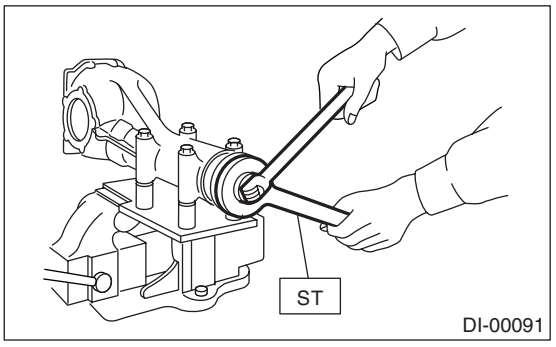

10) Assembling differential case
Install the side gears and pinion mate gears, with their thrust washers and pinion mate shaft, into differential case. (Model without LSD)

NOTE:
• Apply gear oil on both sides of the washer and on the side gear shaft before installing.

• Insert the pinion mate shaft into the differential case by aligning the lock pin holes.

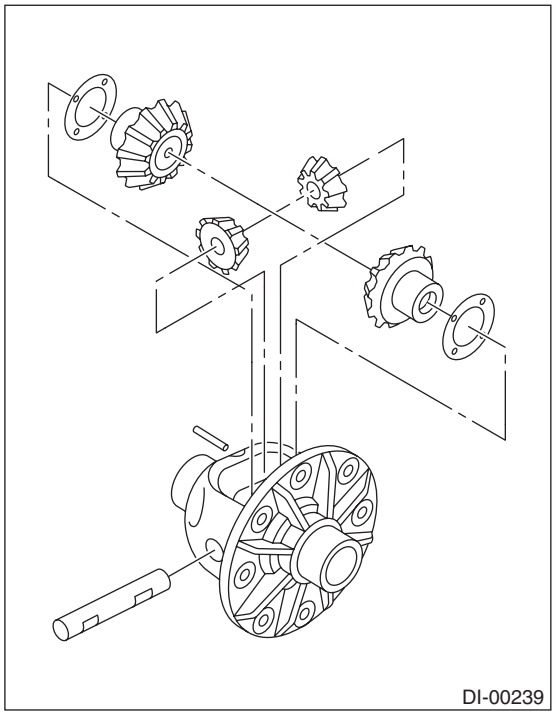
DI-00239

(1) Measure the side gear backlash.

Side gear backlash:
0.10 — 0.20 mm (0.0039 — 0.0079 in)

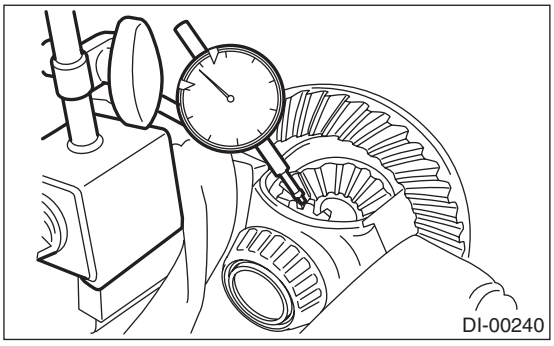
DI-00240

(2) Adjust the side gear backlash as specified by selecting side gear thrust washer.

Side gear thrust washer	
Part No.	Thickness mm (in)
383445201	0.75 — 0.80 (0.0295 — 0.0315)
383445202	0.80 — 0.85 (0.0315 — 0.0335)
383445203	0.85 — 0.90 (0.0335 — 0.0354)

(3) Check the condition of rotation after applying oil to the gear tooth surfaces and thrust surfaces.
(4) After inserting the pinion shaft lock pin into differential case, stake the both sides of the hole to prevent pin from falling off.

11) Install the hypoid driven gear to differential case.

NOTE:
• Before installing bolts, apply Lock Tite to bolt threads.

Lock Tite:
THREE BOND 1324 (Part No. 004403042)

• Tighten diagonally while tapping the bolt heads.

Tightening torque:
105 N·m (10.7 kgf-m, 77.4 ft-lb)

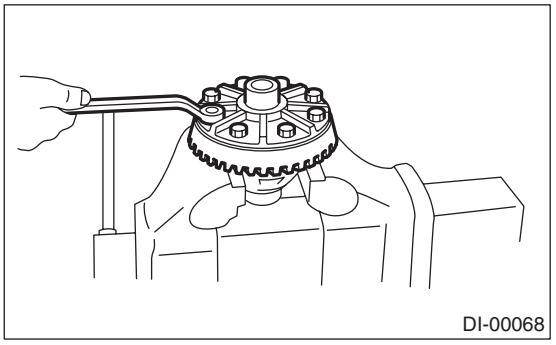
DI-00068

12) Press the side bearing into differential case using ST.
ST 398487700 DRIFT

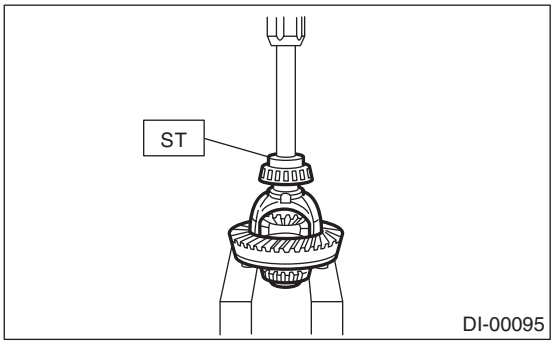

DI-00095

13) Press-fit the side bearing cone to the side bearing retainer using ST.
ST 398177700 DRIFT

14) Adjusting the side bearing retainer shims
(1) The hypoid driven gear backlash and side bearing preload can be adjusted by the side bearing retainer shim thickness.
(2) Install the differential assembly into differential carrier in the reverse order of disassembly.

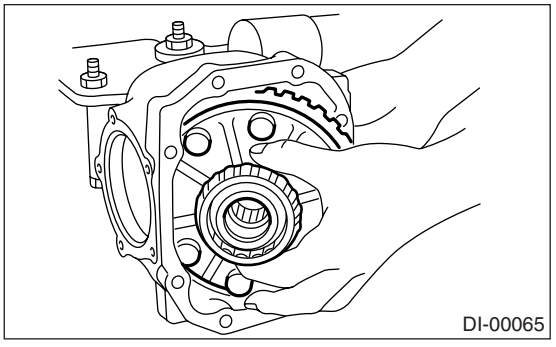
DI-00065

(3) Install the side bearing retainer shims to retainers RH and LH from which they were removed.

NOTE:
Replace the broken or corroded side retainer shim with a new one of same thickness.

Side bearing retainer shim	
Part No.	Thickness mm (in)
383475201	0.20 (0.0079)
383475202	0.25 (0.0098)
383475203	0.30 (0.0118)
383475204	0.40 (0.0157)
383475205	0.50 (0.0197)

(4) Align the arrow mark on differential carrier with the mark on side retainer during installation.

NOTE:
Be careful that side bearing outer race is not damaged by bearing roller.

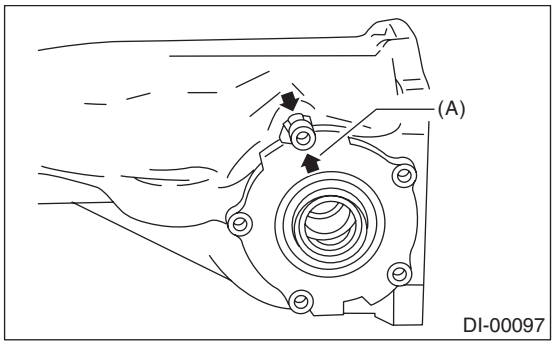

(A) Arrow mark

(5) Tighten the side bearing retainer bolts.

Tightening torque:
10.3 N·m (1.05 kgf-m, 7.6 ft-lb)

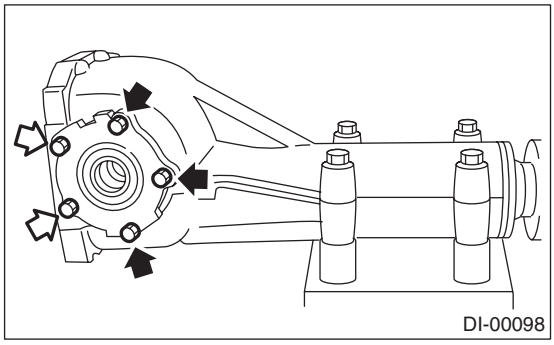

(6) Measure the hypoid driven gear to drive pinion backlash. Set the magnet base on differential carrier. Align the contact point of dial gauge with tooth face of hypoid driven gear, and move hypoid driven gear while holding drive pinion still. Read the value indicated on dial gauge. If the backlash exceeds 0.2 mm (0.08 in), reduce the thickness of shim on the back face of hypoid driven gear and increase the thickness of shim on the tooth face of hypoid driven gear. If the backlash is less than 0.1 mm (0.004 in), increase the thickness of shim on the back face of hypoid driven gear and reduce the thickness of shim on the tooth face of hypoid driven gear.

Backlash:
0.10 — 0.20 mm (0.0039 — 0.0079 in)

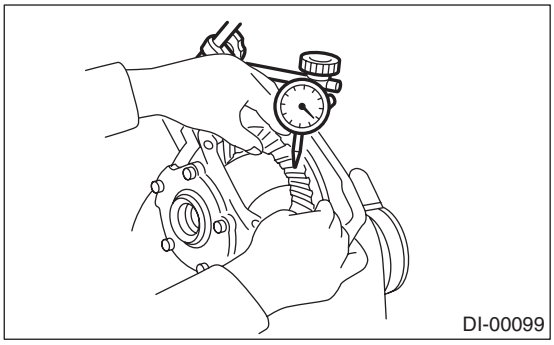

(7) At the same time, measure the total preload of drive pinion. Compared with the resistance when differential case is not installed, if the total preload is not within specification, adjust the thickness of side bearing retainer shims, increasing/reducing by an even amount at a time.

Total preload:
20.7 — 54.4 N (2.1 — 5.5 kgf, 4.7 — 12.2 lb)

15) Recheck the hypoid driven gear to drive pinion backlash.

Backlash:
0.10 — 0.20 mm (0.0039 — 0.0079 in)

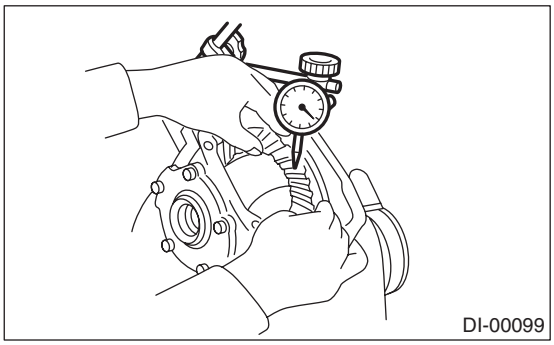

16) Check the hypoid driven gear runout on its back surface, and make sure that pinion and hypoid driven gear rotates smoothly.
If the hypoid driven gear runout on its back surface exceed the specification, verify that there is any foreign material between hypoid driven gear and differential case, and they are not deformed.

Hypoid driven gear runout on its back surface: 0.05 mm (0.0020 in)

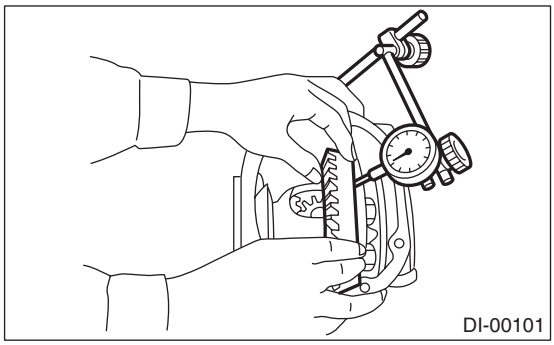

17) Checking and adjusting the tooth contact of hypoid driven gear

(1) Apply an even coat of red lead on both sides of three or four teeth on the hypoid driven gear. Check the contact pattern after rotating the hypoid driven gear several revolutions back and forth until a definite contact pattern appears on the hypoid driven gear.

(2) When the contact pattern is incorrect, readjust.

NOTE:
Be sure to wipe off red lead completely after adjustment is completed.

- Correct tooth contact

Checking item: Tooth contact pattern is slightly shifted toward toe side under no-load rotation. [When loaded, contact pattern moves toward heel.]

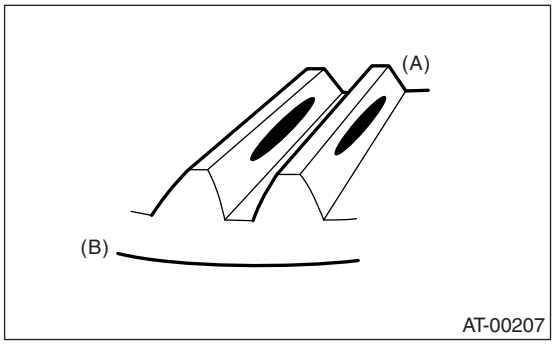

(A) Toe side
(B) Heel side

- Face contact

Checking item: Backlash is too large.
Contact pattern

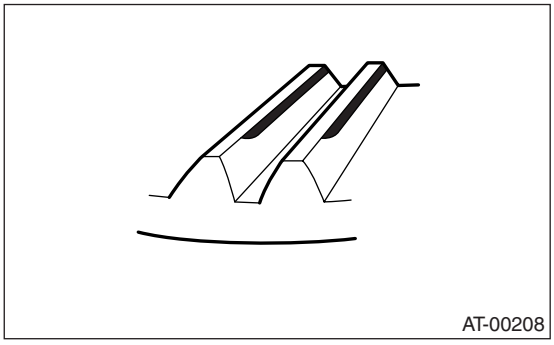

Corrective action: Increase thickness of drive pinion height adjusting washer in order to bring drive pinion close to hypoid driven gear.

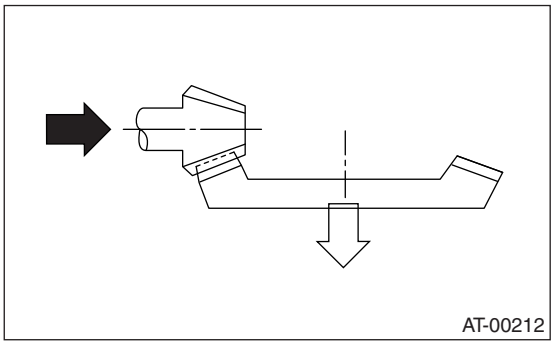

- Flank contact

Checking item: Backlash is too small.
Contact pattern

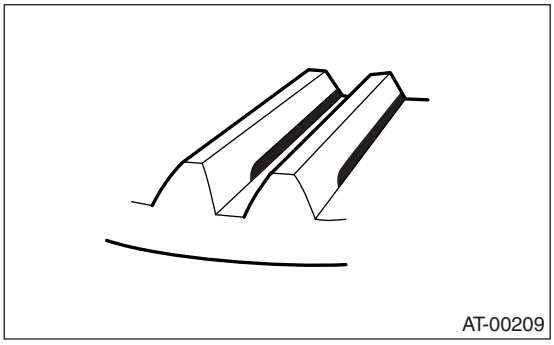

Corrective action: Reduce thickness of drive pinion height adjusting washer in order to bring drive pinion away from hypoid driven gear.

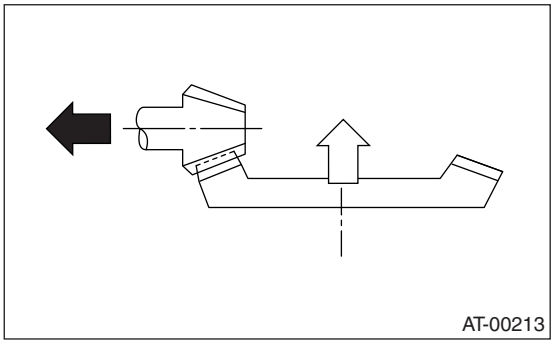

• Toe contact (inside end contact)

Checking item: Contact areas is small

Contact pattern

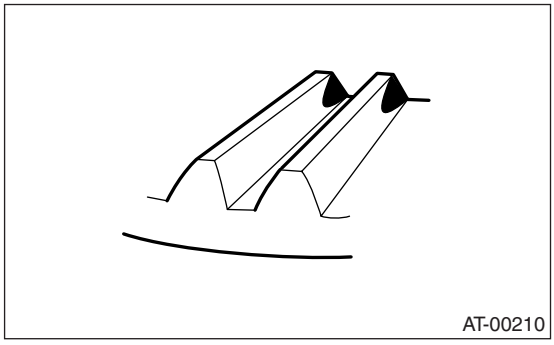

Corrective action: Reduce thickness of drive pinion height adjusting washer in order to bring drive pinion away from hypoid driven gear.

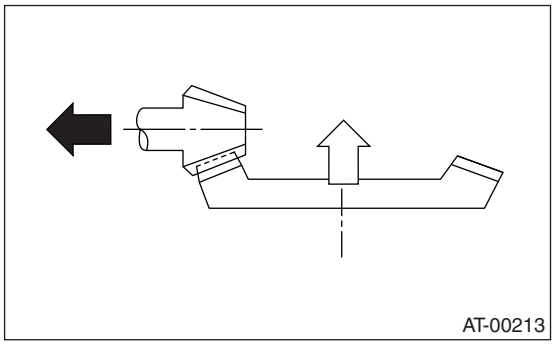

• Heel contact (outside end contact)

Checking item: Contact areas is small

Contact pattern

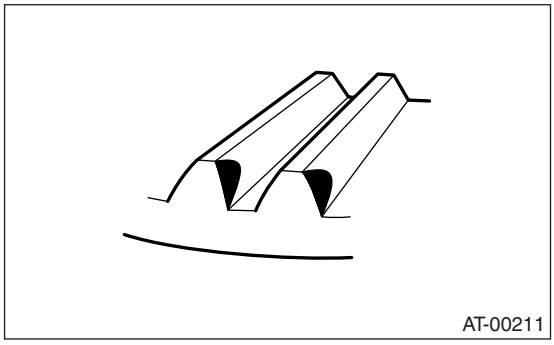

Corrective action: Increase thickness of drive pinion height adjusting washer in order to bring drive pinion close to hypoid driven gear.

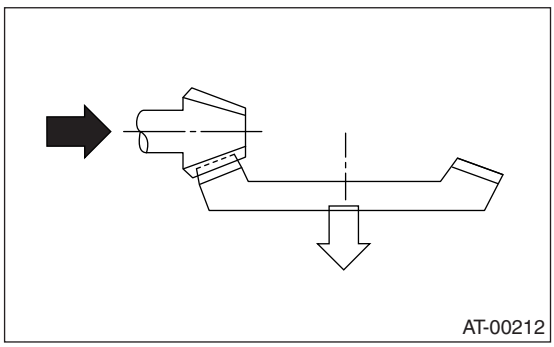

18) If proper tooth contact is not obtained, once again adjust the drive pinion height by changing RH and LH side bearing retainer shims and the hypoid gear backlash.

19) Remove the RH and LH side bearing retainer.

20) Install a new O-ring to side bearing retainer of both side.

21) Using the ST, install the oil seal to the side bearing retainer of both side.

ST 398437700 DRIFT

22) Align the arrow mark on differential carrier with the mark on side retainer during installation.

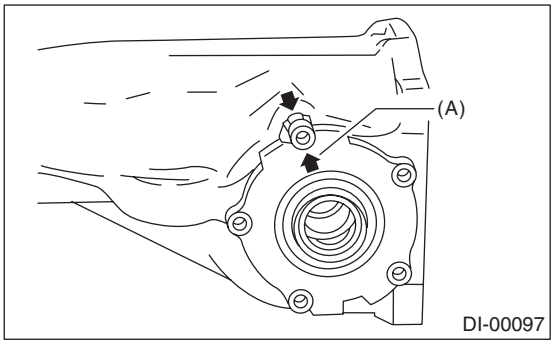

(A) Arrow mark

23) Tighten the side bearing retainer bolts.

Tightening torque:
10.3 N·m (1.05 kgf-m, 7.6 ft-lb)

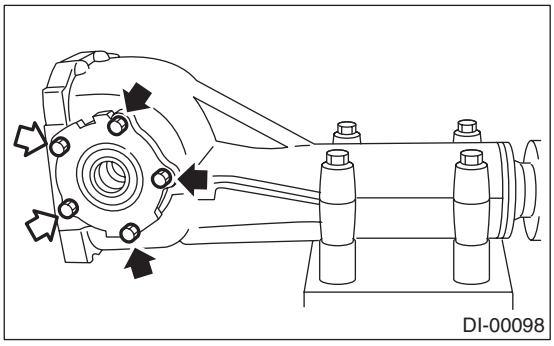

24) Install the new gasket and rear cover to the differential carrier, and tighten the bolts to specified torque.

Tightening torque:
29 N·m (3.0 kgf-m, 21.7 ft-lb)

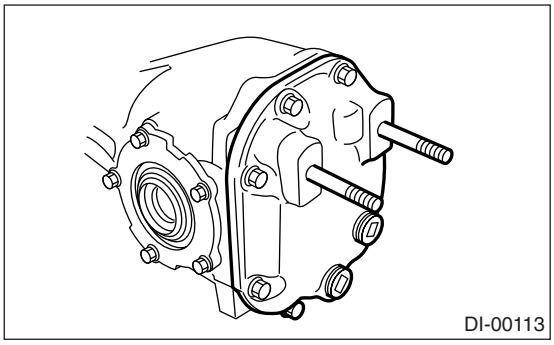

25) Install the breather cap.
26) Install the drain plug and filler plug.

Tightening torque:
49 N·m (5.0 kgf-m, 36.2 ft-lb)

E: INSPECTION

Wash all the disassembled parts clean, and examine them for wear, damage and other defects. Repair or replace the defective parts as necessary.
1) Hypoid driven gear and drive pinion
• If abnormal tooth contact is evident, find out the cause and adjust to give correct tooth contact. Replace the gear if excessively worn or incapable of adjustment.
• If crack, score or seizure is evident, replace as a set. Slight damage of tooth can be corrected by oil stone or the like.
2) Side gear and pinion mate gear
• Replace if crack, score or other defects are evident on tooth surface.
• Replace if thrust washer contacting surface is worn or seized. Slight damage of the surface can be corrected by oil stone or the like.
3) Bearings
Replace if seizure, peeling, wear, rust, dragging during rotation, noise or other defect is evident.
4) Thrust washers of side gear and pinion mate gear:
Replace if seizure, flaw, abnormal wear or other defect is evident.
5) Oil seal
Replace if deformed or damaged, and at every disassembling.
6) Differential carrier
Replace if the bearing bores are worn or damaged.
7) Differential case
Replace if its sliding surfaces are worn or cracked.
8) Companion flange
Replace if the oil seal lip contacting surfaces have flaws.

1. SIDE GEAR BACKLASH

Using a dial gauge, check the backlash of the side gear. (Model without LSD)

Side gear backlash:
0.10 — 0.20 mm (0.0039 — 0.0079 in)

If the side gear backlash is not within the specification, adjust it as specified by selecting side gear thrust washer.

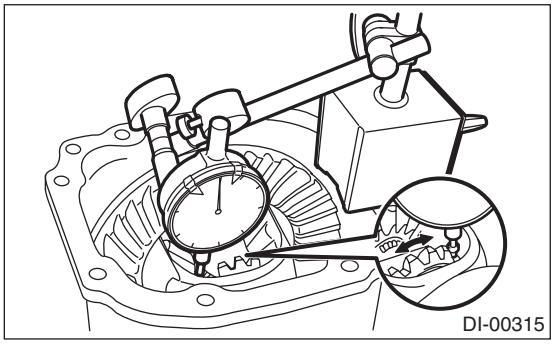
DI-00315

2. HYPOID DRIVEN GEAR BACKLASH

Using a dial gauge, check the backlash of hypoid driven gear.

Hypoid driven gear backlash:
0.10 — 0.20 mm (0.0039 — 0.0079 in)

If the hypoid driven gear backlash is not within the specification, adjust the side bearing preload or repair if necessary.

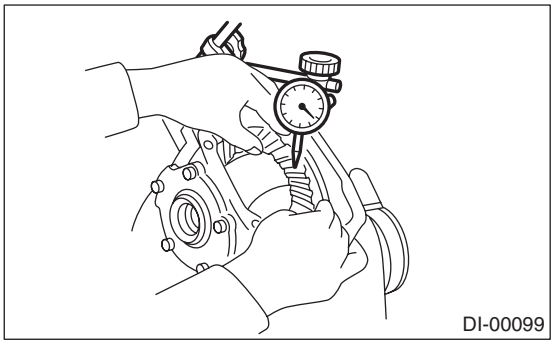
DI-00099

3. HYPOID DRIVEN GEAR RUNOUT ON ITS BACK SURFACE

Using a dial gauge, check the hypoid driven gear runout on its back surface.

Hypoid driven gear runout on its back surface:
0.05 mm (0.0020 in)

If the hypoid driven gear runout exceeds 0.05 mm (0.0020 in), replace the hypoid driven gear.

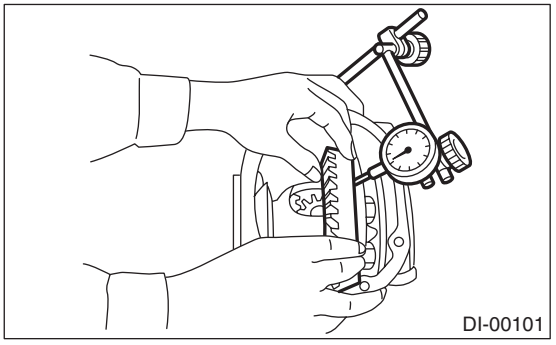
DI-00101

4. TOOTH CONTACT BETWEEN HYPOID DRIVEN GEAR AND DRIVE PINION

Inspect the tooth contact between hypoid driven gear and drive pinion. <Ref. to DI-34, ASSEMBLY, Rear Differential (T-type).>

5. TOTAL PRELOAD

Using a spring balance, check the total preload.

Total preload:
20.7 — 54.4 N (2.1 — 5.5 kgf, 4.7 — 12.2 lb)

If the total preload is not within the specification, adjust the side bearing retainer shims.

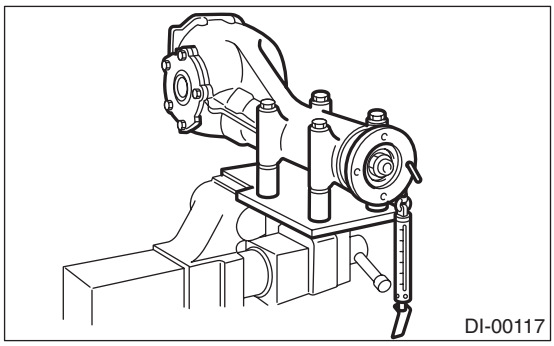
DI-00117

6. COMPANION FLANGE

1) If rust or dirt is attached to the companion flange, remove them.
2) Set a dial gauge at a companion flange surface (mating surface of propeller shaft and companion flange), and then measure the companion flange runout.

Limit of runout:
0.08 mm (0.0031 in)

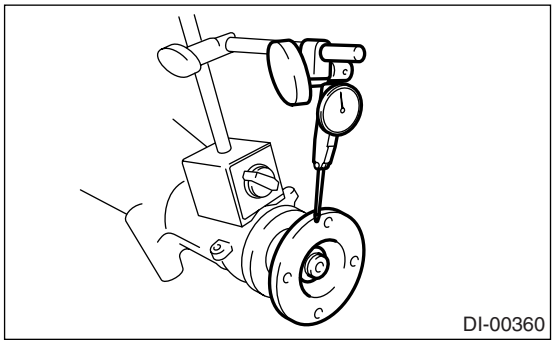
DI-00360

3) Set the gauge inside of the companion flange, and measure the runout.

Limit of runout:
0.08 mm (0.0031 in)

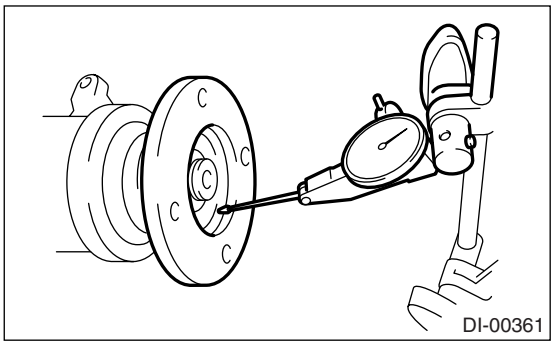
DI-00361

4) If either runout exceeds the limit, move the phase of companion flange and drive pinion 90° each, and find the point where the runout is within the limit.
5) If the runout exceeds the limit after changing the phase, replace the companion flange and recheck the runout.
6) If the runout exceeds the limit after replacing the companion flange, the drive pinion may be assembled incorrectly or bearing is faulty.

F: ADJUSTMENT

1. SIDE GEAR BACKLASH

Adjust the side gear backlash.
<Ref. to DI-34, ASSEMBLY, Rear Differential (T-type).>

2. HYPOID DRIVEN GEAR BACKLASH

Adjust hypoid driven gear backlash.
<Ref. to DI-34, ASSEMBLY, Rear Differential (T-type).>

3. TOOTH CONTACT BETWEEN HYPOID DRIVEN GEAR AND DRIVE PINION

Adjust the tooth contact between hypoid driven gear and drive pinion gear.
<Ref. to DI-34, ASSEMBLY, Rear Differential (T-type).>

4. TOTAL PRELOAD

Adjust the side bearing shim.
<Ref. to DI-34, ASSEMBLY, Rear Differential (T-type).>

5. Rear Differential (VA-type)

A: REMOVAL

1) Disconnect the ground cable from battery.
2) Move the select lever or gear shift lever to neutral.
3) Loosen the wheel nuts.
4) Release the parking brake.
5) Jack-up the vehicle and support it with rigid racks.
6) Remove the rear wheels.
7) Remove the rear exhaust pipe and muffler.
8) Remove the heat shield cover.

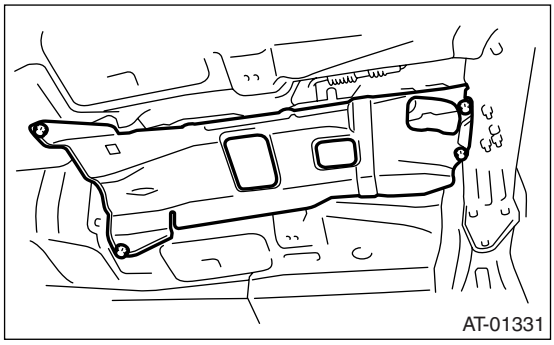

9) Remove the propeller shaft.
<Ref. to DS-10, REMOVAL, Propeller Shaft.>
10) Prepare the transmission jack and band.

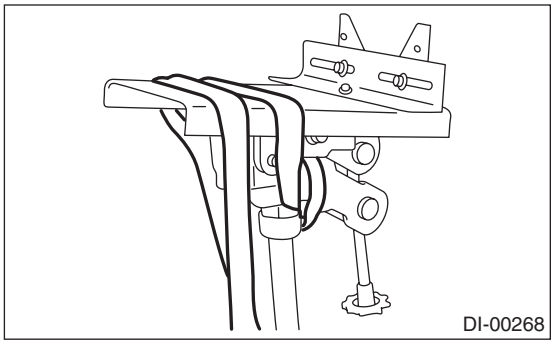

11) Loosen the self-locking nuts which hold the rear differential to rear crossmember.

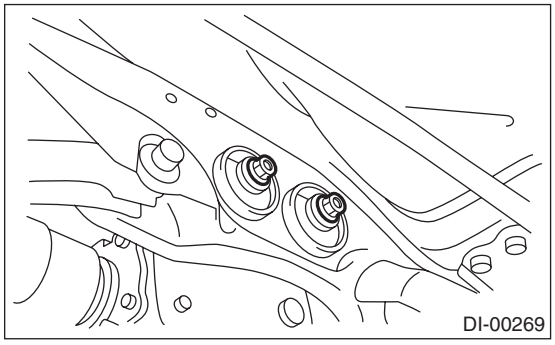

12) Remove the DOJ of rear drive shaft from rear differential.

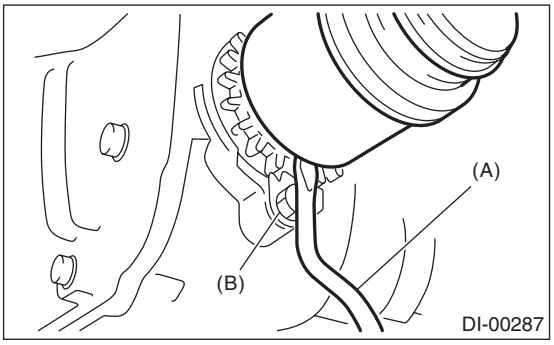

(A) Tire lever
(B) Bolt

13) Remove the nuts which hold the rear differential front member.

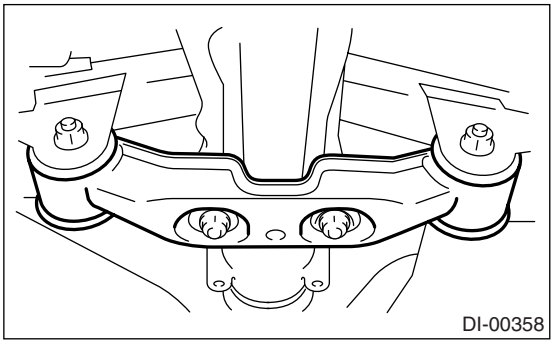

14) Support the rear differential with transmission jack.

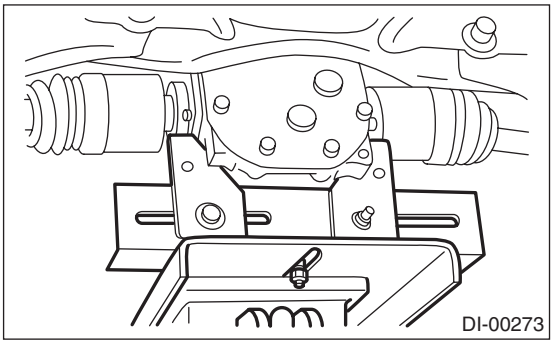

15) Remove the rear differential front member.
16) Secure the rear differential using band.
17) Remove the self-locking nuts which hold the rear differential to rear crossmember.
18) Remove the rear differential stud bolt from rear crossmember bushing.

NOTE:
When removing the stud bolt, carefully adjust the angle and location of transmission jack and jack stand, if necessary.

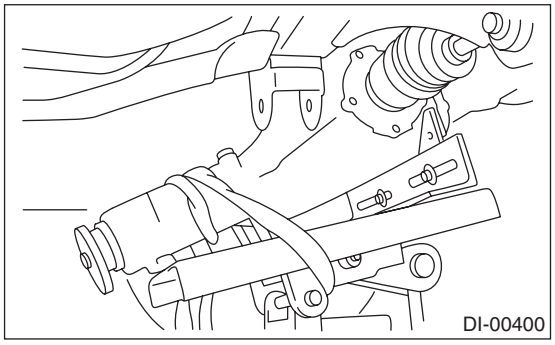

19) Lower the transmission jack stand after removing the rear differential stud bolt from rear crossmember. Rear drive shaft should not come into contact with lateral link bolt.

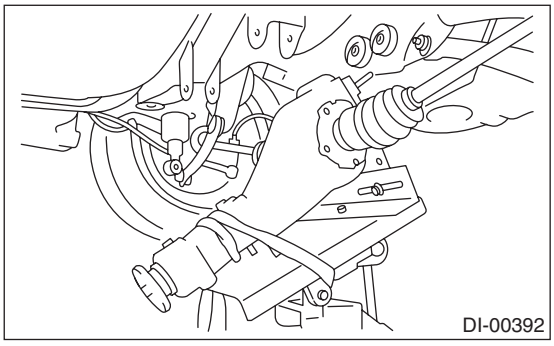

20) Pull out the axle shaft from rear differential.

NOTE:
If it is difficult to remove the axle shaft from rear differential, remove it using tire lever.

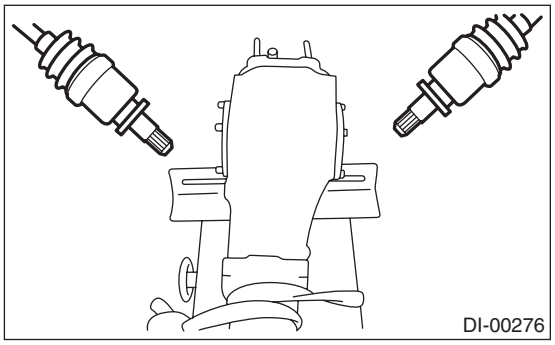

21) Lower the transmission jack.

22) Secure the rear drive shaft to lateral link using wire.

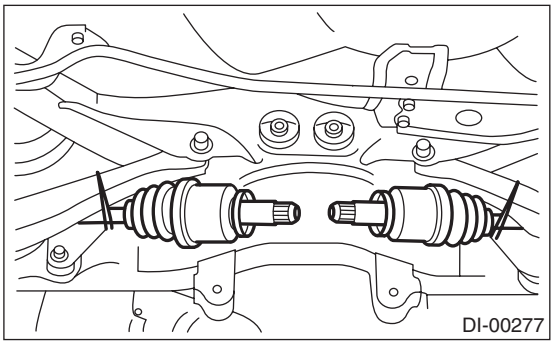

23) Remove the rear differential member plate from rear differential.

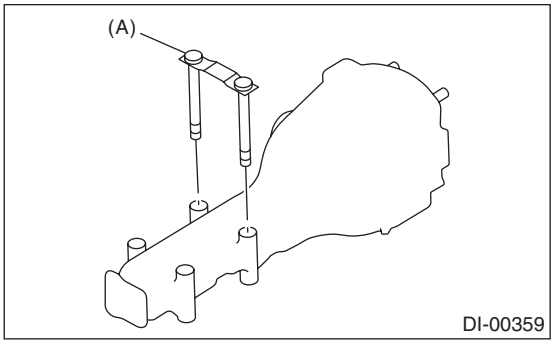

(A) Rear differential member plate

B: INSTALLATION

1) Insert the rear differential member plate into rear differential.

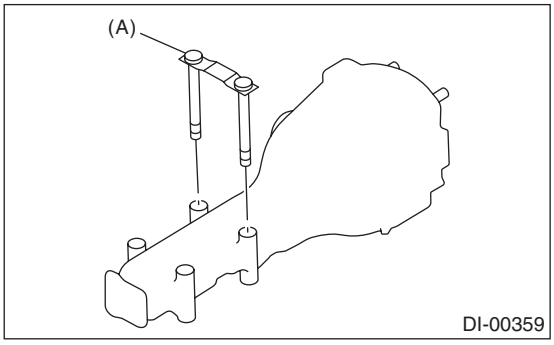

(A) Rear differential member plate

2) Set the rear differential to transmission jack.

NOTE:
Secure the rear differential to transmission jack using band.

3) Install the ST to rear differential.

ST 28099PA090 OIL SEAL PROTECTOR

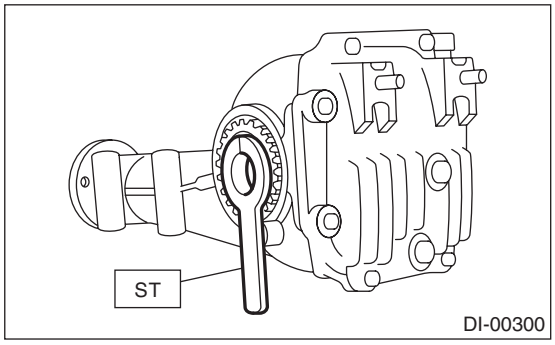

4) Insert the spline shaft until the spline portion comes inside the side oil seal.
ST 28099PA090 OIL SEAL PROTECTOR

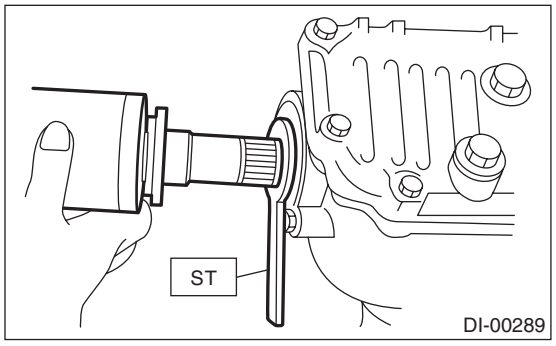

5) Remove ST from rear differential.
ST 28099PA090 OIL SEAL PROTECTOR
6) Push the rear differential to insert the axle shaft into rear differential.

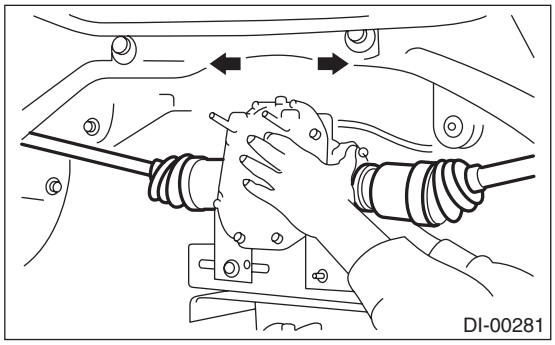

7) Adjust the transmission jack, if necessary, and insert the rear differential stud bolt into rear crossmember bushing properly.

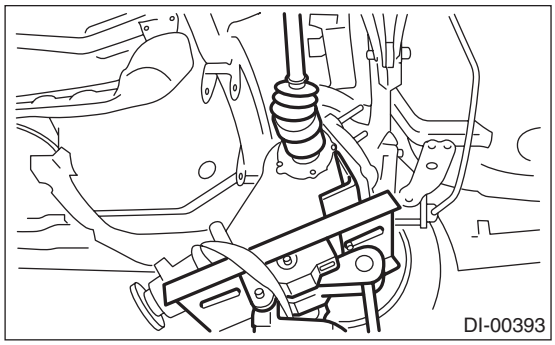

8) After inserting the rear differential stud bolt into rear crossmember bushing, lift up the transmission jack and align the rear differential to the height of rear differential.

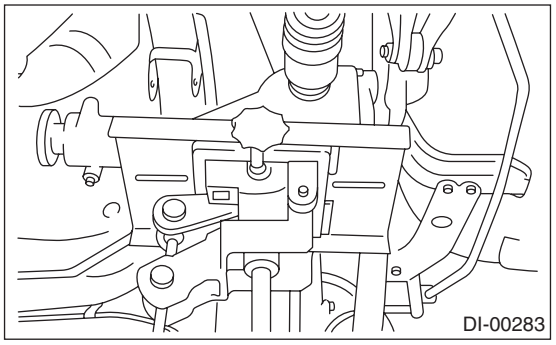

9) Tighten a new self-locking nut temporarily to rear crossmember.

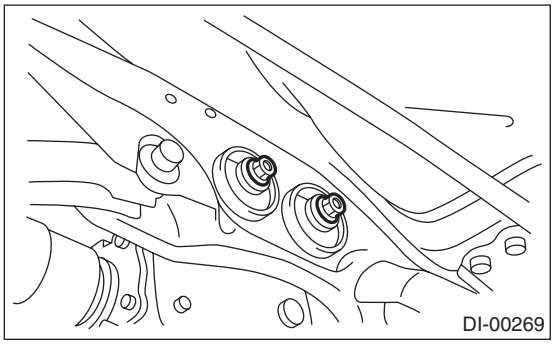

10) Remove the band from rear differential. Lift up the rear differential until the rear differential is left from the transmission jack.
11) Install the rear differential front member with a new self-locking nut.

Tightening torque:
T1: 65 N·m (6.6 kgf-m, 48 ft-lb)
T2: 110 N·m (11.2 kgf-m, 81 ft-lb)

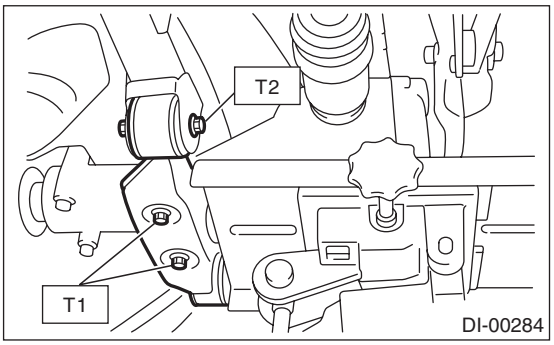

12) Tighten the self-locking nut.

Tightening torque:
70 N·m (7.1 kgf-m, 51 ft-lb)

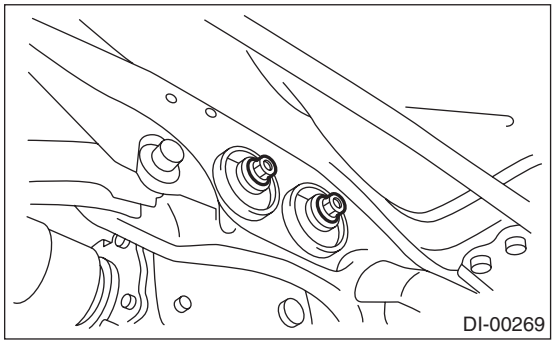

13) Lower the transmission jack.
14) Install the propeller shaft.
<Ref. to DS-11, INSTALLATION, Propeller Shaft.>
15) Install the heat shield cover.
16) Install the rear exhaust pipe and muffler.

C: DISASSEMBLY

1. VA1-TYPE

To detect the real cause of trouble, inspect the following items before disassembling.
- Tooth contact and backlash between hypoid driven gear and drive pinion
- Hypoid driven gear runout on its back surface
- Total preload of drive pinion

1) Set the ST on vise and install the differential assembly to ST.
ST 398217700 ATTACHMENT

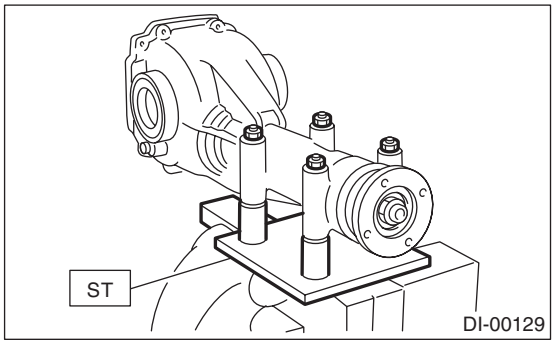

2) Drain the gear oil by removing plug.
3) Remove the rear cover by loosening retaining bolts.

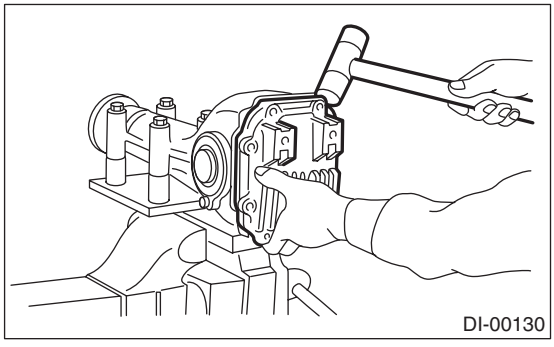

4) Remove the air breather cap.

NOTE:
- Do not attempt to remove the air breather cap unless necessary.
- When removing the air breather cap, replace it with a new one.

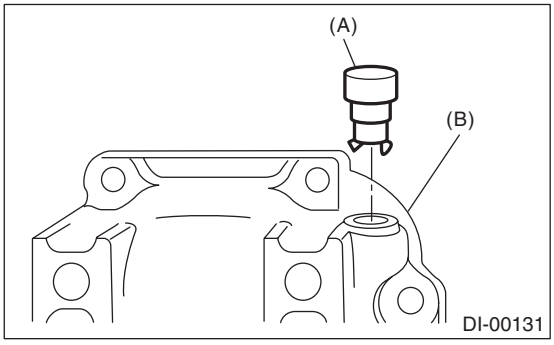

(A) Air breather cap
(B) Rear cover

5) Remove the lock plate RH and LH.

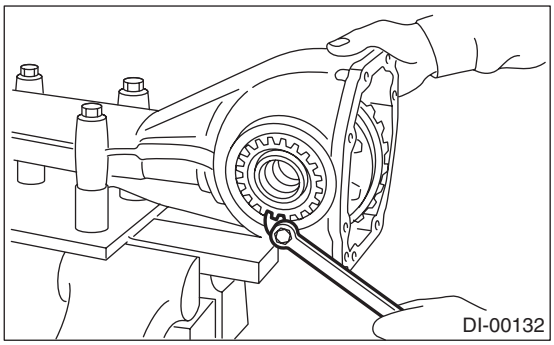

6) Remove the holder RH and LH with ST.
ST 499785500 WRENCH ASSY

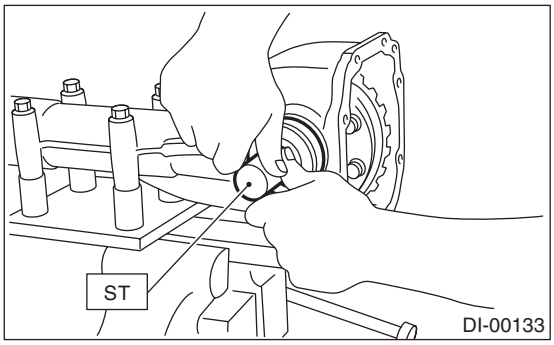

7) Pull out the differential case assembly from differential carrier.

NOTE:
Be careful not to hit the teeth against the case.

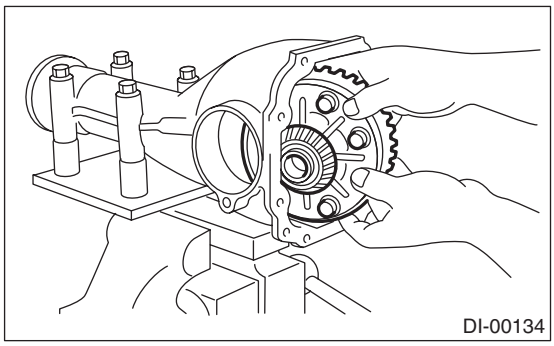

8) Remove the bearing race from holder RH and LH with ST1 and ST2.
ST1 499705401 PULLER ASSY
ST2 499705404 SEAT

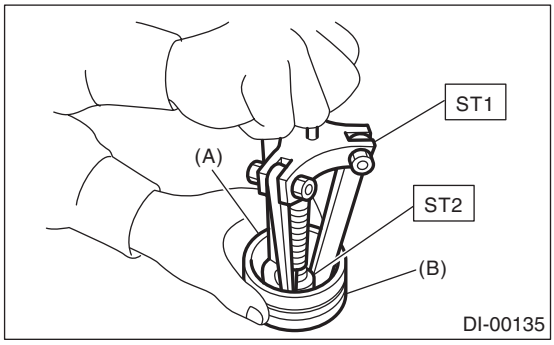

(A) Bearing race
(B) Holder

9) Remove the oil seal from holder RH and LH using screwdriver.

NOTE:
Perform this operation only when changing oil seal.

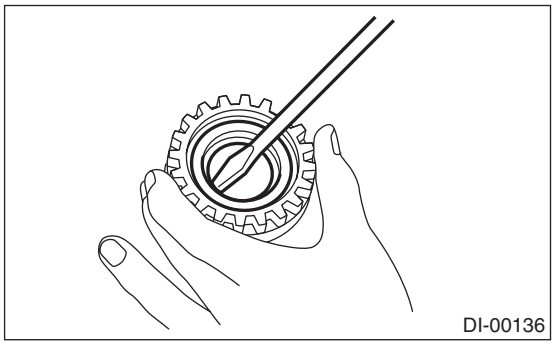

10) Extract the bearing cone with ST1 and ST2.

NOTE:
• Do not attempt to disassemble the parts unless necessary.
• Set the puller so that its claws catch the edge of the bearing cone.
• Never mix up the bearing races RH and LH and cones.

ST1 899524100 PULLER SET
ST2 399520105 SEAT

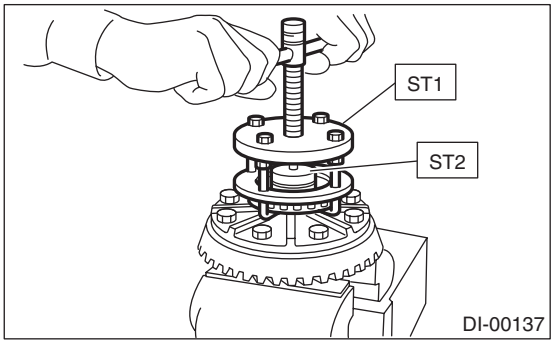

11) Remove the hypoid driven gear by loosening hypoid driven gear bolts.

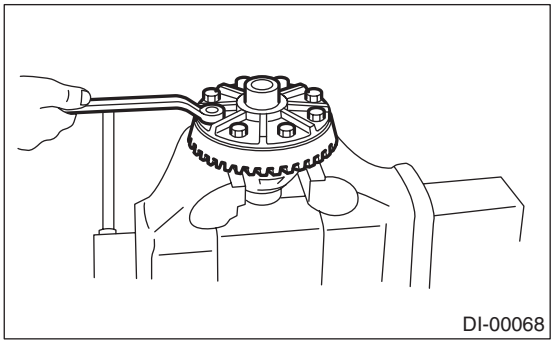

12) Drive out the pinion shaft lock pin from hypoid driven gear side.

NOTE:
The lock pin is staked at the pin hole end on the differential case. do not drive it out forcibly before unstaking it.
ST 899904100 STRAIGHT PIN REMOVER

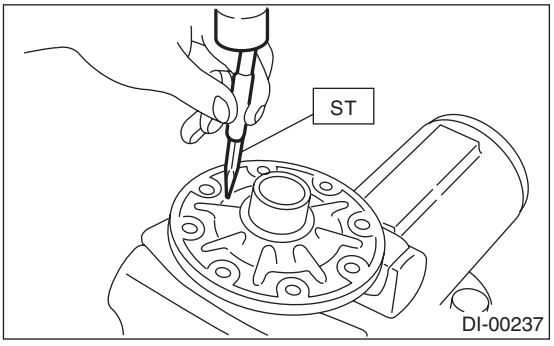

13) Draw out the pinion mate shaft and remove pinion mate gears, side gears and thrust washers.

NOTE:
The gears should be marked or kept separated RH and LH, and front and rear as well as thrust washers.

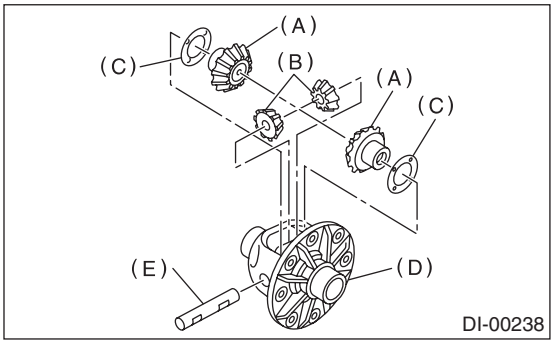

(A) Side gear
(B) Pinion mate gear
(C) Thrust washer
(D) Differential case
(E) Pinion mate shaft

14) Support the companion flange with ST and remove self-locking nut.
ST 498427200 FLANGE WRENCH

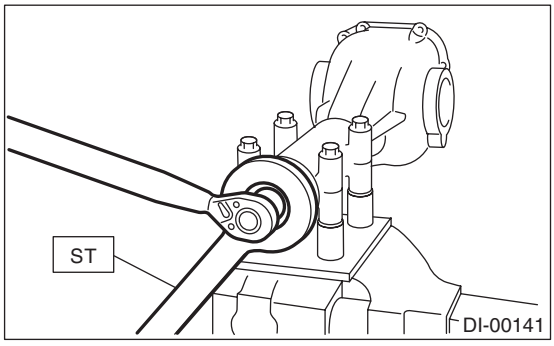

15) Extract the companion flange with a puller.

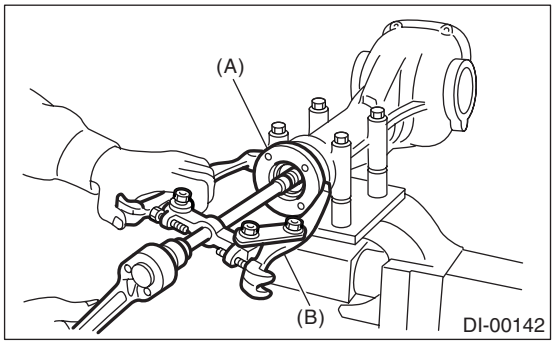

(A) Companion flange
(B) Puller

16) Press the end of drive pinion shaft and extract it together with rear bearing cone, pinion height adjusting washer and washer.

NOTE:
Hold the drive pinion so as not to drop it.

ST 398467700 DRIFT

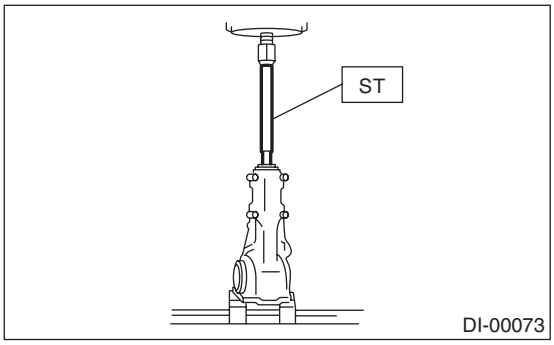

17) Remove the rear bearing cone from drive pinion by supporting the cone with ST.

NOTE:
Place the replacer so that its center-recessed side faces the pinion gear.
ST 498515500 REPLACER

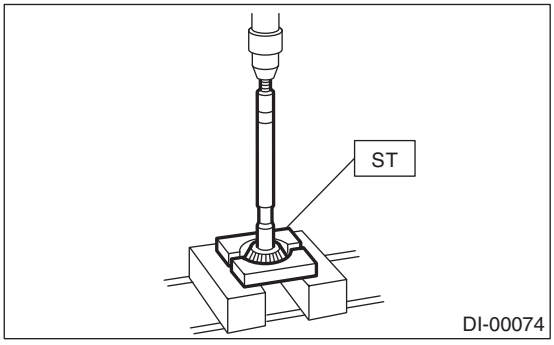

18) Remove the front oil seal from differential carrier using ST.
ST 398527700 PULLER SET

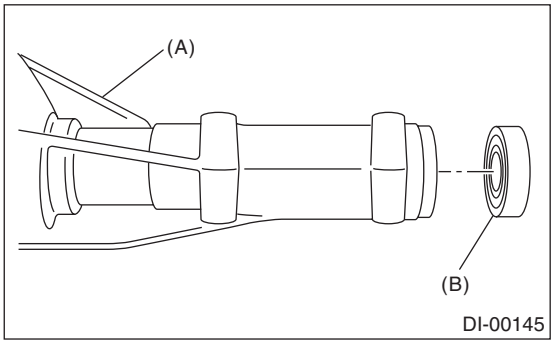

(A) Differential carrier
(B) Front oil seal

19) Remove the pilot bearing together with front bearing cone and collar using ST.

ST 398467700 DRIFT

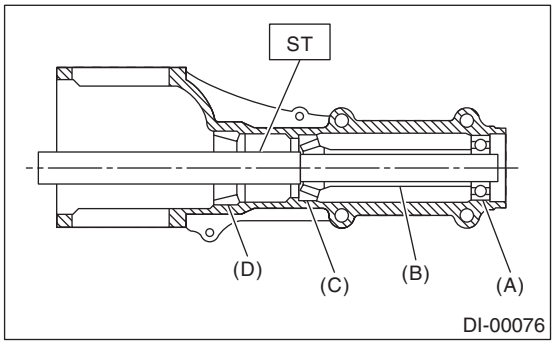

(A) Pilot bearing
(B) Collar
(C) Front bearing
(D) Rear bearing cup

20) When replacing the bearings, hit out the front bearing cup and rear bearing cup in this order out of case by using a brass bar.

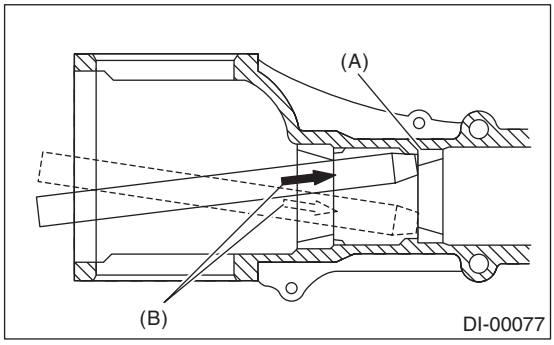

(A) 2 cutouts along diagonal lines
(B) Hit out alternately with brass bar

2. VA2-TYPE

To detect the real cause of trouble, inspect the following items before disassembling.
- Tooth contact and backlash between hypoid driven gear and drive pinion
- Hypoid driven gear runout on its back surface
- Total preload of drive pinion

1) Set the ST on vise and install the differential assembly to ST.
ST 398217700 ATTACHMENT

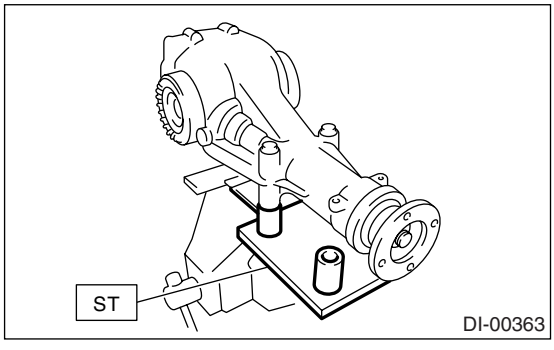

2) Drain the gear oil by removing plug.
3) Remove the rear cover by loosening retaining bolts.

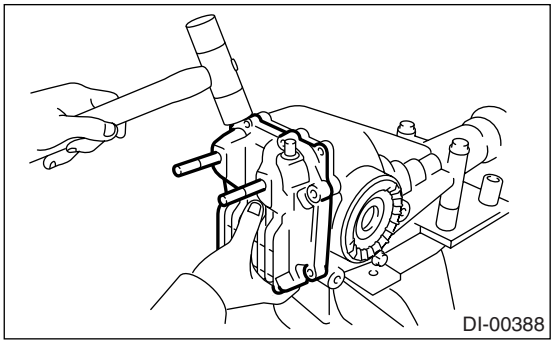

4) Remove the lock plate RH and LH.

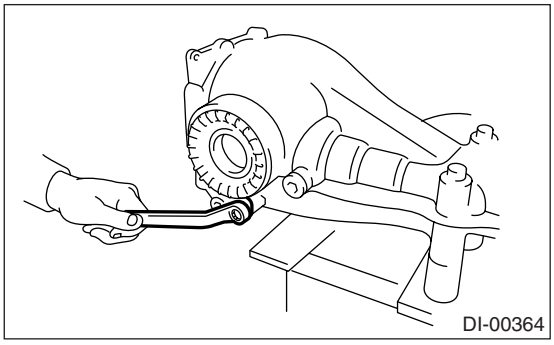

5) Remove the holder RH and LH with ST.
ST 18630AA010 WRENCH

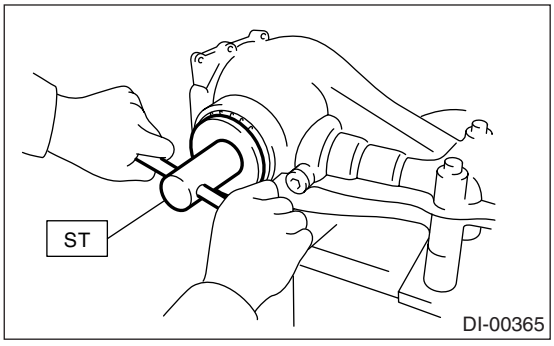

6) Pull out the differential case assembly from differential carrier.

NOTE:
Be careful not to hit the teeth against the case.

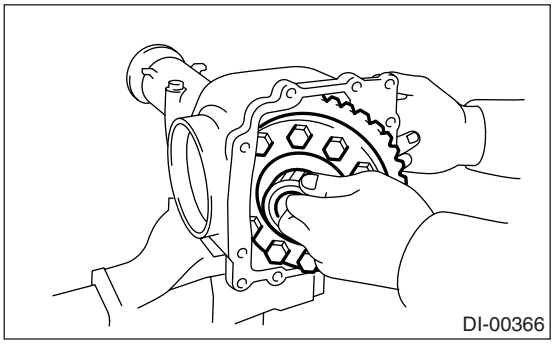

7) Remove the bearing race from holder RH and LH with ST1 and press.
ST 18758AA000 PULLER

NOTE:
• Make sure the bolt of puller turn manually.
• Set the puller so that its claws catch the groove of holder.

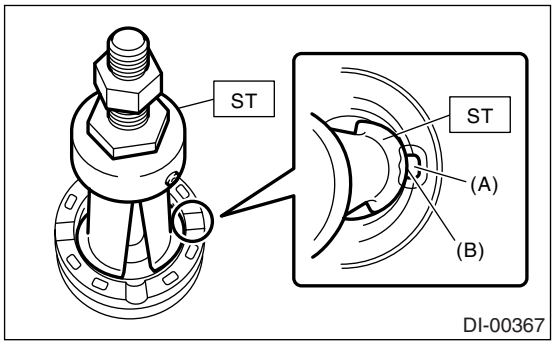

(A) Groove
(B) Claw

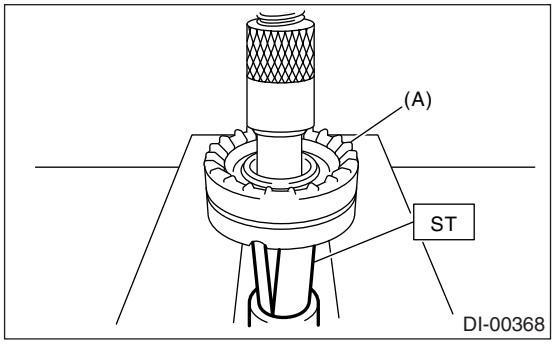

(A) Holder

8) Remove the oil seal from holder RH and LH using screwdriver.

NOTE:
Perform this operation only when changing oil seal.

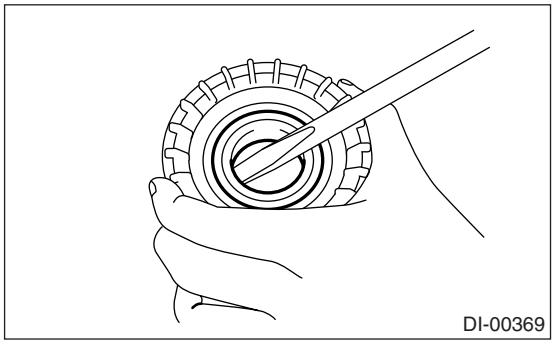

9) Extract the bearing cone with ST1, ST2 and ST3.

NOTE:
• Do not attempt to disassemble the parts unless necessary.
• Never mix up the bearing races RH and LH and cones.

ST1 498077000 REMOVER
ST2 399520105 SEAT
ST3 899864100 REMOVER

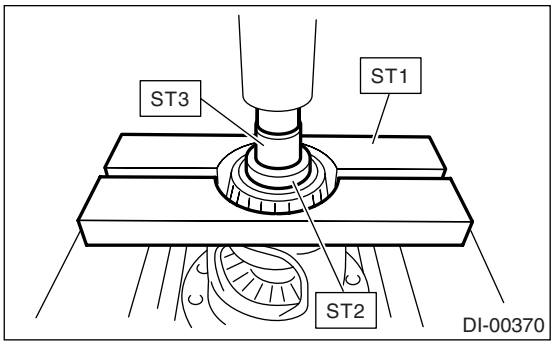

10) Remove the hypoid driven gear by loosening hypoid driven gear bolts.

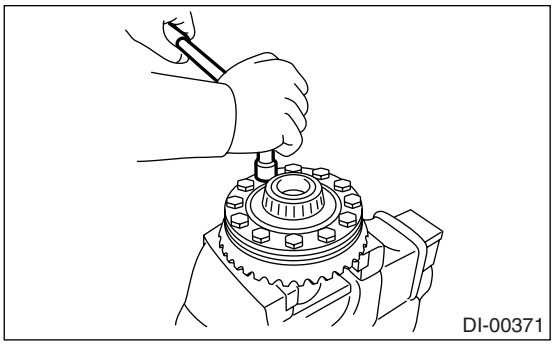

11) Support the companion flange with ST and remove self-locking nut.
ST 498427200 FLANGE WRENCH

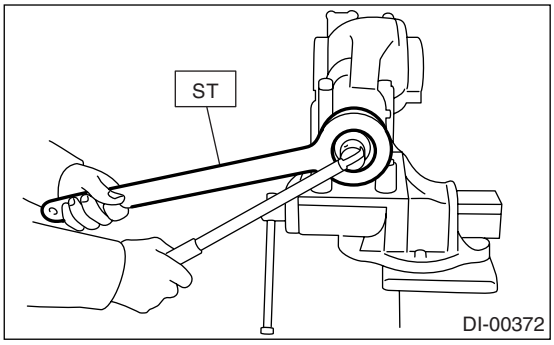

12) Extract the companion flange with a puller.

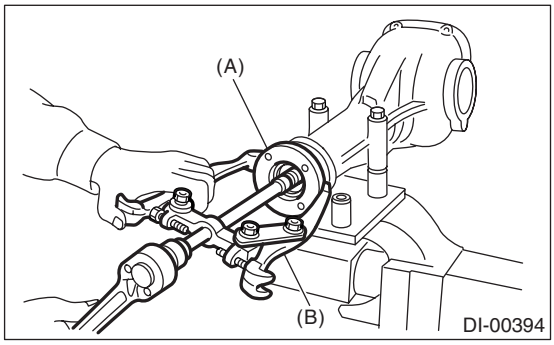

(A) Companion flange
(B) Puller

13) Removes the drive pinion shaft.
14) Remove the rear bearing cone from drive pinion by supporting cone with ST.

NOTE:
Place the replacer so that its center-recessed side faces the pinion gear.

ST 398517700 REPLACER

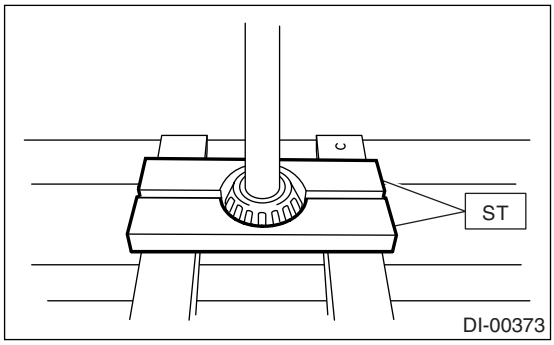

15) Remove the front oil seal from differential carrier using screwdriver.
16) Remove the pilot bearing, front bearing cone and collar.

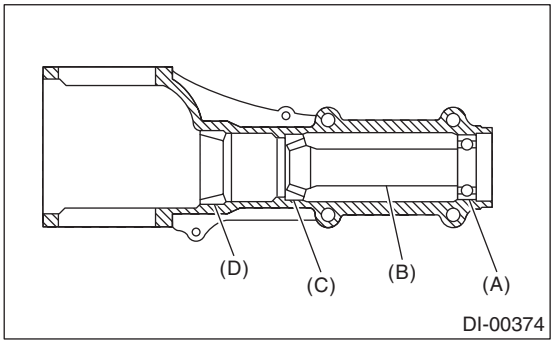

(A) Pilot bearing
(B) Collar
(C) Front bearing
(D) Rear bearing cup

17) When replacing the bearings, hit out the front bearing cup and rear bearing cup in this order out of case by using a brass bar.

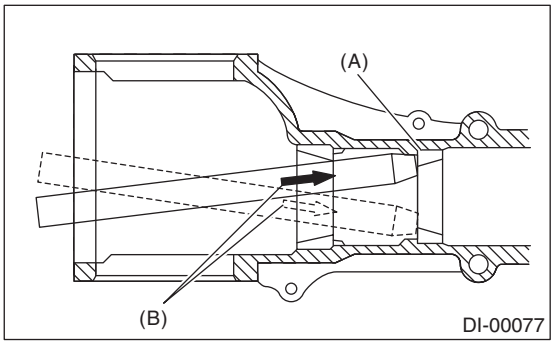

(A) 2 cutouts along diagonal lines
(B) Hit out alternately with brass bar

D: ASSEMBLY

1. VA1-TYPE

NOTE:
- Assemble in the reverse order of disassembly.
- Check and adjust each part during assembly.
- Use a new gasket.
- Keep the shims and washers in order, so that they are not improperly installed.
- Thoroughly clean the surfaces on which the shims, washers and bearings are to be installed.
- Apply gear oil when installing the bearings and thrust washers.
- Be careful not to mix up the bearing races RH and LH.
- Replace the oil seal with a new one at every disassembly. Apply grease to the lips when installing the oil seal.
- Be careful not to mix up the differential oil seal RH and LH.

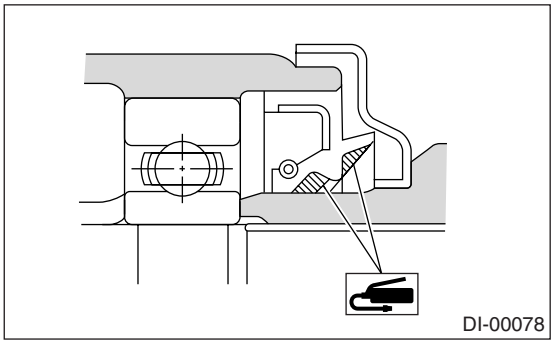

1) Adjusting preload for front and rear bearings:
Adjust the bearing preload with collar and washer between front and rear bearings. Pinion height adjusting washer are not affected by this adjustment. The adjustment must be carried out without oil seal inserted.

(1) Install the rear bearing race into differential carrier with ST1 and ST2.

ST1 398477701 HANDLE
ST2 398477702 DRIFT

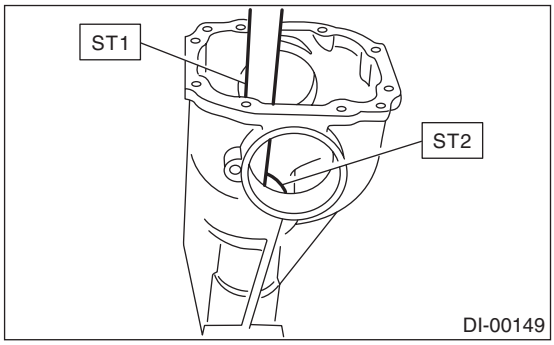

(2) Install the front bearing race to differential carrier using ST1 and ST2.

ST1 398477701 HANDLE
ST2 498447110 DRIFT

(3) Insert the front bearing cone.

NOTE:
Use new front bearing cone.

(4) Measure and record the thickness of pinion height adjusting washer.

NOTE:
If tooth contact (drive pinion, hypoid driven gear) is normal in the inspection before disassembling, verify that the washer is not deformed, and then re-use the used washer.

(5) Insert the ST1 into the case with pinion height adjusting washer and rear bearing cone fitted onto it.

NOTE:
Use new rear bearing cone.

(6) Install the preload adjusting collar and washer, front bearing cone, ST2, companion flange, and washer and self-locking nut.

ST1 498447150 DUMMY SHAFT
ST2 32285AA000 DUMMY COLLAR

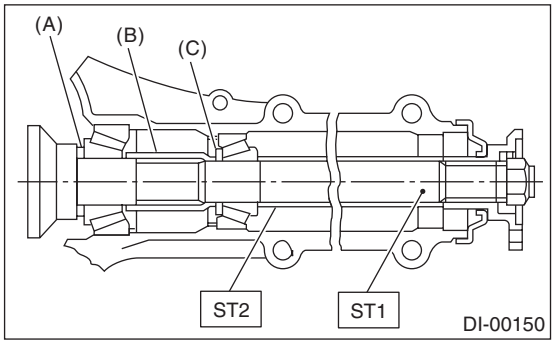

(A) Pinion height adjusting washer
(B) Preload adjusting collar
(C) Preload adjusting washer

(7) Turn the ST1 with hand to make it seated, and tighten the self-locking nut while measuring the preload with spring balance. Select the preload adjusting washer and collar so that the specified preload is obtained when nut is tightened to the specified torque.

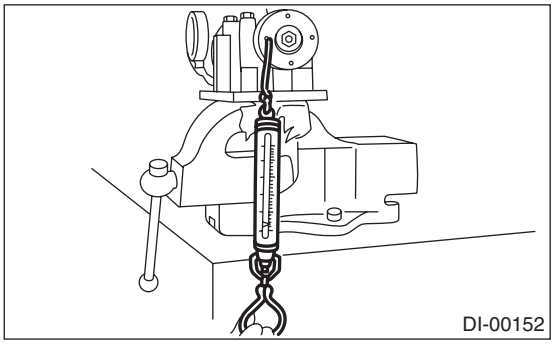

NOTE:
- Use a new self-locking nut.
- Be careful not to give excessive preload.
- When tightening the self-locking nut, lock ST1 with ST2 as shown in the figure.
- Measure the preload in direction of tangent to flange.

ST1 498447150 DUMMY SHAFT
ST2 398507704 BLOCK

Tightening torque:
191 N·m (19.5 kgf-m, 141 ft-lb)

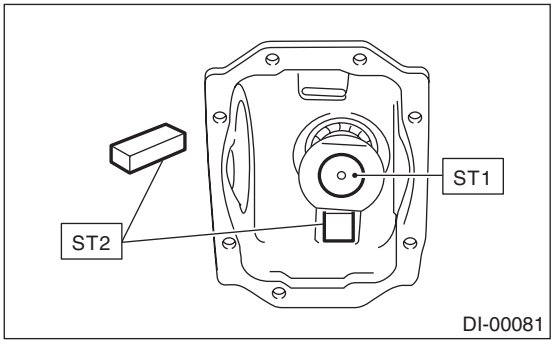

Drive pinion bearing preload
For new bearing: 12.7 — 32.2 N (1.3 — 3.3 kgf, 2.9 — 7.3 lb) Measure at companion flange bolt hole

	Part No.	Thickness mm (in)
Preload adjusting washer	38336AA000	1.500 (0.0591)
	38336AA120	1.513 (0.0596)
	38336AA010	1.525 (0.0600)
	38336AA130	1.538 (0.0606)
	38336AA020	1.550 (0.0610)
	38336AA140	1.563 (0.0615)
	38336AA030	1.575 (0.0620)
	38336AA150	1.588 (0.0625)
	38336AA040	1.600 (0.0630)
	38336AA160	1.613 (0.0635)
	38336AA050	1.625 (0.0640)
	38336AA170	1.638 (0.0645)
	38336AA060	1.650 (0.0650)
	38336AA180	1.663 (0.0655)
	38336AA070	1.675 (0.0659)
	38336AA190	1.688 (0.0665)
	38336AA080	1.700 (0.0669)
	38336AA200	1.713 (0.0674)
	38336AA090	1.725 (0.0679)
	38336AA210	1.738 (0.0684)
	38336AA100	1.750 (0.0689)
	38336AA220	1.763 (0.0694)
	38336AA110	1.775 (0.0699)
	Part No.	Length mm (in)
Preload adjusting collar	32288AA040	52.3 (2.059)
	32288AA050	52.5 (2.067)
	31454AA100	52.6 (2.071)
	32288AA060	52.7 (2.075)
	31454AA110	52.8 (2.079)
	32288AA070	52.9 (2.083)
	31454AA120	53.0 (2.087)
	32288AA080	53.1 (2.091)
	32288AA090	53.3 (2.098)

2) Adjusting drive pinion height:
Adjust the drive pinion height with washer installed between the rear bearing cone and the back of pinion gear.

(1) Install the ST2.

ST1 498447150 DUMMY SHAFT
ST2 498505501 DIFFERENTIAL CARRIER GAUGE
ST3 32285AA000 DUMMY COLLAR

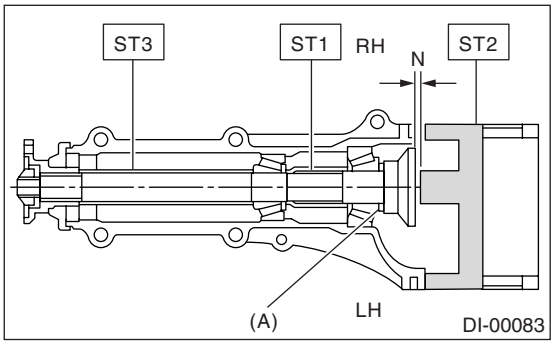

(A) Pinion height adjusting washer

(2) Measure the clearance N between the end of ST2 and the end surface of ST1 by using a thickness gauge.

NOTE:
Make sure there is no clearance between the case and ST2.

ST1 498447150 DUMMY SHAFT
ST2 498505501 DIFFERENTIAL CARRIER GAUGE

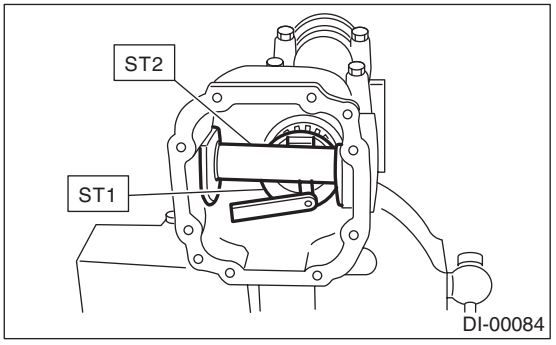

(3) Obtain the thickness of pinion height adjusting washer to be inserted from the following formula, and replace the temporarily installed washer with this one.

NOTE:
Adjust it using the 1 — 3 washers.
T = To + N − 0.05 mm (0.0020 in)

T	Thickness of pinion height adjusting washer mm (in)	
To	Thickness of washer temporally inserted mm (in)	
N	Clearance of thickness gauge mm (in)	
Memo:		

(Example of calculation)
To = 0.15 mm (0.0059 in)
N = 0.1 mm (0.0039 in)

T = 0.15 mm (0.0059 in) + 0.1 mm (0.0039 in) − 0.05 mm (0.0020 in) = 0.2 mm (0.0079 in)
Result: Thickness = 0.2 mm (0.0079 in)
Therefore use the pinion height adjusting washer of part number 32295AA220.

Pinion height adjusting washer	
Part No.	Thickness mm (in)
32295AA200	0.150 (0.0059)
32295AA210	0.175 (0.0069)
32295AA220	0.200 (0.0079)
32295AA230	0.225 (0.0089)
32295AA240	0.250 (0.0098)
32295AA250	0.275 (0.0108)

3) Install the selected pinion height adjusting washer on drive pinion, and press the rear bearing cone into position with ST.
ST 498175500 INSTALLER

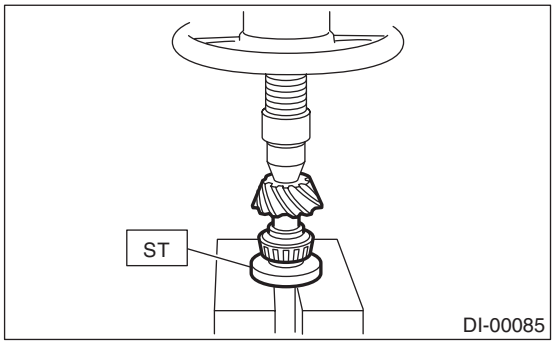

4) Insert the drive pinion into differential carrier, install the selected bearing preload adjusting collar and washer.

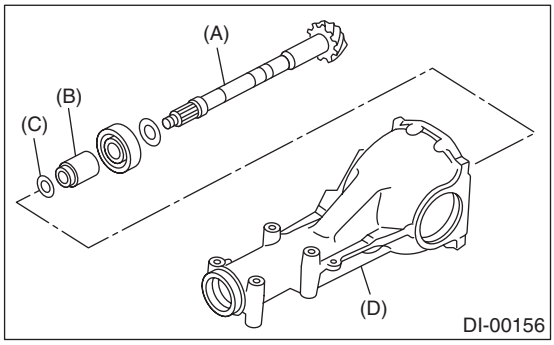

(A) Drive pinion
(B) Bearing preload adjusting collar
(C) Bearing preload adjusting washer
(D) Differential carrier

5) Press-fit the front bearing cone into carrier with ST1, ST2 and ST3.
ST1 32285AA000 DUMMY COLLAR
ST2 399780104 WEIGHT
ST3 899580100 INSTALLER

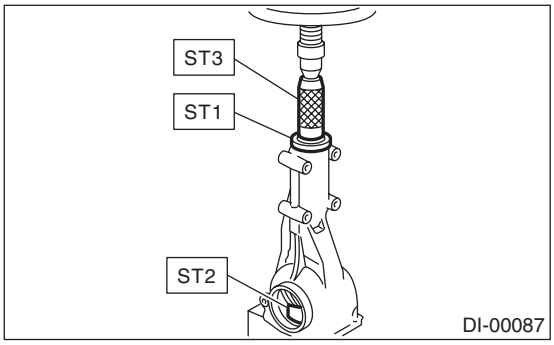

6) Insert the collar, then press-fit the pilot bearing with ST1 and ST2.
ST1 399780104 WEIGHT
ST2 899580100 INSTALLER

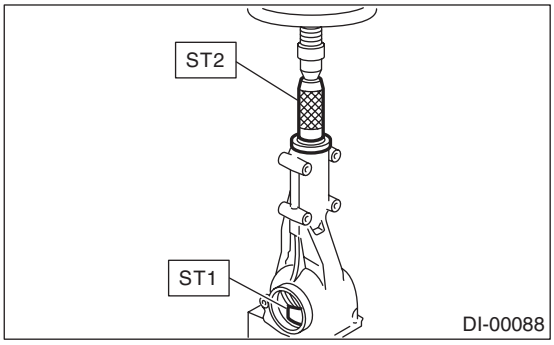

7) Fit a new oil seal with ST.

NOTE:
• Press-fit until end of oil seal is 1 mm (0.0394 in) inward from end of carrier.
• Apply grease to the oil seal lips.

ST 498447120 INSTALLER

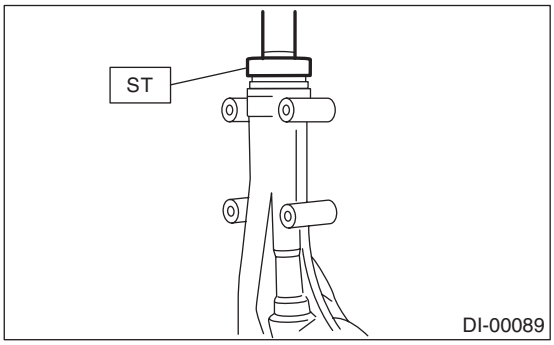

8) Press-fit the companion flange with ST1 and ST2.

NOTE:
Be careful not to damage the bearing.

ST1 899874100 INSTALLER

ST2 399780104 WEIGHT

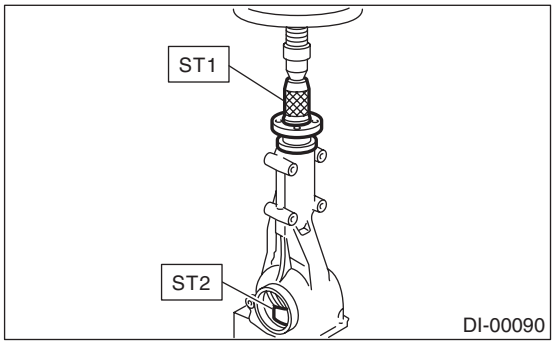

9) Install a new self-locking nut, and secure the companion flange using ST, and tighten the nut.
ST 498427200 FLANGE WRENCH

Tightening torque:
191 N·m (19.5 kgf-m, 141 ft-lb)

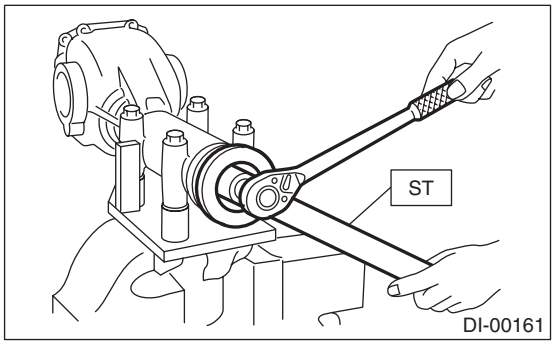

10) Assembling differential case
Install the side gears and pinion mate gears, with their thrust washers and pinion mate shaft, into differential case.

NOTE:
• Apply gear oil to both sides of the washer and the side gear shaft before installing.

• Insert the pinion mate shaft into the differential case by aligning the lock pin holes.

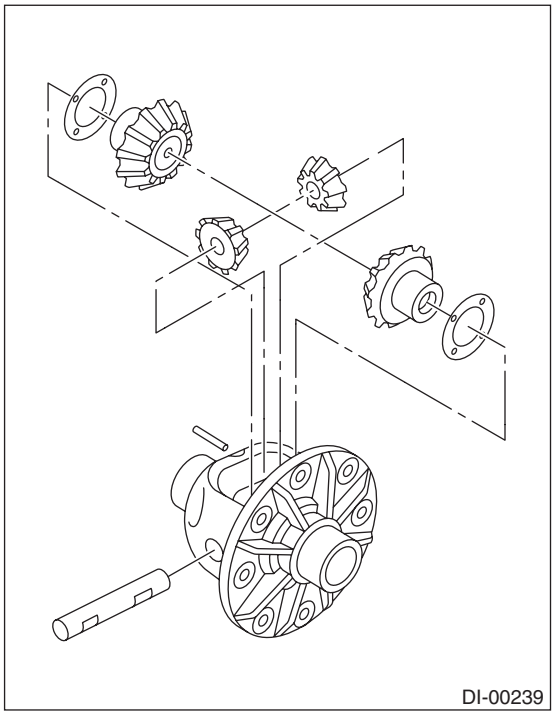

(1) Measure the side gear backlash.

Side gear backlash:
0.05 — 0.15 mm (0.0020 — 0.0059 in)

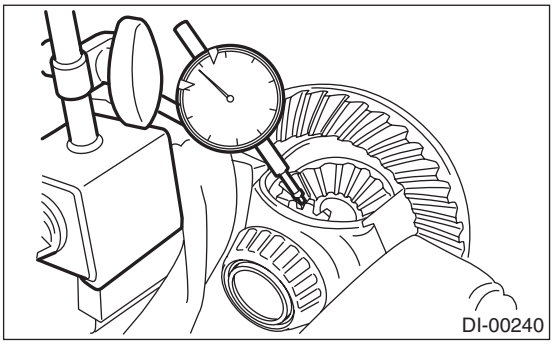

(2) Adjust the side gear backlash as specified by selecting side gear thrust washer.

Side gear thrust washer	
Part No.	Thickness mm (in)
803135011	0.925 — 0.950 (0.0364 — 0.0374)
803135012	0.950 — 0.975 (0.0374 — 0.0384)
803135013	0.975 — 1.000 (0.0384 — 0.0394)
803135014	1.000 — 1.025 (0.0394 — 0.0404)
803135015	1.025 — 1.050 (0.0404 — 0.0413)

(3) Check the condition of rotation after applying oil to the gear tooth surfaces and thrust surfaces.
(4) After inserting the pinion shaft lock pin into differential case, stake the both sides of the hole to prevent pin from falling off.

11) Install the hypoid driven gear on differential case.

NOTE:
• Before installing bolts, apply Lock Tite to bolt threads.

Lock Tite:
THREE BOND 1324 (Part No. 004403042)

• Tighten diagonally while tapping the bolt heads.

Tightening torque:
62 N·m (6.3 kgf-m, 45.6 ft-lb)

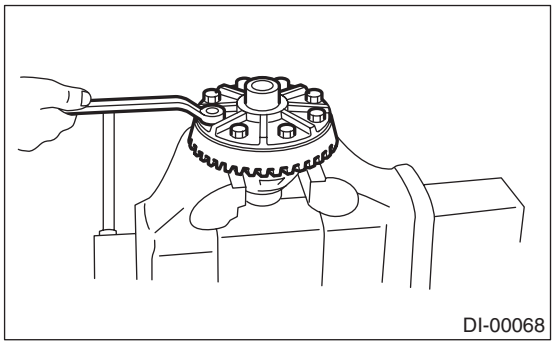

12) Press the side bearing into differential case using ST.
ST 498485400 DRIFT

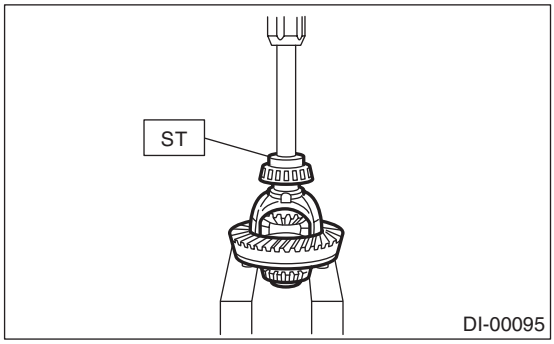

13) Assemble holders.
(1) Install the oil seal into holder RH and LH.
ST 498447100 INSTALLER

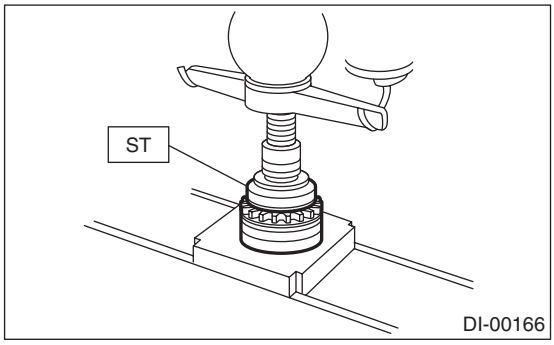

(2) Install the bearing race into holder RH and LH.
ST 398477702 DRIFT

CAUTION:
Make sure that the oil seal, bearing outer race and cone are properly assembled.

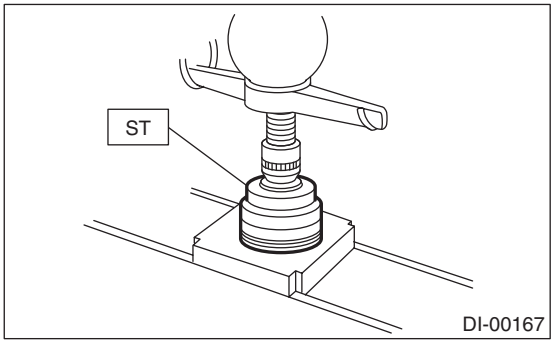

(3) Install the differential assembly into differential carrier in the reverse order of disassembly.

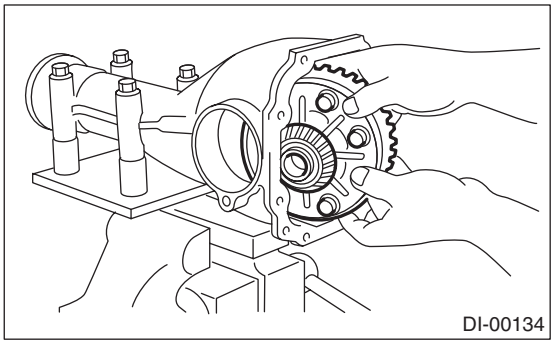

(4) Temporally tighten the side holder RH and LH in differential carrier to install.

14) Perform the backlash adjustment between the hypoid driven gear and drive pinion, and preload adjustment of differential side bearing.
(1) Turn the drive pinion with ST for better fitting of differential side bearing.
ST 498427200 FLANGE WRENCH

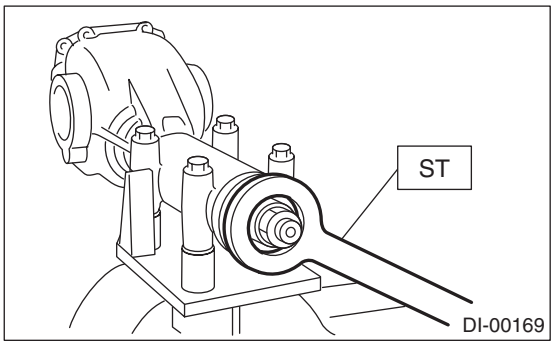

(2) Screw in the side holder LH until light contact is made with ST.

ST 499785500 WRENCH

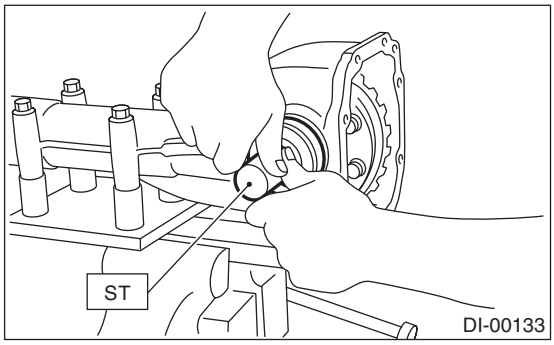

(3) Back off the side (hypoid driven gear side) holder approx. 1 1/2 teeth of holder, and tighten the other side holder by approx. 2 teeth (approx. 1 1/2 + 1/2 teeth). [Back off amount of side (hypoid driven gear side) holder + 1/2 tooth.]
This + 1/2 tooth gives preload.
(4) Temporarily tighten the lock plate.

NOTE:
Turn over the lock plate to displace the holder 1/2 tooth.

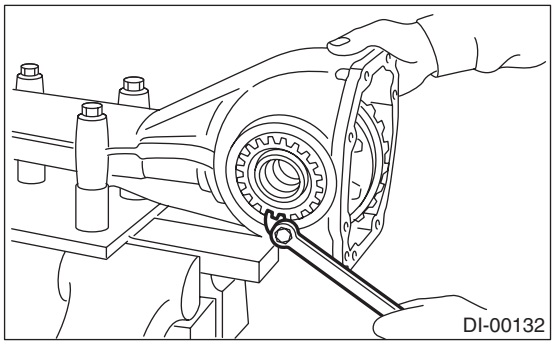

(5) Measure the hypoid driven gear-to-drive pinion backlash. Set the magnet base on differential carrier. Align the contact point of dial gauge with tooth face of hypoid driven gear, and move hypoid driven gear while holding drive pinion still. Read the value indicated on dial gauge.

NOTE:
If measured backlash is not within specified range, repeat the procedures for pinion driven gear set backlash adjustment and differential side bearing preload adjustment.

Backlash:
0.10 — 0.15 mm (0.0039 — 0.0059 in)

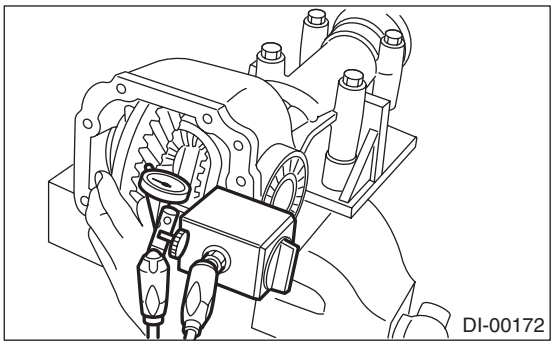

15) Draw a matching mark on both differential carrier and holder. Remove the holder side at a time. Replace in the original position after inserting an O-ring and applying grease to threaded portion.

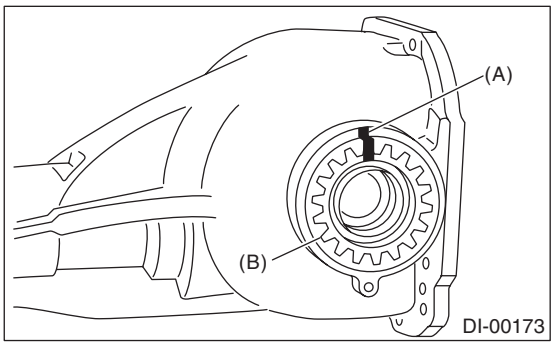

(A) Alignment mark
(B) Holder

16) Tighten the bolt of lock plate to specified torque.

Tightening torque:
25 N·m (2.5 kgf-m, 18.1 ft-lb)

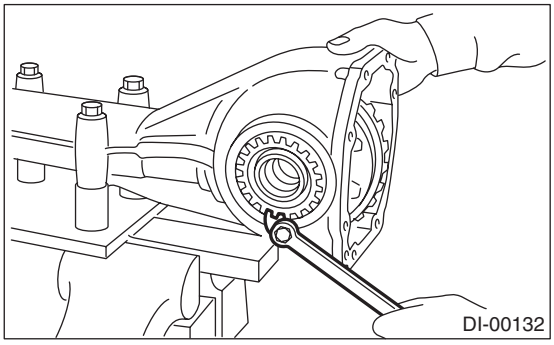

17) Recheck the hypoid driven gear to pinion backlash.

Backlash:
0.10 — 0.15 mm (0.0039 — 0.0059 in)

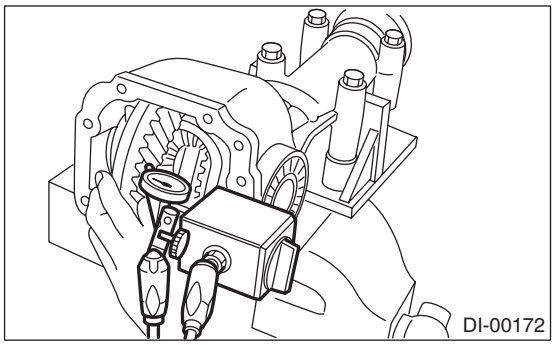

18) Checking and adjusting the tooth contact of hypoid driven gear
(1) Apply an even coat of red lead on both sides of three or four teeth on the hypoid driven gear. Check the contact pattern after rotating the hypoid driven gear several revolutions back and forth until a definite contact pattern appears on the hypoid driven gear.
(2) When the contact pattern is incorrect, readjust.

NOTE:
Be sure to wipe off red lead completely after adjustment is completed.

- Correct tooth contact

Checking item: Tooth contact pattern is slightly shifted toward to toe side under no-load rotation. [When loaded, contact pattern moves toward heel.]

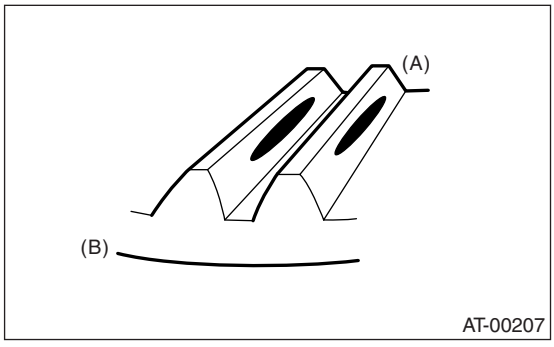

(A) Toe side
(B) Heel side

- Face contact

Checking item: Backlash is too large.
Contact pattern

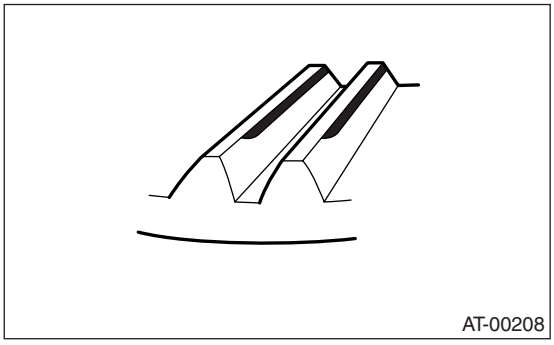

Corrective action: Increase thickness of drive pinion height adjusting washer in order to bring drive pinion close to hypoid driven gear.

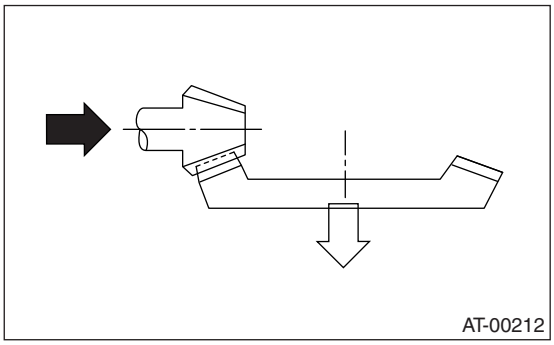

- Flank contact

Checking item: Backlash is too small.
Contact pattern

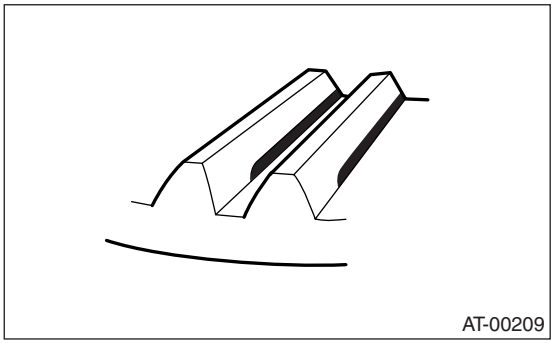

Corrective action: Reduce thickness of drive pinion height adjusting washer in order to bring drive pinion away from hypoid driven gear.

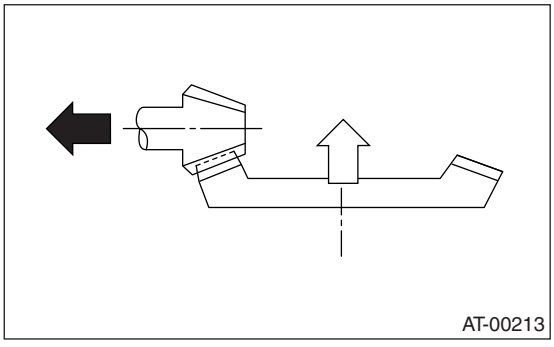

• Toe contact (inside end contact)

Checking item: Contact areas is small

Contact pattern

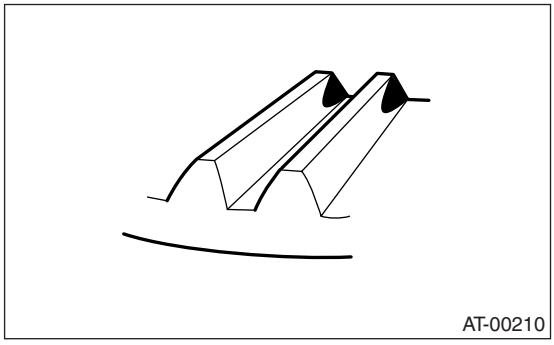

Corrective action: Reduce thickness of drive pinion height adjusting washer in order to bring drive pinion away from hypoid driven gear.

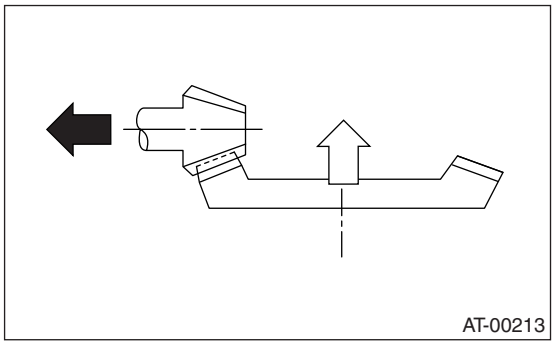

• Heel contact (outside end contact)

Checking item: Contact areas is small

Contact pattern

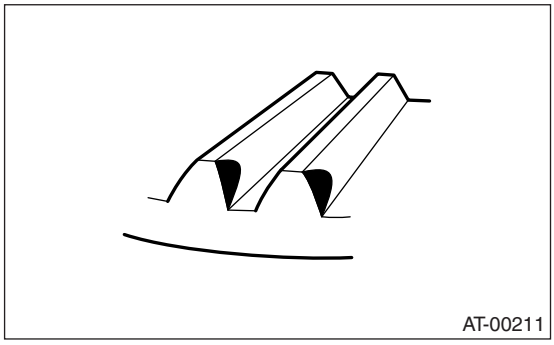

Corrective action: Increase thickness of drive pinion height adjusting washer in order to bring drive pinion close to hypoid driven gear.

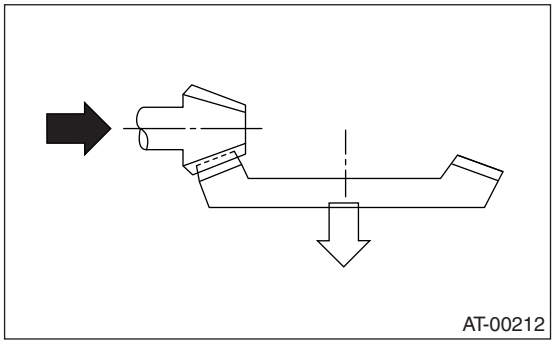

19) If proper tooth contact is not obtained, once again adjust the drive pinion height and the differential side bearing preload (already mentioned) and the hypoid gear backlash.

20) Install the new gasket and rear cover to differential carrier and tighten the bolts to specified torque.

Tightening torque:
25 N·m (2.5 kgf-m, 18.1 ft-lb)

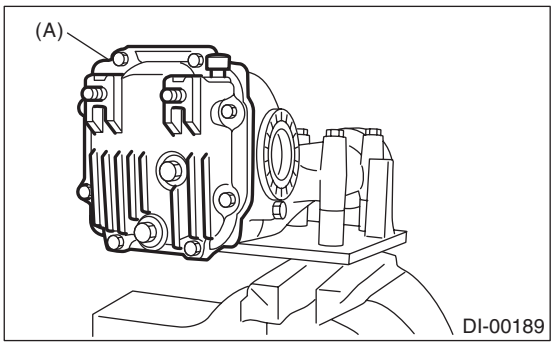

(A) Rear cover

2. VA2-TYPE

NOTE:

• Assemble in the reverse order of disassembly.
• Check and adjust each part during assembly.
• Use a new gasket.
• Keep the shims and washers in order, so that they are not improperly installed.
• Thoroughly clean the surfaces on which the shims, washers and bearings are to be installed.
• Apply gear oil when installing the bearings and thrust washers.
• Be careful not to mix up the bearing races RH and LH.
• Replace the oil seal with a new one at every disassembly. Apply grease to the lips when installing the oil seal.
• Be careful not to mix up the differential oil seal RH and LH.

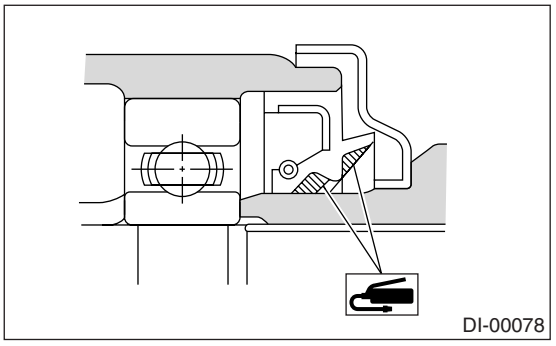

1) Adjusting preload for front and rear bearings:
Adjust the bearing preload with collar and washer between front and rear bearings. Pinion height adjusting washer are not affected by this adjustment. The adjustment must be carried out without oil seal inserted.

(1) Install the rear bearing race into differential carrier with ST1 and ST2.

ST1 398477701 HANDLE
ST2 398477703 DRIFT 2

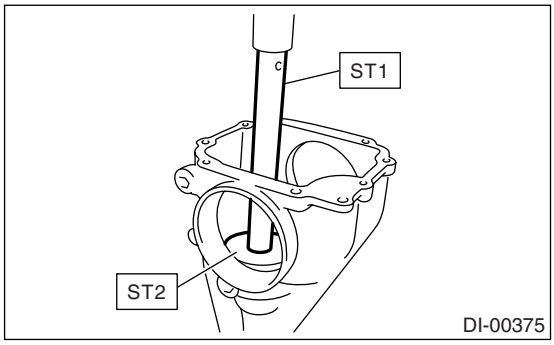

(2) Using the ST, install the front bearing race to the differential carrier.

ST 499277200 INSTALLER

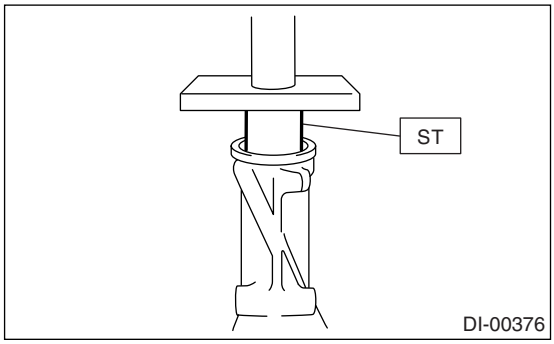

(3) Insert the front bearing cone.

NOTE:
Use new front bearing cone.

(4) Measure and record the thickness of pinion adjusting washer.

NOTE:
If tooth contact (drive pinion, hypoid driven gear) is normal in the inspection before disassembling, verify that the washer is not deformed, and then re-use the used washer.

(5) Insert the ST1 into carrier with pinion height adjusting washer and rear bearing cone fitted onto it.

NOTE:
Use new rear bearing cone.

(6) Install the preload adjusting collar and washer, front bearing cone, collar, companion flange, and washer and self-locking nut.

ST1 18678AA000 DUMMY SHAFT

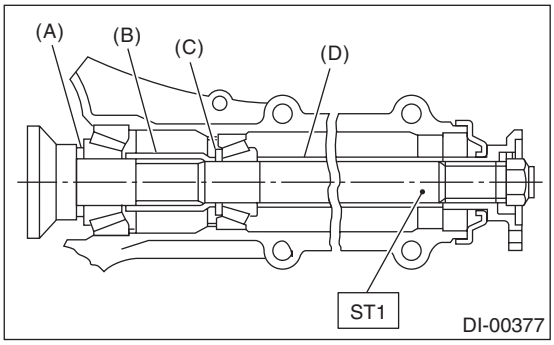

(A) Pinion height adjusting washer
(B) Preload adjusting collar
(C) Preload adjusting washer
(D) Collar

(7) Turn the ST1 with hand to make it seated, and tighten the self-locking nut while measuring the preload with spring balance. Select the preload adjusting washer and collar so that the specified preload is obtained when nut is tightened to the specified torque.

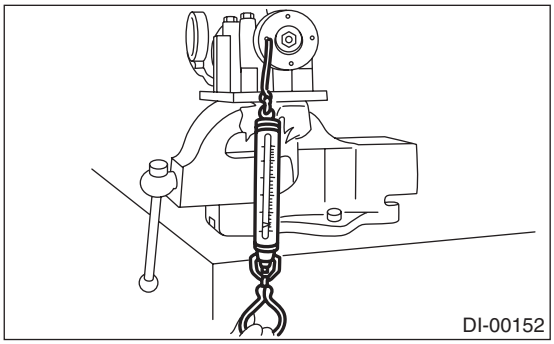

NOTE:
- Use a new self-locking nut.
- Be careful not to give excessive preload.
- When tightening the self-locking nut, lock companion flange with ST2 as shown in the figure.
- Measure the preload in direction of tangent to flange.

ST1 18678AA000 DUMMY SHAFT
ST2 498427200 FLANGE WRENCH

Tightening torque:
191 N·m (19.5 kgf-m, 141 ft-lb)

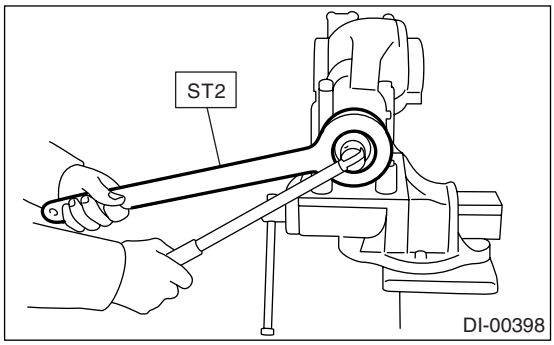

Drive pinion bearing preload
12.7 — 32.4 N (1.3 — 3.3 kgf, 2.9 — 7.3 lb) (at companion flange bolt hole)

	Part No.	Thickness mm (in)
Preload adjusting washer	38336AA430	1.500 (0.0591)
	38336AA440	1.513 (0.0596)
	38336AA450	1.525 (0.0600)
	38336AA460	1.538 (0.0606)
	38336AA470	1.550 (0.0610)
	38336AA480	1.563 (0.0615)
	38336AA490	1.575 (0.0620)
	38336AA500	1.588 (0.0625)
	38336AA510	1.600 (0.0630)
	38336AA520	1.613 (0.0635)
	38336AA530	1.625 (0.0640)
	38336AA540	1.638 (0.0645)
	38336AA550	1.650 (0.0650)
	38336AA560	1.663 (0.0655)
	38336AA570	1.675 (0.0659)
	38336AA580	1.688 (0.0665)
	38336AA590	1.700 (0.0669)
	38336AA600	1.713 (0.0674)
	38336AA610	1.725 (0.0679)
	38336AA620	1.738 (0.0684)
	38336AA630	1.750 (0.0689)
	38336AA640	1.763 (0.0694)
	38336AA650	1.775 (0.0699)
	Part No.	Length mm (in)
Preload adjusting collar	31454AA250	51.05 (2.010)
	31454AA260	51.25 (2.018)
	31454AA270	51.35 (2.022)
	31454AA280	51.45 (2.026)
	31454AA290	51.55 (2.030)
	31454AA300	51.65 (2.033)
	31454AA310	51.75 (2.037)
	31454AA320	51.85 (2.041)
	31454AA330	52.05 (2.049)

2) Adjusting drive pinion height:
Adjust the drive pinion height with washer installed between the rear bearing cone and the back of pinion gear.

(1) Install the ST2.

ST1 18678AA000 DUMMY SHAFT
ST2 18831AA010 DIFFERENTIAL CARRIER GAUGE

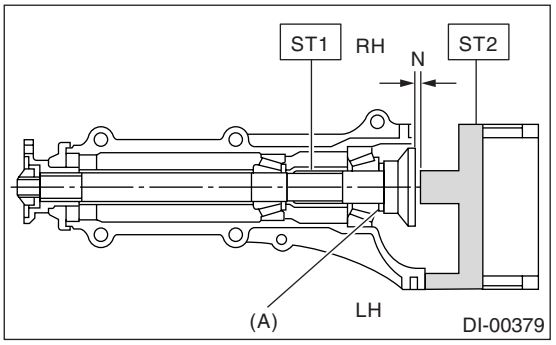

(A) Pinion height adjusting washer

(2) Install the side holder LH to the left side of differential carrier in reverse direction.

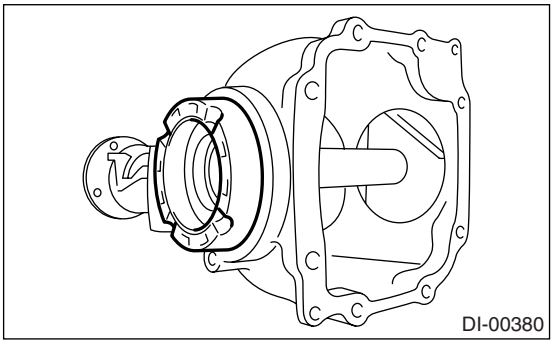

(3) Measure the clearance N between the end of ST2 and the end surface of ST1 by using a thickness gauge.

NOTE:
Make sure there is no clearance between the case and ST2.

ST1 18678AA000 DUMMY SHAFT
ST2 18831AA010 DIFFERENTIAL CARRIER GAUGE

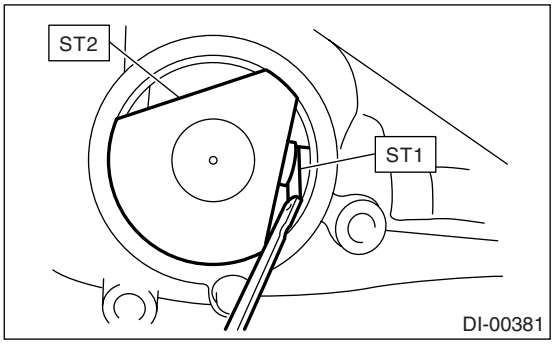

(4) Obtain the thickness of pinion height adjusting washer to be inserted from the following formula, and replace the temporarily installed washer with this one.

NOTE:
Adjust it using the 1 — 3 washers.
T = To + N − 0.05 mm (0.0020 in)

T	Thickness of pinion height adjusting washer mm (in)	
To	Thickness of washer temporally inserted mm (in)	
N	Clearance of thickness gauge mm (in)	
Memo:		

(Example of calculation)
To = 0.15 mm (0.0059 in)
N = 0.1 mm (0.0039 in)
T = 0.15 mm (0.0059 in) + 0.1 mm (0.0039 in) − 0.05 mm (0.0020 in) = 0.2 mm (0.0079 in)
Result: Thickness = 0.2 mm
Therefore use the pinion height adjusting washer of part number 32295AA370.

Pinion height adjusting washer	
Part No.	Thickness mm (in)
32295AA350	0.150 (0.0059)
32295AA360	0.175 (0.0069)
32295AA370	0.200 (0.0079)
32295AA380	0.225 (0.0089)
32295AA390	0.250 (0.0098)
32295AA400	0.275 (0.0108)

3) Install the selected pinion height adjusting washer on drive pinion, and press the rear bearing cone into position with ST.
ST 398177700 INSTALLER

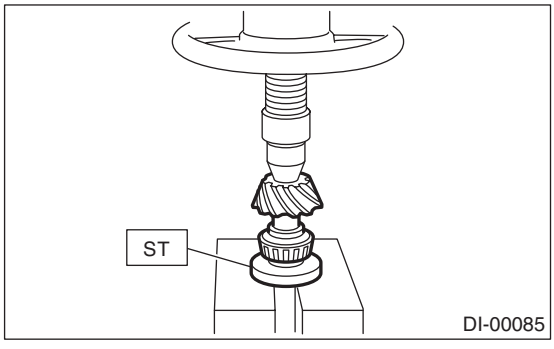

4) Insert the drive pinion into differential carrier, install the previously selected bearing preload adjusting collar and washer.

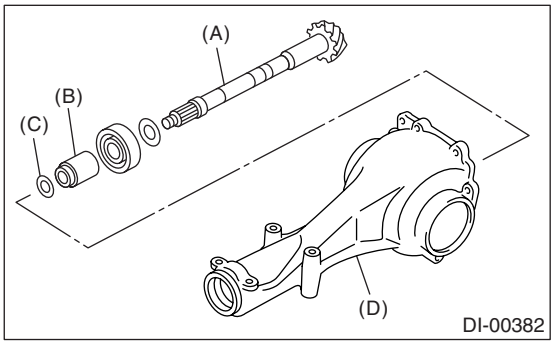

(A) Drive pinion
(B) Bearing preload adjusting collar
(C) Bearing preload adjusting washer
(D) Differential carrier

5) Set ST and differential carrier to the press and install the front bearing cone.
ST 399780104 WEIGHT

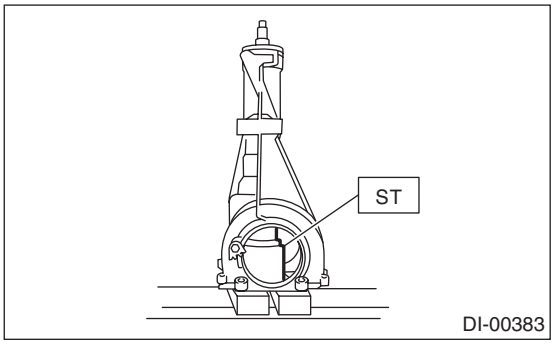

NOTE:
Set the carrier to the press until the companion flange is installed.

6) Insert the collar, then install the pilot bearing.

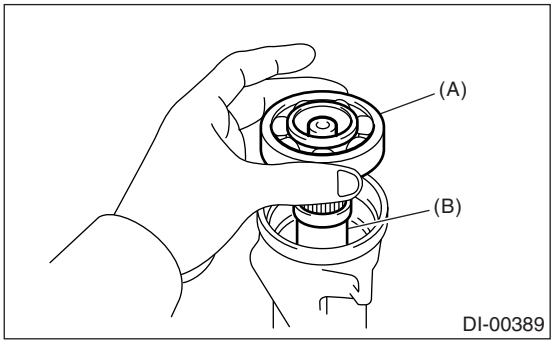

(A) Pilot bearing
(B) Collar

7) Fit a new oil seal with ST.

NOTE:
• Press-fit until end of oil seal is 1 mm (0.04 in) inward from end of carrier.

• Apply grease to the oil seal lips.

ST 499277200 INSTALLER

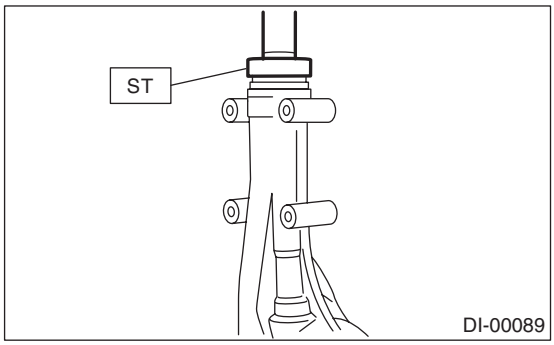

8) Press-fit the companion flange with ST.

NOTE:
Be careful not to damage the bearing.

ST 899874100 INSTALLER

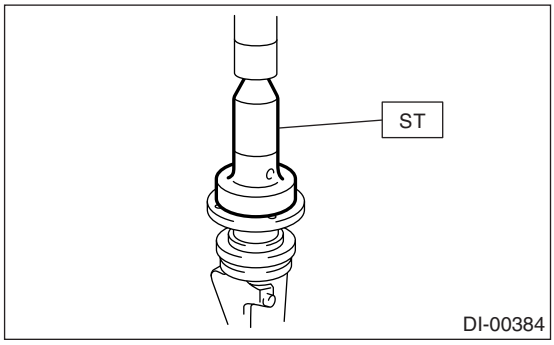

9) Install a new self-locking nut, and secure the companion flange using ST, and tighten the nut.

ST 498427200 FLANGE WRENCH

Tightening torque:
191 N·m (19.5 kgf-m, 141 ft-lb)

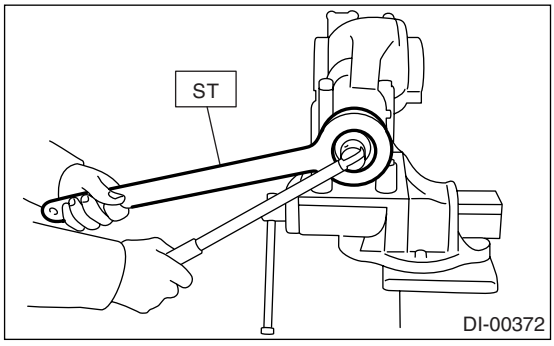

10) Install the hypoid driven gear on differential case.

NOTE:
• Tighten diagonally while tapping the bolt heads.
• Set a cushioning such as wooden block, aluminum plate or shop cloth between vise and differential case if the side gear comes into contact with vise.

Tightening torque:
62 N·m (6.3 kgf-m, 45.6 ft-lb)

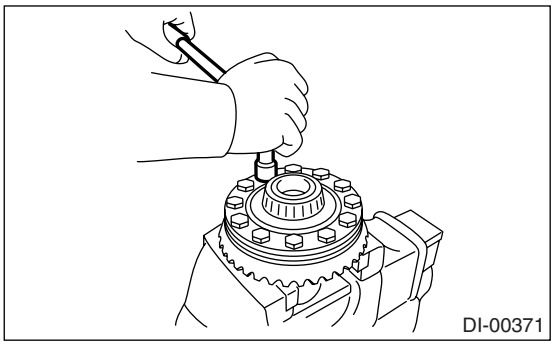

11) Press the side bearing into differential case using ST.

ST 398487700 DRIFT

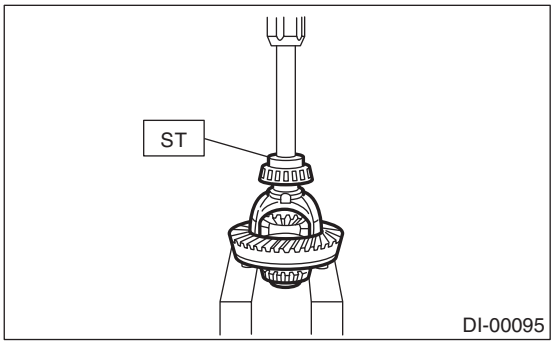

12) Assemble holders.
(1) Install the new oil seal into holder RH and LH.

ST 498447100 INSTALLER

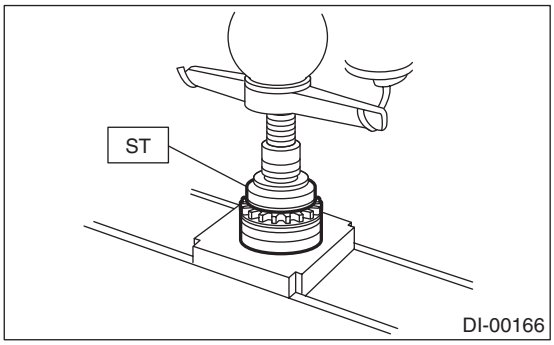

(2) Install the bearing race into holder RH and LH.

ST 398177700 INSTALLER

CAUTION:
Make sure that the oil seal, bearing outer race and cone are properly assembled.

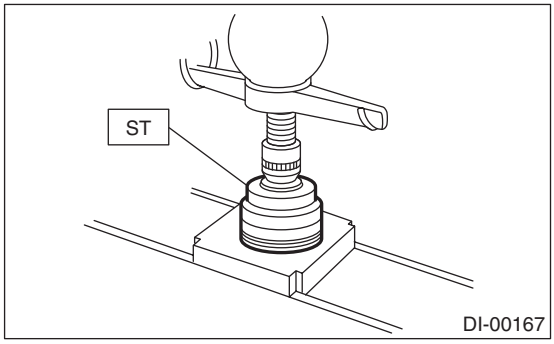

(3) Install the differential assembly into differential carrier in the reverse order of disassembly.

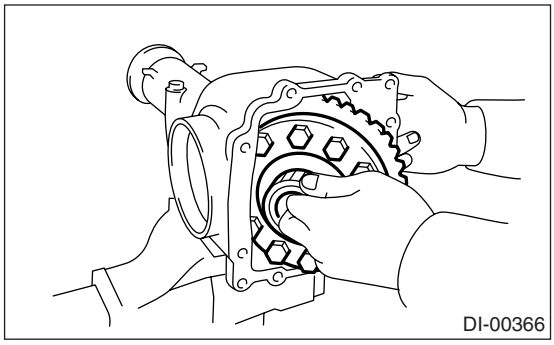

(4) Temporally tighten the side holder RH and LH in differential carrier to install.

13) Perform the backlash adjustment between the hypoid driven gear and drive pinion, and preload adjustment of differential side bearing.

(1) Turn the drive pinion with ST for better fitting of differential side bearing.

ST 498427200 FLANGE WRENCH

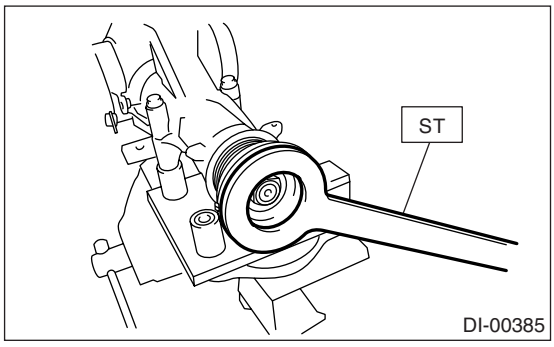

(2) Screw in the side holder LH until light contact is made with ST.

ST 18630AA010 WRENCH

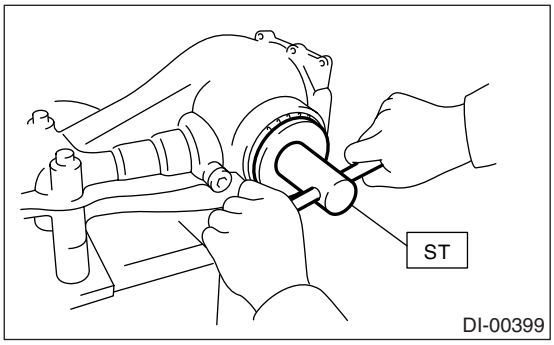

(3) Back off the side (hypoid driven gear side) holder approx.1 1/2 teeth of holder, and tighten the other side holder by approx. 2 teeth (approx. 1 1/2 + 1/2 teeth). [Back off amount of side (hypoid driven gear side) holder + 1/2 tooth.]
This + 1/2 tooth gives preload.

(4) Temporarily tighten the lock plate.

NOTE:
Turn over the lock plate to displace the holder 1/2 tooth.

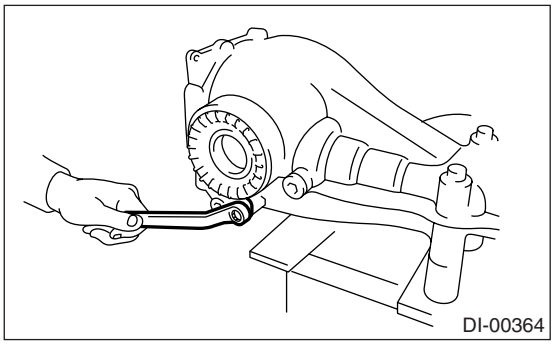

(5) Measure the hypoid driven gear-to-drive pinion backlash. Set the magnet base on differential carrier. Align the contact point of dial gauge with tooth face of hypoid driven gear, and move hypoid driven gear while holding drive pinion still. Read the value indicated on dial gauge.

NOTE:
If measured backlash is not within specified range, repeat the procedures for pinion driven gear set backlash adjustment and differential side bearing preload adjustment.

Backlash:
0.10 — 0.15 mm (0.0039 — 0.0059 in)

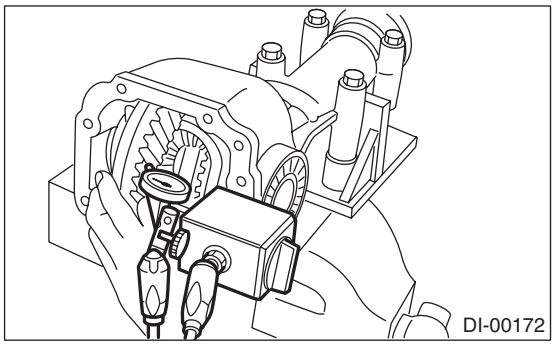

14) Draw a matching mark on both differential carrier and holder. Remove the holder side at a time. Replace in the original position after inserting an O-ring and applying grease to threaded portion.

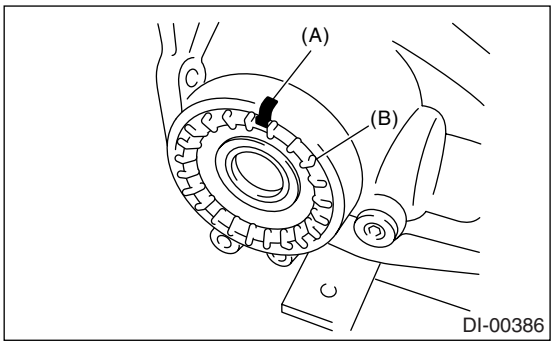

(A) Alignment mark
(B) Holder

15) Tighten the bolt of lock plate to specified torque.

Tightening torque:
25 N·m (2.5 kgf-m, 18.1 ft-lb)

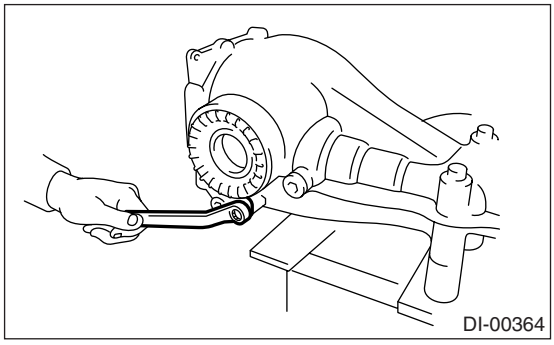

16) Recheck the hypoid driven gear to pinion backlash.

Backlash:
0.10 — 0.15 mm (0.0039 — 0.0059 in)

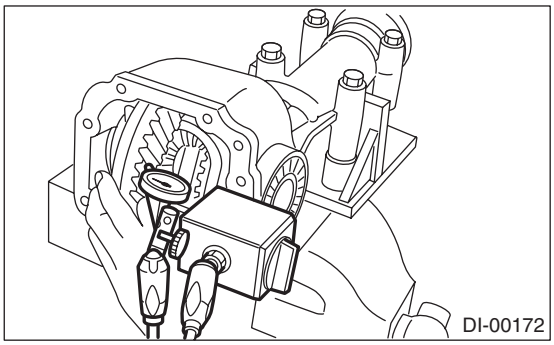

17) Checking and adjusting the tooth contact of hypoid driven gear
(1) Apply an even coat of red lead on both sides of three or four teeth on the hypoid driven gear. Check the contact pattern after rotating the hypoid driven gear several revolutions back and forth until a definite contact pattern appears on the hypoid driven gear.
(2) When the contact pattern is incorrect, readjust.

NOTE:
Be sure to wipe off red lead completely after adjustment is completed.

- Correct tooth contact

Checking item: Tooth contact pattern is slightly shifted toward toe side under no-load rotation. [When loaded, contact pattern moves toward heel.]

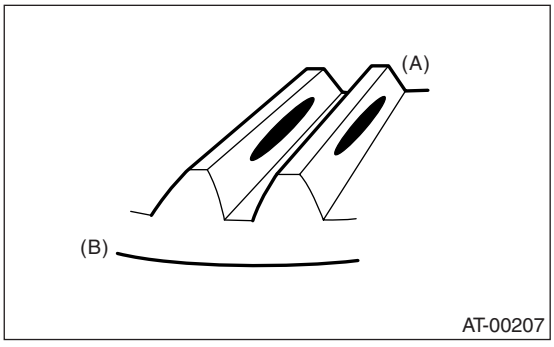

(A) Toe side
(B) Heel side

- Face contact

Checking item: Backlash is too large.
Contact pattern

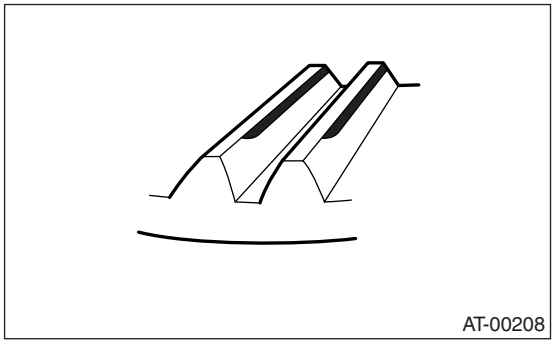

Corrective action: Increase thickness of drive pinion height adjusting washer in order to bring drive pinion close to hypoid driven gear.

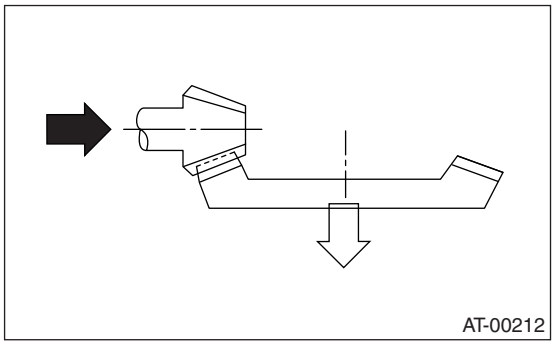

- Flank contact

Checking item: Backlash is too small.
Contact pattern

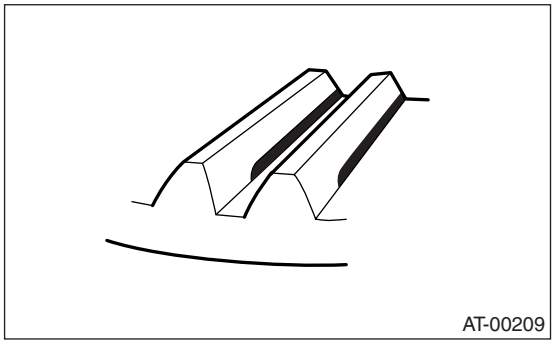

Corrective action: Reduce thickness of drive pinion height adjusting washer in order to bring drive pinion away from hypoid driven gear.

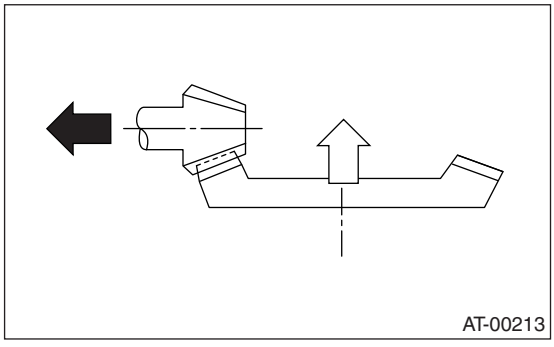

- Toe contact (inside end contact)

Checking item: Contact areas is small
Contact pattern

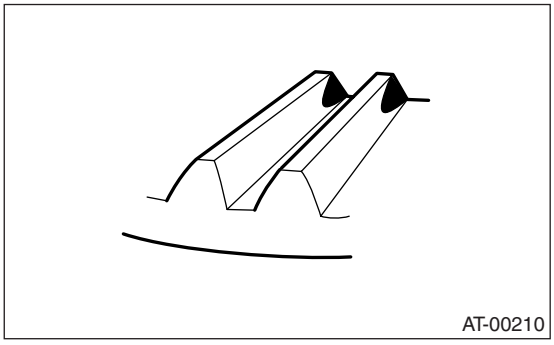

Corrective action: Reduce thickness of drive pinion height adjusting washer in order to bring drive pinion away from hypoid driven gear.

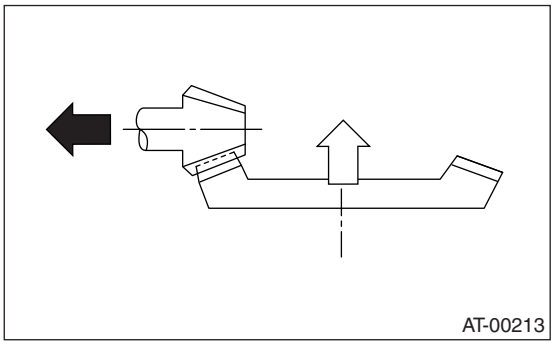

- Heel contact (outside end contact)

Checking item: Contact areas is small
Contact pattern

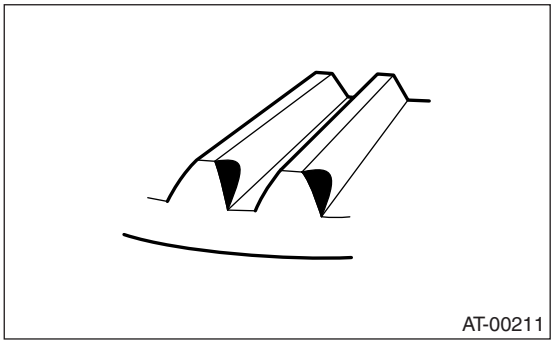

Corrective action: Increase thickness of drive pinion height adjusting washer in order to bring drive pinion close to hypoid driven gear.

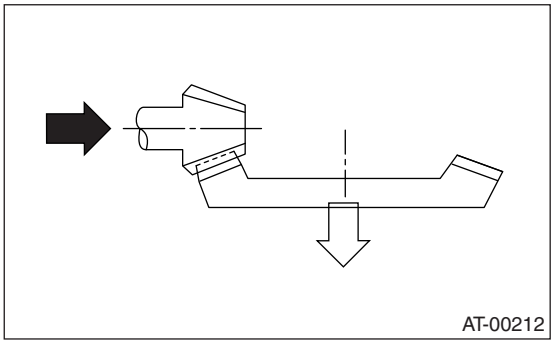

18) If proper tooth contact is not obtained, once again adjust the drive pinion height and the differential side bearing preload (already mentioned) and the hypoid gear backlash.
19) Install the new gasket and rear cover to differential carrier and tighten the bolts to specified torque.

Tightening torque:
25 N·m (2.5 kgf-m, 18.1 ft-lb)

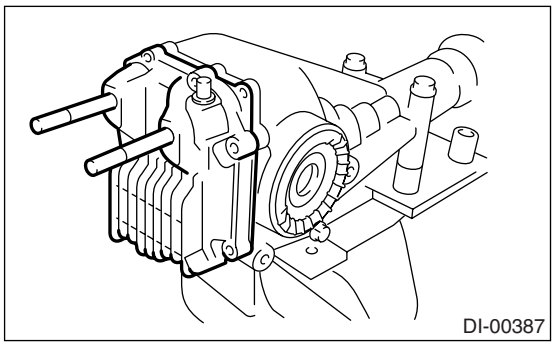
DI-00387

E: INSPECTION

Wash all the disassembled parts clean, and examine them for wear, damage and other defects. Repair or replace the defective parts as necessary.
1) Hypoid driven gear and drive pinion
• If abnormal tooth contact is evident, find out the cause and adjust to give correct tooth contact. Replace the gear if excessively worn or incapable of adjustment.
• If crack, score or seizure is evident, replace as a set. Slight damage of tooth can be corrected by oil stone or the like.
2) Side gear and pinion mate gear
• Replace if crack, score or other defects are evident on tooth surface.
• Replace if thrust washer contacting surface is worn or seized. Slight damage of the surface can be corrected by oil stone or the like.
3) Bearings
Replace if seizure, peeling, wear, rust, dragging during rotation, noise or other defect is evident.
4) Thrust washers of side gear and pinion mate gear:
Replace if seizure, flaw, abnormal wear or other defect is evident.
5) Oil seal
Replace if deformed or damaged, and at every disassembling.
6) Differential carrier
Replace if the bearing bores are worn or damaged.
7) Differential case
Replace if its sliding surfaces are worn or cracked.
8) Companion flange
Replace if the oil seal lip contacting surfaces have flaws.

1. SIDE GEAR BACKLASH

Using a dial gauge, check the backlash of the side gear. (VA1-type only)

Side gear backlash:
0.05 — 0.15 mm (0.0020 — 0.0059 in)

If the side gear backlash is not within the specification, adjust it as specified by selecting side gear thrust washer.

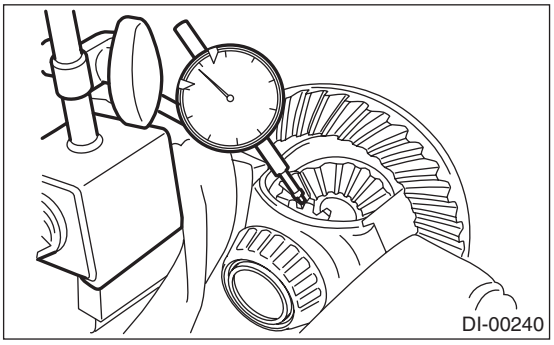
DI-00240

2. HYPOID DRIVEN GEAR BACKLASH

Using a dial gauge, check the backlash of hypoid driven gear.

Hypoid driven gear backlash:
0.10 — 0.15 mm (0.0039 — 0.0059 in)

If the hypoid driven gear backlash is not within the specification, adjust the side bearing preload or repair if necessary.

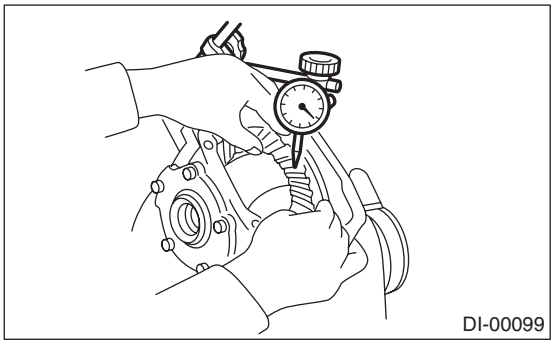
DI-00099

3. TOOTH CONTACT BETWEEN HYPOID DRIVEN GEAR AND DRIVE PINION

Inspect the tooth contact between hypoid driven gear and drive pinion. <Ref. to DI-52, ASSEMBLY, Rear Differential (VA-type).>

4. COMPANION FLANGE

1) If rust or dirt is attached to the companion flange, remove them.
2) Set a dial gauge at a companion flange surface (mating surface of propeller shaft and companion flange), and then measure the companion flange runout.

Limit of runout:
0.08 mm (0.003 in)

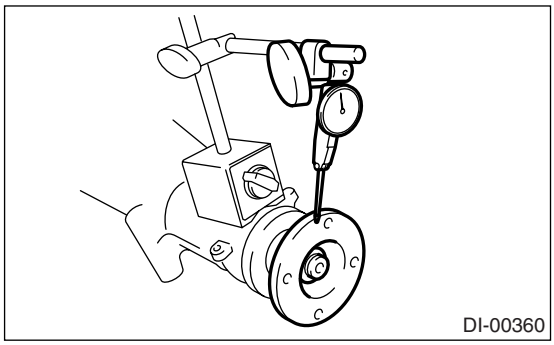

3) Set the gauge inside of the companion flange, and measure the runout.

Limit of runout:
0.08 mm (0.003 in)

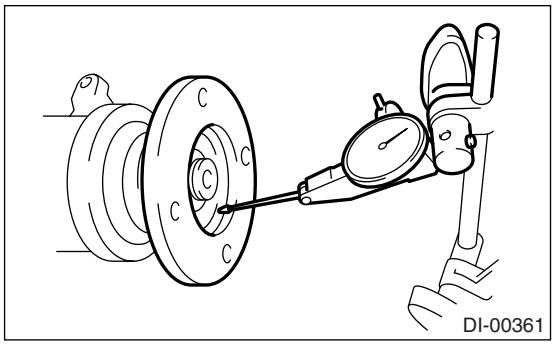

4) If either runout exceeds the limit, move the phase of companion flange and drive pinion 90° each, and find the point that the runout is within the limit.
5) If the runout exceeds the limit after changing the phase, replace the companion flange and recheck the runout.
6) If the runout exceeds the limit after replacing the companion flange, the drive pinion may be assembled incorrectly or bearing is faulty.

F: ADJUSTMENT

1. SIDE GEAR BACKLASH

Adjust the side gear backlash. (VA1-type)
<Ref. to DI-52, ASSEMBLY, Rear Differential (VA-type).>

2. HYPOID DRIVEN GEAR BACKLASH

Adjust hypoid driven gear backlash.
<Ref. to DI-52, ASSEMBLY, Rear Differential (VA-type).>

3. TOOTH CONTACT BETWEEN HYPOID DRIVEN GEAR AND DRIVE PINION

Adjust the tooth contact between hypoid driven gear and drive pinion gear.
<Ref. to DI-52, ASSEMBLY, Rear Differential (VA-type).>

6. Rear Differential Front Oil Seal

A: INSPECTION

Make sure that there is no leakage from front oil seal portion. If there is any leakage, replace the oil seal and inspect the propeller shaft.

B: REPLACEMENT

1) Disconnect the ground cable from battery.
2) Move the select lever or gear shift lever to neutral.
3) Release the parking brake.
4) Remove the oil drain plug, and drain gear oil.

- Except for VA2-type

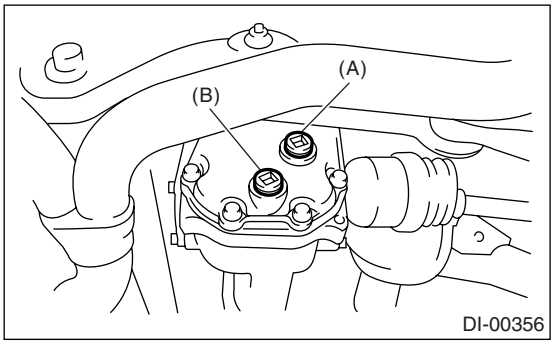

(A) Filler plug
(B) Drain plug

- VA2-type

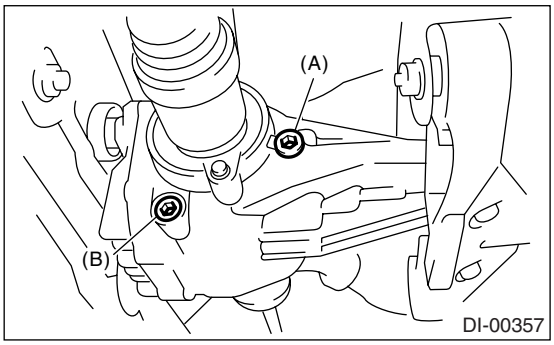

(A) Filler plug
(B) Drain plug

5) Install the oil drain plug.

NOTE:
- Apply liquid gasket to the oil drain plug for T-type.
- Use a new aluminum gasket for VA1-type.
- Use a new metal gasket for VA2-type.

Liquid gasket:
THREE BOND 1105 (Part No. 004403010) or equivalent

Tightening torque:
T-type:
49 N·m (5.0 kgf-m, 36.2 ft-lb)
VA1-type:
34 N·m (3.5 kgf-m, 25.3 ft-lb)
For VA2-type:
29 N·m (3.0 kgf-m, 21.7 ft-lb)

6) Jack-up the rear wheel and support the body with rigid racks.
7) Remove the rear exhaust pipe and muffler.
8) Remove the propeller shaft. <Ref. to DS-10, REMOVAL, Propeller Shaft.>
9) Remove the self-locking nut while holding the companion flange with ST.
ST 498427200 FLANGE WRENCH

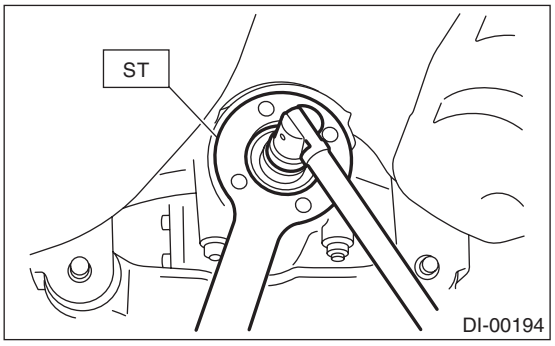

10) Extract the companion flange using ST.
ST 399703600 PULLER ASSY

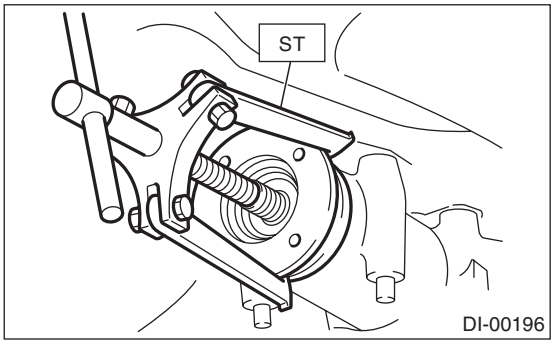

11) Remove the oil seal using ST or screwdriver.
ST 398527700 PULLER ASSY

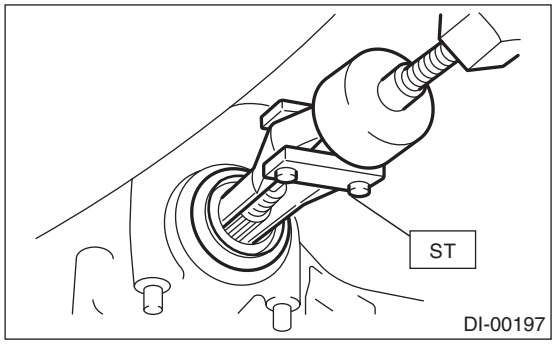

12) Install a new oil seal with ST.

ST 498447120 OIL SEAL INSTALLER

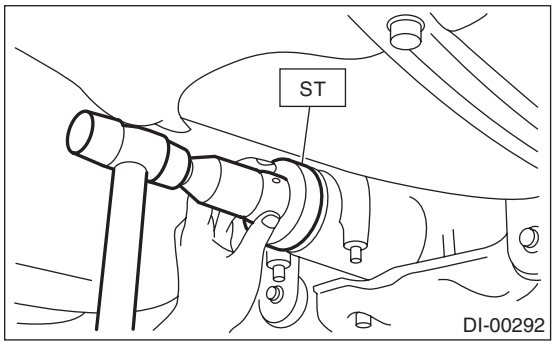

13) Install the companion flange.

NOTE:
Use a plastic hammer to install companion flange.

14) Tighten the self-locking nut within the specified torque range so that the turning resistance of companion flange becomes the same as that of before oil seal replacement.
ST 498427200 FLANGE WRENCH

NOTE:
Use a new self-locking nut.

Tightening torque:
T-type:
181 N·m (18.5 kgf-m, 134 ft-lb)
VA-type:
191 N·m (19.5 kgf-m, 141 ft-lb)

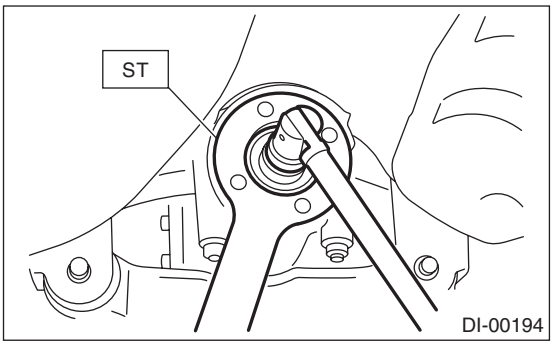

15) Hereafter, reassemble in the reverse order of disassembly.

7. Rear Differential Side Oil Seal

A: INSPECTION

Make sure that there is no leakage from side oil seal. If there is any leakage, replace the oil seal.

B: REPLACEMENT

1) Remove the rear differential. <Ref. to DI-28, REMOVAL, Rear Differential (T-type).> <Ref. to DI-44, REMOVAL, Rear Differential (VA-type).>
2) Remove the rear differential side oil seal using a screwdriver wrapped with vinyl tape to prevent the side retainer from scratches.
3) Using the ST, install the oil seal to the side retainer.

- T-type and VA2-type

ST 398437700 DRIFT

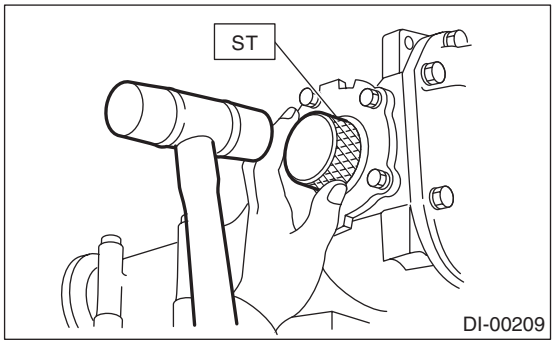

- VA1-type

ST 498447100 INSTALLER

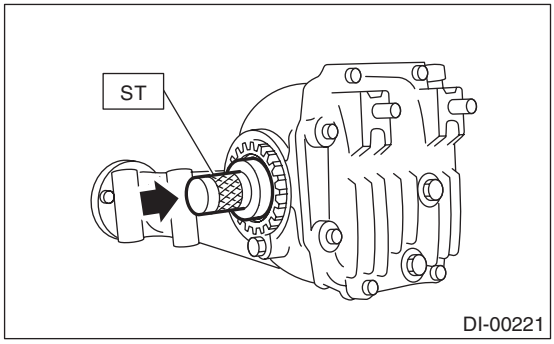

4) Install the rear differential. <Ref. to DI-29, INSTALLATION, Rear Differential (T-type).> <Ref. to DI-45, INSTALLATION, Rear Differential (VA-type).>

8. Rear Differential Front Member

A: REMOVAL

1) Disconnect the ground cable from battery.
2) Lift-up the vehicle.
3) Support the rear differential using transmission jack, and then remove the rear differential front member.

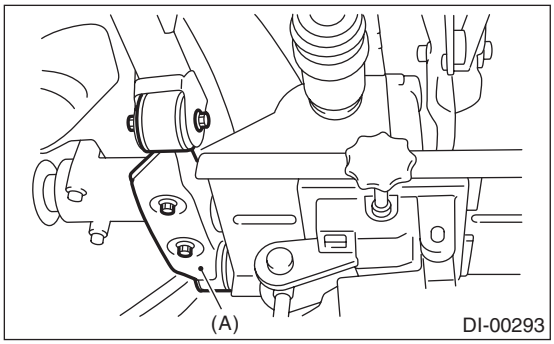

(A) Rear differential front member

B: INSTALLATION

Install the rear differential front member with a new self-locking nut.

Tightening torque:
T1: 65 N·m (6.6 kgf-m, 48 ft-lb)
T2: 110 N·m (11.2 kgf-m, 81 ft-lb)

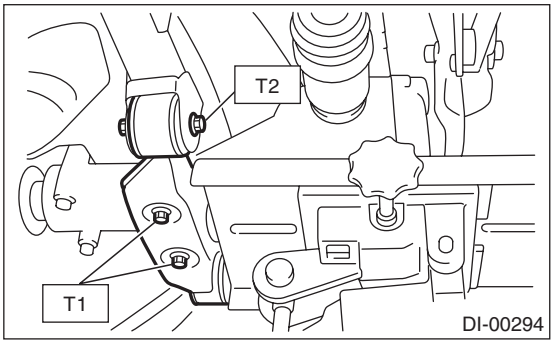

C: INSPECTION

1) Check the rear differential front member for damage, bend and corrosion.
If damage, bend or corrosion is excessive, replace the rear differential front member.
2) Check the bushings of rear differential member for cracking, hardening and damage.
If cracking, hardening or damage is excessive, replace rear differential front member.

9. General Diagnostic Table

A: INSPECTION

Symptom or trouble	Possible cause	Remedy
1. Oil leakage	(1) Worn, scratched or incorrectly seated front or side oil seal. Scored, battered or excessively worn sliding surface of companion flange.	Correct or replace.
	(2) Clogged or damaged air breather.	Clean, repair or replace.
	(3) Loose bolts on differential spindle or side retainer, or incorrectly fitted O-ring.	Tighten the bolts to specified torque. Replace the O-ring.
	(4) Loose rear cover attaching bolts or damaged gasket.	Tighten the bolts to specified torque. Replace gasket and apply liquid gasket.
	(5) Loose oil filler or drain plug.	Retighten and apply liquid gasket.
	(6) Wear, damage or incorrectly fitting for spindle, side retainer and oil seal.	Correct or replace.
2. Seizure NOTE: Seized or damaged parts should be replaced, and also other parts should be thoroughly checked for any defect and should be repaired or replaced as required.	(1) Insufficient backlash for hypoid gear.	Readjust or replace.
	(2) Excessive preload for side, rear or front bearing.	Readjust or replace.
	(3) Insufficient or improper oil used.	Replace seized part and fill with specified oil to specified level.
3. Damage NOTE: Damaged parts should be replaced, and also other parts should be thoroughly checked for any defect and should be repaired or replaced as required.	(1) Improper backlash for hypoid gear.	Replace.
	(2) Insufficient or excessive preload for side, rear or front bearing.	Readjust or replace.
	(3) Excessive backlash for differential gear.	Replace gear or thrust washer.
	(4) Loose bolts and nuts such as hypoid driven gear bolt.	Retightening.
	(5) Damage due to overloading.	Replace.
4. Noises when starting or shifting gears NOTE: Noises may be caused by differential assembly, universal joint, wheel bearing, etc. Find out what is actually making noise before disassembling.	(1) Excessive backlash for hypoid gear.	Readjust.
	(2) Excessive backlash for differential gear.	Replace gear or thrust washer.
	(3) Insufficient preload for front or rear bearing.	Readjust.
	(4) Loose drive pinion nut.	Tighten to specified torque.
	(5) Loose bolts and nuts such as side bearing retainer attaching bolt.	Tighten to specified torque.
5. Noises when cornering	(1) Damaged differential gear.	Replace.
	(2) Excessive wear or damage of thrust washer.	Replace.
	(3) Broken pinion mate shaft.	Replace.
	(4) Seized or damaged side bearing.	Replace.

Symptom or trouble	Possible cause	Remedy
6. Gear noise NOTE: Since noises from engine, muffler, transmission, propeller shaft, wheel bearings, tires, and body are sometimes mistaken for noises from differential assembly, be careful in checking them. Inspection methods to locate noises include coasting, accelerating, cruising, and jacking-up all four wheels. Perform these inspections according to condition of trouble. When listening to noises, shift gears into four wheel drive and fourth speed position, trying to pick up only differential noise.	(1) Improper tooth contact of hypoid gear.	Readjust or replace hypoid gear set.
	(2) Improper backlash for hypoid gear.	Readjust.
	(3) Scored or chipped teeth of hypoid gear.	Replace hypoid gear set.
	(4) Seized hypoid gear.	Replace hypoid gear set.
	(5) Improper preload for front or rear bearings.	Readjust.
	(6) Seized, scored or chipped front or rear bearing.	Replace.
	(7) Seized, scored or chipped side bearing.	Replace.
	(8) Vibrating differential carrier.	Replace.

TRANSFER CASE

TC

		Page
1.	General Description	2
2.	Transfer Case and Extension Case Assembly	3
3.	Transfer Clutch	4
4.	Extension Case	5
5.	Extension Case and Intermediate Case	6
6.	Oil Seal	7
7.	Transfer Drive Gear	8
8.	Transfer Driven Gear	9
9.	Reduction Drive Gear	10
10.	Center Differential Carrier	11
11.	Reduction Driven Gear	12
12.	Center Differential	13
13.	Transfer Clutch Pressure Test	14

1. General Description

A: NOTE

For general description, refer to “4AT”, “5AT” or “5MT” section.
4AT model:
<Ref. to 4AT-2, General Description.>
5AT model:
<Ref. to 5AT-2, General Description.>
5MT model:
<Ref. to 5MT-2, General Description.>

2. Transfer Case and Extension Case Assembly

A: NOTE

For removal, installation and inspection, refer to “5MT” section. <Ref. to 5MT-37, Transfer Case and Extension Case Assembly.>

3. Transfer Clutch

A: NOTE

For removal, installation and inspection, refer to "4AT" or "5AT" section.
4AT model:
<Ref. to 4AT-75, Transfer Clutch.>
5AT model:
<Ref. to 5AT-71, Transfer Clutch.>

4. Extension Case

A: NOTE

For removal, installation and inspection, refer to “4AT” section. <Ref. to 4AT-73, Extension Case.>

5. Extension Case and Intermediate Case

A: NOTE

For removal, installation and inspection, refer to “5AT” section. <Ref. to 5AT-69, Extension Case and Intermediate Case.>

6. Oil Seal

A: NOTE

For replacement and inspection, refer to “4AT”, “5AT” or “5MT” section.
4AT model:
<Ref. to 4AT-46, Extension Case Oil Seal.> <Ref. to 4AT-47, Differential Side Retainer Oil Seal.>
5AT model:
<Ref. to 5AT-48, Extension Case Oil Seal.> <Ref. to 5AT-49, Differential Side Retainer Oil Seal.>
5MT model:
<Ref. to 5MT-32, Oil Seal.> <Ref. to 5MT-33, Differential Side Retainer Oil Seal.>

7. Transfer Drive Gear

A: NOTE

For removal, installation and inspection, refer to “5MT” section. <Ref. to 5MT-41, Transfer Drive Gear.>

8. Transfer Driven Gear

A: NOTE

For removal, installation and inspection, refer to “5MT” section. <Ref. to 5MT-43, Transfer Driven Gear.>

9. Reduction Drive Gear

A: NOTE

For removal, installation and inspection, refer to “4AT” section. <Ref. to 4AT-82, Reduction Drive Gear.>

10.Center Differential Carrier

A: NOTE

For removal, installation and inspection, refer to “5AT” section.
<Ref. to 5AT-76, Center Differential Carrier.>

11.Reduction Driven Gear

A: NOTE

For removal, installation and inspection, refer to "4AT" or "5AT" section.
4AT model:
<Ref. to 4AT-80, Reduction Driven Gear.>
5AT model:
<Ref. to 5AT-74, Reduction Driven Gear.>

12.Center Differential

A: NOTE

For removal, installation and inspection, refer to “5MT” section. <Ref. to 5MT-45, Center Differential.>

13. Transfer Clutch Pressure Test

A: NOTE

For inspection, refer to “4AT” or “5AT” section.
4AT model:
<Ref. to 4AT-36, Transfer Clutch Pressure Test.>
5AT model:
<Ref. to 5AT-36, Transfer Clutch Pressure Test.>

DRIVE SHAFT SYSTEM

DS

		Page
1.	General Description	2
2.	Propeller Shaft	10
3.	Front Axle	13
4.	Front Hub Unit Bearing	17
5.	Rear Hub Unit Bearing	19
6.	Front Drive Shaft	22
7.	Rear Drive Shaft	26
8.	General Diagnostic Table	30

1. General Description

A: SPECIFICATION

1. PROPELLER SHAFT

Model			5MT	4AT	5AT
Propeller shaft type			EDJ		
Propeller shaft length: L		mm (in)	1,490 (58.66)	1,430 (56.30)	1,317 (51.85)
Front propeller shaft Joint-to-joint length: L_1		mm (in)	735 (28.9)	675 (26.6)	562 (22.1)
Rear propeller shaft Joint-to-Joint length: L_2		mm (in)	755 (29.7)		
Outer diameter of tube:	mm (in)	D_1	63.5 (2.50)		
		D_2	57.5 (2.26)		

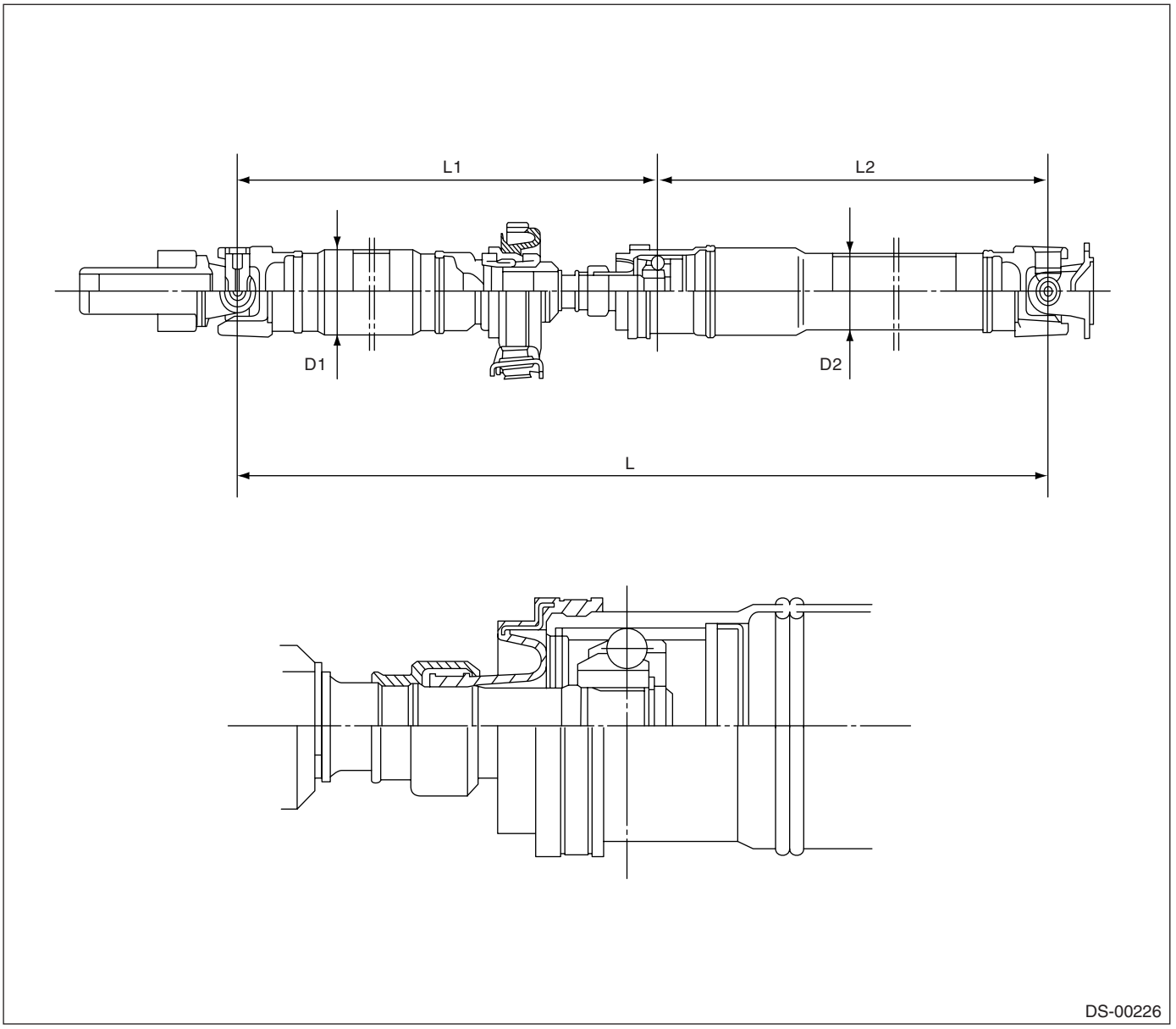

2. FRONT DRIVE SHAFT ASSEMBLY

Model	Type of drive shaft	Axle diameter ϕ D mm (in)	Axle length L mm (in)
Apply all	EBJ87+PTJ82	26 (1.0)	349.6 (13.76)

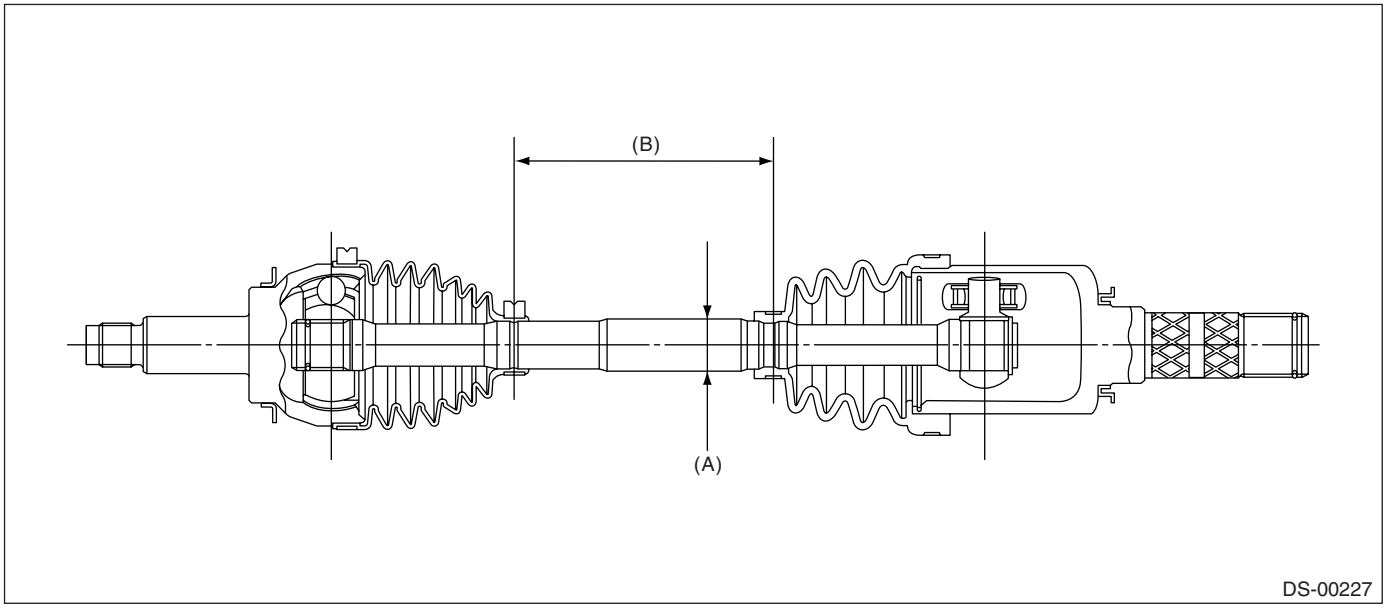

(A) Axle diameter (B) Axle length

3. REAR DRIVE SHAFT ASSEMBLY

Model	Type of drive shaft	Axle diameter ϕ D mm (in)	Axle length L mm (in)
2.5 i AT	BJ75+DOJ75	22 (0.87)	366.5 (14.43)
Except for 2.5 i AT	EBJ82+DOJ79	22 (0.87)	375.1 (14.77)

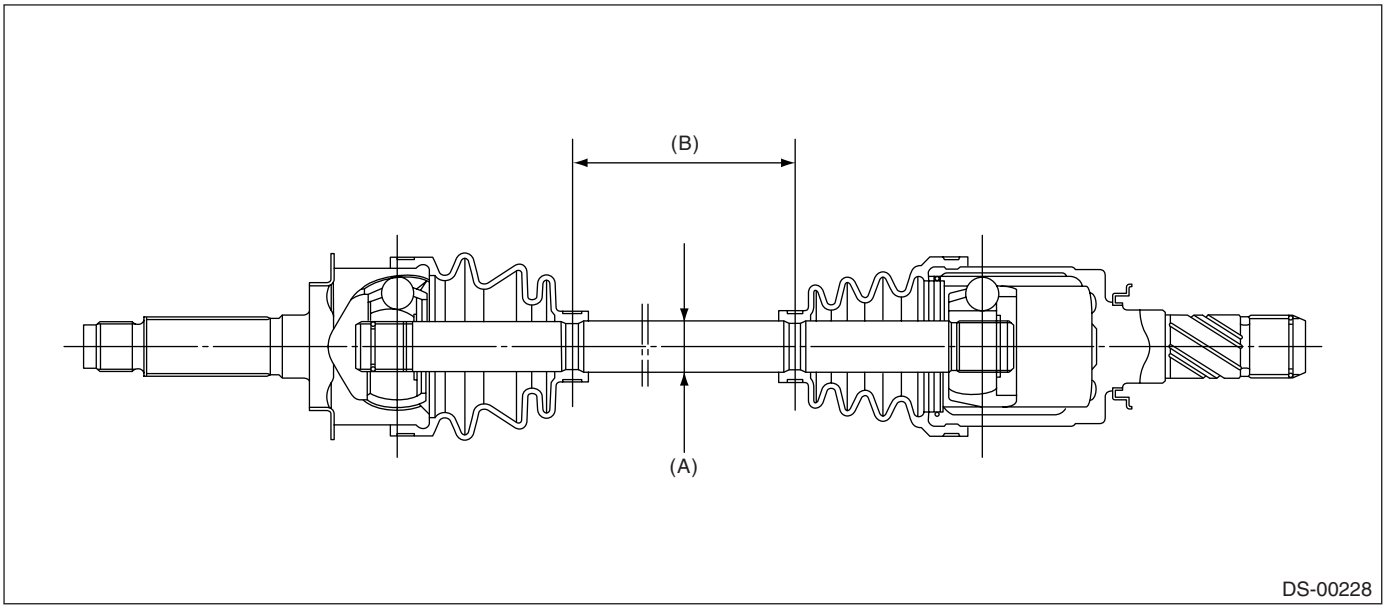

(A) Axle diameter (B) Axle length

B: COMPONENT

1. PROPELLER SHAFT

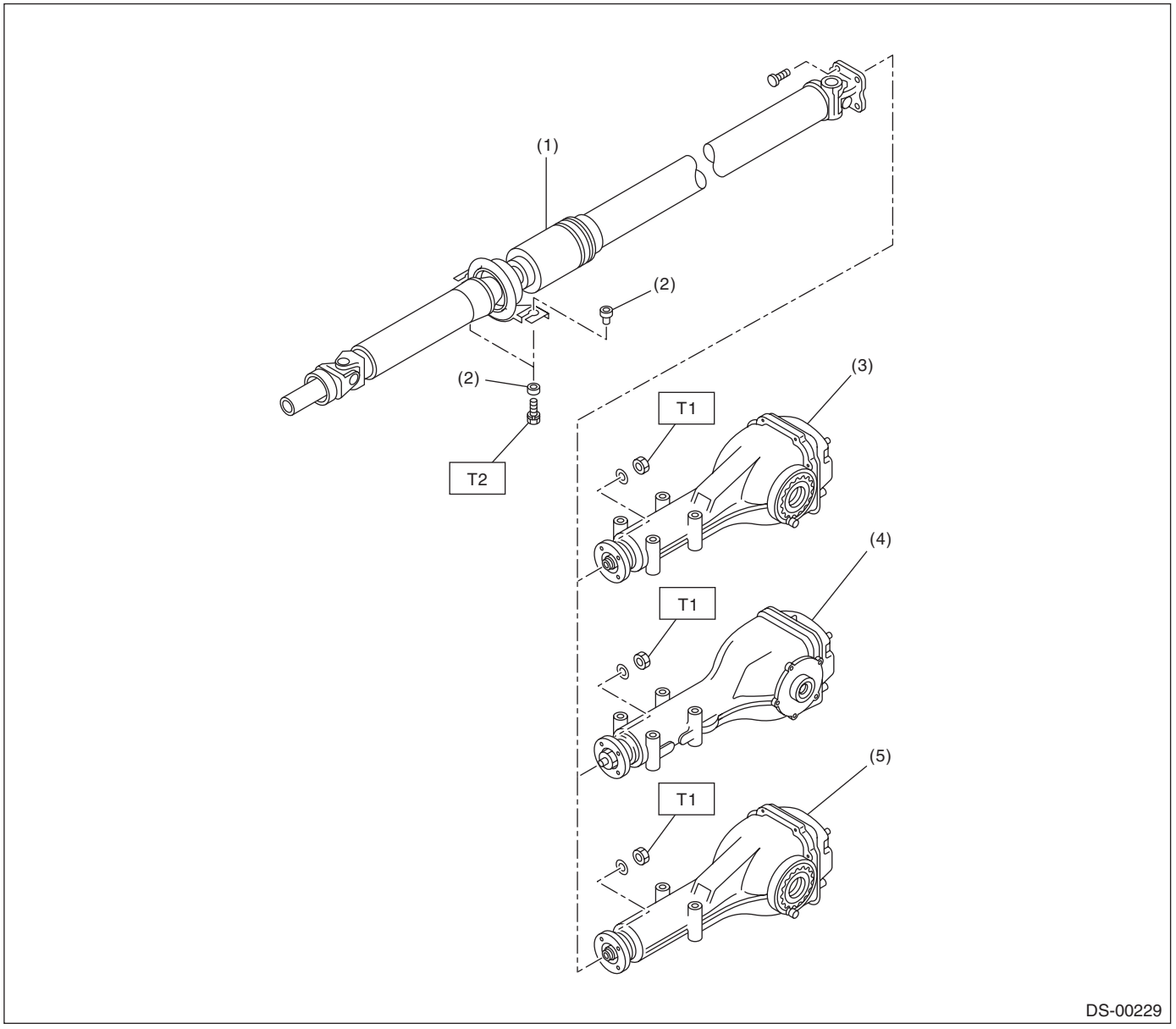

(1) Propeller shaft
(2) Bushing
(3) Rear differential (VA1-type)
(4) Rear differential (T-type)
(5) Rear differential (VA2-type)

Tightening torque: N·m (kgf-m, ft-lb)
T1: 31 (3.2, 23.1)
T2: 52 (5.3, 38.3)

2. FRONT AXLE

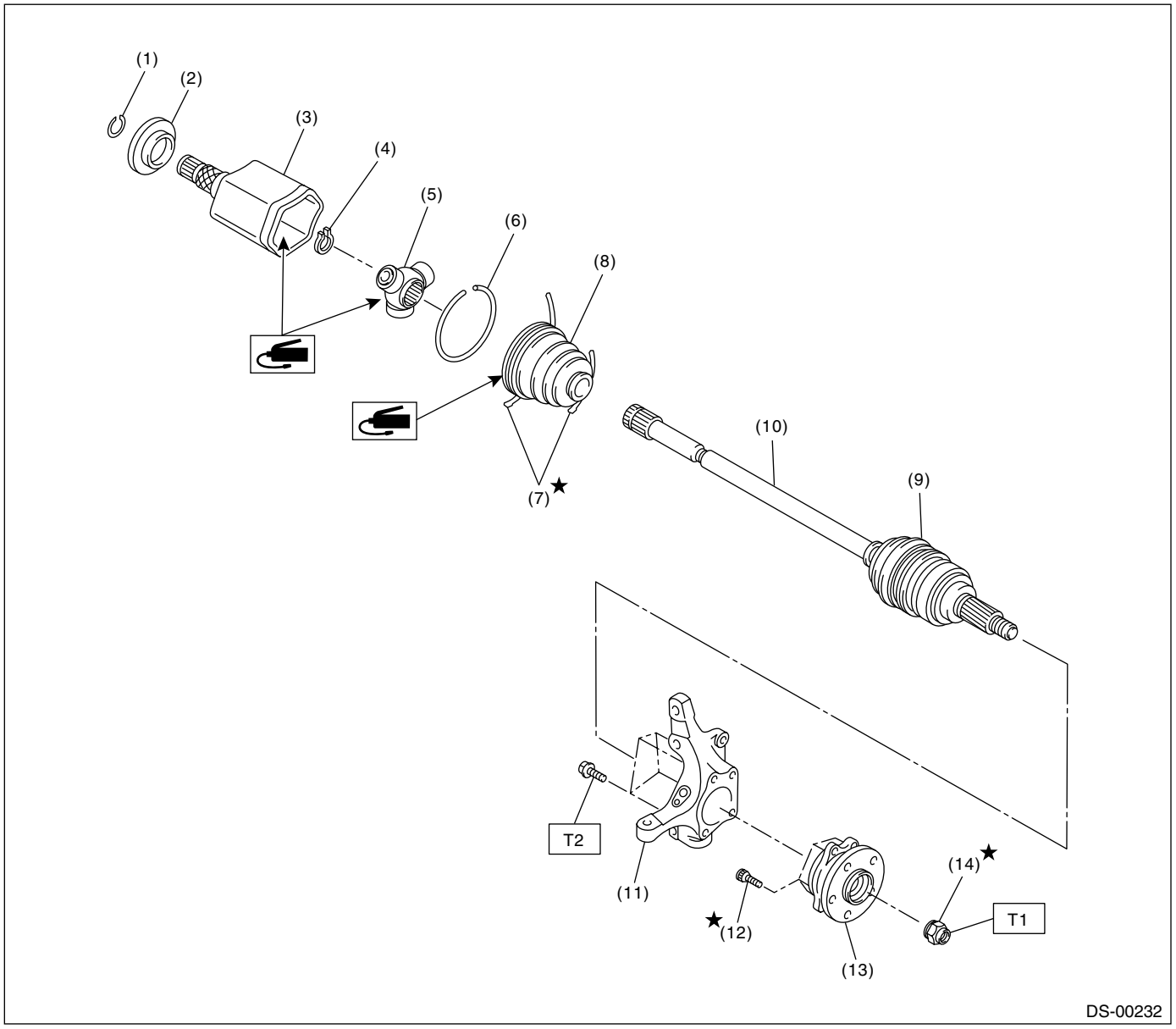

(1) Circlip
(2) Baffle plate
(3) Outer race (PTJ)
(4) Snap ring
(5) Trunnion
(6) Snap ring
(7) Boot band
(8) Boot (PTJ)
(9) Boot (EBJ)
(10) EBJ shaft ASSY
(11) Housing
(12) Hub bolt
(13) Front hub unit bearing
(14) Axle nut

Tightening torque: N·m (kgf-m, ft-lb)
T1: 220 (22.4, 162)
T2: 65 (6.6, 47.9)

3. REAR AXLE

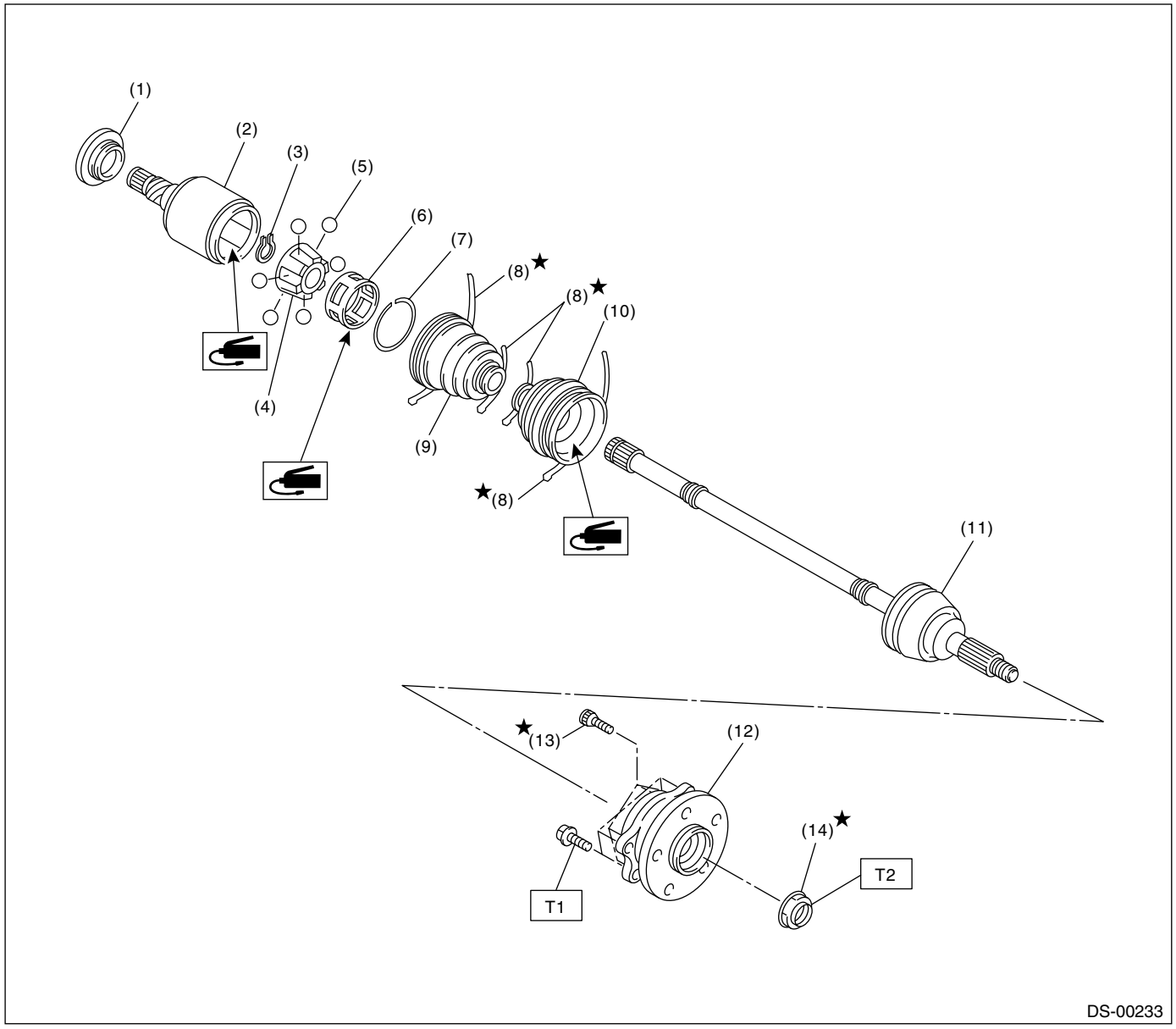

(1) Baffle plate (DOJ)
(2) Outer race (DOJ)
(3) Snap ring
(4) Inner race
(5) Ball
(6) Cage
(7) Snap ring
(8) Boot band
(9) Boot (DOJ)
(10) Boot (BJ)
(11) BJ shaft ASSY (2.5 i AT model)
EBJ shaft ASSY (Except for 2.5 i AT model)
(12) Rear hub unit bearing
(13) Hub bolt
(14) Axle nut (olive color)

Tightening torque: N·m (kgf-m, ft-lb)
T1: 65 (6.6, 47.9)
T2: 240 (24.5, 177)

C: CAUTION

• Wear work clothing, including a cap, protective goggles, and protective shoes during operation.
• Remove contamination including dirt and corrosion before removal, installation or disassembly.
• Keep the disassembled parts in order and protect them from dust and dirt.
• Before removal, installation or disassembly, be sure to clarify the failure. Avoid unnecessary removal, installation, disassembly and replacement.
• Be careful not to burn yourself, because each part on the vehicle is hot after running.
• Use SUBARU genuine grease etc. or the equivalent. Do not mix grease, etc. with that of another grade or from other manufacturers.
• Be sure to tighten fasteners including bolts and nuts to the specified torque.
• Place shop jacks or rigid racks at the specified points.
• Apply grease onto sliding or revolution surfaces before installation.
• Before installing snap rings, apply sufficient amount of grease to avoid damage and deformation.
• Before securing a part on a vise, place cushioning material such as wood blocks, aluminum plate, or shop cloth between the part and the vise.

D: PREPARATION TOOL

1. SPECIAL TOOL

ILLUSTRATION	TOOL NUMBER	DESCRIPTION	REMARKS
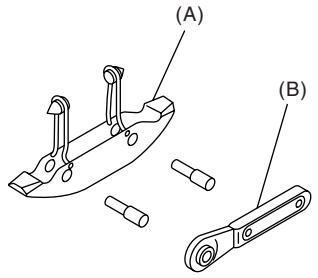 ST-925091000	925091000	BAND TIGHTENING TOOL	Used for tightening boot band. (A) Jig for band (B) Ratchet wrench
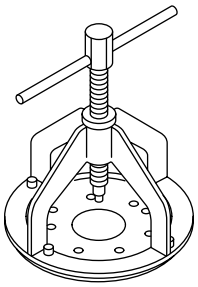 ST-926470000	926470000	AXLE SHAFT PULLER	Used for removing axle shaft.
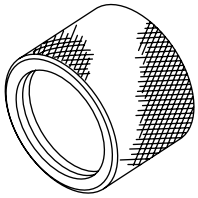 ST18675AA000	18675AA000	DIFFERENTIAL SIDE OIL SEAL INSTALLER	Used for installing differential side retainer oil seal.

ILLUSTRATION	TOOL NUMBER	DESCRIPTION	REMARKS
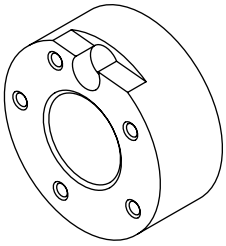 ST-927080000	927080000	HUB STAND	Used for assembling hub bolt in hub.
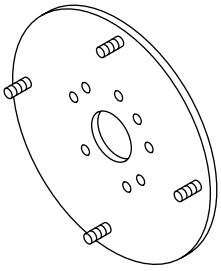 ST-927140000	927140000	AXLE SHAFT PULLER PLATE	Same as plate 2 included in AXLE SHAFT PULLER (926470000).
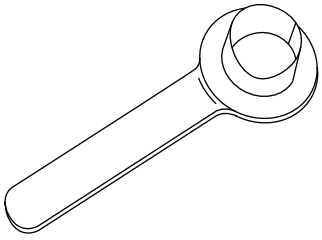 ST28099PA090	28099PA090	OIL SEAL PROTECTOR	• Used for installing rear drive shaft into rear differential. • For protecting oil seal.
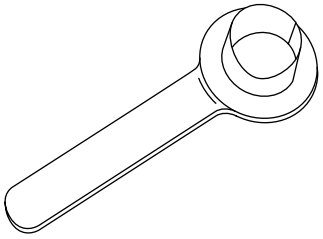 ST28399SA010	28399SA010	OIL SEAL PROTECTOR	• Used for installing front drive shaft into front differential. • For protecting oil seal.

ILLUSTRATION	TOOL NUMBER	DESCRIPTION	REMARKS
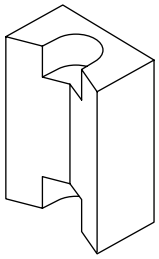 ST28399AG000	28399AG000 (New adopted tool)	HUB STAND	Used for extracting hub bolt.

2. GENERAL TOOL

DESCRIPTION	REMARKS
Puller	Used for removing ball joint from knuckle arm.
Dial gauge	Used for inspecting propeller shaft run-out.
Extension cap	Used for preventing leak of gear oil or ATF.
Bar	Used for extracting drive shaft.

2. Propeller Shaft

A: REMOVAL

NOTE:
• Before removing propeller shaft, wrap metal parts with a cloth or rubber material.
• In case of DOJ type, before removing propeller shaft, wrap metal parts (installed at the rubber boot of center DOJ) with a cloth or rubber material, as shown in the figure. Rubber boot may be damaged due to interference with adjacent metal parts while bending the DOJ during removal.

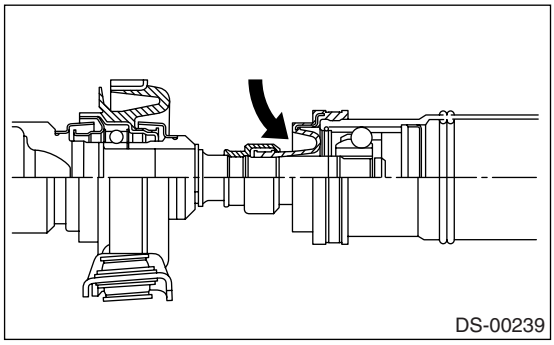
DS-00239

1) Disconnect the ground cable from battery.
2) Shift the select lever or gear shift lever to neutral.
3) Release the parking brake.
4) Lift-up the vehicle.
5) Remove the center exhaust pipe.
6) Remove the rear exhaust pipe and muffler.
7) Remove the heat shield cover.

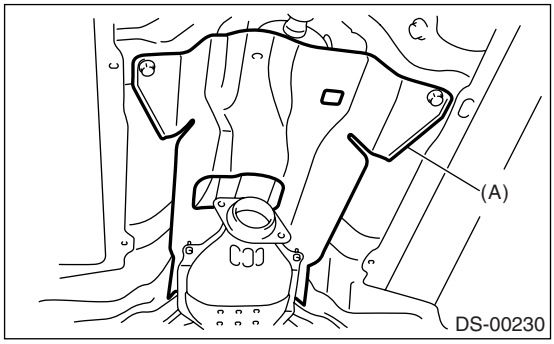

DS-00230

(A) Heat shield cover

8) Make matching marks on the flange yoke and rear differential before removal.

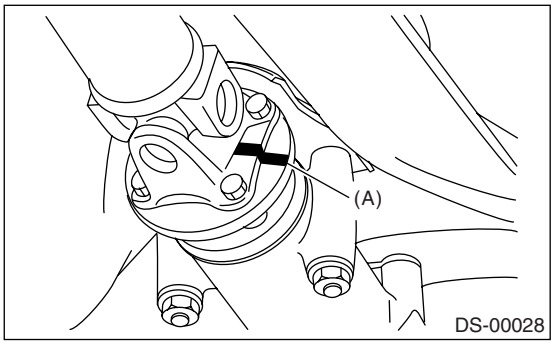

DS-00028

(A) Alignment mark

9) Remove the three bolts which hold propeller shaft to rear differential.
10) Remove the remaining bolt.
11) Remove the two bolts which hold center bearing to vehicle body.

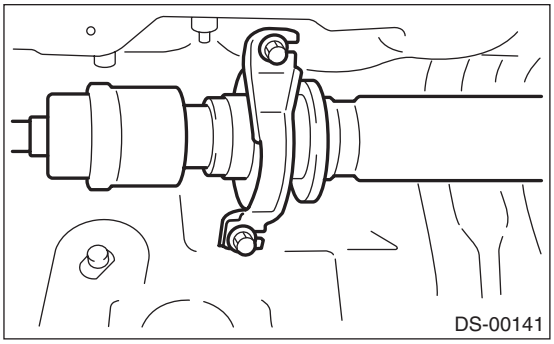
DS-00141

12) Remove the propeller shaft from transmission.

CAUTION:
• Be careful not to damage oil seals and frictional surface of sleeve yoke.
• Cover the center exhaust pipe with a cloth to keep off any ATF or oil spilled from transmission when removing propeller shaft.

NOTE:
Use a container to catch ATF or oil flowing from propeller shaft.

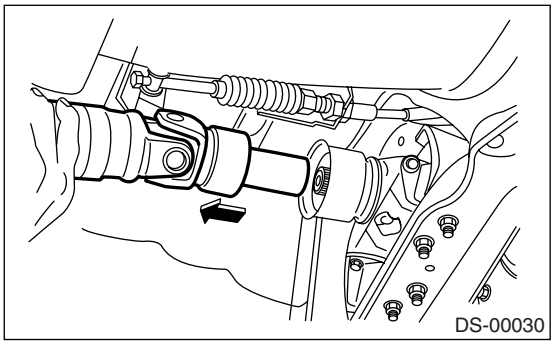
DS-00030

13) Install the extension cap to transmission.

NOTE:
If extension cap is not available, place vinyl bag over opening and fasten with string to prevent gear oil or ATF from leaking.

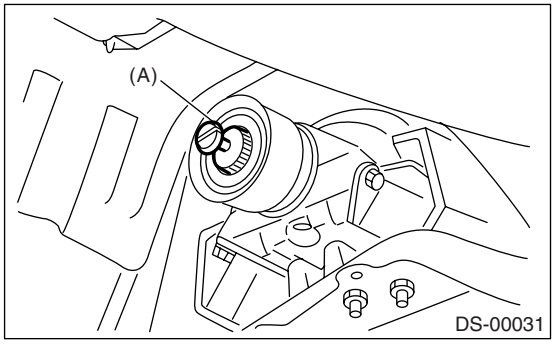

(A) Extension cap

B: INSTALLATION

1) Insert the sleeve yoke into the transmission and attach center bearing to body.

Tightening torque:
52 N·m (5.3 kgf-m, 38.3 ft-lb)

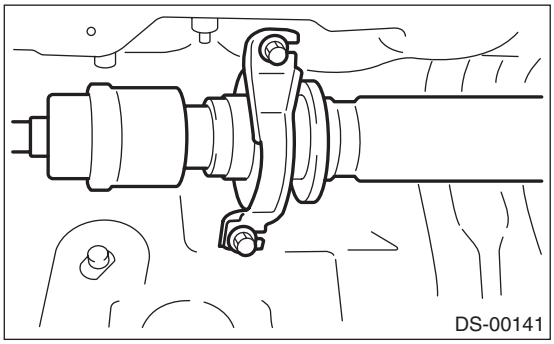

2) Align the matching marks and connect the flange yoke and rear differential.

Tightening torque:
31 N·m (3.2 kgf-m, 23.1 ft-lb)

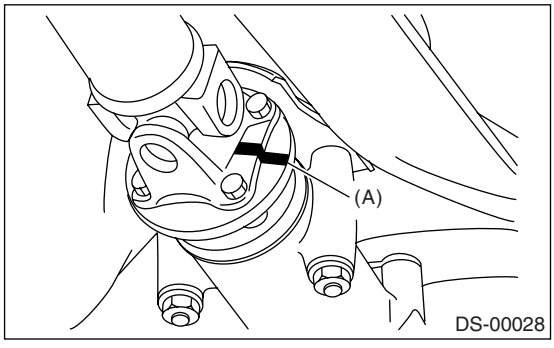

(A) Alignment mark

3) Install the heat shield cover.
4) Install the center exhaust pipe.
5) Install the rear exhaust pipe and muffler.
6) Lower the vehicle.
7) Connect the battery ground cable to battery.

C: INSPECTION

NOTE:
Do not disassemble propeller shaft. Check the following and replace if necessary.

- Tube surface for dents of cracks
- Splines for deformation or abnormal wear
- Joints for non-smooth operation or abnormal noise
- Center bearing for free play, noise or non-smooth operation.
- Oil seals for abnormal wear or damage
- Center bearing for breakage

Check the following points with propeller shaft installed in vehicle.

1. JOINTS AND CONNECTIONS

1) Remove the center exhaust pipe.
2) Remove the heat shield cover.
3) Check for any looseness of the yoke flange mounting bolts which connect to rear differential and center bearing bracket mounting bolts.

2. SPLINES AND BEARING

1) Remove the center exhaust pipe.
2) Remove the rear exhaust pipe and muffler.
3) Remove the heat shield cover.
4) Turn the propeller shaft by hand to see if abnormal free play exists at splines. Also move yokes to see if abnormal free play exists at spiders and bearings.

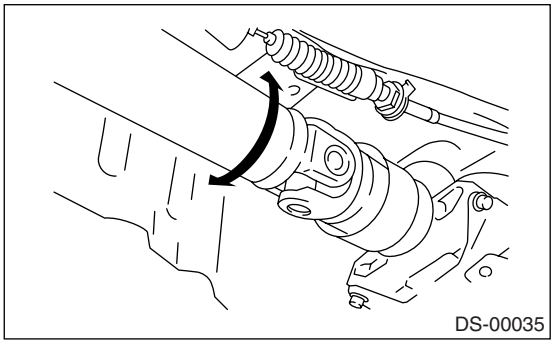

3. RUNOUT OF PROPELLER SHAFT

1) Remove the center exhaust pipe.
2) Remove the rear exhaust pipe and muffler.
3) Remove the heat shield cover.
4) Set the dial gauge with its indicator stem at center of propeller shaft tube.
5) Turn the propeller shaft slowly by hands to check for “runout” of propeller shaft.

Runout:
Service limit 0.6 mm (0.024 in)

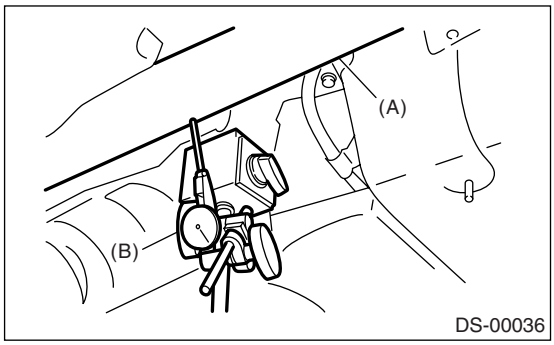

(A) Propeller shaft
(B) Dial gauge

4. CENTER BEARING FREE PLAY

1) Remove the front and center exhaust pipe.
2) Remove the rear exhaust pipe and muffler.
3) Remove the heat shield cover.
4) Move the propeller shaft near center bearing up and down, and left and right with your hand to check for any abnormal bearing free play.

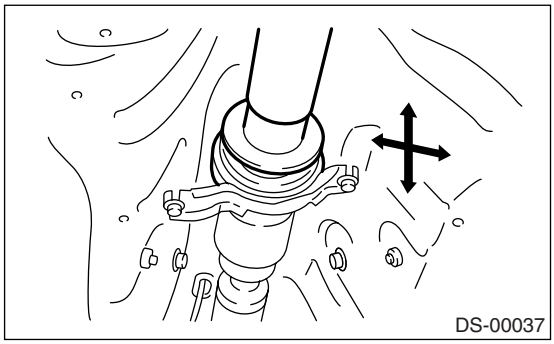

3. Front Axle

A: REMOVAL

1) Disconnect the ground cable from battery.
2) Lift-up the vehicle and remove the front wheels.
3) Unlock the axle nut.

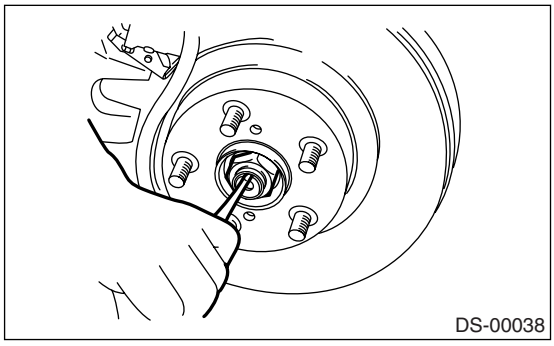

4) Remove the axle nut using a socket wrench while depressing the brake pedal.

CAUTION:
Remove the wheel before loosening the axle nut. Failure to follow this rule may damage the wheel bearings.

5) Remove the stabilizer link.

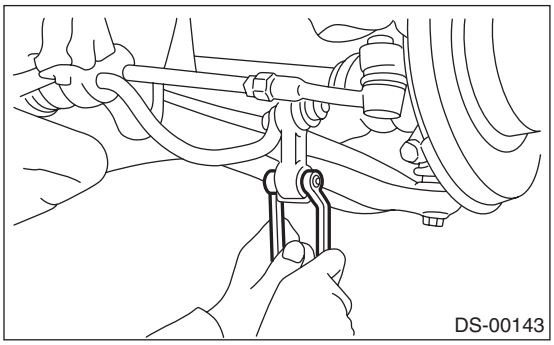

6) Remove the disc brake caliper from housing, and suspend it from strut using a wire.
7) Remove the disc rotor from hub.

NOTE:
If the disc rotor seizes up within hub, drive disc rotor out by installing an 8-mm bolt in screw hole on rotor.

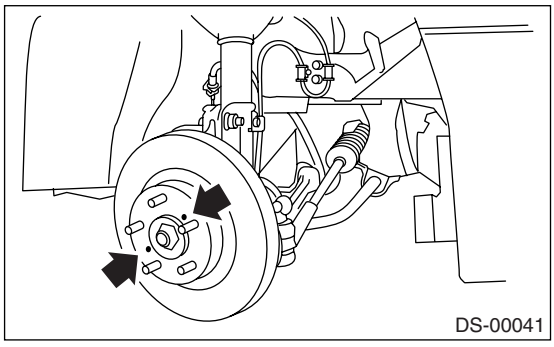

8) Remove the cotter pin and castle nut which secure tie-rod end to housing knuckle arm.

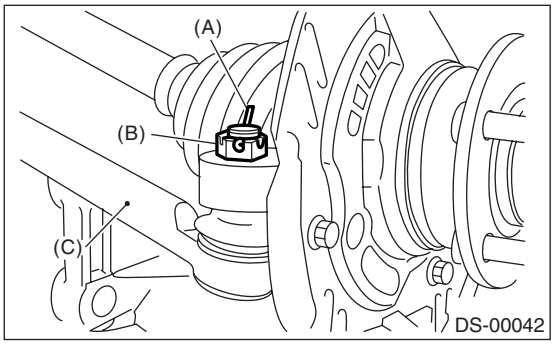

(A) Cotter pin
(B) Castle nut
(C) Tie-rod

9) Using a puller, remove the tie-rod ball joint from knuckle arm.

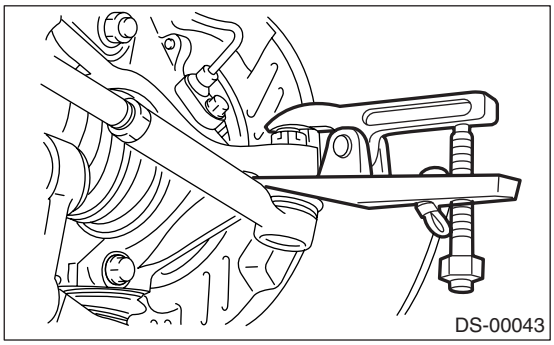

CAUTION:
When removing tie-rod, do not hit the tie-rod end with hammer.

10) Remove the ABS wheel speed sensor assembly and harness.

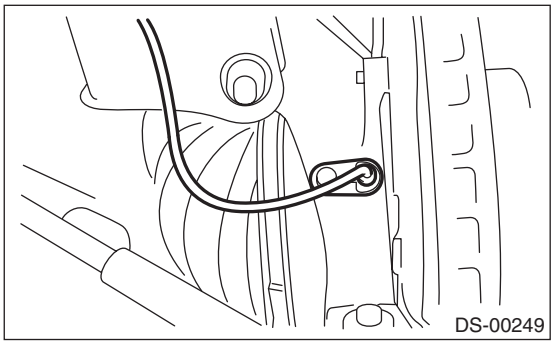

11) Remove the bolts which secure sensor harness to strut.

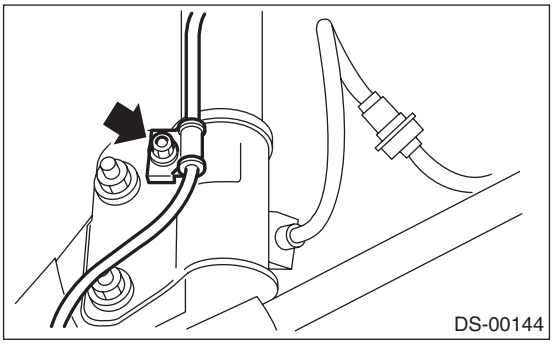

12) Remove the front arm ball joint from housing.

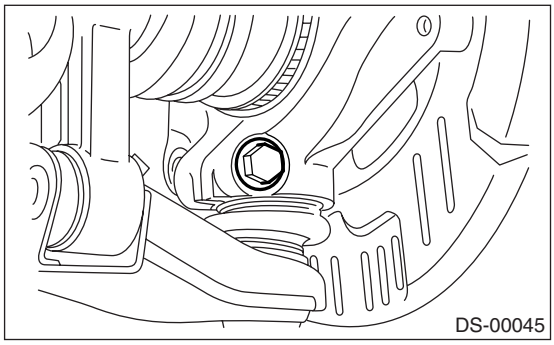

13) Remove the PTJ from transmission.
14) Remove the front drive shaft assembly from hub. If it is hard to remove, use STs.

ST1	926470000	AXLE SHAFT PULLER
ST2	927140000	AXLE SHAFT PULLER PLATE

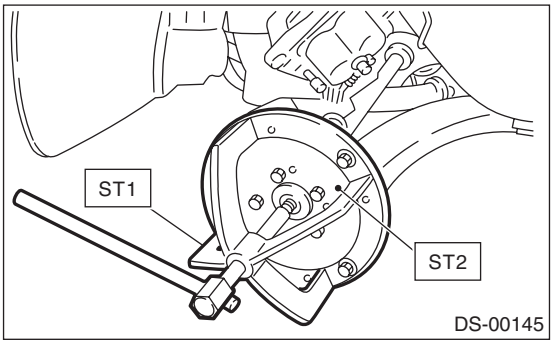

15) After scribing an alignment mark on camber adjusting bolt head, remove the bolts which connect housing and strut, and disconnect the housing from strut.

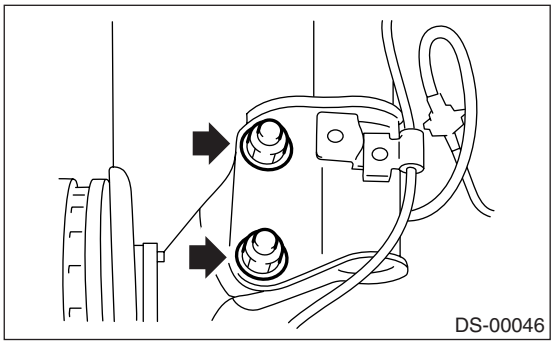

B: INSTALLATION

1) While aligning the alignment mark on the camber adjusting bolt head, tighten the housing and strut using a new self-locking nut.

Tightening torque:
152 N·m (15.5 kgf-m, 112 ft-lb)

2) Install the front drive shaft. <Ref. to DS-22, INSTALLATION, Front Drive Shaft.>
3) Install the front arm ball joint to housing.

Tightening torque:
50 N·m (5.1 kgf-m, 36.9 ft-lb)

4) Install the ABS wheel speed sensor harness to strut.
5) Install the ABS wheel speed sensor on housing.

Tightening torque:
7.5 N·m (0.76 kgf-m, 5.5 ft-lb)

6) Install the disc rotor on hub.
7) Install the disc brake caliper on housing.

Tightening torque:
80 N·m (8.2 kgf-m, 59 ft-lb)

8) Install the stabilizer link.
9) Connect the tie-rod end ball joint to the knuckle arm with a castle nut.

Tightening torque:
27.0 N·m (2.75 kgf-m, 19.9 ft-lb)

CAUTION:
When connecting, do not hit the cap at bottom of tie-rod end with hammer.

10) Tighten the castle nut to specified torque and tighten further within 60° until the pin hole is aligned with the slot in nut. Bend the cotter pin to lock.

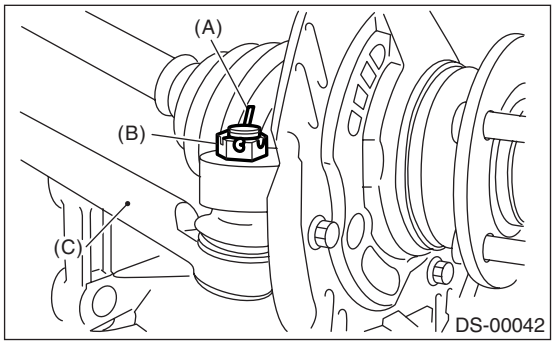

(A) Cotter pin
(B) Castle nut
(C) Tie-rod

11) While depressing the brake pedal, tighten a new axle nut (olive color) to specified torque and lock it securely.

Tightening torque:
220 N·m (22.4 kgf-m, 162 ft-lb)

CAUTION:
• Install the wheel after installation of axle nut. Failure to follow this rule may damage the wheel bearing.
• Be sure to tighten the axle nut to specified torque. Do not overtighten it as this may damage wheel bearing.

12) After tightening the axle nut, lock it securely.

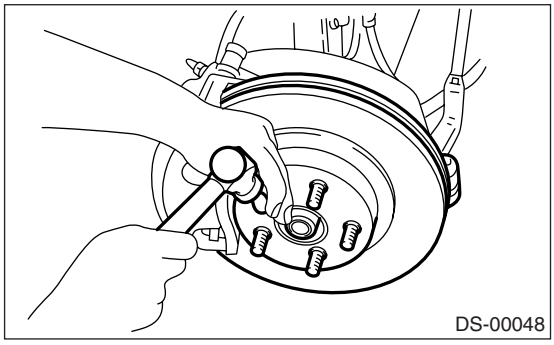

13) Install the wheel and tighten the wheel nuts to specified torque.

Tightening torque:
110 N·m (11.2 kgf-m, 81.1 ft-lb)

C: DISASSEMBLY

1) Remove the four bolts from housing, and remove the front hub unit bearing and disc cover.

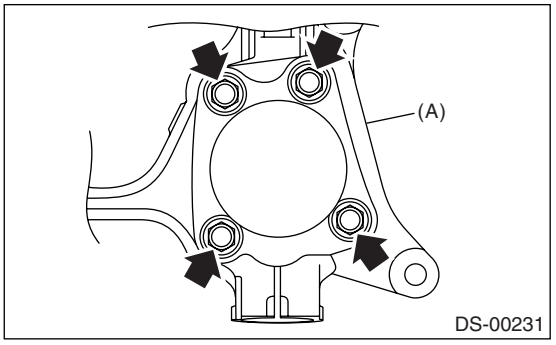

(A) Housing

CAUTION:
• Do not get closer the tool which charged magnetism to magnetic encorder.
• Be careful not to damage the magnetic encoder.

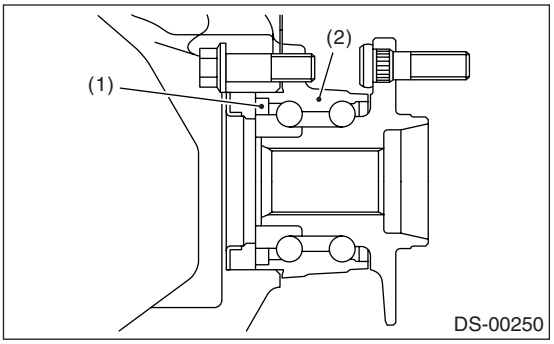

(1) Magnetic encoder
(2) Front hub unit bearing

2) Disassemble the front hub unit bearing. <Ref. to DS-18, DISASSEMBLY, Front Hub Unit Bearing.>

D: ASSEMBLY

1) Assemble the front hub unit bearing. <Ref. to DS-18, ASSEMBLY, Front Hub Unit Bearing.>
2) Place the disc cover between housing and front hub unit, and tighten the four bolts.

Tightening torque:
65 N·m (6.6 kgf-m, 47.9 ft-lb)

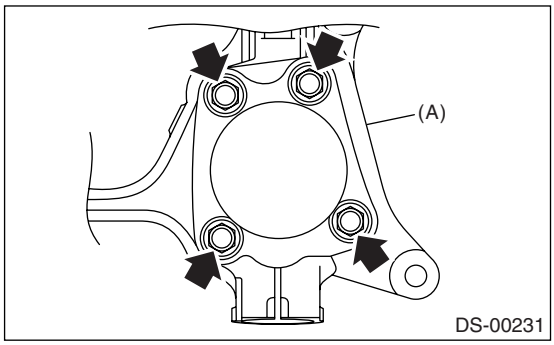

(A) Housing

CAUTION:
• Do not get closer the tool which charged magnetism to magnetic encorder.
• Be careful not to damage the magnetic encoder.

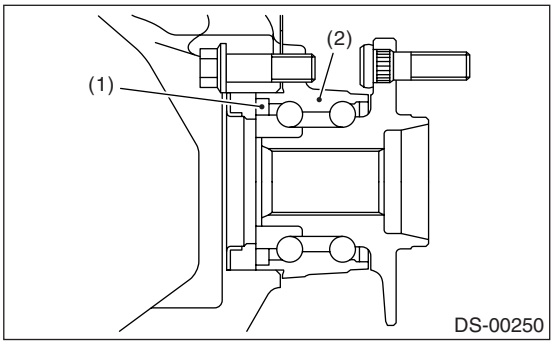

(1) Magnetic encoder
(2) Front hub unit bearing

E: INSPECTION

1) Moving the front tire up and down by hand, check there is no backlash in bearing, and check the wheel rotates smoothly.

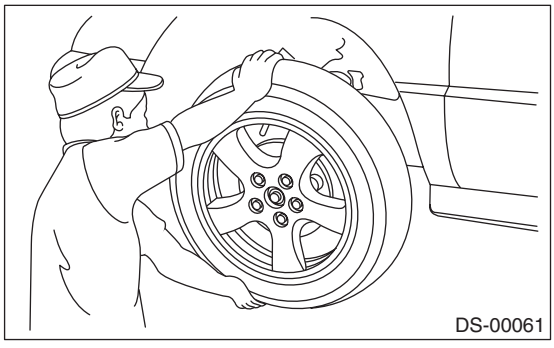

2) Inspect the lean of axis direction using a dial gauge. Replace the bearing if the load range exceeds the limitation.

Service limit:
Maximum: 0.05 mm (0.0020 in)

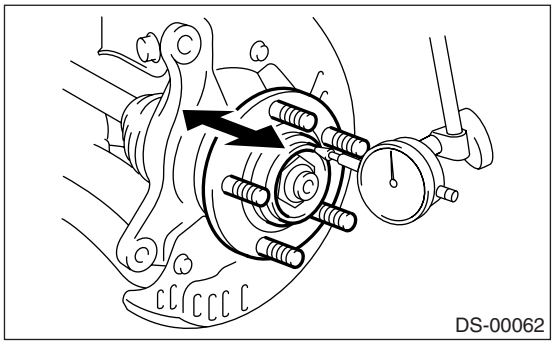

4. Front Hub Unit Bearing

A: REMOVAL

1) Disconnect the ground cable from battery.
2) Lift-up the vehicle and remove the front wheels.
3) Unlock the axle nut.

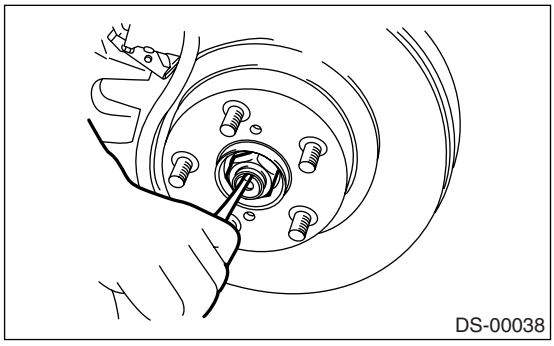

4) Remove the axle nut using a socket wrench while depressing the brake pedal.

CAUTION:
Remove the wheel before loosening the axle nut. Failure to follow this rule may damage the wheel bearings.

5) Remove the disc brake caliper from housing, and suspend it from strut using a wire.
6) Remove the disc rotor from hub.

NOTE:
If the disc rotor seizes up within hub, drive disc rotor out by installing an 8-mm bolt in screw hole on rotor.

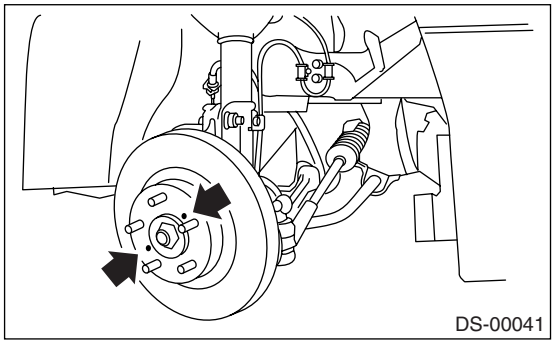

7) Remove four bolts from housing.

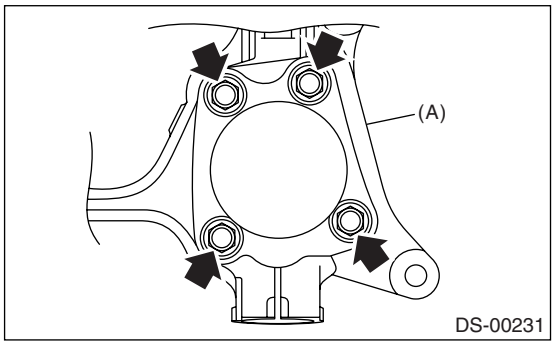

(A) Housing

CAUTION:
• Do not get closer the tool which charged magnetism to magnetic encorder.
• Be careful not to damage the magnetic encoder.

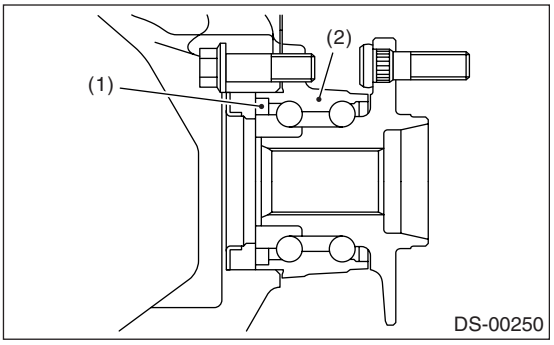

(1) Magnetic encoder
(2) Front hub unit bearing

8) Remove the front hub unit bearing. If it is hard to remove, use STs.

ST1	926470000	AXLE SHAFT PULLER
ST2	927140000	AXLE SHAFT PULLER PLATE

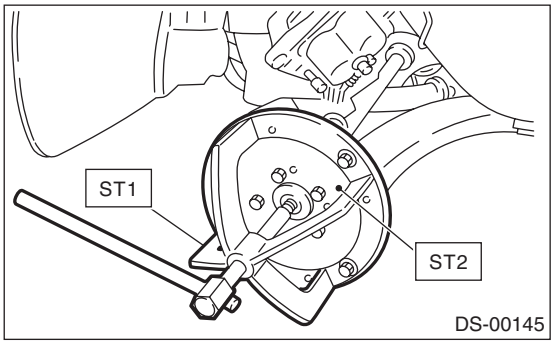

B: INSTALLATION

1) Place the disc cover between housing and front hub unit, and tighten the four bolts.

Tightening torque:
65 N·m (6.6 kgf-m, 47.9 ft-lb)

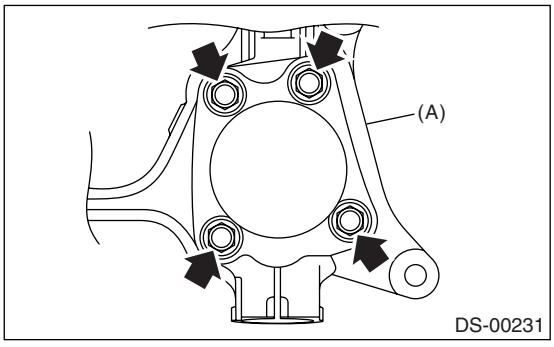

(A) Housing

2) Install the front drive shaft. <Ref. to DS-22, INSTALLATION, Front Drive Shaft.>
3) Tighten the axle nut temporarily.
4) Install the disc rotor on hub.
5) Install the disc brake caliper on the housing.

Tightening torque:
80 N·m (8.2 kgf-m, 59 ft-lb)

6) While depressing the brake pedal, tighten a new axle nut (olive color) to specified torque and lock it securely.

Tightening torque:
220 N·m (22.4 kgf-m, 162 ft-lb)

CAUTION:
• Install the wheel after installation of the axle nut. Failure to follow this rule may damage the wheel bearing.
• Be sure to tighten the axle nut to specified torque. Do not overtighten it as this may damage wheel bearing.

7) After tightening the axle nut, lock it securely.

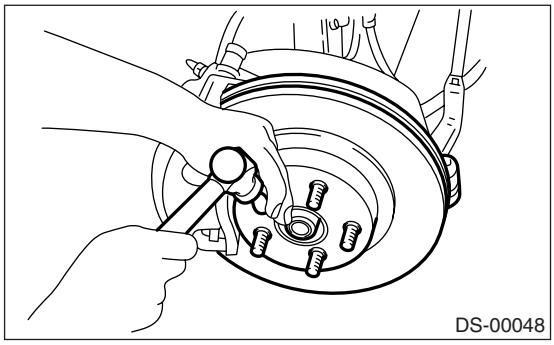

8) Install the wheel and tighten the wheel nuts to specified torque.

Tightening torque:
110 N·m (11.2 kgf-m, 81.1 ft-lb)

C: DISASSEMBLY

Using the ST and a hydraulic press, drive hub bolts out.
ST 28399AG000 HUB STAND

CAUTION:
• Be careful not to hammer the hub bolts. This may deform the hub.
• Do not reuse the hub bolt.

NOTE:
Since the hub unit bearing can not be disassembled, only hub bolts can be removed.

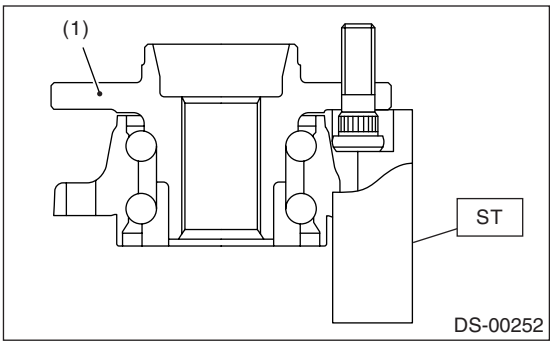

(1) Front hub unit bearing

D: ASSEMBLY

1) Attach the hub to ST securely.
ST 927080000 HUB STAND

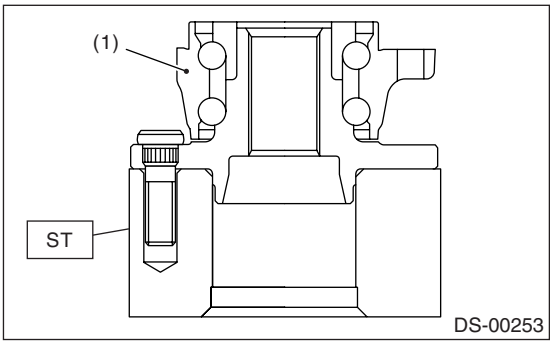

(1) Front hub unit bearing

2) Using a press, press new hub bolts until their seating surfaces contact the hub.

NOTE:
Use 12 mm (0.47 in) dia. holes in HUB STAND to prevent bolts from tilting.

E: INSPECTION

Refer to “FRONT AXLE” for inspection procedures. <Ref. to DS-16, INSPECTION, Front Axle.>

CAUTION:
If there is any fault in the bearing, replace hub unit bearing.

5. Rear Hub Unit Bearing

A: REMOVAL

1) Disconnect the ground cable from battery.
2) Lift-up the vehicle, and then remove the rear wheels.
3) Unlock the axle nut.

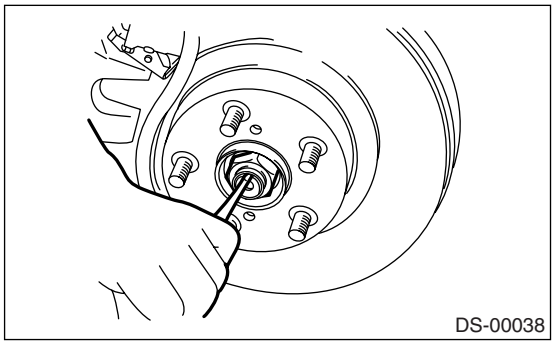

4) While applying the parking brake, remove the axle nut using the socket wrench.

CAUTION:
Remove the wheel before loosening the axle nut. Failure to follow this rule may damage the wheel bearings.

5) Release the parking brake.
6) Remove the rear ABS wheel speed sensor.

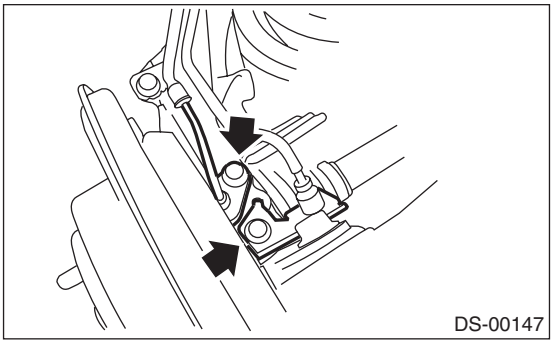

7) Remove the disc brake caliper from back plate, and suspend it from stabilizer using wire.

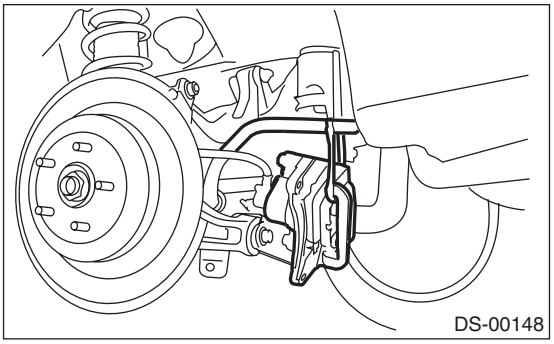

8) Remove the disc rotor from hub.

NOTE:
• Mark the mating surface of hub and disc rotor before removing the disc rotor to avoid confusing when installing.
• If the disc rotor seizes up within hub, drive the disc rotor out by installing an 8-mm bolt in screw hole on rotor.

9) Remove the four bolts from rear arm.

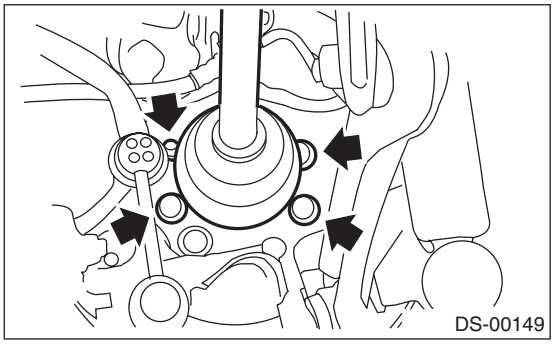

10) Remove the hub unit bearing.

CAUTION:
• Be careful not to damage the magnetic encoder.
• Do not get closer the tool which charged magnetism to magnetic encorder.

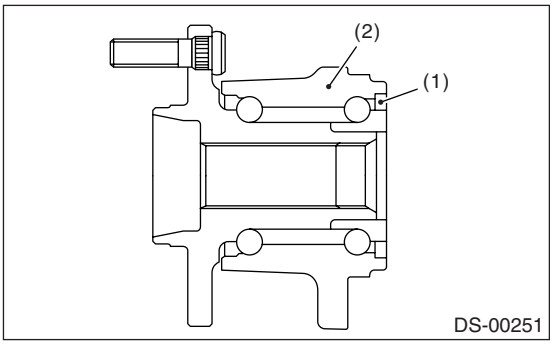

(1) Magnetic encoder
(2) Rear hub unit bearing

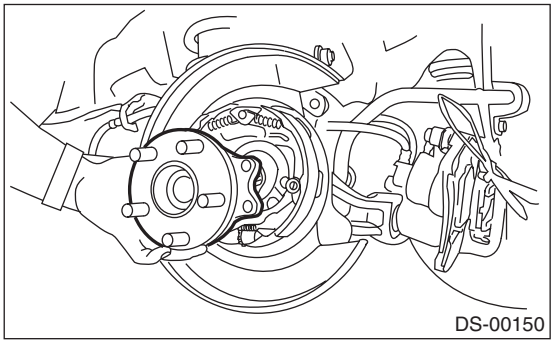

NOTE:
If it is hard to remove, use STs.
ST1 926470000 AXLE SHAFT PULLER

ST2 927140000 AXLE SHAFT PULLER PLATE

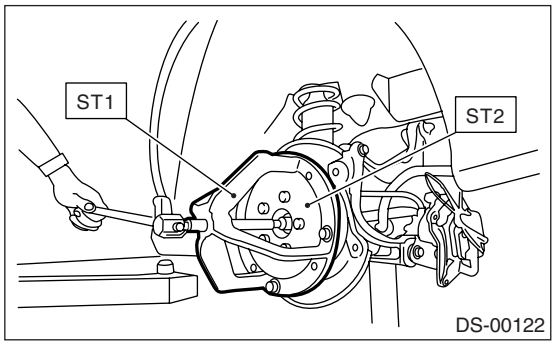

B: INSTALLATION

1) Aligning the hub unit bearing to the mounting hole of the back plate, install the hub unit assembly and back plate. Tighten the axle nut temporarily.

CAUTION:
• Be careful not to damage the magnetic encoder.
• Do not get closer the tool which charged magnetism to magnetic encorder.

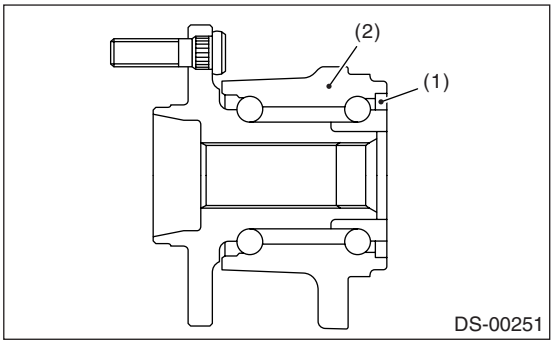

(1) Magnetic encoder
(2) Rear hub unit bearing

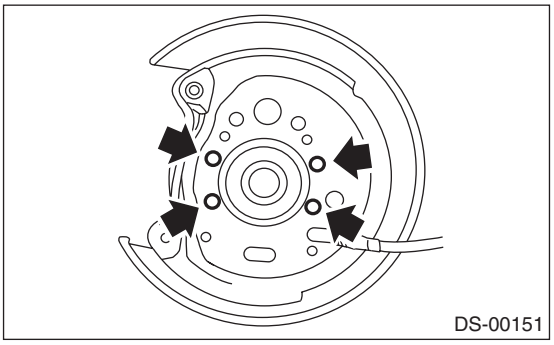

2) Tighten the four bolts to the back plate.

Tightening torque:
65 N·m (6.6 kgf-m, 47.9 ft-lb)

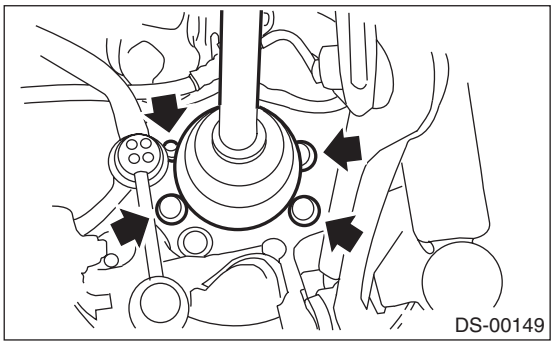

3) Remove the axle nut.
4) Draw the rear drive shaft into specified position.
5) Tighten the new axle nut temporarily.

CAUTION:
Use a new axle nut (olive color).

6) Install the disc rotor on hub.
7) Install the disc brake caliper on back plate.

Tightening torque:
53 N·m (5.4 kgf-m, 39.1 ft-lb)

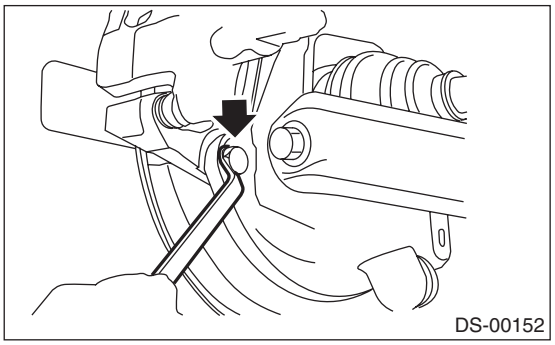

8) Install the rear ABS wheel speed sensor and brake cable bracket.

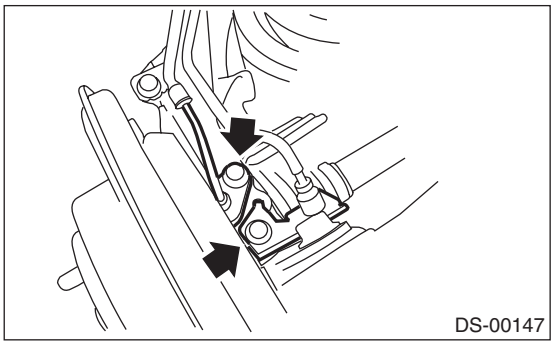

9) Adjust the parking brake lever stroke by turning adjuster. <Ref. to PB-4, ADJUSTMENT, Parking Brake Lever.>
10) While applying the parking brake and depressing the brake pedal, tighten a new axle nut (olive color) to the specified torque and lock it securely.

Tightening torque:
240 N·m (24.5 kgf-m, 177 ft-lb)

CAUTION:
• Install the wheel after installation of the axle nut. Failure to follow this rule may damage the wheel bearing.
• Be sure to tighten the axle nut to specified torque. Do not overtighten it as this may damage wheel bearing.

11) After tightening the axle nut, lock it securely.

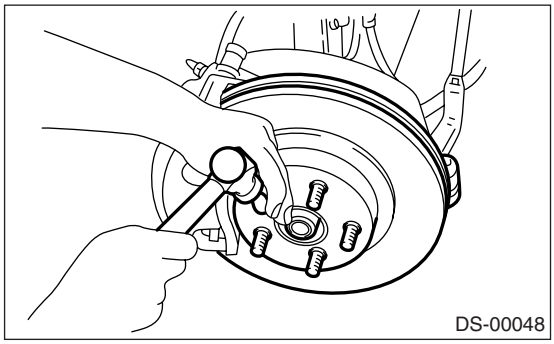

12) Install the wheel and tighten the wheel nuts to specified torque.

Tightening torque:
110 N·m (11.2 kgf-m, 81.1 ft-lb)

C: DISASSEMBLY

Using the ST and a hydraulic press, drive hub bolts out.
ST 28399AG000 HUB STAND

CAUTION:
• Be careful not to hammer the hub bolts. This may deform the hub.
• Do not reuse the hub bolt.

NOTE:
Since the hub unit bearing can not be disassembled, only hub bolts can be removed.

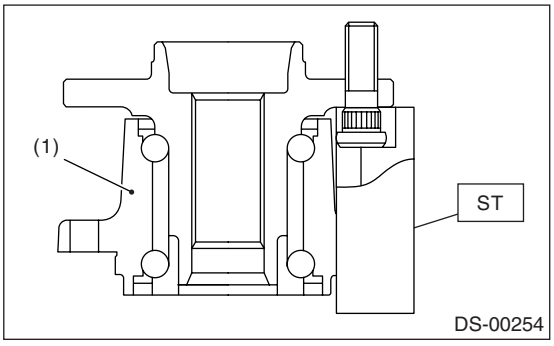

(1) Rear hub unit bearing

D: ASSEMBLY

1) Attach the hub to ST securely.
ST 927080000 HUB STAND

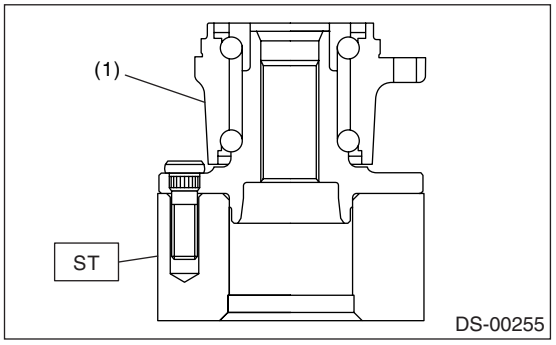

(1) Rear hub unit bearing

2) Using a press, press the new hub bolts until their seating surfaces contact the hub.

NOTE:
Use 12 mm (0.47 in) dia. holes in HUB STAND to prevent bolts from tilting.

E: INSPECTION

1) Moving the rear tire up and down by hand, check there is no backlash in bearing, and check the wheel rotates smoothly.

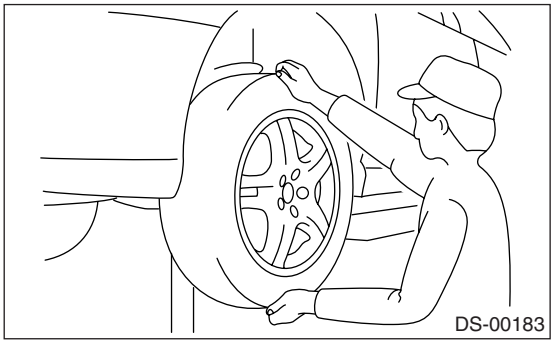

2) Inspect the lean of axis direction using a dial gauge. Replace the hub bearing if the lean range exceed the limitation.

Service limit:
Maximum: 0.05 mm (0.0020 in)

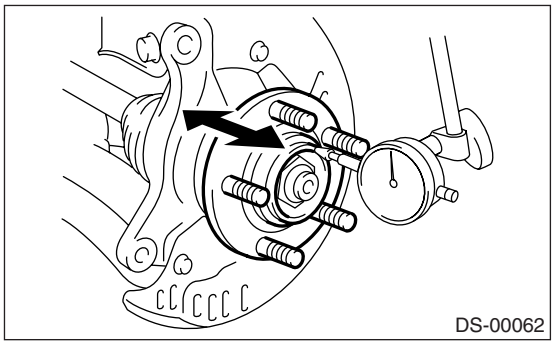

6. Front Drive Shaft

A: REMOVAL

1) Disconnect the ground cable from battery.
2) Lift-up the vehicle and remove the front wheels.
3) Drain the transmission gear oil. (MT model)
4) Drain the differential gear oil. (AT model)
5) Unlock the axle nut.

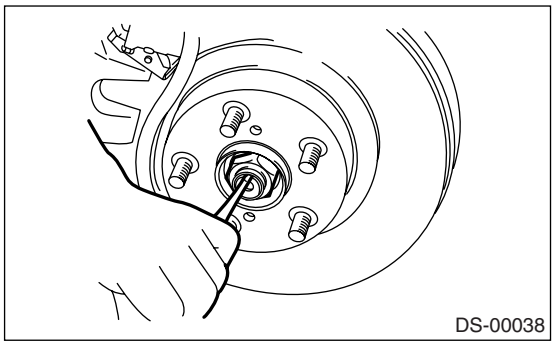

6) Remove the axle nut using a socket wrench while depressing the brake pedal.

CAUTION:
Remove the wheel before loosening the axle nut. Failure to follow this rule may damage the wheel bearings.

7) Remove the stabilizer link from front arm.
8) Disconnect the front arm ball joint from housing.

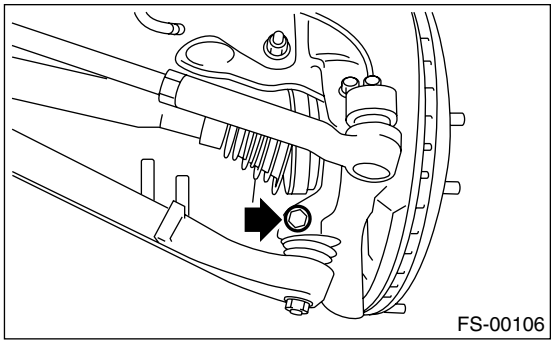

9) Remove the front drive shaft assembly. If it is hard to remove, use ST1 and ST2.

ST1 926470000 AXLE SHAFT PULLER
ST2 927140000 AXLE SHAFT PULLER PLATE

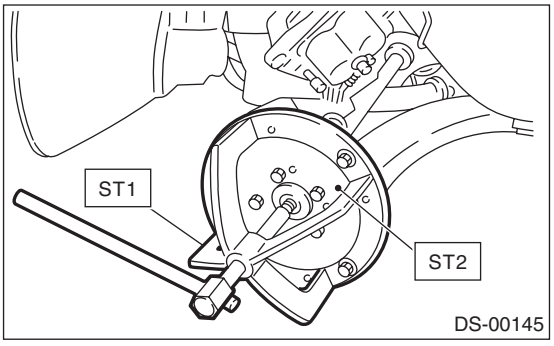

10) Using a bar, remove the front drive shaft from transmission.

CAUTION:
Be careful not to allow the bar to damage holder area.

B: INSTALLATION

1) Using the ST, replace the differential side retainer oil seal with a new one.

ST 18675AA000 DIFFERENTIAL SIDE OIL SEAL INSTALLER

NOTE:
After pulling out the drive shaft, be sure to replace with a new oil seal.

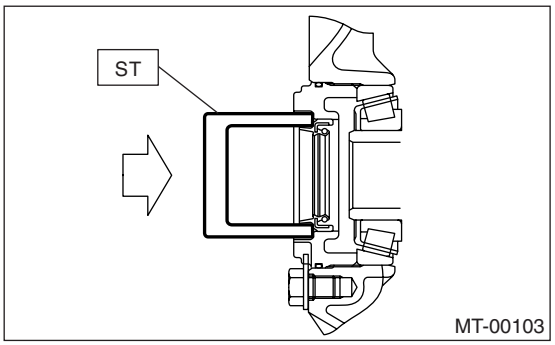

2) Insert the EBJ into hub splines.
3) Draw the drive shaft into specified position.

CAUTION:
Do not hammer drive shaft when installing it.

4) Tighten the axle nut temporarily.
5) Using the ST, install the front drive shaft to transmission.

ST 28399SA010 OIL SEAL PROTECTOR

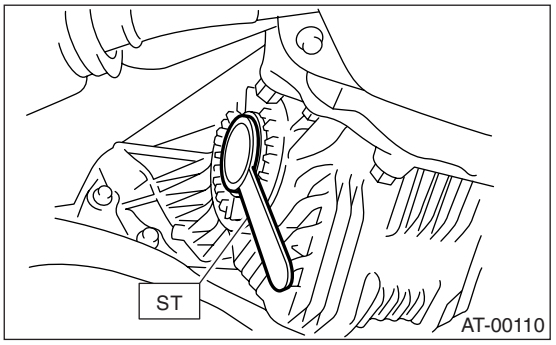

6) Connect the front arm ball joint to housing.

Tightening torque:
50 N·m (5.1 kgf-m, 36.9 ft-lb)

7) Install the stabilizer link.

Tightening torque:
45 N·m (4.6 kgf-m, 33.2 ft-lb)

CAUTION:
Be sure to use a new self-locking nut.

8) While depressing the brake pedal, tighten a new axle nut (olive color) to the specified torque and lock it securely.

Tightening torque:
220 N·m (22.4 kgf-m, 162 ft-lb)

CAUTION:
• Install the wheel after installation of the axle nut. Failure to follow this rule may damage the wheel bearing.
• Be sure to tighten axle nut to specified torque. Do not overtighten it as this may damage wheel bearing.

9) After tightening axle nut, lock it securely.
10) Add transmission gear oil. (MT model)
11) Add differential gear oil. (AT model)

C: DISASSEMBLY

1) Place alignment marks on the shaft and outer race.

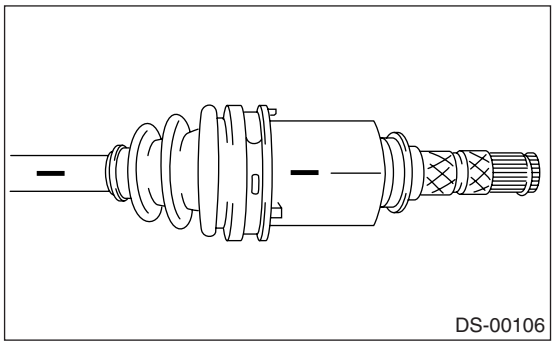
DS-00106

2) Remove the PTJ boot band and boot.

CAUTION:
Be careful not to damage boot.

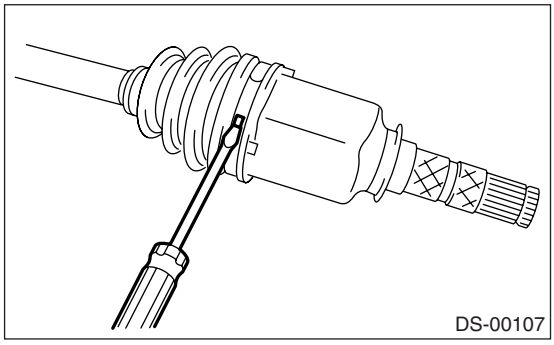
DS-00107

3) Remove the snap ring from PTJ outer race.

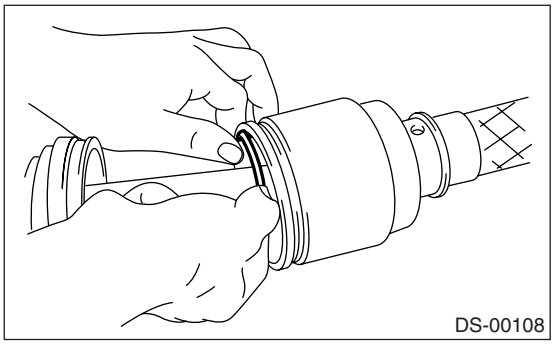
DS-00108

4) Remove the PTJ outer race from shaft assembly.
5) Wipe off grease.

CAUTION:
The grease is a special grease. Do not confuse with other greases.

6) Place alignment marks on the roller kit and trunnion.

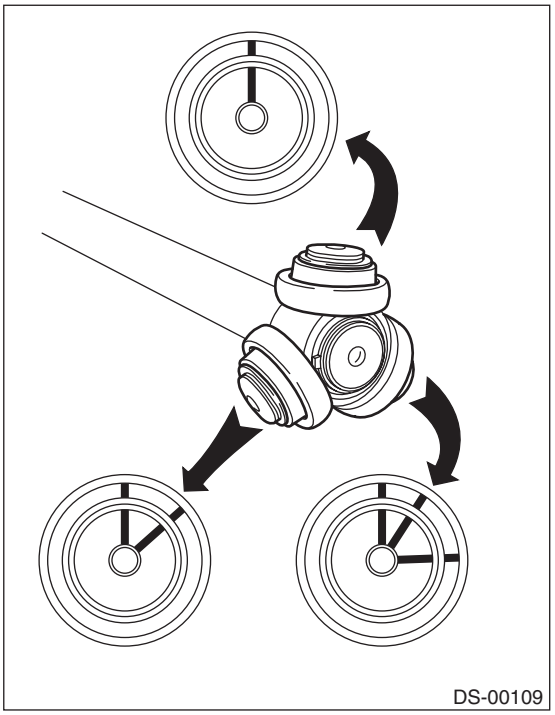
DS-00109

7) Remove the roller kit from trunnion.

CAUTION:
Be careful with the roller kit position.

8) Place alignment marks on the trunnion and shaft.

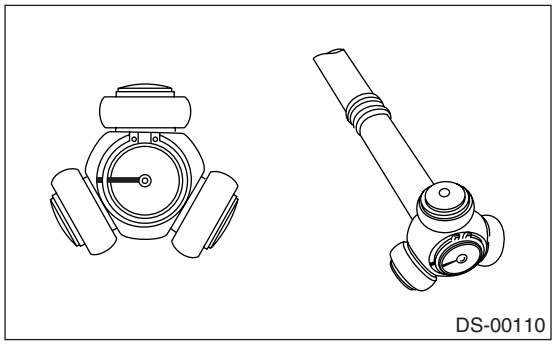

9) Remove the snap ring and trunnion.

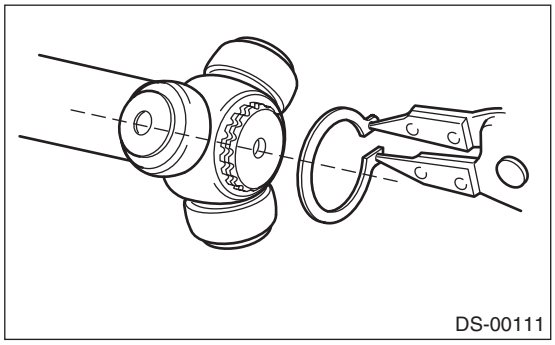

CAUTION:
Be sure to wrap shaft splines with vinyl tape to prevent boot from scratches.

10) Remove the PTJ boot.

NOTE:
Further disassembly of axle is impossible because the BJ cannot be disassembled.

D: ASSEMBLY

NOTE:
Use specified grease.

PTJ side:
NKG302 (Part No. 28395AG02A)

1) Place the PTJ boot at the center of shaft.
2) Align alignment marks and install the trunnion on the shaft.

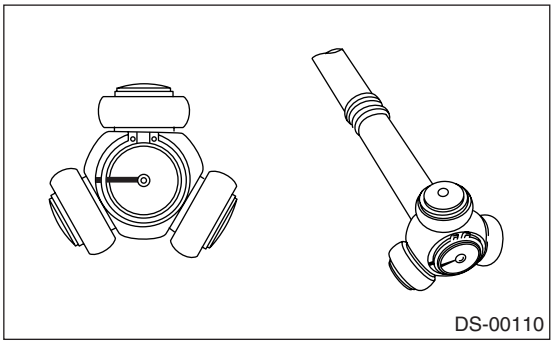

3) Install the snap ring to shaft.

CAUTION:
Confirm that the snap ring is completely fitted in shaft groove.

4) Fill 100 to 110 g (3.53 to 3.88 oz.) of specified grease into the interior of PTJ outer race.
5) Apply a thin coat of specified grease to the roller kit and trunnion.
6) Align alignment marks on roller kit and trunnion and install the roller kit.

CAUTION:
Be careful with the roller kit position.

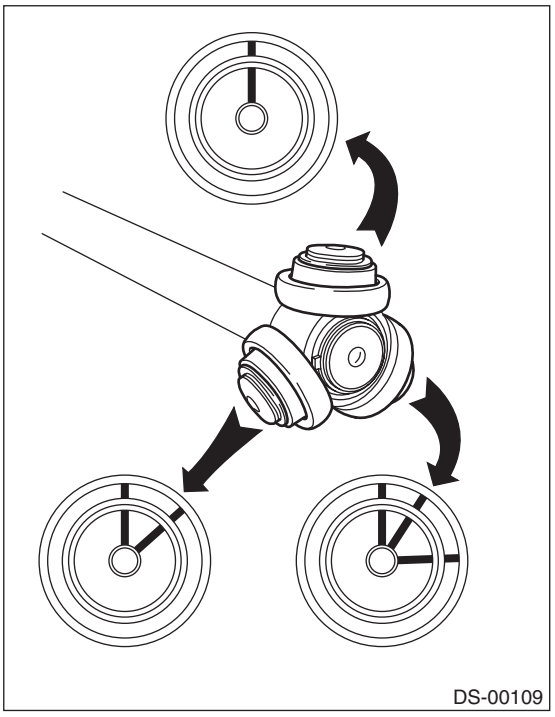

7) Align alignment marks on the shaft and outer race, and install outer race.

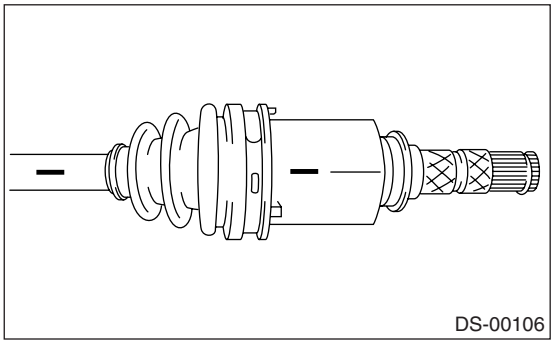

8) Install the snap ring in the groove on PTJ outer race.

CAUTION:
Pull the shaft lightly and assure that the snap ring is completely fitted in the groove.

9) Apply an even coat of the specified grease 30 to 40 g (1.06 to 1.41 oz.) to the entire inner surface of boot.

10) Install the PTJ boot taking care not to twist it.

CAUTION:
• The large end of PTJ boot and the boot groove shall be cleaned completely so as to be free from grease and other substances.
• When installing PTJ boot, position outer race of PTJ at center of its travel.

11) Put a new band through the clip and wind twice in alignment with band groove of boot.
12) Pinch the end of band with pliers. Hold the clip and tighten securely.

NOTE:
When tightening boot, use care so that the air within the boot is appropriate.

13) Tighten the band using ST.
ST 925091000 BAND TIGHTENING TOOL

NOTE:
Tighten the band until it cannot be moved by hand.

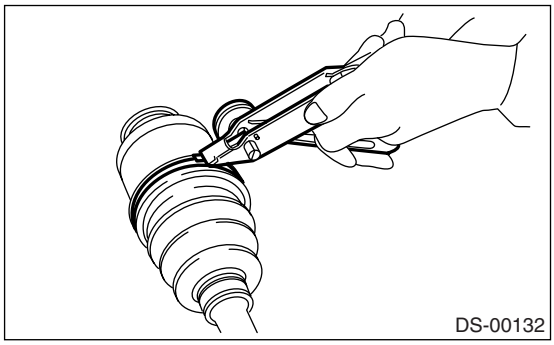
DS-00132

14) Tap on the clip with the punch provided at the end of ST.
ST 925091000 BAND TIGHTENING TOOL

CAUTION:
Tap to an extent that the boot underneath is not damaged.

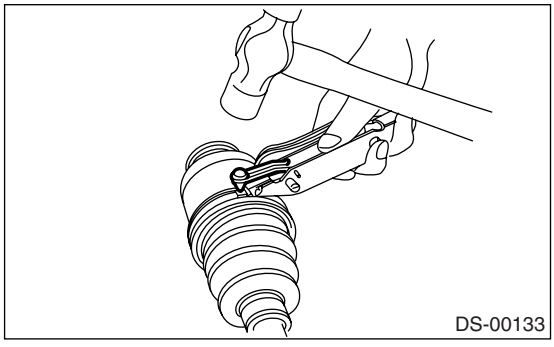
DS-00133

15) Cut off the band with an allowance of about 10 mm (0.39 in) left from the clip and bend this allowance over the clip.

CAUTION:
Be careful so that the end of the band is in close contact with clip.

16) Extend and retract the PTJ to provide equal grease coating.

E: INSPECTION

Check the removed parts for damage, wear, corrosion etc. If faulty, repair or replace.
• PTJ (pillow tripod joint)
Check for seizure, corrosion, damage, wear and excessive play.
• EBJ (high-efficiency compact ball fixed joint)
Check for seizure, corrosion, damage and excessive play.
• Shaft
Check for excessive bending, twisting, damage and wear.
• Boot
Check for wear, warping, breakage and scratches.
• Grease
Check for discoloration and fluidity.

7. Rear Drive Shaft

A: REMOVAL

1) Disconnect the ground cable from battery.
2) Lift-up the vehicle, and then remove the rear wheels.
3) Unlock the axle nut.

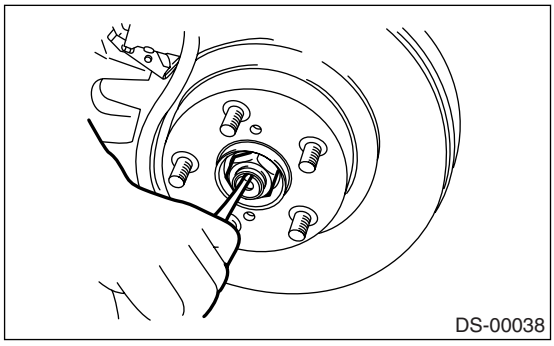

4) While applying the parking brake, remove the axle nut using the socket wrench.

CAUTION:
Remove the wheel before loosening the axle nut. Failure to follow this rule may damage the wheel bearings.

5) Remove the rear differential assembly.
• T-type
<Ref. to DI-28, REMOVAL, Rear Differential (T-type).>
• VA-type
<Ref. to DI-44, REMOVAL, Rear Differential (VA-type).>
6) Remove the axle nut and rear drive shaft. If it is hard to remove, use ST1 and ST2.

ST1	926470000	AXLE SHAFT PULLER
ST2	927140000	AXLE SHAFT PULLER PLATE

CAUTION:
• Do not hammer drive shaft when removing.
• Do not damage the oil seal and magnetic encoder.

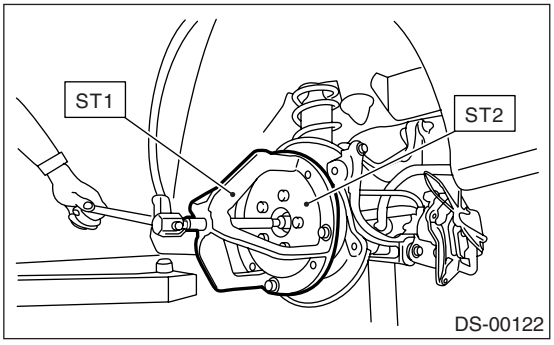

B: INSTALLATION

1) Insert the BJ or EBJ into rear hub splines.

CAUTION:
• Be careful not to damage the magnetic encoder.
• Do not get closer the tool which charged magnetism to magnetic encorder.

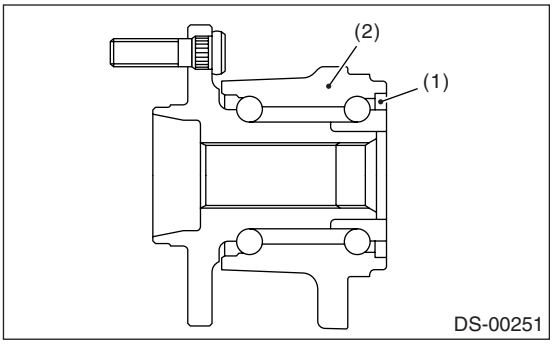

(1) Magnetic encoder
(2) Rear hub unit bearing

2) Draw the rear drive shaft into specified position.

CAUTION:
Do not hammer drive shaft when installing it.

3) Tighten the axle nut temporarily.
4) Install the rear differential assembly.
• T-type
<Ref. to DI-29, INSTALLATION, Rear Differential (T-type).>
• VA-type
<Ref. to DI-45, INSTALLATION, Rear Differential (VA-type).>
5) While applying the parking brake and depressing the brake pedal, tighten a new axle nut (olive color) to specified torque and lock it securely.

Tightening torque:
240 N·m (24.5 kgf-m, 177 ft-lb)

CAUTION:
• Install the wheel after installation of the axle nut. Failure to follow this rule may damage the wheel bearing.
• Be sure to tighten the axle nut to specified torque. Do not overtighten it as this may damage wheel bearing.

6) Lock the axle nut securely.

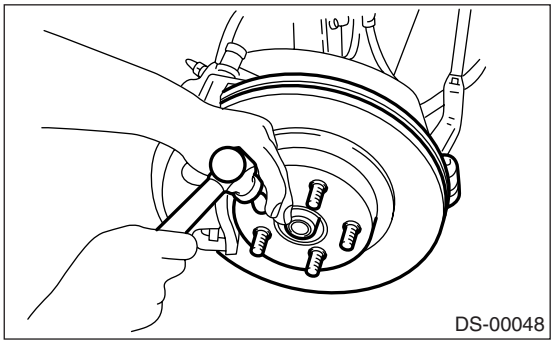

7) Install the wheel.

Tightening torque:
110 N·m (11.2 kgf-m, 81.1 ft-lb)

C: DISASSEMBLY

1) Straighten the bent claw of larger end of DOJ boot.
2) Loosen the band by means of screwdriver or pliers.

CAUTION:
Be careful not to damage boot.

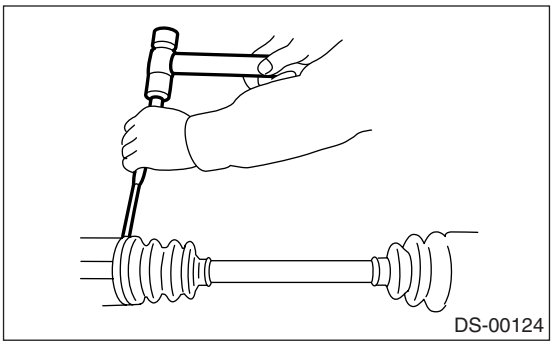

3) Remove the boot band on the small end of DOJ boot in the same manner.
4) Remove the larger end of DOJ boot from DOJ outer race.
5) Pry and remove the round circlip located at the neck of DOJ outer race with a screwdriver.

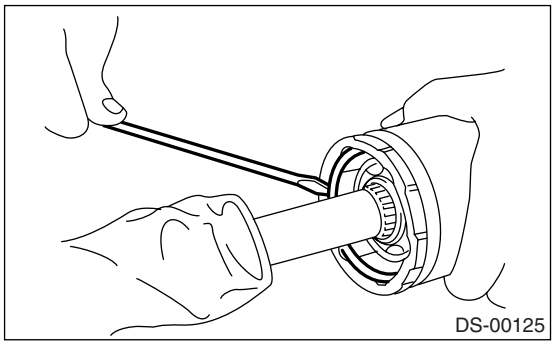

6) Take out the DOJ outer race from shaft assembly.
7) Wipe off the grease and take out balls.

CAUTION:
The grease is a special grease (grease for constant velocity joint). Do not confuse with other greases.

NOTE:
Disassemble exercising care not to lose balls (6 pcs).

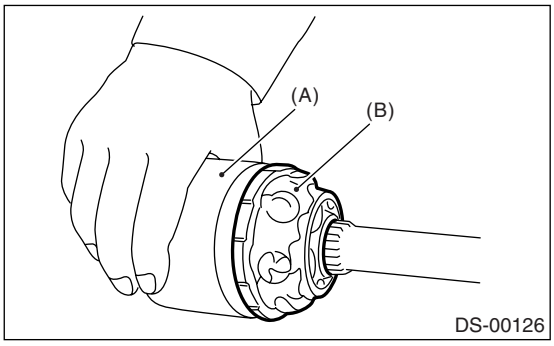

(A) Outer race
(B) Grease

8) To remove the cage from inner race, turn the cage by a half pitch to the track groove of inner race and shift the cage.
9) Remove the snap ring, which fixes inner race to shaft, using pliers.
10) Take out the DOJ inner race.
11) Take off the DOJ cage from shaft and remove DOJ boot.

CAUTION:
Be sure to wrap shaft splines with vinyl tape to prevent boot from scratches.

12) Remove the BJ boot or EBJ boot in the same procedure as DOJ boot.

NOTE:
Further disassembly of axle is impossible because the BJ and EBJ cannot be disassembled.

D: ASSEMBLY

NOTE:
Use specified grease.

BJ side:
NTG2218-M (Part No. 28395AG01A)

EBJ side:
NTG2218-M (Part No. 28395AG01A)

DOJ side:
NKG205 (Part No. 28495AG00A)

1) Install the BJ or EBJ boot in specified position, and fill it with 60 to 70 g (2.12 to 2.47 oz.) of specified grease.
2) Place the DOJ boot at the center of shaft.

CAUTION:
Be sure to wrap shaft splines with vinyl tape to prevent boot from scratches.

3) Insert the DOJ cage onto shaft.

NOTE:
Insert the cage with the cut-out portion facing the shaft end, since the cage has an orientation.

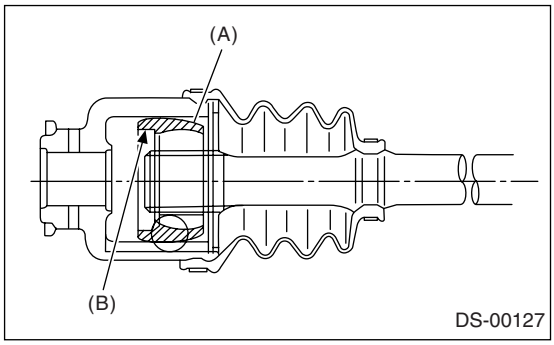

(A) Cage
(B) Cutout

4) Install the DOJ inner race on shaft and fit the snap ring with pliers.

NOTE:
Confirm that the snap ring is completely fitted in the shaft groove.

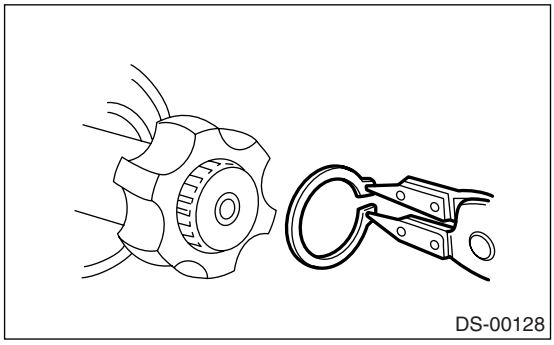

5) Install the cage to inner race fixed upon shaft.

NOTE:
Fit the cage with the protruded part aligned with the track on the inner race and then turn by a half pitch.

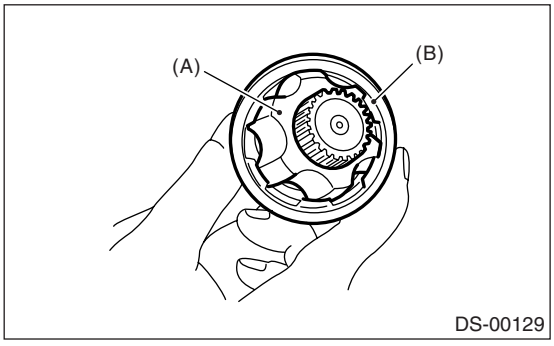

(A) Inner race
(B) Cage

6) Fill 80 to 90 g (2.82 to 3.17 oz.) of specified grease into the interior of DOJ outer race.

7) Apply a coat of specified grease to the cage pocket and six balls.
8) Insert six balls into the cage pocket.
9) Align the outer race track and ball positions, and place the shaft, inner race, cage and balls in the original positions and then fit outer race.

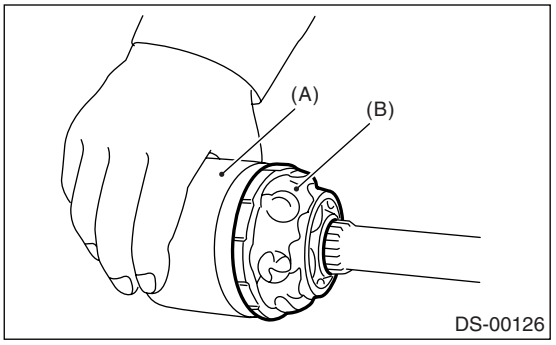

(A) Outer race
(B) Grease

10) Install the snap ring in the groove on DOJ outer race.

NOTE:
• Assure that the balls, cage and inner race are completely fitted in the outer race of DOJ.
• Use care not to place the matched position of snap ring in the ball groove of outer race.
• Pull the shaft lightly and assure that the circlip is completely fitted in the groove.

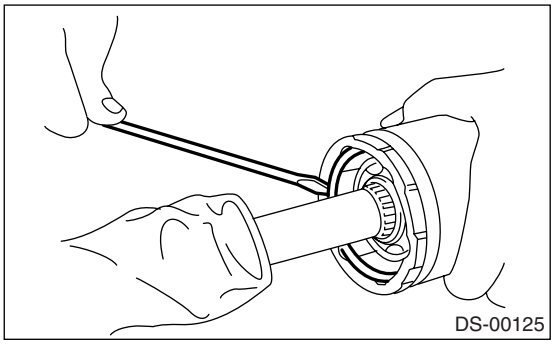

11) Apply an even coat of the specified grease [20 to 30 g (0.71 to 1.06 oz.)] to the entire inner surface of boot. Also apply grease to shaft.
12) Install the DOJ boot taking care not to twist it.

NOTE:
• The inside of the larger end of DOJ boot and the boot groove shall be cleaned so as to be free from grease and other substances.
• When installing DOJ boot, position outer race of DOJ at center of its travel.

13) Put a new band through the clip and wind twice in alignment with band groove of boot.
14) Pinch the end of band with pliers. Hold the clip and tighten securely.

NOTE:
When tightening boot, exercise care so that the air within the boot is appropriate.

15) Tighten the band by using ST.
ST 925091000 BAND TIGHTENING TOOL

NOTE:
Tighten the band until it cannot be moved by hand.

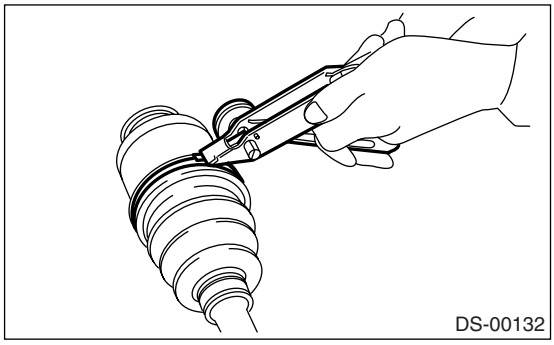
DS-00132

16) Tap on the clip with the punch provided at the end of ST.
ST 925091000 BAND TIGHTENING TOOL

NOTE:
Tap to an extent that the boot underneath is not damaged.

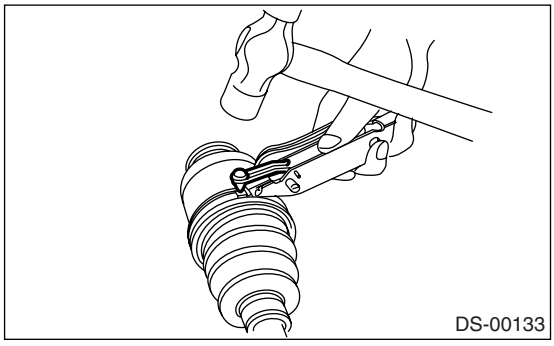
DS-00133

17) Cut off the band with an allowance of about 10 mm (0.39 in) left from the clip and bend this allowance over the clip.

NOTE:
Be careful so that the end of the band is in close contact with clip.

18) Install the BJ boot or EBJ boot in the same procedure as DOJ boot.
19) Extend and retract the DOJ to provide equal grease coating.

E: INSPECTION

Check the removed parts for damage, wear, corrosion etc. Repair or replace if defective.
- DOJ (Double Offset Joint)

Check for seizure, corrosion, damage, wear and excessive play.
- EBJ (high-efficiency compact ball fixed joint)

Check for seizure, corrosion, damage, wear and excessive play.
- Shaft

Check for excessive bending, twisting, damage and wear.
- BJ (Bell Joint)

Check for seizure, corrosion, damage and excessive play.
- Boot

Check for wear, warping, breakage and scratches.
- Grease

Check for discoloration and fluidity.

8. General Diagnostic Table

A: INSPECTION

NOTE:
Vibration while cruising may be caused by an unbalanced tire, improper tire inflation pressure, improper wheel alignment, etc.

Symptom	Possible cause	Corrective action
Noise or vibration from propeller shaft	Center bearing	Check the center bearing. <Ref. to DS-12, CENTER BEARING FREE PLAY, INSPECTION, Propeller Shaft.>
	Runout of propeller shaft	Check the vibration of propeller shaft. <Ref. to DS-11, RUNOUT OF PROPELLER SHAFT, INSPECTION, Propeller Shaft.>
	Loose or free play of connection	Check joint and connector. <Ref. to DS-11, JOINTS AND CONNECTIONS, INSPECTION, Propeller Shaft.>
		Check splines and bearing. <Ref. to DS-11, SPLINES AND BEARING, INSPECTION, Propeller Shaft.>
Abnormal wheel vibration	Wheel is out of balance.	Check the wheel balance. <Ref. to WT-8, ADJUSTMENT, Wheel Balancing.>
	Front wheel alignment	Check the front wheel alignment. <Ref. to FS-7, INSPECTION, Wheel Alignment.>
	Rear wheel alignment	Check the rear wheel alignment. <Ref. to RS-8, INSPECTION, Wheel Alignment.>
	Front strut	Check the front strut. <Ref. to FS-23, INSPECTION, Front Strut.>
	Rear shock absorber	Check the rear shock absorber. <Ref. to RS-16, INSPECTION, Rear Shock Absorber.>
	Front drive shaft	Check the front drive shaft. <Ref. to DS-25, INSPECTION, Front Drive Shaft.>
	Rear drive shaft	Check the rear drive shaft. <Ref. to DS-29, INSPECTION, Rear Drive Shaft.>
	Front hub unit bearing	Check the front hub unit bearing. <Ref. to DS-18, INSPECTION, Front Hub Unit Bearing.>
	Rear hub unit bearing	Check the rear hub unit bearing. <Ref. to DS-21, INSPECTION, Rear Hub Unit Bearing.>
Noise from the underbody	Wheel is out of balance.	Check the wheel balance. <Ref. to WT-8, ADJUSTMENT, Wheel Balancing.>
	Front wheel alignment	Check the front wheel alignment. <Ref. to FS-7, INSPECTION, Wheel Alignment.>
	Rear wheel alignment	Check the rear wheel alignment. <Ref. to RS-8, INSPECTION, Wheel Alignment.>
	Front strut	Check the front strut. <Ref. to FS-23, INSPECTION, Front Strut.>
	Rear shock absorber	Check the rear shock absorber. <Ref. to RS-16, INSPECTION, Rear Shock Absorber.>

ABS

		Page
1.	General Description	2
2.	ABS Control Module and Hydraulic Control Unit (ABSCM&H/U)	6
3.	ABS Sequence Control	10
4.	Front ABS Wheel Speed Sensor	13
5.	Rear ABS Wheel Speed Sensor	15
6.	Front Magnetic Encoder	16
7.	Rear Magnetic Encoder	17
8.	G Sensor	18

1. General Description

A: SPECIFICATION

Item				Standard value or identification
ABS wheel speed sensor	ABS wheel speed sensor gap (for reference)		Front	0.77 — 1.43 mm (0.030 — 0.056 in)
			Rear	0.64 — 1.56 mm (0.025 — 0.061 in)
	Marks of harness (Marks, Color)	Front	RH	K1 (White)
			LH	K2 (Yellow)
		Rear	RH	K5 (White)
			LH	K6 (Yellow)
G sensor	G sensor voltage			2.3±0.2 V
ABSCM&H/U identification	AT (Except for OUTBACK)			J1
	MT (Except for OUTBACK)			J2
	AT (OUTBACK)			J3
	MT (OUTBACK)			J4

B: COMPONENT

1. ABS WHEEL SPEED SENSOR

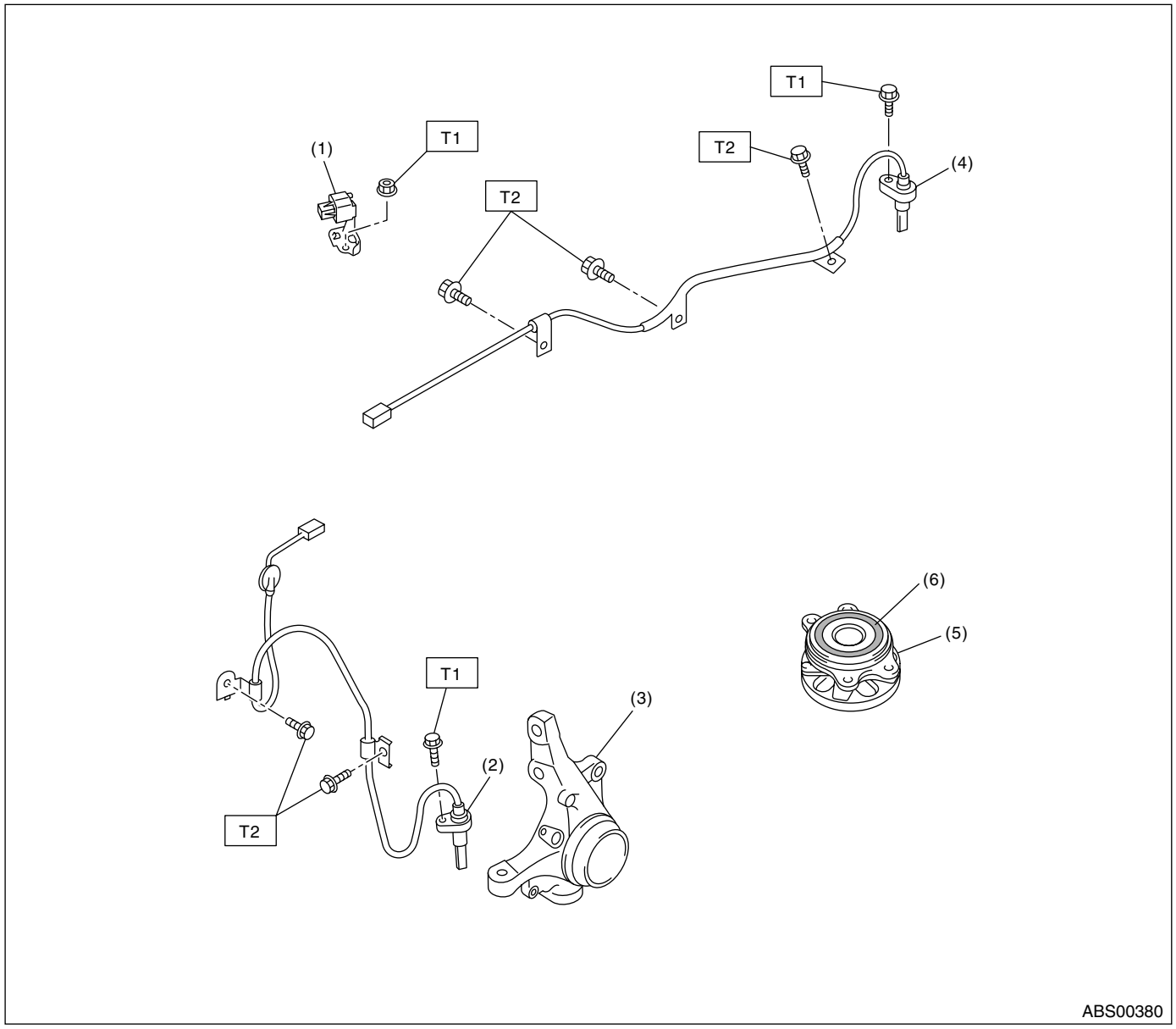

(1)	G sensor	(4)	Rear ABS wheel speed sensor LH	***Tightening torque: N·m (kgf-m, ft-lb)***
(2)	Front ABS wheel speed sensor LH	(5)	Hub unit bearing	***T1: 7.5 (0.76, 5.5)***
(3)	Front housing	(6)	Magnetic encoder	***T2: 33 (3.3, 24)***

2. ABS CONTROL MODULE AND HYDRAULIC CONTROL UNIT (ABSCM&H/U)

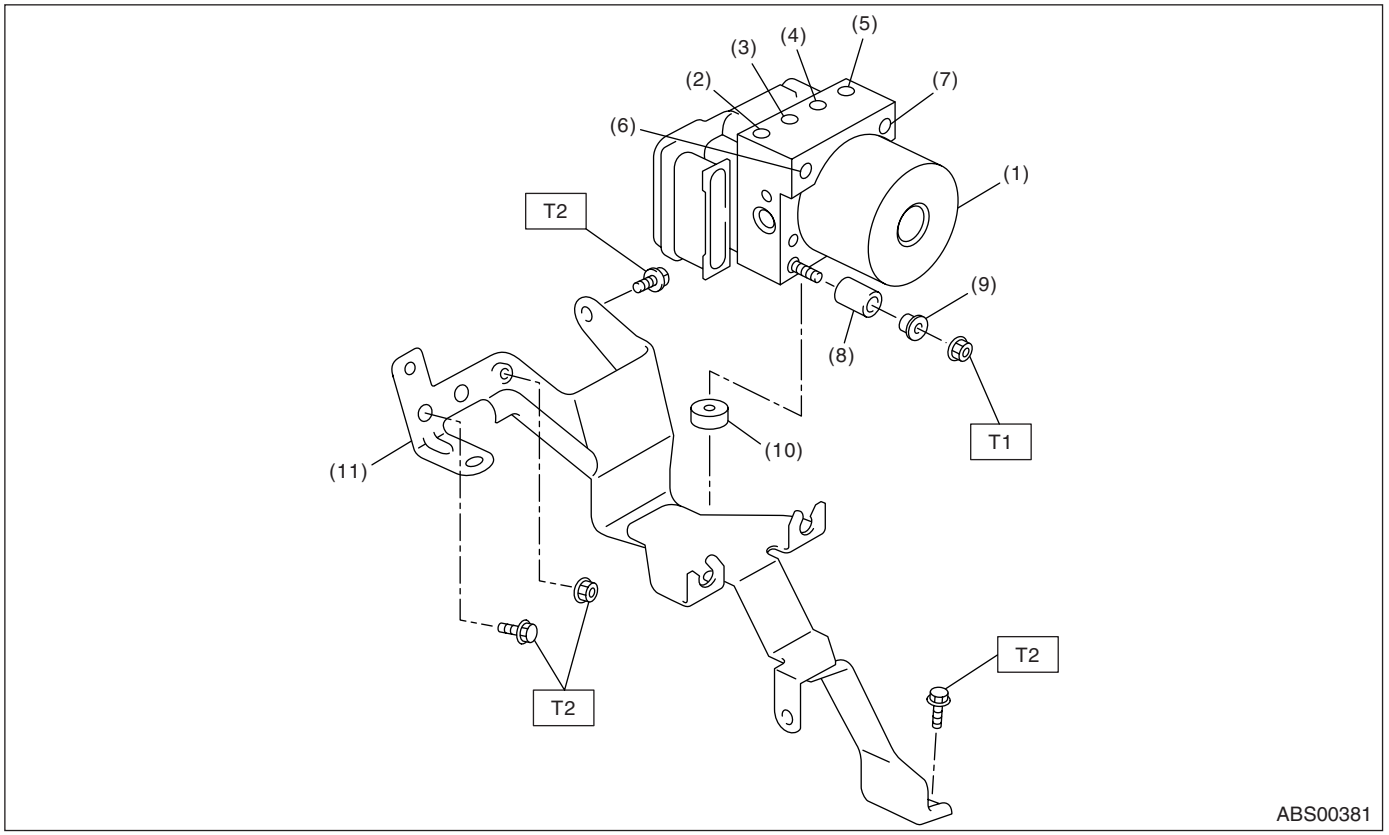

(1) ABS control module and hydraulic control unit (ABSCM&H/U)
(2) Front outlet RH
(3) Rear outlet LH
(4) Rear outlet RH
(5) Front outlet LH
(6) Primary inlet
(7) Secondary inlet
(8) Damper
(9) Spacer
(10) Damper
(11) Bracket

Tightening torque: N·m (kgf-m, ft-lb)
T1: 7.5 (0.76, 5.5)
T2: 33 (3.3, 24)

C: CAUTION

- Wear work clothing, including a cap, protective goggles and protective shoes during operation.
- Before disconnecting electrical connectors of sensors or units, be sure to disconnect the ground cable from battery.
- Before removal, installation or disassembly, be sure to clarify the failure. Avoid unnecessary removal, installation, disassembly and replacement.
- Be careful not to burn yourself, because each part on the vehicle is hot after running.
- Be sure to tighten fasteners including bolts and nuts to the specified torque.
- Place shop jacks or rigid racks at the specified points.

D: PREPARATION TOOL

1. SPECIAL TOOL

ILLUSTRATION	TOOL NUMBER	DESCRIPTION	REMARKS
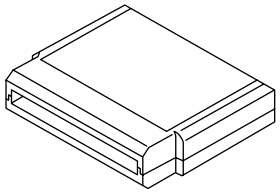 ST24082AA260	24082AA260	CARTRIDGE	Troubleshooting for electrical system.
ST22771AA030	22771AA030	SUBARU SELECT MONITOR KIT	Troubleshooting for electrical system.

2. GENERAL TOOL

TOOL NAME	REMARKS
Circuit tester	Used for measuring resistance, voltage and ampere.
Pressure gauge	Used for measuring oil pressure.
Oscilloscope	Used for measuring sensor.
TORX® bit E5	Used for replacing ABSCM.

2. ABS Control Module and Hydraulic Control Unit (ABSCM&H/U)

A: REMOVAL

1) Disconnect the ground cable from battery.
2) Use compressed air to get rid of water and dust around the ABSCM&H/U.

NOTE:
When dust and dirt are attached to the terminal, they may cause poor contact.

3) Disconnect the ABSCM&H/U connector pulling up the lock lever.

CAUTION:
Do not pull the harness when disconnecting connector.

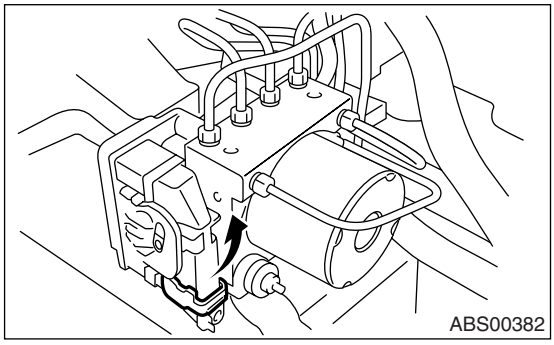

4) Remove the harness clip.
5) Disconnect the brake pipes from ABSCM&H/U.
6) Wrap the brake pipe using a vinyl bag not to spill the brake fluid on the vehicle body.

CAUTION:
When brake fluid is attached to the vehicle body, wash it off with water and wipe the water.

7) Remove the nuts and remove the ABSCM&H/U.

CAUTION:
- **Do not drop or bump the ABSCM&H/U.**
- **Do not turn ABSCM&H/U upside down or place it sideways for storage.**
- **Be careful that no foreign objects are mixed in ABSCM&H/U.**
- **Be careful that no water enters inside the connectors.**

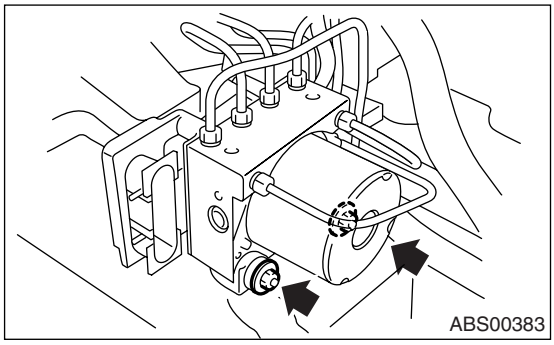

8) Remove the ABSCM&H/U bracket.

B: INSTALLATION

1) Install the ABSCM&H/U bracket.

Tightening torque:
33 N·m (3.3 kgf-m, 24 ft-lb)

2) Install the ABSCM&H/U aligning the groove of damper on ABSCM&H/U side with the pawl of bracket.

NOTE:
Check the identification mark of ABSCM&H/U.

Tightening torque:
7.5 N·m (0.76 kgf-m, 5.5 ft-lb)

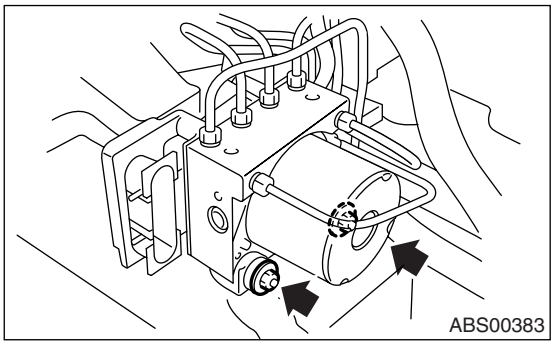

3) Connect the brake pipes to their correct ABSCM&H/U positions.

Tightening torque:
15 N·m (1.5 kgf-m, 10.8 ft-lb)

4) Using a harness clip, secure the ABSCM&H/U harness to bracket.
5) Connect the connector to ABSCM&H/U.

NOTE:
- Be sure to remove all foreign matters from inside the connector before connecting.
- Ensure the ABSCM&H/U connector is securely locked.

6) Bleed air from the brake system.

C: INSPECTION

1) Check the connected and fixed condition of connector.
2) Check the mark used for ABSCM&H/U identification.

Refer to “SPECIFICATION” for mark. <Ref. to ABS-2, SPECIFICATION, General Description.>

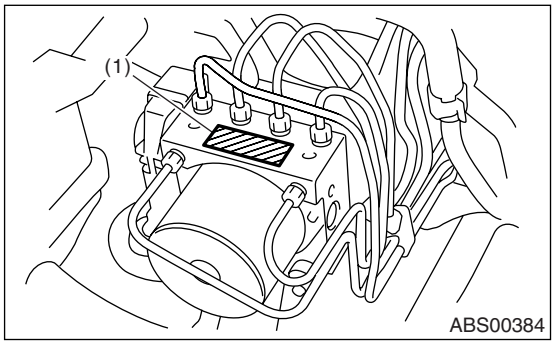

(1) Mark

1. CHECKING THE HYDRAULIC UNIT ABS OPERATION BY PRESSURE GAUGE

1) Lift-up the vehicle, and then remove the wheels.
2) Remove the air bleeder screws from the FL and FR caliper bodies.
3) Connect two pressure gauges to the FL and FR caliper bodies.

CAUTION:
• Pressure gauges used exclusively for brake fluid must be used.
• Do not use the pressure gauge for the measurement of transmission oil pressure since the piston seal may be expanded and deformed.

NOTE:
Wrap a sealing tape around the pressure gauge.

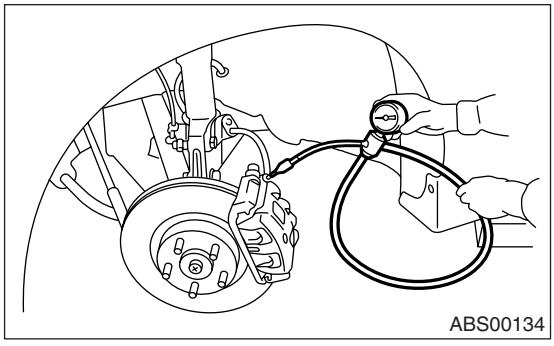

4) Bleed air from the pressure gauges and the FL and FR caliper bodies.
5) Perform ABS sequence control.
<Ref. to ABS-10, ABS Sequence Control.>
6) When the hydraulic unit begins to work, first the FL side performs decompression, holding and compression, and then the FR side performs decompression, holding and compression.
7) Read values indicated on the pressure gauge and check if the fluctuation of the values between decompression and compression meets the standard values. Depress the brake pedal and check that the kick-back is normal, and tightness is normal.

	Front wheel	Rear wheel
Initial value	3,500 kPa (36 kgf/cm^2, 511 psi)	3,500 kPa (36 kgf/cm^2, 511 psi)
When decompressed	500 kPa (5 kgf/cm^2, 73 psi) or less	500 kPa (5 kgf/cm^2, 73 psi) or less
When compressed	3,500 kPa (36 kgf/cm^2, 511 psi) or more	3,500 kPa (36 kgf/cm^2, 511 psi) or more

8) Remove the pressure gauges from the FL and FR caliper bodies.
9) Connect the air bleeder screws of the FL and FR caliper bodies.
10) Remove the air bleeder screws from the RL and RR caliper bodies.
11) Connect two pressure gauges to the RL and RR caliper bodies.
12) Bleed air from the brake system.
13) Bleed air from the pressure gauges and the RL and RR caliper bodies.
14) Perform ABS sequence control.
<Ref. to ABS-10, ABS Sequence Control.>
15) When the hydraulic unit begins to work, first the RR side performs decompression, holding and compression, and then the RL side performs decompression, holding and compression.
16) Read values indicated on the pressure gauge and check if the fluctuation of the values between decompression and compression meets the standard values. Depress the brake pedal and check that the kick-back is normal, and tightness is normal.
17) Remove the pressure gauge from the RL and RR caliper bodies.
18) Connect the air bleeder screws of the RL and RR caliper bodies.
19) Bleed air from the brake system.

2. CHECKING THE HYDRAULIC UNIT ABS OPERATION WITH BRAKE TESTER

1) Install the spare fuse to the FWD connector located in the main fuse box for the model without AT VTD.

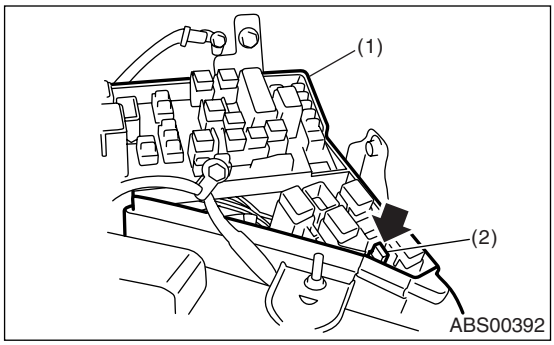

(1) Main fuse box
(2) FWD connector

2) Since the MT model and AT VTD model cannot cut off the AWD circuit forcibly, set the wheels other than measured one onto free rollers.
3) Prepare for the ABS sequence control.
<Ref. to ABS-10, ABS Sequence Control.>
4) Set the front wheels or rear wheels on the brake tester and set the select lever to “neutral”.

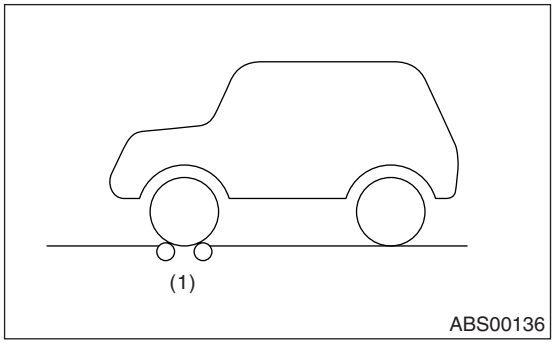

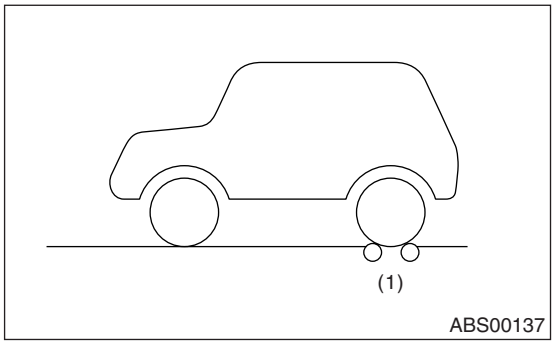

(1) Brake tester

5) Operate the brake tester.
6) Perform ABS sequence control.
<Ref. to ABS-10, ABS Sequence Control.>
7) When the hydraulic unit begins to work, check the following working sequence.

(1) The FL wheel performs decompression, holding and compression in sequence, and subsequently the FR wheel repeats the cycle.
(2) The RR wheel performs decompression, holding and compression in sequence, and subsequently the RL wheel repeats the cycle.

8) Read values indicated on the brake tester and check if the fluctuation of the values between decompression and compression meets the standard values.

	Front wheel	Rear wheel
Initial value	1,000 N (102 kgf, 225 lb)	1,000 N (102 kgf, 225 lb)
When decompressed	500 N (51 kgf, 112 lb) or less	500 N (51 kgf, 112 lb) or less
When compressed	1,000 N (102 kgf, 225 lb) or more	1,000 N (102 kgf, 225 lb) or more

9) After the inspection, depress the brake pedal and check that it is not abnormally hard, and tightness is normal.

D: REPLACEMENT

CAUTION:
• Because the seal of ABSCM cannot be replaced, do not pull or peel it with lifting up.
• Because the screw part of H/U deteriorates in every replacement procedure, do not perform the replacement more than five times on it. When the malfunction is found though the replacement that performed is less than five times, replace the H/U body.
• Use new screws for installation of ABSCM.
• When the sealing surface of ABSCM or H/U is dirty or damaged and it cannot be removed or repaired, replace it with new one.

1) Remove the ABSCM&H/U. <Ref. to ABS-6, REMOVAL, ABS Control Module and Hydraulic Control Unit (ABSCM&H/U).>
2) To prevent entering foreign matter and brake fluid leakage, plug the oil pressure port of ABSCM&H/U using screw plug and etc.
3) Set the pump motor part of removed ABSCM&H/U faces down on a vise.

NOTE:
Before securing a part on a vice, place cushioning material such as wood blocks, aluminum plate or cloth between the part and vice.

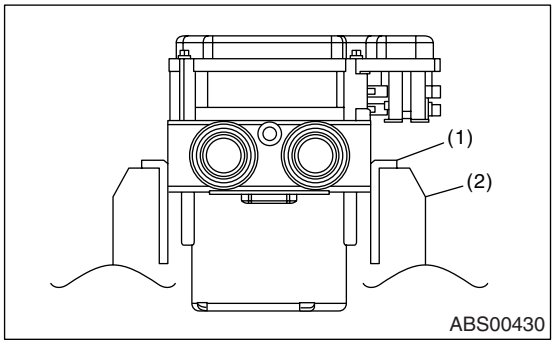

(1) Aluminum plate or etc.
(2) Vise

4) Using TORX® bit E5, remove the four screws of ABSCM.

NOTE:
Always use new screws.

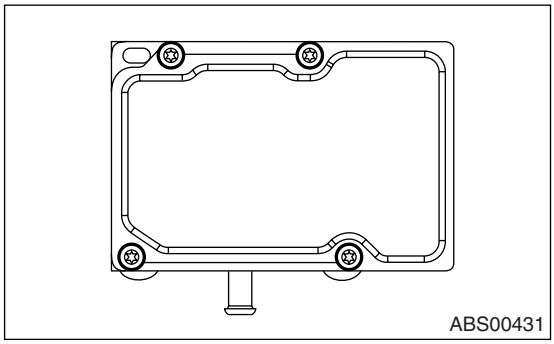

5) Slowly remove the ABSCM upward from H/U.

NOTE:
To prevent damaging of coil part, remove the ABSCM straightly from H/U.

6) Ensure there are no dirt or damage on sealing surface of H/U.

CAUTION:
• Do not clean the ABSCM & H/U with applying compressed air.
• Do not repair the damages of H/U sealing surface using file or metal scraper. To remove the sealing, use resin scraper. Do not use the chemical materials (thinner and etc.).

7) Position the coil of new ABSCM to align H/U valve.
8) To prevent deforming of ABSCM housing cover, hold the corner of ABSCM and install it to the H/U without tilting.
9) Using TORX® bit E5, tighten the screws stepwise in the order of (1) through (4).

CAUTION:
Always use new screws.

Tightening torque:
1.5 N·m (0.15 kgf-m, 1.1 ft-lb)

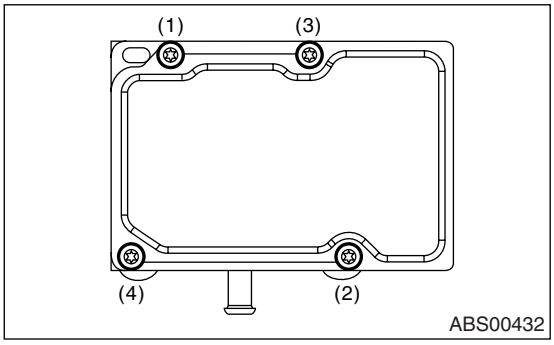

10) Check that there is no foreign matter in aligning part between ABSCM and H/U.
11) Using TORX® bit E5, tighten the screws stepwise in the order of (1) through (4) again.

Tightening torque:
3 N·m (0.3 kgf-m, 2.2 ft-lb)

12) Check that there is no clearance in aligning part between ABSCM and H/U.
13) Install the ABSCM&H/U to vehicle.

3. ABS Sequence Control

A: OPERATION

1) While the ABS sequence control is performed, the operation of the hydraulic unit can be checked using the brake tester or pressure gauge after the hydraulic unit solenoid valve operation.
2) ABS sequence control can be started by Subaru Select Monitor.

1. ABS SEQUENCE CONTROL WITH SUBARU SELECT MONITOR

NOTE:
In the event of any trouble, the ABS sequence control is not operated.

1) Connect the Subaru Select Monitor to data link connector under the driver's side instrument panel lower cover.
2) Turn the ignition switch to ON.
3) Set the Subaru Select Monitor switch to ON.
4) Set the Subaru Select Monitor to "Brake Control" mode.
5) When the "Function check sequence" is selected, the "ABS sequence control" will start.
6) Execute the following operations when the message "Press the brake pedal so that the brake pedal force is between 100 and 150 kgf" is displayed.
   (1) When the brake tester is used, press brake pedal pad with a force of 1,000 N (102 kgf, 225 lb).
   (2) When using the pressure gauge, press the brake pedal so as to make the pressure gauge indicate 3,500 kPa (36 kg/cm^2, 511 psi).
7) "Press the [YES] key" will be displayed. Press the [YES] key.
8) The brake line being operated is displayed on the Subaru Select Monitor.

2. CONDITIONS FOR ABS SEQUENCE CONTROL

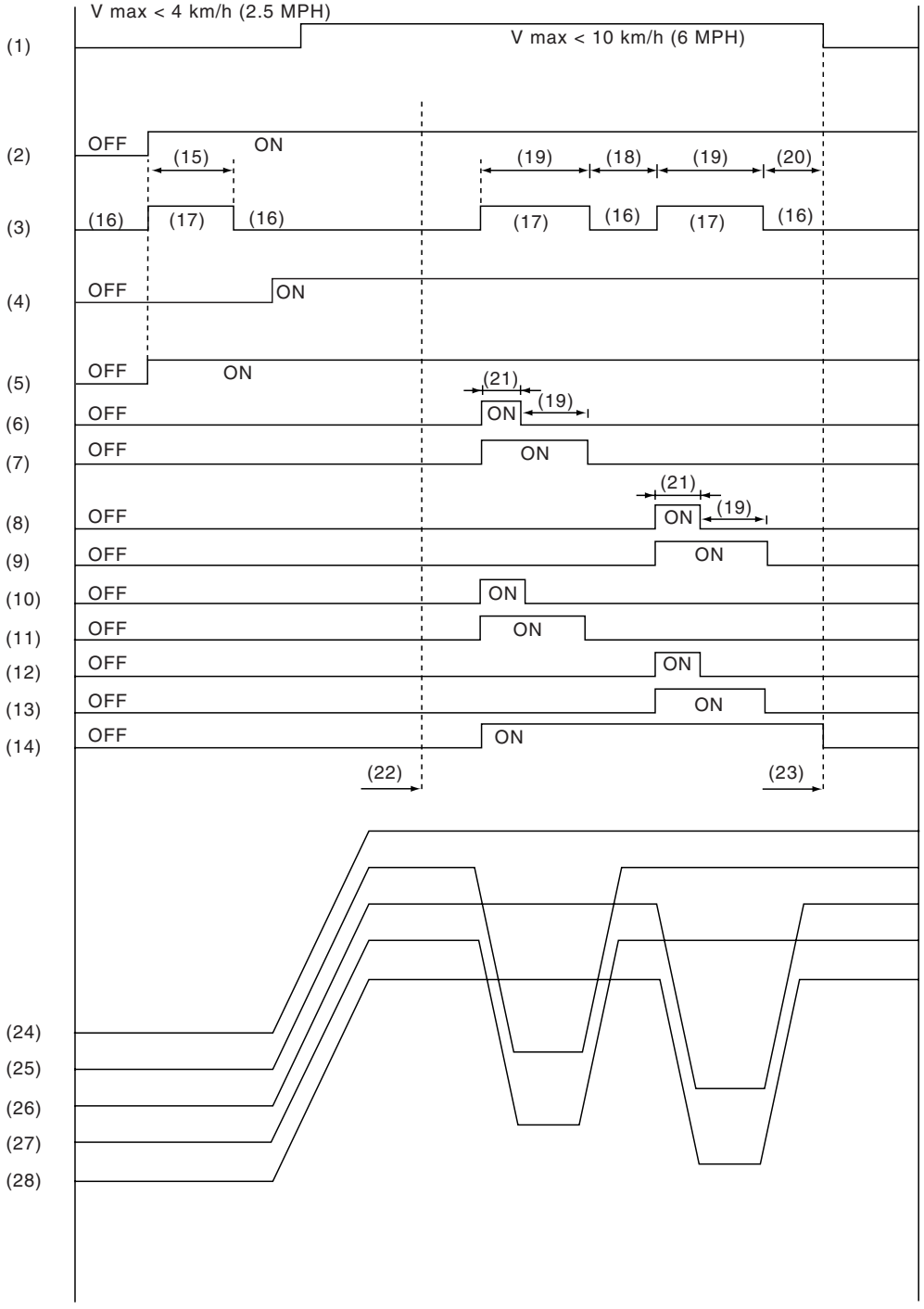

ABS00561

(1) All wheel speed
(2) Ignition key
(3) ABS warning light
(4) Stop light switch
(5) Valve relay
(6) FL decompression valve
(7) FL compression valve
(8) FR decompression valve
(9) FR compression valve
(10) RR decompression valve
(11) RR compression valve
(12) RL decompression valve
(13) RL compression valve
(14) Pump motor
(15) 1.5 seconds
(16) Light OFF
(17) Light ON
(18) 1.0 second
(19) 1.4 seconds
(20) 0.6 second
(21) 0.4 second
(22) Point A
(23) Reset
(24) Master cylinder pressure
(25) FL wheel cylinder pressure
(26) FR wheel cylinder pressure
(27) RR wheel cylinder pressure
(28) RL wheel cylinder pressure

NOTE:
The control operation starts from point A.

B: SPECIFICATION

1. CONDITIONS FOR COMPLETION OF ABS SEQUENCE CONTROL

When the following conditions develop, the ABS sequence control stops and ABS operation is returned to the normal control mode.
1) When the speed of at least one wheel reaches 10 km/h (6 MPH).
2) When the brake pedal is released during ABS sequence control and the stop light switch goes OFF.
3) After completion of ABS sequence control.
4) When malfunction is detected.

4. Front ABS Wheel Speed Sensor

A: REMOVAL

1) Disconnect the ground cable from battery.
2) Disconnect the ABS wheel speed sensor connector located next to the front strut mounting house in engine compartment.
3) Separate the sensor connector and vehicle securing clip. Apply force in the direction of (2) to unlock the pawl, and then slide the connector in the direction of (3). Pull out the connector to the tire side from grommet hole.

CAUTION:
Clip would break when removing the clip without separating sensor connector and clip.

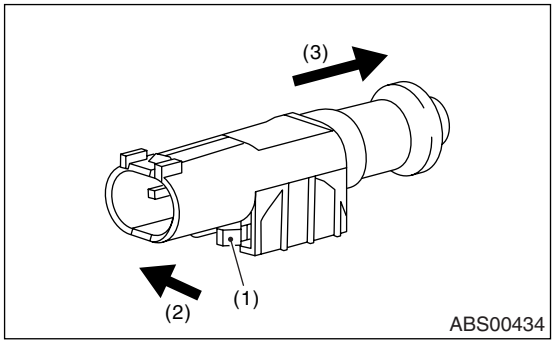

(1) Pawl

4) Remove the sensor harness bracket.

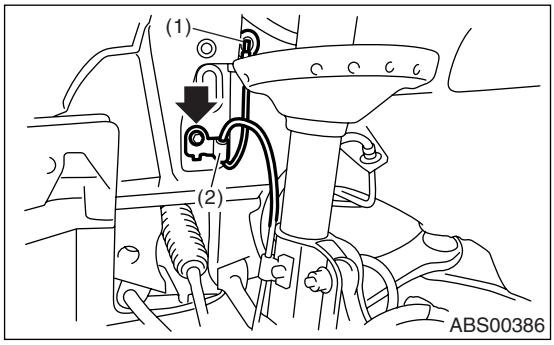

(1) To front ABS wheel speed sensor connector
(2) Sensor harness bracket

5) Remove the bolts which secure sensor harness to front strut.
6) Remove the front ABS wheel speed sensor from front housing.

CAUTION:
- **Be careful not to damage the sensor portion.**
- **Do not apply excessive force to the sensor harness.**

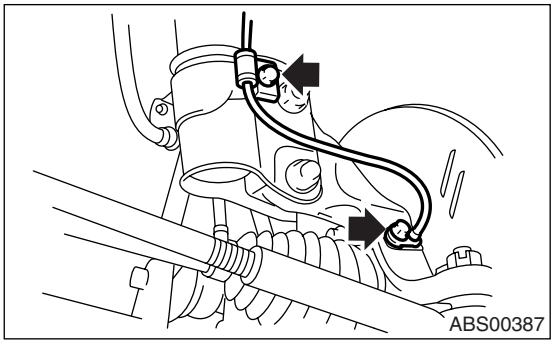

B: INSTALLATION

Install in the reverse order of removal.

Tightening torque:
Sensor:
7.5 N·m (0.76 kgf-m, 5.5 ft-lb)
Bracket:
33 N·m (3.3 kgf-m, 24 ft-lb)

CAUTION:
Be careful not to damage the sensor portion.

NOTE:
- Check the identification (mark) on the harness to make sure that no warp exists. (RH: K1 (White), LH: K2 (Yellow))
- Check if the harness is not pulled and does not come in contact with the suspension or body during steering wheel effort.

C: INSPECTION

1. INSPECTION WITH SUBARU SELECT MONITOR

1) Connect the Subaru Select Monitor to data link connector.
2) Select {Current Data Display & Save}. Check if the speed indicated on the display change in response to the speedometer reading during acceleration/deceleration when the steering wheel is in the straight-ahead position.
3) If the speed indicated on the display does not change, check the ABS wheel speed sensor. <Ref. to ABS-13, ABS WHEEL SPEED SENSOR, INSPECTION, Front ABS Wheel Speed Sensor.>

2. ABS WHEEL SPEED SENSOR

1) Check the pole piece of the ABS wheel speed sensor for foreign particles or damage. If necessary, clean the pole piece or replace the ABS wheel speed sensor.
2) Charge a 12 V power supply to the No. 2 terminal of sensor connector as shown in the figure, and then install the resistance to No. 1 terminal. Rotate

the wheel about 2.75 km/h (2 MPH) or equivalent, measure the voltage using oscilloscope.

Standard value of output voltage:
0.7 — 1.4 V

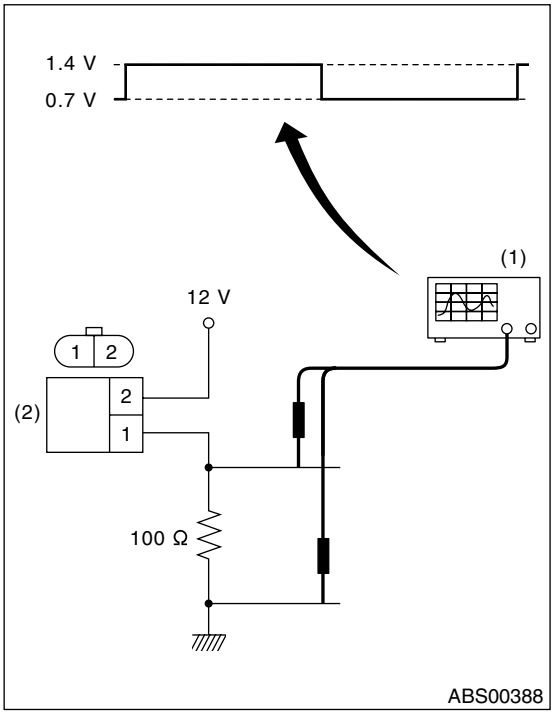

(1) Oscilloscope
(2) ABS wheel speed sensor

NOTE:
Check the ABS wheel speed sensor cable for discontinuity. If necessary, replace with a new one.

5. Rear ABS Wheel Speed Sensor

A: REMOVAL

1) Disconnect the ground cable from battery.
2) Disconnect the connector from rear ABS wheel speed sensor.

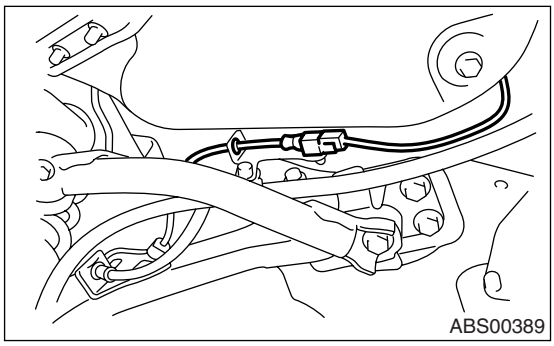

3) Remove the sensor harness bracket from rear arm.

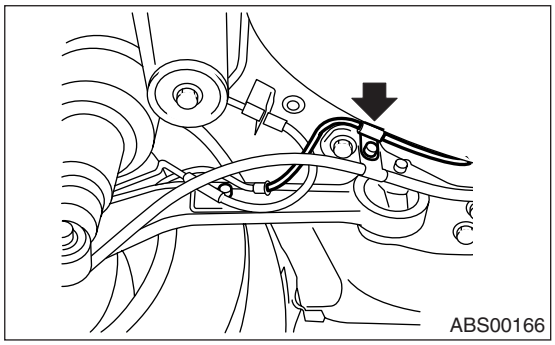

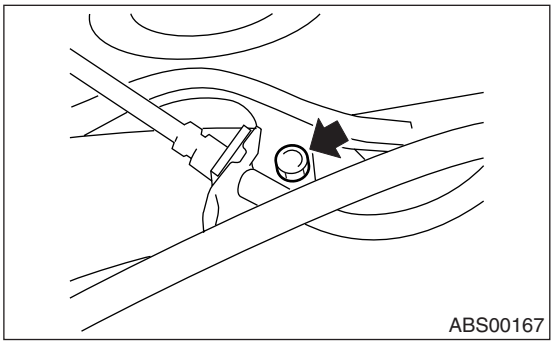

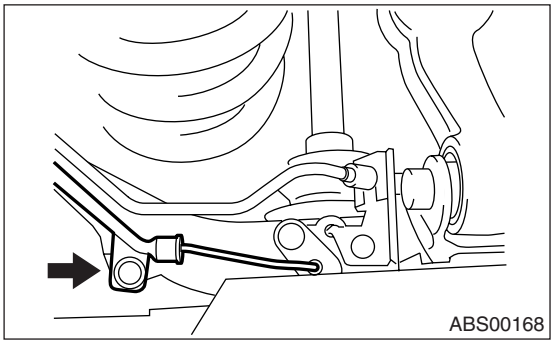

4) Remove the rear ABS wheel speed sensor from rear arm.

CAUTION:
• Be careful not to damage the sensor portion.
• Do not apply excessive force to the sensor harness.

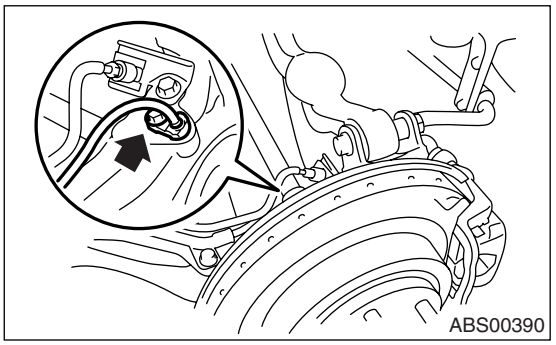

B: INSTALLATION

Install in the reverse order of removal.

CAUTION:
Be careful not to damage the sensor portion.

Tightening torque:
Sensor:
7.5 N·m (0.76 kgf-m, 5.5 ft-lb)
Bracket:
33 N·m (3.3 kgf-m, 24 ft-lb)

NOTE:
Check the identification (mark) on the harness to make sure that no warp exists. (RH:K5(White), LH:K6(Yellow))

C: INSPECTION

1. ABS WHEEL SPEED SENSOR

<Ref. to ABS-13, ABS WHEEL SPEED SENSOR, INSPECTION, Front ABS Wheel Speed Sensor.>

6. Front Magnetic Encoder

A: REMOVAL

Refer to “Front Hub Bearing” for removal, because the front magnetic encoder is integrated with front hub bearing.
<Ref. to DS-17, REMOVAL, Front Hub Unit Bearing.>

B: INSTALLATION

Refer to “Front Hub Bearing” for installation, because the front magnetic encoder is integrated with front hub bearing.
<Ref. to DS-17, INSTALLATION, Front Hub Unit Bearing.>

C: INSPECTION

Visually check the magnetic encoder for any damage. If necessary, replace with a new hub unit bearing.

NOTE:
Replace the hub unit bearing with a new one if there is any defect found on the magnetic encoder, since the magnetic encoder is integrated with hub unit bearing assembly.

7. Rear Magnetic Encoder

A: REMOVAL

Refer to “Rear Hub Unit Bearing” for removal, because the rear magnetic encoder is integrated with rear hub unit bearing.
<Ref. to DS-19, REMOVAL, Rear Hub Unit Bearing.>

B: INSTALLATION

Refer to “Rear Hub Unit Bearing” for installation, because the rear magnetic encoder is integrated with rear hub unit bearing.
<Ref. to DS-20, INSTALLATION, Rear Hub Unit Bearing.>

C: INSPECTION

Visually check the magnetic encoder for any damage. If necessary, replace with a new hub unit bearing.

NOTE:
Replace the hub unit bearing with a new one if there is any defect found on the magnetic encoder, since the magnetic encoder is integrated with hub unit bearing assembly.

8. G Sensor

A: REMOVAL

1) Disconnect the ground cable from battery.
2) Remove the console box.
<Ref. to EI-53, REMOVAL, Console Box.>
3) Disconnect the connector from G sensor.
4) Remove the G sensor from body.

CAUTION:
- **Do not drop or bump the G sensor.**
- **Since G sensor is a unit with the bracket, do not disassemble them.**

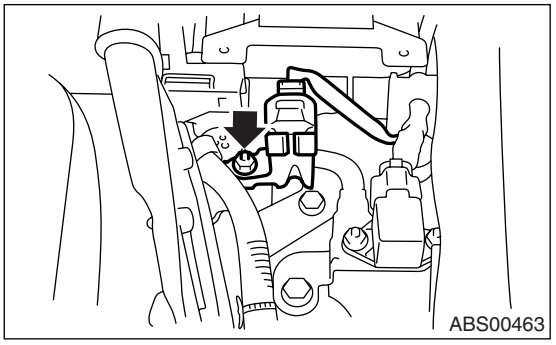

B: INSTALLATION

Install in the reverse order of removal.

CAUTION:
Do not drop or bump the G sensor.

Tightening torque:
7.5 N·m (0.76 kgf-m, 5.5 ft-lb)

C: INSPECTION

	Step	Check	Yes	No
1	**CHECK G SENSOR.** 1) Turn the ignition switch to OFF. 2) Connect the Subaru Select Monitor to data link connector. 3) Set the Subaru Select Monitor to the {Brake Control} mode. 4) Set the display in the {Current Data Display & Save} mode. 5) Read the G sensor output value.	Is the value −1.2 — 1.2 m/s^2 when the vehicle is in horizontal position?	Go to step **2.**	Repair the harness connector between G sensor and ABSCM&H/U. Or replace G sensor.
2	**CHECK G SENSOR.** 1) Remove the console box. 2) Remove the G sensor from vehicle. (Do not disconnect connector.) 3) Read the Subaru Select Monitor display.	Is the value 8.1 — 11.2 m/s^2 when G sensor is inclined forward to 90°?	Go to step **3.**	Repair the harness connector between G sensor and ABSCM&H/U. Or replace G sensor.
3	**CHECK G SENSOR.** Read the Subaru Select Monitor display.	Is the value −8.1 — −11.2 m/s^2 when G sensor is inclined backward to 90°?	G sensor is normal.	Repair the harness connector between G sensor and ABSCM&H/U. Or replace G sensor.

ABS (DIAGNOSTICS)

ABS(diag)

		Page
1.	Basic Diagnostic Procedure	2
2.	Check List for Interview	4
3.	General Description	8
4.	Electrical Component Location	10
5.	Control Module I/O Signal	12
6.	Subaru Select Monitor	15
7.	Read Diagnostic Trouble Code (DTC)	23
8.	Inspection Mode	24
9.	Clear Memory Mode	25
10.	ABS Warning Light / Brake Warning Light Illumination Pattern	26
11.	List of Diagnostic Trouble Code (DTC)	34
12.	Diagnostic Procedure with Diagnostic Trouble Code (DTC)	37
13.	General Diagnostic Table	69

1. Basic Diagnostic Procedure

A: PROCEDURE

CAUTION:
Remove foreign matters (dust, water, oil, etc.) from the ABSCM&H/U connector during removal and installation.

NOTE:
- To check harness for broken wires or short circuits, shake trouble spot or connector.
- Refer to “Check List for Interview”. <Ref. to ABS(diag)-4, Check List for Interview.>

	Step	Check	Yes	No
1	**CHECK PRE-INSPECTION.** 1) Ask the customer when and how the trouble occurred using interview checklist. <Ref. to ABS(diag)-4, Check List for Interview.> 2) Before performing diagnostics, check the component which might affect ABS problems. <Ref. to ABS(diag)-8, INSPECTION, General Description.>	Is the component that might influence the ABS problem normal?	Go to step **2.**	Repair or replace each unit.
2	**CHECK INDICATION OF DTC ON SCREEN.** 1) Turn the ignition switch to OFF. 2) Connect the Subaru Select Monitor to data link connector. 3) Turn the ignition switch to ON and Subaru Select Monitor to ON. NOTE: If the communication function of the Subaru Select Monitor cannot be executed normally, check the communication circuit. <Ref. to ABS(diag)-18, COMMUNICATION FOR INITIALIZING IMPOSSIBLE, INSPECTION, Subaru Select Monitor.> 4) Read the DTC. <Ref. to ABS(diag)-23, OPERATION, Read Diagnostic Trouble Code (DTC).> 5) Record all DTCs and Freeze Frame Data.	Is DTC displayed?	Go to step **4.**	Go to step **3.**
3	**PERFORM THE GENERAL DIAGNOSTICS.** 1) Inspect using “General Diagnostic Table”. <Ref. to ABS(diag)-69, General Diagnostic Table.> 2) Perform clear memory mode. <Ref. to ABS(diag)-17, CLEAR MEMORY MODE, OPERATION, Subaru Select Monitor.> 3) Perform the inspection mode. <Ref. to ABS(diag)-24, Inspection Mode.> 4) Read the DTC. <Ref. to ABS(diag)-15, READ DIAGNOSTIC TROUBLE CODE (DTC), OPERATION, Subaru Select Monitor.> Check the DTC does not displayed.	Does the ABS warning light go off after turning the ignition switch to ON?	Finish the diagnosis.	Check in accordance with “Diagnostic Procedure for ABS”. <Ref. to ABS(diag)-20, WITHOUT DTC, INSPECTION, Subaru Select Monitor.>

	Step	Check	Yes	No
4	**PERFORM THE DIAGNOSIS.** 1) Refer to the “List of Diagnostic Trouble Code (DTC)”. <Ref. to ABS(diag)-34, LIST, List of Diagnostic Trouble Code (DTC).> 2) Fix the wrong part. 3) Perform clear memory mode. <Ref. to ABS(diag)-17, CLEAR MEMORY MODE, OPERATION, Subaru Select Monitor.> 4) Perform the inspection mode. <Ref. to ABS(diag)-24, Inspection Mode.> 5) Read the DTC. <Ref. to ABS(diag)-15, READ DIAGNOSTIC TROUBLE CODE (DTC), OPERATION, Subaru Select Monitor.>	Is DTC displayed?	Repeat step 1 to 4 until DTC is not shown.	Finish the diagnosis.

2. Check List for Interview

A: CHECK

Check the following items about the vehicle's state.

1. STATE OF ABS WARNING LIGHT

ABS warning light comes on.	❑ Always ❑ Sometimes ❑ Only once ❑ Not come on • When / how long does it come on?		
Ignition key position	❑ LOCK ❑ ACC ❑ ON (before starting engine) ❑ START ❑ ON (after Engine starting, engine is running) ❑ ON (after Engine starting, engine is at a standstill)		
Timing	❑ Immediately after turning the ignition to ON ❑ Immediately after turning the ignition to START		
	❑ When accelerating	—	km/h
		—	MPH
	❑ When driving at a constant speed	km/h	MPH
	❑ When decelerating	—	km/h
		—	MPH
	❑ When turning to the right	Steering angle:	deg
		Steering time:	Sec.
	❑ When turning to the left	Steering angle:	deg
		Steering time:	Sec.
	❑ When operating other electrical parts		
	• Parts name: • Operating condition:		

2. STATE OF BRAKE WARNING LIGHT

Brake warning light comes on.	❑ Always ❑ Sometimes ❑ Only once ❑ Not come on ❑ When pulling the parking brake lever up. ❑ When releasing the parking brake lever down. • When / how long does it come on?		
Ignition key position	❑ LOCK ❑ ACC ❑ ON (before starting engine) ❑ START ❑ ON (after Engine starting, engine is running) ❑ ON (after Engine starting, engine is at a standstill)		
Timing	❑ Immediately after turning the ignition to ON ❑ Immediately after turning the ignition to START		
	❑ When accelerating	—	km/h
		—	MPH
	❑ When driving at a constant speed	km/h	MPH
	❑ When decelerating	—	km/h
		—	MPH
	❑ When turning to the right	Steering angle:	deg
		Steering time:	Sec.
	❑ When turning to the left	Steering angle:	deg
		Steering time:	Sec.
	❑ When operating other electrical parts		
	• Parts name: • Operating condition:		

3. SYMPTOMS

<table>
<tr><td rowspan="11">ABS operating condition</td><td colspan="3">❑ Does not move.</td></tr>
<tr><td>❑ Operates only when applying an abrupt brake.</td><td>Vehicle speed:</td><td>km/h
MPH</td></tr>
<tr><td colspan="3">• How to step on brake pedal:</td></tr>
<tr><td>a) Operating time:</td><td colspan="2">Sec.</td></tr>
<tr><td colspan="3">b) Operating noise: ❑ Occurs. / ❑ Does not occur.</td></tr>
<tr><td>• What kind of noise?</td><td colspan="2">❑ Knocking
❑ Gong gong
❑ Bong
❑ Buzz
❑ Gong gong buzz
❑ Others:</td></tr>
<tr><td colspan="3">c) Reaction force of brake pedal</td></tr>
<tr><td></td><td colspan="2">❑ Stick
❑ Weak pedal resistance
❑ Strong pedal resistance
❑ Others:</td></tr>
<tr><td rowspan="13">Behavior of vehicle</td><td colspan="3">a) Directional stability cannot be obtained or the steering refuses to work when applying brakes:
❑ Yes / ❑ No</td></tr>
<tr><td>• When:</td><td colspan="2">❑ When turning to the right
❑ When turning to the left
❑ When spinning
❑ Others:</td></tr>
<tr><td colspan="3">b) Directional stability cannot be obtained or the steering refuses to work when accelerating:
❑ Yes / ❑ No</td></tr>
<tr><td>• When:</td><td colspan="2">❑ When turning to the right
❑ When turning to the left
❑ When spinning
❑ Others:</td></tr>
<tr><td colspan="3">c) Poor brake performance: ❑ Yes / ❑ No</td></tr>
<tr><td>• What kind:</td><td colspan="2">❑ Long braking/stopping distance
❑ Brakes lock or drag
❑ Long pedal stroke
❑ Pedal sticks.
❑ Others:</td></tr>
<tr><td colspan="3">d) Poor acceleration: ❑ Yes / ❑ No</td></tr>
<tr><td>• What kind:</td><td colspan="2">❑ Not accelerate
❑ Engine stalls.
❑ Others:</td></tr>
<tr><td colspan="3">e) Occurrence of vibration: ❑ Yes / ❑ No</td></tr>
<tr><td colspan="3">• Where
• What kind:</td></tr>
<tr><td colspan="3">f) Occurrence of noise: ❑ Yes / ❑ No</td></tr>
<tr><td colspan="3">• Where
• What kind:</td></tr>
<tr><td colspan="3">g) Other troubles occurred: ❑ Yes / ❑ No</td></tr>
<tr><td colspan="3">• What kind:</td></tr>
</table>

4. CONDITIONS UNDER WHICH TROUBLE OCCURS

Environment	a) Weather	❑ Fine ❑ Cloudy ❑ Rainy ❑ Snowy ❑ Others:
	b) Ambient temperature	°C (°F)
	c) Road	❑ Inner city ❑ Suburbs ❑ Highway ❑ Local street ❑ Uphill ❑ Downhill ❑ Paved road ❑ Gravel road ❑ Muddy road ❑ Sandy place ❑ Others:
	d) Road surface	❑ Dried ❑ Wet ❑ Covered with fresh snow ❑ Covered with hardened snow ❑ Frozen slope ❑ Others:
Condition	a) Brakes	Deceleration: G
		❑ Intermittent / ❑ Temporary
	b) Accelerator	Acceleration: G
		❑ Intermittent / ❑ Temporary
	c) Vehicle speed	km/h | MPH
		❑ Advancing ❑ When accelerating ❑ When decelerating ❑ At low speed ❑ When turning ❑ Others:
	d) Tire inflation pressure	Front RH tire: kPa
		Front LH tire: kPa
		Rear RH tire: kPa
		Rear LH tire: kPa
	e) Degree of wear	Front RH tire:
		Front LH tire:
		Rear RH tire:
		Rear LH tire:
	f) Genuine parts are used.: ❑ Yes / ❑ No	
	g) Tire chain is attached.: ❑ Yes / ❑ No	
	h) T-type tire is used.: ❑ Yes / ❑ No	
	i) Condition of suspension alignment:	
	j) Loading state:	
	k) Repair parts are used.: ❑ Yes / ❑ No	
	• Contents:	
	l) Others:	

3. General Description

A: CAUTION

1. SUPPLEMENTAL RESTRAINT SYSTEM "AIRBAG"

Airbag system wiring harness is routed near the ABS wheel speed sensor and ABSCM&H/U.

CAUTION:
• All airbag system wiring harness and connectors are colored yellow. Do not use the electrical test equipment on these circuits.
• Be careful not to damage the airbag system wiring harness when servicing the ABS wheel speed sensor and ABSCM&H/U.

B: INSPECTION

Before performing diagnosis, check the following items which might affect ABS problems.

1. BATTERY

Measure battery voltage and check electrolyte.

Standard voltage: 12 V or more

Specific gravity: More than 1.260

2. GROUND

Check the tightening torque of ABS ground (GB-7) bolt.

Tightening torque:
13 N·m (1.3 kgf-m, 9.6 ft-lb)

3. BRAKE FLUID

1) Check the brake fluid level.
2) Check the brake fluid for leaks.

4. HYDRAULIC UNIT

Check the hydraulic unit.
• With brake tester <Ref. to ABS-8, CHECKING THE HYDRAULIC UNIT ABS OPERATION WITH BRAKE TESTER, INSPECTION, ABS Control Module and Hydraulic Control Unit (ABSCM&H/U).>
• Without brake tester <Ref. to ABS-7, CHECKING THE HYDRAULIC UNIT ABS OPERATION BY PRESSURE GAUGE, INSPECTION, ABS Control Module and Hydraulic Control Unit (ABSCM&H/U).>

5. BRAKE DRAG

Check for brake drag.

6. BRAKE PAD AND ROTOR

Check the brake pad and rotor.
• FRONT <Ref. to BR-15, INSPECTION, Front Brake Pad.> <Ref. to BR-16, INSPECTION, Front Disc Rotor.>
• REAR <Ref. to BR-22, INSPECTION, Rear Brake Pad.> <Ref. to BR-23, INSPECTION, Rear Disc Rotor.>

7. TIRE

Check the tire specifications, tire wear and air pressure. <Ref. to WT-2, SPECIFICATION, General Description.>

C: PREPARATION TOOL

1. SPECIAL TOOL

ILLUSTRATION	TOOL NUMBER	DESCRIPTION	REMARKS
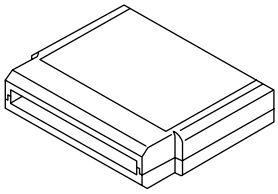 ST24082AA260	24082AA260	CARTRIDGE	Troubleshooting for electrical system.
ST22771AA030	22771AA030	SUBARU SELECT MONITOR KIT	Troubleshooting for electrical system.

2. GENERAL TOOL

TOOL NAME	REMARKS
Circuit tester	Used for measuring resistance, voltage and ampere.
Oscilloscope	Used for measuring sensor.

4. Electrical Component Location

A: LOCATION

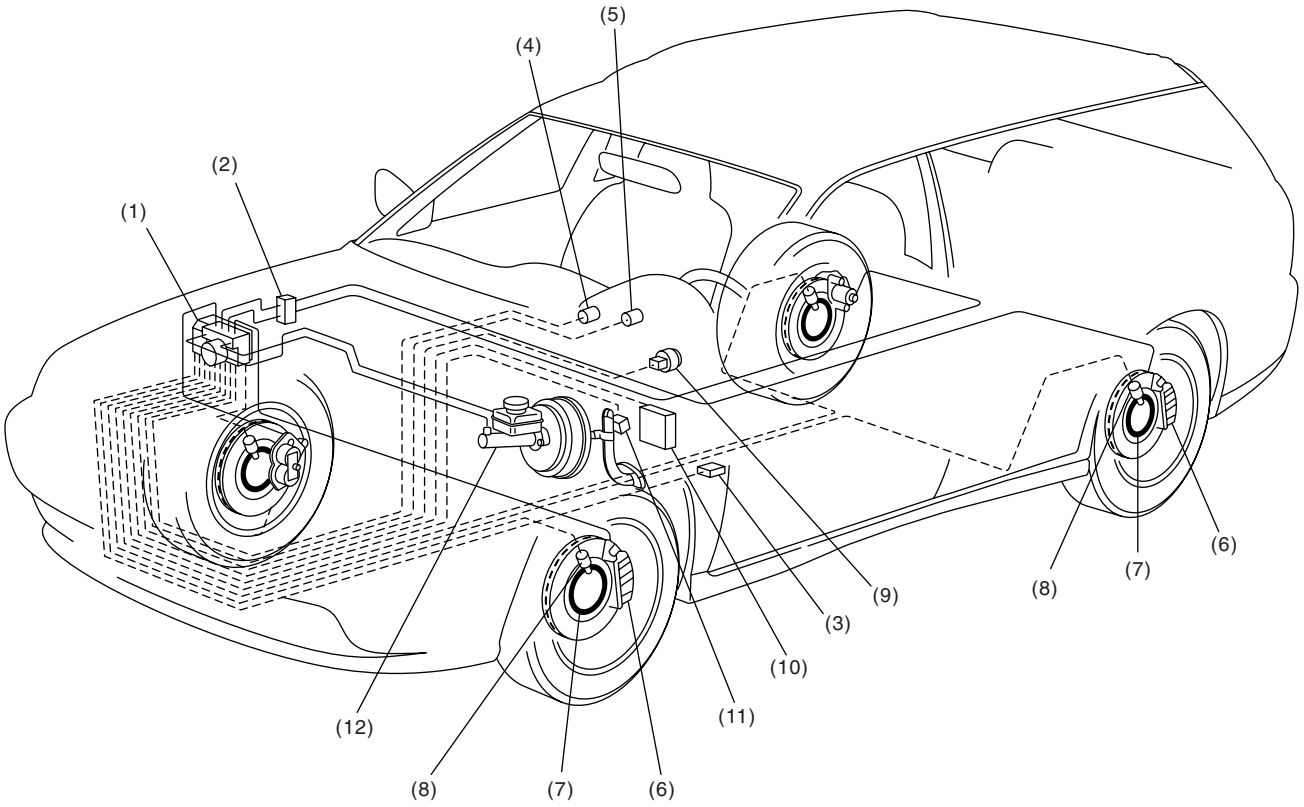

(1) ABS control module and hydraulic control unit (ABSCM&H/U)
(2) Two-way connector
(3) Data link connector (For Subaru Select Monitor)
(4) ABS warning light
(5) Brake and EBD warning light
(6) Caliper body
(7) Magnetic encoder seal
(8) ABS wheel speed sensor
(9) G sensor
(10) Transmission control module (TCM) (AT model)
(11) Stop light switch
(12) Master cylinder

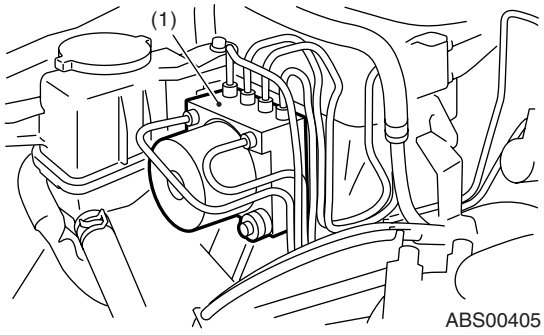
(1)
ABS00405

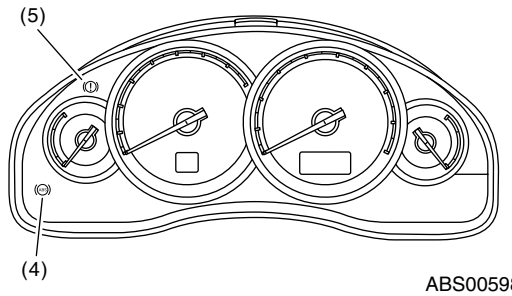
(5)
(4)
ABS00598

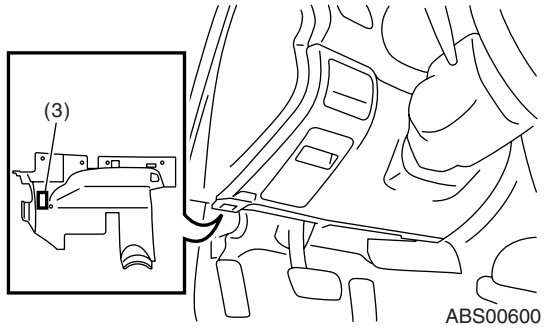
(3)
ABS00600

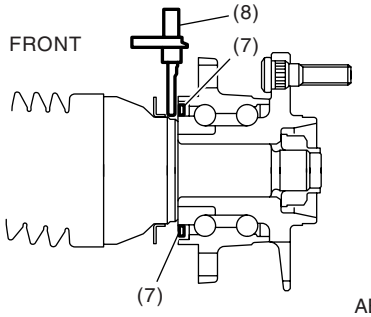
FRONT
(8)
(7)
(7)
ABS00408

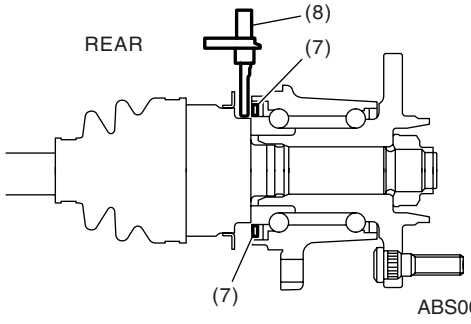
REAR
(8)
(7)
(7)
ABS00407

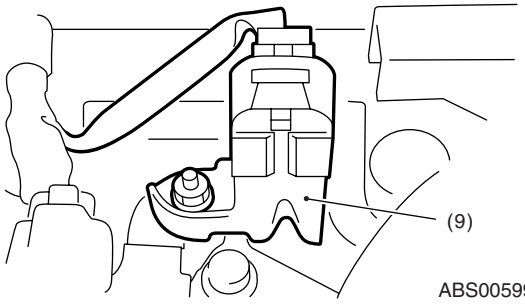
(9)
ABS00599

5. Control Module I/O Signal

A: ELECTRICAL SPECIFICATION

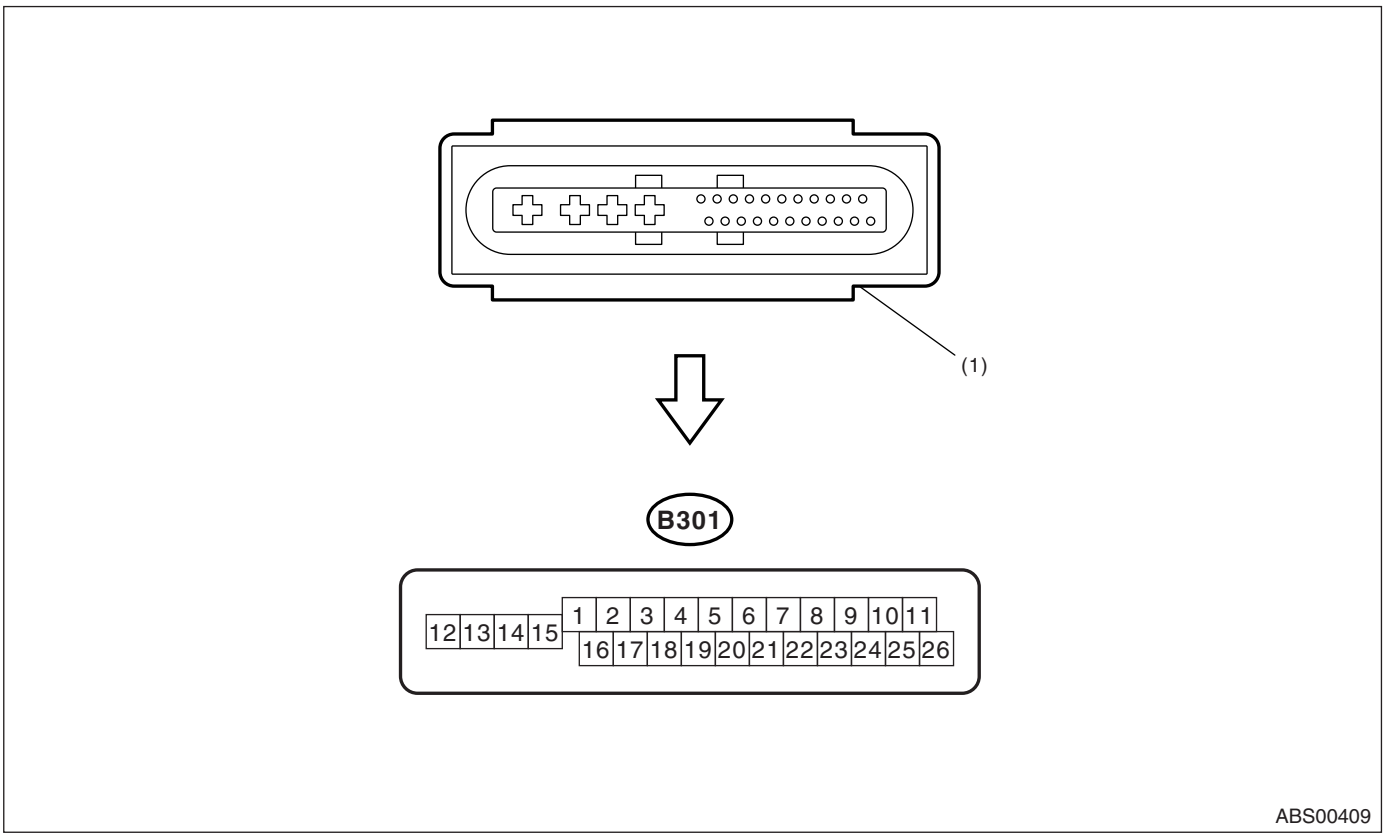

(1) ABS control module and hydraulic control unit (ABSCM&H/U) connector

NOTE:
- Terminal numbers in ABSCM&H/U connector are as shown in the figure.
- ABS warning light is illuminates when the connector is removed from ABSCM&H/U.

Description			Terminal No. (+) — (–)	Input/Output signal Measured value and measuring conditions
ABS wheel speed sensor (Wheel speed sensor)	Front LH wheel	Power supply	16 — 15	4.5 — 16.5 V
		Signal	1	5.9 — 16.8 mA: Rectangle waveform
	Front RH wheel	Power supply	5 — 15	4.5 — 16.5 V
		Signal	6	5.9 — 16.8 mA: Rectangle waveform
	Rear LH wheel	Power supply	2 — 15	4.5 — 16.5 V
		Signal	17	5.9 — 16.8 mA: Rectangle waveform
	Rear RH wheel	Power supply	3 — 15	4.5 — 16.5 V
		Signal	4	5.9 — 16.8 mA: Rectangle waveform
CAN communication line (+)			26	2.5 — 1.5 V pulse signal
CAN communication line (–)			11	3.5 — 2.5 V pulse signal
Valve relay power supply *1			14 — 15	10 — 15 V
Motor relay power supply *1			13 — 15	10 — 15 V
G sensor	Power supply		24 — 10	4.75 — 5.25 V
	Ground		10	—
	Output		21 — 10	2.1 — 2.5 V when the vehicle is on a level surface
Stop light switch *1			20 — 15	Less than 1.5 V when the stop light is OFF; otherwise, 10 — 15 V when the stop light is ON.
ABS warning light			22 — 15	After turning the ignition switch to ON, 10 — 15 V during 1.5 seconds and less than 1.5 V after 1.5 seconds passed.
Brake warning light (EBD warning light)			8 — 15	After turning the ignition switch to ON, 10 — 15 V during 1.5 seconds and less than 1.5 V after 1.5 seconds passed.
Subaru Select Monitor			7 — 15	Less than 1.5 V when no data is received. 0 ←→ 12 V pulse (in communication)
Power supply *1			18 — 15	When the ignition switch is ON, 10 — 15 V.
Grounding line			15	—
Vehicle speed output signal			23 — 15	0 ←→ 5 V pulse

*1: Measure the I/O signal voltage after removing the connector from the ABSCM&H/U terminal.

B: WIRING DIAGRAM

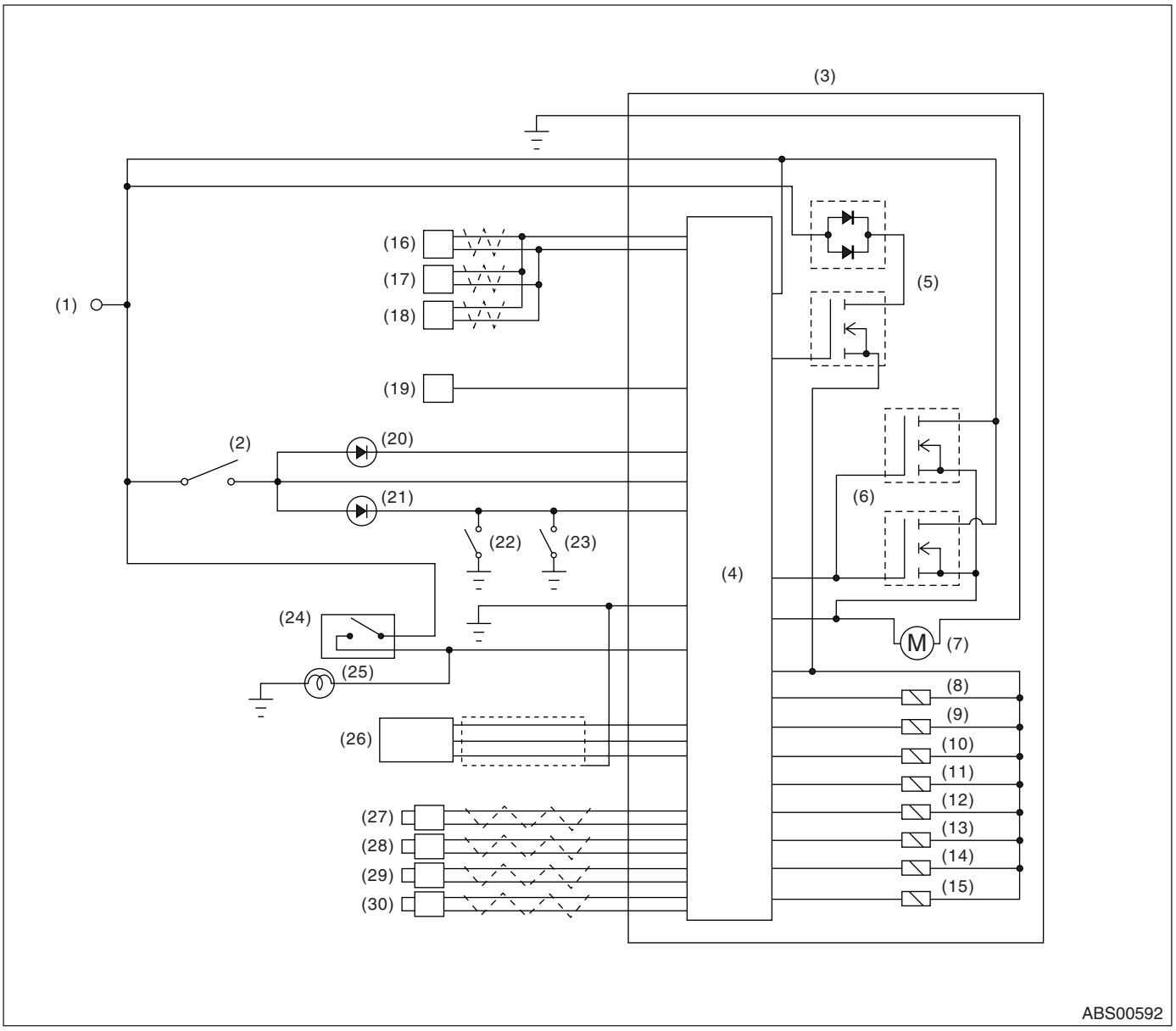

(1) Battery
(2) Ignition switch
(3) ABS control module and hydraulic control unit (ABSCM&H/U)
(4) ABS control module
(5) Valve relay
(6) Motor relay
(7) Motor
(8) Front inlet solenoid valve LH
(9) Front outlet solenoid valve LH
(10) Front inlet solenoid valve RH
(11) Front outlet solenoid valve RH
(12) Rear inlet solenoid valve LH
(13) Rear outlet solenoid valve LH
(14) Rear inlet solenoid valve RH
(15) Rear outlet solenoid valve RH
(16) Body integrated unit
(17) Engine control module (ECM)
(18) Transmission control module (TCM)
(19) Data link connector
(20) ABS warning light
(21) Brake warning light
(22) Parking brake switch
(23) Brake fluid level switch
(24) Stop light switch
(25) Stop light
(26) G sensor
(27) Front ABS wheel speed sensor LH
(28) Front ABS wheel speed sensor RH
(29) Rear ABS wheel speed sensor LH
(30) Rear ABS wheel speed sensor RH

6. Subaru Select Monitor

A: OPERATION

1. READ DIAGNOSTIC TROUBLE CODE (DTC)

1) Prepare the Subaru Select Monitor kit. <Ref. to ABS(diag)-9, SPECIAL TOOL, PREPARATION TOOL, General Description.>

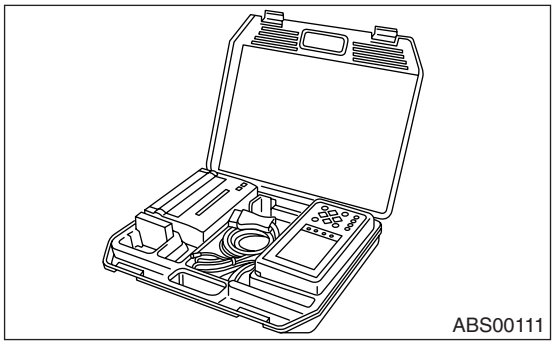

2) Connect the diagnosis cable to Subaru Select Monitor.
3) Insert the cartridge to Subaru Select Monitor. <Ref. to ABS(diag)-9, SPECIAL TOOL, PREPARATION TOOL, General Description.>

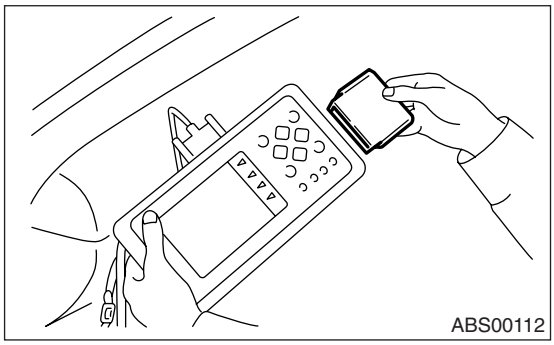

4) Connect the Subaru Select Monitor to data link connector.

(1) Data link connector is located in the lower portion of the instrument panel (on the driver's side).

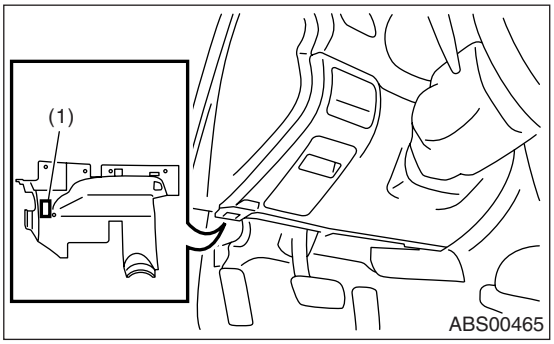

(1) Data link connector

(2) Connect the diagnosis cable to data link connector.

CAUTION:
Do not connect the scan tools except for Subaru Select Monitor.

5) Turn the ignition switch to ON (engine OFF) and turn the Subaru Select Monitor switch to ON.

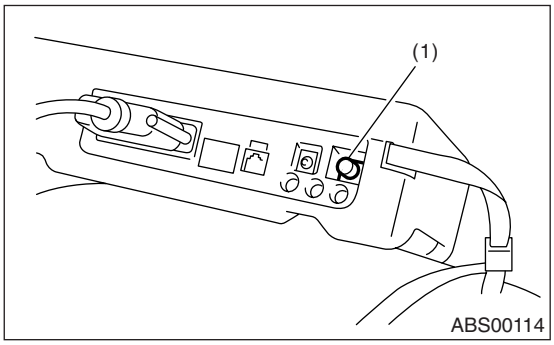

(1) Power switch

6) On the «Main Menu» display screen, select the {Each System Check} and press the [YES] key.
7) On the «System Selection Menu» display screen, select the {Brake Control} and press the [YES] key.
8) Press the [YES] key after the {ABS} is displayed.
9) On the «ABS Diagnosis» display screen, select the {DTC Display} and press the [YES] key.

NOTE:
• For details concerning operation procedure, refer to the "SUBARU SELECT MONITOR OPERATION MANUAL".
• For details concerning DTCs, refer to the "List of Diagnostic Trouble Code (DTC)". <Ref. to ABS(diag)-34, List of Diagnostic Trouble Code (DTC).>
• DTCs are displayed up to three in detected order.
• If a particular DTC is not properly stored in memory (due to a drop in ABSCM&H/U power supply, etc.) on the occurrence of a problem, the DTC which is suffixed with a question mark "?" appears on the Subaru Select Monitor display. This shows it may be an unreliable reading.

10) If ABS and Subaru Select Monitor cannot communicate, check the communication circuit. <Ref. to ABS(diag)-18, COMMUNICATION FOR INITIALIZING IMPOSSIBLE, INSPECTION, Subaru Select Monitor.>

11) When DTC is not displayed, check the meter circuit or CAN communication circuit. <Ref. to ABS(diag)-20, WITHOUT DTC, INSPECTION, Subaru Select Monitor.>

Display	Contents to be monitored
Current	Indicate the latest DTC on the Subaru Select Monitor display.
Old	Indicate the latest DTC in previous trouble on the Subaru Select Monitor display.
Older	Indicate the latest DTC in second previous trouble on the Subaru Select Monitor display.
Before 3	Indicate the latest DTC in third previous trouble on the Subaru Select Monitor display.

2. READ CURRENT DATA

1) On the «Main Menu» display screen, select the {Each System Check} and press the [YES] key.
2) On the «System Selection Menu» display screen, select the {Brake Control} and press the [YES] key.
3) Press the [YES] key after the {ABS} is displayed.
4) On the «Brake Control Diagnosis» screen, select the {Current Data Display/Save}, and then press the [YES] key.
5) On the «Data Display Menu» screen, select the data display style and press the [YES] key.
6) Using a scroll key, move the display screen up or down until necessary data is shown.
• A list of the support data is shown in the following table.

Display	Contents to be monitored	Unit of measure
FR Wheel Speed	Wheel speed detected by front ABS wheel speed sensor RH is displayed.	km/h or MPH
FL Wheel Speed	Wheel speed detected by front ABS wheel speed sensor LH is displayed.	km/h or MPH
RR Wheel Speed	Wheel speed detected by rear ABS wheel speed sensor RH is displayed.	km/h or MPH
RL Wheel Speed	Wheel speed detected by rear ABS wheel speed sensor LH is displayed.	km/h or MPH
BLS Signal	Brake ON/OFF is displayed.	ON or OFF
G Sensor	Vehicle acceleration detected by analog G sensor is displayed.	m/s (m/s^2)
Valve Relay Signal	Valve relay operation signal is displayed.	ON or OFF
ABS Warning Light	ON operation of the ABS warning light is displayed.	ON or OFF
EBD Warning Light	ON operation of the EBD warning light is displayed.	ON or OFF
Motor Relay Monitor	Motor relay monitor voltage is displayed.	V
IG power supply voltage	Voltage supplied to ABSCM&H/U is displayed.	V
ABS Control Flag	ABS control condition is displayed.	ON or OFF
ABS OK B Signal	ABS system normal/abnormal is displayed.	OK or NG

NOTE:
For details concerning operation procedure, refer to the “SUBARU SELECT MONITOR OPERATION MANUAL”.

3. CLEAR MEMORY MODE

1) On the «Main Menu» display screen, select the {2. Each System Check} and press the [YES] key.
2) On the «System Selection Menu» display screen, select the {Brake Control} and press the [YES] key.
3) Press the [YES] key after the {ABS} is displayed.
4) On the «Brake Control Diagnosis» display screen, select the {Clear Memory} and press the [YES] key.

Display	Contents to be monitored
Clear memory?	Function of clearing DTC.

5) When “Done” and “Turn ignition switch OFF” are shown on the display screen, turn the Subaru Select Monitor and ignition switch to OFF.

NOTE:
For details concerning operation procedure, refer to the “SUBARU SELECT MONITOR OPERATION MANUAL”.

4. ABS SEQUENCE CONTROL

Display	Contents to be monitored	Index No.
ABS sequence control	Operate the valve and pump motor continuously to perform the ABS sequence control.	<Ref. to ABS-10, ABS Sequence Control.>

5. FREEZE FRAME DATA

NOTE:
• Data stored at the time of trouble occurrence is shown on display.
• Each time trouble occurs, the latest information is stored in the freeze frame data in memory.
• Freeze frame data will be memorized up to three.
• If a Freeze Frame Data is not properly stored in memory (due to a drop in ABS control module power supply, etc.), the DTC which is suffixed with a question mark “?” appears on the Subaru Select Monitor display. This shows it may be an unreliable reading.

Display	Contents to be monitored
FR Wheel speed	Wheel speed detected by the Front ABS wheel speed sensor RH is displayed in km/h or MPH.
FL Wheel speed	Wheel speed detected by the Front ABS wheel speed sensor LH is displayed in km/h or MPH.
RR Wheel speed	Wheel speed detected by the Rear ABS wheel speed sensor RH is displayed in km/h or MPH.
RL Wheel speed	Wheel speed detected by the Rear ABS wheel speed sensor LH is displayed in km/h or MPH.
IG power supply voltage	Voltage supplied (V) to ABSCM&H/U is displayed.
G Sensor	Vehicle acceleration detected by analog G sensor is displayed.
Motor relay monitor	Motor relay condition is displayed.
BLS Signal	Brake ON/OFF is displayed.
Vehicle speed	Vehicle speed calculated by ABS control module is displayed.
ABS Control Flag	ABS control condition is displayed.
Power Supply Failure	Whether abnormal voltage occurred or not is displayed during malfunction.

B: INSPECTION

1. COMMUNICATION FOR INITIALIZING IMPOSSIBLE

DETECTING CONDITION:
Defective harness connector
TROUBLE SYMPTOM:
Communication is impossible between ABS and Subaru Select Monitor.
WIRING DIAGRAM:

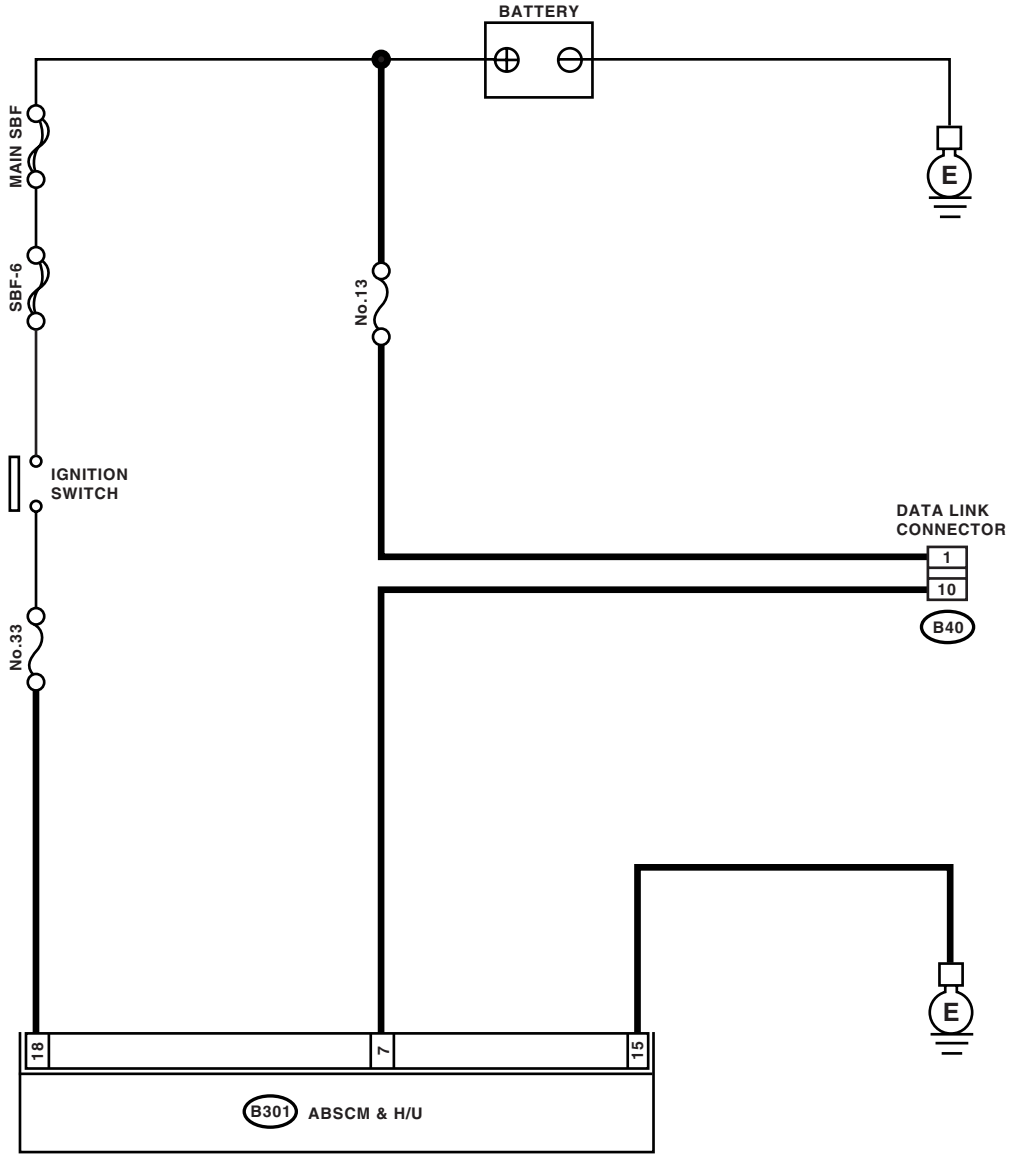

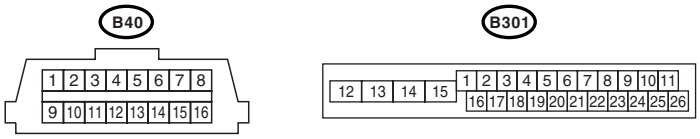

ABS00621

	Step	Check	Yes	No
1	**CHECK IGNITION SWITCH.**	Does the ignition switch turn to ON?	Go to step **2.**	Turn the ignition switch to ON, and select ABS mode using Subaru Select Monitor.
2	**CHECK BATTERY.** 1) Turn the ignition switch to OFF. 2) Measure the battery voltage.	Is the voltage more than 11 V?	Go to step **3.**	Charge or replace the battery.
3	**CHECK BATTERY TERMINAL.**	Is there poor contact at battery terminal?	Repair or tighten the battery terminal.	Go to step **4.**
4	**CHECK SUBARU SELECT MONITOR COMMUNICATION.** 1) Turn the ignition switch to ON. 2) Using Subaru Select Monitor, check whether communication to other system can be executed normally.	Is the system name and model year displayed on Subaru Select Monitor?	Go to step **8.**	Go to step **5.**
5	**CHECK SUBARU SELECT MONITOR COMMUNICATION.** 1) Turn the ignition switch to OFF. 2) Disconnect the ABSCM&H/U connector. 3) Turn the ignition switch to ON. 4) Check whether communication to other systems can be executed normally.	Is the system name and model year displayed on Subaru Select Monitor?	Replace ABSCM&H/U. <Ref. to ABS-6, ABS Control Module and Hydraulic Control Unit (ABSCM&H/U).>	Go to step **6.**
6	**CHECK HARNESS CONNECTOR BETWEEN EACH CONTROL MODULE AND DATA LINK CONNECTOR.** 1) Turn the ignition switch to OFF. 2) Disconnect ABSCM&H/U, ECM and TCM. 3) Measure the resistance between data link connector and chassis ground. ***Connector & terminal*** ***(B40) No. 10 — Chassis ground:***	Is the resistance more than 1 MΩ?	Go to step **7.**	Repair the harness and connector between each control module and data link connector.
7	**CHECK ABSCM&H/U OUTPUT SIGNAL.** 1) Turn the ignition switch to ON. 2) Measure the voltage between data link connector and chassis ground. ***Connector & terminal*** ***(B40) No. 10 (+) — Chassis ground (−):***	Is the voltage less than 1 V?	Go to step **8.**	Repair the harness and connector between each control module and data link connector.
8	**CHECK HARNESS CONNECTOR BETWEEN ABSCM&H/U AND DATA LINK CONNECTOR.** Measure the resistance between ABSCM&H/U connector and data link connector. ***Connector & terminal*** ***(B301) No. 7 — (B40) No. 10:***	Is the resistance less than 0.5 Ω?	Go to step **9.**	Repair the harness and connector between ABSCM&H/U and data link connector.
9	**CHECK INSTALLATION OF ABSCM&H/U CONNECTOR.** Turn the ignition switch to OFF.	Is the ABSCM&H/U connector inserted into ABSCM&H/U until it is locked by clamps?	Go to step **10.**	Insert ABSCM&H/U connector into ABSCM&H/U.
10	**CHECK POWER SUPPLY CIRCUIT.** 1) Turn the ignition switch to ON. (engine OFF) 2) Measure the ignition power supply voltage between ABSCM&H/U connector and chassis ground. ***Connector & terminal*** ***(B301) No. 18 (+) — Chassis ground (−):***	Is the voltage 10 — 15 V?	Go to step **11.**	Repair the open circuit in harness between ABSCM&H/U and battery.

	Step	Check	Yes	No
11	**CHECK HARNESS CONNECTOR BETWEEN ABSCM&H/U AND CHASSIS GROUND.** 1) Turn the ignition switch to OFF. 2) Disconnect the connector from ABSCM&H/U. 3) Measure the resistance of harness between ABSCM&H/U connector and chassis ground. ***Connector & terminal*** ***(B301) No. 15 — Chassis ground:***	Is the resistance less than 0.5 Ω?	Go to step **12.**	Repair the open circuit in harness between ABSCM&H/U and inhibitor side connector, and poor contact in coupling connector.
12	**CHECK POOR CONTACT IN CONNECTOR.**	Is there poor contact in control module power supply, ground circuit and data link connector?	Repair the connector.	Replace the ABSCM only. <Ref. to ABS-8, REPLACEMENT, ABS Control Module and Hydraulic Control Unit (ABSCM&H/U).>

2. WITHOUT DTC

DETECTING CONDITION:

- Defective combination meter
- Open in harness

TROUBLE SYMPTOM:

- ABS warning light does not go off.
- “NO TROUBLE CODE” will be displayed on the Subaru Select Monitor.

NOTE:
When the ABS warning light is OFF and “NO TROUBLE CODE” is displayed on Subaru Select Monitor, the system is in normal condition.

WIRING DIAGRAM:

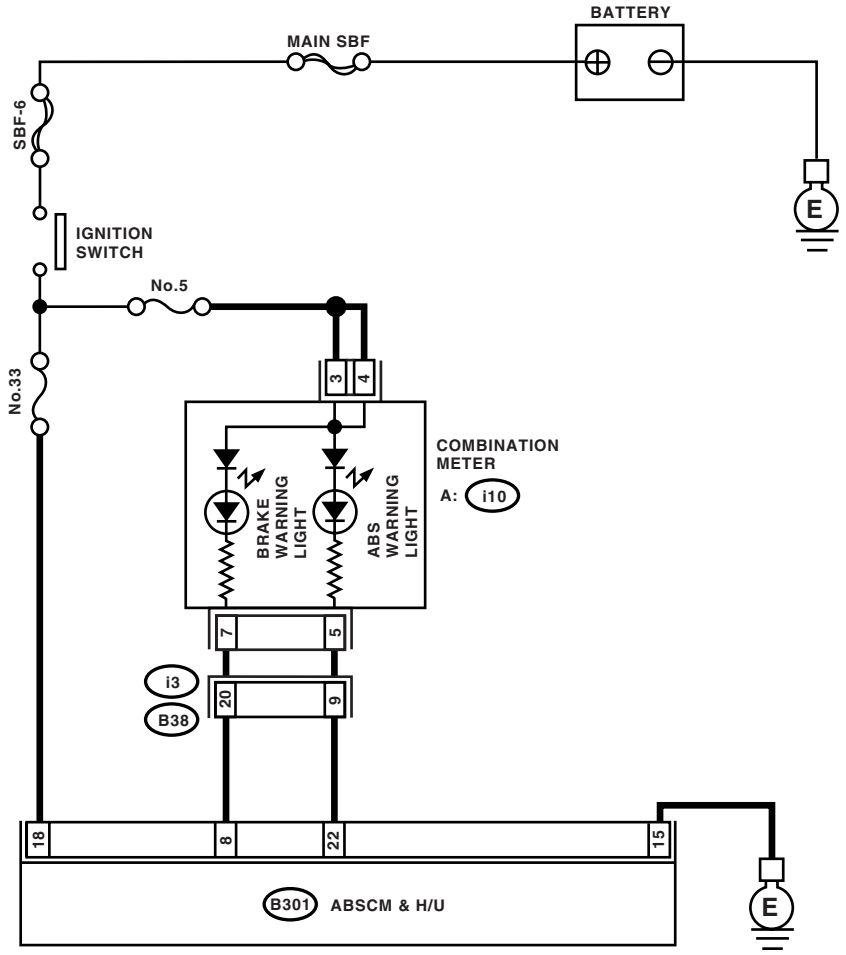

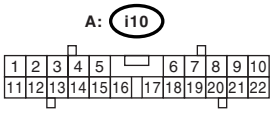

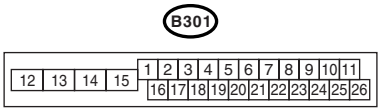

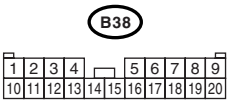

ABS00593

	Step	Check	Yes	No
1	**DATA CHECK SUBARU SELECT MONITOR.** 1) Select {Current Data Display & Save} in Subaru Select Monitor. 2) Read the condition of “ABS warning light”.	Is “ON” indicated?	Replace the ABSCM only. <Ref. to ABS-8, REPLACEMENT, ABS Control Module and Hydraulic Control Unit (ABSCM&H/U).>	Go to step **2.**
2	**CHECK WIRING HARNESS.** Measure the resistance between ABSCM connector and combination meter connector. ***Connector & terminal*** ***(i10) No. 5 — (B301) No. 22:***	Is the resistance less than 0.5 Ω?	Go to step **3.**	Repair the harness and connector between ABSCM&H/U and combination meter connector.
3	**CHECK POOR CONTACT IN CONNECTOR.**	Is there poor contact in ABSCM connector and combination meter connector?	Repair the connector.	Check the combination meter.

7. Read Diagnostic Trouble Code (DTC)

A: OPERATION

For details about reading of DTCs, refer to “Subaru Select Monitor”. <Ref. to ABS(diag)-15, Subaru Select Monitor.>

8. Inspection Mode

A: PROCEDURE

Reproduce the malfunction occurrence condition as possible.
Drive the vehicle at a speed more than 40 km/h (25 MPH) for at least one minute.

9. Clear Memory Mode

A: OPERATION

For details concerning DTC clear operation, refer to “Subaru Select Monitor”. <Ref. to ABS(diag)-15, Subaru Select Monitor.>

10.ABS Warning Light / Brake Warning Light Illumination Pattern

A: INSPECTION

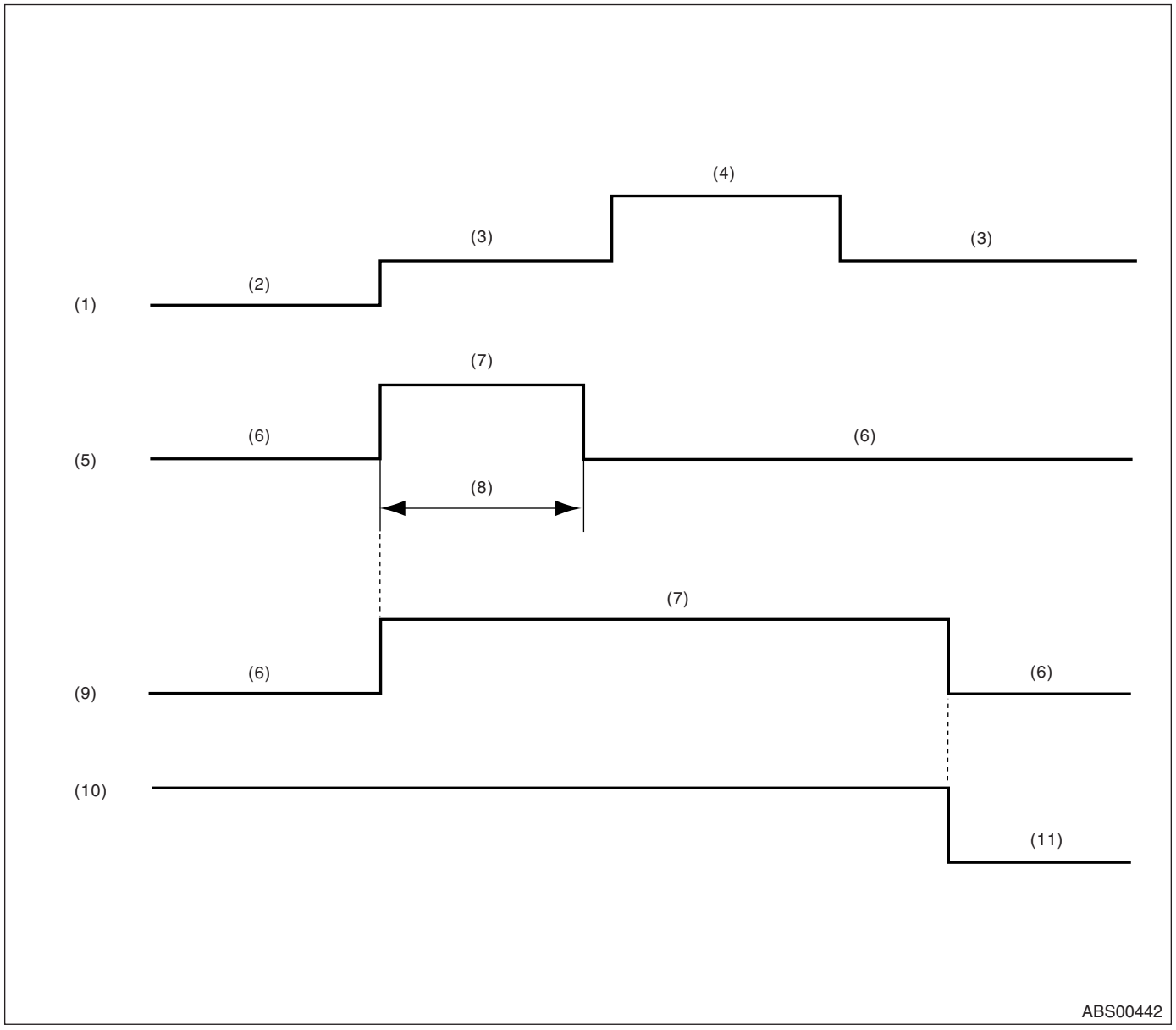

(1)	Ignition switch	(5)	ABS warning light	(9)	Brake warning light (EBD warning light)
(2)	OFF	(6)	Light OFF		
(3)	ON	(7)	Light ON	(10)	Parking brake
(4)	Engine start	(8)	1.5 seconds	(11)	Released

1) When the ABS warning light and brake warning light do not illuminate in accordance with this illumination pattern, there must be an electrical malfunction.
2) When ABS warning light remains constantly OFF, check the combination meter circuit. <Ref. to ABS(diag)-28, ABS WARNING LIGHT DOES NOT COME ON, ABS Warning Light / Brake Warning Light Illumination Pattern.>
3) When ABS warning light does not go off, check the combination meter circuit. <Ref. to ABS(diag)-30, ABS WARNING LIGHT DOES NOT GO OFF, ABS Warning Light / Brake Warning Light Illumination Pattern.>

4) When brake warning light does not go off, check the brake warning light circuit, combination meter circuit. <Ref. to ABS(diag)-32, BRAKE WARNING LIGHT DOES NOT GO OFF, ABS Warning Light / Brake Warning Light Illumination Pattern.>

NOTE:
Even though the ABS warning light does not go off after 1.5 seconds from ABS warning light illumination, the ABS function operates normally when the warning light goes off while driving at approximately 12km/h (7 MPH). However, the ABS function does not operate while the ABS warning light is illuminated.

B: ABS WARNING LIGHT DOES NOT COME ON

DETECTING CONDITION:

- Defective combination meter
- Defective harness

TROUBLE SYMPTOM:

When the ignition switch is turned to ON (engine OFF), ABS warning light does not come on.

WIRING DIAGRAM:

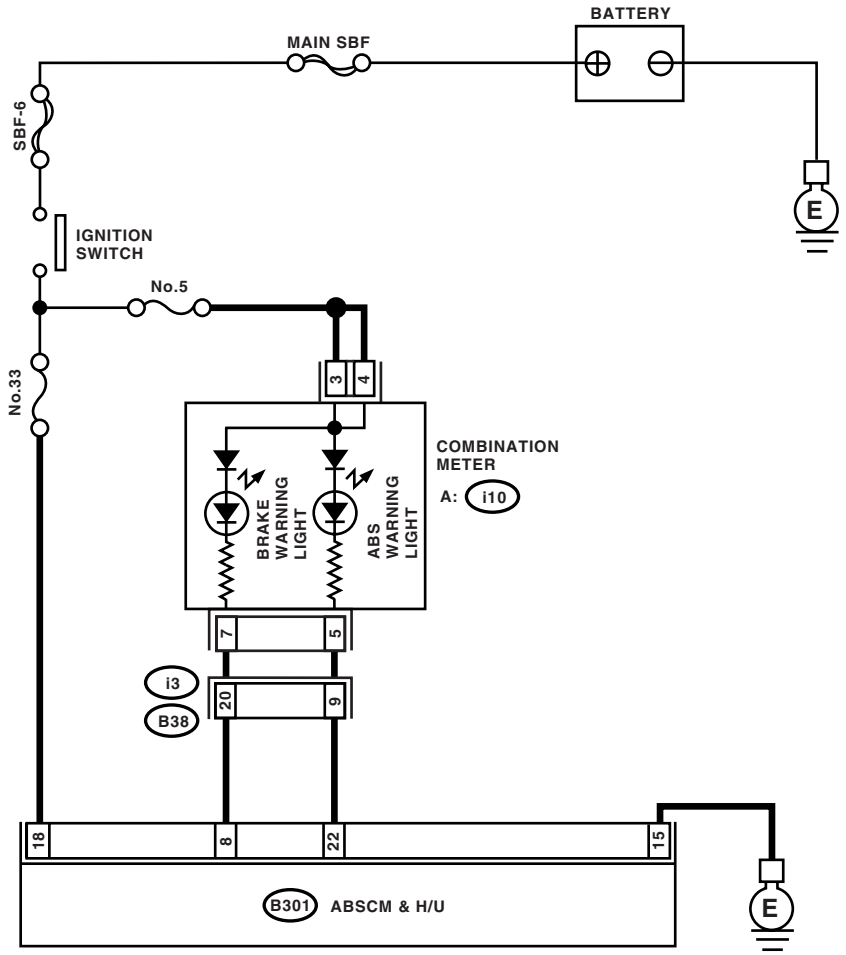

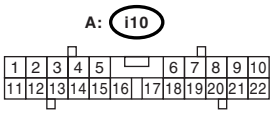

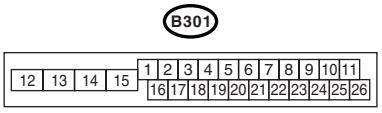

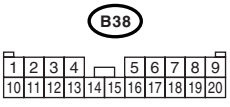

ABS00593

ABS Warning Light / Brake Warning Light Illumination Pattern

	Step	Check	Yes	No
1	**CHECK ILLUMINATION OF OTHER LIGHTS.** Turn the ignition switch to ON. (engine OFF)	Do other warning lights illuminate?	Go to step **2.**	Check the combination meter.
2	**READ DTC.** Read the DTC. <Ref. to ABS(diag)-23, Read Diagnostic Trouble Code (DTC).>	Is DTC displayed?	Perform the diagnosis according to DTC.	Go to step **3.**
3	**CHECK GROUND SHORT OF HARNESS.** 1) Turn the ignition switch to OFF. 2) Disconnect the connector (B301) from ABSCM&H/U. 3) Disconnect the connector (i10) from the combination meter. 4) Measure the resistance between ABSCM connector and chassis ground. ***Connector & terminal*** ***(B301) No. 22 — Chassis ground:***	Is the resistance more than 1 MΩ?	Go to step **4.**	Repair the harness and connector between ABSCM&H/U and combination meter connector.
4	**CHECK ABSCM.** 1) Connect the connector (B301) to the ABSCM&H/U. 2) Turn the ignition to ON. 3) Immediately after turning ignition switch to ON (within 1.5 seconds), measure the resistance of harness between the combination meter connector and chassis ground. ***Connector & terminal*** ***(i10) No. 5 — Chassis ground:***	Is the resistance more than 1 MΩ?	Check the combination meter.	Replace the ABSCM only. <Ref. to ABS-8, REPLACEMENT, ABS Control Module and Hydraulic Control Unit (ABSCM&H/U).>

C: ABS WARNING LIGHT DOES NOT GO OFF

DETECTING CONDITION:

- Defective combination meter
- Open in harness

TROUBLE SYMPTOM:

When starting the engine, the ABS warning light is kept on.

WIRING DIAGRAM:

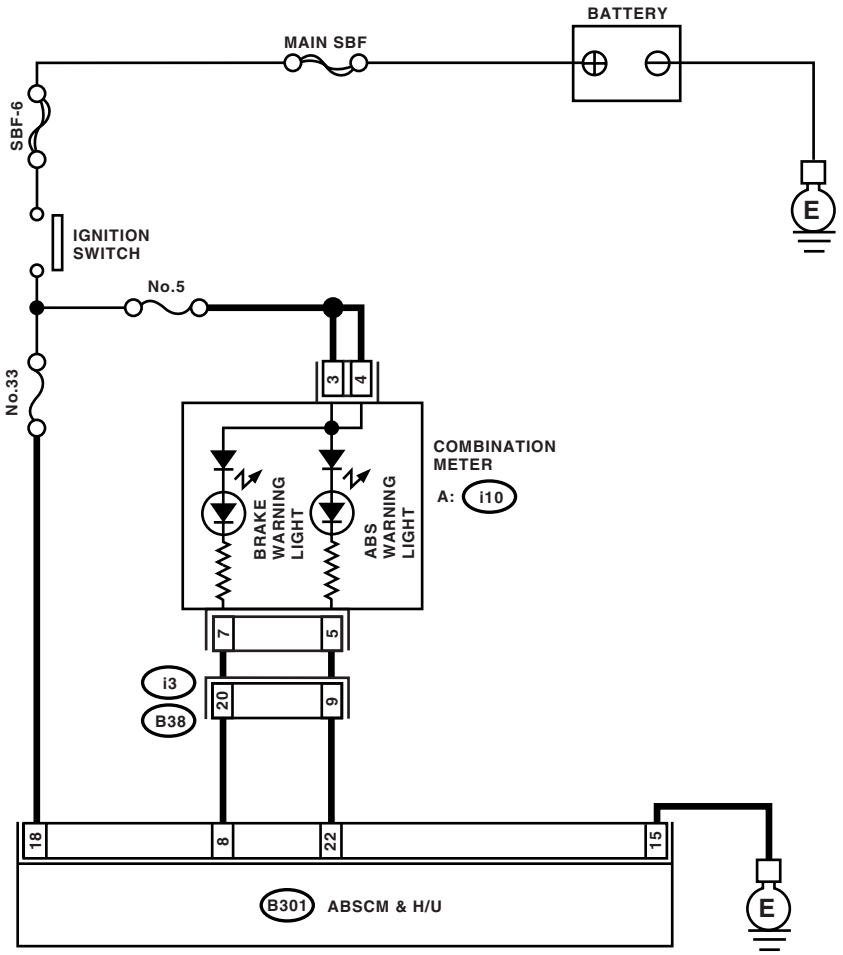

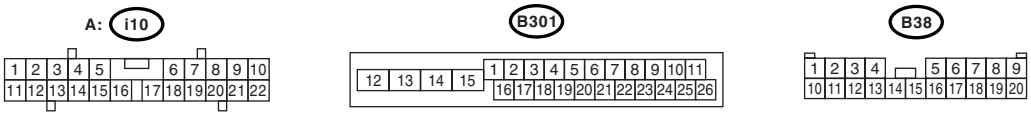

ABS00593

	Step	Check	Yes	No
1	**READ DTC.** Read the DTC. <Ref. to ABS(diag)-23, Read Diagnostic Trouble Code (DTC).>	Is DTC displayed?	Perform the diagnosis according to DTC.	Go to step **2.**
2	**CHECK WIRING HARNESS.** 1) Turn the ignition switch to OFF. 2) Disconnect the connector (B301) from ABSCM&H/U. 3) Disconnect the connector (i10) from the combination meter. 4) Measure the resistance between ABSCM connector and combination meter connector. ***Connector & terminal*** ***(B301) No. 22 — (i10) No. 5:***	Is the resistance less than 0.5 Ω?	Go to step **3.**	Repair the harness and connector between ABSCM&H/U and combination meter connector.
3	**CHECK POOR CONTACT IN CONNECTOR.** Check poor contact in all connectors.	Is there poor contact?	Repair the connector.	Go to step **4.**
4	**CHECK ABSCM.** 1) Connect the connector (B301) to the ABSCM&H/U. 2) Turn the ignition switch to ON. 3) Measure the resistance between combination meter connector and chassis ground. ***Connector & terminal*** ***(i10) No. 5 — Chassis ground:***	Is the resistance less than 0.5 Ω?	Check the combination meter.	Replace the ABSCM only. <Ref. to ABS-8, REPLACEMENT, ABS Control Module and Hydraulic Control Unit (ABSCM&H/U).>

D: BRAKE WARNING LIGHT DOES NOT GO OFF

DETECTING CONDITION:

- Brake warning light circuit is shorted.
- Defective sensor/connector

TROUBLE SYMPTOM:

After starting the engine, the brake warning light is kept on though the parking lever is released.

WIRING DIAGRAM:

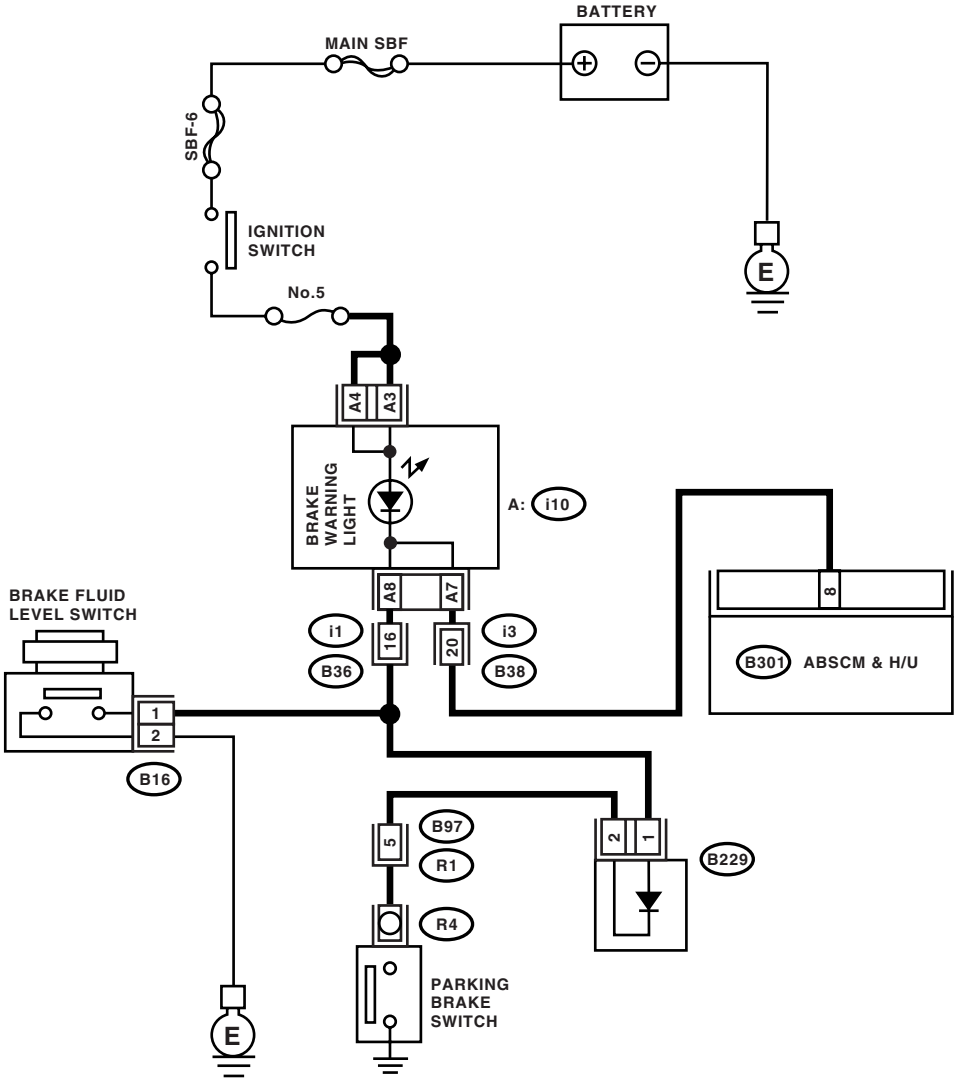

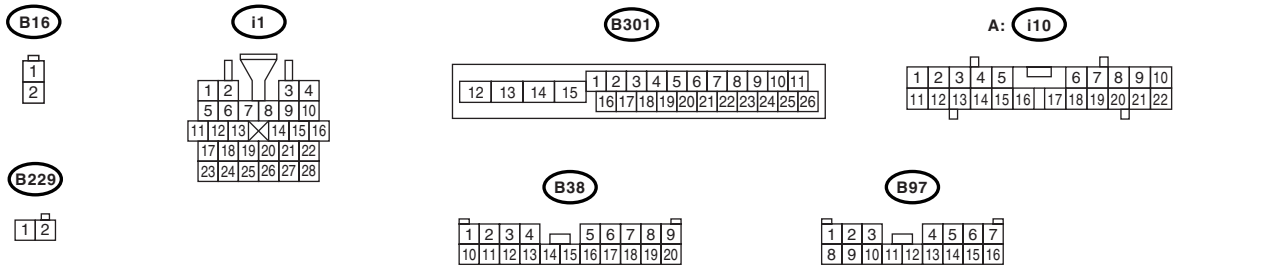

ABS00594

ABS Warning Light / Brake Warning Light Illumination Pattern

	Step	Check	Yes	No
1	**CHECK INSTALLATION OF ABSCM&H/U CONNECTOR.** 1) Turn the ignition switch to OFF. 2) Check that the ABSCM&H/U connector is inserted to ABSCM&H/U until the clamp locks onto it.	Is the connector correctly inserted?	Go to step **2.**	Insert the ABSCM&H/U connector until the clamp locks onto it.
2	**READ DTC.** Read the DTC. <Ref. to ABS(diag)-23, Read Diagnostic Trouble Code (DTC).>	Is DTC displayed?	Perform the diagnosis according to DTC.	Go to step **3.**
3	**CHECK THE BRAKE FLUID AMOUNT.** Check the amount of brake fluid in the reservoir tank of master cylinder.	Is the amount of brake fluid between the lines of MAX and MIN?	Go to step **4.**	Replenish brake fluid to the specified value.
4	**CHECK BRAKE FLUID LEVEL SWITCH.** 1) Disconnect the level switch connector (B16) from master cylinder. 2) Measure the resistance of master cylinder terminals. ***Terminals*** ***No. 1 — No. 2:***	Is the resistance more than 1 MΩ?	Go to step **5.**	Replace the master cylinder.
5	**CHECK PARKING BRAKE SWITCH.** 1) Disconnect the connector (R4) from parking brake switch. 2) Release the parking brake. 3) Measure the resistance between parking brake switch terminal and chassis ground.	Is the resistance more than 1 MΩ?	Go to step **6.**	Replace the parking brake switch.
6	**CHECK GROUND SHORT OF HARNESS.** 1) Disconnect the connector (i10) from combination meter. 2) Measure the resistance between combination meter connector and chassis ground. ***Connector & terminal*** ***(i10) No. 8 — Chassis ground:***	Is the resistance more than 1 MΩ?	Go to step **7.**	Repair the harness connector between combination meter and parking brake switch.
7	**CHECK HARNESS.** 1) Disconnect the connector (B301) from ABSCM&H/U. 2) Disconnect the connector (i10) from the combination meter. 3) Measure the resistance between ABSCM&H/U connector and combination meter connector. ***Connector & terminal*** ***(B301) No. 8 — (i10) No. 7:***	Is the resistance less than 0.5 Ω?	Go to step **8.**	Repair harness between ABSCM&H/U and combination meter connector.
8	**CHECK POOR CONTACT IN CONNECTOR.** Check poor contact in all connectors.	Is there poor contact?	Repair the connector.	Go to step **9.**
9	**CHECK ABSCM.** 1) Connect the connector to the ABSCM&H/U. 2) Turn the ignition switch to ON. 3) Measure the resistance between combination meter connector and chassis ground. ***Connector & terminal*** ***(i10) No. 7 — Chassis ground:***	Is the resistance less than 0.5 Ω?	Check the combination meter.	Replace the ABSCM only. <Ref. to ABS-8, REPLACEMENT, ABS Control Module and Hydraulic Control Unit (ABSCM&H/U).>

11.List of Diagnostic Trouble Code (DTC)

A: LIST

DTC	Content of diagnosis		Display	Reference target
C0101	ABS wheel speed sensor malfunction (Broken wire, short)	Rear ABS wheel speed sensor RH	Rear Right ABS Sensor Circuit Open or Shorted Battery	<Ref. to ABS(diag)-37, DTC C0101 ABS WHEEL SPEED SENSOR MALFUNCTION RR SENSOR (BROKEN WIRE, INPUT VOLTAGE TOO HIGH), Diagnostic Procedure with Diagnostic Trouble Code (DTC).>
C0102		Rear ABS wheel speed sensor LH	Rear Left ABS Sensor Circuit Open or Shorted Battery	<Ref. to ABS(diag)-37, DTC C0102 ABS WHEEL SPEED SENSOR MALFUNCTION RL SENSOR (BROKEN WIRE, INPUT VOLTAGE TOO HIGH), Diagnostic Procedure with Diagnostic Trouble Code (DTC).>
C0103		Front ABS wheel speed sensor RH	Front Right ABS Sensor Circuit Open or Shorted Battery	<Ref. to ABS(diag)-37, DTC C0103 ABS WHEEL SPEED SENSOR MALFUNCTION FR SENSOR (BROKEN WIRE, INPUT VOLTAGE TOO HIGH), Diagnostic Procedure with Diagnostic Trouble Code (DTC).>
C0104		Front ABS wheel speed sensor LH	Front Left ABS Sensor Circuit Open or Shorted Battery	<Ref. to ABS(diag)-38, DTC C0104 ABS WHEEL SPEED SENSOR MALFUNCTION FL SENSOR (BROKEN WIRE, INPUT VOLTAGE TOO HIGH), Diagnostic Procedure with Diagnostic Trouble Code (DTC).>
C0105	ABS wheel speed sensor malfunction (ABS wheel speed sensor abnormal signal)	Abnormal signal of rear ABS wheel speed sensor RH	Rear Right ABS Sensor Signal	<Ref. to ABS(diag)-40, DTC C0105 REAR ABS WHEEL SPEED SENSOR RH MALFUNCTION (ABS WHEEL SPEED SENSOR ABNORMAL SIGNAL), Diagnostic Procedure with Diagnostic Trouble Code (DTC).>
C0106		Abnormal signal of rear ABS wheel speed sensor LH	Rear Left ABS Sensor Signal	<Ref. to ABS(diag)-40, DTC C0106 REAR ABS WHEEL SPEED SENSOR LH MALFUNCTION (ABS WHEEL SPEED SENSOR ABNORMAL SIGNAL), Diagnostic Procedure with Diagnostic Trouble Code (DTC).>
C0107		Abnormal signal of front ABS wheel speed sensor RH	Front Right ABS Sensor Signal	<Ref. to ABS(diag)-40, DTC C0107 FRONT ABS WHEEL SPEED SENSOR RH MALFUNCTION (ABS WHEEL SPEED SENSOR ABNORMAL SIGNAL), Diagnostic Procedure with Diagnostic Trouble Code (DTC).>
C0108		Abnormal signal of front ABS wheel speed sensor LH	Front Left ABS Sensor Signal	<Ref. to ABS(diag)-41, DTC C0108 FRONT ABS WHEEL SPEED SENSOR LH MALFUNCTION (ABS WHEEL SPEED SENSOR ABNORMAL SIGNAL), Diagnostic Procedure with Diagnostic Trouble Code (DTC).>
C0109	Power voltage malfunction		Power Supply Voltage Failure	<Ref. to ABS(diag)-53, DTC C0109 POWER VOLTAGE MALFUNCTION, Diagnostic Procedure with Diagnostic Trouble Code (DTC).>
C0110	ABS control module malfunction		ECM	<Ref. to ABS(diag)-52, DTC C0110 ABS CONTROL MODULE MALFUNCTION, Diagnostic Procedure with Diagnostic Trouble Code (DTC).>

DTC	Content of diagnosis		Display	Reference target
C0111	Motor/motor relay on failure		Motor and Motor Relay	<Ref. to ABS(diag)-59, DTC C0111 MOTOR/MOTOR RELAY MALFUNCTION, Diagnostic Procedure with Diagnostic Trouble Code (DTC).>
C0114	Valve relay on failure		Valve Relay	<Ref. to ABS(diag)-57, DTC C0114 VALVE RELAY MALFUNCTION, Diagnostic Procedure with Diagnostic Trouble Code (DTC).>
C0115	ABS wheel speed sensor malfunction (ABS wheel speed sensor abnormal signal)	Abnormal ABS wheel speed sensor on any one of four sensors	Any One of Four ABS Sensors Signal	<Ref. to ABS(diag)-43, DTC C0115 ABS WHEEL SPEED SENSOR SIGNAL MALFUNCTION IN ONE OF FOUR WHEELS, Diagnostic Procedure with Diagnostic Trouble Code (DTC).>
C0116	Stop light switch signal circuit malfunction		Brake Light Switch	<Ref. to ABS(diag)-61, DTC C0116 FAULTY STOP LIGHT SWITCH, Diagnostic Procedure with Diagnostic Trouble Code (DTC).>
C0118	Faulty G sensor output voltage		G Sensor Failure	<Ref. to ABS(diag)-63, DTC C0118 G SENSOR OUTPUT VOLTAGE MALFUNCTION, Diagnostic Procedure with Diagnostic Trouble Code (DTC).>
C0119	Abnormal G sensor output voltage		G Sensor Signal	<Ref. to ABS(diag)-66, DTC C0119 G SENSOR OUTPUT VOLTAGE MALFUNCTION, Diagnostic Procedure with Diagnostic Trouble Code (DTC).>
C0120	Inlet valve malfunction in hydraulic unit	Front inlet valve LH	FL Hold Valve malfunction	<Ref. to ABS(diag)-46, DTC C0120 FRONT INLET SOLENOID VALVE LH MALFUNCTION IN ABS CONTROL MODULE AND HYDRAULIC CONTROL UNIT (ABSCM&H/U), Diagnostic Procedure with Diagnostic Trouble Code (DTC).>
C0121	Outlet valve malfunction in hydraulic unit	Front outlet valve LH	FL Pressure Reducing Valve malfunction	<Ref. to ABS(diag)-49, DTC C0121 FRONT OUTLET SOLENOID VALVE LH MALFUNCTION IN ABS CONTROL MODULE AND HYDRAULIC CONTROL UNIT (ABSCM&H/U), Diagnostic Procedure with Diagnostic Trouble Code (DTC).>
C0122	Inlet valve malfunction in hydraulic unit	Front inlet valve RH	FR Hold Valve malfunction	<Ref. to ABS(diag)-46, DTC C0122 FRONT INLET SOLENOID VALVE RH MALFUNCTION IN ABS CONTROL MODULE AND HYDRAULIC CONTROL UNIT (ABSCM&H/U), Diagnostic Procedure with Diagnostic Trouble Code (DTC).>
C0123	Outlet valve malfunction in hydraulic unit	Front outlet valve RH	FR Pressure Reducing Valve malfunction	<Ref. to ABS(diag)-49, DTC C0123 FRONT OUTLET SOLENOID VALVE RH MALFUNCTION IN ABS CONTROL MODULE AND HYDRAULIC CONTROL UNIT (ABSCM&H/U), Diagnostic Procedure with Diagnostic Trouble Code (DTC).>
C0124	Inlet valve malfunction in hydraulic unit	Rear inlet valve LH	RL Hold Valve malfunction	<Ref. to ABS(diag)-46, DTC C0124 REAR INLET SOLENOID VALVE LH MALFUNCTION IN ABS CONTROL MODULE AND HYDRAULIC CONTROL UNIT (ABSCM&H/U), Diagnostic Procedure with Diagnostic Trouble Code (DTC).>
C0125	Outlet valve malfunction in hydraulic unit	Rear outlet valve LH	RL Pressure Reducing Valve malfunction	<Ref. to ABS(diag)-49, DTC C0125 REAR OUTLET SOLENOID VALVE LH MALFUNCTION IN ABS CONTROL MODULE AND HYDRAULIC CONTROL UNIT (ABSCM&H/U), Diagnostic Procedure with Diagnostic Trouble Code (DTC).>

List of Diagnostic Trouble Code (DTC)

DTC	Content of diagnosis		Display	Reference target
C0126	Inlet valve malfunction in hydraulic unit	Rear inlet valve RH	RR Hold Valve malfunction	<Ref. to ABS(diag)-46, DTC C0126 REAR INLET SOLENOID VALVE RH MALFUNCTION IN ABS CONTROL MODULE AND HYDRAULIC CONTROL UNIT (ABSCM&H/U), Diagnostic Procedure with Diagnostic Trouble Code (DTC).>
C0127	Outlet valve malfunction in hydraulic unit	Rear outlet valve RH	RR Pressure Reducing Valve malfunction	<Ref. to ABS(diag)-49, DTC C0127 REAR OUTLET SOLENOID VALVE RH MALFUNCTION IN ABS CONTROL MODULE AND HYDRAULIC CONTROL UNIT (ABSCM&H/U), Diagnostic Procedure with Diagnostic Trouble Code (DTC).>
C0140	CAN communication malfunction		Improper CAN communication	<Ref. to ABS(diag)-56, DTC C0140 CAN COMMUNICATION MALFUNCTION, Diagnostic Procedure with Diagnostic Trouble Code (DTC).>

12.Diagnostic Procedure with Diagnostic Trouble Code (DTC)

A: DTC C0101 ABS WHEEL SPEED SENSOR MALFUNCTION RR SENSOR (BROKEN WIRE, INPUT VOLTAGE TOO HIGH)

NOTE:
For the diagnostic procedure, refer to DTC C0104. <Ref. to ABS(diag)-38, DTC C0104 ABS WHEEL SPEED SENSOR MALFUNCTION FL SENSOR (BROKEN WIRE, INPUT VOLTAGE TOO HIGH), Diagnostic Procedure with Diagnostic Trouble Code (DTC).>

B: DTC C0102 ABS WHEEL SPEED SENSOR MALFUNCTION RL SENSOR (BROKEN WIRE, INPUT VOLTAGE TOO HIGH)

NOTE:
For the diagnostic procedure, refer to DTC C0104. <Ref. to ABS(diag)-38, DTC C0104 ABS WHEEL SPEED SENSOR MALFUNCTION FL SENSOR (BROKEN WIRE, INPUT VOLTAGE TOO HIGH), Diagnostic Procedure with Diagnostic Trouble Code (DTC).>

C: DTC C0103 ABS WHEEL SPEED SENSOR MALFUNCTION FR SENSOR (BROKEN WIRE, INPUT VOLTAGE TOO HIGH)

NOTE:
For the diagnostic procedure, refer to DTC C0104. <Ref. to ABS(diag)-38, DTC C0104 ABS WHEEL SPEED SENSOR MALFUNCTION FL SENSOR (BROKEN WIRE, INPUT VOLTAGE TOO HIGH), Diagnostic Procedure with Diagnostic Trouble Code (DTC).>

D: DTC C0104 ABS WHEEL SPEED SENSOR MALFUNCTION FL SENSOR (BROKEN WIRE, INPUT VOLTAGE TOO HIGH)

DTC DETECTING CONDITION:

- Defective ABS wheel speed sensor (broken wire, input voltage too high)
- Defective harness connector

TROUBLE SYMPTOM:

ABS does not operate.

WIRING DIAGRAM:

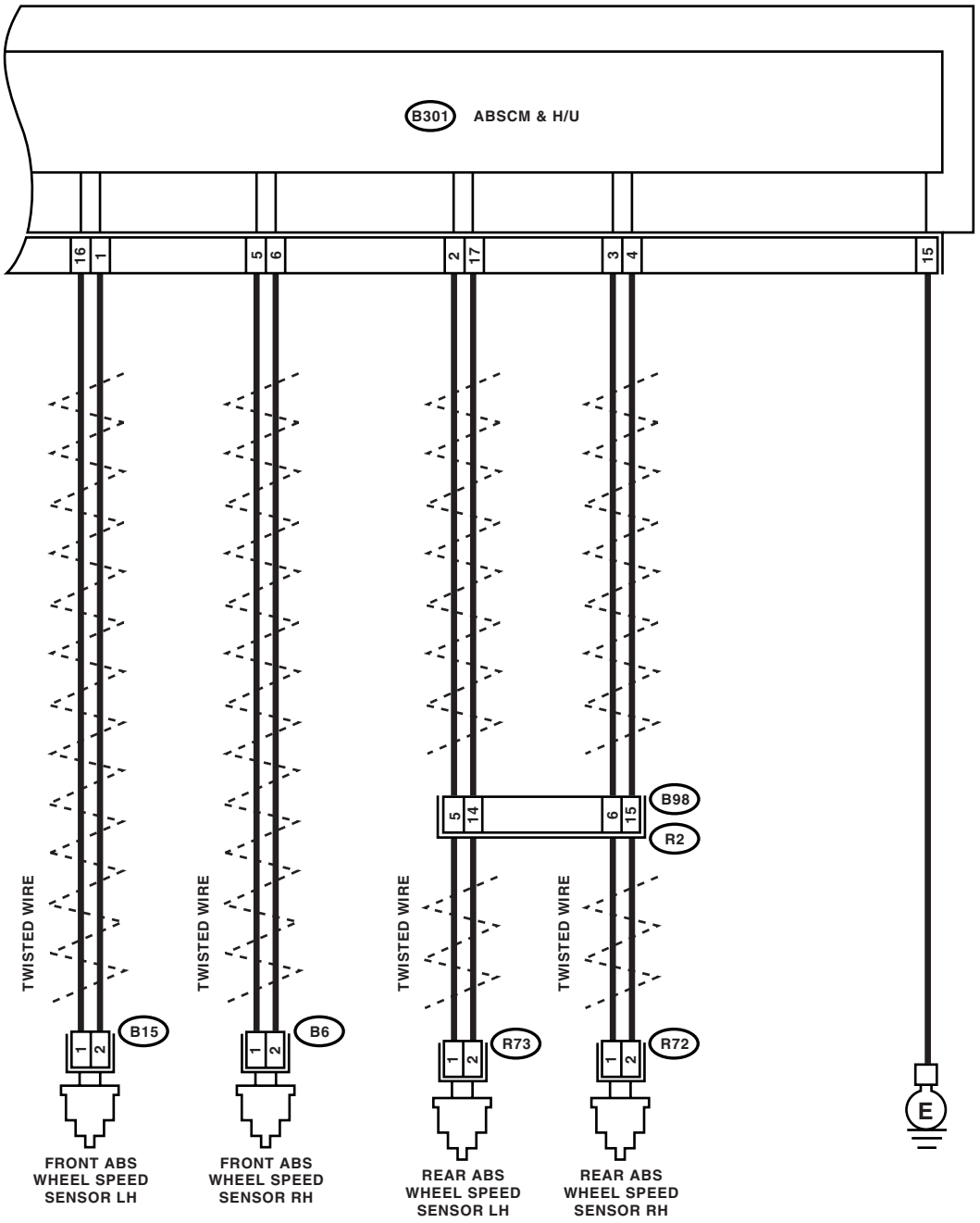

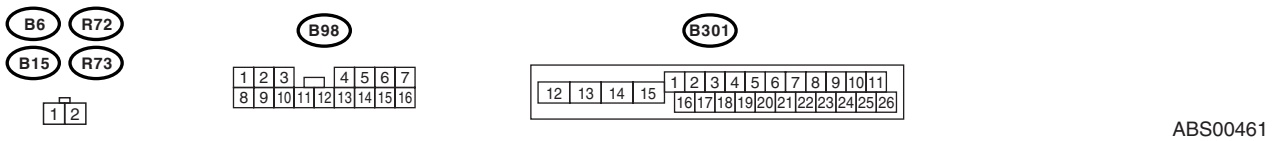

ABS00461

	Step	Check	Yes	No
1	**CHECK POOR CONTACT IN CONNECTOR.** Check the poor contact between ABSCM&H/U and ABS wheel speed sensor.	Is there poor contact?	Repair the connector.	Go to step **2.**
2	**CHECK HARNESS CONNECTOR BETWEEN ABSCM&H/U AND ABS WHEEL SPEED SENSOR.** 1) Disconnect the connector (B301) from ABSCM&H/U. 2) Disconnect the connector from ABS wheel speed sensor. 3) Measure the resistance between ABSCM&H/U connector and ABS wheel speed sensor connector. ***Connector & terminal*** ***DTC C0101*** ***(B301) No. 3 — (R72) No. 1:*** ***(B301) No. 4 — (R72) No. 2:*** ***DTC C0102*** ***(B301) No. 2 — (R73) No. 1:*** ***(B301) No. 17 — (R73) No. 2:*** ***DTC C0103*** ***(B301) No. 5 — (B6) No. 1:*** ***(B301) No. 6 — (B6) No. 2:*** ***DTC C0104*** ***(B301) No. 16 — (B15) No. 1:*** ***(B301) No. 1 — (B15) No. 2:***	Is the resistance less than 0.5 Ω?	Go to step **3.**	Repair the harness connector between ABSCM&H/U and ABS wheel speed sensor.
3	**CHECK GROUND SHORT OF HARNESS.** Measure the resistance between ABSCM&H/U connector and chassis ground. ***Connector & terminal*** ***DTC C0101*** ***(B301) No. 4 — Chassis ground:*** ***DTC C0102*** ***(B301) No. 17 — Chassis ground:*** ***DTC C0103*** ***(B301) No. 6 — Chassis ground:*** ***DTC C0104*** ***(B301) No. 1 — Chassis ground:***	Is the resistance more than 1 MΩ?	Go to step **4.**	Repair the harness connector between ABSCM&H/U and ABS wheel speed sensor.
4	**CHECK ABS WHEEL SPEED SENSOR POWER SUPPLY CIRCUIT.** 1) Connect the ABSCM&H/U connector. 2) Turn the ignition switch to ON. 3) Measure the voltage between ABS wheel speed sensor connector and chassis ground. ***Connector & terminal*** ***DTC C0101*** ***(R72) No. 1 (+) — Chassis ground (−):*** ***DTC C0102*** ***(R73) No. 1 (+) — Chassis ground (−):*** ***DTC C0103*** ***(B6) No. 1 (+) — Chassis ground (−):*** ***DTC C0104*** ***(B15) No. 1 (+) — Chassis ground (−):***	Is the voltage 5 — 16 V?	Go to step **6.**	Go to step **5.**

	Step	Check	Yes	No
5	**CHECK ABSCM&H/U POWER SUPPLY CIRCUIT.** 1) Turn the ignition switch to OFF. 2) Disconnect the ABSCM&H/U connector. 3) Turn the ignition switch to ON. 4) Measure the voltage between ABSCM&H/U connector and chassis ground. ***Connector & terminal*** ***(B301) No. 18 (+) — (B301) No. 15 (–):***	Is the voltage 10 — 15 V?	Go to step **6.**	Check the generator, battery, ABSCM&H/U power circuit.
6	**CHECK ABS WHEEL SPEED SENSOR SIGNAL.** 1) Install the ABS wheel speed sensor. 2) Prepare an oscilloscope. 3) Check ABS wheel speed sensor. <Ref. to ABS-13, ABS WHEEL SPEED SENSOR, INSPECTION, Front ABS Wheel Speed Sensor.>	Is the waveform pattern as shown in the figure?	Go to step **7.**	Replace the speed sensor.
7	**CHECK ABSCM&H/U.** 1) Connect all the connectors. 2) Erase the memory. 3) Perform the inspection mode. <Ref. to ABS(diag)-17, CLEAR MEMORY MODE, OPERATION, Subaru Select Monitor.> 4) Read the DTC.	Is the same DTC displayed?	Replace the ABSCM only. <Ref. to ABS-8, REPLACEMENT, ABS Control Module and Hydraulic Control Unit (ABSCM&H/U).>	Go to step **8.**
8	**CHECK ANY OTHER DTC ON DISPLAY.**	Is any other DTC displayed?	Perform the diagnosis according to DTC.	It results from a temporary noise interference.

E: DTC C0105 REAR ABS WHEEL SPEED SENSOR RH MALFUNCTION (ABS WHEEL SPEED SENSOR ABNORMAL SIGNAL)

NOTE:
For the diagnostic procedure, refer to DTC C0108. <Ref. to ABS(diag)-41, DTC C0108 FRONT ABS WHEEL SPEED SENSOR LH MALFUNCTION (ABS WHEEL SPEED SENSOR ABNORMAL SIGNAL), Diagnostic Procedure with Diagnostic Trouble Code (DTC).>

F: DTC C0106 REAR ABS WHEEL SPEED SENSOR LH MALFUNCTION (ABS WHEEL SPEED SENSOR ABNORMAL SIGNAL)

NOTE:
For the diagnostic procedure, refer to DTC C0108. <Ref. to ABS(diag)-41, DTC C0108 FRONT ABS WHEEL SPEED SENSOR LH MALFUNCTION (ABS WHEEL SPEED SENSOR ABNORMAL SIGNAL), Diagnostic Procedure with Diagnostic Trouble Code (DTC).>

G: DTC C0107 FRONT ABS WHEEL SPEED SENSOR RH MALFUNCTION (ABS WHEEL SPEED SENSOR ABNORMAL SIGNAL)

NOTE:
For the diagnostic procedure, refer to DTC C0108. <Ref. to ABS(diag)-41, DTC C0108 FRONT ABS WHEEL SPEED SENSOR LH MALFUNCTION (ABS WHEEL SPEED SENSOR ABNORMAL SIGNAL), Diagnostic Procedure with Diagnostic Trouble Code (DTC).>

H: DTC C0108 FRONT ABS WHEEL SPEED SENSOR LH MALFUNCTION (ABS WHEEL SPEED SENSOR ABNORMAL SIGNAL)

DTC DETECTING CONDITION:

- Defective ABS wheel speed sensor signal (noise, abnormal signal, etc.)
- Defective harness connector

TROUBLE SYMPTOM:

ABS does not operate.

WIRING DIAGRAM:

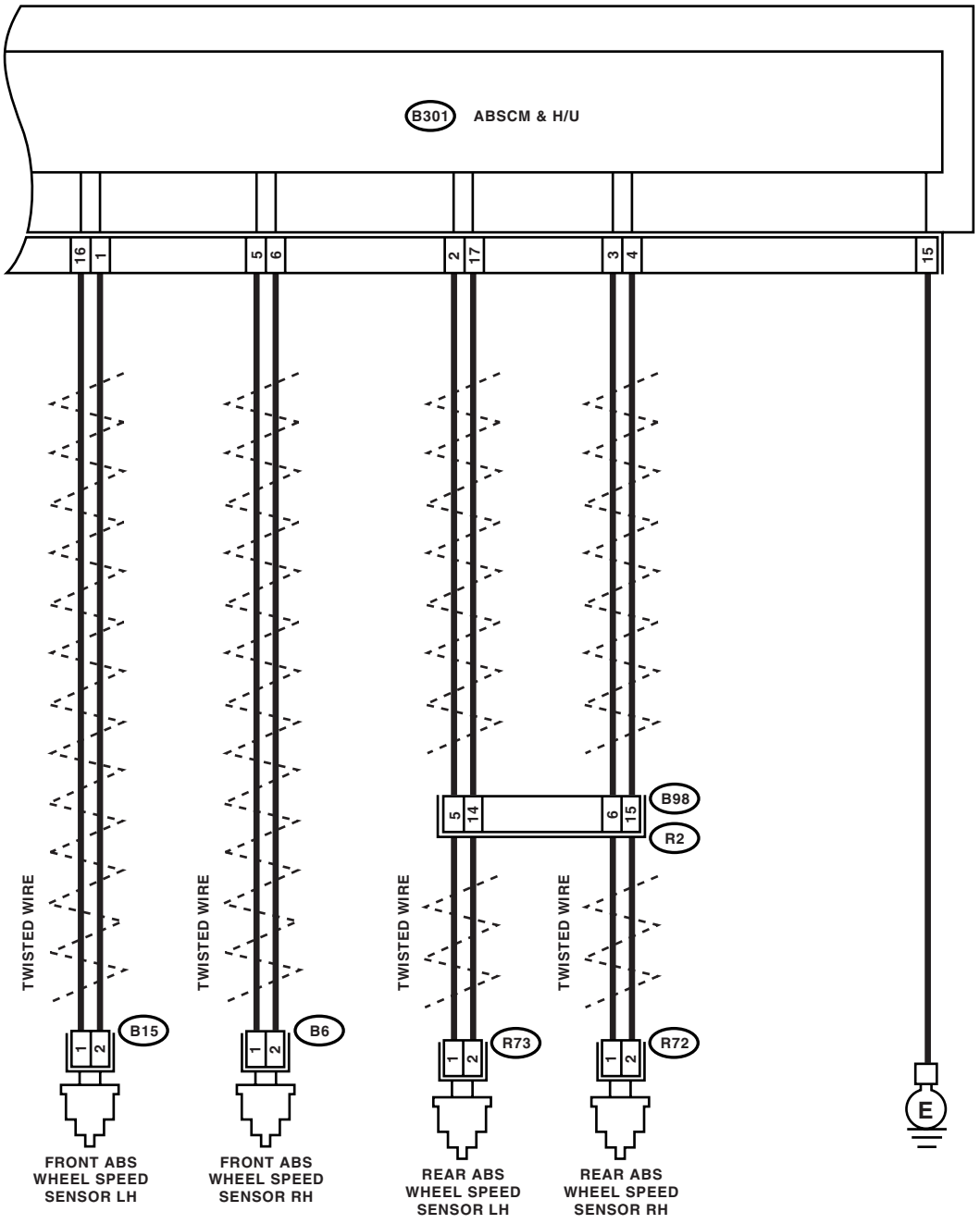

ABS00461

	Step	Check	Yes	No
1	**CHECK OUTPUT OF ABS WHEEL SPEED SENSOR USING SUBARU SELECT MONITOR.** 1) Select {Current Data Display & Save} in Subaru Select Monitor. 2) Read the ABS wheel speed sensor output corresponding to the faulty wheel in Subaru Select Monitor data display mode.	Does the speed indicated on the display change in response to the speedometer reading during acceleration/deceleration when the steering wheel is in the straight-ahead position?	Go to step **2.**	Go to step **7.**
2	**CHECK POOR CONTACT IN CONNECTOR.** Turn the ignition switch to OFF.	Is there poor contact in connectors between ABSCM&H/U and ABS wheel speed sensor?	Repair the connector.	Go to step **3.**
3	**CHECK SOURCES OF SIGNAL NOISE.** Make sure the radio wave device and electric components like car phone, radio, etc. are installed correctly.	Is the radio wave device and electric components like car phone, radio, etc. installed correctly?	Go to step **4.**	Install the radio wave device and electric components properly.
4	**CHECK SOURCES OF SIGNAL NOISE.** Check that the noise sources are (such as an antenna) installed near the sensor harness.	Is the noise sources installed?	Install the noise sources apart from the sensor harness.	Go to step **5.**
5	**CHECK ABSCM&H/U.** 1) Connect all the connectors. 2) Erase the memory. 3) Perform the inspection mode. <Ref. to ABS(diag)-17, CLEAR MEMORY MODE, OPERATION, Subaru Select Monitor.> 4) Read the DTC.	Is the same DTC displayed?	Replace the ABSCM only. <Ref. to ABS-8, REPLACEMENT, ABS Control Module and Hydraulic Control Unit (ABSCM&H/U).>	Go to step **6.**
6	**CHECK ANY OTHER DTC ON DISPLAY.**	Is any other DTC displayed?	Perform the diagnosis according to DTC.	It results from a temporary noise interference.
7	**CHECK INSTALLATION OF ABS WHEEL SPEED SENSOR.**	Is the ABS wheel speed sensor installation bolt tightened to 7.5 N·m (0.76 kgf-m, 5.5 ft-lb)?	Go to step **8.**	Tighten the ABS wheel speed sensor installation bolts.
8	**CHECK ABS WHEEL SPEED SENSOR SIGNAL.** 1) Install the ABS wheel speed sensor. 2) Prepare an oscilloscope. 3) Check ABS wheel speed sensor. <Ref. to ABS-13, ABS WHEEL SPEED SENSOR, INSPECTION, Front ABS Wheel Speed Sensor.>	Does the oscilloscope indicate the waveform pattern like shown in the figure when the tire is slowly turned? Does the oscilloscope indication repeat the waveform pattern like shown in the figure when the tire is slowly turned in equal speed for more one rotation?	Go to step **10.**	Go to step **9.**
9	**CHECK ABS WHEEL SPEED SENSOR AND MAGNETIC ENCODER.**	Are there foreign particles, breakage or damage in the pole piece of ABS wheel speed sensor or magnetic encoder?	Remove dirt completely. Replace the ABS wheel speed sensor or magnetic encoder as a unit with hub unit bearing when it is broken or damaged.	Go to step **10.**
10	**CHECK SOURCES OF SIGNAL NOISE.** Make sure the radio wave device and electric components like car phone, radio, etc. are installed correctly.	Is the radio wave device and electric components like car phone, radio, etc. installed correctly?	Go to step **11.**	Install the radio wave device and electric components properly.

	Step	Check	Yes	No
11	**CHECK SOURCES OF SIGNAL NOISE.** Check if the noise sources are (such as an antenna) installed near the sensor harness.	Are noise sources installed?	Go to step **12.**	Install the noise sources apart from the sensor harness.
12	**CHECK ABSCM&H/U.** 1) Connect all the connectors. 2) Erase the memory. 3) Perform the inspection mode. <Ref. to ABS(diag)-17, CLEAR MEMORY MODE, OPERATION, Subaru Select Monitor.> 4) Read the DTC.	Is the same DTC displayed?	Replace the ABSCM only. <Ref. to ABS-8, REPLACEMENT, ABS Control Module and Hydraulic Control Unit (ABSCM&H/U).>	Go to step **13.**
13	**CHECK ANY OTHER DTC ON DISPLAY.**	Is any other DTC displayed?	Perform the diagnosis according to DTC.	It results from a temporary noise interference. NOTE: Though ABS warning light remains to illuminate at this time, it is normal. Drive the vehicle at more than 12 km/h (7 MPH) in order to make ABS warning light go off. Be sure to drive the vehicle and check the warning light goes off.

I: DTC C0115 ABS WHEEL SPEED SENSOR SIGNAL MALFUNCTION IN ONE OF FOUR WHEELS

DTC DETECTING CONDITION:

- Defective ABS wheel speed sensor signal (noise, abnormal signal, etc.)
- Defective magnetic encoder
- When a wheel is turned freely for a long time

TROUBLE SYMPTOM:

- ABS does not operate.
- EBD does not operate.

NOTE:
Brake warning light comes on as well as ABS warning light.

WIRING DIAGRAM:

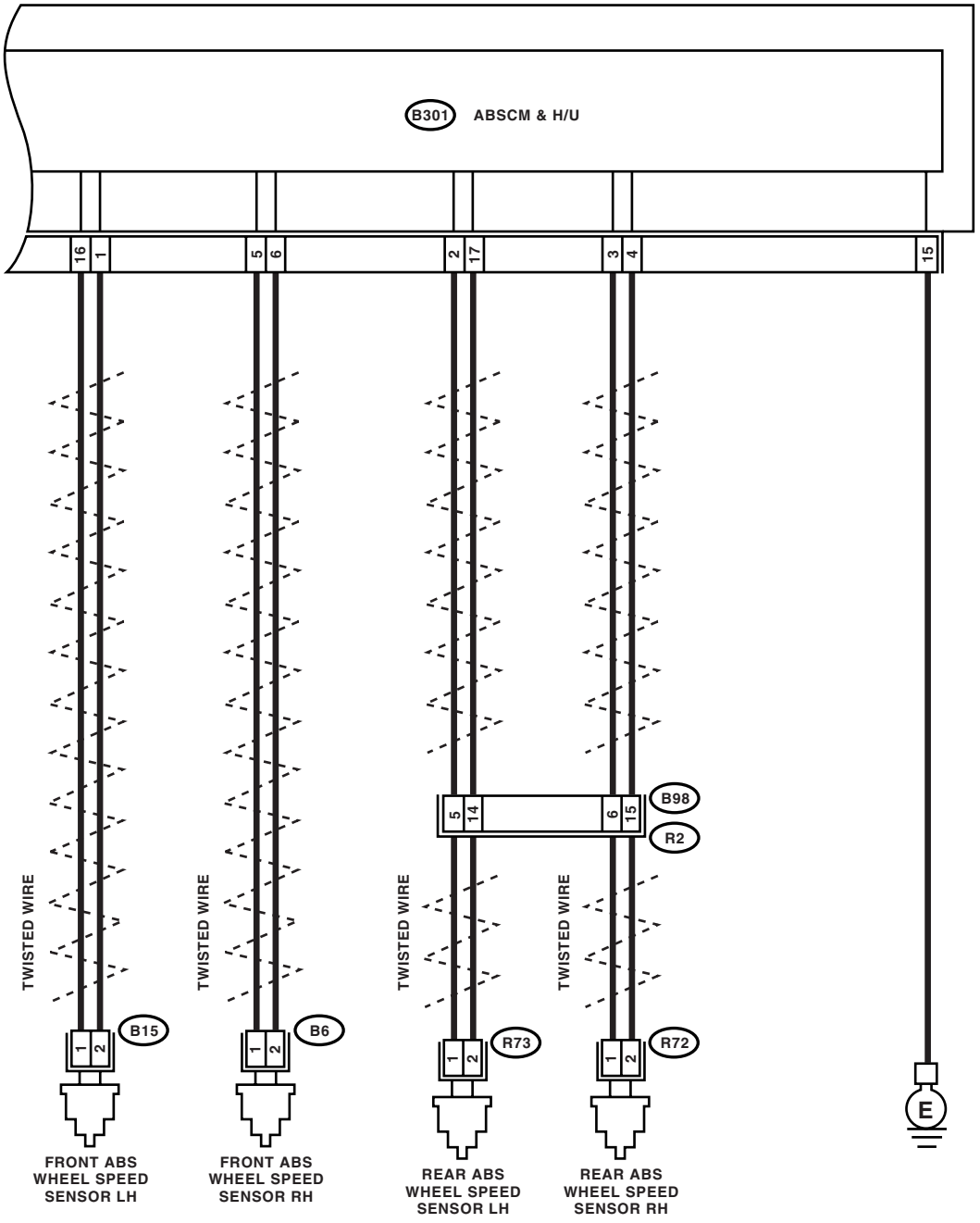

ABS00461

	Step	Check	Yes	No
1	**WHETHER A WHEEL TURNED FREELY OR NOT.** Check if the wheels have been turned freely for more than one minute, such as when the vehicle is jacked-up, under full-lock cornering or when the wheels are not in contact with road surface.	Did the wheels turn freely?	ABS is normal. Erase the memory. NOTE: When the wheels turn freely for a long time, such as when the vehicle is towed or jacked-up, or when steering wheel is continuously turned all the way, this diagnostic trouble code may sometimes occur.	Go to step **2.**
2	**CHECK TIRE SPECIFICATIONS.** Turn the ignition switch to OFF.	Are the tire specifications correct?	Go to step **3.**	Replace the tire.
3	**CHECK WEAR OF TIRE.**	Is the tire worn excessively?	Replace the tire.	Go to step **4.**
4	**CHECK TIRE INFLATION PRESSURE.**	Is the tire pressure correct?	Go to step **5.**	Adjust the tire pressure.
5	**CHECK INSTALLATION OF ABS WHEEL SPEED SENSOR.**	Is the ABS wheel speed sensor installation bolt tightened 7.5 N·m (0.76 kgf-m, 5.5 ft-lb)? (four of them)	Go to step **6.**	Tighten the ABS wheel speed sensor installation bolts.
6	**CHECK ABS WHEEL SPEED SENSOR SIGNAL.** 1) Install the ABS wheel speed sensor. 2) Prepare an oscilloscope. 3) Check ABS wheel speed sensor. <Ref. to ABS-13, ABS WHEEL SPEED SENSOR, INSPECTION, Front ABS Wheel Speed Sensor.>	Does the oscilloscope indicate the waveform pattern as shown in the figure when the tire is slowly turned? Does the oscilloscope indication repeat the waveform pattern as shown in the figure when the tire is slowly turned in equal speed for more one rotation?	Go to step **8.**	Go to step **7.**
7	**CHECK ABS WHEEL SPEED SENSOR AND MAGNETIC ENCODER.**	Are there foreign particles, breakage or damage in the pole piece of ABS wheel speed sensor or magnetic encoder?	Remove dirt completely. Replace the ABS wheel speed sensor or magnetic encoder as a unit with hub unit bearing when it is broken or damaged.	Go to step **8.**
8	**CHECK ABSCM&H/U.** 1) Connect all the connectors. 2) Erase the memory. 3) Perform the inspection mode. <Ref. to ABS(diag)-17, CLEAR MEMORY MODE, OPERATION, Subaru Select Monitor.> 4) Read the DTC.	Is the same DTC displayed?	Replace the ABSCM only. <Ref. to ABS-8, REPLACEMENT, ABS Control Module and Hydraulic Control Unit (ABSCM&H/U).>	Go to step **9.**

Step		Check	Yes	No
9	CHECK ANY OTHER DTC ON DISPLAY.	Is any other DTC displayed?	Perform the diagnosis according to DTC.	It results from a temporary noise interference. NOTE: Though ABS warning light remains to illuminate at this time, it is normal. Drive the vehicle at more than 12 km/h (7 MPH) in order to make ABS warning light go off. Be sure to drive the vehicle and check the warning light goes off.

J: DTC C0120 FRONT INLET SOLENOID VALVE LH MALFUNCTION IN ABS CONTROL MODULE AND HYDRAULIC CONTROL UNIT (ABSCM&H/U)

NOTE:
For the diagnostic procedure, refer to DTC C0126. <Ref. to ABS(diag)-46, DTC C0126 REAR INLET SOLENOID VALVE RH MALFUNCTION IN ABS CONTROL MODULE AND HYDRAULIC CONTROL UNIT (ABSCM&H/U), Diagnostic Procedure with Diagnostic Trouble Code (DTC).>

K: DTC C0122 FRONT INLET SOLENOID VALVE RH MALFUNCTION IN ABS CONTROL MODULE AND HYDRAULIC CONTROL UNIT (ABSCM&H/U)

NOTE:
For the diagnostic procedure, refer to DTC C0126. <Ref. to ABS(diag)-46, DTC C0126 REAR INLET SOLENOID VALVE RH MALFUNCTION IN ABS CONTROL MODULE AND HYDRAULIC CONTROL UNIT (ABSCM&H/U), Diagnostic Procedure with Diagnostic Trouble Code (DTC).>

L: DTC C0124 REAR INLET SOLENOID VALVE LH MALFUNCTION IN ABS CONTROL MODULE AND HYDRAULIC CONTROL UNIT (ABSCM&H/U)

NOTE:
For the diagnostic procedure, refer to DTC C0126. <Ref. to ABS(diag)-46, DTC C0126 REAR INLET SOLENOID VALVE RH MALFUNCTION IN ABS CONTROL MODULE AND HYDRAULIC CONTROL UNIT (ABSCM&H/U), Diagnostic Procedure with Diagnostic Trouble Code (DTC).>

M: DTC C0126 REAR INLET SOLENOID VALVE RH MALFUNCTION IN ABS CONTROL MODULE AND HYDRAULIC CONTROL UNIT (ABSCM&H/U)

DTC DETECTING CONDITION:

- Defective harness connector
- Defective inlet solenoid valve in ABSCM&H/U

TROUBLE SYMPTOM:

- ABS does not operate.
- EBD does not operate.

NOTE:
Brake warning light comes on as well as ABS warning light.

WIRING DIAGRAM:

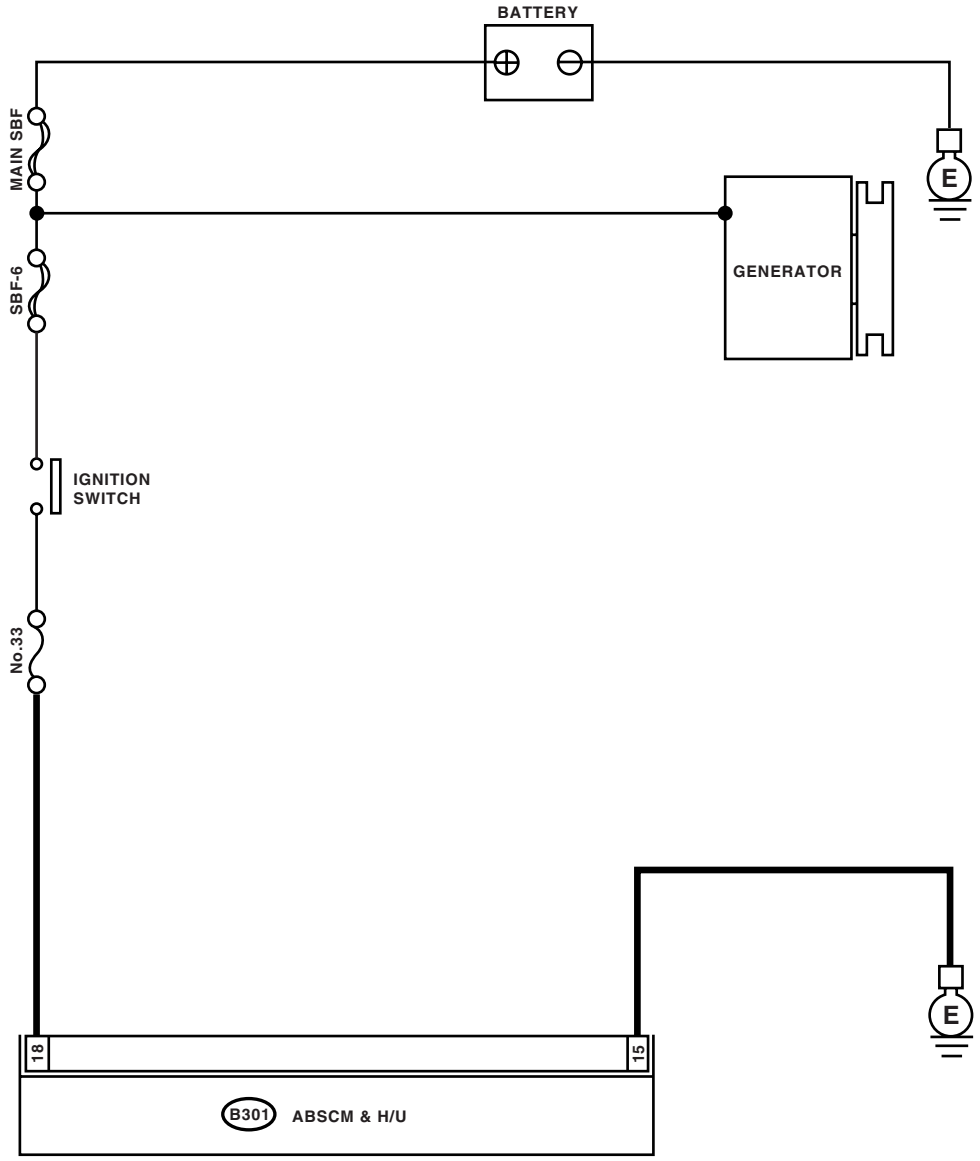

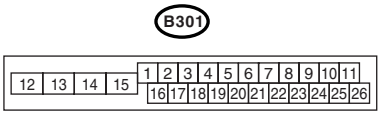

ABS00622

	Step	Check	Yes	No
1	**CHECK INPUT VOLTAGE OF ABSCM&H/U.** 1) Turn the ignition switch to OFF. 2) Disconnect the connector from ABSCM&H/U. 3) Run the engine at idle. 4) Measure the voltage between ABSCM&H/U connector and chassis ground. ***Connector & terminal*** ***(B301) No. 18 (+) — Chassis ground (−):***	Is the voltage 10 — 15 V?	Go to step **2.**	Repair the ABSCM&H/U power circuit.
2	**CHECK GROUND CIRCUIT OF ABSCM&H/U.** 1) Turn the ignition switch to OFF. 2) Measure the resistance between ABSCM&H/U connector and chassis ground. ***Connector & terminal*** ***(B301) No. 15 — Chassis ground:***	Is the resistance less than 0.5 Ω?	Go to step **3.**	Repair the ABSCM&H/U ground harness.
3	**CHECK POOR CONTACT IN CONNECTOR.**	Is there poor contact in connector between generator, battery and ABSCM&H/U?	Repair the connector.	Go to step **4.**
4	**CHECK ABSCM&H/U.** 1) Connect all the connectors. 2) Erase the memory. 3) Perform the inspection mode. 4) Read the DTC.	Is the same DTC displayed?	Replace ABSCM&H/U. <Ref. to ABS-6, ABS Control Module and Hydraulic Control Unit (ABSCM&H/U).>	Go to step **5.**
5	**CHECK ANY OTHER DTC ON DISPLAY.**	Is any other DTC displayed?	Inspect the DTC using “List of Diagnostic Trouble Code (DTC)”. <Ref. to ABS(diag)-34, List of Diagnostic Trouble Code (DTC).>	Temporary poor contact occurs.

N: DTC C0121 FRONT OUTLET SOLENOID VALVE LH MALFUNCTION IN ABS CONTROL MODULE AND HYDRAULIC CONTROL UNIT (ABSCM&H/U)

NOTE:
For the diagnostic procedure, refer to DTC C0127. <Ref. to ABS(diag)-49, DTC C0127 REAR OUTLET SOLENOID VALVE RH MALFUNCTION IN ABS CONTROL MODULE AND HYDRAULIC CONTROL UNIT (ABSCM&H/U), Diagnostic Procedure with Diagnostic Trouble Code (DTC).>

O: DTC C0123 FRONT OUTLET SOLENOID VALVE RH MALFUNCTION IN ABS CONTROL MODULE AND HYDRAULIC CONTROL UNIT (ABSCM&H/U)

NOTE:
For the diagnostic procedure, refer to DTC C0127. <Ref. to ABS(diag)-49, DTC C0127 REAR OUTLET SOLENOID VALVE RH MALFUNCTION IN ABS CONTROL MODULE AND HYDRAULIC CONTROL UNIT (ABSCM&H/U), Diagnostic Procedure with Diagnostic Trouble Code (DTC).>

P: DTC C0125 REAR OUTLET SOLENOID VALVE LH MALFUNCTION IN ABS CONTROL MODULE AND HYDRAULIC CONTROL UNIT (ABSCM&H/U)

NOTE:
For the diagnostic procedure, refer to DTC C0127. <Ref. to ABS(diag)-49, DTC C0127 REAR OUTLET SOLENOID VALVE RH MALFUNCTION IN ABS CONTROL MODULE AND HYDRAULIC CONTROL UNIT (ABSCM&H/U), Diagnostic Procedure with Diagnostic Trouble Code (DTC).>

Q: DTC C0127 REAR OUTLET SOLENOID VALVE RH MALFUNCTION IN ABS CONTROL MODULE AND HYDRAULIC CONTROL UNIT (ABSCM&H/U)

DTC DETECTING CONDITION:

- Defective harness connector
- Defective outlet solenoid valve in ABSCM&H/U

TROUBLE SYMPTOM:

- ABS does not operate.
- EBD does not operate.

NOTE:
Brake warning light comes on as well as ABS warning light.

WIRING DIAGRAM:

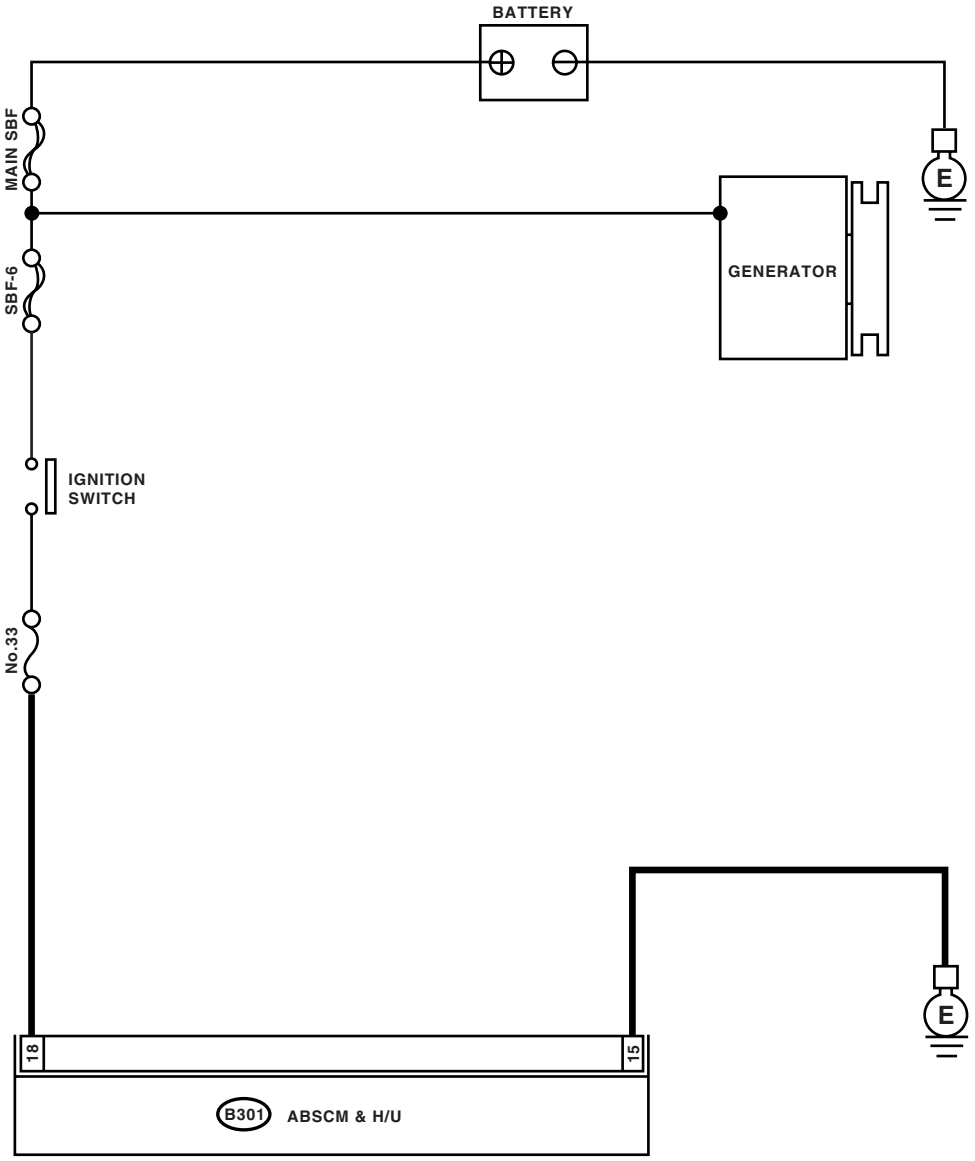

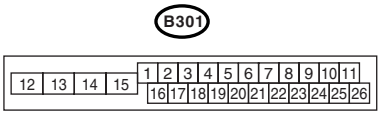

ABS00622

	Step	Check	Yes	No
1	**CHECK INPUT VOLTAGE OF ABSCM&H/U.** 1) Turn the ignition switch to OFF. 2) Disconnect the connector from ABSCM&H/U. 3) Run the engine at idle. 4) Measure the voltage between ABSCM&H/U connector and chassis ground. ***Connector & terminal*** ***(B301) No. 18 (+) — Chassis ground (−):***	Is the voltage 10 — 15 V?	Go to step **2.**	Repair the ABSCM&H/U power circuit.
2	**CHECK GROUND CIRCUIT OF ABSCM&H/U.** 1) Turn the ignition switch to OFF. 2) Measure the resistance between ABSCM&H/U connector and chassis ground. ***Connector & terminal*** ***(B301) No. 15 — Chassis ground:***	Is the resistance less than 0.5 Ω?	Go to step **3.**	Repair the ABSCM&H/U ground harness.
3	**CHECK POOR CONTACT IN CONNECTOR.**	Is there poor contact in connector between generator, battery and ABSCM&H/U?	Repair the connector.	Go to step **4.**
4	**CHECK ABSCM&H/U.** 1) Connect all the connectors. 2) Erase the memory. 3) Perform the inspection mode. 4) Read the DTC.	Is the same DTC displayed?	Replace ABSCM&H/U. <Ref. to ABS-6, ABS Control Module and Hydraulic Control Unit (ABSCM&H/U).>	Go to step **5.**
5	**CHECK ANY OTHER DTC ON DISPLAY.**	Is any other DTC displayed?	Inspect the DTC using “List of Diagnostic Trouble Code (DTC)”. <Ref. to ABS(diag)-34, List of Diagnostic Trouble Code (DTC).>	Temporary poor contact occurs.

R: DTC C0110 ABS CONTROL MODULE MALFUNCTION

DTC DETECTING CONDITION:

Defective ABSCM&H/U

TROUBLE SYMPTOM:

- ABS does not operate.
- EBD does not operate.

NOTE:

Brake warning light comes on as well as ABS warning light.

WIRING DIAGRAM:

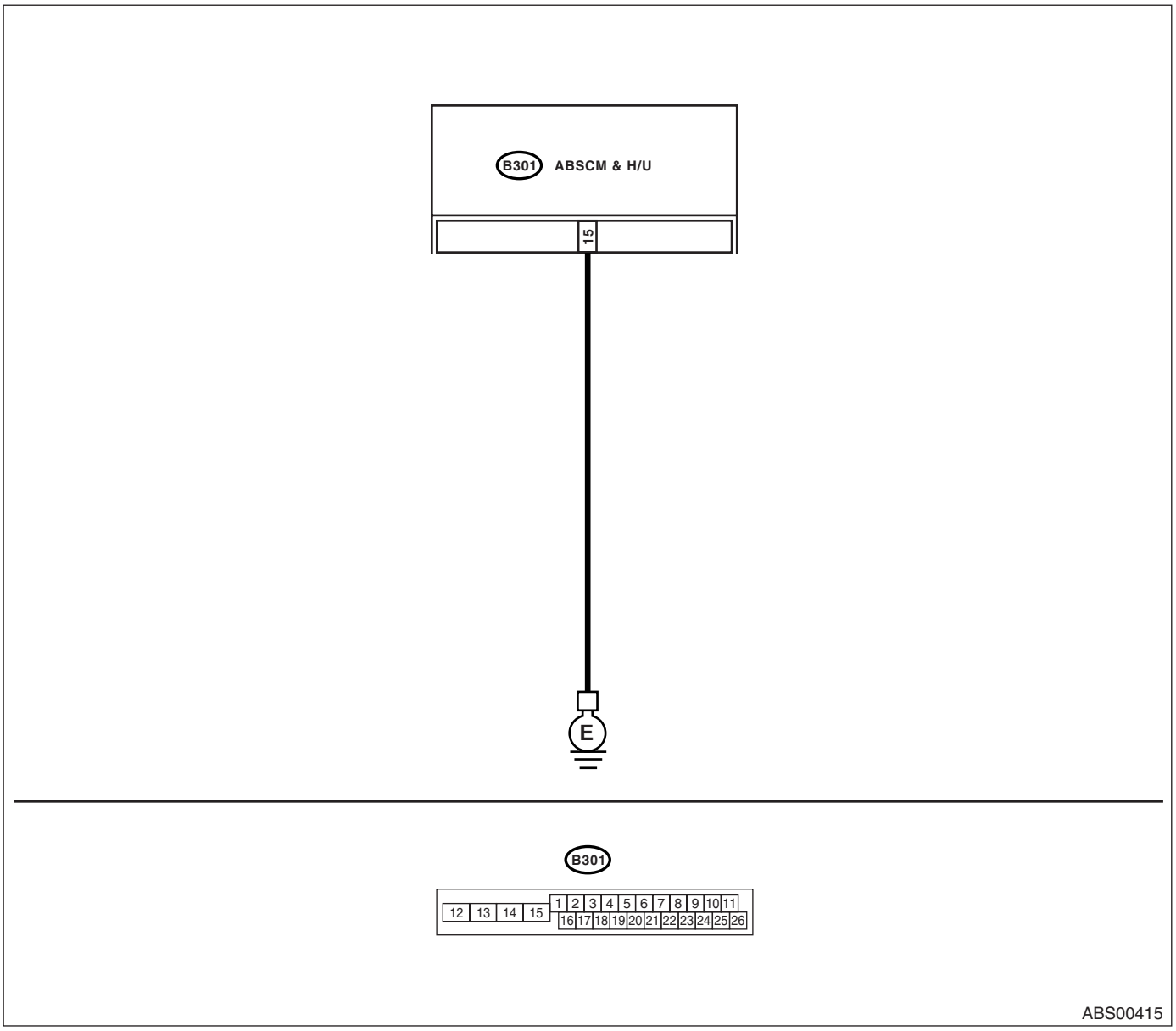

	Step	Check	Yes	No
1	**CHECK GROUND CIRCUIT OF ABSCM&H/U.** 1) Turn the ignition switch to OFF. 2) Disconnect the connector from ABSCM&H/U. 3) Measure the resistance between ABSCM&H/U and chassis ground. ***Connector & terminal*** ***(B301) No. 15 — Chassis ground:***	Is the resistance less than 0.5 Ω?	Go to step **2.**	Repair the ABSCM&H/U ground harness.
2	**CHECK POOR CONTACT IN CONNECTOR.**	Is there poor contact in connectors between battery, ignition switch and ABSCM&H/U?	Repair the connector.	Go to step **3.**
3	**CHECK SOURCES OF SIGNAL NOISE.**	Is the car telephone or radio properly installed?	Go to step **4.**	Properly install the car telephone or radio.
4	**CHECK SOURCES OF SIGNAL NOISE.**	Are noise sources (such as an antenna) installed near the sensor harness?	Install the noise sources apart from the sensor harness.	Go to step **5.**
5	**CHECK ABSCM&H/U.** 1) Connect all the connectors. 2) Erase the memory. 3) Perform the inspection mode. 4) Read the DTC.	Is the same DTC displayed?	Replace the ABSCM only. <Ref. to ABS-8, REPLACEMENT, ABS Control Module and Hydraulic Control Unit (ABSCM&H/U).>	Go to step **6.**
6	**CHECK ANY OTHER DTC ON DISPLAY.**	Is any other DTC displayed?	Inspect the DTC using “List of Diagnostic Trouble Code (DTC)”. <Ref. to ABS(diag)-34, List of Diagnostic Trouble Code (DTC).>	Temporary poor contact occurs.

S: DTC C0109 POWER VOLTAGE MALFUNCTION

DTC DETECTING CONDITION:

Power voltage of the ABSCM&H/U is too low or too high.

TROUBLE SYMPTOM:

- ABS does not operate.
- EBD may not operate.

NOTE:

If EBD does not operate, brake warning light comes on as well as ABS warning light. Both warning lights go off if voltage returns.

WIRING DIAGRAM:

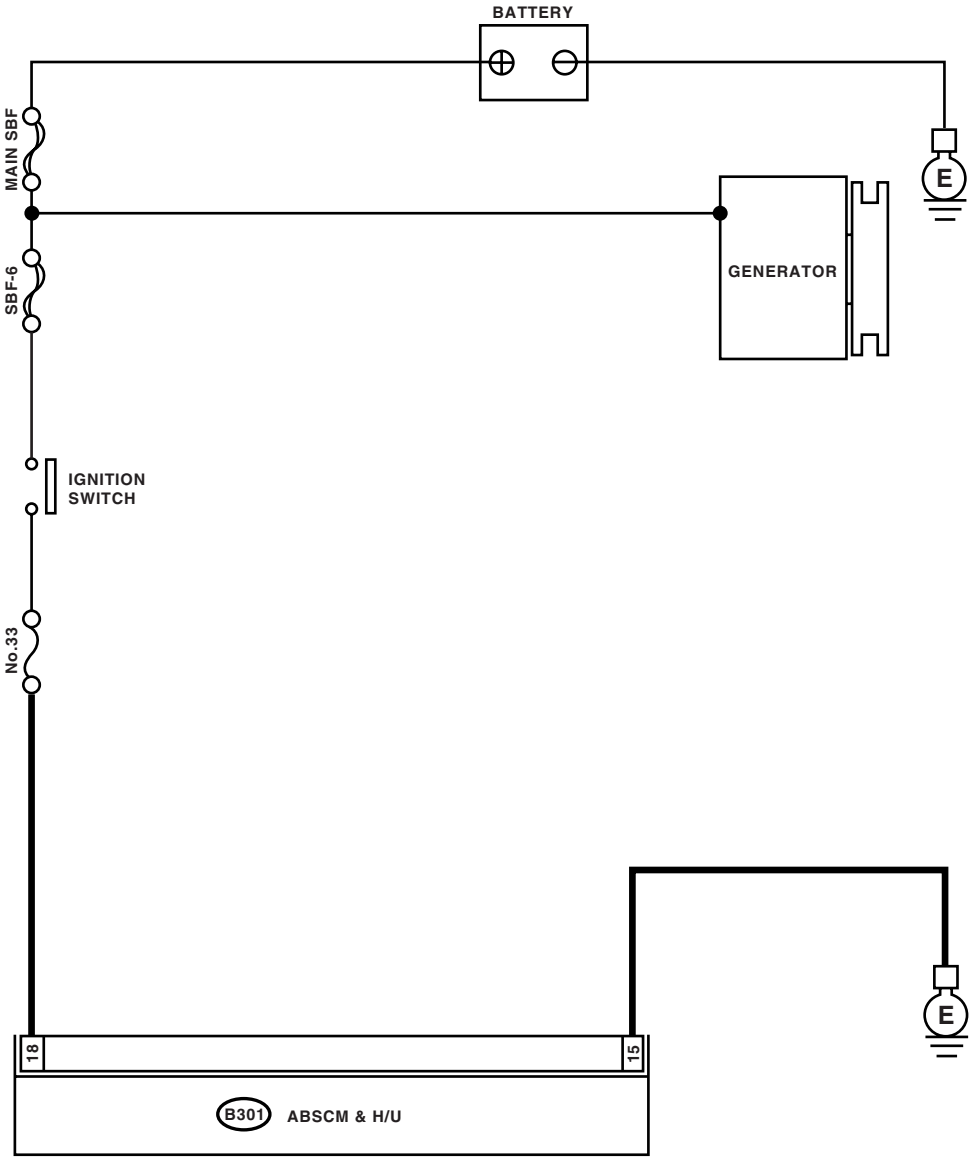

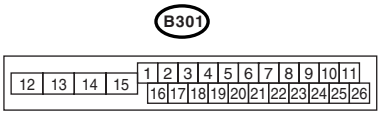

ABS00622

	Step	Check	Yes	No
1	**CHECK GENERATOR.** 1) Start the engine. 2) Run the engine at idle after warming up. 3) Measure the voltage between generator B terminal and chassis ground. ***Terminals*** ***Generator B terminal (+) — Chassis ground (−):***	Is the voltage 10 — 15 V?	Go to step **2.**	Repair the generator.
2	**CHECK BATTERY TERMINAL.** Turn the ignition switch to OFF.	Are the positive and negative battery terminals clamped tightly?	Go to step **3.**	Tighten the terminal.
3	**CHECK INPUT VOLTAGE OF ABSCM&H/U.** 1) Disconnect the connector from ABSCM&H/U. 2) Run the engine at idle. 3) Operate the devices such as headlights, air conditioner, defogger, etc. which produce much electrical loading. 4) Measure the voltage between ABSCM&H/U connector and chassis ground. ***Connector & terminal*** ***(B301) No. 18 (+) — Chassis ground (−):***	Is the voltage 10 — 15 V?	Go to step **4.**	Repair the ABSCM&H/U power circuit.
4	**CHECK GROUND CIRCUIT OF ABSCM&H/U.** 1) Turn the ignition switch to OFF. 2) Measure the resistance between ABSCM&H/U connector and chassis ground. ***Connector & terminal*** ***(B301) No. 15 — Chassis ground:***	Is the resistance less than 0.5 Ω?	Go to step **5.**	Repair the ABSCM&H/U ground harness.
5	**CHECK POOR CONTACT IN CONNECTOR.**	Is there poor contact in connector between generator, battery and ABSCM&H/U?	Repair the connector.	Go to step **6.**
6	**CHECK ABSCM&H/U.** 1) Connect all the connectors. 2) Erase the memory. 3) Perform the inspection mode. 4) Read the DTC.	Is the same DTC displayed?	Replace the ABSCM only. <Ref. to ABS-8, REPLACEMENT, ABS Control Module and Hydraulic Control Unit (ABSCM&H/U).>	Go to step **7.**
7	**CHECK ANY OTHER DTC ON DISPLAY.**	Is any other DTC displayed?	Inspect the DTC using “List of Diagnostic Trouble Code (DTC)”. <Ref. to ABS(diag)-34, List of Diagnostic Trouble Code (DTC).>	Temporary poor contact occurs.

T: DTC C0140 CAN COMMUNICATION MALFUNCTION

DTC DETECTING CONDITION:

Defective CAN communication

TROUBLE SYMPTOM:

Possibly the vehicle speed cannot output on CAN.

	Step	Check	Yes	No
1	**CHECK LAN SYSTEM.** Perform the diagnosis for LAN system. <Ref. to LAN(diag)-24, OPERATION, Read Diagnostic Trouble Code (DTC).>	Is there any fault in LAN system?	Repair it according to DTC of LAN system.	Replace the ABSCM only. <Ref. to ABS-8, REPLACEMENT, ABS Control Module and Hydraulic Control Unit (ABSCM&H/U).>

U: DTC C0114 VALVE RELAY MALFUNCTION

DTC DETECTING CONDITION:

Defective valve relay

TROUBLE SYMPTOM:

- ABS does not operate.
- EBD does not operate depending on the trouble contents.

NOTE:

Brake warning light comes on as well as ABS warning light when EBD does not operate.

WIRING DIAGRAM:

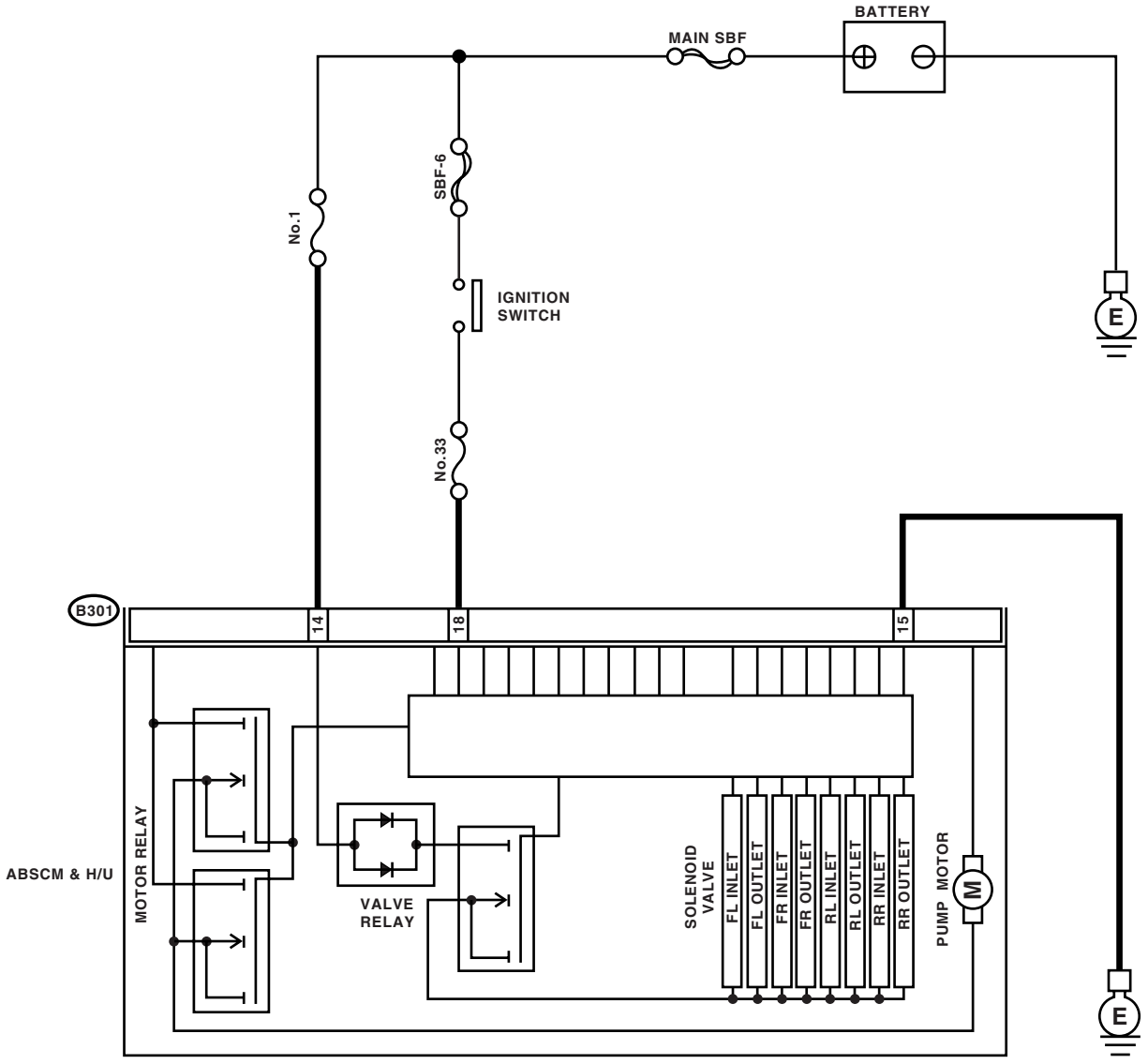

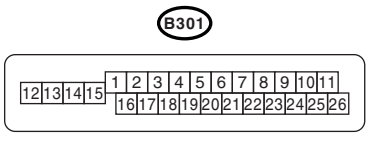

ABS00686

	Step	Check	Yes	No
1	**CHECK INPUT VOLTAGE OF ABSCM&H/U.** 1) Turn the ignition switch to OFF. 2) Disconnect the connector from ABSCM&H/U. 3) Run the engine at idle. 4) Measure the voltage between ABSCM&H/U connector and chassis ground. ***Connector & terminal*** ***(B301) No. 18 (+) — Chassis ground (–):*** ***(B301) No. 14 (+) — Chassis ground (–):***	Is the voltage 10 — 15 V?	Go to step **2.**	Repair the harness connector between battery and ABSCM&H/U.
2	**CHECK GROUND CIRCUIT OF ABSCM&H/U.** 1) Turn the ignition switch to OFF. 2) Measure the resistance between ABSCM&H/U connector and chassis ground. ***Connector & terminal*** ***(B301) No. 15 — Chassis ground:***	Is the resistance less than 0.5 Ω?	Go to step **3.**	Repair the ABSCM&H/U ground harness.
3	**CHECK VALVE RELAY IN ABSCM&H/U.** Measure the resistance between ABSCM&H/U terminals. ***Terminals*** ***No. 14 — No. 15:***	Is the resistance more than 1 MΩ?	Go to step **4.**	Replace the ABSCM only. <Ref. to ABS-8, REPLACEMENT, ABS Control Module and Hydraulic Control Unit (ABSCM&H/U).>
4	**CHECK POOR CONTACT IN CONNECTOR.**	Is there poor contact in connector between generator, battery and ABSCM&H/U?	Repair the connector.	Go to step **5.**
5	**CHECK ABSCM&H/U.** 1) Connect all the connectors. 2) Erase the memory. 3) Perform the inspection mode. 4) Read the DTC.	Is the same DTC displayed?	Replace the ABSCM only. <Ref. to ABS-8, REPLACEMENT, ABS Control Module and Hydraulic Control Unit (ABSCM&H/U).>	Go to step **6.**
6	**CHECK ANY OTHER DTC ON DISPLAY.**	Is any other DTC displayed?	Inspect the DTC using “List of Diagnostic Trouble Code (DTC)”. <Ref. to ABS(diag)-34, List of Diagnostic Trouble Code (DTC).>	Temporary poor contact occurs.

V: DTC C0111 MOTOR/MOTOR RELAY MALFUNCTION

DTC DETECTING CONDITION:

- Defective motor
- Defective motor relay
- Defective harness connector

TROUBLE SYMPTOM:

ABS does not operate.

WIRING DIAGRAM:

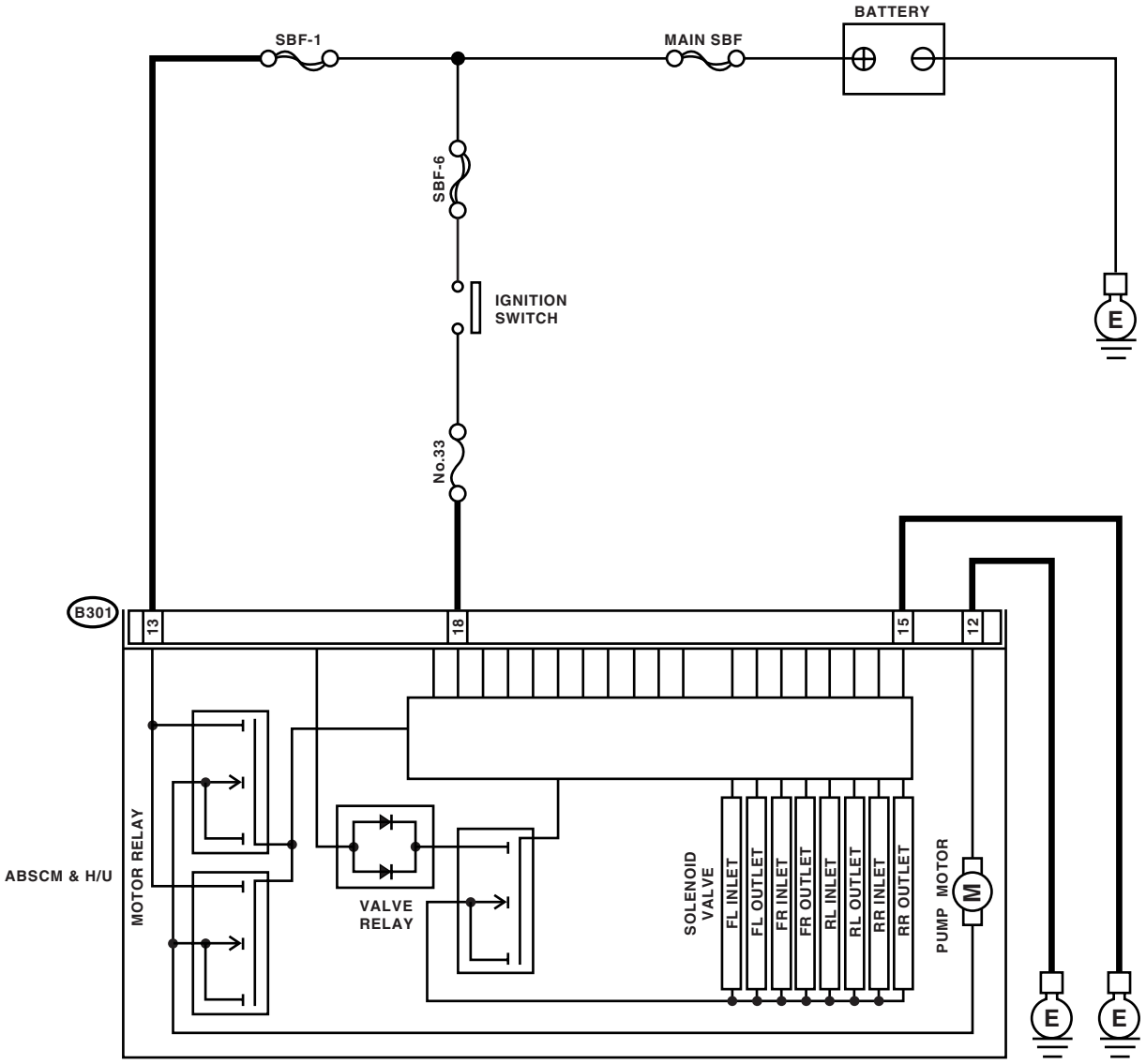

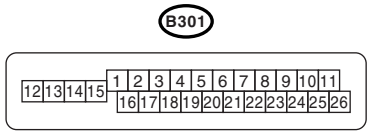

ABS00741

	Step	Check	Yes	No
1	**CHECK INPUT VOLTAGE OF ABSCM&H/U.** 1) Turn the ignition switch to OFF. 2) Disconnect the connector from ABSCM&H/U. 3) Turn the ignition switch to ON. 4) Measure the voltage between ABSCM&H/U connector and chassis ground. ***Connector & terminal*** ***(B301) No. 13 (+) — Chassis ground (–):***	Is the voltage 10 — 15 V?	Go to step **2.**	Repair the harness connector between battery and ABSCM&H/U.
2	**CHECK INSTALLATION OF MOTOR GROUND.**	Is the motor ground terminal installation bolt tightened 33 N·m (3.3 kgf-m, 24.3 ft-lb)?	Go to step **3.**	Tighten the motor ground terminal installation bolt.
3	**CHECK GROUND CIRCUIT OF MOTOR.** 1) Turn the ignition switch to OFF. 2) Measure the resistance between ABSCM&H/U connector and chassis ground. ***Connector & terminal*** ***(B301) No. 12 — Chassis ground:***	Is the resistance less than 0.5 Ω?	Go to step **4.**	Repair the ABSCM&H/U ground harness.
4	**CHECK INPUT VOLTAGE OF ABSCM&H/U.** 1) Run the engine at idle. 2) Measure the voltage between ABSCM&H/U connector and chassis ground. ***Connector & terminal*** ***(B301) No. 18 (+) — Chassis ground (–):***	Is the voltage 10 — 15 V?	Go to step **5.**	Repair the harness connector between battery, ignition switch and ABSCM&H/U.
5	**CHECK GROUND CIRCUIT OF ABSCM&H/U.** 1) Turn the ignition switch to OFF. 2) Measure the resistance between ABSCM&H/U connector and chassis ground. ***Connector & terminal*** ***(B301) No. 15 — Chassis ground:***	Is the resistance less than 0.5 Ω?	Go to step **6.**	Repair the ABSCM&H/U ground harness.
6	**CHECK POOR CONTACT IN CONNECTOR.** Turn the ignition switch to OFF.	Is there poor contact in connector between generator, battery and ABSCM&H/U?	Repair the connector.	Go to step **7.**
7	**CHECK ABSCM&H/U.** 1) Connect all the connectors. 2) Erase the memory. 3) Perform the inspection mode. 4) Read the DTC.	Is the same DTC displayed?	Replace ABSCM&H/U. <Ref. to ABS-6, ABS Control Module and Hydraulic Control Unit (ABSCM&H/U).>	Go to step **8.**
8	**CHECK ANY OTHER DTC ON DISPLAY.**	Is any other DTC displayed?	Inspect the DTC using “List of Diagnostic Trouble Code (DTC)”. <Ref. to ABS(diag)-34, List of Diagnostic Trouble Code (DTC).>	Temporary poor contact occurs. NOTE: Though ABS warning light remains to illuminate at this time, it is normal. Drive the vehicle at more than 12 km/h (7 MPH) in order to make ABS warning light go off. Be sure to drive the vehicle and check the warning light goes off.

W: DTC C0116 FAULTY STOP LIGHT SWITCH

DTC DETECTING CONDITION:

Defective stop light switch

WIRING DIAGRAM:

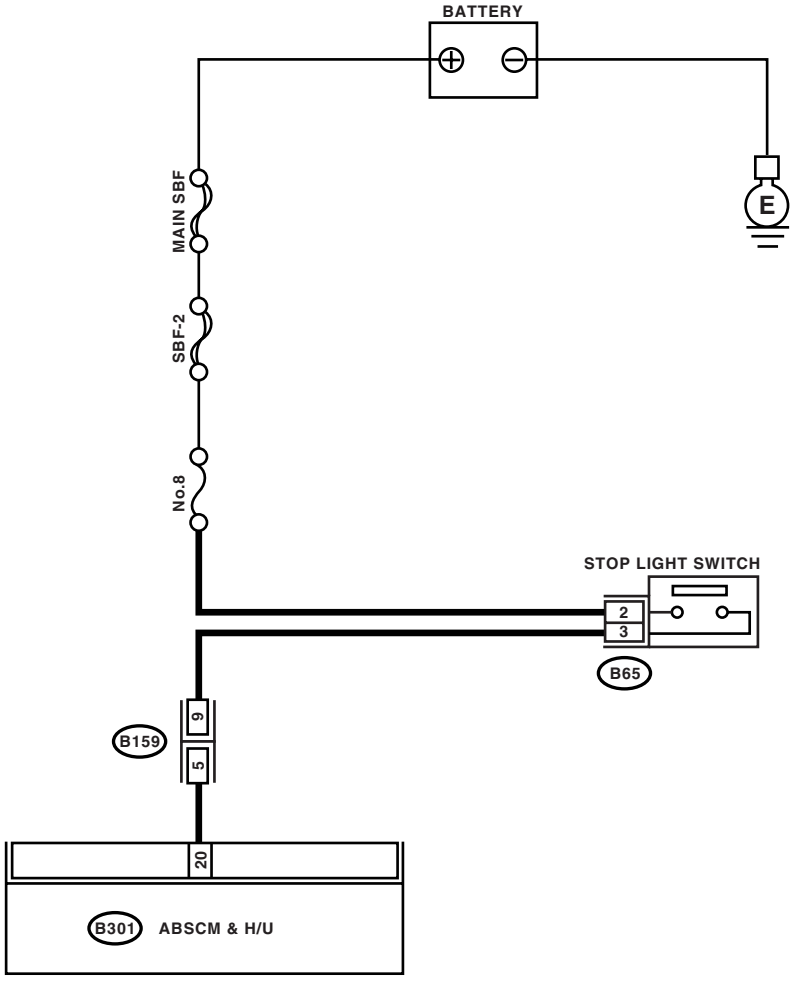

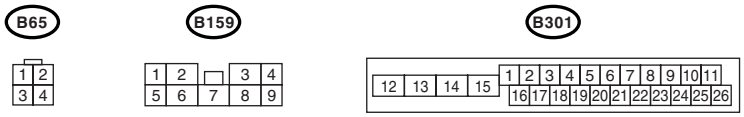

ABS00595

	Step	Check	Yes	No
1	**CHECK OUTPUT OF STOP LIGHT SWITCH USING SUBARU SELECT MONITOR.** 1) Select {Current Data Display & Save} in Subaru Select Monitor. 2) Release the brake pedal. 3) Read the stop light switch signal in Subaru Select Monitor.	Is "OFF" displayed on the display?	Go to step **2.**	Go to step **3.**
2	**CHECK OUTPUT OF STOP LIGHT SWITCH USING SUBARU SELECT MONITOR.** 1) Depress the brake pedal. 2) Read the stop light switch output in Subaru Select Monitor.	Is "ON" displayed on the display?	Go to step **5.**	Go to step **3.**
3	**CHECK IF STOP LIGHTS COME ON.** Depress the brake pedal.	Does the stop light illuminate?	Go to step **4.**	Repair the stop lights circuit.
4	**CHECK OPEN CIRCUIT IN HARNESS.** 1) Turn the ignition switch to OFF. 2) Disconnect the connector from ABSCM&H/U. 3) Depress the brake pedal. 4) Measure the voltage between ABSCM&H/U connector and chassis ground. ***Connector & terminal*** ***(B301) No. 20 (+) — Chassis ground (−):***	Is the voltage 10 — 15 V?	Go to step **5.**	Repair harness between stop light switch and ABSCM&H/U connector.
5	**CHECK POOR CONTACT IN CONNECTOR.**	Is there poor contact in connector between stop light switch and ABSCM&H/U?	Go to step **6.**	Repair the connector.
6	**CHECK ABSCM&H/U.** 1) Connect all the connectors. 2) Erase the memory. 3) Perform the inspection mode. 4) Read the DTC.	Is the same DTC displayed?	Replace the ABSCM only. <Ref. to ABS-8, REPLACEMENT, ABS Control Module and Hydraulic Control Unit (ABSCM&H/U).>	Go to step **7.**
7	**CHECK ANY OTHER DTC ON DISPLAY.**	Is any other DTC displayed?	Inspect the DTC using "List of Diagnostic Trouble Code (DTC)". <Ref. to ABS(diag)-34, List of Diagnostic Trouble Code (DTC).>	Temporary poor contact occurs.

X: DTC C0118 G SENSOR OUTPUT VOLTAGE MALFUNCTION

DTC DETECTING CONDITION:
Defective G sensor
TROUBLE SYMPTOM:
ABS does not operate.
WIRING DIAGRAM:

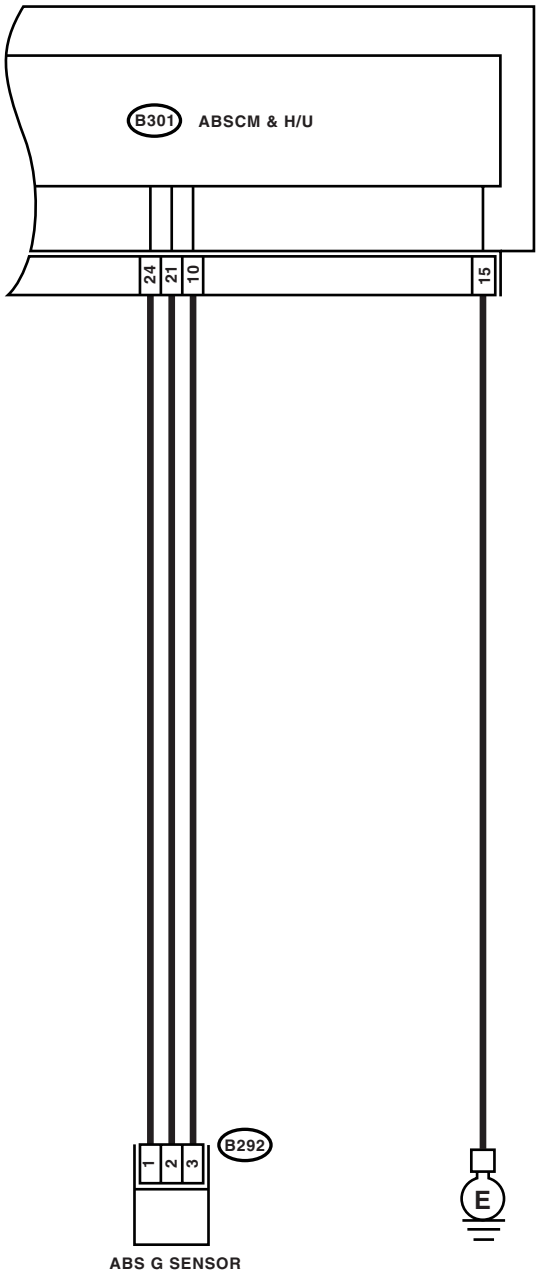

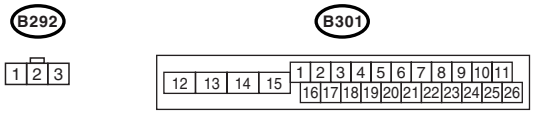

ABS00419

	Step	Check	Yes	No
1	**CHECK OUTPUT OF G SENSOR USING SUBARU SELECT MONITOR.** 1) Select {Current Data Display & Save} in Subaru Select Monitor. 2) Read the G sensor output on Subaru Select Monitor.	Is the reading indicated on display −1.2 — 1.2 m/s when G sensor is horizontal?	Go to step **2.**	Go to step **5.**
2	**CHECK POOR CONTACT IN CONNECTOR.**	Is there poor contact in connector between ABSCM&H/U and G sensor?	Repair the connector.	Go to step **3.**
3	**CHECK ABSCM&H/U.** 1) Connect all the connectors. 2) Erase the memory. 3) Perform the inspection mode. 4) Read the DTC.	Is the same DTC displayed?	Replace the ABSCM only. <Ref. to ABS-8, REPLACEMENT, ABS Control Module and Hydraulic Control Unit (ABSCM&H/U).>	Go to step **4.**
4	**CHECK ANY OTHER DTC ON DISPLAY.**	Is any other DTC displayed?	Inspect the DTC using “List of Diagnostic Trouble Code (DTC)”. <Ref. to ABS(diag)-34, List of Diagnostic Trouble Code (DTC).>	Temporary poor contact occurs.
5	**CHECK INPUT VOLTAGE OF G SENSOR.** 1) Turn the ignition switch to OFF. 2) Remove the console box. 3) Remove the G sensor from vehicle. (Do not disconnect connector.) 4) Turn the ignition switch to ON. 5) Measure the voltage between G sensor connector terminals. ***Connector & terminal*** ***(B292) No. 1 (+) — No. 3 (−):***	Is the voltage 4.75 — 5.25 V?	Go to step **6.**	Repair the harness connector between G sensor and ABSCM&H/U.
6	**CHECK OPEN CIRCUIT IN G SENSOR OUTPUT HARNESS AND GROUND HARNESS.** 1) Turn the ignition switch to OFF. 2) Disconnect the connector from ABSCM&H/U. 3) Measure the resistance between ABSCM&H/U connector terminals. ***Connector & terminal*** ***(B301) No. 21 — No. 10:***	Is the resistance 1.8 — 2.4 kΩ?	Go to step **7.**	Repair the harness connector between G sensor and ABSCM&H/U.
7	**CHECK GROUND SHORT IN G SENSOR OUTPUT HARNESS.** 1) Disconnect the connector from G sensor. 2) Measure the resistance between ABSCM&H/U connector and chassis ground. ***Connector & terminal*** ***(B301) No. 21 — Chassis ground:***	Is the resistance more than 1 MΩ?	Go to step **8.**	Repair the harness between G sensor and ABSCM&H/U.
8	**CHECK G SENSOR.** 1) Connect the connector to G sensor. 2) Connect the connector to ABSCM&H/U. 3) Turn the ignition switch to ON. 4) Measure the voltage between G sensor connector terminals. ***Connector & terminal*** ***(B292) No. 2 (+) — No. 3 (−):***	Is the voltage 2.1 — 2.5 V when G sensor is on a level?	Go to step **9.**	Replace G sensor. <Ref. to ABS-18, G Sensor.>

	Step	Check	Yes	No
9	**CHECK G SENSOR.** Measure the voltage between G sensor connector terminals. ***Connector & terminal*** ***(B292) No. 2 (+) — No. 3 (–):***	Is the voltage 3.6 — 4.1 V when G sensor is inclined forwards to 90°?	Go to step **10.**	Replace G sensor. <Ref. to ABS-18, G Sensor.>
10	**CHECK G SENSOR.** Measure the voltage between G sensor connector terminals. ***Connector & terminal*** ***(B292) No. 2 (+) — No. 3 (–):***	Is the voltage 0.5 — 1.0 V when G sensor is inclined backward to 90°?	Go to step **11.**	Replace G sensor. <Ref. to ABS-18, G Sensor.>
11	**CHECK POOR CONTACT IN CONNECTOR.** Turn the ignition switch to OFF.	Is there poor contact in connector between ABSCM&H/U and G sensor?	Repair the connector.	Go to step **12.**
12	**CHECK ABSCM&H/U.** 1) Connect all the connectors. 2) Erase the memory. 3) Perform the inspection mode. 4) Read the DTC.	Is the same DTC displayed?	Replace the ABSCM only. <Ref. to ABS-8, REPLACEMENT, ABS Control Module and Hydraulic Control Unit (ABSCM&H/U).>	Go to step **13.**
13	**CHECK ANY OTHER DTC ON DISPLAY.**	Is any other DTC displayed?	Inspect the DTC using “List of Diagnostic Trouble Code (DTC)”. <Ref. to ABS(diag)-34, List of Diagnostic Trouble Code (DTC).>	Temporary poor contact occurs.

Y: DTC C0119 G SENSOR OUTPUT VOLTAGE MALFUNCTION

DTC DETECTING CONDITION:
Defective G sensor output signal
TROUBLE SYMPTOM:
ABS does not operate.
WIRING DIAGRAM:

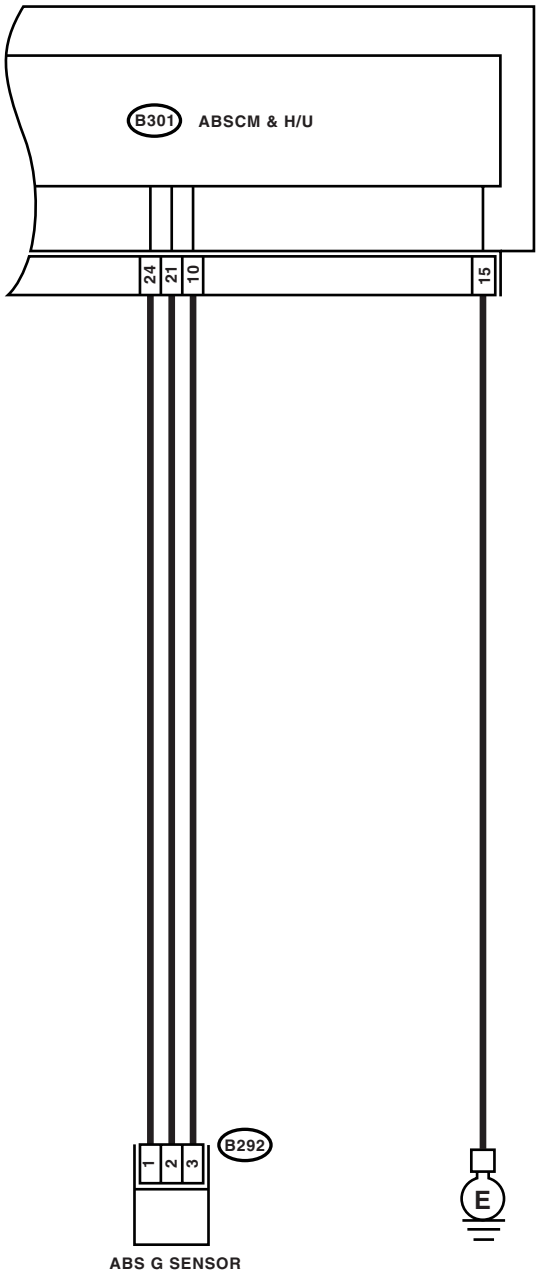

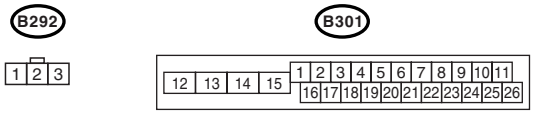

ABS00419

	Step	Check	Yes	No
1	**WHETHER A WHEEL TURNED FREELY OR NOT.**	Have the wheels been turned freely when the vehicle is lifted up or drove on a rolling road?	ABS is normal. Erase the memory.	Go to step **2.**
2	**CHECK OUTPUT OF G SENSOR USING SUBARU SELECT MONITOR.** 1) Select {Current Data Display & Save} in Subaru Select Monitor. 2) Read the Subaru Select Monitor display.	Is the reading indicated on display −1.2 — 1.2 m/s when G sensor is on a level?	Go to step **3.**	Go to step **8.**
3	**CHECK OUTPUT OF G SENSOR USING SUBARU SELECT MONITOR.** 1) Turn the ignition switch to OFF. 2) Remove the console box. 3) Remove the G sensor from vehicle. (Do not disconnect connector.) 4) Turn the ignition switch to ON. 5) Select {Current Data Display & Save} in Subaru Select Monitor. 6) Read the Subaru Select Monitor display.	Is the reading indicated on display 8.1 — 11.2 m/s when G sensor is inclined forward to 90°?	Go to step **4.**	Replace G sensor. <Ref. to ABS-18, G Sensor.>
4	**CHECK OUTPUT OF G SENSOR USING SUBARU SELECT MONITOR.** Read the Subaru Select Monitor display.	Is the reading indicated on display −8.1 — −11.2 m/s when G sensor is inclined backward to 90°?	Go to step **5.**	Replace G sensor. <Ref. to ABS-18, G Sensor.>
5	**CHECK POOR CONTACT IN CONNECTOR.** Turn the ignition switch to OFF.	Is there poor contact in connector between ABSCM&H/U and G sensor?	Repair the connector.	Go to step **6.**
6	**CHECK ABSCM&H/U.** 1) Connect all the connectors. 2) Erase the memory. 3) Perform the inspection mode. 4) Read the DTC.	Is the same DTC displayed?	Replace the ABSCM only. <Ref. to ABS-8, REPLACEMENT, ABS Control Module and Hydraulic Control Unit (ABSCM&H/U).>	Go to step **7.**
7	**CHECK ANY OTHER DTC ON DISPLAY.**	Is any other DTC displayed?	Inspect the DTC using “List of Diagnostic Trouble Code (DTC)”. <Ref. to ABS(diag)-34, List of Diagnostic Trouble Code (DTC).>	Temporary poor contact occurs.
8	**CHECK OPEN CIRCUIT IN G SENSOR OUTPUT HARNESS AND GROUND HARNESS.** 1) Turn the ignition switch to OFF. 2) Disconnect the connector from ABSCM&H/U. 3) Measure the resistance between ABSCM&H/U connector terminals. ***Connector & terminal*** ***(B301) No. 21 — No. 10:***	Is the resistance 1.8 — 2.4 kΩ?	Go to step **9.**	Repair the harness connector between G sensor and ABSCM&H/U.
9	**CHECK GROUND SHORT OF HARNESS.** Measure the resistance between ABSCM&H/U connector and chassis ground. ***Connector & terminal*** ***(B301) No. 21 — Chassis ground:***	Is the resistance more than 1 MΩ?	Go to step **10.**	Repair the harness connector between G sensor and ABSCM&H/U.

	Step	Check	Yes	No
10	**CHECK G SENSOR.** 1) Remove the console box. 2) Remove the G sensor from vehicle. 3) Connect the connector to G sensor. 4) Connect the connector to ABSCM&H/U. 5) Turn the ignition switch to ON. 6) Measure the voltage between G sensor connector terminals. ***Connector & terminal*** ***(B292) No. 2 (+) — No. 3 (–):***	Is the voltage 2.1 — 2.5 V when G sensor is on a level?	Go to step **11.**	Replace G sensor. <Ref. to ABS-18, G Sensor.>
11	**CHECK G SENSOR.** Measure the voltage between G sensor connector terminals. ***Connector & terminal*** ***(B292) No. 2 (+) — No. 3 (–):***	Is the voltage 3.6 — 4.1 V when G sensor is inclined forwards to 90°?	Go to step **12.**	Replace G sensor. <Ref. to ABS-18, G Sensor.>
12	**CHECK G SENSOR.** Measure the voltage between G sensor connector terminals. ***Connector & terminal*** ***(B292) No. 2 (+) — No. 3 (–):***	Is the voltage 0.5 — 1.0 V when G sensor is inclined backward to 90°?	Go to step **13.**	Replace G sensor. <Ref. to ABS-18, G Sensor.>
13	**CHECK ABSCM&H/U.** 1) Turn the ignition switch to OFF. 2) Connect all the connectors. 3) Erase the memory. 4) Perform the inspection mode. 5) Read the DTC.	Is the same DTC displayed?	Replace the ABSCM only. <Ref. to ABS-8, REPLACEMENT, ABS Control Module and Hydraulic Control Unit (ABSCM&H/U).>	Go to step **14.**
14	**CHECK ANY OTHER DTC ON DISPLAY.**	Is any other DTC displayed?	Inspect the DTC using “List of Diagnostic Trouble Code (DTC)”. <Ref. to ABS(diag)-34, List of Diagnostic Trouble Code (DTC).>	Temporary poor contact occurs.

13.General Diagnostic Table

A: INSPECTION

Symptom		Problem parts
Vehicle instability during braking	Vehicle is pulled to either right or left side.	• ABSCM&H/U (solenoid valve) • ABS wheel speed sensor • Brake (caliper, piston and pads) • Wheel Alignment • Tire specifications, tire wear and air pressures • Incorrect wiring or piping connections • Road surface (uneven, camber)
	Vehicle spins.	• ABSCM&H/U (solenoid valve) • ABS wheel speed sensor • Brake (pads) • Tire specifications, tire wear and air pressures • Incorrect wiring or piping connections
Poor brake performance	Long braking/stopping distance	• ABSCM&H/U (solenoid valve) • Brake (pads) • Air in brake line • Tire specifications, tire wear and air pressures • Incorrect wiring or piping connections
	Wheel locks.	• ABSCM&H/U (solenoid valve, motor) • ABS wheel speed sensor • Incorrect wiring or piping connections
	Brake drag	• ABSCM&H/U (solenoid valve) • ABS wheel speed sensor • Master cylinder • Brake (caliper and piston) • Parking Brake • Axle and wheels • Brake pedal play
	Long brake pedal stroke	• Air in brake line • Brake pedal play
	Vehicle vertical pitching	• Suspension play or fatigue (reduced damping) • Incorrect wiring or piping connections • Road surface (uneven)
	Unstable or uneven braking	• ABSCM&H/U (solenoid valve) • ABS wheel speed sensor • Brake (caliper, piston and pads) • Tire specifications, tire wear and air pressures • Incorrect wiring or piping connections • Road surface (uneven)
Vibration and/or noise (while driving on slippery roads)	Excessive pedal vibration	• Incorrect wiring or piping connections • Road surface (uneven)
	Noise from ABSCM&H/U	• ABSCM&H/U (mount bushing) • ABS wheel speed sensor • Brake line
	Noise from front of vehicle	• ABSCM&H/U (mount bushing) • ABS wheel speed sensor • Master cylinder • Brake (caliper, piston, pads and rotor) • Brake line • Brake booster and check valve • Suspension play or fatigue
	Noise from rear of vehicle	• ABS wheel speed sensor • Brake (caliper, piston, pads and rotor) • Parking Brake • Brake line • Suspension play or fatigue

VEHICLE DYNAMICS CONTROL (VDC)

VDC

		Page
1.	General Description	2
2.	VDC Control Module and Hydraulic Control Unit (VDCCM/U)	7
3.	ABS Sequence Control	10
4.	VDC Sequence Control	11
5.	Yaw Rate and Lateral G Sensor	14
6.	Steering Angle Sensor	16
7.	Front ABS Wheel Speed Sensor	18
8.	Rear ABS Wheel Speed Sensor	19
9.	Front Magnetic Encoder	20
10.	Rear Magnetic Encoder	21
11.	VDC OFF Switch	22

1. General Description

A: SPECIFICATION

Item				Standard values or identification
ABS wheel speed sensor	ABS wheel speed sensor gap (for reference)	Front		0.77 — 1.43 mm (0.030 — 0.056 in)
		Rear		0.64 — 1.56 mm (0.025 — 0.061 in)
	Marks of harness (Marks, Color)	Front	RH	K1 (White)
			LH	K2 (Yellow)
		Rear	RH	K5 (White)
			LH	K6 (Yellow)
Yaw rate and lateral G sensor	Lateral G sensor voltage			2.5±0.2 V
Marks of VDCCM&H/U	WAGON OUTBACK 3.0 R			G5
	SEDAN OUTBACK 3.0 R			GB

B: COMPONENT

1. ABS WHEEL SPEED SENSOR

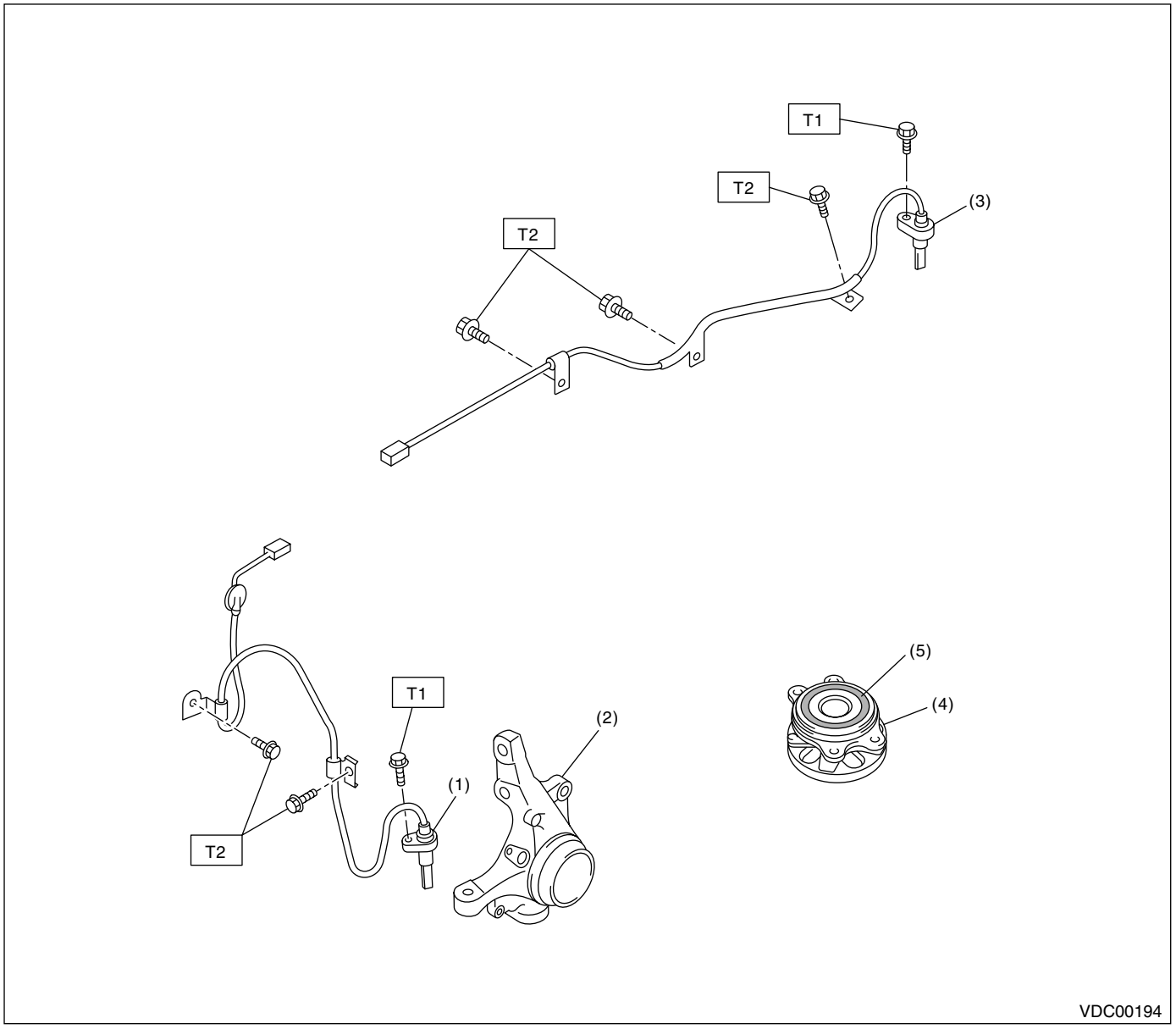

(1) Front ABS wheel speed sensor
(2) Front housing
(3) Rear ABS wheel speed sensor
(4) Hub unit bearing
(5) Magnetic encoder

Tightening torque: N·m (kgf-m, ft-lb)
T1: 7.5 (0.76, 5.5)
T2: 33 (3.4, 24)

2. YAW RATE AND LATERAL G SENSOR

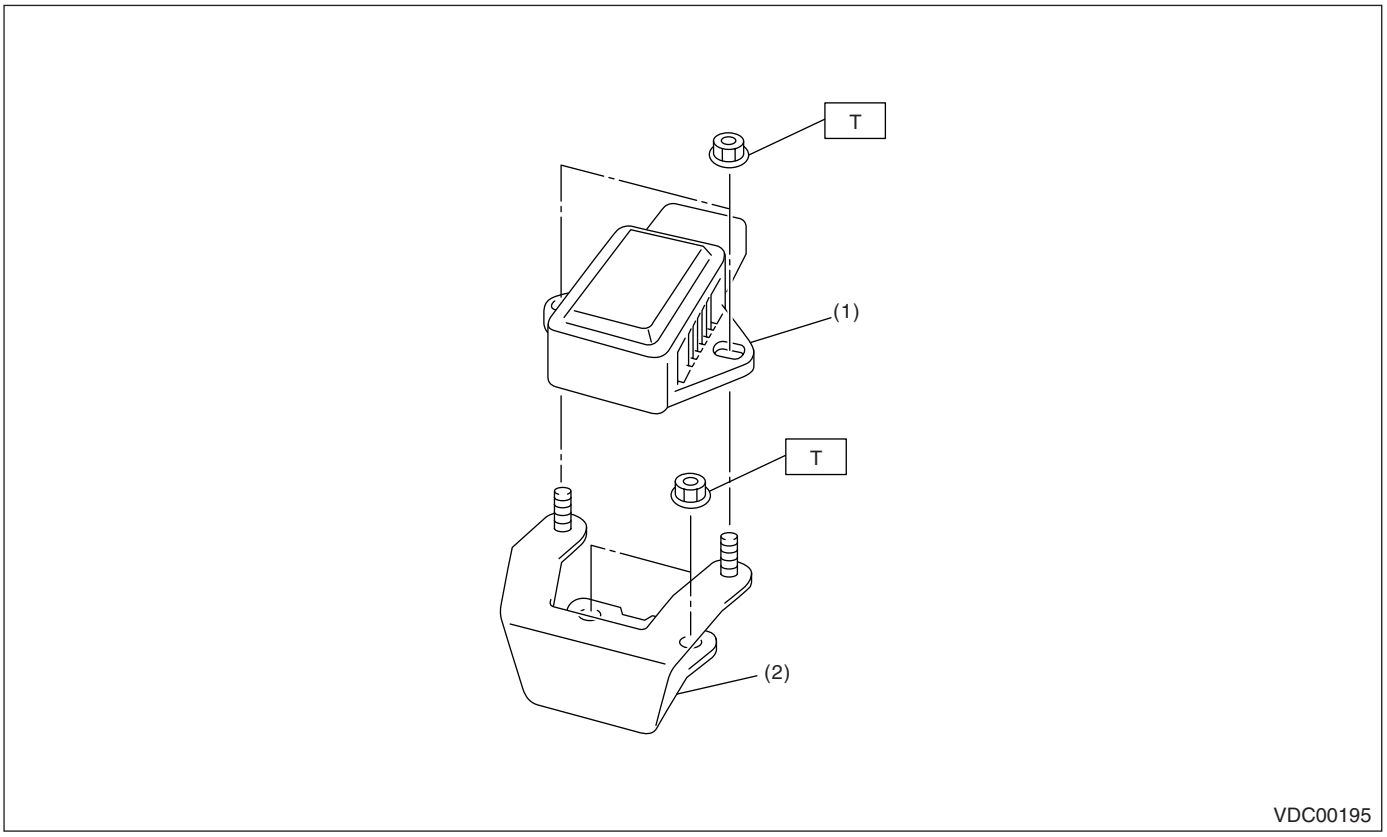

(1) Yaw rate and lateral G sensor (2) Bracket

Tightening torque: N·m (kgf-m, ft-lb)
T: 7.5 (0.76, 5.5)

3. STEERING ANGLE SENSOR

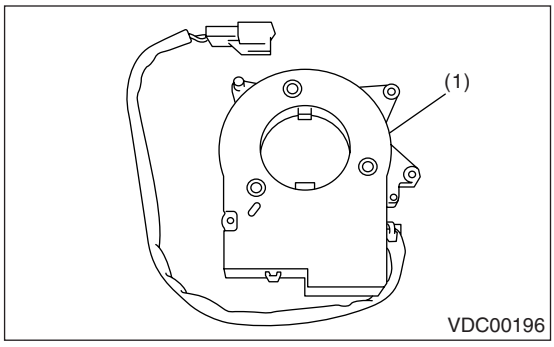

(1) Steering angle sensor

4. VDC CONTROL MODULE & HYDRAULIC CONTROL UNIT (VDCCM&H/U)

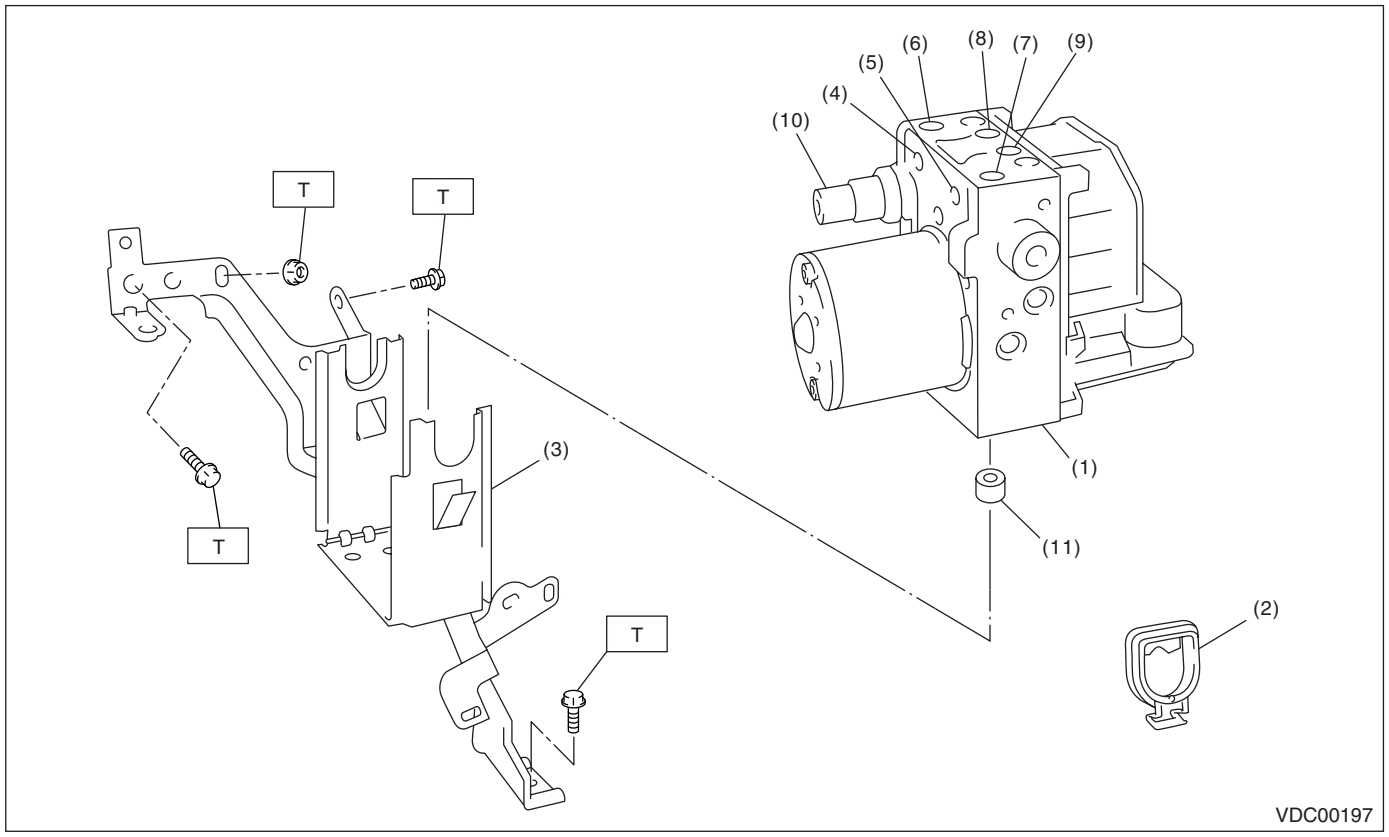

(1) VDC control module and hydraulic control unit (VDCCM&H/U)
(2) Clip
(3) Bracket
(4) Rear RH outlet
(5) Rear LH outlet
(6) Secondary inlet
(7) Primary inlet
(8) Front LH outlet
(9) Front RH outlet
(10) Pressure sensor
(11) Damper

Tightening torque: N·m (kgf-m, ft-lb)
T: 33 (3.4, 24)

C: CAUTION

- Wear work clothing, including a cap, protective goggles and protective shoes during operation.
- Remove contamination including dirt and corrosion before removal, installation or disassembly.
- Keep the disassembled parts in order and protect them from dust and dirt.
- Before disconnecting electrical connectors of sensors or units, be sure to disconnect the ground cable from battery.
- Before removal, installation or disassembly, be sure to clarify the failure. Avoid unnecessary removal, installation, disassembly and replacement.
- Be careful not to burn yourself, because each part on the vehicle is hot after running.
- Be sure to tighten fasteners including bolts and nuts to the specified torque.
- Place shop jacks or rigid racks at the specified points.

D: PREPARATION TOOL

1. SPECIAL TOOL

ILLUSTRATION	TOOL NUMBER	DESCRIPTION	REMARKS
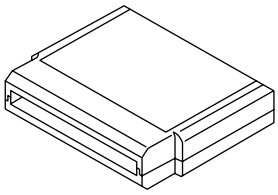 ST24082AA260	24082AA260	CARTRIDGE	Troubleshooting for electrical system.
ST22771AA030	22771AA030	SUBARU SELECT MONITOR KIT	Troubleshooting for electrical system.

2. GENERAL TOOL

TOOL NAME	REMARKS
Circuit tester	Used for measuring resistance, voltage and ampere.
Pressure gauge	Used for measuring oil pressure.
Oscilloscope	Used for measuring sensor.

2. VDC Control Module and Hydraulic Control Unit (VDCCM/U)

A: REMOVAL

1) Disconnect the ground cable from battery.
2) Use compressed air to get rid of water and dust around the VDCCM&H/U.

NOTE:
When dust and dirt are attached to the terminal, they may cause poor contact.

3) Disconnect the pressure sensor connector.

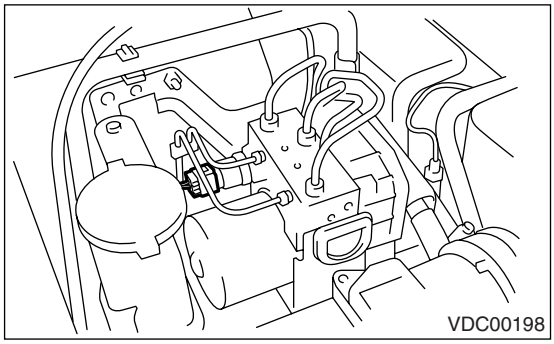

4) Disconnect the VDCCM&H/U connector with pulling up the lock lever.

CAUTION:
Do not pull the harness when disconnecting connector.

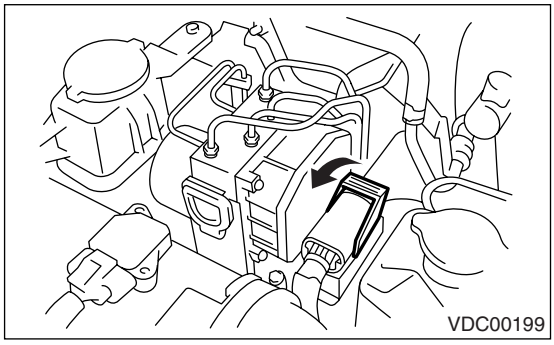

5) Disconnect the brake pipes from VDCCM&H/U.
6) Wrap the brake pipe using a vinyl bag not to spill the brake fluid on the vehicle body.

CAUTION:
When the brake fluid is attached to vehicle body, wash it off with water and wipe the water.

7) Remove the clips, and then remove the VDCCM&H/U.

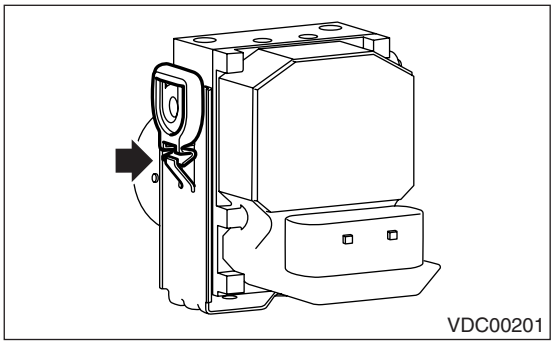

CAUTION:
• VDCCM&H/U cannot be disassembled. Do not attempt to loosen the bolts and nuts.
• Do not drop or bump the VDCCM&H/U.
• Do not turn VDCCM&H/U upside down or place it sideways for storage.
• Be careful that no foreign objects are mixed in VDCCM&H/U.
• Be careful that no water enters connectors.

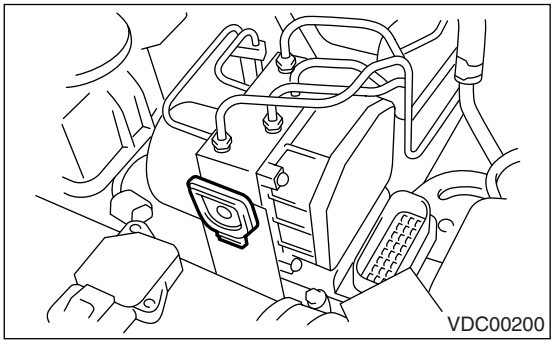

8) Remove the VDCCM&H/U bracket.

B: INSTALLATION

1) Install the VDCCM&H/U bracket.

Tightening torque:
33 N·m (3.3 kgf-m, 24 ft-lb)

2) Install the VDCCM&H/U to bracket.
3) Install the clip.

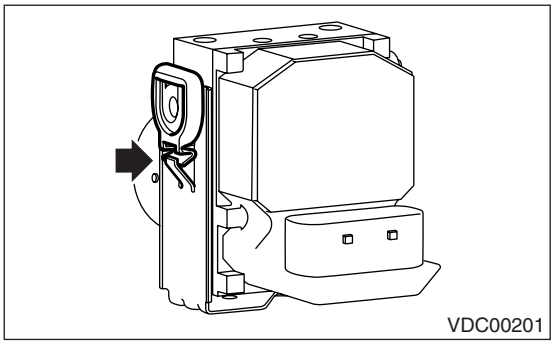

NOTE:
Hook the clip on the pawl of bracket securely.

4) Connect the brake pipes to their specified VDC-CM&H/U positions.

Tightening torque:
<Ref. to BR-7, FRONT BRAKE PIPES AND HOSE, COMPONENT, General Description.>

5) Connect the connector to VDCCM&H/U.

NOTE:
• Be sure to remove all foreign matters from inside the connector before connecting.
• Ensure that the VDCCM&H/U connector is securely locked.

6) Connect the pressure sensor connector.
7) Bleed air from the brake system.

C: INSPECTION

1) Check the connected and fixed condition of connector.
2) Check the mark used for VDCCM&H/U identification.
Refer to "SPECIFICATION" for mark. <Ref. to VDC-2, SPECIFICATION, General Description.>

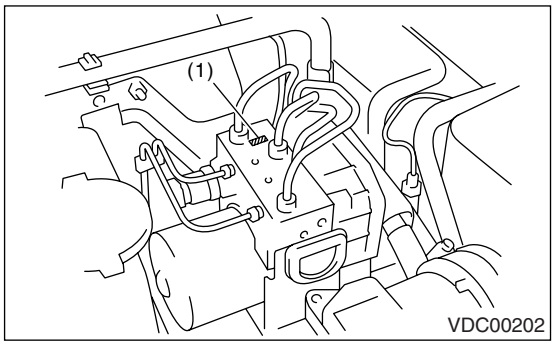

(1) Mark

1. CHECKING THE HYDRAULIC UNIT ABS OPERATION BY PRESSURE GAUGE

<Ref. to ABS-7, CHECKING THE HYDRAULIC UNIT ABS OPERATION BY PRESSURE GAUGE, INSPECTION, ABS Control Module and Hydraulic Control Unit (ABSCM&H/U).>

2. CHECKING THE HYDRAULIC UNIT ABS OPERATION WITH BRAKE TESTER

<Ref. to ABS-8, CHECKING THE HYDRAULIC UNIT ABS OPERATION WITH BRAKE TESTER, INSPECTION, ABS Control Module and Hydraulic Control Unit (ABSCM&H/U).>

3. CHECKING THE HYDRAULIC UNIT VDC OPERATION BY PRESSURE GAUGE

1) Lift-up the vehicle, and then remove the wheels.
2) Remove the air bleeder screws from the FL and FR caliper bodies.
3) Connect two pressure gauges to the FL and FR caliper bodies.

CAUTION:
• Pressure gauges used exclusively for brake fluid must be used.
• Do not use the pressure gauge for the measurement of transmission oil pressure since the piston seal may be expanded and deformed.

NOTE:
Wrap a sealing tape around the pressure gauge.

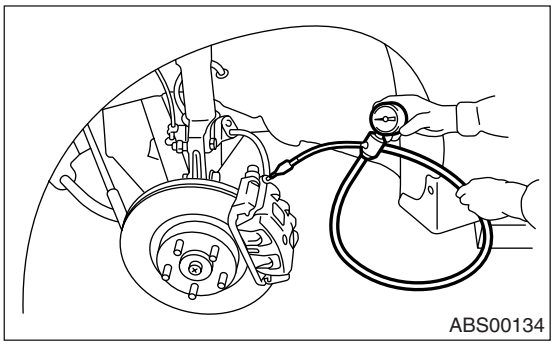

4) Bleed air from the pressure gauges.
5) Perform VDC sequence control.
<Ref. to VDC-11, VDC Sequence Control.>
6) When the hydraulic unit begins to work, first the FL side performs compression, holding, and decompression, and then the FR side performs compression, holding, and decompression.
7) Read values indicated on the pressure gauge and check if the fluctuation of the values between decompression and compression meets the standard values. Depress the brake pedal and check that it is not abnormally hard, and tightness is normal.

	Front wheel	Rear wheel
When compressed	3,000 kPa (31 kgf/cm^2, 441 psi) or more	3,000 kPa (31 kgf/cm^2, 441psi) or more
When decompressed	500 kPa (5 kgf/cm^2, 73 psi) or less	500 kPa (5 kgf/cm^2, 73 psi) or less

8) Disconnect the pressure gauges from FL and FR caliper bodies.
9) Install the air bleeder screws of FL and FR caliper bodies.
10) Remove the air bleeder screws from the RL and RR caliper bodies.
11) Connect two pressure gauges to the RL and RR caliper bodies.
12) Bleed air from the pressure gauges and the RL and RR caliper bodies.
13) Perform VDC sequence control.
<Ref. to VDC-11, VDC Sequence Control.>

14) When the hydraulic unit begins to work, first the RR side performs compression, holding, and decompression, and then the RL side performs compression, holding, and decompression.
15) Read the values indicated on the pressure gauges and check it within specified. Depress the brake pedal and check that it is not abnormally hard, and tightness is normal.
16) Disconnect the pressure gauge from the RL and RR caliper bodies.
17) Install the air bleeder screws of RL and RR caliper bodies.
18) Bleed air from the brake line.

4. CHECK HYDRAULIC UNIT VDC OPERATION WITH BRAKE TESTER

1) Set the wheels other than the measured one on free rollers.
2) Prepare for operating the VDC sequence control.
<Ref. to VDC-11, VDC Sequence Control.>
3) Set the front wheels or rear wheels on the brake tester and set the select lever position to “N” range.

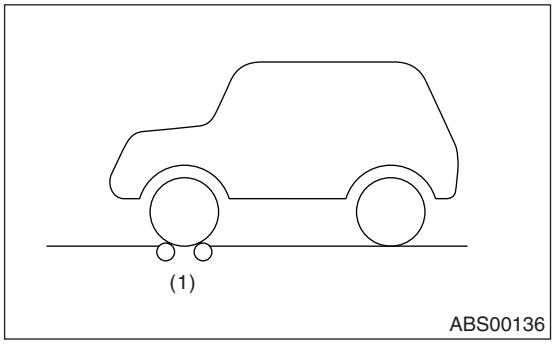

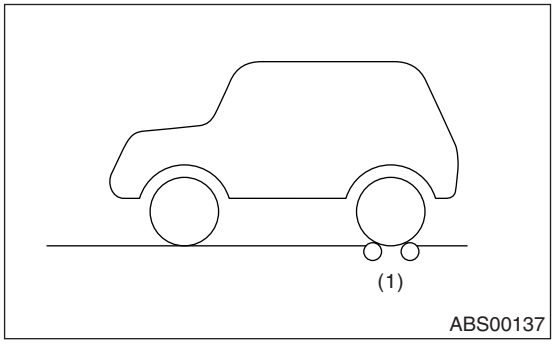

(1) Brake tester

4) Operate the brake tester.
5) Perform VDC sequence control.
<Ref. to VDC-11, VDC Sequence Control.>
6) When the hydraulic unit begins to work; check the following working sequence.
(1) The FL wheel performs compression, holding and decompression in sequence, and subsequently the FR wheel repeats the cycle.
(2) The RR wheel performs compression, holding and decompression in sequence, and subsequently the RL wheel repeats the cycle.
7) Read values indicated on the brake tester and check if the fluctuation of the values between decompression and compression meets the standard values.

	Front wheel	Rear wheel
When compressed	2,000 N (203 kgf, 447 lb) or more	1,000 N (102 kgf, 225 lb) or more
When decompressed	500 N (51 kgf, 112 lb) or less	500 N (51 kgf, 112 lb) or less

8) After the inspection, depress the brake pedal and check that it is not abnormally hard, and tightness is normal.

D: ADJUSTMENT

When the following replacement, removal and installation is performed, be sure to perform the centering setting of steering angle sensor and zero point setting of yaw rate and lateral G sensor.
- VDCCM&H/U
- Steering angle sensor
- Yaw rate and lateral G sensor
- Steering wheel parts (Including airbag)
- Suspension parts
- Wheel alignment adjustment

1) Park the vehicle straight on a level surface. (Engine operation on “P” or “N” range)
2) Check that steering wheels are positioned in center. (When the center position is not correct, adjust the wheel alignment.)
3) Set the Subaru Select Monitor to vehicle, select the {Set up mode for Neutral of Steering Angle Sensor & Lateral G Sensor 0 point} on «Function check sequence» display. (Follow the step on display.)
4) On the «Brake Control System» display screen, select the {Current Data Display & Save}, and check that the steering angle sensor is displayed “0 deg”.
5) When the “0 deg” is not displayed, repeat the above steps and check that the “0 deg” is displayed.
6) Drive the vehicle for 10 minutes, and check that the ABS and VDC warning light is not illuminated.
7) Check that the unnecessary operation of VDC, or losing control of steering is not occurred. And when the malfunction occurred, repeat the above steps.

3. ABS Sequence Control

A: OPERATION

<Ref. to ABS-10, OPERATION, ABS Sequence Control.>

1. ABS SEQUENCE CONTROL WITH SUBARU SELECT MONITOR

<Ref. to ABS-10, ABS SEQUENCE CONTROL WITH SUBARU SELECT MONITOR, OPERATION, ABS Sequence Control.>

2. CONDITIONS FOR ABS SEQUENCE CONTROL

<Ref. to ABS-11, CONDITIONS FOR ABS SEQUENCE CONTROL, OPERATION, ABS Sequence Control.>

B: SPECIFICATION

1. CONDITIONS FOR COMPLETION OF ABS SEQUENCE CONTROL

<Ref. to ABS-12, CONDITIONS FOR COMPLETION OF ABS SEQUENCE CONTROL, SPECIFICATION, ABS Sequence Control.>

4. VDC Sequence Control

A: OPERATION

1) While the VDC sequence control is performed, the operation of the hydraulic unit can be checked using the brake tester or pressure gauge after the hydraulic unit solenoid valve is operated.
2) VDC sequence control can be started by Subaru Select Monitor.

1. VDC SEQUENCE CONTROL WITH SUBARU SELECT MONITOR

NOTE:
In the event of any trouble, the sequence control may not be operative.

1) Connect the Subaru Select Monitor to data link connector under the driver's side instrument panel lower cover.
2) Turn the ignition switch to ON.
3) Set the Subaru Select Monitor switch to ON.
4) Set the Subaru Select Monitor to the "Brake Control" mode.
5) When the "VDC Inspection Mode" is selected from the "Function check sequence" menu, the "VDC sequence control" will start.
6) Since "Press the [YES] key" is displayed, press the YES key.
7) Operation points will be displayed on the Subaru Select Monitor.

2. CONDITIONS FOR VDC SEQUENCE CONTROL

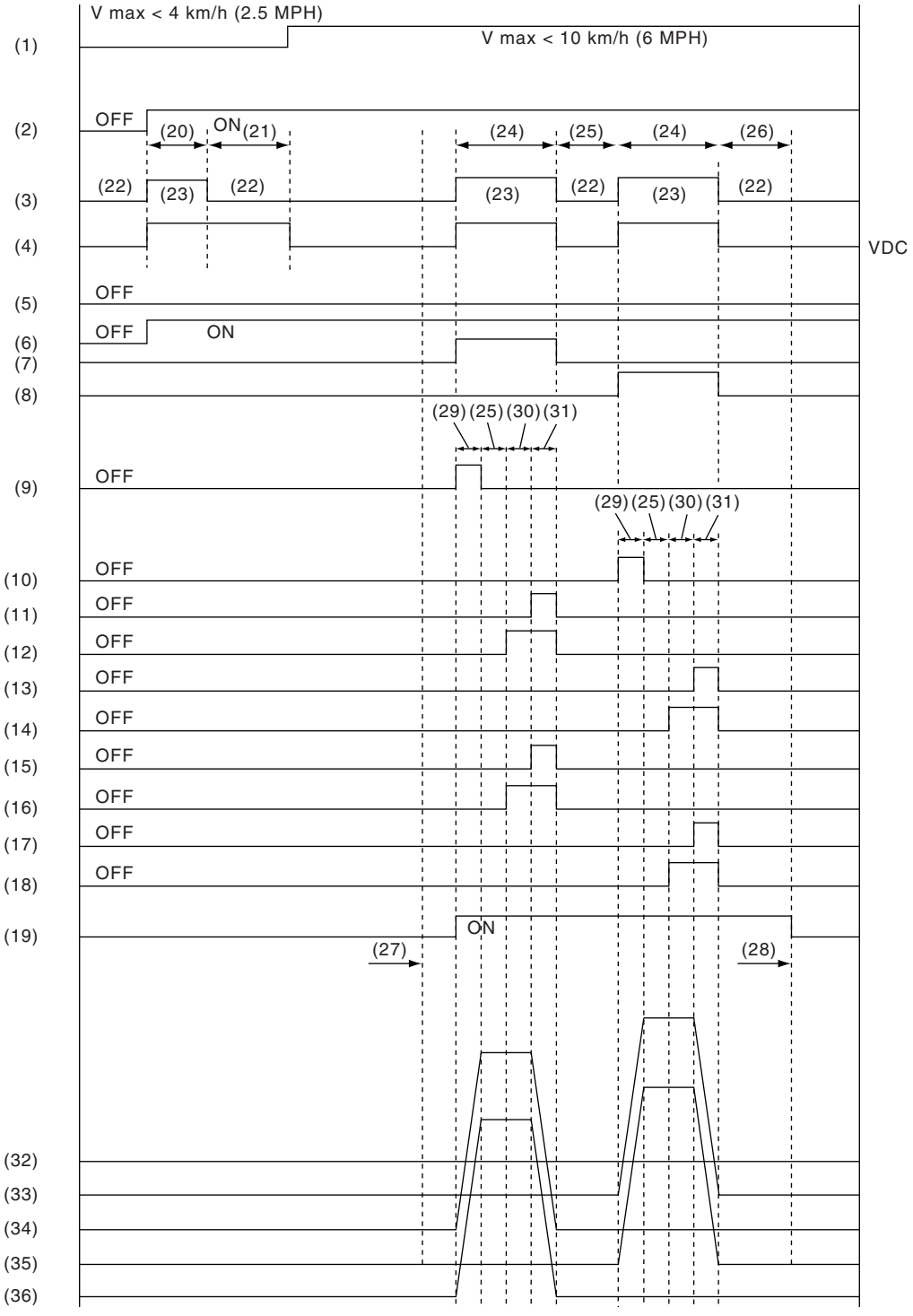

VDC00275

(1) All wheel speed
(2) Ignition key
(3) ABS warning light
(4) VDC warning light
(5) Stop light switch
(6) Valve relay
(7) VDC switching valve 1 FL
(8) VDC switching valve 1 FR
(9) VDC switching valve 2 FL
(10) VDC switching valve 2 FR
(11) FL decompression valve
(12) FL compression valve
(13) FR decompression valve
(14) FR compression valve
(15) RR decompression valve
(16) RR compression valve
(17) RL decompression valve
(18) RL compression valve
(19) Pump motor
(20) 1.5 sec.
(21) Approx. 3 sec.
(22) Light OFF
(23) Light ON
(24) 3.4 sec.
(25) 1 sec.
(26) 1.6 sec.
(27) Point A
(28) Reset
(29) 0.8 sec.
(30) 1.2 sec.
(31) 0.4 sec.
(32) Master cylinder pressure
(33) FR wheel cylinder pressure
(34) FL wheel cylinder pressure
(35) RL wheel cylinder pressure
(36) RR wheel cylinder pressure

NOTE:
The control operation starts from point A.

B: SPECIFICATION

1. CONDITIONS FOR COMPLETION OF VDC SEQUENCE CONTROL

When the following conditions develop, the VDC sequence control stops and VDC operation is returned to the normal control mode.
1) When the speed of at least one wheel reaches 10 km/h (6 MPH).
2) When the brake pedal is pressed during sequence control and the stop light switch is set to ON.
3) After completion of VDC sequence control.
4) When malfunction is detected.

5. Yaw Rate and Lateral G Sensor

A: REMOVAL

1) Disconnect the ground cable from battery.
2) Remove the console box.
<Ref. to EI-53, Console Box.>
3) Disconnect the connector from the yaw rate and lateral G sensor.
4) Remove the yaw rate and lateral G sensor.

CAUTION:
Do not drop or bump the yaw rate and lateral G sensor.

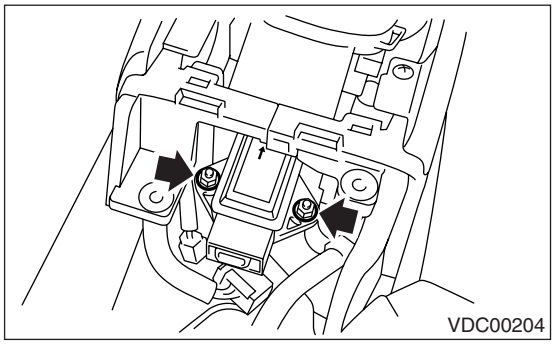

B: INSTALLATION

Install in the reverse order of removal.

NOTE:
Install the yaw rate and lateral G sensor to body with directing the arrow mark on sensors to vehicle front.

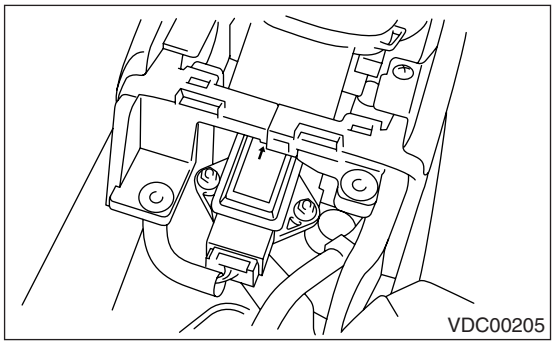

Tightening torque:
7.5 N·m (0.76 kgf-m, 5.5 ft-lb)

CAUTION:
After completion of installation, set the following two positions.
• Positioning to the center of steering angle sensor
• Positioning of the yaw rate and lateral G sensor to zero
The above procedure is required VDCCM&H/U to identify the vehicle position afterward. For the setting procedure of step 2 above, refer to "VDC Control Module and Hydraulic Control Unit". <Ref. to VDC-9, ADJUSTMENT, VDC Control Module and Hydraulic Control Unit (VDC-CM/U).>

C: INSPECTION

1. YAW RATE AND LATERAL G SENSOR SIGNAL

	Step	Check	Yes	No
1	**CHECK YAW RATE AND LATERAL G SENSOR.** 1) Turn the ignition switch to OFF. 2) Connect the Subaru Select Monitor connector to data link connector. 3) Turn the ignition switch to ON. 4) Set the Subaru Select Monitor connector to the {Brake Control} mode. 5) Select {Current Data Display & Save}. 6) Read the output voltage of yaw rate and lateral G sensor.	Are the indicated values when the vehicle is placed horizontally Lateral G sensor: −1.5 — 1.5 m/s Yaw rate sensor: −4 — 4 deg/s?	Go to step **2.**	Repair the harness connector between yaw rate and lateral G sensor and VDCCM&H/U. Or replace the yaw rate and lateral G sensor.
2	**CHECK LATERAL G SENSOR.** 1) Remove the console box. 2) Remove the yaw rate and lateral G sensor from vehicle. (Do not disconnect the connector.) 3) Read the display of Subaru Select Monitor. NOTE: When the yaw rate and lateral G sensor is moved with its power supply on, DTC of yaw rate and lateral G sensor may be recorded.	Is the value 6.8 — 12.8 m/s when the yaw rate and lateral G sensor are inclined rightward to 90°?	Go to step **3.**	Repair the harness connector between yaw rate and lateral G sensor and VDCCM&H/U. Or replace the yaw rate and lateral G sensor.
3	**CHECK LATERAL G SENSOR.** Read the display of Subaru Select Monitor. NOTE: When the yaw rate and lateral G sensor is moved with its power supply on, DTC of yaw rate and lateral G sensor may be recorded.	Is the value −6.8 — −12.8 m/s when the yaw rate and lateral G sensor are inclined leftward to 90°?	Yaw rate and lateral G sensor is normal.	Repair the harness connector between yaw rate and lateral G sensor and VDCCM&H/U. Or replace the yaw rate and lateral G sensor.

6. Steering Angle Sensor

A: REPLACEMENT

CAUTION:
• Do not perform the removal except when the replacement.
• When replacing more than three times, replace the combination switch as assembly to protect screw part.

1) Set the steering wheel in a wheel-forward position.
2) Disconnect the ground cable from battery.
3) Remove the airbag module.
<Ref. to AB-16, REMOVAL, Driver's Airbag Module.>

WARNING:
Always refer to "Airbag System" when performing the airbag module repair service.
<Ref. to AB-5, CAUTION, General Description.>

4) Remove the steering wheel.
<Ref. to PS-14, REMOVAL, Steering Wheel.>
5) Remove the screws and detach the steering column lower cover.
6) Remove the two screws securing the steering column upper cover.
7) Unlock the harness band and disconnect the connector of steering angle sensor.

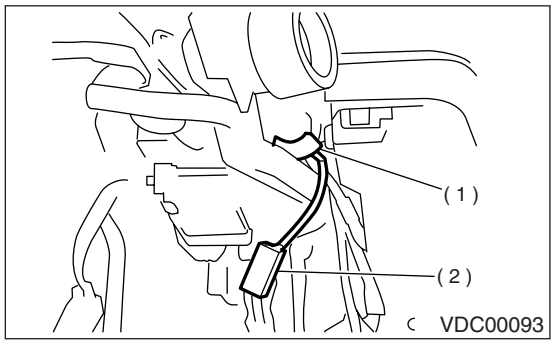

(1) Harness band
(2) Connector

8) Remove the screws which secure the roll connector to steering column.

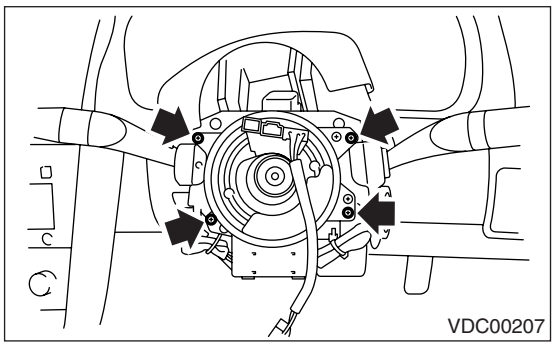

9) Remove the steering angle sensor from roll connector.

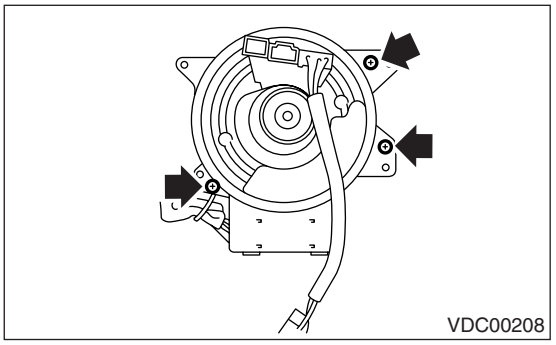

10) Turn the protrusion portion of new steering angle sensor to match the alignment mark of inspection hole.

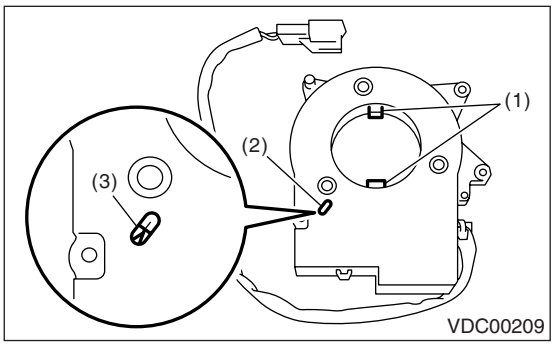

(1) Protrusion portion
(2) Inspection hole
(3) Alignment mark

CAUTION:
Be careful not to allow foreign particles to enter from inspection hole.

11) Align the center of roll connector.
<Ref. to AB-25, INSTALLATION, Roll Connector.>
12) Apply thin coat of grease which is enclosed with new part to the protruding parts (four) of steering angle sensor.

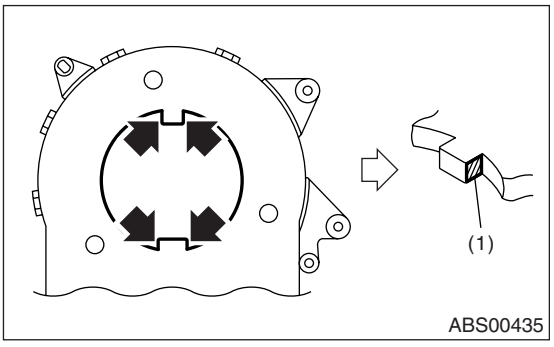

(1) Apply grease.

13) Align the position of protrusion portion and install the roll connector to the steering angle sensor.

Tightening torque:
0.5 N·m (0.05 kgf-m, 0.36 ft-lb)

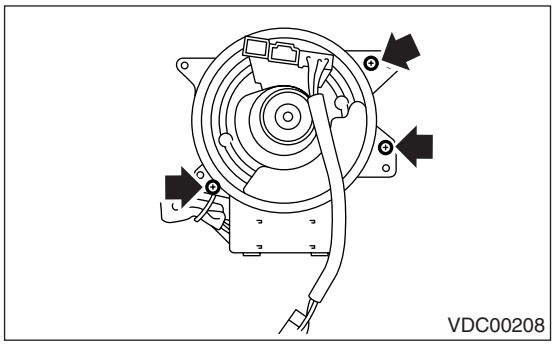

14) Install the roll connector to combination switch.

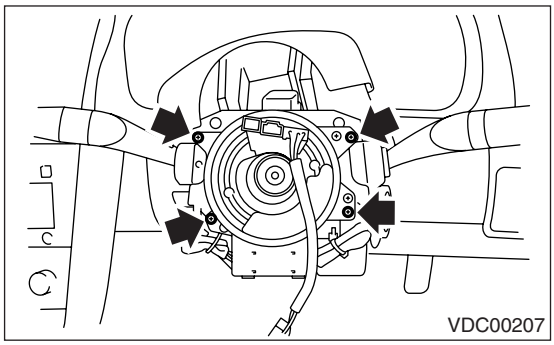

15) Install the steering wheel.
<Ref. to PS-14, INSTALLATION, Steering Wheel.>

Tightening torque:
44 N·m (4.5 kgf-m, 32.5 ft-lb)

16) Install the airbag module to steering wheel.
<Ref. to AB-16, INSTALLATION, Driver's Airbag Module.>

WARNING:
Always refer to "Airbag System" before performing the service operation.
<Ref. to AB-5, CAUTION, General Description.>

17) Connect the battery ground cable to battery.

CAUTION:
After completion of installation, adjust the following two positions.
• Positioning to the center of steering angle sensor
• Positioning of the yaw rate and lateral G sensor to zero
The above procedure is required for VDCCM to identify the vehicle position afterward. For the setting procedure of step 2 above, refer to "VDC Control Module and Hydraulic Control Unit". <Ref. to VDC-9, ADJUSTMENT, VDC Control Module and Hydraulic Control Unit (VDC-CM/U).>

7. Front ABS Wheel Speed Sensor

A: NOTE

For the vehicle equipped with VDC, it has the same ABS wheel speed sensor as installed to the vehicle equipped with ABS. For removal, installation and inspection procedures, refer to ABS section.
<Ref. to ABS-13, Front ABS Wheel Speed Sensor.>

8. Rear ABS Wheel Speed Sensor

A: NOTE

For the vehicle equipped with VDC, it has the same ABS wheel speed sensor as installed to the vehicle equipped with ABS. For removal, installation and inspection procedures, refer to ABS section.
<Ref. to ABS-15, Rear ABS Wheel Speed Sensor.>

9. Front Magnetic Encoder

A: NOTE

For the vehicle equipped with VDC, it has the same magnetic encoder as installed to the vehicle equipped with ABS. For removal, installation and inspection procedures, refer to ABS section.
<Ref. to ABS-16, Front Magnetic Encoder.>

10.Rear Magnetic Encoder

A: NOTE

For the vehicle equipped with VDC, it has the same magnetic encoder as installed to the vehicle equipped with ABS. For removal, installation and inspection procedures, refer to ABS section.
<Ref. to ABS-17, Rear Magnetic Encoder.>

11.VDC OFF Switch

A: REMOVAL

1) Remove the instrument panel lower cover.
2) Remove the screws, and then remove the VDC OFF switch.

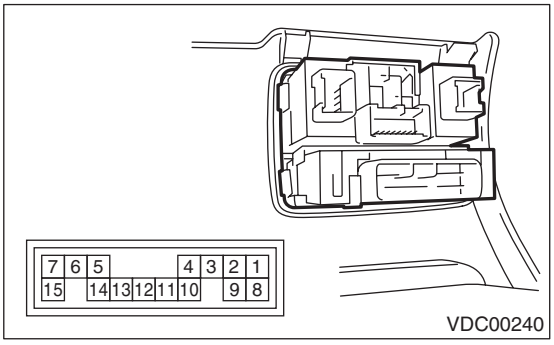

B: INSTALLATION

Install in the reverse order of removal.

C: INSPECTION

Measure the resistance between VDC OFF switch terminals.

Switch position	Terminal No.	Standard
OFF	2 — 15	More than 1 MΩ
ON	2 — 15	Less than 1 Ω

If NG, replace the VDC OFF switch.

VEHICLE DYNAMICS CONTROL (VDC) (DIAGNOSTICS) VDC(diag)

		Page
1.	Basic Diagnostic Procedure	2
2.	Check List for Interview	4
3.	General Description	8
4.	Electrical Component Location	10
5.	Control Module I/O Signal	12
6.	Subaru Select Monitor	16
7.	Read Diagnostic Trouble Code (DTC)	22
8.	Inspection Mode	23
9.	Clear Memory Mode	24
10.	Warning Light Illumination Pattern	25
11.	List of Diagnostic Trouble Code (DTC)	34
12.	Diagnostic Procedure with Diagnostic Trouble Code (DTC)	40
13.	General Diagnostic Table	119

1. Basic Diagnostic Procedure

A: PROCEDURE

CAUTION:
When the Subaru Select Monitor is communicating (except when displaying the data), the ABS warning light flashes and VDC warning light illuminates in the combination meter. Do not communicate with the Subaru Select Monitor while driving, because the ABS and VDC functions are disabled. Carefully drive the vehicle, when you have to communicate with the Subaru Select Monitor. When the data is displayed by the {Current Data Display & Save} menu, both the ABS and VDC warning lights are turned off and ABS and VDC functions are enabled.

NOTE:
- To check the harness for broken wires or short circuits, shake problem spot or connector.
- Refer to “Check List for Interview”. <Ref. to VDC(diag)-4, Check List for Interview.>

	Step	Check	Yes	No
1	**CHECK PRE-INSPECTION.** 1) Ask the customer when and how the trouble occurred using the interview checklist. <Ref. to VDC(diag)-4, Check List for Interview.> 2) Before performing diagnostics, check the component which might affect VDC problems. <Ref. to VDC(diag)-8, INSPECTION, General Description.>	Is the component that might influence the VDC problem normal?	Go to step **2.**	Repair or replace each component.
2	**CHECK INDICATION OF DTC.** 1) Turn the ignition switch to OFF. 2) Connect the Subaru Select Monitor to data link connector. 3) Turn the ignition switch to ON, and the Subaru Select Monitor switch to ON. 4) Read the DTC. <Ref. to VDC(diag)-22, OPERATION, Read Diagnostic Trouble Code (DTC).> NOTE: If the communication function of the Subaru Select Monitor cannot be executed normally, check the communication circuit. <Ref. to VDC(diag)-19, COMMUNICATION FOR INITIALIZING IMPOSSIBLE, INSPECTION, Subaru Select Monitor.> 5) Record all DTCs and freeze frame data.	Is DTC displayed?	Go to step **4.**	Go to step **3.**
3	**PERFORM GENERAL DIAGNOSTICS.** 1) Inspect using “General Diagnostic Table”. <Ref. to VDC(diag)-119, INSPECTION, General Diagnostic Table.> 2) Perform the clear memory mode. <Ref. to VDC(diag)-24, OPERATION, Clear Memory Mode.> 3) Perform the inspection mode. <Ref. to VDC(diag)-23, PROCEDURE, Inspection Mode.> 4) Read the DTC. <Ref. to VDC(diag)-22, OPERATION, Read Diagnostic Trouble Code (DTC).> 5) Check the DTC does not displayed.	Do the VDC warning light and ABS warning light go off after starting the engine?	Finish the diagnosis.	Check the combination meter circuit. <Ref. to VDC(diag)-28, ABS WARNING LIGHT DOES NOT GO OFF, Warning Light Illumination Pattern.> <Ref. to VDC(diag)-31, VDC WARNING LIGHT AND VDC OFF INDICATOR LIGHT DO NOT GO OFF, Warning Light Illumination Pattern.>

	Step	Check	Yes	No
4	**PERFORM DIAGNOSIS.** 1) Refer to “List of Diagnostic Trouble Code (DTC)”. NOTE: For the DTC list, refer to “List of Diagnostic Trouble Code (DTC)”. <Ref. to VDC(diag)-34, LIST, List of Diagnostic Trouble Code (DTC).> 2) Fix the wrong part. 3) Perform the clear memory mode. <Ref. to VDC(diag)-24, OPERATION, Clear Memory Mode.> 4) Perform the inspection mode. <Ref. to VDC(diag)-23, PROCEDURE, Inspection Mode.> 5) Read the DTC. <Ref. to VDC(diag)-22, OPERATION, Read Diagnostic Trouble Code (DTC).>	Is DTC displayed?	Repeat step 4 until DTC is not shown.	Finish the diagnosis.

2. Check List for Interview

A: CHECK

Check the following items about the vehicle's state.

1. STATE OF ABS WARNING LIGHT

ABS warning light come on.	❑ Always ❑ Sometimes ❑ Only once ❑ Not come on • When / How long does it come on?		
Ignition key position	❑ LOCK ❑ ACC ❑ ON (before starting engine) ❑ START ❑ ON (after engine starting, engine is running) ❑ ON (after engine starting, engine is at a standstill)		
Timing	❑ Immediately after turning the ignition switch to ON ❑ Immediately after turning the ignition switch to START		
	❑ When accelerating	—	km/h
		—	MPH
	❑ When driving at a constant speed	km/h	MPH
	❑ When decelerating	—	km/h
		—	MPH
	❑ When turning to the right	Steering angle:	deg
		Steering time:	Sec.
	❑ When turning to the left	Steering angle:	deg
		Steering time:	Sec.
	❑ When operating other electrical parts		
	• Part name: • Operating condition:		

2. STATE OF VDC WARNING LIGHT AND VDC OFF INDICATOR LIGHT

VDC warning light and VDC OFF indicator light come on.	❑ Always ❑ Sometimes ❑ Only once ❑ Not come on • When / How long does it come on?		
Ignition key position	❑ LOCK ❑ ACC ❑ ON (before starting engine) ❑ START ❑ ON (after engine starting, engine is running) ❑ ON (after engine starting, engine is at a standstill)		
Timing	❑ Immediately after turning the ignition switch to ON ❑ Immediately after turning the ignition switch to START		
	❑ When accelerating	—	km/h
		—	MPH
	❑ When driving at a constant speed	km/h	MPH
	❑ When decelerating	—	km/h
		—	MPH
	❑ When turning to the right	Steering angle:	deg
		Steering time:	Sec.
	❑ When turning to the left	Steering angle:	deg
		Steering time:	Sec.
	❑ When operating other electrical parts		
	• Part name: • Operating condition:		

3. STATE OF VDC INDICATOR LIGHT

VDC operation indicator light comes on.	❑ Always ❑ Sometimes ❑ Only once ❑ Not come on • When / How long does it come on?		
Ignition key position	❑ LOCK ❑ ACC ❑ ON (before starting engine) ❑ START ❑ ON (after engine starting, engine is running) ❑ ON (after engine starting, engine is at a standstill)		
Timing	❑ Immediately after turning the ignition switch to ON ❑ Immediately after turning the ignition switch to START		
	❑ When accelerating	—	km/h
		—	MPH
	❑ When driving at a constant speed	km/h	MPH
	❑ When decelerating	—	km/h
		—	MPH
	❑ When turning to the right	Steering angle:	deg
		Steering time:	Sec.
	❑ When turning to the left	Steering angle:	deg
		Steering time:	Sec.
	❑ When operating other electrical parts		
	• Part name: • Operating condition:		

4. CONDITIONS UNDER WHICH TROUBLE OCCURS

Environment	a) Weather	❑ Fine ❑ Cloudy ❑ Rainy ❑ Snowy ❑ Others:
	b) Ambient temperature	°C (°F)
	c) Road	❑ Inner city ❑ Suburbs ❑ Highway ❑ Local street ❑ Uphill ❑ Downhill ❑ Paved road ❑ Gravel road ❑ Muddy road ❑ Sandy place ❑ Straight road ❑ Sharp curve ❑ Gentle curve ❑ S-curve ❑ Road with a slope on both sides ❑ Others:
	d) Road surface	❑ Dried ❑ Wet ❑ Covered with fresh snow ❑ Covered with hardened snow ❑ Frozen slope ❑ Others:

Condition	a) Brakes	Deceleration:	G
		❑ continuous / ❑ intermittent	
	b) Accelerator	Acceleration:	G
		❑ continuous / ❑ intermittent	
	c) Vehicle speed	km/h	MPH
		❑ Advancing ❑ When accelerating ❑ When decelerating ❑ At low speed ❑ When turning ❑ Others:	
	d) Tire inflation pressure	Front RH tire:	kPa
		Front LH tire:	kPa
		Rear RH tire:	kPa
		Rear LH tire:	kPa
	e) Degree of wear	Front RH tire:	
		Front LH tire:	
		Rear RH tire:	
		Rear LH tire:	
	f) Steering wheel	❑ Sharp turning ❑ Gentle turning ❑ Straight forward motion ❑ Gentle return ❑ Sharp return	
	g) Tire/Wheel size	❑ Specified size ❑ Except specification ( )	
	h) Tire variation	❑ Summer tire ❑ Studless tire (Brand:)	
	i) Tire chains are fitted: ❑ Yes / ❑ No		
	j) T-type tire is used: ❑ Yes / ❑ No		
	k) Condition of suspension alignment:		
	l) Loading state:		
	m) Repair parts are used: ❑ Yes / ❑ No		
	• Contents:		
	n) Others:		

3. General Description

A: CAUTION

1. SUPPLEMENTAL RESTRAINT SYSTEM "AIRBAG"

Airbag system wiring harness is routed near the ABS wheel speed sensor and VDCCM&H/U.

CAUTION:
• All airbag system wiring harness and connectors are colored yellow. Do not use the electrical test equipment on these circuits.
• Be careful not to damage the airbag system wiring harness when servicing the ABS wheel speed sensor and VDCCM&H/U.

B: INSPECTION

Before performing diagnosis, check the following items which might affect VDC problems.

1. BATTERY

Measure battery voltage and check electrolyte.

Standard voltage: 12 V or more

Specific gravity: More than 1.260

2. GROUND

Check the tightening torque of VDC ground (GB-7) bolt.

Tightening torque:
13 N·m (1.3 kgf-m, 9.6 ft-lb)

3. BRAKE FLUID

1) Check the brake fluid level.
2) Check the brake fluid for leaks.

4. HYDRAULIC UNIT

Check the hydraulic unit.
• With brake tester <Ref. to VDC-8, CHECKING THE HYDRAULIC UNIT ABS OPERATION WITH BRAKE TESTER, INSPECTION, VDC Control Module and Hydraulic Control Unit (VDCCM/U).>
• Without brake tester <Ref. to VDC-8, CHECKING THE HYDRAULIC UNIT ABS OPERATION BY PRESSURE GAUGE, INSPECTION, VDC Control Module and Hydraulic Control Unit (VDCCM/U).>

5. BRAKE DRAG

Check for brake drag.

6. BRAKE PAD AND ROTOR

Check the brake pad and rotor.
• FRONT <Ref. to BR-15, INSPECTION, Front Brake Pad.> <Ref. to BR-16, INSPECTION, Front Disc Rotor.>
• REAR <Ref. to BR-22, INSPECTION, Rear Brake Pad.> <Ref. to BR-23, INSPECTION, Rear Disc Rotor.>

7. TIRE

Check the tire specifications, tire wear and air pressure. <Ref. to WT-2, SPECIFICATION, General Description.>

C: PREPARATION TOOL

1. SPECIAL TOOL

ILLUSTRATION	TOOL NUMBER	DESCRIPTION	REMARKS
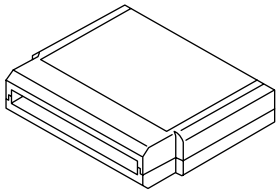 ST24082AA260	24082AA260	CARTRIDGE	Troubleshooting for electrical system.
ST22771AA030	22771AA030	SUBARU SELECT MONITOR KIT	Troubleshooting for electrical system.

2. GENERAL TOOL

TOOL NAME	REMARKS
Circuit tester	Used for measuring resistance, voltage and current.
Oscilloscope	Used for measuring sensor.

4. Electrical Component Location

A: LOCATION

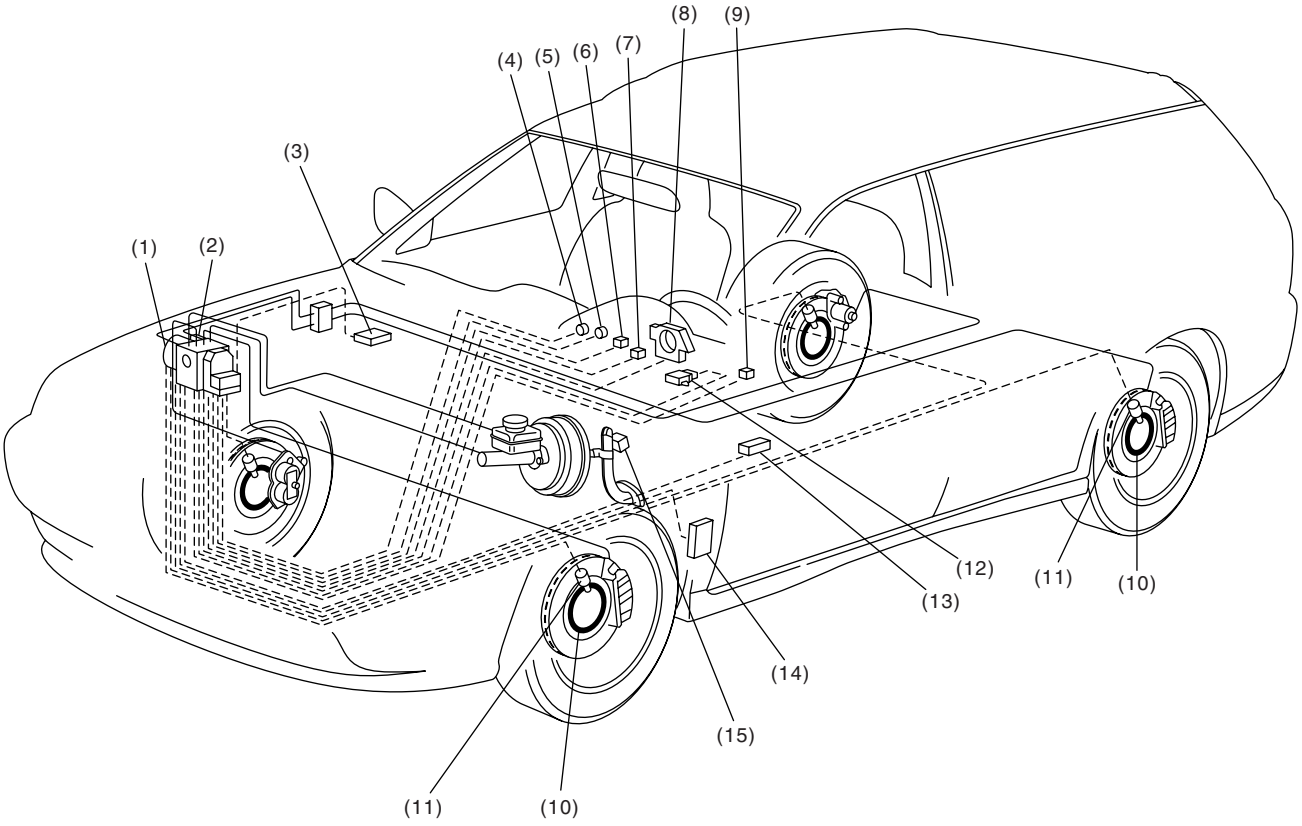

(1) VDC control module and hydraulic control unit (VDCCM&H/U)
(2) Pressure sensor
(3) Engine control module (ECM)
(4) Brake warning light (EBD warning light)
(5) ABS warning light
(6) VDC indicator light
(7) VDC warning light and VDC OFF indicator light
(8) Steering angle sensor
(9) VDC OFF switch
(10) Magnetic encoder
(11) ABS wheel speed sensor
(12) Yaw rate & lateral G sensor
(13) Data link connector
(14) Transmission control module (TCM)
(15) Stop light switch

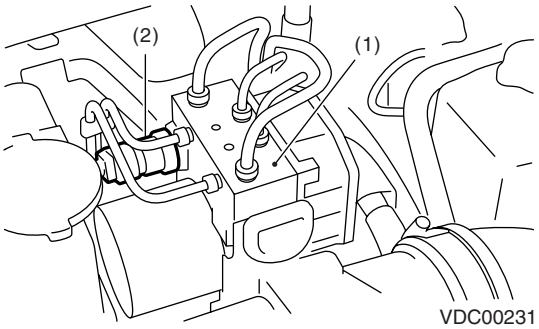

VDC00231

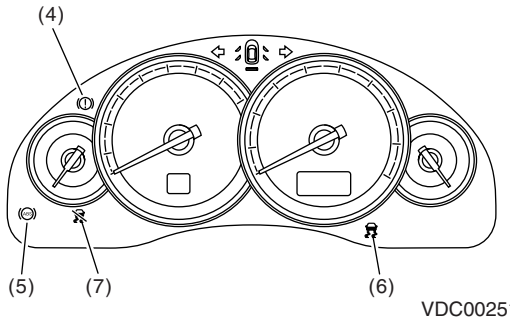

VDC00251

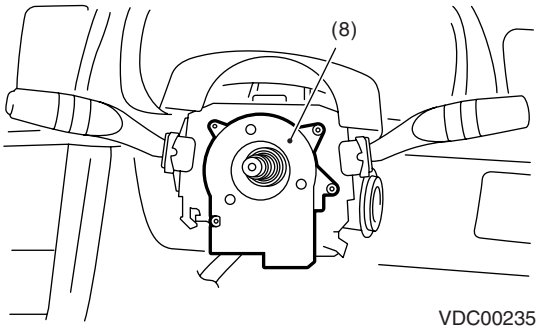

VDC00235

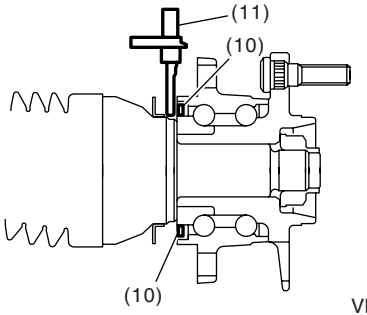

VDC00234

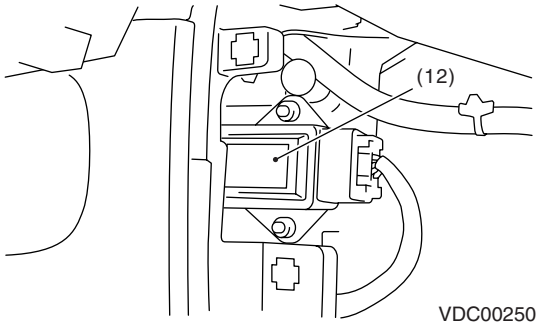

VDC00250

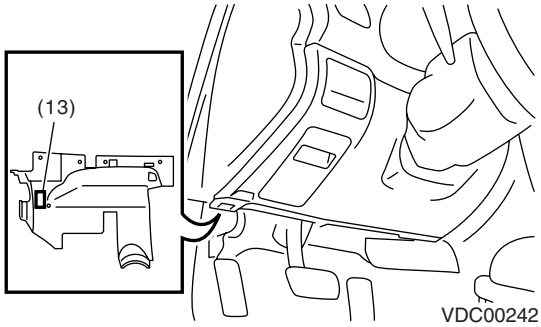

VDC00242

5. Control Module I/O Signal

A: ELECTRICAL SPECIFICATION

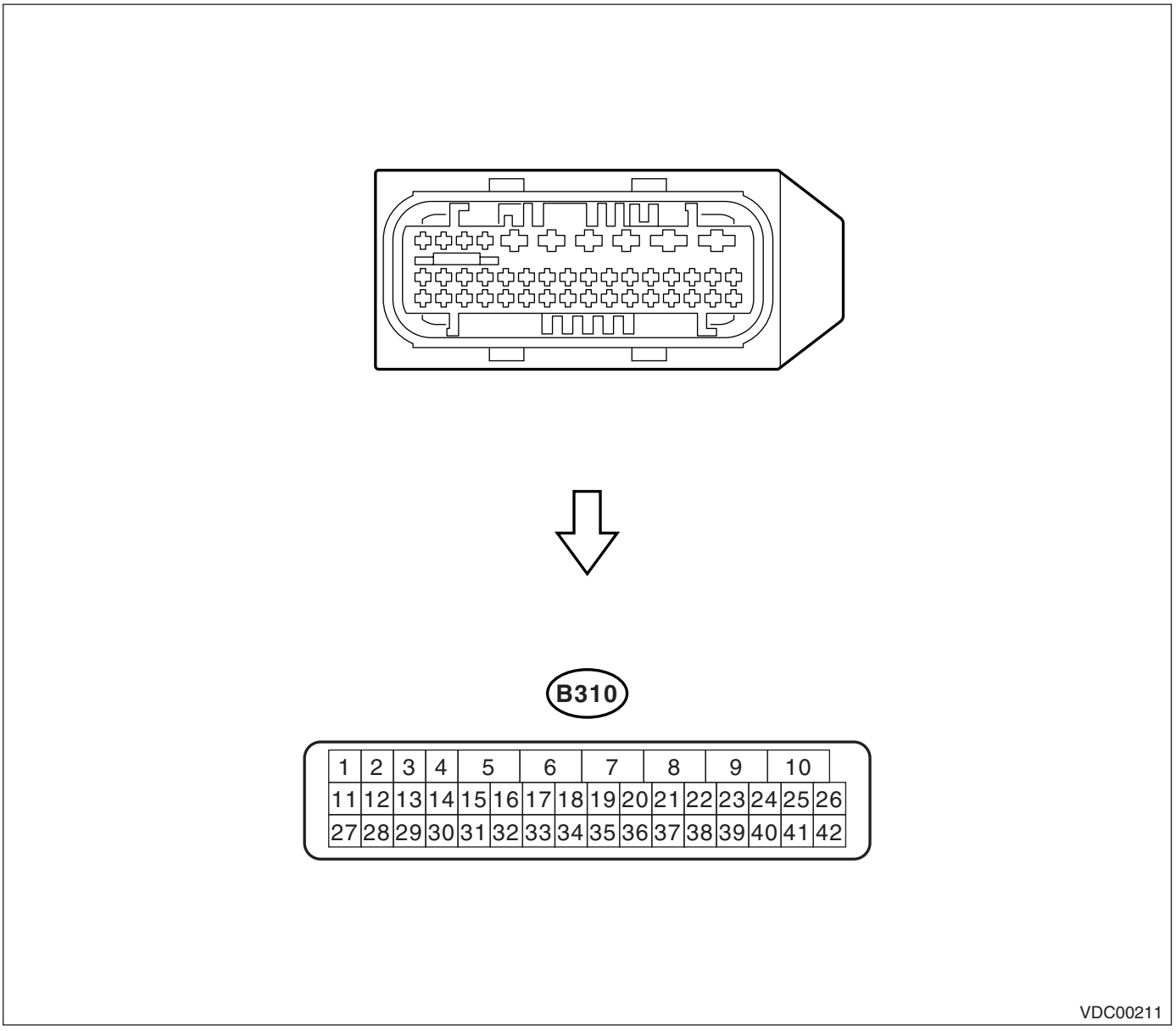

NOTE:
- Terminal numbers in VDCCM&H/U connector are as shown in the figure.
- When the connector is removed from VDCCM&H/U, the ABS warning light, VDC warning light and VDC OFF indicator light illuminate.

Content			Terminal No. (+) — (–)	Input/Output signal Measured value and measuring conditions
Power supply			14 — 6	When the ignition switch is ON, 10 — 15 V.
ABS wheel speed sensor	Front LH wheel	Power supply	41 — 6	4.5 — 16.5 V
		Signal	25	5.9 — 16.8 mA: Rectangle waveform
	Front RH wheel	Power supply	22 — 6	4.5 — 16.5 V
		Signal	21	5.9 — 16.8 mA: Rectangle waveform
	Rear LH wheel	Power supply	24 — 6	4.5 — 16.5 V
		Signal	40	5.9 — 16.8 mA: Rectangle waveform
	Rear RH wheel	Power supply	23 — 6	4.5 — 16.5 V
		Signal	38	5.9 — 16.8 mA: Rectangle waveform
Yaw rate & lateral G sensor	Output (Lateral G sensor)		3 — 16	When the vehicle is on level, 2.35 — 2.65 V.
	Power supply		30 — 16	When the ignition switch is ON, 8 — 16 V.
	Output (Yaw rate sensor)		28 — 16	Waveform <Ref. to VDC(diag)-15, WAVEFORM, MEASUREMENT, Control Module I/O Signal.>
	Standard (Yaw rate sensor)		1 — 16	2.1 — 2.9 V
	Test		2 — 16	5 — 1 V cycle for 40 ms pulse signal. <Ref. to VDC(diag)-15, WAVEFORM, MEASUREMENT, Control Module I/O Signal.>
	Ground		16	—
CAN communication line (+)			13	2.5 — 1.5 V pulse signal
CAN communication line (–)			29	3.5 — 2.5 V pulse signal
Valve relay power supply			5 — 6	When the ignition switch is ON, 10 — 15 V.
Motor relay power supply			9 — 10	When the ignition switch is ON, 10 — 15 V.
Pressure sensor	Power supply		27 — 12	When the ignition switch is ON, 4.75 — 5.25 V.
	Output voltage		11 — 12	0.48 — 0.72 V (when releasing the brake pedal)
	Ground		12	—
ABS warning light			35 — 6	After turning the ignition switch to ON, 10 — 15 V during 1.5 seconds and less than 1.5 V after 1.5 seconds passed.
Brake warning light (EBD warning light)			20 — 6	After turning the ignition switch to ON, 10 — 15 V during 1.5 seconds and less than 1.5 V after 1.5 seconds passed.
Stop light switch			37 — 6	Less than 1.5 V when the stop light is OFF; otherwise, 10 — 15 V when the stop light is ON.
Subaru Select Monitor			26 — 6	0 ←→ 12 V pulse (in communication)
Vehicle speed output signal			36	0 ←→ 5 V pulse
Ground			6	—

B: WIRING DIAGRAM

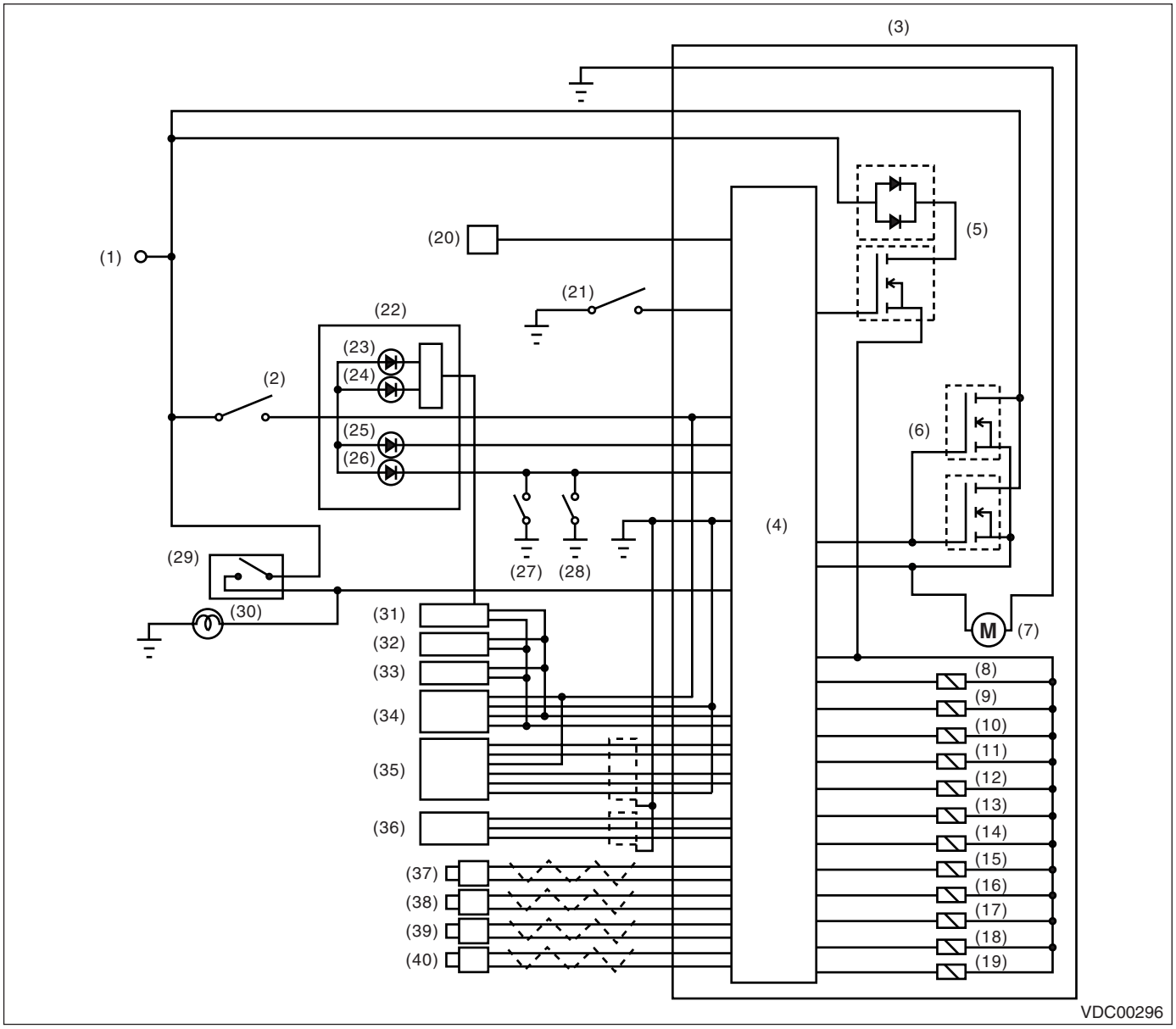

(1) Battery
(2) Ignition switch
(3) VDC control module and hydraulic control unit (VDCCM&H/U)
(4) VDC control module
(5) Valve relay
(6) Motor relay
(7) Motor
(8) Front inlet solenoid valve LH
(9) Front outlet solenoid valve LH
(10) Front inlet solenoid valve RH
(11) Front outlet solenoid valve RH
(12) Rear inlet solenoid valve LH
(13) Rear outlet solenoid valve LH
(14) Rear inlet solenoid valve RH
(15) Rear outlet solenoid valve RH
(16) Primary cut solenoid valve
(17) Primary suction solenoid valve
(18) Secondary cut solenoid valve
(19) Secondary suction solenoid valve
(20) Data link connector
(21) VDC OFF switch
(22) Combination meter
(23) VDC indicator light
(24) VDC warning light and VDC OFF indicator light
(25) ABS warning light
(26) Brake warning light
(27) Parking brake switch
(28) Brake fluid level switch
(29) Stop light switch
(30) Stop light
(31) Body integrated unit
(32) Engine control module (ECM)
(33) Transmission control module (TCM)
(34) Steering angle sensor
(35) Yaw rate & lateral G sensor
(36) Pressure sensor
(37) Front ABS wheel speed sensor LH
(38) Front ABS wheel speed sensor RH
(39) Rear ABS wheel speed sensor LH
(40) Rear ABS wheel speed sensor RH

C: MEASUREMENT

Measure input and output signal voltage.

1. WAVEFORM

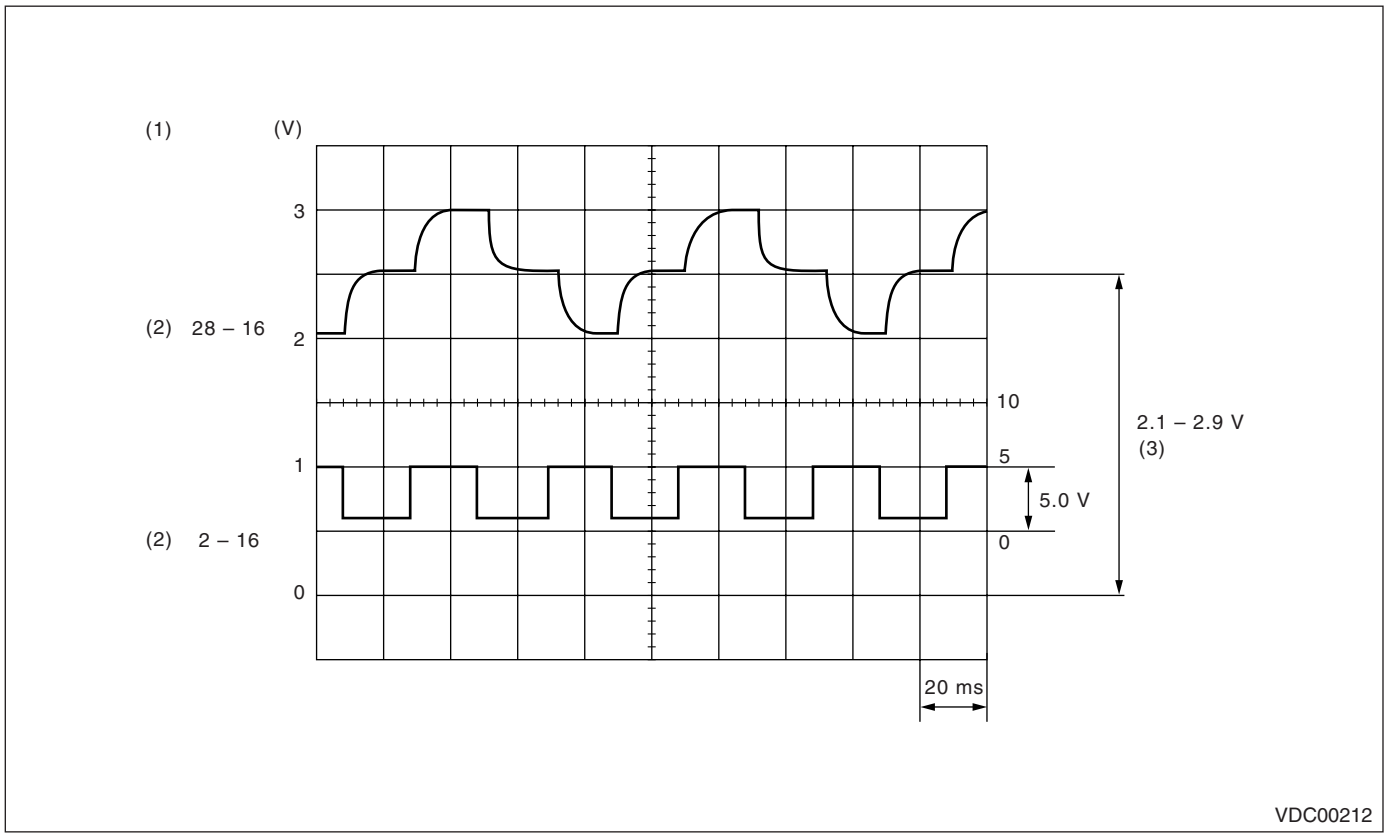

(1) Yaw rate sensor
(2) Terminal No.
(3) Vehicle is at a standstill.

6. Subaru Select Monitor

A: OPERATION

CAUTION:
When the Subaru Select Monitor is communicating (except when displaying the data), the ABS warning light flashes and VDC warning light illuminates in the combination meter. Do not communicate with the Subaru Select Monitor while driving, because the ABS and VDC functions are disabled. Carefully drive the vehicle, when you have to communicate with the Subaru Select Monitor. When the data is displayed by the {Current Data Display & Save} menu, both the ABS and VDC warning lights are turned off and ABS and VDC functions are enabled.

1. READ DIAGNOSTIC TROUBLE CODE (DTC)

1) Prepare the Subaru Select Monitor kit. <Ref. to VDC(diag)-9, SPECIAL TOOL, PREPARATION TOOL, General Description.>

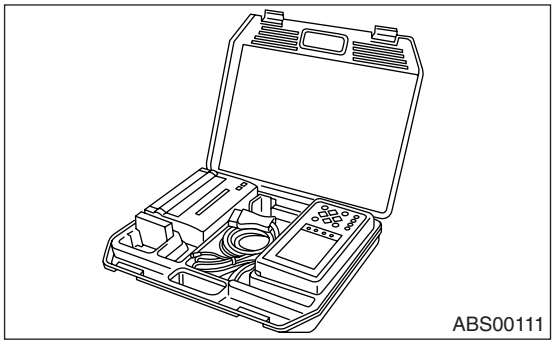

2) Connect the diagnosis cable to Subaru Select Monitor.
3) Insert the cartridge to Subaru Select Monitor. <Ref. to VDC(diag)-9, SPECIAL TOOL, PREPARATION TOOL, General Description.>

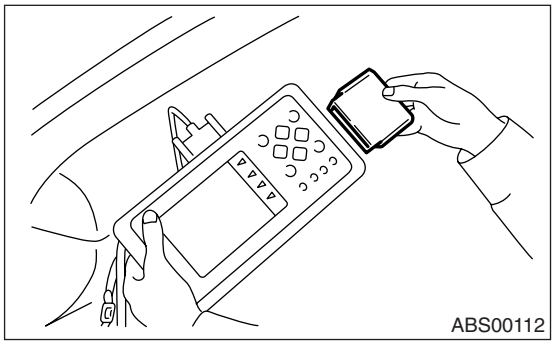

4) Connect the Subaru Select Monitor to data link connector.

(1) Data link connector is located in the lower portion of instrument panel (on the driver's side).

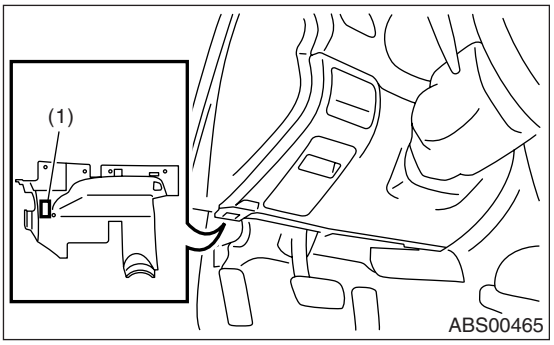

(1) Data link connector

(2) Connect the diagnosis cable to data link connector.

CAUTION:
Do not connect the scan tools except for Subaru Select Monitor.

5) Turn the ignition switch to ON (engine OFF) and turn the Subaru Select Monitor switch to ON.

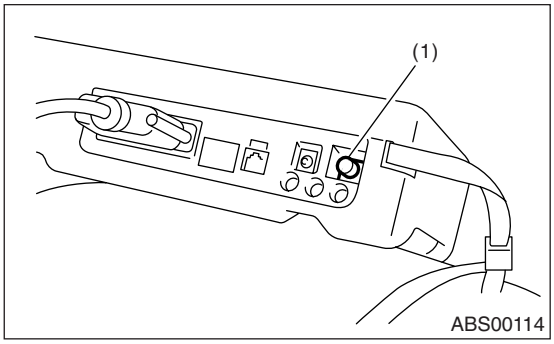

(1) Power switch

6) On the «Main Menu» display screen, select the {Each System Check} and press the [YES] key.
7) On the «System Selection Menu» display screen, select the {Brake Control} and press the [YES] key.
8) Press the [YES] key after the {VDC AWD AT} is displayed.
9) On the «VDC Diagnosis» display screen, select the {Diagnostic Code(s) Display}, and then press the [YES] key.

NOTE:
• For details concerning operation procedure, refer to "SUBARU SELECT MONITOR OPERATION MANUAL".
• For details concerning DTCs, refer to "List of Diagnostic Trouble Code (DTC)". <Ref. to VDC(diag)-34, List of Diagnostic Trouble Code (DTC).>
• DTCs are displayed up to three in detected order.

• If a particular DTC is not properly stored in memory (due to a drop in VDCCM&H/U power supply, etc.) on the occurrence of a problem, the DTC which is suffixed with a question mark "?" appears on the Subaru Select Monitor display. This shows it may be an unreliable reading.

10) If VDC and Subaru Select Monitor cannot communicate, check the communication circuit. <Ref. to VDC(diag)-19, COMMUNICATION FOR INITIALIZING IMPOSSIBLE, INSPECTION, Subaru Select Monitor.>

Display	Contents to be monitored
Current	Indicate the latest DTC on the Subaru Select Monitor display.
Old	Indicate the latest DTC in previous trouble on the Subaru Select Monitor display.
Older	Indicate the latest DTC in second previous trouble on the Subaru Select Monitor display.
Before 3	Indicate the latest DTC in third previous trouble on the Subaru Select Monitor display.

2. READ CURRENT DATA

1) On the «Main Menu» display screen, select the {Each System Check} and press the [YES] key.
2) On the «System Selection Menu» display screen, select the {Brake Control} and press the [YES] key.
3) Press the [YES] key after {VDC AWD AT} is displayed.
4) On the «Brake Control Diagnosis» display screen, select the {Current Data Display/Save}, and then press the [YES] key.
5) On the «Data Display Menu» display screen, select the display method, and press the [YES] key.
6) Using a scroll key, scroll the display screen up or down until necessary data is shown.
• A list of the support data is shown in the following table.

Display	Contents to be monitored	Unit of measure
FR Wheel Speed	Wheel speed detected by front ABS wheel speed sensor RH is displayed.	km/h or MPH
FL Wheel Speed	Wheel speed detected by front ABS wheel speed sensor LH is displayed.	km/h or MPH
RR Wheel Speed	Wheel speed detected by rear ABS wheel speed sensor RH is displayed.	km/h or MPH
RL Wheel Speed	Wheel speed detected by rear ABS wheel speed sensor LH is displayed.	km/h or MPH
Steering Angle Sensor	Steering angle detected by steering angle sensor is displayed.	deg
Yaw Rate Sensor	Vehicle angular speed detected by yaw rate sensor is displayed.	deg/s
Pressure Sensor	Brake fluid pressure detected by pressure sensor is displayed.	bar
Lateral G Sensor	Vehicle lateral acceleration detected by lateral G sensor is displayed.	m/s (m/s^2)
IG power supply voltage	Voltage supplied to VDCCM&H/U is displayed.	V
EAM signal	Engine control command signal is displayed.	1 or 0
TCS Operation Light	TCS operation condition is displayed.	ON or OFF
VDC Operation Light	VDC operation condition is displayed.	ON or OFF
VDC OFF Light	ON/OFF condition of VDC OFF indicator light is displayed.	ON or OFF
EBD Warning Light	ON operation of the EBD warning light is displayed.	ON or OFF
ABS Warning Light	ON operation of the ABS warning light is displayed.	ON or OFF
VDC Warning Light	ON operation of the VDC warning light is displayed.	ON or OFF
VDC OK-B signal	Malfunction of VDC sensor (except for vehicle speed sensor) is displayed.	1 or 0
Valve Relay Signal	Valve relay operation signal is displayed.	ON or OFF
Motor Relay Signal	Motor relay operation signal is displayed.	ON or OFF
Motor Relay Monitor	Motor relay monitor signal is displayed.	ON or OFF
PATA Signal	Operation condition of VDC OFF switch is displayed.	ON or OFF
BLS Signal	Brake ON/OFF is displayed.	ON or OFF
Gear position	Present gear position is displayed.	—
Engine Speed	Current engine speed is displayed.	rpm
PW Signal	Acceleration opening is displayed.	%

NOTE:
For details concerning operation procedure, refer to “SUBARU SELECT MONITOR OPERATION MANUAL”.

3. CLEAR MEMORY MODE

1) On the «Main Menu» display screen, select the {Each System Check} and press the [YES] key.
2) On the «System Selection Menu» display screen, select the {Brake Control} and press the [YES] key.
3) Press the [YES] key after {VDC AWD AT} is displayed.
4) On the «Brake Control Diagnosis» display screen, select the {Memory Clear} and press the [YES] key.

Display	Contents to be monitored
Clear memory?	DTC deleting function

5) When “Done” and “Turn ignition switch OFF” are shown on the display screen, turn the Subaru Select Monitor and ignition switch to OFF.

NOTE:
For details concerning operation procedure, refer to “SUBARU SELECT MONITOR OPERATION MANUAL”.

4. ABS SEQUENCE CONTROL

Display	Contents to be monitored	Reference target
ABS sequence control	Operate the valve and pump motor continuously to perform the ABS sequence control.	<Ref. to ABS-10, ABS Sequence Control.>
VDC confirmation mode	Operate the valve and pump motor continuously to perform the VDC sequence control.	<Ref. to VDC-11, VDC Sequence Control.>

5. FREEZE FRAME DATA

NOTE:
• Data stored at the time of trouble occurrence is shown on display.
• Each time trouble occurs, the latest information is stored in the freeze frame data in memory.
• If a freeze frame data is not properly stored in memory (due to a drop in VDC control module power supply, etc.), the DTC which is suffixed with a question mark “?” appears on the Subaru Select Monitor display. This shows it may be an unreliable reading.

Display	Contents to be monitored
Steering angle sensor	Steering angle detected by steering angle sensor is displayed.
Yaw rate sensor	Vehicle angular speed detected by yaw rate sensor is displayed.
Lateral G sensor	Vehicle lateral acceleration detected by lateral G sensor is displayed.
Pressure sensor	Brake fluid pressure detected by pressure sensor is displayed.
Vehicle Speed	Vehicle speed calculated by VDC control module is displayed.
FR Wheel Speed	Wheel speed detected by front ABS wheel speed sensor RH is displayed in km/h or MPH.
FL Wheel Speed	Wheel speed detected by front ABS wheel speed sensor LH is displayed in km/h or MPH.
RR Wheel Speed	Wheel speed detected by rear ABS wheel speed sensor RH is displayed in km/h or MPH.
RL Wheel Speed	Wheel speed detected by rear ABS wheel speed sensor LH is displayed in km/h or MPH.
Required torque	Engine required torque is displayed.
Current torque	Current engine torque on malfunction occurrence is displayed.
Target torque	Engine target torque is displayed.
PW signal	Acceleration opening is displayed.
Engine Speed	Engine speed on malfunction occurrence is displayed.
Gear position	Gear position on malfunction occurrence is displayed.
IG power supply voltage	Voltage supplied to VDC control module is displayed.
Absolute angle recognition flag	Whether the absolute angle was determined is displayed.
Decreasing required torque	Whether the torque decrease is required to engine is displayed.
EAM signal	Engine control command signal is displayed.
VDC O control flag	VDC oversteer control condition is displayed.
VDC U control flag	VDC understeer control condition is displayed.
BMR control flag	Brake control condition is displayed.
AMR control flag	Engine control condition is displayed.
ABS control flag	ABS control condition is displayed.
VDC OFF light	ON/OFF condition of VDC OFF indicator light is displayed.
Valve Relay Signal	Valve relay operation signal is displayed.
Motor Relay Monitor	Motor relay monitor signal is displayed.
BLS signal	Brake ON/OFF is displayed.

B: INSPECTION

1. COMMUNICATION FOR INITIALIZING IMPOSSIBLE

DETECTING CONDITION:
Defective harness connector
TROUBLE SYMPTOM:
Communication is impossible between VDC and Subaru Select Monitor.
WIRING DIAGRAM:

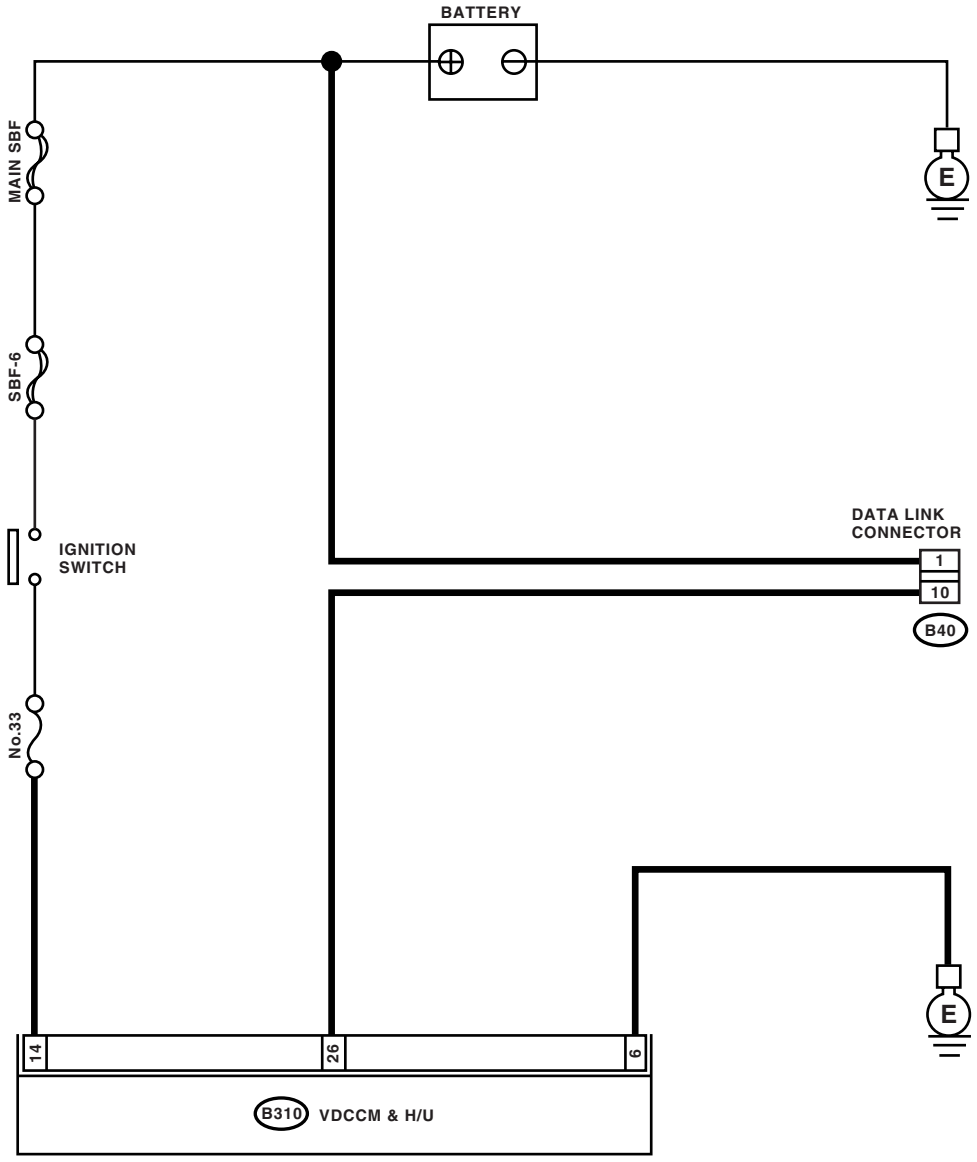

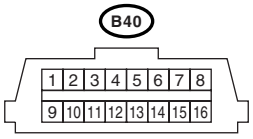

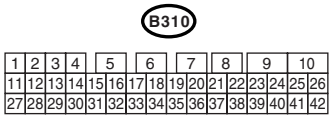

VDC00297

	Step	Check	Yes	No
1	**CHECK IGNITION SWITCH.**	Is the ignition switch ON?	Go to step **2.**	Turn the ignition switch to ON, and select VDC mode using Subaru Select Monitor.
2	**CHECK BATTERY.** 1) Turn the ignition switch to OFF. 2) Measure the battery voltage.	Is the voltage more than 11 V?	Go to step **3.**	Charge or replace the battery.
3	**CHECK BATTERY TERMINAL.**	Is there poor contact at battery terminal?	Repair or tighten the battery terminal.	Go to step **4.**
4	**CHECK SUBARU SELECT MONITOR COMMUNICATION.** 1) Turn the ignition switch to ON. 2) Using the Subaru Select Monitor, check whether communication to other system can be executed normally.	Are the system name and model year displayed on Subaru Select Monitor?	Go to step **8.**	Go to step **5.**
5	**CHECK SUBARU SELECT MONITOR COMMUNICATION.** 1) Turn the ignition switch to OFF. 2) Disconnect the VDCCM&H/U connector. 3) Turn the ignition switch to ON. 4) Check whether communication to other systems can be executed normally.	Are the system name and model year displayed on Subaru Select Monitor?	Replace the VDCCM&H/U. <Ref. to VDC-7, VDC Control Module and Hydraulic Control Unit (VDCCM/U).>	Go to step **6.**
6	**CHECK HARNESS CONNECTOR BETWEEN EACH CONTROL MODULE AND DATA LINK CONNECTOR.** 1) Turn the ignition switch to OFF. 2) Disconnect the VDCCM&H/U, ECM and TCM. 3) Measure the resistance between data link connector and chassis ground. ***Connector & terminal*** ***(B40) No. 10 — Chassis ground:***	Is the resistance more than 1 MΩ?	Go to step **7.**	Repair the harness and connector between each control module and data link connector.
7	**CHECK VDCCM&H/U OUTPUT SIGNAL.** 1) Turn the ignition switch to ON. 2) Measure the voltage between date link connector and chassis ground. ***Connector & terminal*** ***(B40) No. 10 (+) — Chassis ground (−):***	Is the voltage less than 1 V?	Go to step **8.**	Repair the harness and connector between each control module and data link connector.
8	**CHECK HARNESS CONNECTOR BETWEEN VDCCM&H/U AND DATA LINK CONNECTOR.** Measure the resistance between VDCCM&H/U connector and data link connector. ***Connector & terminal*** ***(B310) No. 26 — (B40) No. 10:***	Is the resistance less than 0.5 Ω?	Go to step **9.**	Repair the harness and connector between VDCCM&H/U and data link connector.
9	**CHECK INSTALLATION OF VDCCM&H/U CONNECTOR.** Turn the ignition switch to OFF.	Is the VDCCM&H/U connector inserted into VDCCM&H/U until the clamp locks onto it?	Go to step **10.**	Insert the VDCCM&H/U connector into VDCCM&H/U.
10	**CHECK POWER SUPPLY CIRCUIT.** 1) Turn the ignition switch to ON. (engine OFF) 2) Measure the ignition power supply voltage between VDCCM&H/U connector and chassis ground. ***Connector & terminal*** ***(B310) No. 14 (+) — Chassis ground (−):***	Is the voltage 10 — 15 V?	Go to step **11.**	Repair the open circuit in harness between VDCCM&H/U and battery.

	Step	Check	Yes	No
11	**CHECK HARNESS CONNECTOR BETWEEN VDCCM&H/U AND CHASSIS GROUND.** 1) Turn the ignition switch to OFF. 2) Disconnect the connector from VDCCM&H/U. 3) Measure the resistance of harness between VDCCM&H/U connector and chassis ground. ***Connector & terminal*** ***(B310) No. 6 — Chassis ground:***	Is the resistance less than 0.5 Ω?	Go to step **12.**	Repair the open circuit in harness between VDCCM&H/U and inhibitor side connector, and poor contact in coupling connector.
12	**CHECK POOR CONTACT IN CONNECTOR.**	Is there poor contact in control module power supply, ground circuit and data link connector?	Repair the connector.	Replace the VDCCM&H/U. <Ref. to VDC-7, VDC Control Module and Hydraulic Control Unit (VDCCM/U).>

7. Read Diagnostic Trouble Code (DTC)

A: OPERATION

For details concerning DTC reading procedure, refer to “Subaru Select Monitor”. <Ref. to VDC(diag)-16, Subaru Select Monitor.>

8. Inspection Mode

A: PROCEDURE

Reproduce the malfunction occurrence condition as possible.
Drive the vehicle at least ten minutes.

NOTE:
Make sure the vehicle is not dragged to one side under usual driving condition.

9. Clear Memory Mode

A: OPERATION

For details concerning DTC clear operation, refer to “Subaru Select Monitor”. <Ref. to VDC(diag)-16, Subaru Select Monitor.>

10.Warning Light Illumination Pattern

A: INSPECTION

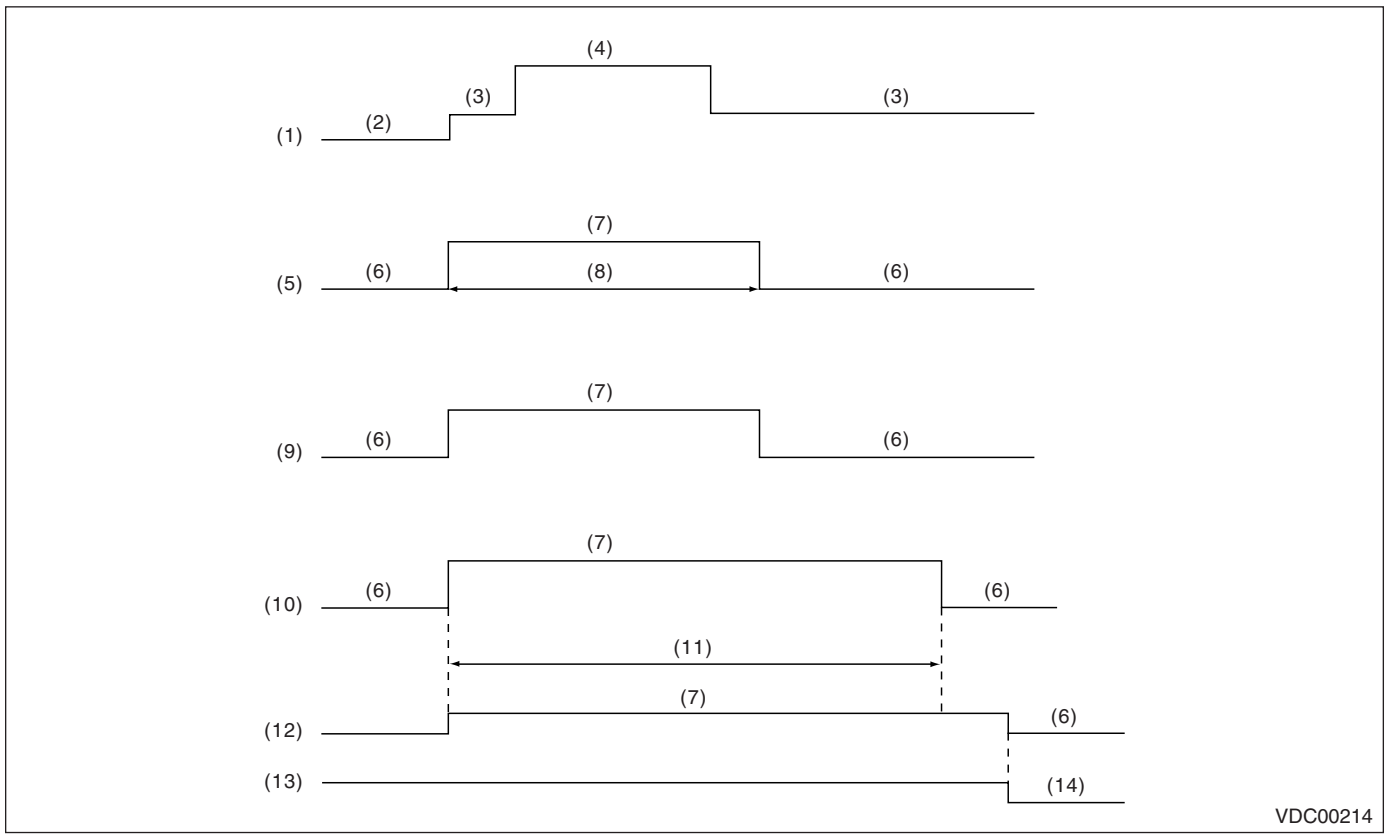

(1) Ignition switch
(2) OFF
(3) ON
(4) Engine start
(5) ABS warning light
(6) Light OFF
(7) Light ON
(8) 1.5 sec.
(9) VDC indicator light
(10) VDC warning light and VDC OFF indicator light
(11) Several seconds (depending on engine coolant temperature)
(12) Brake warning light (EBD warning light)
(13) Parking brake
(14) Released

1) When warning lights or indicator lights do not illuminate in accordance with this illumination pattern, there must be an electrical malfunction.
2) When warning lights or indicator lights remain constantly OFF, check the combination meter circuit or CAN communication circuit. <Ref. to VDC(diag)-26, VDC WARNING LIGHT, VDC OFF INDICATOR LIGHT AND VDC INDICATOR LIGHT DO NOT COME ON, Warning Light Illumination Pattern.>
3) When ABS warning light does not go off, check the combination meter circuit. <Ref. to VDC(diag)-28, ABS WARNING LIGHT DOES NOT GO OFF, Warning Light Illumination Pattern.>
4) When the VDC indicator light, VDC warning light and VDC OFF indicator light do not go off, check the combination meter circuit or CAN communication circuit. <Ref. to VDC(diag)-30, VDC INDICATOR LIGHT DOES NOT GO OFF, Warning Light Illumination Pattern.>

NOTE:
• Even though the ABS warning light does not go off after 1.5 seconds from ABS warning light illumination, the ABS system operates normally when the warning light goes off while driving at approximately 12 km/h (7 MPH). However, the ABS system does not work while the ABS warning light is illuminated.
• It may take several minutes before VDC warning light and VDC OFF indicator light goes off if the vehicle is parked under low temperature for a specified time. This is not defective because it is resulted from low engine coolant temperature.
• With the vehicle jack-up/lift-up or set on free rollers, when the wheels lock or spin after starting the engine, ABS warning light, VDC warning light and VDC OFF indicator light may illuminate because VDCCM&H/U detects the abnormal conditions from ABS wheel speed sensors. In this case, this is not a malfunction. Perform the clear memory mode.

B: VDC WARNING LIGHT, VDC OFF INDICATOR LIGHT AND VDC INDICATOR LIGHT DO NOT COME ON

DETECTING CONDITION:
• Defective combination meter
• Defective CAN communication

TROUBLE SYMPTOM:
When the ignition switch is turned to ON (engine OFF), VDC indicator light, VDC warning light and VDC OFF indicator light do not come on.

NOTE:
When pressing VDC OFF switch for more than 10 seconds, VDC OFF indicator light goes off and cannot operate any more. When turning the ignition switch from OFF to ON, the OFF operation enabled status is restored.

	Step	Check	Yes	No
1	**CHECK OTHER INDICATOR LIGHT.** Turn the ignition switch to ON.	Does other indicator light illuminate soon after “ON”?	Go to step **2.**	Perform the self-diagnosis of combination meter.
2	**CHECK VDCCM.** When the engine does not start, display the current data of VDCCM using Subaru Select Monitor.	Is “VDC warning light” output set to “ON”?	Go to step **3.**	Replace the VDCCM&H/U.
3	**CHECK LAN SYSTEM.** Perform the diagnosis for LAN system. <Ref. to LAN(diag)-24, OPERATION, Read Diagnostic Trouble Code (DTC).>	Is there any fault in LAN system?	Perform the diagnosis according to DTC for LAN system.	Go to step **4.**
4	**CHECK COMBINATION METER.** Check the combination meter.	Is combination meter OK?	Replace the VDCCM&H/U.	Repair the combination meter assembly.

C: ABS WARNING LIGHT DOES NOT COME ON

DETECTING CONDITION:

- Defective combination meter
- Defective harness

TROUBLE SYMPTOM:

When the ignition switch is turned to ON (engine OFF), ABS warning light does not come on.

WIRING DIAGRAM:

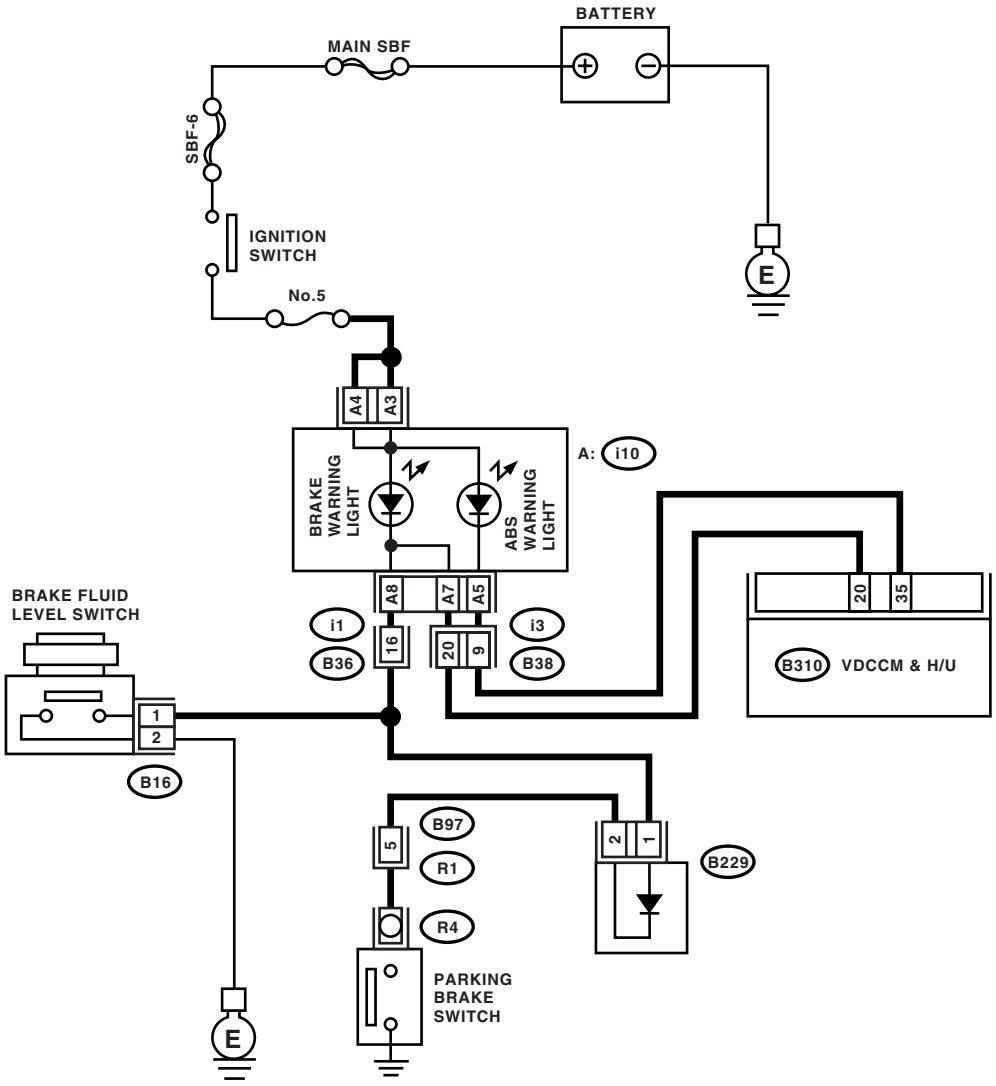

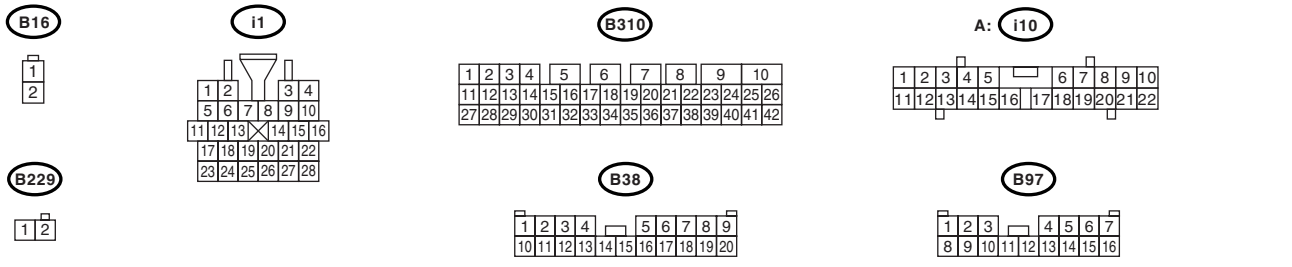

VDC00298

	Step	Check	Yes	No
1	**CHECK OTHER LIGHTS TURN ON.** Turn the ignition switch to ON. (engine OFF)	Do other warning lights illuminate?	Go to step **2.**	Check the combination meter.
2	**READ DTC.** Read the DTC. <Ref. to VDC(diag)-22, Read Diagnostic Trouble Code (DTC).>	Is DTC displayed?	Perform the diagnosis according to DTC.	Go to step **3.**
3	**CHECK GROUND SHORT CIRCUIT OF HARNESS.** 1) Turn the ignition switch to OFF. 2) Disconnect the connector (B310) from VDCCM&H/U. 3) Disconnect the connector (i10) from combination meter. 4) Measure the resistance between VDCCM&H/U connector and chassis ground. ***Connector & terminal*** ***(B310) No. 35 — Chassis ground:***	Is the resistance more than 1 MΩ?	Go to step **4.**	Repair the harness connector between VDCCM&H/U and combination meter.
4	**CHECK VDCCM.** 1) Connect the connector (B310) to VDCCM&H/U. 2) Turn the ignition switch to ON. 3) Measure the resistance between the combination meter connector and chassis ground soon after the ignition switch is turned to ON (within 1.5 seconds). ***Connector & terminal*** ***(i10) No. A5 — Chassis ground:***	Is the resistance more than 1 MΩ?	Check the combination meter.	Replace VDCCM&H/U.

D: ABS WARNING LIGHT DOES NOT GO OFF

DETECTING CONDITION:

- Defective combination meter
- Open in harness

TROUBLE SYMPTOM:

When starting the engine, the ABS warning light is kept ON.

WIRING DIAGRAM:

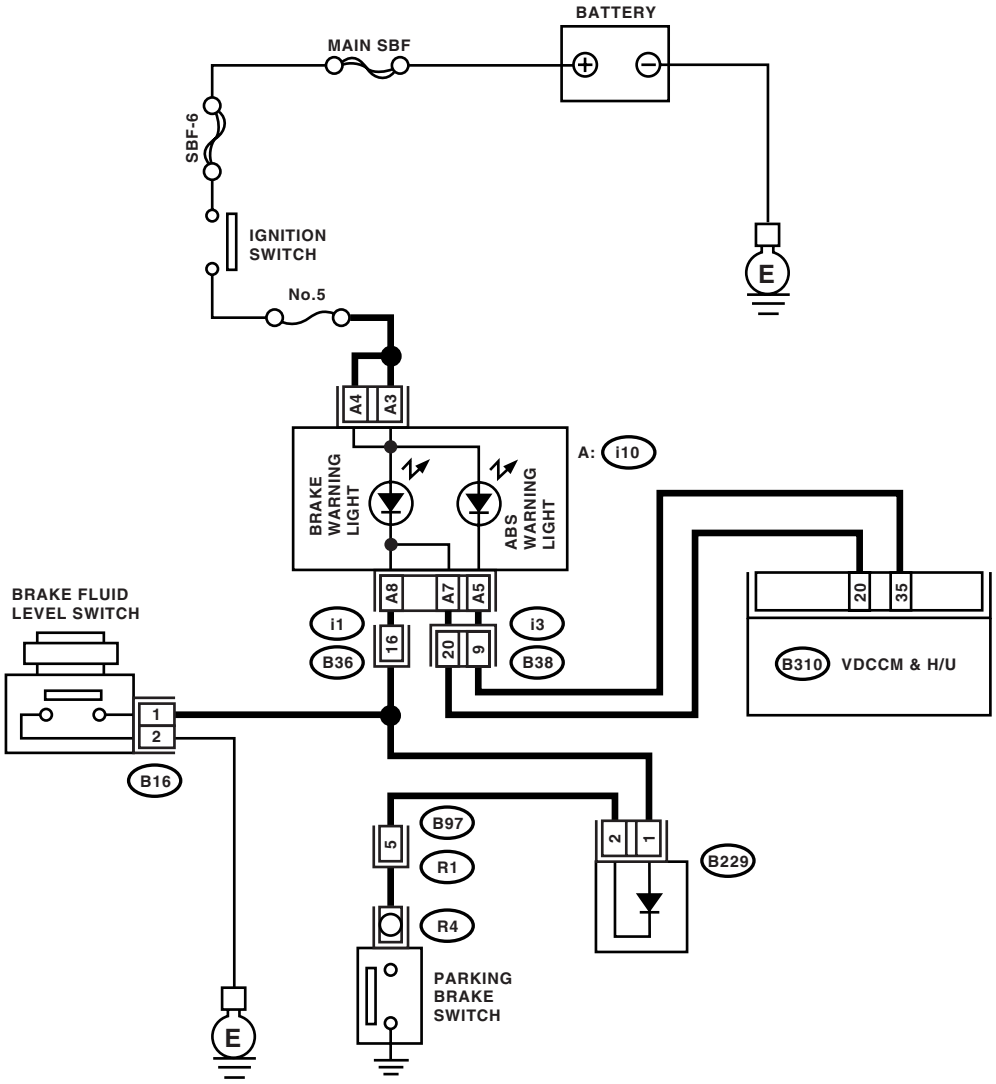

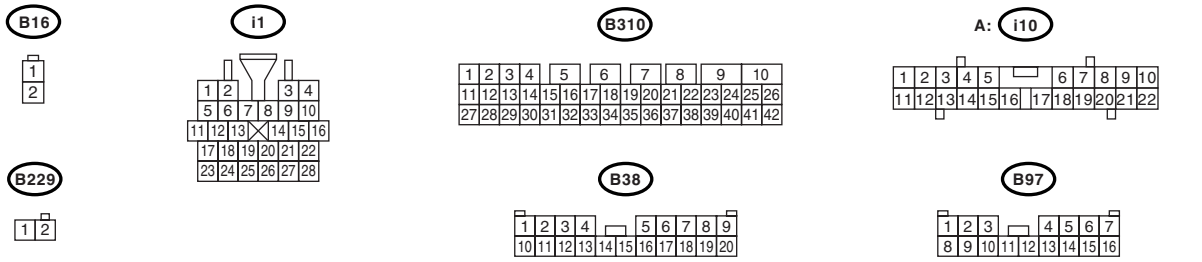

VDC00298

Step		Check	Yes	No
1	**READ DTC.** Read the DTC. <Ref. to VDC(diag)-22, Read Diagnostic Trouble Code (DTC).>	Is DTC displayed?	Perform the diagnosis according to DTC.	Go to step **2.**

	Step	Check	Yes	No
2	**CHECK WIRING HARNESS.** 1) Turn the ignition switch to OFF. 2) Disconnect the connector (B310) from VDCCM&H/U. 3) Disconnect the connector (i10) from combination meter. 4) Measure the resistance between VDCCM&H/U connector and combination meter connector. ***Connector & terminal*** ***(B310) No. 35 — (i10) No. A5:***	Is the resistance less than 0.5 Ω?	Go to step **3.**	Repair the harness connector between VDCCM&H/U and combination meter.
3	**CHECK POOR CONTACT IN CONNECTOR.** Check poor contact in all connectors.	Is there poor contact?	Repair the connector.	Go to step **4.**
4	**CHECK VDCCM.** 1) Connect the connector to VDCCM&H/U (B310). 2) Turn the ignition switch to ON. 3) Measure the resistance between combination meter connector and chassis ground. ***Connector & terminal*** ***(i10) No. A5 — Chassis ground:***	Is the resistance less than 0.5 Ω?	Check the combination meter.	Replace the VDCCM&H/U.

E: VDC INDICATOR LIGHT DOES NOT GO OFF

DETECTING CONDITION:

- Defective combination meter
- Defective CAN communication

TROUBLE SYMPTOM:

When starting the engine, VDC indicator light is kept ON.

	Step	Check	Yes	No
1	**READ DTC.** Read the DTC. <Ref. to VDC(diag)-22, Read Diagnostic Trouble Code (DTC).>	Is DTC displayed?	Perform the diagnosis according to DTC.	Go to step **2.**
2	**CHECK LAN SYSTEM.** Perform the diagnosis for LAN system. <Ref. to LAN(diag)-24, OPERATION, Read Diagnostic Trouble Code (DTC).>	Is there any fault in LAN system?	Perform the diagnosis according to DTC for LAN system.	Go to step **3.**
3	**CHECK COMBINATION METER.** Check the combination meter.	Is combination meter OK?	Replace the VDCCM&H/U.	Repair the combination meter.

F: VDC WARNING LIGHT AND VDC OFF INDICATOR LIGHT DO NOT GO OFF

DETECTING CONDITION:

- Defective combination meter
- Defective CAN communication
- Defective engine
- VDC OFF switch is shorted.

TROUBLE SYMPTOM:

When starting the engine, VDC OFF indicator light is kept ON.

NOTE:
When pressing the VDC OFF switch for more than 10 seconds, the VDC OFF indicator light goes off and cannot operate any more. When turning the ignition switch from OFF to ON, the OFF operation enabled status is restored.

	Step	Check	Yes	No
1	**READ DTC.** Read the DTC. <Ref. to VDC(diag)-22, Read Diagnostic Trouble Code (DTC).>	Is DTC displayed?	Perform the diagnosis according to DTC.	Go to step **2.**
2	**CHECK ENGINE.**	Does the malfunction indicator light illuminate?	Repair the engine.	Go to step **3.**
3	**CHECK ENGINE COOLANT.** Warm up the engine and check if VDC warning light and VDC OFF indicator light illumination condition changes.	When the engine coolant temperature is too low, VDC warning light and VDC OFF indicator light illuminate. Does the lights go off when the engine is warmed-up?	Normal Operation	Go to step **4.**
4	**CHECK VDC OFF SWITCH.** Remove and check VDC OFF switch.	Is VDC OFF switch normal?	Go to step **5.**	Replace the VDC OFF switch.
5	**CHECK LAN SYSTEM.** Perform the diagnosis for LAN system. <Ref. to LAN(diag)-24, OPERATION, Read Diagnostic Trouble Code (DTC).>	Is there any fault in LAN system?	Perform the diagnosis according to DTC for LAN system.	Go to step **6.**
6	**CHECK COMBINATION METER.** Check the combination meter.	Is combination meter OK?	Replace the VDCCM&H/U.	Repair the combination meter.

G: BRAKE WARNING LIGHT DOES NOT GO OFF

DETECTING CONDITION:

- Brake warning light circuit is shorted.
- Defective sensor/connector

TROUBLE SYMPTOM:

After starting the engine, the brake warning light is kept on though the parking lever is released.

WIRING DIAGRAM:

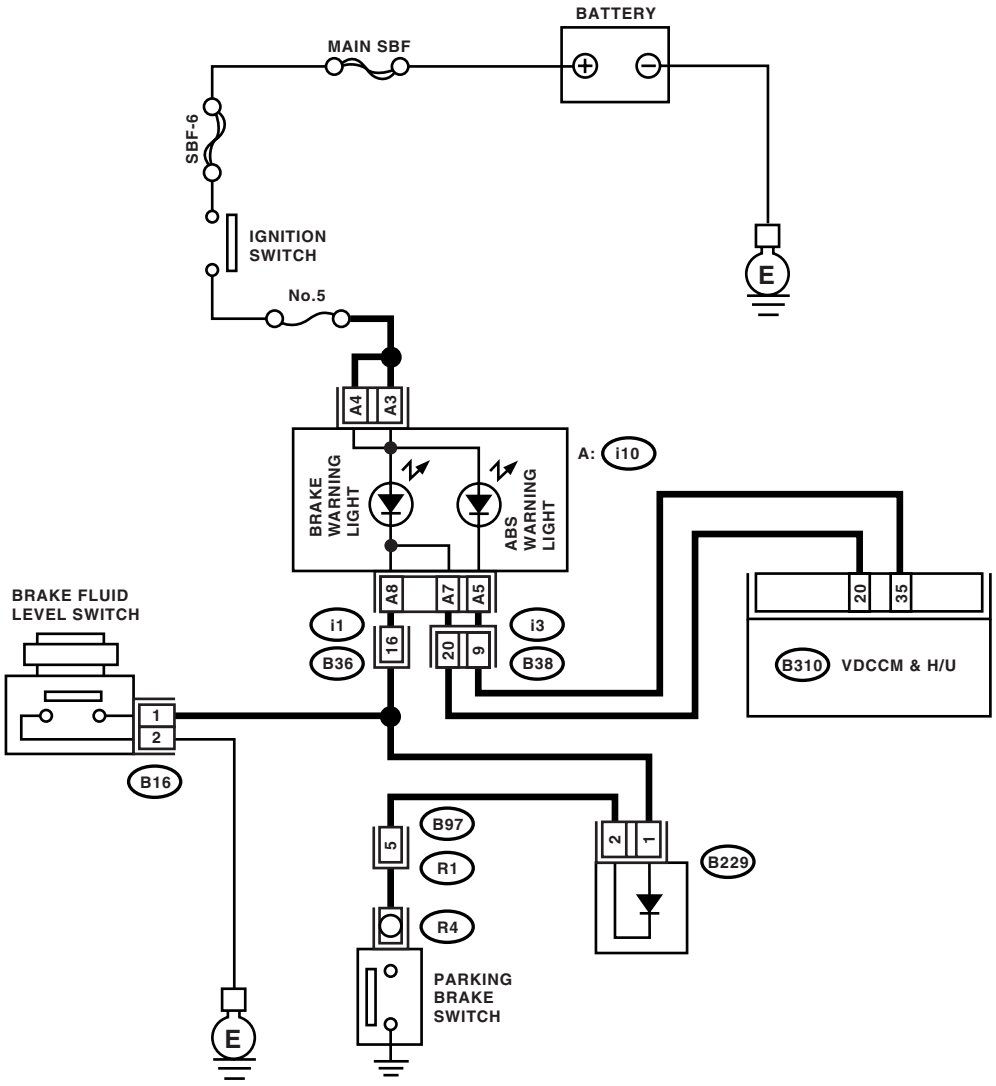

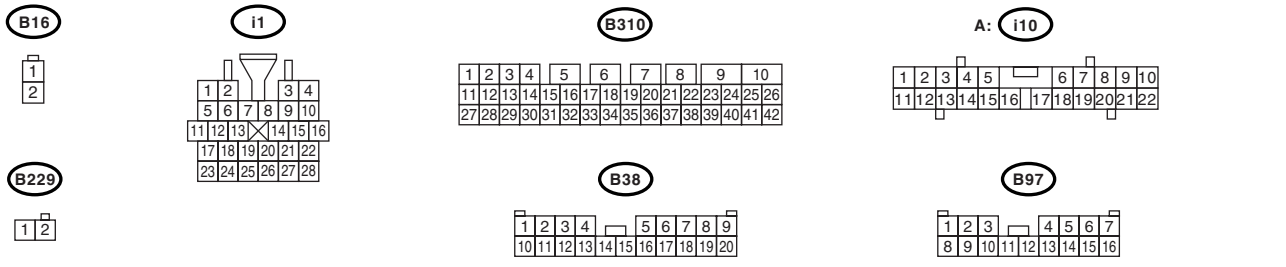

VDC00298

	Step	Check	Yes	No
1	**CHECK INSTALLATION OF VDCCM&H/U CONNECTOR.** 1) Turn the ignition switch to OFF. 2) Check that VDCCM&H/U connector is inserted until it is locked by clamp.	Is the connector firmly inserted?	Go to step **2.**	Insert the VDCCM&H/U connector until it is locked by clamp.
2	**READ DTC.** Read the DTC. <Ref. to VDC(diag)-22, Read Diagnostic Trouble Code (DTC).>	Is DTC displayed?	Perform the diagnosis according to DTC.	Go to step **3.**
3	**CHECK BRAKE FLUID AMOUNT.** Check the amount of brake fluid in the reservoir tank of master cylinder.	Is the amount of brake fluid between the lines of “MAX” and “MIN”?	Go to step **4.**	Replenish brake fluid to the specified value.
4	**CHECK BRAKE FLUID LEVEL SWITCH.** 1) Turn the ignition switch to OFF. 2) Disconnect the level switch connector (B16) from master cylinder. 3) Measure the resistance of master cylinder terminals. ***Terminals*** ***No. 1 — No. 2:***	Is the resistance more than 1 MΩ?	Go to step **5.**	Replace the master cylinder.
5	**CHECK PARKING BRAKE SWITCH.** 1) Disconnect the connector (R4) from parking brake switch. 2) Release the parking brake. 3) Measure the resistance between parking brake switch terminal and chassis ground.	Is the resistance more than 1 MΩ?	Go to step **6.**	Replace the parking brake switch.
6	**CHECK GROUND SHORT OF HARNESS.** 1) Disconnect the connector (i10) from combination meter. 2) Measure the resistance between combination meter connector and chassis ground. ***Connector & terminal*** ***(i10) No. A7 — Chassis ground:***	Is the resistance more than 1 MΩ?	Go to step **7.**	Repair the harness connector between combination meter brake fluid level switch and parking brake switch.
7	**CHECK HARNESS CONNECTOR.** 1) Disconnect the connector (B310) from VDCCM&H/U. 2) Disconnect the connector (i10) from combination meter. 3) Measure the resistance between VDCCM&H/U connector and combination connector. ***Connector & terminal*** ***(B310) No. 20 — (i10) No. A7:***	Is the resistance less than 0.5 Ω?	Go to step **8.**	Repair the harness connector between VDCCM&H/U and combination meter.
8	**CHECK POOR CONTACT IN CONNECTOR.** Check poor contact in all connectors.	Is there poor contact?	Repair the connector.	Go to step **9.**
9	**CHECK VDCCM.** 1) Connect the connector (B310) to VDCCM&H/U. 2) Turn the ignition to ON. 3) Measure the resistance between combination meter connector and chassis ground. ***Connector & terminal*** ***(i10) No. A7 — Chassis ground:***	Is the resistance less than 0.5 Ω?	Check the combination meter.	Replace the VDCCM&H/U.

11.List of Diagnostic Trouble Code (DTC)

A: LIST

DTC	Detailed code	Display	Content of diagnosis	Reference target
C0021	698XH	FR sensor power supply failure	Abnormal power supply of front ABS wheel speed sensor RH	<Ref. to VDC(diag)-40, DTC C0021 FRONT ABS WHEEL SPEED SENSOR RH POWER SUPPLY MALFUNCTION, Diagnostic Procedure with Diagnostic Trouble Code (DTC).>
	6A0XH	Front Right ABS Sensor Circuit Open or Shorted Battery	Open/high input of front ABS wheel speed sensor RH	<Ref. to VDC(diag)-43, DTC C0021 OPEN/HIGH INPUT OF FRONT ABS WHEEL SPEED SENSOR RH, Diagnostic Procedure with Diagnostic Trouble Code (DTC).>
C0022	68CXH 68EXH 690XH 694XH 696XH	Front Right ABS Sensor Signal	Front ABS wheel speed sensor RH signal malfunction	<Ref. to VDC(diag)-47, DTC C0022 FRONT ABS WHEEL SPEED SENSOR RH SIGNAL MALFUNCTION, Diagnostic Procedure with Diagnostic Trouble Code (DTC).>
C0023	618XH	FL sensor power supply failure	Front ABS wheel speed sensor LH power supply malfunction	<Ref. to VDC(diag)-40, DTC C0023 FRONT ABS WHEEL SPEED SENSOR LH POWER SUPPLY MALFUNCTION, Diagnostic Procedure with Diagnostic Trouble Code (DTC).>
	620XH	Front Left ABS Sensor Circuit Open or Shorted Battery	Open/high input of front ABS wheel speed sensor LH	<Ref. to VDC(diag)-43, DTC C0023 OPEN/HIGH INPUT OF FRONT ABS WHEEL SPEED SENSOR LH, Diagnostic Procedure with Diagnostic Trouble Code (DTC).>
C0024	60CXH 60EXH 610XH 614XH 616XH	Front Left ABS Sensor Signal	Front ABS wheel speed sensor LH signal malfunction	<Ref. to VDC(diag)-47, DTC C0024 FRONT ABS WHEEL SPEED SENSOR LH SIGNAL MALFUNCTION, Diagnostic Procedure with Diagnostic Trouble Code (DTC).>
C0025	658XH	RR sensor power supply failure	Rear ABS wheel speed sensor RH power supply malfunction	<Ref. to VDC(diag)-40, DTC C0025 REAR ABS WHEEL SPEED SENSOR RH POWER SUPPLY MALFUNCTION, Diagnostic Procedure with Diagnostic Trouble Code (DTC).>
	660XH	Rear Right ABS Sensor Circuit Open or Shorted Battery	Open/high input of rear ABS wheel speed sensor RH	<Ref. to VDC(diag)-43, DTC C0025 OPEN/HIGH INPUT OF REAR ABS WHEEL SPEED SENSOR RH, Diagnostic Procedure with Diagnostic Trouble Code (DTC).>
C0026	64CXH 64EXH 650XH 654XH 656XH	Rear Right ABS Sensor Signal	Rear ABS wheel speed sensor RH signal malfunction	<Ref. to VDC(diag)-47, DTC C0026 REAR ABS WHEEL SPEED SENSOR RH SIGNAL MALFUNCTION, Diagnostic Procedure with Diagnostic Trouble Code (DTC).>
C0027	6D8XH	RL sensor power supply failure	Rear ABS wheel speed sensor LH power supply malfunction	<Ref. to VDC(diag)-41, DTC C0027 REAR ABS WHEEL SPEED SENSOR LH POWER SUPPLY MALFUNCTION, Diagnostic Procedure with Diagnostic Trouble Code (DTC).>
	6E0XH	Rear Left ABS Sensor Circuit Open or Shorted Battery	Open/high input of rear ABS wheel speed sensor LH	<Ref. to VDC(diag)-44, DTC C0027 OPEN/HIGH INPUT OF REAR ABS WHEEL SPEED SENSOR LH, Diagnostic Procedure with Diagnostic Trouble Code (DTC).>
C0028	6CCXH 6CEXH 6D0XH 6D4XH 6D6XH	Rear Left ABS Sensor Signal	Rear ABS wheel speed sensor LH signal malfunction	<Ref. to VDC(diag)-48, DTC C0028 REAR ABS WHEEL SPEED SENSOR LH SIGNAL MALFUNCTION, Diagnostic Procedure with Diagnostic Trouble Code (DTC).>

DTC	Detailed code	Display	Content of diagnosis	Reference target
C0029	608XH 648XH 688XH 6C8XH 704XH 606XH 646XH 686XH 6C6XH 702XH 604XH 644XH 684XH 6C4XH 70CXH 720XH 710XH	Any One of Four ABS Sensors Signal	ABS wheel speed sensor signal malfunction in one of four wheels	<Ref. to VDC(diag)-50, DTC C0029 ABS WHEEL SPEED SENSOR SIGNAL MALFUNCTION IN ONE OF FOUR WHEELS, Diagnostic Procedure with Diagnostic Trouble Code (DTC).>
C0031	320XH	FR hold valve malfunction	Front inlet solenoid valve RH malfunction in VDCCM&H/U	<Ref. to VDC(diag)-53, DTC C0031 FRONT INLET SOLENOID VALVE RH MALFUNCTION IN VDCCM&H/U, Diagnostic Procedure with Diagnostic Trouble Code (DTC).>
C0032	360XH	FR pressure reducing valve malfunction	Front outlet solenoid valve RH malfunction in VDCCM&H/U	<Ref. to VDC(diag)-53, DTC C0032 FRONT OUTLET SOLENOID VALVE RH MALFUNCTION IN VDCCM&H/U, Diagnostic Procedure with Diagnostic Trouble Code (DTC).>
C0033	220XH	FL hold valve malfunction	Front inlet solenoid valve LH malfunction in VDCCM&H/U	<Ref. to VDC(diag)-53, DTC C0033 FRONT INLET SOLENOID VALVE LH MALFUNCTION IN VDCCM&H/U, Diagnostic Procedure with Diagnostic Trouble Code (DTC).>
C0034	260XH	FL pressure reducing valve malfunction	Front outlet solenoid valve LH malfunction in VDCCM&H/U	<Ref. to VDC(diag)-53, DTC C0034 FRONT OUTLET SOLENOID VALVE LH MALFUNCTION IN VDCCM&H/U, Diagnostic Procedure with Diagnostic Trouble Code (DTC).>
C0035	2A0XH	RR hold valve malfunction	Rear inlet solenoid valve RH malfunction in VDCCM&H/U	<Ref. to VDC(diag)-53, DTC C0035 REAR INLET SOLENOID VALVE RH MALFUNCTION IN VDCCM&H/U, Diagnostic Procedure with Diagnostic Trouble Code (DTC).>
C0036	2E0XH	RR pressure reducing valve malfunction	Rear outlet solenoid valve RH malfunction in VDCCM&H/U	<Ref. to VDC(diag)-54, DTC C0036 REAR OUTLET SOLENOID VALVE RH MALFUNCTION IN VDCCM&H/U, Diagnostic Procedure with Diagnostic Trouble Code (DTC).>
C0037	3A0XH	RL hold valve malfunction	Rear inlet solenoid valve LH malfunction in VDCCM&H/U	<Ref. to VDC(diag)-54, DTC C0037 REAR INLET SOLENOID VALVE LH MALFUNCTION IN VDCCM&H/U, Diagnostic Procedure with Diagnostic Trouble Code (DTC).>
C0038	3E0XH	RL pressure reducing valve malfunction	Rear outlet solenoid valve LH malfunction in VDCCM&H/U	<Ref. to VDC(diag)-54, DTC C0038 REAR OUTLET SOLENOID VALVE LH MALFUNCTION IN VDCCM&H/U, Diagnostic Procedure with Diagnostic Trouble Code (DTC).>
C0061	4A0XH	Normal opening valve 1 malfunction	Secondary cut valve malfunction in VDCCM&H/U	<Ref. to VDC(diag)-54, DTC C0061 SECONDARY CUT VALVE MALFUNCTION IN VDCCM&H/U, Diagnostic Procedure with Diagnostic Trouble Code (DTC).>
C0062	4E0XH	Normal opening valve 2 malfunction	Primary cut valve malfunction in VDCCM&H/U	<Ref. to VDC(diag)-54, DTC C0062 PRIMARY CUT VALVE MALFUNCTION IN VDCCM&H/U, Diagnostic Procedure with Diagnostic Trouble Code (DTC).>

DTC	Detailed code	Display	Content of diagnosis	Reference target
C0063	520XH	Normal closing valve 1 malfunction	Secondary suction valve malfunction in VDCCM&H/U	<Ref. to VDC(diag)-54, DTC C0063 SECONDARY SUCTION VALVE MALFUNCTION IN VDCCM&H/U, Diagnostic Procedure with Diagnostic Trouble Code (DTC).>
C0064	560XH	Normal closing valve 2 malfunction	Primary suction valve malfunction in VDCCM&H/U	<Ref. to VDC(diag)-54, DTC C0064 PRIMARY SUCTION VALVE MALFUNCTION IN VDCCM&H/U, Diagnostic Procedure with Diagnostic Trouble Code (DTC).>
C0041	000XH 002XH 004XH 006XH 010XH 012XH 014XH 016XH 018XH 01AXH 01EXH 024XH 026XH 028XH 02AXH 02CXH 02EXH 030XH 03AXH 03CXH 03DXH 03EXH 034XH 036XH 038XH	ECM	VDC control module (VDCCM) malfunction	<Ref. to VDC(diag)-57, DTC C0041 VDC CONTROL MODULE MALFUNCTION, Diagnostic Procedure with Diagnostic Trouble Code (DTC).>
C0042	7CEXH 7D0XH	Power supply voltage failure	Power voltage malfunction	<Ref. to VDC(diag)-59, DTC C0042 POWER VOLTAGE MALFUNCTION, Diagnostic Procedure with Diagnostic Trouble Code (DTC).>
	7CCXH	Speed sen. power supply failure	ABS wheel speed sensor power malfunction	<Ref. to VDC(diag)-61, DTC C0042 ABS WHEEL SPEED SENSOR POWER MALFUNCTION, Diagnostic Procedure with Diagnostic Trouble Code (DTC).>
C0044	9A0XH	TCM communication circuit	CAN communication malfunction of transmission control module	<Ref. to VDC(diag)-62, DTC C0044 AT COMMUNICATION, Diagnostic Procedure with Diagnostic Trouble Code (DTC).>
C0045	970XH 822XH	Incorrect VDC Control Module specifications	Different VDC control module specification	<Ref. to VDC(diag)-62, DTC C0045 DIFFERENT VDC CONTROL MODULE SPECIFICATION, Diagnostic Procedure with Diagnostic Trouble Code (DTC).>
	972XH	TCM malfunction	AT control module malfunction	<Ref. to VDC(diag)-63, DTC C0045 AT CONTROL MODULE MALFUNCTION, Diagnostic Procedure with Diagnostic Trouble Code (DTC).>
C0047	788XH 78CXH 7A0XH 7A4XH	Improper CAN communication	Improper CAN communication	<Ref. to VDC(diag)-64, DTC C0047 IMPROPER CAN COMMUNICATION, Diagnostic Procedure with Diagnostic Trouble Code (DTC).>

DTC	Detailed code	Display	Content of diagnosis	Reference target
C0051	048XH	Valve relay OFF failure	Valve relay OFF malfunction	<Ref. to VDC(diag)-66, DTC C0051 VALVE RELAY OFF MALFUNCTION, Diagnostic Procedure with Diagnostic Trouble Code (DTC).>
	04AXH 04CXH	Valve relay	Valve relay system	<Ref. to VDC(diag)-68, DTC C0051 VALVE RELAY MALFUNCTION, Diagnostic Procedure with Diagnostic Trouble Code (DTC).>
	06AXH	Valve relay test failure	Valve relay test malfunction	<Ref. to VDC(diag)-70, DTC C0051 VALVE RELAY TEST MALFUNCTION, Diagnostic Procedure with Diagnostic Trouble Code (DTC).>
	00DXH	Valve relay ON failure	Valve relay ON malfunction	<Ref. to VDC(diag)-71, DTC C0051 VALVE RELAY ON MALFUNCTION, Diagnostic Procedure with Diagnostic Trouble Code (DTC).>
C0052	58AXH	Motor and motor relay	Motor/motor relay system	<Ref. to VDC(diag)-73, DTC C0052 MOTOR/ MOTOR RELAY MALFUNCTION, Diagnostic Procedure with Diagnostic Trouble Code (DTC).>
	5A0XH	Motor and motor relay OFF failure	Motor/motor relay OFF malfunction	<Ref. to VDC(diag)-76, DTC C0052 MOTOR/ MOTOR RELAY OFF MALFUNCTION, Diagnostic Procedure with Diagnostic Trouble Code (DTC).>
	58EXH	Motor and motor relay ON failure	Motor/motor relay ON malfunction	<Ref. to VDC(diag)-76, DTC C0052 MOTOR/ MOTOR RELAY ON MALFUNCTION, Diagnostic Procedure with Diagnostic Trouble Code (DTC).>
	58CXH	Motor malfunction	Motor	<Ref. to VDC(diag)-78, DTC C0052 MOTOR, Diagnostic Procedure with Diagnostic Trouble Code (DTC).>
C0054	0A0XH	Brake Light Switch	BLS open circuit	<Ref. to VDC(diag)-78, DTC C0054 BLS OPEN CIRCUIT, Diagnostic Procedure with Diagnostic Trouble Code (DTC).>
	08CXH	BLS ON malfunction	BLS ON malfunction	<Ref. to VDC(diag)-80, DTC C0054 BLS ON MALFUNCTION, Diagnostic Procedure with Diagnostic Trouble Code (DTC).>
C0057	820XH	EGI communication circuit	CAN communication malfunction of engine control module	<Ref. to VDC(diag)-82, DTC C0057 EGI COMMUNICATION, Diagnostic Procedure with Diagnostic Trouble Code (DTC).>

DTC	Detailed code	Display	Content of diagnosis	Reference target
C0071	148XH	Steering angle sensor offset is too big	Excessive steering angle sensor output offset	<Ref. to VDC(diag)-83, DTC C0071 EXCESSIVE STEERING ANGLE SENSOR OUTPUT OFFSET, Diagnostic Procedure with Diagnostic Trouble Code (DTC).>
	14AXH	Change range of steering angle sensor is too big	Excessive variation amount of steering angle sensor output	<Ref. to VDC(diag)-85, DTC C0071 EXCESSIVE VARIATION AMOUNT OF STEERING ANGLE SENSOR OUTPUT, Diagnostic Procedure with Diagnostic Trouble Code (DTC).>
	142XH 144XH 146XH 14EXH 158XH 15AXH 15CXH 15EXH 14CXH 164XH 166XH 16AXH 16CXH 16EXH 170XH	Steering angle sensor malfunction	Steering angle sensor output	<Ref. to VDC(diag)-86, DTC C0071 STEERING ANGLE SENSOR OUTPUT, Diagnostic Procedure with Diagnostic Trouble Code (DTC).>
	160XH	No signal from steering angle sensor	Steering angle sensor communication	<Ref. to VDC(diag)-88, DTC C0071 STEERING ANGLE SENSOR COMMUNICATION, Diagnostic Procedure with Diagnostic Trouble Code (DTC).>
	764XH	Steering angle sensor malfunction	Steering angle sensor power supply malfunction	<Ref. to VDC(diag)-91, DTC C0071 STEERING ANGLE SENSOR POWER SUPPLY MALFUNCTION, Diagnostic Procedure with Diagnostic Trouble Code (DTC).>
C0072	184XH 188XH 18EXH	Abnormal yaw rate sensor output	Yaw rate sensor output	<Ref. to VDC(diag)-94, DTC C0072 YAW RATE SENSOR OUTPUT, Diagnostic Procedure with Diagnostic Trouble Code (DTC).>
	180XH 182XH 186XH 190XH 194XH 196XH 198XH 19AXH	Abnormal yaw rate sensor output	Yaw rate sensor output	<Ref. to VDC(diag)-94, DTC C0072 YAW RATE SENSOR OUTPUT, Diagnostic Procedure with Diagnostic Trouble Code (DTC).>
	192XH	Abnormal yaw rate sensor output	Yaw rate sensor output	<Ref. to VDC(diag)-94, DTC C0072 YAW RATE SENSOR OUTPUT, Diagnostic Procedure with Diagnostic Trouble Code (DTC).>
	1A0XH 18BXH	Voltage inputted to yaw rate sensor exceeds specification	Yaw rate sensor power supply/output	<Ref. to VDC(diag)-96, DTC C0072 YAW RATE SENSOR POWER/OUTPUT, Diagnostic Procedure with Diagnostic Trouble Code (DTC).>
	19CXH	Abnormal yaw rate sensor reference voltage	Yaw rate sensor reference	<Ref. to VDC(diag)-99, DTC C0072 YAW RATE SENSOR REFERENCE, Diagnostic Procedure with Diagnostic Trouble Code (DTC).>
	18CXH	Change range of yaw rate sensor signal is too big	Excessive variation amount of yaw rate sensor output	<Ref. to VDC(diag)-102, DTC C0072 EXCESSIVE VARIATION AMOUNT OF YAW RATE SENSOR OUTPUT, Diagnostic Procedure with Diagnostic Trouble Code (DTC).>

DTC	Detailed code	Display	Content of diagnosis	Reference target
C0073	1C8XH 1CAXH	Lateral G sensor offset is too big	Excessive amount of lateral G sensor output offset	<Ref. to VDC(diag)-105, DTC C0073 EXCESSIVE AMOUNT OF LATERAL G SENSOR OUTPUT OFFSET, Diagnostic Procedure with Diagnostic Trouble Code (DTC).>
	1C0XH 1C6XH 1D8XH	Abnormal lateral G sensor output	Lateral G sensor output	<Ref. to VDC(diag)-105, DTC C0073 LATERAL G SENSOR OUTPUT, Diagnostic Procedure with Diagnostic Trouble Code (DTC).>
	1CCXH	Change range of lateral G sensor is too big	Excessive variation amount of lateral G sensor output	<Ref. to VDC(diag)-105, DTC C0073 EXCESSIVE VARIATION AMOUNT OF LATERAL G SENSOR OUTPUT, Diagnostic Procedure with Diagnostic Trouble Code (DTC).>
	1D2XH	Excessive lateral G sensor signal	Excessive lateral G sensor output	<Ref. to VDC(diag)-106, DTC C0073 EXCESSIVE LATERAL G SENSOR OUTPUT, Diagnostic Procedure with Diagnostic Trouble Code (DTC).>
	1E0XH	Voltage inputted to lateral G sensor exceeds specification	Lateral G sensor power/output	<Ref. to VDC(diag)-108, DTC C0073 LATERAL G SENSOR POWER/OUTPUT, Diagnostic Procedure with Diagnostic Trouble Code (DTC).>
C0074	118XH	Pressure sensor test failure	Pressure sensor test malfunction	<Ref. to VDC(diag)-111, DTC C0074 PRESSURE SENSOR TEST MALFUNCTION, Diagnostic Procedure with Diagnostic Trouble Code (DTC).>
	110XH	Pressure sensor offset is too big	Excessive pressure sensor output offset	<Ref. to VDC(diag)-113, DTC C0074 EXCESSIVE PRESSURE SENSOR OUTPUT OFFSET, Diagnostic Procedure with Diagnostic Trouble Code (DTC).>
	120XH 113XH	Pressure sensor power/output	Pressure sensor power/output	<Ref. to VDC(diag)-114, DTC C0074 PRESSURE SENSOR POWER/OUTPUT, Diagnostic Procedure with Diagnostic Trouble Code (DTC).>
	102XH 108XH	Pressure sensor output	Pressure sensor output	<Ref. to VDC(diag)-115, DTC C0074 PRESSURE SENSOR OUTPUT, Diagnostic Procedure with Diagnostic Trouble Code (DTC).>
	124XH	Pressure sensor power supply malfunction	Pressure sensor power supply malfunction	<Ref. to VDC(diag)-117, DTC C0074 PRESSURE SENSOR POWER MALFUNCTION, Diagnostic Procedure with Diagnostic Trouble Code (DTC).>
C0081	746XH	System failure	System malfunction	<Ref. to VDC(diag)-118, DTC C0081 SYSTEM MALFUNCTION, Diagnostic Procedure with Diagnostic Trouble Code (DTC).>

12.Diagnostic Procedure with Diagnostic Trouble Code (DTC)

A: DTC C0021 FRONT ABS WHEEL SPEED SENSOR RH POWER SUPPLY MALFUNCTION

NOTE:
For the diagnostic procedure, refer to DTC C0027 “REAR ABS WHEEL SPEED SENSOR LH POWER SUPPLY MALFUNCTION”. <Ref. to VDC(diag)-41, DTC C0027 REAR ABS WHEEL SPEED SENSOR LH POWER SUPPLY MALFUNCTION, Diagnostic Procedure with Diagnostic Trouble Code (DTC).>

B: DTC C0023 FRONT ABS WHEEL SPEED SENSOR LH POWER SUPPLY MALFUNCTION

NOTE:
For the diagnostic procedure, refer to DTC C0027 “REAR ABS WHEEL SPEED SENSOR LH POWER SUPPLY MALFUNCTION”. <Ref. to VDC(diag)-41, DTC C0027 REAR ABS WHEEL SPEED SENSOR LH POWER SUPPLY MALFUNCTION, Diagnostic Procedure with Diagnostic Trouble Code (DTC).>

C: DTC C0025 REAR ABS WHEEL SPEED SENSOR RH POWER SUPPLY MALFUNCTION

NOTE:
For the diagnostic procedure, refer to DTC C0027 “REAR ABS WHEEL SPEED SENSOR LH POWER SUPPLY MALFUNCTION”. <Ref. to VDC(diag)-41, DTC C0027 REAR ABS WHEEL SPEED SENSOR LH POWER SUPPLY MALFUNCTION, Diagnostic Procedure with Diagnostic Trouble Code (DTC).>

D: DTC C0027 REAR ABS WHEEL SPEED SENSOR LH POWER SUPPLY MALFUNCTION

DTC DETECTING CONDITION:

Defective ABS wheel speed sensor

TROUBLE SYMPTOM:

- ABS does not operate.
- VDC does not operate.

WIRING DIAGRAM:

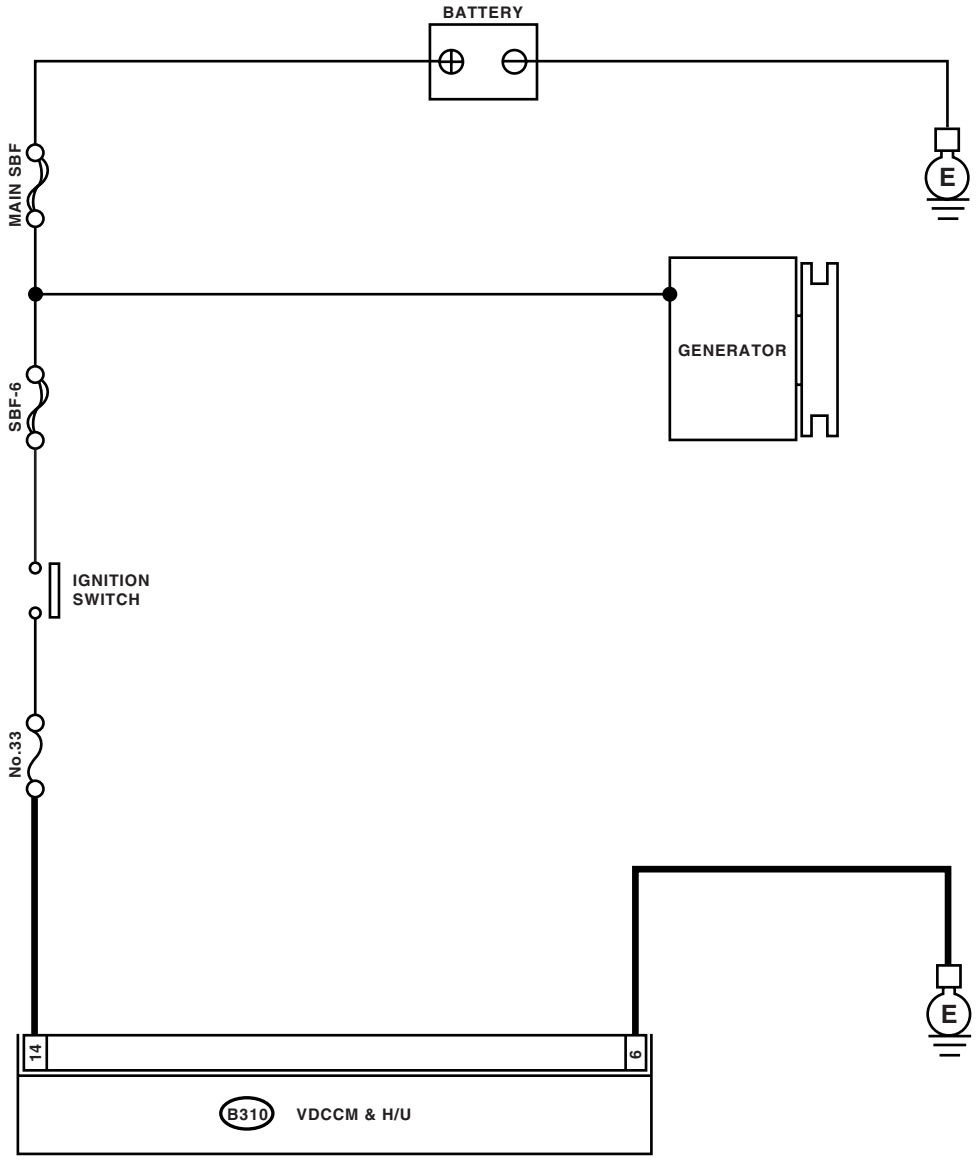

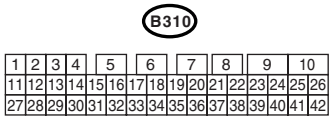

VDC00309

	Step	Check	Yes	No
1	**CHECK POOR CONTACT IN CONNECTOR.** Check if there is poor contact in VDCCM&H/U power supply circuit.	Is there poor contact?	Repair the connector.	Go to step **2.**
2	**CHECK VDCCM&H/U POWER SUPPLY CIRCUIT.** 1) Turn the ignition switch to OFF. 2) Disconnect the VDCCM&H/U connector. 3) Turn the ignition switch to ON. 4) Measure the voltage between VDCCM&H/U connector terminals. ***Terminals*** ***(B310) No. 14 (+) — (B310) No. 6 (–):***	Is the voltage 10 — 15 V?	Go to step **3.**	Check the generator, battery and VDCCM&H/U power supply circuit.
3	**CHECK VDCCM&H/U.** 1) Connect all the connectors. 2) Erase the memory. 3) Perform the inspection mode. 4) Read the DTC.	Is the same DTC displayed?	Replace the VDCCM&H/U.	Go to step **4.**
4	**CHECK OTHER DTC DETECTION.**	Is any other DTC displayed?	Perform the diagnosis according to DTC.	It results from a temporary noise interference.

E: DTC C0021 OPEN/HIGH INPUT OF FRONT ABS WHEEL SPEED SENSOR RH

NOTE:
For the diagnostic procedure, refer to DTC C0027 “OPEN/HIGH INPUT OF REAR ABS WHEEL SPEED SENSOR LH”. <Ref. to VDC(diag)-44, DTC C0027 OPEN/HIGH INPUT OF REAR ABS WHEEL SPEED SENSOR LH, Diagnostic Procedure with Diagnostic Trouble Code (DTC).>

F: DTC C0023 OPEN/HIGH INPUT OF FRONT ABS WHEEL SPEED SENSOR LH

NOTE:
For the diagnostic procedure, refer to DTC C0027 “OPEN/HIGH INPUT OF REAR ABS WHEEL SPEED SENSOR LH”. <Ref. to VDC(diag)-44, DTC C0027 OPEN/HIGH INPUT OF REAR ABS WHEEL SPEED SENSOR LH, Diagnostic Procedure with Diagnostic Trouble Code (DTC).>

G: DTC C0025 OPEN/HIGH INPUT OF REAR ABS WHEEL SPEED SENSOR RH

NOTE:
For the diagnostic procedure, refer to DTC C0027 “OPEN/HIGH INPUT OF REAR ABS WHEEL SPEED SENSOR LH”. <Ref. to VDC(diag)-44, DTC C0027 OPEN/HIGH INPUT OF REAR ABS WHEEL SPEED SENSOR LH, Diagnostic Procedure with Diagnostic Trouble Code (DTC).>

H: DTC C0027 OPEN/HIGH INPUT OF REAR ABS WHEEL SPEED SENSOR LH

DTC DETECTING CONDITION:

- Defective ABS wheel speed sensor (broken wire, input voltage too high)
- Defective harness connector

TROUBLE SYMPTOM:

- ABS does not operate.
- VDC does not operate.

WIRING DIAGRAM:

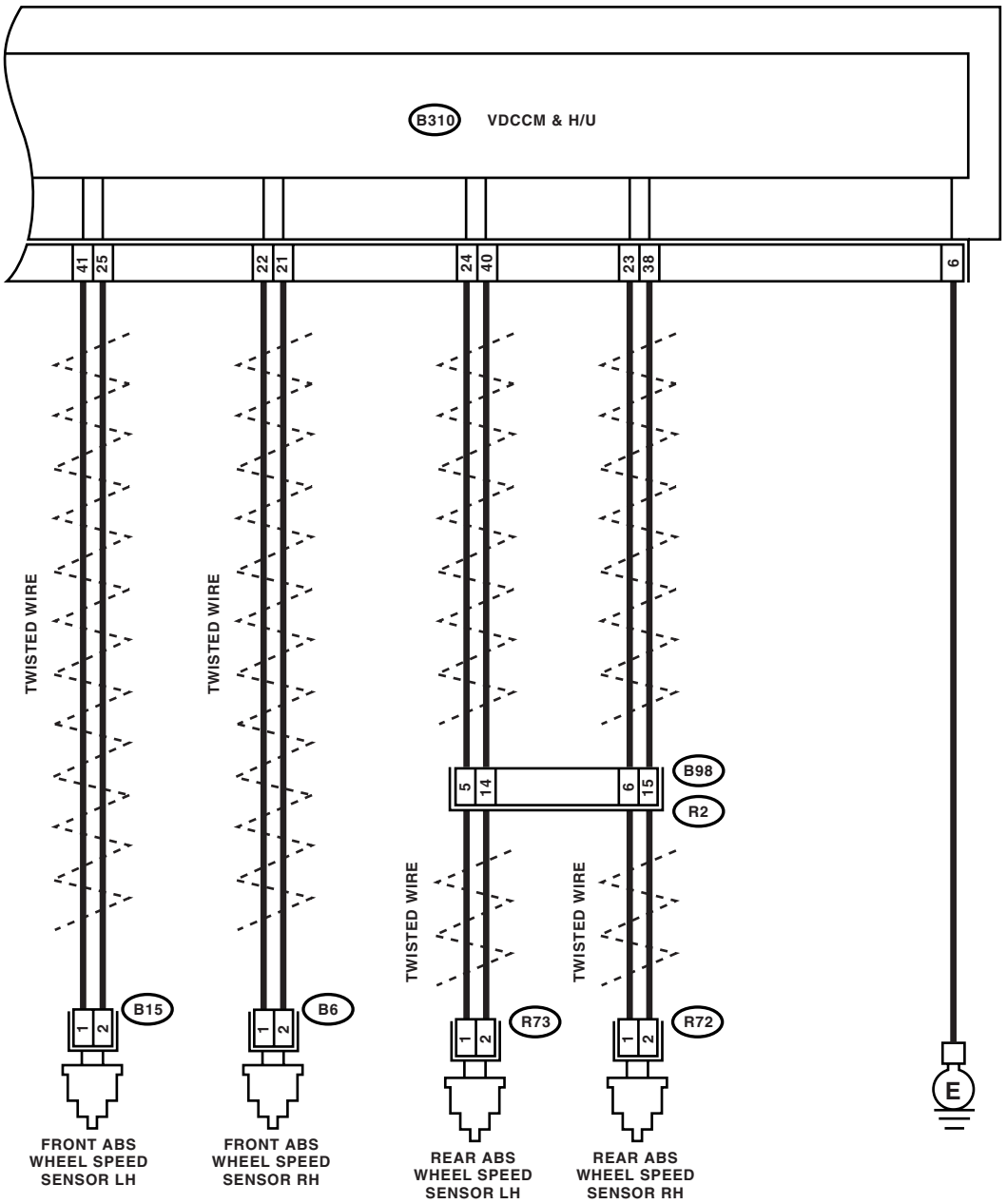

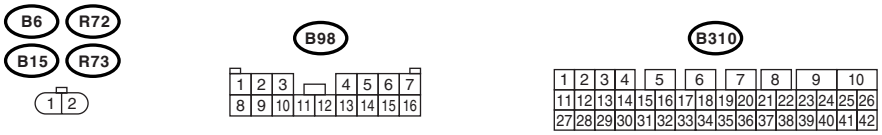

VDC00299

	Step	Check	Yes	No
1	**CHECK POOR CONTACT IN CONNECTOR.** Check if there is poor contact between VDCCM&H/U and ABS wheel speed sensor.	Is there poor contact?	Repair the connector.	Go to step **2.**
2	**CHECK HARNESS CONNECTOR BETWEEN VDCCM&H/U AND ABS WHEEL SPEED SENSOR.** 1) Disconnect the connector (B310) from VDCCM&H/U. 2) Disconnect the connector from ABS wheel speed sensor. 3) Measure the resistance between VDCCM&H/U connector and ABS wheel speed sensor connector. ***Connector & terminal*** ***DTC C0021*** ***(B310) No. 22 — (B6) No. 1:*** ***(B310) No. 21 — (B6) No. 2:*** ***DTC C0023*** ***(B310) No. 41 — (B15) No. 1:*** ***(B310) No. 25 — (B15) No. 2:*** ***DTC C0025*** ***(B310) No. 23 — (R72) No. 1:*** ***(B310) No. 38 — (R72) No. 2:*** ***DTC C0027*** ***(B310) No. 24 — (R73) No. 1:*** ***(B310) No. 40 — (R73) No. 2:***	Is the resistance less than 0.5 Ω?	Go to step **3.**	Repair the harness connector between VDCCM&H/U and ABS wheel speed sensor.
3	**CHECK GROUND SHORT OF HARNESS.** Measure the resistance between VDCCM&H/U connector and chassis ground. ***Connector & terminal*** ***DTC C0021*** ***(B310) No. 21 — Chassis ground:*** ***DTC C0023*** ***(B310) No. 25 — Chassis ground:*** ***DTC C0025*** ***(B310) No. 38 — Chassis ground:*** ***DTC C0027*** ***(B310) No. 40 — Chassis ground:***	Is the resistance more than 1 MΩ?	Go to step **4.**	Repair the harness connector between VDCCM&H/U and ABS wheel speed sensor.
4	**CHECK ABS WHEEL SPEED SENSOR POWER SUPPLY CIRCUIT.** 1) Connect the VDCCM&H/U connector. 2) Turn the ignition switch to ON. 3) Measure the voltage between ABS wheel speed sensor connector and chassis ground. ***Connector & terminal*** ***DTC C0021*** ***(B6) No. 1 (+) — Chassis ground (−):*** ***DTC C0023*** ***(B15) No. 1 (+) — Chassis ground (−):*** ***DTC C0025*** ***(R72) No. 1 (+) — Chassis ground (−):*** ***DTC C0027*** ***(R73) No. 1 (+) — Chassis ground (−):***	Is the voltage 5 — 16 V?	Go to step **6.**	Go to step **5.**

	Step	Check	Yes	No
5	**CHECK VDCCM&H/U POWER SUPPLY CIRCUIT.** 1) Turn the ignition switch to OFF. 2) Disconnect the VDCCM&H/U connector. 3) Turn the ignition switch to ON. 4) Measure the voltage between VDCCM&H/U connector terminals. ***Connector & terminal*** ***(B310) No. 14 (+) — (B310) No. 6 (–):***	Is the voltage 10 — 15 V?	Go to step **7.**	Check the generator, battery and VDCCM&H/U power supply circuit.
6	**CHECK ABS WHEEL SPEED SENSOR SIGNAL.** 1) Install the ABS wheel speed sensor. 2) Prepare an oscilloscope. 3) Check the ABS wheel speed sensor. <Ref. to ABS-15, ABS WHEEL SPEED SENSOR, INSPECTION, Rear ABS Wheel Speed Sensor.>	Is waveform pattern same as shown in the figure.	Go to step **7.**	Replace the ABS wheel speed sensor.
7	**CHECK VDCCM&H/U.** 1) Connect all the connectors. 2) Erase the memory. 3) Perform the inspection mode. <Ref. to VDC(diag)-23, PROCEDURE, Inspection Mode.> 4) Read the DTC.	Is the same DTC displayed?	Replace the VDCCM&H/U. <Ref. to VDC-7, VDC Control Module and Hydraulic Control Unit (VDCCM/U).>	Go to step **8.**
8	**CHECK OTHER DTC DETECTION.**	Is any other DTC displayed?	Perform the diagnosis according to DTC.	It results from a temporary noise interference.

I: DTC C0022 FRONT ABS WHEEL SPEED SENSOR RH SIGNAL MALFUNCTION

NOTE:
For the diagnostic procedure, refer to DTC C0028 “REAR ABS WHEEL SPEED SENSOR LH SIGNAL MALFUNCTION”. <Ref. to VDC(diag)-48, DTC C0028 REAR ABS WHEEL SPEED SENSOR LH SIGNAL MALFUNCTION, Diagnostic Procedure with Diagnostic Trouble Code (DTC).>

J: DTC C0024 FRONT ABS WHEEL SPEED SENSOR LH SIGNAL MALFUNCTION

NOTE:
For the diagnostic procedure, refer to DTC C0028 “REAR ABS WHEEL SPEED SENSOR LH SIGNAL MALFUNCTION”. <Ref. to VDC(diag)-48, DTC C0028 REAR ABS WHEEL SPEED SENSOR LH SIGNAL MALFUNCTION, Diagnostic Procedure with Diagnostic Trouble Code (DTC).>

K: DTC C0026 REAR ABS WHEEL SPEED SENSOR RH SIGNAL MALFUNCTION

NOTE:
For the diagnostic procedure, refer to DTC C0028 “REAR ABS WHEEL SPEED SENSOR LH SIGNAL MALFUNCTION”. <Ref. to VDC(diag)-48, DTC C0028 REAR ABS WHEEL SPEED SENSOR LH SIGNAL MALFUNCTION, Diagnostic Procedure with Diagnostic Trouble Code (DTC).>

L: DTC C0028 REAR ABS WHEEL SPEED SENSOR LH SIGNAL MALFUNCTION

DTC DETECTING CONDITION:

- Defective ABS wheel speed sensor signal (noise, irregular signal, etc.)
- Defective harness connector

TROUBLE SYMPTOM:

- ABS does not operate.
- VDC does not operate.

WIRING DIAGRAM:

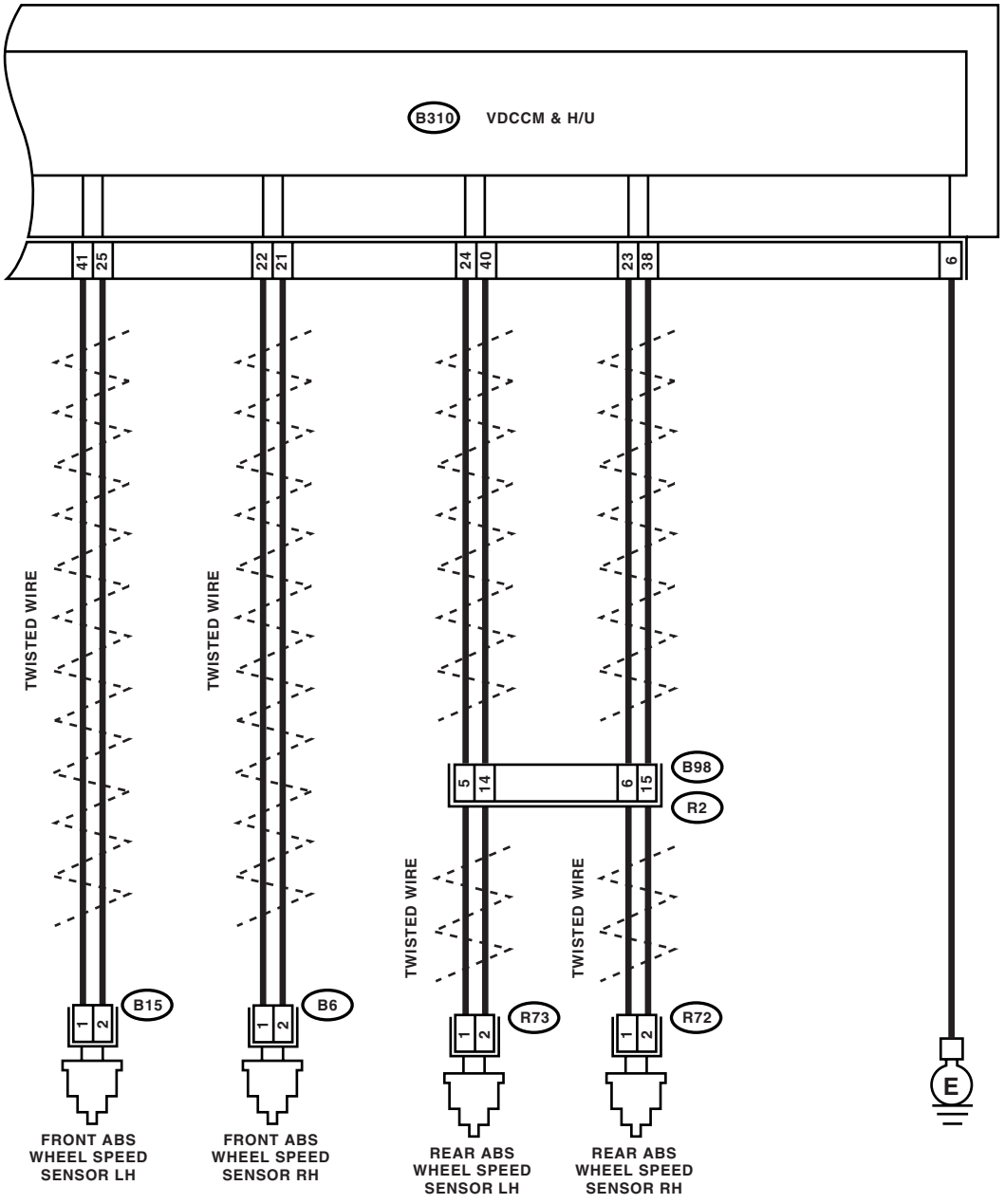

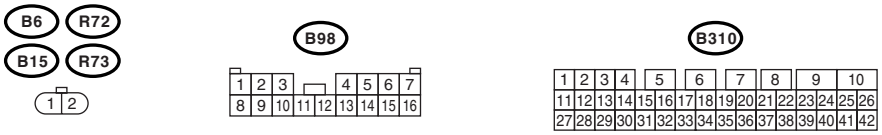

VDC00299

	Step	Check	Yes	No
1	**CHECK OUTPUT OF ABS WHEEL SPEED SENSOR USING SUBARU SELECT MONITOR.** 1) Select {Current Data Display & Save} in Subaru Select Monitor. 2) Read the ABS wheel speed sensor output corresponding to the faulty wheel in Subaru Select Monitor data display mode.	Does the speed indicated on the display change in response to the speedometer reading during acceleration/deceleration when the steering wheel is in the straight-ahead position?	Go to step **2.**	Go to step **7.**
2	**CHECK POOR CONTACT IN CONNECTOR.** Turn the ignition switch to OFF.	Is there poor contact in connectors between VDCCM&H/U and ABS wheel speed sensor?	Repair the connector.	Go to step **3.**
3	**CHECK SOURCES OF SIGNAL NOISE.** Make sure the radio wave device and electric device like car phone and radio are installed correctly.	Are the radio wave device and electric device like car phone and radio installed correctly?	Go to step **4.**	Install the radio wave device and electric device properly.
4	**CHECK SOURCES OF SIGNAL NOISE.** Check if the noise sources (such as an antenna) are installed near the sensor harness.	Are noise sources installed?	Install the noise sources apart from the sensor harness.	Go to step **5.**
5	**CHECK VDCCM&H/U.** 1) Connect all the connectors. 2) Erase the memory. 3) Perform the inspection mode. <Ref. to VDC(diag)-23, PROCEDURE, Inspection Mode.> 4) Read the DTC.	Is the same DTC displayed?	Replace the VDCCM&H/U. <Ref. to VDC-7, VDC Control Module and Hydraulic Control Unit (VDCCM/U).>	Go to step **6.**
6	**CHECK OTHER DTC DETECTION.**	Is any other DTC displayed?	Perform the diagnosis according to DTC.	It results from a temporary noise interference.
7	**CHECK INSTALLATION OF ABS WHEEL SPEED SENSOR.**	Is the ABS wheel speed sensor installation bolt tightened 7.5 N·m (0.76 kgf-m, 5.5 ft-lb)?	Go to step **8.**	Tighten the ABS wheel speed sensor installation bolts.
8	**CHECK ABS WHEEL SPEED SENSOR SIGNAL.** 1) Install the ABS wheel speed sensor. 2) Prepare an oscilloscope. 3) Check ABS wheel speed sensor. <Ref. to ABS-13, ABS WHEEL SPEED SENSOR, INSPECTION, Front ABS Wheel Speed Sensor.>	Is the oscilloscope waveform pattern as shown in the figure when the tire is rotated? Is the pattern as shown in the figure displayed regularly in the oscilloscope when the tire is slowly rotated more than one revolution with even speed?	Go to step **10.**	Go to step **9.**
9	**CHECK ABS WHEEL SPEED SENSOR OR MAGNETIC ENCODER.**	Are there foreign materials, breakage or damage in the protrusion of ABS wheel speed sensor or magnetic encoder?	Remove dirt thoroughly. Replace the ABS wheel speed sensor or magnetic encoder as a unit with hub unit bearing when it is broken or damaged.	Go to step **10.**
10	**CHECK SOURCES OF SIGNAL NOISE.** Make sure the radio wave device and electric device like car phone and radio are installed correctly.	Is the radio wave device and electric device like car phone and radio installed correctly?	Go to step **11.**	Install the radio wave device and electric device properly.
11	**CHECK SOURCES OF SIGNAL NOISE.** Check if the noise sources are (such as an antenna) installed near the sensor harness.	Are noise sources installed?	Go to step **12.**	Install the noise sources apart from the sensor harness.

	Step	Check	Yes	No
12	**CHECK VDCCM&H/U.** 1) Connect all the connectors. 2) Erase the memory. 3) Perform the inspection mode. <Ref. to VDC(diag)-23, PROCEDURE, Inspection Mode.> 4) Read the DTC.	Is the same DTC displayed?	Replace the VDCCM&H/U. <Ref. to VDC-7, VDC Control Module and Hydraulic Control Unit (VDCCM/U).>	Go to step **13.**
13	**CHECK OTHER DTC DETECTION.**	Is any other DTC displayed?	Perform the diagnosis according to DTC.	It results from a temporary noise interference. NOTE: Though the ABS warning light remains on at this time, it is normal. Drive the vehicle at more than 12 km/h (7 MPH) in order to turn ABS warning light off. Be sure to drive the vehicle and check the warning light goes off.

M: DTC C0029 ABS WHEEL SPEED SENSOR SIGNAL MALFUNCTION IN ONE OF FOUR WHEELS

DTC DETECTING CONDITION:

- Defective ABS wheel speed sensor signal (noise, irregular signal, etc.)
- Defective magnetic encoder
- When a wheel is turned freely for a long time

TROUBLE SYMPTOM:

- ABS does not operate.
- VDC does not operate.
- EBD may not operate.

NOTE:
Brake warning light comes on as well as ABS warning light when EBD does not operate.

WIRING DIAGRAM:

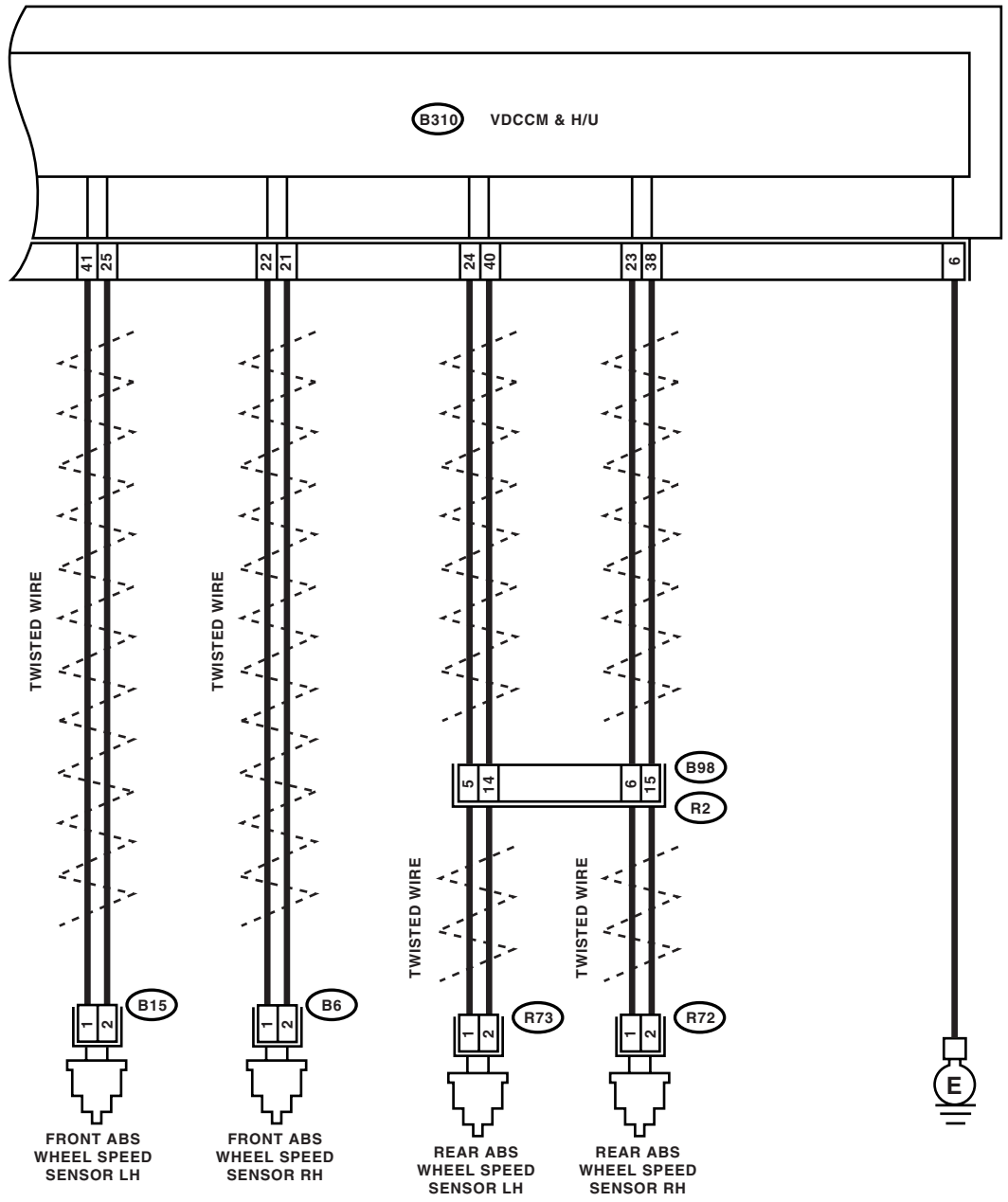

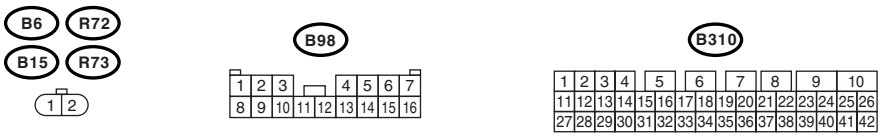

VDC00299

	Step	Check	Yes	No
1	**WHETHER A WHEEL TURNED FREELY OR NOT.** Check if the wheels have been turned freely for more than one minute, such as when the vehicle is jacked-up, under full-lock cornering or when the wheels are not in contact with road surface.	Did the wheels turn freely?	VDC is normal. Erase the memory. NOTE: When the wheels turn freely for a long time, such as when the vehicle is towed or jacked-up, or when steering wheel is continuously turned all the way, this diagnostic trouble code may sometimes occur.	Go to step **2.**
2	**CHECK TIRE SPECIFICATIONS.** Turn the ignition switch to OFF.	Are the tire specifications correct?	Go to step **3.**	Replace the tire.
3	**CHECK WEAR OF TIRE.**	Is the tire worn excessively?	Replace the tire.	Go to step **4.**
4	**CHECK TIRE INFLATION PRESSURE.**	Is the tire pressure correct?	Go to step **5.**	Adjust the tire pressure.
5	**CHECK INSTALLATION OF ABS WHEEL SPEED SENSOR.**	Are the ABS wheel speed sensor installation bolts tightened to 7.5 N·m (0.76 kgf-m, 5.5 ft-lb)? (For four wheels)	Go to step **6.**	Tighten the ABS wheel speed sensor installation bolts.
6	**CHECK ABS WHEEL SPEED SENSOR SIGNAL.** 1) Install the ABS wheel speed sensor. 2) Prepare an oscilloscope. 3) Check the ABS wheel speed sensor. <Ref. to ABS-13, ABS WHEEL SPEED SENSOR, INSPECTION, Front ABS Wheel Speed Sensor.>	Is the oscilloscope waveform pattern as shown in the figure when the tire is rotated? Is the pattern as shown in the figure displayed regularly in the oscilloscope when the tire is slowly rotated more than one revolution with even speed?	Go to step **8.**	Go to step **7.**
7	**CHECK ABS WHEEL SPEED SENSOR OR MAGNETIC ENCODER.**	Are there foreign materials, breakage or damage in the protrusion of ABS wheel speed sensor or magnetic encoder?	Remove dirt thoroughly. Replace the ABS wheel speed sensor or magnetic encoder as a unit with hub unit bearing if there is breakage or damage.	Go to step **8.**
8	**CHECK VDCCM&H/U.** 1) Connect all the connectors. 2) Erase the memory. 3) Perform the inspection mode. <Ref. to VDC(diag)-23, PROCEDURE, Inspection Mode.> 4) Read the DTC.	Is the same DTC displayed?	Replace the VDCCM&H/U. <Ref. to VDC-7, VDC Control Module and Hydraulic Control Unit (VDCCM/U).>	Go to step **9.**

Step		Check	Yes	No
9	CHECK OTHER DTC DETECTION.	Is any other DTC displayed?	Perform the diagnosis according to DTC.	It results from a temporary noise interference. NOTE: Though the ABS warning light remains on at this time, it is normal. Drive the vehicle at more than 12 km/h (7 MPH) in order to turn off the ABS warning light. Be sure to drive the vehicle and check the warning light goes off.

N: DTC C0031 FRONT INLET SOLENOID VALVE RH MALFUNCTION IN VDC-CM&H/U

NOTE:
For the diagnostic procedure, refer to DTC C0064 “PRIMARY SUCTION VALVE MALFUNCTION IN VDC-CM&H/U”. <Ref. to VDC(diag)-54, DTC C0064 PRIMARY SUCTION VALVE MALFUNCTION IN VDC-CM&H/U, Diagnostic Procedure with Diagnostic Trouble Code (DTC).>

O: DTC C0032 FRONT OUTLET SOLENOID VALVE RH MALFUNCTION IN VDC-CM&H/U

NOTE:
For the diagnostic procedure, refer to DTC C0064 “PRIMARY SUCTION VALVE MALFUNCTION IN VDC-CM&H/U”. <Ref. to VDC(diag)-54, DTC C0064 PRIMARY SUCTION VALVE MALFUNCTION IN VDC-CM&H/U, Diagnostic Procedure with Diagnostic Trouble Code (DTC).>

P: DTC C0033 FRONT INLET SOLENOID VALVE LH MALFUNCTION IN VDC-CM&H/U

NOTE:
For the diagnostic procedure, refer to DTC C0064 “PRIMARY SUCTION VALVE MALFUNCTION IN VDC-CM&H/U”. <Ref. to VDC(diag)-54, DTC C0064 PRIMARY SUCTION VALVE MALFUNCTION IN VDC-CM&H/U, Diagnostic Procedure with Diagnostic Trouble Code (DTC).>

Q: DTC C0034 FRONT OUTLET SOLENOID VALVE LH MALFUNCTION IN VDC-CM&H/U

NOTE:
For the diagnostic procedure, refer to DTC C0064 “PRIMARY SUCTION VALVE MALFUNCTION IN VDC-CM&H/U”. <Ref. to VDC(diag)-54, DTC C0064 PRIMARY SUCTION VALVE MALFUNCTION IN VDC-CM&H/U, Diagnostic Procedure with Diagnostic Trouble Code (DTC).>

R: DTC C0035 REAR INLET SOLENOID VALVE RH MALFUNCTION IN VDC-CM&H/U

NOTE:
For the diagnostic procedure, refer to DTC C0064 “PRIMARY SUCTION VALVE MALFUNCTION IN VDC-CM&H/U”. <Ref. to VDC(diag)-54, DTC C0064 PRIMARY SUCTION VALVE MALFUNCTION IN VDC-CM&H/U, Diagnostic Procedure with Diagnostic Trouble Code (DTC).>

S: DTC C0036 REAR OUTLET SOLENOID VALVE RH MALFUNCTION IN VDC-CM&H/U

NOTE:
For the diagnostic procedure, refer to DTC C0064 “PRIMARY SUCTION VALVE MALFUNCTION IN VDC-CM&H/U”. <Ref. to VDC(diag)-54, DTC C0064 PRIMARY SUCTION VALVE MALFUNCTION IN VDC-CM&H/U, Diagnostic Procedure with Diagnostic Trouble Code (DTC).>

T: DTC C0037 REAR INLET SOLENOID VALVE LH MALFUNCTION IN VDC-CM&H/U

NOTE:
For the diagnostic procedure, refer to DTC C0064 “PRIMARY SUCTION VALVE MALFUNCTION IN VDC-CM&H/U”. <Ref. to VDC(diag)-54, DTC C0064 PRIMARY SUCTION VALVE MALFUNCTION IN VDC-CM&H/U, Diagnostic Procedure with Diagnostic Trouble Code (DTC).>

U: DTC C0038 REAR OUTLET SOLENOID VALVE LH MALFUNCTION IN VDC-CM&H/U

NOTE:
For the diagnostic procedure, refer to DTC C0064 “PRIMARY SUCTION VALVE MALFUNCTION IN VDC-CM&H/U”. <Ref. to VDC(diag)-54, DTC C0064 PRIMARY SUCTION VALVE MALFUNCTION IN VDC-CM&H/U, Diagnostic Procedure with Diagnostic Trouble Code (DTC).>

V: DTC C0061 SECONDARY CUT VALVE MALFUNCTION IN VDCCM&H/U

NOTE:
For the diagnostic procedure, refer to DTC C0064 “PRIMARY SUCTION VALVE MALFUNCTION IN VDC-CM&H/U”. <Ref. to VDC(diag)-54, DTC C0064 PRIMARY SUCTION VALVE MALFUNCTION IN VDC-CM&H/U, Diagnostic Procedure with Diagnostic Trouble Code (DTC).>

W: DTC C0062 PRIMARY CUT VALVE MALFUNCTION IN VDCCM&H/U

NOTE:
For the diagnostic procedure, refer to DTC C0064 “PRIMARY SUCTION VALVE MALFUNCTION IN VDC-CM&H/U”. <Ref. to VDC(diag)-54, DTC C0064 PRIMARY SUCTION VALVE MALFUNCTION IN VDC-CM&H/U, Diagnostic Procedure with Diagnostic Trouble Code (DTC).>

X: DTC C0063 SECONDARY SUCTION VALVE MALFUNCTION IN VDCCM&H/U

NOTE:
For the diagnostic procedure, refer to DTC C0064 “PRIMARY SUCTION VALVE MALFUNCTION IN VDC-CM&H/U”. <Ref. to VDC(diag)-54, DTC C0064 PRIMARY SUCTION VALVE MALFUNCTION IN VDC-CM&H/U, Diagnostic Procedure with Diagnostic Trouble Code (DTC).>

Y: DTC C0064 PRIMARY SUCTION VALVE MALFUNCTION IN VDCCM&H/U

DTC DETECTING CONDITION:

- Defective harness connector
- Defective VDCH/U solenoid valve

TROUBLE SYMPTOM:

- ABS does not operate.
- EBD does not operate.
- VDC does not operate.

WIRING DIAGRAM:

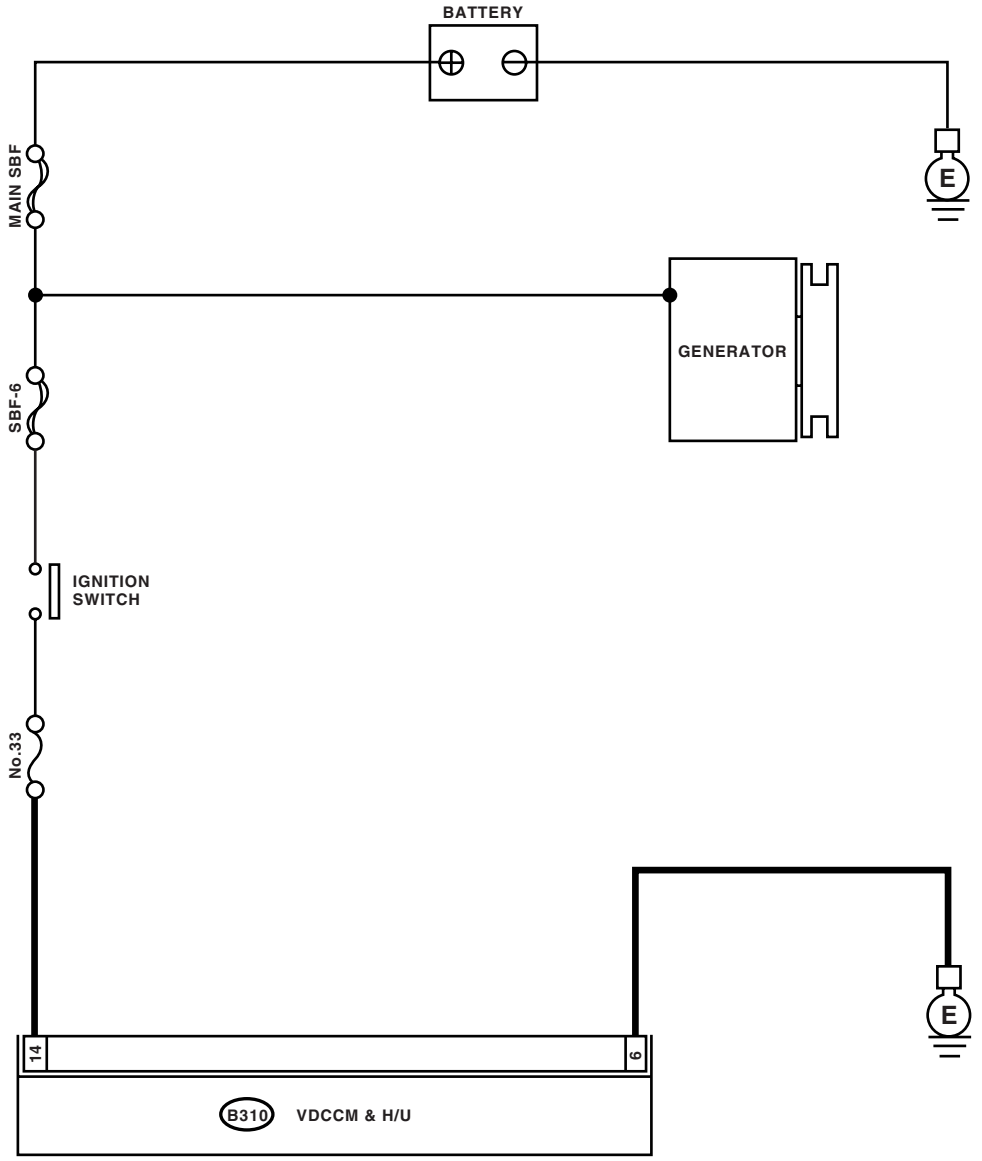

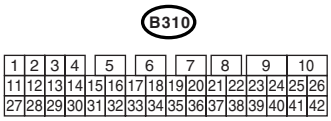

VDC00309

	Step	Check	Yes	No
1	**CHECK INPUT VOLTAGE FOR VDCCM&H/U.** 1) Turn the ignition switch to OFF. 2) Disconnect the connector from VDCCM&H/U. 3) Run the engine at idle. 4) Measure the voltage between VDCCM&H/U connector and chassis ground. ***Connector & terminal*** ***(B310) No. 14 (+) — Chassis ground (−):***	Is the voltage 10 — 15 V?	Go to step **2.**	Repair the power supply circuit.
2	**CHECK GROUND CIRCUIT FOR VDCCM&H/U.** 1) Turn the ignition switch to OFF. 2) Measure the resistance between VDCCM&H/U connector and chassis ground. ***Connector & terminal*** ***(B310) No. 6 — Chassis ground:***	Is the resistance less than 0.5 Ω?	Go to step **3.**	Repair the VDCCM&H/U ground harness.
3	**CHECK POOR CONTACT IN CONNECTORS.**	Is there poor contact in connector between generator, battery and VDCCM&H/U?	Repair the connector.	Go to step **4.**
4	**CHECK VDCCM&H/U.** 1) Connect all the connectors. 2) Erase the memory. 3) Perform the inspection mode. 4) Read the DTC.	Is the same DTC displayed?	Replace the VDCCM&H/U. <Ref. to VDC-7, VDC Control Module and Hydraulic Control Unit (VDCCM/U).>	Go to step **5.**
5	**CHECK OTHER DTC DETECTION.**	Is any other DTC displayed?	Perform the diagnosis according to DTC.	Temporary poor contact occurs.

Z: DTC C0041 VDC CONTROL MODULE MALFUNCTION

DTC DETECTING CONDITION:

Defective VDCCM&H/U

TROUBLE SYMPTOM:

- ABS does not operate.
- EBD does not operate.
- VDC does not operate.

WIRING DIAGRAM:

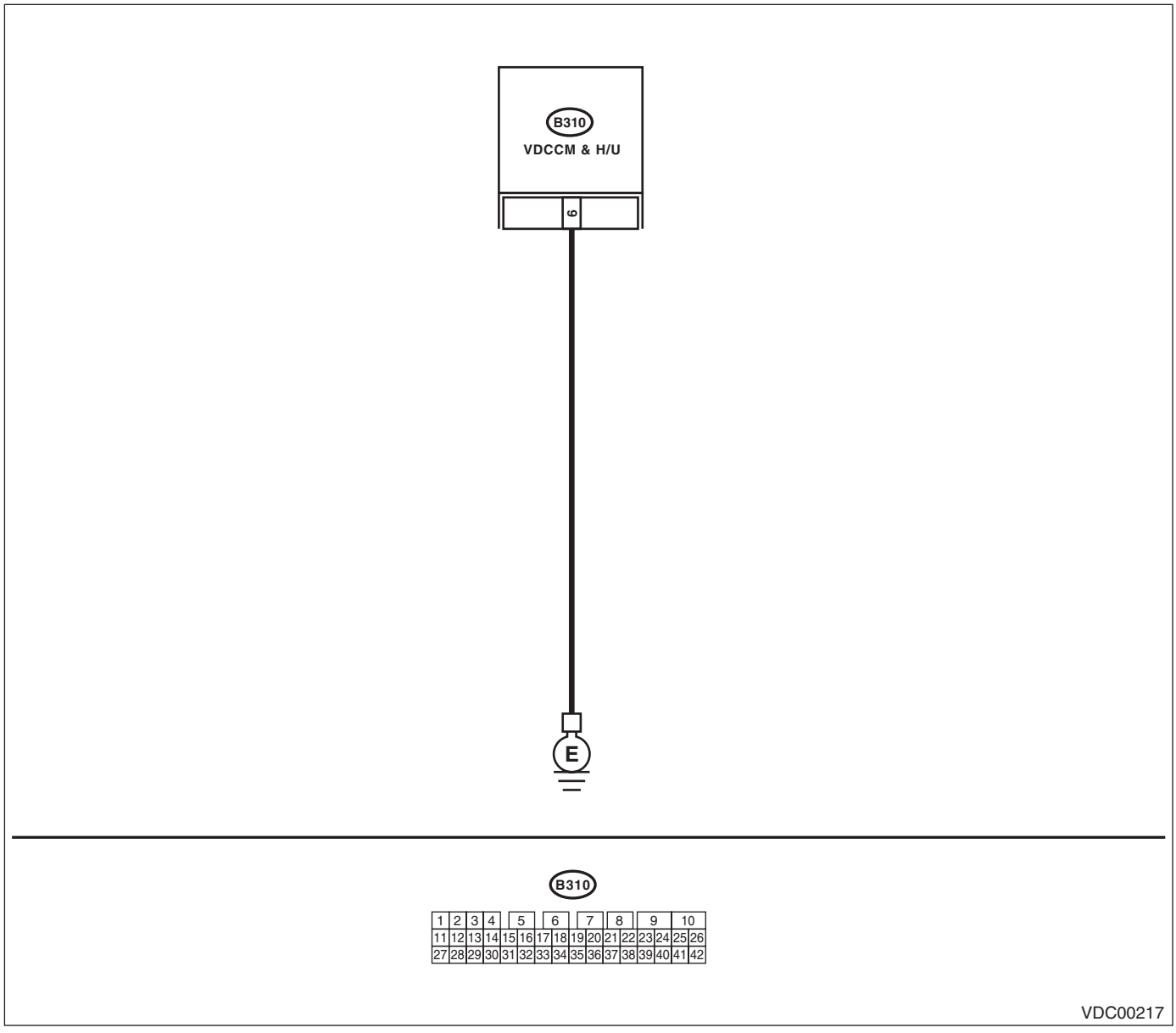

	Step	Check	Yes	No
1	**CHECK GROUND CIRCUIT FOR VDCCM&H/U.** 1) Turn the ignition switch to OFF. 2) Disconnect the connector from VDCCM&H/U. 3) Measure the resistance between VDCCM&H/U and chassis ground. ***Connector & terminal*** ***(B310) No. 6 — Chassis ground:***	Is the resistance less than 0.5 Ω?	Go to step **2.**	Repair the VDCCM&H/U ground harness.

	Step	Check	Yes	No
2	**CHECK POOR CONTACT IN CONNECTORS.**	Is there poor contact in connectors between battery, ignition switch and VDCCM&H/U?	Repair the connector.	Go to step **3.**
3	**CHECK SOURCES OF SIGNAL NOISE.**	Is the car phone or radio properly installed?	Go to step **4.**	Install the car phone or radio properly.
4	**CHECK SOURCES OF SIGNAL NOISE.**	Are noise sources (such as an antenna) installed near the sensor harness?	Install the noise sources apart from the sensor harness.	Go to step **5.**
5	**CHECK VDCCM&H/U.** 1) Connect all the connectors. 2) Erase the memory. 3) Perform the inspection mode. 4) Read the DTC.	Is the same DTC displayed?	Replace the VDCCM&H/U. <Ref. to VDC-7, VDC Control Module and Hydraulic Control Unit (VDCCM/U).>	Go to step **6.**
6	**CHECK OTHER DTC DETECTION.**	Is any other DTC displayed?	Perform the diagnosis according to DTC. <Ref. to VDC(diag)-34, List of Diagnostic Trouble Code (DTC).>	Temporary poor contact occurs.

AA:DTC C0042 POWER VOLTAGE MALFUNCTION

DTC DETECTING CONDITION:

Defective VDCCM&H/U power voltage

TROUBLE SYMPTOM:

- ABS does not operate.
- EBD may not operate.
- VDC does not operate.

NOTE:
Warning lights go off if voltage returns.

WIRING DIAGRAM:

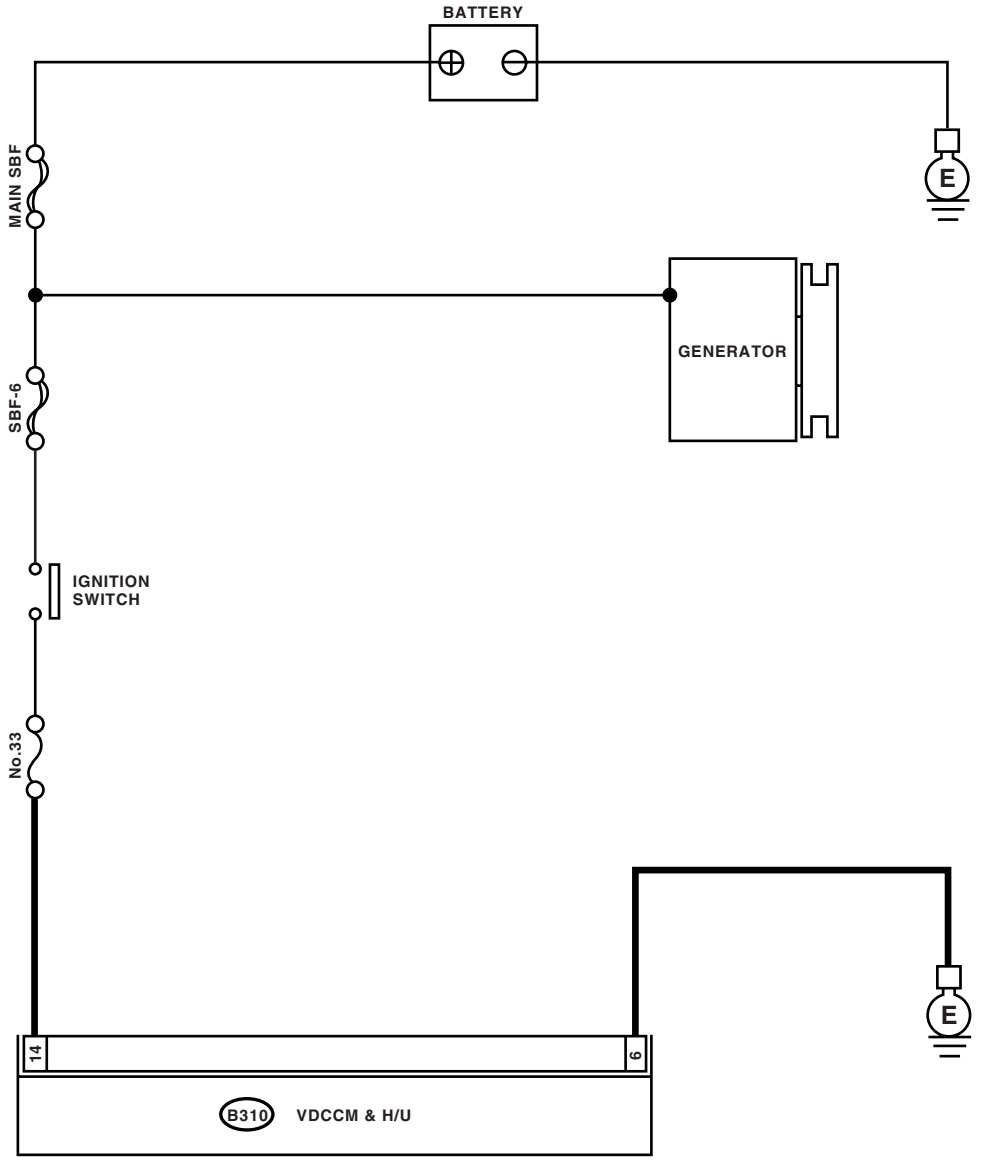

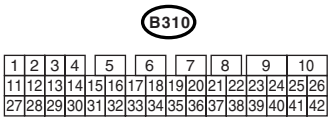

VDC00309

	Step	Check	Yes	No
1	**CHECK GENERATOR.** 1) Start the engine. 2) Run the engine at idle after warming up. 3) Measure the voltage between generator B terminal and chassis ground. ***Terminals*** ***Generator B terminal (+) — Chassis ground (−):***	Is the voltage 10 — 15 V?	Go to step **2.**	Repair the generator. <Ref. to SC(H4SO)-20, Generator.>
2	**CHECK BATTERY TERMINAL.** Turn the ignition switch to OFF.	Are the positive and negative battery terminals clamped tightly?	Go to step **3.**	Tighten the terminal.
3	**CHECK INPUT VOLTAGE FOR VDCCM&H/U.** 1) Disconnect the connector from VDCCM&H/U. 2) Run the engine at idle. 3) Operate the devices such as headlights, air conditioner, defogger, etc. which produce much electrical loading. 4) Measure the voltage between VDCCM&H/U connector and chassis ground. ***Connector & terminal*** ***(B310) No. 14 (+) — Chassis ground (−):***	Is the voltage 10 — 15 V?	Go to step **4.**	Repair the power supply circuit.
4	**CHECK GROUND CIRCUIT FOR VDCCM&H/U.** 1) Turn the ignition switch to OFF. 2) Measure the resistance between VDCCM&H/U connector and chassis ground. ***Connector & terminal*** ***(B310) No. 6 — Chassis ground:***	Is the resistance less than 0.5 Ω?	Go to step **5.**	Repair the VDCCM&H/U ground harness.
5	**CHECK POOR CONTACT IN CONNECTORS.**	Is there poor contact in connector between generator, battery and VDCCM&H/U?	Repair the connector.	Go to step **6.**
6	**CHECK VDCCM&H/U.** 1) Connect all the connectors. 2) Erase the memory. 3) Perform the inspection mode. 4) Read the DTC.	Is the same DTC displayed?	Replace the VDCCM&H/U. <Ref. to VDC-7, VDC Control Module and Hydraulic Control Unit (VDCCM/U).>	Go to step **7.**
7	**CHECK OTHER DTC DETECTION.**	Is any other DTC displayed?	Perform the diagnosis according to DTC. <Ref. to VDC(diag)-34, List of Diagnostic Trouble Code (DTC).>	Temporary poor contact occurs.

AB:DTC C0042 ABS WHEEL SPEED SENSOR POWER MALFUNCTION

NOTE:
For the diagnostic procedure, refer to DTC C0042 “POWER VOLTAGE MALFUNCTION”. <Ref. to VDC(diag)-59, DTC C0042 POWER VOLTAGE MALFUNCTION, Diagnostic Procedure with Diagnostic Trouble Code (DTC).>

AC:DTC C0044 AT COMMUNICATION

DTC DETECTING CONDITION:

No CAN signal from TCM.

TROUBLE SYMPTOM:

- ABS does not operate.
- VDC does not operate.

	Step	Check	Yes	No
1	**CHECK LAN SYSTEM.** Perform the diagnosis for LAN system. <Ref. to LAN(diag)-24, OPERATION, Read Diagnostic Trouble Code (DTC).>	Is there any fault in LAN system?	Perform the diagnosis according to DTC for LAN system.	Go to step **2.**
2	**CHECK POOR CONTACT IN CONNECTORS.**	Is there poor contact in TCM connector?	Repair the connector.	Go to step **3.**
3	**CHECK TCM.**	Is the TCM normal?	Go to step **4.**	Replace the TCM. <Ref. to 4AT-64, Transmission Control Module (TCM).> <Ref. to 5AT-60, Transmission Control Module (TCM).>
4	**CHECK VDCCM&H/U.** 1) Connect all the connectors. 2) Erase the memory. 3) Perform the inspection mode. 4) Read the DTC.	Is the same DTC displayed?	Replace the VDCCM&H/U.	Go to step **5.**
5	**CHECK OTHER DTC DETECTION.**	Is any other DTC displayed?	Perform the diagnosis according to DTC.	It results from a temporary noise interference.

AD:DTC C0045 DIFFERENT VDC CONTROL MODULE SPECIFICATION

DTC DETECTING CONDITION:

Different control module specification

TROUBLE SYMPTOM:

- ABS does not operate.
- VDC does not operate.

	Step	Check	Yes	No
1	**CHECK VDCCM&H/U SPECIFICATION.** Check the identification mark of VDCCM&H/U. ***Identification mark of VDCCM&H/U*** ***Wagon model OUTBACK 3.0 R: G5*** ***Sedan model OUTBACK 3.0 R: GB***	Is the identification mark of VDCCM&H/U the same as vehicle specification?	Go to step **2.**	Replace the VDCCM&H/U. <Ref. to VDC-7, VDC Control Module and Hydraulic Control Unit (VDCCM/U).>
2	**CHECK TCM SPECIFICATION.** Check the TCM specification.	Is the specification of TCM same as vehicle specification?	Go to step **3.**	Replace the TCM. <Ref. to 4AT-64, Transmission Control Module (TCM).> <Ref. to 5AT-60, Transmission Control Module (TCM).>
3	**CHECK AT SYSTEM.** 1) Start the engine. 2) Check the DTC in AT system.	Is DTC of AT system displayed?	Repair the AT system.	Go to step **4.**

	Step	Check	Yes	No
4	**CHECK ECM SPECIFICATION.** Check the ECM specification.	Is the specification of ECM same as vehicle specification?	Go to step **5.**	Replace the ECM. <Ref. to FU(H4SO)-35, Engine Control Module (ECM).> <Ref. to FU(H4DOTC)-39, Engine Control Module (ECM).> <Ref. to FU(H6DO)-34, Engine Control Module (ECM).>
5	**CHECK VDCCM&H/U.** 1) Connect all the connectors. 2) Erase the memory. 3) Perform the inspection mode. 4) Read the DTC.	Is the same DTC displayed?	Replace the VDCCM&H/U.	Go to step **6.**
6	**CHECK OTHER DTC DETECTION.**	Is any other DTC displayed?	Perform the diagnosis according to DTC.	It results from a temporary noise interference.

AE:DTC C0045 AT CONTROL MODULE MALFUNCTION

DTC DETECTING CONDITION:

Defective TCM

TROUBLE SYMPTOM:

- ABS does not operate.
- VDC does not operate.

	Step	Check	Yes	No
1	**CHECK AT SYSTEM.** 1) Start the engine. 2) Check the DTC in AT system.	Is DTC of AT system displayed?	Repair the AT system.	Go to step **2.**
2	**CHECK VDCCM&H/U.** 1) Connect all the connectors. 2) Erase the memory. 3) Perform the inspection mode. 4) Read the DTC.	Is the same DTC displayed?	Replace the VDCCM&H/U.	Go to step **3.**
3	**CHECK OTHER DTC DETECTION.**	Is any other DTC displayed?	Perform the diagnosis according to DTC.	It results from a temporary noise interference.

AF:DTC C0047 IMPROPER CAN COMMUNICATION

DTC DETECTING CONDITION:

CAN communication line circuit is open or shorted.

TROUBLE SYMPTOM:

- ABS does not operate.
- VDC does not operate.

WIRING DIAGRAM:

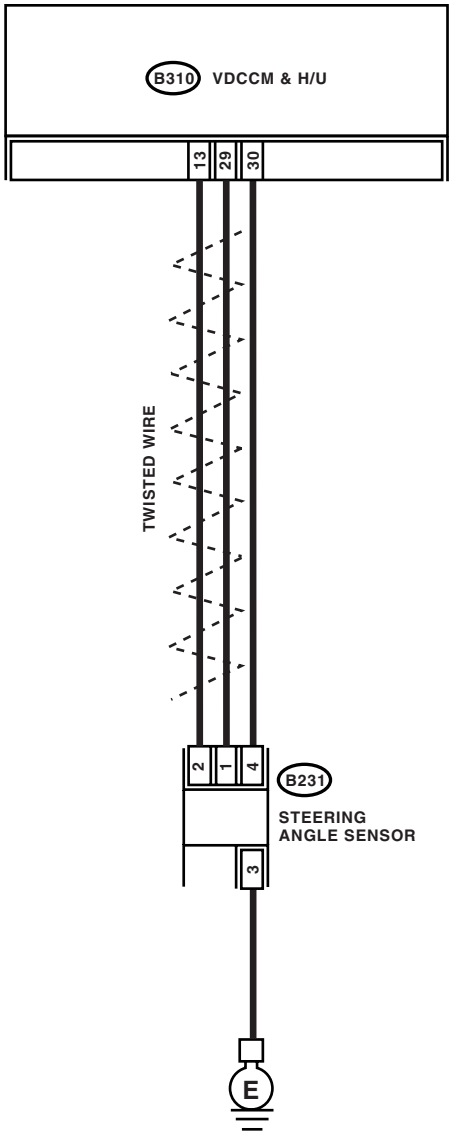

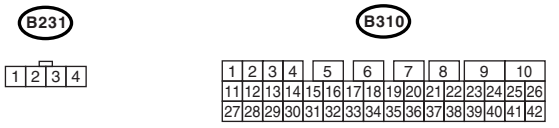

VDC00247

	Step	Check	Yes	No
1	**CHECK LAN SYSTEM.** Perform the diagnosis for LAN system. <Ref. to LAN(diag)-24, OPERATION, Read Diagnostic Trouble Code (DTC).>	Is there any fault in LAN system?	Perform the diagnosis according to DTC for LAN system.	Go to step **2.**
2	**CHECK POOR CONTACT IN CONNECTORS.**	Is there poor contact in VDCCM&H/U connector?	Repair the connector.	Go to step **3.**
3	**CHECK VDCCM&H/U.** 1) Connect all the connectors. 2) Erase the memory. 3) Perform the inspection mode. 4) Read the DTC.	Is the same DTC displayed?	Replace the VDCCM&H/U. <Ref. to VDC-7, VDC Control Module and Hydraulic Control Unit (VDCCM/U).>	Temporary poor contact occurs.

AG:DTC C0051 VALVE RELAY OFF MALFUNCTION

DTC DETECTING CONDITION:

Defective valve relay

TROUBLE SYMPTOM:

- ABS does not operate.
- EBD does not operate.
- VDC does not operate.

WIRING DIAGRAM:

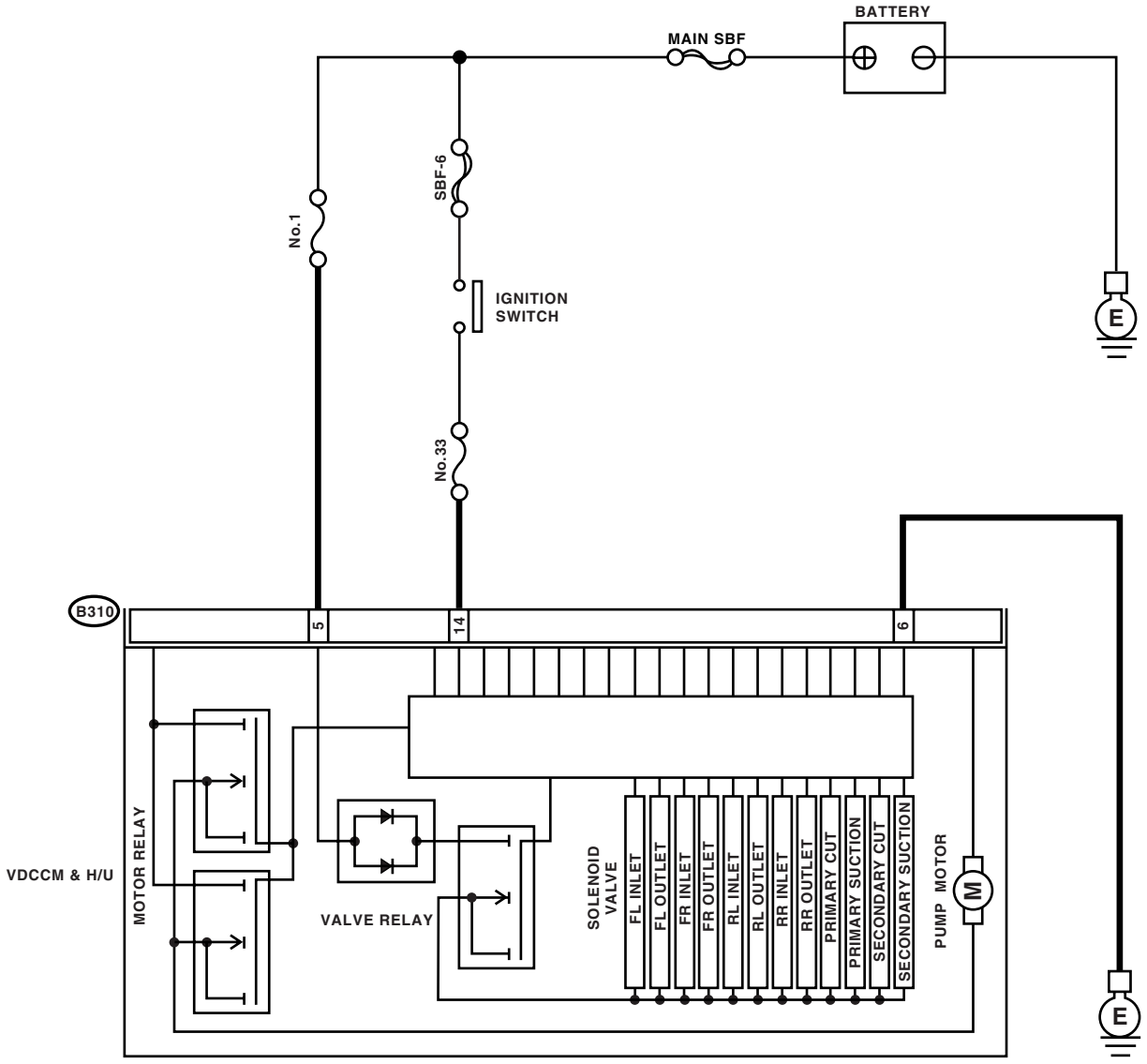

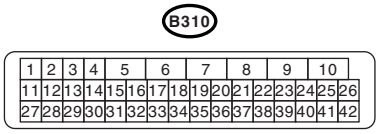

VDC00320

	Step	Check	Yes	No
1	**CHECK INPUT VOLTAGE FOR VDCCM&H/U.** 1) Turn the ignition switch to OFF. 2) Disconnect the connector from VDCCM&H/U. 3) Run the engine at idle. 4) Measure the voltage between VDCCM&H/U connector and chassis ground. ***Connector & terminal*** ***(B310) No. 5 (+) — Chassis ground (−):***	Is the voltage 10 — 15 V?	Go to step **2.**	Repair the harness connector between battery and VDCCM&H/U.
2	**CHECK GROUND CIRCUIT FOR VDCCM&H/U.** 1) Turn the ignition switch to OFF. 2) Measure the resistance between VDCCM&H/U connector and chassis ground. ***Connector & terminal*** ***(B310) No. 6 — Chassis ground:***	Is the resistance less than 0.5 Ω?	Go to step **3.**	Repair the VDCCM&H/U ground harness.
3	**CHECK POOR CONTACT IN CONNECTORS.**	Is there poor contact in connector between generator, battery and VDCCM&H/U?	Repair the connector.	Go to step **4.**
4	**CHECK VDCCM&H/U.** 1) Connect all the connectors. 2) Erase the memory. 3) Perform the inspection mode. 4) Read the DTC.	Is the same DTC displayed?	Replace the VDCCM&H/U. <Ref. to VDC-7, VDC Control Module and Hydraulic Control Unit (VDCCM/U).>	Go to step **5.**
5	**CHECK OTHER DTC DETECTION.**	Is any other DTC displayed?	Perform the diagnosis according to DTC.	Temporary poor contact occurs.

AH:DTC C0051 VALVE RELAY MALFUNCTION

DTC DETECTING CONDITION:

Defective valve relay

TROUBLE SYMPTOM:

- ABS does not operate.
- EBD does not operate.
- VDC does not operate.

WIRING DIAGRAM:

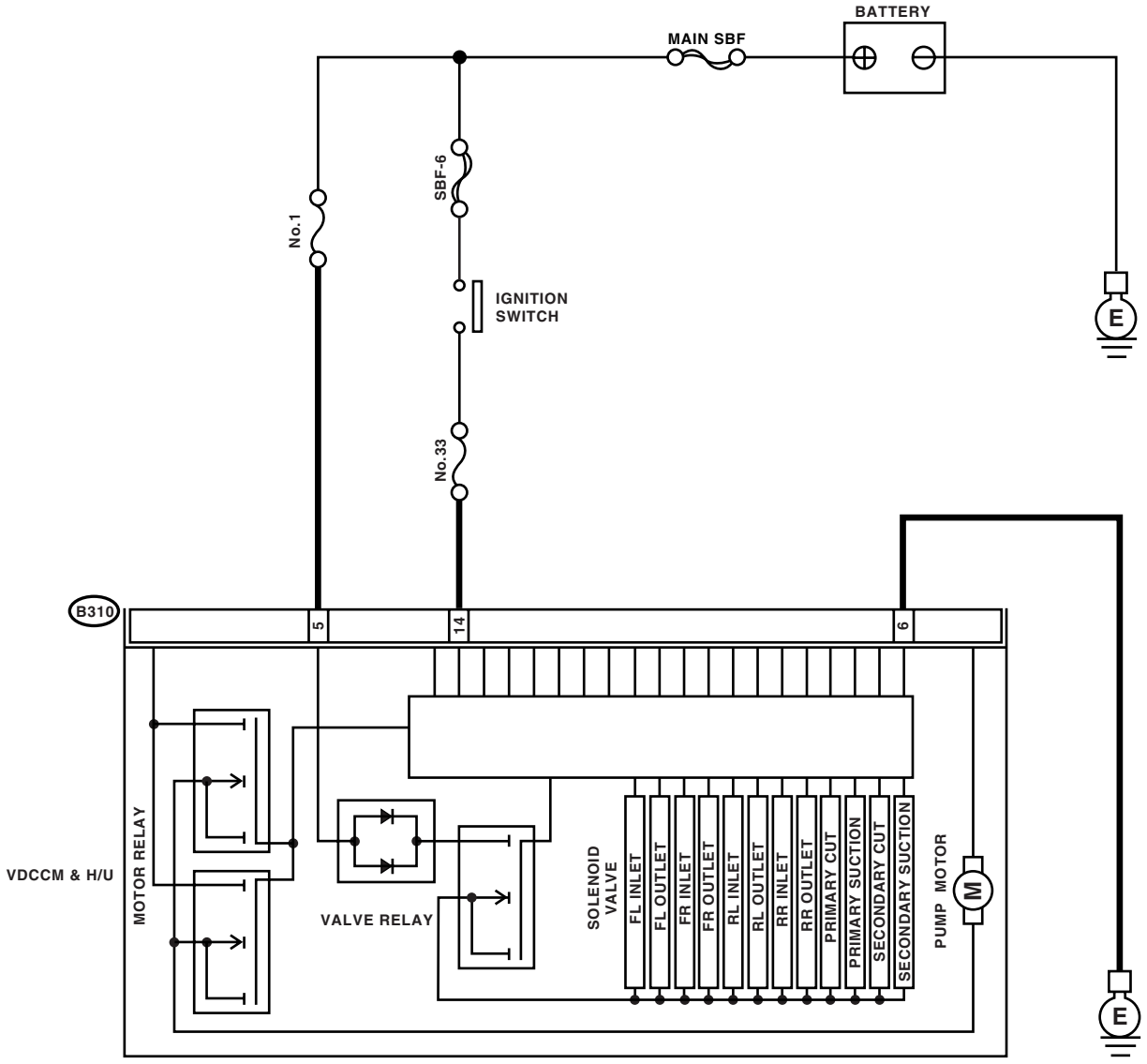

B310

1	2	3	4	5	6	7	8	9	10	
11	12	13	14	15	16	17	18	19	20	21	22	23	24	25	26
27	28	29	30	31	32	33	34	35	36	37	38	39	40	41	42

VDC00320

	Step	Check	Yes	No
1	**CHECK INPUT VOLTAGE FOR VDCCM&H/U.** 1) Turn the ignition switch to OFF. 2) Disconnect the connector from VDCCM&H/U. 3) Run the engine at idle. 4) Measure the voltage between VDCCM&H/U connector and chassis ground. ***Connector & terminal*** ***(B310) No. 14 (+) —Chassis ground (–):*** ***(B310) No. 5 (+) — Chassis ground (–):***	Is the voltage 10 — 15 V?	Go to step **2.**	Repair the power supply circuit.
2	**CHECK INPUT VOLTAGE FOR VDCCM&H/U.** Calculate the voltage difference measured in step 1. A:(B310) No. 14 (+) — Chassis ground (–): B:(B310) No. 5 (+) — Chassis ground (–):	Is the voltage difference between A and B more than 2 V?	Repair the power supply circuit.	Go to step **3.**
3	**CHECK GROUND CIRCUIT FOR VDCCM&H/U.** 1) Turn the ignition switch to OFF. 2) Measure the resistance between VDCCM&H/U connector and chassis ground. ***Connector & terminal*** ***(B310) No. 6 — Chassis ground:***	Is the resistance less than 0.5 Ω?	Go to step **4.**	Repair the VDCCM&H/U ground harness.
4	**CHECK VALVE RELAY FOR VDCCM&H/U.** Measure the resistance between VDCCM&H/U connector terminals. ***Connector & terminal*** ***(B310) No. 5 — (B310) No. 6:***	Is the resistance more than 1 MΩ?	Go to step **5.**	Replace the VDCCM&H/U.
5	**CHECK POOR CONTACT IN CONNECTORS.**	Is there poor contact in connector between generator, battery and VDCCM&H/U?	Repair the connector.	Go to step **6.**
6	**CHECK VDCCM&H/U.** 1) Connect all the connectors. 2) Erase the memory. 3) Perform the inspection mode. 4) Read the DTC.	Is the same DTC displayed?	Replace the VDCCM&H/U. <Ref. to VDC-7, VDC Control Module and Hydraulic Control Unit (VDCCM/U).>	Go to step **7.**
7	**CHECK OTHER DTC DETECTION.**	Is any other DTC displayed?	Perform the diagnosis according to DTC.	Temporary poor contact occurs.

AI: DTC C0051 VALVE RELAY TEST MALFUNCTION

DTC DETECTING CONDITION:

Defective valve relay

TROUBLE SYMPTOM:

- ABS does not operate.
- EBD does not operate.
- VDC does not operate.

WIRING DIAGRAM:

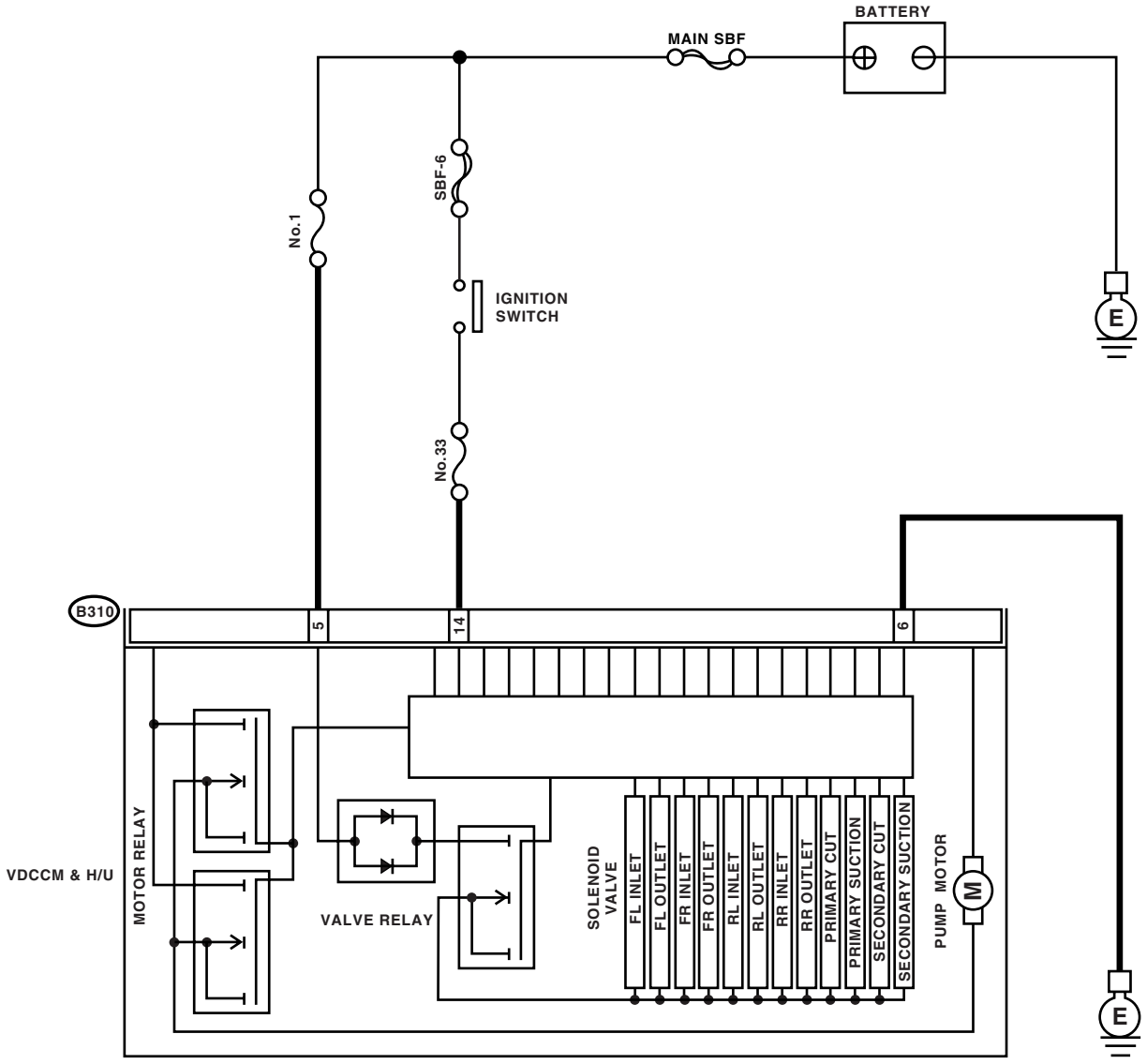

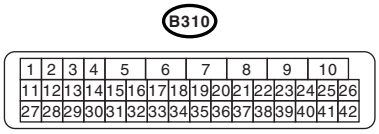

VDC00320

	Step	Check	Yes	No
1	**CHECK INPUT VOLTAGE FOR VDCCM&H/U.** 1) Turn the ignition switch to OFF. 2) Disconnect the connector from VDCCM&H/U. 3) Run the engine at idle. 4) Measure the voltage between VDCCM&H/U connector and chassis ground. ***Connector & terminal*** ***(B310) No. 5 (+) — Chassis ground (−):***	Is the voltage 10 — 15 V?	Go to step **2.**	Repair the power supply circuit in VDCCM&H/U.
2	**CHECK GROUND CIRCUIT FOR VDCCM&H/U.** 1) Turn the ignition switch to OFF. 2) Measure the resistance between VDCCM&H/U connector and chassis ground. ***Connector & terminal*** ***(B310) No. 6 — Chassis ground:***	Is the resistance less than 0.5 Ω?	Go to step **3.**	Repair the ground circuit in VDCCM&H/U.
3	**CHECK VALVE RELAY FOR VDCCM&H/U.** Measure the resistance between VDCCM&H/U connector terminals. ***Connector & terminal*** ***(B310) No. 5 — (B310) No. 6:***	Is the resistance more than 1 MΩ?	Go to step **4.**	Replace the VDCCM&H/U.
4	**CHECK POOR CONTACT IN CONNECTORS.**	Is there poor contact in connector between generator, battery and VDCCM&H/U?	Repair the connector.	Go to step **5.**
5	**CHECK VDCCM&H/U.** 1) Connect all the connectors. 2) Erase the memory. 3) Perform the inspection mode. 4) Read the DTC.	Is the same DTC displayed?	Replace the VDCCM&H/U. <Ref. to VDC-7, VDC Control Module and Hydraulic Control Unit (VDCCM/U).>	Go to step **6.**
6	**CHECK OTHER DTC DETECTION.**	Is any other DTC displayed?	Perform the diagnosis according to DTC.	Temporary poor contact occurs.

AJ:DTC C0051 VALVE RELAY ON MALFUNCTION

DTC DETECTING CONDITION:

Defective valve relay

TROUBLE SYMPTOM:

- ABS does not operate.
- VDC does not operate.
- EBD may not operate.

WIRING DIAGRAM:

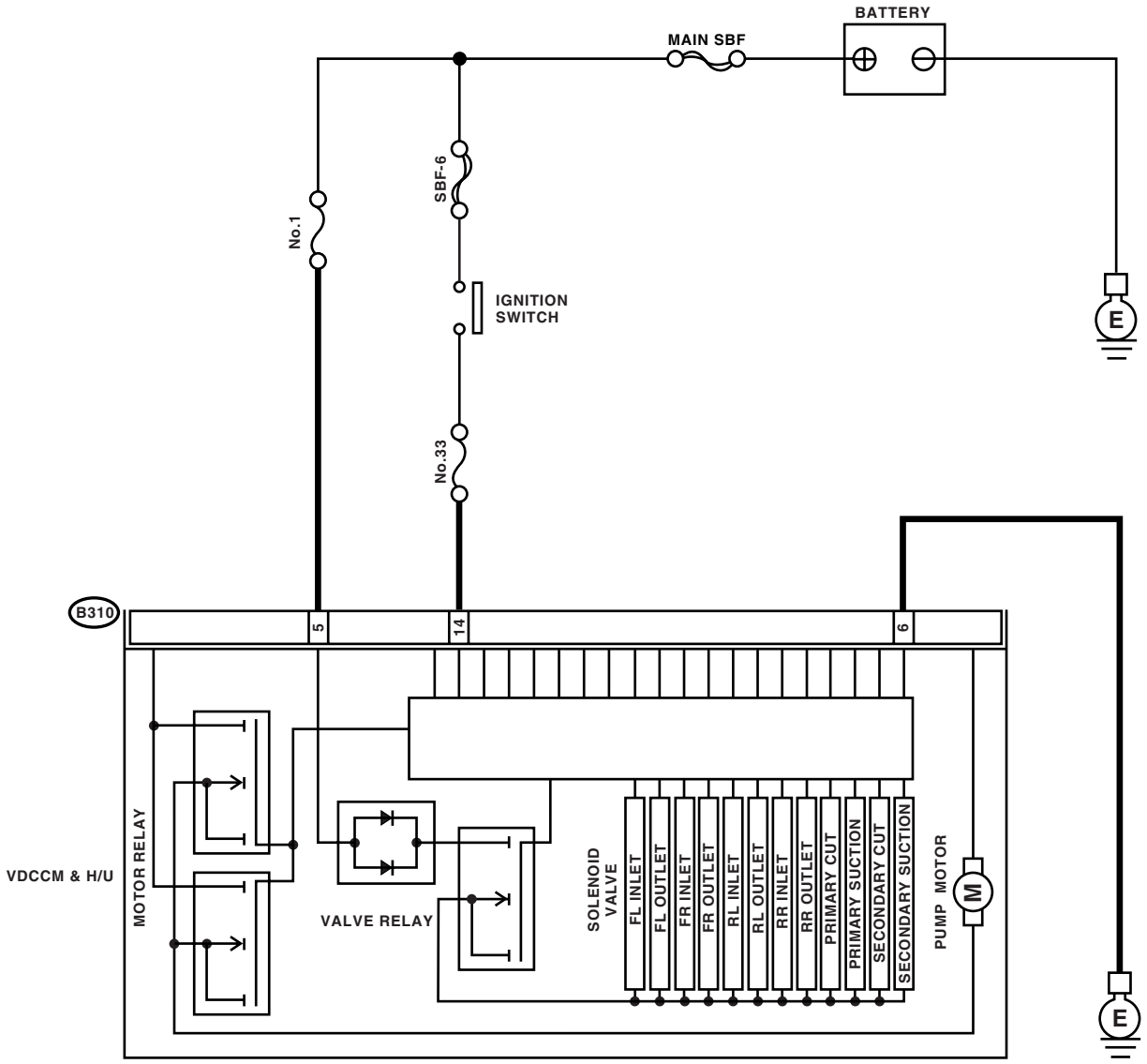

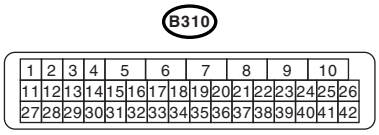

VDC00320

	Step	Check	Yes	No
1	**CHECK VALVE RELAY FOR VDCCM&H/U.** 1) Disconnect the connector from VDCCM&H/U. 2) Measure the resistance between VDCCM&H/U connector terminals. ***Terminals*** ***No. 5 — No. 6:***	Is the resistance more than 1 MΩ?	Go to step **2.**	Replace the VDCCM&H/U. <Ref. to VDC-7, VDC Control Module and Hydraulic Control Unit (VDCCM/U).>
2	**CHECK POOR CONTACT IN CONNECTORS.**	Is there poor contact in connector between generator, battery and VDCCM&H/U?	Repair the connector.	Go to step **3.**
3	**CHECK VDCCM&H/U.** 1) Connect all the connectors. 2) Erase the memory. 3) Perform the inspection mode. 4) Read the DTC.	Is the same DTC displayed?	Replace the VDCCM&H/U. <Ref. to VDC-7, VDC Control Module and Hydraulic Control Unit (VDCCM/U).>	Go to step **4.**
4	**CHECK OTHER DTC DETECTION.**	Is any other DTC displayed?	Perform the diagnosis according to DTC. <Ref. to VDC(diag)-34, List of Diagnostic Trouble Code (DTC).>	Temporary poor contact occurs.

AK:DTC C0052 MOTOR/MOTOR RELAY MALFUNCTION

DTC DETECTING CONDITION:

- Defective motor and motor relay
- Defective harness connector

TROUBLE SYMPTOM:

- ABS does not operate.
- VDC does not operate.
- EBD may not operate.

WIRING DIAGRAM:

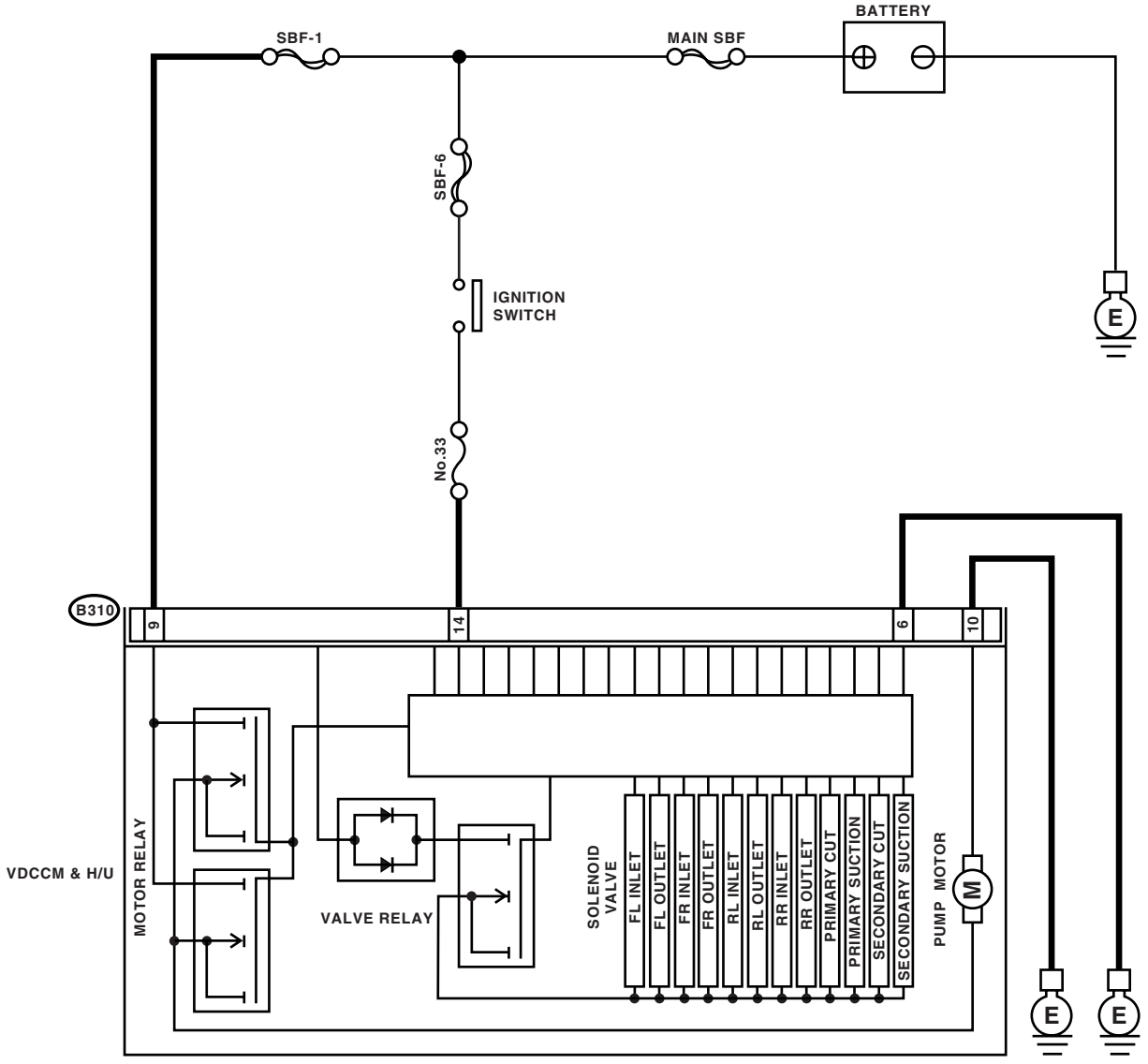

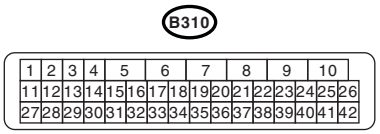

VDC00321

	Step	Check	Yes	No
1	**CHECK INPUT VOLTAGE FOR VDCCM&H/U.** 1) Turn the ignition switch to OFF. 2) Disconnect the connector from VDCCM&H/U. 3) Turn the ignition switch to ON. 4) Measure the voltage between VDCCM&H/U connector and chassis ground. ***Connector & terminal*** ***(B310) No. 9 (+) — Chassis ground (–):*** ***(B310) No. 14 (+) — Chassis ground (–):***	Is the voltage 10 — 15 V?	Go to step **2.**	Repair the power supply circuit in VDCCM&H/U.
2	**CHECK INSTALLATION OF MOTOR GROUND.**	Is the motor ground terminal installation bolt tightened 33 N·m (3.3 kgf-m, 24.3 ft-lb)?	Go to step **3.**	Tighten the motor ground terminal installation bolts.
3	**CHECK GROUND CIRCUIT FOR VDCCM&H/U.** 1) Turn the ignition switch to OFF. 2) Measure the resistance between VDCCM&H/U connector and chassis ground. ***Connector & terminal*** ***(B310) No. 6 — Chassis ground:*** ***(B310) No. 10 — Chassis ground:***	Is the resistance less than 0.5 Ω?	Go to step **4.**	Repair the VDCCM&H/U ground harness.
4	**CHECK MOTOR RELAY FOR VDCCM&H/U.** Measure the resistance between VDCCM&H/U connector terminals. ***Terminals*** ***No. 9 — No. 10:***	Is the resistance more than 1 MΩ?	Go to step **5.**	Replace the VDCCM&H/U.
5	**CHECK POOR CONTACT IN CONNECTORS.** Turn the ignition switch to OFF.	Is there poor contact in connector between generator, battery and VDCCM&H/U?	Repair the connector.	Go to step **6.**
6	**CHECK VDCCM&H/U.** 1) Connect all the connectors. 2) Erase the memory. 3) Perform the inspection mode. 4) Read the DTC.	Is the same DTC displayed?	Replace the VDCCM&H/U. <Ref. to VDC-7, VDC Control Module and Hydraulic Control Unit (VDCCM/U).>	Go to step **7.**
7	**CHECK OTHER DTC DETECTION.**	Is any other DTC displayed?	Perform the diagnosis according to DTC. <Ref. to VDC(diag)-34, List of Diagnostic Trouble Code (DTC).>	Temporary poor contact occurs. NOTE: Though the ABS warning light remains on at this time, it is normal. Drive the vehicle at more than 12 km/h (7 MPH) in order to turn ABS warning light off. Be sure to drive the vehicle and check the warning light goes off.

AL:DTC C0052 MOTOR/MOTOR RELAY OFF MALFUNCTION

DTC DETECTING CONDITION:

- Defective motor relay
- Defective harness connector

TROUBLE SYMPTOM:

- ABS does not operate.
- VDC does not operate.
- EBD may not operate.

NOTE:
For the diagnostic procedure, refer to DTC C0052 “MOTOR/MOTOR RELAY MALFUNCTION” <Ref. to VDC(diag)-73, DTC C0052 MOTOR/MOTOR RELAY MALFUNCTION, Diagnostic Procedure with Diagnostic Trouble Code (DTC).>

AM:DTC C0052 MOTOR/MOTOR RELAY ON MALFUNCTION

DTC DETECTING CONDITION:

- Defective motor relay
- Defective harness connector

TROUBLE SYMPTOM:

- ABS does not operate.
- VDC does not operate.
- EBD may not operate.

WIRING DIAGRAM:

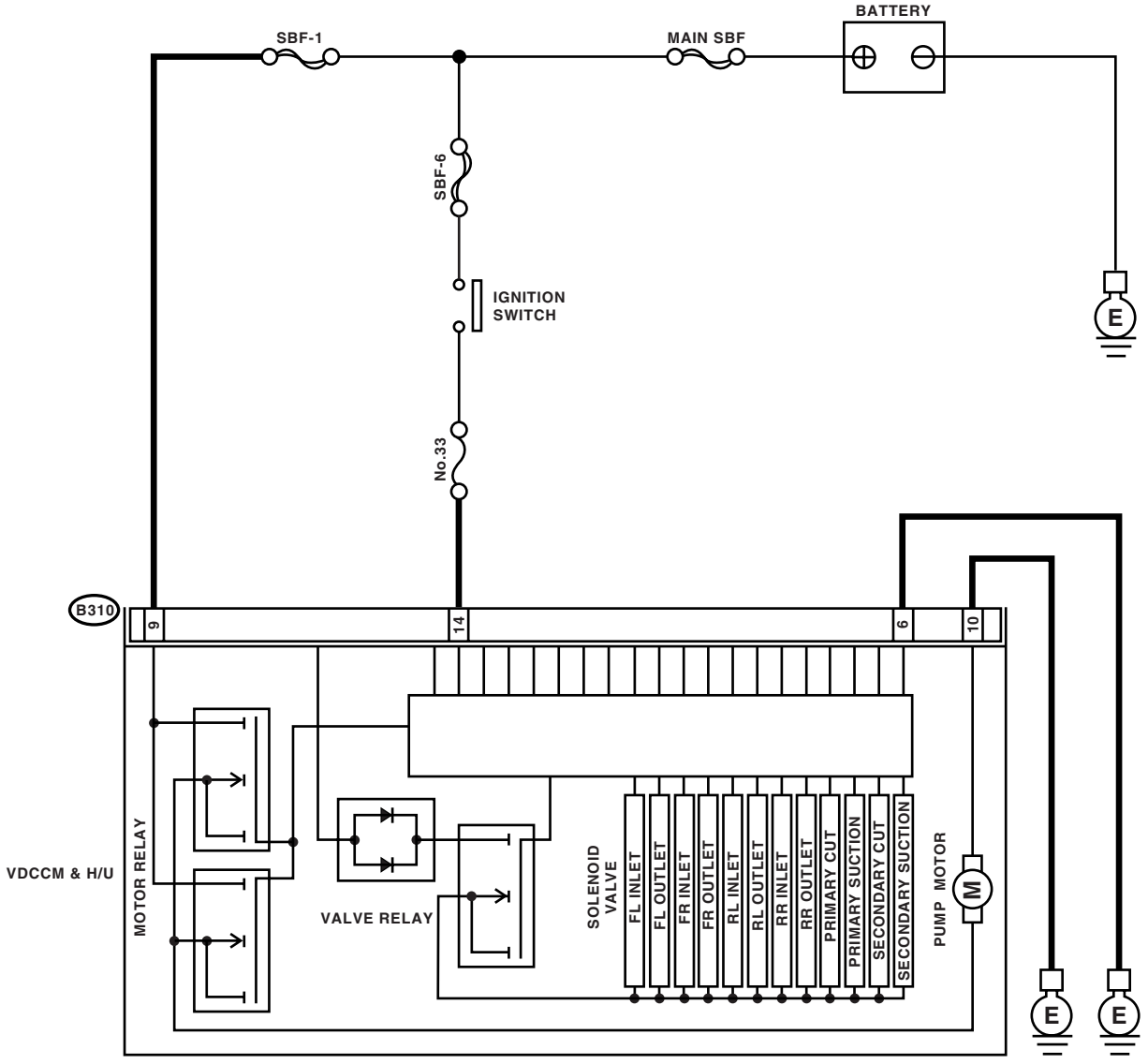

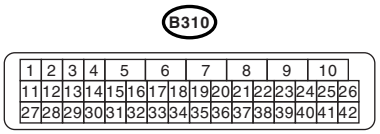

VDC00321

	Step	Check	Yes	No
1	**CHECK MOTOR RELAY FOR VDCCM&H/U.** 1) Disconnect the connector from VDCCM&H/U. 2) Measure the resistance between VDCCM&H/U connector terminals. ***Terminals*** ***No. 9 — No. 10:***	Is the resistance more than 1 MΩ?	Go to step **2.**	Replace the VDCCM&H/U. <Ref. to VDC-7, VDC Control Module and Hydraulic Control Unit (VDCCM/U).>
2	**CHECK VDCCM&H/U.** 1) Connect all the connectors. 2) Erase the memory. 3) Perform the inspection mode. 4) Read the DTC.	Is the same DTC displayed?	Replace the VDCCM&H/U. <Ref. to VDC-7, VDC Control Module and Hydraulic Control Unit (VDCCM/U).>	Go to step **3.**
3	**CHECK OTHER DTC DETECTION.**	Is any other DTC displayed?	Perform the diagnosis according to DTC. <Ref. to VDC(diag)-34, List of Diagnostic Trouble Code (DTC).>	Temporary poor contact occurs. NOTE: Though the ABS warning light remains on at this time, it is normal. Drive the vehicle at more than 12 km/h (7 MPH) in order to turn ABS warning light off. Be sure to drive the vehicle and check the warning light goes off.

AN:DTC C0052 MOTOR

DTC DETECTING CONDITION:

- Defective motor
- Defective motor relay
- Defective harness connector

TROUBLE SYMPTOM:

- ABS does not operate.
- VDC does not operate.
- EBD may not operate.

NOTE:
For the diagnostic procedure, refer to DTC C0052 “MOTOR/MOTOR RELAY MALFUNCTION” <Ref. to VDC(diag)-73, DTC C0052 MOTOR/MOTOR RELAY MALFUNCTION, Diagnostic Procedure with Diagnostic Trouble Code (DTC).>

AO:DTC C0054 BLS OPEN CIRCUIT

DTC DETECTING CONDITION:

Defective stop light switch

TROUBLE SYMPTOM:

- ABS does not operate.
- VDC does not operate.

WIRING DIAGRAM:

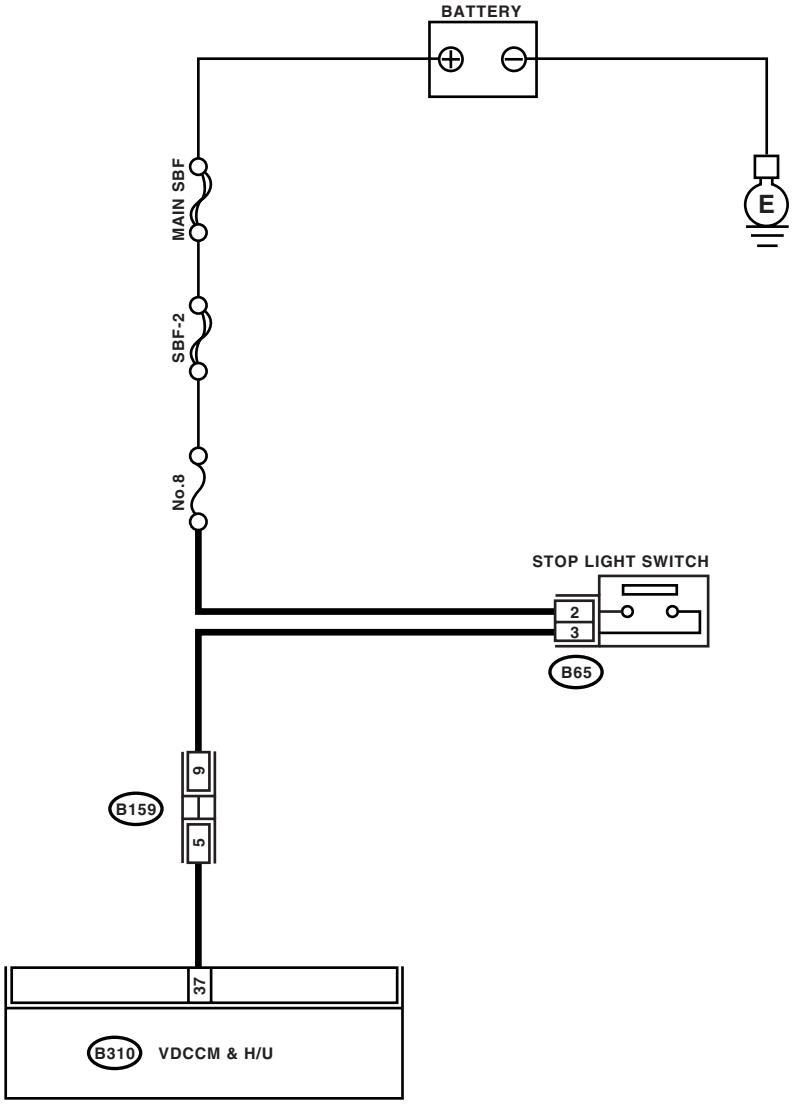

VDC00301

	Step	Check	Yes	No
1	**CHECK OUTPUT OF STOP LIGHT SWITCH WITH SUBARU SELECT MONITOR.** 1) Select {Current Data Display & Save} in Subaru Select Monitor. 2) Release the brake pedal. 3) Read the stop light switch output in Subaru Select Monitor.	Is OFF displayed on the display?	Go to step **2.**	Go to step **3.**

	Step	Check	Yes	No
2	**CHECK OUTPUT OF STOP LIGHT SWITCH WITH SUBARU SELECT MONITOR.** 1) Depress the brake pedal. 2) Read the stop light switch output in Subaru Select Monitor.	Is ON displayed on the display?	Go to step **5.**	Go to step **3.**
3	**CHECK IF STOP LIGHTS COME ON.** Depress the brake pedal.	Does the stop light illuminate?	Go to step **4.**	Repair the stop lights circuit.
4	**CHECK OPEN CIRCUIT OF HARNESS.** 1) Turn the ignition switch to OFF. 2) Disconnect the connector from VDCCM&H/U. 3) Depress the brake pedal. 4) Measure the voltage between VDCCM&H/U connector and chassis ground. ***Connector & terminal*** ***(B310) No. 37 (+) — Chassis ground (−):***	Is the voltage 10 — 15 V?	Go to step **5.**	Repair the harness between stop light switch and VDCCM&H/U connector.
5	**CHECK POOR CONTACT IN CONNECTORS.**	Is there poor contact in connector between stop light switch and VDCCM&H/U?	Go to step **6.**	Repair the connector.
6	**CHECK VDCCM&H/U.** 1) Connect all the connectors. 2) Erase the memory. 3) Perform the inspection mode. 4) Read the DTC.	Is the same DTC displayed?	Replace the VDCCM&H/U. <Ref. to VDC-7, VDC Control Module and Hydraulic Control Unit (VDCCM/U).>	Go to step **7.**
7	**CHECK OTHER DTC DETECTION.**	Is any other DTC displayed?	Perform the diagnosis according to DTC.	Temporary poor contact occurs.

AP:DTC C0054 BLS ON MALFUNCTION

DTC DETECTING CONDITION:

Defective stop light switch

TROUBLE SYMPTOM:

- ABS does not operate.
- VDC does not operate.

WIRING DIAGRAM:

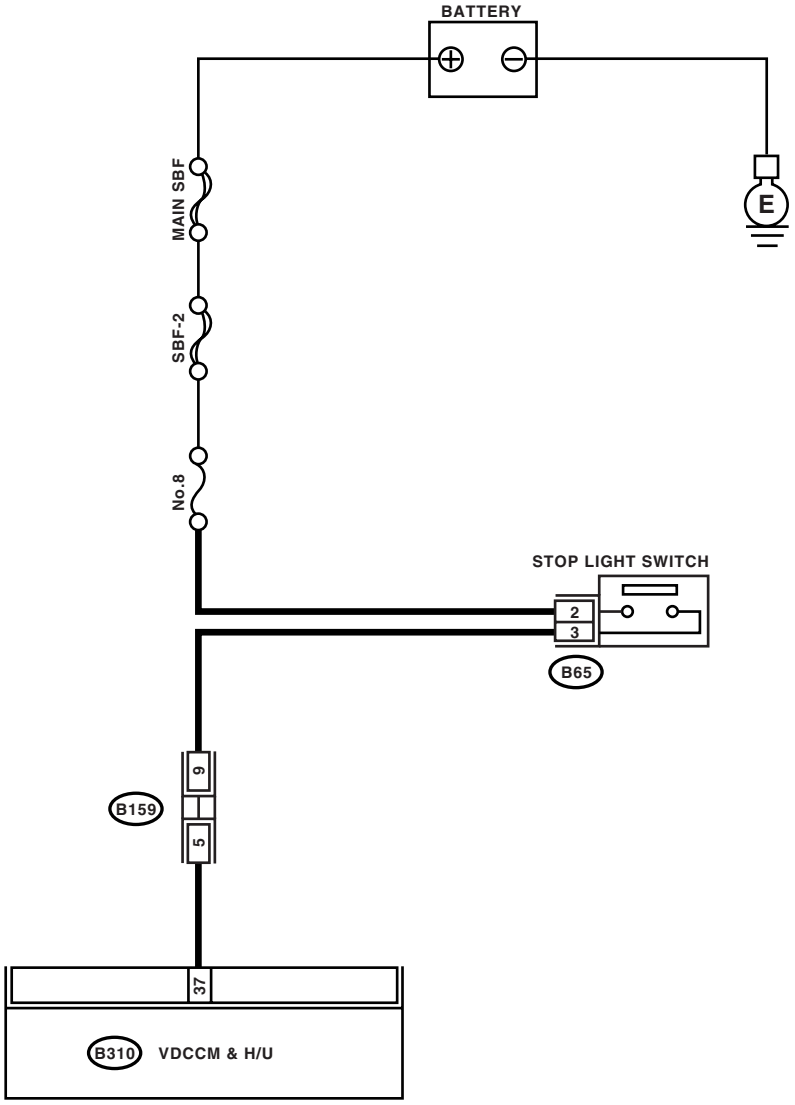

VDC00301

	Step	Check	Yes	No
1	**CHECK STOP LIGHT SWITCH.** 1) Turn the ignition switch to OFF. 2) Disconnect the stop light switch connector. 3) Measure the resistance of stop light switch terminals.	Is the resistance more than 1 MΩ when switch is OFF (when pedal is not depressed)?	Go to step **2.**	Replace the stop light switch.
2	**INTERVIEWING CUSTOMERS.** Make sure that the operation was performed in which accelerator pedal and brake pedal were depressed simultaneously (with depressing brake pedal with left foot).	Were the acceleration pedal and brake pedal depressed simultaneously during driving?	System is in good order. (DTC may be recorded while brake is applied during driving.)	Go to step **3.**
3	**CHECK VDCCM&H/U.** 1) Connect all the connectors. 2) Erase the memory. 3) Perform the inspection mode. 4) Read the DTC.	Is the same DTC displayed?	Replace the VDCCM&H/U. <Ref. to VDC-7, VDC Control Module and Hydraulic Control Unit (VDCCM/U).>	Go to step **4.**
4	**CHECK OTHER DTC DETECTION.**	Is any other DTC displayed?	Perform the diagnosis according to DTC. <Ref. to VDC(diag)-34, List of Diagnostic Trouble Code (DTC).>	Temporary poor contact occurs.

AQ:DTC C0057 EGI COMMUNICATION

DTC DETECTING CONDITION:

No CAN signal from ECM.

TROUBLE SYMPTOM:

- ABS does not operate.
- VDC does not operate.

	Step	Check	Yes	No
1	**CHECK LAN SYSTEM.** Perform the diagnosis for LAN system. <Ref. to LAN(diag)-24, OPERATION, Read Diagnostic Trouble Code (DTC).>	Is there any fault in LAN system?	Perform the diagnosis according to DTC for LAN system.	Go to step **2.**
2	**CHECK POOR CONTACT IN CONNECTORS.**	Is the poor contact in ECM connector?	Repair the connector.	Go to step **3.**
3	**CHECK ECM.**	Is ECM normal?	Go to step **4.**	Replace the ECM.
4	**CHECK VDCCM&H/U.** 1) Connect all the connectors. 2) Erase the memory. 3) Perform the inspection mode. 4) Read the DTC.	Is the same DTC displayed?	Replace the VDCCM&H/U. <Ref. to VDC-7, VDC Control Module and Hydraulic Control Unit (VDCCM/U).>	Go to step **5.**
5	**CHECK OTHER DTC DETECTION.**	Is any other DTC displayed?	Perform the diagnosis according to DTC.	It results from a temporary noise interference.

AR:DTC C0071 EXCESSIVE STEERING ANGLE SENSOR OUTPUT OFFSET

DTC DETECTING CONDITION:

Defective steering angle sensor

TROUBLE SYMPTOM:

VDC does not operate.

WIRING DIAGRAM:

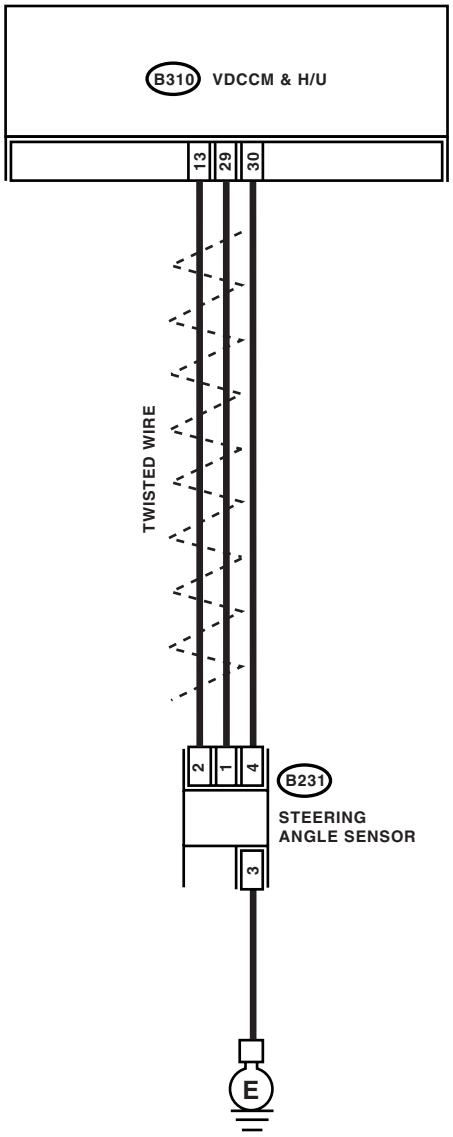

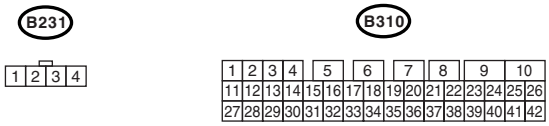

VDC00247

	Step	Check	Yes	No
1	**CHECK STEERING WHEEL.** 1) Drive the vehicle on a flat road. 2) Park the vehicle straight. 3) Check the steering wheel for deviation from center.	Is the deviation from the center of steering wheel less than 5°?	Go to step **2.**	Perform the centering adjustment of steering wheel.
2	**CHECK VDCCM&H/U.** 1) Turn the ignition switch to OFF. 2) Connect all the connectors. 3) Erase the memory. 4) Perform the inspection mode. 5) Read the DTC.	Is the same DTC displayed?	Replace the VDCCM&H/U. <Ref. to VDC-7, VDC Control Module and Hydraulic Control Unit (VDCCM/U).>	Go to step **3.**
3	**CHECK OTHER DTC DETECTION.**	Is any other DTC displayed?	Perform the diagnosis according to DTC. <Ref. to VDC(diag)-34, List of Diagnostic Trouble Code (DTC).>	Temporary poor contact occurs.

AS:DTC C0071 EXCESSIVE VARIATION AMOUNT OF STEERING ANGLE SENSOR OUTPUT

DTC DETECTING CONDITION:
Defective steering angle sensor
TROUBLE SYMPTOM:
VDC does not operate.
WIRING DIAGRAM:

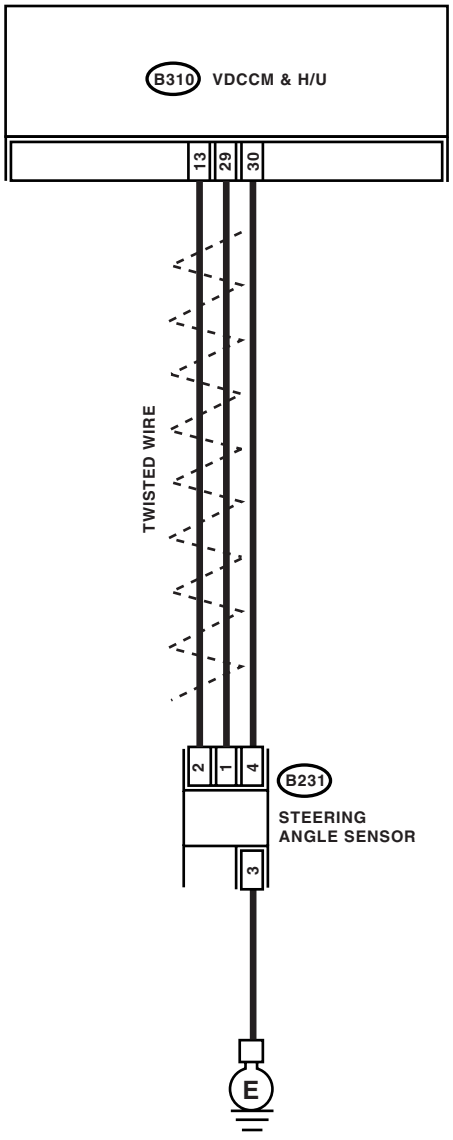

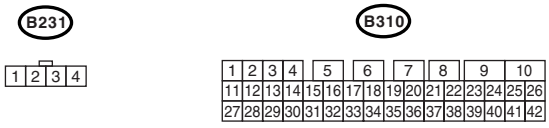

VDC00247

Step		Check	Yes	No
1	**CHECK VDCCM&H/U.** 1) Turn the ignition switch to OFF. 2) Connect all the connectors. 3) Erase the memory. 4) Perform the inspection mode. 5) Read the DTC.	Is the same DTC displayed?	Replace the VDCCM&H/U. <Ref. to VDC-7, VDC Control Module and Hydraulic Control Unit (VDCCM/U).>	Go to step **2.**
2	**CHECK OTHER DTC DETECTION.**	Is any other DTC displayed?	Perform the diagnosis according to DTC. <Ref. to VDC(diag)-34, List of Diagnostic Trouble Code (DTC).>	Temporary poor contact occurs.

AT:DTC C0071 STEERING ANGLE SENSOR OUTPUT

DTC DETECTING CONDITION:

Defective steering angle sensor

TROUBLE SYMPTOM:

VDC does not operate.

WIRING DIAGRAM:

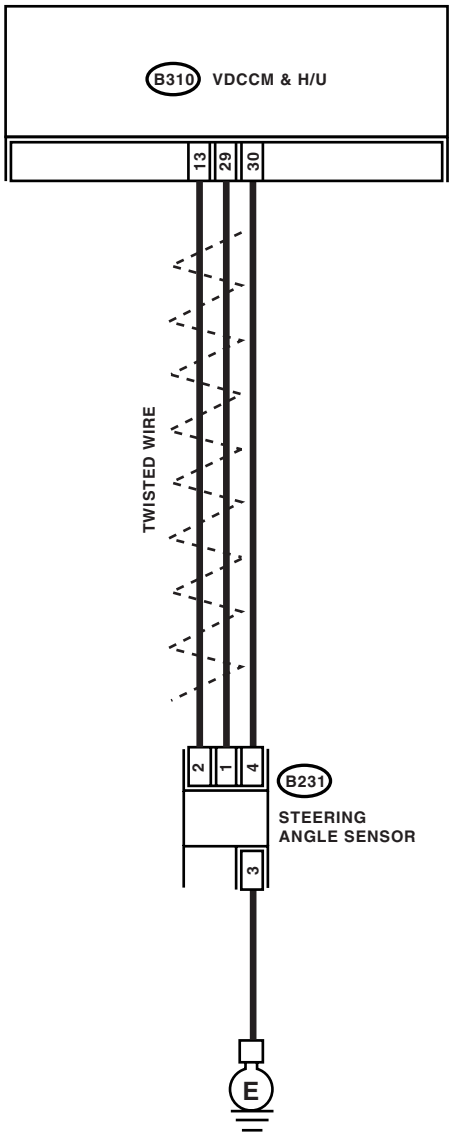

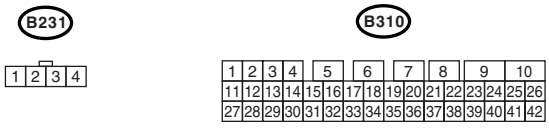

VDC00247

Step		Check	Yes	No
1	**CHECK STEERING WHEEL.** 1) Drive the vehicle on a flat road. 2) Park the vehicle straight. 3) Check the steering wheel for deviation from center.	Is the deviation from the center of steering wheel less than 5°?	Go to step **2.**	Perform the centering adjustment of steering wheel.

	Step	Check	Yes	No
2	**CHECK DRIVING PLACE.** Check if the vehicle ran the road with banks or sandy surface (which does not mean a dirt road).	Did the vehicle run the road with banks or sandy surface (which does not mean a dirt road)?	VDCCM&H/U may record DTC when the vehicle ran the road with banks or sandy surface (which does not mean a dirt road).	Go to step **3.**
3	**CHECK OUTPUT OF STEERING ANGLE SENSOR WITH SUBARU SELECT MONITOR.** 1) Select {Current Data Display & Save} in Subaru Select Monitor. 2) Read the steering angle sensor output displayed on display.	Does the steering angle sensor output value on the display vary in accordance with steering operation when turning the steering wheel to the right or left?	Go to step **4.**	Replace the steering angle sensor.
4	**CHECK VDCCM&H/U.** 1) Turn the ignition switch to OFF. 2) Connect all the connectors. 3) Erase the memory. 4) Perform the inspection mode. 5) Read the DTC.	Is the same DTC displayed?	Replace the VDCCM&H/U. <Ref. to VDC-7, VDC Control Module and Hydraulic Control Unit (VDCCM/U).>	Go to step **5.**
5	**CHECK OTHER DTC DETECTION.**	Is any other DTC displayed?	Perform the diagnosis according to DTC.	Temporary poor contact occurs.

AU:DTC C0071 STEERING ANGLE SENSOR COMMUNICATION

DTC DETECTING CONDITION:

Signal does not come from the steering angle sensor.

TROUBLE SYMPTOM:

VDC does not operate.

WIRING DIAGRAM:

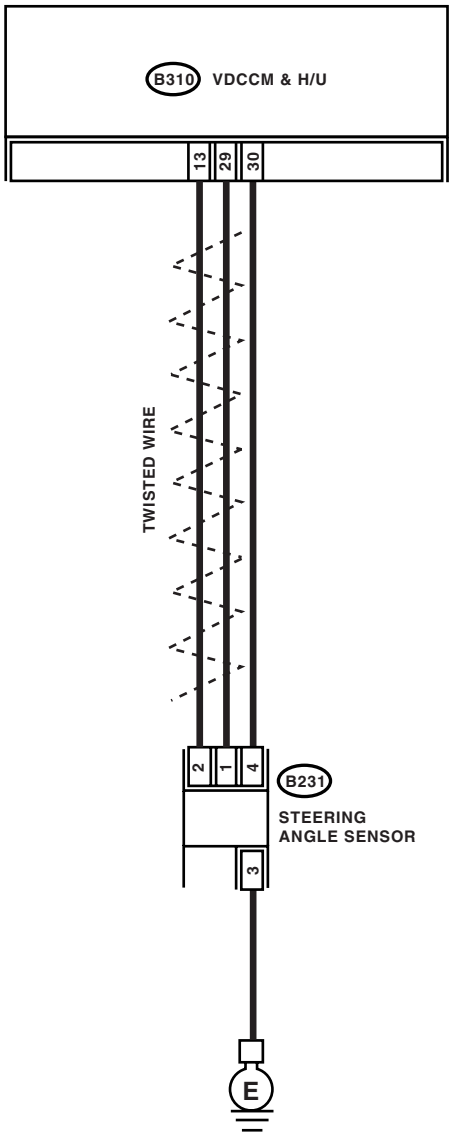

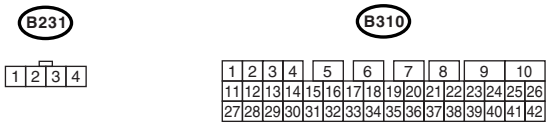

VDC00247

	Step	Check	Yes	No
1	**CHECK POWER SUPPLY FOR STEERING ANGLE SENSOR.** 1) Turn the ignition switch to OFF. 2) Disconnect the connector from steering angle sensor. 3) Turn the ignition switch to ON. 4) Measure the voltage between steering angle sensor and chassis ground. ***Connector & terminal*** ***(B231) No. 4 (+) — Chassis ground (−):***	Is the voltage 10 — 15 V?	Go to step **4.**	Go to step **2.**
2	**CHECK OUTPUT VOLTAGE OF VDCCM&H/U.** Measure the voltage between VDCCM&H/U and chassis ground. ***Connector & terminal*** ***(B310) No. 30 (+) — Chassis ground (−):***	Is the voltage 10 — 15 V?	Repair the harness between steering angle sensor and VDCCM&H/U.	Go to step **3.**
3	**CHECK POOR CONTACT IN CONNECTORS.**	Is there poor contact in connector?	Correct or replace the connector.	Go to step **9.**
4	**CHECK GROUND CIRCUIT FOR STEERING ANGLE SENSOR.** Measure the resistance between steering angle sensor and chassis ground. ***Connector & terminal*** ***(B231) No. 3 — Chassis ground:***	Is the resistance less than 0.5 Ω?	Go to step **5.**	Repair ground circuit in the steering angle sensor.
5	**CHECK STEERING ANGLE SENSOR HARNESS.** 1) Disconnect the connector from VDCCM&H/U. 2) Measure the resistance between VDCCM&H/U and steering angle sensor. ***Connector & terminal*** ***(B231) No. 1 — (B310) No. 29:*** ***(B231) No. 2 — (B310) No. 13:***	Is the resistance 0.5 less than Ω?	Go to step **6.**	Repair the harness between steering angle sensor and VDCCM&H/U.
6	**CHECK GROUND SHORT CIRCUIT OF STEERING ANGLE SENSOR HARNESS.** Measure the resistance between steering angle sensor and chassis ground. ***Connector & terminal*** ***(B231) No. 1 — Chassis ground:*** ***(B231 No. 2 — Chassis ground:***	Is the resistance more than 1 MΩ?	Go to step **7.**	Repair the harness between steering angle sensor and VDCCM&H/U.
7	**CHECK STEERING ANGLE SENSOR.** 1) Turn the ignition switch to OFF. 2) Connect all the connectors. 3) Erase the memory. 4) Perform the inspection mode. 5) Read the DTC.	Is the same DTC displayed?	Go to step **8.**	Go to step **10.**
8	**CHECK VDCCM&H/U.** 1) Turn the ignition switch to OFF. 2) Replace the steering angle sensor. 3) Erase the memory. 4) Perform the inspection mode. 5) Read the DTC.	Is the same DTC displayed?	Replace the VDCCM&H/U. <Ref. to VDC-7, VDC Control Module and Hydraulic Control Unit (VDCCM/U).>	Go to step **11.**

	Step	Check	Yes	No
9	**CHECK STEERING ANGLE SENSOR.** 1) Turn the ignition switch to OFF. 2) Connect all the connectors. 3) Erase the memory. 4) Perform the inspection mode. 5) Read the DTC.	Is the same DTC displayed?	Replace the VDCCM&H/U. <Ref. to VDC-7, VDC Control Module and Hydraulic Control Unit (VDCCM/U).>	Go to step **10.**
10	**CHECK OTHER DTC DETECTION.**	Is any other DTC displayed?	Perform the diagnosis according to DTC.	Temporary poor contact occurs.
11	**CHECK OTHER DTC DETECTION.**	Is any other DTC displayed?	Perform the diagnosis according to DTC.	Original steering angle sensor malfunction

AV:DTC C0071 STEERING ANGLE SENSOR POWER SUPPLY MALFUNCTION

DTC DETECTING CONDITION:

Defective steering angle sensor

TROUBLE SYMPTOM:

- ABS does not operate.
- VDC does not operate.

NOTE:

- Warning light does not illuminate though problem is detected.
- The ABS and VDC operate normally if voltage returns.

WIRING DIAGRAM:

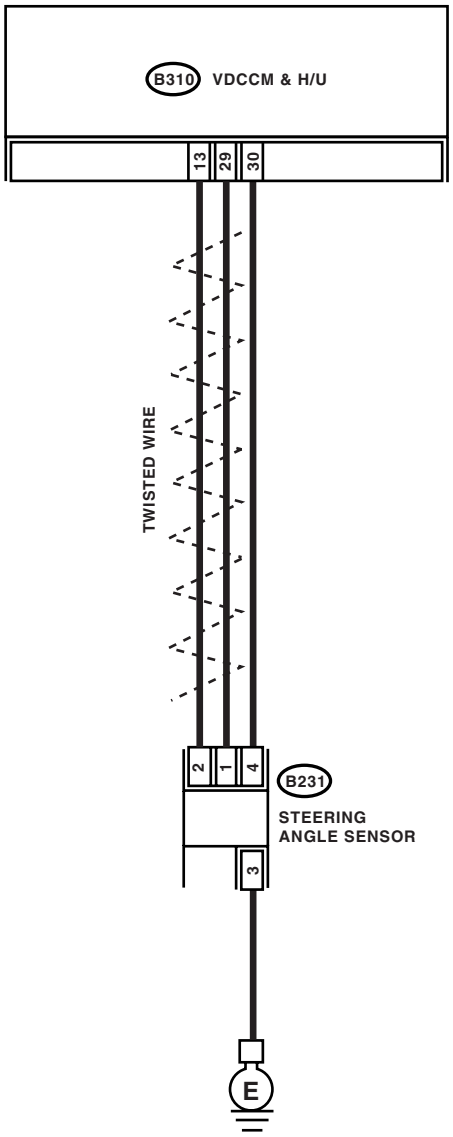

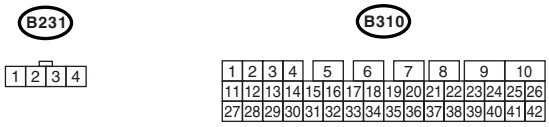

VDC00247

	Step	Check	Yes	No
1	**CHECK POWER SUPPLY FOR STEERING ANGLE SENSOR.** 1) Turn the ignition switch to OFF. 2) Disconnect the connector from steering angle sensor. 3) Turn the ignition switch to ON. 4) Measure the voltage between steering angle sensor and chassis ground. ***Connector & terminal*** ***(B231) No. 4 (+) — Chassis ground (−):***	Is the voltage 10 — 15 V?	Go to step **4.**	Go to step **2.**
2	**CHECK OUTPUT VOLTAGE OF VDCCM&H/U.** Measure the voltage between VDCCM&H/U and chassis ground. ***Connector & terminal*** ***(B310) No. 30 (+) — Chassis ground (−):***	Is the voltage 10 — 15 V?	Repair the harness between steering angle sensor and VDCCM&H/U.	Go to step **3.**
3	**CHECK POOR CONTACT IN CONNECTORS.**	Is there poor contact in connector?	Correct or replace the connector.	Go to step **7.**
4	**CHECK GROUND CIRCUIT FOR STEERING ANGLE SENSOR.** Measure the resistance between steering angle sensor and chassis ground. ***Connector & terminal*** ***(B231) No. 3 — Chassis ground:***	Is the resistance less than 0.5 Ω?	Go to step **5.**	Repair ground circuit in the steering angle sensor.
5	**CHECK STEERING ANGLE SENSOR.** 1) Turn the ignition switch to OFF. 2) Connect all the connectors. 3) Erase the memory. 4) Perform the inspection mode. 5) Read the DTC.	Is the same DTC displayed?	Go to step **6.**	Go to step **8.**
6	**CHECK VDCCM&H/U.** 1) Turn the ignition switch to OFF. 2) Replace the steering angle sensor. 3) Erase the memory. 4) Perform the inspection mode. 5) Read the DTC.	Is the same DTC displayed?	Replace the VDCCM&H/U. <Ref. to VDC-7, VDC Control Module and Hydraulic Control Unit (VDCCM/U).>	Go to step **9.**
7	**CHECK STEERING ANGLE SENSOR.** 1) Turn the ignition switch to OFF. 2) Connect all the connectors. 3) Erase the memory. 4) Perform the inspection mode. 5) Read the DTC.	Is the same DTC displayed?	Replace the VDCCM&H/U. <Ref. to VDC-7, VDC Control Module and Hydraulic Control Unit (VDCCM/U).>	Go to step **8.**
8	**CHECK OTHER DTC DETECTION.**	Is any other DTC displayed?	Perform the diagnosis according to DTC.	Temporary poor contact occurs.
9	**CHECK OTHER DTC DETECTION.**	Is any other DTC displayed?	Perform the diagnosis according to DTC.	Original steering angle sensor malfunction

AW:DTC C0072 YAW RATE SENSOR OUTPUT

DTC DETECTING CONDITION:
Defective yaw rate sensor
TROUBLE SYMPTOM:
VDC does not operate.
WIRING DIAGRAM:

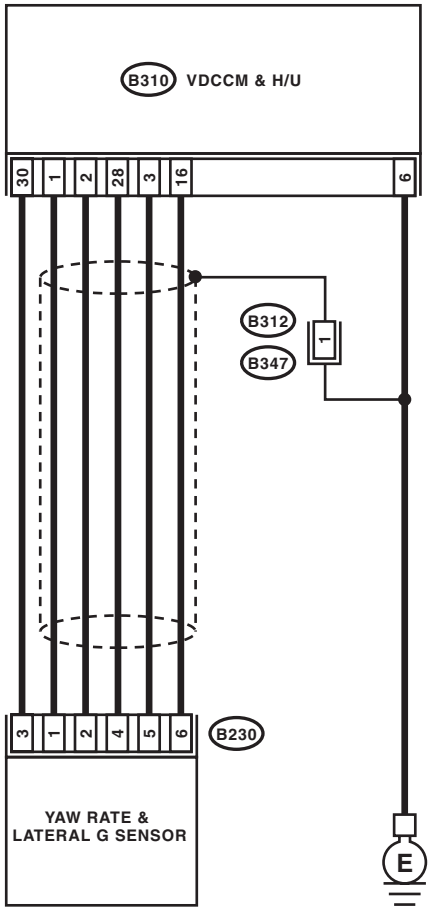

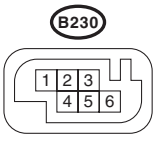

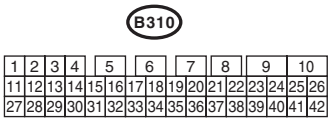

VDC00222

	Step	Check	Yes	No
1	**CHECK DRIVING PLACE.** Check if the vehicle ran the road with banks or sandy surface (which does not mean a dirt road).	Did the vehicle run the road with banks or sandy surface (which does not mean a dirt road)?	VDCCM&H/U may record DTC when the vehicle ran the road with banks or sandy surface (which does not mean a dirt road).	Go to step **2.**
2	**CHECK YAW RATE & LATERAL G SENSOR INSTALLATION.**	Is the yaw rate & lateral G sensor installation bolt tightened to 7.5 N·m (0.76 kgf-m, 5.5 ft-lb)?	Go to step **3.**	Tighten the yaw rate & lateral G sensor installation bolt.
3	**CHECK OUTPUT OF YAW RATE & LATERAL G SENSOR WITH SUBARU SELECT MONITOR.** 1) Drive the vehicle on a flat road. 2) Park the vehicle straight. 3) Select {Current Data Display & Save} in Subaru Select Monitor. 4) Read the yaw rate output displayed on display.	Is the reading indicated on monitor display –4 — 4 deg/s?	Go to step **4.**	Replace the yaw rate & lateral G sensor.
4	**CHECK OUTPUT OF STEERING ANGLE SENSOR WITH SUBARU SELECT MONITOR.** 1) Drive the vehicle on a flat road. 2) Park the vehicle straight. 3) Select {Current Data Display & Save} in Subaru Select Monitor. 4) Read the steering angle sensor output displayed on display.	Is the reading indicated on monitor display –5 — 5°?	Go to step **5.**	Perform the centering adjustment of steering wheel.
5	**CHECK YAW RATE & LATERAL G SENSOR.** 1) Turn the ignition switch to OFF. 2) Connect all the connectors. 3) Erase the memory. 4) Perform the inspection mode. 5) Read the DTC.	Is the same DTC displayed?	Go to step **6.**	Go to step **7.**
6	**CHECK VDCCM&H/U.** 1) Turn the ignition switch to OFF. 2) Replace the yaw rate & lateral G sensor. 3) Erase the memory. 4) Perform the inspection mode. 5) Read the DTC.	Is the same DTC displayed?	Replace the VDCCM&H/U. <Ref. to VDC-7, VDC Control Module and Hydraulic Control Unit (VDCCM/U).>	Go to step **8.**
7	**CHECK OTHER DTC DETECTION.**	Is any other DTC displayed?	Perform the diagnosis according to DTC.	Temporary poor contact occurs.
8	**CHECK OTHER DTC DETECTION.**	Is any other DTC displayed?	Perform the diagnosis according to DTC.	Malfunction is found in original yaw rate & lateral G sensor.

AX:DTC C0072 YAW RATE SENSOR POWER/OUTPUT

DTC DETECTING CONDITION:
Defective yaw rate sensor
TROUBLE SYMPTOM:
VDC does not operate.
WIRING DIAGRAM:

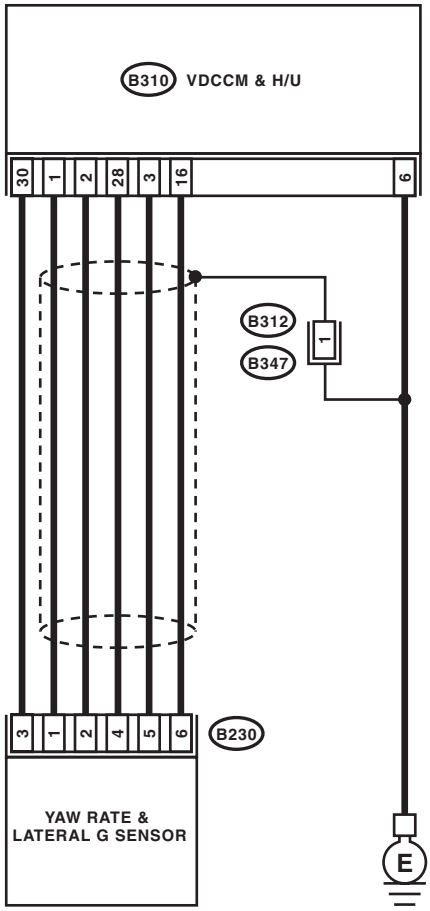

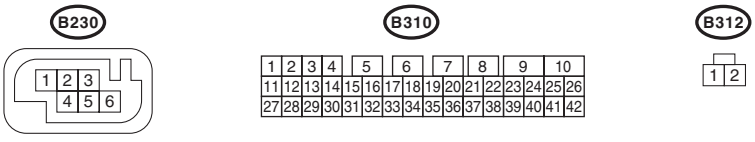

VDC00222

	Step	Check	Yes	No
1	**CHECK YAW RATE & LATERAL G SENSOR POWER SUPPLY.** 1) Turn the ignition switch to OFF. 2) Disconnect the connector from the yaw rate & lateral G sensor. 3) Turn the ignition switch to ON. 4) Measure the voltage between yaw rate & lateral G sensor and chassis ground. ***Connector & terminal*** ***(B230) No. 3 (+) — Chassis ground (−):***	Is the voltage 10 — 15 V?	Go to step **4.**	Go to step **2.**
2	**CHECK OUTPUT VOLTAGE OF VDCCM&H/U.** Measure the voltage between VDCCM&H/U and chassis ground. ***Connector & terminal*** ***(B310) No. 30 (+) — Chassis ground (−):***	Is the voltage 10 — 15 V?	Repair the harness between yaw rate & lateral G sensor and VDCCM&H/U.	Go to step **3.**
3	**CHECK POOR CONTACT IN CONNECTORS.**	Is there poor contact in connector?	Correct or replace the connector.	Go to step **10.**
4	**CHECK GROUND CIRCUIT OF YAW RATE & LATERAL G SENSOR.** Measure the resistance between yaw rate & lateral G sensor and chassis ground. ***Connector & terminal*** ***(B230) No. 6 — Chassis ground:***	Is the resistance less than 0.5 Ω?	Go to step **7.**	Go to step **5.**
5	**CHECK GROUND CIRCUIT FOR VDCCM&H/U.** Measure the resistance between VDCCM&H/U and chassis ground. ***Connector & terminal*** ***(B310) No. 16 — Chassis ground:***	Is the resistance less than 0.5 Ω?	Repair the harness between yaw rate & lateral G sensor and VDCCM&H/U.	Go to step **6.**
6	**CHECK POOR CONTACT IN CONNECTORS.**	Is there poor contact in connector?	Correct or replace the connector.	Go to step **10.**
7	**CHECK YAW RATE & LATERAL G SENSOR HARNESS.** 1) Disconnect the connector from VDCCM&H/U. 2) Measure the resistance between VDCCM&H/U and yaw rate & lateral G sensor. ***Connector & terminal*** ***(B310) No. 28 — (B230) No. 4:***	Is the resistance less than 0.5 Ω?	Go to step **8.**	Repair the harness between yaw rate & lateral G sensor and VDCCM&H/U.
8	**CHECK GROUND SHORT OF HARNESS.** Measure the resistance between VDCCM&H/U connector and chassis ground. ***Connector & terminal*** ***(B310) No. 28 — Chassis ground:***	Is the resistance more than 1 MΩ?	Go to step **9.**	Repair the harness between yaw rate & lateral G sensor and VDCCM&H/U.
9	**CHECK YAW RATE & LATERAL G SENSOR.** 1) Connect all the connectors. 2) Turn the ignition switch to ON. 3) Check the signal pattern of oscilloscope between VDCCM&H/U connector terminals. <Ref. to VDC(diag)-15, WAVEFORM, MEASUREMENT, Control Module I/O Signal.> ***Connector & terminal*** ***(B310) No. 2 — No. 16:*** ***(B310) No. 28 — No. 16:***	Is the oscilloscope waveform pattern as shown in the figure?	Go to step **10.**	Replace the yaw rate & lateral G sensor.

	Step	Check	Yes	No
10	**CHECK YAW RATE & LATERAL G SENSOR.** 1) Turn the ignition switch to OFF. 2) Connect all the connectors. 3) Erase the memory. 4) Perform the inspection mode. 5) Read the DTC.	Is the same DTC displayed?	Replace the VDCCM&H/U. <Ref. to VDC-7, VDC Control Module and Hydraulic Control Unit (VDCCM/U).>	Go to step **11.**
11	**CHECK OTHER DTC DETECTION.**	Is any other DTC displayed?	Perform the diagnosis according to DTC.	Temporary poor contact occurs.

AY:DTC C0072 YAW RATE SENSOR REFERENCE

DTC DETECTING CONDITION:
Defective yaw rate sensor
TROUBLE SYMPTOM:
VDC does not operate.
WIRING DIAGRAM:

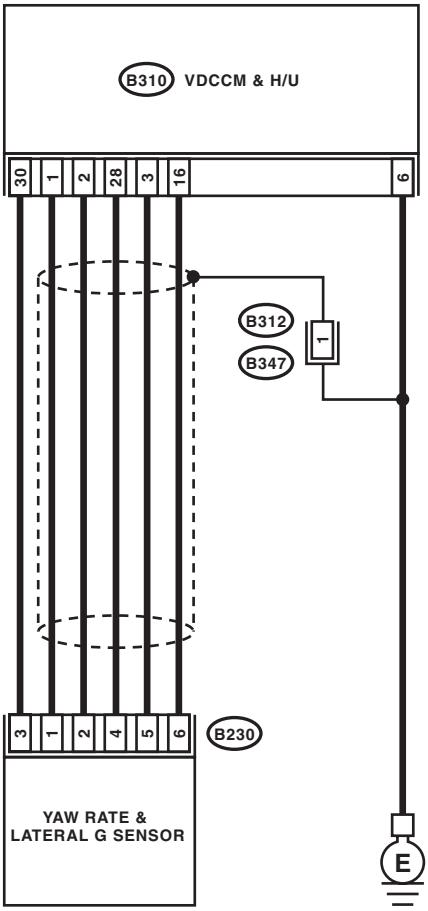

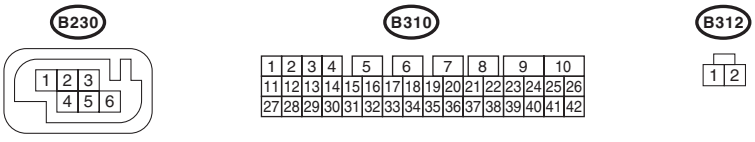

VDC00222

	Step	Check	Yes	No
1	**CHECK POWER SUPPLY FOR YAW RATE & LATERAL G SENSOR.** 1) Turn the ignition switch to OFF. 2) Disconnect the connector from yaw rate & lateral G sensor. 3) Turn the ignition switch to ON. 4) Measure the voltage between yaw rate & lateral G sensor and chassis ground. ***Connector & terminal*** ***(B230) No. 3 (+) — Chassis ground (–):***	Is the voltage 10 — 15 V?	Go to step **3.**	Go to step **2.**
2	**CHECK OUTPUT VOLTAGE OF VDCCM&H/U.** Measure the voltage between VDCCM&H/U and chassis ground. ***Connector & terminal*** ***(B310) No. 30 (+) — Chassis ground (–):***	Is the voltage 10 — 15 V?	Repair the harness between yaw rate & lateral G sensor and VDCCM&H/U.	Go to step **5.**
3	**CHECK GROUND CIRCUIT OF YAW RATE & LATERAL G SENSOR.** Measure the resistance between yaw rate & lateral G sensor and chassis ground. ***Connector & terminal*** ***(B230) No. 6 — Chassis ground:***	Is the resistance less than 0.5 Ω?	Go to step **6.**	Go to step **4.**
4	**CHECK GROUND CIRCUIT FOR VDCCM&H/U.** Measure the resistance between VDCCM&H/U and chassis ground. ***Connector & terminal*** ***(B310) No. 16 — Chassis ground:***	Is the resistance less than 0.5 Ω?	Repair the harness between yaw rate & lateral G sensor and VDCCM&H/U.	Go to step **5.**
5	**CHECK POOR CONTACT IN CONNECTORS.**	Is there poor contact in connector?	Correct or replace the connector.	Go to step **9.**
6	**CHECK HARNESS OF YAW RATE & LATERAL G SENSOR.** 1) Turn the ignition switch to OFF. 2) Disconnect the connector from VDCCM&H/U. 3) Measure the resistance between VDCCM&H/U and yaw rate & lateral G sensor. ***Connector & terminal*** ***(B310) No. 1 — (B230) No. 1:***	Is the resistance less than 0.5 Ω?	Go to step **7.**	Repair the harness between yaw rate & lateral G sensor and VDCCM&H/U.
7	**CHECK GROUND SHORT CIRCUIT OF HARNESS.** Measure the resistance between VDCCM&H/U and chassis ground. ***Connector & terminal*** ***(B310) No. 1 — Chassis ground:***	Is the resistance more than 1 MΩ?	Go to step **8.**	Repair the harness between yaw rate & lateral G sensor and VDCCM&H/U.
8	**CHECK THE YAW RATE & LATERAL G SENSOR.** 1) Turn the ignition switch to OFF. 2) Install the yaw rate & lateral G sensor to body. 3) Connect all the connectors. 4) Turn the ignition switch to ON. 5) Measure the voltage between VDCCM&H/U connector terminals. ***Connector & terminal*** ***(B310) No. 1 (+) — (B310) No. 16 (–):***	Is the voltage 2.1 — 2.9 V?	Go to step **9.**	Replace the yaw rate & lateral G sensor. <Ref. to VDC-14, Yaw Rate and Lateral G Sensor.>

	Step	Check	Yes	No
9	**CHECK VDCCM&H/U.** 1) Turn the ignition switch to OFF. 2) Connect all the connectors. 3) Erase the memory. 4) Perform the inspection mode. 5) Read the DTC.	Is the same DTC displayed?	Replace the VDCCM&H/U. <Ref. to VDC-7, VDC Control Module and Hydraulic Control Unit (VDCCM/U).>	Go to step **10.**
10	**CHECK OTHER DTC DETECTION.**	Is any other DTC displayed?	Perform the diagnosis according to DTC.	Temporary poor contact occurs.

AZ:DTC C0072 EXCESSIVE VARIATION AMOUNT OF YAW RATE SENSOR OUTPUT

DTC DETECTING CONDITION:
Defective yaw rate sensor
TROUBLE SYMPTOM:
VDC does not operate.
WIRING DIAGRAM:

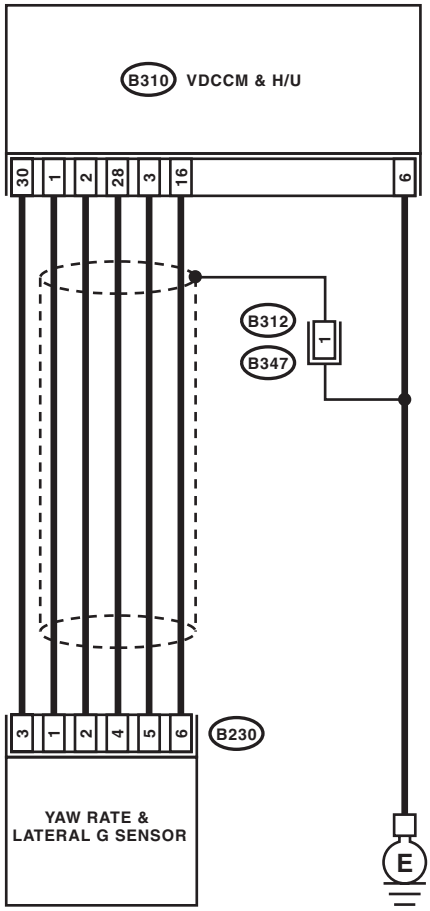

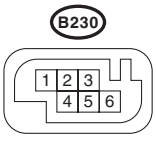

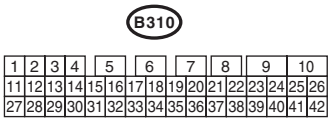

VDC00222

	Step	Check	Yes	No
1	**CHECK DRIVING PLACE.** Check if the vehicle ran the road with banks or sandy surface (which does not mean a dirt road).	Did the vehicle run the road with banks or sandy surface (which does not mean a dirt road)?	VDCCM&H/U may record DTC when the vehicle ran the road with banks or sandy surface (which does not mean a dirt road).	Go to step **2.**
2	**CHECK YAW RATE & LATERAL G SENSOR INSTALLATION.**	Is the yaw rate & lateral G sensor installation bolt tightened to 7.5 N·m (0.76 kgf-m, 5.5 ft-lb)?	Go to step **3.**	Tighten the yaw rate & lateral G sensor installation bolt.
3	**CHECK YAW RATE & LATERAL G SENSOR POWER SUPPLY.** 1) Turn the ignition switch to OFF. 2) Disconnect the connector from yaw rate & lateral G sensor. 3) Turn the ignition switch to ON. 4) Measure the voltage between yaw rate & lateral G sensor and chassis ground. ***Connector & terminal*** ***(B230) No. 3 (+) — Chassis ground (−):***	Is the voltage 10 — 15 V?	Go to step **5.**	Go to step **4.**
4	**CHECK OUTPUT VOLTAGE OF VDCCM&H/U.** Measure the voltage between VDCCM&H/U and chassis ground. ***Connector & terminal*** ***(B310) No. 30 (+) — Chassis ground (−):***	Is the voltage 10 — 15 V?	Repair the harness between yaw rate & lateral G sensor and VDCCM&H/U.	Go to step **7.**
5	**CHECK GROUND CIRCUIT OF YAW RATE & LATERAL G SENSOR.** Measure the resistance between yaw rate & lateral G sensor and chassis ground. ***Connector & terminal*** ***(B230) No. 6 — Chassis ground:***	Is the resistance less than 0.5 Ω?	Go to step **8.**	Go to step **6.**
6	**CHECK GROUND CIRCUIT FOR VDCCM&H/U.** Measure the resistance between VDCCM&H/U and chassis ground. ***Connector & terminal*** ***(B310) No. 16 — Chassis ground:***	Is the resistance less than 0.5 Ω?	Repair the harness between yaw rate & lateral G sensor and VDCCM&H/U.	Go to step **7.**
7	**CHECK POOR CONTACT IN CONNECTORS.**	Is there poor contact in connector?	Correct or replace the connector.	Go to step **14.**
8	**CHECK HARNESS OF YAW RATE & LATERAL G SENSOR.** 1) Disconnect the connector from VDCCM&H/U. 2) Measure the resistance between VDCCM&H/U and yaw rate & lateral G sensor. ***Connector & terminal*** ***(B310) No. 1 — (B230) No. 1:*** ***(B310) No. 2 — (B230) No. 2:*** ***(B310) No. 28 — (B230) No. 4:***	Is the resistance less than 0.5 Ω?	Go to step **9.**	Repair the harness between yaw rate & lateral G sensor and VDCCM&H/U.
9	**CHECK GROUND SHORT CIRCUIT OF HARNESS.** Measure the resistance between VDCCM&H/U connector and chassis ground. ***Connector & terminal*** ***(B310) No. 1 — Chassis ground:*** ***(B310) No. 2 — Chassis ground:*** ***(B310) No. 28 — Chassis ground:***	Is the resistance more than 1 MΩ?	Go to step **10.**	Repair the harness between yaw rate & lateral G sensor and VDCCM&H/U.

	Step	Check	Yes	No
10	**CHECK YAW RATE & LATERAL G SENSOR.** 1) Turn the ignition switch to OFF. 2) Connect all the connectors. 3) Turn the ignition switch to ON. 4) Measure the voltage between VDCCM&H/U connector terminals. ***Connector & terminal*** ***(B310) No. 1 (+) — (B310) No. 16 (–):***	Is the voltage 2.1 — 2.9 V?	Go to step **11.**	Replace the yaw rate & lateral G sensor.
11	**CHECK YAW RATE & LATERAL G SENSOR.** 1) Turn the ignition switch to ON. 2) Check the signal pattern of oscilloscope between VDCCM&H/U connector terminals. <Ref. to VDC(diag)-15, WAVEFORM, MEASUREMENT, Control Module I/O Signal.> ***Connector & terminal*** ***(B310) No. 2 — No. 16:*** ***(B310) No. 28 — No. 16:***	Is the oscilloscope waveform pattern as shown in the figure?	Go to step **12.**	Replace the yaw rate & lateral G sensor.
12	**CHECK YAW RATE & LATERAL G SENSOR.** 1) Turn the ignition switch to OFF. 2) Connect all the connectors. 3) Erase the memory. 4) Perform the inspection mode. 5) Read the DTC.	Is the same DTC displayed?	Go to step **13.**	Go to step **15.**
13	**CHECK VDCCM&H/U.** 1) Turn the ignition switch to OFF. 2) Replace the yaw rate & lateral G sensor. 3) Erase the memory. 4) Perform the inspection mode. 5) Read the DTC.	Is the same DTC displayed?	Replace the VDCCM&H/U. <Ref. to VDC-7, VDC Control Module and Hydraulic Control Unit (VDCCM/U).>	Go to step **16.**
14	**CHECK YAW RATE & LATERAL G SENSOR.** 1) Turn the ignition switch to OFF. 2) Connect all the connectors. 3) Erase the memory. 4) Perform the inspection mode. 5) Read the DTC.	Is the same DTC displayed?	Replace the VDCCM&H/U. <Ref. to VDC-7, VDC Control Module and Hydraulic Control Unit (VDCCM/U).>	Go to step **15.**
15	**CHECK OTHER DTC DETECTION.**	Is any other DTC displayed?	Perform the diagnosis according to DTC.	Temporary poor contact occurs.
16	**CHECK OTHER DTC DETECTION.**	Is any other DTC displayed?	Perform the diagnosis according to DTC.	Malfunction is found in original yaw rate & lateral G sensor.

BA:DTC C0073 EXCESSIVE AMOUNT OF LATERAL G SENSOR OUTPUT OFFSET

NOTE:
For the diagnostic procedure, refer to DTC C0073. <Ref. to VDC(diag)-106, DTC C0073 EXCESSIVE LATERAL G SENSOR OUTPUT, Diagnostic Procedure with Diagnostic Trouble Code (DTC).>

BB:DTC C0073 LATERAL G SENSOR OUTPUT

NOTE:
For the diagnostic procedure, refer to DTC C0073. <Ref. to VDC(diag)-106, DTC C0073 EXCESSIVE LATERAL G SENSOR OUTPUT, Diagnostic Procedure with Diagnostic Trouble Code (DTC).>

BC:DTC C0073 EXCESSIVE VARIATION AMOUNT OF LATERAL G SENSOR OUTPUT

NOTE:
For the diagnostic procedure, refer to DTC C0073. <Ref. to VDC(diag)-106, DTC C0073 EXCESSIVE LATERAL G SENSOR OUTPUT, Diagnostic Procedure with Diagnostic Trouble Code (DTC).>

BD:DTC C0073 EXCESSIVE LATERAL G SENSOR OUTPUT

DTC DETECTING CONDITION:
Defective lateral G sensor
TROUBLE SYMPTOM:
VDC does not operate.
WIRING DIAGRAM:

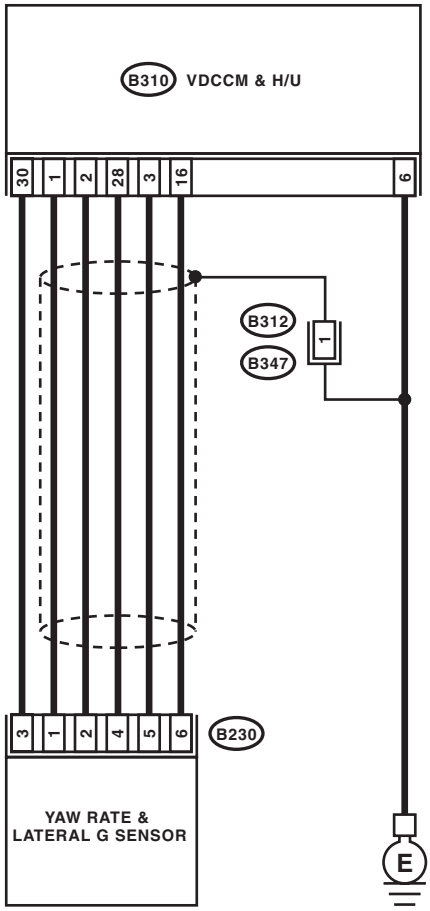

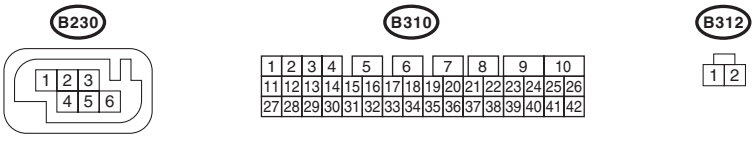

VDC00222

	Step	Check	Yes	No
1	**CHECK YAW RATE & LATERAL G SENSOR INSTALLATION.**	Is the yaw rate & lateral G sensor installation bolt tightened to 7.5 N·m (0.76 kgf-m, 5.5 ft-lb)?	Go to step **2.**	Tighten the yaw rate & lateral G sensor installation bolt.
2	**CHECK LATERAL G SENSOR OUTPUT.** 1) Park the vehicle on a level surface. 2) Select {Current Data Display & Save} in Subaru Select Monitor. 3) Read the lateral G sensor output displayed on display.	Is the indicated reading on the monitor display −1.5 — 1.5 m/s^2?	Go to step **3.**	Replace the yaw rate & lateral G sensor.
3	**CHECK LATERAL G SENSOR OUTPUT.** 1) Turn the ignition switch to OFF. 2) Remove the yaw rate & lateral G sensor from vehicle. 3) Turn the ignition switch to ON, and select {Current Data Display & Save} in Subaru Select Monitor. 4) Read the lateral G sensor output displayed on display.	When the yaw rate & lateral G sensor is inclined 90° to the right, is the indicated value 6.8 — 12.8 m/s^2?	Go to step **4.**	Replace the yaw rate & lateral G sensor.
4	**CHECK LATERAL G SENSOR.** Read the lateral G sensor output displayed on screen.	When the yaw rate & lateral G sensor is inclined 90° to the left, is the indicated value −6.8 — −12.8 m/s^2?	Go to step **5.**	Replace the yaw rate & lateral G sensor.
5	**CHECK POOR CONTACT IN CONNECTORS.** Turn the ignition switch to OFF.	Is there poor contact in connector between VDCCM&H/U and yaw rate & lateral G sensor?	Repair the connector.	Go to step **6.**
6	**CHECK VDCCM&H/U.** 1) Connect all the connectors. 2) Erase the memory. 3) Perform the inspection mode. 4) Read the DTC.	Is the same DTC displayed?	Replace the VDCCM&H/U. <Ref. to VDC-7, VDC Control Module and Hydraulic Control Unit (VDCCM/U).>	Go to step **7.**
7	**CHECK OTHER DTC DETECTION.**	Is any other DTC displayed?	Perform the diagnosis according to DTC.	Temporary poor contact occurs.

BE:DTC C0073 LATERAL G SENSOR POWER/OUTPUT

DTC DETECTING CONDITION:
Defective lateral G sensor
DTC DETECTING CONDITION:
VDC does not operate.
WIRING DIAGRAM:

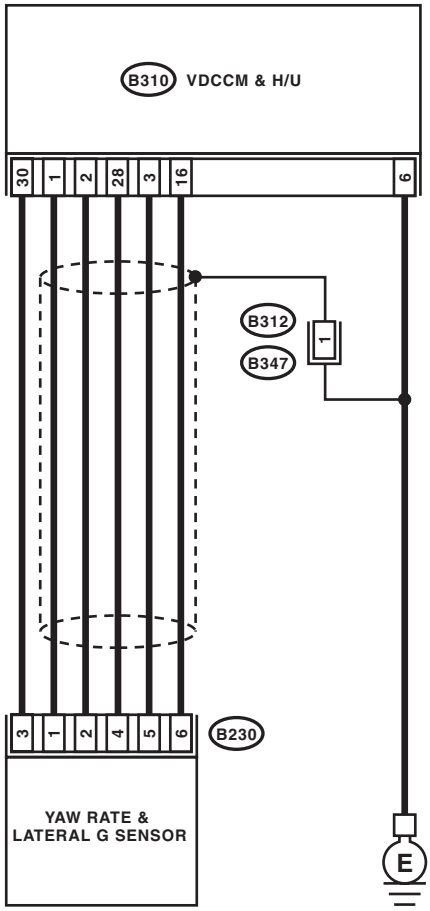

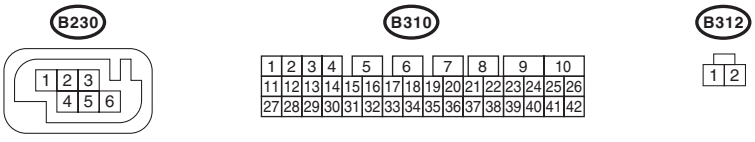

VDC00222

	Step	Check	Yes	No
1	**CHECK LATERAL G SENSOR OUTPUT.** 1) Park the vehicle on a level surface. 2) Select {Current Data Display & Save} in Subaru Select Monitor. 3) Read the lateral G sensor output displayed on display.	Is the indicated reading on the monitor display -1.5 — 1.5 m/s^2?	Go to step **2.**	Go to step **3.**
2	**CHECK POOR CONTACT IN CONNECTORS.** Turn the ignition switch to OFF.	Is there poor contact in connector between VDCCM&H/U and yaw rate & lateral G sensor?	Repair the connector.	Go to step **10.**
3	**CHECK YAW RATE & LATERAL G SENSOR POWER SUPPLY.** 1) Turn the ignition switch to OFF. 2) Disconnect the connector from yaw rate & lateral G sensor. 3) Turn the ignition switch to ON. 4) Measure the voltage between yaw rate & lateral G sensor and chassis ground. ***Connector & terminal*** ***(B230) No. 3 (+) — Chassis ground (−):***	Is the voltage 10 — 15 V?	Go to step **6.**	Go to step **4.**
4	**CHECK OUTPUT VOLTAGE OF VDCCM&H/U.** Measure the voltage between VDCCM&H/U and chassis ground. ***Connector & terminal*** ***(B310) No. 30 (+) — Chassis ground (−):***	Is the voltage 10 — 15 V?	Repair the harness between yaw rate & lateral G sensor and VDCCM&H/U.	Go to step **5.**
5	**CHECK POOR CONTACT IN CONNECTORS**	Is there poor contact in connector?	Correct or replace the connector.	Go to step **10.**
6	**CHECK OPEN CIRCUIT IN LATERAL G SENSOR OUTPUT HARNESS.** 1) Disconnect the connector from yaw rate & lateral G sensor. 2) Disconnect the connector from VDCCM&H/U. 3) Measure the resistance between VDCCM&H/U and yaw rate & lateral G sensor. ***Connector & terminal*** ***(B310) No. 3 — (B230) No. 5:***	Is the resistance less than 0.5 Ω?	Go to step **7.**	Repair the harness connector between yaw rate & lateral G sensor and VDCCM&H/U.
7	**CHECK GROUND SHORT CIRCUIT FOR YAW RATE & LATERAL G SENSOR HARNESS.** Measure the resistance between VDCCM&H/U connector and chassis ground. ***Connector & terminal*** ***(B310) No. 3 — Chassis ground:***	Is the resistance more than 1 MΩ?	Go to step **8.**	Repair the harness connector between yaw rate & lateral G sensor and VDCCM&H/U.
8	**CHECK LATERAL G SENSOR.** 1) Turn the ignition switch to OFF. 2) Remove the yaw rate & lateral G sensor from vehicle. 3) Connect the connector to the yaw rate & lateral G sensor. 4) Connect the connector to VDCCM&H/U. 5) Turn the ignition switch to ON. 6) Measure the voltage between yaw rate & lateral G sensor connector terminals. ***Connector & terminal*** ***(B230) No. 5 (+) — (B230) No. 6 (−):***	Is the voltage 2.35 — 2.65 V when yaw rate & lateral G sensor is on level?	Go to step **9.**	Replace the yaw rate & lateral G sensor.

	Step	Check	Yes	No
9	**CHECK POOR CONTACT IN CONNECTORS.**	Is there poor contact in connector between VDCCM&H/U and yaw rate & lateral G sensor?	Repair the connector.	Go to step **10.**
10	**CHECK VDCCM&H/U.** 1) Connect all the connectors. 2) Erase the memory. 3) Perform the inspection mode. 4) Read the DTC.	Is the same DTC displayed?	Replace the VDCCM&H/U. <Ref. to VDC-7, VDC Control Module and Hydraulic Control Unit (VDCCM/U).>	Go to step **11.**
11	**CHECK OTHER DTC DETECTION.**	Is any other DTC displayed?	Perform the diagnosis according to DTC.	Temporary poor contact occurs.

BF:DTC C0074 PRESSURE SENSOR TEST MALFUNCTION

DTC DETECTING CONDITION:

Defective pressure sensor

TROUBLE SYMPTOM:

- ABS does not operate.
- VDC does not operate.

WIRING DIAGRAM:

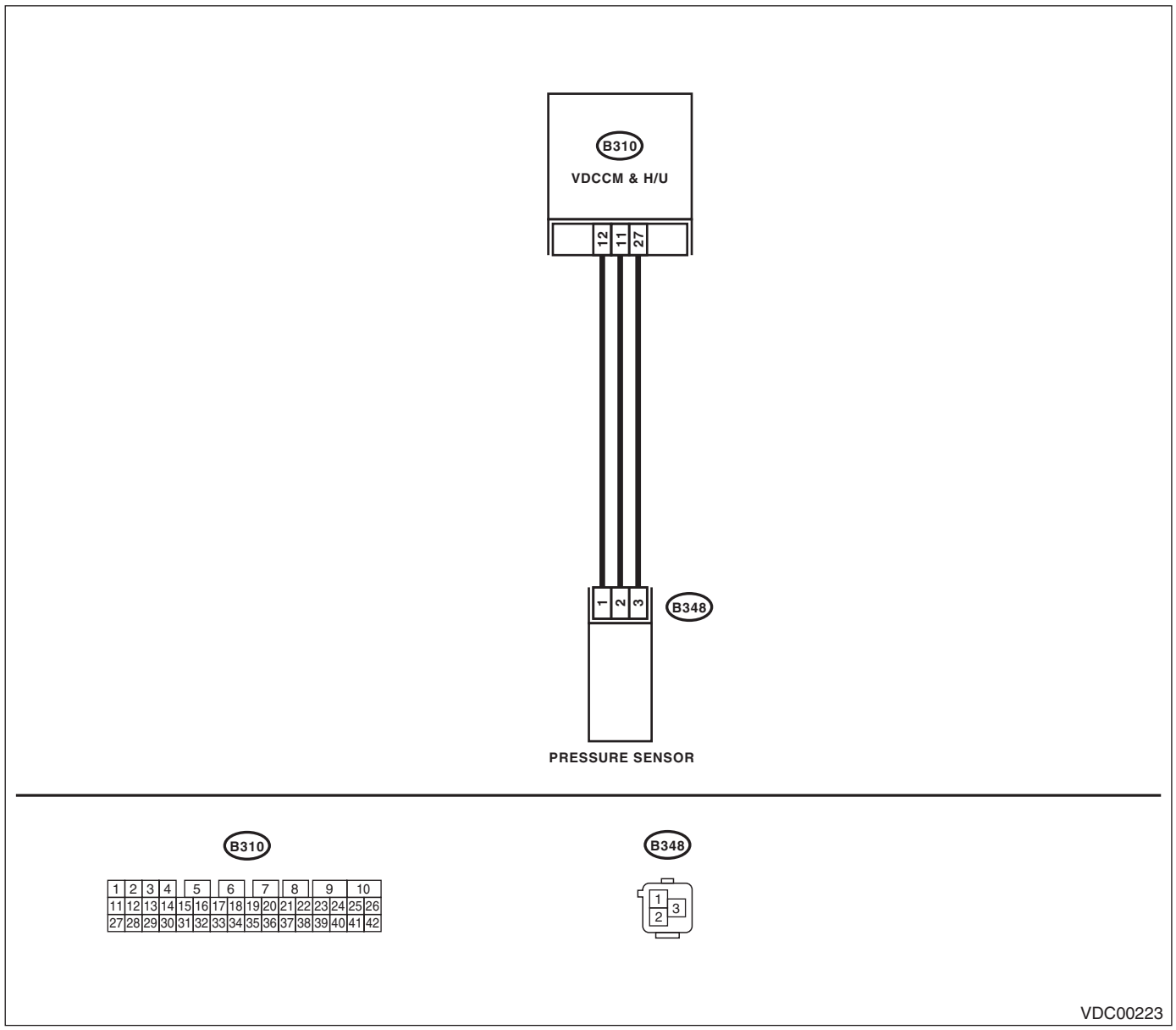

	Step	Check	Yes	No
1	**CHECK PRESSURE SENSOR POWER SUPPLY.** 1) Turn the ignition switch to OFF. 2) Disconnect the connector from pressure sensor. 3) Turn the ignition switch to ON. 4) Measure the voltage between pressure sensor connector and chassis ground. ***Connector & terminal*** ***(B348) No. 3 (+) — Chassis ground (−):***	Is the voltage 4.75 — 5.25 V?	Go to step **4.**	Go to step **2.**

	Step	Check	Yes	No
2	**CHECK OUTPUT VOLTAGE OF VDCCM&H/U.** Measure the voltage between VDCCM&H/U and chassis ground. ***Connector & terminal*** ***(B310) No. 27 (+) — Chassis ground (−):***	Is the voltage 4.75 — 5.25 V?	Repair the harness between pressure sensor and VDCCM&H/U.	Go to step **3.**
3	**CHECK POOR CONTACT IN CONNECTORS.**	Is there poor contact in connector?	Correct or replace the connector.	Go to step **9.**
4	**CHECK GROUND CIRCUIT OF PRESSURE SENSOR.** Measure the resistance between pressure sensor and chassis ground. ***Connector & terminal*** ***(B348) No. 1 — Chassis ground:***	Is the resistance less than 0.5 Ω?	Go to step **7.**	Go to step **5.**
5	**CHECK GROUND CIRCUIT OF VDCCM&H/U.** Measure the resistance between VDCCM&H/U and chassis ground. ***Connector & terminal*** ***(B310) No. 12 — Chassis ground:***	Is the resistance less than 0.5 Ω?	Repair the harness between pressure sensor and VDCCM&H/U.	Go to step **6.**
6	**CHECK POOR CONTACT IN CONNECTORS.**	Is there poor contact in connector?	Correct or replace the connector.	Go to step **9.**
7	**CHECK PRESSURE SENSOR HARNESS.** 1) Turn the ignition switch to OFF. 2) Disconnect the connector from VDCCM&H/U. 3) Measure the resistance between VDCCM&H/U and pressure sensor. ***Connector & terminal*** ***(B310) No. 11 — (B348) No. 2:***	Is the resistance less than 0.5 Ω?	Go to step **8.**	Repair the harness between-pressure sensor and VDCCM&H/U.
8	**CHECK GROUND SHORT OF HARNESS.** Measure the resistance between VDCCM&H/U connector and chassis ground. ***Connector & terminal*** ***(B310) No. 11 — Chassis ground:***	Is the resistance more than 1 MΩ?	Go to step **9.**	Repair the harness between pressure sensor and VDCCM&H/U.
9	**CHECK VDCCM&H/U.** 1) Connect all the connectors. 2) Erase the memory. 3) Perform the inspection mode. 4) Read the DTC.	Is DTC displayed?	Replace the VDCCM&H/U. <Ref. to VDC-7, VDC Control Module and Hydraulic Control Unit (VDCCM/U).>	Go to step **10.**
10	**CHECK OTHER DTC DETECTION.**	Is any other DTC displayed?	Perform the diagnosis according to DTC.	Temporary poor contact occurs.

BG:DTC C0074 EXCESSIVE PRESSURE SENSOR OUTPUT OFFSET

DTC DETECTING CONDITION:

Defective pressure sensor

TROUBLE SYMPTOM:

- ABS does not operate.
- VDC does not operate.

WIRING DIAGRAM:

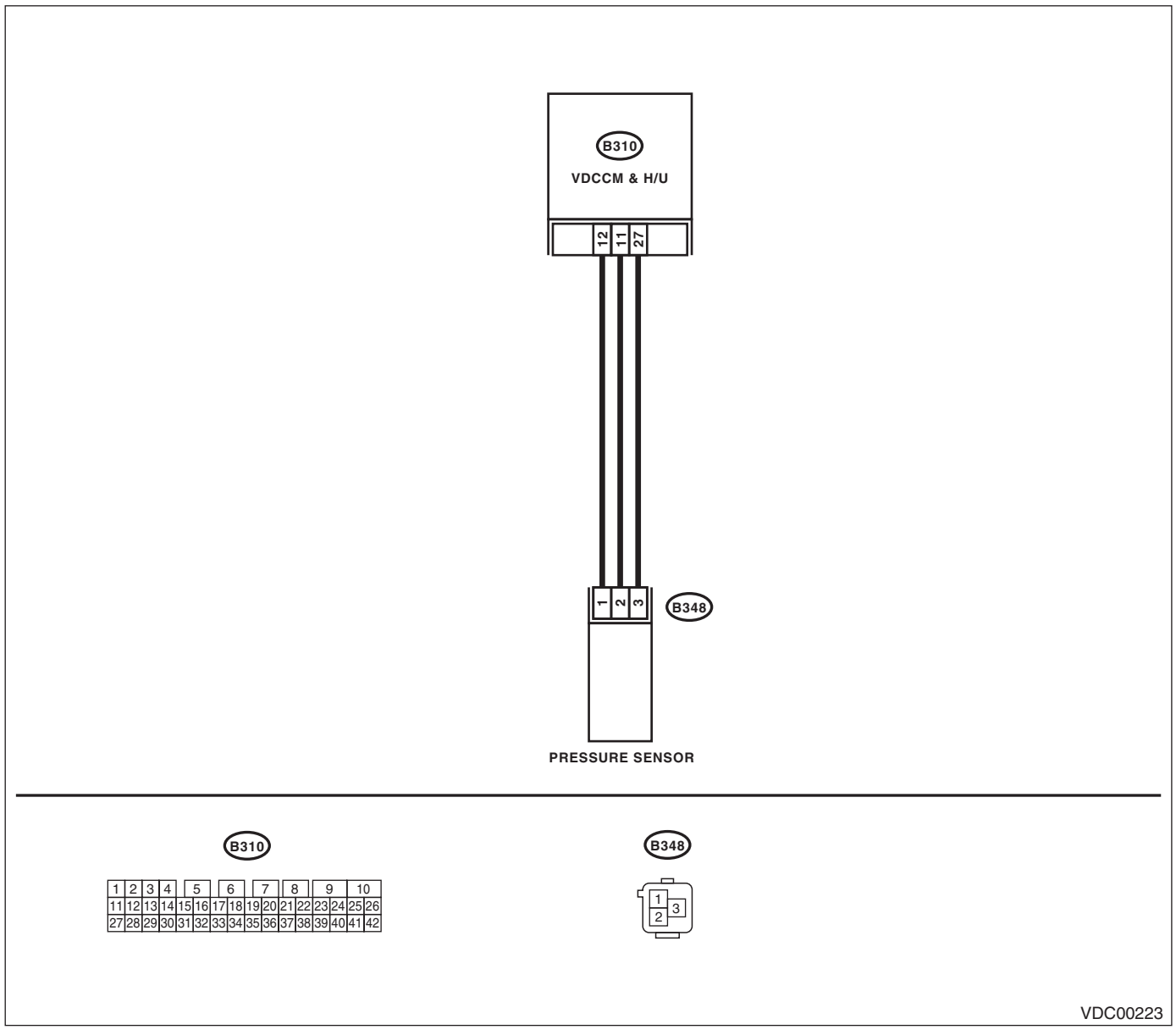

	Step	Check	Yes	No
1	**CHECK STOP LIGHT SWITCH CIRCUIT.** Check stop light switch open circuit.	Is the stop light switch circuit OK?	Go to step **2.**	Repair the stop light switch circuit.
2	**CHECK VDCCM&H/U.** 1) Connect all the connectors. 2) Erase the memory. 3) Perform the inspection mode. 4) Read the DTC.	Is the same DTC displayed?	Replace the VDCCM&H/U. <Ref. to VDC-7, VDC Control Module and Hydraulic Control Unit (VDCCM/U).>	Go to step **3.**

Step		Check	Yes	No
3	CHECK OTHER DTC DETECTION.	Is any other DTC displayed?	Perform the diagnosis according to DTC. <Ref. to VDC(diag)-34, List of Diagnostic Trouble Code (DTC).>	Temporary poor contact occurs.

BH:DTC C0074 PRESSURE SENSOR POWER/OUTPUT

DTC DETECTING CONDITION:

Defective pressure sensor

TROUBLE SYMPTOM:

- ABS does not operate.
- VDC does not operate.

NOTE:
For the diagnostic procedure, refer to DTC C0074 “PRESSURE SENSOR TEST MALFUNCTION”. <Ref. to VDC(diag)-111, DTC C0074 PRESSURE SENSOR TEST MALFUNCTION, Diagnostic Procedure with Diagnostic Trouble Code (DTC).>

BI: DTC C0074 PRESSURE SENSOR OUTPUT

DTC DETECTING CONDITION:

Defective pressure sensor

TROUBLE SYMPTOM:

- ABS does not operate.
- VDC does not operate.

WIRING DIAGRAM:

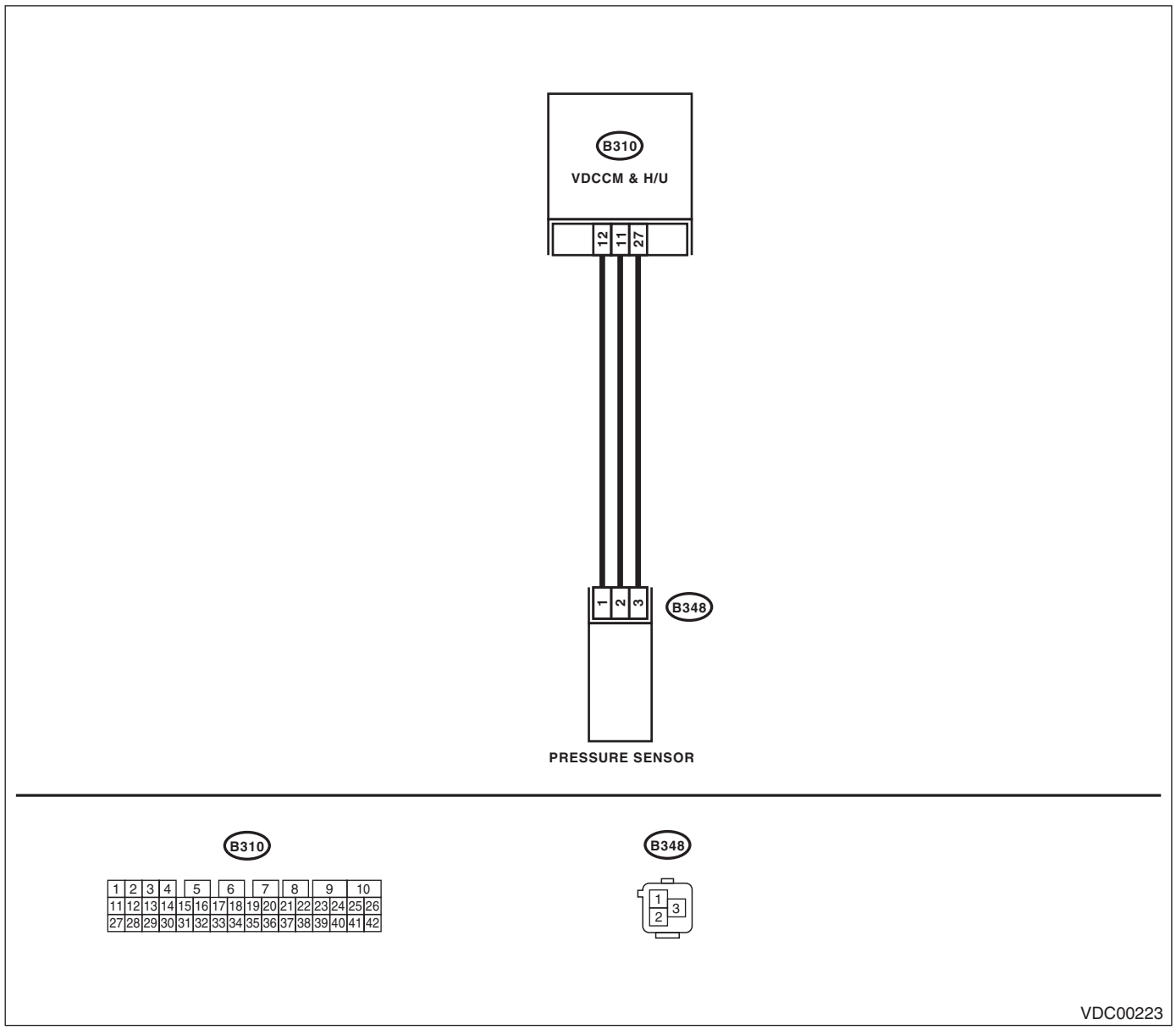

	Step	Check	Yes	No
1	**CHECK STOP LIGHT SWITCH CIRCUIT.** Check stop light switch open circuit.	Is the stop light switch circuit OK?	Go to step **2.**	If there is malfunction in the stop light switch circuit, DTC may be recorded in the memory.

	Step	Check	Yes	No
2	**CHECK PRESSURE SENSOR POWER SUPPLY.** 1) Turn the ignition switch to OFF. 2) Disconnect the connector from pressure sensor. 3) Turn the ignition switch to ON. 4) Measure the voltage between pressure sensor connector and chassis ground. ***Connector & terminal*** ***(B348) No. 3 (+) — Chassis ground (–):***	Is the voltage 4.75 — 5.25 V?	Go to step **5.**	Go to step **3.**
3	**CHECK OUTPUT VOLTAGE OF VDCCM&H/U.** Measure the voltage between VDCCM&H/U and chassis ground. ***Connector & terminal*** ***(B310) No. 27 (+) — Chassis ground (–):***	Is the voltage 4.75 — 5.25 V?	Repair the harness between pressure sensor and VDCCM&H/U.	Go to step **4.**
4	**CHECK POOR CONTACT IN CONNECTORS.**	Is there poor contact in connector?	Correct or replace the connector.	Go to step **10.**
5	**CHECK GROUND CIRCUIT OF PRESSURE SENSOR.** Measure the resistance between pressure sensor and chassis ground. ***Connector & terminal*** ***(B348) No. 1 — Chassis ground:***	Is the resistance less than 0.5 Ω?	Go to step **8.**	Go to step **6.**
6	**CHECK GROUND CIRCUIT OF VDCCM&H/U.** Measure the resistance between VDCCM&H/U and chassis ground. ***Connector & terminal*** ***(B310) No. 12 — Chassis ground:***	Is the resistance less than 0.5 Ω?	Repair the harness between pressure sensor and VDCCM&H/U.	Go to step **7.**
7	**CHECK POOR CONTACT IN CONNECTORS.**	Is there poor contact in connector?	Correct or replace the connector.	Go to step **10.**
8	**CHECK PRESSURE SENSOR HARNESS.** 1) Turn the ignition switch to OFF. 2) Disconnect the connector from VDCCM&H/U. 3) Measure the resistance between VDCCM&H/U and pressure sensor. ***Connector & terminal*** ***(B310) No. 11 — (B348) No. 2:***	Is the resistance less than 0.5 Ω?	Go to step **9.**	Repair the harness between pressure sensor and VDCCM&H/U.
9	**CHECK GROUND SHORT OF HARNESS.** Measure the resistance between VDCCM&H/U connector and chassis ground. ***Connector & terminal*** ***(B310) No. 11 — Chassis ground:***	Is the resistance more than 1 MΩ?	Go to step **10.**	Repair the harness between pressure sensor and VDCCM&H/U.
10	**CHECK VDCCM&H/U.** 1) Connect all the connectors. 2) Erase the memory. 3) Perform the inspection mode. 4) Read the DTC.	Is DTC displayed?	Replace the VDCCM&H/U. <Ref. to VDC-7, VDC Control Module and Hydraulic Control Unit (VDCCM/U).>	Go to step **11.**
11	**CHECK OTHER DTC DETECTION.**	Is any other DTC displayed?	Perform the diagnosis according to DTC.	Temporary poor contact occurs.

BJ:DTC C0074 PRESSURE SENSOR POWER MALFUNCTION

DTC DETECTING CONDITION:

Defective pressure sensor

TROUBLE SYMPTOM:

- ABS does not operate.
- VDC does not operate.

WIRING DIAGRAM:

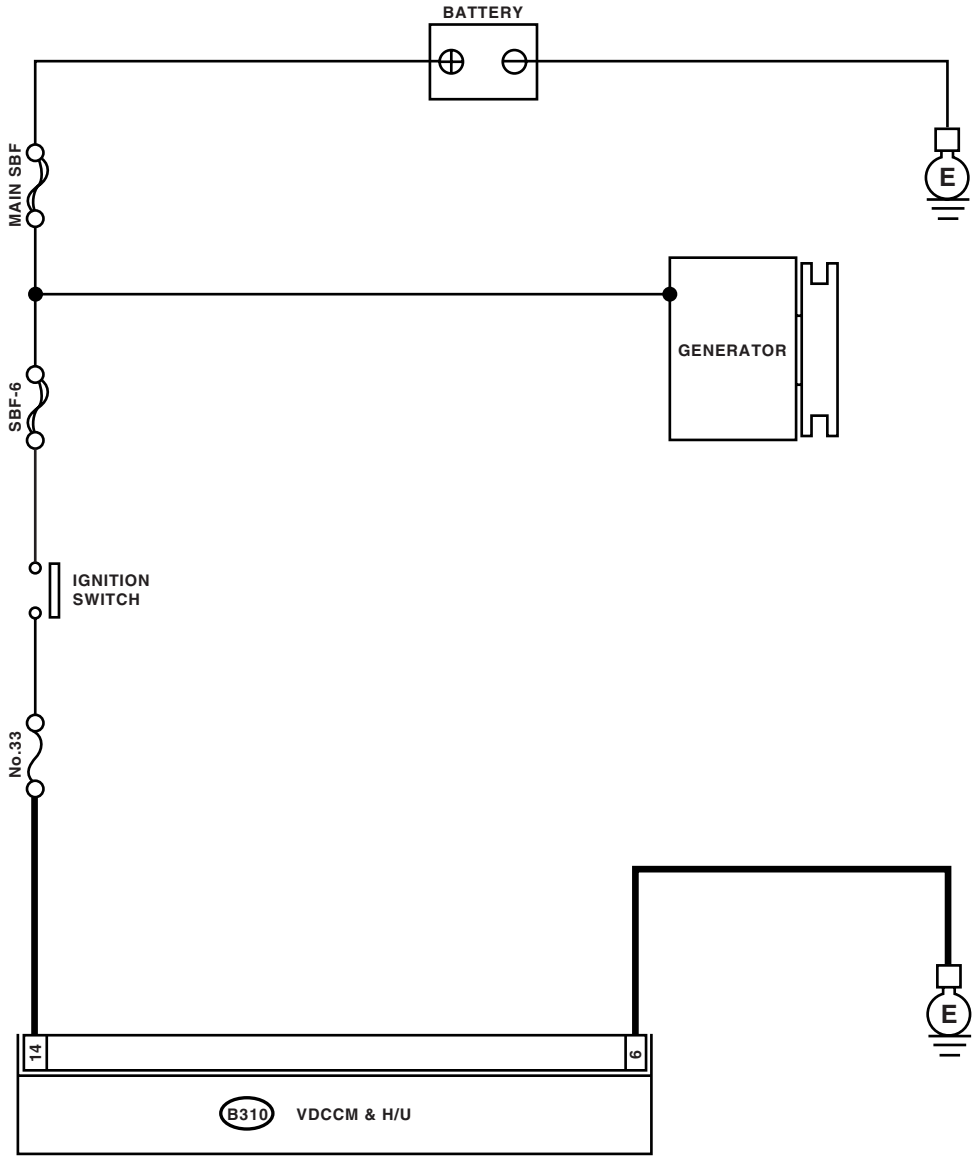

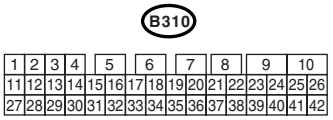

VDC00309

	Step	Check	Yes	No
1	**CHECK POOR CONTACT IN CONNECTORS.** Check if there is poor contact in VDCCM&H/U power supply circuit.	Is there poor contact?	Repair the connector.	Go to step **2.**
2	**CHECK VDCCM&H/U POWER SUPPLY CIRCUIT.** 1) Turn the ignition switch to OFF. 2) Disconnect the VDCCM&H/U connector. 3) Turn the ignition switch to ON. 4) Measure the voltage between VDCCM&H/U connector terminals. ***Connector & terminal*** ***(B310) No. 14 (+) — (B310) No. 6 (–):***	Is the voltage 10 — 15 V?	Go to step **3.**	Check the power supply circuit in VDCCM&H/U.
3	**CHECK VDCCM&H/U.** 1) Connect all the connectors. 2) Erase the memory. 3) Perform the inspection mode. 4) Read the DTC.	Is the same DTC displayed?	Replace the VDCCM&H/U. <Ref. to VDC-7, VDC Control Module and Hydraulic Control Unit (VDCCM/U).>	Go to step **4.**
4	**CHECK OTHER DTC DETECTION.**	Is any other DTC displayed?	Perform the diagnosis according to DTC.	It results from a temporary noise interference.

BK:DTC C0081 SYSTEM MALFUNCTION

DTC DETECTING CONDITION:

VDC long time sequential control

TROUBLE SYMPTOM:

- ABS does not operate.
- VDC does not operate.

	Step	Check	Yes	No
1	**CHECK POOR CONTACT IN CONNECTOR.**	Is there poor contact in the VDCCM&H/U and yaw rate & lateral G sensor connector?	Repair the connector.	Go to step **2.**
2	**CHECK VDCCM&H/U.** 1) Replace the yaw rate & lateral G sensor. 2) Connect all the connectors. 3) Erase the memory. 4) Perform the inspection mode. 5) Read the DTC.	Is the same DTC displayed?	Replace the VDCCM&H/U.	Malfunction is found in original yaw rate & lateral G sensor.

13.General Diagnostic Table

A: INSPECTION

Symptom		Main probable cause	Other probable cause
Poor brake performance	Long braking/ stopping distance	• VDCCM&H/U • Brake pad • Aeration to brake line • Tire specifications, tire wear and air pressures • Incorrect wiring or piping connections	• Defective ABS wheel speed sensor or sensor gap • Defective steering angle sensor or improper neutral position • Defective yaw rate & lateral G sensor or improper installation • Master cylinder • Brake caliper • Disc rotor • Brake pipe • Brake booster
	Wheel lock	• VDCCM&H/U • Defective ABS wheel speed sensor or sensor gap • Incorrect wiring or piping connections	• Defective steering angle sensor or improper neutral position • Defective yaw rate & lateral G sensor or improper installation • Brake caliper • Brake pipe
	Brake drag	• VDCCM&H/U • Defective ABS wheel speed sensor or sensor gap • Master cylinder • Brake caliper • Parking brake • Axle and wheels • Brake pedal play	• Defective steering angle sensor or improper neutral position • Defective yaw rate & lateral G sensor or improper installation • Brake pad • Brake pipe
	Long brake pedal stroke	• Aeration to brake line • Brake pedal play	• VDCCM&H/U • Master cylinder • Brake caliper • Brake pad • Brake pipe • Brake booster
	Vehicle vertical pitching	• VDCCM&H/U • Road surface (uneven) • Suspension play or fatigue (reduced damping) • Incorrect wiring or piping connections	• Defective ABS wheel speed sensor or sensor gap • Defective steering angle sensor or improper neutral position • Defective yaw rate & lateral G sensor or improper installation
Poor brake performance	Unstable or uneven braking	• VDCCM&H/U • Defective ABS wheel speed sensor or sensor gap • Brake caliper • Brake pad • Road surface (uneven) • Tire specifications, tire wear and air pressures • Incorrect wiring or piping connections	• Defective ABS wheel speed sensor or sensor gap • Defective steering angle sensor or improper neutral position • Defective yaw rate & lateral G sensor or improper installation • Master cylinder • Disc rotor • Brake pipe • Axle and wheels • Road with crowns or banks • Suspension play or fatigue (poor damping)

Symptom		Main probable cause	Other probable cause
Vibration or noise • When braking suddenly • When accelerating suddenly • While driving on a slippery road	Excessive brake pedal vibration	• Road surface (uneven) • Incorrect wiring or piping connections	• VDCCM&H/U • Brake booster • Suspension play or fatigue (poor damping)
	Strange noise from VDCH/U	• VDCCM&H/U (mount bushing) • Defective ABS wheel speed sensor or sensor gap • Brake pipe	• VDCCM&H/U • Defective steering angle sensor or improper neutral position • Defective yaw rate & lateral G sensor or improper installation
	Noise from the front side of vehicle	• VDCCM&H/U (mount bushing) • Defective ABS wheel speed sensor or sensor gap • Master cylinder • Brake caliper • Brake pad • Disc rotor • Brake pipe • Brake booster • Suspension play or fatigue (poor damping)	• Axle and wheels • Tire specifications, tire wear and air pressures
	Noise inside passenger seat		• VDCCM&H/U • Defective steering angle sensor or improper neutral position • Defective yaw rate & lateral G sensor or improper installation
	Noise from the rear side of vehicle	• Defective ABS wheel speed sensor or sensor gap • Brake caliper • Brake pad • Disc rotor • Parking brake • Brake pipe • Suspension play or fatigue (poor damping)	• Axle and wheels • Tire specifications, tire wear and air pressures
Engine does not accelerate or goes into a stall when accelerating suddenly or driving on a slippery surface.		• VDCCM&H/U • Defective ABS wheel speed sensor or sensor gap • Master cylinder • Brake caliper • Parking brake • Incorrect wiring or piping	• Defective steering angle sensor or improper neutral position • Defective yaw rate & lateral G sensor or improper installation • Brake pad • Brake pipe

Symptom		Main probable cause	Other probable cause
Poor change-direction-operation stability of TCS	Deviation to right or left direction	• VDCCM&H/U • Defective ABS wheel speed sensor or sensor gap • Defective steering angle sensor or improper neutral position • Defective yaw rate & lateral G sensor or improper installation • Brake caliper • Brake pad • Wheel alignment • Road surface (uneven) • Road with crowns or banks • Tire specifications, tire wear and air pressures • Incorrect wiring or piping connections	• Disc rotor • Brake pipe • Axle and wheels • Suspension play or fatigue (poor damping)
	Vehicle spin	• VDCCM&H/U • Defective ABS wheel speed sensor or sensor gap • Defective steering angle sensor or improper neutral position • Defective yaw rate & lateral G sensor or improper installation • Brake pad • Tire specifications, tire wear and air pressures • Incorrect wiring or piping connections	• Brake caliper • Brake pipe
Steering wheel drag while driving		• VDCCM&H/U • Defective ABS wheel speed sensor or sensor gap • Defective steering angle sensor or improper neutral position • Defective yaw rate & lateral G sensor or improper installation • Incorrect wiring or piping connections • Power steering system	• Brake caliper • Brake pad • Disc rotor • Wheel alignment • Road surface (uneven) • Road with crowns or banks • Suspension play or fatigue (poor damping) • Tire specifications, tire wear and air pressures
VDC operates while driving normally.		• VDCCM&H/U • Defective ABS wheel speed sensor or sensor gap • Defective steering angle sensor or improper neutral position • Defective yaw rate & lateral G sensor or improper installation • Wheel alignment • Road surface (uneven) • Road with crowns or banks • Suspension play or fatigue (poor damping) • Tire specifications, tire wear and air pressures • Incorrect wiring or piping connections • Power steering system	

Symptom	Main probable cause	Other probable cause
VDC OFF indicator light does not come on when the VDC OFF switch is depressed. NOTE: When pressing VDC OFF switch for more than 10 seconds, VDC OFF indicator light goes off and cannot operate any more. When turning the ignition switch from OFF to ON, the previous status is restored.	• Harness • Indicator light bulb • VDC OFF switch	

BRAKE

BR

		Page
1.	General Description	2
2.	Front Brake Pad	13
3.	Front Disc Rotor	16
4.	Front Disc Brake Assembly	17
5.	Rear Brake Pad	22
6.	Rear Disc Rotor	23
7.	Rear Disc Brake Assembly	25
8.	Master Cylinder	27
9.	Brake Booster	29
10.	Brake Fluid	33
11.	Air Bleeding	34
12.	Brake Hose	36
13.	Brake Pipe	38
14.	Brake Pedal	39
15.	Stop Light Switch	41
16.	General Diagnostic Table	43

1. General Description

A: SPECIFICATION

Model			2.5 i	2.5 i-LTD, OUTBACK 2.5 i, -LTD, OUTBACK 3.0 R, -LTD, -LLB, OUTBACK 2.5 XT	2.5 GT, -LTD
Front disc brake	Size		15-inch type	16-inch type	17-inch type
	Type		Disc (Floating type, ventilated)		
	Effective disc diameter	mm (in)	228 (8.98)	244 (4.61)	261 (10.28)
	Disc thickness × Outer diameter	mm (in)	24 × 277 (0.94 × 10.91)	24 × 294 (0.94 × 11.57)	30 × 316 (1.18 × 12.44)
	Effective cylinder diameter		42.8 (1.685) × 2		
	Pad dimensions (length × width × thickness)	mm (in)	117.8 × 50.5 × 11.0 (4.638 × 1.988 × 0.433)		130.0 × 53.5 × 11.0 (5.118 × 2.106 × 0.433)
	Clearance adjustment		Automatic adjustment		
Rear disc brake	Size		15-inch type		
	Type		Disc (Floating type, solid)		Disc (Floating type, ventilated)
	Effective disc diameter	mm (in)	238 (9.37)		254 (10.0)
	Disc thickness × Outer diameter	mm (in)	10 × 274 (0.39 × 10.79)		18 × 290 (0.71 × 11.42)
	Effective cylinder diameter	mm (in)	38.1 (1.500)		
	Pad dimensions (length × width × thickness)	mm (in)	92.0 × 33.0 × 9.0 (3.622 × 1.299 × 0.354)		82.4 × 33.7 × 9.0 (3.244 × 1.327 × 0.354)
	Clearance adjustment		Automatic adjustment		
Master cylinder	Type		Tandem		
	Effective diameter	mm (in)	23.8 (15/16)		
	Reservoir type		Sealed type		
	Brake fluid reservoir capacity	cm^3 (cu in)	205 (12.51)		
Brake booster	Type		Vacuum suspended		
	Effective diameter	mm (in)	208 + 229 (8.19 + 9.02)		
Brake line			Dual circuit system		
Brake fluid **CAUTION:** **• Avoid mixing brake fluid of different brands to prevent fluid performance from degrading.** **• When filling brake fluid, be careful not to allow any dust into the reservoir.** **• Use fresh brake fluid when replacing or refilling the fluid.**			FMVSS No. 116, DOT3		

NOTE:
Refer to “PB” section for parking brake specifications. <Ref. to PB-2, SPECIFICATION, General Description.>

Item			Standard value	Limit
Front brake	Pad thickness mm (in)	Except 17-inch type	11 (0.43)	1.5 (0.059)
		17-inch type	11 (0.43)	1.5 (0.059)
	Disc thickness mm (in)	Except 17-inch type	24 (0.94)	22 (0.87)
		17-inch type	30 (1.18)	28 (1.10)
	Disc runout mm (in)		—	0.05 (0.0020)
Rear brake (Disc type)	Pad thickness mm (in)	Solid disc	9.0 (0.354)	1.5 (0.059)
		Ventilated disc	9.0 (0.354)	1.5 (0.059)
	Disc thickness mm (in)	Solid disc	10 (0.39)	8.5 (0.335)
		Ventilated disc	18 (0.71)	16 (0.63)
	Disc runout mm (in)		—	0.05 (0.0020)
Parking brake	Inside diameter mm (in)		170 (6.69)	171 (6.73)
	Lining thickness mm (in)		3.2 (0.126)	1.5 (0.059)
	Lever stroke		5 — 6 notches/200 N (20 kgf, 45 lb)	

		Brake pedal force N (kgf, lb)	Fluid pressure kPa (kg/cm^2, psi)		
			15-inch type	16-inch type	17-inch type
Brake Booster	Brake fluid pressure without engine running	147 (15, 33)	545 (6, 79)		
		294 (30, 66)	1,564 (16, 227)		
	Brake fluid pressure with engine running and vacuuming at 66.7 kPa (500 mmHg, 19.69 inHg)	147 (15, 33)	6,003 (61, 871)	5,381 (55, 780)	4,963 (51, 720)
		294 (30, 66)	11,273 (115, 1,635)	10,982 (112, 1,593)	10,055 (103, 1,458)

Brake pedal	Free play mm (in)	0.5 — 2 (0.02 — 0.08) [When pulling the brake pedal upward with a force of less than 10 N (1 kgf, 2 lb).]

B: COMPONENT

1. FRONT DISK BRAKE

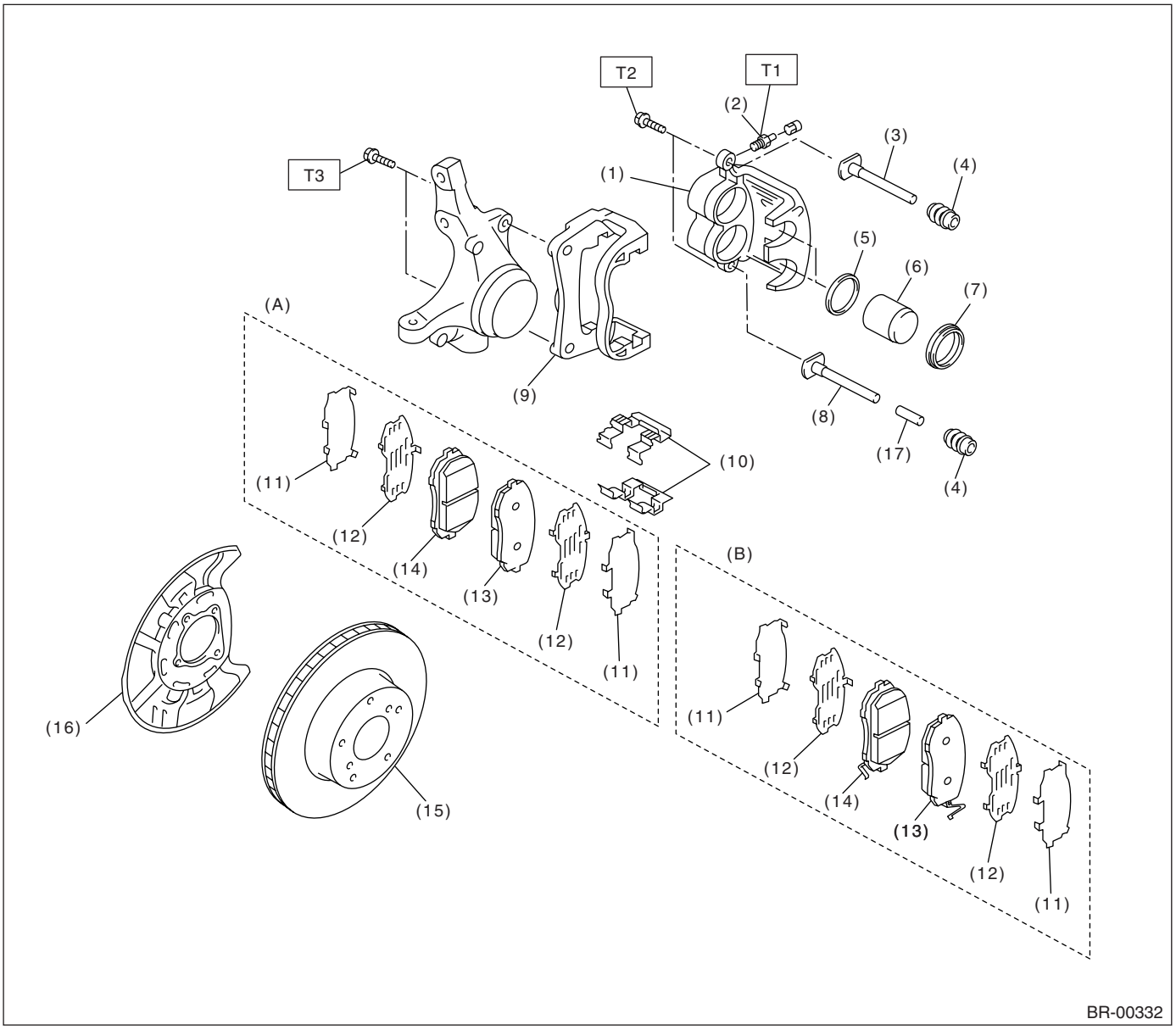

(A) 15, 16-inch type
(B) 17-inch type

(1) Caliper body
(2) Air bleeder screw
(3) Guide pin (Green)
(4) Pin boot
(5) Piston seal
(6) Piston
(7) Piston boot
(8) Lock pin (Yellow)
(9) Support
(10) Pad clip
(11) Outer shim
(12) Inner shim
(13) Pad (Outside)
(14) Pad (Inside)
(15) Disc rotor
(16) Disc cover
(17) Bushing

Tightening torque: N·m (kgf-m, ft-lb)
T1: 8 (0.8, 5.8)
T2: 27 (2.8, 19.9)
T3: 80 (8.2, 59)

2. REAR DISC BRAKE

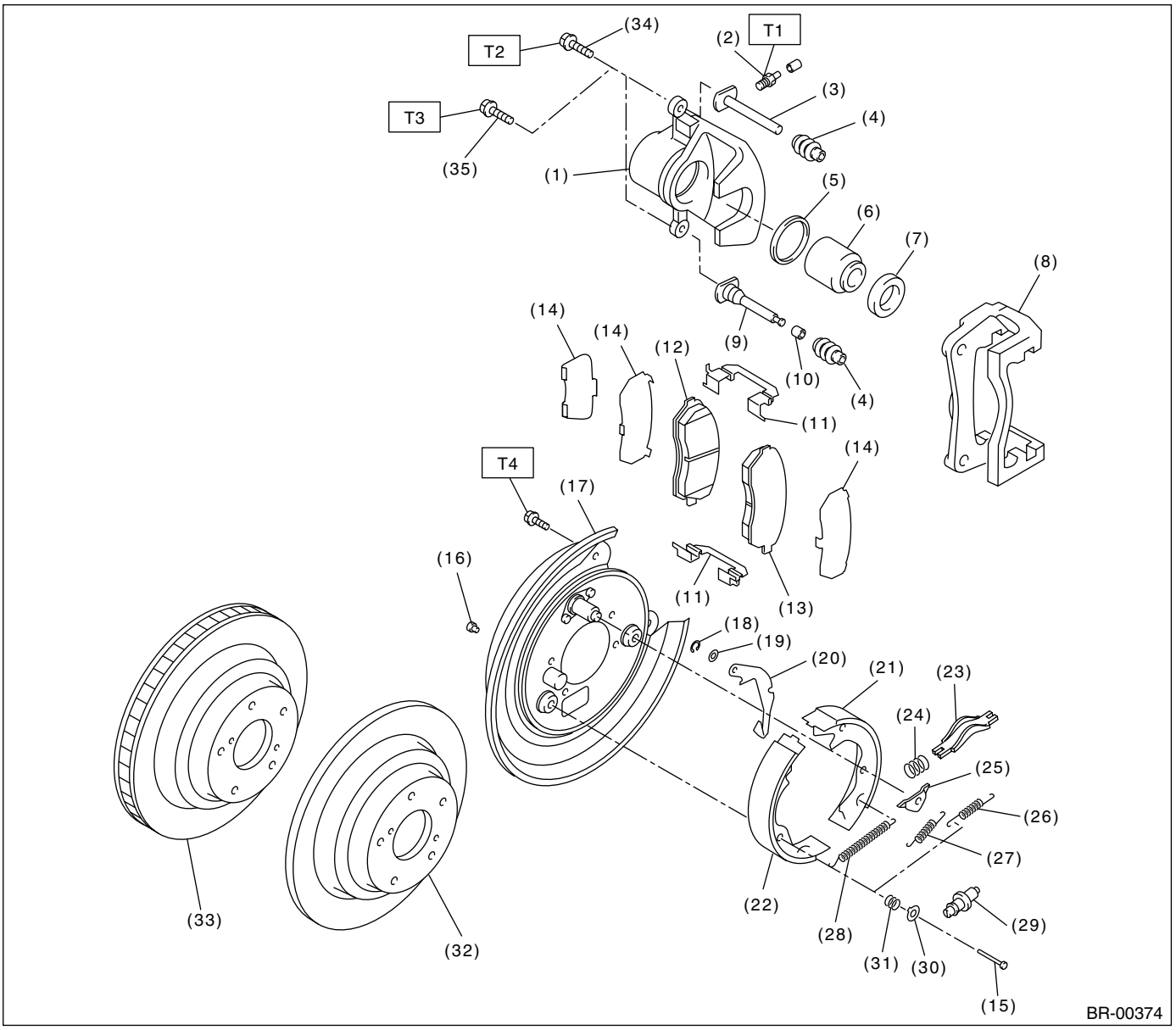

(1) Caliper body
(2) Air bleeder screw
(3) Guide pin (Green)
(4) Pin boot
(5) Piston seal
(6) Piston
(7) Piston boot
(8) Support
(9) Lock pin (Yellow)
(10) Bushing
(11) Pad clip
(12) Inner pad
(13) Outer pad
(14) Shim
(15) Shoe hold-down pin
(16) Cover
(17) Back plate
(18) Retainer
(19) Spring washer
(20) Parking brake lever
(21) Parking brake shoe (Secondary)
(22) Parking brake shoe (Primary)
(23) Strut
(24) Strut shoe spring
(25) Shoe guide plate
(26) Secondary shoe return spring
(27) Primary shoe return spring
(28) Adjusting spring
(29) Adjuster
(30) Shoe hold-down cup
(31) Shoe hold-down spring
(32) Disc rotor (Solid type)
(33) Disc rotor (Ventilated type)
(34) Bolt (For solid disc brake)
(35) Bolt (For ventilated disc brake)

Tightening torque: N·m (kgf-m, ft-lb)
T1: 8 (0.8, 5.8)
T2: 27 (2.8, 19.9)
T3: 37 (3.7, 27.2)
T4: 53 (5.4, 39.1)

3. MASTER CYLINDER

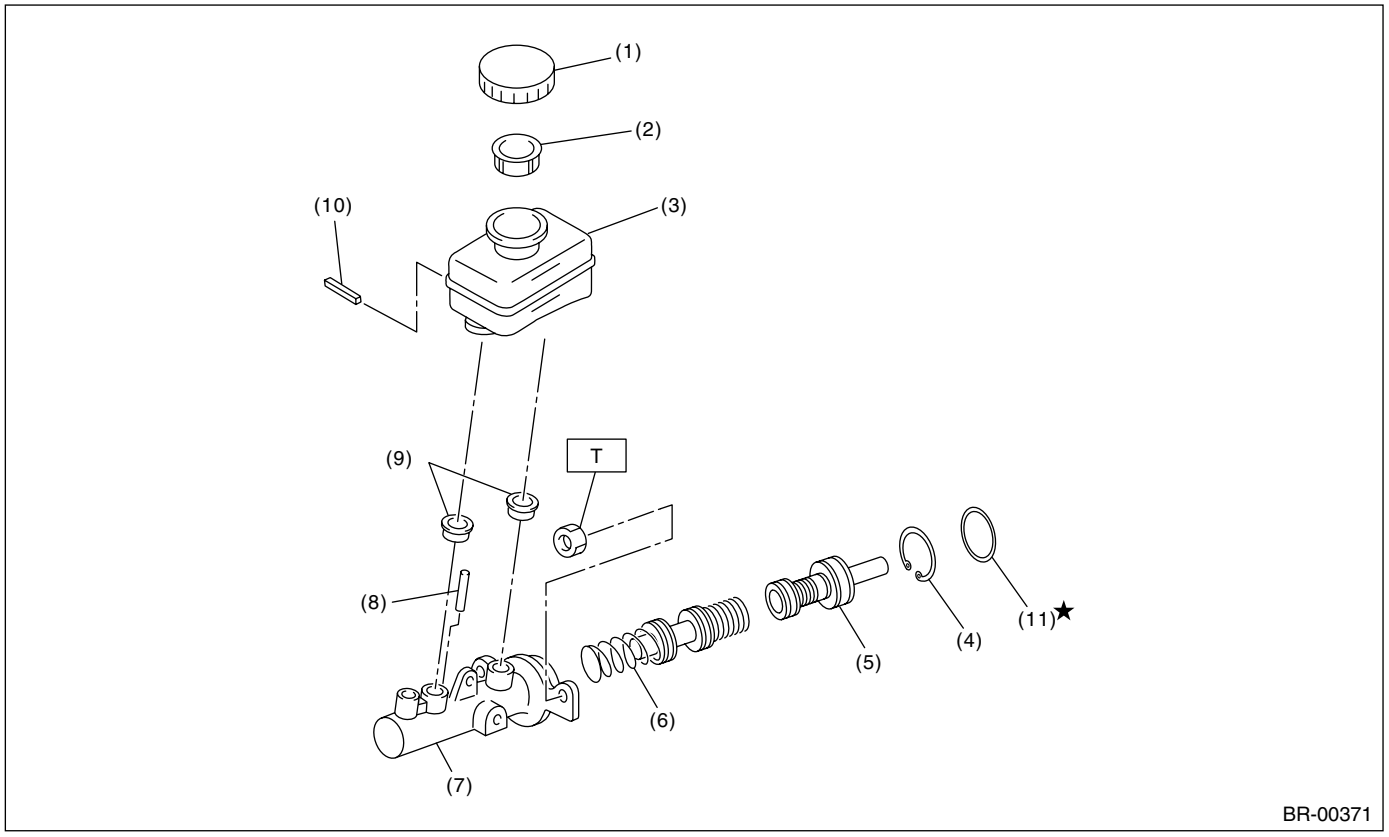

(1) Cap
(2) Filter
(3) Reservoir tank
(4) C-ring
(5) Primary piston
(6) Secondary piston
(7) Cylinder body
(8) Cylinder pin
(9) Seal
(10) Pin
(11) O-ring

Tightening torque: N·m (kgf-m, ft-lb)
T: 13 (1.3, 9.6)

4. FRONT BRAKE PIPES AND HOSE

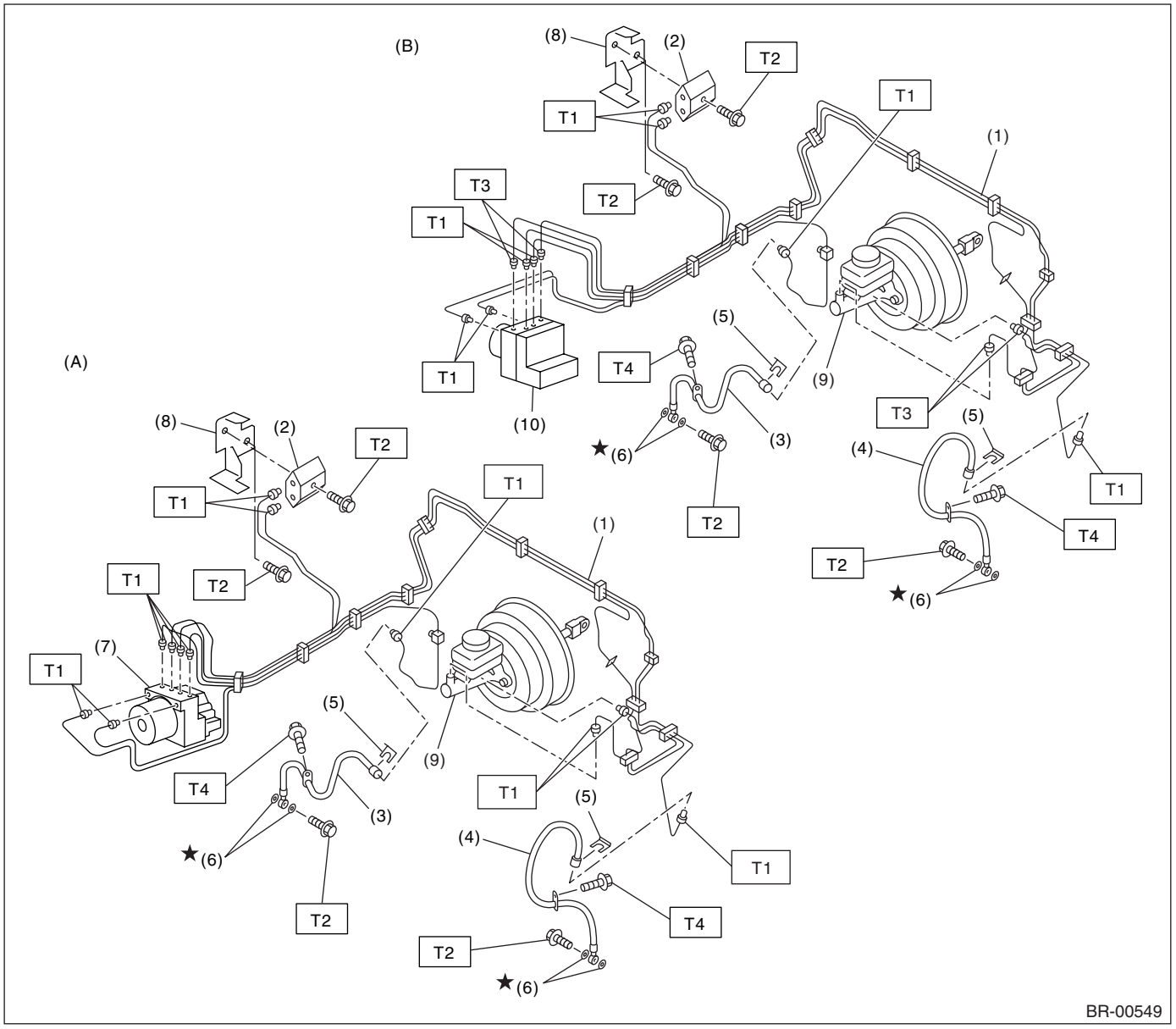

(A) Model with ABS
(B) Model with vehicle dynamics control (VDC)
(1) Front brake pipe ASSY
(2) Two-way connector
(3) Front brake hose RH
(4) Front brake hose LH
(5) Clamp
(6) Gasket
(7) ABS control module and hydraulic control unit (ABSCM&H/U)
(8) Bracket
(9) Master cylinder
(10) VDC control module & hydraulic control unit (VDCCM&H/U)

Tightening torque: N·m (kgf-m, ft-lb)
T1: 15 (1.5, 10.8)
T2: 18 (1.8, 13.0)
T3: 19 (1.9, 14.0)
T4: 33 (3.4, 24.3)

5. CENTER AND REAR BRAKE PIPES AND HOSE

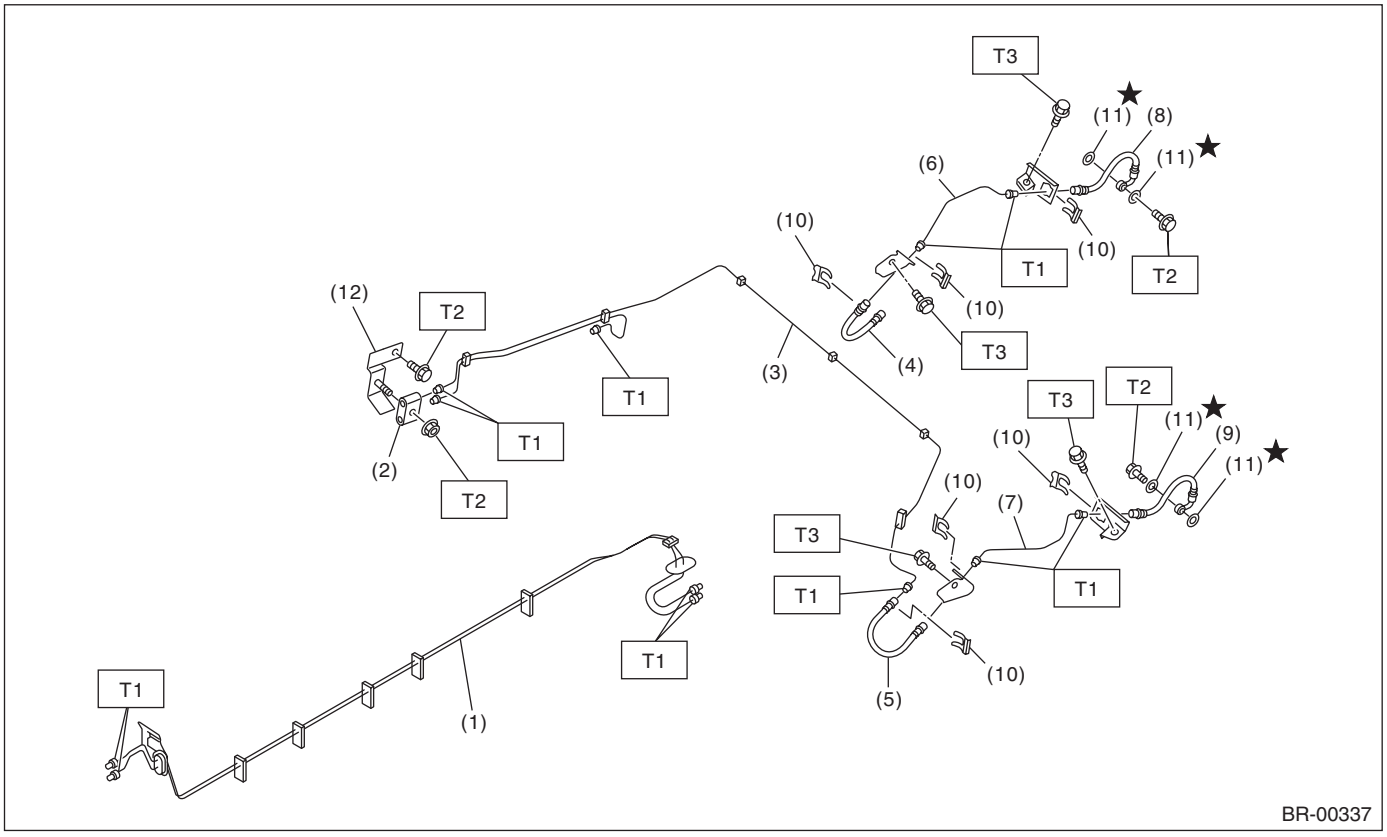

(1) Center brake pipe ASSY
(2) Two-way connector
(3) Rear brake pipe ASSY
(4) Rear brake hose RH
(5) Rear brake hose LH
(6) Rear brake pipe RH
(7) Rear brake pipe LH
(8) Rear brake hose rear RH
(9) Rear brake hose rear LH
(10) Clamp
(11) Gasket
(12) Bracket

Tightening torque: N·m (kgf-m, ft-lb)
T1: 15 (1.5, 10.8)
T2: 18 (1.8, 13.0)
T3: 33 (3.4, 24.3)

6. BRAKE BOOSTER

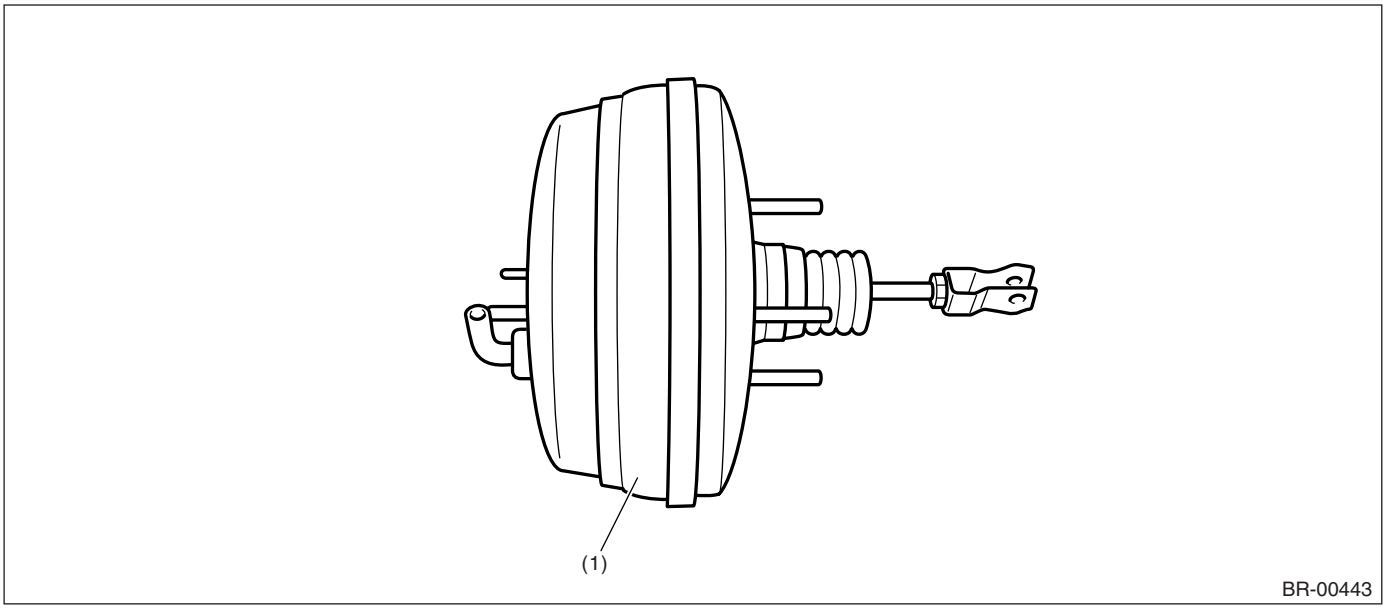

(1) Brake booster

7. BRAKE PEDAL

- MT model

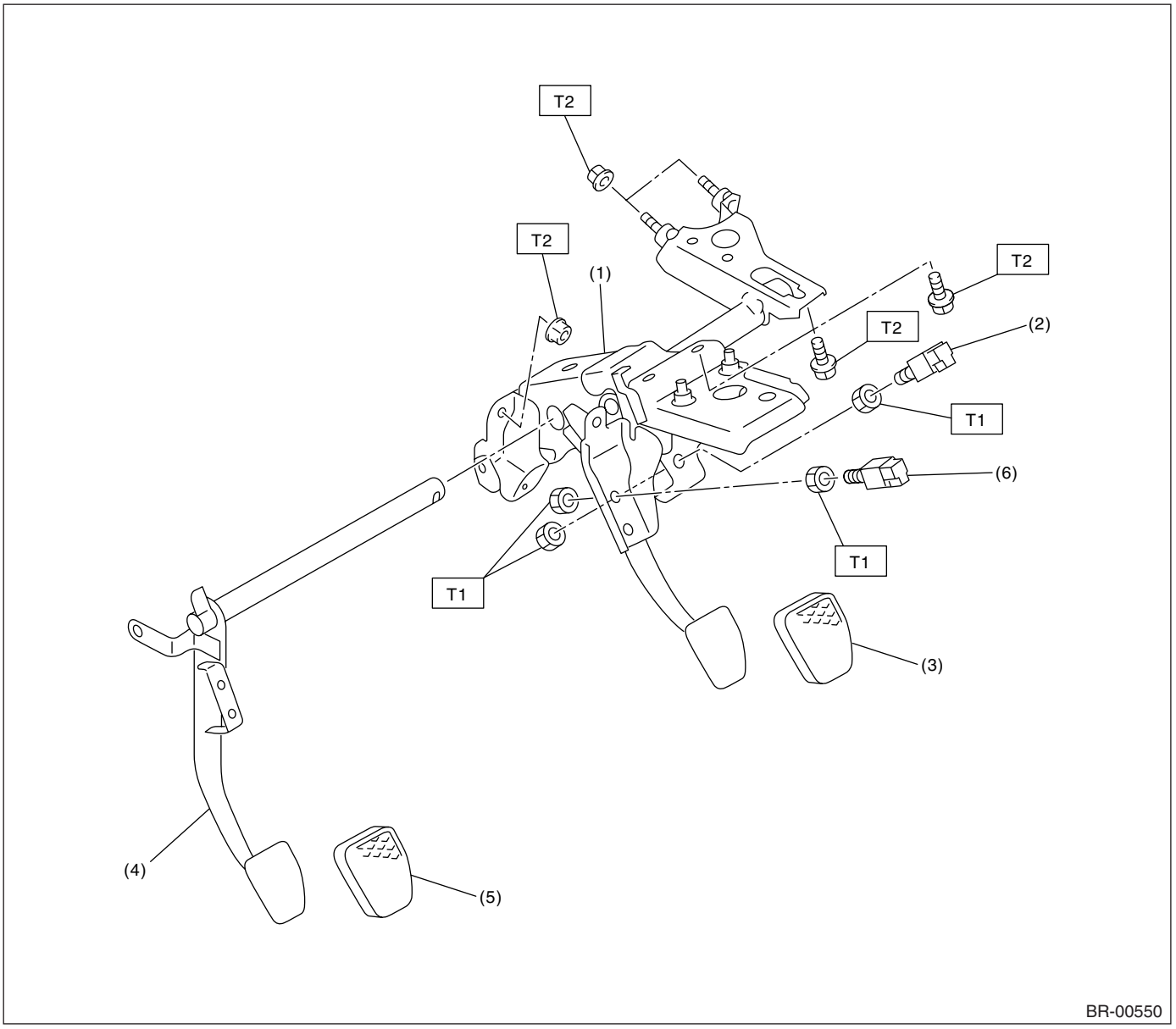

(1)	Brake pedal ASSY	(4)	Clutch pedal	***Tightening torque: N·m (kgf-m, ft-lb)***
(2)	Stop light switch	(5)	Clutch pedal pad	***T1: 8 (0.8, 5.8)***
(3)	Brake pedal pad	(6)	Clutch switch	***T2: 18 (1.8, 13.0)***

• AT model

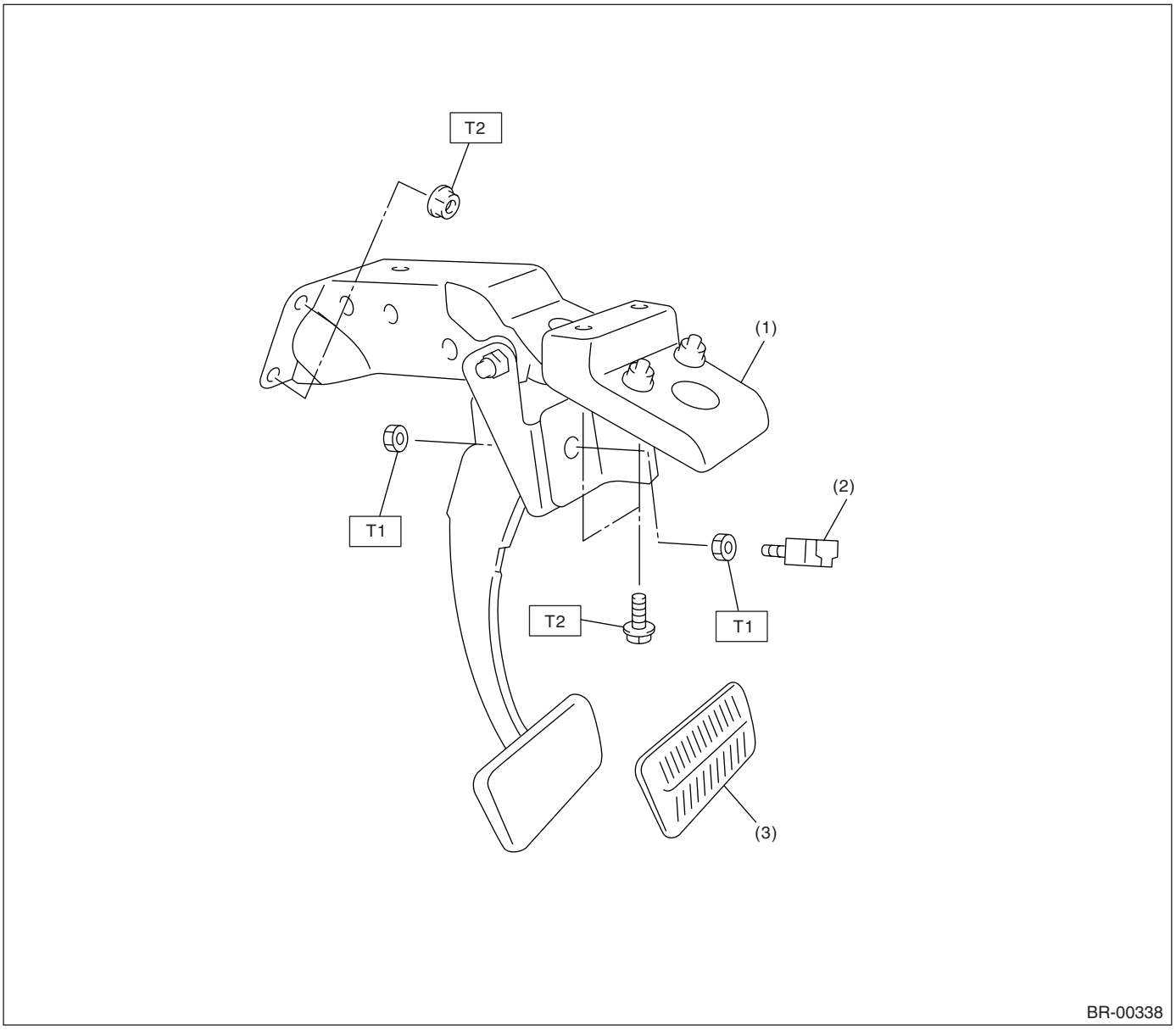

(1) Brake pedal ASSY
(2) Stop light switch
(3) Brake pedal pad

Tightening torque: N·m (kgf-m, ft-lb)
T1: 8 (0.8, 5.8)
T2: 18 (1.8, 13.0)

C: CAUTION

• Wear work clothing, including a cap, protective goggles, and protective shoes during operation.
• Before removal, installation or disassembly, be sure to clarify the failure. Avoid unnecessary removal, installation, disassembly and replacement.
• Use SUBARU genuine grease etc. or equivalent. Do not mix grease, etc. with that of another grade or from other manufacturers.
• Before securing a part on a vice, place cushioning material such as wood blocks, aluminum plate, or shop cloth between the part and the vice.
• Be sure to tighten fasteners including bolts and nuts to the specified torque.
• Place shop jacks or rigid racks at the specified points.

D: PREPARATION TOOL

1. GENERAL TOOL

TOOL NAME	REMARKS
Snap ring pliers	Used for removing and installing snap ring.

2. Front Brake Pad

A: REMOVAL

1. 15-INCH TYPE

1) Lift-up the vehicle and remove front wheels.
2) Remove the caliper bolt.

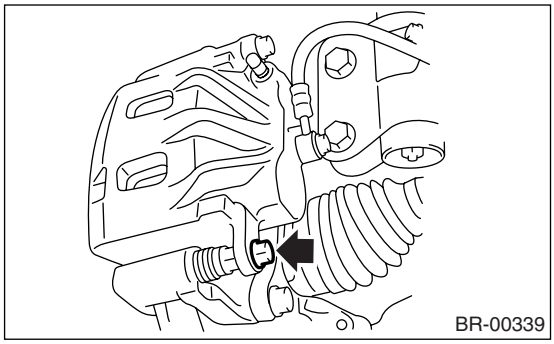

3) Raise the caliper body and support it.

NOTE:
Do not disconnect the brake hose from caliper body.

4) Remove the pad.

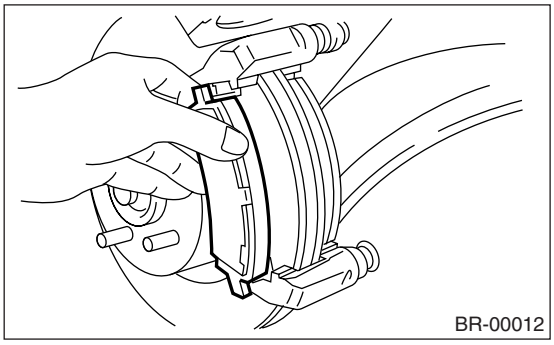

NOTE:
If the brake pad is difficult to remove, proceed as follows:

(1) Remove the caliper body from support.
(2) Remove the support.
(3) Place the support in a vise between wooden blocks.

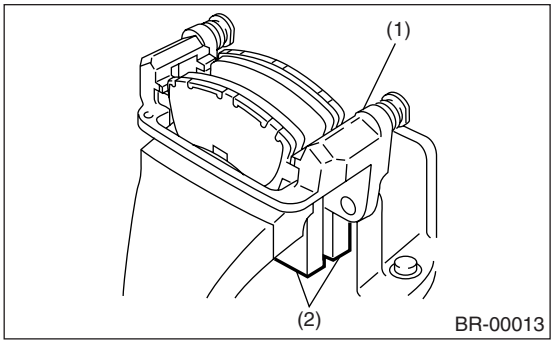

(1) Support
(2) Wooden block

(4) Attach a rod of less than 12 mm (0.47 in) diameter to the shaded area of the brake pad, and strike the rod with a hammer to drive brake pad out of place.

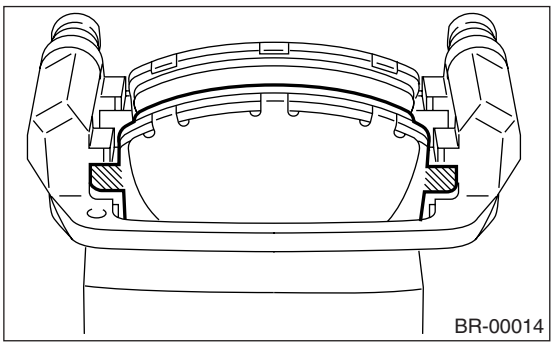

2. 16-INCH TYPE

Refer to 15-inch type. <Ref. to BR-13, 15-INCH TYPE, REMOVAL, Front Brake Pad.>

3. 17-INCH TYPE

Refer to 15-inch type. <Ref. to BR-13, 15-INCH TYPE, REMOVAL, Front Brake Pad.>

B: INSTALLATION

1. 15-INCH TYPE

1) Apply a thin coat of Molykote M7439 to pad clip.

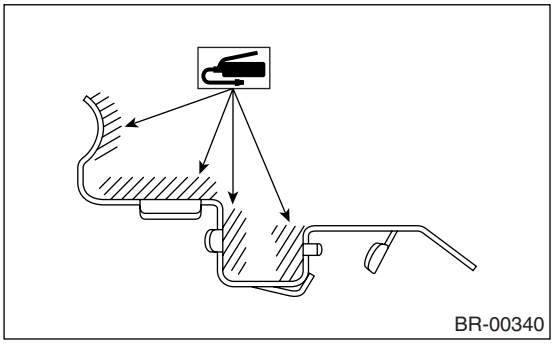

2) Apply a thin coat of Molykote AS880N (Part No. K0779YA010) to the frictional portion between pad and pad inner shim.

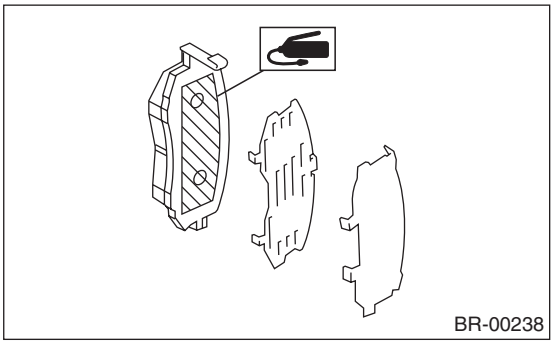

3) Apply a thin coat of Molykote AS880N (Part No. K0779YA010) to the three frictional portions between inner shim and outer shim of outer pads.

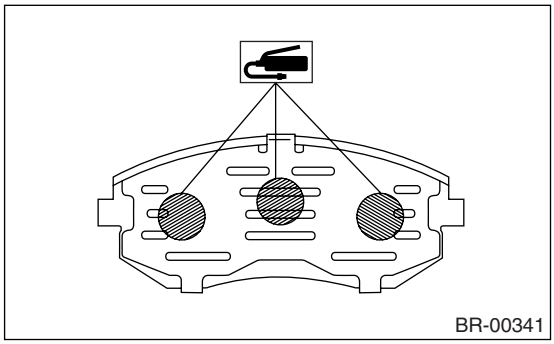

4) Install the pad on support.
5) Install the caliper body on support.

Tightening torque:
27 N·m (2.8 kgf-m, 19.9 ft-lb)

2. 16-INCH TYPE

Refer to 15-inch type. <Ref. to BR-13, 15-INCH TYPE, INSTALLATION, Front Brake Pad.>

3. 17-INCH TYPE

1) Apply a thin coat of Molykote M7439 to pad clip.

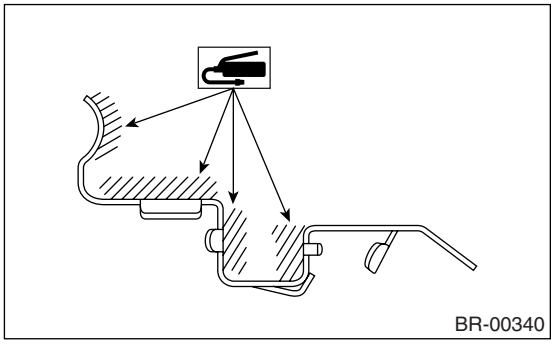

2) Apply a thin coat of Molykote AS880N (Part No. K0779YA010) to the frictional portion between pad and pad inner shim.

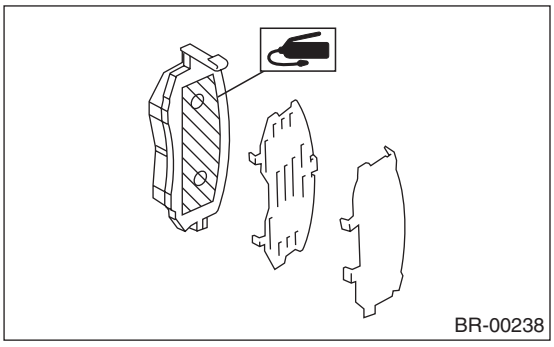

3) Apply a thin coat of Molykote AS880N (Part No. K0779YA010) to the three frictional portions between inner shim and outer shim of outer pads.

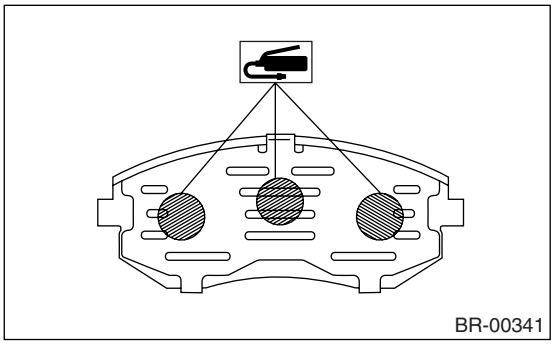

4) Install the pad on support.

NOTE:
Install the pad indicator in proper direction.

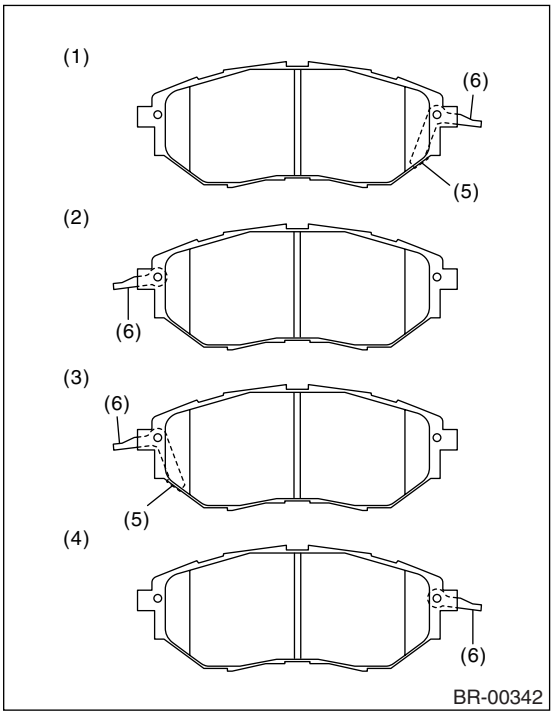

(1) LH – IN
(2) LH – OUT
(3) RH – IN
(4) RH – OUT
(5) Pad indicator
(6) Pad return spring

CAUTION:
• Be sure to install so that the direction of pad return spring faces to the input side of brake rotor rotation direction as shown in the figure.
• Correctly install the pad return spring to supporting surface of pad clip as shown in the figure.

• When the pad return spring is deformed or damaged, replace the brake pad with new one.

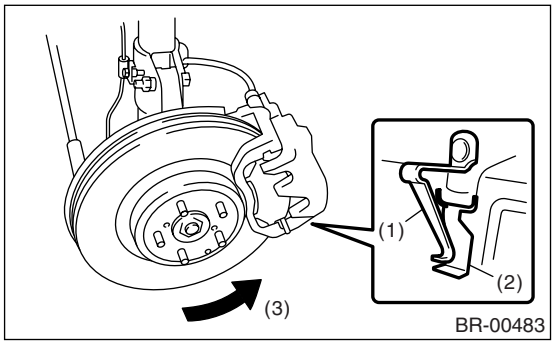

(1) Pad return spring
(2) Supporting surface of pad clip
(3) Brake rotor rotation direction

5) Install the caliper body on support.

Tightening torque:
27 N·m (2.8 kgf-m, 19.9 ft-lb)

C: INSPECTION

1. 15-INCH TYPE

Check the pad thickness A.

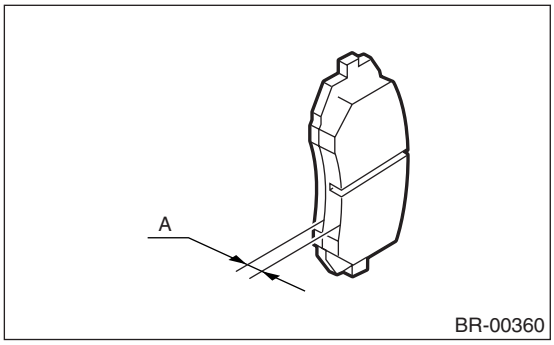

Pad thickness mm (in)	Standard value	11 (0.43)
	Wear limit	1.5 (0.059)

NOTE:
• Always replace the pads for both right and left wheels as a set.
• Also replace the pad clips if they are twisted or worn.
• Replace the pad if there is oil or grease on it.

2. 16-INCH TYPE

Refer to 15-inch type. <Ref. to BR-15, 15-INCH TYPE, INSPECTION, Front Brake Pad.>

3. 17-INCH TYPE

Check the pad thickness A.

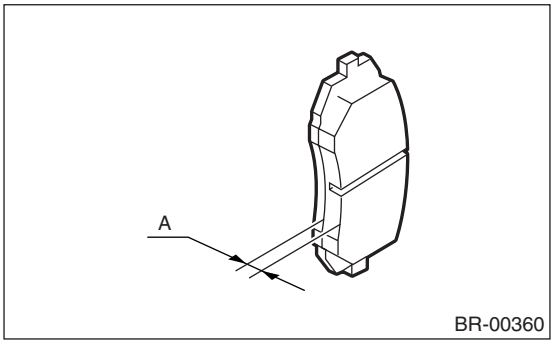

Pad thickness mm (in)	Standard value	11 (0.43)
	Wear limit	1.5 (0.059)

NOTE:
• Always replace the pads for both right and left wheels as a set.
• Replace the pad if there is oil or grease on it.

3. Front Disc Rotor

A: REMOVAL

1. 15-INCH TYPE

1) Lift-up the vehicle, and remove the front wheels.
2) Remove the caliper body and the support from housing, and suspend it from strut using a wire.

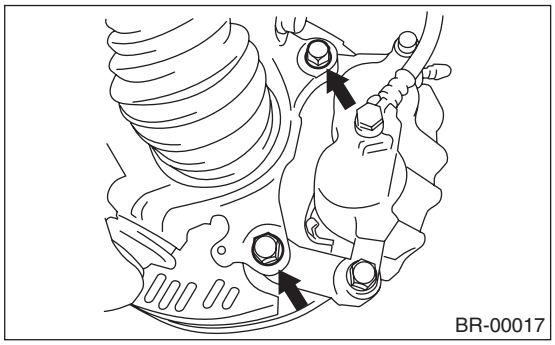

3) Remove the disc rotor.

NOTE:
If the disc rotor seizes up within hub, drive the disc rotor out by pushing with an 8 mm bolt in holes B on the rotor.

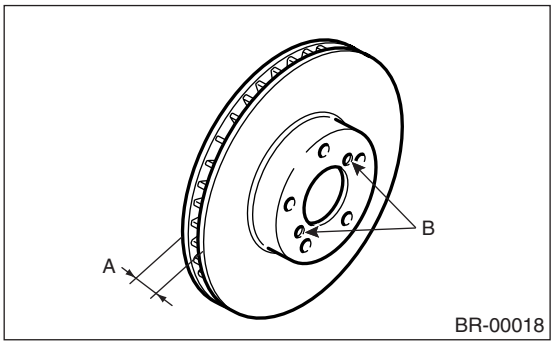

4) Clean mud and foreign particles from the caliper body assembly and the support.

2. 16-INCH TYPE

Refer to 15-inch type. <Ref. to BR-16, 15-INCH TYPE, REMOVAL, Front Disc Rotor.>

3. 17-INCH TYPE

Refer to 15-inch type. <Ref. to BR-16, 15-INCH TYPE, REMOVAL, Front Disc Rotor.>

B: INSTALLATION

1) Install the disc rotor.
2) Install the caliper body and the support to housing.

Tightening torque:
80 N·m (8.2 kgf-m, 59 ft-lb)

3) Install the front wheels.

C: INSPECTION

1) Check front wheel bearing play and axial hub runout before disc rotor runout limit inspection. <Ref. to DS-16, INSPECTION, Front Axle.>
2) Secure the disc rotor by tightening five wheel nuts.
3) Set a dial gauge 10 mm (0.39 in) inward of the rotor outer perimeter. Turn the disc rotor to check runout. If the disc rotor runout exceeds the service limit, resurface the disc rotor. After resurfacing, check disc rotor thickness as in step 4.

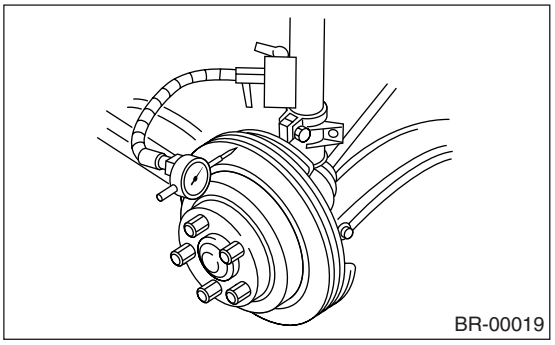

Disc rotor runout limit:
0.05 mm (0.0020 in)

4) Set a micrometer 10 mm (0.39 in) inward of the rotor outer perimeter, and then measure the disc rotor thickness. If the thickness of disc rotor exceeds the service limit, replace with a new disc rotor.

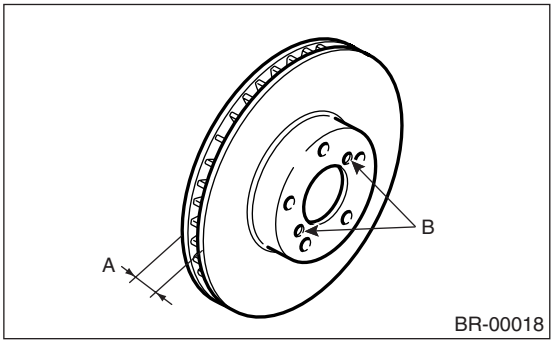

		Standard value	Limit	Disc rotor outer diameter
Disc rotor thickness A mm (in)	15″	24 (0.94)	22 (0.87)	277 (10.91)
	16″	24 (0.94)	22 (0.87)	294 (11.57)
	17″	30 (1.18)	28 (1.10)	316 (12.44)

4. Front Disc Brake Assembly

A: REMOVAL

1. 15-INCH TYPE

CAUTION:
Do not allow brake fluid to come in contact with vehicle body; wash away with water and wipe off completely if spilled.

1) Lift-up the vehicle, and remove the front wheels.
2) Remove the union bolt, and disconnect the brake hose from caliper body assembly.

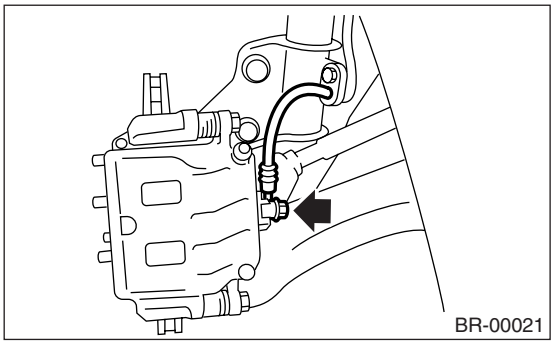

3) Remove the bolt securing lock pin to caliper body.

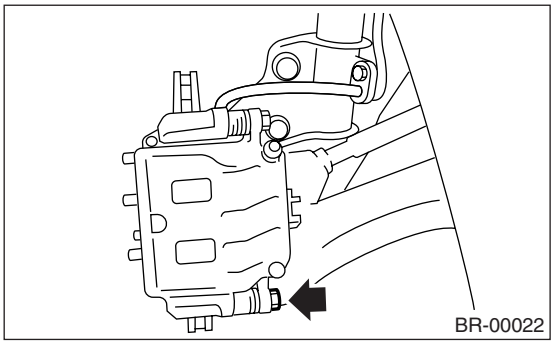

4) Raise the caliper body, and then move it toward vehicle center to separate it from support.
5) Remove the support from housing.

NOTE:
Remove the support only when replacing itself or rotor. It need not be removed when servicing the caliper body assembly.

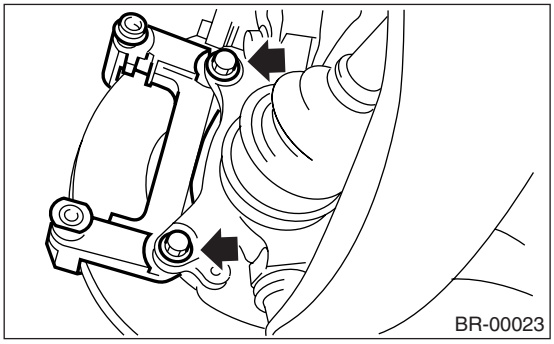

6) Clean mud and foreign particles from the caliper body assembly and the support.

2. 16-INCH TYPE

Refer to 15-inch type. <Ref. to BR-17, 15-INCH TYPE, REMOVAL, Front Disc Brake Assembly.>

3. 17-INCH TYPE

Refer to 15-inch type. <Ref. to BR-17, 15-INCH TYPE, REMOVAL, Front Disc Brake Assembly.>

B: INSTALLATION

1. 15-INCH TYPE

1) Install the support on housing.

Tightening torque:
80 N·m (8.2 kgf-m, 59 ft-lb)

2) Apply a thin coat of Molykote M7439 to pad clip.

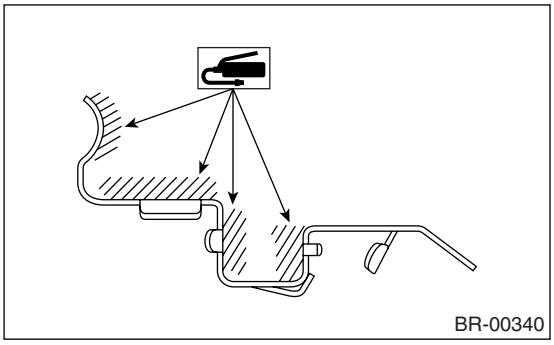

3) Apply a thin coat of Molykote AS880N (Part No. K0777YA010) to the frictional portion between pad and inner shim.

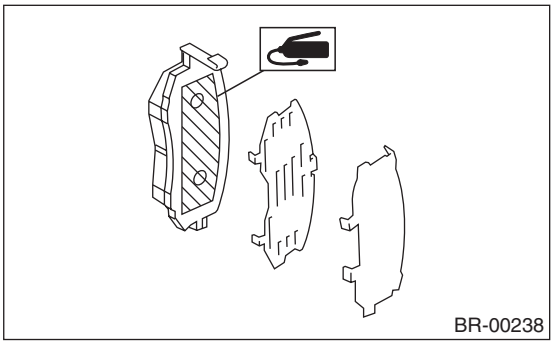

4) Apply a thin coat of Molykote AS880N (Part No. K0777YA010) to the three frictional portions between inner shim and outer shim of outer pads.

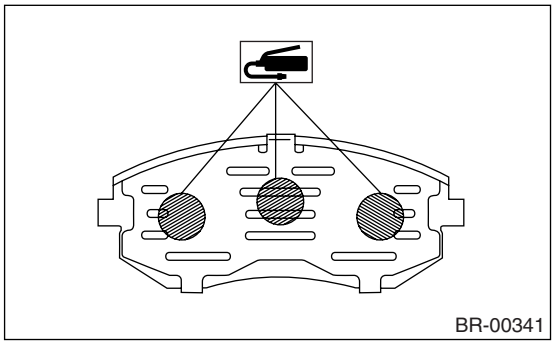

5) Install the pad on support.
6) Install the caliper body on support.

Tightening torque:
27 N·m (2.8 kgf-m, 19.9 ft-lb)

7) Using new brake hose gaskets, connect the brake hose.

Tightening torque:
18 N·m (1.8 kgf-m, 13.0 ft-lb)

8) Bleed air from the brake system.

2. 16-INCH TYPE

Refer to 15-inch type. <Ref. to BR-17, 15-INCH TYPE, INSTALLATION, Front Disc Brake Assembly.>

3. 17-INCH TYPE

1) Install the support on housing.

Tightening torque:
80 N·m (8.2 kgf-m, 59 ft-lb)

2) Apply a thin coat of Molykote M7439 to pad clip.

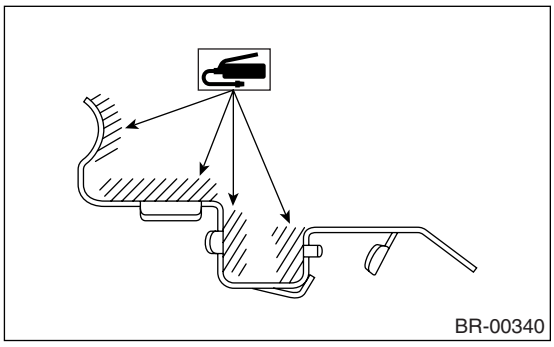

3) Apply a thin coat of Molykote AS880N (Part No. K0777YA010) to the frictional portion between pad and inner shim.

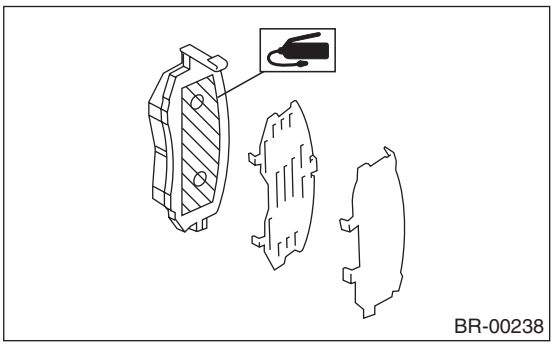

4) Apply a thin coat of Molykote AS880N (Part No. K0779YA010) to the three frictional portions between inner shim and outer shim of outer pads.

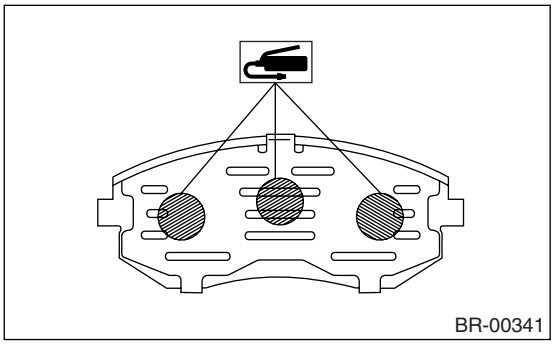

5) Install the pad on support.

NOTE:
Install the pad indicator in proper direction.

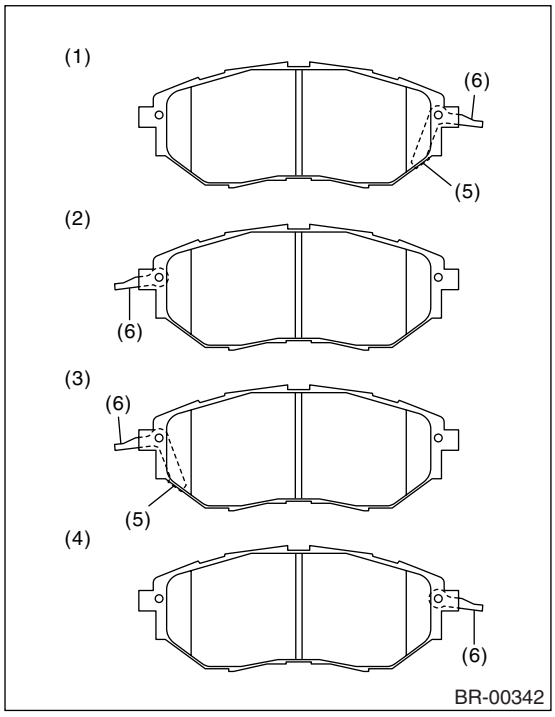

(1) LH – IN
(2) LH – OUT
(3) RH – IN
(4) RH – OUT
(5) Pad indicator
(6) Pad return spring

CAUTION:
• Be sure to install so that the direction of pad return spring faces to the input side of brake rotor rotation direction as shown in the figure.
• Correctly install the pad return spring to supporting surface of pad clip as shown in the figure.
• When the pad return spring is deformed or damaged, replace the brake pad with new one.

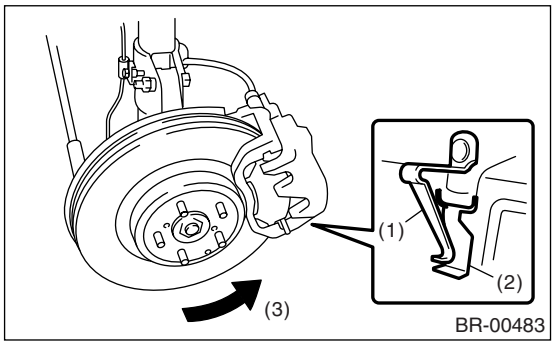

(1) Pad return spring
(2) Supporting surface of pad clip
(3) Brake rotor rotation direction

6) Install the caliper body on support.
7) Using new brake hose gaskets, connect the brake hose.

Tightening torque:
18 N·m (1.8 kgf-m, 13.0 ft-lb)

8) Bleed air from brake system.

C: DISASSEMBLY

1. 15-INCH TYPE

1) Clean mud and foreign particles from the caliper body assembly and the support.

CAUTION:
Be careful not to allow foreign particles to enter the brake hose connector.

2) Place a wooden block in caliper body as shown in the figure to prevent piston from jumping out and avoid being damaged.
3) Gradually supply compressed air via installation hole of brake hose to force the piston out.

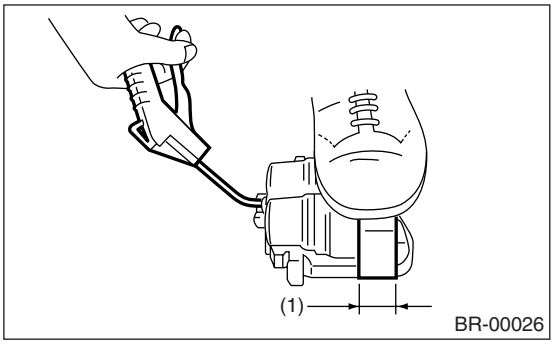

(1) Place a 30 mm (1.18 in) wide wood block here.

4) Remove the piston boot.

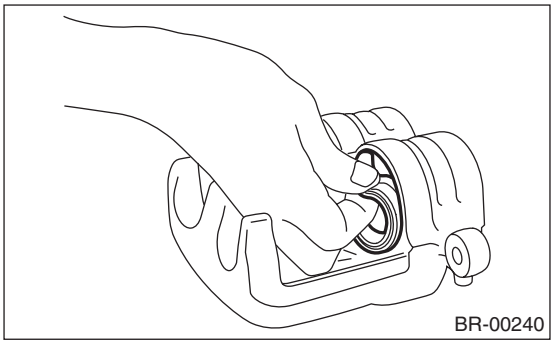

5) Remove the piston seal from caliper body cylinder.

CAUTION:
Do not damage the cylinder and piston seal groove.

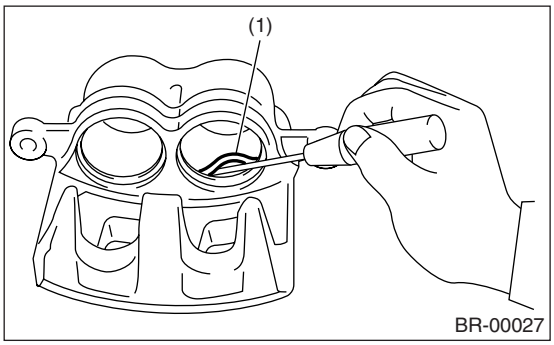

(1) Piston seal

6) Remove the guide pin and boot from caliper body.

2. 16-INCH TYPE

Refer to 15-inch type. <Ref. to BR-19, 15-INCH TYPE, DISASSEMBLY, Front Disc Brake Assembly.>

3. 17-INCH TYPE

Refer to 15-inch type. <Ref. to BR-19, 15-INCH TYPE, DISASSEMBLY, Front Disc Brake Assembly.>

D: ASSEMBLY

1. 15-INCH TYPE

1) Clean the caliper body interior using brake fluid.
2) Apply a coat of brake fluid to the piston seal and fit piston seal in groove on caliper body.
3) Apply a coat of brake fluid to the entire inner surface of cylinder and outer surface of piston.
4) Apply a coat of specified grease to the boot and fit in to the groove on the ends of cylinder.

Grease:
NIGLUBE RX-2 (Part No. K0779GA102)

5) Insert the piston into cylinder.

CAUTION:
Do not force the piston into cylinder.

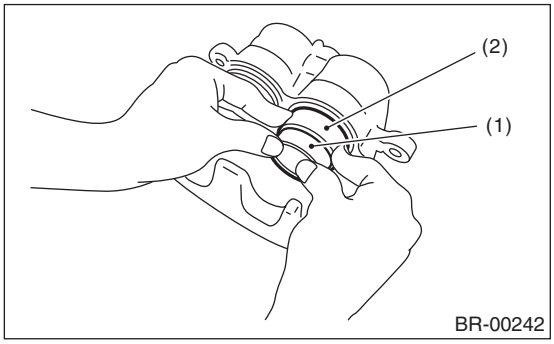

(1) Piston
(2) Piston boot

6) Position the boot in the grooves on cylinder and piston.

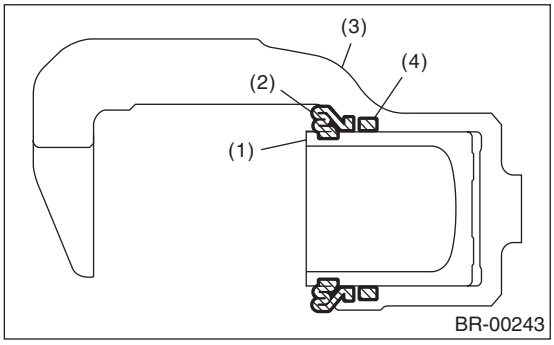

(1) Piston
(2) Piston boot
(3) Caliper body
(4) Piston seal

7) Apply a coat of specified grease to the lock pin and guide pin outer surface, cylinder inner surface, and boot grooves.

Grease:
NIGLUBE RX-2 (Part No. K0779GA102)

8) Install the lock pin and guide pin boot on support.

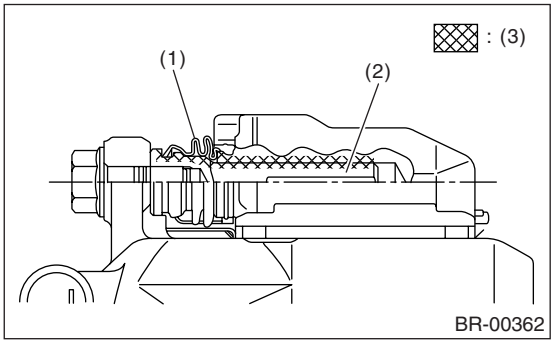

(1) Pin boot
(2) Lock pin or guide pin
(3) Apply grease.

2. 16-INCH TYPE

Refer to 15-inch type. <Ref. to BR-20, 15-INCH TYPE, ASSEMBLY, Front Disc Brake Assembly.>

3. 17-INCH TYPE

Refer to 15-inch type. <Ref. to BR-20, 15-INCH TYPE, ASSEMBLY, Front Disc Brake Assembly.>

E: INSPECTION

1) Repair or replace the faulty parts.
2) Check the caliper body and piston for uneven wear, damage or rust.
3) Check the rubber parts for damage and deterioration.

5. Rear Brake Pad

A: REMOVAL

1) Lift-up the vehicle, and then remove the rear wheels.
2) Remove the caliper bolt.

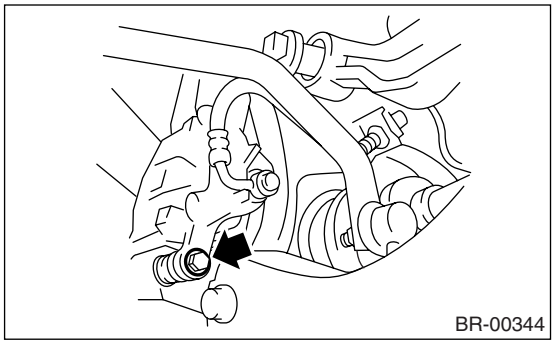

3) Raise the caliper body and support it.

NOTE:
Do not disconnect the brake hose from caliper body.

4) Remove the pad.

NOTE:
If the brake pad is difficult to remove, use the same procedure as for front disc brake pad.
<Ref. to BR-13, REMOVAL, Front Brake Pad.>

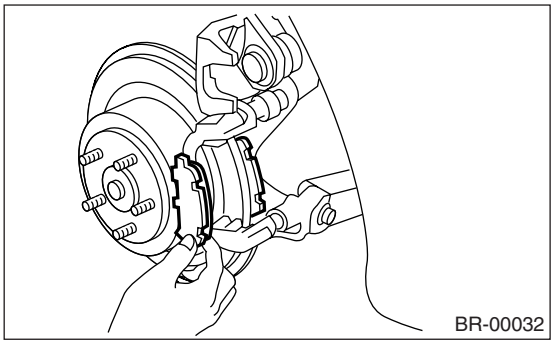

B: INSTALLATION

1) Apply a thin coat of Molykote M7439 to pad clip.

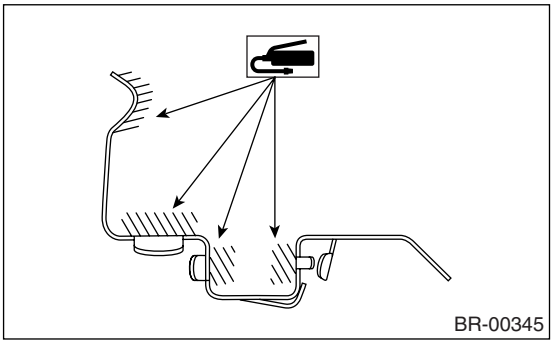

2) Apply a thin coat of Molykote AS880N (Part No. K0777YA010) to the frictional portion between pad and shim.
3) Install the pad on support.
4) Install the caliper body on support.

Tightening torque:
Solid disc brake model
27 N·m (2.8 kgf-m, 19.9 ft-lb)
Ventilated disc brake model
37 N·m (3.7 kgf-m, 27.2 ft-lb)

C: INSPECTION

Check the pad thickness A.

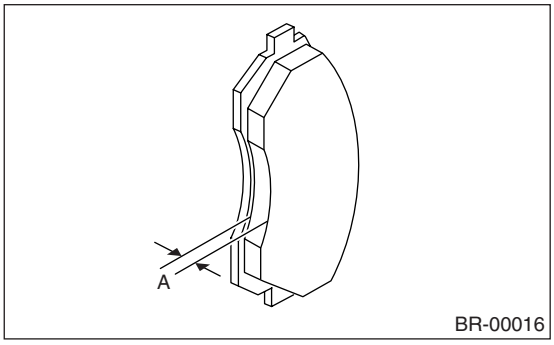

Type of disc rotor		Solid	Ventilated
Pad thickness mm (in)	Standard value	9.0 (0.35)	9.0 (0.35)
	Wear limit	1.5 (0.059)	1.5 (0.059)

NOTE:
• Always replace the pads for both right and left wheels as a set.
• Also replace pad clips if they are twisted or worn.
• A wear indicator is provided on the inner disc brake pad. If the pad wears down to such an extent that the end of wear indicator contacts disc rotor, a squeaking sound is produced as the wheel rotates. If this sound is heard, replace the pad.
• Replace the pad if there is oil or grease on it.

6. Rear Disc Rotor

A: REMOVAL

1) Lift-up the vehicle, and then remove the rear wheels.
2) Release the parking brake.
3) Remove the two mounting bolts, and remove the disc brake assembly.

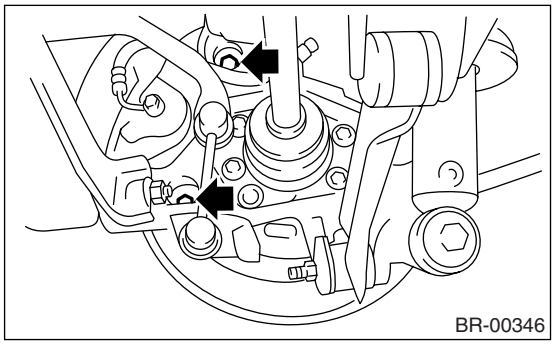
BR-00346

4) Suspend the disc brake assembly so that the hose is not stretched.
5) Remove the disc rotor.

NOTE:
If the disc rotor is difficult to remove, try following two methods in order.

(1) Turn the adjusting screw using a flat tip screwdriver until the brake shoe gets away enough from the disc rotor.

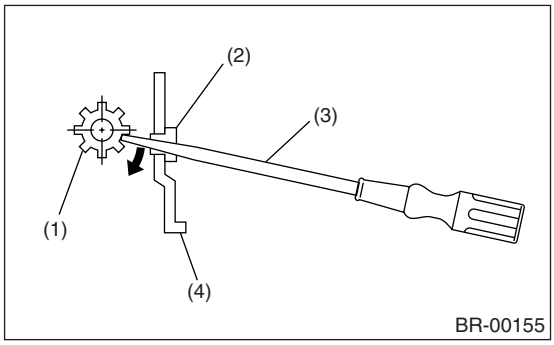

BR-00155

(1) Adjusting screw
(2) Cover
(3) Flat tip screwdriver
(4) Back plate

(2) If the disc rotor seizes up within hub, drive the disc rotor out by pushing with an 8 mm bolt in holes B on the rotor.

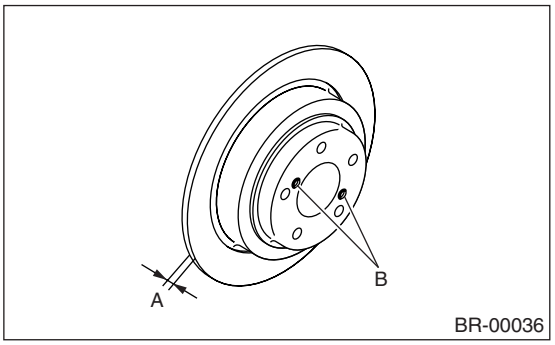

BR-00036

B: INSTALLATION

1) Install in the reverse order of removal.
2) Adjust the parking brake. <Ref. to PB-8, ADJUSTMENT, Parking Brake Assembly (Rear Disc Brake).>

C: INSPECTION

1) Check rear wheel bearing play and axial hub runout before disc rotor runout limit inspection. <Ref. to DS-21, INSPECTION, Rear Hub Unit Bearing.>
2) Secure the disc rotor by tightening five wheel nuts.
3) Set a dial gauge 10 mm (0.39 in) inward of the rotor outer perimeter. Turn the disc rotor to check runout. If the disc rotor runout exceeds the service limit, resurface the disc rotor. After resurfacing, check disc rotor thickness as in step 4.

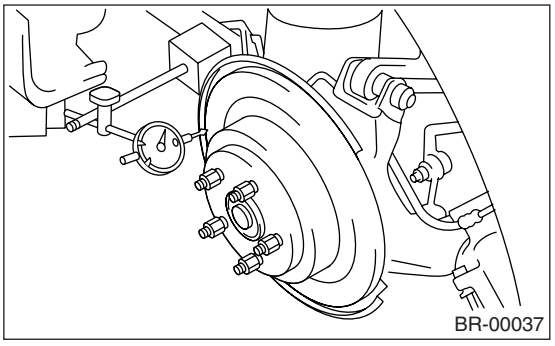
BR-00037

Disc rotor runout limit:
0.05 mm (0.0020 in)

4) Set a micrometer 10 mm (0.39 in) inward of the rotor outer perimeter, and then measure the disc rotor thickness. If the thickness of disc rotor ex-

ceeds the service limit, replace with a new disc rotor.

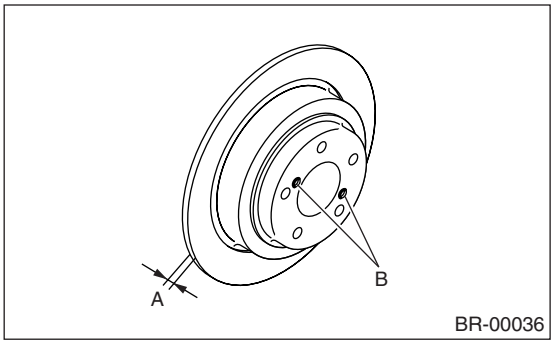

		Standard value	Limit	Disc outer dia.
Disc rotor thickness A mm (in)	Solid disc	10 (0.39)	8.5 (0.335)	274 (10.79)
	Ventilated disc	18 (0.71)	16 (0.63)	290 (11.42)

7. Rear Disc Brake Assembly

A: REMOVAL

CAUTION:
Do not allow brake fluid to come in contact with vehicle body; wash away with water and wipe off completely if spilled.

1) Lift-up the vehicle, and then remove the rear wheels.
2) Disconnect the brake hose from caliper body assembly.
3) Remove the caliper lower bolts.

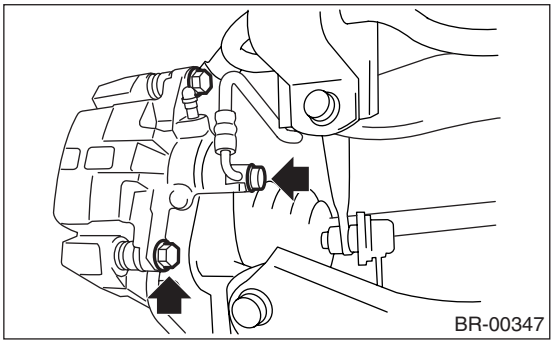

4) Raise the caliper body, and then move it toward vehicle center to separate it from the support.
5) Remove the support from housing.

NOTE:
Remove the support only when replacing itself or rotor. It need not be removed when servicing the caliper body assembly.

6) Clean mud and foreign particles from the caliper body assembly and the support.

CAUTION:
Be careful not to allow foreign particles to enter the brake hose connector.

B: INSTALLATION

1) Install the support on housing.

Tightening torque:
53 N·m (5.4 kgf-m, 39.1 ft-lb)

2) Apply a thin coat of Molykote M7439 to pad clip.

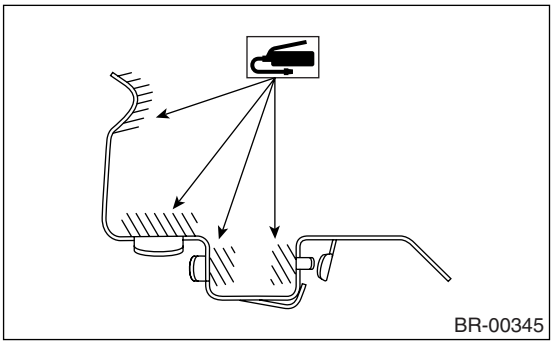

3) Apply a thin coat of Molykote AS880N (Part No. K0777YA010) to the frictional portion between pad and shim.
4) Install the pad on support.
5) Install the caliper body on support.

Tightening torque:
Solid disc brake model
27 N·m (2.8 kgf-m, 19.9 ft-lb)
Ventilated disc brake model
37 N·m (3.7 kgf-m, 27.2 ft-lb)

6) Connect the brake hose using new brake hose gaskets.

Tightening torque:
18 N·m (1.8 kgf-m, 13.0 ft-lb)

7) Bleed air from the brake system.

C: DISASSEMBLY

1) Remove the piston boot.

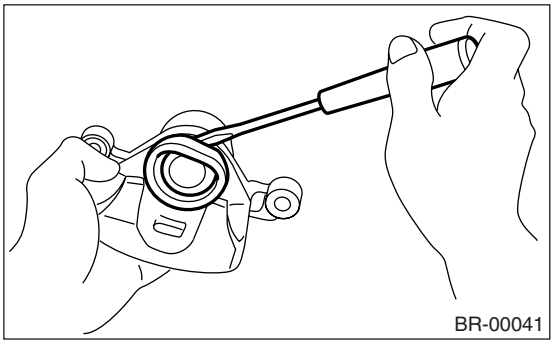

2) Place a wooden block in caliper body as shown in the figure to prevent the piston from jumping out and avoid being damaged.
3) Gradually supply compressed air via installation hole of brake hose to force the piston out.

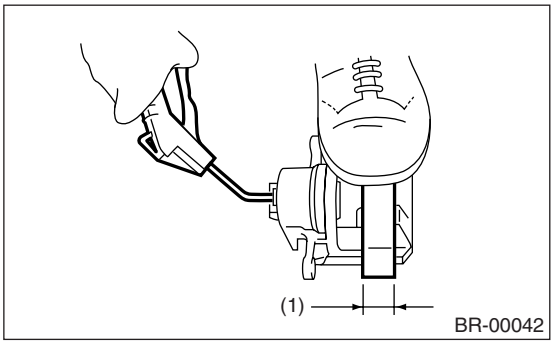

(1) Place a 30 mm (1.18 in) wide wooden block here.

4) Remove the piston seal from caliper body cylinder.

CAUTION:
Do not damage the cylinder and piston seal groove.

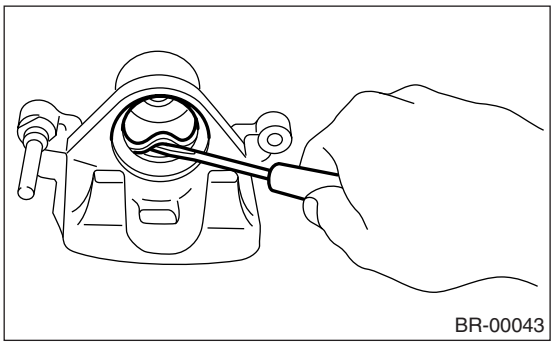

5) Remove the lock pin sleeve and boot from caliper body.
6) Remove the guide pin boot.

D: ASSEMBLY

1) Clean the caliper body interior using brake fluid.
2) Apply a coat of brake fluid to the piston seal and fit piston seal in groove on caliper body.
3) Apply a coat of brake fluid to the entire inner surface of cylinder and outer surface of piston.
4) Apply a coat of specified grease to the boot and fit in to the groove on the ends of cylinder.

Grease:
NIGLUBE RX-2 (Part No. K0779GA102)

5) Insert the piston into cylinder.

CAUTION:
Do not force the piston into cylinder.

6) Position the boot in the grooves on cylinder and piston.

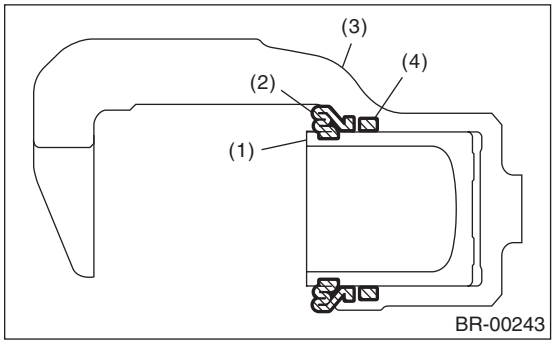

(1) Piston
(2) Piston boot
(3) Caliper body
(4) Piston seal

7) Apply a coat of specified grease to the guide pin, outer surface, sleeve outer surface, cylinder inner surface, and boot grooves.

Grease:
NIGLUBE RX-2 (Part No. K0779GA102)

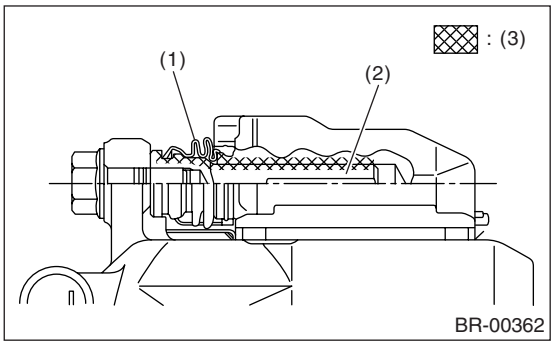

(1) Pin boot
(2) Lock pin or guide pin
(3) Apply grease.

8) Install the guide pin boot on support.
9) Install the lock pin boot on support, and then insert the lock pin sleeve into specified point.

E: INSPECTION

1) Repair or replace the faulty parts.
2) Check the caliper body and piston for uneven wear, damage or rust.
3) Check the rubber parts for damage or deterioration.

8. Master Cylinder

A: REMOVAL

CAUTION:
Do not allow brake fluid to come in contact with vehicle body; wash away with water and wipe off completely if spilled.

1) Thoroughly drain the brake fluid from reservoir tank.
2) Disconnect the fluid level gauge harness connector.
3) Remove the brake pipes from master cylinder.
4) Remove the master cylinder mounting nuts, and take out the master cylinder from brake booster.

B: INSTALLATION

1) Replace the O-ring for the master cylinder with a new one.

CAUTION:
Do not install the O-ring in wrong place.

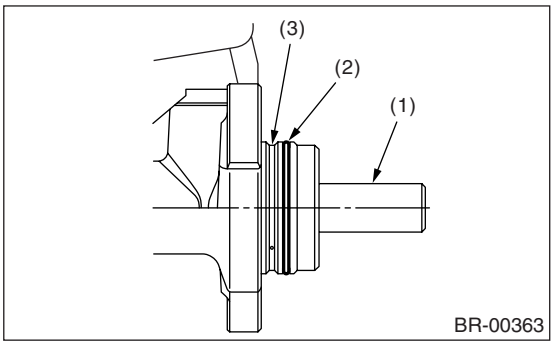

(1) Primary piston
(2) O-ring
(3) Do not install the O-ring on this groove.

2) Install in the reverse order of removal.

Tightening torque:
Master cylinder mounting nut
13 N·m (1.3 kgf-m, 9.6 ft-lb)
Piping flare nut
Model with ABS
15 N·m (1.5 kgf-m, 10.8 ft-lb)
Model with VDC
19 N·m (1.9 kgf-m, 14.0 ft-lb)

CAUTION:
Be sure to use recommended brake fluid.

3) Bleed air from brake system. <Ref. to BR-34, PROCEDURE, Air Bleeding.>

C: REPLACEMENT

1) Remove mud and dirt from the surface of brake master cylinder.
2) Secure the master cylinder on a vise.

NOTE:
To avoid damaging master cylinder, use aluminum plate while holding with vise.

3) Remove the pin which secures the reservoir tank to master cylinder, and then remove the reservoir tank and seal.

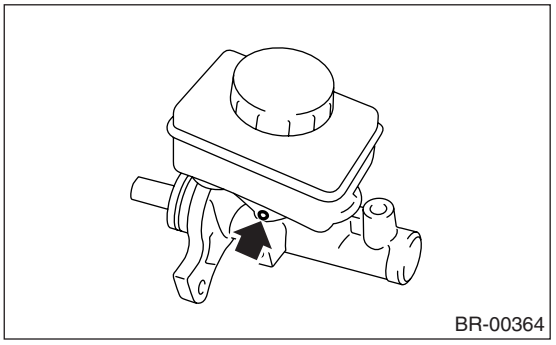

4) With pushing-in the primary piston, remove the C-ring using pliers.

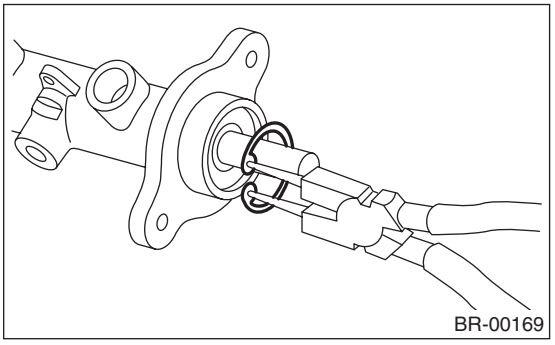

5) With pushing-in the primary piston, remove the straight pin from the port on installation part of reservoir tank using magnet pick-up tool.

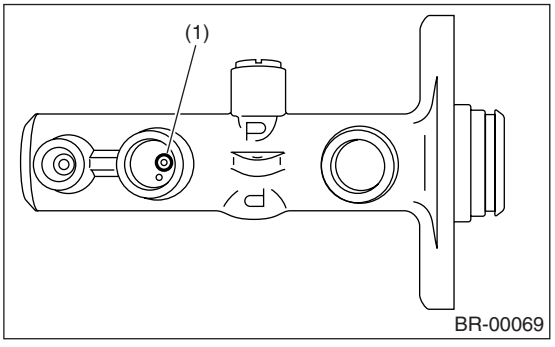

(1) Straight pin

6) Extract the primary piston assembly and secondary piston assembly straight out, while taking care not to scratch the inner surface of cylinder.
7) Clean the inside of master cylinder with brake fluid. Check the inside of cylinder for damage, deform and wear. Replace the master cylinder as assembly if faulty.
8) Apply brake fluid to the inner surface of master cylinder and piston assembly.

9) Ensure that the inner surface of master cylinder and piston assembly are free of dirt before assembling. Install the primary piston assembly and secondary piston assembly, while taking care not to scratch the master cylinder inner surface.
10) With pushing-in the primary piston, install the cylinder pin.
11) With pushing-in the primary piston, install the C-ring to groove, using pliers.

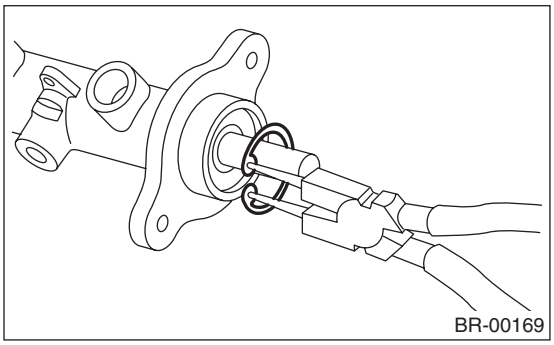

CAUTION:
Ensure the secure installation.
12) Install the seal to reservoir tank.

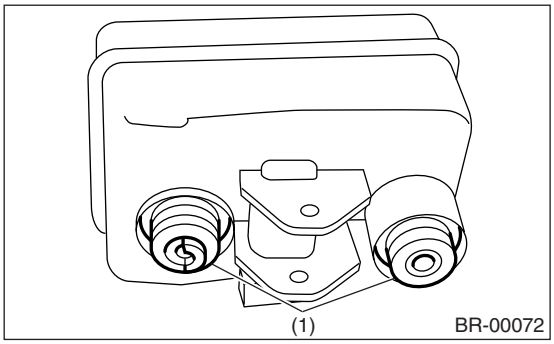

(1) Seal

13) Install the reservoir tank to master cylinder, and secure with pin.
14) Replace the O-ring for the master cylinder with a new one.

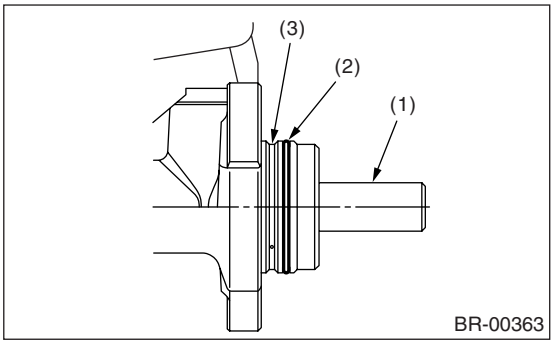

(1) Primary piston
(2) O-ring
(3) Do not install the O-ring on this groove.

D: INSPECTION

Inspect for oil leakage from the master cylinder.

NOTE:
After replacing piston kit, when the oil leakage is found without damaging or scratching the inside of cylinder, wear of master cylinder inner wall may be the cause. In this case, replace the master cylinder as assembly.

9. Brake Booster

A: REMOVAL

1) Remove or disconnect the following parts at engine compartment.
   (1) Disconnect the connector for brake fluid level gauge.
   (2) Remove the brake pipes from master cylinder.
   (3) Remove the master cylinder installing nuts.
   (4) Disconnect the vacuum hose from brake booster.
2) Remove the following parts from pedal bracket.
   (1) Snap pin and clevis pin
   (2) Four brake booster installing nuts

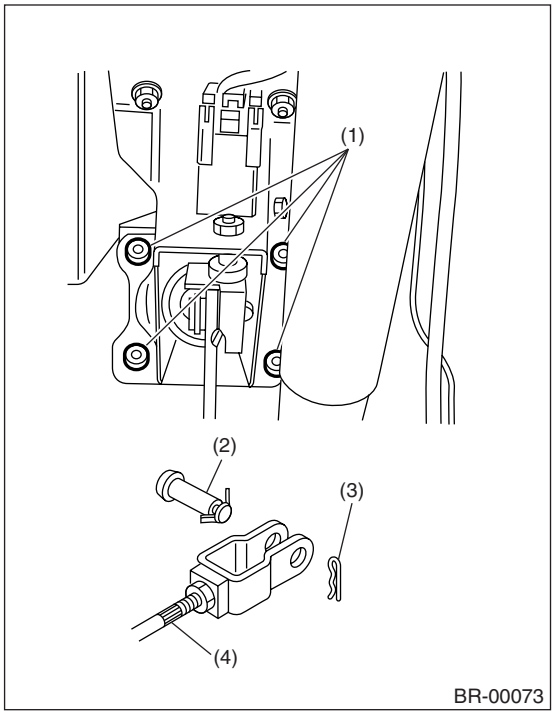

(1) Nut
(2) Clevis pin
(3) Snap pin
(4) Operating rod

3) Remove the brake booster while shunning brake pipes.

NOTE:
• Do not apply strong impact to booster shell and vacuum pipe.
• Be careful not to drop the brake booster. The brake booster should be replaced if it has been dropped.
• Use special care when handling the operating rod. If excessive force is applied to operating rod sufficient to cause a change in the angle in excess of ±3°, it may result in damage to the power piston cylinder.
• Use care when placing the brake booster on the floor.
• Do not change the push rod length.

CAUTION:
• Do not disassemble the brake booster.
• If external force is applied from above when brake booster is placed in this position, the resin portion as indicated by "P", may be damaged.

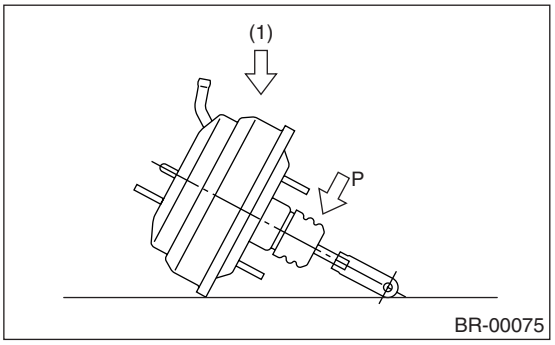

(1) Force

B: INSTALLATION

1) Check and adjust the operating rod of brake booster.

Standard L:
136.3 mm (5.38 in)

If it is not within the specified value, adjust it by adjusting the brake booster operating rod.

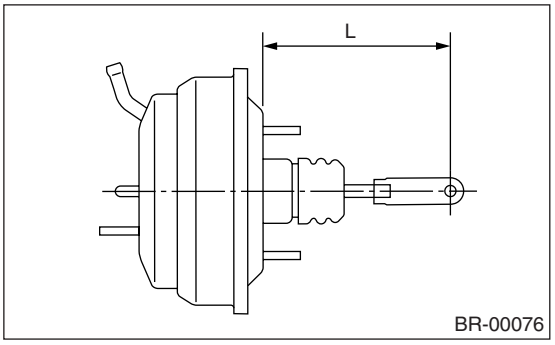

2) Mount the brake booster in position.

3) Connect the operating rod to brake pedal with clevis pin and snap pin.

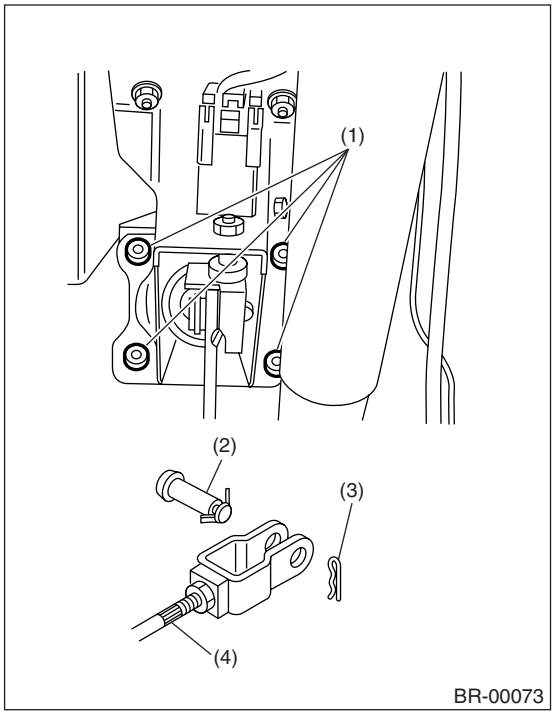

(1) Nut
(2) Clevis pin
(3) Snap pin
(4) Operating rod

NOTE:
Apply a thin coat of grease [SUNLIGHT 2 (Part No. 003602010)] to clevis pin.

4) Connect the vacuum hose to brake booster.
5) After replacing the O-ring with a new one, install the master cylinder to brake booster.

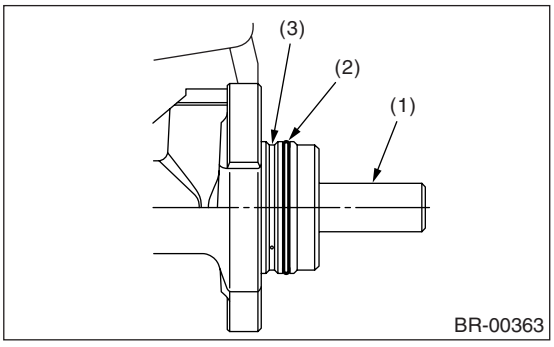

(1) Primary piston
(2) O-ring
(3) Do not install the O-ring on this groove.

6) Connect the brake pipes to master cylinder.
7) Connect the connector for brake fluid level gauge.
8) Measure the clearance between the threaded end of stop light switch and stopper.

If it is not within specified value, adjust it by adjusting the position of stop light switch. <Ref. to BR-41, ADJUSTMENT, Stop Light Switch.>

CAUTION:
Be careful not to rotate the stop light switch.

Stop light switch clearance A:
0.3 mm (0.012 in)

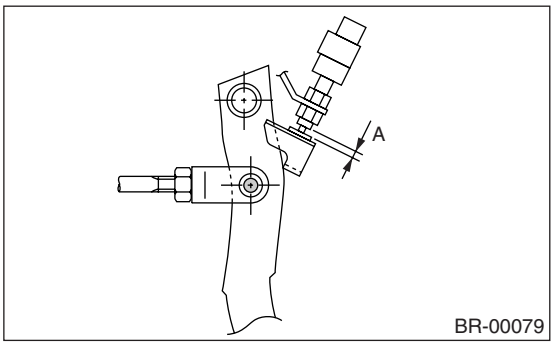

9) Apply grease to the operating rod connecting pin to prevent it from wearing.
10) Bleed air from the brake system.

Tightening torque (Air bleeder screw):
8 N·m (0.8 kgf-m, 5.8 ft-lb)

11) Conduct road tests to ensure brakes do not drag.

C: INSPECTION

1. OPERATION CHECK (WITHOUT GAUGES)

CAUTION:
When checking operation, be sure to securely apply the parking brake.

• CHECKING WITHOUT GAUGES

This method cannot determine the exact portion which has failed. But it can provide a rough understanding of the nature of failure if checking is conducted in accordance with the following procedures.

• AIR TIGHTNESS CHECK

Start the engine, and idle it for 1 to 2 minutes, then turn it OFF. Depress the brake pedal several times applying the same pedal force as that used in ordinary braking operations. The pedal stroke should be greatest on the 1st depression, and it should become smaller with each successive depression. If

no change occurs in the pedal height while in a depressed state, the brake booster is faulty.

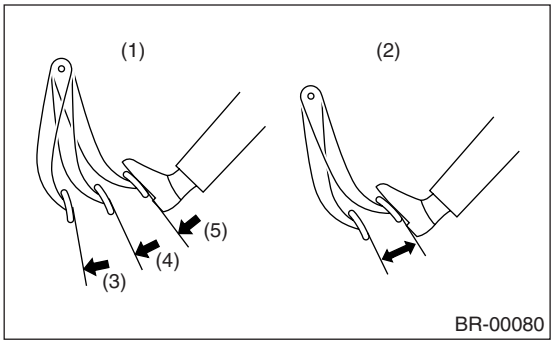

(1) Normal operation
(2) Not OK
(3) 1st
(4) 2nd
(5) 3rd

NOTE:
• In the event of defective operation, also inspect the condition of the check valve and vacuum hose.
• Replace them if faulty and conduct the test again.
• If no improvement is observed, check precisely with gauges.

• OPERATION CHECK

1) With the engine OFF, depress the brake pedal several times applying the same pedal force and make sure that the pedal height does not vary with each depression of the pedal.

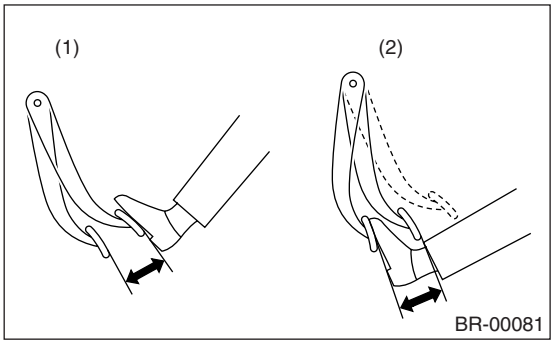

(1) When engine is stopped
(2) When engine is started

2) With the brake pedal depressed, start the engine.
3) As engine starts, the brake pedal should move slowly toward the floor. If no change occurs in the pedal height, the brake booster is faulty.

NOTE:
If faulty, check precisely with gauges.

• LOADED AIR TIGHTNESS CHECK

Depress the brake pedal while engine is running, and turn OFF the engine while the pedal is still depressed. Keep the pedal depressed for 30 seconds; if no change occurs in the pedal height, the brake booster is functioning normally; if the pedal height increases, it is faulty.

NOTE:
If faulty, check precisely with gauges.

2. OPERATION CHECK (WITH GAUGES)

CAUTION:
When checking operation, be sure to securely apply the parking brake.

• CHECKING WITH GAUGES

Connect gauges as shown in the figure. After bleeding air from pressure gauges, proceed to each check.

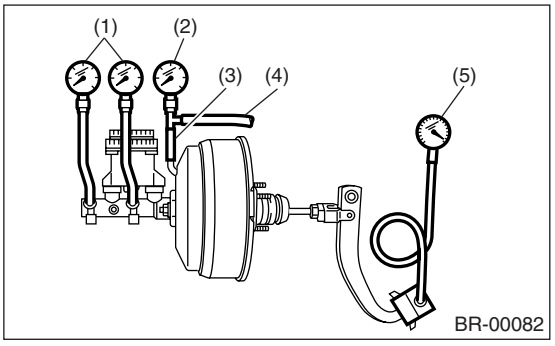

(1) Pressure gauge
(2) Vacuum gauge
(3) Adapter hose
(4) Vacuum hose
(5) Pedal force gauge

• AIR TIGHTNESS CHECK

1) Start the engine and keep it running until a vacuum of 66.7 kPa (500 mmHg, 19.69 inHg) = point A is indicated on vacuum gauge. Do not depress the brake pedal at this moment.

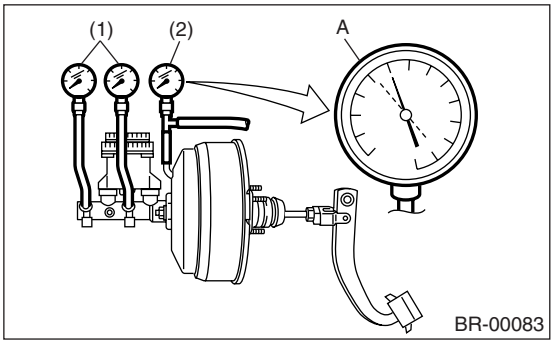

(1) Pressure gauge
(2) Vacuum gauge

2) Stop the engine and watch the gauge. If the vacuum drop range is less than 3.3 kPa (25 mmHg, 0.98 inHg) within 15 seconds after stopping the engine, brake booster is functioning properly.
If defective, the cause may be one of those listed below.
- Check valve malfunction
- Leak from vacuum hose
- Leak from shell jointed portion or stud bolt welded portion
- Damaged diaphragm
- Leak from valve body seal and bearing portion
- Leak from plate and seal assembly portion
- Leak from poppet valve assembly portion

• LOADED AIR TIGHTNESS CHECK

1) Start the engine and depress the brake pedal with pedal force of 196 N (20 kgf, 44 lb). Keep the engine running until a vacuum of 66.7 kPa (500 mmHg, 19.69 inHg) = point B is indicated on vacuum gauge while the pedal is still depressed.

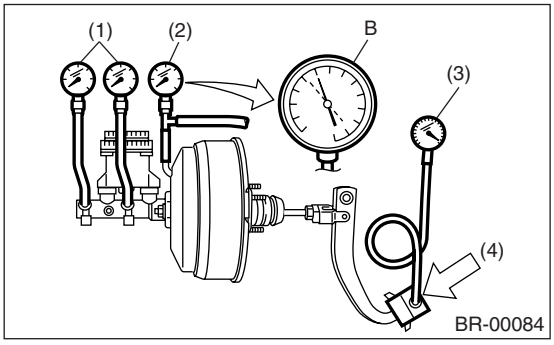

(1) Pressure gauge
(2) Vacuum gauge
(3) Pedal force gauge
(4) Depressed

2) Stop the engine and watch vacuum gauge.
If the vacuum drop range is less than 3.3 kPa (25 mmHg, 0.98 inHg) within 15 seconds after stopping the engine, brake booster is functioning properly.
If defective, refer to “AIR TIGHTNESS CHECK”.
<Ref. to BR-30, INSPECTION, Brake Booster.>
3) If any fault is found on brake booster, replace the brake booster with a new one.

• LACK OF BOOSTING ACTION CHECK

Turn OFF the engine, and set the vacuum gauge reading at “0”. Then, check the fluid pressure when brake pedal is depressed. The pressure must be greater than the standard value listed.

Brake pedal force N (kgf, lb)	147 (15, 33)	294 (30, 66)
Fluid pressure kPa (kg/cm^2, psi)	545 (6, 79)	1,564 (16, 227)

• BOOSTING ACTION CHECK

Set the vacuum gauge reading at 66.7 kPa (500 mmHg, 19.69 inHg) by running engine. Then, check the fluid pressure when brake pedal is depressed. The pressure must be greater than the standard value listed.

Brake pedal force N (kgf, lb)		147 (15, 33)	294 (30, 66)
Fluid pressure kPa (kg/cm^2, psi)	15″ 16″ OUTBACK	6,003 (61, 871)	11,273 (115, 1,635)
	16″ (Except for OUTBACK)	5,381 (55, 780)	10,982 (112, 1,593)
	17″	4,963 (51, 720)	10,055 (103, 1,458)

10.Brake Fluid

A: INSPECTION

1) Check that the brake fluid level is between “MIN” and “MAX”. If out of the specified range, refill or drain fluid. If the fluid level becomes close to “MIN”, check the brake pad and refill fluid.
2) Check the fluid for discoloration. If the fluid color has excessively changed, drain the fluid and refill with new fluid.

B: REPLACEMENT

CAUTION:
• Do not allow brake fluid to come in contact with vehicle body; wash away with water and wipe off completely if spilled.
• Avoid mixing different brands of brake fluid to prevent degrading the quality of fluid.
• Be careful not to allow dirt or dust to get into the reservoir tank.

NOTE:
• During the operation, keep the brake reservoir tank filled with brake fluid to eliminate entry of air.
• The brake pedal operating must be very slow.
• For convenience and safety, two people should do the work.
• The amount of brake fluid required is approximately 500 m ℓ (16.9 US fl oz, 17.6 Imp fl oz) for total brake system.

1) Either lift-up the vehicle to place a rigid racks under it, or lift-up the vehicle.
2) Remove both the front and rear wheels.
3) Drain brake fluid from the reservoir tank.
4) Refill the reservoir tank with recommended brake fluid.

Recommended brake fluid:
Refer to the specification. <Ref. to BR-2, SPECIFICATION, General Description.>

Perform the same procedure as bleeding operation of brake line until the new brake fluid coming out from vinyl tube. <Ref. to BR-34, PROCEDURE, Air Bleeding.>

NOTE:
Perform the brake fluid replacement in order from the farthest wheel cylinder from master cylinder.

11.Air Bleeding

A: PROCEDURE

CAUTION:
• Do not allow brake fluid to come in contact with vehicle body; wash away with water and wipe off completely if spilled.
• Avoid mixing different brands of brake fluid to prevent degrading the quality of fluid.
• Be careful not to allow dirt or dust to get into the reservoir tank.

1. MASTER CYLINDER

NOTE:
• If the master cylinder is disassembled or reservoir tank is empty, bleed the master cylinder.
• If bleeding the master cylinder is not necessary, bleed the brake line without doing the procedure below. <Ref. to BR-34, BRAKE LINE, PROCEDURE, Air Bleeding.>

1) Fulfill the reservoir tank of master cylinder with brake fluid.

NOTE:
During the operation, keep the reservoir tank filled with brake fluid to eliminate entry of air.

2) Disconnect the brake line at primary and secondary sides.
3) Put a plastic bag cover on master cylinder.
4) Slowly depress the brake pedal and hold it.

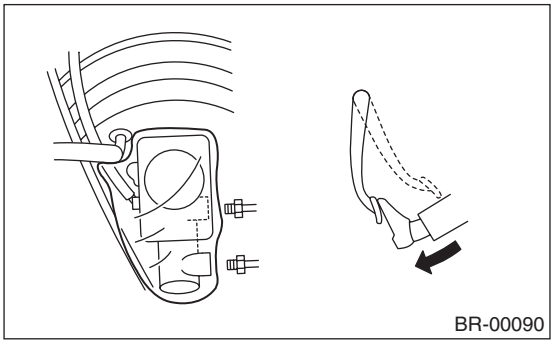
BR-00090

5) Close the outlet plug with your finger, and then return the brake pedal.

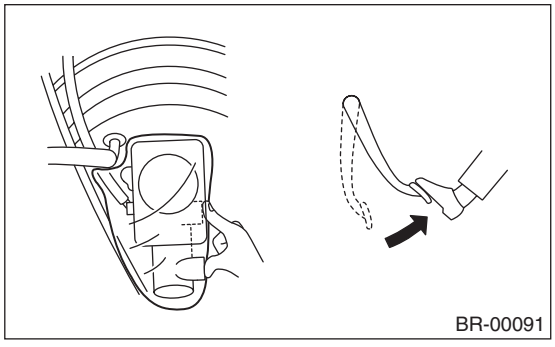
BR-00091

6) Repeat the step4) and 5) several times.
7) Remove the plastic bag.
8) Install the brake pipes to master cylinder.

Tightening torque:
Model with ABS
15 N·m (1.5 kgf-m, 10.8 ft-lb)
Model with VDC
18 N·m (1.8 kgf-m, 13.0 ft-lb)

9) Bleed air from the brake line. <Ref. to BR-34, BRAKE LINE, PROCEDURE, Air Bleeding.>

2. BRAKE LINE

1) If the master cylinder is disassembled or reservoir tank is empty, bleed the master cylinder before bleeding the brake line. <Ref. to BR-34, MASTER CYLINDER, PROCEDURE, Air Bleeding.>
2) Fulfill the reservoir tank of the master cylinder with brake fluid.

NOTE:
During the bleeding operation, keep the reservoir tank filled with brake fluid to eliminate entry of air.

3) Fit one end of vinyl tube into the air bleeder and put the other end into a brake fluid container.

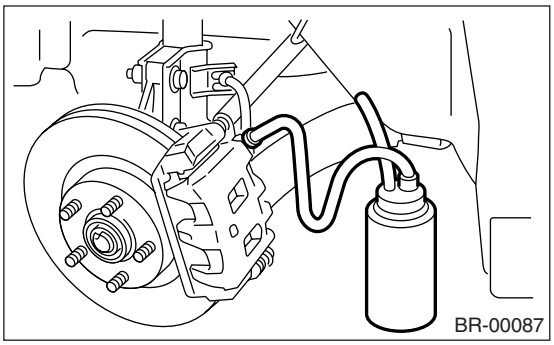
BR-00087

4) Several times depress the brake pedal and keep it.
5) Loosen the air bleeder screws to discharge the brake fluid.
With the air bleeder tightened quickly, release the brake pedal.
6) Repeat the steps 4) and 5) until there are no more air bubbles in the vinyl tube.
7) Repeat the steps above from 2) to 6) in order to bleed each wheel.

NOTE:
Perform the operation in order from the closest wheel cylinder to the master cylinder.

8) Tighten the air bleeder screws securely.

Tightening torque:
8 N·m (0.8 kgf-m, 5.8 ft-lb)

9) Inspect that there is no brake fluid leak evident in the entire system.
10) Check the pedal stroke.
While the engine is idling after warming up, depress the brake pedal with a 500 N (51 kgf, 112 lb) load and measure the distance between brake ped-

al and steering wheel. With the brake pedal released, measure the distance between pedal and steering wheel again.

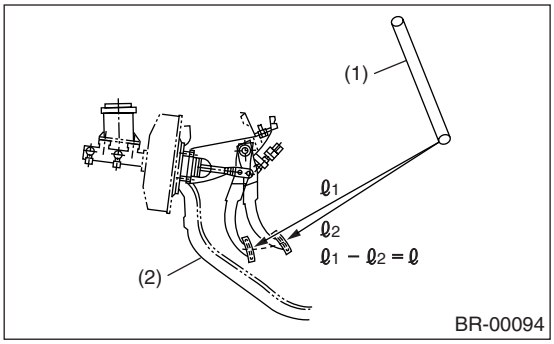

(1) Steering wheel
(2) Toe board

Specified pedal stroke:
When depressing brake pedal with a 500 N (51 kgf, 112 lb) load.
95 mm (3.74 in) or less

11) If it is more than specified, there is a possibility that air is in the brake line. Bleed the brake line until pedal stroke meets the specification.
12) Operate the hydraulic control unit in the sequence control mode. <Ref. to ABS-10, ABS Sequence Control.>
13) Recheck the pedal stroke.
14) If it is more than specified, there is a possibility that air is in the inside of the hydraulic unit. Repeat above steps 2) to 9) until pedal stroke meets the specification.
15) Add brake fluid to the required level (“MAX” level) of reservoir tank.
16) Test run the vehicle and ensure that brakes provide normal braking action.

12.Brake Hose

A: REMOVAL

1. FRONT BRAKE HOSE

1) Separate the brake pipe from brake hose using a flare nut wrench.
2) Remove the clamp, bolt at strut mount, and union bolt.

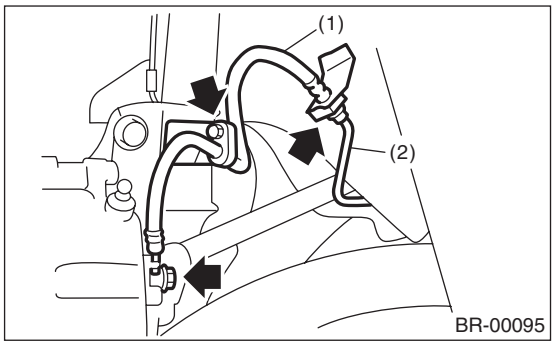

(1) Brake hose
(2) Brake pipe

2. REAR BRAKE HOSE

1) Remove the union bolt from rear brake caliper.

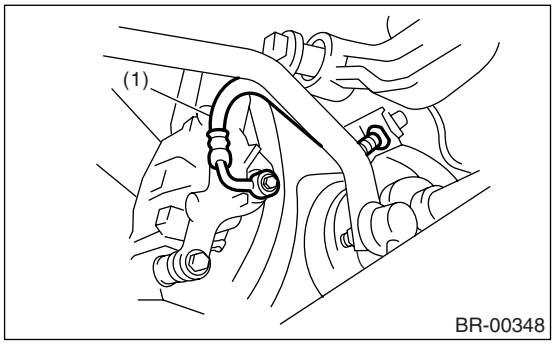

(1) Brake hose

2) Separate the brake pipe from brake hose using a flare nut wrench.

3) Remove the clamp and remove the brake hose.

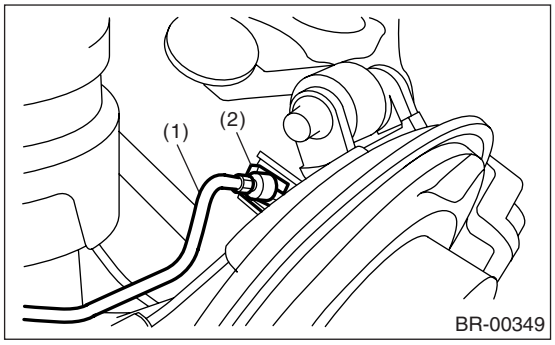

(1) Brake pipe
(2) Brake hose clamp

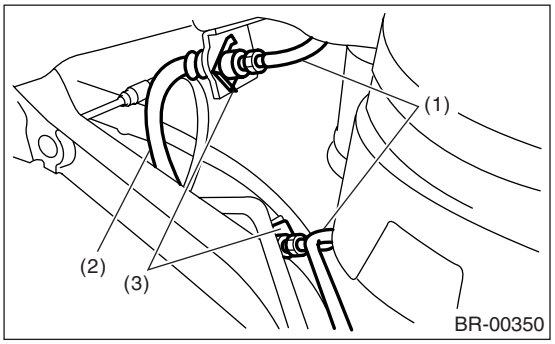

(1) Brake pipe
(2) Brake hose
(3) Brake hose clamp

B: INSTALLATION

1. FRONT BRAKE HOSE

1) Secure the brake hose to strut mount.

Tightening torque:
33 N·m (3.4 kgf-m, 24.3 ft-lb)

2) Install the brake hose to caliper using a new gasket.

Tightening torque (Union bolt):
18 N·m (1.8 kgf-m, 13.0 ft-lb)

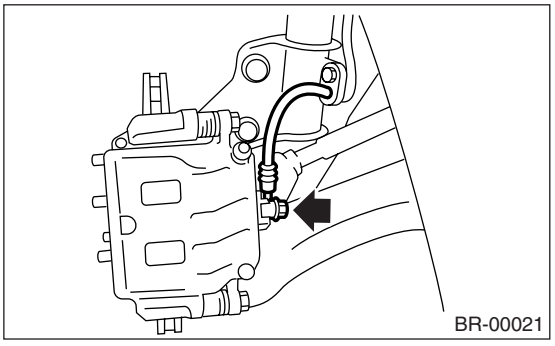

3) Position the disc in straight-forward direction and route the brake hose through the hole in bracket on wheel apron side.

CAUTION:
Be sure the brake hose is not twisted.

4) Temporarily tighten the flare nut to connect the brake pipe and hose.
5) Fix the brake hose with clamp at wheel apron bracket.
6) Tighten the flare nut to specified torque.

Tightening torque (Brake pipe flare nut):
15 N·m (1.5 kgf-m, 10.8 ft-lb)

7) Bleed air from brake system.

2. REAR BRAKE HOSE

1) Pass the brake hose through the hole of bracket, and lightly tighten the flare nut to connect brake pipe.
2) Insert the clamp upward to fix brake hose.

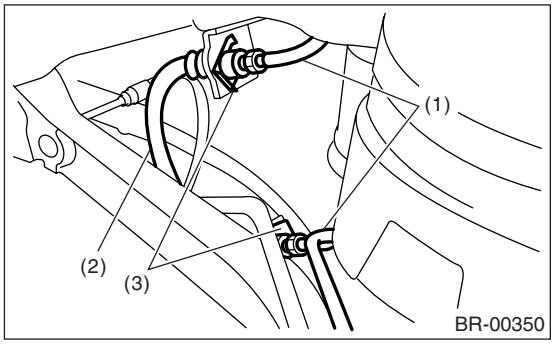

(1) Brake pipe
(2) Brake hose
(3) Brake hose clamp

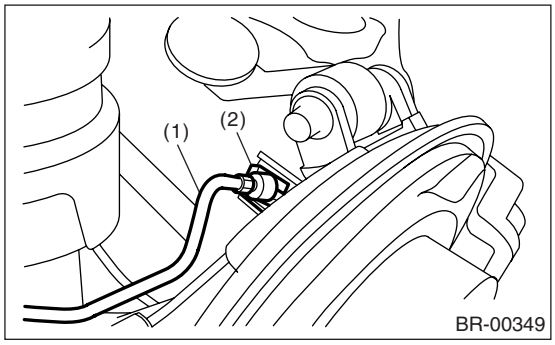

(1) Brake pipe
(2) Brake hose clamp

3) Install the brake hose to rear brake caliper using a new gasket.

Tightening torque (Union bolt):
18 N·m (1.8 kgf-m, 13.0 ft-lb)

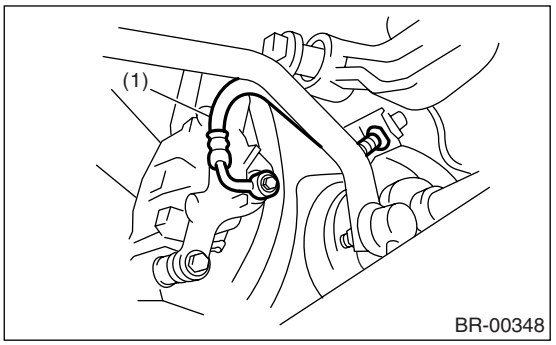

(1) Brake hose

4) Tighten the flare nut to specified torque.

Tightening torque (Brake pipe flare nut):
15 N·m (1.5 kgf-m, 10.8 ft-lb)

5) Bleed air from the brake system.

C: INSPECTION

Ensure there are no cracks, breakage or damage on hoses. Check joints for fluid leakage. If any cracks, breakage, damage or fluid leakage is found, repair or replace the hose.

13.Brake Pipe

A: REMOVAL

NOTE:
Airbag system wiring harness is routed near the center brake pipe.

CAUTION:
• All airbag system wiring harness and connectors are colored yellow. Do not use the electrical test equipment on these circuits.
• Be careful not to damage the airbag system wiring harness when servicing the center brake pipe.
• When removing the brake pipe, make sure that it is not bent.

B: INSTALLATION

NOTE:
Airbag system wiring harness is routed near the center brake pipe.

CAUTION:
• All airbag system wiring harness and connectors are colored yellow. Do not use the electrical test equipment on these circuits.
• Be careful not to damage the airbag system wiring harness when servicing the center brake pipe.
• When installing the brake pipe, make sure that it is not bent.
• After installing the brake pipe and hose, bleed air.
• After installing the brake hose, make sure that it does not touch the tire or suspension assembly, etc.

Brake pipe tightening torque:
<Ref. to BR-7, FRONT BRAKE PIPES AND HOSE, COMPONENT, General Description.>
<Ref. to BR-8, CENTER AND REAR BRAKE PIPES AND HOSE, COMPONENT, General Description.>

C: INSPECTION

Ensure there are no cracks, breakage or damage on pipes. Check joints for fluid leakage. If any cracks, breakage, damage or fluid leakage is found, repair or replace the pipes.

NOTE:
Use a mirror when inspecting the low-visible part or backside.

14.Brake Pedal

A: REMOVAL

1. MT MODEL

1) Remove the steering shaft.
2) Disconnect the connectors (stop light switch) from pedal bracket.
3) Remove the clevis pin which secures lever to push rod.
4) Remove the nuts which secure clutch master cylinder.
5) Remove the bolts and nuts which secure pedal bracket.

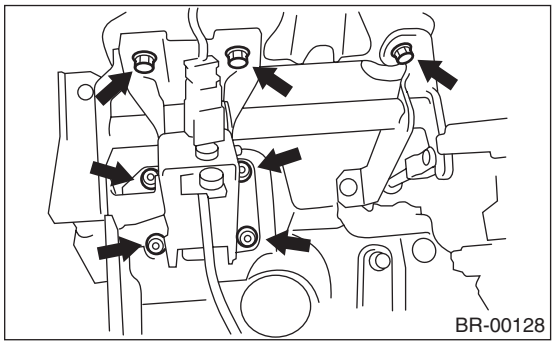

2. AT MODEL

1) Remove the steering shaft.
2) Disconnect the connectors (stop light switch) from pedal bracket.
3) Remove the clevis pin which secures lever to push rod.
4) Remove the bolts and nuts which secure pedal bracket.

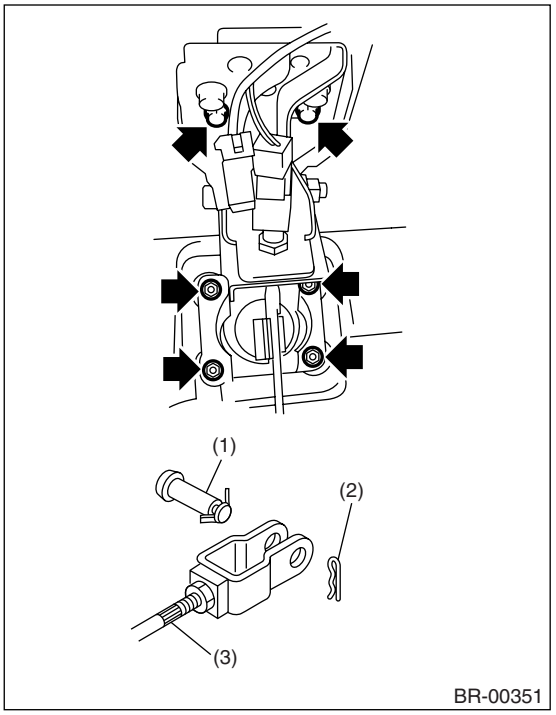

(1) Clevis pin
(2) Snap pin
(3) Operating rod

B: INSTALLATION

1) Install in the reverse order of removal.

CAUTION:
Always use new clevis pins.

2) Inspect the brake pedal after installation. <Ref. to BR-39, INSPECTION, Brake Pedal.>

C: INSPECTION

1) Move the brake pedal pads in the lateral direction with a force of approx. 10 N (1 kgf, 2 lb) to ensure pedal deflection is in specified range.

CAUTION:
If excessive deflection is noted, replace the bushing with a new one.

Deflection of brake pedal:
Limit
5.0 mm (0.197 in) or less

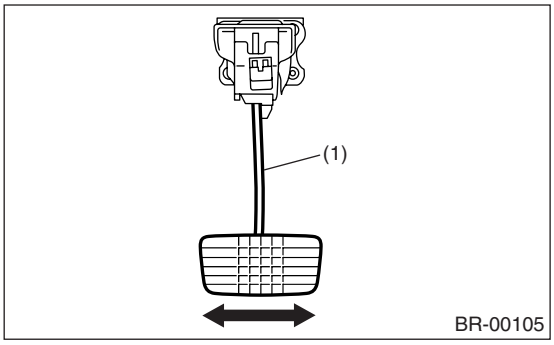

(1) Brake pedal

2) Check the position of pedal pad.

Pedal height L:
150 — 160 mm (5.91 — 6.30 in)

Brake pedal free play A:
0.5 — 2 mm (0.02 — 0.08 in) [When the brake pedal is pulled upward with force of less than 10 N (1 kgf, 2 lb).]

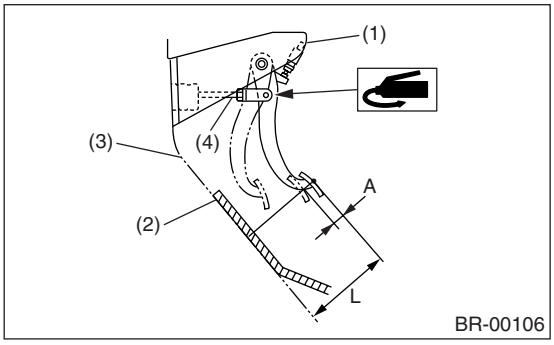

(1) Stop light switch
(2) Mat
(3) Toe board
(4) Brake booster operating rod

3) If it is not within the specified value, adjust it by adjusting the brake booster operating rod length.

15.Stop Light Switch

A: REMOVAL

1) Disconnect the ground cable from battery.
2) Disconnect the stop light switch connector.
3) Loosen the nuts, and unscrew the stop light switch to remove.

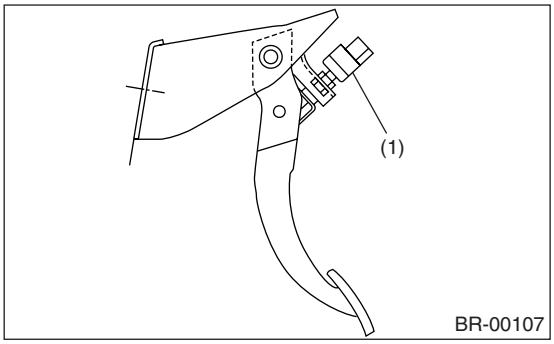

(1) Stop light switch

B: INSTALLATION

1) Screw the stop light switch onto a bracket and secure it temporarily with a nut.
2) Adjust the stop light switch position, and then tighten the nut.
<Ref. to BR-41, ADJUSTMENT, Stop Light Switch.>

Tightening torque:
8 N·m (0.8 kgf-m, 5.8 ft-lb)

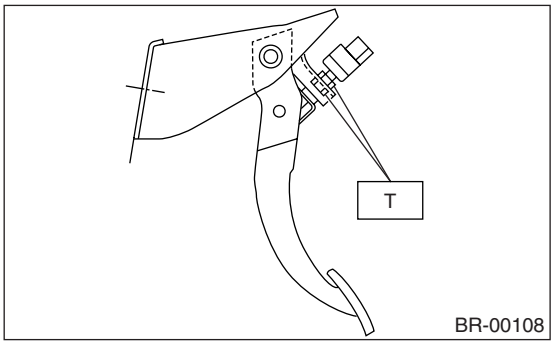

C: INSPECTION

1) If the stop light switch does not operate properly (or if it does not fix at the specified position), replace with a new one.

Specified position L:
2 mm (0.079 in)

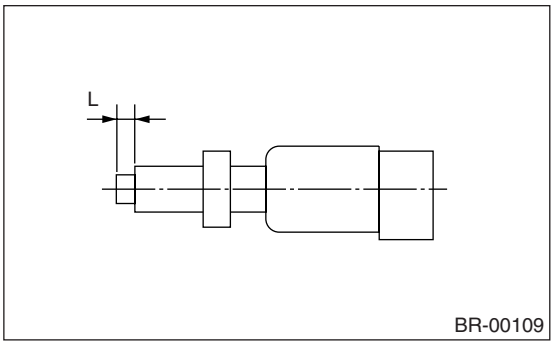

2) Measure the clearance between the threaded end of stop light switch and stopper.

CAUTION:
Be careful not to rotate the stop light switch.

Stop light switch clearance A:
0.3 mm (0.012 in)

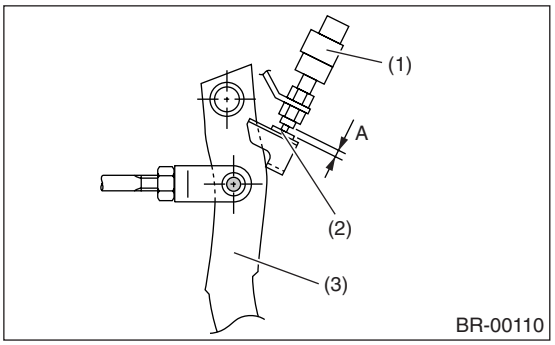

(1) Stop light switch
(2) Stopper
(3) Brake pedal

3) If it is not within the specified value, adjust it by adjusting the position of stop light switch.

CAUTION:
Be careful not to rotate the stop light switch.

D: ADJUSTMENT

Loosen the lock nut, and adjust the stop light switch position until the clearance between the threaded end of the stop light switch and stopper (A) becomes 0.3 mm (0.012 in). Then, tighten the lock nut.

Tightening torque:
8 N·m (0.8 kgf-m, 5.8 ft-lb)

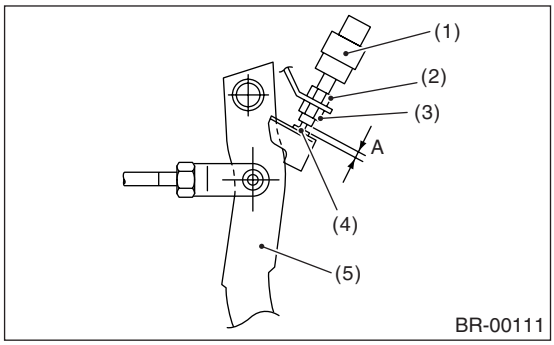

(1) Stop light switch
(2) Lock nut A
(3) Lock nut B
(4) Stopper
(5) Brake pedal

NOTE:
Tighten the lock nut B until the clearance between the threaded end of stop light switch and stopper becomes 0 mm (0 inch). Hold the stop light switch to prevent turning, and then loosen the lock nut B approx. 60°. The clearance (A) becomes 0.3 mm (0.012 in).

16.General Diagnostic Table

A: INSPECTION

	Trouble and possible cause	Corrective action
1. Insufficient braking	(1) Fluid leakage from the hydraulic mechanism	Correct or replace. (cup, piston seal, piston boot, master cylinder piston kit, pipe or hose)
	(2) Entry of air into the hydraulic mechanism	Bleed air.
	(3) Wear, deteriorated surface material, adhering water or fluid on the lining	Replace, grind or clean.
	(4) Improper operation of master cylinder, disc caliper, brake booster or check valve	Correct or replace.
2. Unstable or uneven braking	(1) Fluid on the lining or rotor	Eliminate cause of fluid leakage, and clean or replace.
	(2) Rotor eccentricity	Correct or replace the rotor.
	(3) Improper lining contact, deteriorated surface material, improper inferior material, or wear	Correct by grinding, or replace.
	(4) Deformed back plate	Rectify or replace.
	(5) Improper tire inflation	Adjust to correct pressure.
	(6) Disordered wheel alignment	Adjust alignment.
	(7) Loosened back plate or the support installing bolts	Retighten to specified torque.
	(8) Faulty wheel bearing	Replace.
	(9) Trouble in hydraulic system	Replace the cylinder, brake pipe or hose.
	(10) Uneven effect of the parking brake	Check, adjust, or replace the rear brake and cable system.
3. Excessive pedal stroke	(1) Entry of air into the hydraulic mechanism	Bleed air.
	(2) Excessive play in the master cylinder push rod	Adjust.
	(3) Fluid leakage from the hydraulic mechanism	Correct or replace. (cup, piston seal, piston boot, master cylinder piston kit, pipe or hose)
	(4) Improper lining contact or worn lining	Correct or replace.
4. Brake dragging or improper brake return	(1) Insufficient pedal play	Adjust play.
	(2) Improper master cylinder return	Clean or replace the cylinder.
	(3) Clogged hydraulic system	Replace.
	(4) Improper return or adjustment of parking brake	Correct or adjust.
	(5) Weakened spring tension or breakage of shoe return spring	Replace the spring.
	(6) Improper disc caliper operation	Correct or replace.
	(7) Faulty wheel bearing	Replace.
5. Brake noise (1) (creak sound)	(1) Hardened or deteriorated brake pad	Replace the pad.
	(2) Worn brake pad	Replace the pad.
	(3) Loosened back plate or the support installing bolts	Retighten to specified torque.
	(4) Loose wheel bearing	Retighten to specified torque.
	(5) Dirty rotor	Clean the rotor, or clean and replace brake assembly.
6. Brake noise (2) (hissing sound)	(1) Worn brake pad	Replace the pad.
	(2) Improper installed pad	Correct or replace the pad.
	(3) Loose or bent rotor	Retighten or replace.
7. Brake noise (3) (click sound)	Excessively worn pad or the support	Replace the pad or the support.

PARKING BRAKE

PB

Page

1. General Description 2
2. Parking Brake Lever....4
3. Parking Brake Cable 5
4. Parking Brake Assembly (Rear Disc Brake) 6
5. General Diagnostic Table....9

1. General Description

A: SPECIFICATION

Type	Mechanical on rear brakes, drum in disc
Effective drum diameter mm (in)	170 (6.69)
Lining dimensions (length × width × thickness) mm (in)	163.1 × 30.0 × 3.2 (6.421 × 1.181 × 0.126)
Clearance adjustment	Manual adjustment
Lever stroke notches/N (kgf, lb)	5 to 6/200 (20.4, 45)

B: COMPONENT

1. PARKING BRAKE (REAR DISC BRAKE)

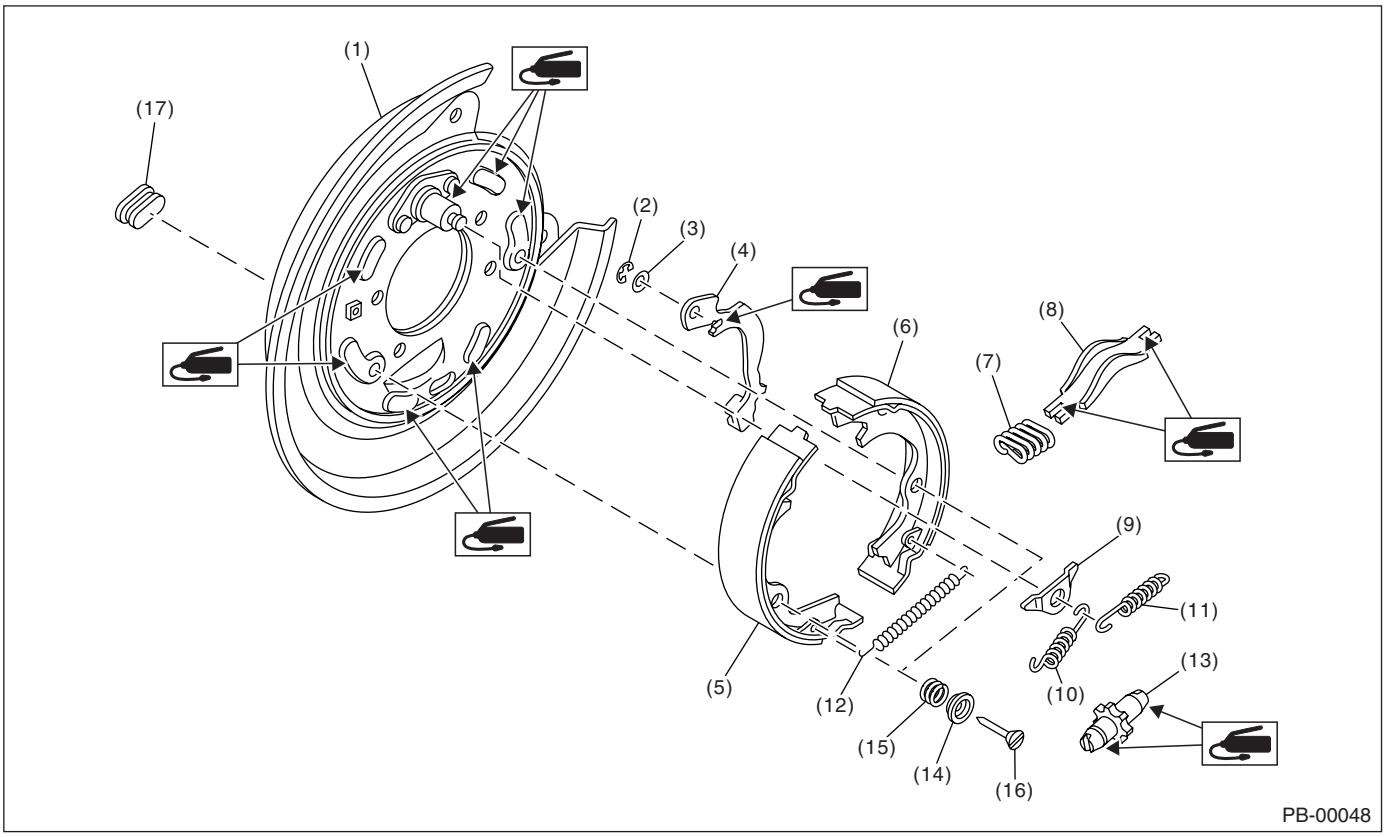

(1) Back plate
(2) Retainer
(3) Spring washer
(4) Lever
(5) Parking brake shoe (Primary)
(6) Parking brake shoe (Secondary)
(7) Strut spring
(8) Strut
(9) Shoe guide plate
(10) Primary return spring
(11) Secondary return spring
(12) Adjusting spring
(13) Adjuster
(14) Shoe hold-down cup
(15) Shoe hold-down spring
(16) Shoe hold-down pin
(17) Adjusting hole cover

2. PARKING BRAKE CABLE

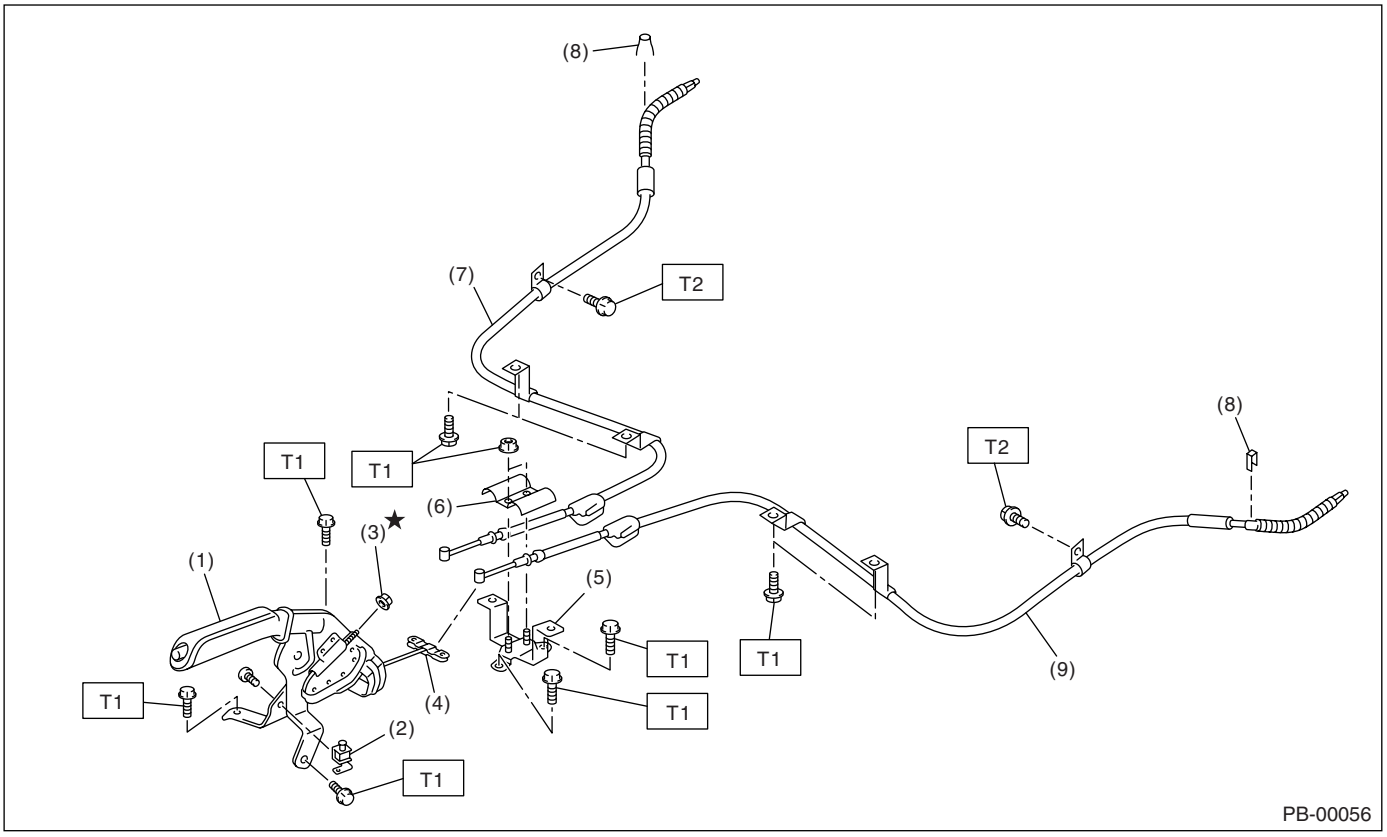

(1) Parking brake lever
(2) Parking brake switch
(3) Adjusting nut (Self-locking nut)
(4) Equalizer
(5) Bracket
(6) Clamp
(7) Parking brake cable RH
(8) Clamp
(9) Parking brake cable LH

Tightening torque: N·m (kgf-m, ft-lb)
T1: 18 (1.8, 13.0)
T2: 33 (3.4, 24.3)

C: CAUTION

- Wear work clothing, including a cap, protective goggles, and protective shoes during operation.
- Before removal, installation or disassembly, be sure to clarify the failure. Avoid unnecessary removal, installation, disassembly and replacement.
- Be careful not to burn your hands, because each part on the vehicle is hot after running.
- Use SUBARU genuine grease etc. or the equivalent. Do not mix grease etc. with that of another grade or from other manufacturers.
- Be sure to tighten fasteners including bolts and nuts to the specified torque.
- Place shop jacks or rigid racks at the specified points.
- Before securing a part on a vice, place cushioning material such as wood blocks, aluminum plate, or shop cloth between the part and the vice.
- Keep grease etc. away from parking brake shoes.

2. Parking Brake Lever

A: REMOVAL

1) Set the wheel stoppers to tires.
2) Remove the console box.
3) Disconnect the parking brake switch connector.
4) Remove the parking cable adjusting nut (self-locking nut).
5) Remove the parking brake lever.

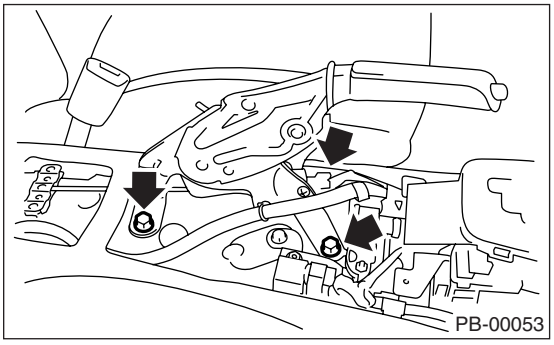

B: INSTALLATION

1) Install in the reverse order of removal.

Tightening torque:
Parking brake lever
18 N·m (1.8 kgf-m, 13.0 ft-lb)

2) Install a new adjusting nut (self-locking nut).
3) Adjust the lever stroke. <Ref. to PB-4, ADJUSTMENT, Parking Brake Lever.>

C: INSPECTION

1) Operate the parking brake lever 3 to 4 times and return the lever fully.
2) While pulling the parking brake lever upward, count the notches.

Lever stroke:
5 to 6 notches when pulled with a force of 200 N (20.4 kgf, 45 lb)

If it is not within the specified value, adjust the parking brake. <Ref. to PB-8, ADJUSTMENT, Parking Brake Assembly (Rear Disc Brake).>

D: ADJUSTMENT

Adjust the parking lever stroke. <Ref. to PB-8, LEVER STROKE, ADJUSTMENT, Parking Brake Assembly (Rear Disc Brake).>

3. Parking Brake Cable

A: REMOVAL

1) Remove the rear seat cushion.
2) Remove the console box.
3) Remove the parking cable adjusting nut (self-locking nut).
4) Remove the parking brake lever. <Ref. to PB-4, REMOVAL, Parking Brake Lever.>
5) Roll up the floor mat and remove the clamps.

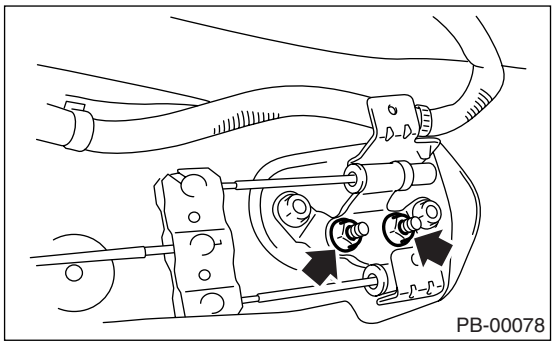

6) Remove the inner cable end from equalizer.

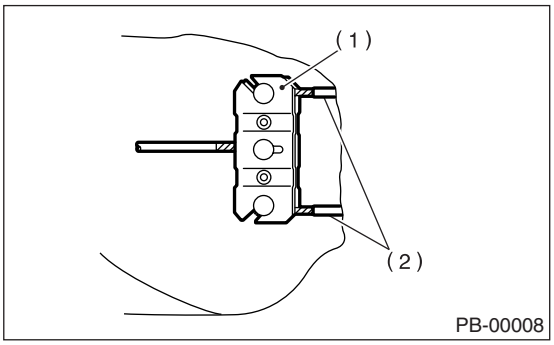

(1) Equalizer
(2) Inner cable end

7) Lift-up the vehicle, and then remove the rear wheels.
8) Remove the parking brake cable from rear brake. <Ref. to PB-6, REMOVAL, Parking Brake Assembly (Rear Disc Brake).>
9) Remove the clamp from rear brake.
10) Remove the cable clamp from rear arm bracket.
11) Remove the cable clamp from rear floor.

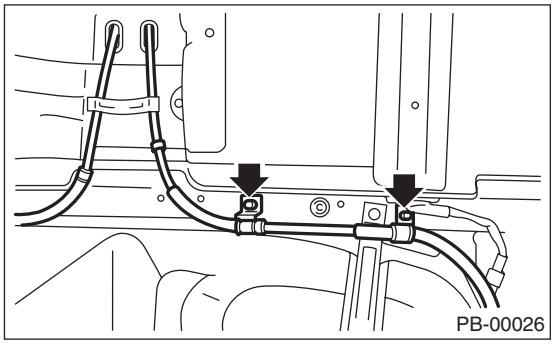

12) Remove the cable assembly.

B: INSTALLATION

1) Install in the reverse order of removal.

NOTE:
Be sure to pass the cable through the cable guide inside tunnel.

2) Adjust the lever stroke. <Ref. to PB-4, ADJUSTMENT, Parking Brake Lever.>

C: INSPECTION

Check and replace the removed cable if damaged, rusty or faulty.
1) Check the cable for smooth operation.
2) Check the inner cable for damage and rust.
3) Check the outer cable for damage, bends and cracks.
4) Check the boot for damage, cracks and corrosion.

4. Parking Brake Assembly (Rear Disc Brake)

A: REMOVAL

1) Release the parking brake.
2) Remove the two mounting bolts and remove the brake caliper assembly.

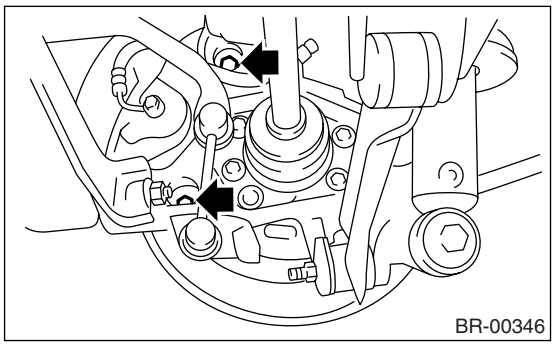

3) Suspend the brake caliper assembly so that the hose is not stretched.
4) Remove the disc rotor.

NOTE:
If the disc rotor is difficult to remove, try the following two methods in order.

(1) Turn the adjusting screw using a flat tip screwdriver until the brake shoe gets away enough from the disc rotor.

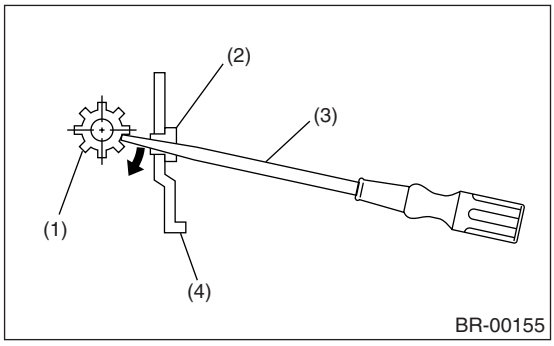

(1) Adjuster
(2) Adjusting hole cover (rubber)
(3) Flat tip screwdriver
(4) Back plate

(2) If the disc rotor seizes up within hub, drive out the disc rotor by pushing two 8 mm bolts in holes B on rotor.

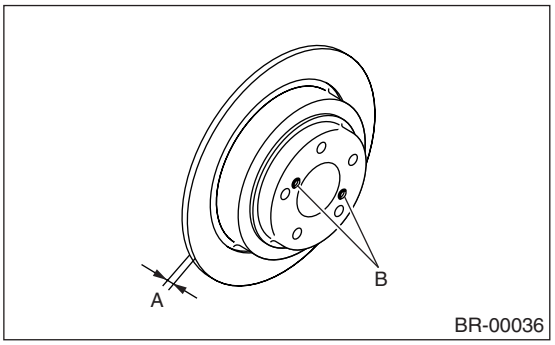

5) Remove the shoe return spring from parking brake assembly.
6) Remove the front shoe hold down spring and pin.

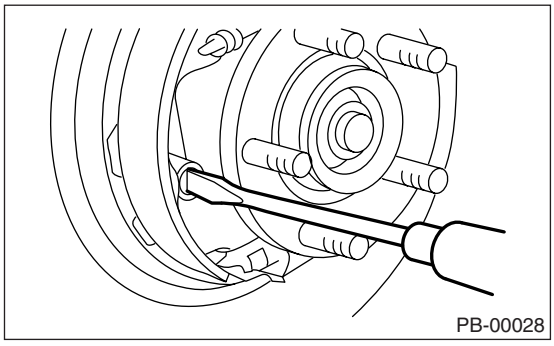

7) Remove the strut and strut spring.
8) Remove the adjuster assembly from parking brake assembly.
9) Remove the brake shoe.
10) Remove the rear shoe hold down spring and pin with pliers.
11) Remove the parking brake cable from lever.

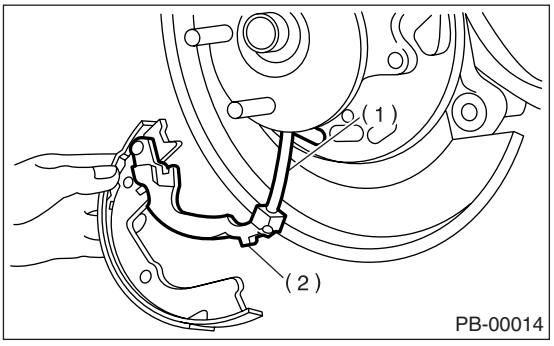

(1) Parking brake cable
(2) Lever

12) Using a flat tip screwdriver, raise the retainer. Remove the parking lever and washer from brake shoe.

B: INSTALLATION

CAUTION:
Be sure the lining surface is free from oil and grease contamination.

1) Apply brake grease to the following places.

Brake grease:
Brake Grease (Part No. 003602002)

- Six contact surfaces of shoe rim and back plate packing
- Contact surface of shoe wave and anchor pin
- Contact surface of lever and strut
- Contact surface of shoe wave and adjuster assembly
- Contact surface of shoe wave and strut
- Contact surface of lever and shoe wave

2) Insert the primary side brake shoe into anchor pin groove.
3) Secure the brake shoe with the shoe hold-down pin and cup.
4) Install the plate to anchor pin, and then assemble the primary return spring to anchor pin.

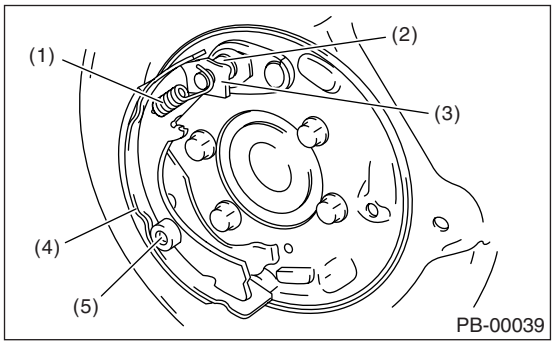

(1) Primary return spring
(2) Anchor pin
(3) Plate
(4) Primary shoe
(5) Shoe hold-down pin and shoe hold-down cup

5) Install the parking brake cable to parking brake lever.
6) Assemble the strut and adjuster, and then secure the secondary side brake shoe with shoe hold-down pin and cup.

NOTE:
- Install the strut spring of both right and left wheel facing vehicle front.
- Install the adjuster assembly with screw on left side.

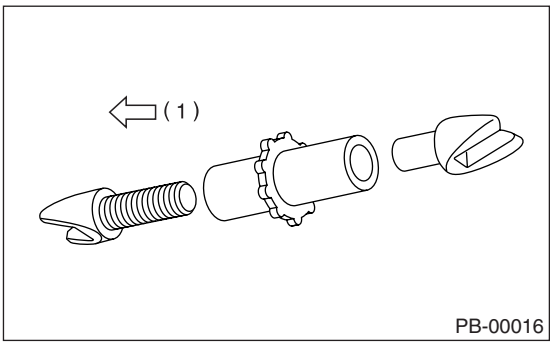

(1) LH

7) Install the secondary return spring and adjusting spring.

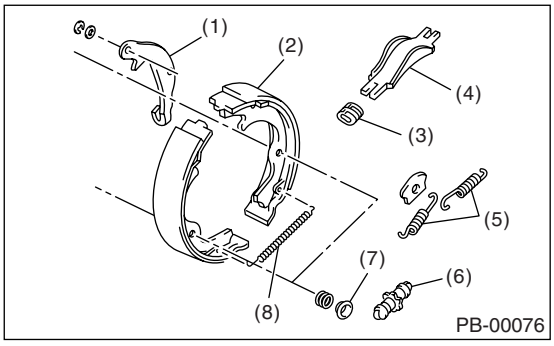

(1) Lever
(2) Secondary brake shoe
(3) Strut spring
(4) Strut
(5) Return spring
(6) Adjuster
(7) Shoe hold-down cup
(8) Adjusting spring

8) Adjust the parking brake. <Ref. to PB-8, ADJUSTMENT, Parking Brake Assembly (Rear Disc Brake).>
9) Drive the vehicle for parking brake lining “break-in”.
(1) Drive the vehicle at about 35 km/h (22 MPH).
(2) With the parking brake release button pushed in, pull the parking brake lever gently.
(3) Drive the vehicle for about 200 m (0.12 mile) in this condition.
(4) Wait 5 to 10 minutes for the parking brake to cool down.
Repeat once more from step (1).
(5) After breaking-in, re-adjust the parking brakes.

C: INSPECTION

1) Measure the brake disc rotor inside diameter. If the disc is scored or worn, replace the brake disc rotor.

Disc rotor inside diameter:
Standard:
170 mm (6.69 in)
Service limit:
171 mm (6.73 in)

2) Measure the lining thickness. If it exceeds the limit, replace shoe assembly.

Lining thickness:
Standard:
3.2 mm (0.126 in)
Service limit:
1.5 mm (0.059 in)

NOTE:
Replace the right and left brake shoe as a set.

D: ADJUSTMENT

1. SHOE CLEARANCE

1) Return the parking brake lever fully.
2) Remove the adjusting hole cover from back plate.
3) Turn the adjusting screw using a flat tip screwdriver until the brake shoe is in close contact with disc rotor.

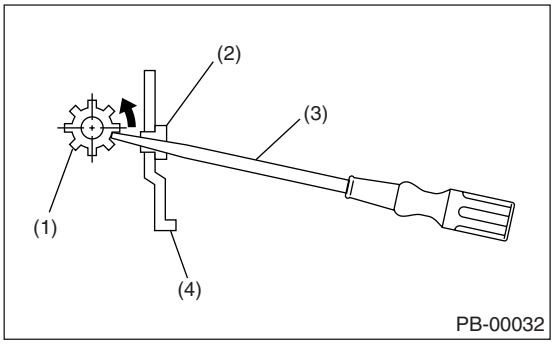

(1) Adjusting screw
(2) Adjusting hole cover (rubber)
(3) Flat tip screwdriver
(4) Back plate

4) Turn back (downward) the adjusting screw 3 to 4 notches.

CAUTION:
Check there is no brake drag.

5) Install the adjusting hole cover to back plate.
6) Adjust the parking lever stroke. <Ref. to PB-8, LEVER STROKE, ADJUSTMENT, Parking Brake Assembly (Rear Disc Brake).>

2. LEVER STROKE

1) Adjust the shoe clearance before lever stroke adjustment. <Ref. to PB-8, SHOE CLEARANCE, ADJUSTMENT, Parking Brake Assembly (Rear Disc Brake).>
2) Remove the parking lever cover.
3) Operate the parking brake lever 3 to 4 times.
4) Turn the adjusting nut until lever stroke is at the specification.

Lever stroke:
5 to 6 notches when pulled with a force of 200 N (20.4 kgf, 45 lb)

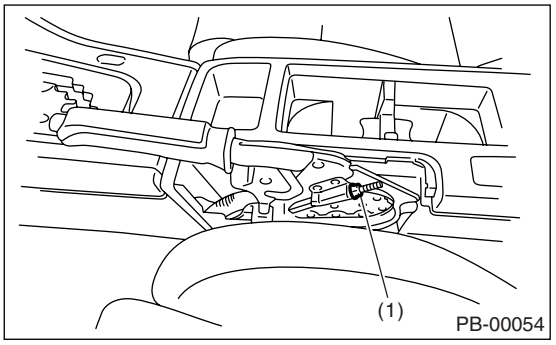

(1) Adjusting nut (Self-locking nut)

5) Check there is no brake drag.
6) Install the parking lever cover.

5. General Diagnostic Table

A: INSPECTION

Symptom	Possible cause	Remedy
Brake drag	Parking brake lever is maladjusted.	Adjustment.
	Parking brake cable does not move.	Repair or replace.
	Parking brake shoe clearance is maladjusted.	Adjustment.
	Return spring is faulty.	Replace.
Noise from brake	Return spring is faulty.	Replace.
	Shoe hold-down spring is faulty.	Replace.

POWER ASSISTED SYSTEM (POWER STEERING)

PS

		Page
1.	General Description	2
2.	Steering Wheel	14
3.	Universal Joint	15
4.	Tilt Steering Column	17
5.	Steering Gearbox	19
6.	Pipe Assembly	39
7.	Oil Pump	45
8.	Reservoir Tank	53
9.	Power Steering Fluid	54
10.	General Diagnostic Table	55

1. General Description

A: SPECIFICATION

Model			OUTBACK Except for 3.0 R	OUTBACK 3.0 R
Whole system	Minimum turning radius m (ft)		5.4 (17.8)	
	Steering angle	Inner wheel	Except for OUTBACK: 37.2°±1.5°, OUTBACK: 38.0°±1.5°	
		Outer wheel	Except for OUTBACK: 33.0°±1.5°, OUTBACK: 33.7°±1.5°	
	Steering wheel diameter mm (in)		375 (14.76)	
	Lock to lock turn		Except for 2.5 GT: 3.2, 2.5 GT: 2.8	
Gearbox	Type		Rack and Pinion, Integral	
	Backlash		0 (Automatically adjustable)	
	Valve (Power steering system)		Rotary valve	
Pump (Power steering system)	Type		Vane pump	
	Oil tank		Installed on body	
	Specific output cm^3 (cu in)/rev.		8.5 (0.519)	9.6 (0.586)
	Relief pressure kPa (kg/cm^2, psi)		7,350 — 8,036 (75 — 82, 1,067 — 1,165)	8,300 — 9,000 (85 — 92, 1,204 — 1,305)
	Hydraulic fluid control		Dropping in response to increased engine revolutions	
	Hydraulic fluid ℓ (US qt, Imp qt)		1,000 rpm: 6.15 (6.5, 5.4) 3,000 rpm: 5.5 (5.8, 4.8)	1,000 rpm: 6.5 (6.9, 5.7) 3,000 rpm: 5.5 (5.8, 4.8)
	Range of revolution rpm		680 — 9,600	
	Revolving direction		Clockwise	
Working fluid (Power steering system)	Fluid		ATF DEXRON III or equivalent	
	Capacity ℓ (US qt, Imp qt)	Oil tank	0.2 (0.2, 0.2)	
		Whole system	0.7 (0.7, 0.6)	

Steering wheel	Free play		mm (in)	17 (0.67)
Steering shaft	Clearance between steering wheel and column cover		mm (in)	3.0 (0.12)
Steering gearbox (Power steering system)	Sliding resistance		N (kgf, lb)	314 (32, 71) or less Difference between right and left sliding resistance: Less than 20%
	Rack shaft play in radial direction	Right-turn steering	mm (in)	0.3 (0.012) or less
		Left-turn steering	mm (in)	Horizontal movement: 0.6 (0.024) or less Vertical movement: 0.4 (0.016) or less
	Input shaft play	In radial direction	mm (in)	0.18 (0.0071) or less
		In axial direction	mm (in)	0.27 (0.0106) or less
	Resistance to rotation		N (kgf, lb)	Maximum allowable value: 10.5 (1.07, 2.36) or less Difference between right and left sliding resistance: Less than 20%
Oil pump (Power steering system)	Pulley shaft	Radial play	mm (in)	0.4 (0.016) or less
		Axial play	mm (in)	0.9 (0.035) or less
	Pulley	Ditch deflection	mm (in)	1.0 (0.039) or less
		Resistance to rotation	N (kgf, lb)	9.22 (0.94, 2.07) or less
	Regular pressure (Unloaded)		kPa (kg/cm^2, psi)	981 (10, 142) or less
Steering wheel effort (Power steering system)	At standstill with engine idling on a concrete road		N (kgf, lb)	29.4 (3.0, 6.6) or less
	At standstill with engine stalled on a concrete road		N (kgf, lb)	294.2 (30, 66.2) or less

Recommended power steering fluid	Manufacturer
ATF DEXRON III or equivalent	B.P.
	CALTEX
	CASTROL
	MOBIL
	SHELL
	TEXACO

B: COMPONENT

1. STEERING WHEEL AND COLUMN

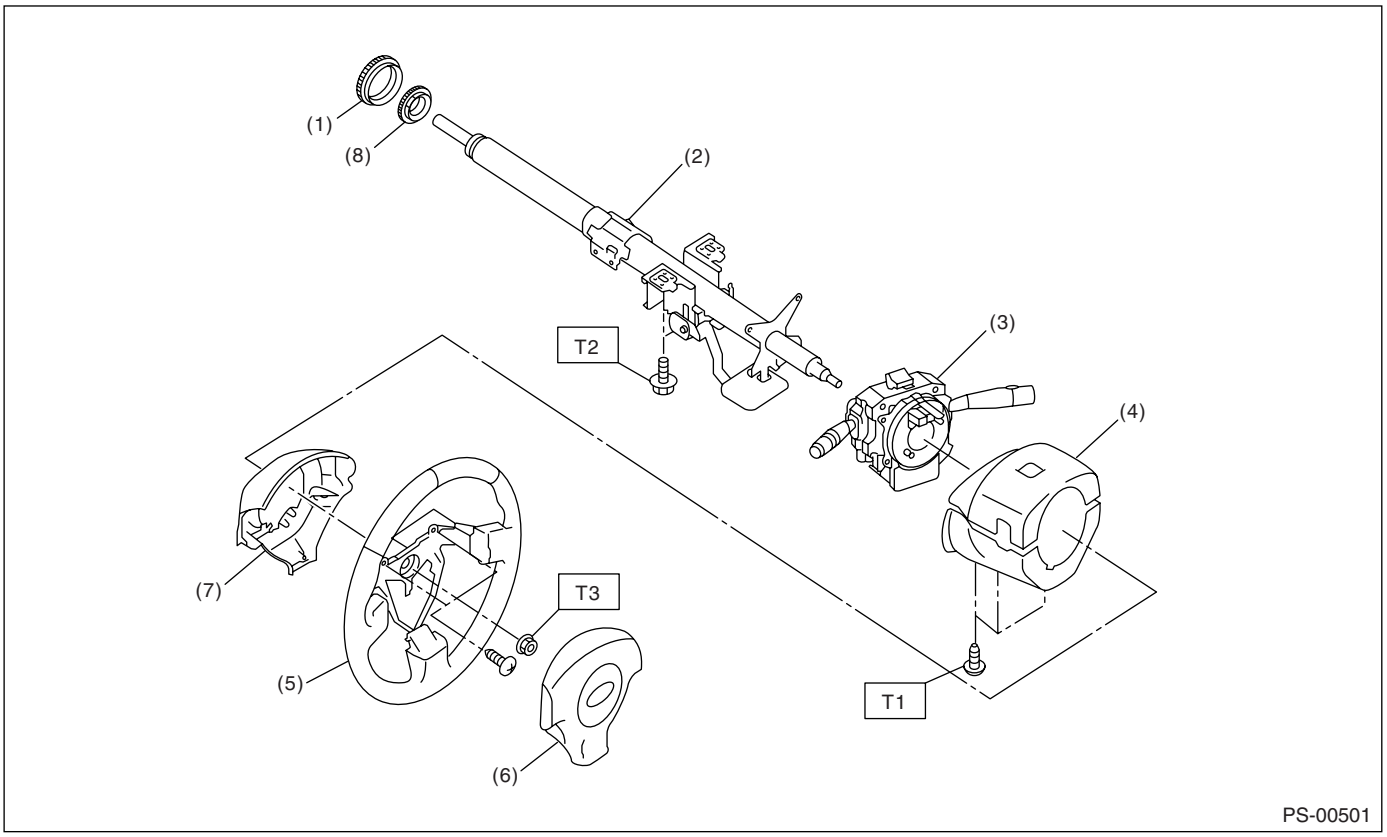

(1) Bushing
(2) Steering shaft
(3) Steering roll connector
(4) Column cover
(5) Steering wheel
(6) Airbag module
(7) Steering wheel lower cover
(8) Insulator

Tightening torque: N·m (kgf-m, ft-lb)
T1: 1.2 (0.12, 0.9)
T2: 25 (2.5, 18.1)
T3: 45 (4.6, 33.2)

2. POWER ASSISTED SYSTEM

- Hose and tank (H4 model)

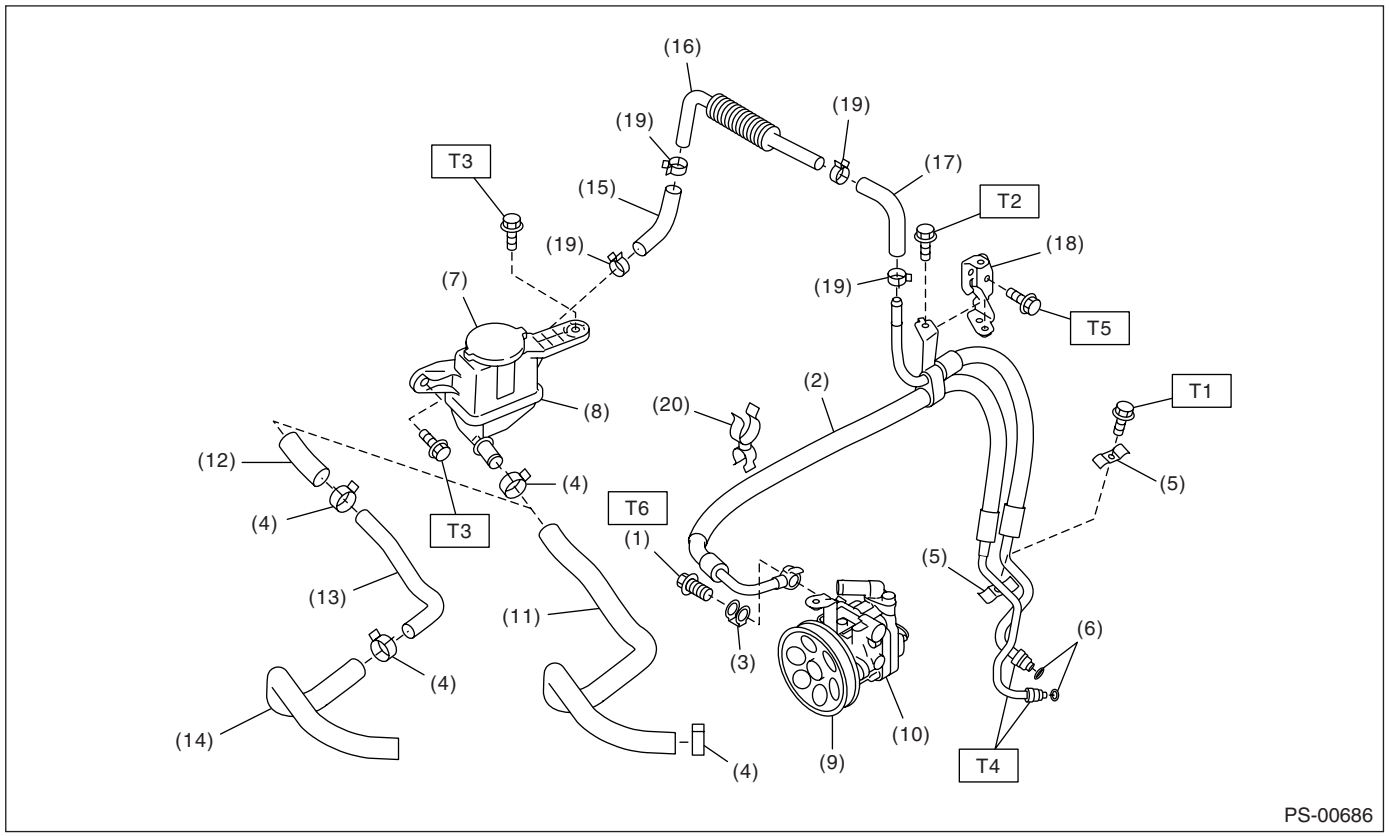

(1)	Eye bolt	(11)	Suction hose (Non-turbo model)	
(2)	Hose	(12)	Suction hose (Turbo model)	
(3)	Eye bolt gasket	(13)	Suction hose (Turbo model)	
(4)	Clip	(14)	Suction hose (Turbo model)	
(5)	Clamp E	(15)	Return hose	
(6)	O-ring	(16)	Oil cooler	
(7)	Cap	(17)	Return hose	
(8)	Reservoir tank	(18)	Hose bracket	
(9)	Pulley	(19)	Clip	
(10)	Oil pump	(20)	Clip	

Tightening torque: N·m (kgf-m, ft-lb)
T1: 7.4 (0.75, 5.4)
T2: 10 (1.02, 7.4)
T3: 13 (1.32, 9.6)
T4: 15 (1.5, 10.8)
T5: 18 (1.84, 13.3)
T6: 39 (3.98, 28.8)

- Hose and tank (H6 model)

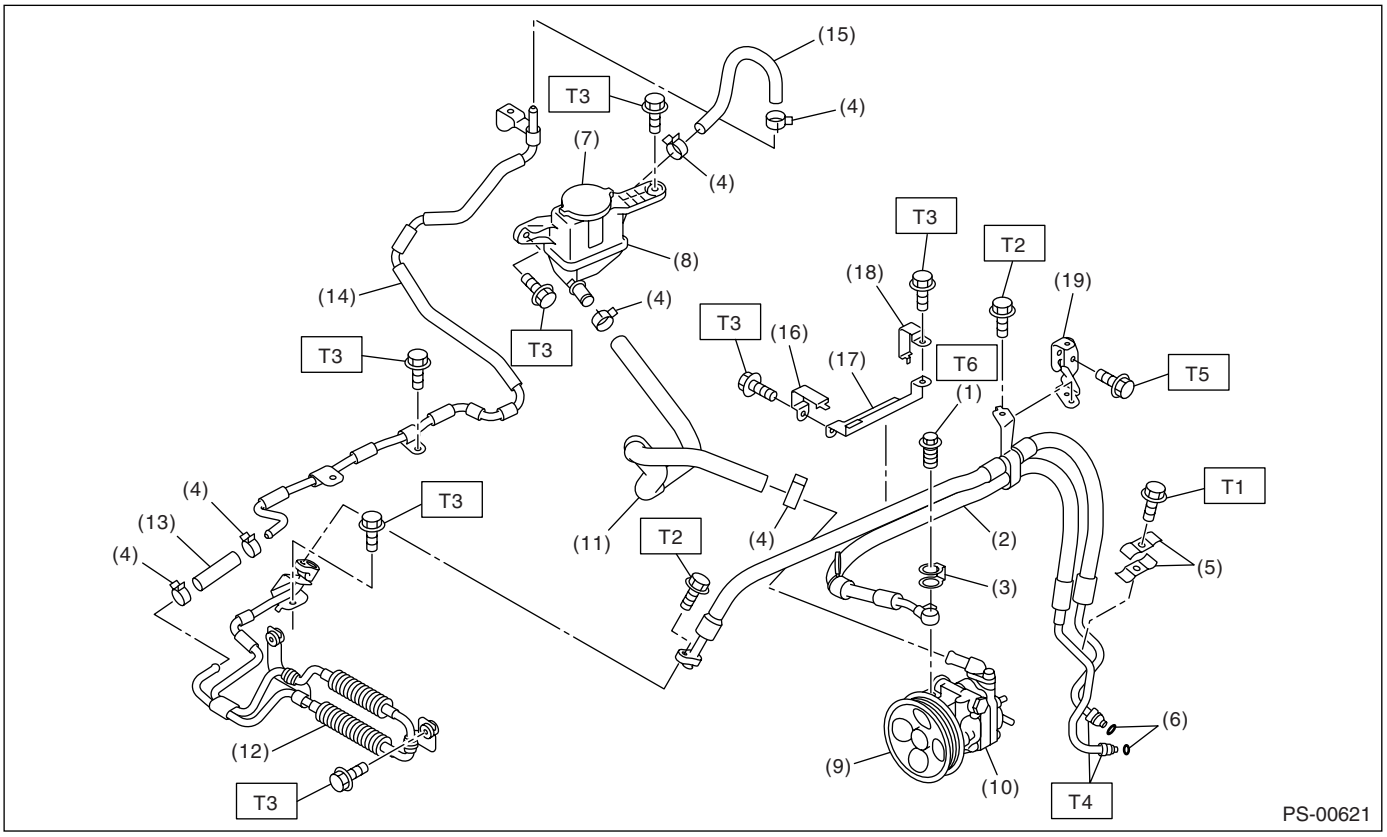

(1)	Eye bolt	(10)	Oil pump	(19)	Hose bracket D
(2)	Hose	(11)	Suction hose		
(3)	Eye bolt gasket	(12)	Cooler pipe	***Tightening torque: N·m (kgf-m, ft-lb)***	
(4)	Clip	(13)	Return hose	***T1:***	***7.4 (0.75, 5.4)***
(5)	Clamp E	(14)	Return pipe	***T2:***	***10 (1.02, 7.4)***
(6)	O-ring	(15)	Return hose	***T3:***	***13 (1.32, 9.6)***
(7)	Cap	(16)	Hose bracket A	***T4:***	***15 (1.5, 10.8)***
(8)	Reservoir tank	(17)	Hose bracket B	***T5:***	***18 (1.84, 13.3)***
(9)	Pulley	(18)	Hose bracket C	***T6:***	***39 (3.98, 28.8)***

- Gearbox

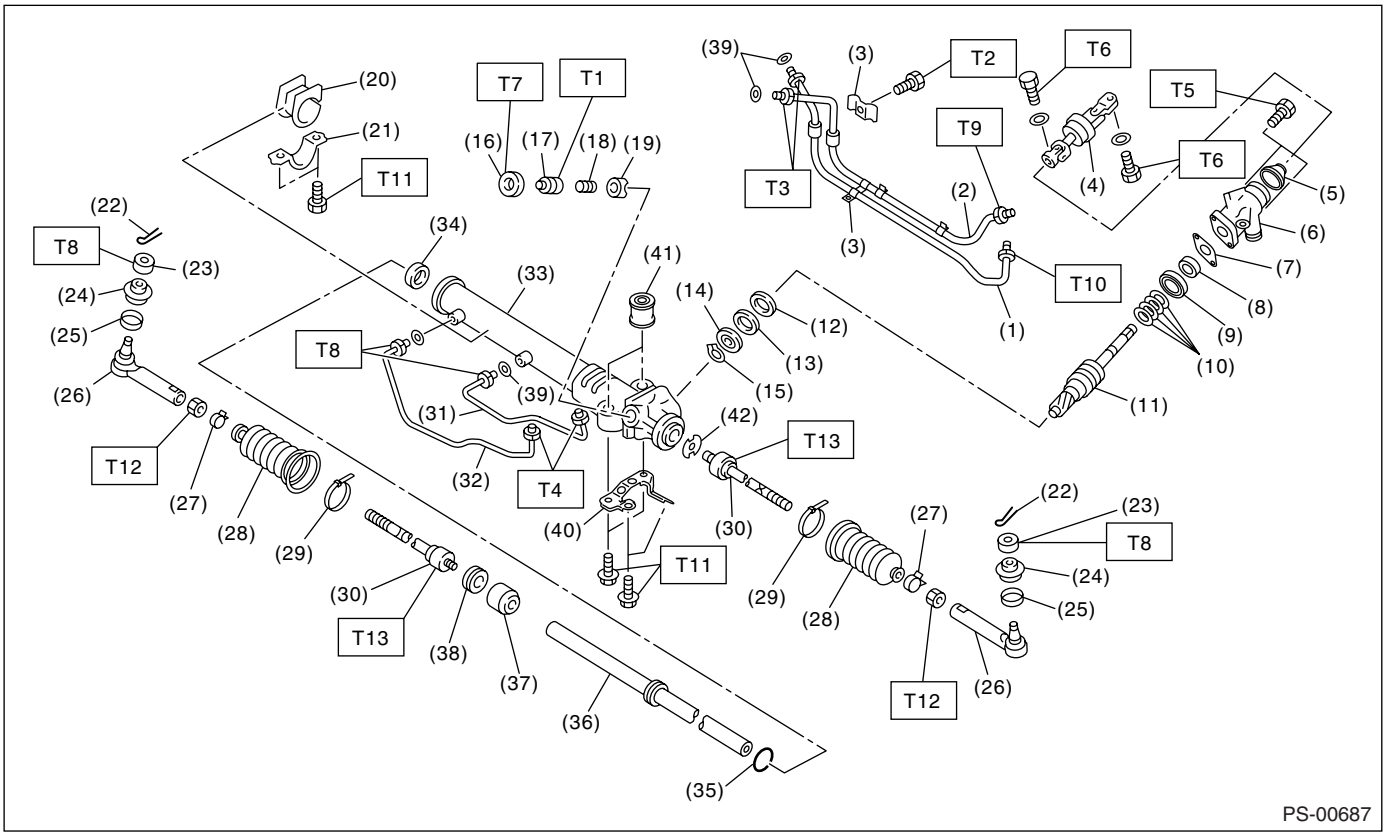

(1)	Pipe C	(20)	Adapter	(39)	O-ring
(2)	Pipe D	(21)	Clamp	(40)	Bracket
(3)	Clamp plate	(22)	Cotter pin	(41)	Bushing
(4)	Universal joint	(23)	Castle nut	(42)	Lock washer
(5)	Dust seal	(24)	Dust cover		
(6)	Valve housing	(25)	Clip	***Tightening torque: N·m (kgf-m, ft-lb)***	
(7)	Gasket	(26)	Tie-rod end	***T1:***	***3.9 (0.4, 2.9)***
(8)	Oil seal	(27)	Clip	***T2:***	***10 (1.02, 7.4)***
(9)	Bushing	(28)	Boot	***T3:***	***15 (1.5, 10.8)***
(10)	Seal ring	(29)	Band	***T4:***	***17 (1.7, 12.5)***
(11)	Pinion & valve ASSY	(30)	Tie-rod	***T5:***	***20 (2.0, 14.8)***
(12)	Oil seal	(31)	Pipe B	***T6:***	***24 (2.4, 17.4)***
(13)	Back-up washer	(32)	Pipe A	***T7:***	***25 (2.5, 18.1)***
(14)	Ball bearing	(33)	Steering body	***T8:***	***27 (2.75, 19.9)***
(15)	Snap ring	(34)	Oil seal	***T9:***	***29 (3.0, 21.4)***
(16)	Lock nut	(35)	Piston ring	***T10:***	***37 (3.8, 27.3)***
(17)	Adjusting screw	(36)	Rack	***T11:***	***60 (6.1, 44.1)***
(18)	Spring	(37)	Rack bushing	***T12:***	***85 (8.7, 62.7)***
(19)	Sleeve	(38)	Holder	***T13:***	***90 (9.1, 65.8)***

3. OIL PUMP

- H4 model

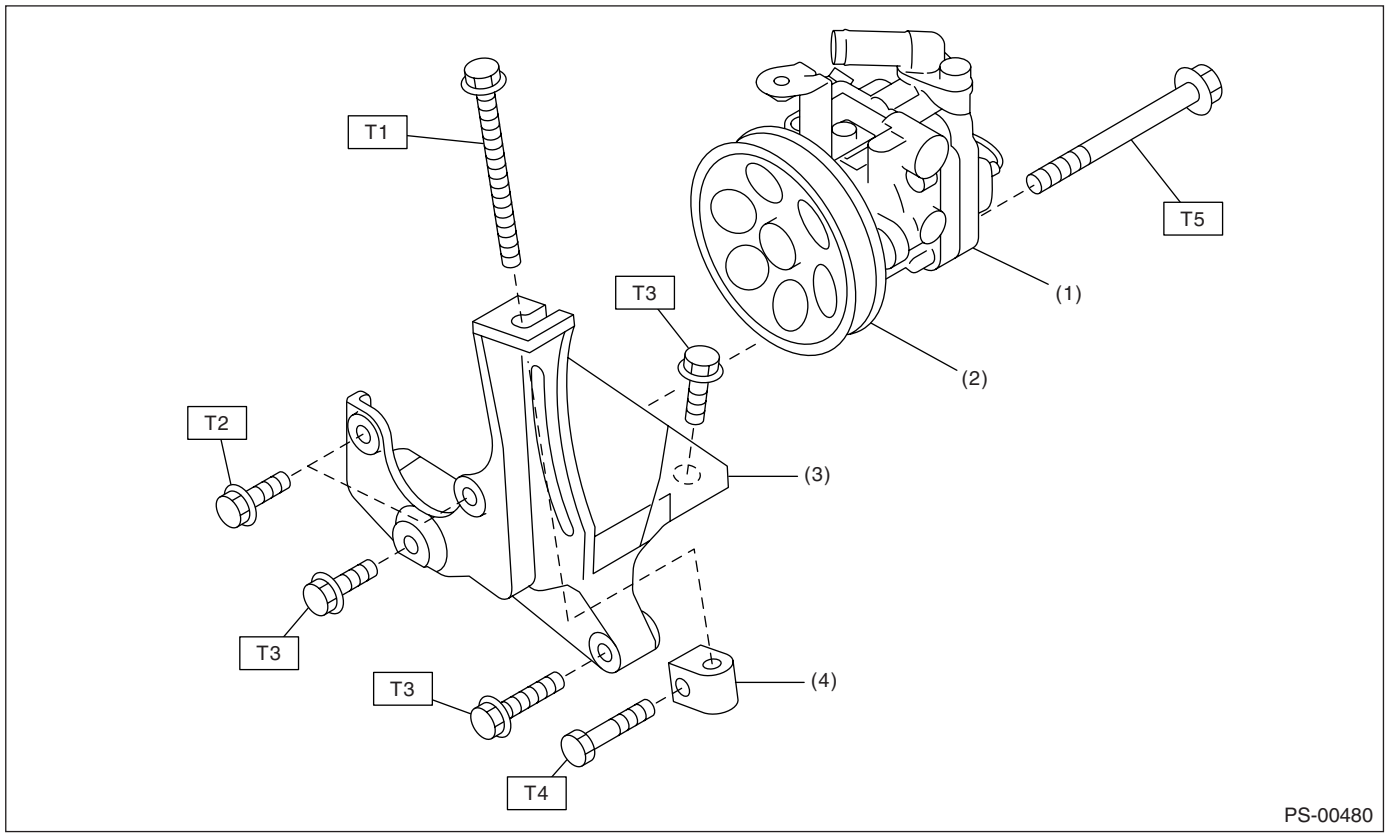

(1) Oil pump
(2) Pulley
(3) Bracket
(4) Belt tension nut

Tightening torque: N·m (kgf-m, ft-lb)
T1: 8 (0.8, 5.8)
T2: 15.7 (1.6, 11.6)
T3: 22 (2.2, 15.9)
T4: 25 (2.5, 18.1)
T5: 37.3 (3.8, 27.5)

• H6 model

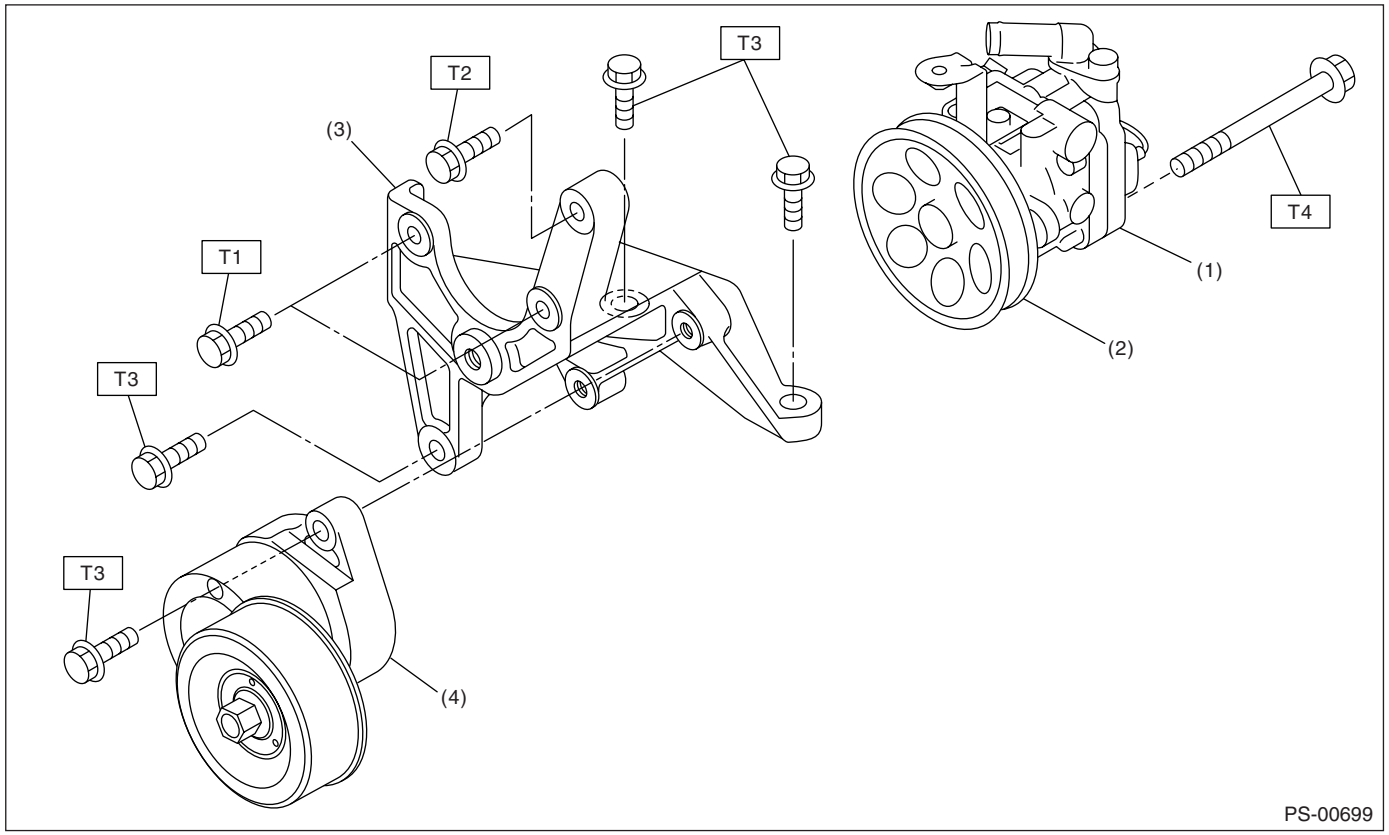

(1) Oil pump
(2) Pulley
(3) Bracket
(4) Belt tensioner

Tightening torque: N·m (kgf-m, ft-lb)
T1: 15.7 (1.6, 11.6)
T2: 25 (2.5, 18.4)
T3: 33 (3.4, 24.3)
T4: 37.3 (3.8, 27.5)

C: CAUTION

• Wear work clothing, including a cap, protective goggles and protective shoes during operation.
• Before removal, installation or disassembly, be sure to clarify the failure. Avoid unnecessary removal, installation, disassembly and replacement.
• Be careful not to burn yourself, because each part on the vehicle is hot after running.
• Use SUBARU genuine power steering fluid, grease etc. or the equivalent. Do not mix fluid, grease etc. with that of another grade or from other manufacturers.
• Be sure to tighten fasteners including bolts and nuts to the specified torque.
• Place shop jacks or rigid racks at the specified points.
• Before securing a part on a vise, place cushioning material such as wooden blocks, aluminum plate or cloth between the part and the vise.

D: PREPARATION TOOL

1. SPECIAL TOOL

ILLUSTRATION	TOOL NUMBER	DESCRIPTION	REMARKS
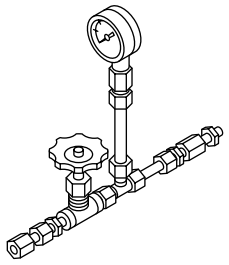 ST-925711000	925711000	PRESSURE GAUGE	Used for measuring oil pump pressure.
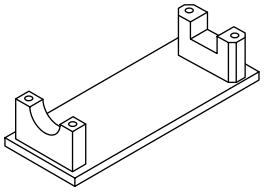 ST-926200000	926200000	STAND	• Used when inspecting characteristic of gear-box assembly and disassembling it. • Used with BOSS D (34199AG000).
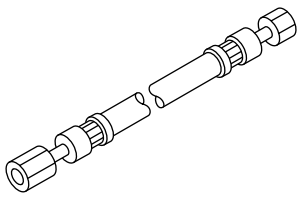 ST34099AC010	34099AC010	ADAPTER HOSE A	Used with PRESSURE GAUGE (925711000).
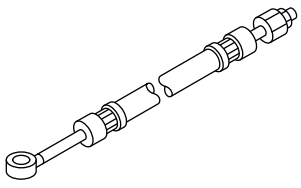 ST34099AC020	34099AC020	ADAPTER HOSE B	Used with PRESSURE GAUGE (925711000).

ILLUSTRATION	TOOL NUMBER	DESCRIPTION	REMARKS
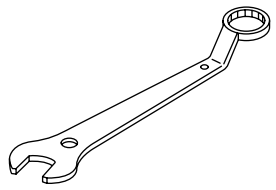 ST-926230000	926230000	SPANNER	For the lock nut when adjusting backlash of gearbox.
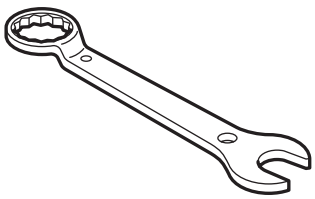 ST34099PA100	34099PA100	SPANNER	Used when measuring the rotating resistance of gearbox assembly.
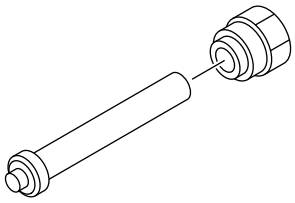 ST-926420000	926420000	PLUG	When fluid leaks from pinion side of gearbox assembly, remove pipe B from valve housing, attach this tool and check fluid leaking points.
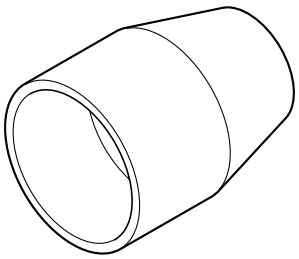 ST-926250000	926250000	GUIDE	Used for installing holder assembly into rack housing.

ILLUSTRATION	TOOL NUMBER	DESCRIPTION	REMARKS
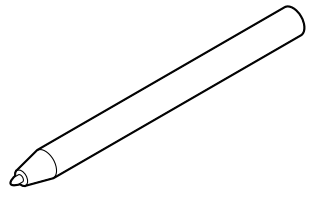 ST34099FA060	34099FA060	PUNCH HOLDER	Used for caulking.
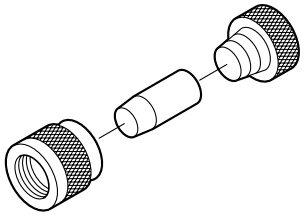 ST-927490000	927490000	INSTALLER A, B, C	Used for installing oil seal to rack assembly.
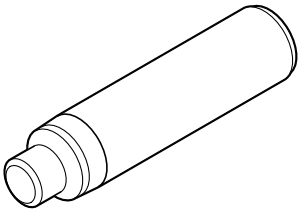 ST34099FA030	34034099FA030	INSTALLER & REMOVER	Used for removing and installing rack oil seal (outer & inner).
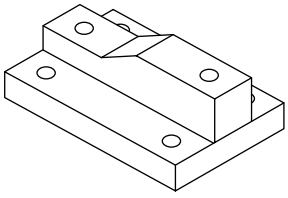 ST34199AG000	34199AG000	BOSS D	• Used for inspecting characteristic of gearbox assembly and disassembling it. • Used with STAND (926200000).

ILLUSTRATION	TOOL NUMBER	DESCRIPTION	REMARKS
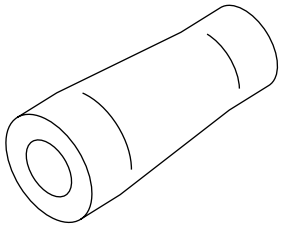 ST34199AG030	34199AG030	GUIDE	Used for installing seal ring of rack.
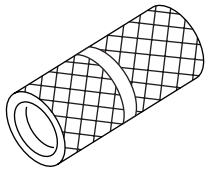 ST34199AG070	34199AG070	FORMER	Used for forming seal ring of pinion.
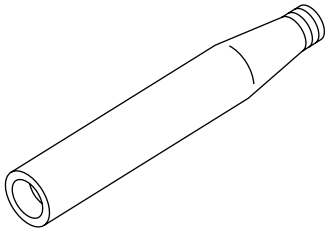 ST34199AG020	34199AG020	GUIDE	Used for installing seal ring of pinion.
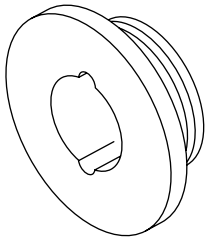 ST34199AG050	34199AG050	GUIDE G (24)	• Used for forming seal ring of rack. • Used with FORMER PISTON (34199AG080).

ILLUSTRATION	TOOL NUMBER	DESCRIPTION	REMARKS
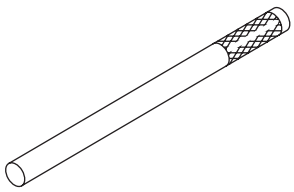 ST34199AE050	34199AE050	OIL SEAL REMOVER	Used for removing oil seal.
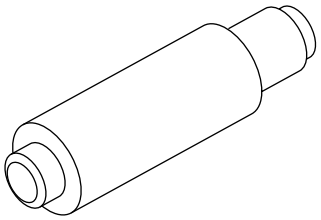 ST34199AG090	34199AG090	INSTALLER & REMOVER	• Used for installing oil seal of valve housing. • Used with SEAL INSTALLER (34099FA130). • Used for installing ball bearing of valve housing. • Used for removing oil seal and ball bearing from valve housing.
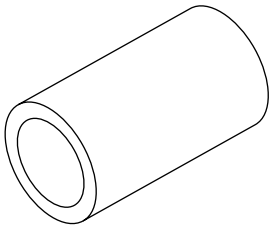 ST34199AG080	34199AG080	FORMER PISTON	• Used for forming seal of rack. • Used with GUIDE G (24) (34199AG050).
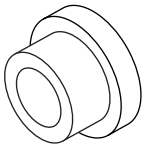 ST34199AG010	34199AG010	INSTALLER	Used for press-fitting oil seal of gearbox cylinder.

2. Steering Wheel

A: REMOVAL

1) Disconnect the ground cable from battery.
2) Set the tire to the straight-ahead position.
3) Remove the airbag module. <Ref. to AB-16, REMOVAL, Driver's Airbag Module.>

WARNING:
Always refer to "Airbag System" before performing airbag module service. <Ref. to AB-5, CAUTION, General Description.>

4) Place alignment marks on the steering wheel and steering shaft.

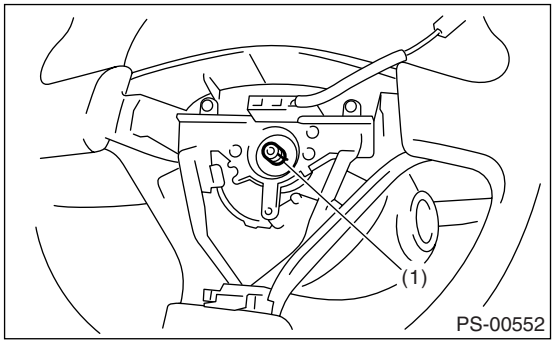

(1) Alignment mark

5) Remove the steering wheel nut, and then draw out the steering wheel from shaft using steering puller.

B: INSTALLATION

WARNING:
Always refer to "Airbag System" before performing airbag module service. <Ref. to AB-5, CAUTION, General Description.>

1) Align the center of roll connector. <Ref. to AB-25, ADJUSTMENT, Roll Connector.>
2) Install in the reverse order of removal.

NOTE:
Align the alignment marks on the steering wheel and steering shaft.

Tightening torque:
45 N·m (4.6 kgf-m, 33.2 ft-lb)

Column cover-to-steering wheel clearance:
2 — 4 mm (0.08 — 0.16 in)

CAUTION:
Insert roll connector guide pin into guide hole on lower end of surface of steering wheel to prevent damage.

C: INSPECTION

1) Check the steering wheel for deformation. If the deformation is excessive, replace the steering wheel.
2) Check the splines on the steering wheel for damage. If the damage is excessive, replace the steering wheel.

3. Universal Joint

A: REMOVAL

1) Remove the steering wheel. <Ref. to PS-14, REMOVAL, Steering Wheel.>
2) Place alignment marks on universal joint.
3) Remove the universal joint bolts and then remove the universal joint.

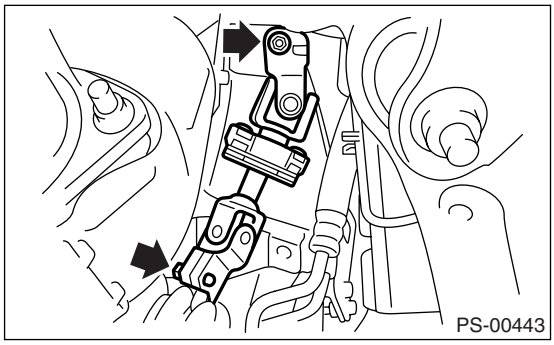

B: INSTALLATION

1) Align the cutout at serrated section of the column shaft and yoke, then install the universal joint into column shaft.

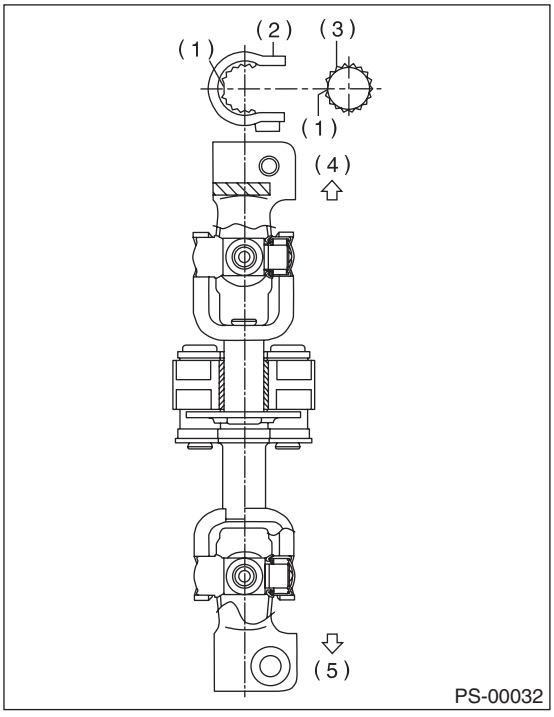

(1) Cutout
(2) Yoke
(3) Column shaft
(4) Column shaft side
(5) Gearbox side

2) Install the universal joint to the serrations of gearbox assembly by matching alignment marks.
3) Tighten the bolt.

Tightening torque:
24 N·m (2.4 kgf-m, 17.4 ft-lb)

CAUTION:
Excessively large tightening torque of universal joint bolts may lead to heavy steering wheel operation.

4) Align the center of roll connector. <Ref. to AB-25, ADJUSTMENT, Roll Connector.>
5) Install the steering wheel. <Ref. to PS-14, INSTALLATION, Steering Wheel.>

C: INSPECTION

Check for wear, damage or any other faults. If necessary, replace it.

Service limit:
Universal joint play: 0 mm (0 in)
Maximum swing torque: 0.3 N (0.03 kgf, 0.07 lb)

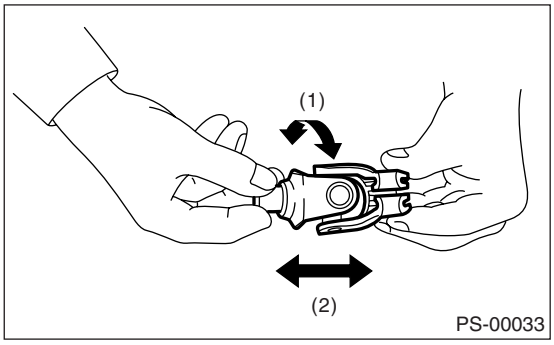

(1) Swinging torque
(2) Play

Measure the swing torque of universal joint.

Service limit:
Maximum load: 3.8 N (0.39 kgf, 0.86 lb) or less

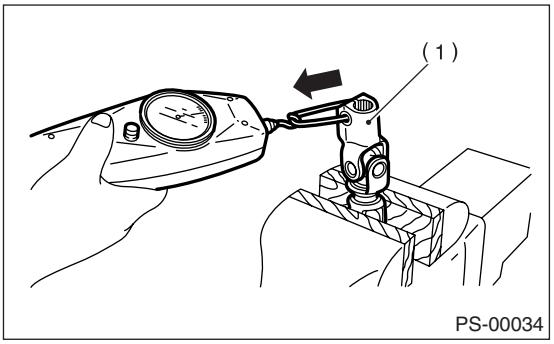

(1) Yoke (Gearbox side)

Service limit:
Maximum load: 3.8 N (0.39 kgf, 0.86 lb) or less

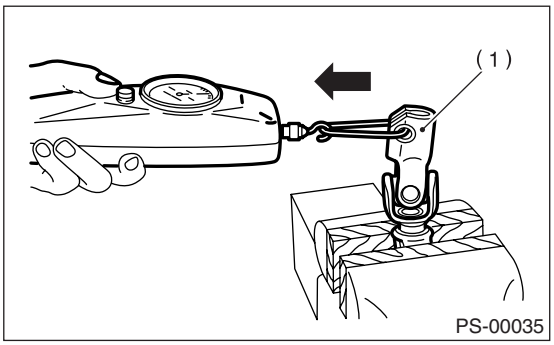

(1) Yoke (Gearbox side)

Service limit:
Maximum load: 7.3 N (0.74 kgf, 1.64 lb) or less

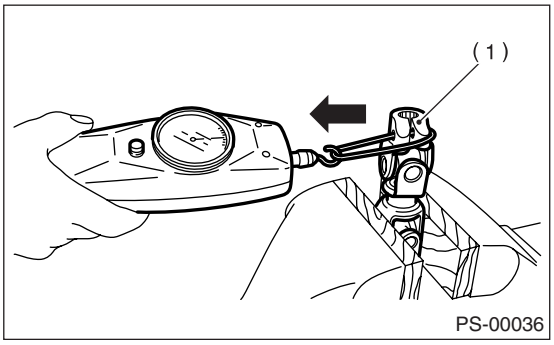

(1) Yoke (Steering column side)

Service limit:
Maximum load: 7.3 N (0.74 kgf, 1.64 lb) or less

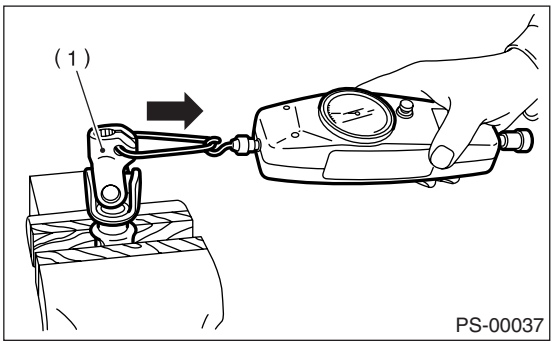

(1) Yoke (Steering column side)

4. Tilt Steering Column

A: REMOVAL

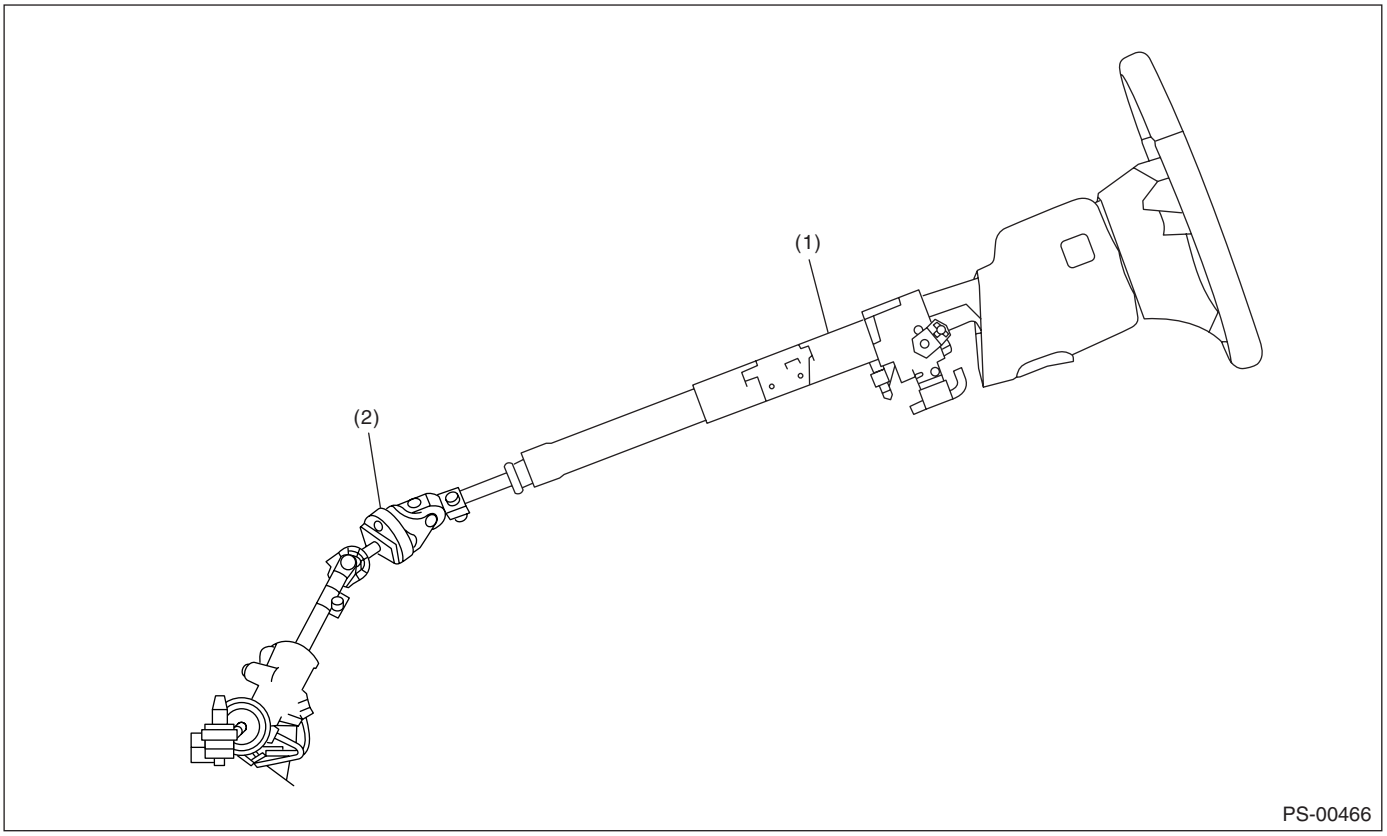

(1) Tilt steering column (2) Universal joint

1) Remove the steering wheel. <Ref. to PS-14, REMOVAL, Steering Wheel.>
2) Remove the universal joint. <Ref. to PS-15, REMOVAL, Universal Joint.>
3) Remove the instrument panel lower cover under.
4) Remove the instrument panel lower cover upper.
5) Remove all connectors from the steering column.
6) Remove the two bolts under instrument panel securing steering column.

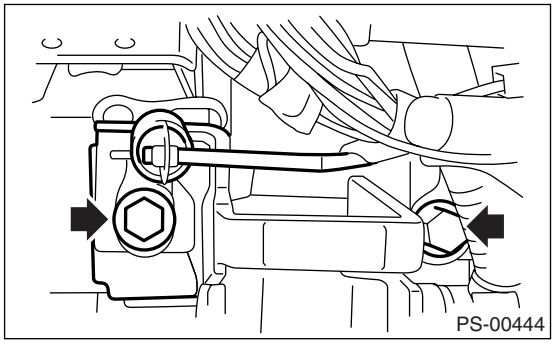

7) Pull out the steering shaft assembly from the hole on toe board.

CAUTION:
• Be sure to remove the universal joint before removing steering shaft assembly installing bolts when removing steering shaft assembly or when lowering it for servicing of other parts.
• Do not loosen the tilt lever when the steering column is not secured to the vehicle.

B: INSTALLATION

1) Install the grommet to toe board.

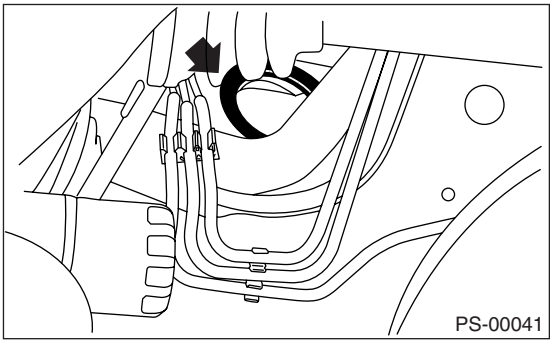

2) Insert the end of steering shaft into toe board grommet.
3) With the tilt lever secured, tighten the steering shaft mounting bolts under instrument panel.

Tightening torque:
25 N·m (2.5 kgf-m, 18.1 ft-lb)

4) Connect all the connectors under instrument panel.
5) Connect the airbag system connector at the harness spool.

NOTE:
Make sure to apply double lock.

6) Install the instrument panel lower cover with tilt lever held in the lowered position.
7) Install the universal joint. <Ref. to PS-15, INSTALLATION, Universal Joint.>
8) Align the center of roll connector. <Ref. to AB-25, ADJUSTMENT, Roll Connector.>
9) Install the steering wheel. <Ref. to PS-14, INSTALLATION, Steering Wheel.>

CAUTION:
Insert roll connector guide pin into guide hole on lower end of steering wheel surface to prevent damage.

C: DISASSEMBLY

Remove the two screws securing upper steering column covers, and the two screws securing combination switch, and then remove the related parts.

D: ASSEMBLY

Insert the combination switch to the upper column shaft, and install the upper column cover. Then route the ignition key harness and combination switch harness between column cover mounting bosses.

Tightening torque:
1.2 N·m (0.12 kgf-m, 0.9 ft-lb)

CAUTION:
Do not overtorque the screw.

E: INSPECTION

1. BASIC INSPECTION

Measure the overall length of steering column. If not as specified, replace it.

Overall length L:

Standard value
Except for OUTBACK model
$833.6^{+1.3\ mm}_{-0.3\ mm}$ ($32.82^{+0.051\ in}_{-0.020\ in}$)
OUTBACK model
$825.4^{+1.3\ mm}_{-0.3\ mm}$ ($32.50^{+0.051\ in}_{-0.020\ in}$)

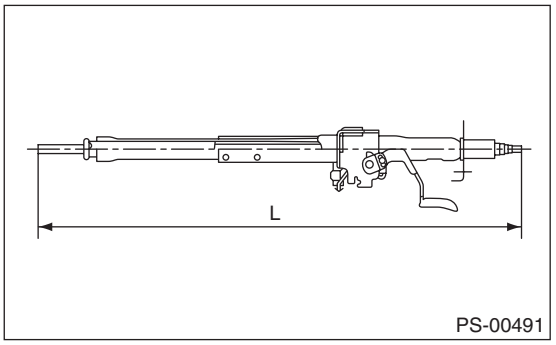

2. AIRBAG SYSTEM INSPECTION

WARNING:
For airbag inspection procedures, refer to "Airbag System". <Ref. to AB-5, CAUTION, General Description.>

5. Steering Gearbox

A: REMOVAL

1) Set the vehicle on a lift.
2) Disconnect the ground cable from battery.
3) Loosen the front wheel nuts.
4) Lift-up the vehicle and remove the front wheels.
5) Remove the under cover. <Ref. to EI-26, REMOVAL, Front Under Cover.>
6) Remove the front exhaust pipe assembly. (Non-turbo model) <Ref. to EX(H4SO)-4, REMOVAL, Front Exhaust Pipe.>

WARNING:
Be careful, not to burn your hand because the exhaust pipe is hot.

7) Using a puller, remove the tie-rod end from the knuckle arm after pulling off cotter pin and removing castle nut.

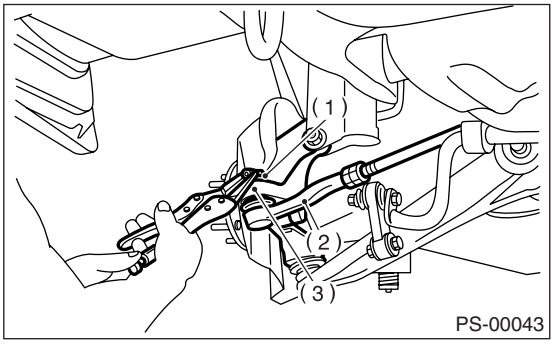

(1) Castle nut
(2) Tie-rod end
(3) Knuckle arm

8) Remove the front crossmember support plate, jack-up plate and front stabilizer. <Ref. to FS-15, REMOVAL, Front Stabilizer.>

- Large type

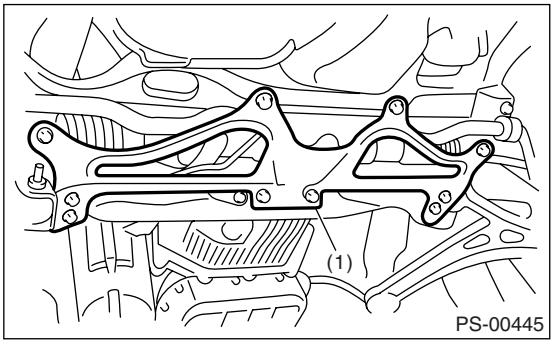

(1) Front crossmember support plate

- Small type

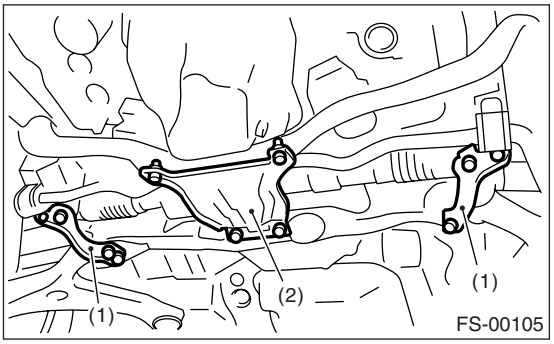

(1) Crossmember support plate
(2) Jack-up plate

9) Remove the one pipe joint at the center of gearbox, and connect the vinyl hose to the pipe and the joint. Discharge the fluid by turning steering wheel fully clockwise and counterclockwise. Discharge the fluid similarly from other pipes.

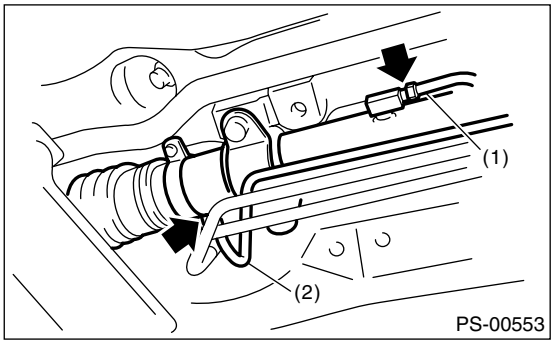

(1) Pipe A
(2) Pipe B

10) Remove the universal joint. <Ref. to PS-15, REMOVAL, Universal Joint.>

11) Disconnect the pipe C from pressure hose first, and pipe D from return hose second.

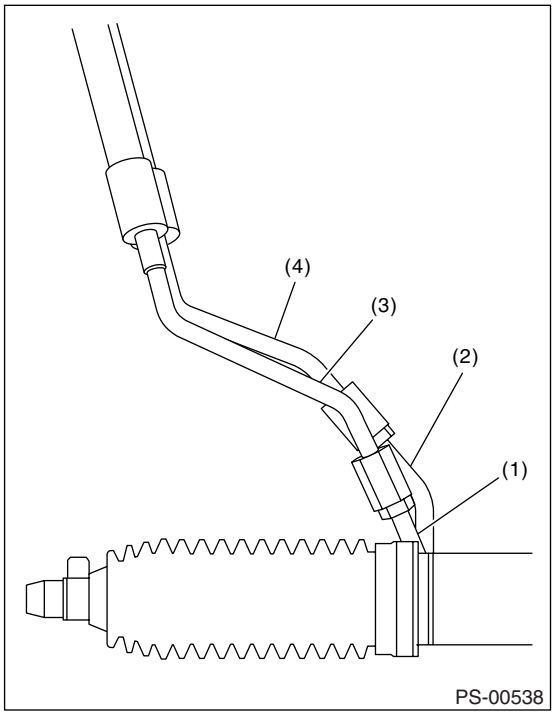

(1) Pipe C
(2) Pipe D
(3) Pressure hose
(4) Return hose

12) Remove the clamp bolts securing gearbox to crossmember, and remove the clamp.

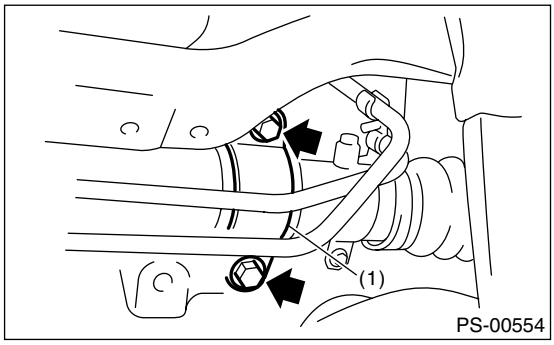

(1) Clamp

13) Remove the bolts which secure gearbox bracket, and remove the bracket and gearbox.

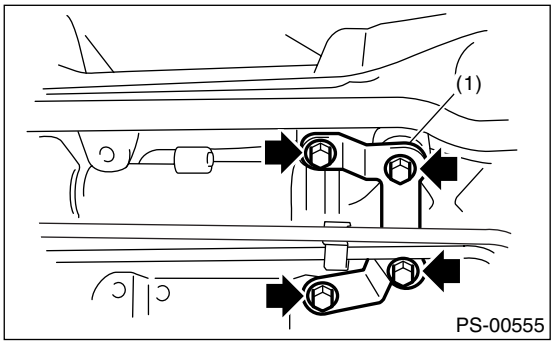

(1) Bracket

B: INSTALLATION

1) Insert the gearbox into crossmember, being careful not to damage gearbox boot.
2) Install the gearbox and bracket. Tighten the bolt temporarily.

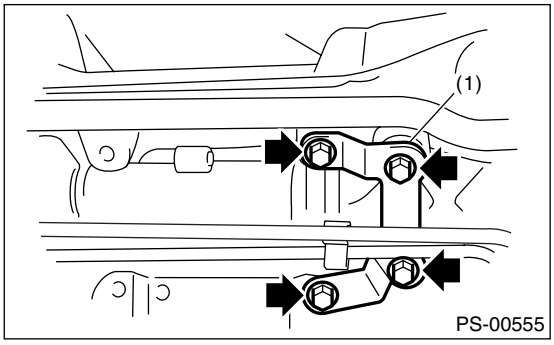

(1) Bracket

3) Tighten the gearbox to the crossmember bracket via clamp with bolt temporarily.

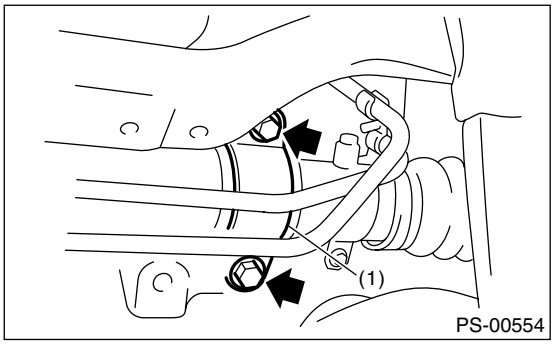

(1) Clamp

4) Tighten the bolts which temporary tightening the clamp and bracket of gearbox to specified torque.

Tightening torque:
60 N·m (6.1 kgf-m, 44.1 ft-lb)

5) Connect the pipe D to return hose first, and the pipe C to pressure hose second.

Tightening torque:
15 N·m (1.5 kgf-m, 10.8 ft-lb)

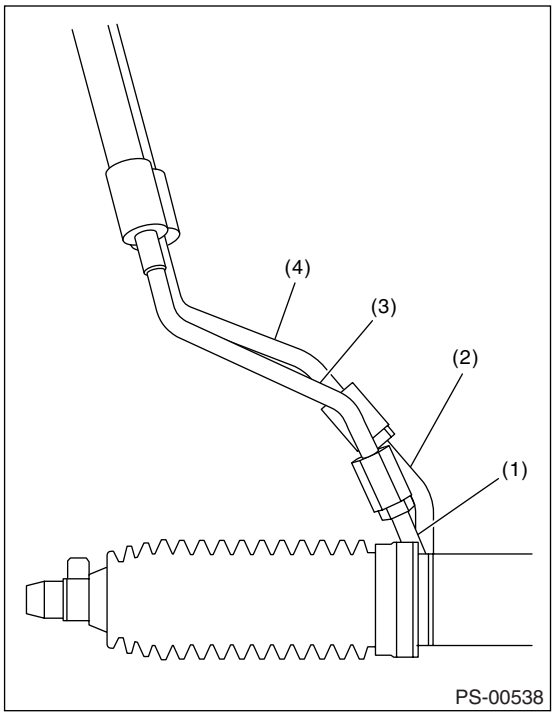

(1) Pipe C
(2) Pipe D
(3) Pressure hose
(4) Return hose

6) Install the universal joint. <Ref. to PS-15, INSTALLATION, Universal Joint.>
7) Connect the tie-rod end and knuckle arm, and tighten with castle nut.

Castle nut tightening torque:
27 N·m (2.75 kgf-m, 19.9 ft-lb)

CAUTION:
When connecting, do not hit cap at the bottom of tie-rod end with hammer.

8) After tightening the castle nut to specified tightening torque, tighten it further within 60° until cotter pin hole is aligned with slot in the nut. Fit the cotter pin into nut, and then bend the pin to lock.

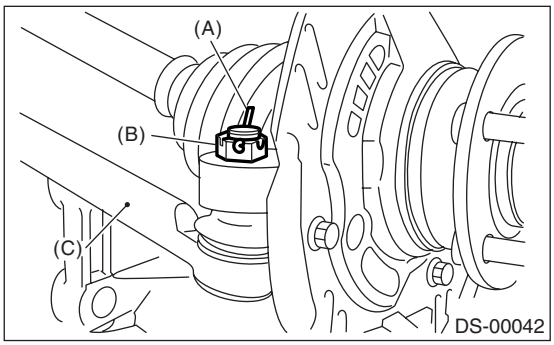

(A) Cotter pin
(B) Castle nut
(C) Tie-rod end

9) Install the front stabilizer. <Ref. to FS-15, INSTALLATION, Front Stabilizer.>
10) Install the front crossmember support plate and jack-up plate.
11) Install the front exhaust pipe assembly. (Non-turbo model) <Ref. to EX(H4SO)-5, INSTALLATION, Front Exhaust Pipe.>
12) Install the under cover. <Ref. to EI-26, INSTALLATION, Front Under Cover.>
13) Install the front wheels.
14) Tighten the wheel nuts to specified torque.

Tightening torque:
90 N·m (9.1 kgf-m, 65.8 ft-lb)

15) Lower the vehicle.
16) Remove the steering wheel. <Ref. to PS-14, REMOVAL, Steering Wheel.>
17) Align the center of roll connector. <Ref. to AB-25, ADJUSTMENT, Roll Connector.>
18) Install the steering wheel. <Ref. to PS-14, INSTALLATION, Steering Wheel.>
19) Connect the battery ground cable to battery.
20) Pour fluid into the oil tank, and bleed air. <Ref. to PS-54, Power Steering Fluid.>
21) Check for fluid leaks.
22) Check the fluid level in oil tank.
23) After adjusting toe-in and steering angle, tighten the lock nut on tie-rod end.

Tightening torque:
85 N·m (8.7 kgf-m, 62.7 ft-lb)

NOTE:
When adjusting toe-in, hold the boot as shown to prevent it from being rotated or twisted. If twisted, straighten it.

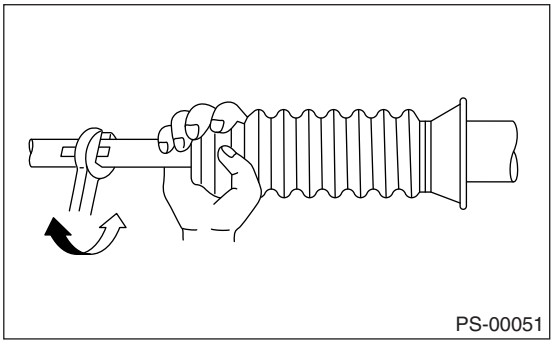

C: DISASSEMBLY

1. RACK HOUSING ASSEMBLY

1) Disconnect the four pipes from gearbox.

NOTE:
Remove the pipes C and D, which are fixed to clamp plate, as a unit.

2) Secure the gearbox removed from vehicle in a vise using ST.
ST1 926200000 STAND
ST2 34199AG000 BOSS D

CAUTION:
Secure the gearbox in a vise using ST as shown in the figure. Do not secure the gearbox without this ST.

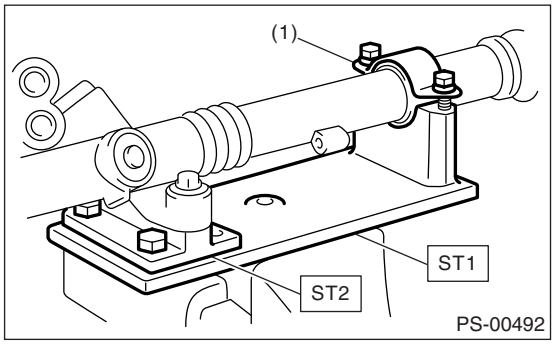

(1) Clamp

3) Remove the tie-rod end and lock nut from gearbox.

4) Remove the small clip from the boot using pliers, and then move the boot to tie-rod end side.

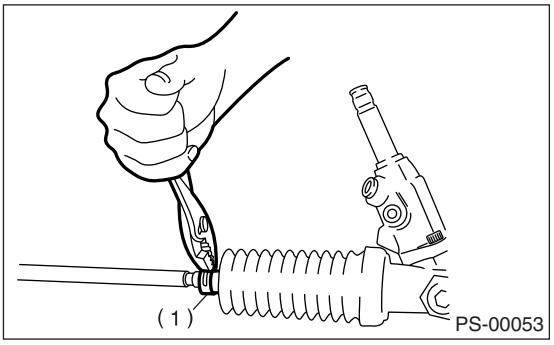

(1) Clip

5) Using a flat-tip screwdriver, remove the band from boot.

NOTE:
Replace the boot if there is damage, cracks or deterioration.

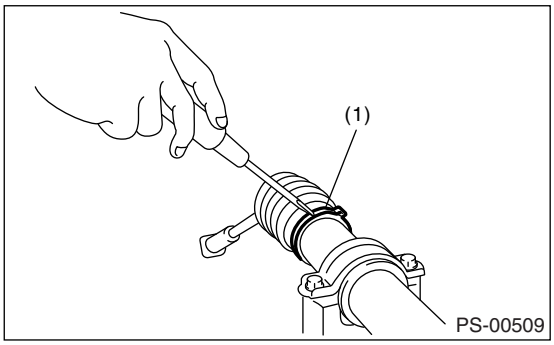

(1) Band

6) Using the ST, loosen the lock nut.
ST 926230000 SPANNER

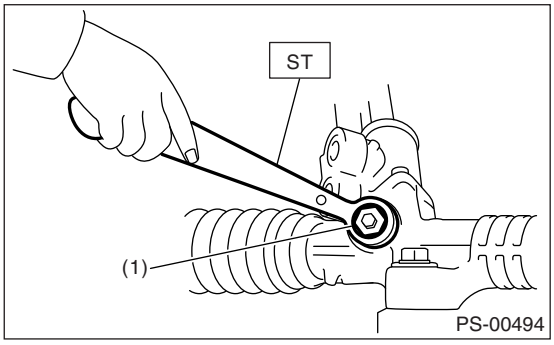

(1) Lock nut

7) Tighten the adjusting screw until it can no longer be tightened.

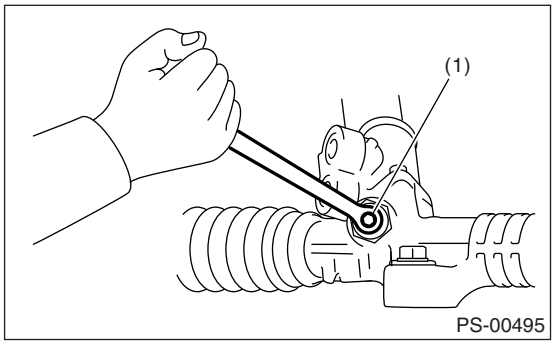

(1) Adjusting screw

8) Using the ST, remove the tie-rod.
ST 926230000 SPANNER
9) Loosen the adjusting screw, and remove the spring and sleeve.
10) Remove the two bolts securing valve assembly.

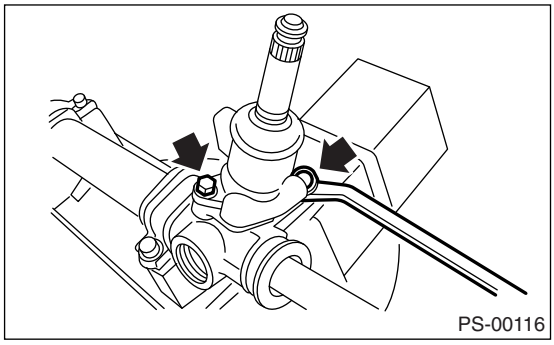

11) Carefully draw out the input shaft and remove the valve assembly.

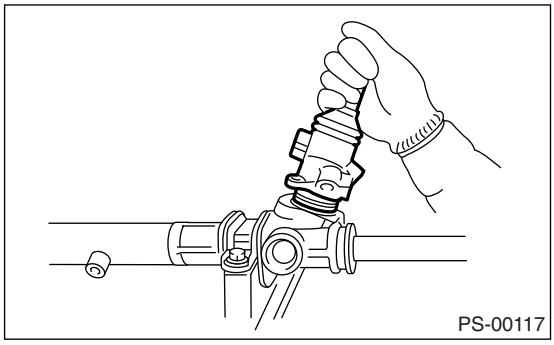

12) Using a drill, release the crimping of holder.

CAUTION:
Make a hole of 2 mm (0.08 in) depth using a drill with 3 mm (0.12 in) diameter.

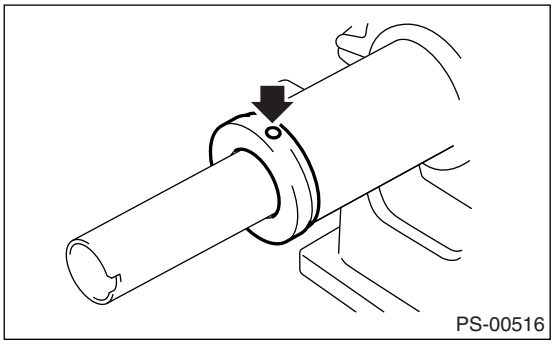

13) Remove the holder.

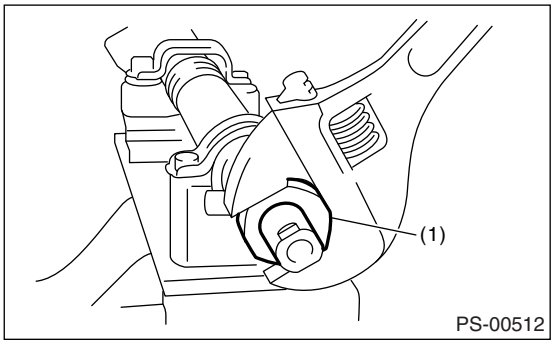

(1) Holder

14) Attach the ST to the pinion housing side of the rack and push out the rack along with the outer side oil seal.
ST 34199FE000 INSTALLER & REMOVER

NOTE:
Plug the connecting section of the steering body pipe to prevent the fluid from flowing out.

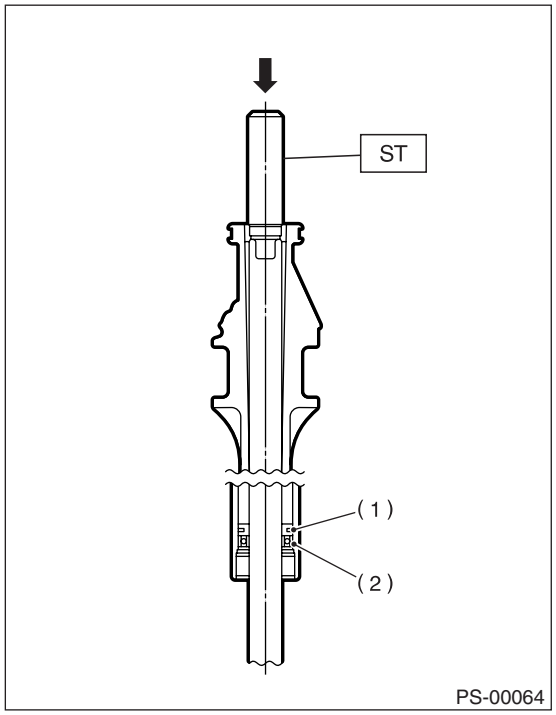

(1) Rack piston
(2) Outer side oil seal

15) Insert the ST from pinion housing side and remove the oil seal using a press.
ST 927580000 OIL SEAL REMOVER

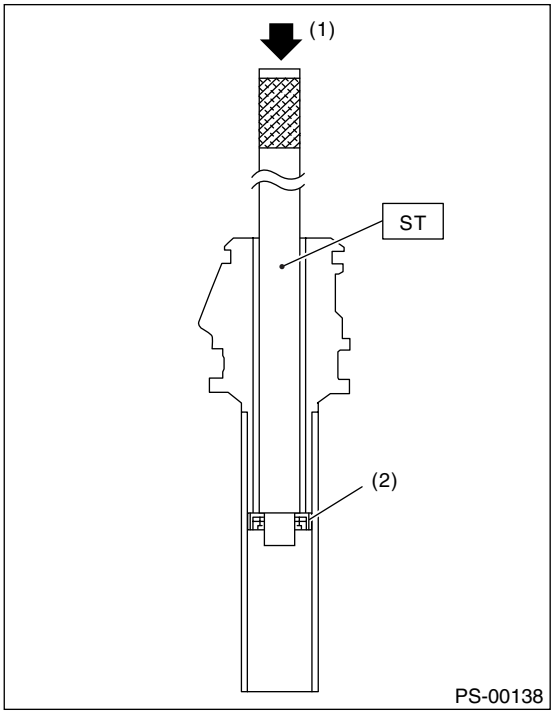

(1) Press
(2) Oil seal

16) Using a press, remove the bushing of gearbox installation portion.

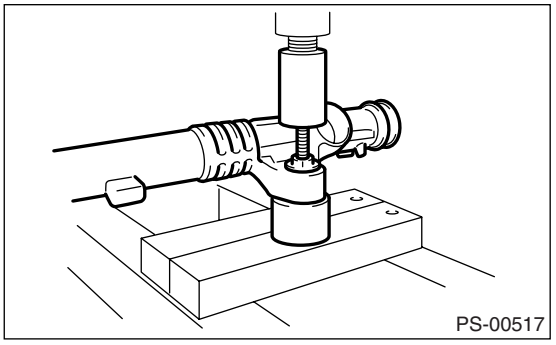

2. CONTROL VALVE

1) Disconnect the pipes A and B from gearbox.
2) Secure the gearbox removed from vehicle in a vise using ST.
ST1 926200000 STAND
ST2 34199AG000 BOSS D

CAUTION:
Secure the gearbox in a vise using ST as shown in the figure. Do not secure the gearbox without this ST.

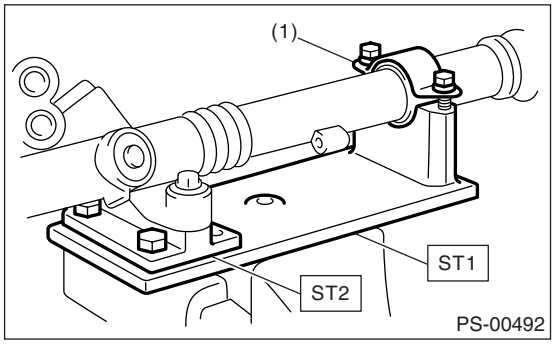

(1) Clamp

3) Using the ST, loosen the lock nut.
ST 926230000 SPANNER

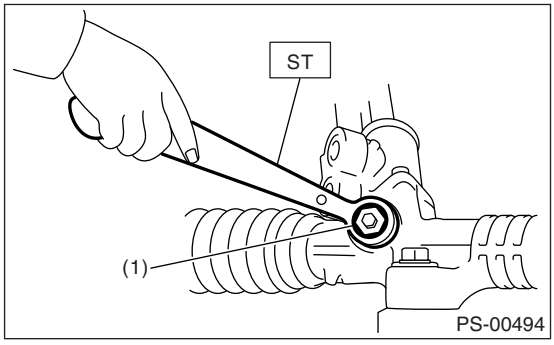

(1) Lock nut

4) Tighten the adjusting screw until it can no longer be tightened.

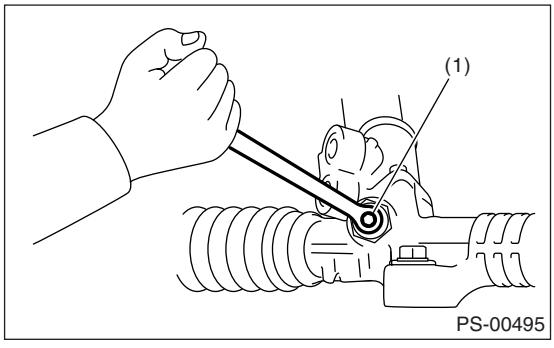

(1) Adjusting screw

5) Loosen the adjusting screw, and remove the spring and sleeve.
6) Remove the two bolts securing valve assembly.

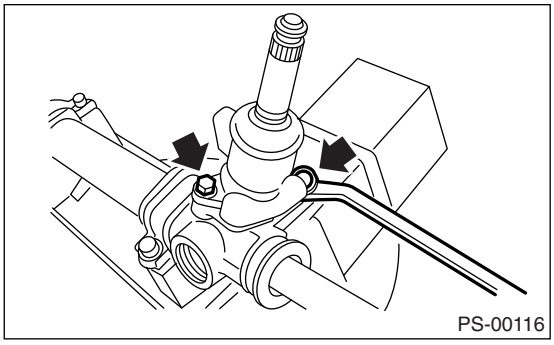

7) Carefully draw out the input shaft and remove the valve assembly.

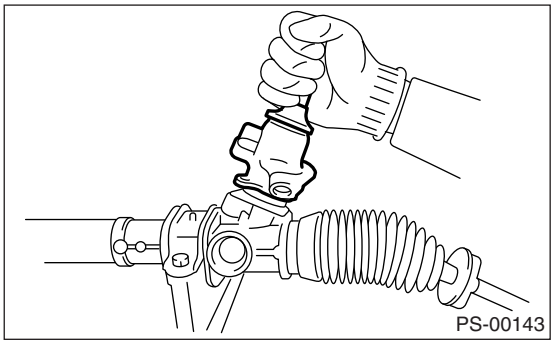

8) Put a vinyl tape around the spline portion, and slide the dust cover to remove.

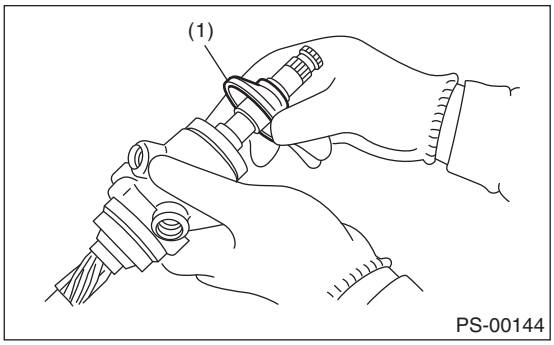

(1) Dust cover

9) Using a press, remove the pinion & valve assembly from valve housing.

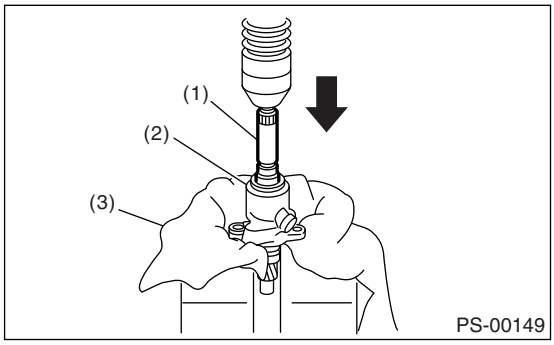

(1) Pinion & valve ASSY
(2) Valve housing
(3) Cloth

10) Using the ST and a press, remove the bushing and oil seal from the valve housing.
ST 34199AG090 INSTALLER & REMOVER

CAUTION:
• Do not apply a force to the end surface of valve housing.
• Do not reuse the oil seal after removal.

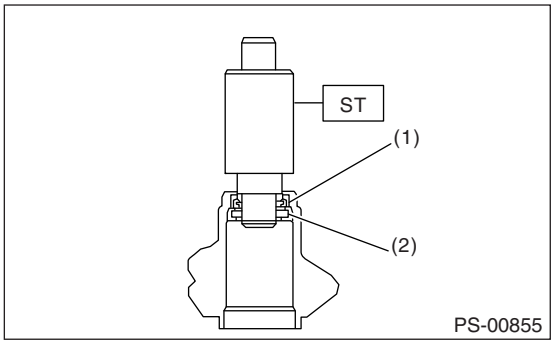

(1) Oil seal
(2) Bushing

11) Using a snap ring pliers, remove the snap ring, valve, oil seal and back-up washer.

CAUTION:
Be careful not to scratch the pinion and valve assembly.

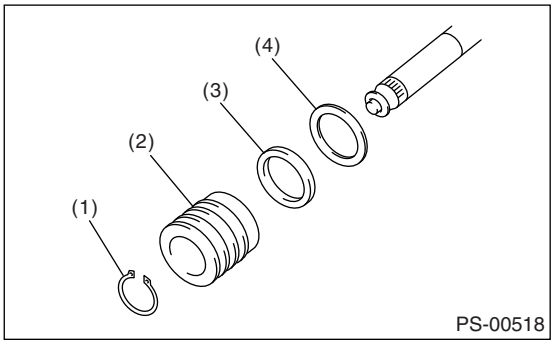

(1) Snap ring
(2) Valve
(3) Oil seal
(4) Back-up ring

D: ASSEMBLY

1. RACK HOUSING ASSEMBLY

1) Using a press, install the bushing to gearbox installation portion.

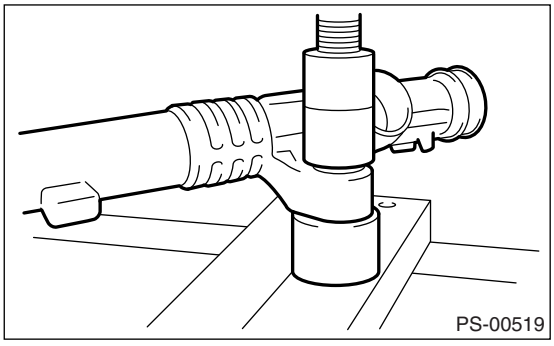

2) Insert the ST to rack.
ST 34199AG030 GUIDE

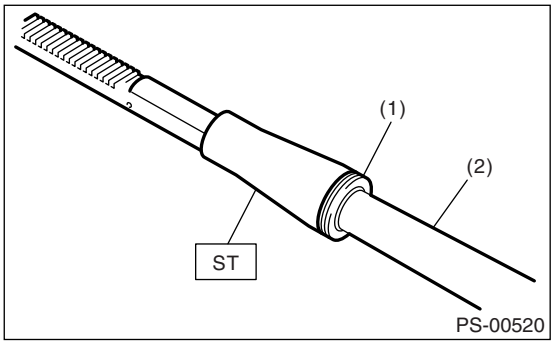

(1) Seal ring
(2) Rack

3) Install the seal ring to piston portion of rack.
4) Using the ST, form the seal ring properly
ST1 34199AG080 FORMER PISTON
ST2 34199AG050 GUIDE G (24)

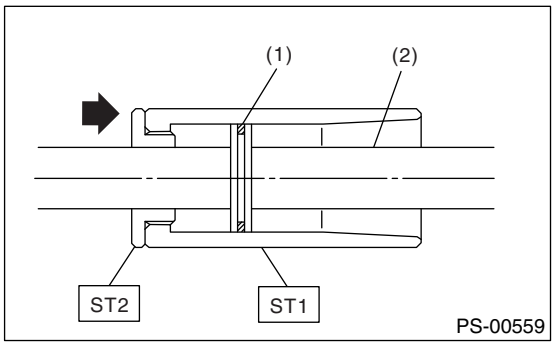

(1) Seal ring
(2) Rack

5) Fit the ST over toothed portion of rack assembly, and insert the oil seal to rack.
ST 926390001 COVER & REMOVER

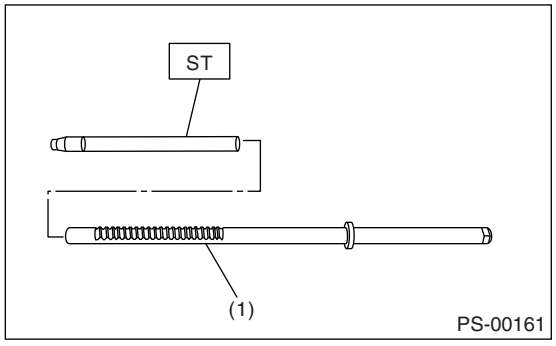

(1) Rack ASSY

6) Remove the ST from rack assembly.
7) Install the back-up washer from the gear side of rack.

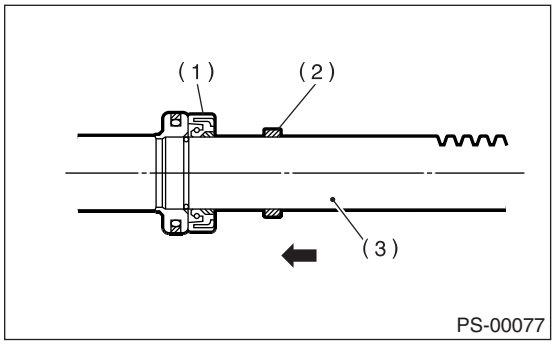

(1) Oil seal
(2) Back-up washer
(3) Rack

8) Check the threaded end of holder and gearbox cylinder end for burrs, damage, etc. Correct if faulty.

9) Apply a coat of grease to the grooves in rack, sliding surface of sleeve and sealing surface of piston. Then insert the rack into steering body from cylinder side.
10) Temporarily tighten the new holder to gearbox cylinder.
11) Put a mark at the specified position from the end surface of the ST as shown in the figure.

Specified position:
Except for 2.5 GT-B:
13.5 mm (0.53 in)
2.5 GT-B:
18.9 mm (0.74 in)
ST 34199FE000 INSTALLER & REMOVER

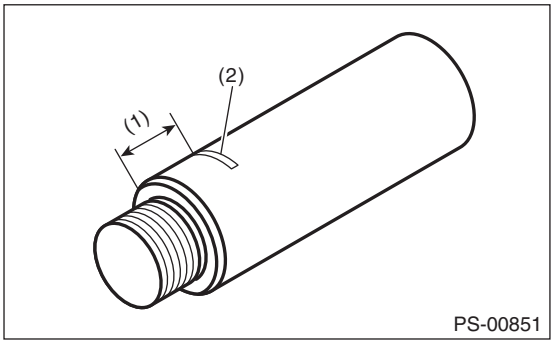

(1) 13.5 mm (0.53 in) or 18.9 mm (0.74 in)
(2) Put a mark.

12) Attach the ST to the rack end surface.
ST 34199FE000 INSTALLER & REMOVER
13) Using a press, press-fit until the mark on the ST is aligned to the end surface of the holder.

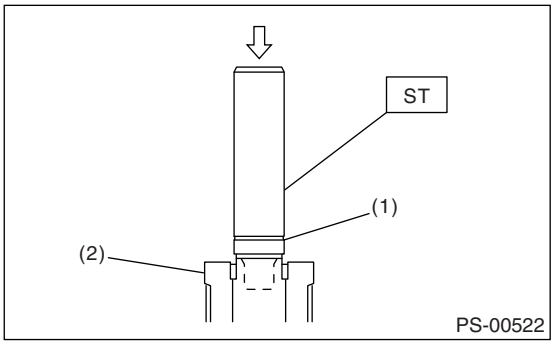

(1) Marked position
(2) Holder

14) Remove the ST and the holder.
15) Insert the outer side oil seal to the rack in the same procedure as in step 5) and 6).
ST 926390001 COVER & REMOVER

16) Put the ST and pipe through the rack and press-fit the outer side oil seal using a press.
ST 34199AG010 INSTALLER

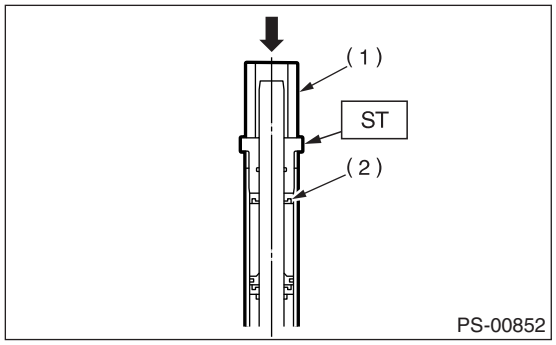

(1) Pipe
(2) Outer side oil seal

17) Secure the gearbox in a vise using ST.
ST1 926200000 STAND
ST2 34199AG000 BOSS D

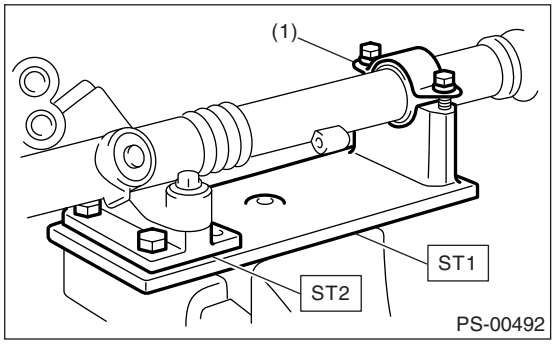

(1) Clamp

18) Tighten the new holder.

Tightening torque:
70 N·m (7.1 kgf-m, 51.6 ft-lb)

19) Using the ST, crimp so that the diameter of punch hole is 2 — 2.5 mm (0.08 — 0.10 in) and is aligned to the position of 2 mm (0.08 in) from gearbox cylinder end surface.
ST1 34099FA060 PUNCH HOLDER
ST2 34199XA050 BASE

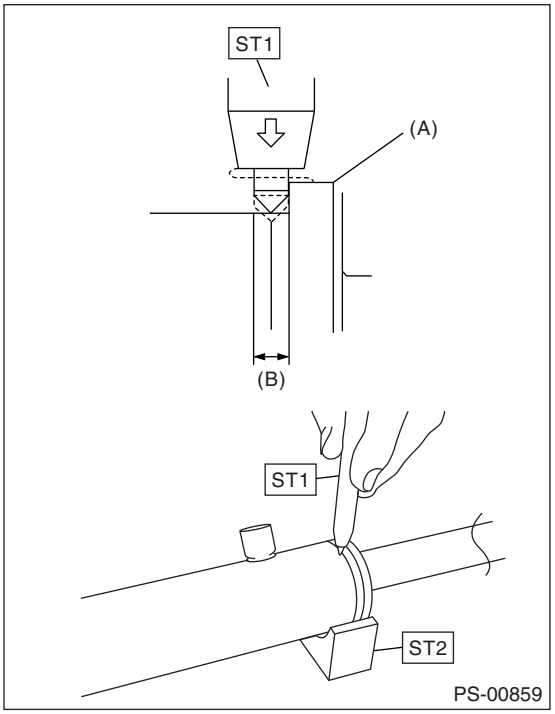

(1) Holder
(2) 2 mm (0.08 in)

20) Put a vinyl tape around the spline portion and apply genuine grease to the dust cover and install to valve assembly.

CAUTION:
Be sure to install the dust cover to groove of shaft.

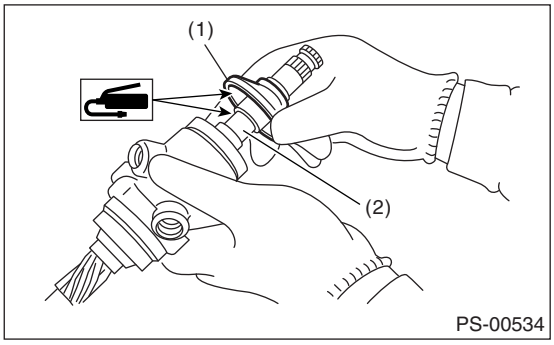

(1) Dust cover
(2) Groove

21) Apply the genuine grease to the pinion gear and bearing of valve assembly.

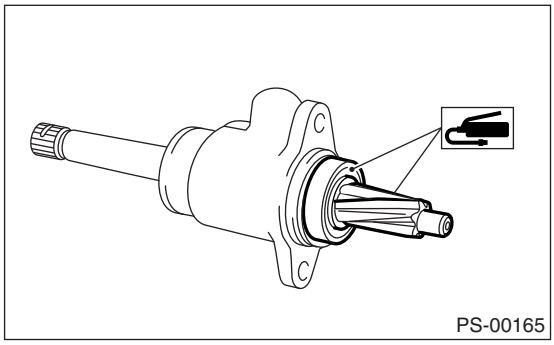

22) Install a new gasket on valve assembly. Insert the valve assembly into place while facing the rack teeth toward pinion.

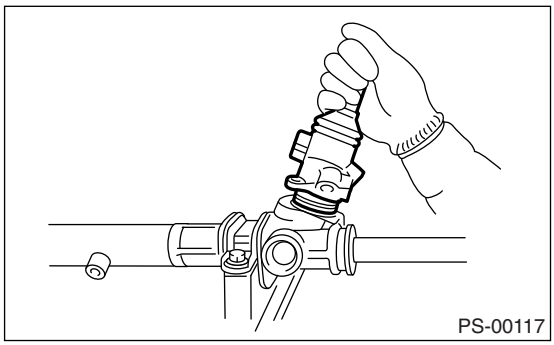

23) Tighten the bolts alternately to secure the valve assembly.

Tightening torque:
20 N·m (2.0 kgf-m, 14.8 ft-lb)

CAUTION:
Be sure to alternately tighten the bolts.

24) Temporarily install the tie-rod to rack end, and then operate the rack from lock to lock for two or three times to make it fit in.

CAUTION:
Operating the rack from lock to lock without installing tie-rods may damage the oil seal. Always install the left and right tie-rods.

25) Apply liquid gasket to 1/3 or more of entire perimeter of adjusting screw thread.

Liquid gasket:
THREE BOND 1102 or equivalent

26) Apply a coat of grease to the sliding surface of sleeve and seating surface of spring, and then insert sleeve into steering body.
Charge the adjusting screw with grease, and then insert the spring into adjusting screw. Then install on the steering body.

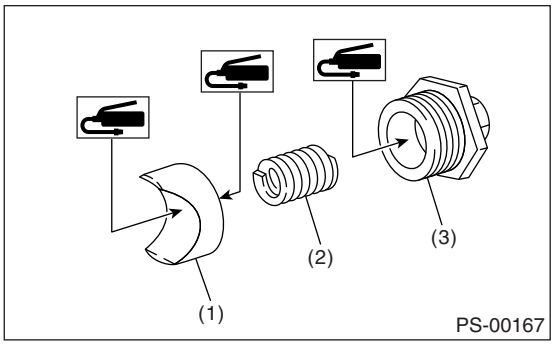

(1) Sleeve
(2) Spring
(3) Adjusting screw

27) Tighten the adjusting screw to the specified torque, then loosen it.

Tightening torque:
25 N·m (2.5 kgf-m, 18.1 ft-lb)

28) Tighten the adjusting screw to the specified torque, then loosen it 20°.

Tightening torque:
3.9 N·m (0.4 kgf-m, 2.9 ft-lb)

29) Remove the tie-rod.
30) Adjust the turning resistance of gearbox so that it is within specification using adjusting screw.<Ref. to PS-37, TURNING RESISTANCE OF GEARBOX, INSPECTION, Steering Gearbox.>
31) Apply liquid gasket to lock nut and install it into adjusting screw. While holding the adjusting screw with wrench, tighten the lock nut using ST.

Liquid gasket:
THREE BOND 1102 or equivalent

ST 926230000 SPANNER

Tightening torque (lock nut):
25 N·m (2.5 kgf-m, 18.1 ft-lb)

NOTE:
Hold the adjusting screw with a wrench to prevent it from turning while tightening lock nut.

32) Extend the rack approx. 40 mm (1.57 in) from steering body.

33) Install the tie-rod and new lock washer into rack.

Tightening torque:
90 N·m (9.1 kgf-m, 65.8 ft-lb)

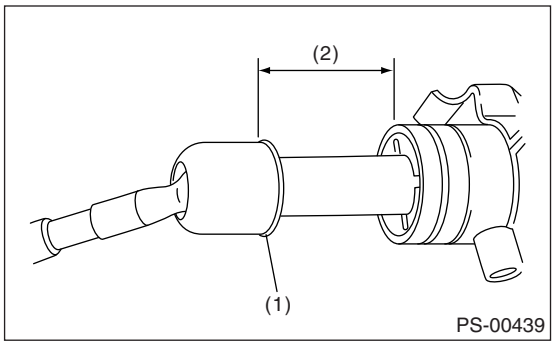

(1) Lock washer
(2) Approx. 40 mm (1.57 in)

34) Bend the lock washer and crimp it.

CAUTION:
Be careful not to scratch the rack when crimping lock washer.

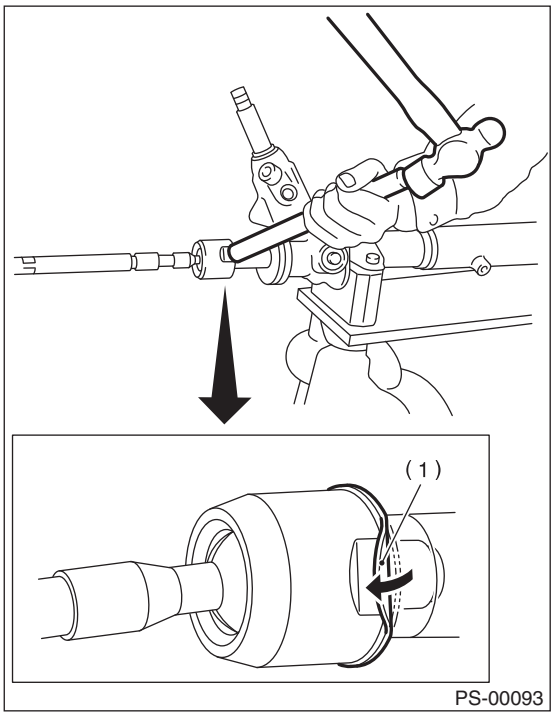

(1) Lock washer

35) Apply a coat of grease to the tie-rod groove, and then install the boot to the housing.

CAUTION:
Right side boot has groove for identification, be sure to install the right and left of boot.

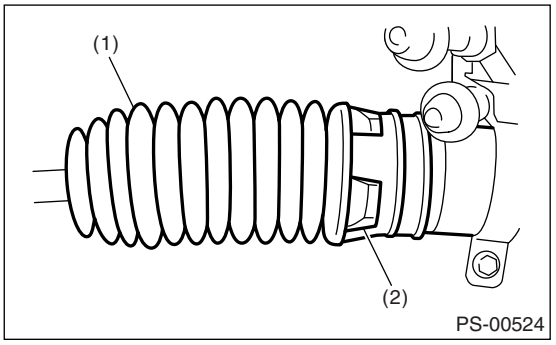

(1) Right side boot
(2) Groove for identification

NOTE:
Make sure that the boot is installed without unusual inflation or deflation.

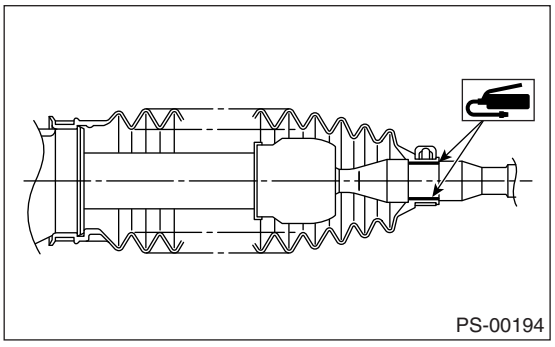

36) Install a new boot band. Using band clamp pliers, crimp it so that the clearance of crimping portion becomes 2 mm (0.079 in) or less.

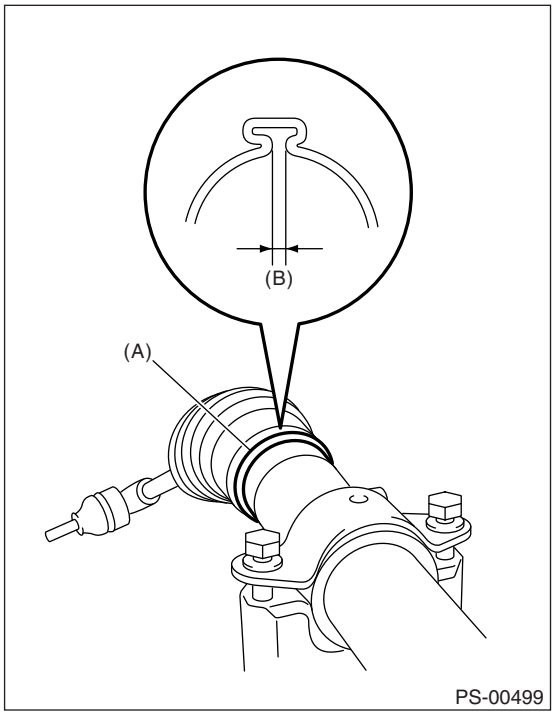

(A) Boot band
(B) 2 mm (0.079 in) or less

37) Fix the boot end with small clip.

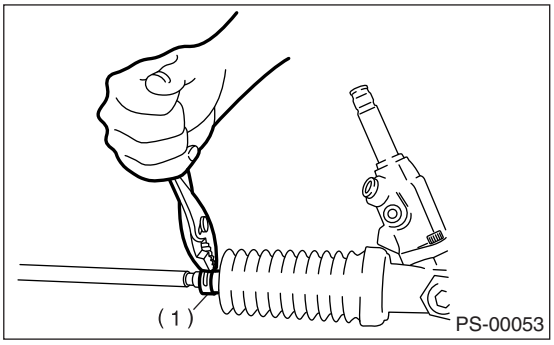

(1) Clip

38) After installing, check that the boot end is installed to the groove of the tie-rod.
39) If the tie-rod end has been removed, screw in lock nut and tie-rod end to the screwed portion of tie-rod, and tighten the lock nut temporarily in a position as shown in the figure.

Installed tie-rod length L:
31 mm (1.22 in)

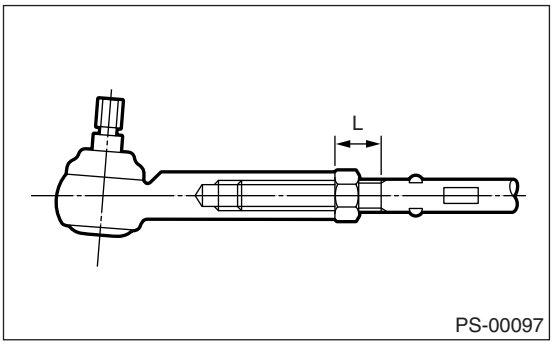

40) Inspect the gearbox as follows:
"A" Holding the tie-rod end, repeat movement from lock to lock two or three times as quickly as possible.
"B" Holding the tie-rod end, turn a few times as slowly as possible.
Finally, make sure that the boot is installed in the specified position without inflating.

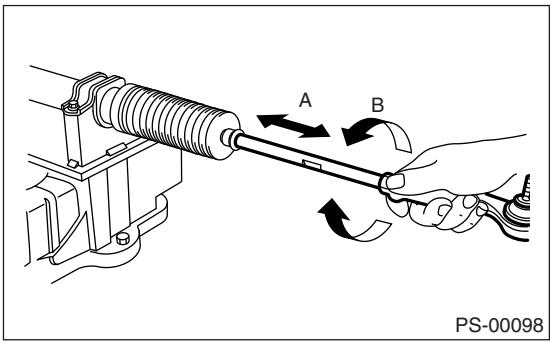

41) Remove the gearbox from ST.
ST1 926200000 STAND
ST2 34199AG000 BOSS D
42) Install the four pipes on gearbox.
(1) Connect the pipes A and B to the four pipe joints of gearbox.

Tightening torque:
Refer to the component parts.<Ref. to PS-4, POWER ASSISTED SYSTEM, COMPONENT, General Description.>

(2) Connect the pipes C and D to gearbox.

Tightening torque:
Pipe C: 37 N·m (3.8 kgf-m, 27.3 ft-lb)
Pipe D: 29 N·m (3.0 kgf-m, 21.4 ft-lb)

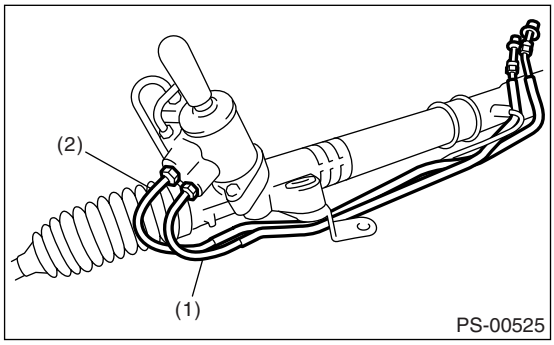

(1) Pipe C
(2) Pipe D

2. CONTROL VALVE ASSEMBLY

Specified steering grease:
VALIANT GREASE M2 (Part No. 003608001)

1) Clean all parts and tools before reassembling.
2) Apply a coat of specified power steering fluid to the inner wall of valve housing.

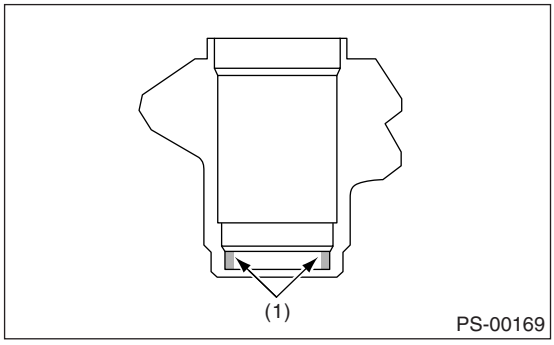

(1) Apply fluid.

3) Apply a coat of grease to the oil seal.
4) Verify the direction of oil seal.
5) Using the ST and a press, install the oil seal and bushing in valve housing.
ST 34199AG090 INSTALLER & REMOVER

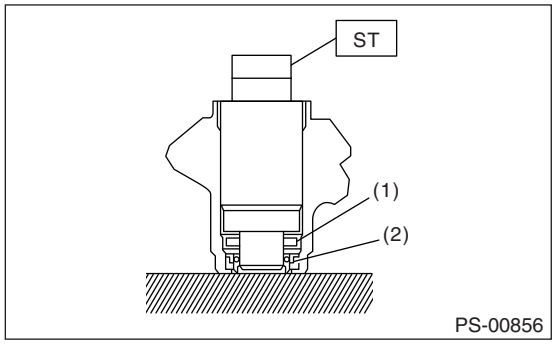

(1) Bushing
(2) Oil seal

6) Apply vinyl tape to the groove of pinion.
7) Install the back-up ring and oil seal to pinion, and then remove the vinyl tape.

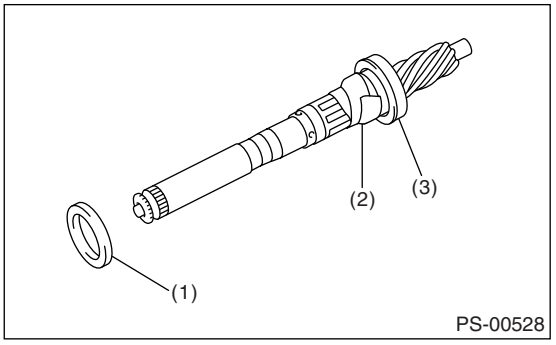

(1) Oil seal
(2) Vinyl tape
(3) Back-up ring

8) Attach the ST to pinion, and install the seal ring.
ST 34199AG020 GUIDE

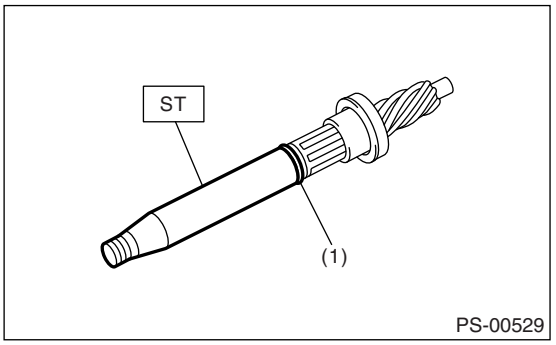

(1) Seal ring

9) Remove the ST GUIDE, and form the seal ring properly using ST FORMER.
ST 34199AG070 FORMER

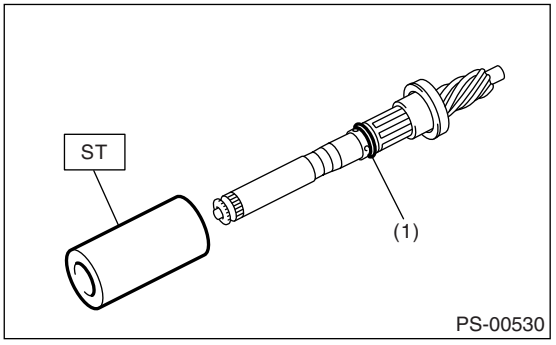

(1) Seal ring

10) Put vinyl tape around pinion shaft spline to protect oil seal from damage.

11) Install the valve to pinion, and install the snap ring.

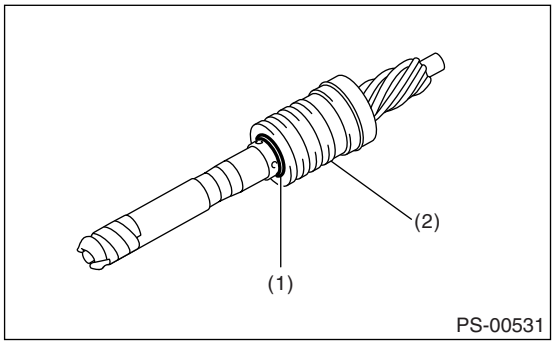

(1) Snap ring
(2) Valve

12) Attach the pinion and valve assembly into the valve housing.

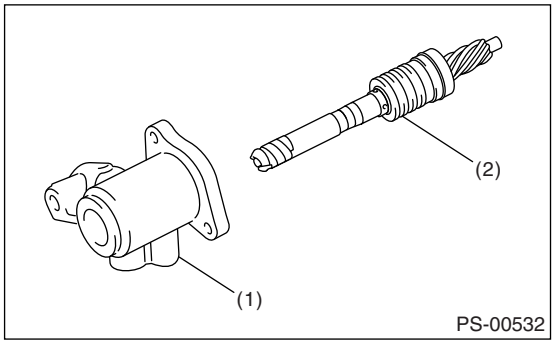

(1) Valve housing
(2) Pinion & valve ASSY

13) Using a press, push the outer race of bearing and press-fit the pinion & valve assembly into housing.

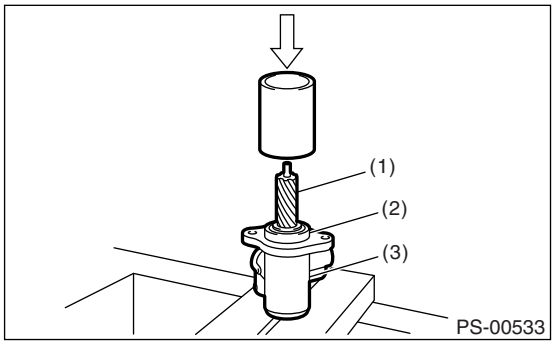

(1) Pinion & valve ASSY
(2) Bearing
(3) Housing

14) Apply the specified grease to dust cover.
15) Install the dust cover on valve assembly.

CAUTION:
Be sure to install the dust cover to groove of shaft.

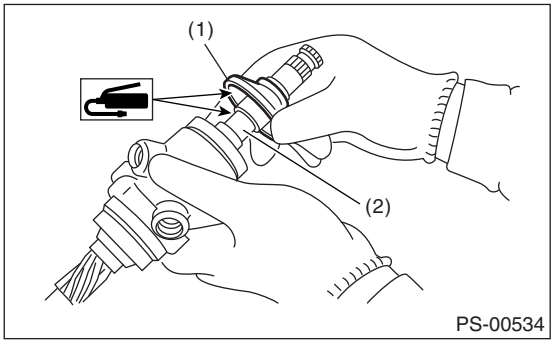

(1) Dust cover
(2) Groove

16) Apply the genuine grease to the pinion gear and bearing of valve assembly.

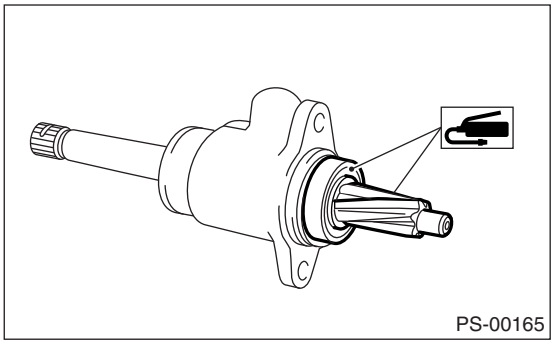

17) Install new O-ring to valve assembly.

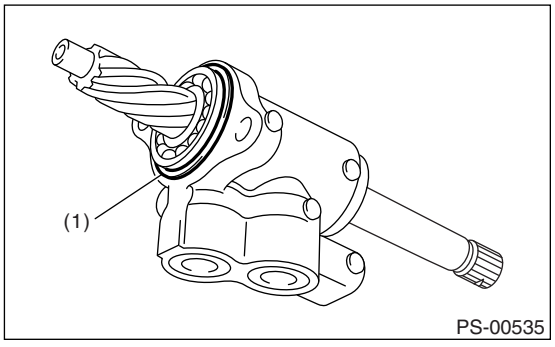

(1) O-ring

18) Insert the valve assembly into place while facing the rack teeth toward pinion.

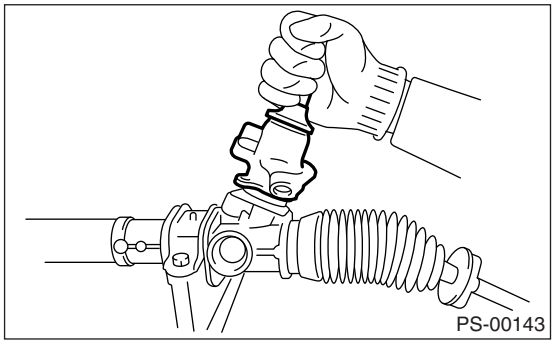

19) Tighten the bolts alternately to secure the valve assembly.

Tightening torque:
20 N·m (2.0 kgf-m, 14.8 ft-lb)

CAUTION:
Be sure to alternately tighten the bolts.

20) Apply liquid gasket to 1/3 or more of entire perimeter of adjusting screw thread.

Liquid gasket:
THREE BOND 1102 or equivalent

21) Apply a coat of grease to the sliding surface of sleeve and seating surface of spring, and then insert the sleeve into steering body.
Charge the adjusting screw with grease, and then insert the spring into adjusting screw. Then install on the steering body.

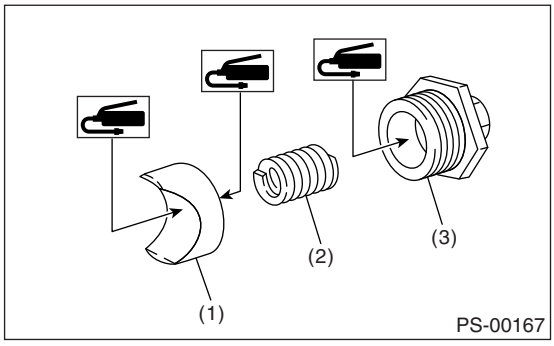

(1) Sleeve
(2) Spring
(3) Adjusting screw

22) Tighten the adjusting screw to the specified torque, then loosen it.

Tightening torque:
25 N·m (2.5 kgf-m, 18.1 ft-lb)

23) Tighten the adjusting screw to the specified torque, then loosen it 20°.

Tightening torque:
3.9 N·m (0.4 kgf-m, 2.9 ft-lb)

24) Adjust the turning resistance of gearbox so that it is within specification using adjusting screw.<Ref. to PS-37, TURNING RESISTANCE OF GEARBOX, INSPECTION, Steering Gearbox.>
25) Apply liquid gasket to lock nut and install it into adjusting screw. While holding the adjusting screw with wrench, tighten the lock nut using ST.

Liquid gasket:
THREE BOND 1102 or equivalent

ST 926230000 SPANNER

Tightening torque (lock nut):
25 N·m (2.5 kgf-m, 18.1 ft-lb)

NOTE:
Hold the adjusting screw with a wrench to prevent it from turning while tightening lock nut.

26) Remove the gearbox from ST.
ST1 926200000 STAND
ST2 34199AG000 BOSS D
27) Install the four pipes on gearbox.
(1) Connect the pipes A and B to gearbox.

Tightening torque:
Refer to the component parts. <Ref. to PS-4, POWER ASSISTED SYSTEM, COMPONENT, General Description.>

(2) Connect the pipes C and D to gearbox.

Tightening torque:
Pipe C: 37 N·m (3.8 kgf-m, 27.3 ft-lb)
Pipe D: 29 N·m (3.0 kgf-m, 21.4 ft-lb)

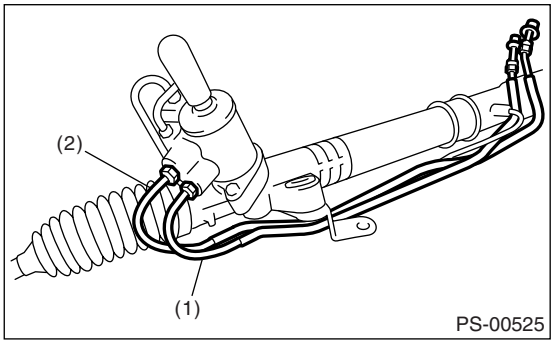

(1) Pipe C
(2) Pipe D

E: INSPECTION

1. BASIC INSPECTION

1) Clean all disassembled parts, and check for wear, damage or any other faults, then repair or replace as necessary.
2) When disassembling, check the inside of gearbox for water. If any water is found, carefully check the boot for damage, input shaft dust seal, adjusting screw and boot clips for poor sealing. If faulty, replace with new parts.

No.	Parts	Inspection	Corrective action
1	Input shaft	(1) Bend of input shaft (2) Damage on serration	If the bend or damage is excessive, replace the entire gearbox.
2	Dust seal	(1) Crack or damage (2) Wear	If the outer wall slips, the lip is worn out or damage is found, replace it with a new one.
3	Rack & pinion	Poor mating of rack with pinion	(1) Adjust the backlash properly. By measuring the turning torque of gearbox and sliding resistance of rack, check if rack & pinion engage uniformly and smoothly with each other. (Refer to “Service limit”.) (2) Keeping the rack pulled out all the way so that all teeth emerge, check teeth for damage. Even if abnormality is found in either (1) or (2), replace the entire gearbox.
4	Gearbox unit	(1) Bend of rack shaft (2) Bend of cylinder portion (3) Crack or damage on cast iron portion	Replace the gearbox with a new one.
		(4) Wear or damage on rack bush	If the free play of rack shaft in radial direction is out of the specified range, replace the gearbox with a new one. (Refer to “Service limit”.)
		(5) Wear on input shaft bearing	If the free plays of input shaft in radial and axial directions are out of the specified ranges, replace the gearbox with a new one. (Refer to “Service limit”.)
5	Boot	Crack, damage or deterioration	Replace.
6	Tie-rod	(1) Looseness of ball joint (2) Bend of tie-rod	Replace.
7	Tie-rod end	Damage or deterioration on dust seal	Replace.
8	Adjusting screw spring	Deterioration	Replace.
9	Boot clip	Deterioration	Replace.
10	Sleeve	Damage	Replace.
11	Pipes	(1) Damage to flared surface (2) Damage to flare nut (3) Damage to pipe	Replace.

2. SERVICE LIMIT

Make a measurement as follows. If it exceeds the specified service limit, adjust or replace.

NOTE:
When making a measurement, vise the gearbox using ST. Never vise the gearbox by inserting aluminum plates, etc. between vise and gearbox.

ST1 926200000 STAND
ST2 34199AG000 BOSS D

Sliding resistance of rack shaft:

Service limit
400 N (41 kgf, 90 lb) or less

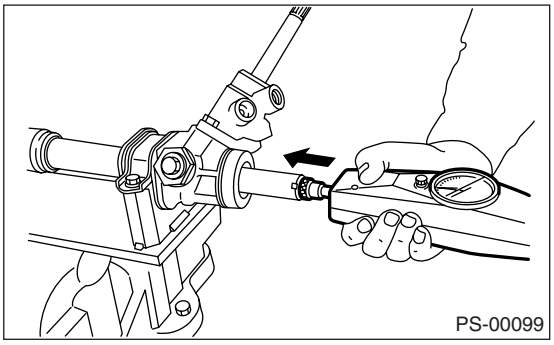
PS-00099

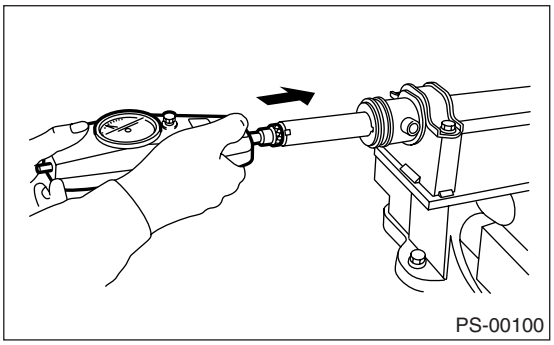
PS-00100

3. RACK SHAFT PLAY IN RADIAL DIRECTION

Right-turn steering:

Service limit
0.19 mm (0.0075 in) or less

On condition
L: 5 mm (0.20 in)
P: 122.6 N (12.5 kgf, 27.6 lb)

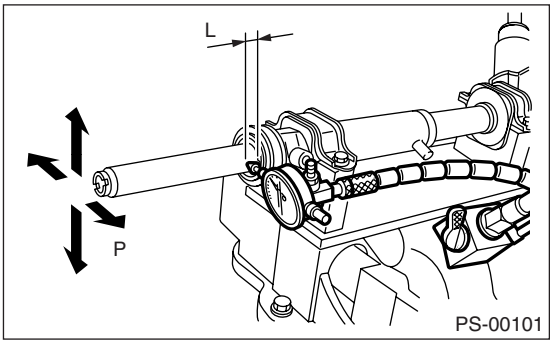

PS-00101

Left-turn steering:

Service limit
Direction ⇦ ⇨
0.6 mm (0.024 in) or less
Direction ⬅ ➡
0.4 mm (0.016 in) or less

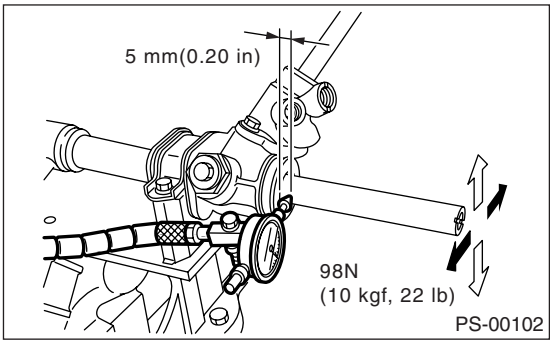

PS-00102

4. INPUT SHAFT PLAY

In radial direction:

Service limit
0.18 mm (0.0071 in) or less

On condition
P: 98 N (10 kgf, 22 lb)

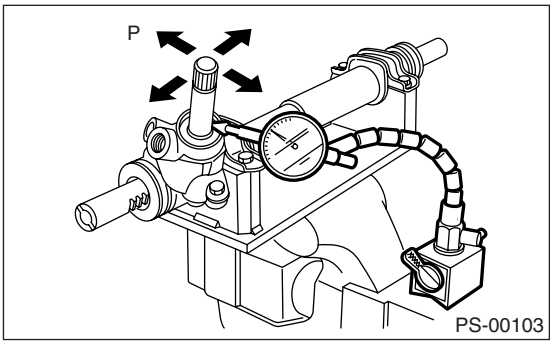

PS-00103

In axial direction:

Service limit
0.27 mm (0.0106 in) or less

On condition
P: 20 — 49 N (2 — 5 kgf, 4 — 11 lb)

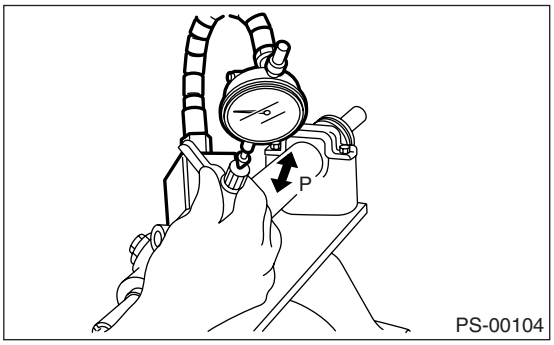

5. TURNING RESISTANCE OF GEARBOX

Using the ST, measure the gearbox turning resistance.
ST 34099PA100 SPANNER

Service limit:
Maximum allowable resistance:
10.5 N (1.1 kgf, 2.4 lb) or less
Difference between right and left turning resistance:
20% or less

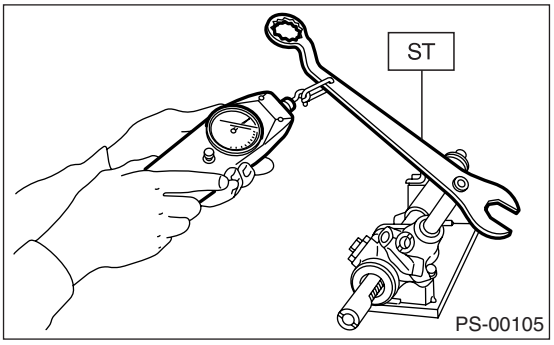

6. OIL LEAKING

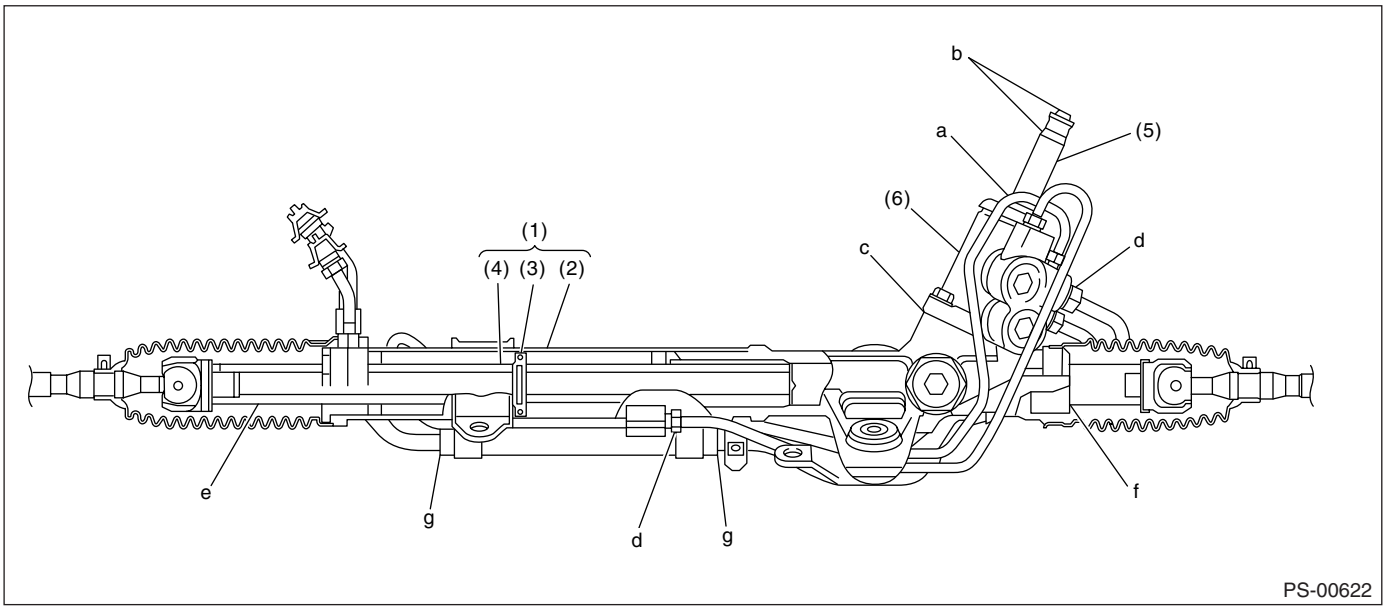

(1) Power cylinder
(2) Cylinder
(3) Rack piston
(4) Rack axle
(5) Input shaft
(6) Valve housing

1) Lift up the vehicle.
2) Even if the location of leak can be easily found by observing the leaking condition, it is necessary to thoroughly remove the fluid from the suspected portion and turn the steering wheel from lock to lock about thirty to forty times with engine running, then make comparison of the suspected portion between immediately after and several hours after this operation.
3) Cause and measure for oil leakage from “a”
The oil seal is damaged. Replace the valve assembly with a new one.
4) Cause and measure for oil leakage from “b”
The torsion bar O-ring is damaged. Replace the valve assembly with a new one.
5) Cause and measure for oil leakage from “c”
The oil seal is damaged. Replace the valve assembly or oil seal with a new one.
6) Cause and measure for oil leakage from “d”

The pipe is damaged. Replace the faulty pipe or O-ring.
7) Cause and measure for oil leakage from “g”
The hose is damaged. Replace the hose with a new one.
8) If leak is other than a, b, c, d, or g, and if oil is leaking from the gearbox, move the right and left boots toward tie-rod end side, respectively, with the gearbox mounted to the vehicle, and remove fluid from the surrounding portions. Then, turn the steering wheel from lock to lock about thirty to forty times with the engine running, and make comparison of the leaked portion immediately after and several hours after this operation.

(1) Leakage from “e”
The cylinder seal is damaged. Replace the rack bush with a new one.
(2) Leakage from “f”
There are two possible causes. Take the following step first. Remove the pipe assembly B from the valve housing, and close the circuit with ST.
ST 926420000 PLUG
Turn the steering wheel from lock to lock about thirty to forty times with the engine running, then make comparison of the leaked portion between immediately after and several hours after this operation.

- If leakage from “f” is noted again:

The oil seal of pinion & valve assembly is damaged. Replace the pinion & valve assembly with a new one. Or replace the oil seal and parts that are damaged during disassembly with new ones.

- If oil stops leaking from “f”:

The oil seal of rack housing is damaged. Replace the oil seal and the parts that are damaged during disassembly with new ones.

F: ADJUSTMENT

1) Adjust the front toe. <Ref. to FS-11, FRONT WHEEL TOE-IN, INSPECTION, Wheel Alignment.>

Standard of front toe:
IN 3 — OUT 3 mm (IN 0.12 — OUT 0.12 in)

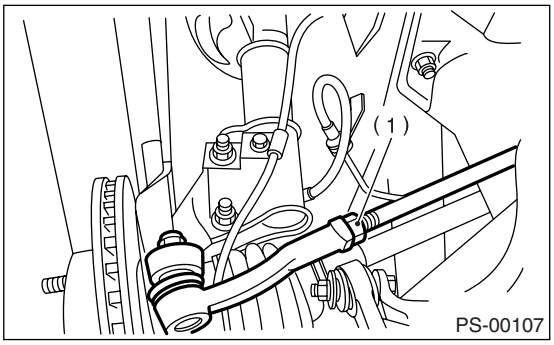

(1) Lock nut

2) Adjust the steering angle of wheels.

Standard of steering angle:

Model	Except for OUTBACK	OUTBACK
Inner wheel	37.2°±1.5°	38.0°±1.5°
Outer wheel	33.0°±1.5°	33.7°±1.5°

3) If the steering wheel spokes are not horizontal when wheels are set in the straight ahead position, and error is more than 5° on the periphery of steering wheel, correctly re-install the steering wheel.

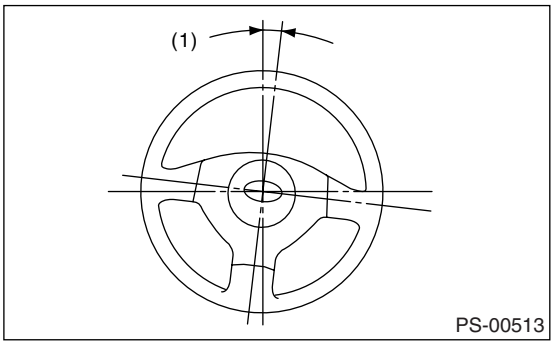

(1) Within 5°

4) If the steering wheel spokes are not horizontal with vehicle set in the straight ahead position after this adjustment, correct it by turning the right and left tie-rods in opposite direction by same angle.

6. Pipe Assembly

A: REMOVAL

1) Disconnect the ground cable from battery.
2) Lift-up the vehicle, and then remove the front crossmember support plate and jack-up plate.

- Large type

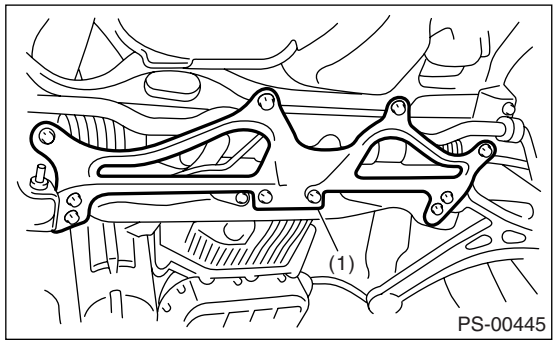

(1) Front crossmember support plate

- Small type

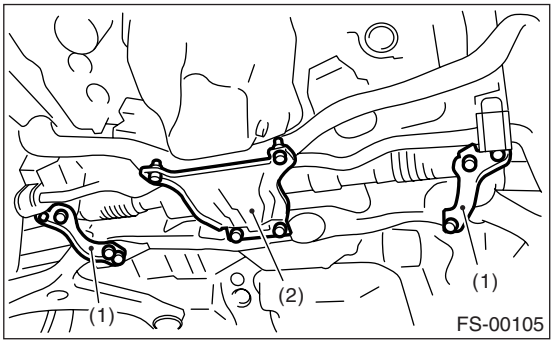

(1) Front crossmember support plate
(2) Jack-up plate

3) Remove one pipe joint at the center of gearbox, and connect the vinyl hose to the pipe and the joint. Discharge the fluid by turning steering wheel fully clockwise and counterclockwise. Discharge the fluid similarly from other pipes.

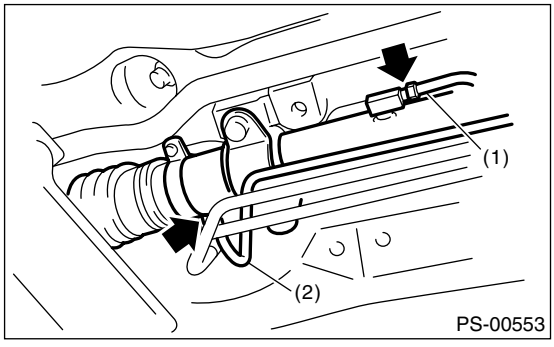

(1) Pipe A
(2) Pipe B

4) Remove the clamp E from return hose and pressure hose.

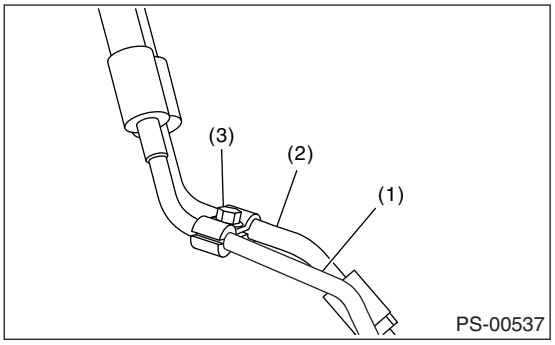

(1) Return hose
(2) Pressure hose
(3) Clamp E

5) Disconnect the return hose and pipe D, pressure hose and pipe C.

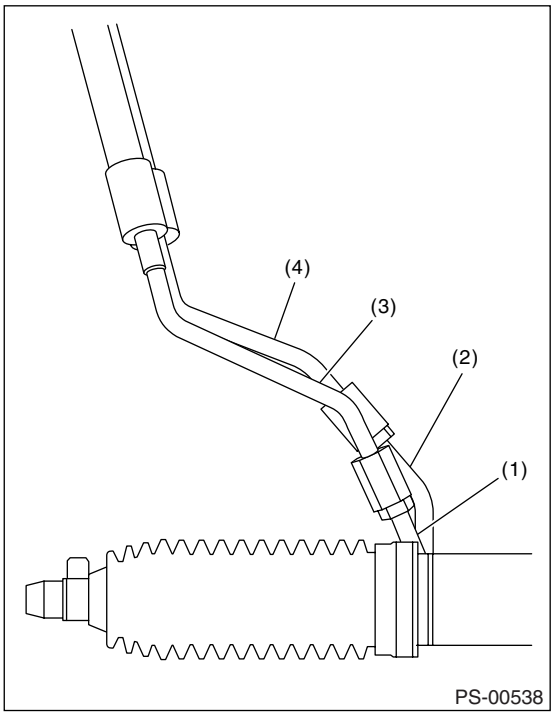

(1) Pipe C
(2) Pipe D
(3) Pressure hose
(4) Return hose

6) Remove the air intake duct. <Ref. to IN(H4DOTC)-9, REMOVAL, Air Intake Duct.> <Ref. to IN(H4SO)-10, REMOVAL, Air Intake Duct.>

7) Disconnect the suction hose and pressure hose from oil pump.

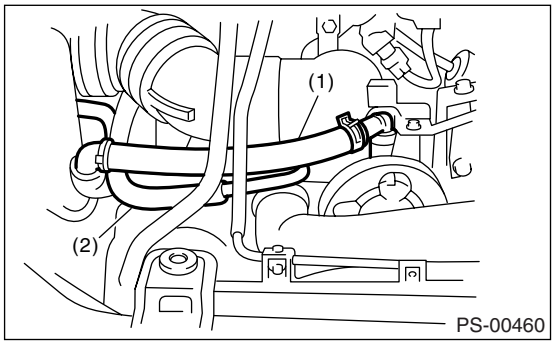

(1) Suction hose
(2) Pressure hose

8) Disconnect the suction hose and return hose from reservoir tank. Remove the oil cooler from oil cooler bracket.

- H4 model

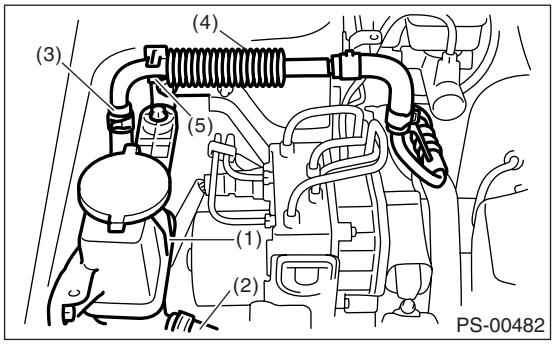

(1) Reservoir tank
(2) Suction hose
(3) Return hose
(4) Oil cooler
(5) Oil cooler bracket

- H6 model

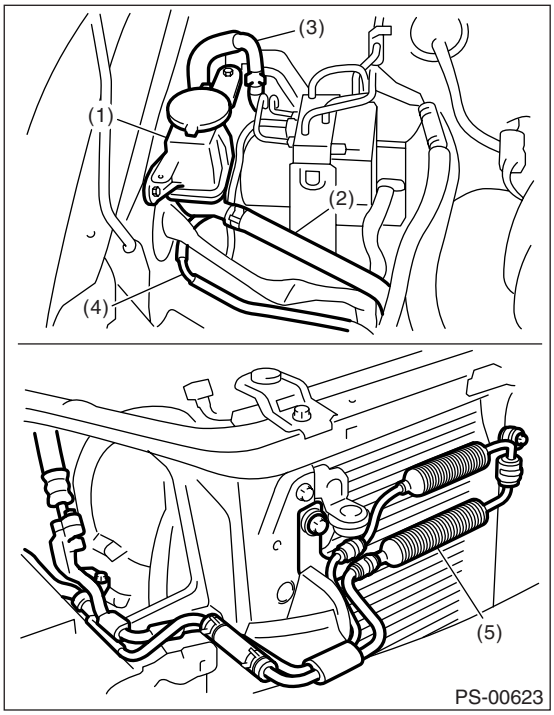

(1) Reservoir tank
(2) Suction hose
(3) Return hose
(4) Oil cooler pipe
(5) Oil cooler

9) Remove the hose bracket and take out the hose assembly from vehicle.

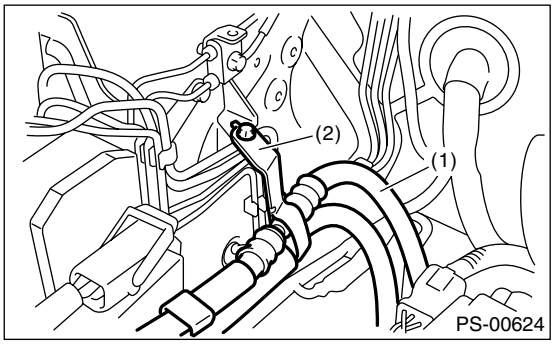

(1) Hose ASSY
(2) Hose bracket

B: INSTALLATION

1) Temporarily tighten the bolt of hose bracket.

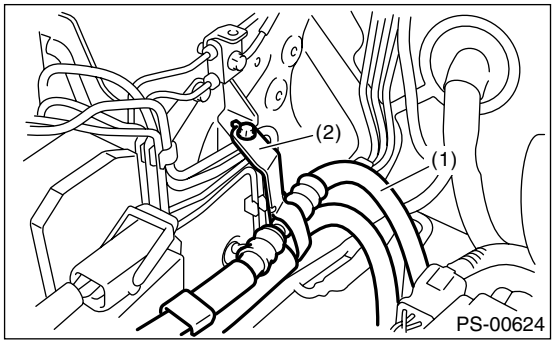

(1) Hose ASSY
(2) Hose bracket

2) Install the resin clip to the pressure hose and suction hose.

CAUTION:
Align the installation position of the resin clip with the protector edge of suction hose.

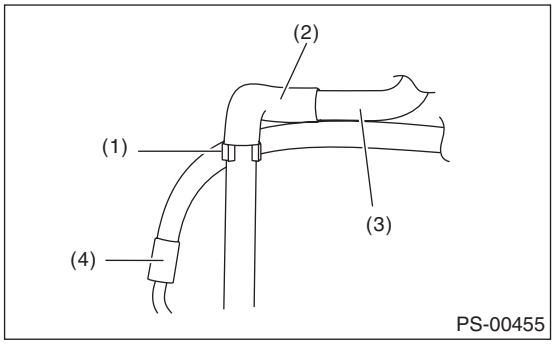

(1) Resin clip
(2) Protector
(3) Suction hose
(4) Pressure hose

3) Connect the suction hose and return hose to reservoir tank. Install the oil cooler to oil cooler bracket.

CAUTION:
Firmly insert the resin clip of return hose to the bracket.

- H4 model

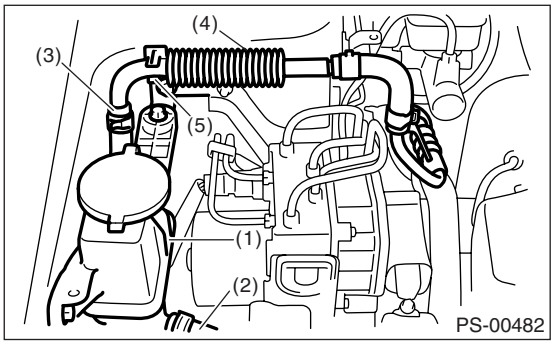

(1) Reservoir tank
(2) Suction hose
(3) Return hose
(4) Oil cooler
(5) Oil cooler bracket

- H6 model

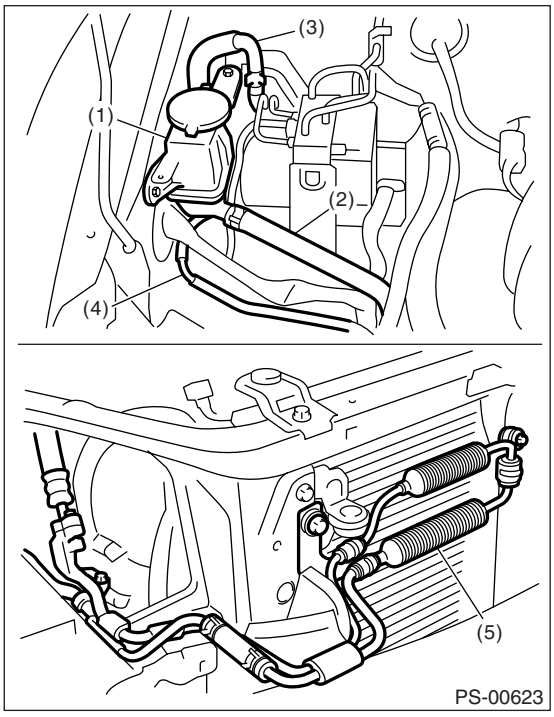

(1) Reservoir tank
(2) Suction hose
(3) Return hose
(4) Oil cooler pipe
(5) Oil cooler

4) Connect the suction hose and pressure hose to the oil pump. Tighten the eye bolt of pressure hose.

Tightening torque:
39 N·m (3.98 kgf-m, 28.8 ft-lb)

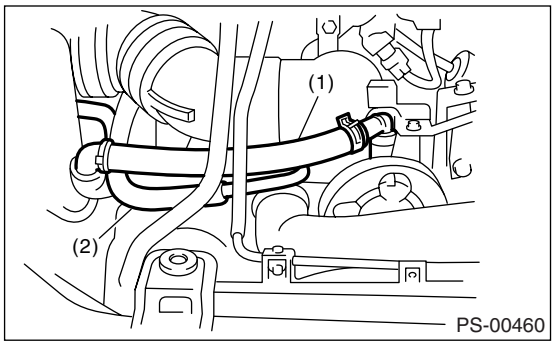

(1) Suction hose
(2) Pressure hose

5) Temporarily connect the pressure hose and pipe C, the return hose and D. Place the clamp E in the position shown in the figure, and tighten the bolt temporarily.

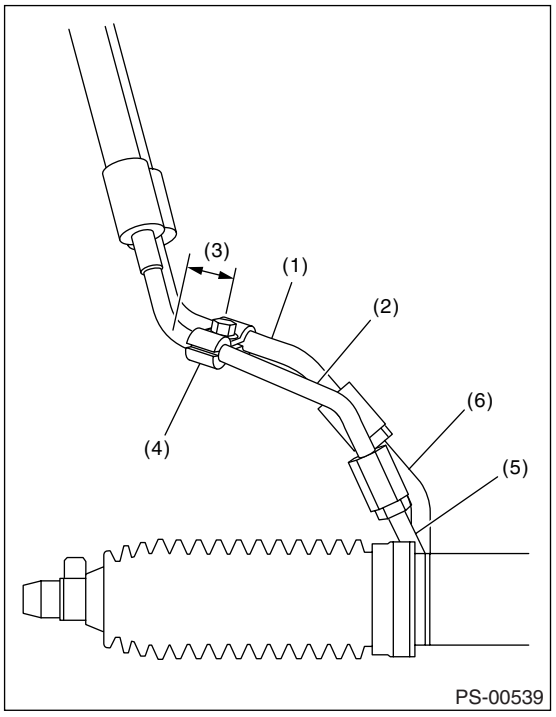

(1) Return hose
(2) Pressure hose
(3) Approx. 18 mm (0.71 in)
(4) Clamp E
(5) Pipe C
(6) Pipe D

6) Tighten the clamp E.

Tightening torque:
7.4 N·m (0.75 kgf-m, 5.4 ft-lb)

7) Tighten the pressure hose and pipe C, the return hose and pipe D.

Tightening torque:
15 N·m (1.5 kgf-m, 10.8 ft-lb)

8) Connect the pipe A and B to the four pipe joints of gearbox.

Tightening torque:
Refer to COMPONENT in General Description. <Ref. to PS-4, POWER ASSISTED SYSTEM, COMPONENT, General Description.>

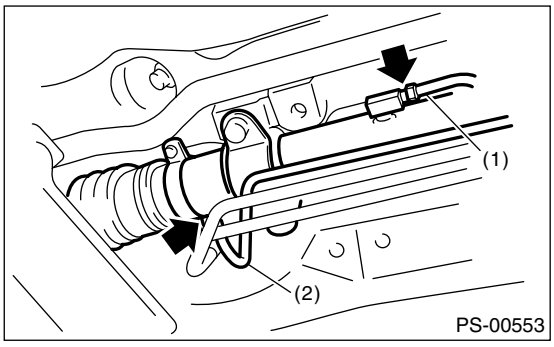

(1) Pipe A
(2) Pipe B

9) Install the front crossmember support plate and jack-up plate.
10) Lower the vehicle.
11) Tighten the bolts which hold the hose bracket.

Tightening torque:
10 N·m (1.02 kgf-m, 7.4 ft-lb)

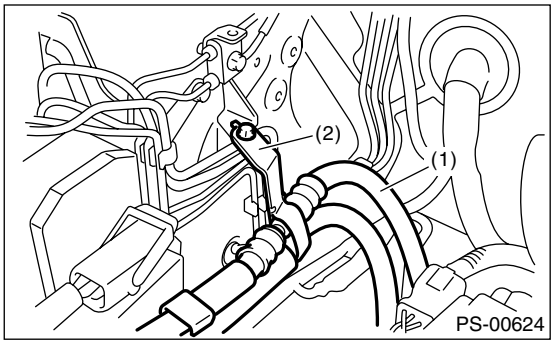

(1) Hose ASSY
(2) Hose bracket

12) Install the air intake duct. <Ref. to IN(H4DOTC)-9, INSTALLATION, Air Intake Duct.> <Ref. to IN(H4SO)-10, INSTALLATION, Air Intake Duct.>
13) Connect the battery ground cable to battery.
14) Feed the specified fluid.

CAUTION:
Never start the engine before feeding the fluid; otherwise vane pump might be seized up.

15) Finally, check clearance between pipes or hoses as shown in the figure indicated in “General Diagnostic Table”. <Ref. to PS-59, INSPECTION OF CLEARANCE, INSPECTION, General Diagnostic Table.>

C: INSPECTION

Check all disassembled parts for wear, damage or other abnormalities. Repair or replace defective parts as necessary.

Parts	Maintenance Parts	Corrective action
Pipe	• O-ring fitting surface for damage • Nut for damage • Pipe for damage	Replace with a new one.
Clamp	• Clamps for weak clamping force	Replace with a new one.
Hose	• Flare surface for damage • Flare nut for damage • Outer surface for cracks • Outer surface for wear • Clip for damage • End coupling or adapter for deformation	Replace with a new one.

CAUTION:
Although surface layer materials of rubber hoses have excellent weathering resistance, heat resistance and resistance for low temperature brittleness, they are likely to be damaged chemically by brake fluid, battery electrolyte, engine oil and automatic transmission fluid and their service lives are to be very shortened. Wipe out immediately when the hoses are adhered with the fluids.
Since resistances for heat or low temperature brittleness are gradually declining according to time accumulation of hot or cold conditions for the hoses and their service lives are shortening accordingly, it is necessary to perform careful inspection frequently when the vehicle is used in hot weather areas, cold weather areas and a driving condition in which many steering operations are required in short time.
Particularly continuous work of relief valve over 5 seconds causes to reduce service lives of the hoses, the oil pump, the fluid, etc. due to over heat.

Trouble	Possible cause	Corrective action
Pressure hose burst	Excessive holding time of relief status	Instruct customers.
	Malfunction of relief valve	Replace oil pump.
	Poor cold characteristic of fluid	Replace fluid.
Forced out return hose	Poor connection	Repair.
	Poor holding of clip	Retighten.
	Poor cold characteristic of fluid	Replace fluid.
Fluid bleeding out of hose slightly	Wrong layout, tensioned	Replace hose.
	Excessive play of engine due to deterioration of engine mounting rubber	Replace the parts if defective.
	Improper stop position of pitching stopper	Replace the parts if defective.
Crack on hose	Excessive holding time of relief status	Replace. Instruct customers.
	Excessive tightening torque of return hose clip	Replace.
	Power steering fluid, engine oil, electrolyte adhere on the hose surface	Replace. Pay attention on service work.
	Too many times use in extremely cold weather	Replace. Instruct customers.

NOTE:
It is likely that although one judges fluid leakage, there is actually no leakage. This is because the fluid spilt during the last maintenance was not completely wiped off. Be sure to wipe off spilt fluid thoroughly after maintenance.

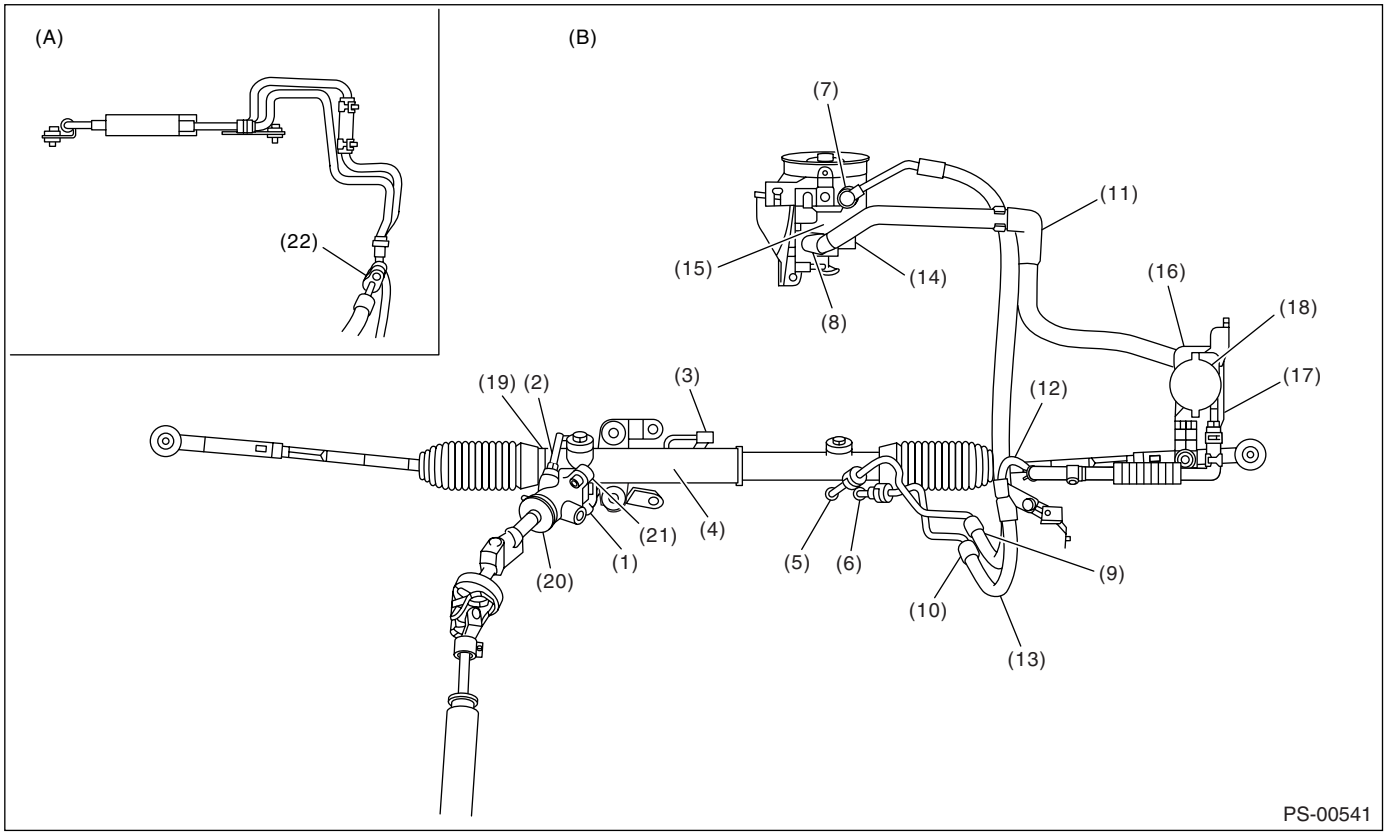

(A) H6 model (B) H4 model

Fluid leaking area	Possible cause	Corrective action
Leakage from connecting portions of pipes and hoses, numbered with (1) through (8) in figure	Insufficient tightening of flare nut, adhesion of dirt, damage to flare or flare nut or eye bolt	Loosen and retighten. Replace if ineffective.
	Poor insertion of hose or clamping	Retighten or replace the clamp.
	Damaged O-ring or gasket	Replace O-ring or gasket pipe or hose with new one, if ineffective, replace the gearbox also.
Leakage from hose (9) through (13) in figure	Crack or damage in hose	Replace with a new one.
	Crack or damage in hose hardware	Replace with a new one.
Leakage from surrounding of cast iron portion of oil pump (14) and (15) in figure	Damaged O-ring	Replace the oil pump.
	Damaged gasket	Replace the oil pump.
Leakage from oil tank (16) and (17) in figure	Crack in oil tank	Replace the oil tank.
Leakage from filler neck (18)	Damaged cap packing	Replace the cap.
	Crack in root of filler neck	Replace the oil tank.
	High fluid level	Adjust the fluid level.
Leakage from surrounding of power cylinder of gearbox (19) in figure	Damaged oil seal	Replace the oil seal.
Leakage from control valve of gearbox (20) and (21) in figure	Damaged packing or oil seal	Replace the problem parts.
	Damage in control valve	Replace the control valve.
(22) Leakage from connecting portion of cooler pipe and hose.	Insufficient tightening of connecting portion.	Loosen and retighten.

7. Oil Pump

A: REMOVAL

1. H4 MODEL

1) Disconnect the ground cable from battery.
2) Remove the air intake duct. <Ref. to IN(H4DOTC)-9, REMOVAL, Air Intake Duct.> <Ref. to IN(H4SO)-10, REMOVAL, Air Intake Duct.>
3) Remove the pulley belt cover.
4) Loosen the belt tension securing bolt and generator securing bolt, and then remove the power steering pump V-belt.

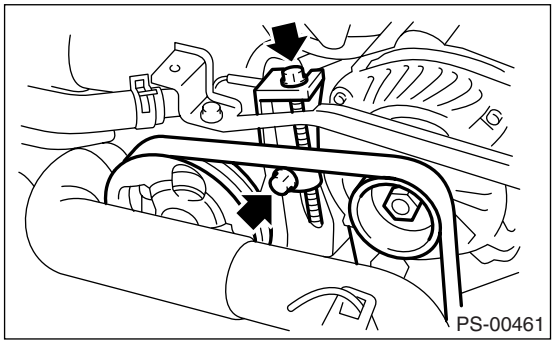

5) Disconnect the connector from power steering pump switch.
6) Disconnect the pressure hose and suction hose from oil pump.

CAUTION:
• Do not allow fluid to come into contact with pulley belt.
• To prevent foreign matter from entering the hose and pipe, cover the open ends with a clean cloth.

• Non-turbo model

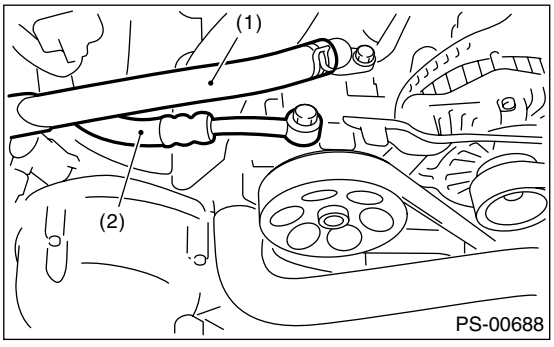

(1) Suction hose
(2) Pressure hose

10) Disassemble the oil pump and bracket by inserting a flat tip screwdriver as shown in the figure.

• Turbo model

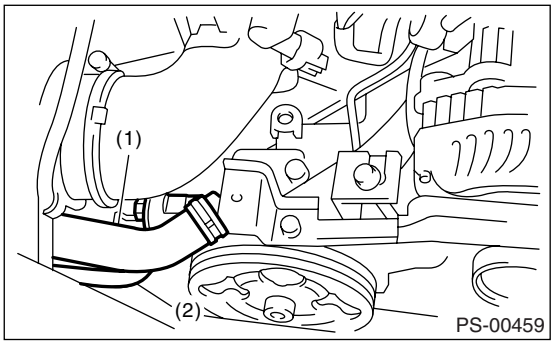

(1) Suction hose
(2) Pressure hose

7) Remove the bolts which hold the power steering pump bracket.

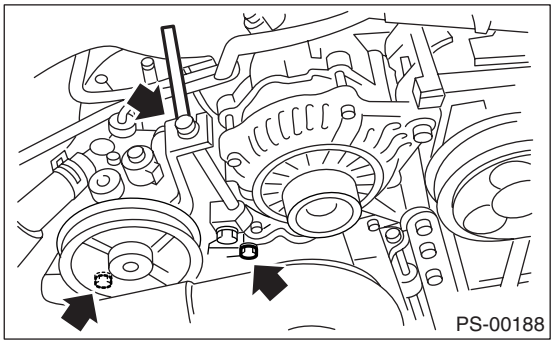

8) Place the oil pump bracket in a vise, and remove the two bolts from the front side of oil pump.

CAUTION:
When securing the oil pump bracket in a vise, hold the oil pump bracket with the least possible force between two wood pieces.

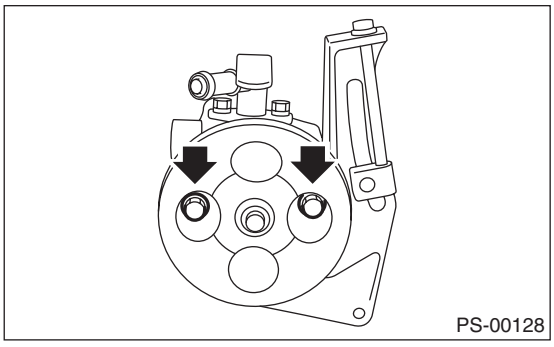

9) Remove the bolt from the rear side of oil pump.

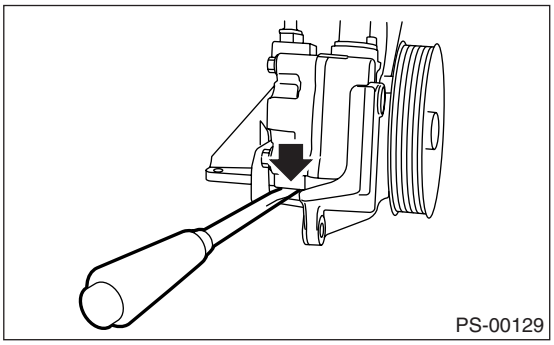

2. H6 MODEL

1) Disconnect the ground cable from battery.
2) Remove the cover of pully belt.
3) Remove the V-belt.
4) Remove the power steering pressure switch connector.
5) Remove the tensioner adjuster.
6) Disconnect the pressure hose and suction hose from the oil pump.

CAUTION:
• Do not allow fluid to flow from the hose end and to contact pully belt.
• To prevent entering foreign matter into hose, cover the hose opening with clean cloth.

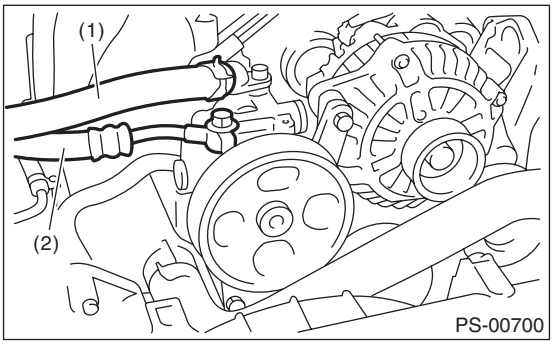

(1) Suction hose
(2) Pressure hose

7) Remove the bolts which install power steering pump bracket.

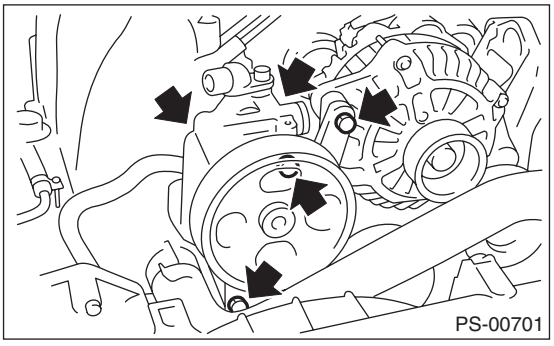

8) Place the oil pump bracket in a vise, and remove the two bolts from the front side of oil pump.

CAUTION:
When securing the oil pump bracket in a vise, hold the oil pump bracket with the least possible force between two wood pieces.

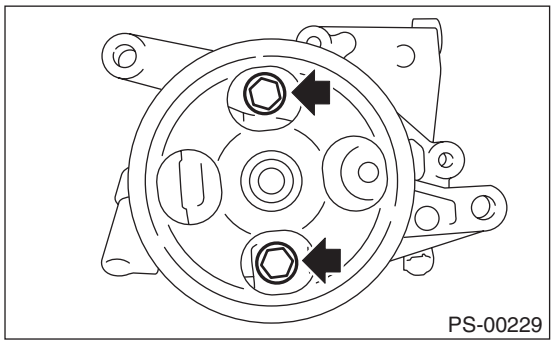

9) Remove the bolt from back side of oil pump.

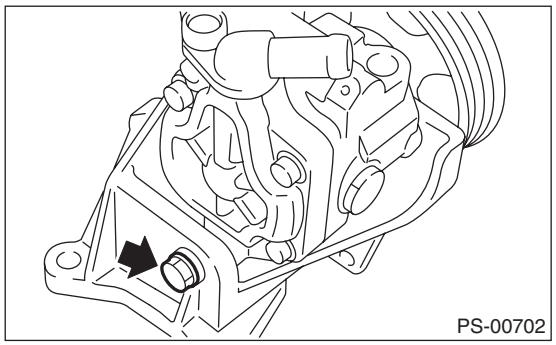

10) Remove the oil pump from bracket.

B: INSTALLATION

1. H4 MODEL

1) Install the oil pump to bracket.
(1) Place the oil pump bracket in a vise. Tighten the bushing using a 12.7 mm (1/2″) type 14- and 21-mm box wrench until it is in contact with oil pump mounting surface.

CAUTION:
When securing the oil pump bracket in a vise, hold the oil pump bracket with the least possible force between two wood pieces.

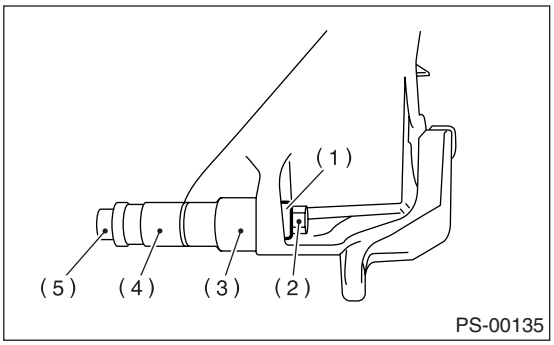

(1) Bushing
(2) Nut
(3) 21 mm
(4) 14 mm
(5) Bolt

(2) Tighten the bolt which holds the oil pump to bracket.

Tightening torque:
15.7 N·m (1.6 kgf-m, 11.6 ft-lb)

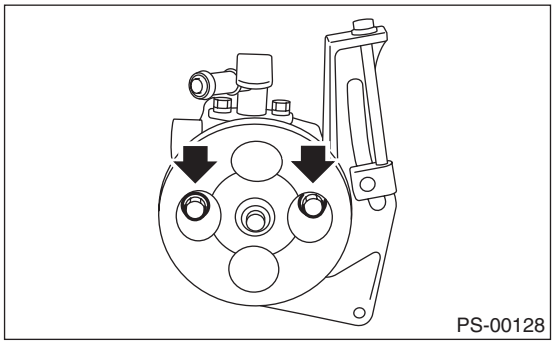

Tightening torque:
37.3 N·m (3.8 kgf-m, 27.5 ft-lb)

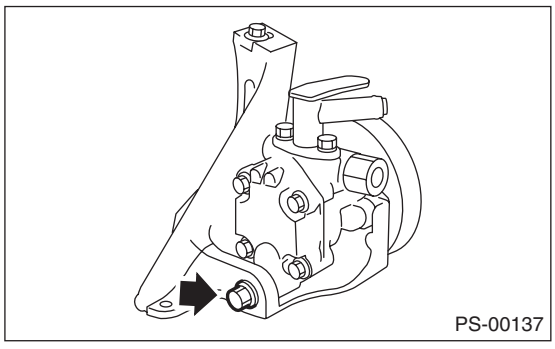

2) Tighten the bolts which hold the power steering pump bracket.

Tightening torque:
<Ref. to PS-7, OIL PUMP, COMPONENT, General Description.>

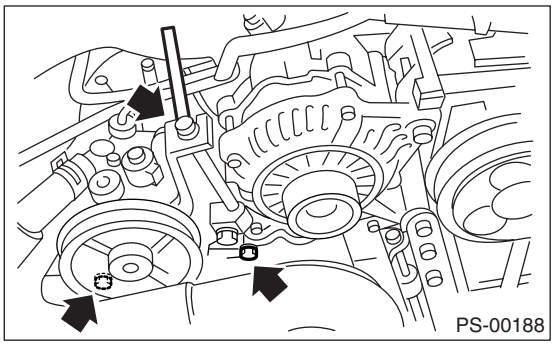

3) Interconnect the pressure hose and suction hose.

Tightening torque:
Eye bolt
39 N·m (4.0 kgf-m, 28.9 ft-lb)

CAUTION:
If a hose is twisted at this step, take care the hose may come into contact with some other parts.

- Non-turbo model

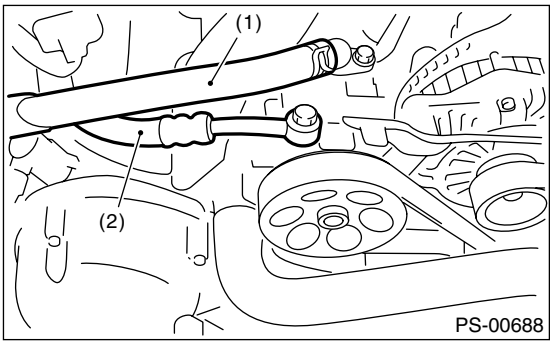

(1) Suction hose
(2) Pressure hose

- Turbo model

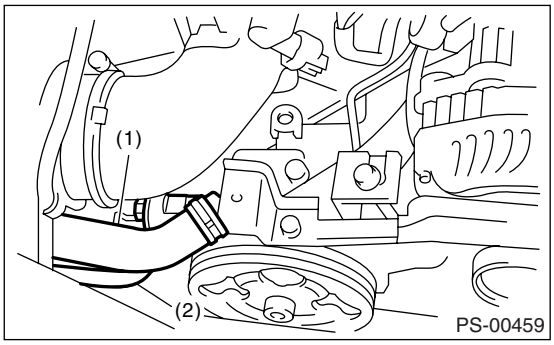

(1) Suction hose
(2) Pressure hose

4) Connect the connector to power steering pump switch.
5) Install the V-belts to oil pump.
6) Check the tension of V-belt.
<Ref. to ME(H4SO)-38, INSPECTION, V-belt.>
7) Tighten the belt tension bolt.

Tightening torque:
25 N·m (2.5 kgf-m, 18.4 ft-lb)

8) Install the pulley belt cover.
9) Install the air intake duct.
<Ref. to IN(H4DOTC)-9, INSTALLATION, Air Intake Duct.> <Ref. to IN(H4SO)-10, INSTALLATION, Air Intake Duct.>
10) Connect the ground cable to battery.
11) Feed the specified power steering fluid. <Ref. to PS-54, Power Steering Fluid.>

CAUTION:
Never start the engine before feeding the fluid otherwise vane pump might be seized up.

2. H6 MODEL

1) Install the oil pump to bracket.
(1) Place the oil pump bracket in a vise. Tighten the bushing using a 12.7 mm (1/2″) type 14- and 21-mm box wrench until it is in contact with oil pump mounting surface.

CAUTION:
When securing the oil pump bracket in a vise, hold the oil pump bracket with the least possible force between two wood pieces.

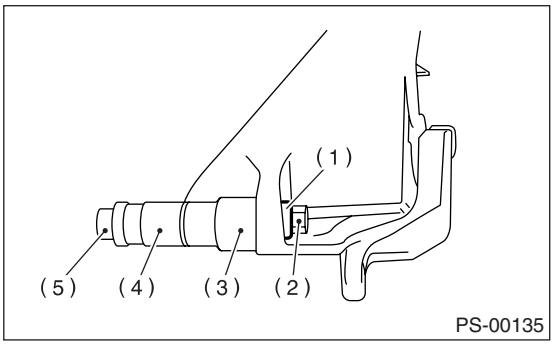

(1) Bushing
(2) Nut
(3) 21 mm
(4) 14 mm
(5) Bolt

(2) Tighten the bolt which installs oil pump to bracket.

Tightening torque:
15.7 N·m (1.6 kgf-m, 11.6 ft-lb)

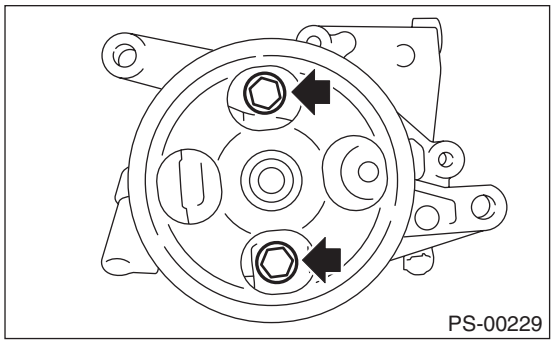

Tightening torque:
37.3 N·m (3.8 kgf-m, 27.5 ft-lb)

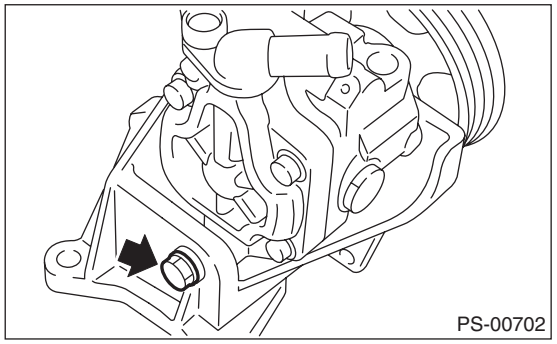

2) Tighten the bolts which install power steering pump bracket.

Tightening torque:
<Ref. to PS-7, OIL PUMP, COMPONENT, General Description.>

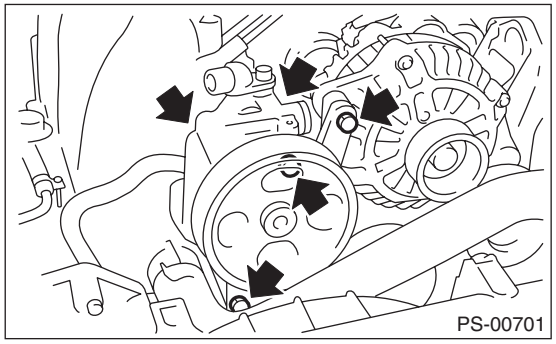

3) Connect the pressure hose and suction hose each other.

Tightening torque:
Eye bolt
39 N·m (4.0 kgf-m, 28.9 ft-lb)

CAUTION:
If a hose is twisted at this step, take care the hose may come into contact with some other parts.

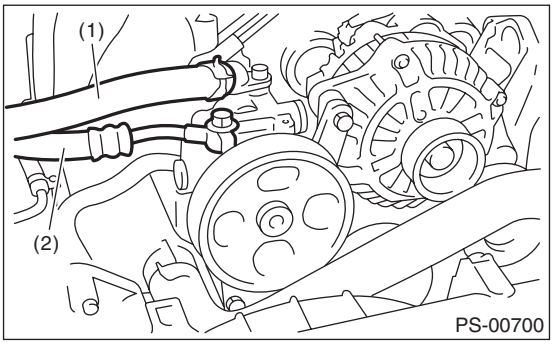

(1) Suction hose
(2) Pressure hose

4) Connect the connector to power steering oil pressure switch.
5) Install the tensioner adjuster.
6) Install the V-belts.
7) Install the cover of pully belt.
8) Connect the battery ground cable to battery.
9) Pour the specified power steering fluid. <Ref. to PS-54, Power Steering Fluid.>

CAUTION:
Never start the engine before feeding the fluid; otherwise vane pump might be seized up.

C: INSPECTION

1. BASIC INSPECTION

Perform the following inspection procedures and replace defective parts.

No.	Parts	INSPECTION	Corrective action
1	Oil pump (Exterior)	(1) Crack, damage or oil leakage	Replace the oil pump with a new one.
		(2) Play of pulley shaft	Measure the radial play and axial play. If any of these exceeds the service limit, replace the oil pump with a new one.
2	Pulley	(1) Damage	Replace with a new one.
		(2) Bend	Measure the V ditch deflection. If it exceeds the service limit, replace the pulley with a new one.
3	Oil pump (Interior)	(1) Defect or burning of vane pump	Check the resistance to the rotation of pulley. If it exceeds the service limit, replace the oil pump with a new one.
		(2) Bend in the shaft or damage to bearing	Oil pump emits a noise that is markedly different in tone and loudness from a sound of a new oil pump when turning its pulley which is put around with a string, replace the oil pump with a new one.
4	O-ring	Crack or deterioration	Replace with a new one.
5	Bracket	Crack	Replace with a new one.

2. SERVICE LIMIT

Make a measurement as follows. If it exceeds the service limit, replace with a new one.

CAUTION:
• When securing the oil pump on a vice, hold the oil pump with the least possible force between two wood pieces.
• Do not set outside of flow control valve or pulley on a vice; otherwise outside or pulley might be deformed. Select properly sized wood pieces.

1) Play of the pulley shaft

Condition:
P: When applying the force of 9.8 N (1.0 kgf, 2.2 lb)

Service limit:
Radial play (Direction ⬅ ➡)
0.4 mm (0.016 in) or less

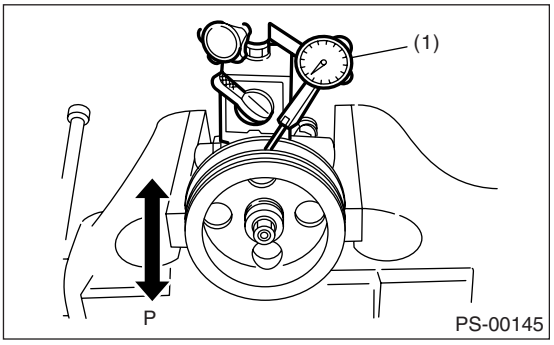

(1) Dial gauge

Axial play (Direction ⇦ ⇨)
0.9 mm (0.035 in) or less

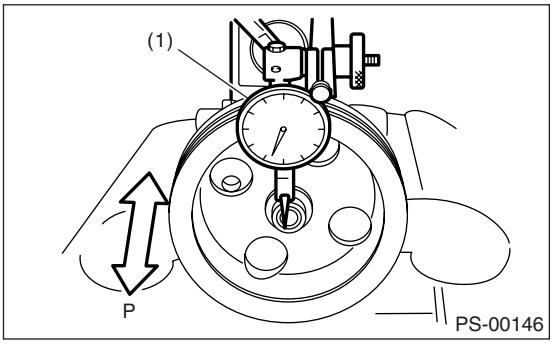

(1) Dial gauge

2) Ditch deflection of pulley

Service limit:
1.0 mm (0.039 in) or less

NOTE:
Read the value for one surface of V ditch, and then the value for another off the dial.

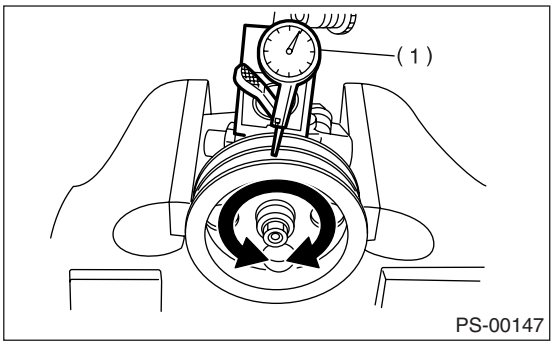

(1) Dial gauge

3) Resistance to rotation of pulley

Service limit:
Maximum load: 9.22 N (0.94 kgf, 2.07 lb) or less

NOTE:
• A rather higher value may be indicated when pulley starts turning.
• Measure the load during rotation to make a judgment.

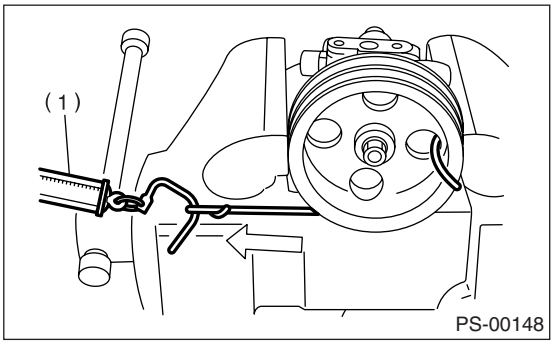

(1) Spring balance

3. HYDRAULIC PRESSURE

NOTE:
• Be sure to complete all items aforementioned in "INSPECTION", prior to measuring hydraulic pressure. Otherwise, pressure cannot be measured correctly. <Ref. to PS-55, INSPECTION, General Diagnostic Table.>
• Do not leave the valve of pressure gauge closed or hold the steering wheel at stop end for 5 seconds or more in any case, as the oil pump may be damaged due to long keep of these conditions.
ST3 34099AC010 ADAPTER HOSE A
• Put cloth at a place where fluid drops before pressure gauge is installed. Wipe off spilt fluid thoroughly after the measurement.

1) Regular pressure measurement
(1) Connect ST1, ST2 and ST3.
ST1 925711000 PRESSURE GAUGE
ST2 34099AC020 ADAPTER HOSE B
ST3 34099AC010 ADAPTER HOSE A
(2) Remove the air intake duct.
(3) Disconnect the pipe C from pump.
(4) Using the gasket (Part No. 34621AC021) and bolt (Part No. 34620AC010), install the ST2 to pump instead of pressure hose.
• Non-turbo model

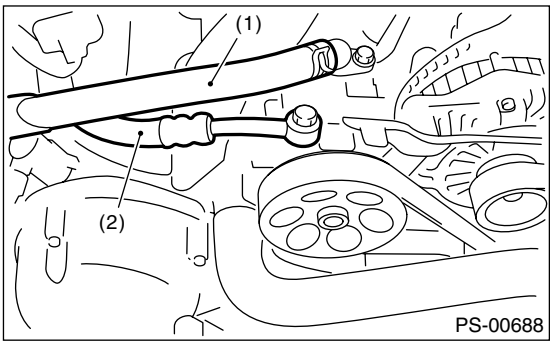

(1) Suction hose
(2) Pressure hose

• Turbo model

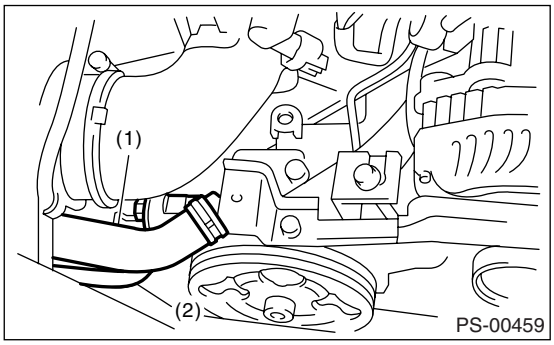

(1) Suction hose
(2) Pressure hose

(5) Install the ST3 to the end of pressure hose which is removed from pump.
(6) Replenish the power steering fluid up to specified level.
(7) Open the valve, and start the engine.
(8) Measure the regular pressure.
ST1 925711000 PRESSURE GAUGE
ST2 34099AC020 ADAPTER HOSE B

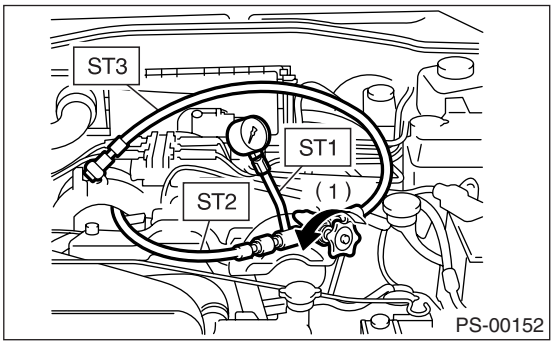

(1) Valve

Service limit:
981 kPa (10 kg/cm^2, 142 psi) or less

(9) If it is not within the specified value, replace the troubled part caused by following symptoms. (Pipe or hose clogged, leaks from fluid line, and mixture of foreign matters in fluid line)

2) Measure the relief pressure.
(1) Using the STs, measure the relief pressure.
(2) Close the valve.
(3) Measure the relief pressure.

ST1 925711000 PRESSURE GAUGE
ST2 34099AC020 ADAPTER HOSE B
ST3 34099AC010 ADAPTER HOSE A

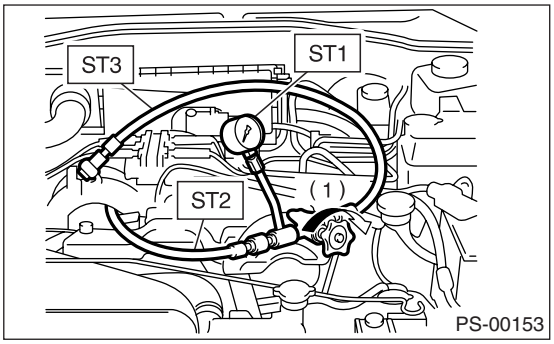

(1) Valve

Service limit:
H4 model:
7,350 — 8,036 kPa (75 — 82 kg/cm^2, 1,067 — 1,165 psi)
H6 model:
8,300 — 9,000 kPa (85 — 92 kg/cm^2, 1,204 — 1,305 psi)

(4) If it is not within the specified value, replace the oil pump.

3) Measure working pressure.
(1) Using the STs, measure the working pressure.
(2) Open the valve.
(3) Measure the working pressure of control valve by turning steering wheel from stop to stop.

ST1 925711000 PRESSURE GAUGE
ST2 34099AC020 ADAPTER HOSE B
ST3 34099AC010 ADAPTER HOSE A

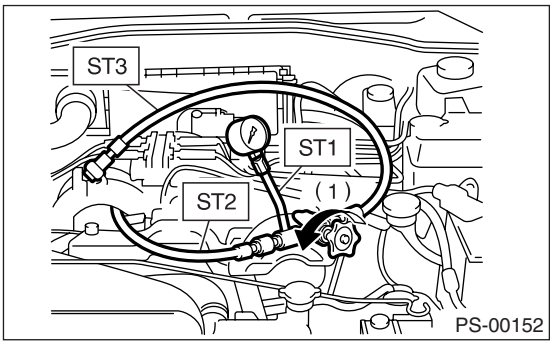

(1) Valve

Service limit:
7,650 — 8,330 kPa (78 — 85 kg/cm^2 , 1,110 — 1,208 psi)

(4) If it is not within the specified value, measure the steering effort. <Ref. to PS-58, MEASUREMENT OF STEERING EFFORT, INSPECTION, General Diagnostic Table.> If it is not within specified value, replace the control valve itself or control valve and pinion as a single unit with new ones.

8. Reservoir Tank

A: REMOVAL

1) Drain fluid from the reservoir tank.
2) Disconnect the hose from reservoir tank.

CAUTION:
To prevent foreign matter from entering the hose and pipe, cover the open ends of them with a clean cloth.

- H4 model

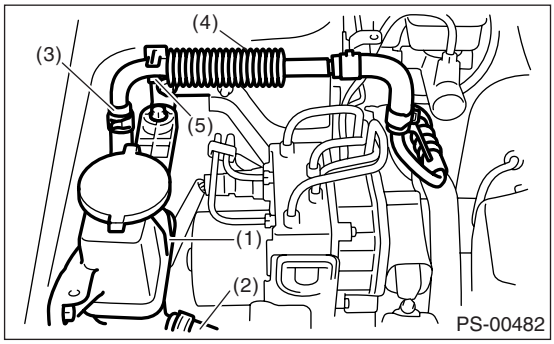

(1) Reservoir tank
(2) Suction hose
(3) Return hose
(4) Oil cooler
(5) Oil cooler bracket

- H6 model

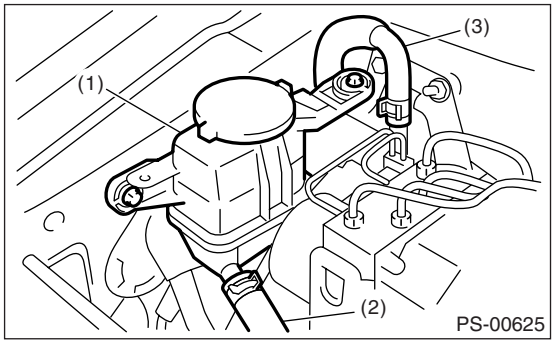

(1) Reservoir tank
(2) Suction hose
(3) Return hose

3) Remove the reservoir tank from body.

B: INSTALLATION

1) Install the reservoir tank to body.

Tightening torque:
13 N·m (1.32 kgf-m, 9.6 ft-lb)

2) Connect the hose to reservoir tank.

- H4 model

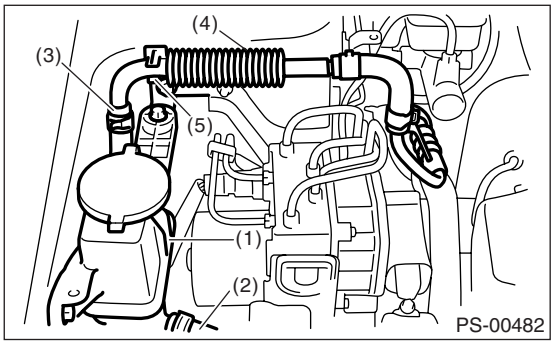

(1) Reservoir tank
(2) Suction hose
(3) Return hose
(4) Oil cooler
(5) Oil cooler bracket

- H6 model

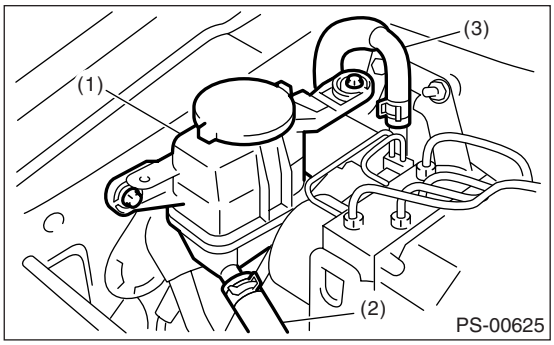

(1) Reservoir tank
(2) Suction hose
(3) Return hose

3) Feed the power steering fluid to specified level. <Ref. to PS-54, Power Steering Fluid.>

C: INSPECTION

Check the reservoir tank for cracks, breakage and damage. If a failure is found, replace the reservoir tank.

9. Power Steering Fluid

A: SPECIFICATION

Recommended power steering fluid	Manufacturer
ATF DEXRON III or equivalent	B.P.
	CALTEX
	CASTROL
	MOBIL
	SHELL
	TEXACO

B: INSPECTION

1) Check the power steering fluid for deterioration and contamination. If the fluid is highly deteriorated or contaminated, drain it and refill with new fluid.
2) Check the joints and units for oil leakage. If any oil leaks are found, repair or replace the applicable part.
3) Inspect the fluid level on flat and level surface with engine "OFF" by indicator of reservoir tank.
If the level is at "MIN." point or below, add fluid to keep the level in the specified range of the indicator. If at "MAX." point or above, drain fluid by using a syringe or the like.
(1) Check at power steering fluid temperature 20°C (68°F); read the fluid level on the "COLD" side.
(2) Check at power steering fluid temperature 80°C (176°F); read the fluid level on the "HOT" side.

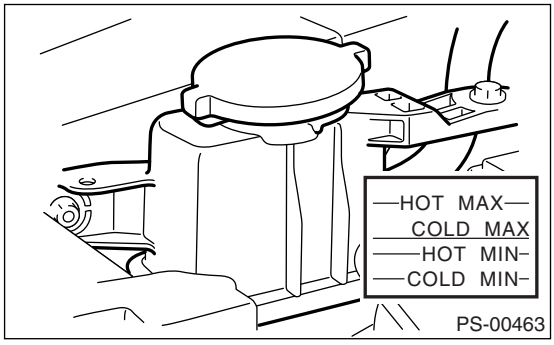

C: REPLACEMENT

1) Lift-up the vehicle.
2) Remove the crossmember support.
3) Remove the pipe joint in the center of gearbox, and connect the vinyl hose to the pipe and joint. Wipe fluid off while turning the steering wheel.
4) Add the specified fluid to reservoir tank at MAX level.
5) Continue to turn the steering wheel slowly from lock to lock until the bubbles stop appearing on oil surface while keeping the fluid at the level in the Step 4).
6) If turning the steering wheel in low fluid level condition, air will be sucked in pipe. In this case, leave it about half an hour and then do the step 5) again.
7) Start the engine and let it idle.
8) Continue to turn the steering wheel slowly from lock to lock again until the bubbles stop appearing on oil surface while keeping the fluid at the level in Step 4).
Normally bubbles stop appearing after three times turning of steering wheel from lock to lock.
9) In case bubbles do not stop appearing in the tank, leave it about half an hour and then do the step 4) all over again.
10) Lower the vehicle, and then idle the engine.
11) Continue to turn the steering wheel from lock to lock until the bubbles stop appearing and change of the fluid level is within 3 mm (0.12 in).
12) In case the following happens, leave it about half an hour and then do step 8) to 11) again.
(1) The fluid level changes over 3 mm (0.12 in).
(2) Bubbles remain on the upper surface of the fluid.
(3) Grinding noise is generated from oil pump.
13) Check the fluid leakage after turning steering wheel from lock to lock with engine running.

10.General Diagnostic Table

A: INSPECTION

Trouble	Possible cause	Corrective action
• Heavy steering effort in all ranges • Heavy steering effort at stand still • Steering wheel surges when turning.	1. Pulley belt • Unequal length of pulley belts • Adhesion of oil and grease • Loose or damage of pulley belt • Poor uniformity of pulley belt cross section • Pulley belt touches to pulley bottom • Poor revolution of pulleys except oil pump pulley • Poor revolution of oil pump pulley	Adjust or replace.
	2. Tire and wheel • Improper tires out of specification*1 • Improper wheel out of specification*1 • Tires not properly inflated	Replace or reinflate.
	3. Fluid • Low fluid level • Aeration • Dust mix • Deterioration of fluid • Poor warming-up of fluid *2	Refill, bleed air, replace or instruct customer.
	4. Idle speed • Lower idle speed • Excessive drop of idle speed at start or at turning steering wheel *3	Adjust or instruct customer.
	5. Measure hydraulic pressure. <Ref. to PS-50, INSPECTION, Oil Pump.>	Replace the problem parts.
	6. Measure steering effort. <Ref. to PS-58, MEASUREMENT OF STEERING EFFORT, INSPECTION, General Diagnostic Table.>	Adjust or replace.
• Vehicle leads to one side or the other • Poor return of steering wheel to center • Steering wheel surges when turning.	1. Fluid line • Folded hose • Flattened pipe	Correct or replace.
	2. Tire and wheel • Flat tire • Mix use of different tires • Mix use of different wheels • Abnormal wear of tire • Unbalance of remained grooves • Unbalance of tire pressure	Adjust, fix or replace.
	3. Front alignment • Improper or unbalance caster • Improper or unbalance toe-in • Loose connection of suspension	Adjust or retighten.
	4. Others • Damaged joint assembly • Unbalanced height • Unbalanced weight	Replace, adjust or instruct customer.
	5. Measure steering effort. <Ref. to PS-58, MEASUREMENT OF STEERING EFFORT, INSPECTION, General Diagnostic Table.>	Adjust or replace.

*1 If the tires or wheels are wider than specifications, the load to power steering system is increased. Accordingly, in a condition, for example before fluid warms-up, relief valve may work before maximum turning angle. In this case, steering effort may be heavy. When the measured hydraulic pressure is normal, there is no abnormal thing.
*2 In cold weather, steering effort may be heavy due to increased flow resistance of cold fluid. After warming-up engine, turn the steering wheel from stop to stop several times to warm-up fluid. Then if steering effort reduces normally, there is no abnormal thing.

*3 In cold weather or with insufficient warm-up of engine, steering effort may be heavy due to excessive drop of idling when turning steering wheel. In this case, it is recommended to start the vehicle with increasing engine speed than usual. Then if steering effort reduces normally, there is no abnormal thing.

1. NOISE AND VIBRATION

CAUTION:
Do not keep the relief valve operated over five seconds at any time or inner parts of the oil pump may be damaged due to rapid increase of fluid temperature.

NOTE:
• Grinding noise may be heard immediately after the engine start in extremely cold condition. In this case, if the noise goes off during warm-up there is no abnormal function in the system. This is due to the fluid characteristic in extremely cold condition.
• Oil pump makes whine or growl noise slightly due to its mechanism. Even if the noise can be heard when steering wheel is turned at stand still, there is no abnormal function in the system provided that the noise eliminates when the vehicle is running.
• When turning the steering wheel with service brake and/or parking brake applied, the noise is generated by creaking between disc and pads. However this does not indicate abnormal function in system.
• There may be a little vibration around the steering devices when turning steering wheel at standstill, even though the component parts are properly adjusted and have no defects.
Hydraulic systems are likely to generate this kind of vibration as well as working noise and fluid noise because of combined conditions, i.e., road surface and tire surface, engine speed and turning speed of steering wheel, fluid temperature and braking condition.
These phenomena do not indicate there are some abnormal functions in the system.
Confirm the vibration by turning the steering wheel repeatedly at various speeds from slow to rapid step by step with parking brake applied on concrete road and in “D” range for AT model.

Trouble	Possible cause	Corrective action
Hiss noise (continuous) While engine is running.	Relief valve emits operating sound when steering wheel is completely turned in either direction. (Do not keep this condition over five seconds.)	Normal Operation
	Relief valve emits operating sound when steering wheel is not turned. This means that the relief valve is defective.	Replace the oil pump.
Rattling noise (intermittent) While engine is running.	Interference with adjacent parts	Check the clearance. Correct if necessary. <Ref. to PS-43, INSPECTION, Pipe Assembly.>
	Loosened installation of oil pump, oil tank, pump bracket, gearbox or crossmember	Retighten.
	Loosened installation of oil pump pulley or other pulley(s)	Retighten.
	Loosened linkage or play of steering or suspension Loosened tightening of joint or steering column	Retighten or replace.
	Sound generates from the inside of gearbox or oil pump.	Replace the faulty parts of the gearbox or oil pump.
Knocking When turning steering wheel in both directions with small angle repeatedly at engine ON or OFF.	Excessive backlash Loosened lock nut for adjusting backlash	Adjust and retighten.
	Loosened tightening or play of tie-rod, tie-rod end	Retighten or replace.
Grinding noise (continuous) While engine is running.	Vane pump aeration	Inspect and retighten the fluid line connection. Refill the fluid and vent air.
	Vane pump seizing	Replace the oil pump.
	Pulley bearing seizing of oil pump	Replace the oil pump.
	Folded hose, flattened pipe	Replace.

Trouble	Possible cause	Corrective action
Squeal, squeak (intermittent or continuous) While engine is running.	Maladjustment of pulley belt Damaged or charged pulley belt Unequal length of pulley belts	Adjust or replace. (Replace two belts as a set.)
	Runout or defacement of V-groove surface of oil pump pulley	Clean or replace.
Sizzling noise (continuous) While engine is running.	Fluid aeration	Fix the wrong part causing aeration. Replace the fluid and vent air.
	Damaged pipe of gearbox	Replace the pipe.
	Abnormal inside of hose or pipe Flattened hose or pipe	Rectify or replace.
	Abnormal inside of oil tank	Replace.
	Removed oil tank cap	Install cap.
Whistle (continuous) While engine is running.	Abnormal pipe of gearbox or abnormal inside of hose	Replace the faulty parts of the gearbox or hose.
Whine or growl (intermittent or continuous) While engine is running with/ without steering turned.	Loosened installation of oil pump, oil pump bracket	Retighten.
	Abnormal inside of oil pump, hose	Replace the oil pump or hose, if the noise can be heard when running as well as stand still.
	Torque converter growl, air conditioner compression growl	Remove the power steering pulley belt and confirm.
Grinding noise (continuous) While engine is running with the steering turned.	Abnormal inside of gearbox	Replace the faulty parts of gearbox.
	Abnormal bearing for steering shaft	Apply grease or replace.
	Generates when turning steering wheel with brake (service or parking) applied.	If the noise goes off when brake is released, it is normal.
Vibration While engine is running with/ without steering turned.	Too low engine speed	Adjust and instruct customers.
	Vane pump aeration	Fix the wrong part. Vent air.
	Damaged valve in oil pump, gearbox	Replace the oil pump, faulty parts of gearbox.
	Looseness of play of steering, suspension parts	Retighten.

2. MEASUREMENT OF STEERING EFFORT

	Step	Check	Yes	No
1	**CHECK STEERING EFFORT.** 1) Stop the vehicle on a concrete road. 2) Start the engine. 3) Run the engine at idle. 4) Install a spring scale on the steering wheel. 5) Pull the spring scale at a right angle to the steering wheel, and measure both right and left steering wheel efforts. NOTE: When turning the steering more quickly than necessary from a direction to the other direction at an engine speed over 2,000 rpm, steering effort may be heavy. This is caused by flow characteristic of oil pump and is not defective.	Is the steering effort less than 29.4 N (3.0 kgf, 6.6 lb)?	Go to step **2.**	Adjust the backlash.
2	**CHECK STEERING EFFORT.** 1) Stop the engine. 2) Pull the spring scale at a right angle to the steering wheel, and measure both right and left steering wheel efforts.	Is the steering effort less than 294.2 N (30 kgf, 66.2 lb)?	Go to step **3.**	Perform adjustment.
3	**CHECK STEERING WHEEL EFFORT.** 1) Remove the universal joint. 2) Measure steering wheel effort.	Is steering effort less than 2.26 N (0.23 kgf, 0.51 lb)?	Go to step **4.**	Check, adjust and replace if necessary.
4	**CHECK STEERING WHEEL EFFORT.** Measure steering wheel effort.	Is the difference of steering effort between clockwise and counterclockwise less than 20%?	Go to step **5.**	Check, adjust and replace if necessary.
5	**CHECK UNIVERSAL JOINT.** Measure the swing torque of the joint (yoke of steering column side). <Ref. to PS-15, INSPECTION, Universal Joint.>	Is the swing torque less than 7.3 N (0.74 kgf, 1.64 lb)?	Go to step **6.**	Replace with a new one.
6	**CHECK UNIVERSAL JOINT.** Measure the swing torque of the joint (yoke of gearbox side). <Ref. to PS-15, INSPECTION, Universal Joint.>	Is the swing torque less than 3.8 N (0.39 kgf, 0.86 lb)?	Go to step **7.**	Replace with a new one.
7	**CHECK FRONT WHEEL.** Check the front wheel.	If the front wheels have unsteady revolution or rattling and brake for dragging?	Inspect, readjust and replace if necessary.	Go to step **8.**
8	**CHECK TIE-ROD ENDS.** Remove the tie-rod ends.	If the tie-rod ends of suspension have unsteady revolution or rattling?	Inspect and replace if necessary.	Go to step **9.**
9	**CHECK BALL JOINT.** Remove the ball joint.	If the ball joints of suspension have unsteady revolution or rattling?	Inspect and replace if necessary.	Go to step **10.**
10	**CHECK GEARBOX.** Measure the rotating of gearbox. <Ref. to PS-37, TURNING RESISTANCE OF GEARBOX, INSPECTION, Steering Gearbox.>	Is the rotating resistance of steering gearbox less than 10.5 N (1.1 kgf, 2.4 lb)? Is the difference between clockwise and counterclockwise less than 20%?	Go to step **11.**	Readjust the backlash, and if ineffective, replace the faulty parts.
11	**CHECK GEARBOX.** Measure the sliding of gearbox. <Ref. to PS-36, SERVICE LIMIT, INSPECTION, Steering Gearbox.>	Is the sliding resistance of steering gearbox less than 314 N (32 kgf, 71 lb)? Is the difference between right and left sliding resistances less than 20%?	Steering effort is normal.	Readjust the backlash, and if ineffective, replace the faulty parts.

3. INSPECTION OF CLEARANCE

This table lists various clearances that must be correctly adjusted to ensure the normal vehicle driving without interfering noise, or any other faults.

LOCATION	Minimum allowance mm (in)
(1) Crossmember-to-Hose ASSY	3 (0.12)
(2) Front exhaust pipe-to-Hose ASSY (Turbo model)	15 (0.59)
(3) Front frame side-to-Hose ASSY	10 (0.39)
(4) Turbo cover-to-Hose ASSY (Turbo model)	10 (0.39)
(5) Master cylinder-to-Return hose (Turbo model)	10 (0.39)
(6) Master cylinder-to-Hose clip (Model with vehicle dynamics control (VDC))	10 (0.39)
(7) VDC H/U-to-Hose ASSY (Model with vehicle dynamics control (VDC))	5 (0.20)
(8) Air cleaner-to-Hose ASSY (Turbo model)	5 (0.20)
(9) Air boot-to-Hose ASSY	10 (0.39)
(10) Protector-to-Hose ASSY (Turbo model, DOHC non-turbo model)	10 (0.39)
(11) Blow-by-to-Hose ASSY (Turbo model)	8 (0.31)
(12) Over flow hose-to-Hose ASSY (Turbo model)	8 (0.31)
(13) Brake pipe-to-Return hose (Model with ABS)	10 (0.39)
(14) Front suspension bracket-to-Return hose	5 (0.20)
(15) Front wheel apron-to-Return hose	5 (0.20)
(16) VDC H/U bracket-to-Suction hose (Model with vehicle dynamics control (VDC))	5 (0.20)
(17) Air cleaner case-to-Suction hose	5 (0.20)
(18) Air intake duct-to-Suction hose (Turbo model)	10 (0.39)
(19) Air duct-to-Suction hose (Turbo model)	10 (0.39)
(20) Front wheel apron-to-Reservoir tank	5 (0.20)
(21) VDC H/U-to-Reservoir tank (Model with vehicle dynamics control (VDC))	5 (0.20)
(22) Valve housing-to-DOJ (MT model)	12 (0.47)
(23) Valve housing-to-Crossmember (Hole)	1 (0.04)
(24) Bracket-to-Crossmember	1 (0.04)
(25) Cylinder-to-Crossmember	5 (0.20)
(26) Elbow-to-Crossmember	1 (0.04)
(27) Cylinder-to-Exhaust pipe	18 (0.71)
(28) Universal joint coupling-to-Turbo cover (Turbo model)	15 (0.59)
(29) Universal joint column side yoke-to-Master cylinder (Closest approach point when universal joint turns by 360°) (OUTBACK model)	5 (0.20)
(30) Cruise control-to-Hose ASSY (Model with cruise control)	10 (0.39)
(31) Universal joint coupling-to-ATF level gauge (LHD model)	10 (0.39)
(32) Boot-to-Exhaust pipe (LHD model)	18 (0.71)
(33) Return hose-to-Pressure hose	No contact between hoses

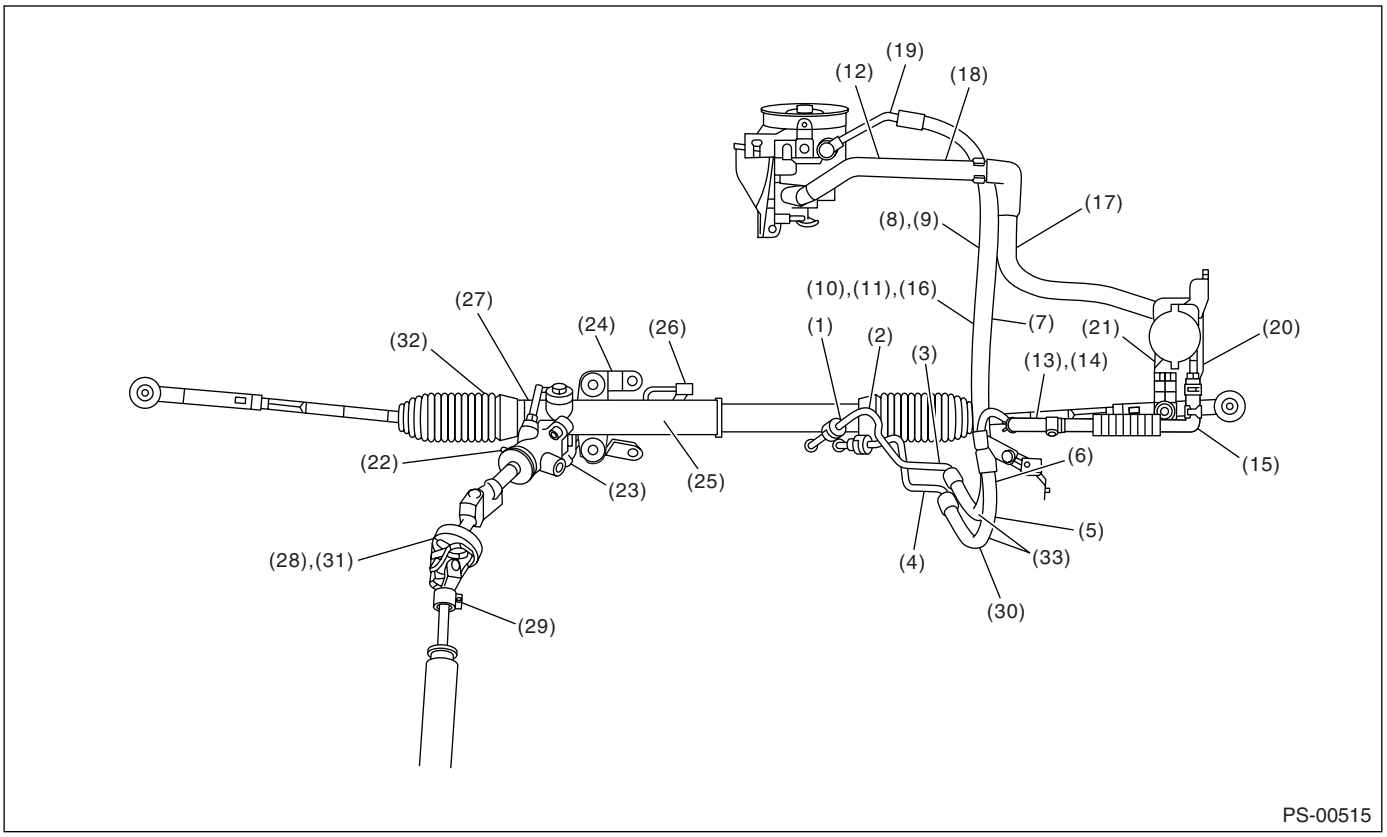
(19)
(12)
(18)
(17)
(8),(9)
(10),(11),(16)
(7)
(21)
(20)
(27)
(24)
(26)
(1)
(2)
(3)
(13),(14)
(32)
(22)
(23)
(25)
(6)
(15)
(5)
(28),(31)
(4)
(33)
(30)
(29)
PS-00515

BODY SECTION

This service manual has been prepared to provide SUBARU service personnel with the necessary information and data for the correct maintenance and repair of SUBARU vehicles.
This manual includes the procedures for maintenance, disassembling, reassembling, inspection and adjustment of components and diagnostics for guidance of experienced mechanics.
Please peruse and utilize this manual fully to ensure complete repair work for satisfying our customers by keeping their vehicle in optimum condition. When replacement of parts during repair work is needed, be sure to use SUBARU genuine parts.

All information, illustration and specifications contained in this manual are based on the latest product information available at the time of publication approval.

HVAC SYSTEM (HEATER, VENTILATOR AND A/C)	AC
HVAC SYSTEM (AUTO A/C) (DIAGNOSTICS)	AC(diag)
AIRBAG SYSTEM	AB
AIRBAG SYSTEM (DIAGNOSTICS)	AB(diag)
OCCUPANT DETECTION SYSTEM (DIAGNOSTICS)	OD(diag)
SEAT BELT SYSTEM	SB
LIGHTING SYSTEM	LI
WIPER AND WASHER SYSTEMS	WW
ENTERTAINMENT	ET
COMMUNICATION SYSTEM	COM
GLASS/WINDOWS/MIRRORS	GW
BODY STRUCTURE	BS
INSTRUMENTATION/DRIVER INFO	IDI
SEATS	SE
SECURITY AND LOCKS	SL
SUNROOF/T-TOP/CONVERTIBLE TOP (SUNROOF)	SR
EXTERIOR/INTERIOR TRIM	EI

BODY SECTION

EXTERIOR BODY PANELS	EB
CRUISE CONTROL SYSTEM	CC
CRUISE CONTROL SYSTEM (DIAGNOSTICS)	CC(ETC)(diag)
IMMOBILIZER (DIAGNOSTICS)	IM(diag)
LAN SYSTEM (DIAGNOSTICS)	LAN(diag)

HVAC SYSTEM (HEATER, VENTILATOR AND A/C)

AC

		Page
1.	General Description	2
2.	Refrigerant Pressure with Manifold Gauge Set	19
3.	Refrigerant Recovery Procedure	20
4.	Refrigerant Charging Procedure	21
5.	Refrigerant Leak Check	24
6.	Compressor Oil	25
7.	Blower Motor Unit Assembly	26
8.	Blower Motor	27
10.	Blower Resistor (Manual A/C Model)	29
11.	Heater Core	30
12.	Control Panel (Auto A/C Model)	31
13.	Control Unit (Manual A/C Model)	32
14.	Control Unit (Auto A/C Model)	33
15.	Compressor	34
16.	Condenser	36
17.	Heater and Cooling Unit	37
18.	Evaporator	38
19.	Hose and Tube	39
20.	Relay and Fuse	40
21.	Pressure Switch (Triple Pressure Switch)	41
22.	Actuator	42
23.	Ambient Sensor (Auto A/C Model)	43
24.	Sunload Sensor (Auto A/C Model)	44
25.	In-Vehicle Sensor (Auto A/C Model)	45
26.	Air Vent Grille	46
27.	Heater Duct	47
28.	Heater Vent Duct	48
29.	A/C Filter	49
30.	General Diagnostic Table	50

1. General Description

A: SPECIFICATION

1. HEATER SYSTEM

Item		Specification	On condition
Heating capacity		5.2 kW (4,471 kcal/h, 17,743 BTU/h) or more	• Mode selector switch: HEAT • Temperature control switch: FULL HOT • Temperature difference between hot water and inlet air: 65°C (149°F) • Hot water flow rate: 360 ℓ (95.1 US gal, 79.2 Imp gal)/h
Air flow rate		320 m^3 (11,301 cu ft)/h	Heat mode (FRESH), FULL HOT at 12.5 V
Max air flow rate		460 m^3 (16,245 cu ft)/h	• Temperature control switch: FULL COLD • Blower fan speed: Auto A/C: 6th position Manual A/C: 4th position • Mode selector lever: RECIRC
Heater core size (height × length × width)		264 × 110 × 27 mm (10.4 × 4.33 × 1.06 in)	—
Blower motor	Type	Magnet motor 220 W or less	12 V
	Fan type and size (diameter × width)	Sirocco fan type 150 × 75 mm (5.91 × 2.95 in)	—

2. A/C SYSTEM

• Auto A/C model

Item		Specification
Type of air conditioner		Reheat air-mix type
Cooling capacity		5.3 kW (4,557 kcal/h, 18,084 BTU/h)
Refrigerant		HFC-134a (CH_2FCF_3) [0.4±0.03 kg (0.88±0.07 lb)]
Compressor	Type	Scroll, constant volume (SCSA 08C)
	Discharge	74.5 cc (4.55 cu in)/rev
	Max. permissible speed	9,000 rpm
Magnet clutch	Type	Dry, single-disc type
	Power consumption	35 W
	Type of belt	2.5 L SOHC Non-turbo and 2.5 L DOHC Turbo model: V-belt 4 PK 3.0 L DOHC Non-turbo model: V-belt 6 PK
	Pulley dia. (effective dia.)	93 mm (3.7 in)
	Pulley ratio	1.43
Condenser	Type	Corrugated fin (Sub cool type)
	Core face area	0.193 m^2 (2.077 sq ft)
	Core thickness	16 mm (0.63 in)
	Radiation area	5.72 m^2 (61.57 sq ft)
Receiver drier	Effective inner capacity	190 cm^3 (11.6 cu in)
Expansion valve	Type	Internal equalizing
Evaporator	Type	Single tank
	Dimensions (W × H × T)	298.6 × 151 × 38 mm (11.76 × 5.94 × 1.50 in)
Blower fan	Fan type	Sirocco fan
	Outer diameter × width	150 × 75 mm (5.91 × 2.95 in)
	Power consumption	220 W

Condenser fan (Sub fan)		Motor type	Magnet
		Power consumption	2.5 L SOHC Non-turbo model: 90 W 2.5 L DOHC Turbo model: 120 W 3.0 L DOHC Non-turbo model: 160 W
		Fan outer diameter	2.5 L SOHC Non-turbo model: 300 mm (11.8 in) 2.5 L DOHC Turbo and 3.0 L DOHC Non-turbo model: 320 mm (12.6 in)
Radiator fan (Main fan)		Motor type	Magnet
		Power consumption	2.5 L SOHC Non-turbo model: 90 W 2.5 L DOHC Turbo model: 120 W 3.0 L DOHC Non-turbo model: 160 W
		Fan outer diameter	2.5 L SOHC Non-turbo model: 300 mm (11.8 in) 2.5 L DOHC Turbo and 3.0 L DOHC Non-turbo model: 320 mm (12.6 in)
Idling speed (A/C ON)		MPFI model	800±100 rpm
Triple switch (Pressure switch)	Low-pressure switch operating pressure	ON → OFF	196±20 kPa (2.00±0.20 kg/cm^2, 28.4±2.9 psi)
		OFF → ON	225^{+25}_{-29} kPa ($2.29^{+0.25}_{-0.30}$ kg/cm^2, $32.6^{+3.6}_{-4.2}$ psi)
	High-pressure switch operating pressure	ON → OFF	$3{,}140^{+50}_{-200}$ kPa ($32.02^{+0.51}_{-2.04}$ kg/cm^2, $455.4^{+7.25}_{-29.0}$ psi)
		OFF → ON	2,550±200 kPa (26.00±2.04 kg/cm^2, 369.8±29.0 psi)
	Middle-pressure switch operating pressure	ON → OFF	1,370±120 kPa (13.97±1.22 kg/cm^2, 198.65±17.35 psi)
		OFF → ON	1,770±100 kPa (18.05±1.02 kg/cm^2, 256.81±14.50 psi)
Thermo-control amplifier working temperature (Evaporator outlet air)		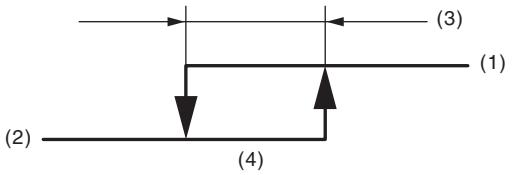 AC-00601 (1) ON (2) OFF (3) 1±0.5°C (33.8±0.9°F) (4) $4^{+1.5}_{0}$°C ($39.2^{+2.7}_{0}$°F)	

- Manual A/C model

Item		Specification
Type of air conditioner		Reheat air-mix type
Cooling capacity		5.3 kW (4,557 kcal/h, 18,084 BTU/h)
Refrigerant		HFC-134a (CH_2FCF_3) [0.4±0.03 kg (0.88±0.07 lb)]
Compressor	Type	Scroll, constant volume (SCSA 08C)
	Discharge	74.5 cc (4.55 cu in)/rev
	Max. permissible speed	9,000 rpm

Magnet clutch		Type	Dry, single-disc type
		Power consumption	35 W
		Type of belt	V-belt 4 PK
		Pulley dia. (effective dia.)	93 mm (3.7 in)
		Pulley ratio	1.43
Condenser		Type	Corrugated fin (Sub cool type)
		Core face area	0.186 m^2 (2.002 sq ft)
		Core thickness	16 mm (0.63 in)
		Radiation area	5.49 m^2 (59.09 sq ft)
Receiver drier		Effective inner capacity	250 cm^3 (15.26 cu in)
Expansion valve		Type	Externally equalizing
Evaporator		Type	Single tank
		Dimensions (W × H × T)	298.6 × 151 × 38 mm (11.7 × 5.94 × 1.50 in)
Blower fan		Fan type	Sirocco fan
		Outer diameter × width	150 × 75 mm (5.91 × 2.95 in)
		Power consumption	220 W
Condenser fan (Sub fan)		Motor type	Magnet
		Power consumption	90 W
		Fan outer diameter	300 mm (11.8 in)
Radiator fan (Main fan)		Motor type	Magnet
		Power consumption	90 W
		Fan outer diameter	300 mm (11.8 in)
Idling speed (A/C ON)		MPFI model	800±100 rpm
Triple switch (Pressure switch)	Low-pressure switch operating pressure	ON → OFF	196±20 kPa (2.00±0.20 kg/cm^2, 28.4±2.9 psi)
		OFF → ON	225^{+25}_{-29} kPa ($2.29^{+0.25}_{-0.30}$ kg/cm^2, $32.6^{+3.6}_{-4.2}$ psi)
	High-pressure switch operating pressure	ON → OFF	$3{,}140^{+50}_{-200}$ kPa ($32.02^{+0.51}_{-2.04}$ kg/cm^2, $455.4^{+7.25}_{-29.0}$ psi)
		OFF → ON	2,550±200 kPa (26.00±2.04 kg/cm^2, 369.8±29.0 psi)
	Middle-pressure switch operating pressure	ON → OFF	1,370±120 kPa (13.97±1.22 kg/cm^2, 198.65±17.35 psi)
		OFF → ON	1,770±100 kPa (18.05±1.02 kg/cm^2, 256.81±14.50 psi)
Thermo control amplifier working temperature (Evaporator outlet air)		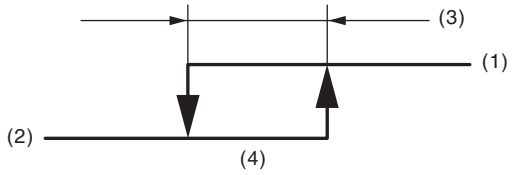 AC-00601 (1) ON (2) OFF (3) 1±0.5°C (33.8±0.9°F) (4) $4^{+1.5}_{0}$°C ($39.2^{+2.7}_{0}$°F)	

B: COMPONENT

1. HEATER COOLING UNIT

- Auto A/C model

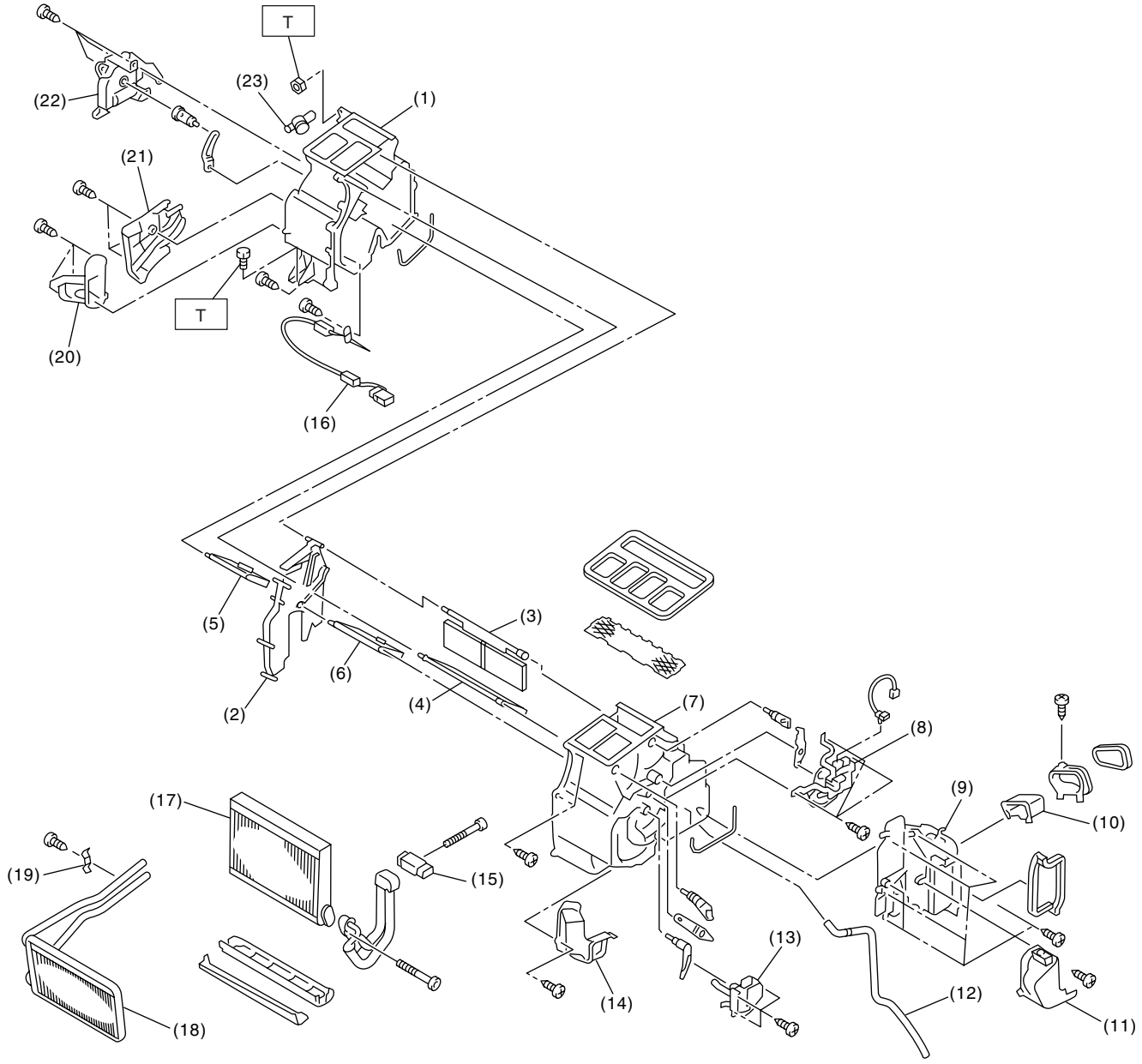

AC-01128

(1) Heater unit case LH
(2) Separator
(3) Mode door RR
(4) Mode door FR
(5) Air mix door LH
(6) Air mix door RH
(7) Heater unit case RH
(8) Mode door actuator
(9) Evaporator cover
(10) Grommet
(11) Pipe cover
(12) Drain hose
(13) Air mix door actuator RH
(14) Foot duct RH
(15) Expansion valve
(16) Evaporator sensor
(17) Evaporator
(18) Heater core
(19) Heater pipe clamp
(20) Foot duct LH
(21) Heater core cover
(22) Air mix door actuator LH
(23) Aspirator

Tightening torque: N·m (kgf-m, ft-lb)
T: 7.5 (0.76, 5.5)

- Manual A/C model

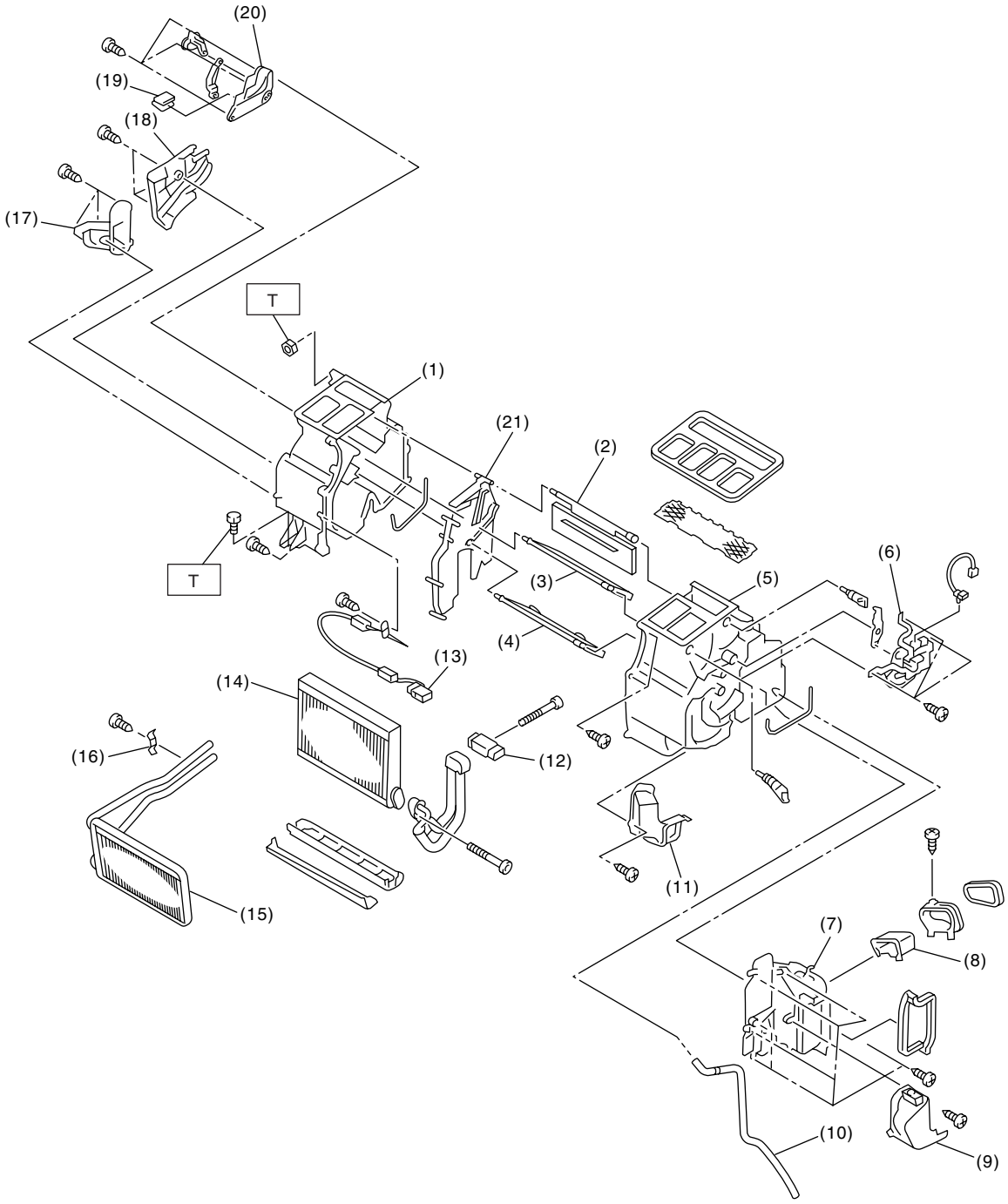

AC-01129

(1) Heater unit case LH
(2) Mode door RR
(3) Mode door FR
(4) Air mix door
(5) Heater unit case RH
(6) Mode door actuator
(7) Evaporator cover
(8) Grommet
(9) Pipe cover
(10) Drain hose
(11) Foot duct RH
(12) Expansion valve
(13) Thermo amplifier
(14) Evaporator
(15) Heater core
(16) Heater pipe clamp
(17) Foot duct LH
(18) Heater core cover
(19) Clip
(20) Air mix door linkage
(21) Separator

Tightening torque: N·m (kgf-m, ft-lb)
T: 7.5 (0.76, 5.5)

2. BLOWER MOTOR UNIT

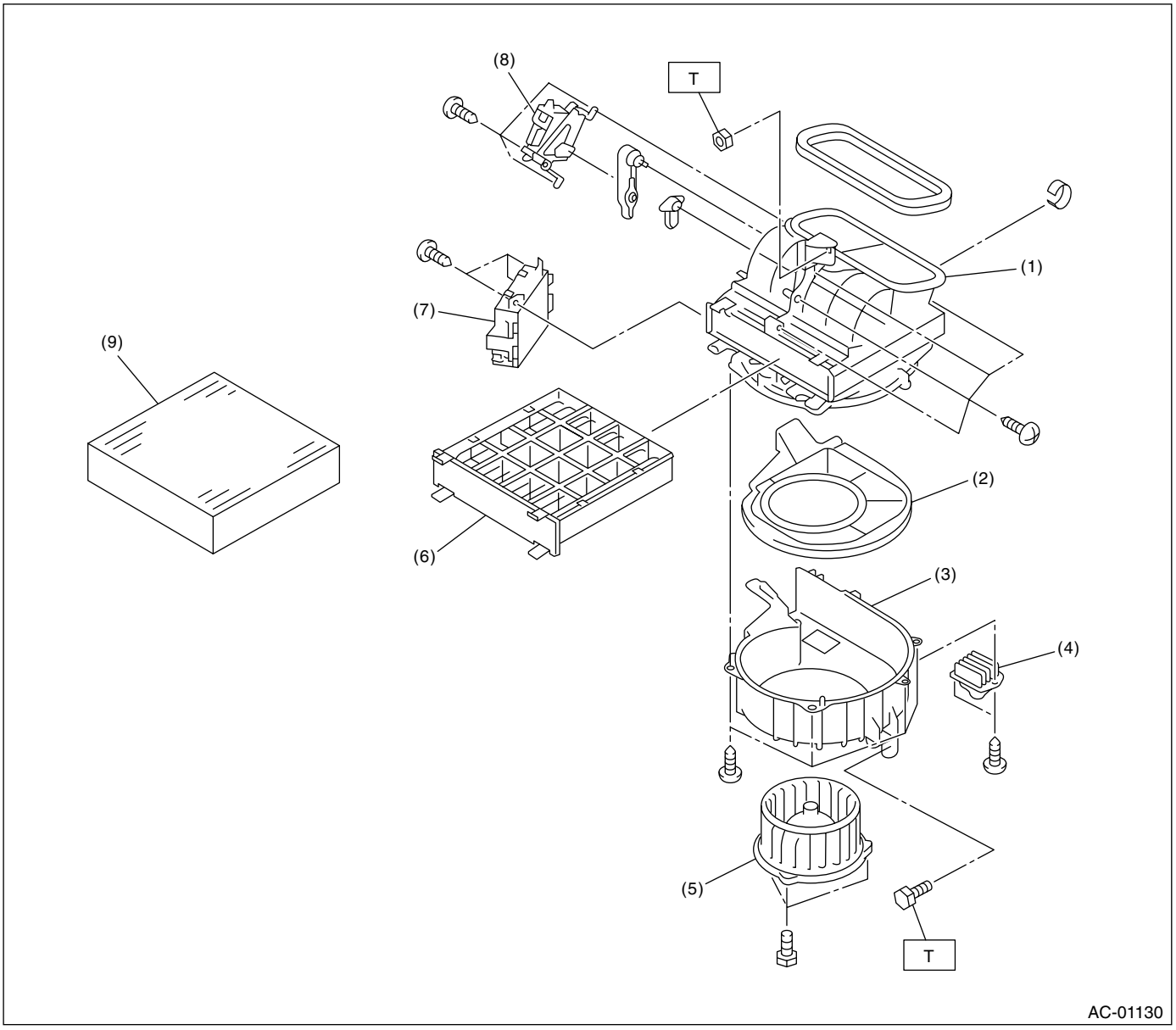

(1) Upper case
(2) Blower plate
(3) Lower case
(4) Power transistor (Auto A/C model)
Blower resistor (Manual A/C model)
(5) Blower motor
(6) Filter cover
(7) Control unit (Auto A/C model)
(8) Intake door actuator
(9) Filter (Option)

Tightening torque: N·m (kgf-m, ft-lb)
T: 7.5 (0.76, 5.5)

3. CONTROL PANEL

- Auto A/C model

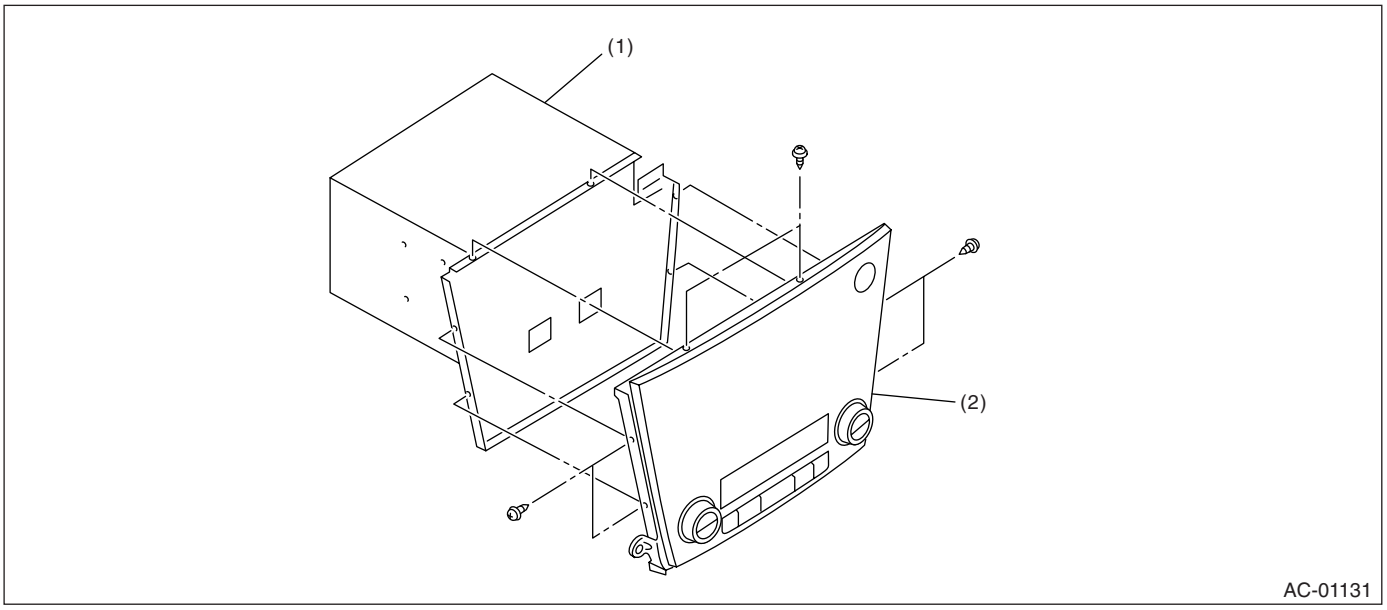

(1) Audio ASSY
(2) Control panel

- Manual A/C model

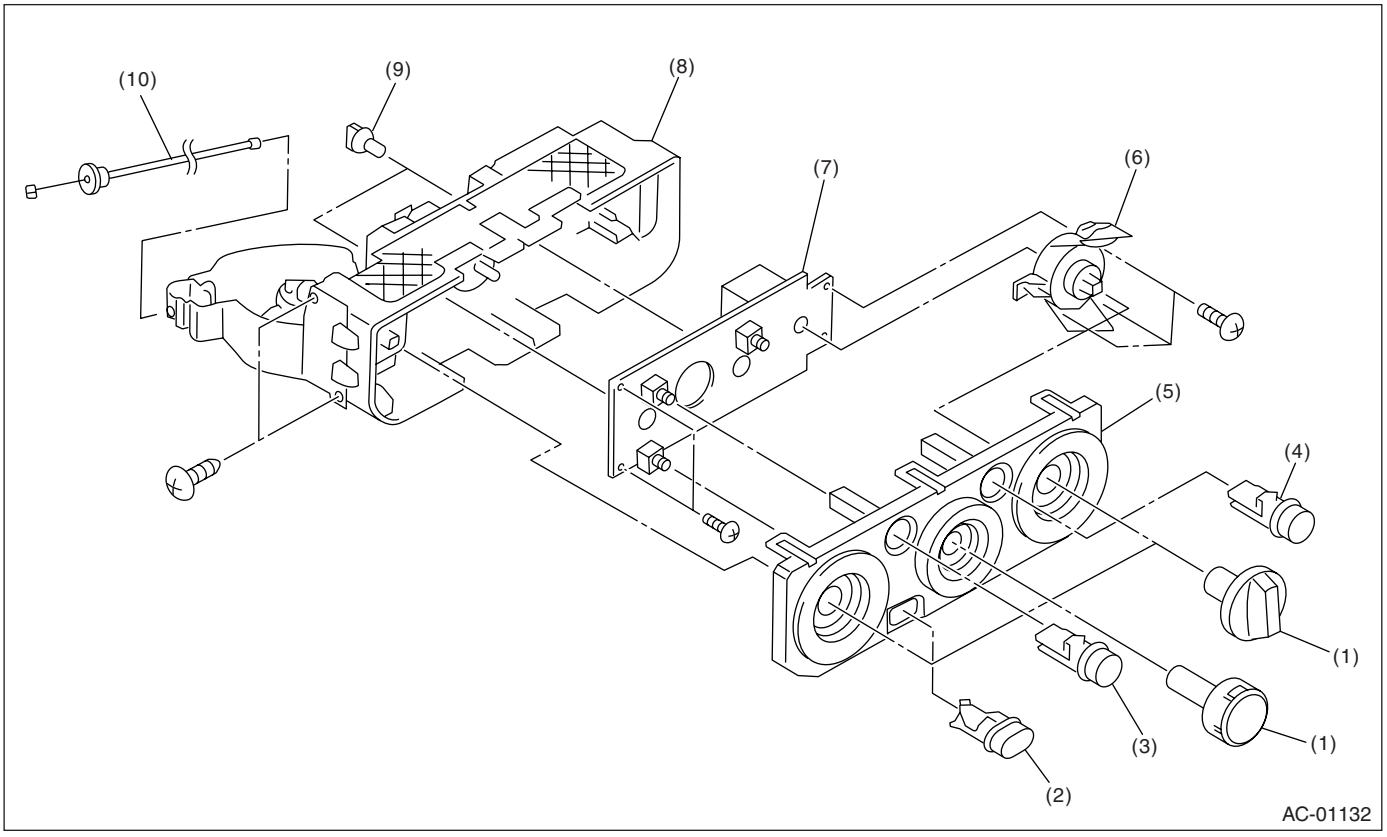

(1) Dial
(2) A/C switch
(3) FRESH/RECIRC switch
(4) Rear window defogger switch
(5) Heater control panel
(6) Air flow control switch
(7) Switch base
(8) Heater control base
(9) Light
(10) Temperature control cable

4. AIR CONDITIONING UNIT

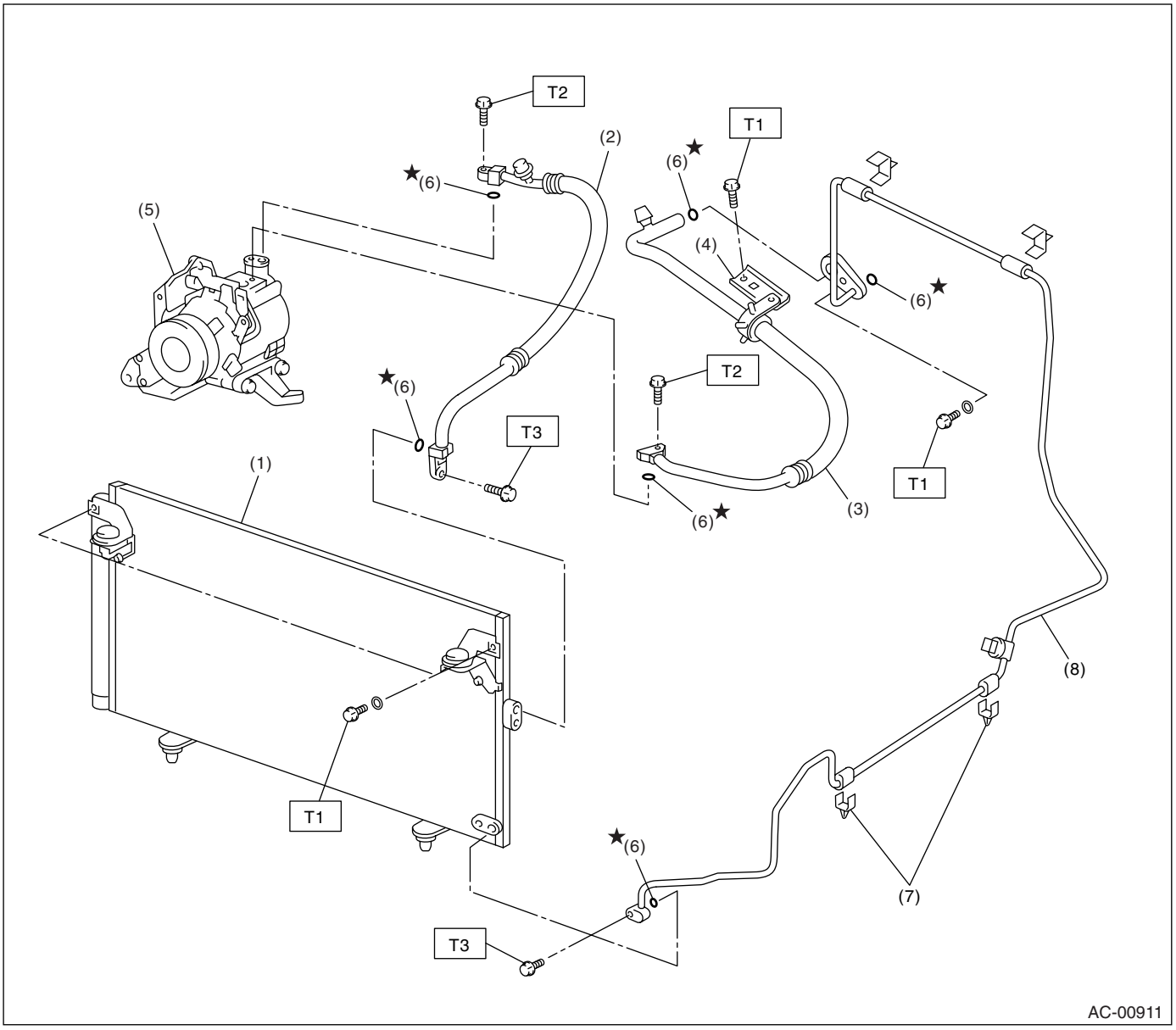

(1)	Condenser	(5)	Compressor
(2)	Hose (High-pressure)	(6)	O-ring
(3)	Hose (Low-pressure)	(7)	Clamp
(4)	Bracket	(8)	Tube

Tightening torque: N·m (kgf-m, ft-lb)
T1: 7.5 (0.76, 5.5)
T2: 10 (1.0, 7.4)
T3: 5 (0.5, 3.7)

5. COMPRESSOR

- H4 model

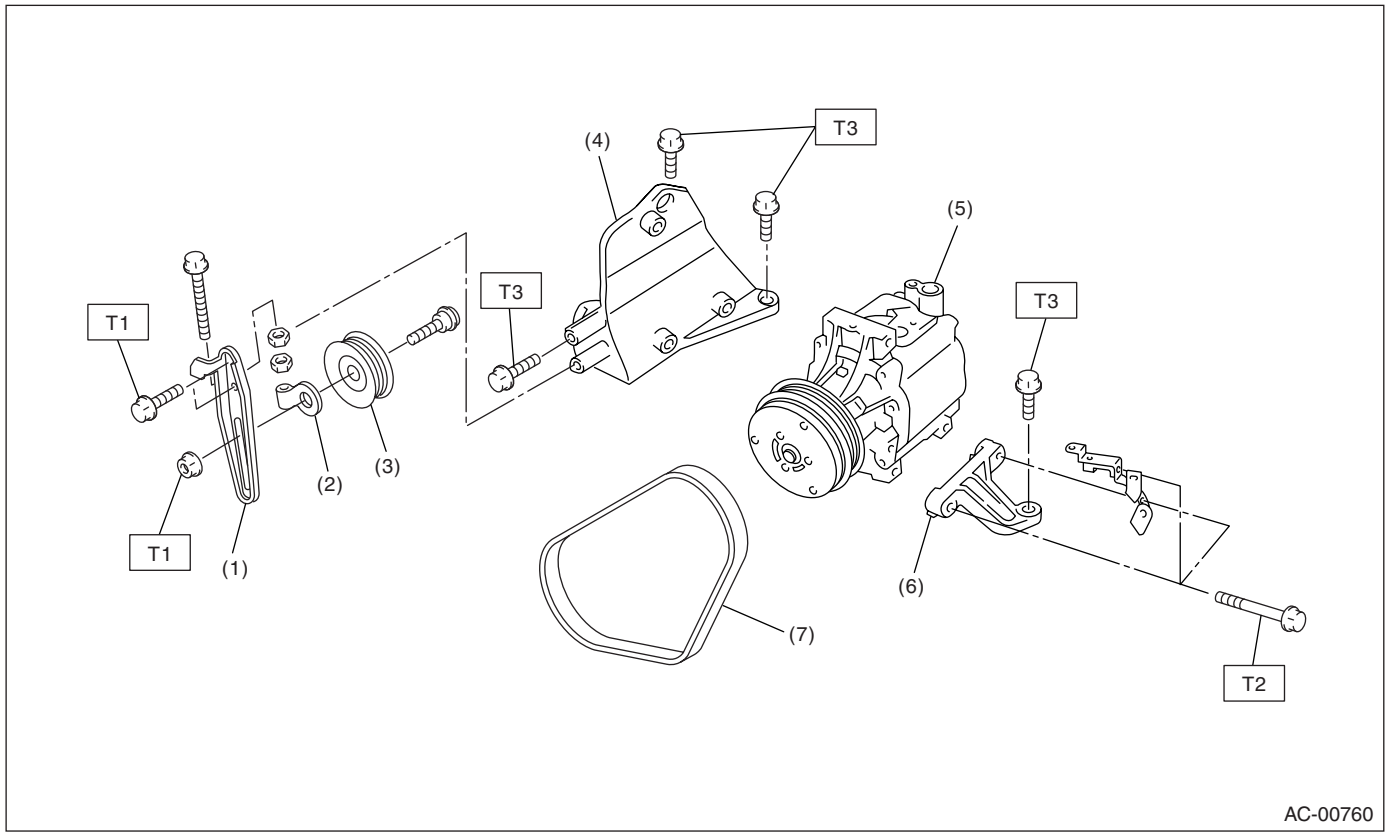

(1)	Idler pulley bracket	(5)	Compressor
(2)	Idler pulley adjuster	(6)	Compressor lower bracket
(3)	Idler pulley	(7)	V-Belt
(4)	Compressor upper bracket		

Tightening torque: N·m (kgf-m, ft-lb)
T1: 23.0 (2.35, 17.0)
T2: 28.9 (2.95, 21.3)
T3: 36 (3.7, 26.6)

- H6 model

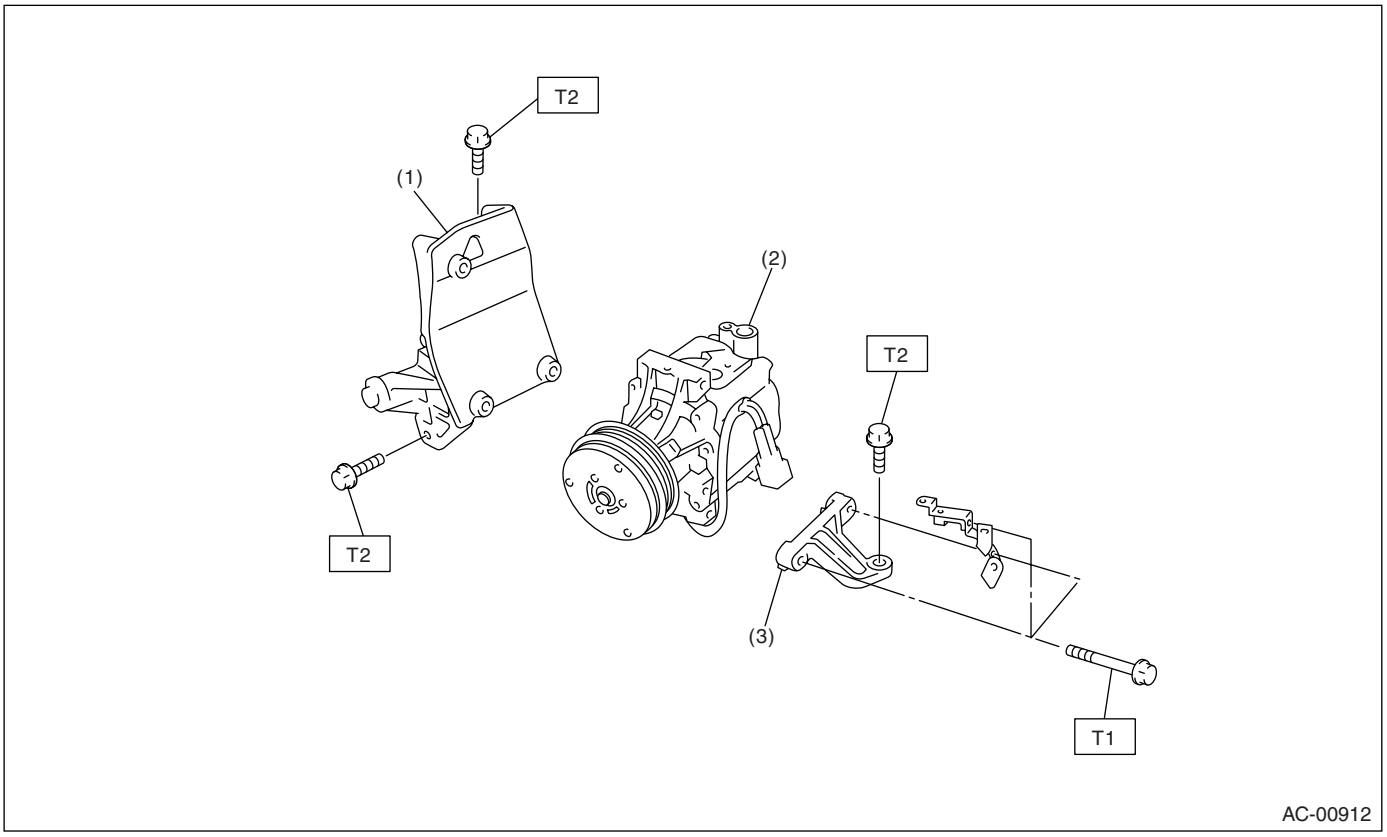

(1) Compressor upper bracket
(2) Compressor
(3) Compressor lower bracket

Tightening torque: N·m (kgf-m, ft-lb)
T1: 28.9 (2.95, 21.3)
T2: 36 (3.7, 26.6)

6. HEATER DUCT

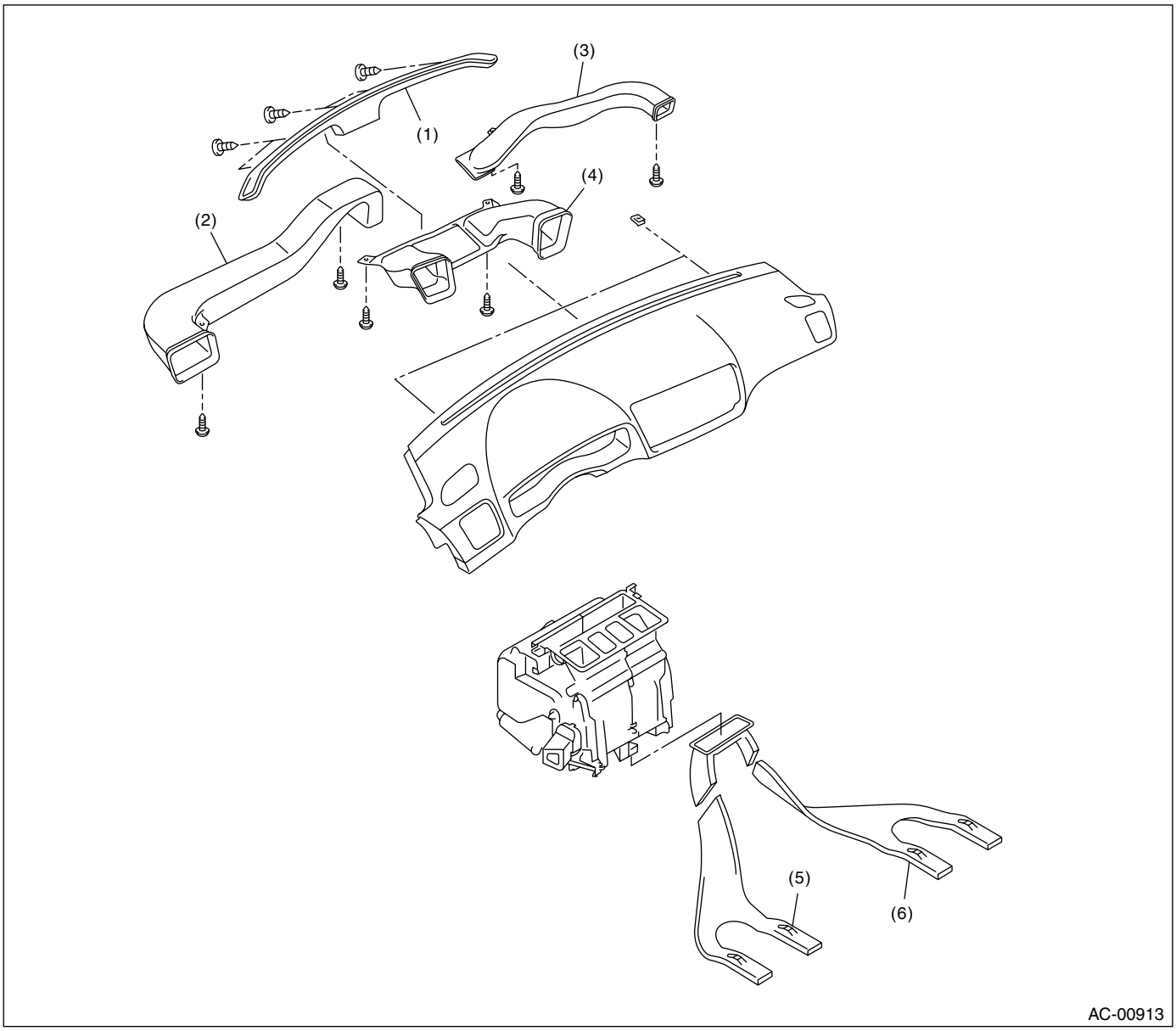

(1) Front defroster nozzle
(2) Side ventilation duct (LH)
(3) Side ventilation duct (RH)
(4) Center ventilation duct
(5) Rear heater duct (LH)
(6) Rear heater duct (RH)

C: CAUTION

1. HFC-134a A/C SYSTEM

• The cooling system components for the HFC-134a system such as the refrigerant and compressor oil are different from the conventional CFC-12 system components and they are incompatible with each other.
• Vehicles with the HFC-134a system can be identified by the label (A) attached to the vehicle.
Before maintenance, check which A/C system is installed to the vehicle.

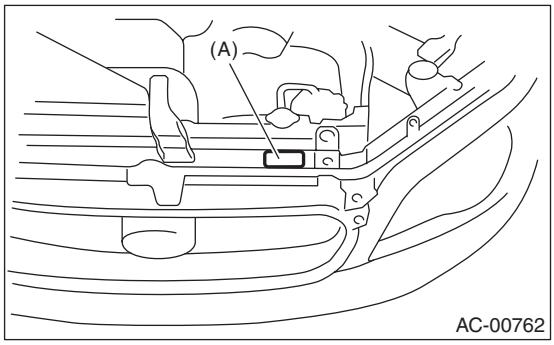

2. COMPRESSOR OIL

• HFC-134a compressor oil has no compatibility with that of CFC-12 system.
• Use only Denso Oil 8 which is a manufacturer-authorized compressor oil for HFC-134a system.
• Do not mix multiple compressor oils.
If CFC-12 compressor oil is used in the HFC-134a A/C system, the compressor may become stuck due to poor lubrication, or the refrigerant may leak due to swelling of rubber parts.
On the other hand, if HFC-134a compressor oil is used in a CFC-12 A/C system, the durability of the A/C system will be lowered.
• HFC-134a compressor oil is very hygroscopic. When replacing or installing/removing A/C parts, immediately isolate the oil from atmosphere using a plug or tape. In order to avoid moisture, store the oil in a container with its cap tightly closed.

3. REFRIGERANT

• The CFC-12 refrigerant cannot be used in the HFC-134a A/C system. The HFC-134a refrigerant, also, cannot be used in the CFC-12 A/C system.
• If an incorrect or no refrigerant is used, it will result in poor lubrication and the compressor itself may be damaged.

4. HANDLING OF REFRIGERANT

• The refrigerant boils at approx. –30°C (–22°F). When handling it, be sure to wear protective goggles and protective gloves. Direct contact of the refrigerant with skin may cause frostbite.
If the refrigerant gets into your eye, avoid rubbing your eyes with your hands. Wash your eye with plenty of water, and receive medical treatment from an eye doctor.
• Do not heat a service can. If a service can is directly heated, or put into boiling water, the inside pressure will become extremely high. This may cause the can to explode. If a service can must be warmed up, use hot water in 40°C (104°F) max.
• Do not drop or impact a service can. (Observe the precautions and operation procedure described on the refrigerant can.)
• When the engine is running, do not open the high-pressure valve of manifold gauge. The high-pressure gas will back-flow resulting in an explosion of the can.
• Provide good ventilation and do not work in a closed area.
• In order to prevent global warming, avoid releasing HFC-134a into the atmosphere. Using a refrigerant recovery system, discharge and reuse it.

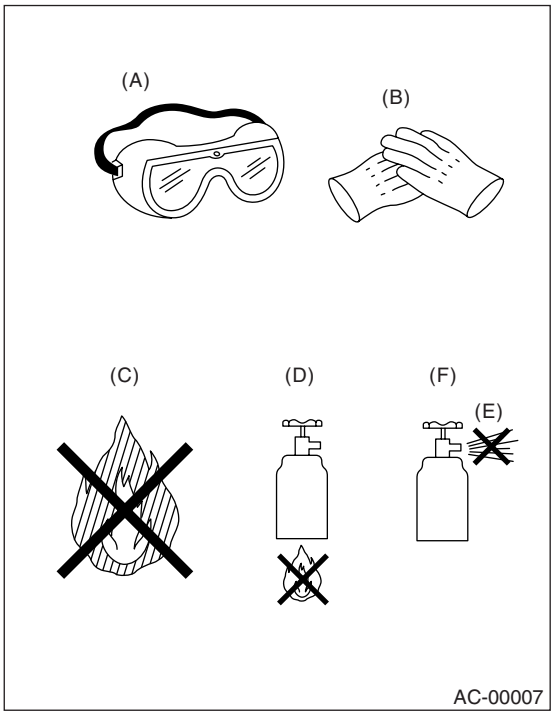

(A) Goggles
(B) Gloves
(C) Avoid open flame
(D) No direct heat on container
(E) Do not discharge
(F) Loosen

5. O-RING CONNECTIONS

- Always use a new O-ring.
- In order to keep the O-rings free of lint which will cause a refrigerant gas leak, perform operations without gloves and cloth.
- Apply compressor oil to O-rings to avoid sticking, before installation.
- Use a torque wrench to tighten the O-ring fittings. Over-tightening will result in damage of O-ring and tube end distortion.
- If the operation is interrupted before completing a pipe connection; recap the tubes, components and fittings with a plug or tape to prevent foreign matter from entering.

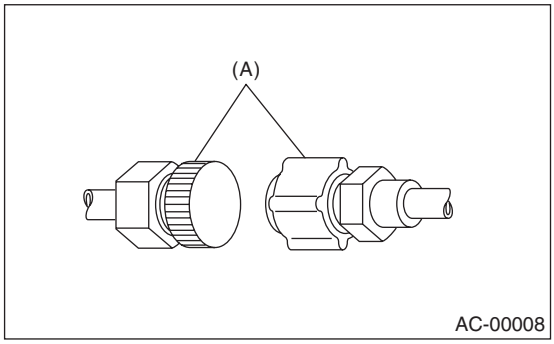

(A) Seal

- Visually check the surfaces and mating surfaces of O-rings, threads and connecting points. If a failure is found, replace the applicable parts.
- Install the O-rings at right angle to tube beads.

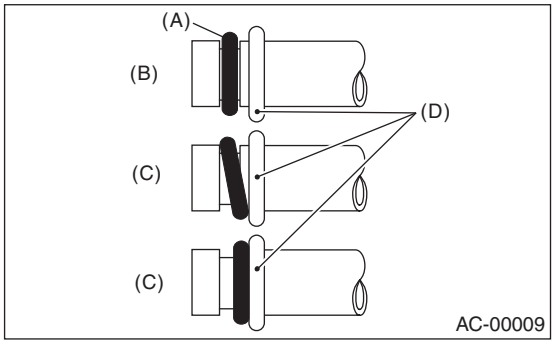

(A) O-ring
(B) OK
(C) NG
(D) Bead

- Use compressor oil specified in the service manual to lubricate the O-rings.

Apply oil to the top and sides of O-rings before installation.

Apply compressor oil to the bead of tube.

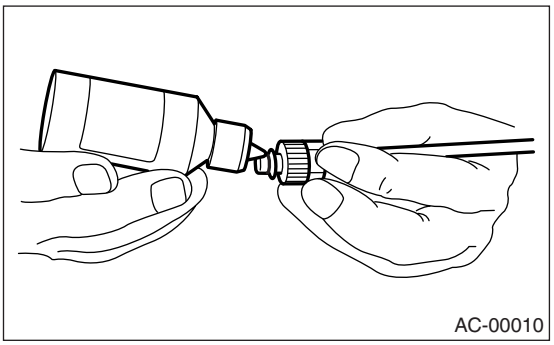

- After tightening, use a clean cloth to remove excess compressor oil from the connections and any oil which may have run on the vehicle body or other parts.
- If any leakage is suspected after tightening, do not further tighten the connections, but disconnect the connections, remove the O-rings, and check the O-rings, threads, and connections.

D: PREPARATION TOOL

CAUTION:
When working on vehicles with HFC-134a system, only use HFC-134a specified tools and parts. Do not mix with those of CFC-12. If HFC-134a and CFC-12 refrigerant or compressor oil is mixed, it will result in poor lubrication and the compressor itself may be destroyed.
In order to prevent the mixture of HFC-134a and CFC-12 parts and liquid, the tool and screw type and the type of service valves used are different. The gas leak detectors for the HFC-134a and CFC-12 systems must also not be interchanged.

	HFC-134a	CFC-12
Tool & screw type	Millimeter size	Inch size
Valve type	Quick joint type	Screw-in type

ILLUSTRATION	Tools and Equipment
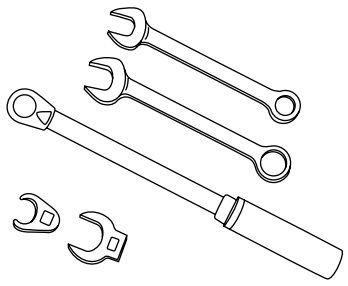 AC-00213	Wrench Various **WRENCHES** will be required to service any A/C system. 7 to 40 N·m (0.7 to 4.1 kgf-m, 5 to 30 ft-lb) torque wrench and various crow-foot wrenches will be needed. Open end or flare nut wrenches will be needed to hold the tube and hose fittings.
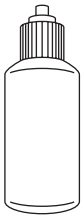 AC-00012	Applicator bottle A small **APPLICATOR BOTTLE** is recommended to apply compressor oil to the various parts. It can be available at a hardware or drug store.
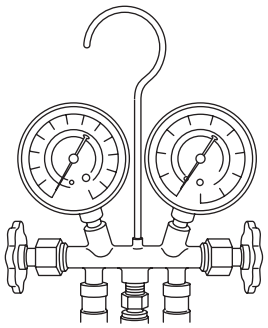 AC-00013	Manifold gauge set A **MANIFOLD GAUGE SET** (with hoses) can be available at either a refrigerant supplier or an automotive equipment supplier.

ILLUSTRATION	Tools and Equipment
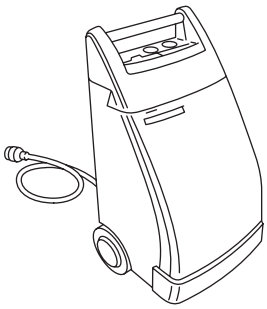 AC-00014	Refrigerant recovery system A **REFRIGERANT RECOVERY SYSTEM** is used for the recovery and reuse of A/C system refrigerant after contaminants and moisture have been removed from the refrigerant.
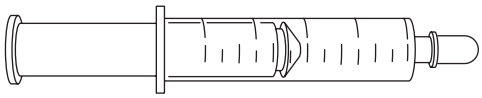 AC-00015	Syringe A graduated plastic **SYRINGE** will be needed to add oil back into the system. A syringe can be available at a pharmacy or drug store.
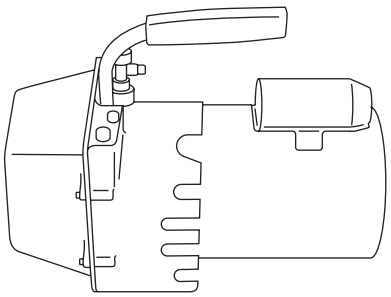 AC-00016	Vacuum pump A **VACUUM PUMP** is necessary (for a good working condition), and may be available at either a refrigerant supplier or an automotive equipment supplier.
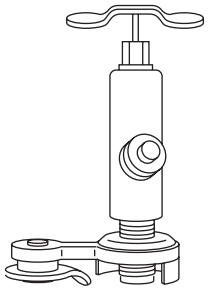 AC-00017	Can tap A **CAN TAP** for the 397 g (14 oz.) can is available at an automotive equipment supplier.

ILLUSTRATION	Tools and Equipment
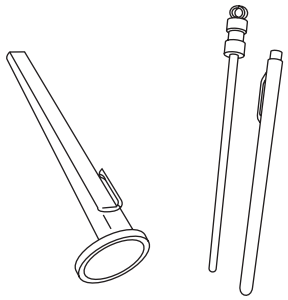 AC-00018	Temperature gauge A Pocket **THERMOMETER** is available at either a industrial hardware store or a refrigerant suppliers.
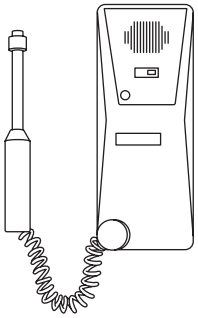 AC-00019	Electronic leak detector An **ELECTRONIC LEAK DETECTOR** can be available at either a specialty tool supplier or an A/C equipment supplier.
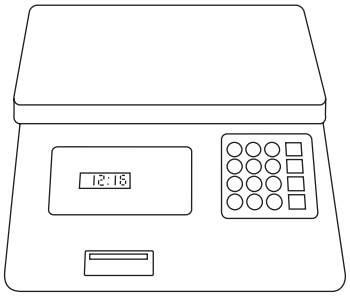 AC-00020	Weight scale A **WEIGHT SCALE** such as an electronic charging scale or a bathroom scale with digital display will be needed, if a 13.6 kg (30 lb) refrigerant container is used.

2. Refrigerant Pressure with Manifold Gauge Set

A: PROCEDURE

1) Place the vehicle in the shade and windless condition.
2) Connect the manifold gauge set.
3) Open the front windows and close all doors.
4) Open the front hood.
5) Increase the engine to 1,500 rpm.
6) Turn on the A/C switch.
7) Turn the temperature control switch to MAX COOL.
8) Put in RECIRC position.
9) Turn the blower control switch to HI.
10) Read the gauge.

Standard:
Low pressure: 127 — 196 kPa (1.3 — 2.0 kg/cm^2, 18 — 28 psi)
High pressure: 1,471 — 1,667 kPa (15 — 17 kg/cm^2, 213 — 242 psi)
Ambient temperature: 30 — 35°C (86 — 95°F)

B: INSPECTION

Symptom	Probable cause	Repair order
High-pressure side is unusually high.	• Defective condenser fan motor • Clogged condenser fin • Too much refrigerant • Air inside the system • Defective receiver dryer	• Replace the fan motor. • Clean the condenser fin. • Discharge refrigerant. • Replace the receiver dryer. • After evacuating again, charge an appropriate amount of refrigerant.
High-pressure side is unusually low.	• Defective compressor • Not enough refrigerant • Clogged expansion valve • Expansion valve frozen temporarily by moisture.	• Replace the compressor. • Check for leaks. • Replace the expansion valve. • Fully evacuate the expansion valve.
Low-pressure side is unusually high.	• Defective compressor • Defective expansion valve • Too much refrigerant	• Replace the compressor. • Replace the expansion valve. • Discharge refrigerant.
Low-pressure side is unusually low.	• Not enough refrigerant • Clogged expansion valve • Expansion valve frozen temporarily by moisture. • Saturated receiver dryer	• Check for leaks. • Replace the expansion valve. • Replace the receiver dryer.

3. Refrigerant Recovery Procedure

A: PROCEDURE

CAUTION:
• During operation, be sure to wear protective goggles and protective gloves.
• Connect the refrigerant recovery system with the manifold gauge set to discharge the refrigerant from the A/C system and reuse it.
• When reusing the discharged refrigerant, keep service cans on hand. Because the discharge rate with the recovery system is approx. 90%, service cans are necessary to charge the refrigerant.
• Follow the detailed operation procedure described in the operation manual attached to the refrigerant recovery system.

1) Perform the compressor oil return operation. <Ref. to AC-25, PROCEDURE, Compressor Oil.>
2) Stop the engine.
3) Make sure the valves on low-/high-pressure sides of manifold gauge set are fully closed.

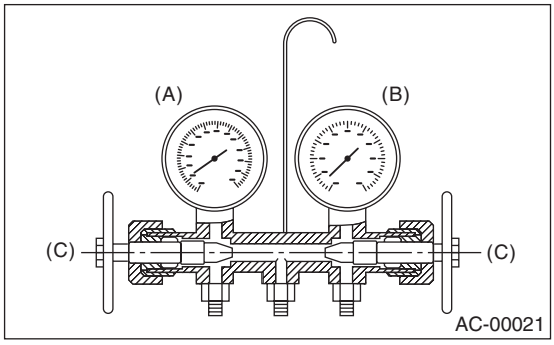

(A) Low-pressure gauge (Compound pressure gauge)
(B) High-pressure gauge
(C) Close

4) Install the low-/high-pressure hoses to the service ports on the low-/high-pressure sides of the vehicle respectively.

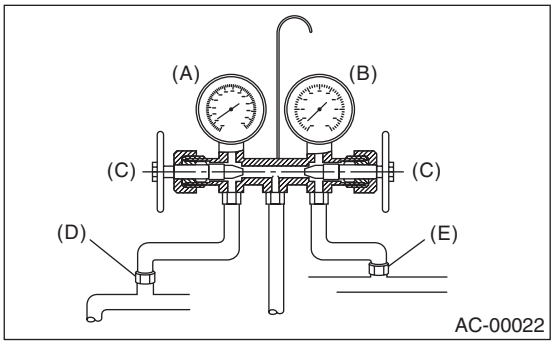

(A) Low-pressure gauge (Compound pressure gauge)
(B) High-pressure gauge
(C) Close
(D) Low-pressure side service port
(E) High-pressure side service port

5) Connect the center hose to the refrigerant recovery system.
6) Follow the operation manual to activate the refrigerant recovery system.

4. Refrigerant Charging Procedure

A: PROCEDURE

CAUTION:
• During operation, be sure to wear protective goggles and protective gloves.
• Before charging the refrigerant, evacuate the system to remove small amounts of moisture remaining in the system.
The moisture in the system can be completely evacuated only under the minimum vacuum level. The minimum vacuum level affects the temperature in the system.
• The list below shows the vacuum values necessary to boil water in various temperature. In addition, the vacuum levels indicated on the gauge are approx. 3.3 kPa (25 mmHg, 0.98 inHg) lower than those measured at 304.8 m (1,000 ft) above sea level.

Vacuum level required to boil water (at sea level)	
Temperature	Vacuum
1.7°C (35°F)	100.9 kPa (757 mmHg, 29.8 inHg)
7.2°C (45°F)	100.5 kPa (754 mmHg, 29.7 inHg)
12.8°C (55°F)	99.8 kPa (749 mmHg, 29.5 inHg)
18.3°C (65°F)	99.2 kPa (744 mmHg, 29.3 inHg)
23.9°C (75°F)	98.5 kPa (739 mmHg, 29.1 inHg)
29.4°C (85°F)	97.2 kPa (729 mmHg, 28.7 inHg)
35°C (95°F)	95.8 kPa (719 mmHg, 28.3 inHg)

1) Close the valves on low-/high-pressure sides of the manifold gauge.

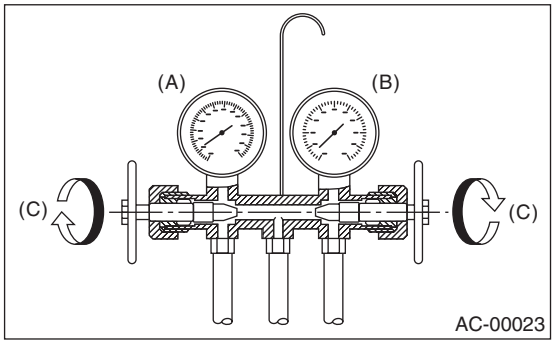

(A) Low-pressure gauge (Compound pressure gauge)
(B) High-pressure gauge
(C) Close

2) Install the low-/high-pressure hoses to the corresponding service ports on the vehicle respectively.
3) Connect the center hose of the manifold gauge set with the vacuum pump.
4) Carefully open the valves on the low-/high-pressure sides to activate the vacuum pump.

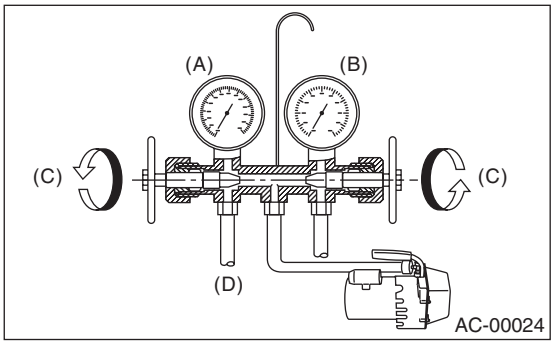

(A) Low-pressure gauge (Compound pressure gauge)
(B) High-pressure gauge
(C) Slowly open
(D) Vacuum pump turn on

5) After the low-pressure gauge reaches 100.0 kPa (750 mmHg, 29.5 inHg) or higher, evacuate the system for approx. 15 minutes. (Continue evacuation).

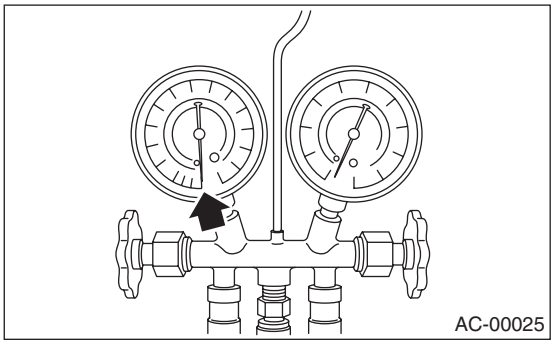

6) After 15 minutes of evacuation, if the reading shows 100.0 kPa (750 mmHg, 29.5 inHg) or higher, close the valves on the both sides to stop the vacuum pump.

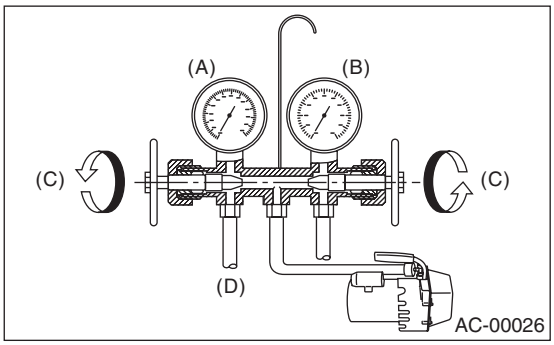

(A) Low-pressure gauge (Compound pressure gauge)
(B) High-pressure gauge
(C) Close
(D) Vacuum pump turn off

7) Note the low-pressure gauge reading.

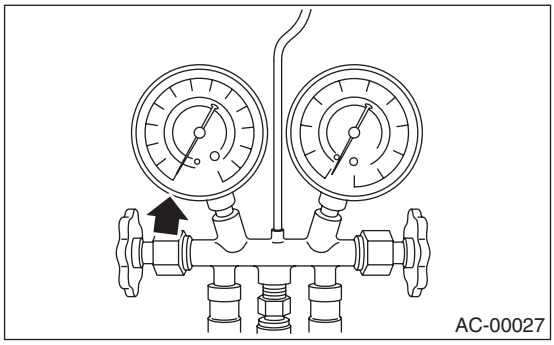

8) Leave it at least 5 minutes, and then check the low-pressure gauge reading for any changes.
When a gauge indicator shows near to zero point, it is a sign of leakage. Check pipe connector points, repair them, make sure there is no leakage by air bleeding.
9) Following the can tap operation manual instructions, install it to the refrigerant can.

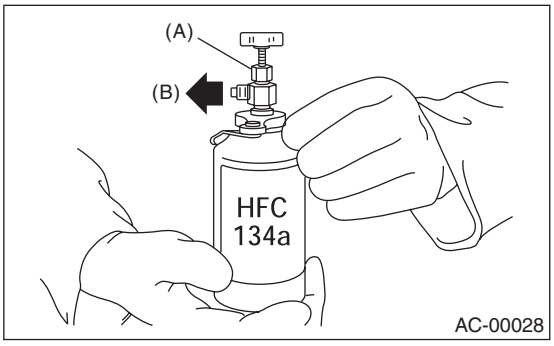

(A) Tap valve
(B) Center manifold hose

10) Disconnect the center manifold hose from the vacuum pump, and connect the hose to the tap valve.
11) When a 13.6 kg (30 lb) refrigerant container is used, measure the refrigerant amount in use using a weight scale.

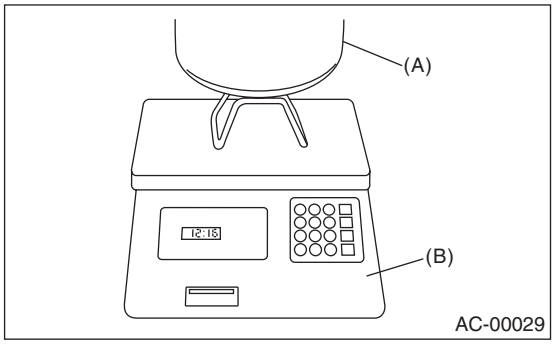

(A) Refrigerant container (HFC-134a)
(B) Weight scale

12) Confirm that all the 3 hoses are tightly connected to the manifold gauge set.

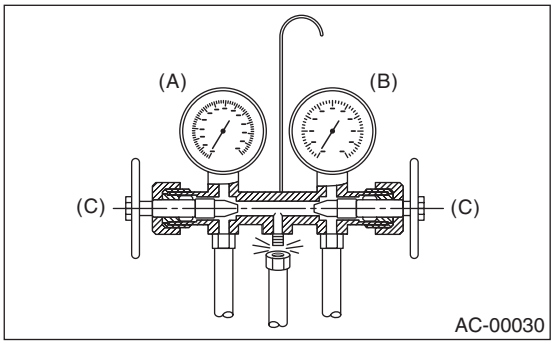

(A) Low-pressure gauge (Compound pressure gauge)
(B) High-pressure gauge
(C) Close

13) Open the valve on the HFC-134a source.
14) Loosen the center hose connection on the manifold gauge set (if applicable, press a purge valve on the manifold gauge set) only for a couple of seconds to allow the air in the center hose to escape by the refrigerant.
15) Carefully open the high-pressure valve with the engine stopping.

CAUTION:
Do not open the low-pressure valve.

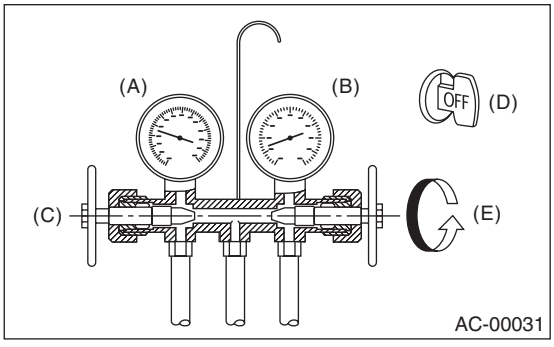

(A) Low-pressure gauge (Compound pressure gauge)
(B) High-pressure gauge
(C) Close
(D) Ignition switch OFF
(E) Slowly open

CAUTION:
Never run the engine during charging from the high-pressure side.

16) Close the high-pressure valve when the low-pressure gauge reaches 98 kPa (1 kg/cm^2, 14 psi).
Using a leak tester, check the system for leaks.
If any leakage is found after the refrigerant recovery is completed, repair the applicable area.

17) After confirming that there are no leaks with the leak test, charge the required amount of refrigerant.

CAUTION:
Never run the engine during charging from the high-pressure side.

18) Close the high-pressure valve when;
• the readings of low- / high-pressure gauges become almost equal, after the charging speed is reduced,
• the HFC-134a source becomes empty, or the system is filled with the gas.

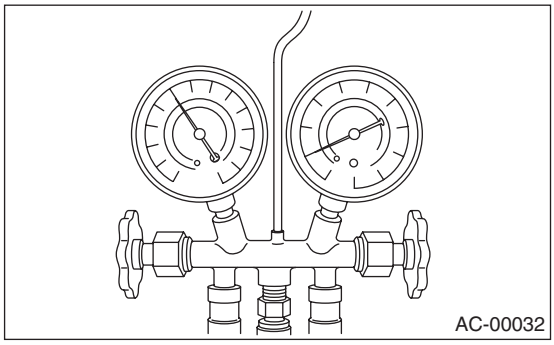

19) If the HFC-134a source is empty, close the high-pressure valve, close the valve on the can tap, and replace the HFC-134a source with a new one to restart the operation.

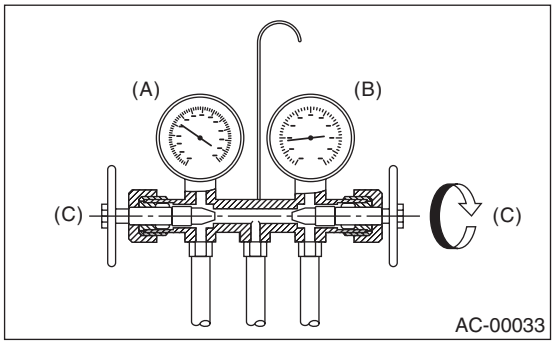

(A) Low-pressure gauge (Compound pressure gauge)
(B) High-pressure gauge
(C) Close

20) Confirm that both the low-/high-pressure valves can be closed. Start the engine with the A/C switch OFF.
21) Quickly repeat ON-OFF cycles a few times to prevent initial compressor damage.
22) Set up the vehicle to the following status:
• A/C switch ON
• Engine running at 1,500 rpm
• Blower speed setting to “HI”
• Temperature setting to “MAX COOL”
• Air inlet setting to “RECIRC”
• Window open

23) While reading the low-pressure gauge, carefully open the low-pressure valve with the refrigerant source connected and the service hose purged.

CAUTION:
Never open the high-pressure valve with the engine running. The high-pressure gas will backflow resulting in an explosion of the can.

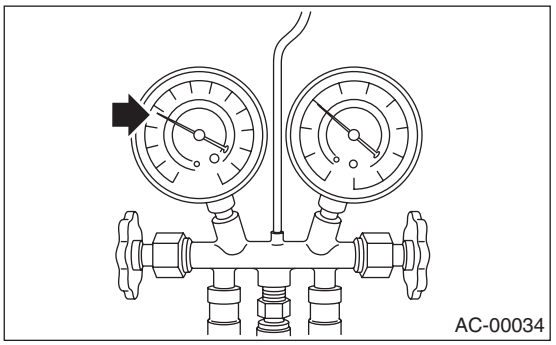

24) Adjust the refrigerant flow to maintain the pressure on the low-pressure side at 276 kPa (2.81 kg/cm^2, 40 psi) max.
25) After the system is fully charged, close the low-pressure valve.
26) Close the valve on the refrigerant source.

Refrigerant amount		
Refrigerant	Minimum	Maximum
HFC-134a	370 g (0.82 lb)	430 g (0.95 lb)

27) Disconnect the hose from the service port, and install the service port cap.

5. Refrigerant Leak Check

A: INSPECTION

1) Operate the A/C system for approx. 10 minutes, and confirm that the high-side pressure shows at least 690 kPa (7.03 kg/cm^2, 100 psi). Then stop the engine to start the leak test.
2) Starting from the connection between high-pressure pipe and evaporator, check the system for leaks along the high-pressure side through the compressor. The following items must be checked thoroughly.
3) Check the joint and seam between pressure switch (dual switch) and high-pressure pipe.
4) Check the connections between condenser and pipes, and welded joints on the condenser.
The leak tester may detect the oil on the condenser fins as a leak.
5) Check the joint between compressor and hoses.
6) Check the machined area of compressor and other joints on the compressor.
7) Check the compressor shaft seal at the area near the center of compressor clutch pulley.
Some shaft seals show a slight amount of leakage about 3 g (0.1 oz.) per year. This is not a problem.
8) Starting from the connection between low-pressure pipe and evaporator, check the system for leakage along the low-pressure side through the compressor. The following items must be checked thoroughly.

- Connection between 2 parts
- Connection between pipe and plate

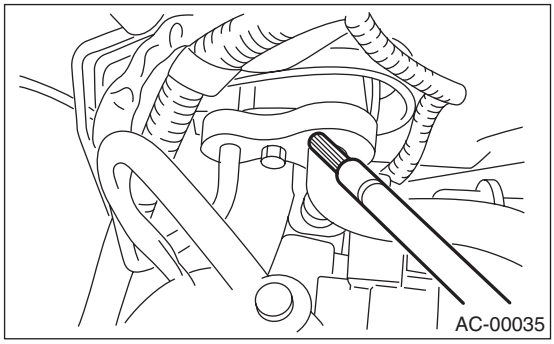

9) Visually check the rubber area of the flexible hose for cracks.
Check the entire length of the flexible hose, especially the connection with the metal hose end.

CAUTION:
Carefully check the external surface of hoses and tubes at approx. 25 mm (0.98 in) per second.

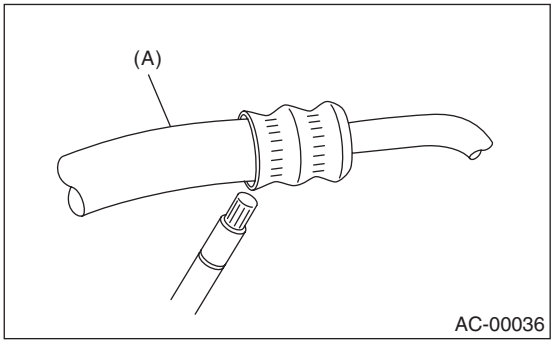

(A) Flexible hose

10) Disconnect the drain hose from heater case, and check the hose end for at least 10 seconds.
After the test is finished, reconnect the drain hose.
11) Turn the ignition key to ON position, and run the blower at high speed for approx. 1 minute. Stop the blower to check the ventilation grille on the instrument panel. While moving the tester closer to the grille, run the blower for 1 or 2 seconds, then stop it. Check the grille at that point for at least 10 seconds.

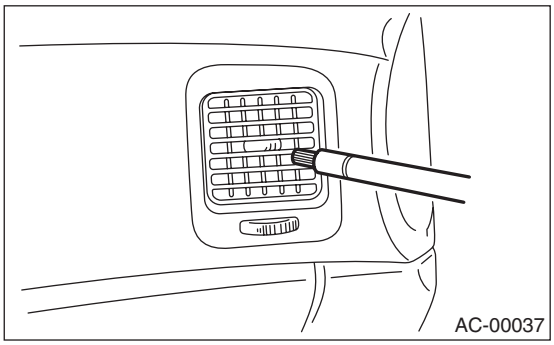

12) Check the valve in the service port.
13) Visually check the rubber seal in the service port cap.

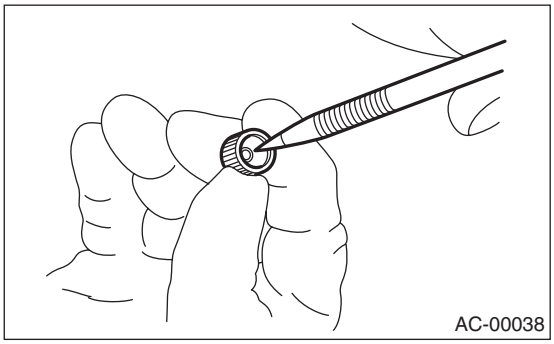

6. Compressor Oil

A: PROCEDURE

NOTE:
Before servicing, perform the oil return operation to return the compressor oil in circulation with the refrigerant to the compressor.

1) Increase the engine to 1,500 rpm.
2) Turn ON the A/C switch.
3) Turn the temperature control switch to MAX COOL.
4) Put in RECIRC position.
5) Turn the blower control switch to HI.
6) Leave in this condition for 10 minutes.

B: REPLACEMENT

NOTE:
• If a component has been replaced, add an appropriate amount of compressor oil (same as the amount of remaining oil in removed component).
• When replacing the compressor, the new compressor will already have the specified amount of oil in it. Install the new compressor after removing the same amount of oil remained in the removed compressor.

7. Blower Motor Unit Assembly

A: REMOVAL

1) Disconnect the ground cable from battery.
2) Remove the glove box. <Ref. to EI-51, REMOVAL, Glove Box.>
3) Disconnect the connectors of A/C control module, intake door actuator, blower motor, power transistor and blower resistor.
4) Loosen the bolts and nut to remove blower motor unit assembly.

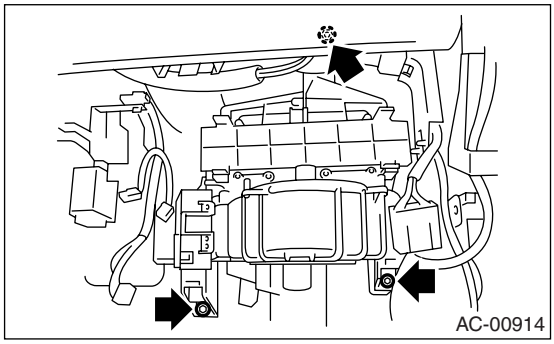

B: INSTALLATION

Install in the reverse order of removal.

Tightening torque:
Refer to "COMPONENT" of "General Description". <Ref. to AC-5, HEATER COOLING UNIT, COMPONENT, General Description.> <Ref. to AC-8, BLOWER MOTOR UNIT, COMPONENT, General Description.>

8. Blower Motor

A: REMOVAL

1) Disconnect the ground cable from battery.
2) Remove the glove box lower cover. <Ref. to EI-51, REMOVAL, Glove Box.>
3) Disconnect the connector of blower motor.
4) Loosen the screw to remove blower motor.

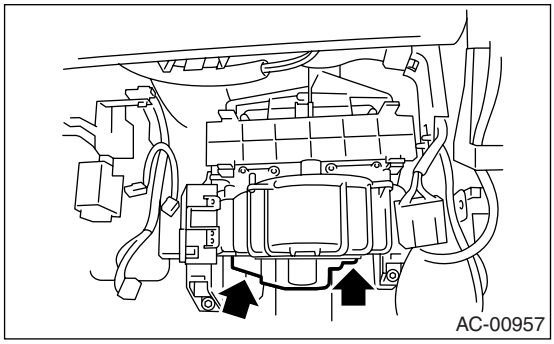

B: INSTALLATION

Install in the reverse order of removal.

C: INSPECTION

Connect the battery positive (+) terminal to terminal No. 2 of blower motor, and negative (−) terminal to terminal No. 1. Check the blower motor for smooth rotation.

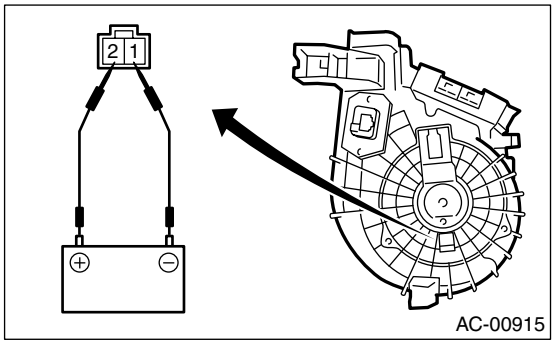

9. Power Transistor (Auto A/C Model)

A: REMOVAL

1) Remove the glove box lower cover on passenger side. <Ref. to EI-51, REMOVAL, Glove Box.>
2) Disconnect the power transistor connector.
3) Remove the two screws, and then remove the power transistor.

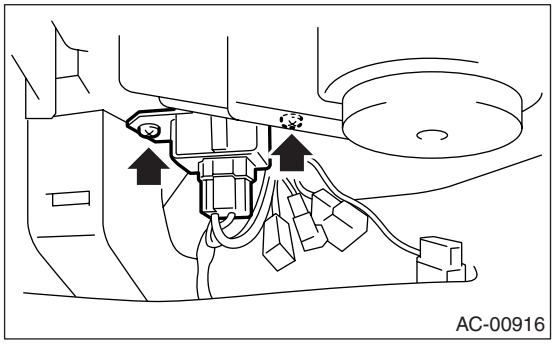

B: INSTALLATION

Install in the reverse order of removal.

10. Blower Resistor (Manual A/C Model)

A: REMOVAL

1) Remove the glove box lower cover on passenger side. <Ref. to EI-51, REMOVAL, Glove Box.>
2) Disconnect the blower resistor connector.
3) Remove the two screws, and then remove the blower resistor.

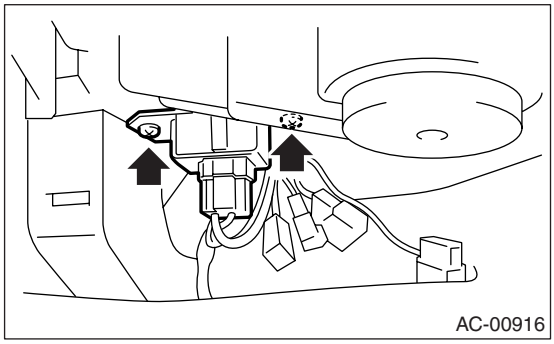

B: INSTALLATION

Install in the reverse order of removal.

C: INSPECTION

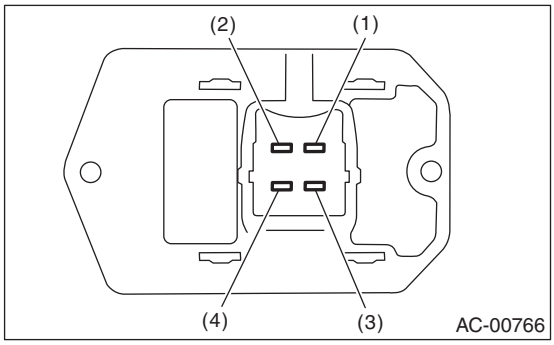

Measure the blower resistor resistance.

Terminal No.	Standard
4 and 2	Approx. 0.44 Ω
4 and 3	Approx. 1.12 Ω
4 and 1	Approx. 2.92 Ω

If NG, replace the blower resistor.

11.Heater Core

A: REMOVAL

1) Remove the heater and cooling unit. <Ref. to AC-37, REMOVAL, Heater and Cooling Unit.>
2) Remove the screws and remove the heater core cover and pipe clamp.

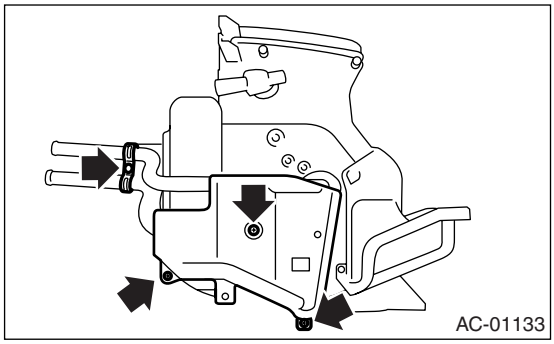

3) Remove the heater core (A).

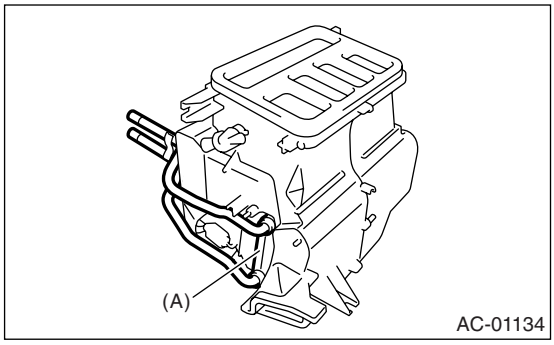

B: INSTALLATION

Install in the reverse order of removal.

12.Control Panel (Auto A/C Model)

A: REMOVAL

1) Remove the audio assembly. <Ref. to ET-5, REMOVAL, Audio.>
2) Remove the six screws.

NOTE:
When working the removed audio assembly with its back facing down, place wooden blocks between the audio assembly and the workbench to prevent ground terminal from folding.

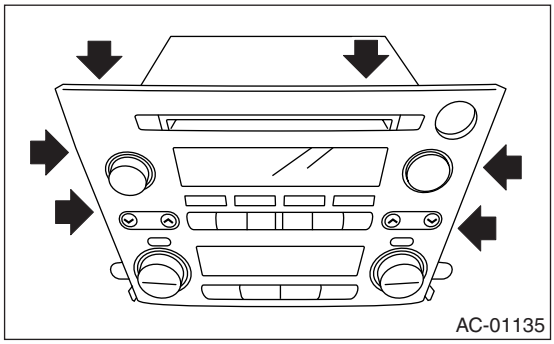

3) Using a fine flat tip screwdriver, remove the ten hooks gradually in the order of both sides, lower and upper side.

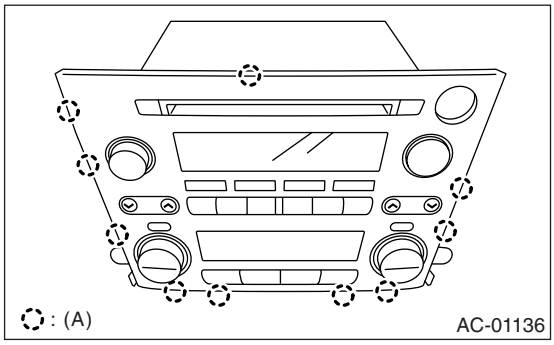

(A) Hook

4) Pull the panel straight toward you to remove.

CAUTION:
Be careful not to touch the logic board to prevent static electricity damage.

B: INSTALLATION

1) Fit the hooks. Make sure the firm connection between logic board and connector by pushing the center part of panel with fingertips.
2) Install in the reverse order of removal.

13.Control Unit (Manual A/C Model)

A: REMOVAL

1) Disconnect the ground cable from battery.
2) Remove the instrument panel lower cover. <Ref. to EI-50, REMOVAL, Instrument Panel Lower Cover.>
3) Remove the control wires.

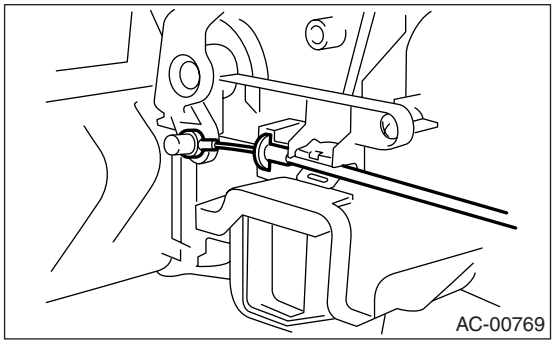

4) Remove the audio assembly. <Ref. to ET-5, REMOVAL, Audio.>
5) Loosen the screw to remove the control unit from bracket.

B: INSTALLATION

Install in the reverse order of removal.

14.Control Unit (Auto A/C Model)

A: REMOVAL

1) Disconnect the ground cable from battery.
2) Remove the glove box. <Ref. to EI-51, REMOVAL, Glove Box.>
3) Remove the screw, disconnect the connector and remove the control unit.

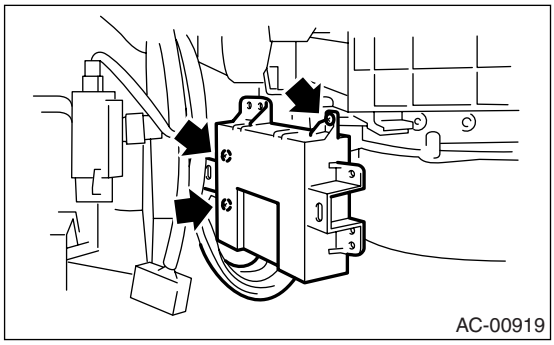

B: INSTALLATION

Install in the reverse order of removal.

15.Compressor

A: INSPECTION

1. MAGNETIC CLUTCH CLEARANCE

Check the clearance of entire circumference around the drive plate and pulley.

Standard:
0.45±0.15 mm (0.0177±0.0059 in)

2. MAGNETIC CLUTCH OPERATION

1) Disconnect the compressor connector.
2) Connect the battery positive (+) terminal to terminal No. 1 of compressor connector, and negative (−) terminal to terminal No. 2.

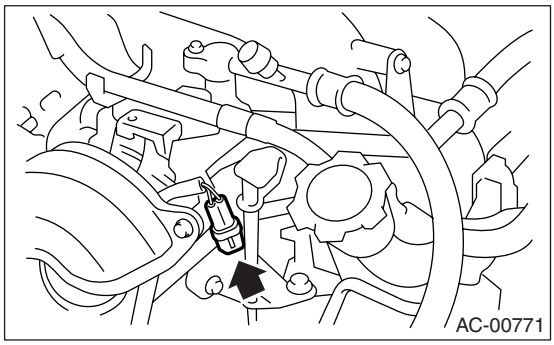

3) Check the magnet clutch engagement.
If NG, replace the compressor.

B: REMOVAL

1) Perform the compressor oil return operation. <Ref. to AC-25, PROCEDURE, Compressor Oil.>
2) Turn the A/C switch to OFF and stop the engine.
3) Using the refrigerant recovery system, discharge refrigerant. <Ref. to AC-20, PROCEDURE, Refrigerant Recovery Procedure.>
4) Disconnect the ground cable from battery.
5) Remove the V-belts. <Ref. to ME(H4SO)-37, REMOVAL, V-belt.> <Ref. to ME(H4DOTC)-37, REMOVAL, V-belt.> <Ref. to ME(H6DO)-32, REMOVAL, V-belt.>
6) Remove the generator. <Ref. to SC(H4SO)-20, REMOVAL, Generator.>
7) Remove the bolt and remove the low-pressure hose and high-pressure hose.

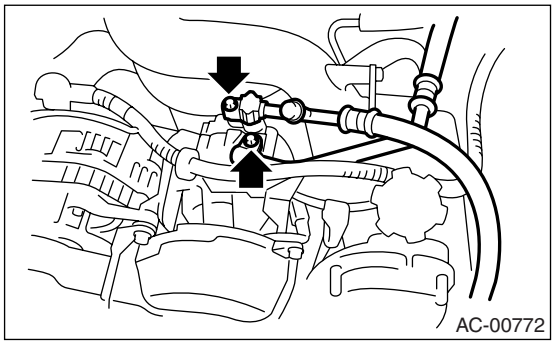

8) Disconnect the compressor harness from body harness.
9) Remove the bolts and remove compressor bracket.
- H4 model

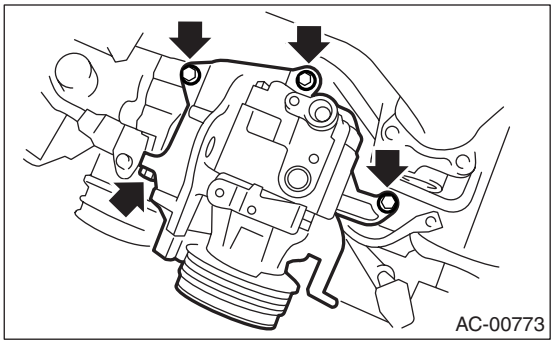

- H6 model

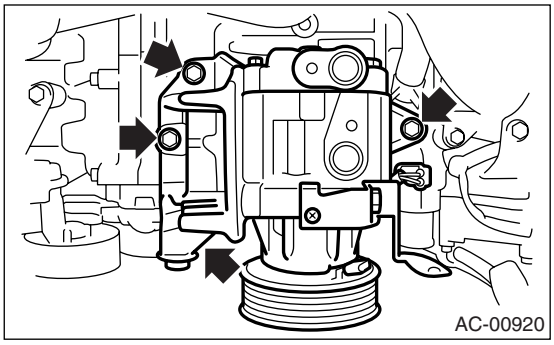

10) Remove the bolts, and then remove the bracket from compressor.

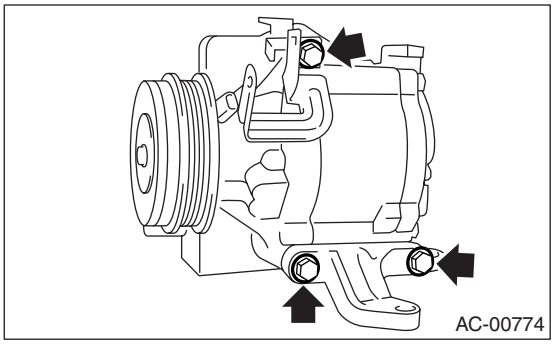

C: INSTALLATION

1) Install in the reverse order of removal.
2) Replace the O-rings on low-/high-pressure hoses with new ones, then apply compressor oil.
3) When replacing the compressor, adjust amount of compressor oil. <Ref. to AC-25, PROCEDURE, Compressor Oil.>
4) Charge refrigerant. <Ref. to AC-21, PROCEDURE, Refrigerant Charging Procedure.>

Tightening torque:

Refer to "COMPONENT" of "General Description". <Ref. to AC-10, AIR CONDITIONING UNIT, COMPONENT, General Description.> <Ref. to AC-11, COMPRESSOR, COMPONENT, General Description.>

16.Condenser

A: REMOVAL

1) Using the refrigerant recovery system, discharge refrigerant. <Ref. to AC-20, PROCEDURE, Refrigerant Recovery Procedure.>
2) Disconnect the ground cable from battery.
3) Disconnect the pressure hose and pipe from condenser.

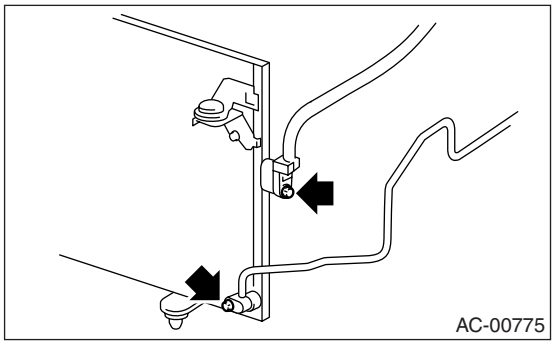

4) Remove the radiator bracket (A) and hood stay (B).

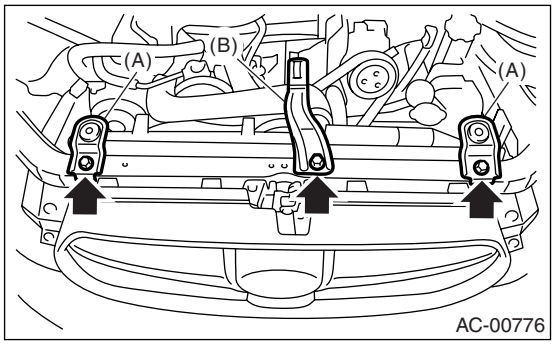

5) Remove the front grille. <Ref. to EI-24, REMOVAL, Front Grille.>
6) Remove two bolts. While lifting condenser, pull it out through the space between radiator and radiator panel.

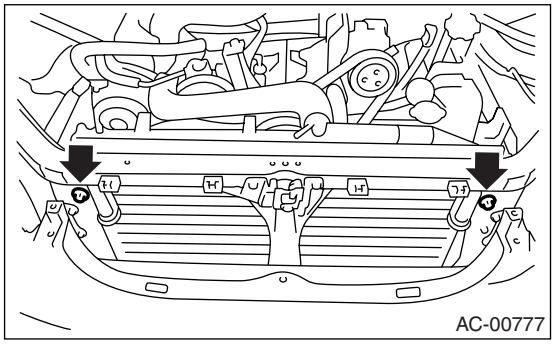

CAUTION:
• Be careful not to damage the condenser fins. If a damaged fin is found, repair it using a thin screwdriver.
• If the condenser is replaced, add an appropriate amount of compressor oil to the compressor. <Ref. to AC-25, REPLACEMENT, Compressor Oil.>

B: INSTALLATION

1) Install in the reverse order of removal.

CAUTION:
Replace the O-rings on hoses or pipes with new ones, and then apply compressor oil. Confirm that lower guide of condenser (A) has been fitted into holes on radiator panel.

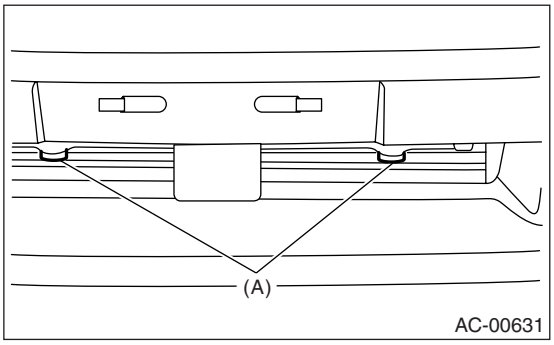

2) Charge refrigerant. <Ref. to AC-21, PROCEDURE, Refrigerant Charging Procedure.>

Tightening torque:
Refer to "COMPONENT" of "General Description". <Ref. to AC-10, AIR CONDITIONING UNIT, COMPONENT, General Description.> <Ref. to CO(H4SO)-5, RADIATOR AND RADIATOR FAN, COMPONENT, General Description.>

C: INSPECTION

1) Check no dust or insects are found on the condenser fins. Air-blow or flush fins with water as needed.
2) Inspect for oil leakage from condenser. If a failure is found, replace the condenser with a new one.

17.Heater and Cooling Unit

A: REMOVAL

1) Disconnect the ground cable from battery.
2) Using the refrigerant recovery system, discharge refrigerant. <Ref. to AC-20, PROCEDURE, Refrigerant Recovery Procedure.>
3) Drain engine coolant from the radiator.
4) Remove the bolts securing expansion valve and pipe in engine compartment. Release the heater hose clamps in engine compartment to remove the hoses.

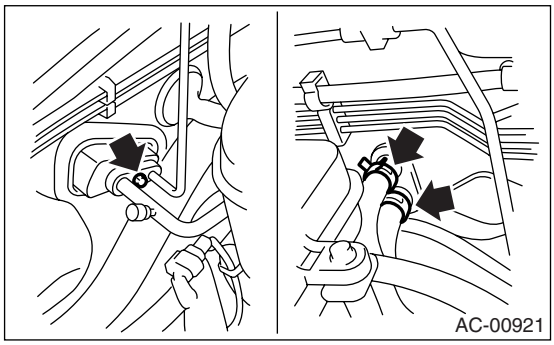

5) Remove the instrument panel. <Ref. to EI-56, REMOVAL, Instrument Panel Assembly.>
6) Remove the support beam.
7) Remove the blower motor unit assembly. <Ref. to AC-26, REMOVAL, Blower Motor Unit Assembly.>
8) Disconnect the actuator connector.
9) Remove the bolt and nuts to remove the heater and cooling unit.

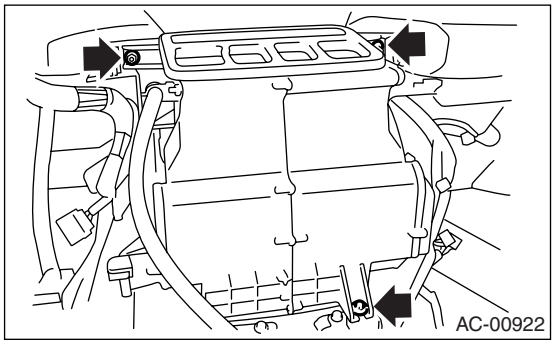

B: INSTALLATION

1) Install in the reverse order of removal.
2) Charge refrigerant. <Ref. to AC-21, PROCEDURE, Refrigerant Charging Procedure.>

Tightening torque:
Refer to "COMPONENT" of "General Description". <Ref. to AC-5, HEATER COOLING UNIT, COMPONENT, General Description.>

18.Evaporator

A: REMOVAL

1) Using the refrigerant recovery system, discharge refrigerant. <Ref. to AC-20, PROCEDURE, Refrigerant Recovery Procedure.>
2) Disconnect the ground cable from battery.
3) Remove the blower motor unit assembly. <Ref. to AC-26, REMOVAL, Blower Motor Unit Assembly.>
4) Disconnect the connector, remove the screw and then remove the air-mix door actuator and mode door actuator.

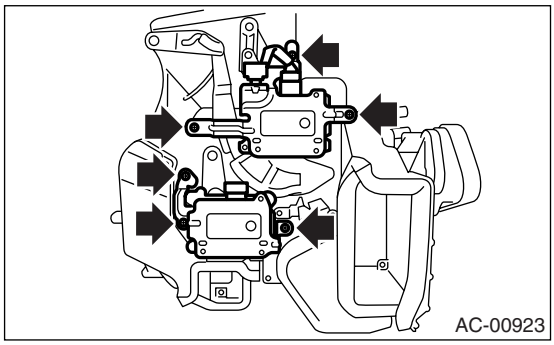
AC-00923

5) Disconnect the connector, remove the screw and remove the pipe cover and evaporator sensor.

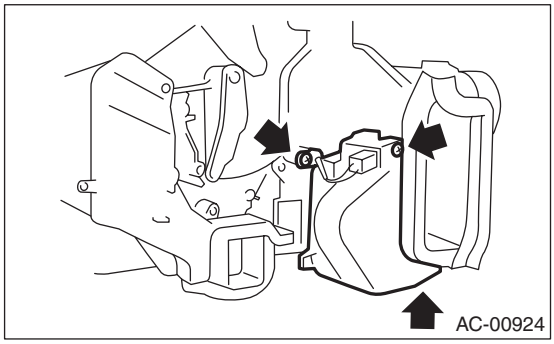
AC-00924

6) Remove the bolts securing expansion valve and pipe in engine compartment.

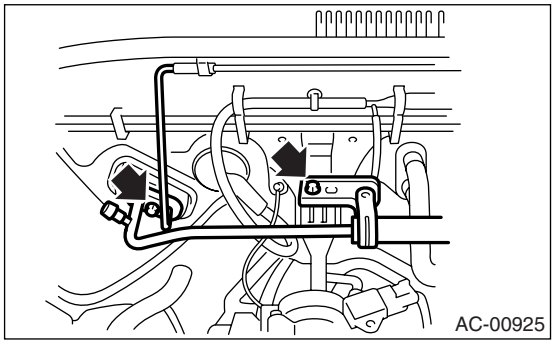
AC-00925

7) Remove the bolt which holds the pipe to evaporator.

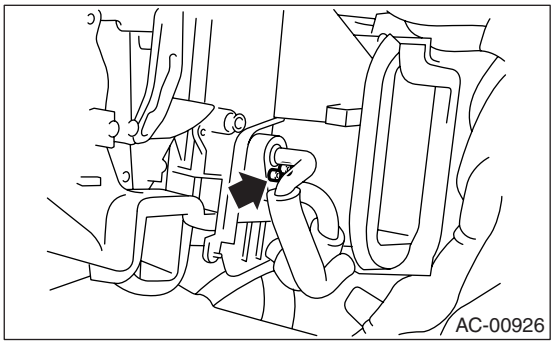
AC-00926

8) Remove the screws and clip to remove the evaporator cover.

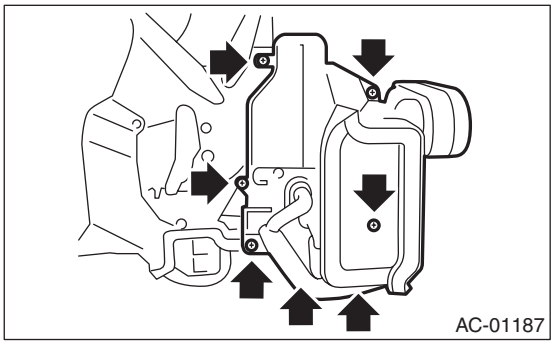
AC-01187

9) Pull out the evaporator (A) in the direction of arrow.

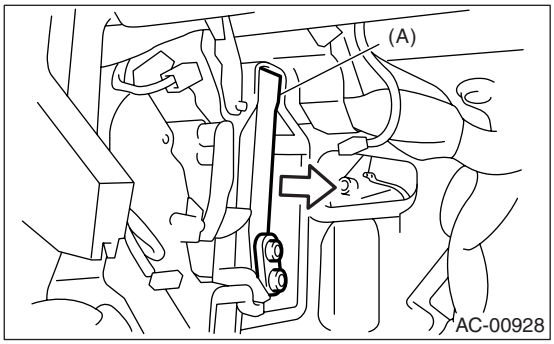

AC-00928

CAUTION:
If the evaporator is replaced, add an appropriate amount of compressor oil to evaporator. <Ref. to AC-25, REPLACEMENT, Compressor Oil.>

B: INSTALLATION

Install in the reverse order of removal.

19.Hose and Tube

A: REMOVAL

CAUTION:
• When disconnecting/connecting hoses, do not apply an excessive force to them. Confirm that no torsion and excessive tension is charged after installing.
• Seal the disconnected hose with a plug or vinyl tape to prevent foreign matter from entering.

1) Disconnect the ground cable from battery.
2) Using the refrigerant recovery system, discharge refrigerant. <Ref. to AC-20, PROCEDURE, Refrigerant Recovery Procedure.>
3) Remove the evaporator unit mounting bolt (A) and low-pressure hose bracket bolt (B).
4) Remove the low-pressure hose attaching bolts (C).
5) Disconnect the low-pressure hose from evaporator unit.
6) Disconnect the low-pressure hose from compressor.
7) Remove the low-pressure hose from vehicle.
8) Remove the high-pressure hose attaching bolt (D).
9) Disconnect the high-pressure hose from compressor.
10) Disconnect the high-pressure hose from condenser.
11) Remove the high-pressure hose from vehicle.
12) Remove the high-pressure attaching bolt (E).
13) Remove the high-pressure tube from vehicle.

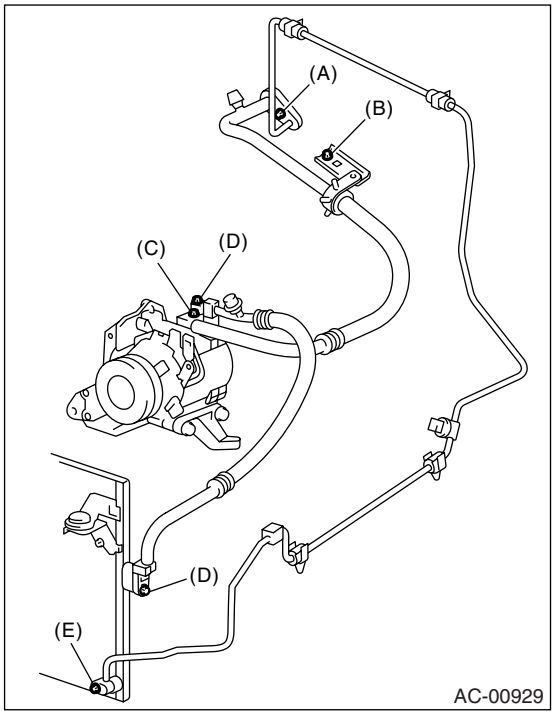

B: INSTALLATION

CAUTION:
• When disconnecting or connecting the hoses, do not apply excessive force to them. Confirm that no torsion and excessive tension is charged after installing.
• Seal the disconnected hose with a plug or vinyl tape to prevent foreign matter from entering.

1) Install in the reverse order of removal.
2) Charge refrigerant. <Ref. to AC-21, PROCEDURE, Refrigerant Charging Procedure.>

Tightening torque:
Refer to "COMPONENT" of "General Description". <Ref. to AC-10, AIR CONDITIONING UNIT, COMPONENT, General Description.>

C: INSPECTION

Check the hoses for cracks, damage and expansion. If any fault is found, replace them with new ones.

20.Relay and Fuse

A: LOCATION

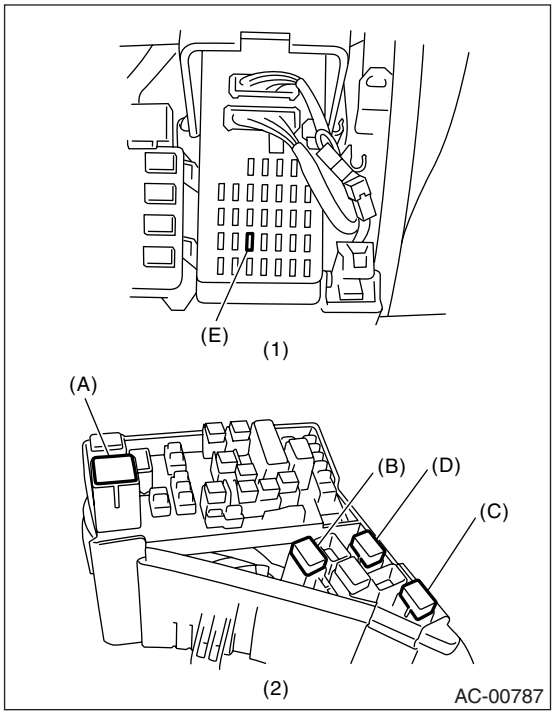

(1) Joint box
(2) Main fuse box

Main Fan Relay 1	(A)
Main Fan Relay 2	(B)
Sub Fan Relay	(C)
A/C Relay	(D)
A/C Fuse	(E)

B: INSPECTION

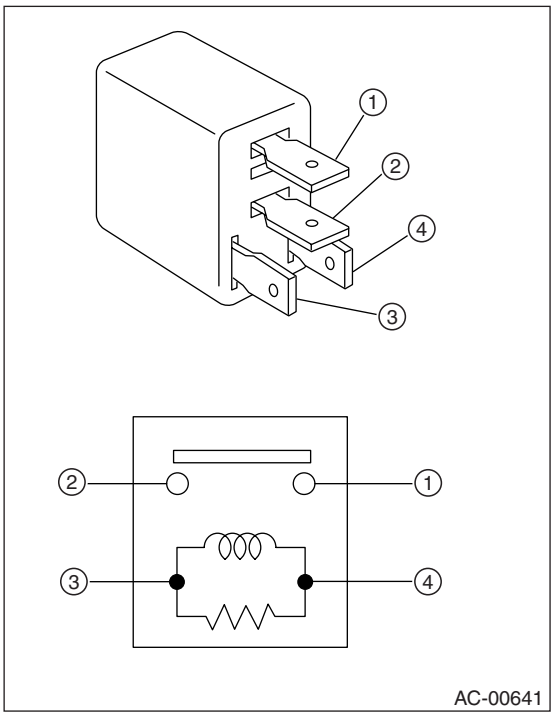

(3) — (4): Continuity exists
(1) — (2): Continuity does not exist

While applying battery voltage to the terminal between (3) and (4), check continuity between (1) and (2).
If no continuity exists, replace the relay with a new one.

21.Pressure Switch (Triple Pressure Switch)

A: INSPECTION

1) Connect the manifold gauge to the service valve on the high-pressure side.
2) Remove the pressure switch harness connector. Using a circuit tester, inspect the ON-OFF operation of pressure switch.

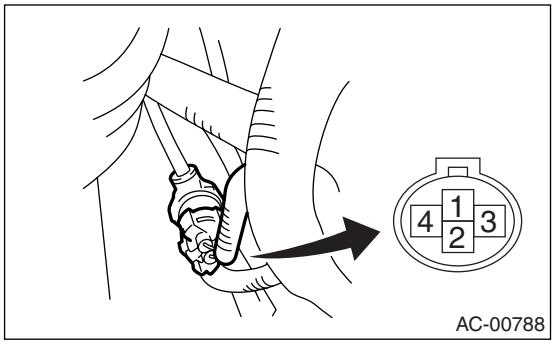

	Terminal No.	Operation	Standard kPa (kg/cm^2, psi)
High and low pressure switch	1 and 2	Turns OFF.	Increasing to $3{,}140^{+50}_{-200}$ ($32.02^{+0.51}_{-2.04}$, $455.4^{+7.25}_{-29.0}$)
			Decreasing to 196±20 (2.00±0.20, 28.4±2.9)
		Turns ON.	Increasing to 225^{+25}_{-29} ($2.29^{+0.25}_{-0.30}$, $32.6^{+3.6}_{-4.2}$)
			Decreasing to 2,550±200 (26.00±2.04, 369.8±29.0)
Middle pressure switch	3 and 4	Turns OFF.	Decreasing to 1,370±120 (14±1, 199±14)
		Turns ON.	Increasing to 1,770±100 (18±1, 256±14)

22.Actuator

A: REMOVAL

1. MODE DOOR ACTUATOR

Disconnect the connector, remove the screw, and then remove the mode door actuator from heater and cooling unit.

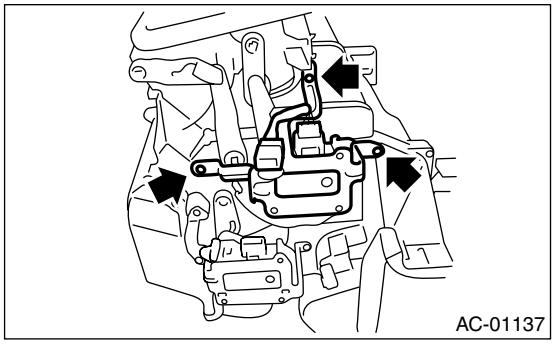

2. INTAKE DOOR ACTUATOR

Disconnect the connector, remove the screw, and then remove the intake door actuator from blower motor unit.

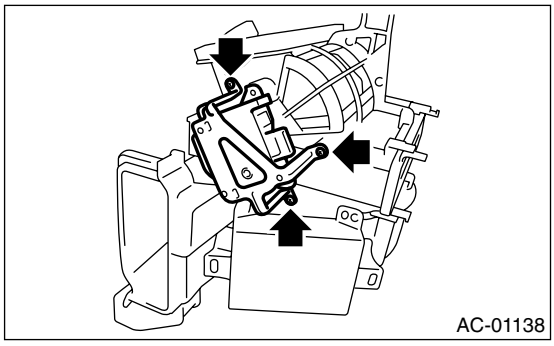

3. AIR MIX DOOR ACTUATOR (AUTO A/C MODEL)

Disconnect the connector, remove the screw, and then remove the air mix door actuator from heater and cooling unit.

- Driver's side

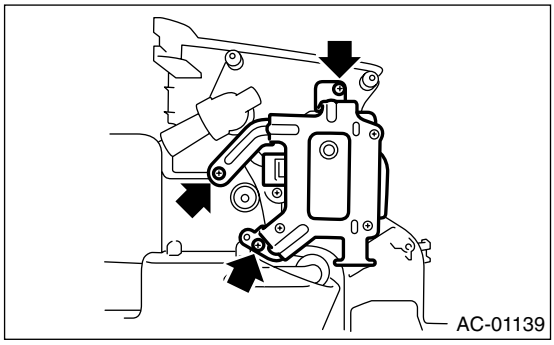

- Passenger's side

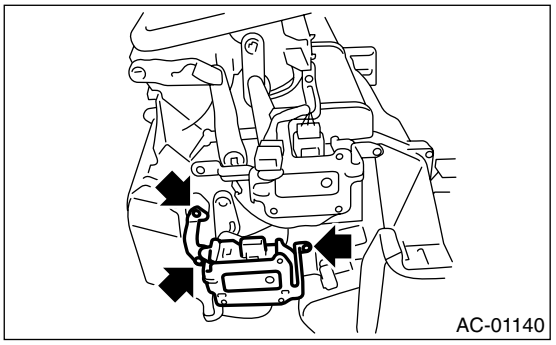

B: INSTALLATION

Install in the reverse order of removal.

23. Ambient Sensor (Auto A/C Model)

A: REMOVAL

1) Open the front hood.
2) Disconnect the ground cable from battery.
3) Disconnect the ambient sensor connector.
4) Remove the ambient sensor from the radiator lower panel.

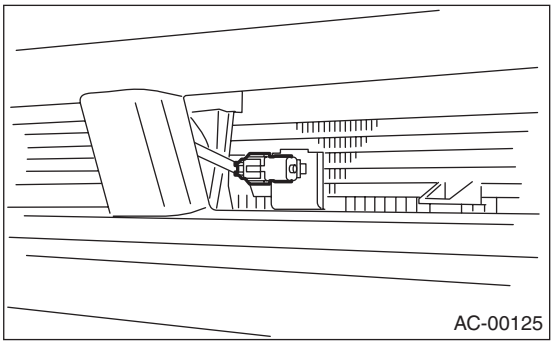

B: INSTALLATION

Install in the reverse order of removal.

C: INSPECTION

<Ref. to AC(diag)-31, AMBIENT SENSOR, Diagnostic Procedure for Sensors.>

24.Sunload Sensor (Auto A/C Model)

A: REMOVAL

1) Disconnect the ground cable from battery.
2) Disconnect the connector and remove the sunload sensor.

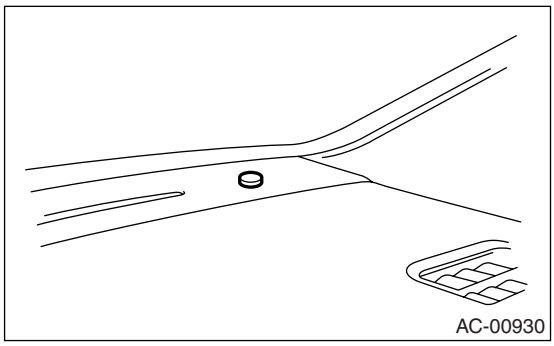

CAUTION:
Be careful not to damage the interior trims when removing the sensor.

B: INSTALLATION

Install in the reverse order of removal.

C: INSPECTION

<Ref. to AC(diag)-37, SUNLOAD SENSOR, Diagnostic Procedure for Sensors.>

25.In-Vehicle Sensor (Auto A/C Model)

A: REMOVAL

1) Disconnect the ground cable from battery.
2) Remove the console side panel of driver's side. <Ref. to EI-54, REMOVAL, Center Console.>
3) Disconnect the connector and aspirator hose, remove the pawl and remove the in-vehicle sensor from center console frame.

CAUTION:
Be careful not to damage the sensors and interior trims when removing.

B: INSTALLATION

Install in the reverse order of removal.

C: INSPECTION

<Ref. to AC(diag)-33, IN-VEHICLE SENSOR, Diagnostic Procedure for Sensors.>

26.Air Vent Grille

A: REMOVAL

1. CENTER GRILLE

1) Disconnect the ground cable from battery.
2) Remove the three pawls and connector to remove center air vent grill.

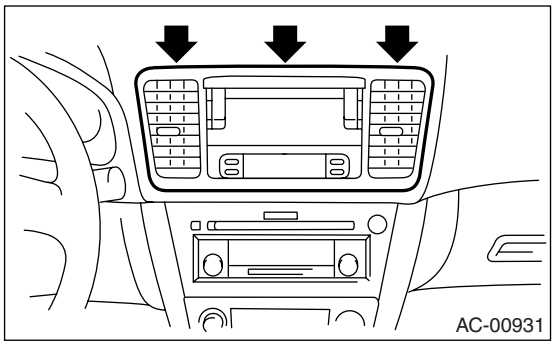

2. SIDE GRILLE

Remove the two pawls to remove side air vent grill.

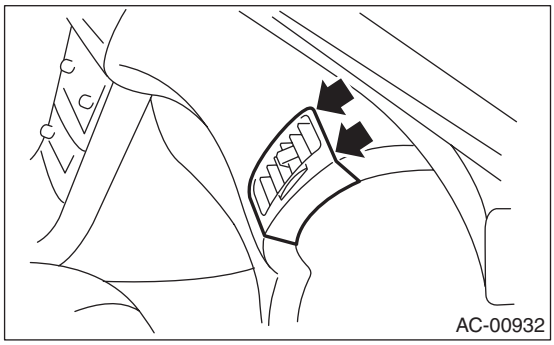

B: INSTALLATION

Install in the reverse order of removal.

C: INSPECTION

1) Check the direction and amount of air can be adjusted smoothly.
2) Check the adjustment can be kept in each position.

27.Heater Duct

A: REMOVAL

1. FRONT HEATER DUCT

1) Remove the instrument panel lower cover. <Ref. to EI-50, REMOVAL, Instrument Panel Lower Cover.>
2) Remove the screws and detach the front heater duct (A).

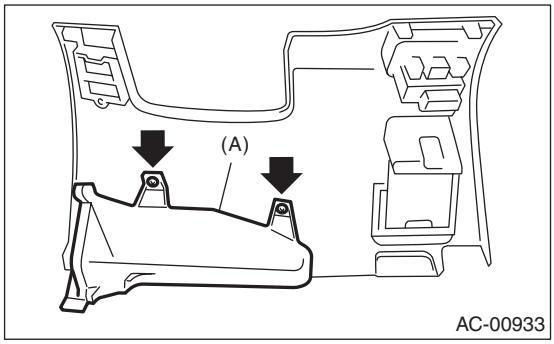

2. REAR HEATER DUCT

1) Remove the heater cooling unit. <Ref. to AC-37, REMOVAL, Heater and Cooling Unit.>
2) Remove the front seats. <Ref. to SE-9, REMOVAL, Front Seat.>
3) Remove the front side sill cover.
4) Pull off the floor mat to remove the rear center heater duct (A) and rear heater duct LH, RH (B).

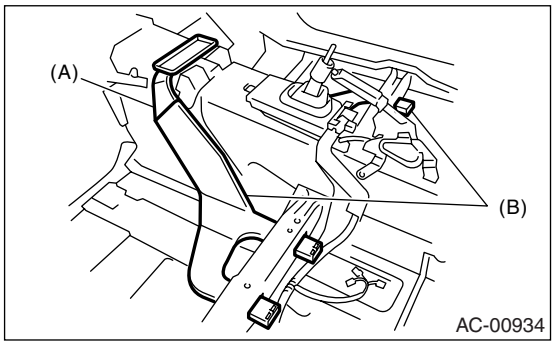

B: INSTALLATION

Install in the reverse order of removal.

28.Heater Vent Duct

A: REMOVAL

1) Remove the instrument panel. <Ref. to EI-50, REMOVAL, Instrument Panel Lower Cover.>
2) Remove the screws and detach the center vent duct (A).
3) Remove the screws and detach the center vent ducts (B).
4) Remove the insulator, remove the screws and detach the defroster duct.

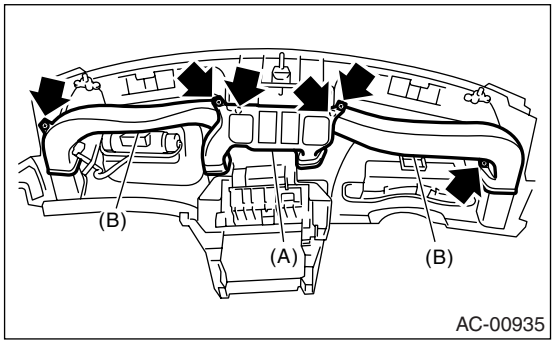

B: INSTALLATION

Install in the reverse order of removal.

29.A/C Filter

A: REPLACEMENT

1) Remove the instrument panel side cover.

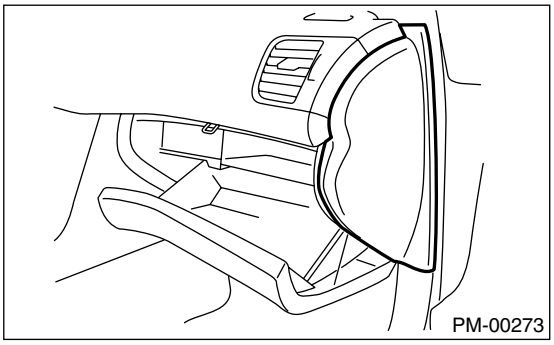

2) Remove the clip and damper (string).

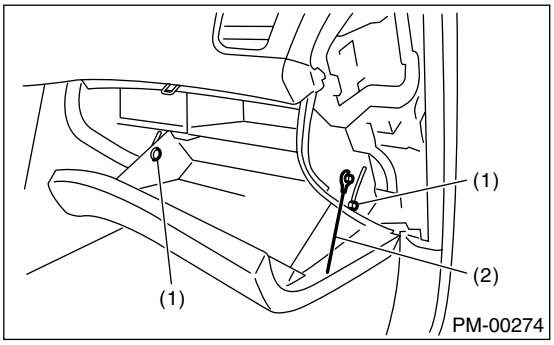

(1) Clip
(2) Damper

3) Remove the A/C filter.

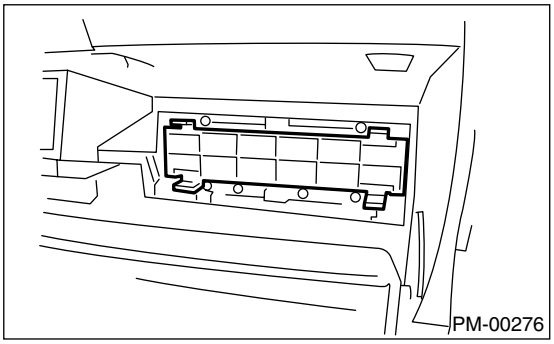

4) Install in the reverse order of removal.

30.General Diagnostic Table

A: INSPECTION

Symptom		Repair order
Blower motor	Doesn't operate.	Fuse
		Blower motor relay
		Blower motor
		Blower motor resistor
		Blower switch
		Wire harness
	Noise	Blower motor
Compressor	Doesn't operate.	Refrigerant
		Fuse
		Air conditioning relay
		Magnet clutch
		Compressor
		Pressure switch
		A/C switch
		Blower switch
		Wire harness
	Noise	V-Belt
		Magnet clutch
		Compressor
Cold air not emitted.		Refrigerant
		V-Belt
		Magnet clutch
		Compressor
		Pressure switch
		A/C switch
		Blower switch
		Wire harness
		Heater duct
		Heater vent duct
Warm air not emitted.		Engine coolant
		Blower switch
		Heater core
		Heater cock solenoid valve
Temperature of air from vents does not change.		Engine coolant
		Air mix door actuator (Auto A/C)
		Wire harness (Auto A/C)
		Temperature control cable (Manual A/C)
Unable to switch blow vents.		Mode door actuator
		Air flow switch
		Wire harness
Unable to switch suction vents.		Air inlet select switch
		Intake door actuator
		Wire harness

HVAC SYSTEM (AUTO A/C) (DIAGNOSTICS)

AC(diag)

		Page
1.	Basic Diagnostic Procedure	2
2.	General Description	3
3.	Electrical Component Location	5
4.	Auto A/C Control Module I/O Signal	8
5.	Diagnostic Chart for Self-Diagnosis	10
6.	Diagnostics for A/C System Malfunction	15
7.	Diagnostic Procedure for Actuators	24
8.	Diagnostic Procedure for Sensors	31
9.	Diagnostics with Phenomenon	41

1. Basic Diagnostic Procedure

A: PROCEDURE

	Step	Check	Yes	No
1	**START INSPECTIONS.** 1) Perform the pre-inspection. <Ref. to AC(diag)-3, INSPECTION, General Description.> 2) Perform the self-diagnosis. <Ref. to AC(diag)-10, OPERATION, Diagnostic Chart for Self-Diagnosis.>	Does the self-diagnosis operate?	Go to step **2.**	<Ref. to AC(diag)-15, A/C OR SELF-DIAGNOSIS SYSTEMS DO NOT OPERATE, Diagnostics for A/C System Malfunction.>
2	**IDENTIFY MALFUNCTION PART.** Identify the malfunction part with self-diagnosis.	Can the malfunction part be identified?	Repair the malfunction part in accordance with each diagnostic chart.	Go to step **3.**
3	**CHECK COMPARTMENT TEMPERATURE.** 1) Turn ON the A/C switch. 2) Turn the temperature control dial at maximum cool position. 3) Check the compartment temperature change.	Does the compartment temperature change?	Go to step **4.**	<Ref. to AC(diag)-20, COMPARTMENT TEMPERATURE DOES NOT CHANGE, OR A/C SYSTEM DOES NOT RESPOND PROMPTLY., Diagnostics for A/C System Malfunction.>
4	**CHECK A/C SYSTEM RESPONSE.** Change the temperature setting, and check the response of A/C system.	Does the A/C system respond quickly?	A/C system is normal.	<Ref. to AC(diag)-20, COMPARTMENT TEMPERATURE DOES NOT CHANGE, OR A/C SYSTEM DOES NOT RESPOND PROMPTLY., Diagnostics for A/C System Malfunction.>

2. General Description

A: CAUTION

1) Never connect the battery in reverse polarity.
• Auto A/C control module may be destroyed instantly.
2) Do not disconnect the battery terminals while the engine is running.
• A large counter electromotive force will be generated in the generator, and this voltage may damage electronic parts such as auto A/C control module, etc.
3) Before disconnecting the connectors of each sensor and the auto A/C control module, be sure to turn off the ignition switch.
• Auto A/C control module may be damaged.
4) Every A/C-related part is a precision part. Do not drop them.
5) Airbag system wiring harness is routed near the A/C control panel and junction box.

CAUTION:
• For airbag system, yellow-colored wiring harness and connectors are all used. Do not use the electrical test equipment on these circuits.
• Be careful not to damage the airbag system wiring harness when servicing the A/C control panel and junction box.

B: INSPECTION

Before performing the diagnosis, check the following items which might affect A/C system problems.

1. BATTERY

1) Measure the battery voltage and specific gravity of electrolyte.

Standard voltage: 12 V

Specific gravity: More than 1.260

2) Check the condition of the fuses for A/C system power supply and other fuses.
3) Check the condition of harness and harness connector connections.

2. ASPIRATOR HOSE

1) Turn the ignition switch to ON, and press the A/C switch.
2) Turn the temperature control dial at maximum hot position.
3) Turn the air flow control dial to “DEF” position.
4) Turn the fan speed control dial to 4th position.
5) Approach a strip of paper in front of the in-vehicle sensor suction port (A) located in the driver’s side console side panel, and check that air is being sucked into the port by seeing the paper moving towards the port.

NOTE:
Be careful not to let the paper get sucked into the port.

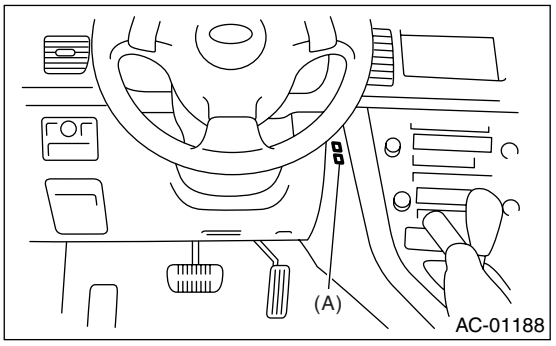

6) If the paper does not move at all, remove the driver’s side console side panel <Ref. to EI-54, REMOVAL, Center Console.> and check for improper connection of the aspirator hose, in-vehicle sensor and heater unit, and repair them if necessary.

3. A/C LINE

Check the connection for A/C line (A) and lower side high-pressure pipe.

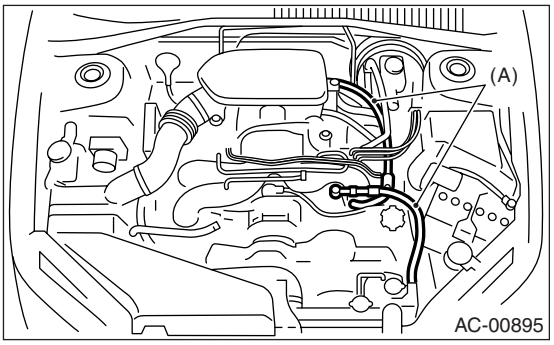

4. CONTROL LINKAGE

1) Check the state of mode door linkage.
2) Check the state of air mix door linkage.
3) Check the state of intake door linkage.

5. CONTROL SWITCHES

Start and warm-up the engine completely.
1) Inspection using switches

No.	Point to check	Switch operation	Judgment standard
1	OFF switch	Press the OFF switch.	Setting temperature display goes out. • Blower fan: OFF • Inlet opening: External air • Compressor: OFF
2	AUTO switch, Driver's side temperature control dial and passenger's side temperature control dial	1) Press the AUTO switch. 2) Turn the temperature control dial to the left fully, and set to 18°C (64°F) (maximum cool position).	AUTO display illuminates. • Outlet air temperature: COOL • Blower fan: HI (AUTO) • Outlet opening: FACE • Inlet opening: AUTO • Compressor: AUTO
		3) Turn the temperature control dial to the right slowly, and change the setting from 18°C (64°F) (maximum cool position) to 32°C (90°F).	• Outlet air temperature: COOL → HOT • Blower fan: AUTO • Outlet opening: FACE → B/L → FOOT • Inlet opening: AUTO • Compressor: AUTO
		4) Turn the temperature control dial to the right fully, and set to 32°C (90°F) (maximum hot position).	• Outlet air temperature: HOT • Blower fan: HI (AUTO) • Outlet opening: FOOT • Inlet opening: Ambient (AUTO) • Compressor: AUTO
3	Defroster switch	Press the defroster switch.	Defroster switch indicator illuminates. • Outlet air temperature: AUTO • Blower fan: AUTO • Outlet opening: DEF • Inlet opening: External air • Compressor: ON
4	FRESH/RECIRC switch	Press the FRESH/RECIRC switch.	Inlet opening switches RECIRC → FRESH or FRESH → RECIRC each time pressing the switch.
5	MODE switch	Press the MODE switch.	Outlet opening switches FACE → B/L → FOOT → F/D each time pressing the switch.
6	FAN switch	Press the FAN (+) switch.	Inlet opening switches LO → M1 → M2 → M3 → M4 → HI each time pressing the switch.

2) Compressor operation inspection

No.	Point to check	Switch operation	Judgment standard
1	Compressor	1) Turn the A/C switch to ON. 2) Set the FAN switch between LO and HI.	Compressor: ON

3) Inspection of illumination control

No.	Point to check	Switch operation	Judgment standard
1	Illumination	Turn the lighting switch to ON.	Illumination comes on.

3. Electrical Component Location

A: LOCATION

1. ENGINE COMPARTMENT

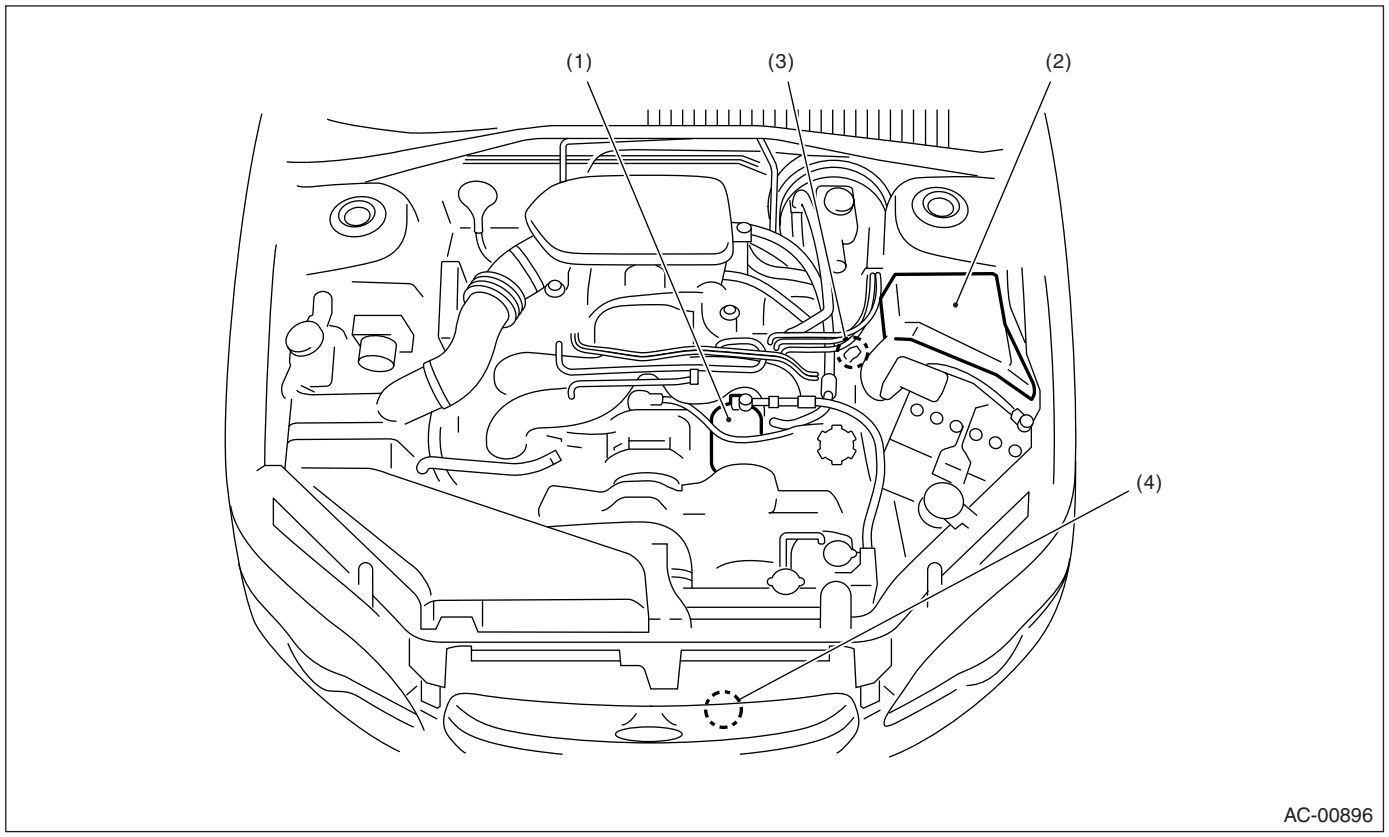

(1) A/C compressor
(2) A/C relay
(3) Pressure switch
(4) Ambient sensor

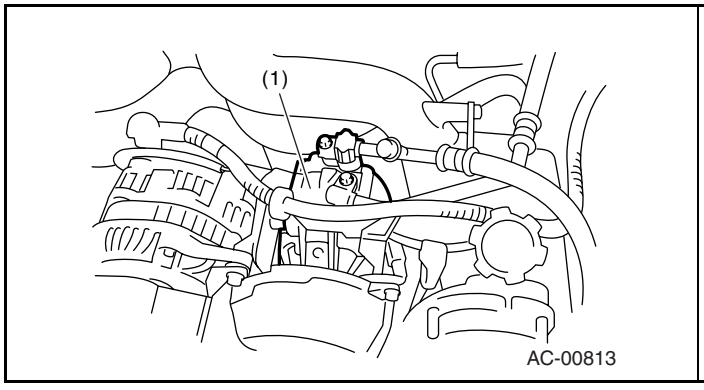

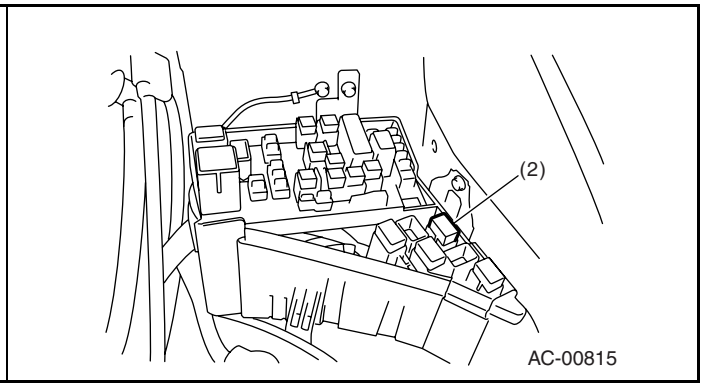

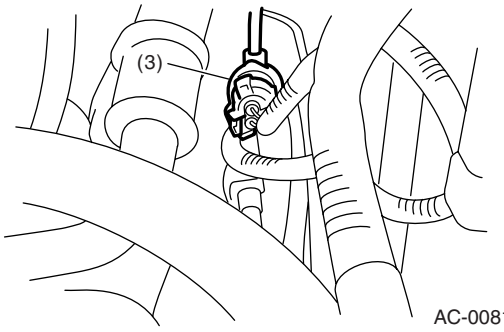

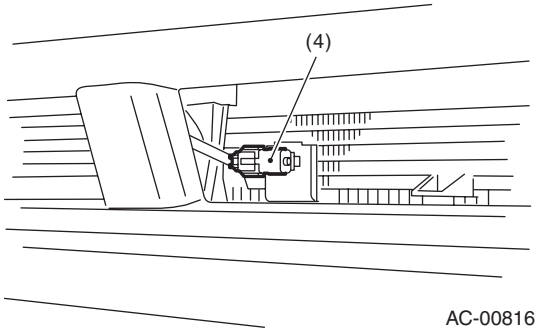

2. PASSENGER COMPARTMENT

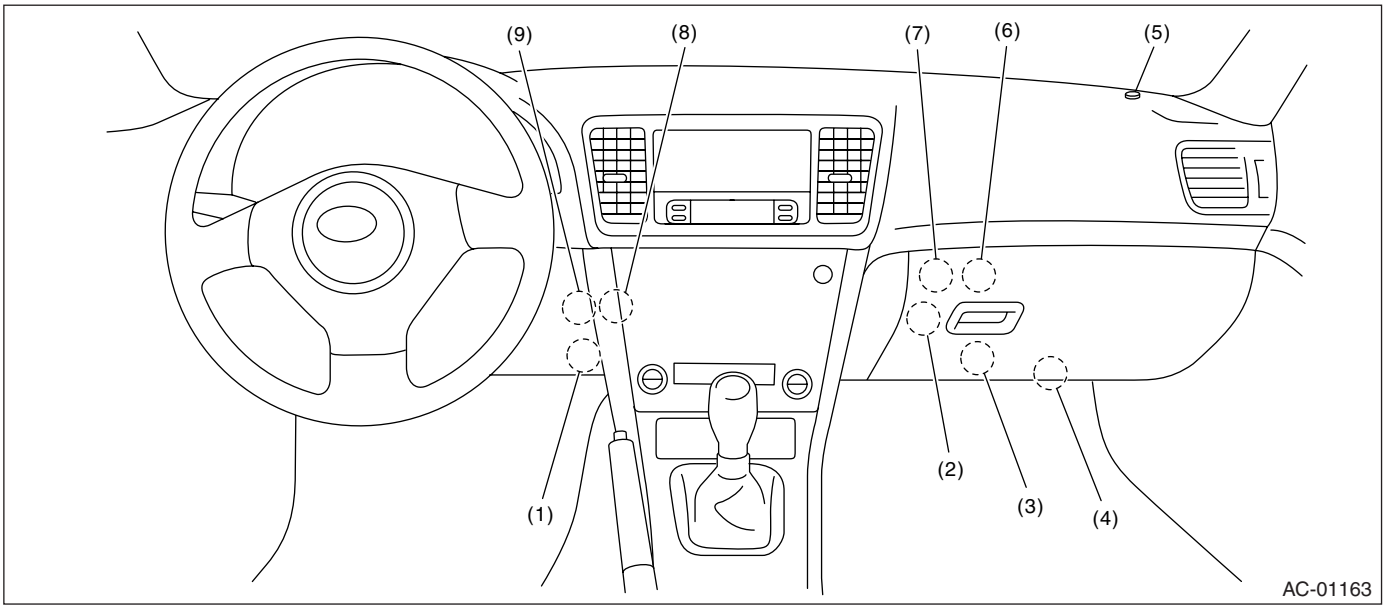

(1) Evaporator sensor
(2) Passenger's side air mix door actuator
(3) Auto A/C control module
(4) Blower motor
(5) Sunload sensor
(6) Intake door actuator
(7) Mode door actuator
(8) In-vehicle sensor
(9) Driver's side air mix door actuator

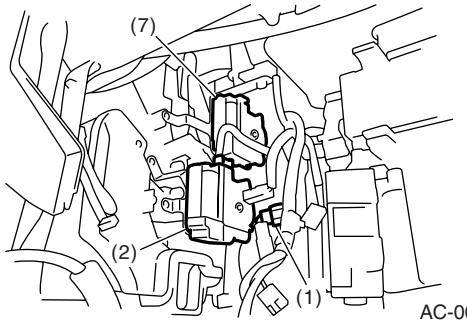

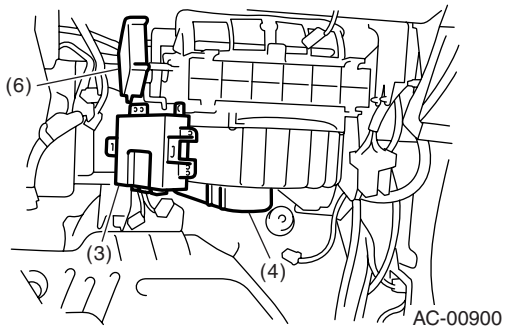

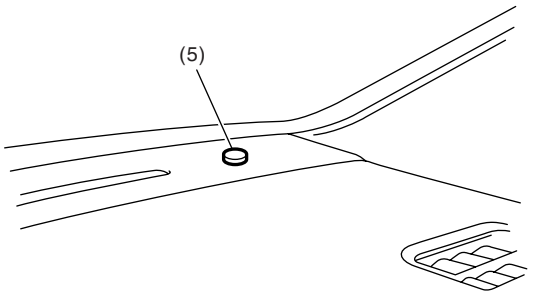
(5)
AC-00899

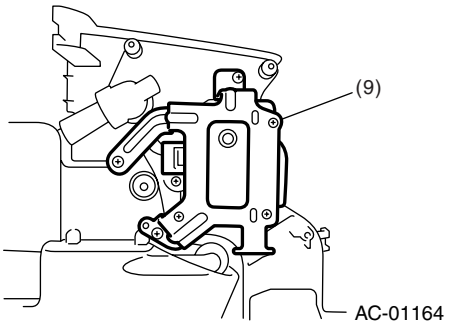
(9)
AC-01164

4. Auto A/C Control Module I/O Signal

A: ELECTRICAL SPECIFICATION

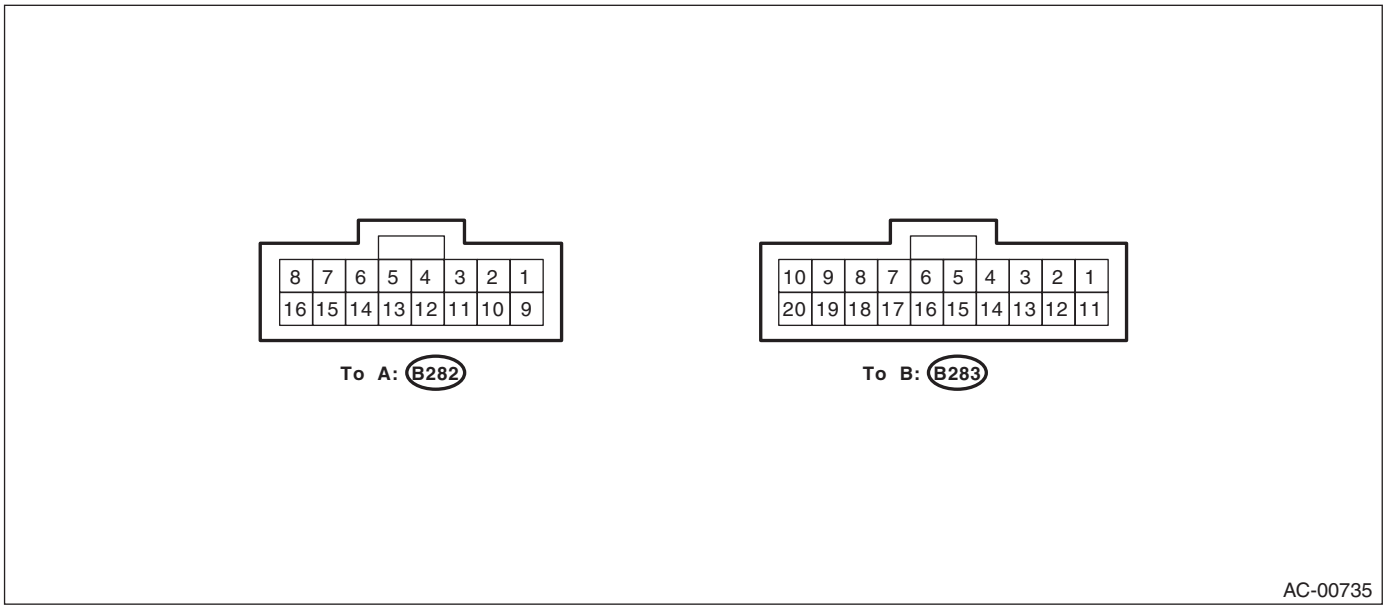

Terminal No.	Remarks	Measuring conditions	Standard value
A1	Battery power supply	Ignition switch: OFF	Battery voltage
A2	ACC power supply	Ignition switch: ACC	Battery voltage
A3	Mode door actuator position signal	Mode door: FACE position	4 V
		Mode door: DEF position	1 V
A4	Passenger's side air mix door actuator position signal	Air mix door: Maximum cool position	4 V
		Air mix door: Maximum hot position	1 V
A5	In-vehicle sensor	Ignition switch: ON	Less than 5 V
A6	Sunload sensor	Ignition switch: ON, With sunload (No sunload: 0 V)	3 V
A8	Sensor power supply	Ignition switch: ON	5 V
A9	Ignition power supply	Ignition switch: ON	Battery voltage
A10	A/C cut signal	Ignition switch: ON	Battery voltage
		When operating pressure SW	0 V
A12	Driver's side air mix door actuator position signal	Air mix door: Maximum cool position	4 V
		Air mix door: Maximum hot position	1 V
A13	Evaporator center	Ignition switch: ON	Less than 5 V
A14, A16	Ground	Continuity to chassis ground	0 Ω
A15	Sensor ground	Continuity to chassis ground	0 Ω
B1, B11	Ambient sensor, engine coolant temperature sensor	—	*1
B2	Blower motor control	Ignition switch : ON, Blower switch : ON	0.45 V
B3	Blower motor control	Ignition switch : ON, Blower switch : ON	9.05 V
B4	RAM monitor	—	*1
B5	RAM monitor	—	*1
B6	A/C ON signal	A/C ON (A/C OFF: 0 V)	7 — 14 V
B7	Mode door actuator power supply	When switching mode door from DEF → FACE	Battery voltage
B17		When switching mode door from FACE → DEF	Battery voltage
B8	Passenger's side air mix door actuator power supply	When switching air mix door from HOT → COOL	Battery voltage
B18		When switching air mix door from COOL → HOT	Battery voltage
B9	Driver's side air mix door actuator power supply	When switching air mix door from HOT → COOL	Battery voltage
B19		When switching air mix door from COOL → HOT	Battery voltage

Terminal No.	Remarks	Measuring conditions	Standard value
B10	Intake door actuator	FRESH (RECIRC: Battery voltage)	0 V
B20		RECIRC (FRESH: Battery voltage)	0 V
B13	Blower fan ON signal	When blower fan is rotating (Not rotating: Battery voltage)	0 V
B14	RAM monitor	—	*1
B15, B16	Control panel	—	*1

*1: Unable to measure the voltage for digital signal.

B: WIRING DIAGRAM

1. AIR CONDITIONER AUTO A/C MODEL

<Ref. to WI-113, WIRING DIAGRAM, Air Conditioning System.>

5. Diagnostic Chart for Self-Diagnosis

A: OPERATION

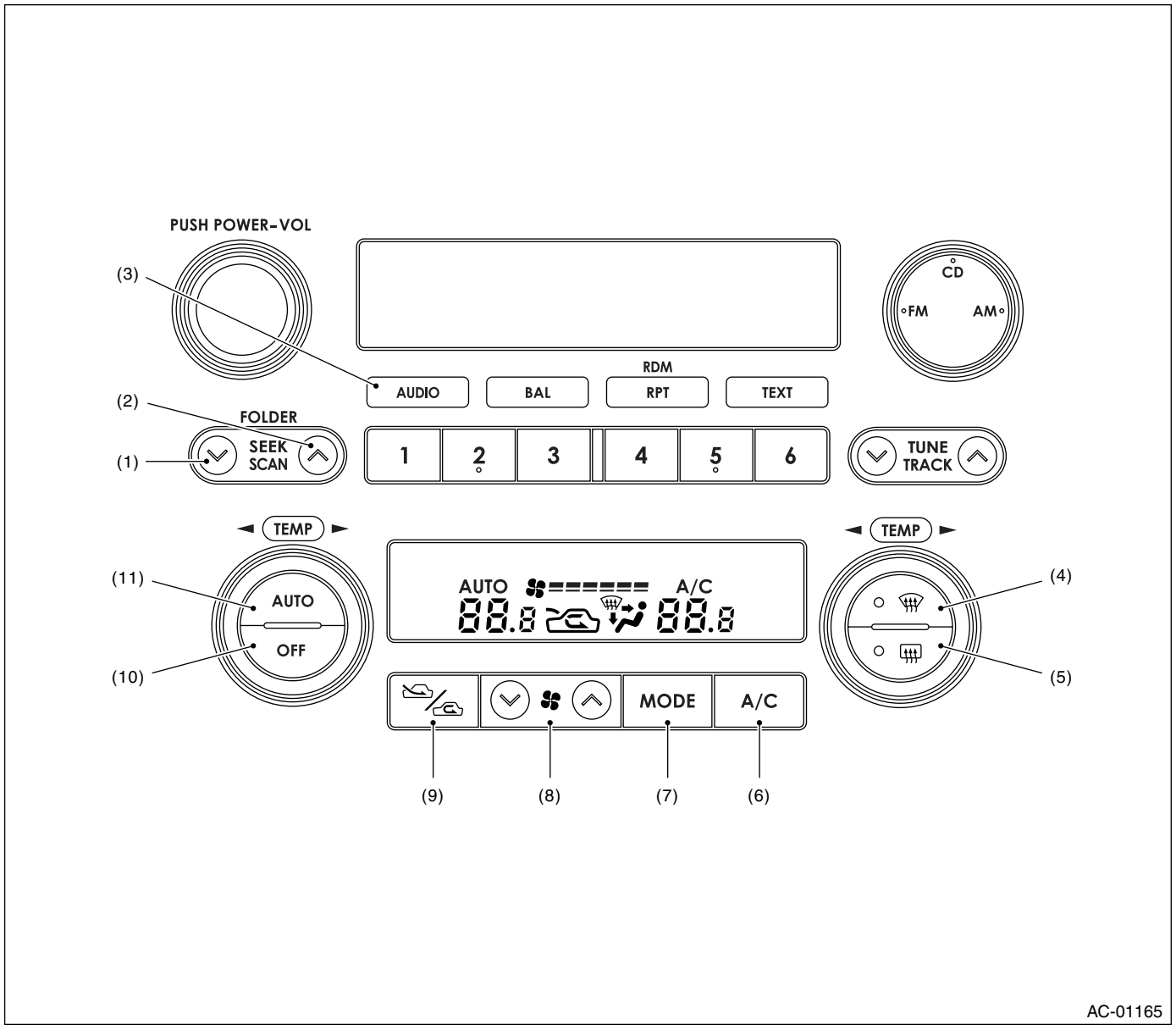

(1) SEEK DOWN switch
(2) SEEK UP switch
(3) AUDIO switch
(4) Defroster switch
(5) Rear window defogger switch
(6) A/C switch
(7) Air flow control switch
(8) Fan switch
(9) FRESH/RECIRC switch
(10) OFF switch
(11) AUTO switch

NOTE:
For A/C system self-diagnosis, there is one that checks the control panel, and the other that checks the whole control system (sensor, actuator, blower motor, etc.). Perform the self-diagnosis for control panel first, and then perform the self-diagnosis for control system.

1. A/C CONTROL PANEL SELF-DIAGNOSIS

	Step	Check	Yes	No
1	**SET SELF-DIAGNOSIS MODE BY OPERATING A/C CONTROL PANEL.** 1) Turn the ignition switch from OFF to ACC, and wait for 2 seconds. 2) Turn the ignition switch to ON with the AUDIO switch and SEEK UP switch pressed. 3) The screen display and indicator illuminate.	Does the self-diagnosis mode operate?	Go to step **2.**	<Ref. to AC(diag)-15, A/C OR SELF-DIAGNOSIS SYSTEMS DO NOT OPERATE, Diagnostics for A/C System Malfunction.>
2	**CHECK DISPLAY AND INDICATOR.** Check if all the screen display and indicators come on and then go off. NOTE: "11" — "14" is displayed in the screen when malfunction occurs.	Do all the screen display and indicators come on and then go off?	Go to step **3.**	Replace the A/C control panel.
3	**CHECK SWITCH AND TEMPERATURE CONTROL DIAL INPUT.** According to the switch check table, press each switch or turn the temperature control dial, and check the relative screen display and indicators illuminate. <Ref. to AC(diag)-12, SWITCH CHECK TABLE, OPERATION, Diagnostic Chart for Self-Diagnosis.>	Does the screen display related to each switch and dial input illuminate?	Go to step **4.**	Replace the A/C control panel.
4	**CHECK A/C CONTROL PANEL COMMUNICATION.** 1) Turn the ignition switch to OFF. 2) Disconnect the auto A/C control module harness connector. 3) Using a suitable lead wire, short the terminal No. 15 and No. 16 of auto A/C control module harness connector (B283). 4) Turn the ignition switch from OFF to ACC, and wait for 2 seconds. 5) Turn the ignition switch to ON with the AUDIO switch and SEEK SOWN switch pressed. 6) When no malfunction occurs in the control panel communication, "CL" is displayed in the screen; and when malfunction occurs, "OP" is displayed.	Is "CL" displayed in the screen?	A/C control panel is normal. Turn the ignition switch to OFF, and connect the auto A/C control module harness connector.	Replace the A/C control panel.

2. SWITCH CHECK TABLE

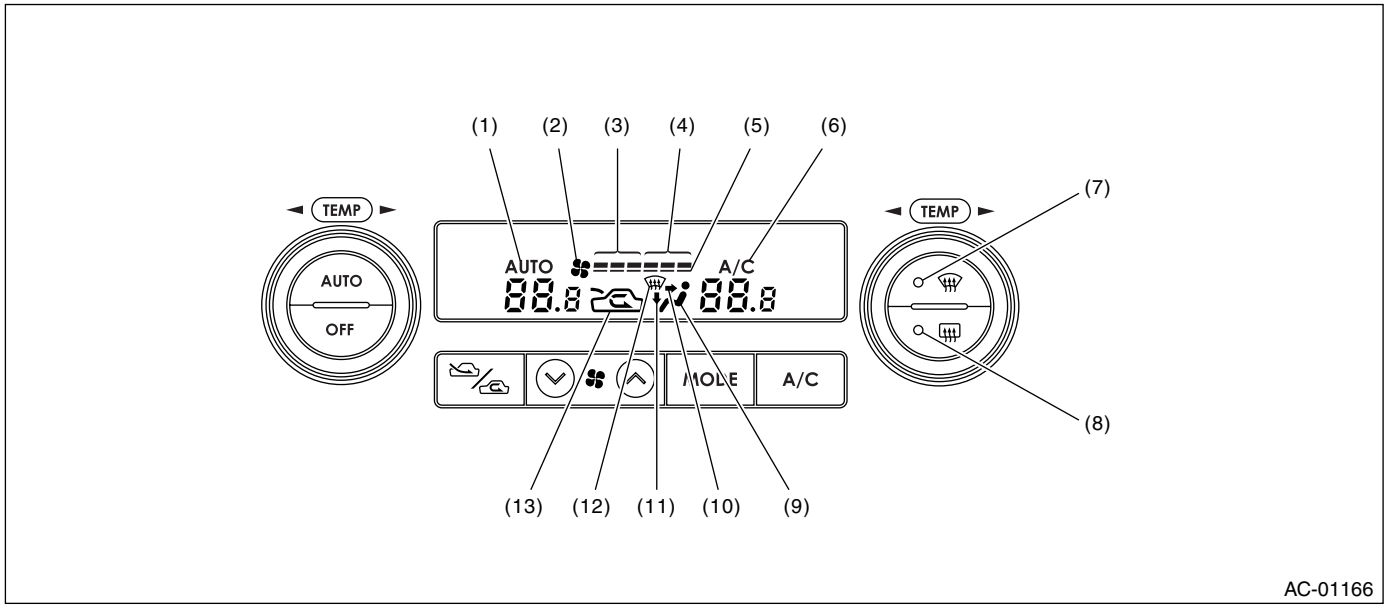

Switch	Display screen	Switch	Display screen
A/C switch	(6)	FAN switch (+)	(4)
AUTO switch	(1)	FAN switch (–)	(3)
Air flow control switch	(9)	Driver's side temperature control dial	(10) (12)
FRESH/RECIRC	(13)	Passenger's side temperature control dial	(11) (12)
Defroster switch	(7)	OFF switch	(2) (5)
Rear defogger switch	(8)		

3. A/C CONTROL SYSTEM SELF-DIAGNOSIS

	Step	Check	Yes	No
1	**SET SELF-DIAGNOSIS MODE BY OPERATING A/C CONTROL PANEL.** 1) Turn the ignition switch from OFF to ACC, and wait for 2 seconds. 2) Start the engine with the auto switch and FRESH/RECIRC switch pressed. NOTE: Self-diagnosis can also be performed with ignition switch ON, but start the engine because telling the magnet clutch operation is difficult. 3) All the indicator blinks four times.	Does the self-diagnosis mode operate?	Go to step **2.**	<Ref. to AC(diag)-15, A/C OR SELF-DIAGNOSIS SYSTEMS DO NOT OPERATE, Diagnostics for A/C System Malfunction.>
2	**CHECK EACH SENSOR AND POTENTIOMETER** 1) After the indicators are completed to blink, automatically change to the inspection mode of sensor and potentiometer. NOTE: Display items can be changed each time the A/C switch is pressed. (Step Operation) 2) When malfunction occurs in each sensor and potentiometer, codes are displayed on the screen. When no malfunction occurs in each sensor and potentiometer, code “20” is displayed on the screen. 3) Identify the defective sensor according to the sensor check table. <Ref. to AC(diag)-14, SENSOR CHECK TABLE, OPERATION, Diagnostic Chart for Self-Diagnosis.>	Are other codes except “20” displayed?	Repair the defective sensor. <Ref. to AC(diag)-31, Diagnostic Procedure for Sensors.>	Go to step **3.**
3	**CHECK EACH ACTUATOR, BLOWER FAN AND MAGNET CLUTCH.** 1) After completing each sensor and potentiometer inspection, change to the inspection mode of actuator, blower fan and magnet clutch by pressing the defroster switch. 2) Each mode will change and operate automatically every four seconds. NOTE: Operation mode items can be changed each time the A/C switch is pressed. (Step Operation) 3) Check the operation of actuator, blower fan and magnet clutch in each mode according to the operating mode table. <Ref. to AC(diag)-14, OPERATING MODE TABLE, OPERATION, Diagnostic Chart for Self-Diagnosis.>	Do the actuator, blower fan and magnet clutch operate along the operating mode table?	A/C control system is normal. Press the OFF switch and complete the self-diagnosis mode.	Repair the malfunction part in accordance with each diagnostic chart. <Ref. to AC(diag)-15, Diagnostics for A/C System Malfunction.> or <Ref. to AC(diag)-24, Diagnostic Procedure for Actuators.>

4. SENSOR CHECK TABLE

NOTE:
When the sunload sensor check is conducted indoors or in the shade, open circuit might be indicated. Always check the sunload sensor at the place where the sun shines directly on it.

Display screen (Malfunction at present) *1	SENSOR	Trouble contents
21/AUTO Blink	In-vehicle sensor	Open
−21/AUTO Blink		Short
22/AUTO Blink	Ambient sensor	Sensor trouble or communication malfunction
23/AUTO Blink	Evaporator sensor	Open
−23/AUTO Blink		Short
24/AUTO Blink	Engine coolant temperature sensor	Sensor trouble or communication malfunction
25 Blink	Sunload sensor	Open *2
−25/AUTO Blink		Short
26/AUTO Blink	Driver's side air mix door actuator potentiometer	COOL
27/AUTO Blink		HOT
−26/AUTO Blink	Passenger's side air mix door actuator potentiometer	COOL
−27/AUTO Blink		HOT
28/AUTO Blink	Mode door actuator potentiometer	FACE
29/AUTO Blink		DEF
20 Blink	When all conditions are normal	

*1: "AUTO" display does not blink when past malfunction occurred. Past malfunction means that abnormal signal had input for a certain time continuously in the past.
*2: Present malfunction only is displayed for sunload sensor open circuit.

5. OPERATING MODE TABLE

Display screen	FRESH/RECIRC door	Mode door	Air mix door*	Blower fan	A/C compressor (Magnet clutch)
31	FRESH	FACE	Maximum cool	LO	OFF
32	RECIRC	FACE	Maximum cool	LO	ON
33	RECIRC	FACE	Maximum cool	M1	ON
34	FRESH	B/L	50%	M1	ON
35	FRESH	FOOT	50%	M1	ON
36	FRESH	FOOT	Maximum hot	M3	ON
37	FRESH	F/D	Maximum hot	M3	ON
38	FRESH	DEF	Maximum hot	HI	ON

*: Same opening angle for both driver's and passenger's side.

6. Diagnostics for A/C System Malfunction

A: A/C OR SELF-DIAGNOSIS SYSTEMS DO NOT OPERATE

TROUBLE SYMPTOM:

- "Set" temperature is not indicated on the display, switch LEDs are faulty and switches do not operate.
- Self-diagnosis system does not operate.

WIRING DIAGRAM:

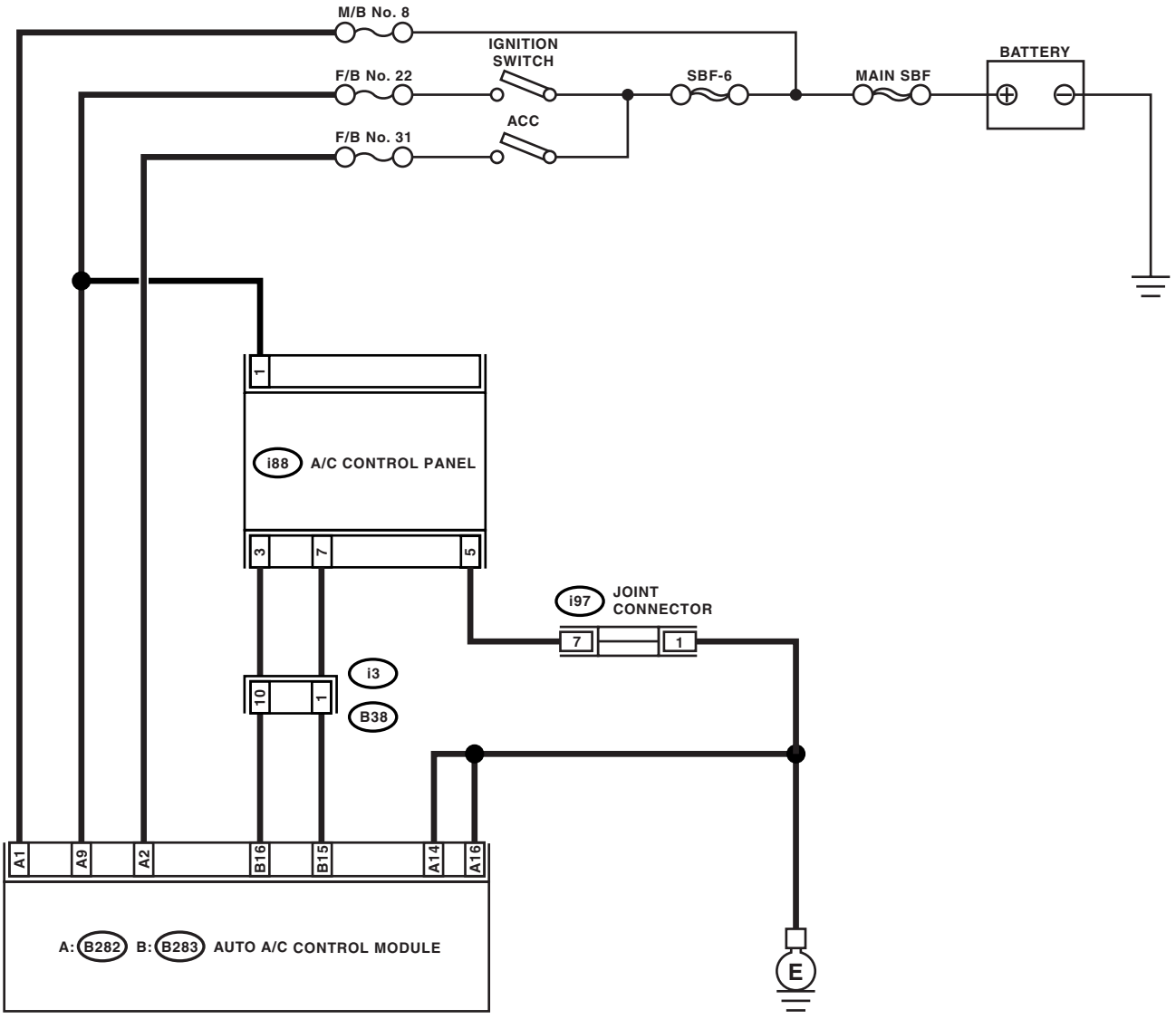

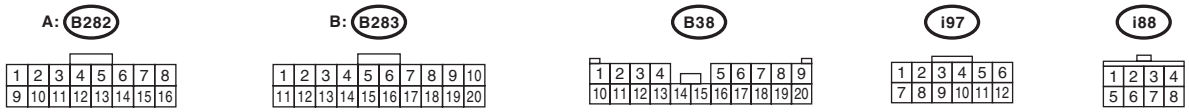

AC-01167

	Step	Check	Yes	No
1	**CHECK FUSE.** 1) Turn the ignition switch to OFF. 2) Remove the fuse No. 8 from main fuse box. 3) Check the condition of fuse.	Is the fuse blown-out?	Replace the fuse.	Go to step **2.**
2	**CHECK FUSE.** 1) Turn the ignition switch to OFF. 2) Remove the fuse No. 22 and 31 from fuse & relay box. 3) Check the condition of fuse.	Is the fuse blown-out?	Replace the fuse.	Go to step **3.**
3	**CHECK A/C CONTROL PANEL POWER CIRCUIT.** Measure the voltage between A/C control panel harness connector terminal and chassis ground after turning the ignition switch to ON position. ***Connector & terminal*** ***(i88) No. 1 (+) — Chassis ground (−):***	Is the voltage more than 10 V?	Go to step **4.**	Check the harness for open or short circuit between A/C control panel and fuse.
4	**CHECK A/C CONTROL PANEL GROUND POWER CIRCUIT.** Measure the resistance in harness between A/C control panel and chassis ground after turning the ignition switch to OFF position. ***Connector & terminal*** ***(i88) No. 5 — Chassis ground:***	Is the resistance less than 10 Ω?	Go to step **5.**	Repair the harness for ground line.
5	**CHECK AUTO A/C CONTROL MODULE POWER CIRCUIT.** Measure the voltage between auto A/C control module connector terminal and chassis ground after turning the ignition switch to OFF position. ***Connector & terminal*** ***(B282) No. 1 (+) — Chassis ground (−):***	Is the voltage more than 10 V?	Go to step **6.**	Check the harness for open or short circuit between auto A/C control module and fuse.
6	**CHECK AUTO A/C CONTROL MODULE POWER CIRCUIT.** Measure the voltage between auto A/C control module connector terminal and chassis ground after turning the ignition switch to ACC position. ***Connector & terminal*** ***(B282) No. 2 (+) — Chassis ground (−):***	Is the voltage more than 10 V?	Go to step **7.**	Check the harness for open or short circuit between auto A/C control module and fuse.
7	**CHECK AUTO A/C CONTROL MODULE POWER CIRCUIT.** Measure the voltage between auto A/C control module connector terminal and chassis ground after turning the ignition switch to ON position. ***Connector & terminal*** ***(B282) No. 9 (+) — Chassis ground (−):***	Is the voltage more than 10 V?	Go to step **8.**	Check the harness for open or short circuit between auto A/C control module and fuse.
8	**CHECK AUTO A/C CONTROL MODULE GROUND CIRCUIT.** Measure the resistance in harness between auto A/C control module and chassis ground. ***Connector & terminal*** ***(B282) No. 14, No. 16 — Chassis ground:***	Is the resistance less than 5 Ω?	Go to step **9.**	Repair the harness for ground line.
9	**CHECK COMMUNICATION CIRCUIT.** Measure the resistance in harness between A/C control panel and auto A/C control module. ***Connector & terminal*** ***(i88) No. 3 — (B283) No. 16:*** ***(i88) No. 7 — (B283) No. 15:***	Is the resistance less than1 Ω?	Go to step **10.**	Repair the harness.

	Step	Check	Yes	No
10	**CHECK POOR CONTACT.** Check poor contact in auto A/C control module connector.	Is there poor contact in connector?	Repair the connector.	Replace the auto A/C control module.

B: BLOWER FAN DOES NOT ROTATE.

TROUBLE SYMPTOM:

- Blower motor does not rotate.
- Blower motor does not rotate in “HI”.

WIRING DIAGRAM:

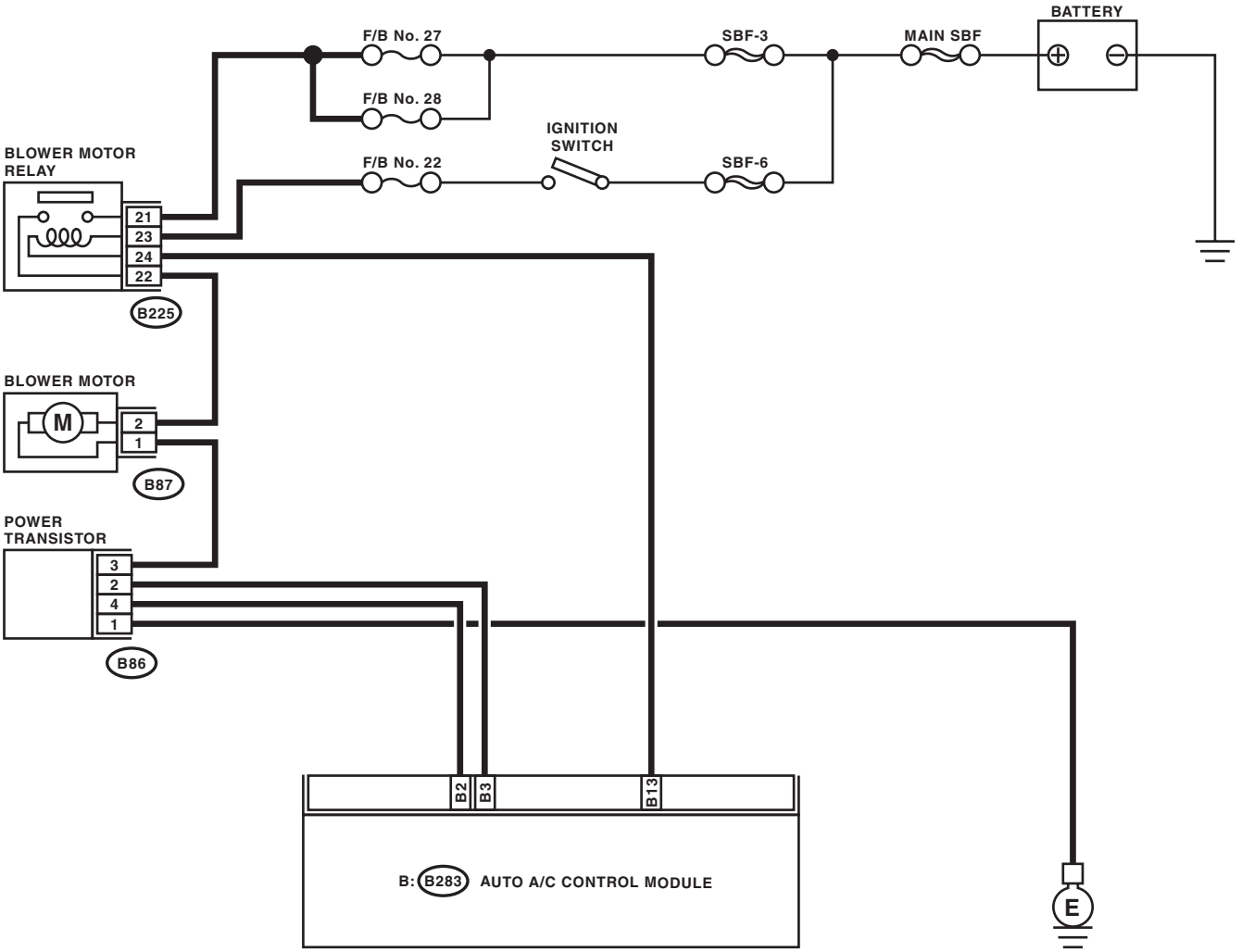

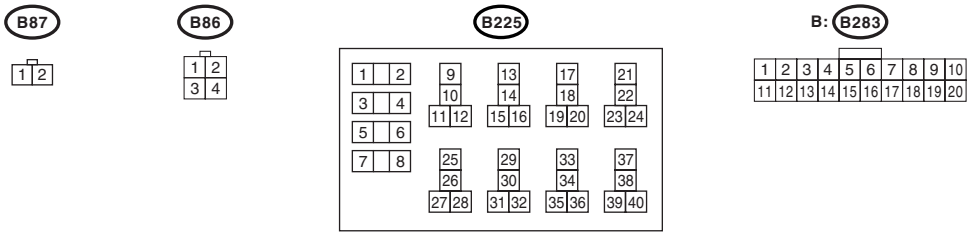

AC-01168

	Step	Check	Yes	No
1	**CHECK FUSE.** 1) Remove the fuse No. 22, 27 and 28 from fuse & relay box. 2) Check the condition of fuse.	Is any fuse blown-out?	Replace the fuse.	Go to step **2.**
2	**CHECK POWER SUPPLY FOR BLOWER MOTOR.** 1) Turn the ignition switch to ON. 2) Turn the blower switch to ON. 3) Measure the voltage between blower motor and chassis ground. ***Connector & terminal*** ***(B87) No. 2 (+) — Chassis ground (−):***	Is the voltage more than 10 V?	Go to step **3.**	Repair the open circuit of blower motor power supply line harness.
3	**CHECK BLOWER MOTOR RELAY.** 1) Turn the ignition switch to OFF. 2) Remove the blower motor relay. 3) Connect the battery positive (+) terminal to terminal No. 23 of blower motor relay, and negative (−) terminal to terminal No. 24. 4) Measure the resistance between terminals No. 21 and 22. ***Terminals*** ***(B225) No. 21 — (B225) No. 22:***	Is the resistance less than 1 Ω?	Go to step **4.**	Replace the blower motor relay.
4	**CHECK BLOWER MOTOR.** 1) Disconnect the connector from blower motor. 2) Connect the battery positive (+) terminal to terminal No. 2 of blower motor connector, and negative (−) terminal to terminal No. 1. 3) Make sure the blower motor runs.	Does the blower motor run?	Go to step **5.**	Replace the blower motor.
5	**CHECK POOR CONTACT.** Check poor contact in auto A/C control module connector.	Is there poor contact in connector?	Repair the connector.	Replace the auto A/C control module.

C: COMPARTMENT TEMPERATURE DOES NOT CHANGE, OR A/C SYSTEM DOES NOT RESPOND PROMPTLY.

WIRING DIAGRAM:

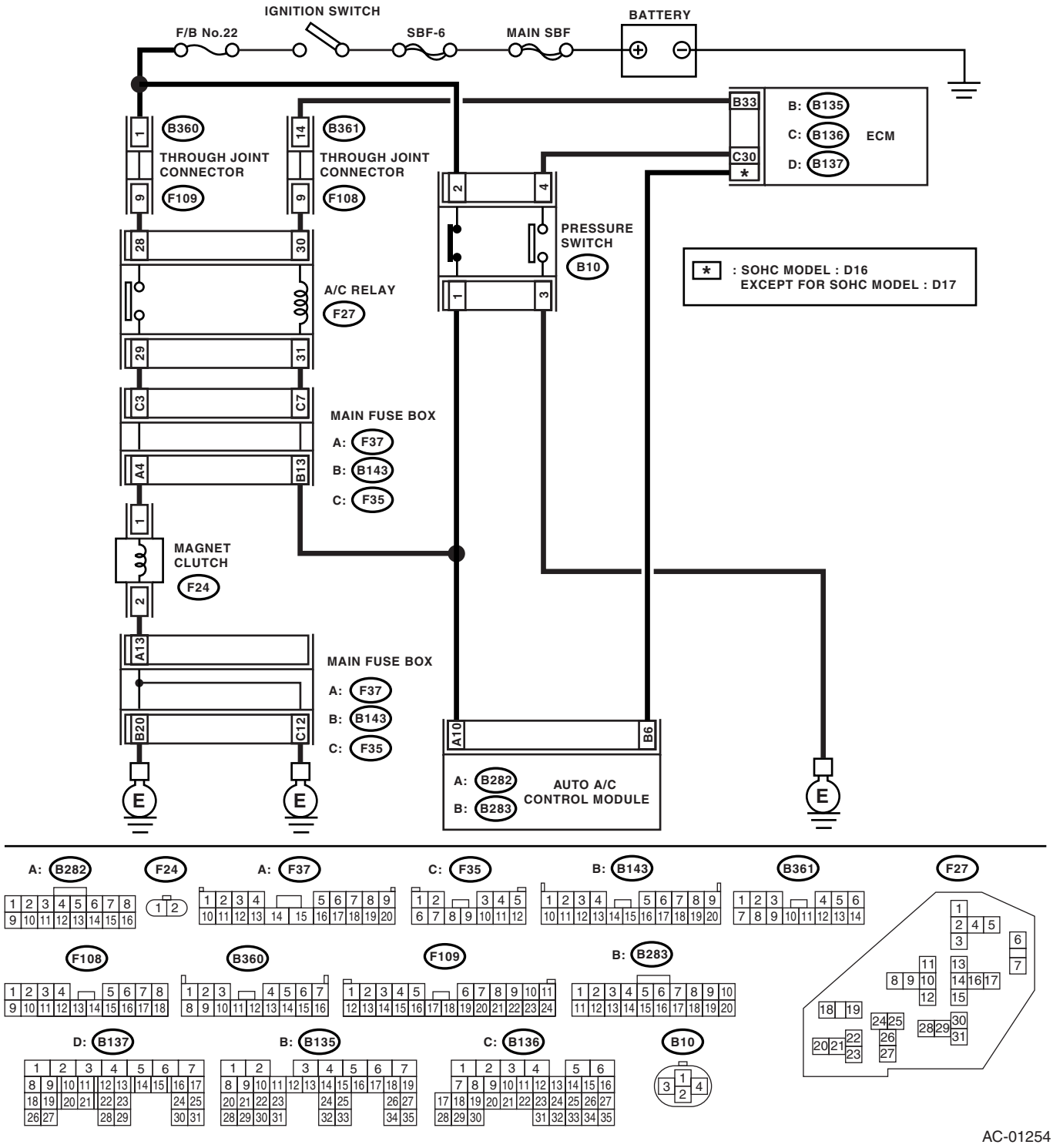

AC-01254

	Step	Check	Yes	No
1	**CHECK FUSE.** 1) Turn the ignition switch to OFF. 2) Remove the fuse No. 22 from fuse & relay box. 3) Check the condition of fuse.	Is the fuse blown-out?	Replace the fuse.	Go to step **2.**
2	**CHECK SIGNAL TO A/C RELAY AND A/C CONTROL MODULE.** 1) Disconnect the A/C relay and auto A/C control module harness connector. 2) Turn the ignition switch to ON. 3) Measure the voltage between A/C relay connector terminal and chassis ground. 4) Measure the voltage between auto A/C control module harness connector terminal and chassis ground. ***Connector & terminal*** ***(F27) No. 31 (+) — Chassis ground (−):*** ***(B282) No. 10 (+) — Chassis ground (−):***	Is the voltage more than 10 V?	Go to step **5.**	Go to step **3.**
3	**CHECK POWER SUPPLY FOR PRESSURE SWITCH.** 1) Turn the ignition switch to OFF. 2) Disconnect the pressure switch harness connector. 3) Turn the ignition switch to ON. 4) Measure the voltage between pressure switch harness connector terminal and chassis ground. ***Connector & terminal*** ***(B10) No. 2 (+) — Chassis ground (−):***	Is the voltage more than 10 V?	Go to step **4.**	Check the harness for open or short circuit between fuse and pressure switch.
4	**CHECK HARNESS BETWEEN PRESSURE SWITCH AND A/C RELAY, AUTO A/C CONTROL MODULE.** 1) Turn the ignition switch to OFF. 2) Measure the resistance in harness between pressure switch connector and A/C relay connector. 3) Measure the resistance in harness between pressure switch connector and auto A/C control module connector. ***Connector & terminal*** ***(B10) No. 1 — (F27) No. 31:*** ***(B10) No. 1 — (B282) No. 10:***	Is the resistance less than 1 Ω?	Check the pressure switch. <Ref. to AC-41, INSPECTION, Pressure Switch (Triple Pressure Switch).>	Repair the harness.
5	**CHECK POWER SUPPLY FOR A/C RELAY.** Measure the voltage between A/C relay connector terminal and chassis ground. ***Connector & terminal*** ***(F27) No. 28 (+) — Chassis ground (−):***	Is the voltage more than 10 V?	Go to step **6.**	Check the harness for open or short circuit between fuse and A/C relay.
6	**CHECK A/C RELAY.** Check the A/C relay. <Ref. to AC-40, INSPECTION, Relay and Fuse.>	Is malfunction found in A/C relay?	Replace the A/C relay.	Go to step **7.**

	Step	Check	Yes	No
7	**CHECK A/C ON SIGNAL.** 1) Turn the ignition switch to OFF. 2) Connect the A/C relay and all disconnected connectors. 3) Start the engine and turn the AUTO switch to ON. 4) Turn the temperature control dial at maximum cool position. 5) Measure the voltage between auto A/C control module harness connector terminal and chassis ground. ***Connector & terminal*** ***(B283) No. 6 (+) — Chassis ground (−):***	Is the voltage more than 5.5 V?	Go to step **9.**	Go to step **8.**
8	**CHECK HARNESS BETWEEN AUTO A/C CONTROL MODULE AND ECM.** 1) Turn the ignition switch to OFF. 2) Disconnect the harness connector of auto A/C control module and ECM. 3) Measure the resistance in harness between auto A/C control module connector and ECM connector. ***Connector & terminal*** ***Except for 2.5 L Non-turbo model*** ***(B283) No. 6 — (B137) No. 17:*** ***2.5 L Non-turbo model*** ***(B283) No. 6 — (B137) No. 16:***	Is the resistance less than 1 Ω?	Replace the auto A/C control module.	Repair the harness.
9	**CHECK MAGNET CLUTCH ON SIGNAL.** 1) Stop the engine and turn the AUTO switch to OFF. 2) Turn the ignition switch to ON. 3) Measure the voltage between ECM connector terminal and chassis ground. ***Connector & terminal*** ***(B135) No. 33 (+) — Chassis ground (−):***	Is the voltage more than 10 V?	Go to step **10.**	Check the harness for open or short circuit between A/C relay and ECM.
10	**CHECK MAGNET CLUTCH ON SIGNAL.** 1) Start the engine and turn the AUTO switch to ON. 2) Turn the temperature control dial at maximum cool position. 3) Measure the voltage between ECM connector terminal and chassis ground. ***Connector & terminal*** ***(B135) No. 33 (+) — Chassis ground (−):***	Is the voltage 0 V?	Go to step **11.**	Replace the ECM.
11	**CHECK POWER SUPPLY FOR MAGNET CLUTCH.** 1) Stop the engine and turn the AUTO switch to OFF. 2) Disconnect the harness connector of magnet clutch. 3) Start the engine and turn the AUTO switch to ON. 4) Turn the temperature control dial at maximum cool position. 5) Measure the voltage between magnet clutch harness connector terminal and chassis ground. ***Connector & terminal*** ***(F24) No. 1 (+) — Chassis ground (−):***	Is the voltage more than 10 V?	Go to step **12.**	Check the harness for open or short circuit between A/C relay and magnet clutch.

	Step	Check	Yes	No
12	**CHECK HARNESS BETWEEN AUTO A/C CONTROL MODULE AND ECM.** 1) Stop the engine and turn the AUTO switch to OFF. 2) Measure the resistance between magnet clutch harness connector terminal and chassis ground. ***Connector & terminal*** ***(F24) No. 2 — Chassis ground:***	Is the resistance less than 1 Ω?	Check the compressor. <Ref. to AC-34, INSPECTION, Compressor.>	Repair the harness.

7. Diagnostic Procedure for Actuators

A: INTAKE DOOR ACTUATOR

TROUBLE SYMPTOM:

FRESH/RECIRC mode is not changed.

WIRING DIAGRAM:

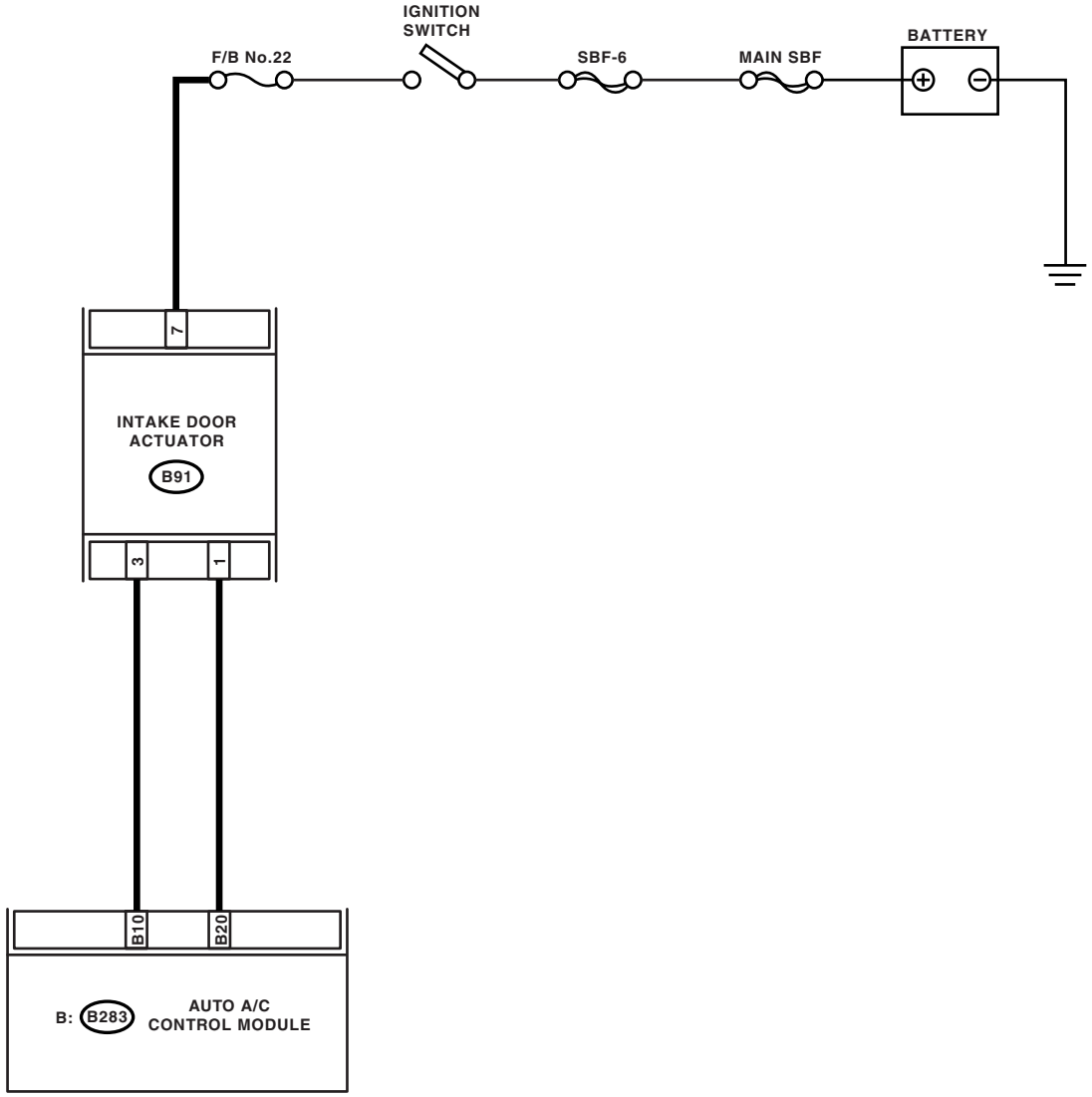

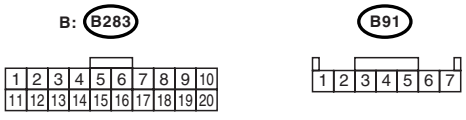

AC-01192

	Step	Check	Yes	No
1	**CHECK POWER SUPPLY FOR INTAKE DOOR ACTUATOR.** 1) Turn the ignition switch to OFF. 2) Disconnect the intake door actuator connector. 3) Turn the ignition switch to ON. 4) Measure the voltage between intake door actuator connector and chassis ground. ***Connector & terminal*** ***(B91) No. 7 (+) — Chassis ground (–):***	Is the voltage 7 V (at normal temperature)?	Go to step **2.**	Check the harness for open or short circuit between intake door actuator and fuse.
2	**CHECK HARNESS BETWEEN AUTO A/C CONTROL MODULE AND INTAKE DOOR ACTUATOR.** 1) Turn the ignition switch to OFF. 2) Disconnect the auto A/C control module connector. 3) Measure the resistance between intake door actuator connector and auto A/C control module connector. ***Connector & terminal*** ***(B283) No. 10 — (B91) No. 3:*** ***(B283) No. 20 — (B91) No. 1:***	Is the resistance less than 1 Ω?	Go to step **3.**	Repair the harness between auto A/C control module and intake door actuator.
3	**CHECK OPERATION OF INTAKE DOOR ACTUATOR.** 1) Connect the intake door actuator connector. 2) Ground the auto A/C control module connector with a suitable wire. 3) Turn the ignition switch to ON, and check the operation of intake door actuator. ***Connector & terminal*** ***(B283) No. 10 — Chassis ground:***	Does the actuator move to the FRESH side?	Go to step **4.**	Replace the intake door actuator.
4	**CHECK OPERATION OF INTAKE DOOR ACTUATOR.** 1) Turn the ignition switch to OFF. 2) Ground the auto A/C control module connector with a suitable wire. 3) Turn the ignition switch to ON, and check the operation of intake door actuator. ***Connector & terminal:*** ***(B283) No. 20 — Chassis ground:***	Does the actuator move to the RECIRC side?	Replace the auto A/C control module.	Replace the intake door actuator.

B: MODE DOOR ACTUATOR

TROUBLE SYMPTOM:

Air flow outlet is not changed.

WIRING DIAGRAM:

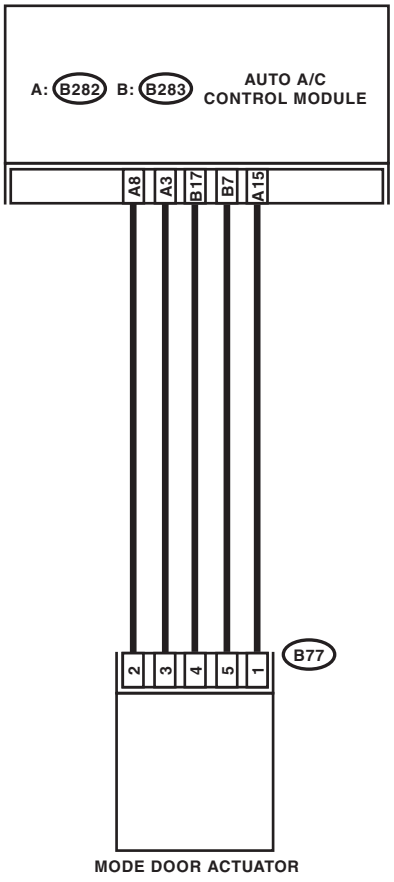

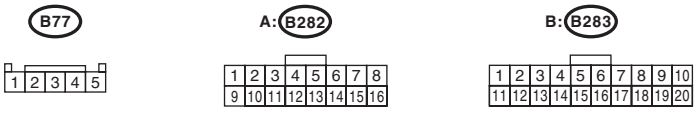

AC-00827

	Step	Check	Yes	No
1	**CHECK POWER SUPPLY FOR MODE DOOR ACTUATOR POSITION SENSOR.** 1) Turn the ignition switch to OFF. 2) Disconnect the mode door actuator connector. 3) Turn the ignition switch and AUTO switch to ON. 4) Measure the voltage between auto A/C control module connector terminals. ***Connector & terminal*** ***(B282) No. 8 (+) — (B282) No. 15 (–):***	Is the voltage approx. 5 V?	Go to step **2.**	Replace the auto A/C control module.
2	**CHECK POWER SUPPLY FOR MODE DOOR ACTUATOR.** Measure the voltage between auto A/C control module connector and chassis ground after turning the air flow control switch to FACE position. ***Connector & terminal*** ***(B283) No. 7 (+) — Chassis ground (–):***	Is the voltage 7 V (at normal temperature)?	Go to step **3.**	Replace the auto A/C control module.
3	**CHECK POWER SUPPLY FOR MODE DOOR ACTUATOR.** Measure the voltage between auto A/C control module connector and chassis ground after turning the air flow control switch to DEF position. ***Connector & terminal*** ***(B283) No. 17 (+) — Chassis ground (–):***	Is the voltage 7 V (at normal temperature)?	Go to step **4.**	Replace the auto A/C control module.
4	**CHECK HARNESS BETWEEN AUTO A/C CONTROL MODULE AND MODE DOOR ACTUATOR.** 1) Turn the A/C and ignition switch to OFF. 2) Disconnect the auto A/C control module connector. 3) Measure the resistance between auto A/C control module and mode door actuator connector. ***Connector & terminal*** ***(B77) No. 1 — (B282) No. 15:*** ***(B77) No. 2 — (B282) No. 8:*** ***(B77) No. 3 — (B282) No. 3:*** ***(B77) No. 4 — (B283) No. 17:*** ***(B77) No. 5 — (B283) No. 7:***	Is the resistance less than 1 Ω?	Go to step **5.**	Repair the harness between auto A/C control module and mode door actuator.
5	**CHECK MODE DOOR ACTUATOR POSITION SWITCH SIGNAL.** 1) Connect the connector of auto A/C control module and mode door actuator. 2) Turn the ignition switch and AUTO switch to ON. 3) Check the voltage between auto A/C control module connector terminals while changing the mode between DEF and FACE. ***Connector & terminal*** ***(B282) No. 3 (+) — (B282) No. 15 (–):***	Does the voltage change between 1 (DEF) — 4 (FACE) V?	Go to step **6.**	Replace the mode door actuator.
6	**CHECK POOR CONTACT.** Check poor contact in auto A/C control module and connector.	Is there poor contact in connector?	Repair connector.	Replace the auto A/C control module.

C: AIR MIX DOOR ACTUATOR

TROUBLE SYMPTOM:

Outlet air temperature does not change.

WIRING DIAGRAM:

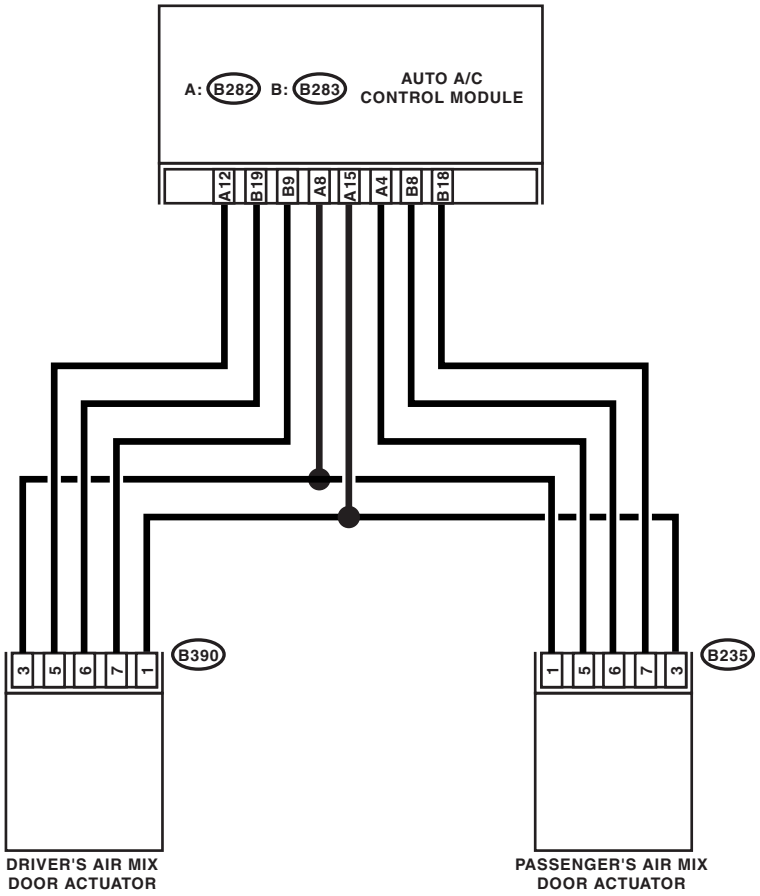

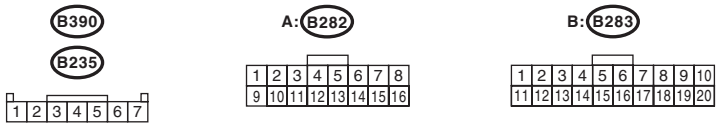

AC-01170

	Step	Check	Yes	No
1	**CHECK POWER SUPPLY FOR AIR MIX DOOR ACTUATOR POSITION SWITCH.** 1) Turn the ignition switch to OFF. 2) Disconnect the air mix door actuator connector. 3) Turn the ignition switch and AUTO switch to ON. 4) Measure the voltage between auto A/C control module connector terminals. ***Connector & terminal*** ***(B282) No. 8 (+) — (B282) No. 15 (–):***	Is the voltage approx. 5 V?	Go to step **2.**	Replace the auto A/C control module.
2	**CHECK POWER SUPPLY FOR AIR MIX DOOR ACTUATOR.** Measure the voltage between auto A/C control module connector and chassis ground after turning the temperature control dial to maximum COOL position. ***Connector & terminal*** ***Driver's side*** ***(B283) No. 9 (+) — Chassis ground (–):*** ***Passenger's side*** ***(B283) No. 8 (+) — Chassis ground (–):***	Is the voltage 7 V (at normal temperature)?	Go to step **3.**	Replace the auto A/C control module.
3	**CHECK POWER SUPPLY FOR AIR MIX DOOR ACTUATOR.** Measure the voltage between auto A/C control module connector and chassis ground after turning the temperature control dial to maximum HOT position. ***Connector & terminal*** ***Driver's side*** ***(B283) No. 19 (+) — Chassis ground (–):*** ***Passenger's side*** ***(B283) No. 18 (+) — Chassis ground (–):***	Is the voltage 7 V (at normal temperature)?	Go to step **4.**	Replace the auto A/C control module.
4	**CHECK HARNESS BETWEEN AUTO A/C CONTROL MODULE AND AIR MIX DOOR ACTUATOR.** 1) Turn the A/C and ignition switch to OFF. 2) Disconnect the auto A/C control module connector. 3) Measure the resistance between auto A/C control module and air mix door actuator connector. ***Connector & terminal*** ***Driver's side*** ***(B390) No. 1 — (B282) No. 15:*** ***(B390) No. 3 — (B282) No. 8:*** ***(B390) No. 5 — (B282) No. 12:*** ***(B390) No. 6 — (B283) No. 19:*** ***(B390) No. 7 — (B283) No. 9:*** ***Passenger's side*** ***(B235) No. 1 — (B282) No. 8:*** ***(B235) No. 3 — (B282) No. 15:*** ***(B235) No. 5 — (B282) No. 4:*** ***(B235) No. 6 — (B283) No. 8:*** ***(B235) No. 7 — (B283) No. 18:***	Is the resistance less than 1 Ω?	Go to step **5.**	Repair the harness between auto A/C control module and air mix door actuator.

	Step	Check	Yes	No
5	**CHECK AIR MIX DOOR ACTUATOR POSITION SWITCH SIGNAL.** 1) Connect the connector of auto A/C control module and air mix door actuator. 2) Turn the ignition switch and AUTO switch to ON. 3) Check the voltage between auto A/C control module connector terminals while changing the setting temperature between maximum COOL and maximum HOT. ***Connector & terminal*** ***Driver's side*** ***(B282) No. 12 (+) — (B282) No. 15 (–):*** ***Passenger's side*** ***(B282) No. 4 (+) — (B282) No. 15 (–):***	Does the voltage change between 1 (Max. HOT) — 4 (Max. COOL) V?	Go to step **6.**	Replace the air mix door actuator.
6	**CHECK POOR CONTACT.** Check poor contact in auto A/C control module and connector.	Is there poor contact in connector?	Repair the connector.	Replace the auto A/C control module.

8. Diagnostic Procedure for Sensors

A: AMBIENT SENSOR

TROUBLE SYMPTOM:

Fan speed is not switched when the fan speed control dial is in AUTO position.

WIRING DIAGRAM:

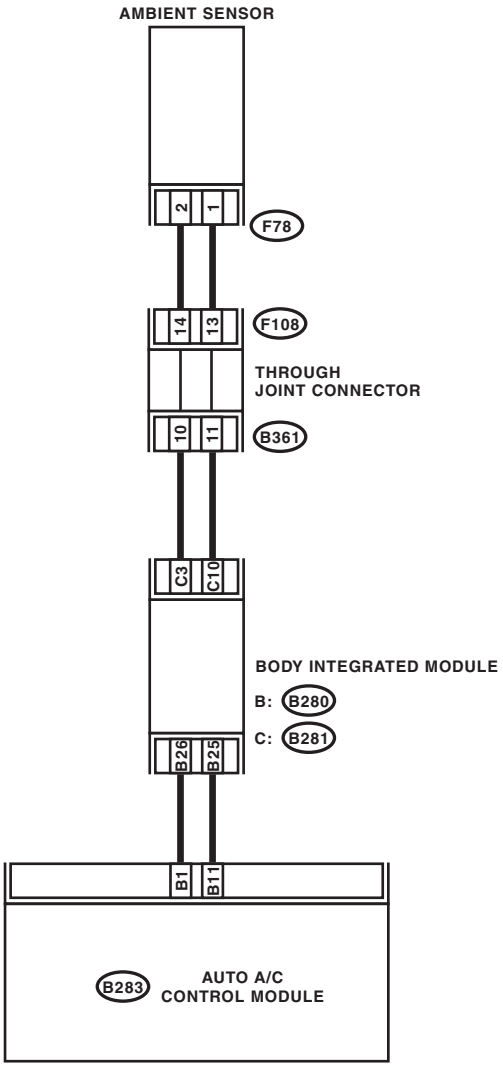

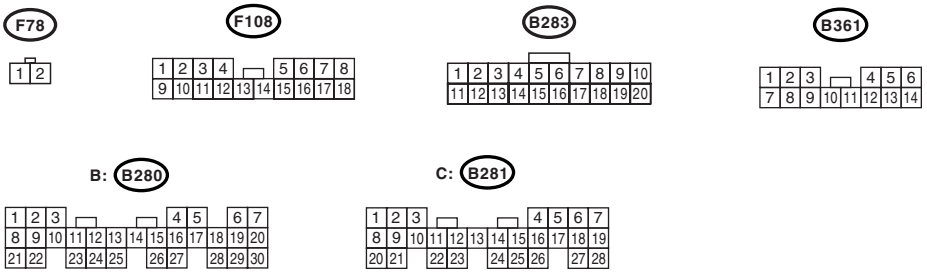

AC-00829

Diagnostic Procedure for Sensors

	Step	Check	Yes	No
1	**CHECK AMBIENT SENSOR.** 1) Turn the ignition switch to OFF. 2) Disconnect the connector from ambient sensor. 3) Measure the resistance between connector terminals of ambient sensor. ***Terminals*** ***No. 1 — No. 2:***	Is the resistance approx. 2.2 kΩ at 25°C (77°F)?	Go to step **2.**	Replace the ambient sensor.
2	**CHECK INPUT SIGNAL FOR AMBIENT SENSOR.** 1) Turn the ignition to ON. 2) Measure the voltage between connector (F78) terminals. ***Connector & terminal*** ***(F78) No. 1 (+) — No. 2 (−):***	Is the voltage approx. 5 V?	Go to step **6.**	Go to step **3.**
3	**CHECK OUTPUT SIGNAL OF BODY INTEGRATED UNIT.** 1) Turn the ignition switch to OFF. 2) Draw out the body integrated unit. 3) Disconnect the connector from ambient sensor. 4) Turn the ignition switch to ON. 5) Measure the voltage between connector terminals of body integrated unit. ***Connector & terminal*** ***(B281) No. 3 (+) — No. 10 (−):***	Is the voltage approx. 5 V?	Go to step **4.**	Go to step **6.**
4	**CHECK HARNESS CONNECTOR BETWEEN BODY INTEGRATED UNIT AND AMBIENT SENSOR.** 1) Turn the ignition switch to OFF. 2) Disconnect the connector from body integrated unit. 3) Measure the resistance in harness between body integrated unit and ambient sensor. ***Connector & terminal*** ***(F78) No. 1 — (B281) No. 10:***	Is the resistance less than 1 Ω?	Go to step **5.**	Repair the open circuit in harness between body integrated unit and ambient sensor.
5	**CHECK HARNESS CONNECTOR BETWEEN BODY INTEGRATED UNIT AND AMBIENT SENSOR.** Measure the resistance in harness between body integrated unit and ambient sensor. ***Connector & terminal*** ***(F78) No. 2 — (B281) No. 3:***	Is the resistance less than 1 Ω?	Go to step **6.**	Repair the open circuit in harness between body integrated unit and ambient sensor.
6	**CHECK COMMUNICATION ERROR DISPLAY.** 1) Connect the connectors of body integrated unit and ambient sensor to original position. 2) Check “Er xx” is indicated on the Odo/Trip meter in combination meter after turning the ignition switch to ON.	Is the error display “Er xx” indicated?	Check the communication circuit. <Ref. to LAN(diag)-2, Basic Diagnostic Procedure.>	Go to step **7.**
7	**CHECK POOR CONTACT.** Check poor contact in auto A/C control module connector.	Is there poor contact in connector?	Repair the connector.	Replace the A/C control module.

B: IN-VEHICLE SENSOR

TROUBLE SYMPTOM:

Blower fan speed, outlet port and inlet port do not change after turning the AUTO switch to ON.

WIRING DIAGRAM:

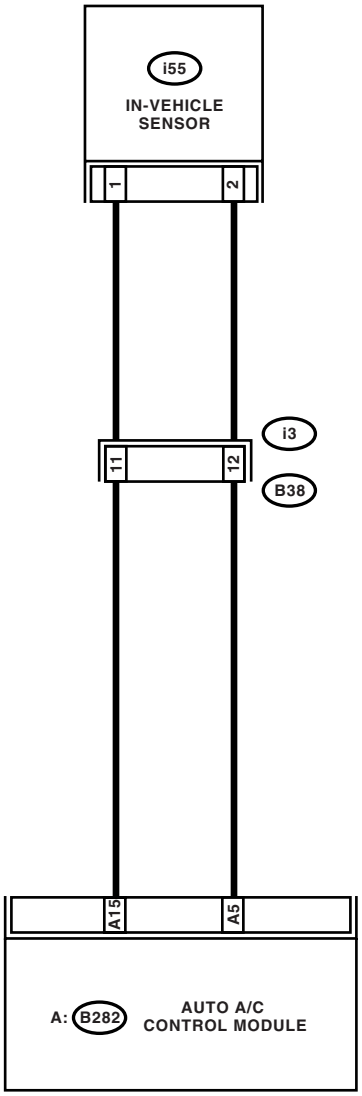

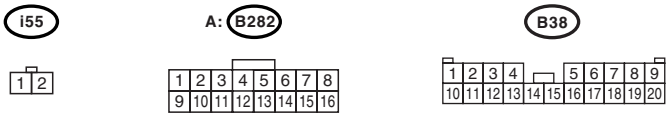

AC-00830

Diagnostic Procedure for Sensors

	Step	Check	Yes	No
1	**CHECK IN-VEHICLE SENSOR.** 1) Turn the ignition switch to OFF. 2) Remove the driver's side lower cover. 3) Disconnect the connector from in-vehicle sensor. 4) Measure the resistance between connector terminals of in-vehicle sensor. ***Terminals*** ***No. 1 — No. 2:***	Is the resistance approx. 2.7 kΩ at 20°C (68°F)?	Go to step **2.**	Replace the in-vehicle sensor.
2	**CHECK INPUT SIGNAL FOR IN-VEHICLE SENSOR.** 1) Turn the ignition switch to ON. 2) Measure the voltage between in-vehicle sensor harness connector terminal and chassis ground. ***Connector & terminal*** ***(i55) No. 2 (+) — No. 1 (–):***	Is the voltage approx. 5 V?	Go to step **6.**	Go to step **3.**
3	**CHECK AUTO A/C CONTROL MODULE OUTPUT SIGNAL.** 1) Turn the ignition switch to OFF. 2) Remove the auto A/C control module. 3) Turn the ignition switch to ON. 4) Measure the voltage between connector terminals of auto A/C control module. ***Connector & terminal*** ***(B282) No. 5 (+) — (B282) No. 15 (–):***	Is the voltage approx. 5 V?	Go to step **4.**	Go to step **6.**
4	**CHECK HARNESS BETWEEN AUTO A/C CONTROL MODULE AND IN-VEHICLE SENSOR.** 1) Turn the ignition switch to OFF. 2) Disconnect the connector from auto A/C control module. 3) Measure the resistance in harness between auto A/C control module and in-vehicle sensor. ***Connector & terminal*** ***(i55) No. 2 — (B282) No. 5:***	Is the resistance less than 1 Ω?	Go to step **5.**	Repair the harness between auto A/C control module and in-vehicle sensor.
5	**CHECK HARNESS BETWEEN AUTO A/C CONTROL MODULE AND IN-VEHICLE SENSOR.** Measure the resistance in harness between auto A/C control module and in-vehicle sensor. ***Connector & terminal*** ***(i55) No. 1 — (B282) No. 15:***	Is the resistance less than 1 Ω?	Go to step **6.**	Repair the harness between auto A/C control module and in-vehicle sensor.
6	**CHECK POOR CONTACT.** Check poor contact in auto A/C control module connector.	Is there poor contact in connector?	Repair the connector.	Replace the auto A/C control module.

C: EVAPORATOR SENSOR

WIRING DIAGRAM:

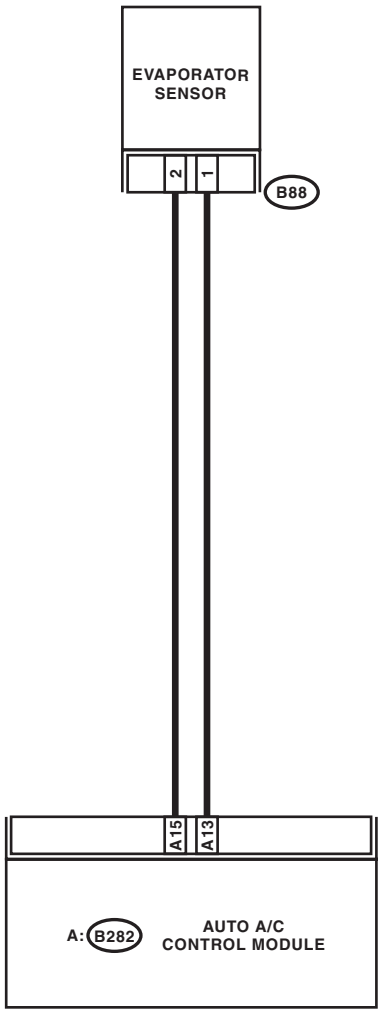

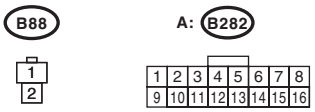

AC-00831

Diagnostic Procedure for Sensors

	Step	Check	Yes	No
1	**CHECK EVAPORATOR SENSOR** 1) Turn the ignition switch to OFF. 2) Remove the glove box. 3) Disconnect the connector from evaporator sensor. 4) Measure the resistance between connector terminals of evaporator sensor. ***Terminals*** ***No. 1 — No. 2:***	Is the resistance approx. 3.3 kΩ at 20°C (68°F)?	Go to step **2.**	Replace the evaporator sensor.
2	**CHECK INPUT SIGNAL FOR EVAPORATOR SENSOR.** 1) Turn the ignition switch to ON. 2) Measure the voltage between connector (B88) terminal and chassis ground. ***Connector & terminal*** ***(B88) No. 1 (+) — No. 2 (–):***	Is the voltage approx. 5 V?	Go to step **6.**	Go to step **3.**
3	**CHECK AUTO A/C CONTROL MODULE OUTPUT SIGNAL.** 1) Turn the ignition switch to OFF. 2) Remove the auto A/C control module. 3) Turn the ignition switch to ON. 4) Measure the voltage between connector terminals of auto A/C control module. ***Connector & terminal*** ***(B282) No. 13 (+) —No. 15 (–):***	Is the voltage approx. 5 V?	Go to step **4.**	Go to step **6.**
4	**CHECK HARNESS CONNECTOR BETWEEN AUTO A/C CONTROL MODULE AND EVAPORATOR SENSOR.** 1) Turn the ignition switch to OFF. 2) Disconnect the connector from auto A/C control module. 3) Measure the resistance in harness between auto A/C control module and evaporator sensor. ***Connector & terminal*** ***(B88) No. 2 — (B282) No. 15:***	Is the resistance less than 1 Ω?	Go to step **5.**	Repair the open circuit in harness between auto A/C control module and evaporator sensor.
5	**CHECK HARNESS CONNECTOR BETWEEN AUTO A/C CONTROL MODULE AND EVAPORATOR SENSOR.** Measure the resistance in harness between auto A/C control module and evaporator sensor. ***Connector & terminal*** ***(B88) No. 1 — (B282) No. 13:***	Is the resistance less than 1 Ω?	Go to step **6.**	Repair the open circuit in harness between auto A/C control module and evaporator sensor.
6	**CHECK POOR CONTACT.** Check poor contact in auto A/C control module connector.	Is there poor contact in connector?	Repair the connector.	Replace the auto A/C control module.

D: SUNLOAD SENSOR

TROUBLE SYMPTOM:

- Sensor identifies that sunlight is at maximum. Then, A/C system is controlled to COOL side.
- Sensor identifies that sunlight is at minimum. Then, A/C system is controlled to HOT side.

NOTE:
When the sunload sensor check is conducted indoors or in the shade, open circuit might be indicated. Always check the sunload sensor at the place where the sun shines directly on it.

WIRING DIAGRAM:

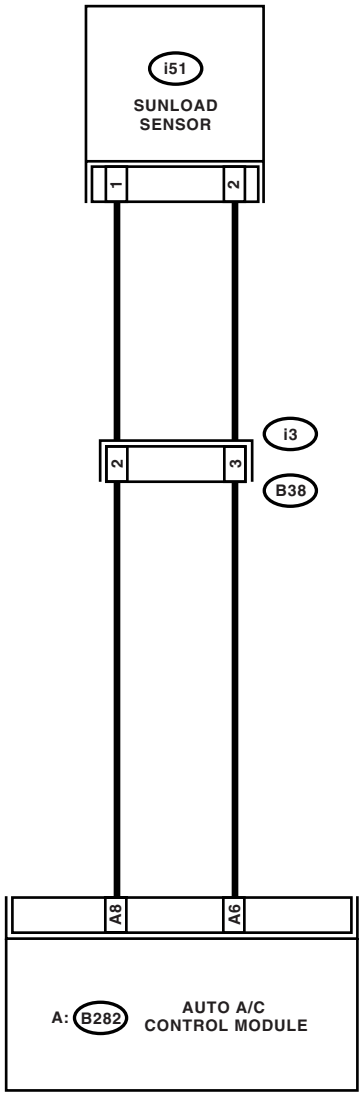

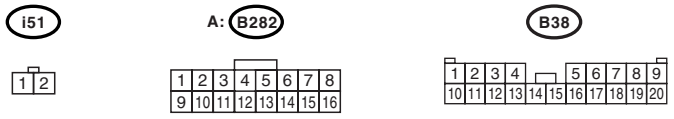

AC-00832

	Step	Check	Yes	No
1	**CHECK POWER SUPPLY VOLTAGE FOR SUNLOAD SENSOR.** 1) Turn the ignition switch to OFF. 2) Disconnect the connector from sunload sensor. 3) Turn the ignition switch to ON. 4) Measure the power supply voltage for sunload sensor. ***Connector & terminal*** ***(i51) No. 1 (+) — No. 2 (–):***	Is the voltage approx. 5 V?	Go to step **4.**	Go to step **2.**
2	**CHECK HARNESS CONNECTOR BETWEEN AUTO A/C CONTROL MODULE AND SUNLOAD SENSOR.** 1) Turn the ignition switch to OFF. 2) Disconnect the connector from auto A/C control module. 3) Measure the resistance in harness between auto A/C control module and sunload sensor. ***Connector & terminal*** ***(i51) No. 2 — (B282) No. 6:***	Is the resistance less than 1 Ω?	Go to step **3.**	Repair the harness between auto A/C control module and sunload sensor.
3	**CHECK HARNESS CONNECTOR BETWEEN AUTO A/C CONTROL MODULE AND SUNLOAD SENSOR.** Measure the resistance in harness between auto A/C control module and sunload sensor. ***Connector & terminal*** ***(i51) No. 1 — (B282) No. 8:***	Is the resistance less than 1 Ω?	Go to step **4.**	Repair the harness between auto A/C control module and sunload sensor.
4	**CHECK INPUT VOLTAGE FOR AUTO A/C CONTROL MODULE.** 1) Connect the connectors of sunload sensor and auto A/C control module. 2) Turn the ignition switch to ON. 3) Measure the voltage between connector terminals of auto A/C control module. ***Connector & terminal*** ***(B282) No. 8 (+) — (B282) No. 6 (–):***	Is the voltage approx. 2.5 V?	Go to step **5.**	Replace the sunload sensor.
5	**CHECK POOR CONTACT.** Check poor contact in auto A/C control module connector.	Is there poor contact in connector?	Repair the connector.	Replace the auto A/C control module.

E: A/C LOCK SENSOR

- H6 model

WIRING DIAGRAM:

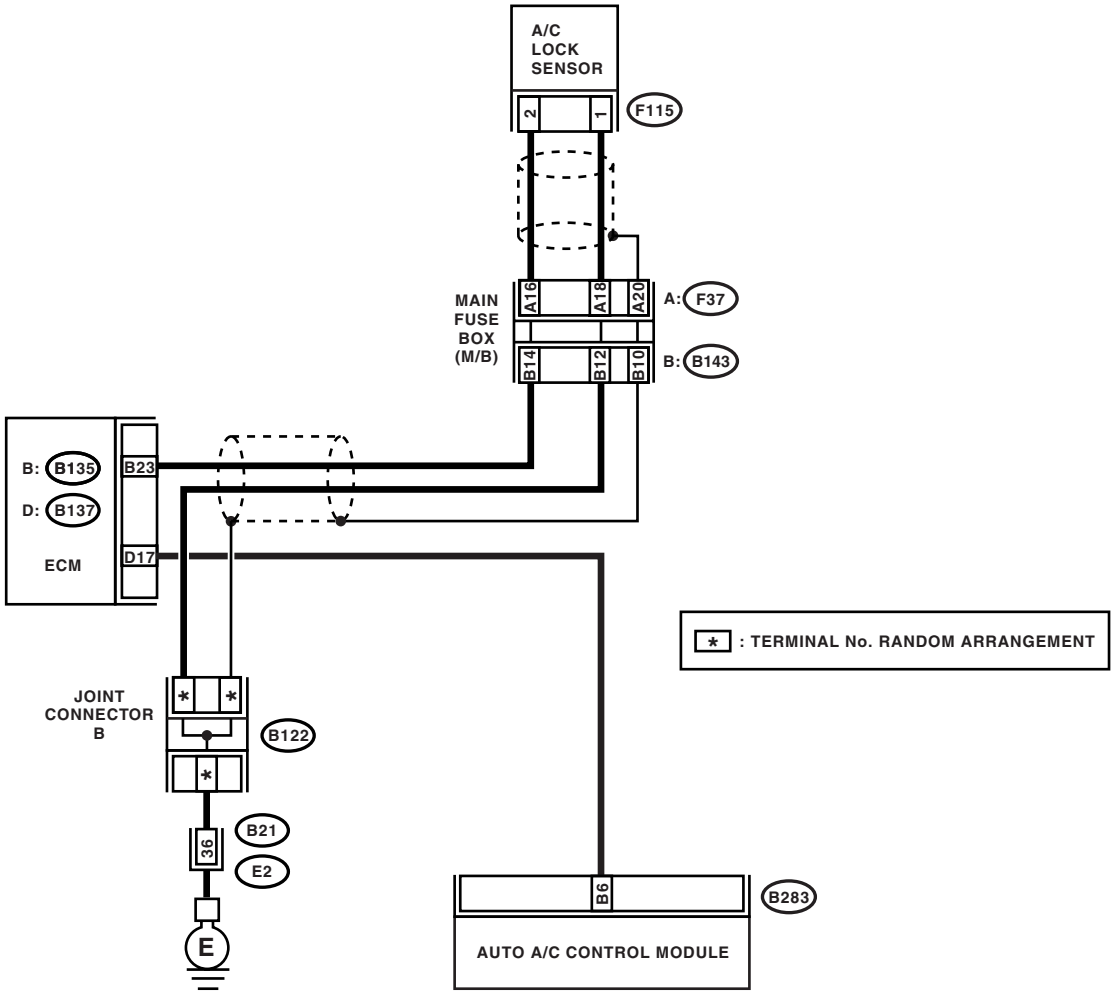

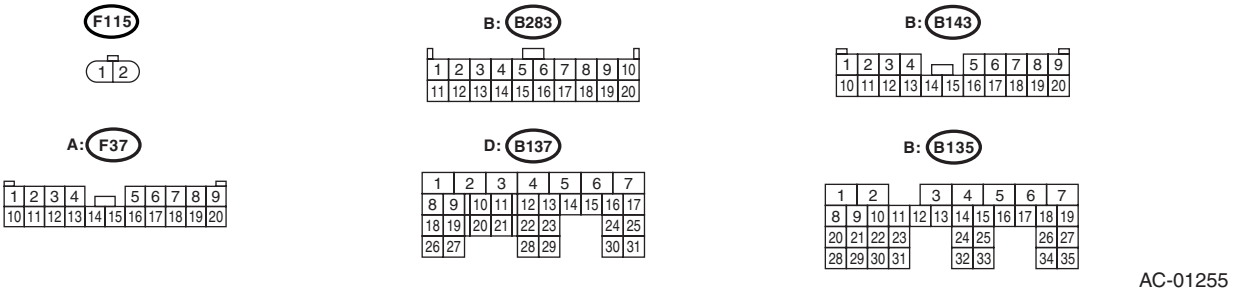

AC-01255

	Step	Check	Yes	No
1	**CHECK A/C LOCK SENSOR SIGNAL.** 1) Turn the ignition switch to OFF. 2) Connect the Subaru Select Monitor to data link connector. 3) Start the engine and turn A/C to ON. 4) Read the data of A/C lock signal using Subaru Select Monitor. NOTE: • Subaru Select Monitor For detailed operation procedure, refer to "READ CURRENT DATA FOR ENGINE".<Ref. to EN(H4SO)(diag)-28, READ CURRENT DATA FOR ENGINE. (NORMAL MODE), OPERATION, Subaru Select Monitor.>	Is the A/C lock signal ON?	Go to step **4.**	Go to step **2.**
2	**CHECK A/C LOCK SENSOR SIGNAL.** 1) Start the engine and turn A/C to ON. 2) Measure the voltage between auto A/C control module connector and chassis ground. ***Connector & terminal*** ***(B283) No. 6 (+) — Chassis ground (−):***	Is the voltage 7 — 14 V?	Replace the auto A/C control module.	Go to step **3.**
3	**CHECK OUTPUT OF ECM.** Measure the voltage between ECM and chassis ground. ***Connector & terminal*** ***(D137) No. 17 (+) — Chassis ground (−):***	Is the voltage 7 — 14 V?	Repair the harness between ECM and auto A/C control module.	Replace the ECM.
4	**CHECK A/C LOCK SENSOR.** 1) Turn the ignition switch to OFF. 2) Disconnect the ECM connector. 3) Measure the resistance between ECM connector and chassis ground. ***Connector & terminal*** ***(B135) No. 23 — Chassis ground:***	Is the resistance 240 — 290 Ω?	Replace the ECM.	Go to step **5.**
5	**CHECK A/C LOCK SENSOR.** 1) Turn the ignition switch to OFF. 2) Disconnect the main fuse box connector. 3) Measure the resistance between main fuse box terminals. ***Connector & terminal*** ***(F37) No. 16 — No. 18:***	Is the resistance 240 — 290 Ω?	Go to step **7.**	Go to step **6.**
6	**CHECK A/C LOCK SENSOR.** 1) Turn the ignition switch to OFF. 2) Disconnect the A/C lock sensor connector. 3) Measure the resistance between A/C lock sensor terminals. ***Connector & terminal*** ***(F115) No. 1 — No. 2:***	Is the resistance 240 — 290 Ω?	Repair or replace the harness between A/C lock sensor and main fuse box.	Replace the A/C compressor assembly. (A/C lock switch is faulty.)
7	**CHECK MAIN FUSE BOX.** 1) Turn the ignition switch to OFF. 2) Disconnect the connector, and measure the resistance between main fuse box terminals. ***Connector & terminal*** ***(F37) No. 16 — (F143) No. 12:*** ***(F37) No. 18 — (F143) No. 14:***	Is the resistance less than 10 Ω?	Repair or replace the harness between A/C lock sensor and main fuse box.	Replace the main fuse box.

9. Diagnostics with Phenomenon

A: INSPECTION

Symptom	Problem parts
A/C system fails to operate.	• Fuse (M/B No. 8, F/B No. 22, 31) • Connector (Poor contact) • Ground • Auto A/C control module • Blower fan motor • Blower fan relay • A/C Relay • Compressor (Magnet clutch) • Evaporator sensor
Fuse is blown out.	• Fuse (M/B No. 8, F/B No. 22, 31) • Connector (Poor contact)
Illumination cannot dim.	• Fuse (M/B No. 8, F/B No. 22, 31) • Connector (Poor contact) • Auto A/C control module • Body integrated unit
Blower fan does not rotate or fan speed cannot be controlled.	• Fuse (F/B No. 22, 27, 28) • Connector (Poor contact) • Ground • Auto A/C control module • Blower fan motor • Blower fan relay
Unable to switch suction vents.	• Connector (Poor contact) • Auto A/C control module • Intake door actuator
Unable to switch blow vents.	• Connector (Poor contact) • Auto A/C control module • Mode door actuator
Compartment temperature does not increase. (No hot air is discharged.)	• Connector (Poor contact) • Auto A/C control module • Air mix door actuator • In-vehicle sensor, ambient sensor, evaporator sensor and sunload sensor • In-vehicle sensor aspirator hose
Compartment temperature does not decrease. (No cool air is discharged.)	• Connector (Poor contact) • Auto A/C control module • Air mix door actuator • A/C Relay • Compressor (Magnet clutch) • Radiator fan motor • Radiator fan relay • In-vehicle sensor, ambient sensor, evaporator sensor and sunload sensor • In-vehicle sensor aspirator hose
Compartment temperature is higher or lower than setting temperature.	• Auto A/C control module • Air mix door actuator • In-vehicle sensor, ambient sensor, evaporator sensor and sunload sensor • In-vehicle sensor aspirator hose
Compartment temperature does not quickly respond to setting temperature.	• Air mix door actuator • In-vehicle sensor, ambient sensor, evaporator sensor and sunload sensor • In-vehicle sensor aspirator hose
Radiator fan does not rotate during A/C operation.	• Radiator fan motor • Radiator fan relay

AIRBAG SYSTEM

AB

		Page
1.	General Description	2
2.	Airbag Connector	10
3.	Inspection Locations After a Collision	13
4.	Driver's Airbag Module	16
5.	Passenger's Airbag Module	17
6.	Side Airbag Module	18
7.	Curtain Airbag Module	20
8.	Airbag Control Module	22
9.	Side Airbag Sensor	23
10.	Curtain Airbag Sensor	24
11.	Roll Connector	25
12.	Front Sub Sensor	26

1. General Description

A: COMPONENT

1. DRIVER'S AIRBAG MODULE

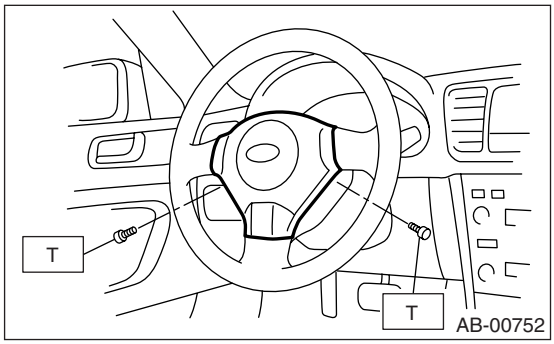

Tightening torque:
10 N·m (1.0 kgf-m, 7.2 ft-lb)

2. PASSENGER'S AIRBAG MODULE

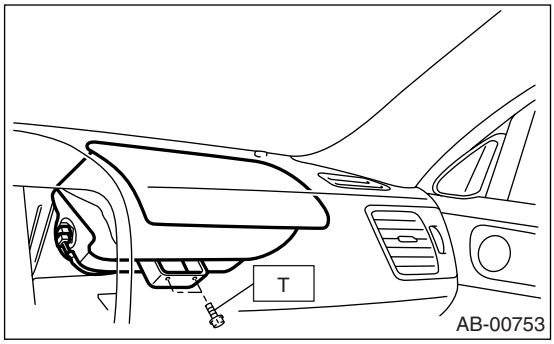

Tightening torque:
7.4 N·m (0.75 kgf-m, 5.5 ft-lb)

3. SIDE AIRBAG MODULE

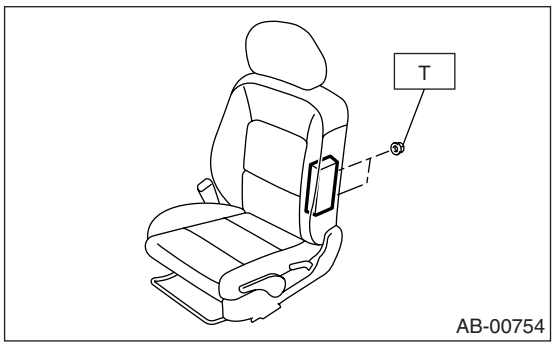

Tightening torque:
6 N·m (0.61 kgf-m, 4.4 ft-lb)

4. AIRBAG CONTROL MODULE

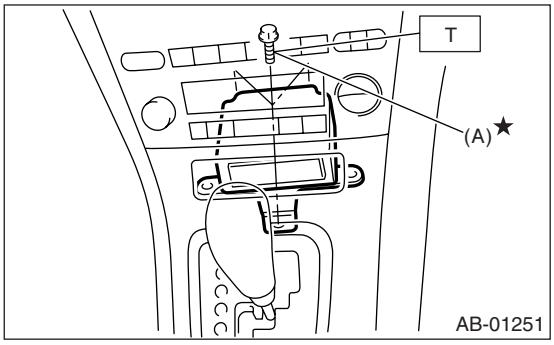

(A) Bolt

Tightening torque:
25 N·m (2.5 kgf-m, 18.1 ft-lb)

CAUTION:
Do not reuse mounting bolts and nuts.

5. FRONT SUB SENSOR

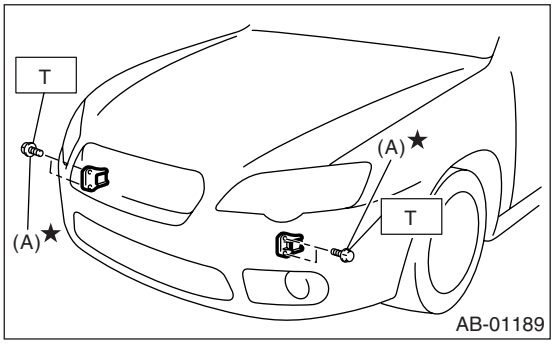

(A) Bolt

Tightening torque:
13 N·m (1.32 kgf-m, 9.6 ft-lb)

CAUTION:
Do not reuse mounting bolts and nuts.

6. SIDE AIRBAG SENSOR

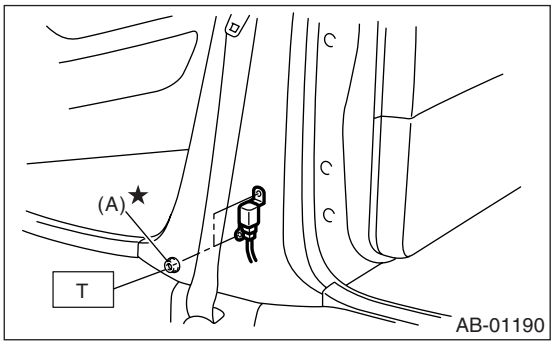

(A) Bolt

Tightening torque:
7.4 N·m (0.75 kgf-m, 5.5 ft-lb)

CAUTION:
Do not reuse mounting bolts and nuts.

7. CURTAIN AIRBAG SENSOR

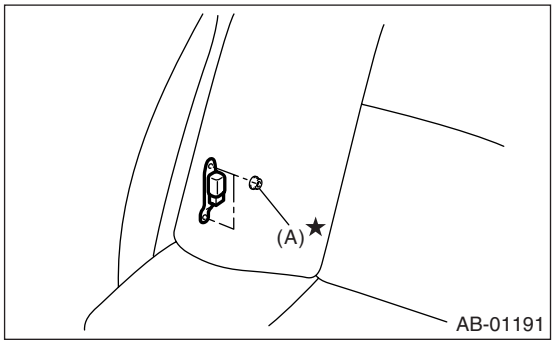

(A) Nut

Tightening torque:
7.4 N·m (0.75 kgf-m, 5.5 ft-lb)

CAUTION:
Do not reuse mounting bolts and nuts.

8. STEERING ROLL CONNECTOR

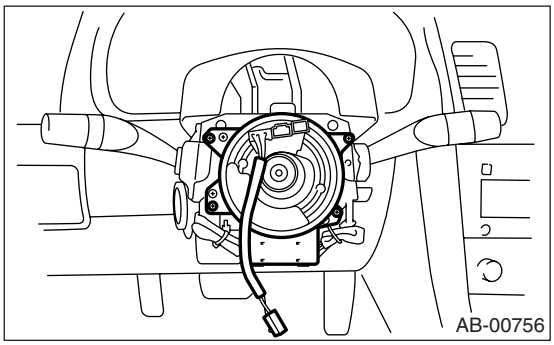

9. CURTAIN AIRBAG MODULE

- Sedan model

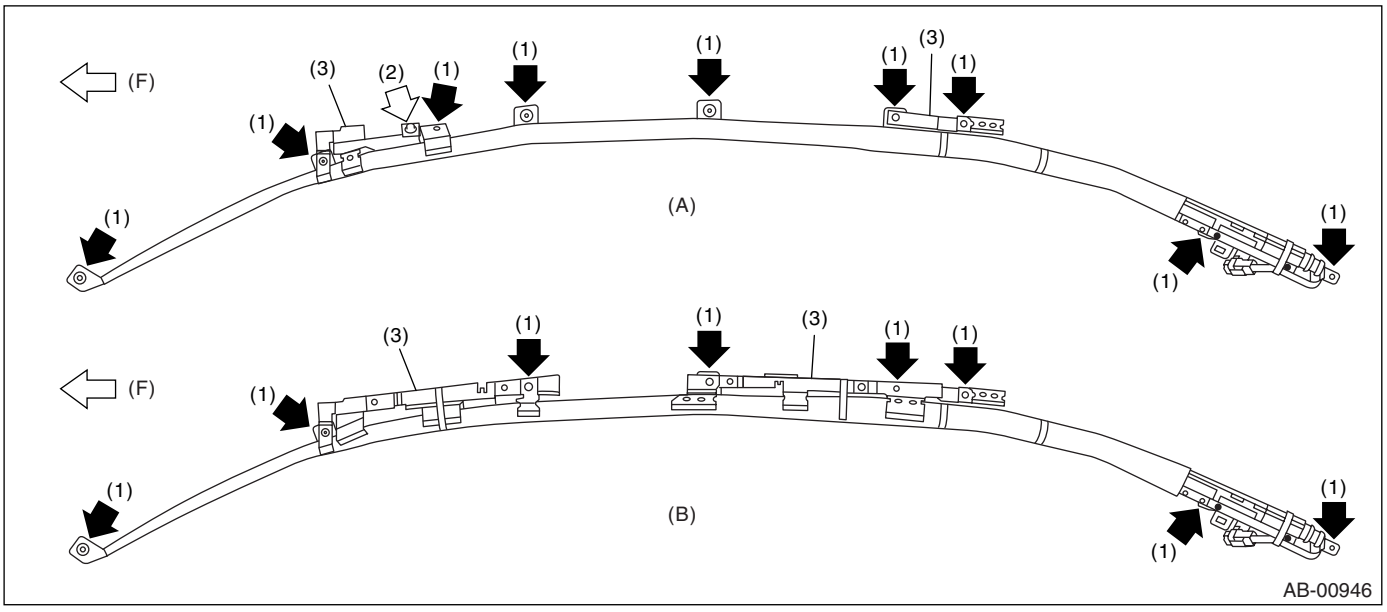

(A) Model equipped with sunroof
(B) Model not equipped with sunroof
(F) Forward
(1) Bolt
(2) Clip
(2) Plate guard

- Wagon model

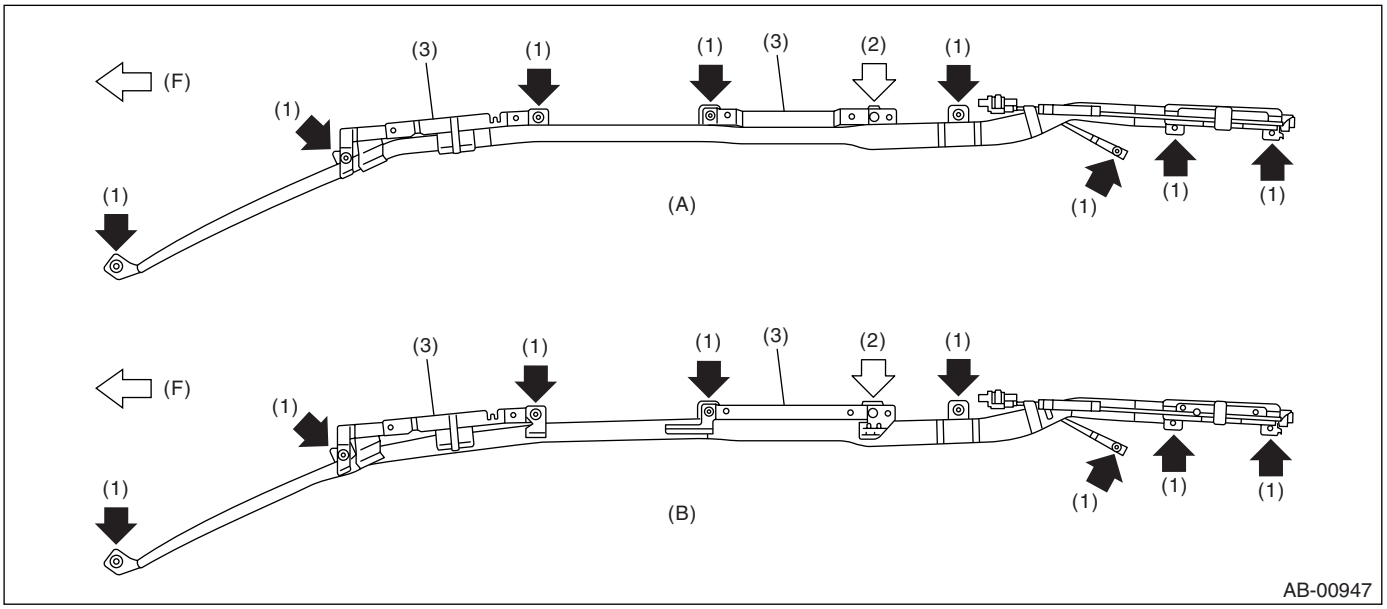

(A) Model equipped with sunroof
(B) Model not equipped with sunroof
(F) Forward
(1) Bolt
(2) Clip
(2) Plate guard

Tightening torque:
7.5 N·m (0.77 kgf-m, 5.5 ft-lb)

10.AIRBAG HARNESS

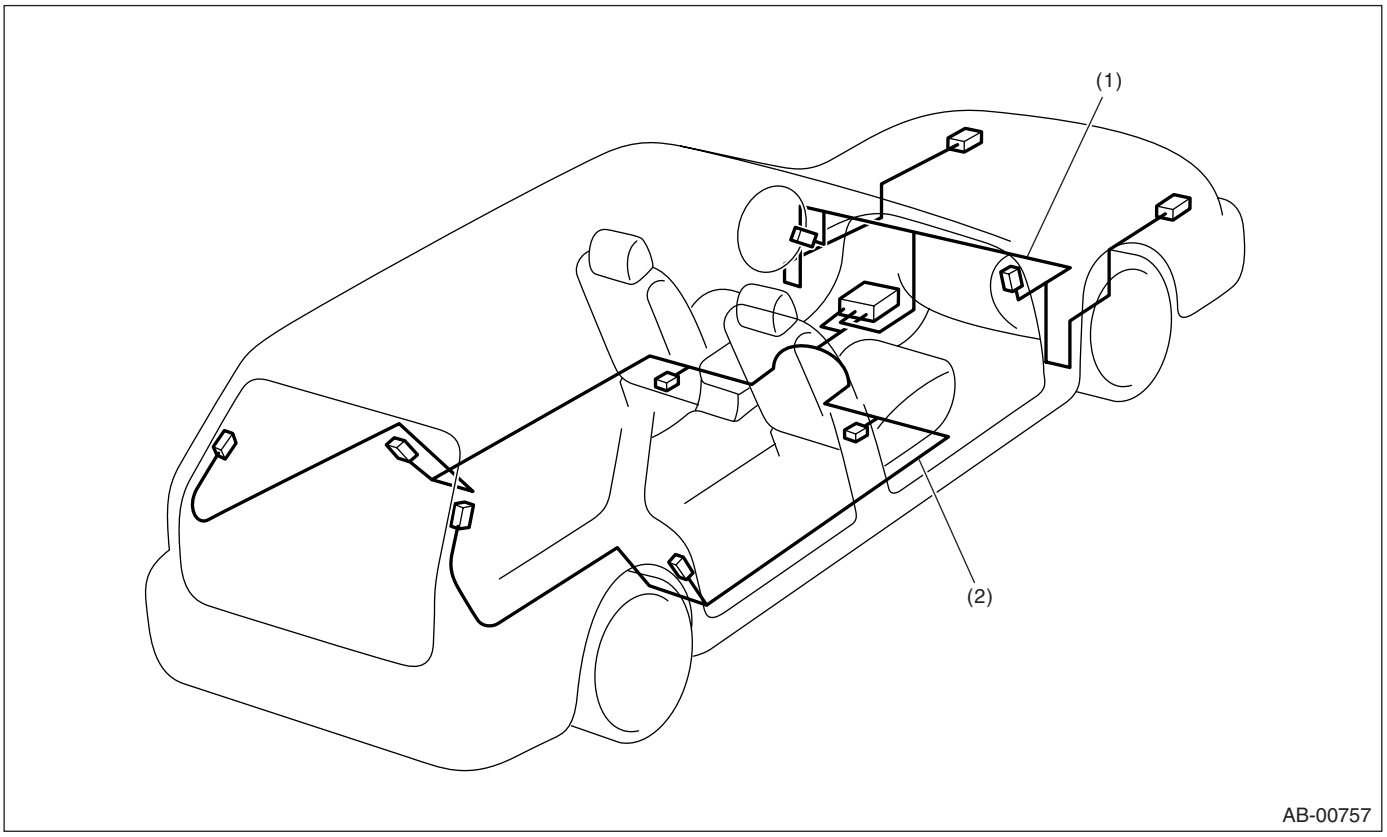

(1) Airbag main harness
(2) Airbag rear harness

B: CAUTION

• When servicing a vehicle, be sure to turn the ignition switch to OFF, disconnect the ground cable from battery, and wait for more than 20 seconds before starting work.
• The airbag system is fitted with a backup power source. If the airbag system is serviced within 20 seconds after the ground cable is disconnected, it may inflate.
• If the airbag warning light illuminates, repair the vehicle immediately. Airbag or pretensioner may inflate incorrectly, or not inflate in collision.
• If sensors, airbag module, airbag control module, pretensioner and harness are deformed or damaged, replace them with new parts.

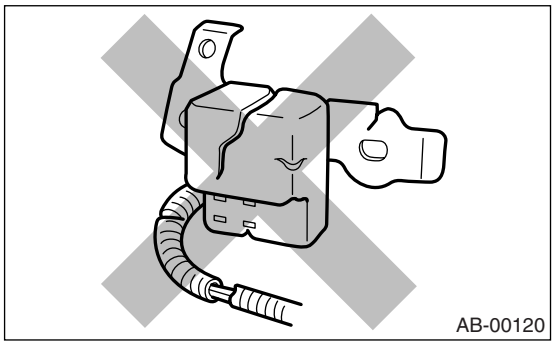
AB-00120

• When checking the airbag system, be sure to use a digital circuit tester. Use of an analog circuit tester may cause the airbag to activate erroneously.

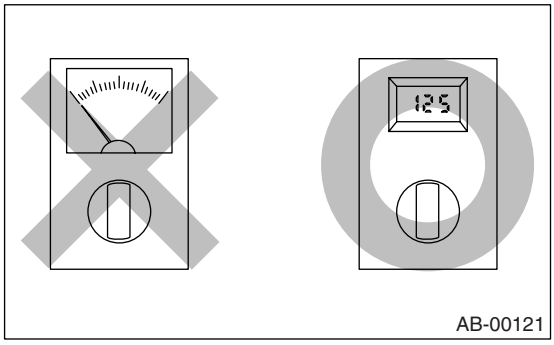

AB-00121

• When checking, use a test harness (1). Since damage to the connector terminal may cause the airbag to activate erroneously, do not directly apply the tester probe to any connector terminal of the airbag.

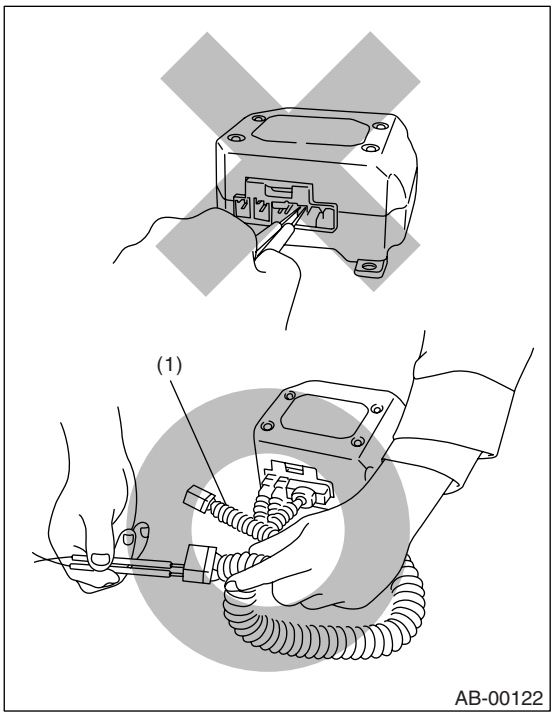

AB-00122

• Do not check continuity of the airbag modules for driver, passenger, side or curtain, or pretensioner.

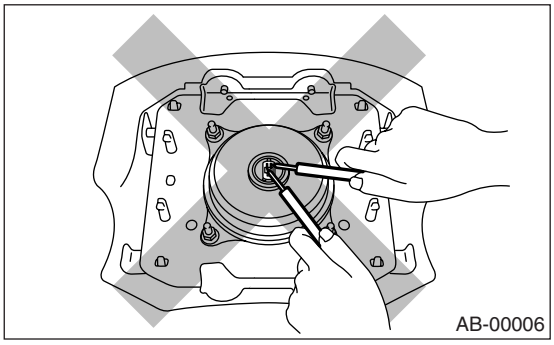
AB-00006

• Do not drop each airbag module, airbag control module and each sensor, subject them to high temperature over 93°C (199°F), or let water, oil or grease get on them; the internal parts may be damaged and reliability greatly lowered.

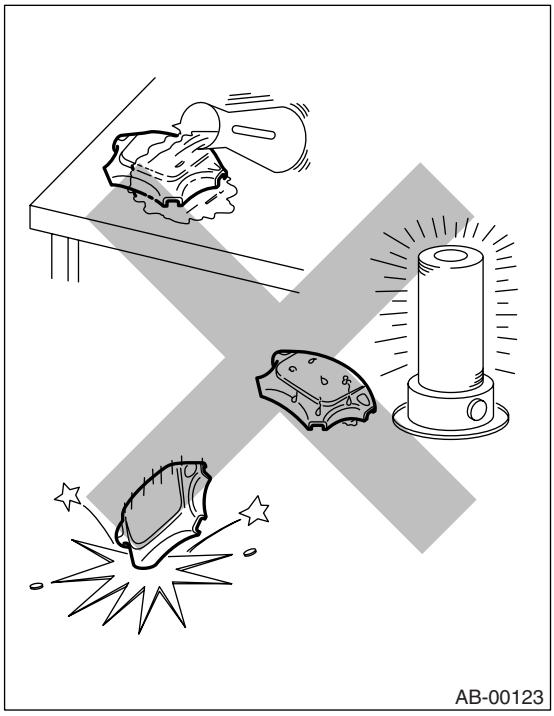

• If any damage, opening or rust is found on the airbag system wire harness, do not attempt to repair using soldering equipment. Be sure to replace the faulty harness with a new genuine part.

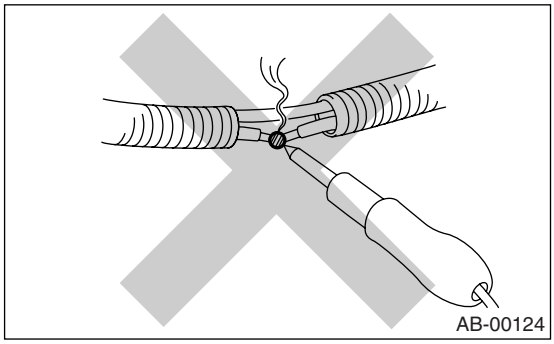

• Install the wire harness securely with the specified clips to avoid interference or tangled up with other parts.

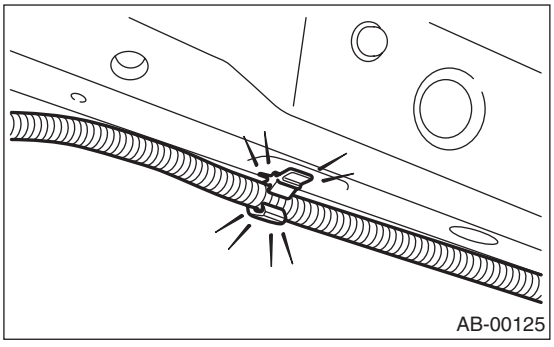

• Do not allow water or oil to come in contact with the connector terminals. Do not touch the connector terminals.

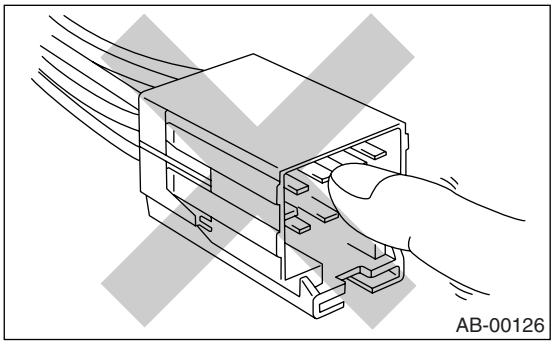

• Either of the airbag modules for driver, passenger, side or curtain, or pretensioner must not be disassembled.

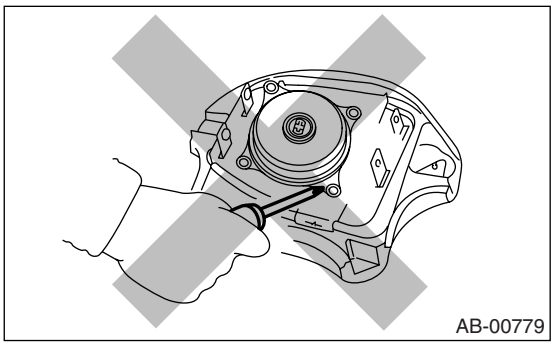

• The removed front seat with airbag module must be kept at least 200 mm (8 in) away from walls and other objects.

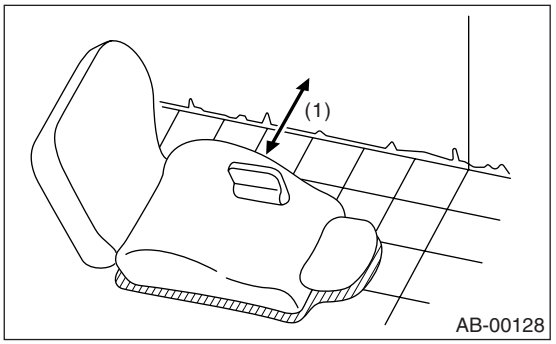

(1) 200 mm (8 in) or more

• Do not use the airbag or pretensioner parts from other vehicles. Always replace the defective parts with new parts.
• Never reuse a deployed airbag module and pretensioner.
• Do not discard the uninflated airbag or pretensioner.
• When painting or performing sheet metal work on the front part of the vehicle, including the front wheel apron front fender, and front side frame, remove the front sub sensors and wire harness of airbag system.

• When painting or performing sheet metal work on the side of the vehicle, including the side sill, center pillar, and front and rear doors, remove the side airbag sensors and wire harness of airbag system.

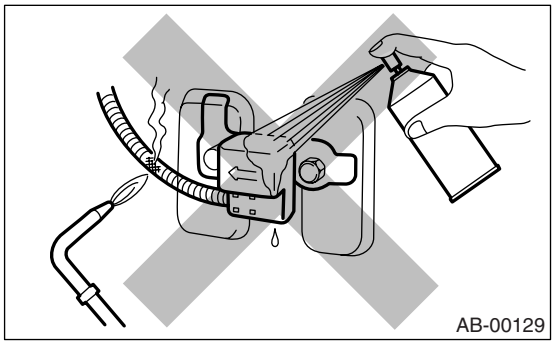

• After removal, keep each airbag system part with the pad facing upward on a dry, clean and flat surface away from heat, light sources, moisture and dust.

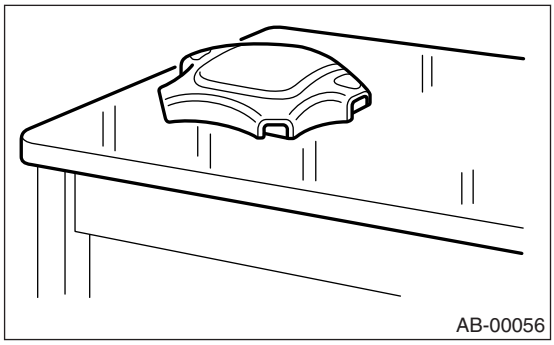

• When airbag control module, front sub sensor, side airbag sensor and curtain airbag sensor are removed, do not reuse the bolts and nuts of them. Always use new bolts and nuts for them.

• When storing a removed airbag module, do not place any objects on it or pile airbag modules on top of each other. If the airbag inflates for some reason when it is placed with its pad side facing downward or under any object, a serious accident may result.

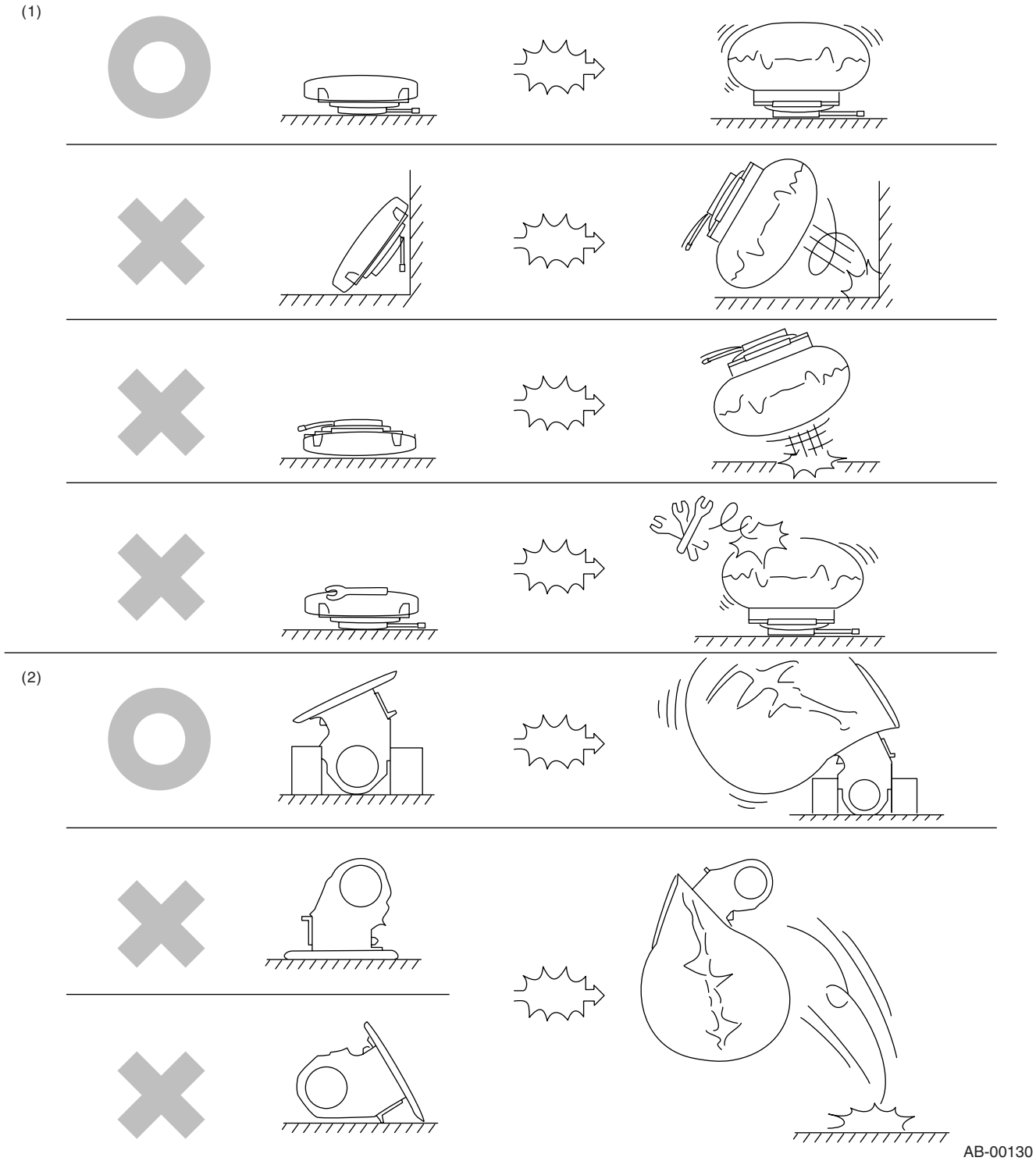

(1) Driver's airbag module (2) Passenger's airbag module

C: PREPARATION TOOL

1. GENERAL TOOL

TOOL NAME	REMARKS
TORX® T30	Used for removing and installing driver's airbag module.

2. Airbag Connector

A: PROCEDURE

1. POWER SUPPLY, BUCKLE SWITCH AND OCCUPANT DETECTION SYSTEM HARNESS

1) How to disconnect:
(1) Move the slide lock (A) in the direction of arrow.
(2) With the slide lock (A) moved, separate the connector.

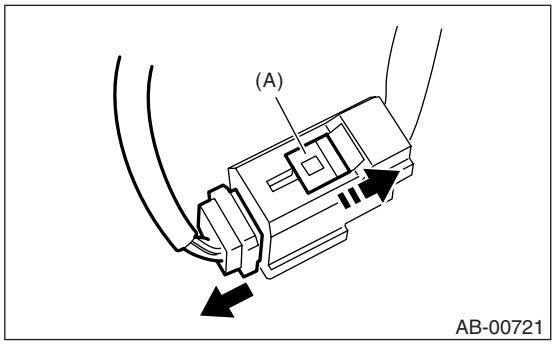

CAUTION:
When pulling the slide lock or disconnecting the connector, be sure to hold onto the connector and not the wire.

2) How to connect:
Holding the connector (A), push it in carefully until a connecting sound is heard.

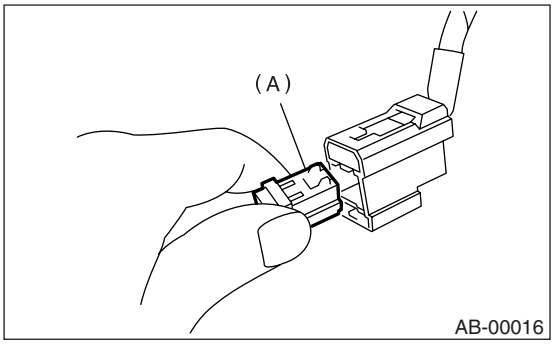

CAUTION:
Be sure to insert the connector in until it is locked. Then pull on it gently to make sure that it is locked.

2. DRIVER'S AIRBAG MODULE AND PRETENSIONER

1) How to disconnect:
(1) Using a flat tip screwdriver, pry the push lock upward to unlock.

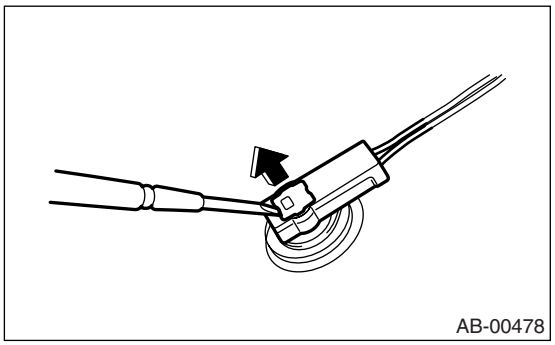

(2) Pull the connector to disconnect from the driver's airbag module assembly or retractor assembly.

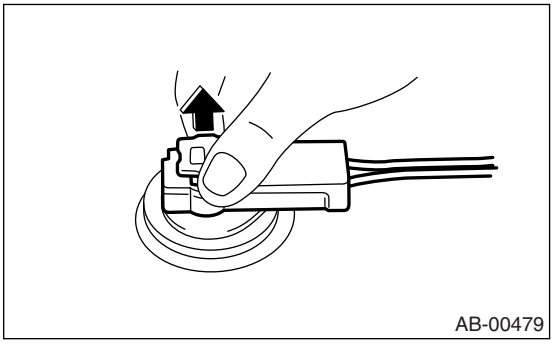

2) How to connect:
Connect the connector in the reverse order of disconnecting. At this time, be sure to insert the push lock until a connecting sound is heard.

CAUTION:
- **Be sure to insert the connector in until it is locked. Then pull on it gently to make sure that it is locked.**
- **Be sure to push the push lock in securely.**

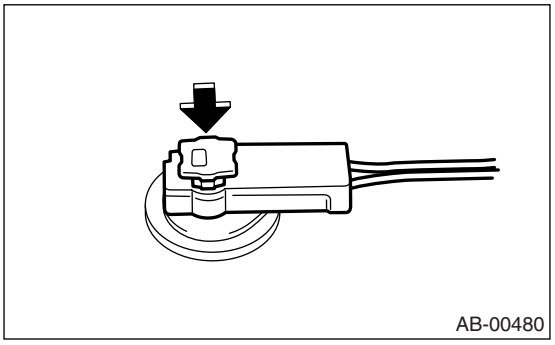

NOTE:
Connector can not be connected when the push lock is in lock position. To connect the connector, set the push lock to unlock position.

3. DRIVER'S AIRBAG (BETWEEN AIRBAG MAIN HARNESS AND ROLL CONNECTOR), PASSENGER'S AIRBAG

1) How to disconnect:
(1) Push the slide lock (A) into the direction of arrow.

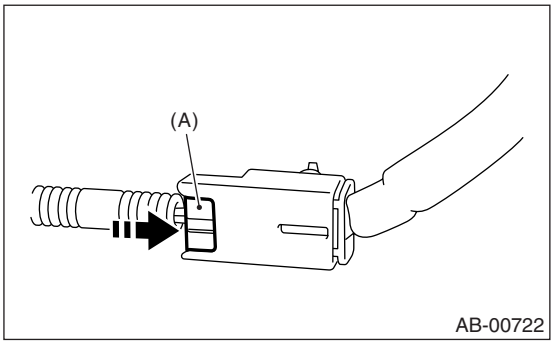

(2) With the slide lock pushed, disconnect the connector.

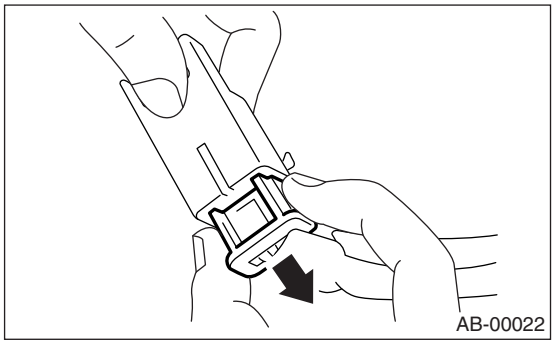

CAUTION:
When pulling the side lock or disconnecting the connector, be sure to hold onto the connector and not the wire.

2) How to connect:
Holding the connector, push it in carefully until a connecting sound is heard.

CAUTION:
Be sure to insert the connector in until it is locked. Then pull on it gently to make sure that it is locked.

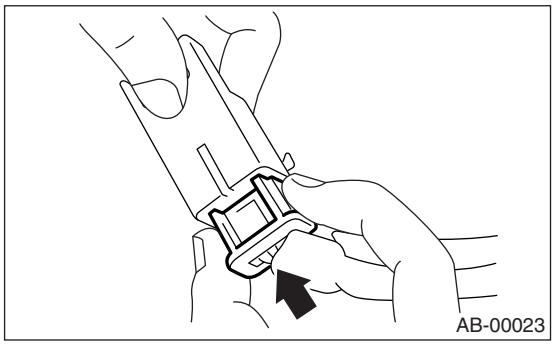

4. SIDE AIRBAG AND CURTAIN AIRBAG

1) How to disconnect:
(1) Push the lock arm (A).
(2) With the lock arm (A) pushed in, move the slide lock (B) in the direction of arrow.

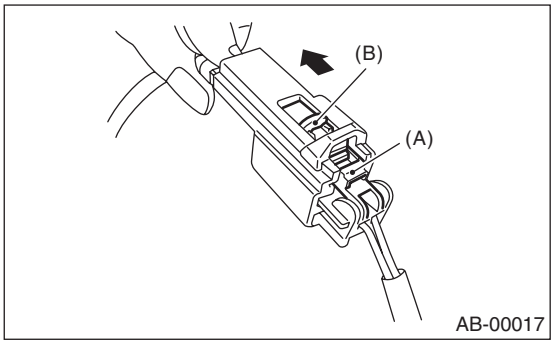

(3) With the slide lock moved, release the lock arm (back to its original position), and disconnect the connector.

CAUTION:
When pulling the side lock or disconnecting the connector, be sure to hold onto the connector and not the wire.

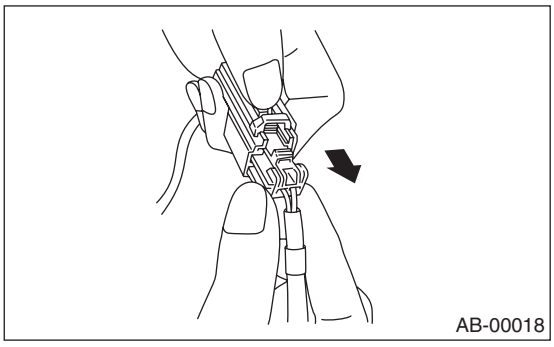

2) How to connect:
Holding the connector, push it in carefully until a connecting sound is heard.

CAUTION:
Be sure to insert the connector in until it is locked. Then pull on it gently to make sure that it is locked.

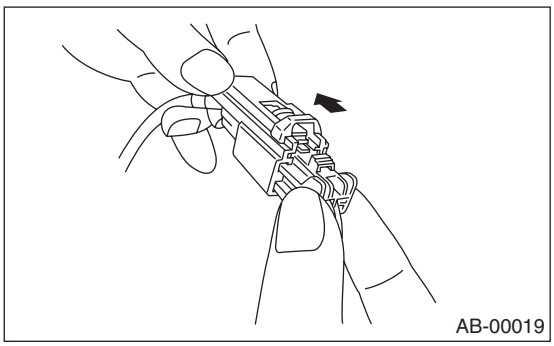

5. FRONT SUB-SENSOR, SIDE AIRBAG SENSOR, CURTAIN AIRBAG SENSOR AND SEAT POSITION SENSOR

1) How to disconnect:
Holding the outer part (A), pull it in the direction of arrow.

CAUTION:
When pulling the side lock or disconnecting the connector, be sure to hold onto the connector and not the wire.

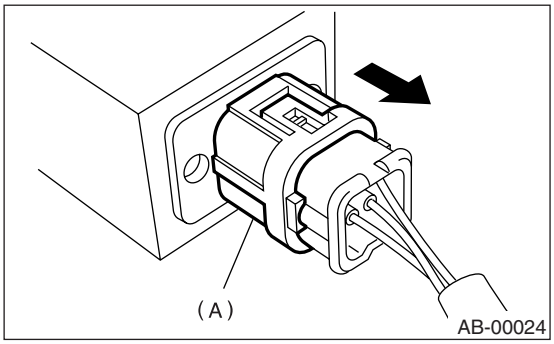

2) How to connect:
Holding the connector, push it in carefully until a connecting sound is heard.

CAUTION:
• The outer side (A) moves back, and so do not put your hand on the outer part.
• Be sure to insert the connector in until it is locked. Then pull on it gently to make sure that it is locked.

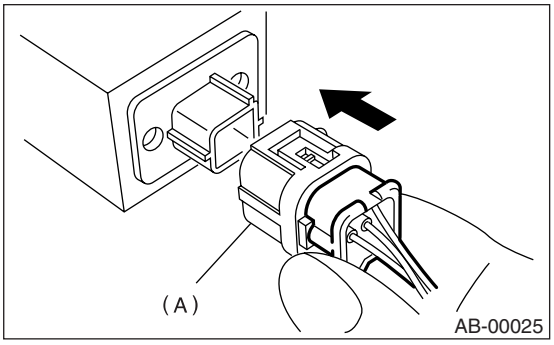

3. Inspection Locations After a Collision

A: REPLACEMENT

Replace the following parts when the airbag is deployed.

1. FRONT COLLISION

1) Driver's airbag module
2) Passenger's airbag module
3) Driver's seat belt (Pretensioner)
4) Passenger's seat belt (Pretensioner)
5) Airbag control module
6) Front sub sensor
7) Roll connector
8) Instrument panel (for integrating with passenger's airbag module)

2. SIDE COLLISION

1) Airbag control module
2) Side airbag module (operating side seat backrest)
3) Side airbag sensor (operating side)
4) Curtain airbag module (operating side)
5) Curtain airbag sensor (operating side)

3. INSPECTION OF OTHER PARTS

Check for the following, and replace the damaged parts with new parts.
1) Check the steering shaft for mounting conditions and deflection of front and rear, upward and downward directions, and deflection of front and rear direction with tilt lever released. (After collision, absorbing part of steering shaft may work.)
2) Check the connector of airbag module, pretensioner, etc. for damage, and also check each harness for pinch and connector damage. Replace the harness as a unit if damage is found.
3) Check the seat cushion frame, backrest, seat rail and headrest for deformation, distortion, crack, installing condition and play.
4) For passenger's seat, replace the seat cushion frame assembly with new one if the seat cushion frame or seat rail is deformed or cracked.
5) Perform the system calibration of passenger's seat. <Ref. to OD(diag)-12, SYSTEM CALIBRATION, OPERATION, Subaru Select Monitor.>
6) Check if the driver's seat position sensor and the deriver's and passenger's seatbelt buckle switch operate normally.

B: INSPECTION

If the vehicle is involved in a collision on any side, even if it is a slight collision, be sure to check the following systems.

1. DRIVER'S AIRBAG MODULE

1) Check for the following, and replace the damaged parts with new parts.
• Airbag module is cracked or deformed.
• Harness and/or connector is cracked, deformed or open. Harness wire is exposed.
• The module surface is fouled with grease, oil, water or cleaning solvent.
2) When installing a new driver's airbag module, check for the following, and replace the damaged parts with new parts.
• The steering wheel is in the way, making it difficult to install the airbag module.
• The clearance between the driver's airbag module and steering wheel is not constant.
• When steering wheel deformation in axial, upward and downward directions exceed limits.

Standard value:
Height deflection A
Less than 6 mm (0.24 in)
O.D. deflection L
Less than 7 mm (0.28 in)

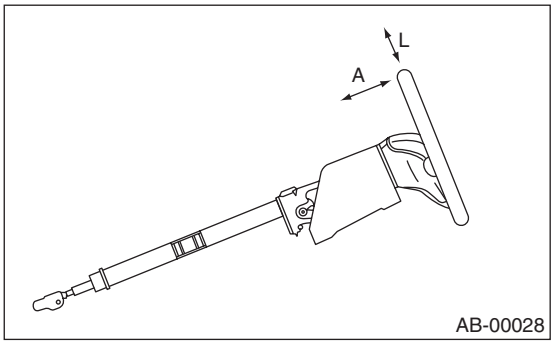

2. PASSENGER'S AIRBAG MODULE

Check for the following, and replace the damaged parts with new parts.
• Airbag module and instrument panel are cracked or deformed.
• Harness and/or connector is cracked, deformed or open. Harness wire is exposed.
• Mounting bracket is cracked or deformed.

3. SIDE AIRBAG MODULE

Check for the following, and replace the damaged parts with new parts.
• Front seat, airbag module and mounting bracket are damaged or deformed.
• Harness and/or connector is cracked, deformed or open. Harness wire is exposed.

4. CURTAIN AIRBAG MODULE

Check for the following, and replace the damaged parts with new parts.
- Airbag cover is scratched or broken.
- Harness and/or connector is cracked, deformed or open. Harness wire is exposed.
- Mounting bracket and securing clip are cracked or deformed.

5. AIRBAG CONTROL MODULE

Check for the following, and replace the damaged parts with new parts.
- Control module is cracked or deformed.
- Mounting bracket is cracked or deformed.
- Connector is scratched, cracked or deformed.
- Airbag is deployed.
- Side airbag is deployed.
- Curtain airbag is deployed.

6. FRONT SUB SENSOR

If the section of vehicle as shown in the figure is damaged, check for the following and replace the damaged parts with new parts.

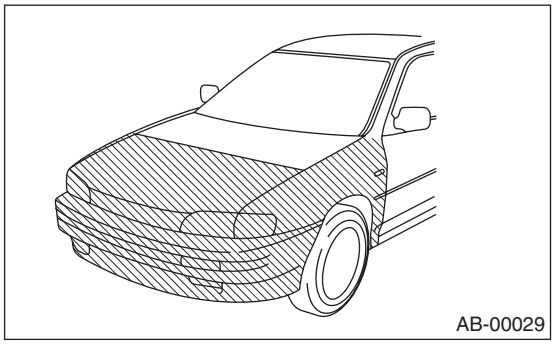

- Front sub sensor is cracked or deformed.
- Mounting bracket is cracked or deformed.
- Connector is scratched, cracked or deformed.
- Airbag is deployed.

7. SIDE AIRBAG SENSOR AND CURTAIN AIRBAG SENSOR

If the section of vehicle as shown in the figure is damaged, check for the following and replace the damaged parts with new parts.

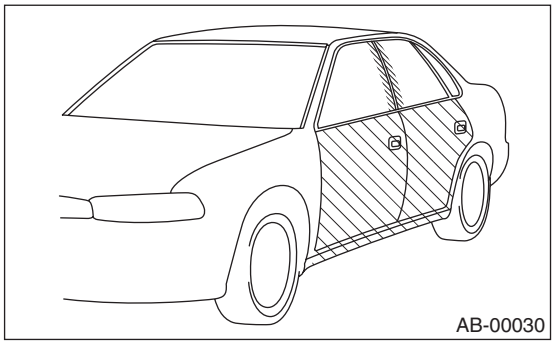

- Side airbag sensor and curtain airbag sensor are cracked or deformed.
- Mounting bracket is cracked or deformed.
- Connector is scratched, cracked or deformed.
- Side airbag or curtain airbag is deployed. (operating side)

8. ROLL CONNECTOR

Check for the following, and replace the damaged parts with new parts.
- Combination switch or steering roll connector is cracked or deformed.

9. STEERING SHAFT

Check for the following, and replace the damaged parts with new parts.
- Overall length of steering column should be within specifications.

Standard value:

Overall length L
Except for OUTBACK model
833.6 $^{+1.3}_{-0.3}$ mm (32.82 $^{+0.051}_{-0.012}$ in)
OUTBACK model
825.4 $^{+1.3}_{-0.3}$ mm (32.50 $^{+0.051}_{-0.012}$ in)

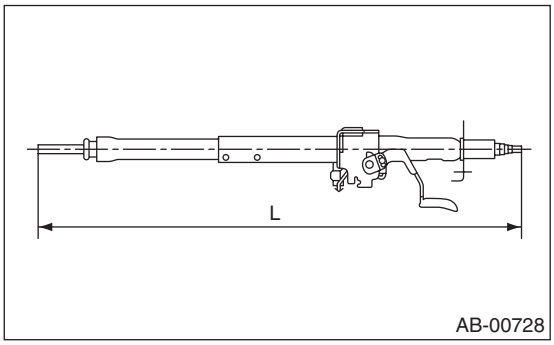

10.DRIVER'S SEAT

Check the following items and replace the faulty parts with new one.
- Seatbelt buckle switch or seat position sensor body/bracket is cracked or deformed.
- Harness and/or connector is cracked, deformed or open. Harness wire is exposed.

11.PASSENGER'S SEAT

1) Check the following items and replace the faulty parts with new one.
- Seatbelt buckle switch body/bracket for scratch, crack or deformation
- Backrest frame for crack or deformation
- Headrest for deformation or play

CAUTION:
Never disassemble the following items. Always check with seat cushion frame assembly.

• Seat cushion frame and seat rail for crack or deformation
• Occupant detection system unit or each load sensor for scratch, crack or deformation
• Harness and/or connector is cracked, deformed or open. Harness wire is exposed.

2) After checking the installing condition of passenger's seat, perform the system calibration of occupant detection system. <Ref. to OD(diag)-12, SYSTEM CALIBRATION, OPERATION, Subaru Select Monitor.>

4. Driver's Airbag Module

A: REMOVAL

CAUTION:
Refer to "CAUTION" of General Description before handling the airbag module. <Ref. to AB-5, CAUTION, General Description.>

1) Position the front wheels straight ahead. (After moving a vehicle more than 5 m (16 ft) with front wheels positioned straight ahead, make sure the vehicle moves straight ahead.)
2) Turn the ignition switch to OFF.
3) Disconnect the ground cable from battery and wait for at least 20 seconds before starting work.
4) Using TORX® BIT T30 (1), remove the two TORX® bolts on the side of steering wheel.

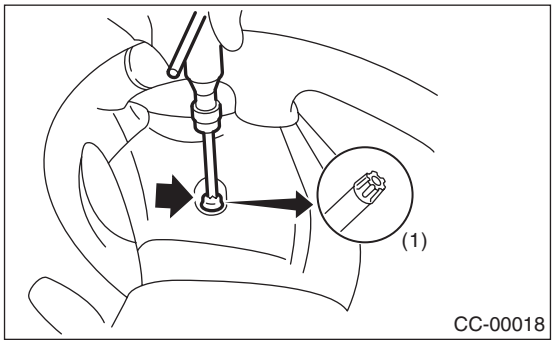

5) Disconnect the horn harness.
6) Disconnect the airbag connector on the back of airbag module, and then remove the airbag module. <Ref. to AB-10, PROCEDURE, Airbag Connector.>

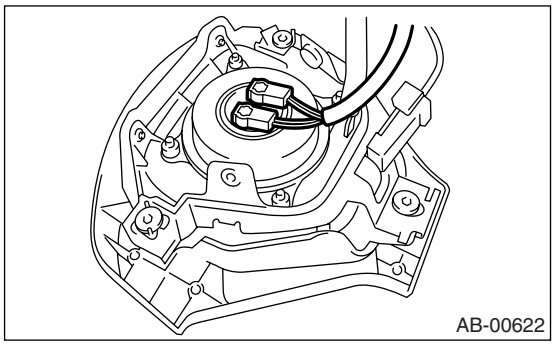

7) Refer to "CAUTION" for handling of a removed airbag module. <Ref. to AB-5, CAUTION, General Description.>

B: INSTALLATION

CAUTION:
• Refer to "CAUTION" of General Description before handling the airbag module. <Ref. to AB-5, CAUTION, General Description.>
• To prevent the misconnection, the connector is colored. Connect the harness side connector to the same color of module side connector.

Install in the reverse order of removal.

Tightening torque:
10 N·m (1.0 kgf-m, 7.2 ft-lb)

C: INSPECTION

CAUTION:
Refer to "CAUTION" of General Description before handling the airbag module. <Ref. to AB-5, CAUTION, General Description.>

Check for the following, and replace damaged parts with new parts.
• Airbag module, harness, connector and mounting bracket are damaged. <Ref. to AB-13, DRIVER'S AIRBAG MODULE, INSPECTION, Inspection Locations After a Collision.>

5. Passenger's Airbag Module

A: REMOVAL

CAUTION:
Refer to "CAUTION" of "General Description" before handling the airbag module. <Ref. to AB-5, CAUTION, General Description.>

1) Turn the ignition switch to OFF.
2) Disconnect the ground cable from battery and wait for at least 20 seconds before starting work.
3) Remove the instrument panel. <Ref. to EI-56, INSTRUMENT PANEL (EXCLUDING STEERING SUPPORT BEAM), REMOVAL, Instrument Panel Assembly.>
4) Remove the pawl and remove the passenger's airbag module.

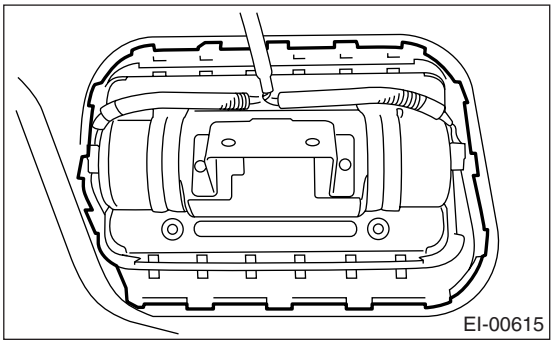

5) Refer to "CAUTION" for handling of a removed airbag module. <Ref. to AB-5, CAUTION, General Description.>

B: INSTALLATION

CAUTION:
Refer to "CAUTION" of General Description before handling the airbag module. <Ref. to AB-5, CAUTION, General Description.>

Install in the reverse order of removal.

Tightening torque:
7.4 N·m (0.75 kgf-m, 5.5 ft-lb)

C: INSPECTION

CAUTION:
Refer to "CAUTION" of General Description before handling the airbag module. <Ref. to AB-5, CAUTION, General Description.>

Check for the following, and replace damaged parts with new parts.

- Airbag module, harness, connector, and mounting bracket are damaged. <Ref. to AB-13, PASSENGER'S AIRBAG MODULE, INSPECTION, Inspection Locations After a Collision.>

6. Side Airbag Module

A: REMOVAL

CAUTION:
Refer to "CAUTION" of General Description before handling the airbag module. <Ref. to AB-5, CAUTION, General Description.>

NOTE:
Remove the passenger's side by referring to driver's side.

1) Turn the ignition switch to OFF.
2) Disconnect the ground cable from battery and wait for at least 20 seconds before starting work.
3) Remove the front seats. <Ref. to SE-9, REMOVAL, Front Seat.>
4) Remove the clip from reverse side of seat cushion assembly and slide rail IN (A), and then remove the side airbag harness.

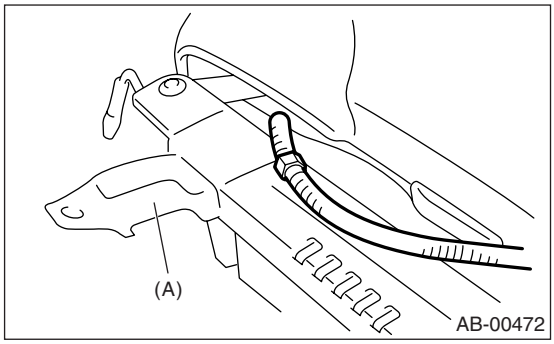

5) Remove the backrest cover. <Ref. to SE-10, DISASSEMBLY, Front Seat.>
6) Remove the side airbag harness from backrest frame assembly.

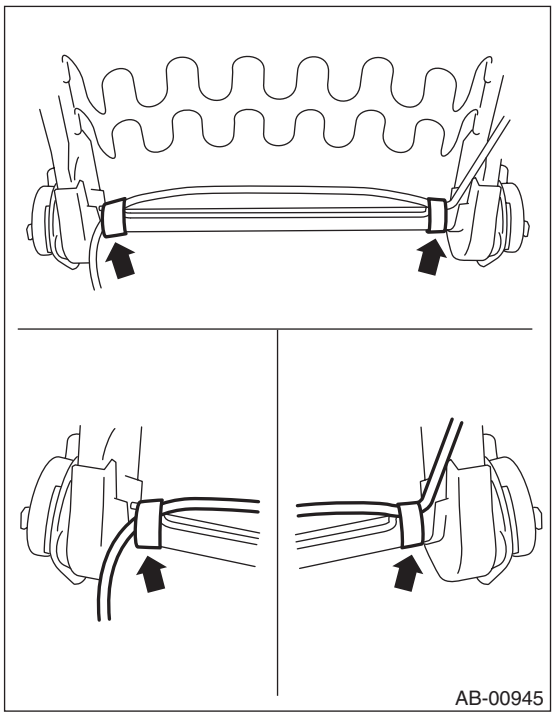

7) Remove the side airbag module (A) from backrest frame assembly.

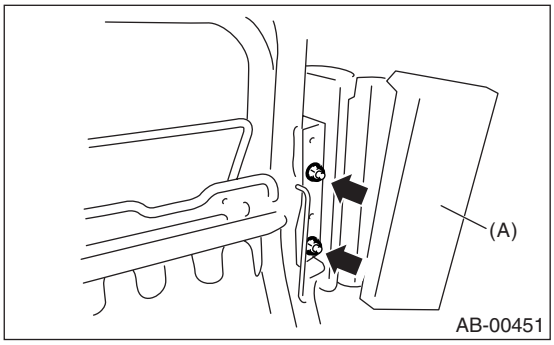

B: INSTALLATION

CAUTION:
• Refer to "CAUTION" of General Description before handling the airbag module. <Ref. to AB-5, CAUTION, General Description.>
• Be sure to perform the system calibration for occupant detection system after passenger's seat installation. <Ref. to OD(diag)-12, SYSTEM CALIBRATION, OPERATION, Subaru Select Monitor.>

1) Ensure that there are no foreign articles on side airbag module.
2) Install the side airbag module (A) to backrest frame assembly.

Tightening torque:
6.0 N·m (0.61 kgf-m, 4.4 ft-lb)

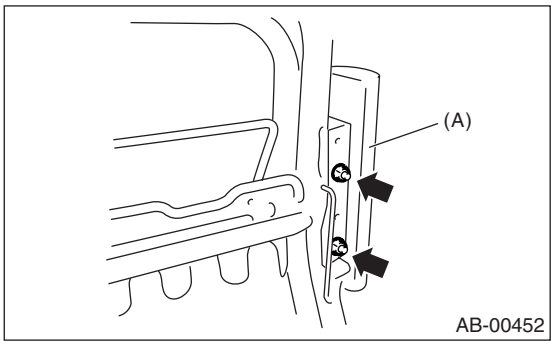

3) Install the side airbag harness to backrest frame assembly.

NOTE:
Secure the harness to its original position of seat.

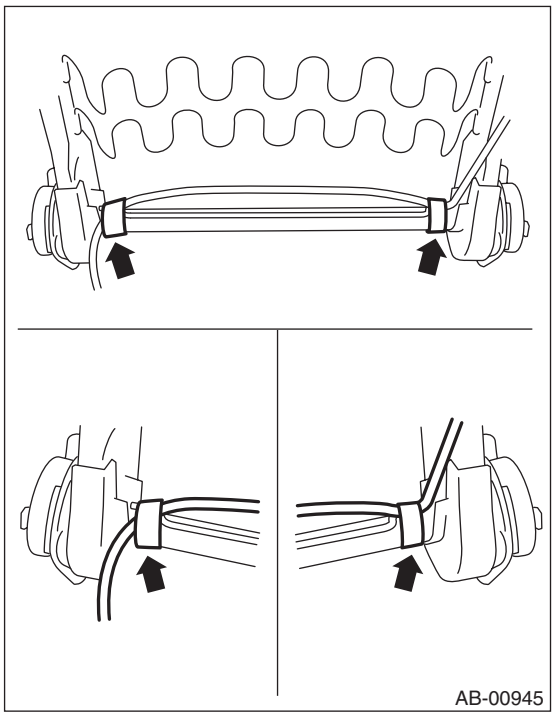

4) Install the backrest cover. <Ref. to SE-18, ASSEMBLY, Front Seat.>
5) Install the side airbag harness to slide rail IN (A), and then secure the connector to the bracket on back side of seat cushion assembly.

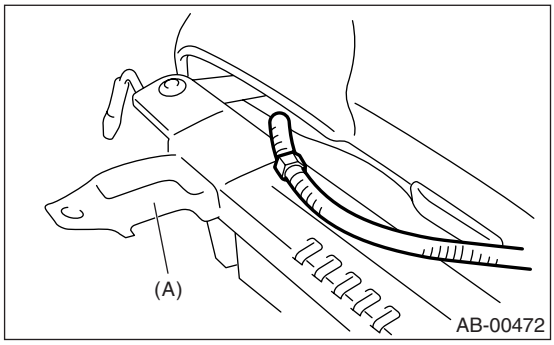

6) Recline the seat or slide it backward and forward, and check there is no contact between the seat backrest assembly, cushion cover assembly and side airbag harness.

C: INSPECTION

CAUTION:
Refer to "CAUTION" of General Description before handling the airbag module. <Ref. to AB-5, CAUTION, General Description.>

Perform the inspection of following items, and replace the damaged parts with new ones. <Ref. to AB-13, SIDE AIRBAG MODULE, INSPECTION, Inspection Locations After a Collision.>

1) With side collision (when side airbag is deployed)
- Side airbag module assembly
- Backrest pad assembly
- Backrest frame assembly
- Backrest cover assembly

2) Other replacement parts, which found to be damaged by visual check
- Headrest assembly
- Bushing
- Slide rail OUT (Driver's side)
- Slide rail IN (Driver's side)
- Seat cushion frame ASSY (Passenger's side)
- Seat hinge cover
- Seat lifter lever
- Reclining lever
- Side airbag harness and connector on body side.

3) With side collision (when side airbag is not deployed)
Check the seat and airbag module visually, and then replace them with new ones if damaged or cracked.
Specially inspect the damage of airbag module body, mounting bracket, and harness connector.
4) Without side collision (dirt and damage of cover)
Replace the corresponding part with a new one.

7. Curtain Airbag Module

A: REMOVAL

CAUTION:
Refer to "CAUTION" of General Description before handling the airbag module. <Ref. to AB-5, CAUTION, General Description.>

1) Turn the ignition switch to OFF.
2) Disconnect the ground cable from battery and wait for at least 20 seconds before starting work.
3) Remove the rear quarter trim. (Sedan model) <Ref. to EI-62, SEDAN MODEL, REMOVAL, Rear Quarter Trim.>
4) Remove the quarter rear pillar trim. (Wagon model) <Ref. to EI-62, WAGON MODEL, REMOVAL, Rear Quarter Trim.>
5) Disconnect the curtain airbag module connector.
- Sedan model

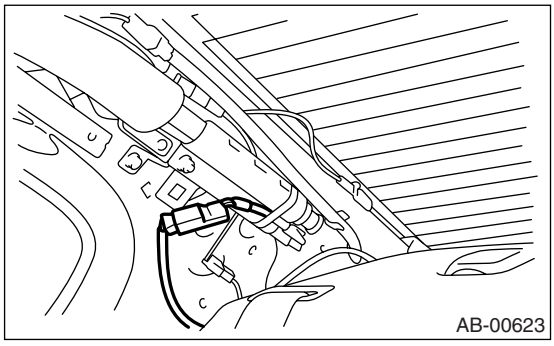
AB-00623

- Wagon model

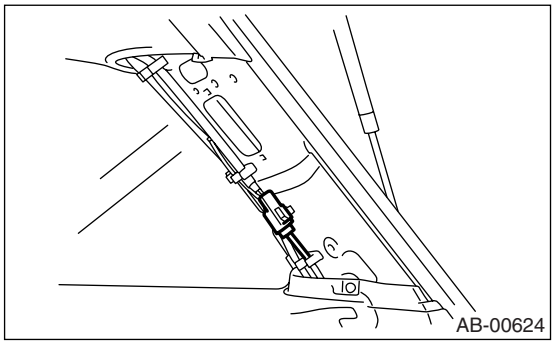
AB-00624

6) Remove the roof trim. <Ref. to EI-66, REMOVAL, Roof Trim.>
7) Remove the bolts (A) and clips (B), and then remove the curtain airbag module.

CAUTION:
• Be careful not to damage the curtain airbag module during removal.
• Never open the curtain airbag module before deploying it. Never reuse the opened curtain airbag module.

- Sedan model

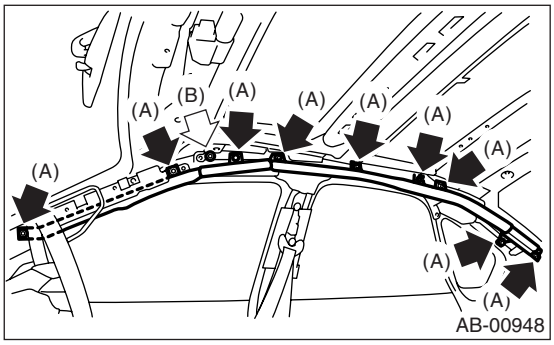

AB-00948

- Wagon model

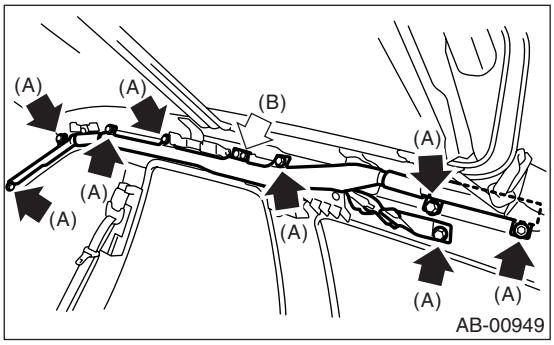

AB-00949

NOTE:
Remove the rear center seat belt retractor on the RH side before servicing.

8) Remove the airbag guide A from front pillar.

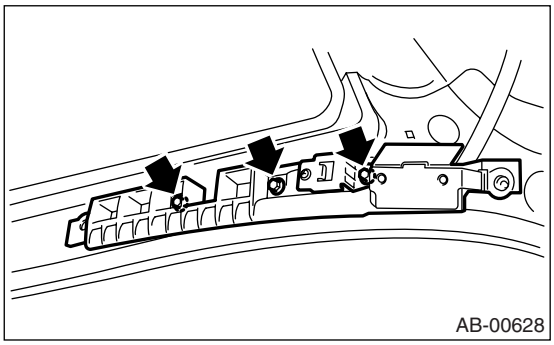
AB-00628

9) Remove the airbag guide B from center pillar.
- Sedan model

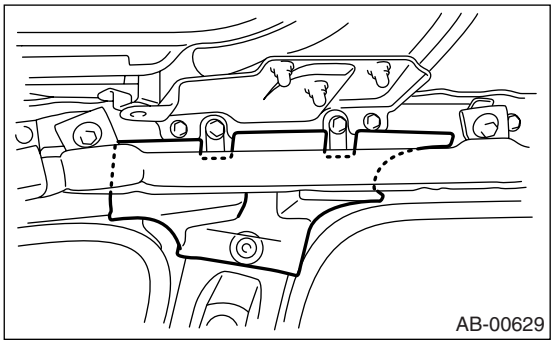
AB-00629

• Wagon model

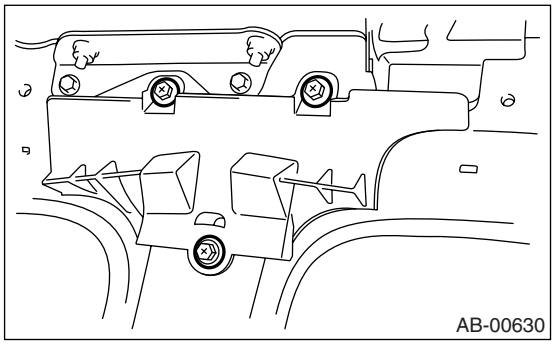

10) Remove the airbag guide C from quarter pillar.
• Sedan model

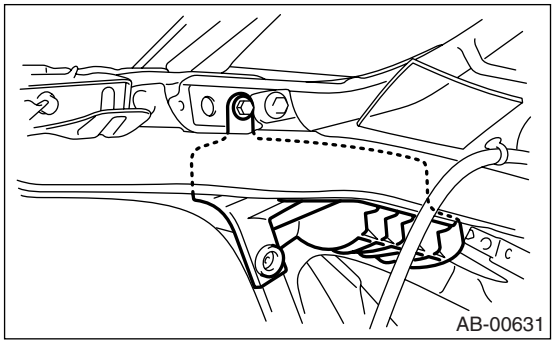

• Wagon model

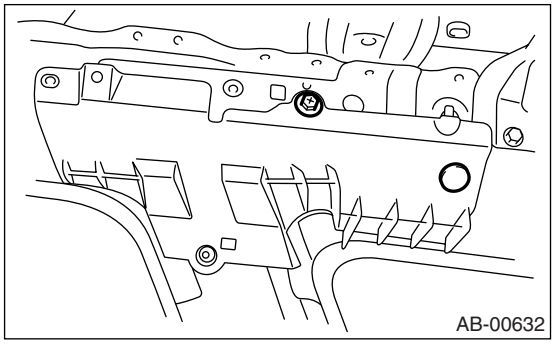

B: INSTALLATION

CAUTION:
• Refer to "CAUTION" of General Description before handling the airbag module. <Ref. to AB-5, CAUTION, General Description.>
• When installing the curtain airbag module, install a specified part at specified place.
• Be careful not to damage the curtain airbag module during installation.
• Never open the curtain airbag module before deploying it. Never reuse the deployed curtain airbag module.
• Ensure that there are no foreign articles on airbag module.

Install in the reverse order of removal.

Tightening torque:
7.5 N·m (0.77 kgf-m, 5.5 ft-lb)

C: INSPECTION

CAUTION:
Refer to "CAUTION" of General Description before handling the airbag module. <Ref. to AB-5, CAUTION, General Description.>

Perform the inspection of following items, and replace the damaged parts with new ones. <Ref. to AB-14, CURTAIN AIRBAG MODULE, INSPECTION, Inspection Locations After a Collision.>
1) With side collision (when curtain airbag is deployed)
• Curtain airbag module assembly
• Roof trim
• Front pillar upper trim
• Center pillar upper trim
• Rear quarter pillar trim
• Airbag guide A, B, C
2) Other replacement parts, which found to be damaged by visual check
• Assist grip
• Assist grip bracket
• Curtain airbag harness and connector on body side.
3) With side collision (when curtain airbag is not deployed)
Check the roof trim, pillar trim and airbag module visually, and then replace them with new ones if damaged or cracked.
Specially inspect the damage of airbag module body, mounting bracket, harness connector.
4) Without side collision (dirt and damage of cover)
Replace the corresponding part with a new one.

8. Airbag Control Module

A: REMOVAL

CAUTION:
• Do not disassemble the airbag control module.
• If the airbag control module is deformed or if water damage is suspected, replace the airbag control module with a new one.
• Do not drop the airbag control module.
• After removal, keep the airbag control module on a dry, clean surface away from moisture, heat and dust.

1) Turn the ignition switch to OFF.
2) Disconnect the ground cable from battery and wait for at least 20 seconds before starting work.
3) Remove the console front panel and console side garnish. <Ref. to EI-54, REMOVAL, Center Console.>
4) Remove the screws and pull out the audio unit assembly to disconnect the connector for removal.

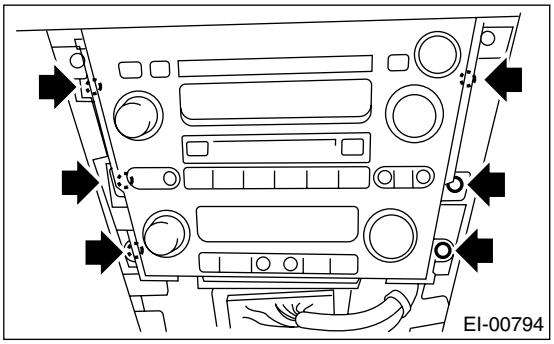

5) Disconnect the connector from airbag control module.
6) Remove the bolts and remove airbag control module.

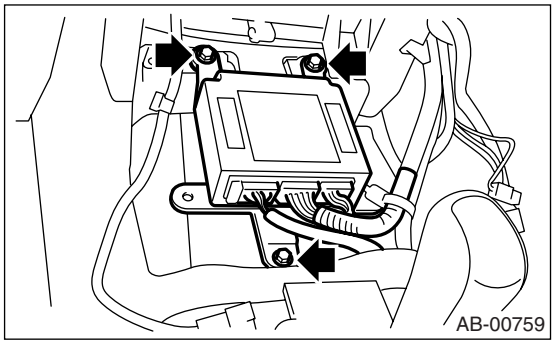

B: INSTALLATION

CAUTION:
• Do not reuse the bolt and nut.
• Always use new bolts and nuts for them.
• Be sure to put the water protection cover over the connector.

Install in the reverse order of removal.

Tightening torque:
25 N·m (2.5 kgf-m, 18.1 ft-lb)

C: INSPECTION

Check for the following, and replace the damaged parts with new parts.
• Control module, connector, and mounting bracket are damaged.
• Airbag is deployed.
• Side airbag is deployed.
• Curtain airbag is deployed.

9. Side Airbag Sensor

A: REMOVAL

1) Turn the ignition switch to OFF.
2) Disconnect the ground cable from battery and wait for at least 20 seconds before starting work.
3) Remove the center pillar lower trim. <Ref. to EI-60, REMOVAL, Lower Inner Trim.>
4) Remove the center pillar inner protector lower.

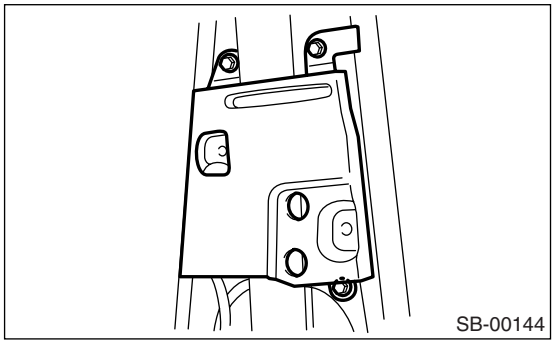
SB-00144

5) Remove the front outer seat belt retractor. <Ref. to SB-10, OUTER SEAT BELT ASSEMBLY, REMOVAL, Front Seat Belt.>
6) Remove the nut and disconnect the airbag connector to remove side airbag sensor.

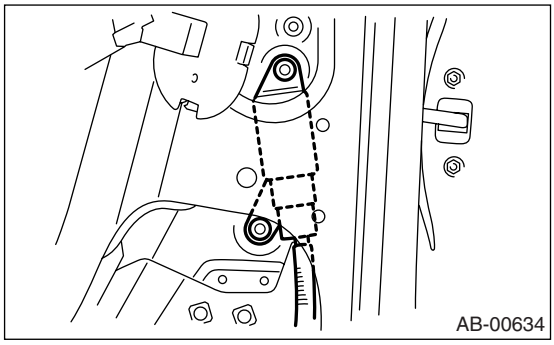
AB-00634

B: INSTALLATION

CAUTION:
- **Do not reuse the bolt and nut.**
- **Always use new bolts and nuts for them.**

Install in the reverse order of removal.

Tightening torque:
7.4 N·m (0.75 kgf-m, 5.5 ft-lb)

C: INSPECTION

Check for the following, and replace the damaged parts with new parts.
- Mounting bracket of airbag sensor or connector is damaged.
- Side airbag is deployed.

10.Curtain Airbag Sensor

A: REMOVAL

1) Turn the ignition switch to OFF.
2) Disconnect the ground cable from battery and wait for at least 20 seconds before starting work.
3) Remove the rear seat. <Ref. to SE-20, REMOVAL, Rear Seat.>
4) Detach the nuts and disconnect the airbag connector to remove the curtain airbag sensor.

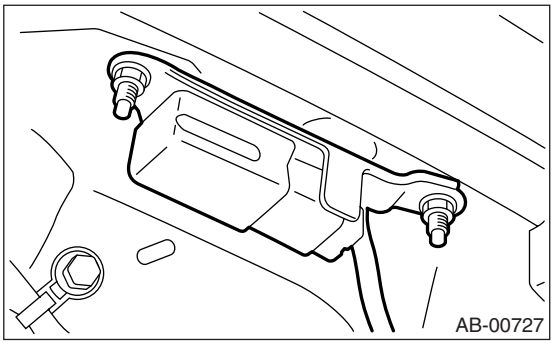

B: INSTALLATION

CAUTION:
- **Do not reuse the bolt and nut.**
- **Always use new bolts and nuts for them.**

Install in the reverse order of removal.

Tightening torque:
7.4 N·m (0.75 kgf-m, 5.5 ft-lb)

C: INSPECTION

Check for the following, and replace the damaged parts with new parts.
- Mounting bracket of curtain airbag sensor or connector is damaged.
- Curtain airbag is deployed.

11.Roll Connector

A: REMOVAL

1) Turn the ignition switch to OFF.
2) Disconnect the ground cable from battery and wait for at least 20 seconds before starting work.
3) Remove the driver's airbag module. <Ref. to AB-16, REMOVAL, Driver's Airbag Module.>
4) Remove the steering wheel. <Ref. to PS-14, REMOVAL, Steering Wheel.>
5) Remove the steering column cover.
6) Remove the screws, and then remove the roll connector.

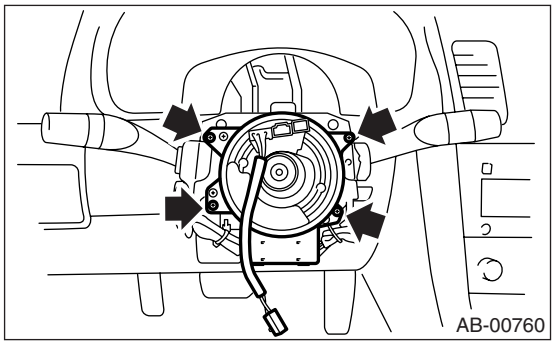

B: INSTALLATION

1) Install in the reverse order of removal.
2) Before installing steering wheel, be sure to adjust the direction of roll connector with steering. <Ref. to AB-25, ADJUSTMENT, Roll Connector.>

C: INSPECTION

Check for the following, and replace the damaged parts with new parts.
• Combination switch and roll connector are cracked or deformed.

D: ADJUSTMENT

1) Check that front wheels are positioned in straight ahead direction.
2) Turn the roll connector pins (A) clockwise until it stops.
3) Turn the roll connector pins (A) approx. 3.25 turns until "▲" marks are aligned.

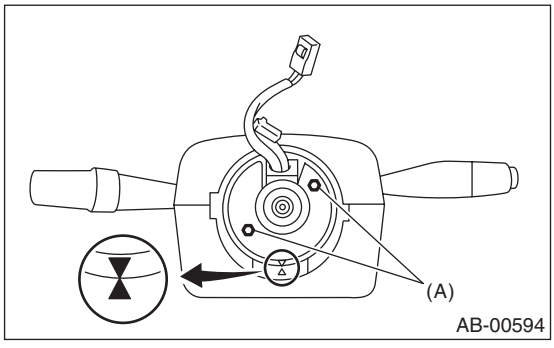

12.Front Sub Sensor

A: REMOVAL

1) Turn the ignition switch to OFF.
2) Disconnect the ground cable from battery and wait for at least 20 seconds before starting work.
3) Remove the front bumper face. <Ref. to EI-30, FRONT BUMPER FACE, REMOVAL, Front Bumper.>
4) Remove the bolts, and then detach the front sub sensor.

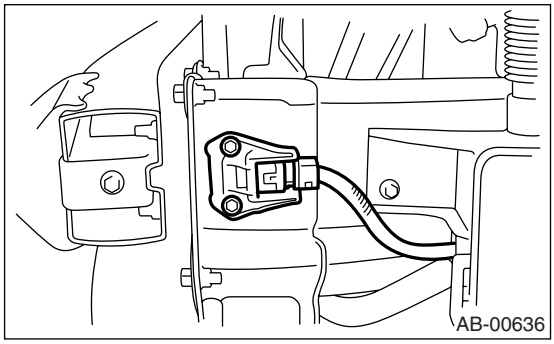

5) Disconnect the connector from front sub sensor.

B: INSTALLATION

CAUTION:
- **Do not reuse the bolt and nut.**
- **Always use new bolts and nuts for them.**

Install in the reverse order of removal.

Tightening torque:
13 N·m (1.32 kgf-m, 9.6 ft-lb)

C: INSPECTION

Check for the following, and replace the damaged parts with new parts.
- Front sub sensor, mounting bracket and connector are damaged.
- Airbag is deployed.

AIRBAG SYSTEM (DIAGNOSTICS)

AB(diag)

		Page
1.	Basic Diagnostic Procedure	2
2.	Check List for Interview	3
3.	General Description	4
4.	Electrical Component Location	20
5.	Airbag Connector	22
6.	Airbag Control Module I/O Signal	25
7.	Subaru Select Monitor	27
8.	Read Diagnostic Trouble Code (DTC)	32
9.	Inspection Mode	33
10.	Clear Memory Mode	34
11.	Airbag Warning Light Illumination Pattern	35
12.	Airbag Warning Light Failure	36
13.	List of Diagnostic Trouble Code (DTC)	41
14.	Diagnostic Chart with Trouble Code	46

1. Basic Diagnostic Procedure

A: PROCEDURE

	Step	Check	Yes	No
1	**CHECK ILLUMINATION OF INDICATOR LIGHT.** Check illumination of airbag warning light in the combination meter.	Does the airbag warning light illuminate?	Go to step **2.**	Perform the diagnosis according to the phenomenon.
2	**CHECK INDICATION OF DTC ON DISPLAY.** 1) Turn the ignition switch to OFF. 2) Connect the Subaru Select Monitor to data link connector. 3) Turn the ignition switch to ON and the Subaru Select Monitor switch to ON. 4) Read DTC. <Ref. to AB(diag)-27, READ DIAGNOSTIC TROUBLE CODE (DTC), OPERATION, Subaru Select Monitor.> NOTE: If the communication function of Subaru Select Monitor cannot be executed normally, check the communication circuit. <Ref. to AB(diag)-29, COMMUNICATION FOR INITIALIZING IMPOSSIBLE, INSPECTION, Subaru Select Monitor.> 5) Record all the DTCs and freeze frame data.	Is DTC displayed?	Go to step **3.**	Go to "Airbag Warning Light Failure". <Ref. to AB(diag)-36, Airbag Warning Light Failure.>
3	**PERFORM DIAGNOSIS.** 1) Judge the possible cause from "List of Diagnostic Trouble Code" <Ref. to AB(diag)-41, List of Diagnostic Trouble Code (DTC).>. 2) Inspect the DTC using "List of Diagnostic Trouble Code (DTC)". 3) Repair the trouble cause. 4) Perform the clear memory mode. <Ref. to AB(diag)-34, Clear Memory Mode.> 5) Perform the inspection mode. <Ref. to AB(diag)-33, Inspection Mode.> 6) Read any DTC again.	Is DTC displayed?	Perform the procedure 1) to 5) in step 3.	Finish the diagnosis.

2. Check List for Interview

A: CHECK

Customer's Name		Inspector's Name	
Date Vehicle Brought In	/ /	Registration No.	
Odometer Reading	km miles	V.I.N.	
Date Problem Occurred	/ /	Registration Year	/ /
Weather	❑ Fine ❑ Cloudy ❑ Rainy ❑ Snowy ❑ Other:		
Temperature	°C (°F)		
Road Condition	❑ Level road ❑ Uphill ❑ Downhill ❑ Rough road ❑ Others:		
Vehicle Operation	❑ Starting ❑ Idling ❑ Driving (❑ Constant speed ❑ Acceleration ❑ Deceleration ❑ Steering wheel turn ❑ Others:)		
Details of Problem			
Check Airbag Warning Light	❑ Normal (After turning the ignition switch to ON, lit for 6 seconds and goes off.) ❑ Remains ON ❑ Remains OFF		
DTC output	❑ Normal Code ❑ DTC: (Code:)		

3. General Description

A: CAUTION

• When servicing a vehicle, be sure to turn the ignition switch to OFF, disconnect the ground cable from battery, and wait for more than 20 seconds before starting work.
• The airbag system is equipped with a backup power source. If the airbag system is serviced within 20 seconds from the ground cable is disconnected, it may inflate.

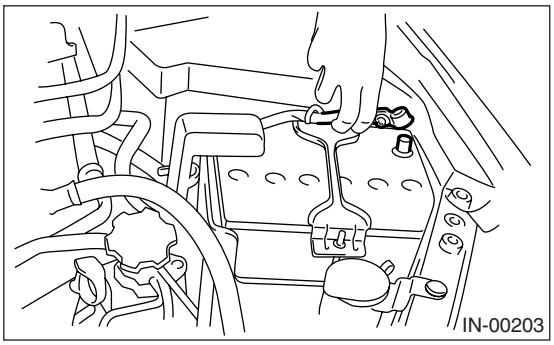

• If sensors, airbag module, airbag control module, pretensioner and harness are deformed or damaged, replace them with new parts.

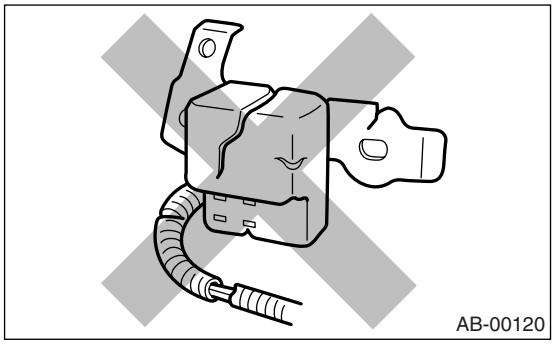

• Do not use the airbag system and pretensioners on other vehicles. When replacing parts, be sure to replace them with new ones.
• When checking the airbag system, be sure to use a digital circuit tester. Use of an analog circuit tester may cause the airbag to activate erroneously.

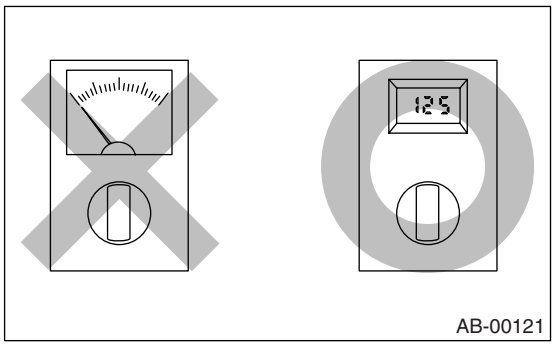

• When checking, use a test harness (1). Do not directly apply the tester probe to any connector terminal of the airbag.

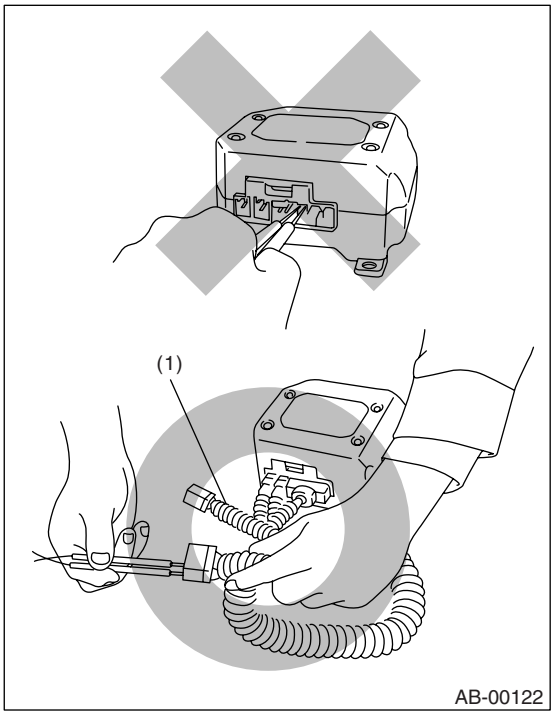

• Do not drop each airbag system part, subject them to high temperature over 93°C (199°F), or let water, oil or grease get on them; the internal parts may be damaged and reliability is greatly lowered.

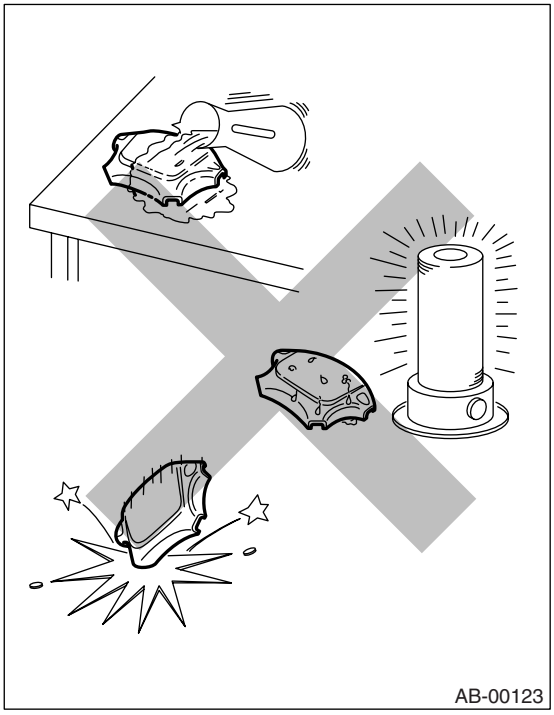

• If any damage, opening or rust is found on the airbag system wire harness, do not attempt to repair using soldering equipment. Be sure to replace the faulty harness with a new genuine part.

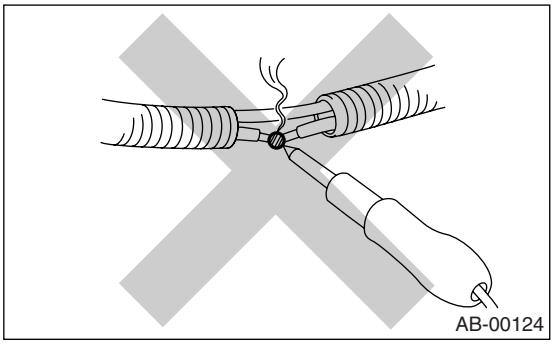

• Install the wire harness securely with the specified clips to avoid interference or tangled up with other parts.

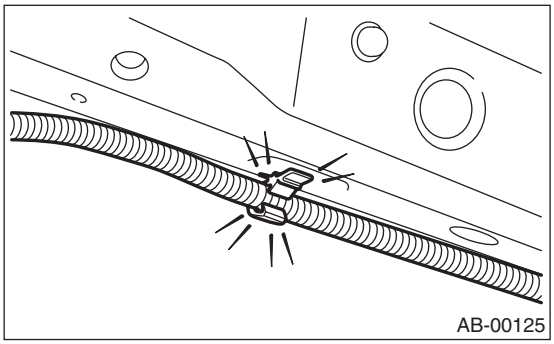

• Do not allow water or oil to come in contact with the connector terminals. Do not touch the connector terminals.

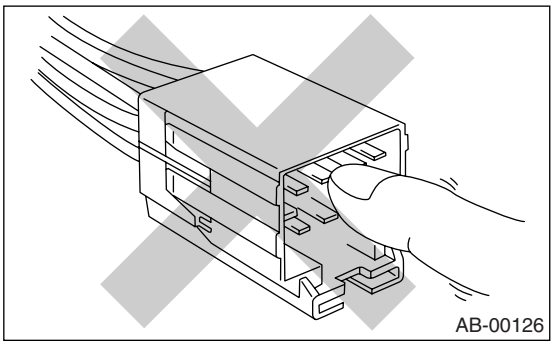

• Either of the airbag modules for driver, passenger, side or curtain, or pretensioner must not be disassembled.

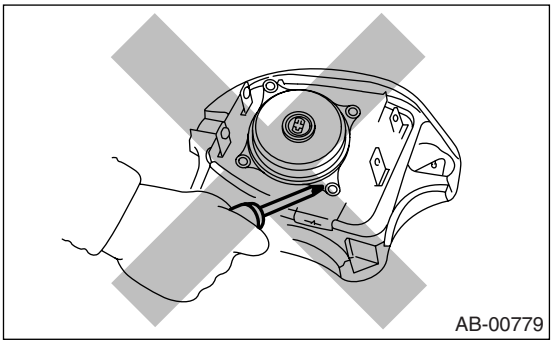

• The airbag module cannot be used again if once deployed.
• After removal, keep the airbag module with the pad facing upward on a dry, clean and flat surface away from heat, light sources, moisture and dust.

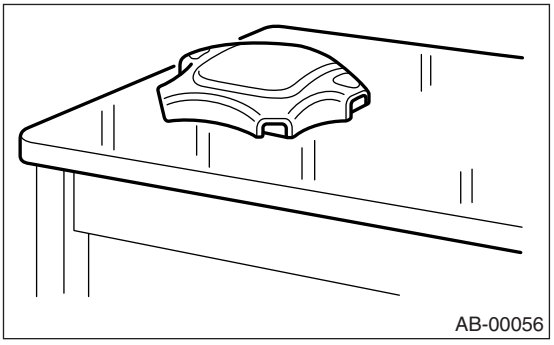

• Do not check continuity of either of the airbag modules for driver, passenger, side or curtain, or pretensioner.

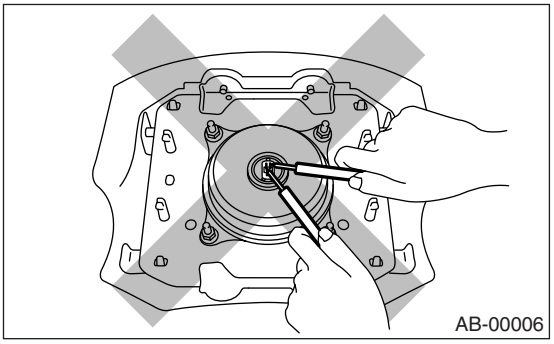

• The removed front seat with an airbag module must be kept at least 200 mm (8 in) away from walls and other objects.

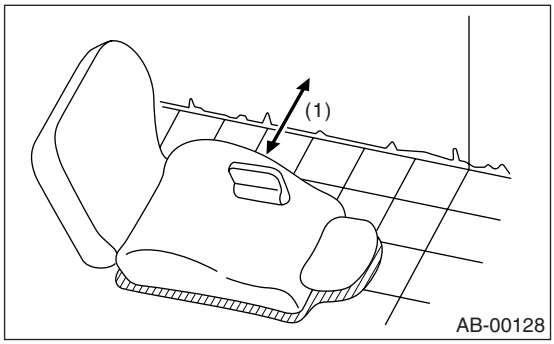

(1) 200 mm (8 in) or more

• When painting or performing sheet metal work on the front part of the vehicle, including the front wheel apron, front fender and front side frame, remove the front sub sensors and wire harness of the airbag system.
• When painting or performing sheet metal work on the side of the vehicle, including the side sill, center pillar and front and rear doors, remove the side airbag sensors and wire harness of the airbag system.

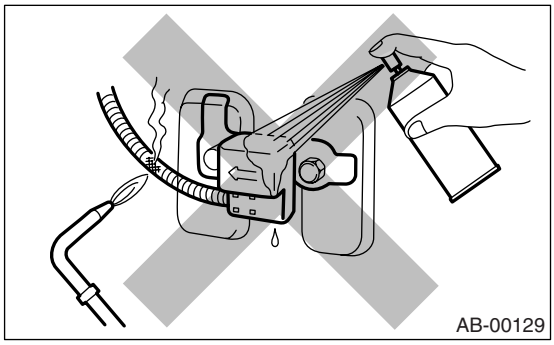

• Do not discard undeployed airbag modules. They could easily cause a serious accident if accidentally deployed.

• When storing a removed airbag module, do not place any objects on it or pile airbag modules on top of each other. If the airbag inflates for some reason when it is placed with its pad side facing downward or under any object, a serious accident may result.

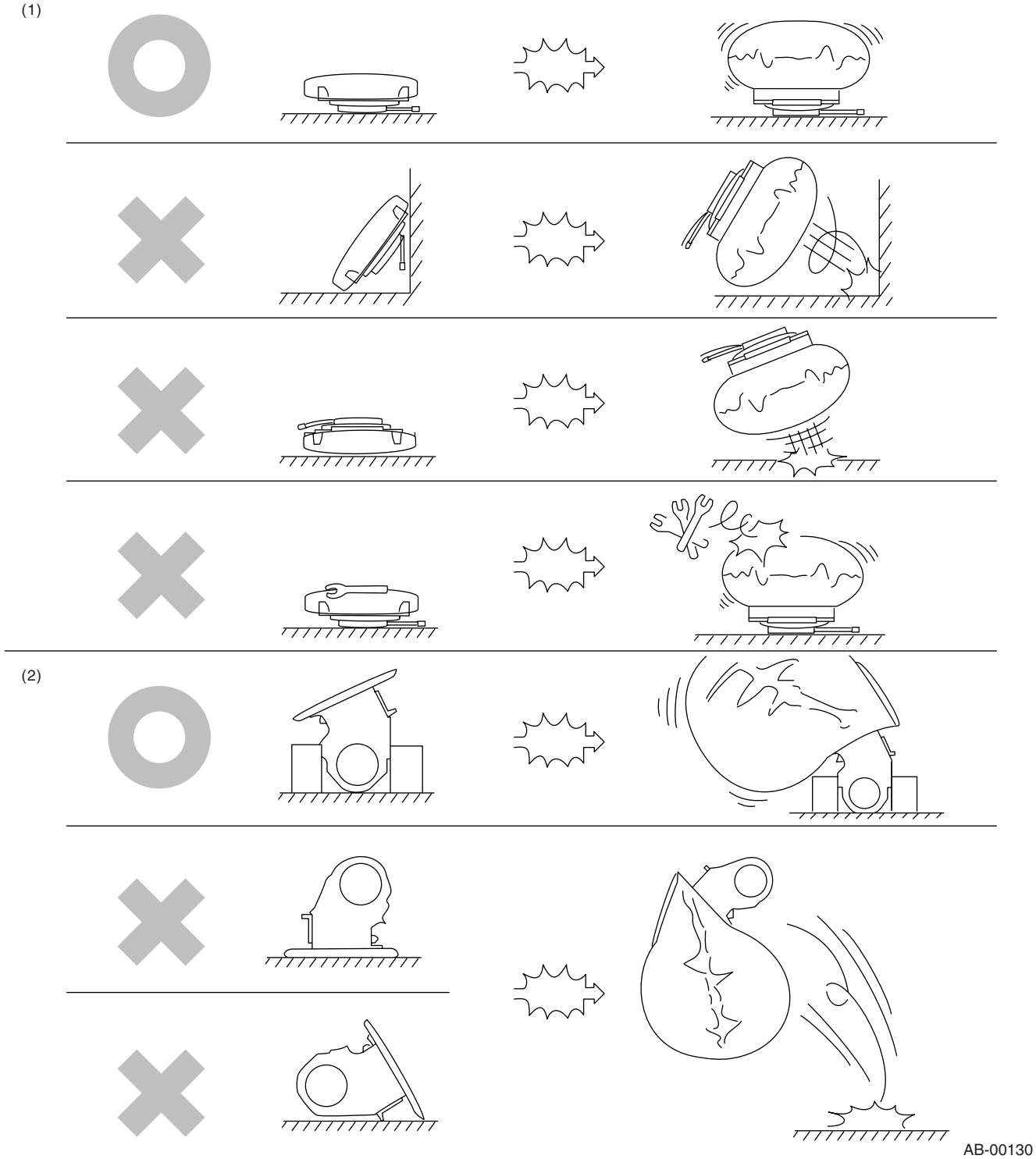

(1) Driver's airbag module (2) Passenger's airbag module

B: INSPECTION

Measure the battery voltage and check electrolyte.

Standard voltage: 12 V

Specific gravity: Above 1.260

C: PREPARATION TOOL

CAUTION:
To check the voltage and resistance of airbag system component, be sure to use the specified test harness.

1. SPECIAL TOOL

ILLUSTRATION	TOOL NUMBER	DESCRIPTION	REMARKS
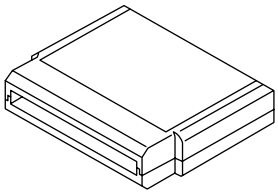 ST24082AA260	24082AA260	CARTRIDGE	Troubleshooting for electrical system
ST22771AA030	22771AA030	SUBARU SELECT MONITOR KIT	Troubleshooting for electrical system

- TEST HARNESS D

ILLUSTRATION	TOOL NUMBER	DESCRIPTION	REMARKS
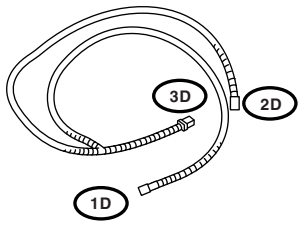 ST98299AG060	98299AG060	TEST HARNESS D	Used when measuring voltage and resistance of front seat belt buckle switch.

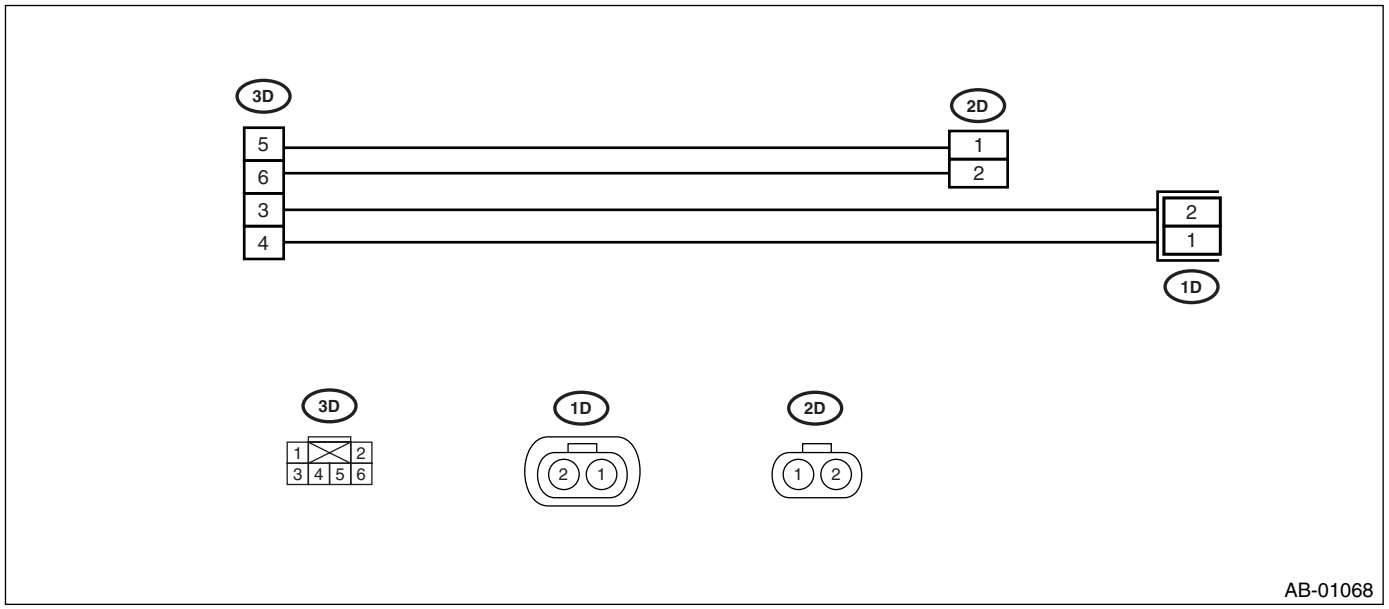

- TEST HARNESS F

ILLUSTRATION	TOOL NUMBER	DESCRIPTION	REMARKS
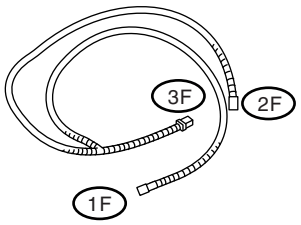 ST98299FC010	98299FC010	TEST HARNESS F	Used when measuring voltage and resistance of airbag module harnesses.

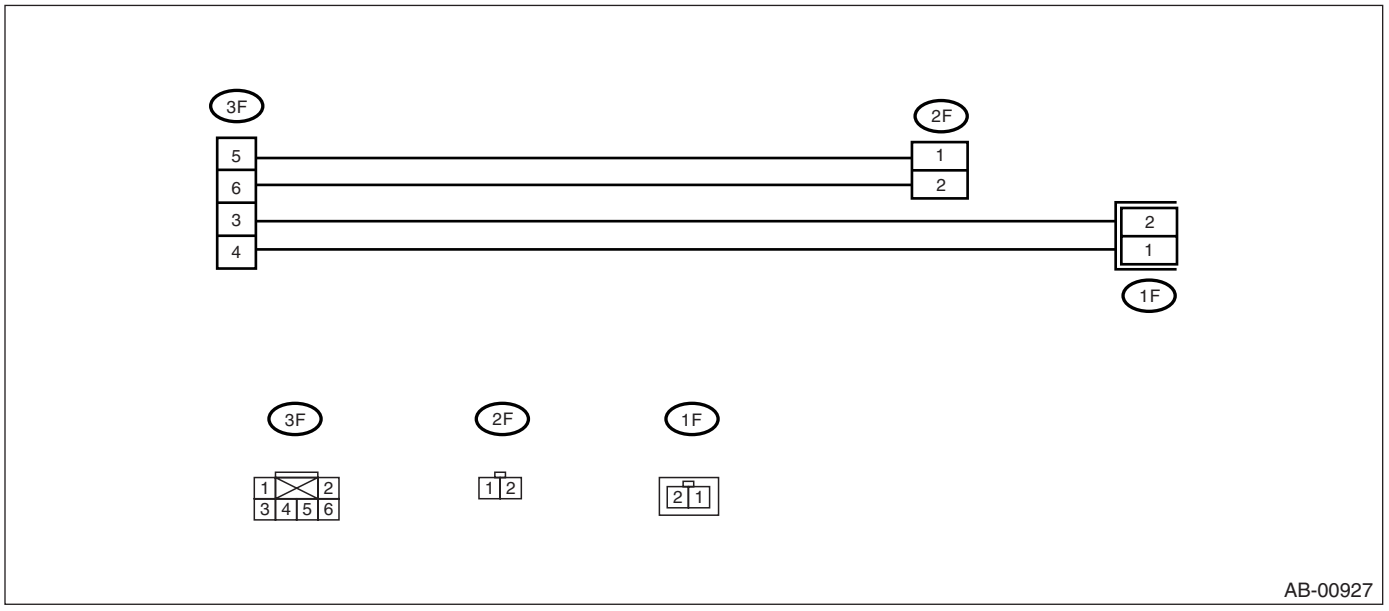

- TEST HARNESS H

ILLUSTRATION	TOOL NUMBER	DESCRIPTION	REMARKS
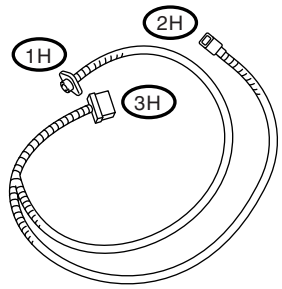 ST98299FA030	98299FA030	TEST HARNESS H	Used when measuring voltage and resistance of front sub sensor.

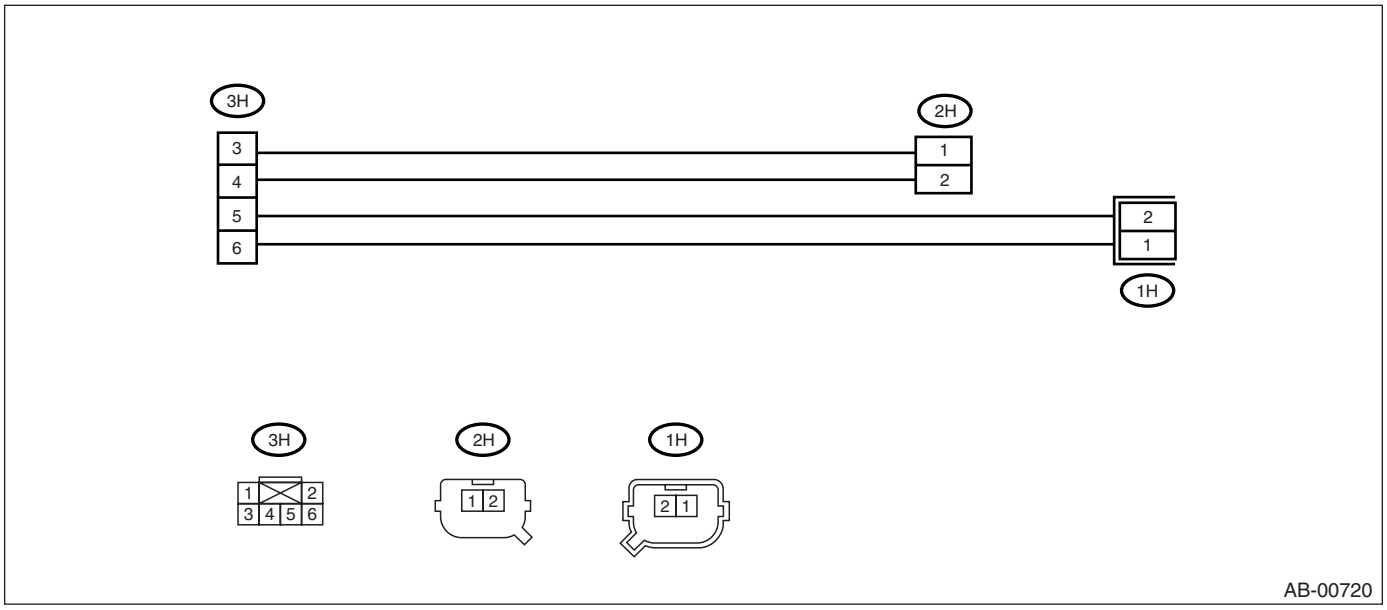

- TEST HARNESS N

ILLUSTRATION	TOOL NUMBER	DESCRIPTION	REMARKS
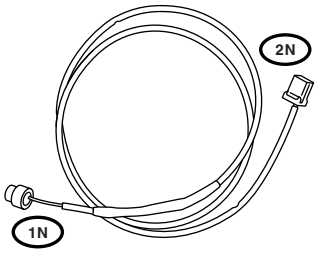 ST98299SA000	98299SA000	TEST HARNESS N	Used when measuring voltage and resistance of driver's airbag module and seat belt pretensioner.

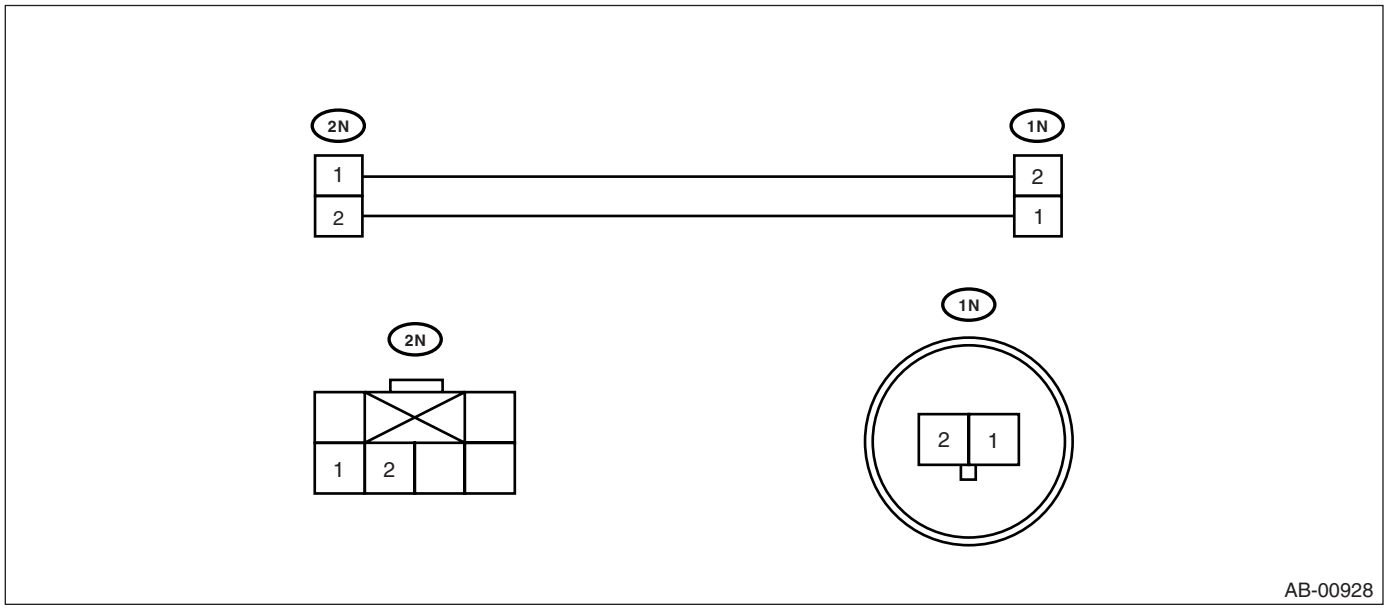

- TEST HARNESS P

ILLUSTRATION	TOOL NUMBER	DESCRIPTION	REMARKS
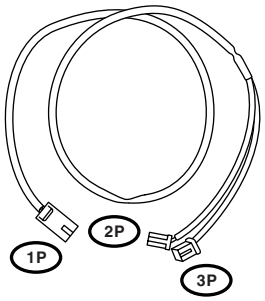 ST98299SA020	98299SA020	TEST HARNESS P	Used when measuring voltage and resistance of driver's airbag module harness and passenger airbag module harness.

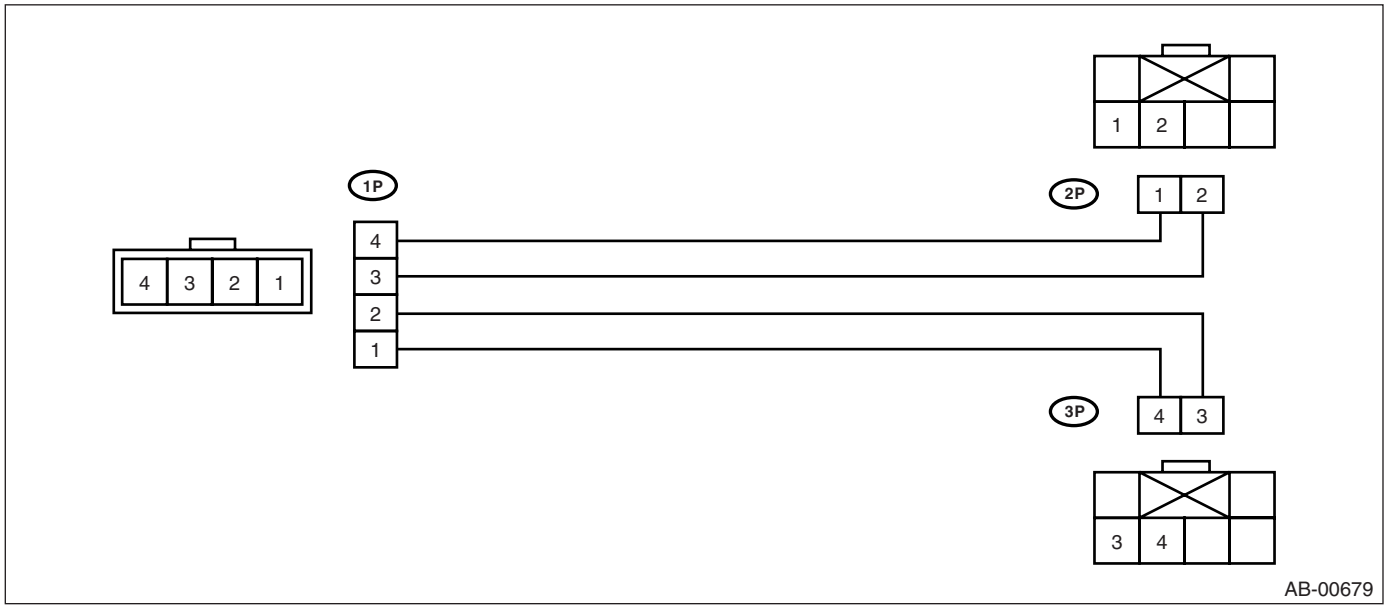

- TEST HARNESS Q

ILLUSTRATION	TOOL NUMBER	DESCRIPTION	REMARKS
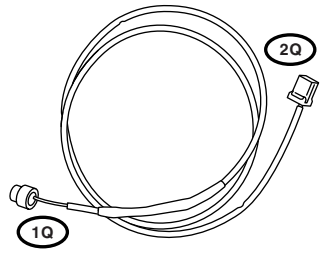 ST98299SA040	98299SA040	TEST HARNESS Q	Used when measuring voltage and resistance of driver's airbag module.

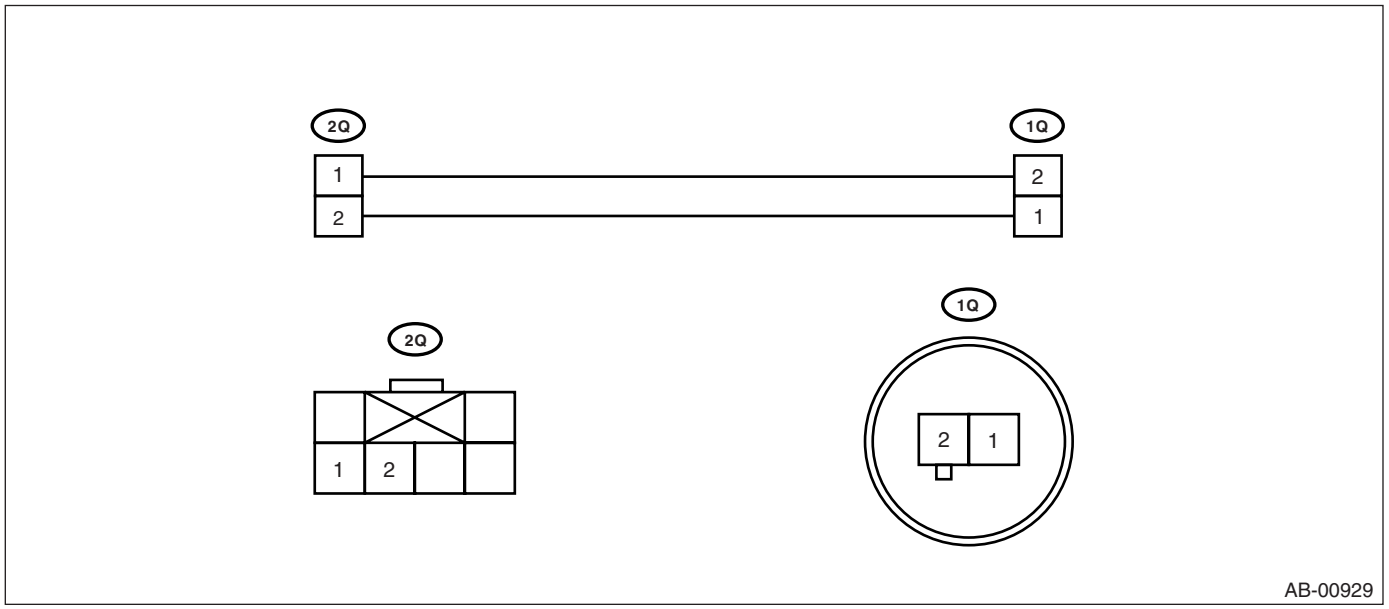

AB-00929

- TEST HARNESS U

ILLUSTRATION	TOOL NUMBER	DESCRIPTION	REMARKS
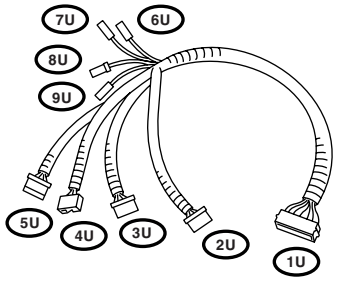 ST98299AG000	98299AG000	TEST HARNESS U	Used when measuring voltage and resistance of airbag control module.

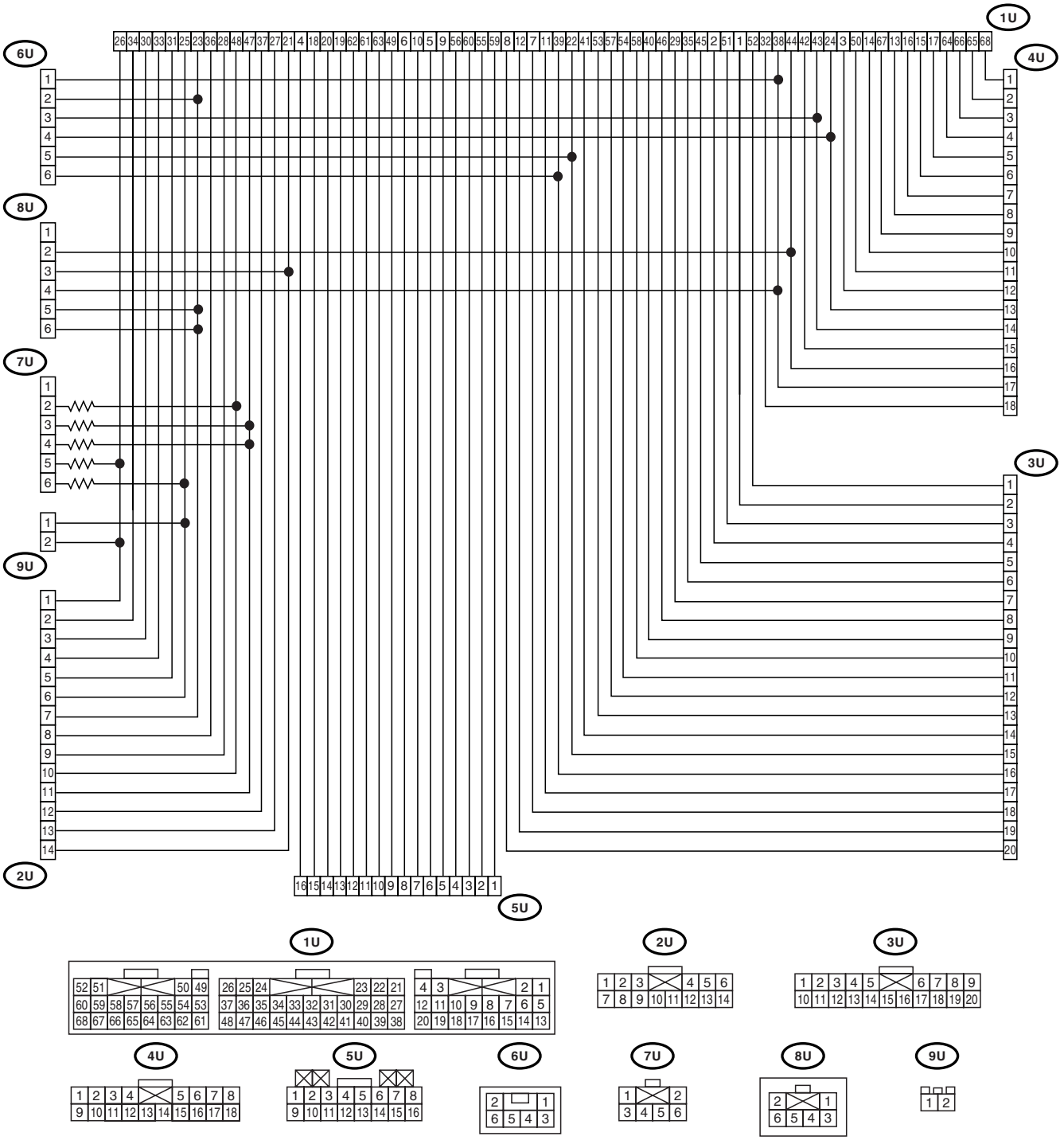
1U
6U
4U
8U
7U
3U
9U
2U
5U
AB-00930

- TEST HARNESS V

ILLUSTRATION	TOOL NUMBER	DESCRIPTION	REMARKS
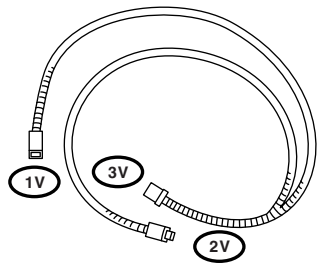 ST98299AG010	98299AG010	TEST HARNESS V	Used when measuring voltage and resistance of side airbag sensor and curtain airbag sensor.

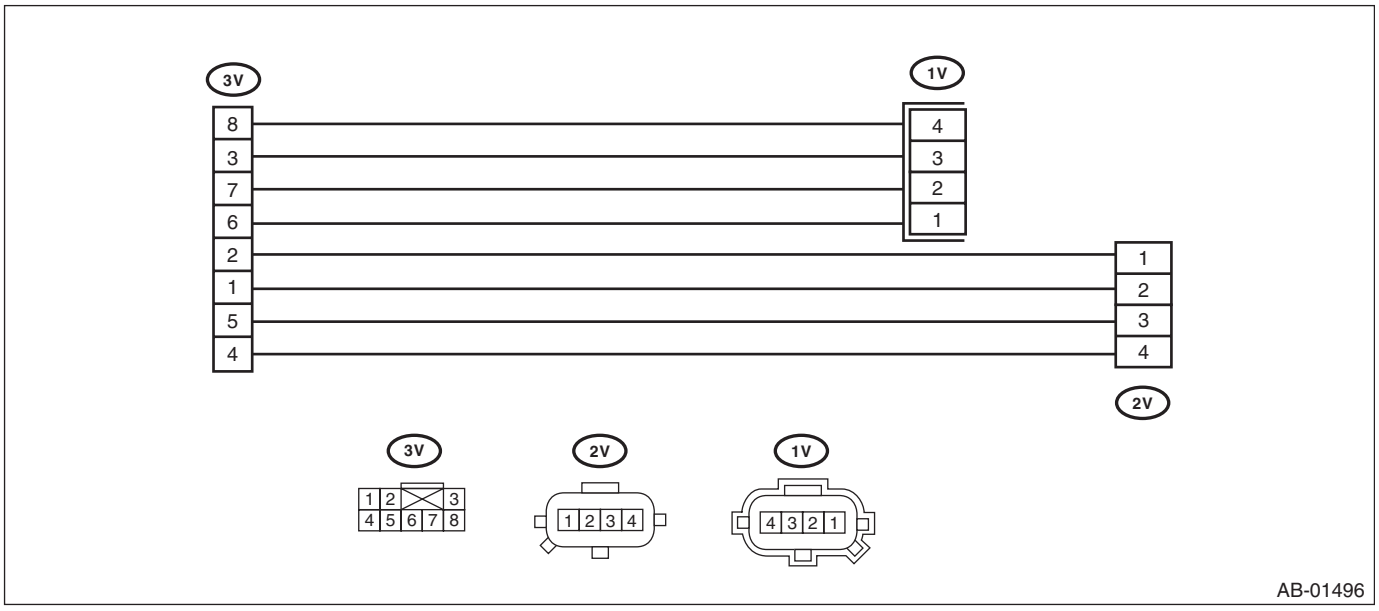

- TEST HARNESS Y

ILLUSTRATION	TOOL NUMBER	DESCRIPTION	REMARKS
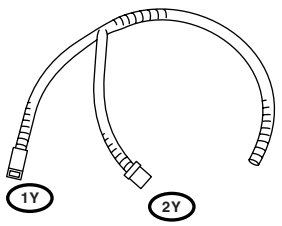 ST98299AG040	28299AG040	TEST HARNESS Y	Used for diagnosing seat belt buckle switch.

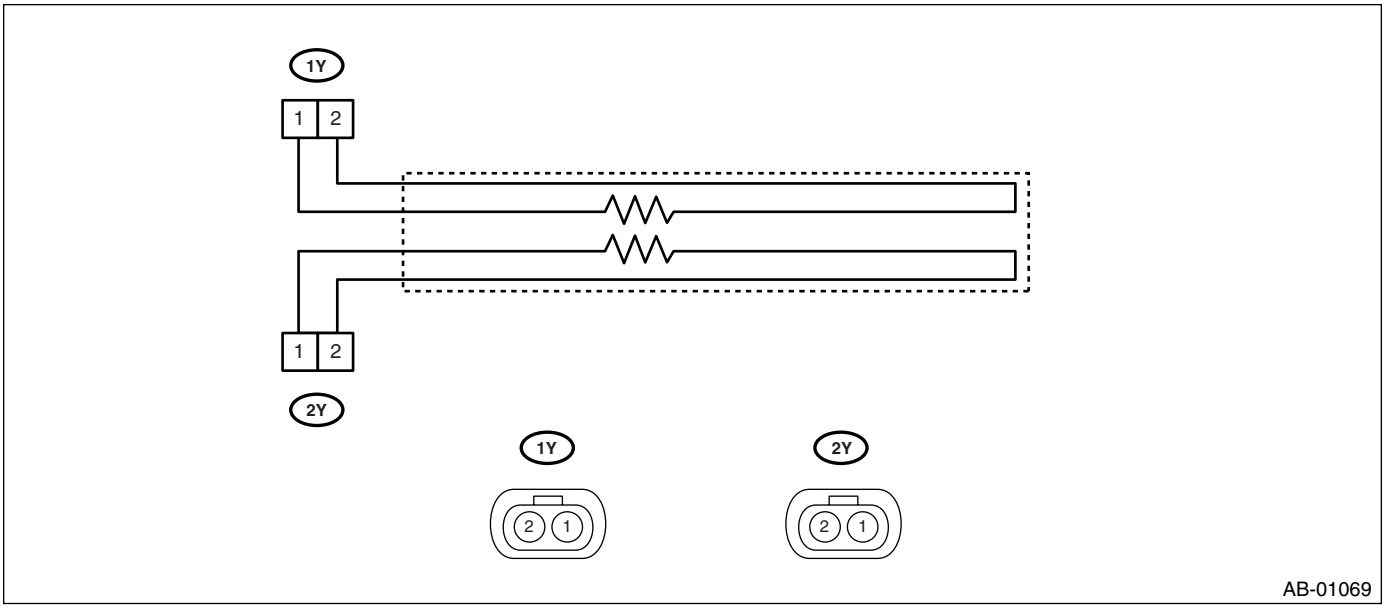

AB-01069

- TEST HARNESS Z

ILLUSTRATION	TOOL NUMBER	DESCRIPTION	REMARKS
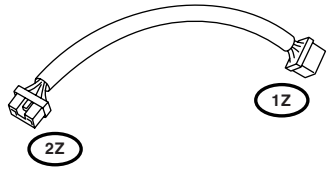 ST98299AG050	98299AG050	TEST HARNESS Z	Used when measuring voltage and resistance of occupant detection system.

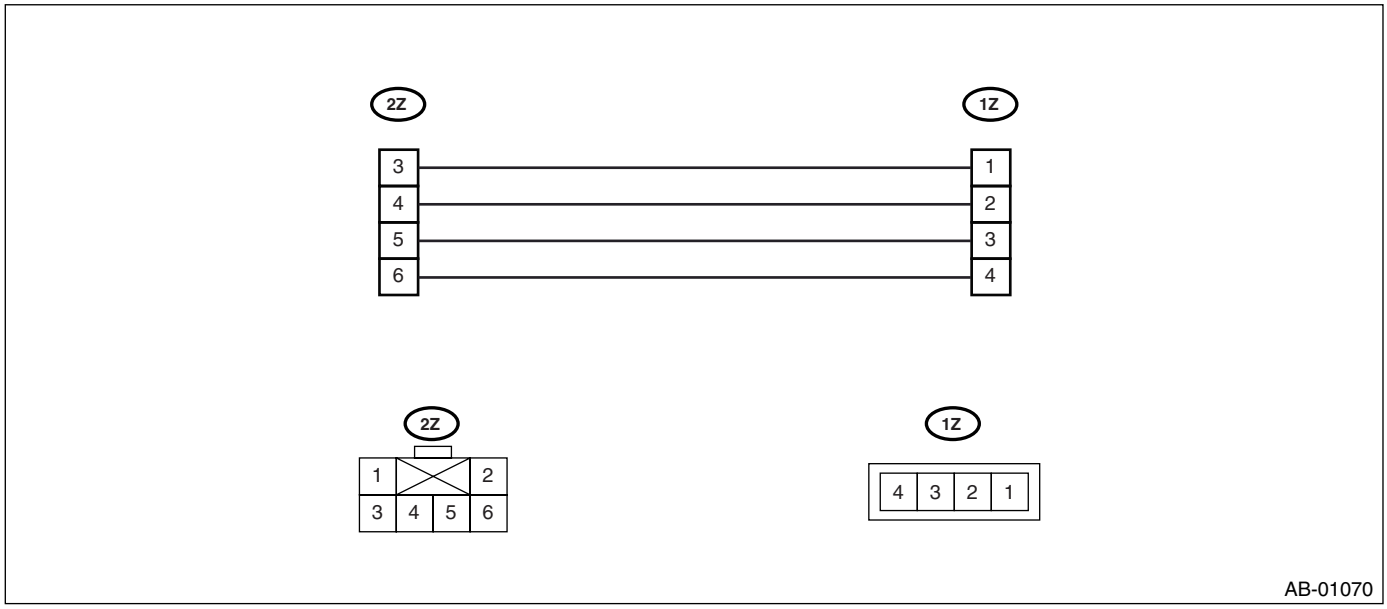

- AIRBAG RESISTOR

ILLUSTRATION	TOOL NUMBER	DESCRIPTION	REMARKS
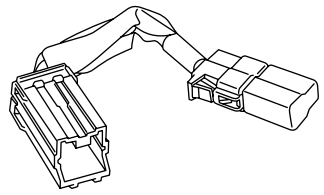 ST98299PA040	98299PA040	AIRBAG RESISTOR	Used in replacement of airbag module for which resistance value is same as airbag module.

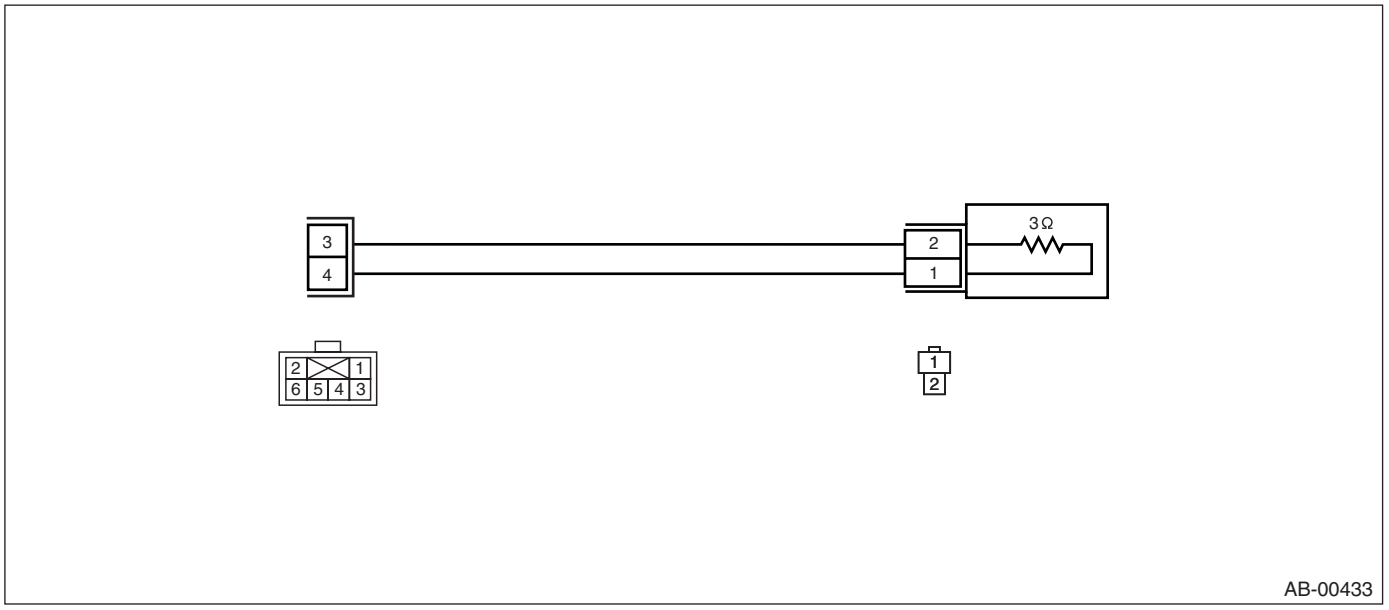

2. GENERAL TOOL

TOOL NAME	REMARKS
Circuit tester	Used for measuring resistance, voltage and ampere.
Oscilloscope	Used for measuring sensor.

4. Electrical Component Location

A: LOCATION

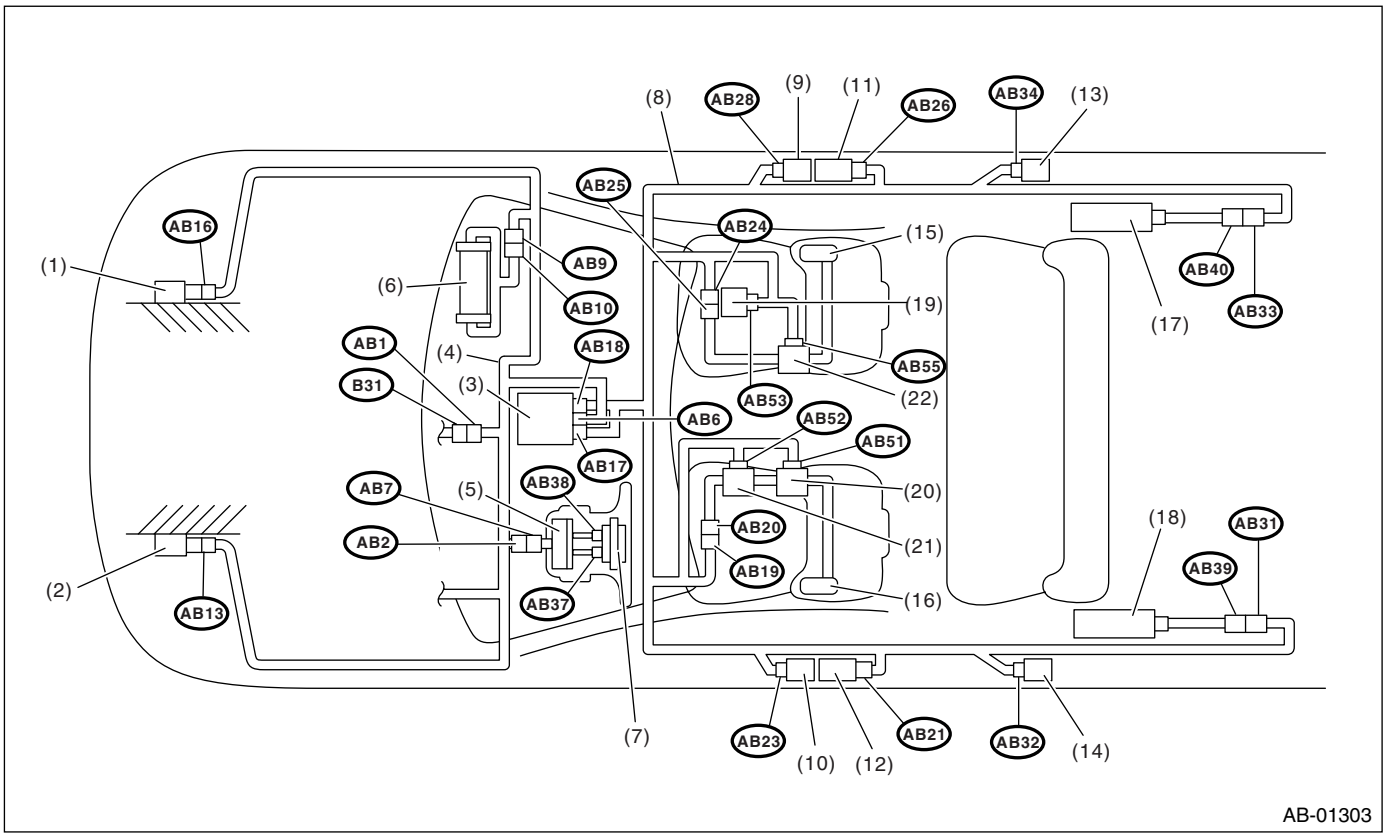

(1) Front sub sensor (RH)
(2) Front sub sensor (LH)
(3) Airbag control module with built-in safing and electric sensor
(4) Airbag main harness
(5) Roll connector
(6) Passenger's airbag inflator
(7) Driver's airbag inflator
(8) Airbag rear harness
(9) Side airbag sensor (RH)
(10) Side airbag sensor (LH)
(11) Seat belt pretensioner (RH)
(12) Seat belt pretensioner (LH)
(13) Curtain airbag sensor (RH)
(14) Curtain airbag sensor (LH)
(15) Side airbag inflator (RH)
(16) Side airbag inflator (LH)
(17) Curtain airbag inflator (RH)
(18) Curtain airbag inflator (LH)
(19) Occupant detection control module
(20) Buckle switch (LH)
(21) Seat position sensor (LH)
(22) Buckle switch (RH)

Connector No.	(AB1)	(AB2)	(AB6)	(AB7)	(AB9)	(AB10)	(AB13)	(AB16)	(AB17)	(AB18)	(AB19)	(AB20)
Pin	12	4	28	4	4	4	2	2	20	20	2	2
Connector color	Yellow	Yellow	Yellow	Yellow	Yellow	Yellow	Yellow	Yellow	Yellow	Yellow	Yellow	Yellow
Male/Female	Female	Female	Female	Male	Female	Male	Female	Female	Female	Female	Female	Male
Connector No.	(AB21)	(AB23)	(AB24)	(AB25)	(AB26)	(AB28)	(AB31)	(AB32)	(AB33)	(AB34)	(AB37)	(AB38)
Pin	2	4	2	2	2	4	2	4	2	4	2	2
Connector color	Black	Yellow	Yellow	Yellow	Black	Yellow	Yellow	Yellow	Yellow	Yellow	Orange	Black
Male/Female	Female	Female	Female	Male	Female	Female	Female	Female	Female	Female	Female	Female
Connector No.	(AB39)	(AB40)	(AB51)	(AB52)	(AB53)	(AB55)						
Pin	2	2	2	2	4	2						
Connector color	Yellow	Yellow	Yellow	Yellow	Yellow	Yellow						
Male/Female	Male	Male	Female	Female	Female	Female						

5. Airbag Connector

A: PROCEDURE

1. BUCKLE SWITCH AND OCCUPANT DETECTION CONTROL MODULE

1) How to disconnect:
(1) Move the slide lock (A) in the direction of arrow.
(2) With the slide lock (A) moved, separate the connector.

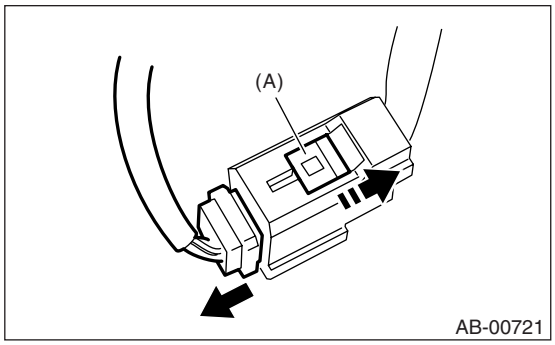

CAUTION:
When pulling the slide lock or disconnecting the connector, be sure to hold onto the connector and not the wire.

2) How to connect:
Holding the connector (A), and push it in carefully until a connecting sound is heard.

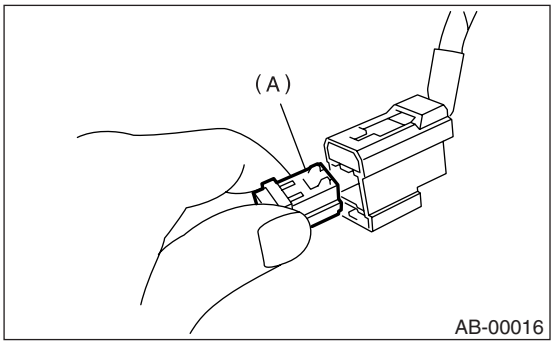

CAUTION:
Be sure to insert the connector in until it locks. Then pull on it gently to make sure that it is locked.

2. DRIVER'S AIRBAG MODULE AND PRETENSIONER

1) How to disconnect:
(1) Using a flat tip screwdriver, pry the push lock upward to unlock.

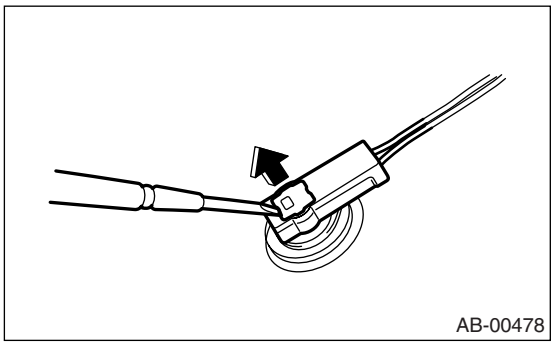

(2) Pull the connector to disconnect from driver's side airbag module assembly or retractor assembly.

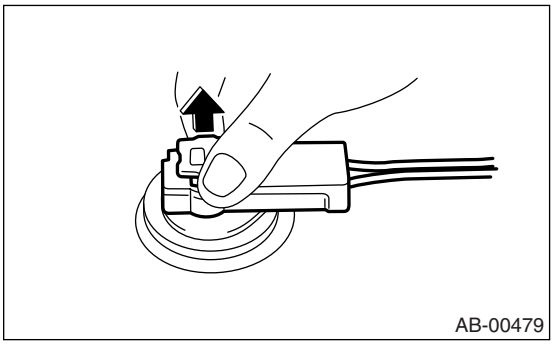

2) How to connect:
Connect the connector in the reverse order of disconnecting. At this time, be sure to insert the push lock until a connecting sound is heard.

CAUTION:
• Be sure to insert the connector in until it locks. Then pull it gently to make sure that it is locked.
• Be sure to push the push lock in securely.

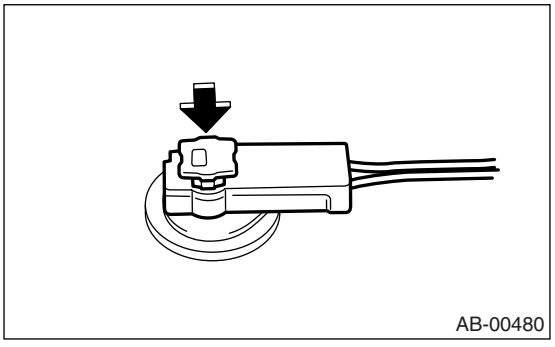

NOTE:
Connector can not be connected when the push lock is in lock position. To connect the connector, set the push lock to unlock.

3. DRIVER'S AIRBAG (BETWEEN AIRBAG MAIN HARNESS AND ROLL CONNECTOR), PASSENGER'S AIRBAG

1) How to disconnect:
(1) Push the slide lock (A) into the direction of arrow.

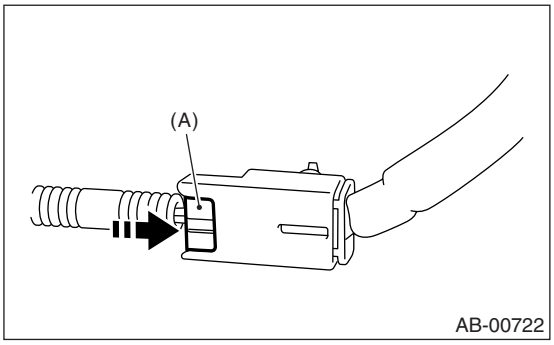

(2) With the slide lock pushed, separate the connector.

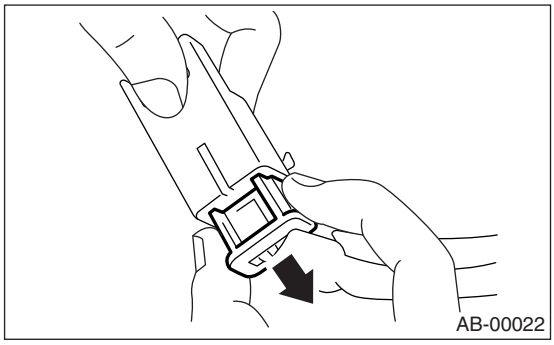

CAUTION:
Be sure to hold onto the connector and not wire when pulling the slide lock or disconnecting the connector.

2) How to connect:
Holding the connector, push it in carefully until a connecting sound is heard.

CAUTION:
Be sure to insert the connector in until it locks. Then pull it gently to make sure that it is locked.

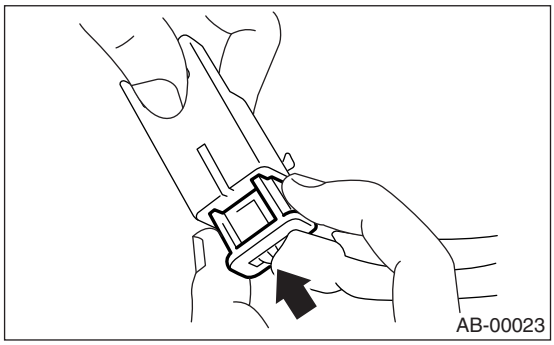

4. SIDE AIRBAG AND CURTAIN AIRBAG

1) How to disconnect:
(1) Push the lock arm (A).
(2) With the lock arm (A) pushed in, move the slide lock (B) in the direction of arrow.

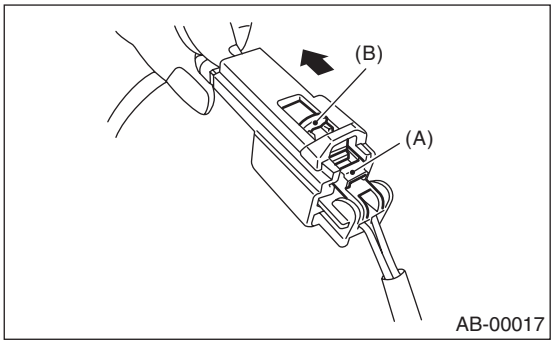

(3) With the slide lock moved, release the lock arm (back to its original position), and disconnect the connector.

CAUTION:
Be sure to hold onto the connector and not wire when pulling the slide lock or disconnecting the connector.

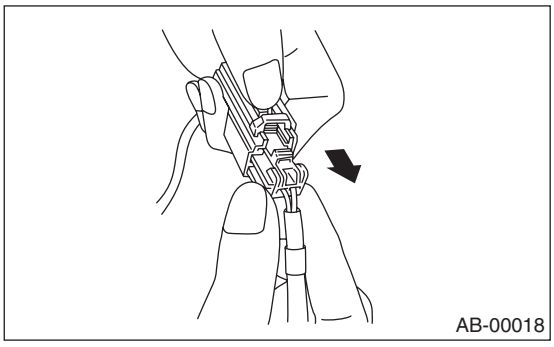

5. FRONT SUB SENSOR, SIDE AIRBAG SENSOR, CURTAIN AIRBAG SENSOR AND SEAT POSITION SENSOR LH

1) How to disconnect:
Holding outer part (A), pull it in the direction of arrow.

CAUTION:
Be sure to hold onto the connector and not wire when pulling the slide lock or disconnecting the connector.

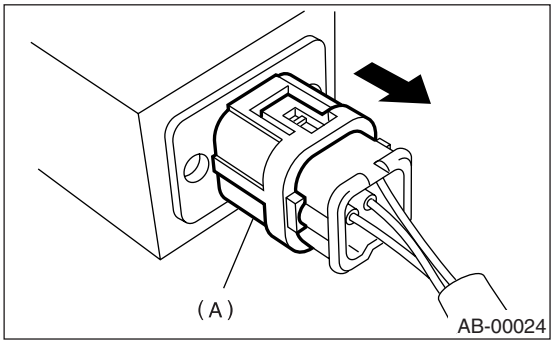

2) How to connect:
Holding the connector, and push it in carefully until a connecting sound is heard.

CAUTION:
• Outer side (A) move back, and so do not put your hand on the outer part.
• Be sure to insert the connector in until it locks. Then pull it gently to make sure that it is locked.

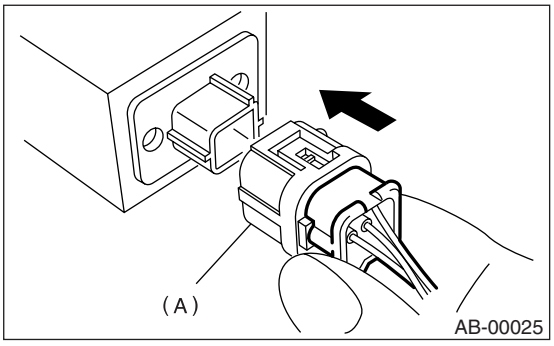

6. Airbag Control Module I/O Signal

A: ELECTRICAL SPECIFICATION

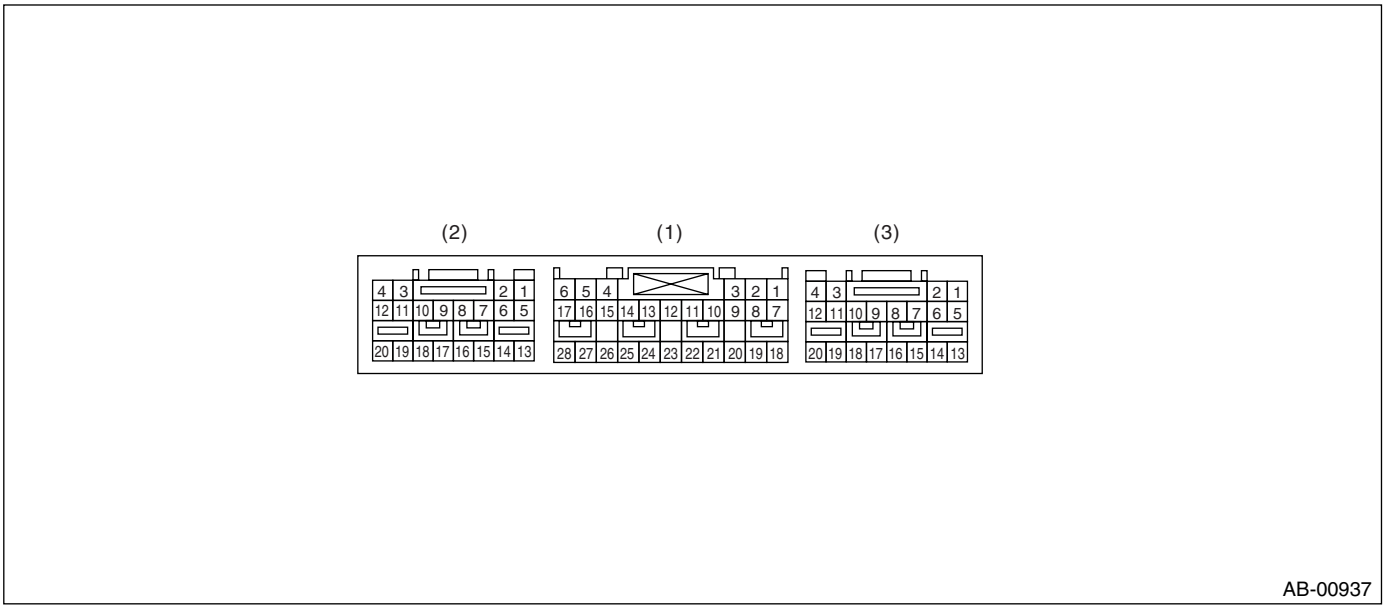

- Terminal numbers of airbag control module connector are as shown in the figure.
- Airbag warning light illuminates when disconnecting the connector from airbag control module.

Item		Control module terminal No.
Data link connector		(1)-12
Combination meter		(1)-3
Battery power supply	Shared fuse	(1)-6
	Dedicated fuse	(1)-5
Passenger's air bag module 1st stage	+	(1)-10
	–	(1)-11
Passenger's air bag module 2nd stage	+	(1)-8
	–	(1)-7
Driver's air bag module 1st stage	+	(1)-14
	–	(1)-13
Driver's air bag module 2nd stage	+	(1)-16
	–	(1)-17
Front sub sensor LH	Power supply/Communication	(1)-15
	GND	(1)-26
Front sub sensor RH	Power supply/Communication	(1)-9
	GND	(1)-20
GND		(1)-27
		(1)-28
Passenger's air bag OFF indicator		(1)-1
Passenger's air bag ON indicator		(1)-18
Passenger's seat belt warning light (Body integrated module)		(1)-24
Seat belt buckle switch LH	+	(2)-19
	–	(2)-2
Seat position sensor LH	+	(2)-3
	–	(2)-4
Seat belt pretensioner LH	+	(2)-6
	–	(2)-5

Item		Control module terminal No.
Side airbag sensor LH	Power supply/Communication	(2)-16
	GND	(2)-18
	+	(2)-17
	–	(2)-20
Side airbag module LH	+	(2)-10
	–	(2)-9
Curtain airbag sensor LH	Power supply/Communication	(2)-14
	GND	(2)-13
	+	(2)-15
	–	(2)-1
Curtain airbag module LH	+	(2)-11
	–	(2)-12
Seat belt pretensioner RH	+	(3)-11
	–	(3)-12
Side airbag sensor RH	Power supply/Communication	(3)-17
	GND	(3)-15
	+	(3)-16
	–	(3)-13
Side airbag module RH	+	(3)-7
	–	(3)-8
Curtain airbag sensor RH	Power supply/Communication	(3)-19
	GND	(3)-20
	+	(3)-18
	–	(3)-4
Curtain airbag module RH	+	(3)-6
	–	(3)-5
Occupant detection control module	+	(3)-1
	–	(3)-2

B: WIRING DIAGRAM

<Ref. to WI-120, WIRING DIAGRAM, Airbag System.>

7. Subaru Select Monitor

A: OPERATION

1. READ DIAGNOSTIC TROUBLE CODE (DTC)

When malfunction of airbag system occurs, the DTC stored in airbag control module will be read out.

1) Prepare the Subaru Select Monitor kit. <Ref. to AB(diag)-8, SPECIAL TOOL, PREPARATION TOOL, General Description.>

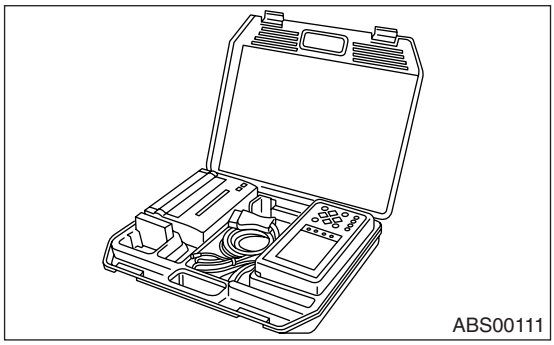

2) Connect the diagnosis cable to Subaru Select Monitor.

3) Insert the cartridge to Subaru Select Monitor. <Ref. to AB(diag)-8, SPECIAL TOOL, PREPARATION TOOL, General Description.>

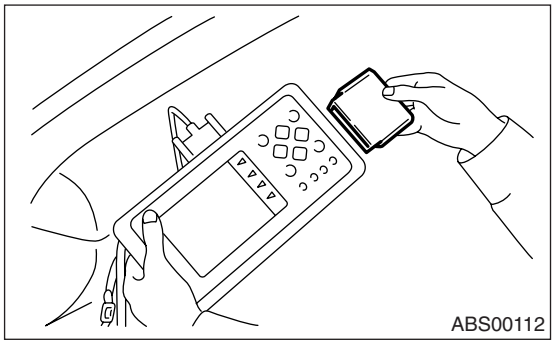

4) Connect the Subaru Select Monitor to data link connector.

(1) Data link connector (1) is located in the lower portion of the instrument panel (on the driver's side).

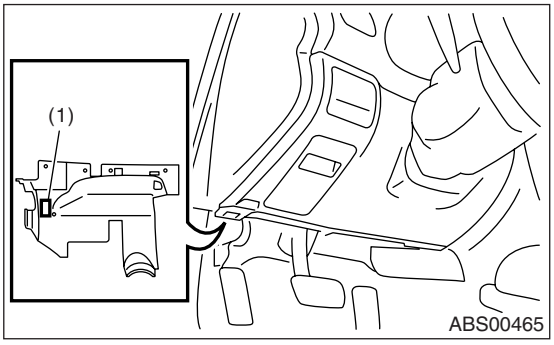

(2) Connect the diagnosis cable to data link connector.

CAUTION:
Do not connect the scan tools except for Subaru Select Monitor.

5) Turn the ignition switch to ON (engine OFF) and turn the Subaru Select Monitor switch to ON.

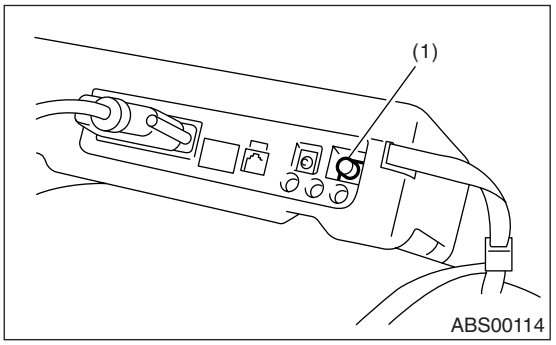

(1) Power switch

6) On the «Main Menu» display screen, select the {Each System Check} and press the [YES] key.

7) On the «System Selection Menu» display screen, select the {Airbag System} and press the [YES] key.

8) Press the [YES] key after the {**MY AIRBAG SYSTEM} is displayed.

9) On the «Airbag system» display screen, select the {DTC Display} and press the [YES] key.

NOTE:

- For details concerning operation procedure, refer to the "SUBARU SELECT MONITOR OPERATION MANUAL".
- For details concerning DTCs, refer to the "List of Diagnostic Trouble Code (DTC)". <Ref. to AB(diag)-41, List of Diagnostic Trouble Code (DTC).>

2. READ STATUS DATA

Check the operating condition of each sensor in the event of malfunction in seat belt buckle switch and seat position sensor, or when the seat belt buckle switch and seat position has been replaced.
1) On the «Main Menu» display screen, select the {Each System Check} and press the [YES] key.
2) On the «System Selection Menu» display screen, select the {Airbag System} and press the [YES] key.
3) On the «Airbag System» display screen, select the {Status Data} and press the [YES] key.
A list of the support data is shown in the following table.

Item	Display
Seat position sensor LH	Front*1/Rear*2/Other*3/Unknown*4/__*5
Seat position sensor RH	__*5
Seat belt buckle switch LH	Belted*6/Unbelted*7/Other*8/Unknown*4/__*9
Seat belt buckle switch RH	Belted*6/Unbelted*7/Other*8/Unknown*4/__*9
Passenger's airbag status	ON*10/OFF*11/Unknown*4

*1: The seat position is forward.
*2: The seat position is the rear side.
*3: Data other than before and behined the seak of the breakdown etc, are input, it is displayed.
*4: It is displayed when it is initial.
*5: Seat position sensor uncorrespondance.
*6: Seat belt installation.
*7: Seat belt uninstallation.
*8: When the data of the seat belt installation and the uninstallation of the breakdown etc. is input, it is displayed.
*9: Seat belt buckle switch uncorrespondance.
*10: Passenger's seat air bag operating state.
*11: Passenger's seat air bag non-operating state.

NOTE:
For detailed operation procedure, refer to "SUBARU SELECT MONITOR OPERATION MANUAL".

3. CLEAR MEMORY MODE

Clear the DTC stored in the airbag control module after repairing airbag system. (If the memory isn't cleared after repairing malfunction, repaired DTC will be read out again when a new malfunction occurs.)
1) On the «Main Menu» display screen, select the {Each System Check} and press the [YES] key.
2) On the «System Selection Menu» display screen, select the {Airbag System} and press the [YES] key.
3) On the «Airbag System» display screen, select the {Memory Clear} and press the [YES] key.
4) Press the [YES] key after the "Clear memory?" has been displayed.
5) When the "Done" is shown on the display screen, turn the Subaru Select Monitor switch to OFF.

NOTE:
For detailed operation procedure, refer to "SUBARU SELECT MONITOR OPERATION MANUAL".

B: INSPECTION

1. COMMUNICATION FOR INITIALIZING IMPOSSIBLE

DETECTING CONDITION:
Defective harness connector
TROUBLE SYMPTOM:
Communication is impossible between Airbag control module and Subaru Select Monitor.
WIRING DIAGRAM:

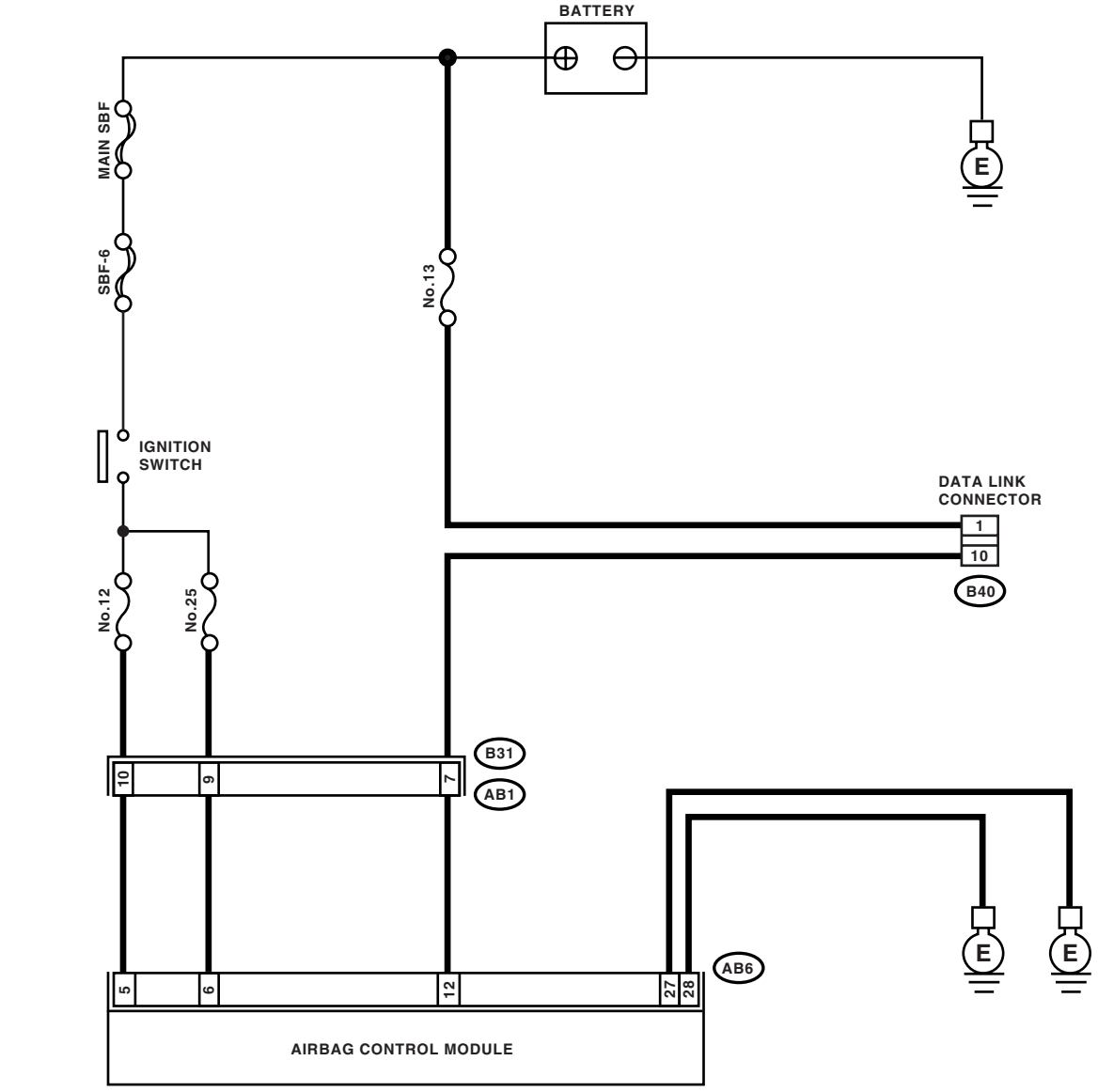

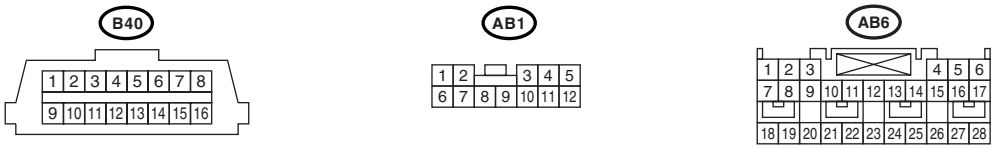

AB-01304

	Step	Check	Yes	No
1	**CHECK IGNITION SWITCH.**	Does the ignition switch turn to ON?	Go to step **2.**	Turn the ignition switch to ON, and select Airbag mode using Subaru Select Monitor.
2	**CHECK BATTERY.** 1) Turn the ignition switch to OFF. 2) Measure the battery voltage.	Is the voltage more than 11 V?	Go to step **3.**	Charge or replace the battery.
3	**CHECK BATTERY TERMINAL.**	Is there poor contact at battery terminal?	Repair or tighten the battery terminal.	Go to step **4.**
4	**CHECK SUBARU SELECT MONITOR COMMUNICATION.** 1) Turn the ignition switch ON. 2) Using Subaru Select Monitor, check whether communication to other system can be executed normally.	Is the system name and model year displayed on Subaru Select Monitor?	Go to step **9.**	Go to step **5.**
5	**CHECK CONNECTOR OF AIRBAG CONTROL MODULE.** 1) Turn the ignition switch OFF. 2) Disconnect the connector (AB52) from seat position sensor (LH). 3) Connect the connector (2Y) in the test harness Y to connector (AB52). 4) Connect the battery ground cable, and turn the ignition switch ON.	Is the airbag control module connected securely?	Go to step **6.**	Reconnect the airbag control module connector.
6	**CHECK SUBARU SELECT MONITOR COMMUNICATION.** 1) Turn the ignition switch to OFF. 2) Disconnect the airbag control module connector. 3) Turn the ignition switch to ON. 4) Check whether communication to other systems can be executed normally.	Is the system name and model year displayed on Subaru Select Monitor?	Replace the airbag control module. <Ref. to AB-22, Airbag Control Module.>	Go to step **7.**
7	**CHECK HARNESS CONNECTOR BETWEEN EACH CONTROL MODULE AND DATA LINK CONNECTOR.** 1) Turn the ignition switch to OFF. 2) Disconnect airbag control module, ABSCM&H/U, ECM and TCM. 3) Measure the resistance between data link connector and chassis ground. ***Connector & terminal*** ***(B40) No. 10 — Chassis ground:***	Is the resistance more than 1 MΩ?	Go to step **8.**	Repair the harness and connector between each control module and data link connector. Airbag harness must be replaced with harness. Do not attempt to repair it.
8	**CHECK OUTPUT SIGNAL FOR AIRBAG CONTROL MODULE.** 1) Turn the ignition switch to ON in step 7 condition. 2) Measure the voltage between data link connector and chassis ground. ***Connector & terminal*** ***(B40) No. 10 (+) — Chassis ground (−):***	Is the voltage less than 1 V?	Go to step **9.**	Repair the harness and connector between each control module and data link connector.

	Step	Check	Yes	No
9	**CHECK HARNESS OF BETWEEN AIRBAG CONTROL MODULE AND DATA LINK CONNECTOR.** 1) Turn the ignition switch OFF, disconnect the battery ground cable, and wait more than 20 seconds. 2) Disconnect the connector (AB6) from airbag control module. 3) Connect the connector (1U) in the test harness U to connector (AB6). 4) Measure the resistance between connector (4U) in the test harness U and data link connector. ***Connector & terminal*** ***(4U) No. 18 — (B40) No. 10:***	Is the resistance less than 10 Ω?	Go to step **10.**	Repair the harness between airbag control module and data link connector. Or replace the airbag main harness with bulkhead harness.
10	**CHECK POWER CIRCUIT.** 1) Turn the ignition switch ON. 2) Measure the voltage between connector (2U) and chassis ground.	Is the voltage more than 10 V?	Go to step **11.**	Repair the harness between airbag control module and battery. Or replace the airbag main harness with bulkhead harness.
11	**CHECK BETWEEN AIRBAG CONTROL MODULE AND CHASSIS GROUND.** 1) Turn the ignition switch OFF. 2) Measure the resistance between connector (2U) in the test harness U and chassis ground. ***Connector & terminal*** ***(2U) No. 10 — Chassis ground:*** ***(2U) No. 11 — Chassis ground:***	Is the resistance less than 10 Ω?	Go to step **12.**	Repair the harness between airbag control module and chassis ground. Or replace the airbag main harness with bulkhead harness.
12	**CHECK POOR CONTACT IN CONNECTOR.**	Is there poor contact in control module power supply, ground circuit and data link connector?	Repair the connector.	Replace the airbag control module only. <Ref. to AB-22, REMOVAL, Airbag Control Module.>

2. WITHOUT DTC

DETECTING CONDITION:
- Defective combination meter
- Open in harness

TROUBLE SYMPTOM:
- Airbag warning light does not go off.
- “NO TROUBLE CODE” will be displayed on the Subaru Select Monitor.

NOTE:
- For detailed operation procedure, refer to “Airbag Warning Light Failure”. <Ref. to AB(diag)-36, Airbag Warning Light Failure.>
- When the Airbag warning light is OFF and “NO TROUBLE CODE” is displayed on Subaru Select Monitor, the system is in normal condition.

8. Read Diagnostic Trouble Code (DTC)

A: OPERATION

For details about reading of DTCs, refer to “Subaru Select Monitor”. <Ref. to AB(diag)-27, Subaru Select Monitor.>

9. Inspection Mode

A: PROCEDURE

Recreate the circumstance by referring to the conditions described in the checklist.

10.Clear Memory Mode

A: OPERATION

Clear the memory in the following steps after the malfunction is repaired.
For details concerning DTC clear operation, refer to “Subaru Select Monitor”. <Ref. to AB(diag)-27, Subaru Select Monitor.>

11. Airbag Warning Light Illumination Pattern

A: INSPECTION

Keep the ignition switch ON, and confirm that the airbag warning light remains off approx. 6 seconds after being turned on.

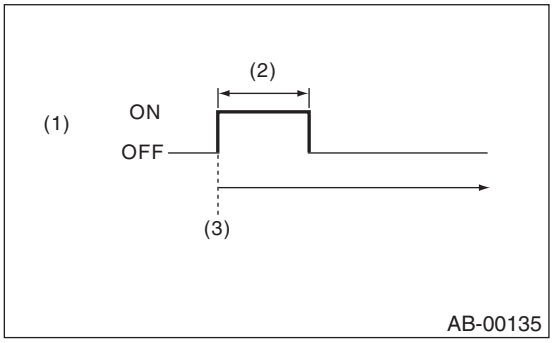

(1) Airbag warning light
(2) Approx. 6 sec.
(3) Ignition switch (ON)

12.Airbag Warning Light Failure

A: AIRBAG WARNING LIGHT REMAINS ON

DETECTING CONDITION:

- Airbag warning light failure
- Airbag control module to airbag warning light circuit is shorted or open.
- Grounding circuit is faulty.
- Airbag control module is faulty.
- (AB1) and (B31) are not connected properly.
- (AB6) is not connected properly to airbag control module.

CAUTION:

• Before diagnosing the airbag system, be sure to turn the ignition switch OFF, disconnect the ground terminal from the battery, and wait more than 20 seconds before starting to work.

• Before replacing the airbag module, seat belt pretensioner, roll connector, control module and sensor, reconnect each part and confirm that the warning light operates properly.

• When inspecting the airbag main harness, disconnect the airbag module connector and the seat belt pretensioner of the driver's and passenger's seats for safety reasons.

WIRING DIAGRAM:

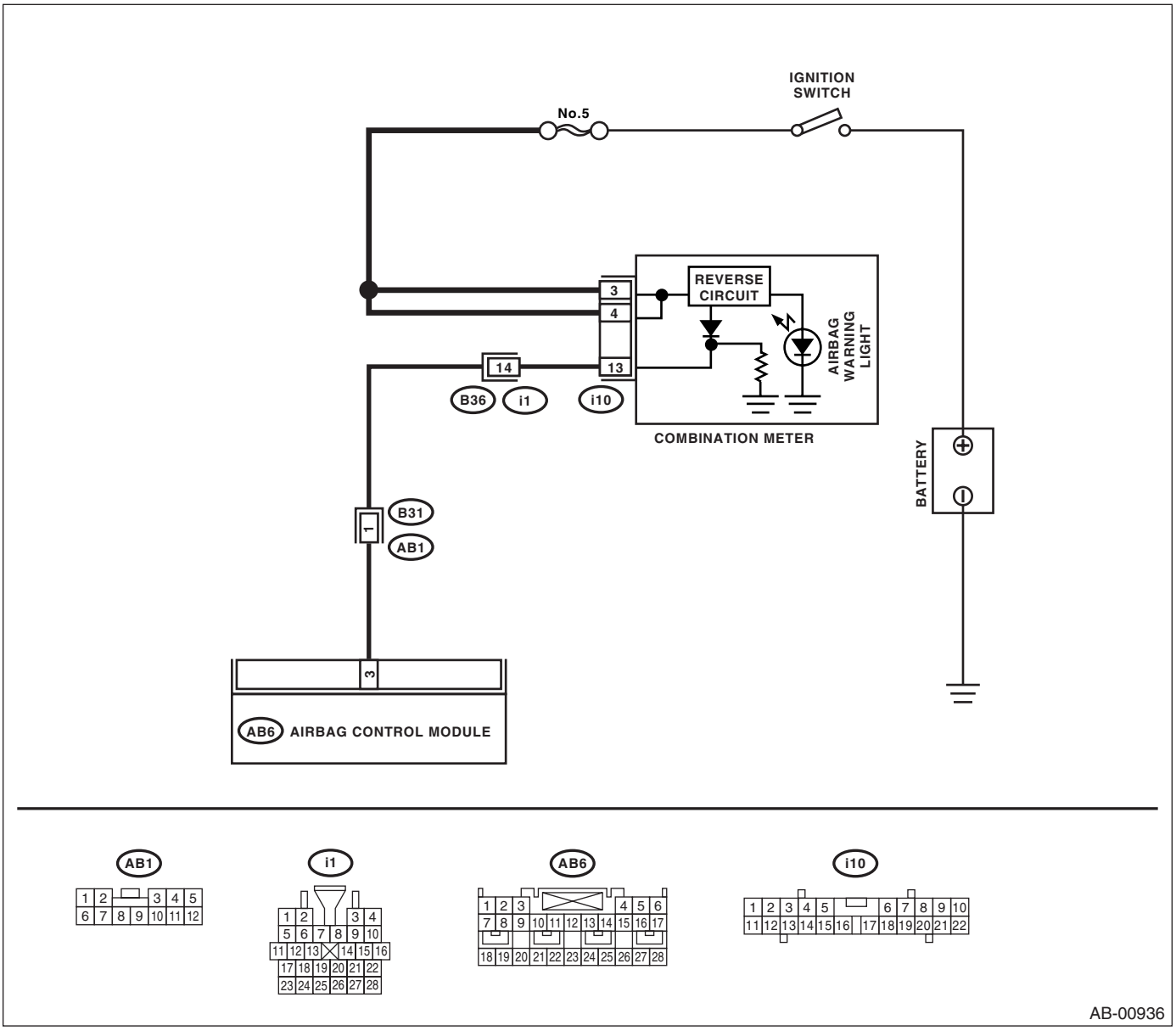

Step		Check	Yes	No
1	**READ DTC.** Read the DTC. <Ref. to AB(diag)-27, READ DIAGNOSTIC TROUBLE CODE (DTC), OPERATION, Subaru Select Monitor.>	Is DTC displayed?	Perform the diagnosis according to DTC.	Go to step **2.**
2	**CHECK POOR CONTACT.** 1) Turn the ignition switch OFF, disconnect the battery ground cable, and wait more than 20 seconds. 2) Confirm that the firm contact is secured between the airbag control module and connector (AB6).	Is there poor contact in connector (AB6)?	When the poor contact in connector is inrepairable, replace the airbag main harness with body harness or replace the airbag control module. <Ref. to AB-22, Airbag Control Module.>	Go to step **3.**

	Step	Check	Yes	No
3	**CHECK AIRBAG MAIN HARNESS.** 1) Remove the instrument panel lower cover and disconnect the connector (AB7) and (AB2). 2) Remove the instrument panel side cover of passenger side and disconnect the connector (AB10) and (AB9). 3) Disconnect the connector (AB6) from air-bag control module, and connect the connector (1U) in the test harness U. 4) Connect the battery ground cable and turn the ignition switch ON. 5) Connect the connectors (7U) and (8U) in the test harness U. NOTE: After problem has been eliminated, disconnect the connectors (7U) and (8U).	Does the airbag warning light go off?	Go to step **4.**	Go to step **5.**
4	**CHECK GROUND CIRCUIT.** 1) Turn the ignition switch OFF, disconnect the battery ground cable, and wait more than 20 seconds. 2) Disconnect the connector (AB6) from air-bag control module. 3) Connect the connector (1U) in the test harness U to body harness connector (AB6). 4) Measure the resistance between connector (2U) in the test harness U and chassis ground. ***Connector & terminal*** ***(2U) No. 10 — Chassis ground:*** ***(2U) No. 11 — Chassis ground:***	Is the resistance less than 10 Ω?	Replace the airbag control module. <Ref. to AB-22, Airbag Control Module.>	Repair the chas-sis ground circuit.
5	**CHECK AIRBAG MAIN HARNESS AND BULKHEAD HARNESS.** 1) Disconnect the connector (7U) and (8U). 2) Remove the combination meter. 3) Measure the resistance between connector (i10) and connector (2U) in the test harness U. ***Connector & terminal*** ***(2U) No. 7 — (i10) No. 13:***	Is the resistance less than 10 Ω?	Check the combi-nation meter.	Go to step **6.**
6	**CHECK POOR CONTACT IN CONNECTORS (AB1) AND (B31).** 1) Turn the ignition switch OFF, disconnect the battery ground cable, and wait more than 20 seconds. 2) Confirm that firm contact is secured between connectors (AB1) and (B31).	Is there poor contact in con-nectors (AB1) and (B31)?	Repair the bulk-head harness or replace the airbag main harness with body harness.	Go to step **7.**
7	**CHECK AIRBAG MAIN HARNESS.** Check the airbag main harness for abnormali-ties.	Is anything unusual to airbag main harness?	Replace the airbag main harness with bulkhead harness.	Repair the bulk-head harness.

B: AIRBAG WARNING LIGHT REMAINS OFF

DETECTING CONDITION:

- Fuse No. 5 (in fuse box) is blown.
- Body harness circuit is open.
- Airbag warning light is faulty.
- Airbag main harness is faulty.
- Airbag control module is faulty.

CAUTION:

• Before diagnosing the airbag system, be sure to turn the ignition switch OFF, disconnect the ground terminal from battery, and wait more than 20 seconds before starting to work.

• Before replacing the airbag module, seat belt pretensioner, roll connector, control module and sensor, reconnect each part and confirm that the warning light operates properly.

• When inspecting the airbag main harness, disconnect the airbag module connector and the seat belt pretensioner of the driver's and passenger's seats for safety reasons.

WIRING DIAGRAM:

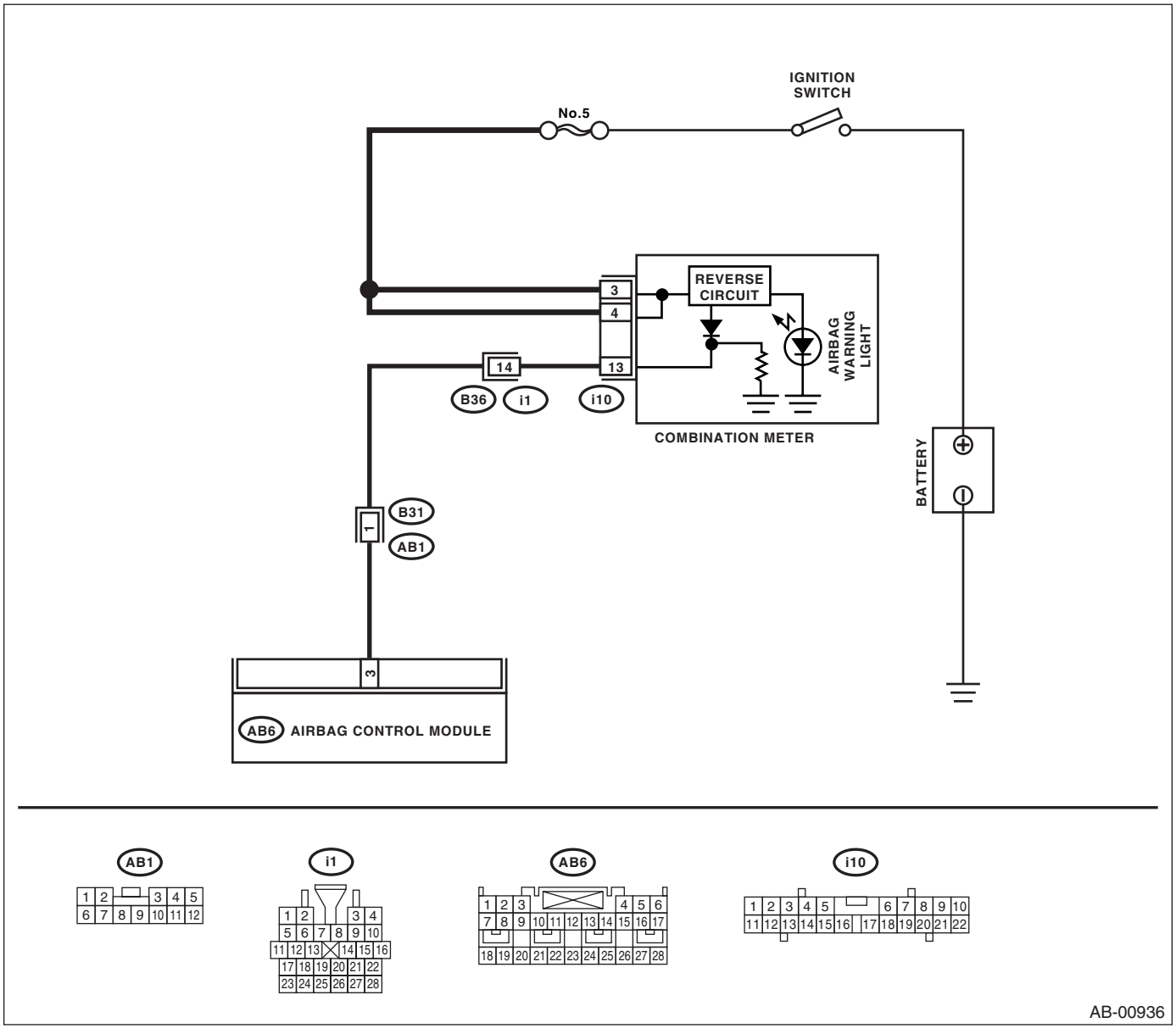

Airbag Warning Light Failure

	Step	Check	Yes	No
1	**CHECK COMBINATION METER.** Turn the ignition switch to ON, and confirm that warning lights equipped in the combination meter are turned on.	Do warning lights other than the airbag turn on?	Go to step **2.**	Check the combination meter.
2	**CHECK DTC.** Read the DTC. <Ref. to AB(diag)-27, READ DIAGNOSTIC TROUBLE CODE (DTC), OPERATION, Subaru Select Monitor.>	Is DTC displayed?	Perform the diagnosis according to DTC.	Go to step **3.**
3	**CHECK FUSE NO. 5 (IN MAIN FUSE BOX).** Remove the fuse No. 5 and perform visual inspection.	Is the fuse No. 5 (in main fuse box) blown out?	Replace the fuse No. 5. If the fuse No. 5 is blown again, go to step 4.	Go to step **4.**
4	**CHECK AIRBAG WARNING LIGHT CIRCUIT (IN COMBINATION METER).** 1) Turn the ignition switch OFF, disconnect the battery ground cable, and wait more than 20 seconds. 2) Disconnect the connector (AB1) from (B31). 3) Connect the battery ground cable and turn the ignition switch ON.	Does the airbag warning light turn on?	Go to step **5.**	Check the combination meter.
5	**CHECK AIRBAG MAIN HARNESS.** 1) Turn the ignition switch OFF, disconnect the battery ground cable, and wait more than 20 seconds. 2) Connect the connector (AB1) to (B31). 3) Disconnect the connector (AB6) from airbag control module. 4) Connect the battery ground cable and turn the ignition switch ON.	Does the airbag warning light turn on?	Replace the airbag control module. <Ref. to AB-22, Airbag Control Module.>	Replace the airbag main harness with bulkhead harness.

13.List of Diagnostic Trouble Code (DTC)

A: LIST

DTC	Display	Contents of diagnosis	Reference
11	Driver's Airbag failure	• Airbag main harness circuit is open, shorted or shorted to ground. • Airbag module harness (Driver's side) circuit is open, shorted or shorted to ground. • Roll connector circuit is open, shorted or shorted to ground. • Airbag control module is faulty. • Driver's airbag module is faulty.	<Ref. to AB(diag)-46, DTC 11 DRIVER'S AIRBAG FAILURE, Diagnostic Chart with Trouble Code.>
12	Passenger's Airbag failure	• Airbag main harness circuit is open, shorted or shorted to ground. • Airbag module harness (Passenger's side) circuit is open, shorted or shorted to ground. • Airbag control module is faulty. • Passenger's airbag module is faulty.	<Ref. to AB(diag)-50, DTC 12 PASSENGER'S AIRBAG FAILURE, Diagnostic Chart with Trouble Code.>
15	Driver's Airbag failure	• Airbag main harness circuit (Driver's side) is shorted to power supply. • Airbag module harness circuit (Driver's side) is shorted to power supply. • Roll connector is shorted to power supply. • Airbag control module is faulty. • Driver's airbag module is faulty.	<Ref. to AB(diag)-53, DTC 15 DRIVER'S AIRBAG FAILURE, Diagnostic Chart with Trouble Code.>
16	Passenger's Airbag failure	• Airbag main harness circuit (Passenger's side) is shorted to power supply. • Airbag module harness (Passenger's side) is shorted to power supply. • Airbag control module is faulty. • Passenger's airbag module is faulty.	<Ref. to AB(diag)-56, DTC 16 PASSENGER'S AIRBAG FAILURE, Diagnostic Chart with Trouble Code.>
21	Airbag ECU failure	Airbag control module is faulty.	<Ref. to AB(diag)-58, DTC 21 AIRBAG ECU FAILURE, Diagnostic Chart with Trouble Code.>
22	Front Airbag Firing output	Front airbag module and seat belt pretensioners (LH/RH) are deployed.	<Ref. to AB(diag)-59, DTC 22 FRONT AIRBAG FIRING OUTPUT, Diagnostic Chart with Trouble Code.>
23	Connector to Airbag ECU	(AB6), (AB17) and (AB18) are not connected properly to airbag control module.	<Ref. to AB(diag)-60, DTC 23 CONNECTOR TO AIRBAG ECU, Diagnostic Chart with Trouble Code.>
24	IG1 open	• Airbag control module is faulty. • Airbag main harness circuit is open. • Fuse No. 12 (in joint box) is blown. • Airbag rear harness circuit is open.	<Ref. to AB(diag)-61, DTC 24 IG1 OPEN, Diagnostic Chart with Trouble Code.>
25	IG2 open	• Airbag control module is faulty. • Airbag main harness circuit is open. • Fuse No. 25 (in joint box) is blown. • Airbag rear harness circuit is open.	<Ref. to AB(diag)-63, DTC 25 IG2 OPEN, Diagnostic Chart with Trouble Code.>
26	Passenger's Airbag indicator failure	• Passenger's Airbag indicator is faulty. • Airbag control module is faulty. • Airbag main harness circuit is open, shorted or shorted to ground. • Body harness circuit is open.	<Ref. to AB(diag)-65, DTC 26 PASSENGER'S AIRBAG INDICATOR FAILURE, Diagnostic Chart with Trouble Code.>

DTC	Display	Contents of diagnosis	Reference
27	ODS Communication error	• Occupant detection control module communication failure • Airbag rear harness circuit is open, shorted, shorted to ground or shorted to power supply.	<Ref. to AB(diag)-67, DTC 27 ODS COMMUNICATION ERROR, Diagnostic Chart with Trouble Code.>
28	ODS Adjustment/Inspection halt	System calibration is incomplete.	<Ref. to OD(diag)-23, DTC 28 ADJUSTMENT / INSPECTION HALT, Diagnostic Procedure with Diagnostic Trouble Code (DTC).>
29	ODS Failure	• Load cell sensor is faulty. • Occupant detection control module is faulty. • Occupant detection harness is faulty. • Fuse No. 7 (in joint box) is blown.	<Ref. to OD(diag)-25, DTC 29 ODS FAILURE, Diagnostic Procedure with Diagnostic Trouble Code (DTC).>
31	Front Sub Sensor RH failure	• Front sub sensor harness (RH) circuit is shorted. • Front sub sensor harness (RH) circuit is open. • Front sub sensor (RH) is faulty. • Airbag control module is faulty.	<Ref. to AB(diag)-68, DTC 31 FRONT SUB SENSOR RH FAILURE, Diagnostic Chart with Trouble Code.>
32	Front Sub Sensor LH failure	• Front sub sensor harness (LH) circuit is shorted. • Front sub sensor harness (LH) circuit is open. • Front sub sensor (LH) is faulty. • Airbag control module is faulty.	<Ref. to AB(diag)-70, DTC 32 FRONT SUB SENSOR LH FAILURE, Diagnostic Chart with Trouble Code.>
33	Front Sub Sensor RH failure	Front sub sensor (RH) is faulty.	<Ref. to AB(diag)-72, DTC 33 FRONT SUB SENSOR RH FAILURE, Diagnostic Chart with Trouble Code.>
34	Front Sub Sensor LH failure	Front sub sensor (LH) is faulty.	<Ref. to AB(diag)-72, DTC 34 FRONT SUB SENSOR LH FAILURE, Diagnostic Chart with Trouble Code.>
36	Seat Position Sensor LH failure	• Driver's seat position sensor is faulty. • Airbag control module is faulty. • Airbag rear harness circuit is open, shorted or shorted to ground.	<Ref. to AB(diag)-73, DTC 36 SEAT POSITION SENSOR LH FAILURE, Diagnostic Chart with Trouble Code.>
37	Buckle Switch RH Failure	• Passenger's seat buckle switch circuit is open, shorted or shorted to ground. • Airbag rear harness circuit is open, shorted or shorted to ground. • Airbag control module is faulty. • Occupant detection control module is faulty.	<Ref. to OD(diag)-26, DTC 37 BUCKLE SWITCH RH FAILURE, Diagnostic Procedure with Diagnostic Trouble Code (DTC).>
38	Buckle Switch LH Failure	• Driver's seat buckle switch circuit is open, shorted or shorted to ground. • Airbag rear harness circuit is open, shorted or shorted to ground. • Airbag control module is faulty.	<Ref. to AB(diag)-75, DTC 38 BUCKLE SWITCH LH FAILURE, Diagnostic Chart with Trouble Code.>
39	Seat Belt Warning failure	• Airbag control module is faulty. • Body integrated unit is faulty. • Body integrated unit to airbag control module harness circuit is open, shorted or shorted to ground.	<Ref. to AB(diag)-77, DTC 39 SEAT BELT WARNING FAILURE, Diagnostic Chart with Trouble Code.>

DTC	Display	Contents of diagnosis	Reference
41	Side Airbag RH failure	• Side airbag harness (RH) circuit is faulty. • Side airbag module (RH) is faulty. • Airbag control module is faulty.	<Ref. to AB(diag)-79, DTC 41 SIDE AIRBAG RH FAILURE, Diagnostic Chart with Trouble Code.>
42	Side Airbag LH failure	• Side airbag harness (LH) circuit is faulty. • Side airbag module (LH) is faulty. • Airbag control module is faulty.	<Ref. to AB(diag)-82, DTC 42 SIDE AIRBAG LH FAILURE, Diagnostic Chart with Trouble Code.>
45	Side Airbag RH failure	• Side airbag harness (RH) is shorted to power supply. • Airbag control module is faulty.	<Ref. to AB(diag)-85, DTC 45 SIDE AIRBAG RH FAILURE, Diagnostic Chart with Trouble Code.>
46	Side Airbag LH failure	• Side airbag harness (LH) is shorted to power supply. • Airbag control module is faulty.	<Ref. to AB(diag)-87, DTC 46 SIDE AIRBAG LH FAILURE, Diagnostic Chart with Trouble Code.>
51	Side Airbag Sensor RH failure	• Side airbag sensor (RH) is faulty. • Side airbag harness (RH) circuit is faulty. • Airbag control module is faulty.	<Ref. to AB(diag)-89, DTC 51 SIDE AIRBAG SENSOR RH FAILURE, Diagnostic Chart with Trouble Code.>
52	Side Airbag Sensor LH failure	• Side airbag sensor (LH) is faulty. • Side airbag harness (LH) circuit is faulty. • Airbag control module is faulty.	<Ref. to AB(diag)-91, DTC 52 SIDE AIRBAG SENSOR LH FAILURE, Diagnostic Chart with Trouble Code.>
53	Side Airbag Sensor RH failure	Side airbag sensor (RH) is faulty.	<Ref. to AB(diag)-93, DTC 53 SIDE AIRBAG SENSOR RH FAILURE, Diagnostic Chart with Trouble Code.>
54	Side Airbag Sensor LH failure	Side airbag sensor (LH) is faulty.	<Ref. to AB(diag)-93, DTC 54 SIDE AIRBAG SENSOR LH FAILURE, Diagnostic Chart with Trouble Code.>
55	Side Curtain Airbag Firing output	• Side airbag module is deployed. • Curtain airbag module is deployed.	<Ref. to AB(diag)-93, DTC 55 SIDE CURTAIN AIRBAG FIRING OUTPUT, Diagnostic Chart with Trouble Code.>
56	Curtain Airbag Sensor RH failure	• Curtain airbag sensor (RH) is faulty. • Curtain airbag harness (RH) circuit is faulty. • Airbag control module is faulty.	<Ref. to AB(diag)-94, DTC 56 CURTAIN AIRBAG SENSOR RH FAILURE, Diagnostic Chart with Trouble Code.>
57	Curtain Airbag Sensor LH failure	• Curtain airbag sensor (LH) is faulty. • Curtain airbag harness (LH) circuit is faulty. • Airbag control module is faulty.	<Ref. to AB(diag)-97, DTC 57 CURTAIN AIRBAG SENSOR LH FAILURE, Diagnostic Chart with Trouble Code.>

DTC	Display	Contents of diagnosis	Reference
58	Curtain Airbag Sensor RH failure	Curtain airbag sensor (RH) is faulty.	<Ref. to AB(diag)-99, DTC 58 CURTAIN AIRBAG SENSOR RH FAILURE, Diagnostic Chart with Trouble Code.>
59	Curtain Airbag Sensor LH failure	Curtain airbag sensor (LH) is faulty.	<Ref. to AB(diag)-99, DTC 59 CURTAIN AIRBAG SENSOR LH FAILURE, Diagnostic Chart with Trouble Code.>
61	Belt Pretensioner RH failure	• Seat belt pretensioner (RH) circuit is open, shorted or shorted to ground. • Airbag control module is faulty. • Pretensioner is faulty. • Pretensioner harness is faulty.	<Ref. to AB(diag)-100, DTC 61 BELT PRETENSIONER RH FAILURE, Diagnostic Chart with Trouble Code.>
62	Belt Pretensioner LH failure	• Seat belt pretensioner (LH) circuit is open, shorted or shorted to ground. • Airbag control module is faulty. • Pretensioner is faulty. • Pretensioner harness is faulty.	<Ref. to AB(diag)-103, DTC 62 BELT PRETENSIONER LH FAILURE, Diagnostic Chart with Trouble Code.>
65	Belt Pretensioner RH failure	• Seat belt pretensioner (RH) circuit is shorted to power supply. • Pretensioner is faulty. • Pretensioner harness is faulty. • Airbag control module is faulty.	<Ref. to AB(diag)-106, DTC 65 BELT PRETENSIONER RH FAILURE, Diagnostic Chart with Trouble Code.>
66	Belt Pretensioner LH failure	• Seat belt pretensioner (LH) circuit is shorted to power supply. • Pretensioner is faulty. • Pretensioner harness is faulty. • Airbag control module is faulty.	<Ref. to AB(diag)-108, DTC 66 BELT PRETENSIONER LH FAILURE, Diagnostic Chart with Trouble Code.>
71	Driver's Airbag failure	• Airbag main harness circuit is open, shorted or shorted to ground. • Airbag module harness (Driver's side) circuit is open, shorted or shorted to ground. • Roll connector circuit is open, shorted or shorted to ground. • Airbag control module is faulty. • Driver's airbag module is faulty.	<Ref. to AB(diag)-110, DTC 71 DRIVER'S AIRBAG FAILURE, Diagnostic Chart with Trouble Code.>
72	Passenger's Airbag failure	• Airbag main harness circuit is open, shorted or shorted to ground. • Airbag module harness (Passenger's side) circuit is open, shorted or shorted to ground. • Airbag control module is faulty. • Passenger's airbag module is faulty.	<Ref. to AB(diag)-113, DTC 72 PASSENGER'S AIRBAG FAILURE, Diagnostic Chart with Trouble Code.>
75	Driver's Airbag failure	• Airbag main harness circuit (Driver's side) is shorted to power supply. • Airbag module harness (Driver's side) is shorted to power supply. • Roll connector is shorted to power supply. • Airbag control module is faulty. • Driver's airbag module is faulty.	<Ref. to AB(diag)-116, DTC 75 DRIVER'S AIRBAG FAILURE, Diagnostic Chart with Trouble Code.>
76	Passenger's Airbag failure	• Airbag main harness circuit (Passenger's side) is shorted to power supply. • Airbag module harness (Passenger's side) is shorted to power supply.	<Ref. to AB(diag)-119, DTC 76 PASSENGER'S AIRBAG FAILURE, Diagnostic Chart with Trouble Code.>

DTC	Display	Contents of diagnosis	Reference
91	Curtain Airbag Module RH failure	• Curtain airbag harness (RH) circuit is faulty. • Curtain airbag module (RH) is faulty. • Airbag control module is faulty.	<Ref. to AB(diag)-121, DTC 91 CURTAIN AIRBAG MODULE RH FAILURE, Diagnostic Chart with Trouble Code.>
92	Curtain Airbag Module LH failure	• Curtain airbag harness (LH) circuit is faulty. • Curtain airbag module (LH) is faulty. • Airbag control module is faulty.	<Ref. to AB(diag)-124, DTC 92 CURTAIN AIRBAG MODULE LH FAILURE, Diagnostic Chart with Trouble Code.>
95	Curtain Airbag Module RH failure	• Curtain airbag harness (RH) is shorted to power supply. • Curtain airbag module (RH) is faulty. • Airbag control module is faulty.	<Ref. to AB(diag)-127, DTC 95 CURTAIN AIRBAG MODULE RH FAILURE, Diagnostic Chart with Trouble Code.>
96	Curtain Airbag Module LH failure	• Curtain airbag harness (LH) is shorted to power supply. • Curtain airbag module (LH) is faulty. • Airbag control module is faulty.	<Ref. to AB(diag)-129, DTC 96 CURTAIN AIRBAG MODULE LH FAILURE, Diagnostic Chart with Trouble Code.>

14.Diagnostic Chart with Trouble Code

A: DTC 11 DRIVER'S AIRBAG FAILURE

DTC DETECTING CONDITION:

- Airbag main harness circuit is open, shorted or shorted to ground.
- Airbag module harness (Driver's side) circuit is open, shorted or shorted to ground.
- Roll connector circuit is open, shorted or shorted to ground.
- Driver's airbag module is faulty.
- Airbag control module is faulty.

CAUTION:

• Before diagnosing the airbag system, be sure to turn the ignition switch OFF, disconnect the ground terminal from battery, and wait more than 20 seconds before starting to work.

• Before replacing the airbag module, seat belt pretensioner, roll connector, control module and sensor, reconnect each part and confirm that the warning light operates properly.

• When inspecting the airbag main harness, disconnect the airbag module connector and the seat belt pretensioner of the driver's and passenger's seats for safety reasons.

NOTE:
Prior to starting work, prepare two airbag registers (98299PA040).

WIRING DIAGRAM:

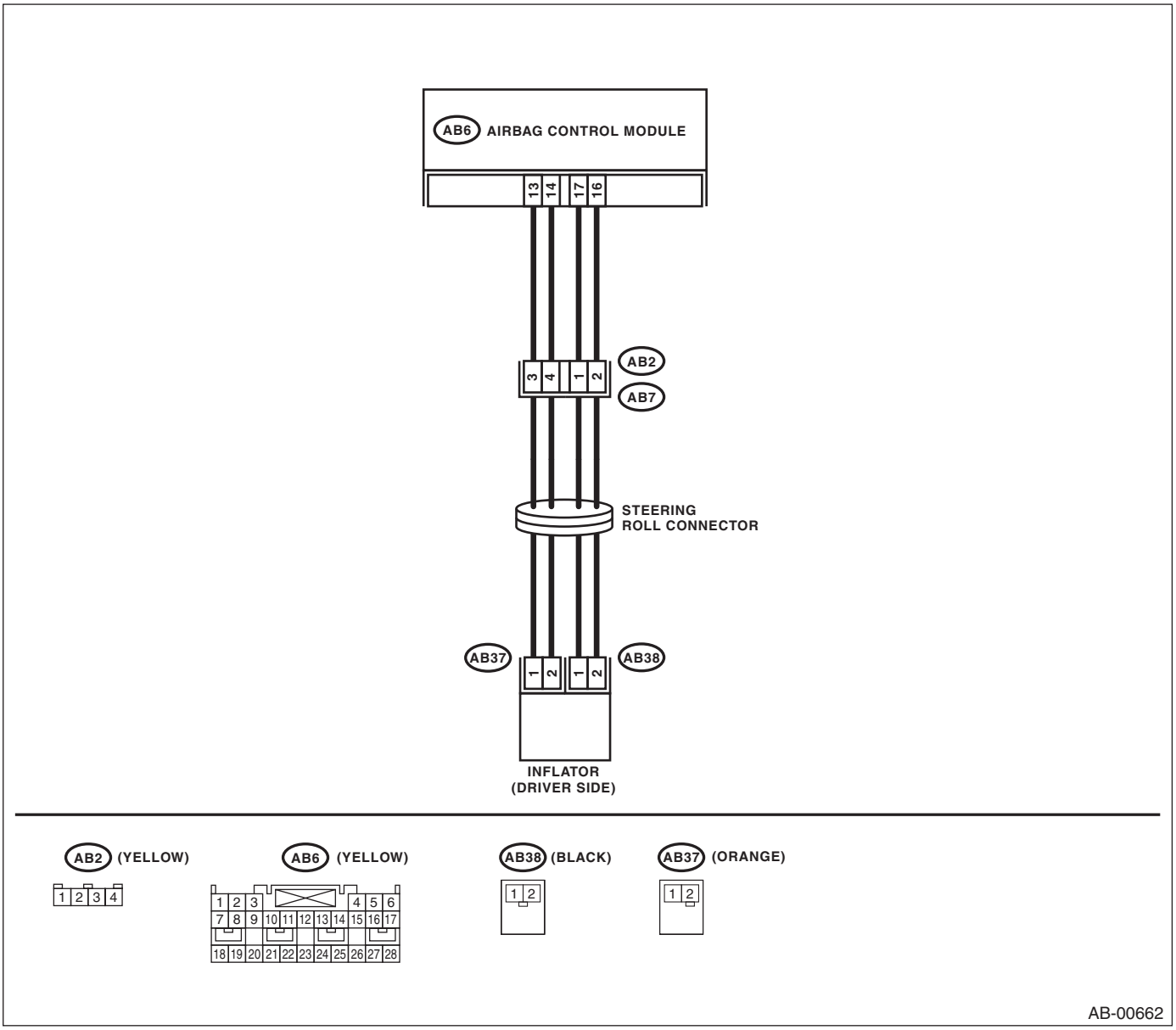

Step		Check	Yes	No
1	**CHECK POOR CONTACT IN CONNECTOR.** Check poor contact in connector between airbag control module and driver's airbag module.	Is there poor contact?	Replace the airbag harness.	Go to step **2.**

	Step	Check	Yes	No
2	**CHECK DRIVER'S AIRBAG MODULE.** 1) Turn the ignition switch OFF, disconnect the battery ground cable, and wait more than 20 seconds. 2) Remove the driver's airbag module. 3) Connect the connector (1N) in the test harness N to connector (AB38). 4) Connect the airbag resistor to connector (2N) in the test harness N. 5) Connect the connectors (1Q) in the test harness Q to connector (AB37). 6) Connect the airbag resistor to connector (2Q) in the test harness Q. 7) Connect the battery ground cable and turn the ignition switch ON.	Does the airbag warning light illuminate for 6 seconds and go off?	Replace the driver's airbag module. <Ref. to AB-16, Driver's Airbag Module.>	Go to step **3.**
3	**CHECK ROLL CONNECTOR.** 1) Turn the ignition switch OFF, disconnect the battery ground cable, and wait more than 20 seconds. 2) Disconnect the test harness N from connector (AB38). 3) Disconnect the test harness Q from connector (AB37). 4) Remove the instrument panel lower cover, disconnect the connector (AB7) from (AB2). 5) Connect the connector (1P) in the test harness P to connector (AB2). 6) Connect the airbag resistor to connector (2P) and (3P) in the test harness P. 7) Connect the battery ground cable and turn the ignition switch ON.	Does the airbag warning light illuminate for 6 seconds and go off?	Replace the roll connector. <Ref. to AB-25, Roll Connector.>	Go to step **4.**
4	**CHECK AIRBAG MAIN HARNESS (DRIVER'S AIRBAG HARNESS).** 1) Turn the ignition switch OFF, disconnect the battery ground cable, and wait more than 20 seconds. 2) Disconnect the airbag resistor from connector (2P) and (3P) in the test harness P. 3) Remove the instrument panel side cover of passenger's side and disconnect the connector (AB10) and (AB9). 4) Disconnect the connector (AB6) from airbag control module, and connect the connector (1U) in the test harness U. 5) Measure the resistance between connector (2U) in the test harness U and connector (2P) and (3P) in the test harness P. ***Connector & terminal*** ***(2U) No. 2 — (2P) No. 1:*** ***(2U) No. 4 — (2P) No. 2:*** ***(2U) No. 8 — (3P) No. 3:*** ***(2U) No. 12 — (3P) No. 4:***	Is the resistance less than 10 Ω?	Go to step **5.**	Replace the airbag main harness with body harness.

	Step	Check	Yes	No
5	**CHECK AIRBAG MAIN HARNESS (DRIVER'S AIRBAG HARNESS).** Measure the resistance between connector (2U) terminals in the test harness U. ***Connector & terminal*** ***(2U) No. 2 — (2U) No. 4:*** ***(2U) No. 4 — Chassis ground:*** ***(2U) No. 2 — Chassis ground:*** ***(2U) No. 8 — (2U) No. 12:*** ***(2U) No. 8 — Chassis ground:*** ***(2U) No. 12 — Chassis ground:***	Is the resistance more than 1 MΩ?	Go to step **6.**	Replace the airbag main harness with body harness.
6	**CHECK AIRBAG CONTROL MODULE.** 1) Connect all the connectors. 2) Erase the memory. 3) Perform the inspection mode. 4) Read the DTC	Is the same DTC displayed as in the current diagnosis still being output?	Replace the airbag control module. <Ref. to AB-22, Airbag Control Module.>	Go to step **7.**
7	**CHECK FOR ANY OTHER DTC ON DISPLAY.**	Is any other DTC displayed?	Inspect the relevant DTC using "List of Diagnostic Trouble Code (DTC)"	Finish the diagnosis.

B: DTC 12 PASSENGER'S AIRBAG FAILURE

DTC DETECTING CONDITION:

- Airbag main harness circuit is open, shorted or shorted to ground.
- Airbag module harness (Passenger's side) circuit is open, shorted or shorted to ground.
- Passenger's airbag module is faulty.
- Airbag control module is faulty.

CAUTION:

• Before diagnosing the airbag system, be sure to turn the ignition switch OFF, disconnect the ground terminal from battery, and wait more than 20 seconds before starting to work.
• Before replacing the airbag module, seat belt pretensioner, roll connector, control module and sensor, reconnect each part and confirm that the warning light operates properly.
• When inspecting the airbag main harness, disconnect the airbag module connector and the seat belt pretensioner of the driver's and passenger's seats for safety reasons.

WIRING DIAGRAM:

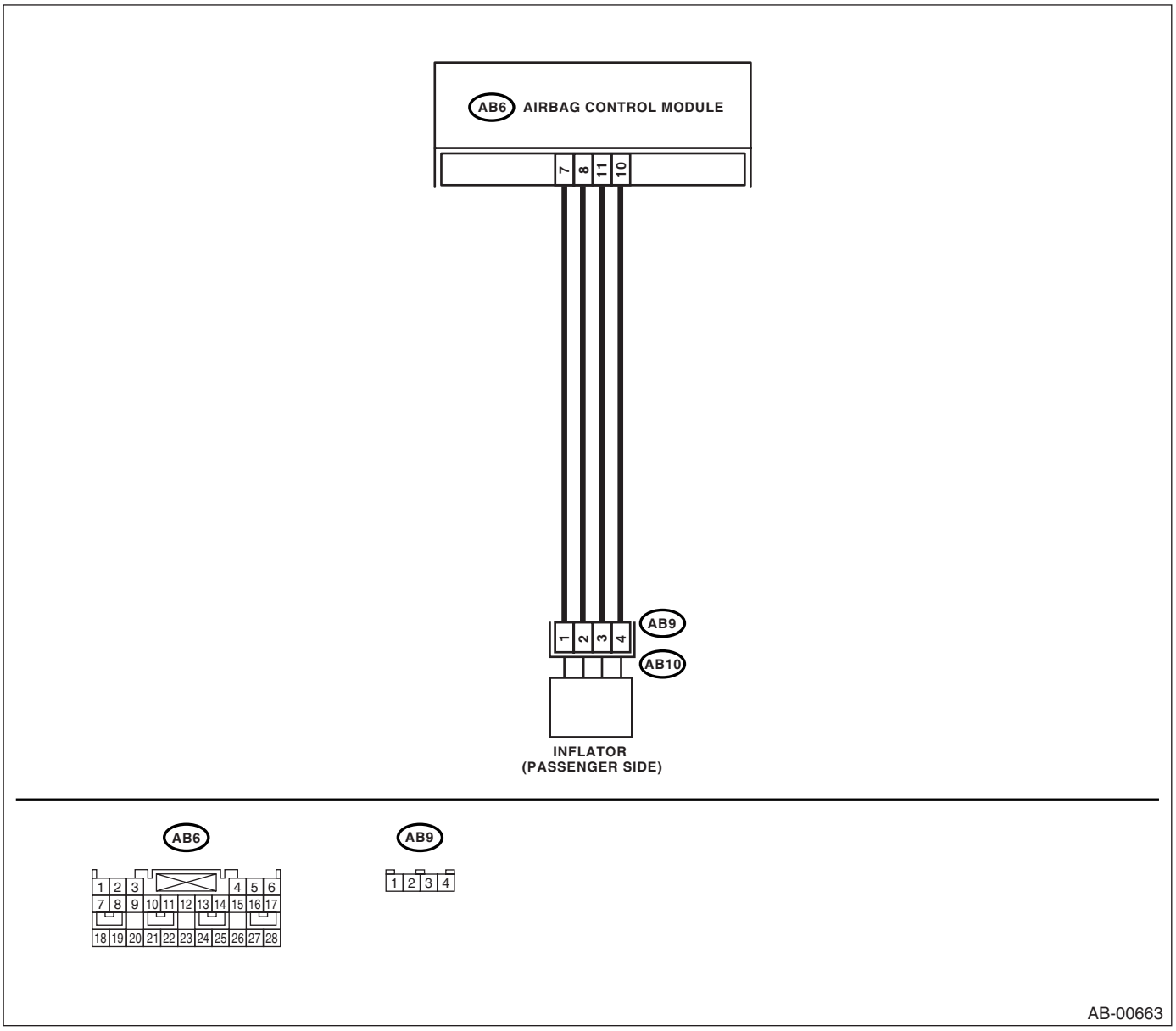

	Step	Check	Yes	No
1	**CHECK POOR CONTACT IN CONNECTOR.** Check if there is poor contact in connector between airbag control module and passenger's airbag module.	Is there poor contact?	Replace the airbag harness.	Go to step **2.**
2	**CHECK PASSENGER'S AIRBAG MODULE.** 1) Turn the ignition switch OFF, disconnect the battery ground cable, and wait more than 20 seconds. 2) Remove the instrument panel side cover on the passenger's side. 3) Disconnect the connector (AB10) from (AB9). 4) Connect the connector (1P) in the test harness P to connector (AB9). 5) Connect the airbag resistor to connector (2P) and (3P) in the test harness P. 6) Connect the battery ground cable and turn the ignition switch ON.	Does the airbag warning light illuminate for 6 seconds and go off?	Replace the passenger's airbag module. <Ref. to AB-17, Passenger's Airbag Module.>	Go to step **3.**
3	**CHECK AIRBAG MAIN HARNESS (PASSENGER'S AIRBAG HARNESS).** 1) Turn the ignition switch OFF, disconnect the battery ground cable, and wait more than 20 seconds. 2) Disconnect the airbag resistor from connector (2P) and (3P) in the test harness P. 3) Remove the instrument panel lower cover, disconnect the connector (AB7) from (AB2). 4) Disconnect the connector (AB6) from airbag control module, and connect the connector (1U) in the test harness U. 5) Measure the resistance between connector (2U) in the test harness U and connector (2P) and (3P) in the test harness P. ***Connector & terminal*** ***(2U) No. 3 — (2P) No. 1:*** ***(2U) No. 5 — (2P) No. 2:*** ***(2U) No. 9 — (3P) No. 3:*** ***(2U) No. 13 — (3P) No. 4:***	Is the resistance less than 10 Ω?	Go to step **4.**	Replace the airbag main harness with body harness.
4	**CHECK AIRBAG MAIN HARNESS (PASSENGER'S AIRBAG HARNESS).** Measure the resistance between connector (2U) terminals in the test harness U and between the connector (2U) and chassis ground. ***Connector & terminal*** ***(2U) No. 3 — (2U) No. 5:*** ***(2U) No. 3 — Chassis ground:*** ***(2U) No. 5 — Chassis ground:*** ***(2U) No. 9 — (2U) No. 13:*** ***(2U) No. 9 — Chassis ground:*** ***(2U) No. 13 — Chassis ground:***	Is the resistance more than 1 MΩ?	Go to step **5.**	Replace the airbag main harness with body harness.
5	**CHECK AIRBAG CONTROL MODULE.** 1) Connect all the connectors. 2) Erase the memory. 3) Perform the inspection mode. 4) Read the DTC.	Is the same DTC displayed as in the current diagnosis still being output?	Replace the airbag control module. <Ref. to AB-22, Airbag Control Module.>	Go to step **6.**

Step		Check	Yes	No
6	**CHECK FOR ANY OTHER DTC ON DISPLAY.**	Is any other DTC displayed?	Inspect the relevant DTC using "List of Diagnostic Trouble Code (DTC)". <Ref. to AB(diag)-41, List of Diagnostic Trouble Code (DTC).>	Finish the diagnosis.

C: DTC 15 DRIVER'S AIRBAG FAILURE

DTC DETECTING CONDITION:

- Airbag main harness circuit (Driver's side) is shorted to power supply.
- Airbag module harness circuit (Driver's side) is shorted to power supply.
- Roll connector is shorted to the power supply.
- Driver's airbag module is faulty.
- Airbag control module is faulty.

CAUTION:

• Before diagnosing the airbag system, be sure to turn the ignition switch OFF, disconnect the ground terminal from battery, and wait more than 20 seconds before starting to work.

• Before replacing the airbag module, seat belt pretensioner, roll connector, control module and sensor, reconnect each part and confirm that the warning light operates properly.

• When inspecting the airbag main harness, disconnect the airbag module connector and the seat belt pretensioner of the driver's and passenger's seats for safety reasons.

NOTE:
Prior to starting work, prepare two airbag registers (98299PA040).

WIRING DIAGRAM:

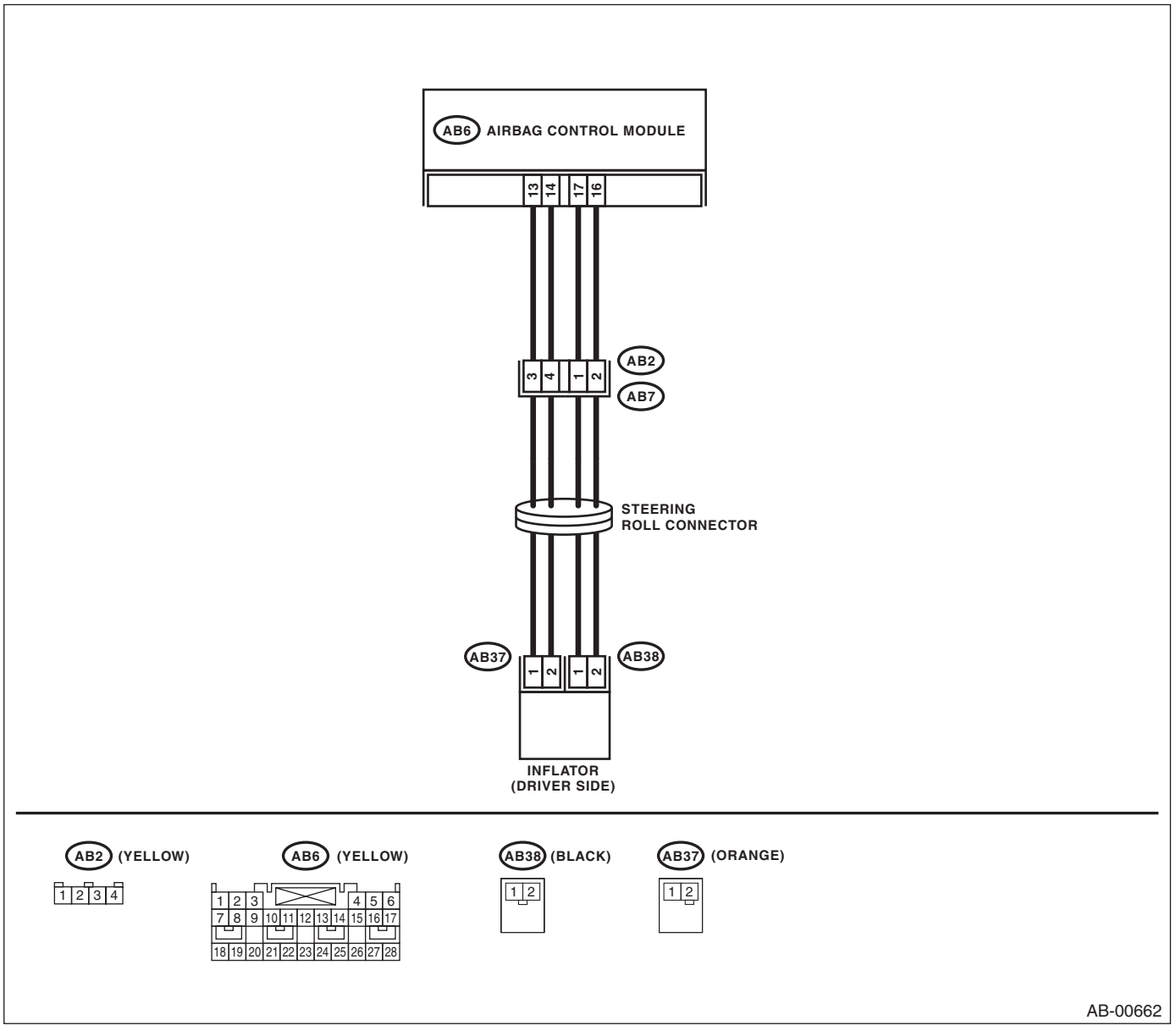

AB-00662

Diagnostic Chart with Trouble Code

	Step	Check	Yes	No
1	**CHECK POOR CONTACT IN CONNECTOR.** Check if there is poor contact in connector between airbag control module and driver's airbag module.	Is there poor contact?	Replace the airbag harness.	Go to step **2.**
2	**CHECK DRIVER'S AIRBAG MODULE.** 1) Turn the ignition switch OFF, disconnect the battery ground cable, and wait more than 20 seconds. 2) Remove the driver's airbag module. 3) Connect the connector (AB38) to connector (1N) in the test harness N. 4) Connect the airbag resistor to connector (2N) in the test harness N. 5) Connect the connectors (1Q) in the test harness Q to connector (AB37). 6) Connect the airbag resistor to connector (2Q) in the test harness Q. 7) Connect the battery ground cable and turn the ignition switch ON.	Does the airbag warning light illuminate for 6 seconds and go off?	Replace the driver's airbag module. <Ref. to AB-16, Driver's Airbag Module.>	Go to step **3.**
3	**CHECK ROLL CONNECTOR.** 1) Turn the ignition switch OFF, disconnect the battery ground cable, and wait more than 20 seconds. 2) Disconnect the test harness N from connector (AB38). 3) Disconnect the test harness Q from connector (AB37). 4) Remove the instrument panel lower cover, disconnect the connector (AB7) from (AB2). 5) Connect the connector (1P) in the test harness P to connector (AB2). 6) Connect the airbag resistor to connector (2P) and (3P) in the test harness P. 7) Connect the battery ground cable and turn the ignition switch ON.	Does the airbag warning light illuminate for 6 seconds and go off?	Replace the roll connector. <Ref. to AB-25, Roll Connector.>	Go to step **4.**
4	**CHECK AIRBAG MAIN HARNESS (DRIVER'S AIRBAG HARNESS).** 1) Turn the ignition switch OFF, disconnect the battery ground cable, and wait more than 20 seconds. 2) Disconnect the airbag resistor from connector (2P) and (3P) in the test harness P. 3) Remove the instrument panel side cover of passenger's side and disconnect the connector (AB10) and (AB9). 4) Disconnect the connector (AB6) from airbag control module, and connect the connector (1U) in the test harness U. 5) Connect the battery ground cable and turn the ignition switch ON. (engine OFF) 6) Measure the voltage between connector (2U) in the test harness U and chassis ground. ***Connector & terminal*** ***(2U) No. 4 (+) — Chassis ground (−):*** ***(2U) No. 2 (+) — Chassis ground (−):*** ***(2U) No. 8 (+) — Chassis ground (−):*** ***(2U) No. 12 (+) — Chassis ground (−):***	Is the voltage less than 1 V?	Go to step **5.**	Replace the airbag main harness with body harness.

	Step	Check	Yes	No
5	**CHECK AIRBAG CONTROL MODULE.** 1) Connect all the connectors. 2) Erase the memory. 3) Perform the inspection mode. 4) Read the DTC.	Is the same DTC displayed as in the current diagnosis still being output?	Replace the airbag control module. <Ref. to AB-22, Airbag Control Module.>	Go to step **6.**
6	**CHECK FOR ANY OTHER DTC ON DISPLAY.**	Is any other DTC displayed?	Inspect the relevant DTC using "List of Diagnostic Trouble Code (DTC)". <Ref. to AB(diag)-41, List of Diagnostic Trouble Code (DTC).>	Finish the diagnosis.

D: DTC 16 PASSENGER'S AIRBAG FAILURE

DTC DETECTING CONDITION:

- Airbag main harness circuit (Passenger's side) is shorted to power supply.
- Airbag module harness circuit (Passenger's side) is shorted to power supply.
- Passenger's airbag module is faulty.
- Airbag control module is faulty.

CAUTION:

• Before diagnosing the airbag system, be sure to turn the ignition switch OFF, disconnect the ground terminal from battery, and wait more than 20 seconds before starting to work.
• Before replacing the airbag module, seat belt pretensioner, roll connector, control module and sensor, reconnect each part and confirm that the warning light operates properly.
• When inspecting the airbag main harness, disconnect the airbag module connector and the seat belt pretensioner of the driver's and passenger's seats for safety reasons.

WIRING DIAGRAM:

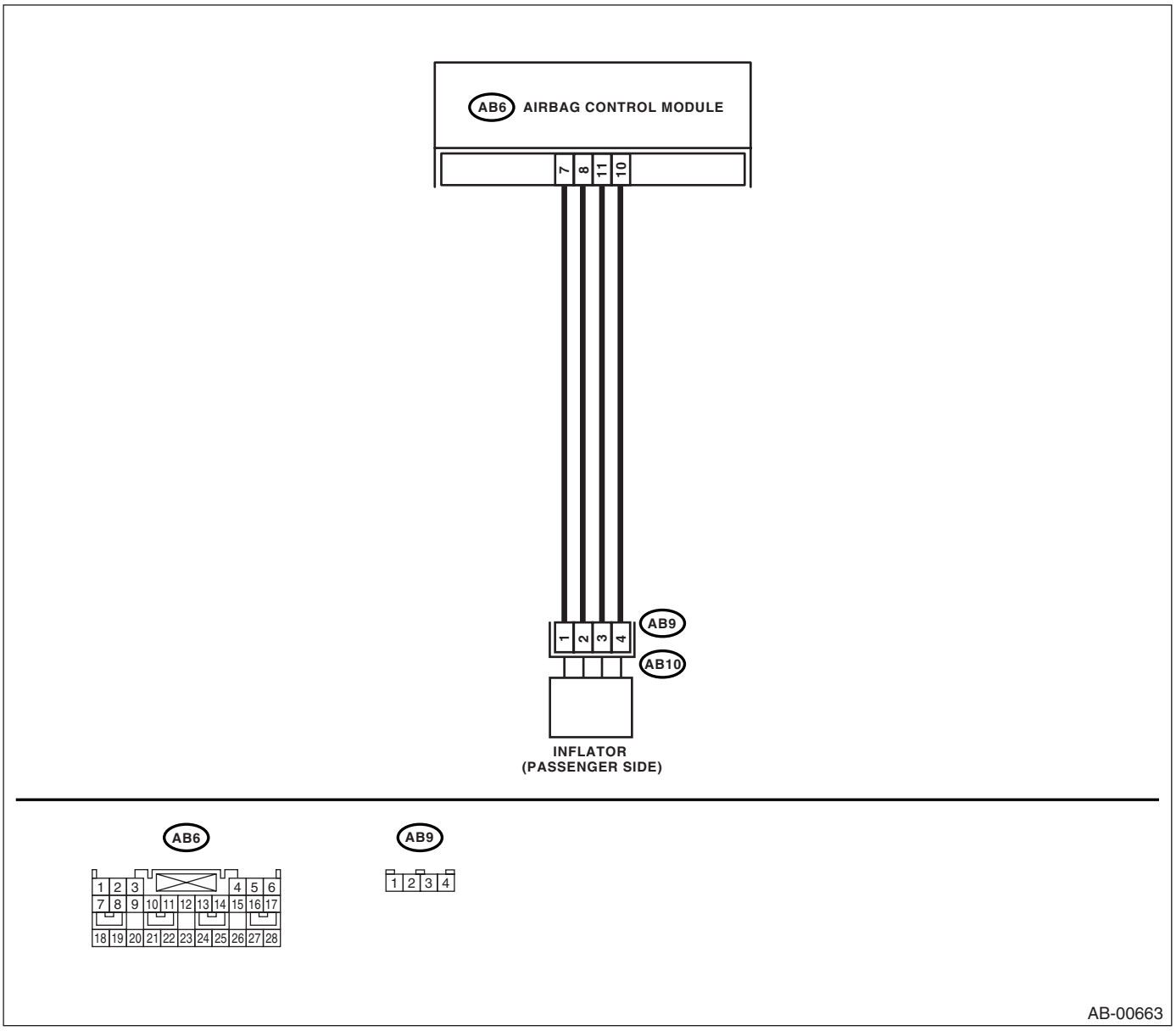

	Step	Check	Yes	No
1	**CHECK POOR CONTACT IN CONNECTOR.** Check if there is poor contact in connector between airbag control module and passenger's airbag module.	Is there poor contact?	Replace the airbag main harness with body harness.	Go to step **2.**
2	**CHECK PASSENGER'S AIRBAG MODULE.** 1) Turn the ignition switch OFF, disconnect the battery ground cable, and wait more than 20 seconds. 2) Remove the instrument panel side cover on the passenger's side. 3) Disconnect the connector (AB10) from (AB9). 4) Connect the connector (1P) in the test harness P to connector (AB9). 5) Connect the airbag resistor to connector (2P) and (3P) in the test harness P. 6) Connect the battery ground cable and turn the ignition switch ON.	Does the airbag warning light illuminate for 6 seconds and go off?	Replace the passenger's airbag module. <Ref. to AB-17, Passenger's Airbag Module.>	Go to step **3.**
3	**CHECK AIRBAG MAIN HARNESS (PASSENGER'S AIRBAG HARNESS).** 1) Turn the ignition switch OFF, disconnect the battery ground cable, and wait more than 20 seconds. 2) Disconnect the airbag resistor from connector (2P) and (3P) in the test harness P. 3) Remove the instrument panel lower cover, disconnect the connector (AB7) from (AB2). 4) Disconnect the connector (AB6) from airbag control module, and connect the connector (1U) in the test harness U. 5) Measure the voltage between connector (2U) in the test harness U and chassis ground. ***Connector & terminal*** ***(2U) No. 3 (+) — Chassis ground (–):*** ***(2U) No. 5 (+) — Chassis ground (–):*** ***(2U) No. 9 (+) — Chassis ground (–):*** ***(2U) No. 13 (+) — Chassis ground (–):***	Is the voltage less than 1 V?	Go to step **4.**	Replace the airbag main harness with body harness.
4	**CHECK AIRBAG CONTROL MODULE.** 1) Connect all the connectors. 2) Erase the memory. 3) Perform the inspection mode. 4) Read the DTC.	Is the same DTC displayed as in the current diagnosis still being output?	Replace the airbag control module. <Ref. to AB-22, Airbag Control Module.>	Go to step **5.**
5	**CHECK FOR ANY OTHER DTC ON DISPLAY.**	Is any other DTC displayed?	Inspect the relevant DTC using "List of Diagnostic Trouble Code (DTC)". <Ref. to AB(diag)-41, List of Diagnostic Trouble Code (DTC).>	Finish the diagnosis.

E: DTC 21 AIRBAG ECU FAILURE

DTC DETECTING CONDITION:

Airbag control module is faulty.

CAUTION:

• Before diagnosing the airbag system, be sure to turn the ignition switch OFF, disconnect the ground terminal from battery, and wait more than 20 seconds before starting to work.

• Before replacing the airbag module, seat belt pretensioner, roll connector, control module and sensor, reconnect each part and confirm that the warning light operates properly.

	Step	Check	Yes	No
1	**CHECK IF DTC 21 IS INDICATED.** Read the DTC. <Ref. to AB(diag)-27, READ DIAGNOSTIC TROUBLE CODE (DTC), OPERATION, Subaru Select Monitor.>	Is DTC 21 indicated for airbag warning light?	Replace the airbag control module. <Ref. to AB-22, Airbag Control Module.>	Perform the clear memory mode. <Ref. to AB(diag)-28, CLEAR MEMORY MODE, OPERATION, Subaru Select Monitor.>

F: DTC 22 FRONT AIRBAG FIRING OUTPUT

WIRING DIAGRAM:

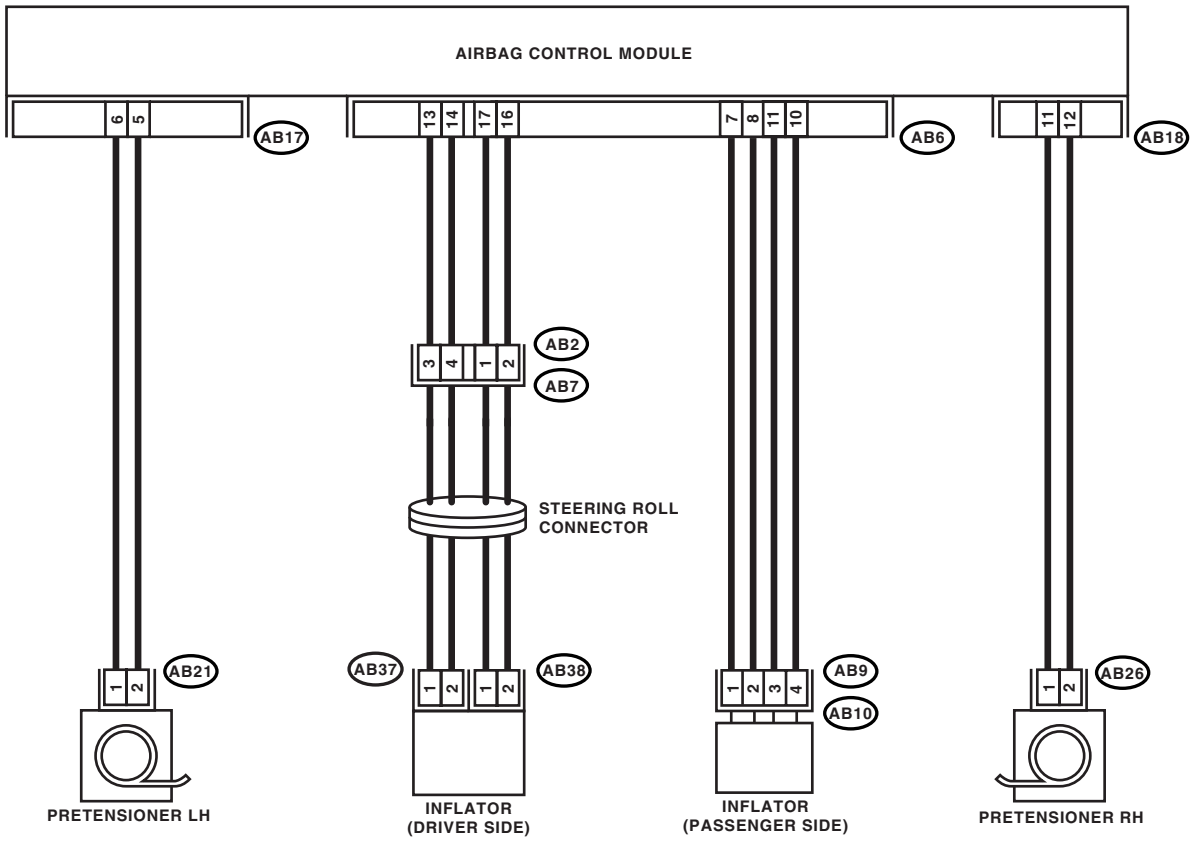

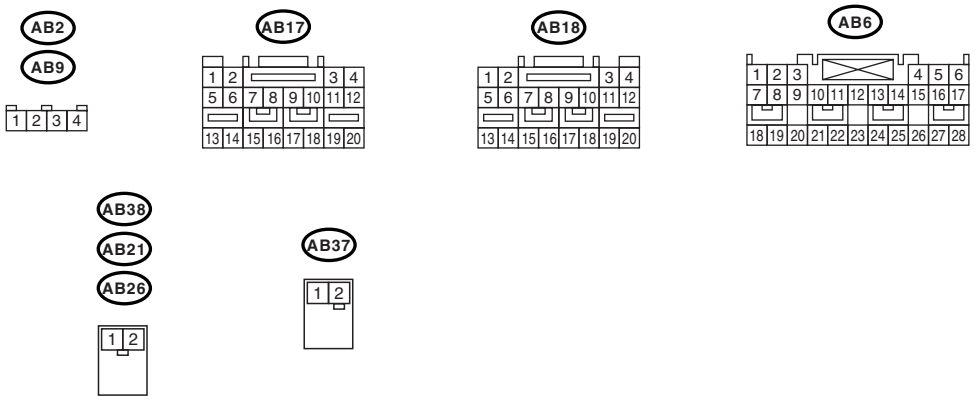

AB-00922

This DTC is indicated when the front airbag module and the pretensioner are deployed. Once this DTC is displayed, the memory cannot be cleared. Replace the following parts.

- Airbag control module. <Ref. to AB-22, Airbag Control Module.>
- Driver's airbag module. <Ref. to AB-16, Driver's Airbag Module.>
- Passenger's airbag module. <Ref. to AB-17, Passenger's Airbag Module.>
- Front sub sensor of both sides. <Ref. to AB-26, Front Sub Sensor.>
- Front seat belt outer with pretensioner of both sides. <Ref. to SB-10, Front Seat Belt.>

G: DTC 23 CONNECTOR TO AIRBAG ECU

DTC DETECTING CONDITION:

(AB6), (AB17) and (AB18) are not connected properly to airbag control module.

CAUTION:

Before diagnosing the airbag system, be sure to turn the ignition switch OFF, disconnect the ground terminal from battery, and wait more than 20 seconds before starting to work.

	Step	Check	Yes	No
1	**CHECK POOR CONTACT IN CONNECTORS (AB6), (AB17) AND (AB18).** 1) Turn the ignition switch OFF, disconnect the battery ground cable, and wait more than 20 seconds. 2) Disconnect the connectors (AB6), (AB17) and (AB18) from airbag control module.	Is there rust or damage on the harness connector and the control module connector?	Replace the airbag control module <Ref. to AB-22, Airbag Control Module.>, replace the body harness with airbag main harness. replace the body harness with side airbag harness.	Go to step **2.**
2	**CHECK POOR CONTACT IN CONNECTORS (AB6), (AB17) AND (AB18).** 1) Ensure that the connectors are firmly reconnected. 2) Connect the battery ground cable and turn the ignition switch ON.	Does the airbag warning light illuminate for 6 seconds and go off?	Go to step **3.**	Replace the airbag control module. <Ref. to AB-22, Airbag Control Module.>
3	**CHECK AIRBAG CONTROL MODULE.** 1) Connect all the connectors. 2) Erase the memory. 3) Perform the inspection mode. 4) Read the DTC.	Is the same DTC displayed as in the current diagnosis still being output?	Replace the airbag control module. <Ref. to AB-22, Airbag Control Module.>	Go to step **4.**
4	**CHECK FOR ANY OTHER DTC ON DISPLAY.**	Is any other DTC displayed?	Inspect the relevant DTC using “List of Diagnostic Trouble Code (DTC)”. <Ref. to AB(diag)-41, List of Diagnostic Trouble Code (DTC).>	Finish the diagnosis.

H: DTC 24 IG1 OPEN

DTC DETECTING CONDITION:

- Airbag control module is faulty.
- Airbag main harness circuit is open.
- Fuse No. 25 (in joint box) is blown.
- Body harness circuit is open.

CAUTION:

• Before diagnosing the airbag system, be sure to turn the ignition switch OFF, disconnect the ground terminal from battery, and wait more than 20 seconds before starting to work.
• Before replacing the airbag module, seat belt pretensioner, roll connector, control module and sensor, reconnect each part and confirm that the warning light operates properly.
• When inspecting the airbag main harness, disconnect the airbag module connector and the seat belt pretensioner of the driver's and passenger's seats for safety reasons.

WIRING DIAGRAM:

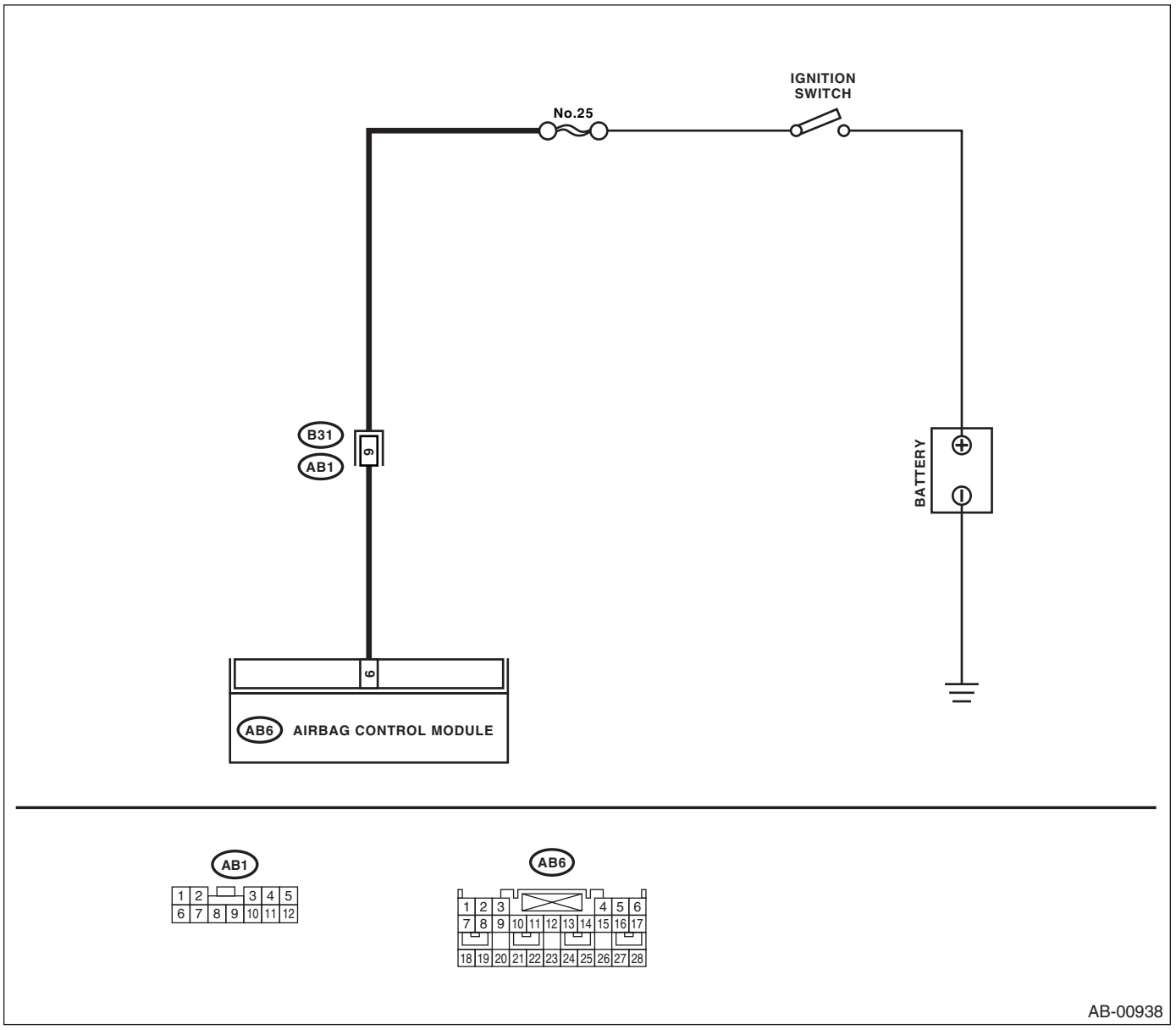

Diagnostic Chart with Trouble Code

	Step	Check	Yes	No
1	**CHECK AIRBAG CONTROL MODULE.** 1) Turn the ignition switch OFF, disconnect the battery ground cable, and wait more than 20 seconds. 2) Disconnect the connector (AB6) from airbag control module. 3) Connect the connector (1U) in the test harness U to connector (AB6). 4) Connect the battery ground cable and turn the ignition switch ON. 5) Measure the voltage between connector (2U) in the test harness U and chassis ground. ***Connector & terminal*** ***(2U) No. 1 (+) — Chassis ground (−):***	Is the voltage more than 10 V?	Replace the airbag control module. <Ref. to AB-22, Airbag Control Module.>	Go to step **2.**
2	**CHECK FUSE NO. 25 (IN JOINT BOX).** 1) Confirm that the ignition switch is turned OFF. 2) Remove the fuse No. 25 (in joint box) and perform visual inspection.	Is the fuse No. 25 blown out?	Replace the fuse No. 25. If fuse No. 25 is blown out again, repair the body harness or replace the airbag main harness with body harness.	Go to step **3.**
3	**CHECK AIRBAG CONTROL MODULE.** 1) Connect all the connectors. 2) Erase the memory. 3) Perform the inspection mode. 4) Read the DTC.	Is the same DTC displayed as in the current diagnosis still being output?	Replace the airbag control module. <Ref. to AB-22, Airbag Control Module.>	Go to step **4.**
4	**CHECK FOR ANY OTHER DTC ON DISPLAY.**	Is any other DTC displayed?	Inspect the relevant DTC using "List of Diagnostic Trouble Code (DTC)". <Ref. to AB(diag)-41, List of Diagnostic Trouble Code (DTC).>	Finish the diagnosis.

I: DTC 25 IG2 OPEN

DTC DETECTING CONDITION:

- Airbag control module is faulty.
- Airbag main harness circuit is open.
- Fuse No. 12 (in joint box) is blown.
- Body harness circuit is open.

CAUTION:

• Before diagnosing the airbag system, be sure to turn the ignition switch OFF, disconnect the ground terminal from the battery, and wait more than 20 seconds before starting to work.

• Before replacing the airbag module, seat belt pretensioner, roll connector, control module and sensor, reconnect each part and confirm that the warning light operates properly.

• When inspecting the airbag main harness, disconnect the airbag module connector and the seat belt pretensioner of the driver's and passenger's seats for safety reasons.

WIRING DIAGRAM:

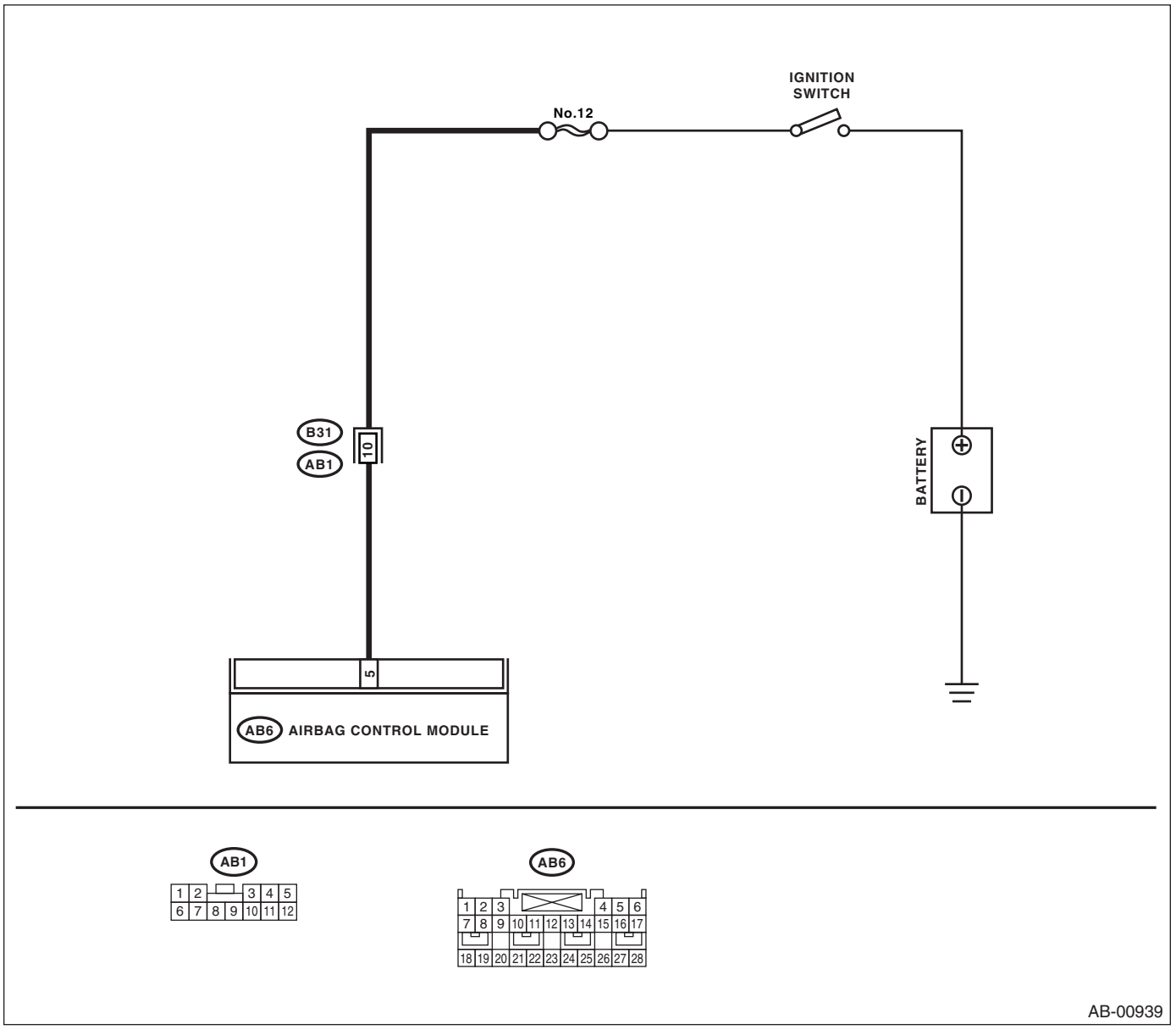

	Step	Check	Yes	No
1	**CHECK AIRBAG CONTROL MODULE.** 1) Turn the ignition switch OFF, disconnect the battery ground cable, and wait more than 20 seconds. 2) Disconnect the connector (AB6) from airbag control module. 3) Connect the connector (1U) in the test harness U to connector (AB6). 4) Connect the battery ground cable and turn the ignition switch ON. 5) Measure the voltage between connector (2U) in the test harness U and chassis ground. ***Connector & terminal*** ***(2U) No. 6 (+) — Chassis ground (−):***	Is the voltage more than 10 V?	Replace the airbag control module. <Ref. to AB-22, Airbag Control Module.>	Go to step **2.**
2	**CHECK FUSE NO. 12 (IN JOINT BOX).** 1) Confirm that the ignition switch is turned OFF. 2) Remove the fuse No. 12 (in joint box) and perform visual inspection.	Is the fuse No. 12 blown out?	Replace the fuse No. 12. If fuse No. 12 is blown out again, repair the body harness, replace the airbag main harness with body harness.	Go to step **3.**
3	**CHECK AIRBAG CONTROL MODULE.** 1) Connect all the connectors. 2) Erase the memory. 3) Perform the inspection mode. 4) Read the DTC.	Is the same DTC displayed as in the current diagnosis still being output?	Replace the airbag control module. <Ref. to AB-22, Airbag Control Module.>	Go to step **4.**
4	**CHECK FOR ANY OTHER DTC ON DISPLAY.**	Is any other DTC displayed?	Inspect the relevant DTC using "List of Diagnostic Trouble Code (DTC)". <Ref. to AB(diag)-41, List of Diagnostic Trouble Code (DTC).>	Finish the diagnosis.

J: DTC 26 PASSENGER'S AIRBAG INDICATOR FAILURE

DTC DETECTING CONDITION:

- Passenger's airbag indicator is faulty.
- Airbag control module is faulty.
- Airbag main harness circuit is open.
- Body harness circuit is open.

CAUTION:

• Before diagnosing the airbag system, be sure to turn the ignition switch OFF, disconnect the ground terminal from battery, and wait more than 20 seconds before starting to work.

• Before replacing the airbag module, seat belt pretensioner, roll connector, control module and sensor, reconnect each part and confirm that the warning light operates properly.

• When inspecting the airbag harness, disconnect each airbag module connector and seat belt pretensioner for safety reasons.

WIRING DIAGRAM:

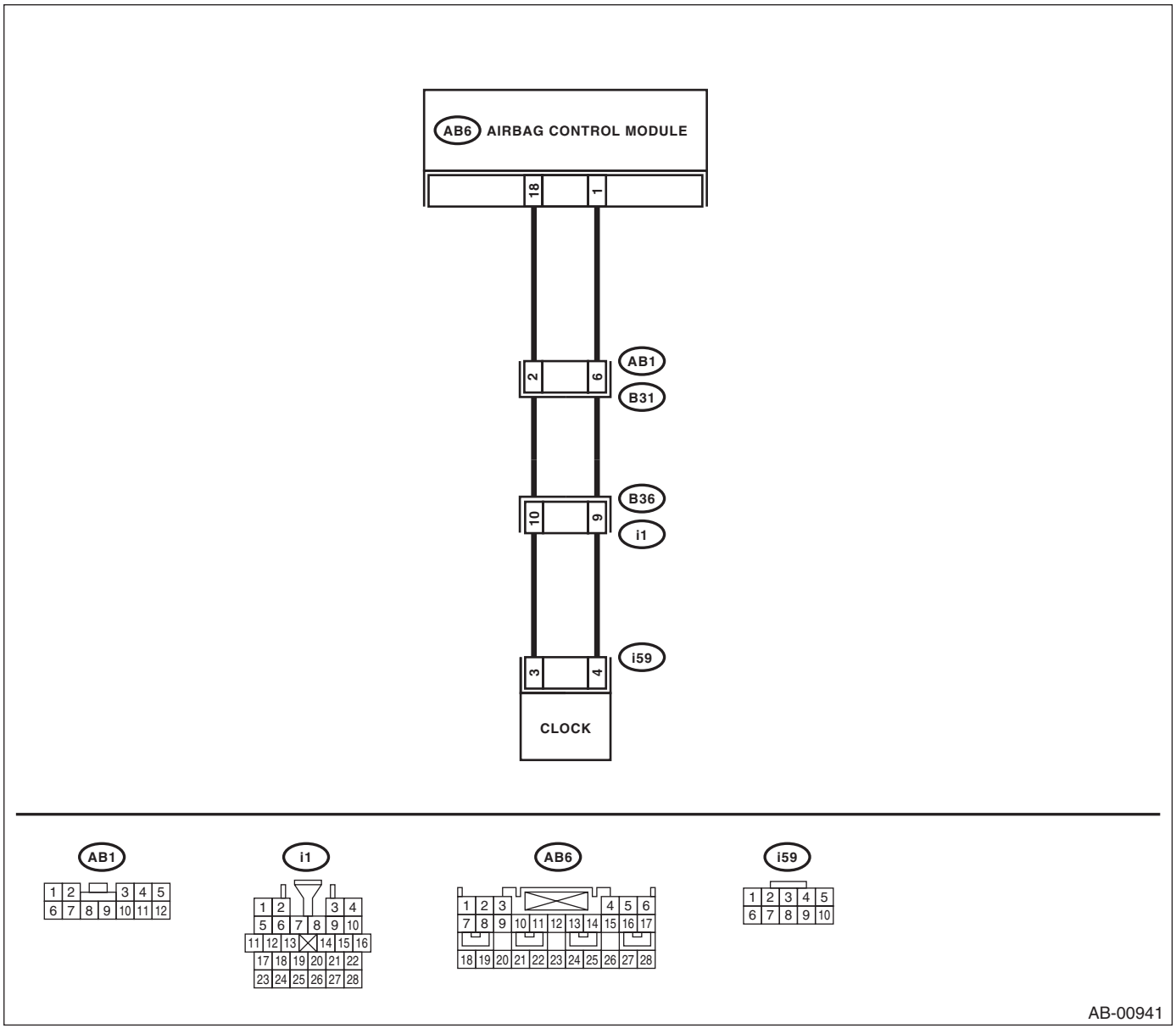

Diagnostic Chart with Trouble Code

	Step	Check	Yes	No
1	**CHECK POOR CONTACT.** 1) Turn the ignition switch OFF, disconnect the battery ground cable, and wait more than 20 seconds. 2) Confirm that the firm contact is secured between the airbag control module and clock.	Is there poor contact in each connector?	Replace the airbag harness connector.	Go to step **2.**
2	**CHECK AIRBAG MAIN HARNESS.** 1) Disconnect the connector (AB6) from airbag control module. 2) Connect the battery ground cable and turn the ignition switch ON. NOTE: Both ON/OFF doesn't light when it is normal.	Does the passenger's airbag indicator illuminate?	Go to step **3.**	Go to step **4.**
3	**CHECK AIRBAG MAIN HARNESS.** 1) Turn the ignition switch OFF. 2) Remove the clock and disconnect the connector (i59). 3) Connect the connector (1U) in the test harness U to connector (AB6). 4) Measure the resistance between connector (2U), (4U) in the test harness U and chassis ground. ***Connector & terminal*** ***(2U) No. 14 — (4U) No. 17:*** ***(2U) No. 14 — Chassis ground:*** ***(4U) No. 17 — Chassis ground:***	Is the resistance more than 1 MΩ?	Replace the clock. <Ref. to IDI-21, Clock.>	Repair the bulkhead harness or replace airbag main harness with body harness.
4	**CHECK AIRBAG MAIN HARNESS.** 1) Connect the connector (7U) and (8U). 2) Connect the battery ground cable, and turn the ignition switch ON. NOTE: Both ON/OFF doesn't light when it is normal.	Does the passenger's airbag indicator illuminate?	Replace the airbag control module. <Ref. to AB-22, Airbag Control Module.>	Go to step **5.**
5	**CHECK AIRBAG MAIN HARNESS.** 1) Turn the ignition switch OFF. 2) Connect the connector (1U) in the test harness U to connector (AB6). 3) Measure the resistance between connector (2U), (4U) in the test harness U and connector (i59). ***Connector & terminal*** ***(2U) No. 14 — (i59) No. 4:*** ***(4U) No. 17 — (i59) No. 3:***	Is the resistance less than 10 Ω?	Go to step **6.**	Repair the bulkhead harness or replace airbag main harness with body harness.
6	**CHECK BODY HARNESS.** 1) Turn the ignition switch ON. 2) Measure the voltage between connector (i59) and chassis ground. ***Connector & terminal*** ***(i59) No. 8 — Chassis ground:***	Is the voltage more than 10 V?	Replace the clock. <Ref. to IDI-21, Clock.>	Repair the power line to clock.

K: DTC 27 ODS COMMUNICATION ERROR

DTC DETECTING CONDITION:

Occupant detection control module communication failure

	Step	Check	Yes	No
1	**CHECK AIRBAG HARNESS.** 1) Turn the ignition switch OFF, disconnect the battery ground cable, and wait more than 20 seconds. 2) Disconnect the connector (AB18) from air-bag control module. 3) Disconnect the connector (AB53) from lower part of passenger's side occupant detection control module. 4) Connect the connector (1U) in test harness U to connector (AB18). 5) Connect the connector (1Z) in test harness Z to connector (AB53). 6) Measure the resistance between connector (3U) in test harness U and (2Z) in test harness Z. ***Connector & terminal*** ***(3U) No. 2 — (2Z) No. 5:*** ***(3U) No. 4 — (2Z) No. 6:***	Is the resistance less than 10 Ω?	Go to step **2.**	Replace the airbag rear harness with body harness.
2	**CHECK AIRBAG HARNESS.** Measure the resistance between connector (3U) in the test harness U and chassis ground. ***Connector & terminal*** ***(3U) No. 2 — Chassis ground:***	Is the resistance less than 10 Ω?	Go to step **3.**	Replace the airbag rear harness with body harness.
3	**CHECK OCCUPANT DETECTION SYSTEM.** 1) Connect the connector (AB18) to airbag control module. 2) Connect the connector (AB53) from the occupant detection control module behind the passenger's seat. 3) Connect the battery ground cable. 4) Check the occupant detection system. <Ref. to OD(diag)-2, Basic Diagnostic Procedure.>	Is there any fault in the occupant detection system.	Repair the occupant detection system. <Ref. to OD(diag)-2, Basic Diagnostic Procedure.>	Finish the diagnosis

L: DTC 28 ODS ADJUSTMENT/INSPECTION HALT

NOTE:
Refer to "Occupant Detection System" for DTC 28. <Ref. to OD(diag)-23, DTC 28 ADJUSTMENT / INSPECTION HALT, Diagnostic Procedure with Diagnostic Trouble Code (DTC).>

M: DTC 29 ODS FAILURE

NOTE:
Refer to "Occupant Detection System" for DTC 29. <Ref. to OD(diag)-25, DTC 29 ODS FAILURE, Diagnostic Procedure with Diagnostic Trouble Code (DTC).>

N: DTC 31 FRONT SUB SENSOR RH FAILURE

DTC DETECTING CONDITION:

- Front sub sensor harness (RH) circuit is shorted.
- Front sub sensor harness (RH) circuit is open.
- Front sub sensor (RH) is faulty.
- Airbag control module is faulty.

CAUTION:

• Before diagnosing the airbag system, be sure to turn the ignition switch OFF, disconnect the ground terminal from the battery, and wait more than 20 seconds before starting to work.

• Before replacing the airbag module, seat belt pretensioner, roll connector, control module and sensor, reconnect each part and confirm that the warning light operates properly.

• When inspecting the airbag main harness, disconnect the airbag module connector and the seat belt pretensioner of the driver's and passenger's seats for safety reasons.

WIRING DIAGRAM:

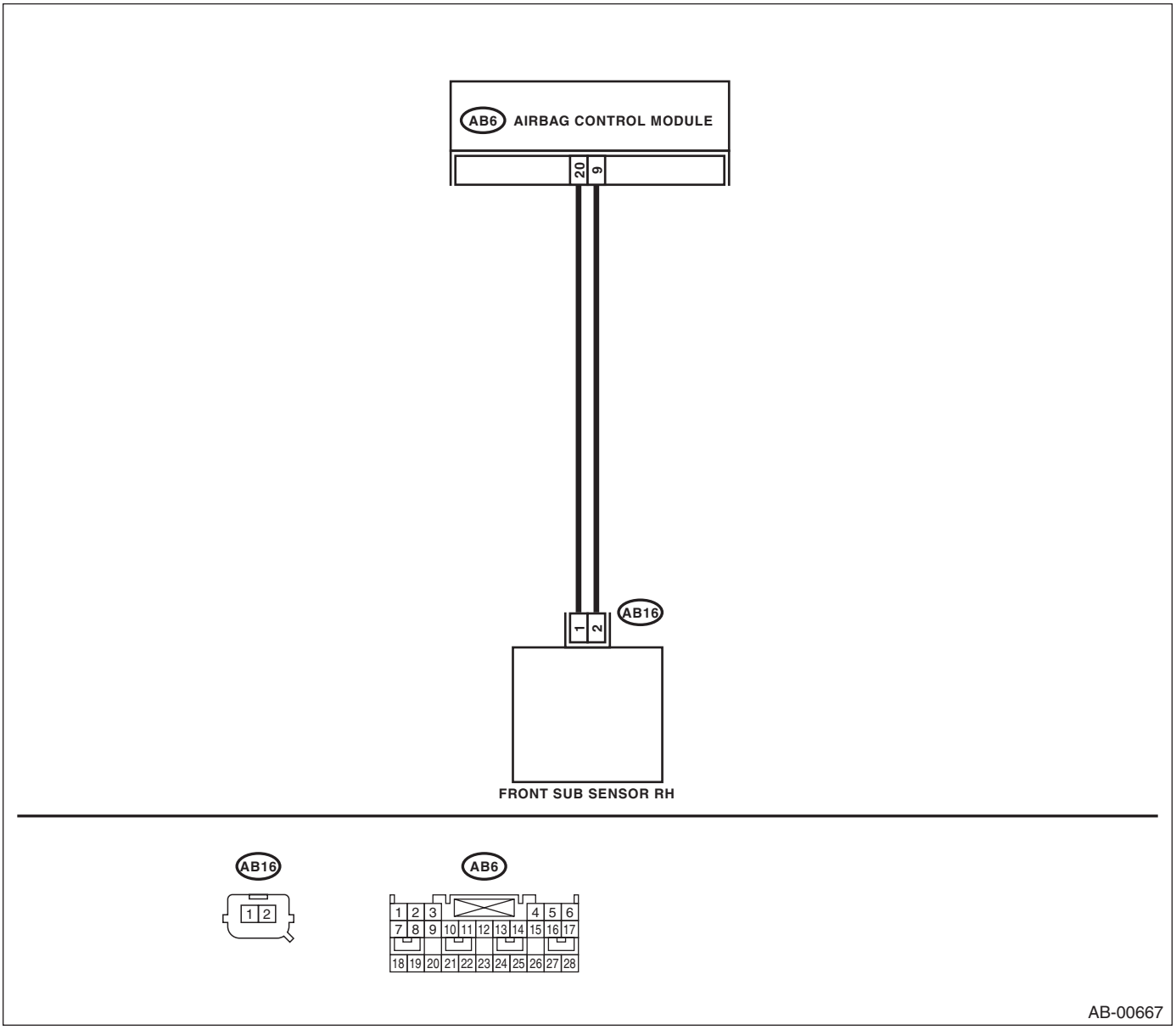

	Step	Check	Yes	No
1	**CHECK POOR CONTACT IN CONNECTOR.** Check if there is poor contact between airbag control module and front sub sensor RH.	Is there poor contact?	Replace the airbag main harness with body harness.	Go to step **2.**
2	**CHECK AIRBAG MAIN HARNESS (FRONT SUB SENSOR HARNESS RH).** 1) Turn the ignition switch OFF, disconnect the battery ground cable, and wait more than 20 seconds. 2) Remove the instrument panel lower cover and disconnect the connector (AB7) and (AB2). 3) Remove the instrument panel side cover on passenger's side and disconnect the connector (AB10) and (AB9). 4) Disconnect the connector (AB6) from airbag control module. 5) Connect the connector (1U) in the test harness U to connector (AB6). 6) Disconnect the front sub sensor (RH), and then connect the connector (1H) in the test harness H to connector (AB16). 7) Measure the resistance between connector (3U) in the test harness U and connector (3H) in the test harness H. ***Connector & terminal*** ***(3U) No. 7 — (3H) No. 5:*** ***(3U) No. 9 — (3H) No. 6:***	Is the resistance less than 10 Ω?	Go to step **3.**	Replace the airbag main harness with body harness.
3	**CHECK AIRBAG MAIN HARNESS (FRONT SUB SENSOR HARNESS RH).** Measure the resistance between connector (3U) in the test harness U and chassis ground. ***Connector & terminal*** ***(3U) No. 7 — Chassis ground:*** ***(3U) No. 9 — Chassis ground:***	Is the resistance more than 1 MΩ?	Replace the front sub sensor (RH). <Ref. to AB-26, Front Sub Sensor.> When the sensor is not OK, though the sensor is replaced, replace the airbag control module. <Ref. to AB-22, Airbag Control Module.>	Go to step **4.**
4	**CHECK AIRBAG CONTROL MODULE.** 1) Connect all the connectors. 2) Erase the memory. 3) Perform the inspection mode. 4) Read the DTC.	Is the same DTC displayed as in the current diagnosis still being output?	Replace the airbag control module. <Ref. to AB-22, Airbag Control Module.>	Go to step **5.**
5	**CHECK FOR ANY OTHER DTC ON DISPLAY.**	Is any other DTC displayed?	Inspect the relevant DTC using "List of Diagnostic Trouble Code (DTC)". <Ref. to AB(diag)-41, List of Diagnostic Trouble Code (DTC).>	Finish the diagnosis.

O: DTC 32 FRONT SUB SENSOR LH FAILURE

DTC DETECTING CONDITION:

- Front sub sensor harness (LH) circuit is shorted.
- Front sub sensor harness (LH) circuit is open.
- Front sub sensor (LH) is faulty.
- Airbag control module is faulty.

CAUTION:

• Before diagnosing the airbag system, be sure to turn the ignition switch OFF, disconnect the ground terminal from battery, and wait more than 20 seconds before starting to work.
• Before replacing the airbag module, seat belt pretensioner, roll connector, control module and sensor, reconnect each part and confirm that the warning light operates properly.
• When inspecting the airbag main harness, disconnect the airbag module connector and the seat belt pretensioner of the driver's and passenger's seats for safety reasons.

WIRING DIAGRAM:

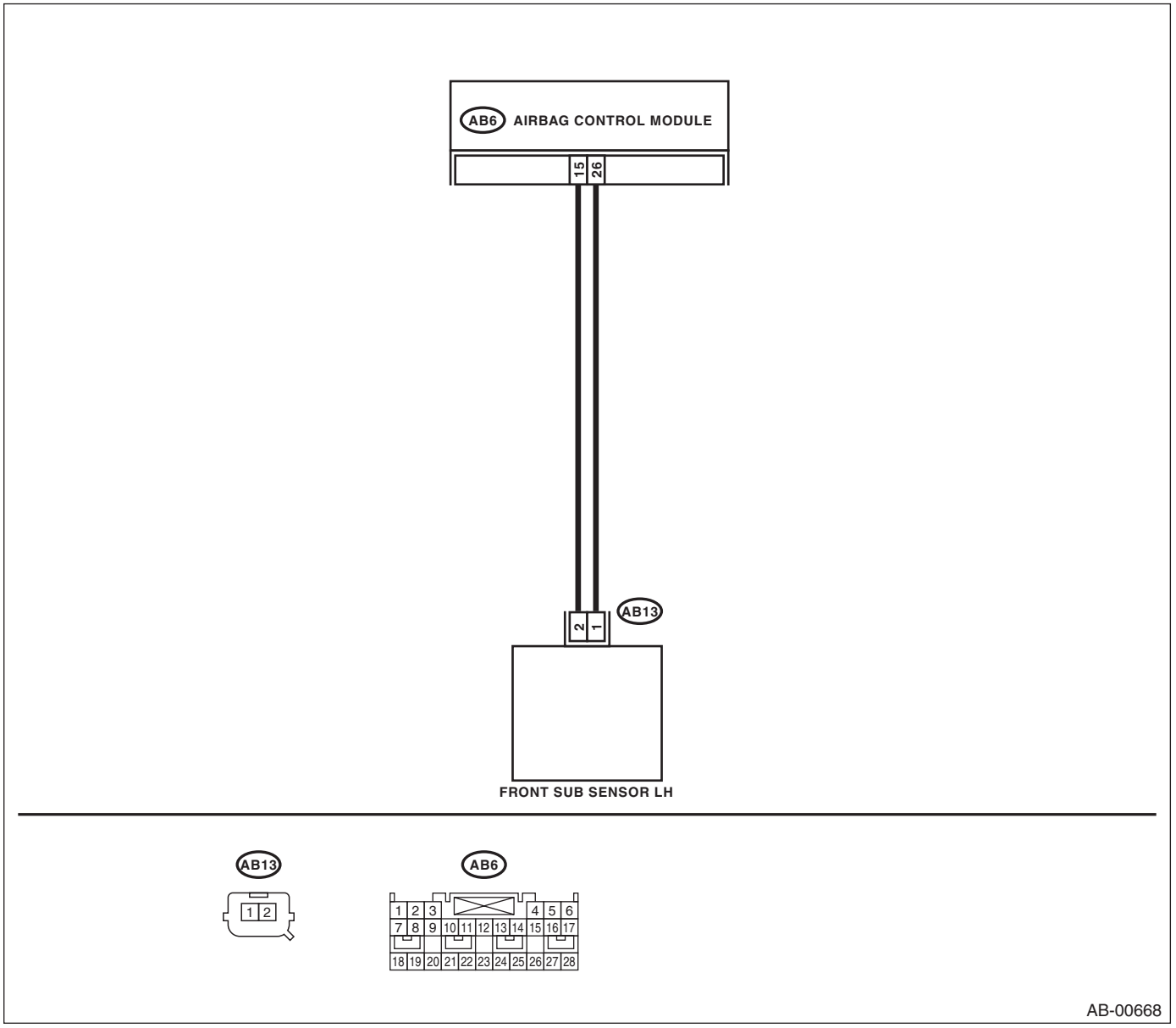

	Step	Check	Yes	No
1	**CHECK POOR CONTACT IN CONNECTOR.** Check if there is poor contact between airbag control module and front sub sensor LH.	Is there poor contact?	Replace the airbag main harness with body harness.	Go to step **2.**
2	**CHECK AIRBAG MAIN HARNESS (FRONT SUB SENSOR HARNESS LH).** 1) Turn the ignition switch OFF, disconnect the battery ground cable, and wait more than 20 seconds. 2) Remove the instrument panel lower cover and disconnect the connector (AB7) and (AB2). 3) Remove the instrument panel side cover on passenger's side and disconnect the connector (AB10) and (AB9). 4) Disconnect the connector (AB6) from airbag control module. 5) Connect the connector (1U) in the test harness U to connector (AB6). 6) Disconnect the front sub sensor (LH), and then connect the connector (1H) in the test harness H to connector (AB13). 7) Measure the resistance between connector (3U) in the test harness U and connector (3H) in the test harness H. ***Connector & terminal*** ***(3U) No. 6 — (3H) No. 5:*** ***(3U) No. 8 — (3H) No. 6:***	Is the resistance less than 10 Ω?	Go to step **3.**	Replace the airbag main harness with body harness.
3	**CHECK AIRBAG MAIN HARNESS (FRONT SUB SENSOR HARNESS LH).** Measure the resistance between connector (3U) in the test harness U and chassis ground. ***Connector & terminal*** ***(3U) No. 6 — Chassis ground:*** ***(3U) No. 8 — Chassis ground:***	Is the resistance more than 1 MΩ?	Replace the front sub sensor (LH). <Ref. to AB-26, Front Sub Sensor.> When the sensor is not OK, though the sensor is replaced, replace the airbag control module. <Ref. to AB-22, Airbag Control Module.>	Go to step **4.**
4	**CHECK AIRBAG CONTROL MODULE.** 1) Connect all the connectors. 2) Erase the memory. 3) Perform the inspection mode. 4) Read the DTC.	Is the same DTC displayed as in the current diagnosis still being output?	Replace the airbag control module. <Ref. to AB-22, Airbag Control Module.>	Go to step **5.**
5	**CHECK FOR ANY OTHER DTC ON DISPLAY.**	Is any other DTC displayed?	Inspect the relevant DTC using "List of Diagnostic Trouble Code (DTC)". <Ref. to AB(diag)-41, List of Diagnostic Trouble Code (DTC).>	Finish the diagnosis.

P: DTC 33 FRONT SUB SENSOR RH FAILURE

DTC DETECTING CONDITION:

Front sub sensor (RH) is faulty.

When DTC 33 is displayed, the circuit within the front sub sensor (RH) is faulty. Replace the front sub sensor (RH). <Ref. to AB-26, Front Sub Sensor.>

Q: DTC 34 FRONT SUB SENSOR LH FAILURE

DTC DETECTING CONDITION:

Front sub sensor (LH) is faulty.

When DTC 34 is displayed, the circuit within the front sub sensor (LH) is faulty. Replace the front sub sensor (LH). <Ref. to AB-26, Front Sub Sensor.>

R: DTC 36 SEAT POSITION SENSOR LH FAILURE

DTC DETECTING CONDITION:

- Driver's seat position sensor is faulty.
- Airbag control module is faulty.
- Airbag rear harness circuit is open, short or shorted to ground.

CAUTION:

• Before diagnosing the airbag system, be sure to turn the ignition switch OFF, disconnect the ground cable from battery, and wait more than 20 seconds before starting to work.

• Before replacing the airbag module, seat belt pretensioner, roll connector, control module and sensor, reconnect each part and confirm that the warning light operates properly.

• When inspecting the airbag harness, disconnect each airbag module connector and seat belt pretensioner for safety reasons.

WIRING DIAGRAM:

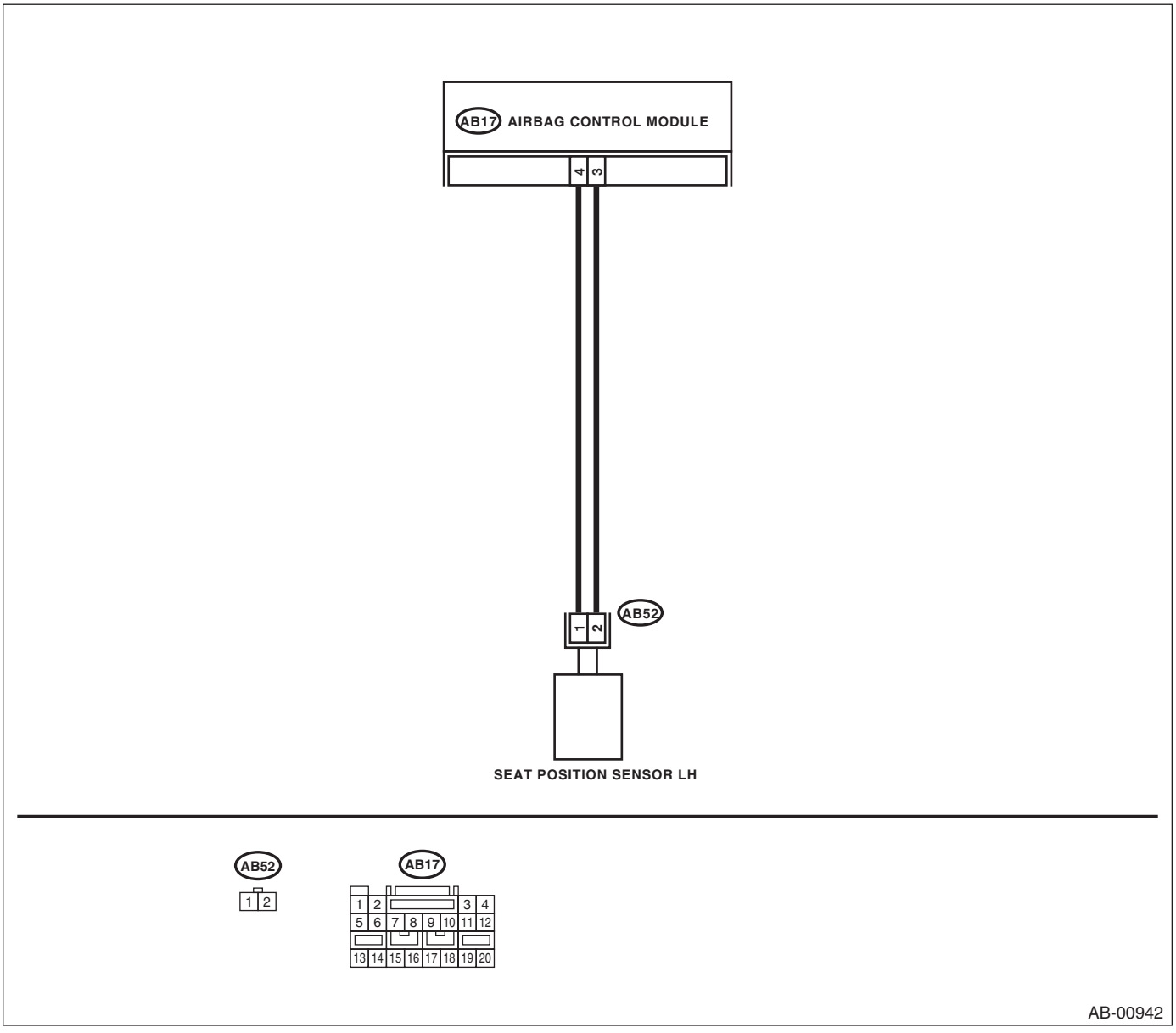

	Step	Check	Yes	No
1	**CHECK SEAT POSITION SENSOR (LH).** 1) Turn the ignition switch OFF, disconnect the battery ground cable, and wait more than 20 seconds. 2) Disconnect the connector (AB52) from seat position sensor (LH). 3) Connect the connector (2Y) in test harness Y to connector (AB52). 4) Connect the battery ground cable and turn the ignition switch ON.	Does the airbag warning light illuminate for 6 seconds and go off?	Replace the seat position sensor (LH) with driver's seat slide rail assembly. <Ref. to SE-9, Front Seat.>	Go to step **2.**
2	**CHECK AIRBAG REAR HARNESS (SEAT POSITION SENSOR HARNESS LH).** 1) Turn the ignition switch OFF, disconnect the battery ground cable, and wait more than 20 seconds. 2) Disconnect the connector (AB23) from side airbag module (LH). 3) Disconnect the connector (AB31) from curtain airbag module (LH). 4) Disconnect the connector (AB21) from seat belt pretensioner (LH). 5) Disconnect the connector (AB17) from airbag control module. 6) Connect the connector (1U) in test harness U to connector (AB17). 7) Disconnect the seat position sensor (LH) and connect the connector (1H) in test harness H to connector (AB52). 8) Measure the resistance between connector (3U) in test harness U and connector (3H) in test harness H. ***Connector & Terminal*** ***(3U) No. 1 — (3H) No. 6:*** ***(3U) No. 3 — (3H) No. 5:***	Is the resistance less than 10 Ω?	Go to step **3.**	Replace the airbag rear harness with body harness.
3	**CHECK AIRBAG REAR HARNESS.** Measure the resistance between connector (3U) in the test harness U and chassis ground. ***Connector & terminal*** ***(3U) No. 1 — Chassis ground:***	Is the resistance less than 10 Ω?	Replace the airbag rear harness with body harness.	Replace the airbag control module.

S: DTC 37 BUCKLE SWITCH RH FAILURE

NOTE:
For DTC 37, refer to Occupant Detection System. <Ref. to OD(diag)-26, DTC 37 BUCKLE SWITCH RH FAILURE, Diagnostic Procedure with Diagnostic Trouble Code (DTC).>

T: DTC 38 BUCKLE SWITCH LH FAILURE

DTC DETECTING CONDITION:

- Driver's seat buckle switch circuit is open, shorted or shorted to ground.
- Airbag rear harness circuit is open, shorted or shorted to ground.
- Airbag control module is faulty.

CAUTION:

• Before diagnosing the airbag system, be sure to turn the ignition switch OFF, disconnect the ground cable from battery, and wait more than 20 seconds before starting to work.

• Before replacing the airbag module, seat belt pretensioner, roll connector, control module and sensor, reconnect each part and confirm that the warning light operates properly.

• When inspecting the airbag harness, disconnect each airbag module connector and seat belt pretensioner for safety reasons.

WIRING DIAGRAM:

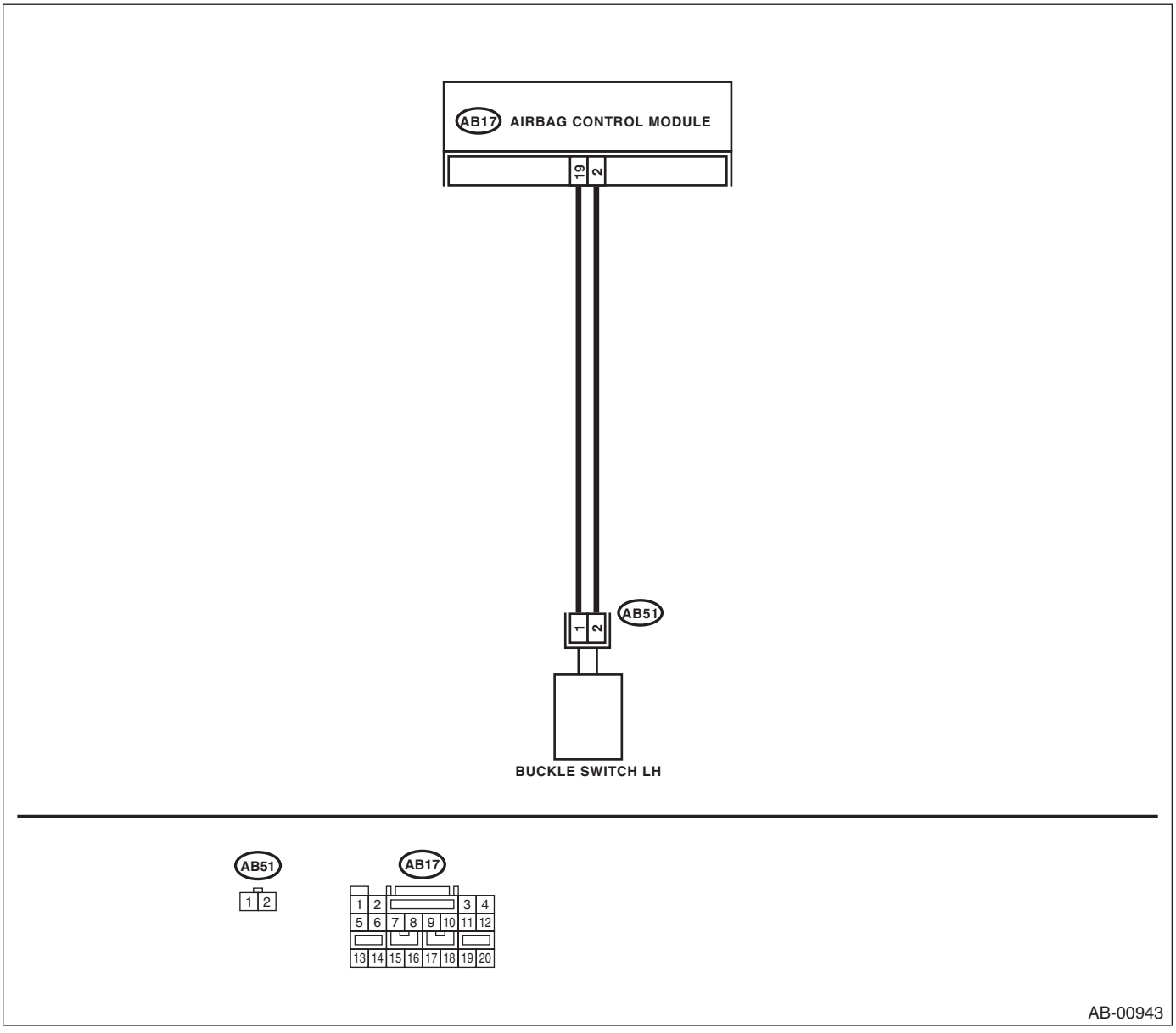

	Step	Check	Yes	No
1	**CHECK SEAT BELT BUCKLE SWITCH (LH).** 1) Turn the ignition switch OFF, disconnect the battery ground cable, and wait more than 20 seconds. 2) Disconnect the connector (AB51) from buckle switch (LH). 3) Connect the connector (1Y) in test harness Y to connector (AB51). 4) Connect the battery ground cable and turn the ignition switch ON.	Does the airbag warning light illuminate for 6 seconds and go off?	Replace the seat belt buckle switch (LH). <Ref. to SB-10, Front Seat Belt.>	Go to step **2.**
2	**CHECK AIRBAG REAR HARNESS (BUCKLE SWITCH HARNESS LH).** 1) Turn the ignition switch OFF, disconnect the battery ground cable, and wait more than 20 seconds. 2) Disconnect the connector (AB23) from side airbag module (LH). 3) Disconnect the connector (AB31) from curtain airbag module (LH). 4) Disconnect the connector (AB21) from seat belt pretensioner (LH). 5) Disconnect the connector (AB17) from airbag control module. 6) Connect the connector (1U) in test harness U to connector (AB17). 7) Disconnect the seat belt buckle switch (LH) and connect the connector (1D) in test harness D to connector (AB51). 8) Measure the resistance between connectors (4U) and (5U) in test harness U and connector (3D) in test harness D. ***Connector & Terminal*** ***(4U) No. 11 — (3D) No. 3:*** ***(4U) No. 9 — (3D) No. 4:***	Is the resistance less than 10 Ω?	Go to step **3.**	Replace the airbag rear harness with body harness.
3	**CHECK AIRBAG REAR HARNESS.** Measure the resistance between connector (3U) in the test harness U and chassis ground. ***Connector & terminal*** ***(4U) No. 9 — (4U) No. 11:*** ***(4U) No. 9 — Chassis ground:***	Is the resistance less than 10 Ω?	Replace the airbag rear harness with body harness.	Replace the airbag control module.

U: DTC 39 SEAT BELT WARNING FAILURE

DTC DETECTING CONDITION:

- Passenger's seat belt warning system is faulty.
- Airbag control module is faulty.
- Body integrated unit is faulty.
- Airbag rear harness circuit is open, shorted or shorted to ground.
- Harness circuit between body integrated unit and airbag control module is open, shorted or shorted to ground.

CAUTION:

- **Before diagnosing the airbag system, be sure to turn the ignition switch OFF, disconnect the ground cable from battery, and wait more than 20 seconds before starting to work.**
- **Before replacing the airbag module, seat belt pretensioner, roll connector, control module and sensor, reconnect each part and confirm that the warning light operates properly.**
- **When inspecting the airbag harness, disconnect each airbag module connector and seat belt pretensioner for safety reasons.**

îWIRING DIAGRAM:

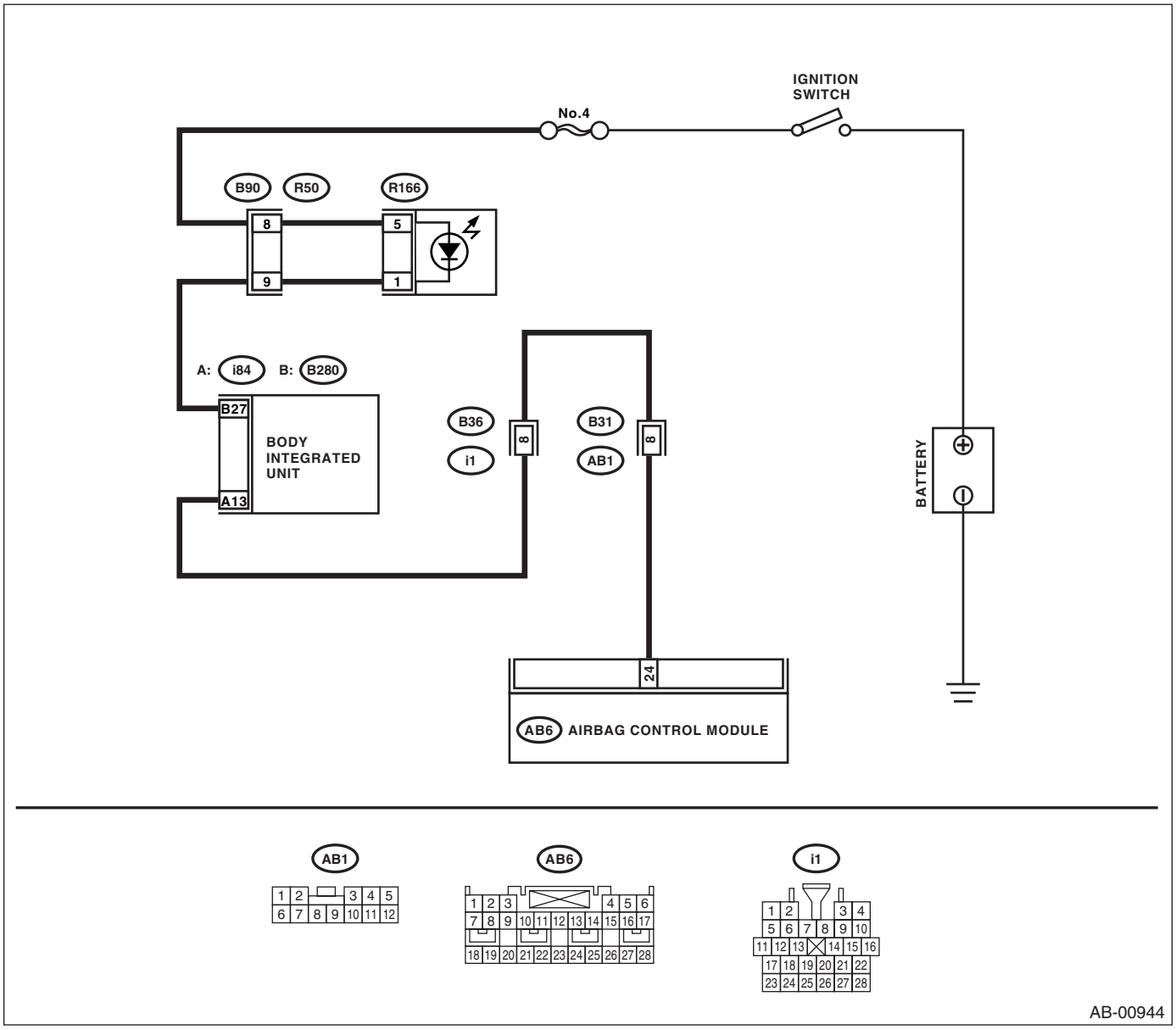

	Step	Check	Yes	No
1	**CHECK AIRBAG HARNESS.** 1) Turn the ignition switch OFF, disconnect the battery ground cable, and wait more than 20 seconds. 2) Disconnect the connector (AB6) from airbag control module. 3) Connect the battery ground cable and turn the ignition switch ON.	Does the passenger's seat belt warning light blink for 6 seconds and then go off?	Go to step **3.**	Go to step **2.**
2	**CHECK AIRBAG HARNESS.** 1) Turn the ignition switch OFF. 2) Connect the connector (1U) in the test harness U to connector (AB6). 3) Measure the resistance between connector (4U) in the test harness U and chassis ground. ***Connector & terminal*** ***(4U) No. 16 — Chassis ground:***	Is the resistance more than 1 MΩ?	Replace body integrated unit.	Repair the bulkhead harness or replace airbag main harness with body harness.
3	**CHECK AIRBAG HARNESS.** 1) Connect the connector (7U) and (8U) in the test harness in step 2 condition. 2) Turn the ignition switch ON.	Does the seat belt warning light blink for 6 seconds and continue to illuminate/blink?	Replace the airbag control module. <Ref. to AB-22, Airbag Control Module.>	Go to step **4.**
4	**CHECK AIRBAG HARNESS.** 1) Disconnect the connector (7U) and (8U) in step 3 condition. 2) Measure the resistance between connector (4U) in the test harness U and connector (i84). ***Connector & terminal*** ***(4U) No. 16 — (i84) No. 13:***	Is the resistance less than 10 Ω?	Replace body integrated unit.	Repair the bulkhead harness or replace airbag main harness with chassis harness.

V: DTC 41 SIDE AIRBAG RH FAILURE

DTC DETECTING CONDITION:

- Side airbag harness (RH) is faulty.
- Side airbag module (RH) is faulty.
- Airbag control module is faulty.

CAUTION:

• Before diagnosing the airbag system, be sure to turn the ignition switch OFF, disconnect the ground terminal from battery, and wait more than 20 seconds before starting to work.

• Before replacing the airbag module, seat belt pretensioner, roll connector, control module and sensor, reconnect each part and confirm that the warning light operates properly.

• When inspecting the airbag main harness, disconnect the airbag module connector of the driver's and passenger's seats for safety reasons.

• When inspecting the airbag rear harness, disconnect the side airbag module connector, curtain airbag module connector and seat belt pretensioner connector for safety reasons.

WIRING DIAGRAM:

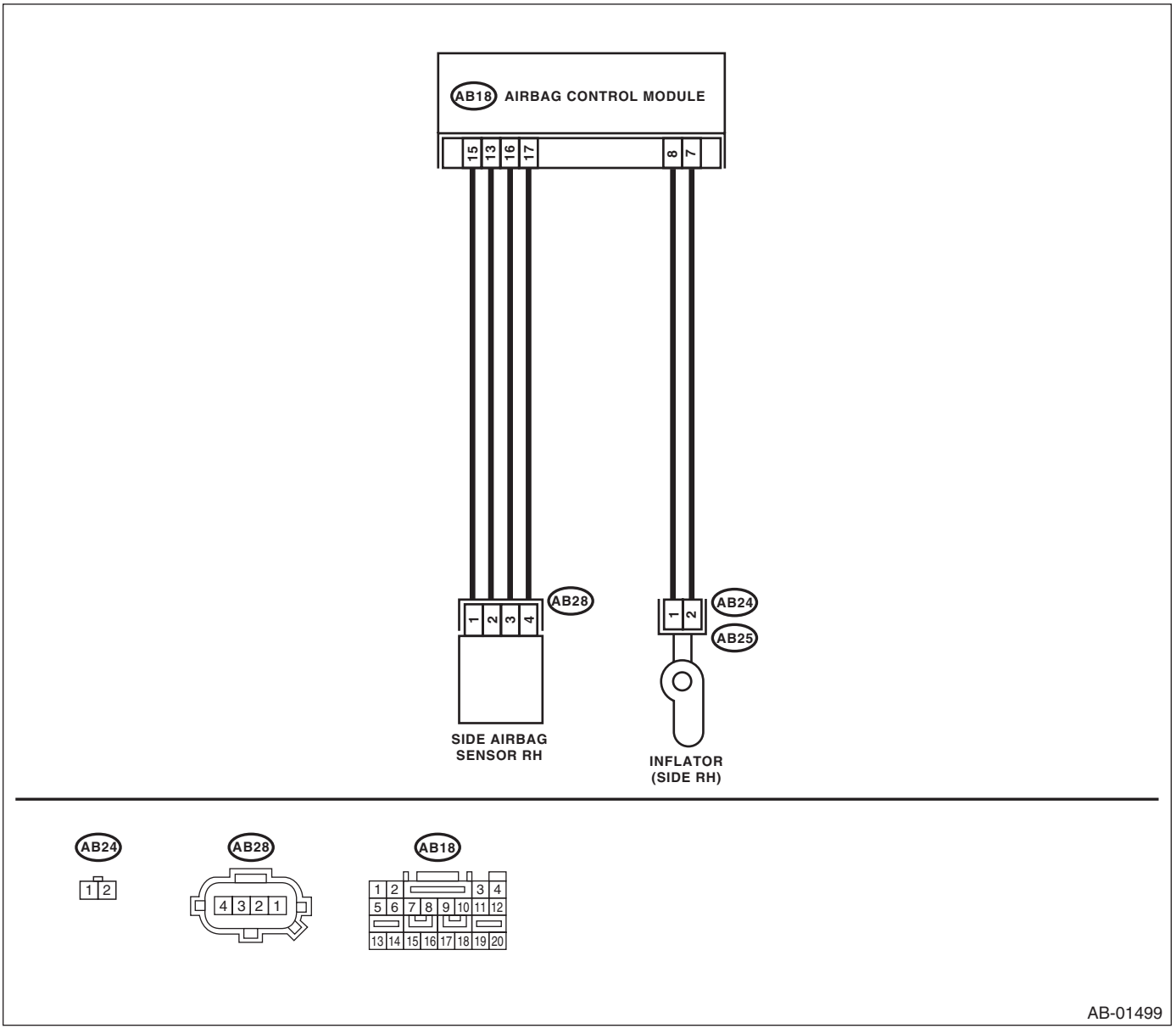

Diagnostic Chart with Trouble Code

	Step	Check	Yes	No
1	**CHECK POOR CONTACT IN CONNECTOR.** Check if there is poor contact in connector between airbag control module, side airbag module RH and side airbag sensor RH.	Is there poor contact?	Replace the airbag rear harness with body harness.	Go to step **2.**
2	**CHECK SIDE AIRBAG MODULE.** 1) Turn the ignition switch OFF, disconnect the battery ground cable, and wait more than 20 seconds. 2) Disconnect the connector (AB25) from (AB24), and connect the connector (1F) in test harness F to connector (AB24). 3) Connect the airbag resistor to the connector (3F) in the test harness F. 4) Connect the battery ground cable and turn the ignition switch ON.	Does the airbag warning light illuminate for 6 seconds and go off?	Replace the side airbag module (RH). <Ref. to AB-18, REMOVAL, Side Airbag Module.>	Go to step **3.**
3	**CHECK AIRBAG REAR HARNESS (SIDE AIRBAG MODULE HARNESS RH).** 1) Turn the ignition switch OFF, disconnect the battery ground cable, and wait more than 20 seconds. 2) Disconnect the connector (AB26) from seat belt pretensioner (RH). 3) Disconnect the connector (AB33) from curtain airbag module (RH). 4) Disconnect the airbag resistor from the test harness F. 5) Disconnect the connector (AB18) from airbag control module. 6) Connect the connector (1U) in the test harness U to connector (AB18). 7) Measure the resistance between connector (3U) in the test harness U and connector (3F) in the test harness F. ***Connector & terminal*** ***(3U) No. 20 — (3F) No. 4:*** ***(3U) No. 18 — (3F) No. 3:***	Is the resistance less than 10 Ω?	Go to step **4.**	Replace the airbag rear harness with body harness.
4	**CHECK AIRBAG REAR HARNESS (SIDE AIRBAG MODULE HARNESS RH).** Measure the resistance between connector (3U) terminals in the test harness U. ***Connector & terminal*** ***(3U) No. 20 — (3U) No. 18:***	Is the resistance more than 1 MΩ?	Go to step **5.**	Replace the airbag rear harness with body harness.
5	**CHECK AIRBAG REAR HARNESS (SIDE AIRBAG MODULE HARNESS RH).** Measure the resistance between connector (3U) in the test harness U and chassis ground. ***Connector & terminal*** ***(3U) No. 20 — Chassis ground:*** ***(3U) No. 18 — Chassis ground:***	Is the resistance more than 1 MΩ?	Go to step **6.**	Replace the airbag rear harness with body harness.
6	**CHECK AIRBAG CONTROL MODULE.** 1) Connect all the connectors. 2) Erase the memory. 3) Perform the inspection mode. 4) Read the DTC.	Is the same DTC displayed as in the current diagnosis still being output?	Replace the airbag control module. <Ref. to AB-22, Airbag Control Module.>	Go to step **7.**

Step		Check	Yes	No
7	**CHECK FOR ANY OTHER DTC ON DISPLAY.**	Is any other DTC displayed?	Inspect the relevant DTC using "List of Diagnostic Trouble Code (DTC)". <Ref. to AB(diag)-41, List of Diagnostic Trouble Code (DTC).>	Finish the diagnosis.

W: DTC 42 SIDE AIRBAG LH FAILURE

DTC DETECTING CONDITION:

- Side airbag harness (LH) is faulty.
- Side airbag module (LH) is faulty.
- Airbag control module is faulty.

CAUTION:

• Before diagnosing the airbag system, be sure to turn the ignition switch OFF, disconnect the ground terminal from battery, and wait more than 20 seconds before starting to work.

• Before replacing the airbag module, seat belt pretensioner, roll connector, control module and sensor, reconnect each part and confirm that the warning light operates properly.

• When inspecting the airbag main harness, disconnect the airbag module connector of the driver's and passenger's seats for safety reasons.

• When inspecting the airbag rear harness, disconnect the side airbag module connector, curtain airbag module connector and seat belt pretensioner connector for safety reasons.

WIRING DIAGRAM:

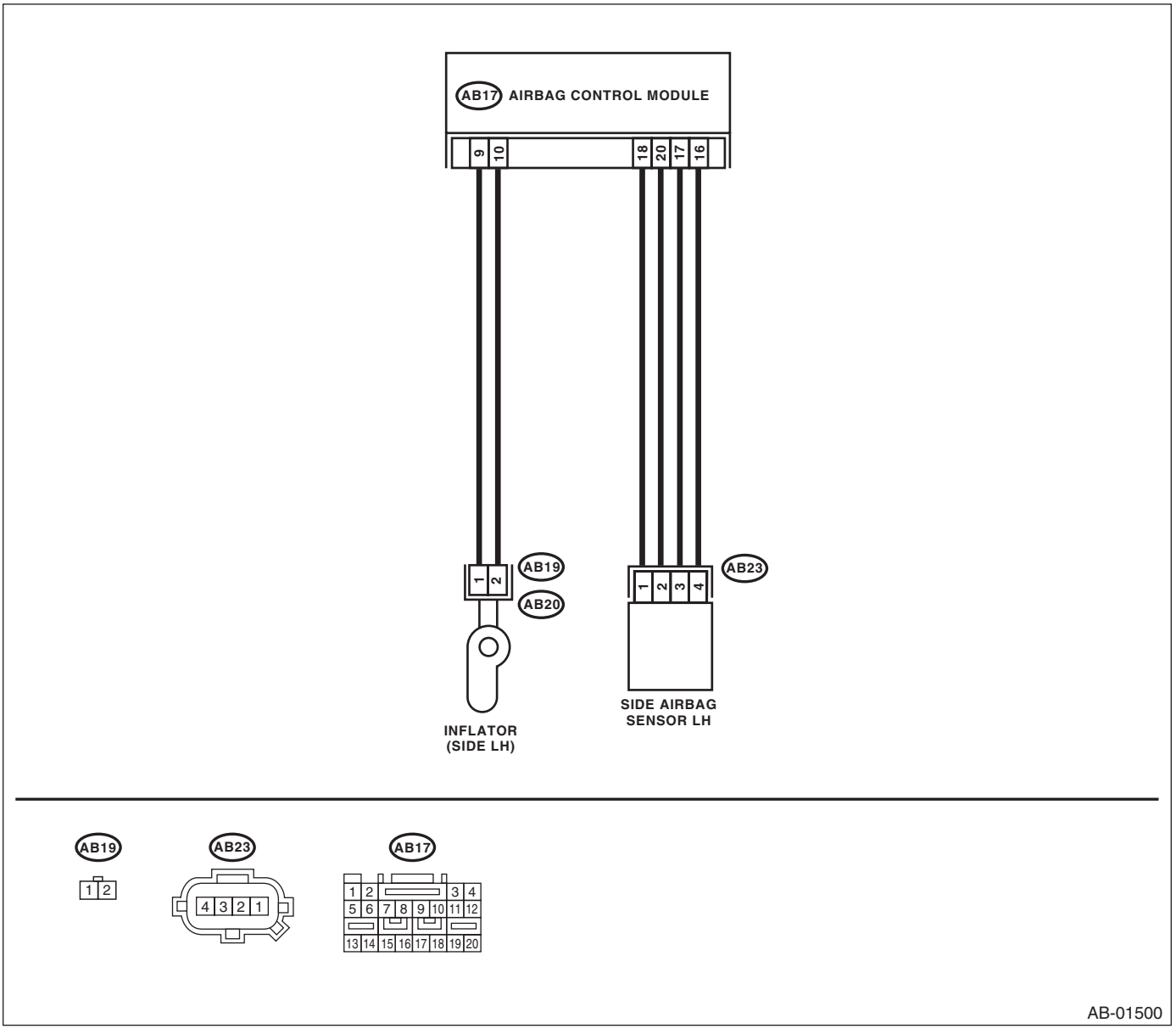

	Step	Check	Yes	No
1	**CHECK POOR CONTACT IN CONNECTOR.** Check if there is poor contact in connector between airbag control module, side airbag module LH and side airbag sensor LH.	Is there poor contact?	Replace the airbag rear harness with body harness.	Go to step **2.**
2	**CHECK SIDE AIRBAG MODULE.** 1) Turn the ignition switch OFF, disconnect the battery ground cable, and wait more than 20 seconds. 2) Disconnect the connector (AB20) from (AB19), and connect the connector (1F) in test harness F to connector (AB19). 3) Connect the airbag resistor to connector (3F) in the test harness F. 4) Connect the battery ground cable and turn the ignition switch ON.	Does the airbag warning light illuminate for 6 seconds and go off?	Replace the side airbag module (LH). <Ref. to AB-18, REMOVAL, Side Airbag Module.>	Go to step **3.**
3	**CHECK AIRBAG REAR HARNESS (SIDE AIRBAG MODULE HARNESS LH).** 1) Turn the ignition switch OFF, disconnect the battery ground cable, and wait more than 20 seconds. 2) Disconnect the connector (AB21) from seat belt pretensioner (LH). 3) Disconnect the connector (AB31) from curtain airbag module (LH). 4) Disconnect the airbag resistor from test harness. 5) Disconnect the connector (AB17) from airbag control module. 6) Connect the connector (1U) in the test harness U to connector (AB17). 7) Measure the resistance between connector (3U) in the test harness U and connector (3F) in the test harness F. ***Connector & terminal*** ***(3U) No. 12 — (3F) No. 4:*** ***(3U) No. 10 — (3F) No. 3:***	Is the resistance less than 10 Ω?	Go to step **4.**	Replace the airbag rear harness with body harness.
4	**CHECK AIRBAG REAR HARNESS (SIDE AIRBAG MODULE HARNESS LH).** Measure the resistance between connector (3U) terminals in the test harness U. ***Connector & terminal*** ***(3U) No. 12 — (3U) No. 10:***	Is the resistance more than 1 MΩ?	Go to step **5.**	Replace the airbag rear harness with body harness.
5	**CHECK AIRBAG REAR HARNESS (SIDE AIRBAG MODULE HARNESS LH).** Measure the resistance between connector (3U) in the test harness U and chassis ground. ***Connector & terminal*** ***(3U) No. 12 — Chassis ground:*** ***(3U) No. 10 — Chassis ground:***	Is the resistance more than 1 MΩ?	Go to step **6.**	Replace the airbag rear harness with body harness.
6	**CHECK AIRBAG CONTROL MODULE.** 1) Connect all the connectors. 2) Erase the memory. 3) Perform the inspection mode. 4) Read the DTC.	Is the same DTC displayed as in the current diagnosis still being output?	Replace the airbag control module. <Ref. to AB-22, Airbag Control Module.>	Go to step **7.**

Step		Check	Yes	No
7	**CHECK FOR ANY OTHER DTC ON DISPLAY.**	Is any other DTC displayed?	Inspect the relevant DTC using "List of Diagnostic Trouble Code (DTC)". <Ref. to AB(diag)-41, List of Diagnostic Trouble Code (DTC).>	Finish the diagnosis.

X: DTC 45 SIDE AIRBAG RH FAILURE

DTC DETECTING CONDITION:

- Side airbag harness (RH) is shorted to power supply.
- Airbag control module is faulty.

CAUTION:

• Before diagnosing the airbag system, be sure to turn the ignition switch OFF, disconnect the ground terminal from battery, and wait more than 20 seconds before starting to work.
• Before replacing the airbag module, seat belt pretensioner, roll connector, control module and sensor, reconnect each part and confirm that the warning light operates properly.
• When inspecting the airbag main harness, disconnect the airbag module connector of the driver's and passenger's seats for safety reasons.
• When inspecting the airbag rear harness, disconnect the side airbag module connector, curtain airbag module connector and seat belt pretensioner connector for safety reasons.

WIRING DIAGRAM:

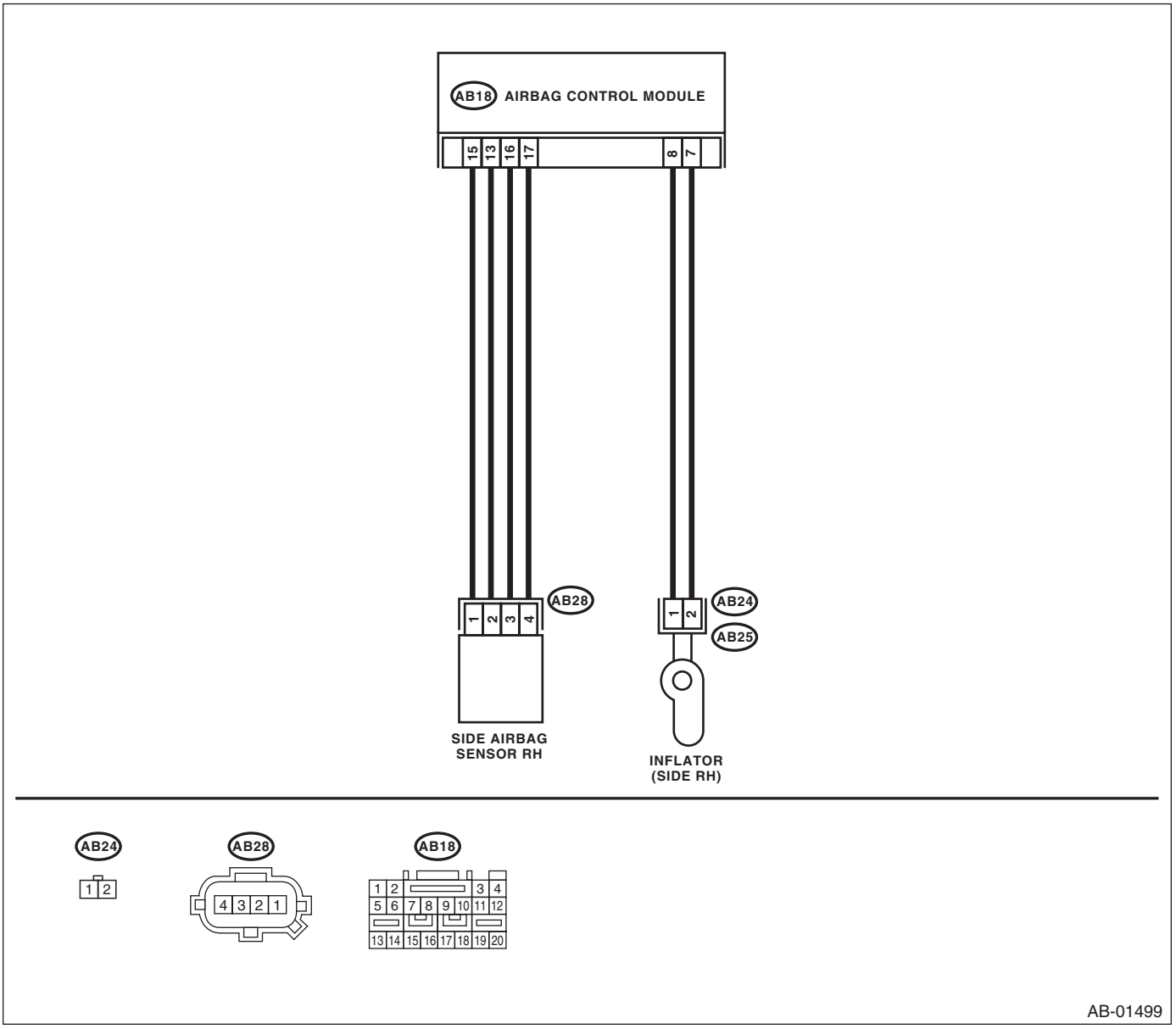

Diagnostic Chart with Trouble Code

	Step	Check	Yes	No
1	**CHECK POOR CONTACT IN CONNECTOR.** Check if there is poor contact in connector between airbag control module, side airbag module RH and side airbag sensor RH.	Is there poor contact?	Replace the airbag rear harness with body harness.	Go to step **2.**
2	**CHECK SIDE AIRBAG MODULE.** 1) Turn the ignition switch OFF, disconnect the battery ground cable, and wait more than 20 seconds. 2) Disconnect the connector (AB25) from (AB24), and connect the connector (1F) in test harness F to connector (AB24). 3) Connect the airbag resistor to connector (3F) in the test harness F. 4) Connect the battery ground cable and turn the ignition switch ON.	Does the airbag warning light illuminate for 6 seconds and go off?	Replace the side airbag module (RH). <Ref. to AB-18, REMOVAL, Side Airbag Module.>	Go to step **3.**
3	**CHECK AIRBAG REAR HARNESS (SIDE AIRBAG MODULE HARNESS RH).** 1) Turn the ignition switch OFF, disconnect the battery ground cable, and wait more than 20 seconds. 2) Disconnect the connector (AB26) from seat belt pretensioner (RH). 3) Disconnect the connector (AB33) from curtain airbag module (RH). 4) Disconnect the airbag resistor from test harness. 5) Disconnect the connector (AB18) from airbag control module. 6) Connect the connector (1U) in the test harness U to connector (AB18). 7) Connect the battery ground cable and turn the ignition switch ON. 8) Measure the voltage between connector (3U) in the test harness U and chassis ground. ***Connector & terminal*** ***(3U) No. 20 (+) — Chassis ground (−):*** ***(3U) No. 18 (+) — Chassis ground (−):***	Is the voltage less than 1 V?	Go to step **4.**	Replace the airbag rear harness with body harness.
4	**CHECK AIRBAG CONTROL MODULE.** 1) Connect all the connectors. 2) Erase the memory. 3) Perform the inspection mode. 4) Read the DTC.	Is the same DTC displayed as in the current diagnosis still being output?	Replace the airbag control module. <Ref. to AB-22, Airbag Control Module.>	Go to step **5.**
5	**CHECK FOR ANY OTHER DTC ON DISPLAY.**	Is any other DTC displayed?	Inspect the relevant DTC using "List of Diagnostic Trouble Code (DTC)". <Ref. to AB(diag)-41, List of Diagnostic Trouble Code (DTC).>	Finish the diagnosis.

Y: DTC 46 SIDE AIRBAG LH FAILURE

DTC DETECTING CONDITION:

- Side airbag harness (LH) is shorted to power supply.
- Airbag control module is faulty.

CAUTION:

• Before diagnosing the airbag system, be sure to turn the ignition switch OFF, disconnect the ground terminal from battery, and wait more than 20 seconds before starting to work.
• Before replacing the airbag module, seat belt pretensioner, roll connector, control module and sensor, reconnect each part and confirm that the warning light operates properly.
• When inspecting the airbag main harness, disconnect the airbag module connector of the driver's and passenger's seats for safety reasons.
• When inspecting the airbag rear harness, disconnect the side airbag module connector, curtain airbag module connector and seat belt pretensioner connector for safety reasons.

WIRING DIAGRAM:

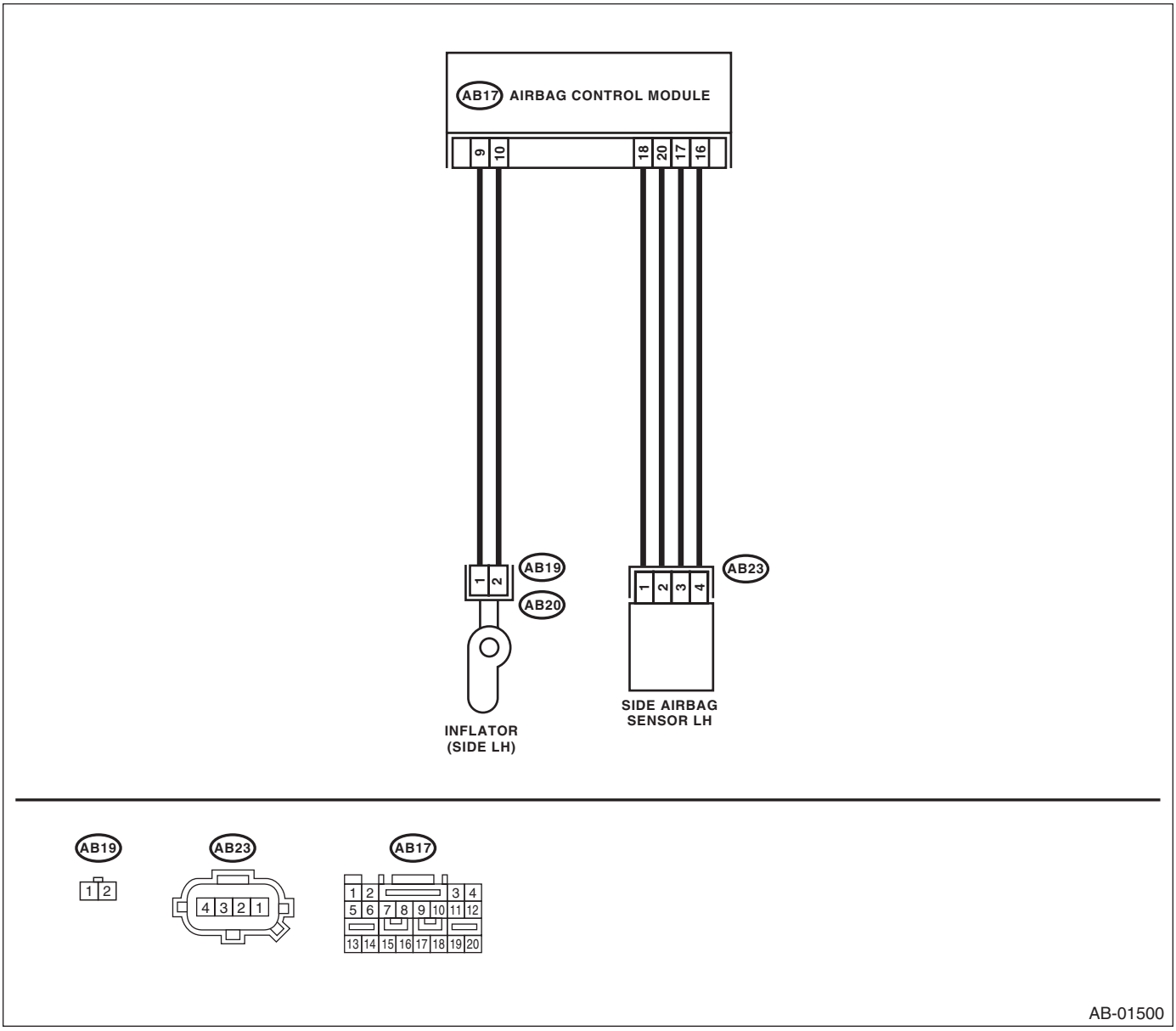

Diagnostic Chart with Trouble Code

	Step	Check	Yes	No
1	**CHECK POOR CONTACT IN CONNECTOR.** Check if there is poor contact in connector between airbag control module, side airbag module LH and side airbag sensor LH.	Is there poor contact?	Replace the airbag rear harness with body harness.	Go to step **2.**
2	**CHECK SIDE AIRBAG MODULE.** 1) Turn the ignition switch OFF, disconnect the battery ground cable, and wait more than 20 seconds. 2) Disconnect the connector (AB20) from (AB19), and connect the connector (1F) in test harness F to connector (AB19). 3) Connect the airbag resistor to connector (3F) in the test harness F. 4) Connect the battery ground cable and turn the ignition switch ON.	Does the airbag warning light illuminate for 6 seconds and go off?	Replace the side airbag module (LH). <Ref. to AB-18, REMOVAL, Side Airbag Module.>	Go to step **3.**
3	**CHECK AIRBAG REAR HARNESS (SIDE AIRBAG MODULE HARNESS LH).** 1) Turn the ignition switch OFF, disconnect the battery ground cable, and wait more than 20 seconds. 2) Disconnect the connector (AB21) from seat belt pretensioner (LH). 3) Disconnect the connector (AB31) from curtain airbag module (LH). 4) Disconnect the airbag resistor from test harness. 5) Disconnect the connector (AB17) from airbag control module. 6) Connect the connector (1U) in the test harness U to connector (AB17). 7) Connect the battery ground cable and turn the ignition switch ON. 8) Measure the voltage between connector (3U) in the test harness U and chassis ground. ***Connector & terminal*** ***(3U) No. 12 (+) — Chassis ground (−):*** ***(3U) No. 10 (+) — Chassis ground (−):***	Is the voltage less than 1 V?	Go to step **4.**	Replace the airbag rear harness with body harness.
4	**CHECK AIRBAG CONTROL MODULE.** 1) Connect all the connectors. 2) Erase the memory. 3) Perform the inspection mode. 4) Read the DTC.	Is the same DTC displayed as in the current diagnosis still being output?	Replace the airbag control module. <Ref. to AB-22, Airbag Control Module.>	Go to step **5.**
5	**CHECK FOR ANY OTHER DTC ON DISPLAY.**	Is any other DTC displayed?	Inspect the relevant DTC using "List of Diagnostic Trouble Code (DTC)". <Ref. to AB(diag)-41, List of Diagnostic Trouble Code (DTC).>	Finish the diagnosis.

Z: DTC 51 SIDE AIRBAG SENSOR RH FAILURE

DTC DETECTING CONDITION:

- Side airbag sensor (RH) is faulty.
- Side airbag harness (RH) is faulty.
- Airbag control module is faulty.

CAUTION:

• Before diagnosing the airbag system, be sure to turn the ignition switch OFF, disconnect the ground terminal from battery, and wait more than 20 seconds before starting to work.

• Before replacing the airbag module, seat belt pretensioner, roll connector, control module and sensor, reconnect each part and confirm that the warning light operates properly.

• When inspecting the airbag main harness, disconnect the airbag module connector of the driver's and passenger's seats for safety reasons.

• When inspecting the airbag rear harness, disconnect the side airbag module connector, curtain airbag module connector and seat belt pretensioner connector for safety reasons.

WIRING DIAGRAM:

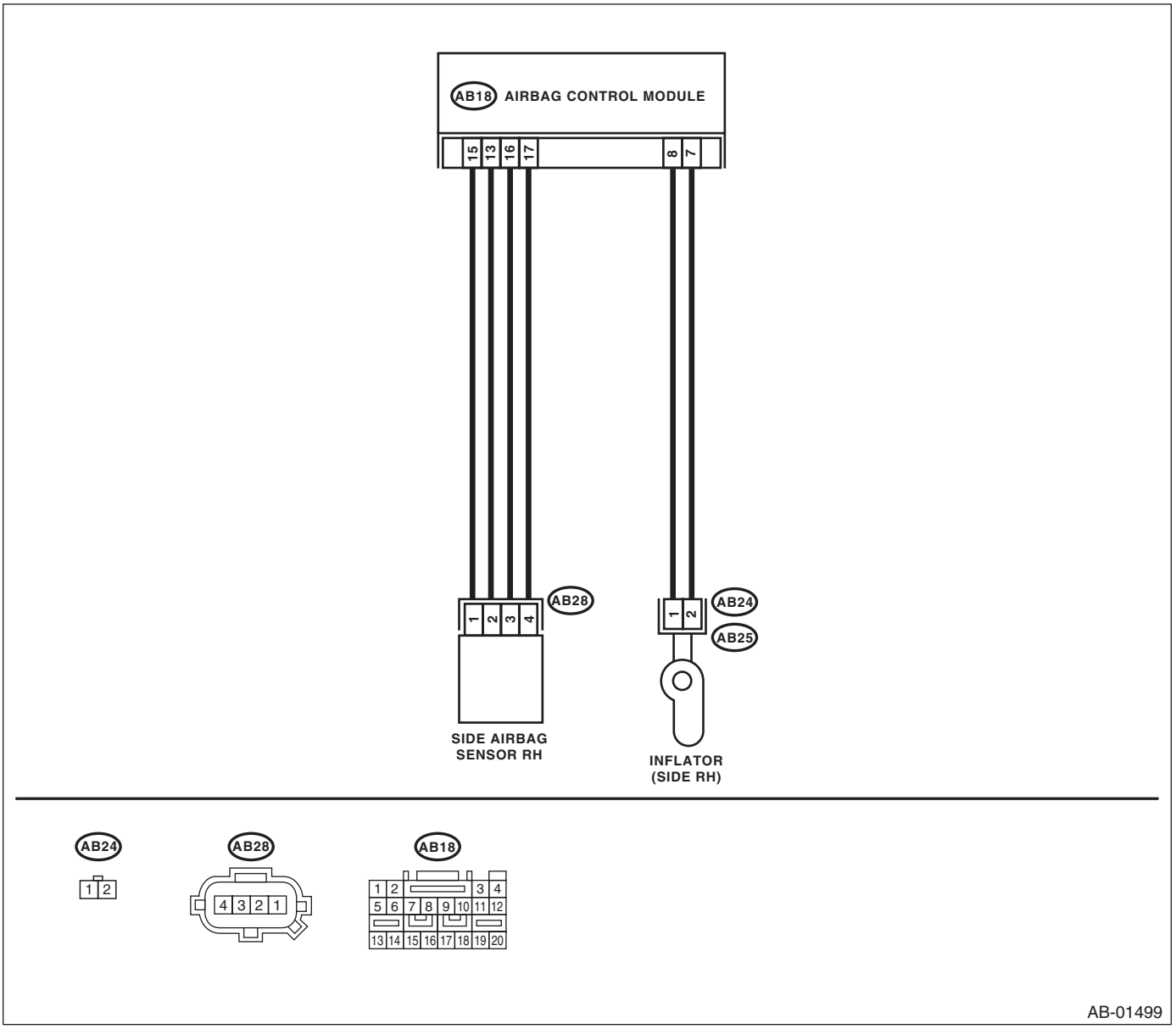

	Step	Check	Yes	No
1	**CHECK POOR CONTACT IN CONNECTOR.** Check if there is poor contact in connector between airbag control module, side airbag module RH and side airbag sensor RH.	Is there poor contact?	Replace the airbag rear harness with body harness.	Go to step **2.**
2	**CHECK AIRBAG REAR HARNESS (SIDE AIRBAG SENSOR HARNESS RH).** 1) Turn the ignition switch OFF, disconnect the battery ground cable, and wait more than 20 seconds. 2) Disconnect the connector (AB26) from seat belt pretensioner (RH). 3) Disconnect the connector (AB33) from curtain airbag module (RH). 4) Disconnect the connector (AB25) from (AB24). 5) Disconnect the connector (AB18) from airbag control module. 6) Connect the connector (1U) in the test harness U to connector (AB18). 7) Disconnect the connector (AB28) from side airbag sensor (RH), and connect the connector (2V) in the test harness V to connector (AB28). 8) Measure the resistance between connector (4U) in the test harness U and connector (3V) in the test harness V. ***Connector & terminal*** ***(4U) No. 5 — (3V) No. 4:*** ***(4U) No. 7 — (3V) No. 5:*** ***(4U) No. 8 — (3V) No. 1:*** ***(4U) No. 6 — (3V) No. 2:***	Is the resistance less than 10 Ω?	Go to step **3.**	Replace the airbag rear harness with body harness.
3	**CHECK AIRBAG REAR HARNESS (SIDE AIRBAG SENSOR HARNESS RH).** Measure the resistance between connector (4U) in the test harness U and chassis ground. ***Connector & terminal*** ***(4U) No. 5 — Chassis ground:*** ***(4U) No. 7 — Chassis ground:*** ***(4U) No. 8 — Chassis ground:*** ***(4U) No. 6 — Chassis ground:***	Is the resistance more than 1 MΩ?	Go to step **4.**	Replace the airbag rear harness with body harness.
4	**CHECK AIRBAG CONTROL MODULE.** 1) Connect all the connectors. 2) Erase the memory. 3) Perform the inspection mode. 4) Read the DTC.	Is the same DTC displayed as in the current diagnosis still being output?	Replace the side airbag sensor (RH). <Ref. to AB-23, Side Airbag Sensor.> When the sensor is not OK though the sensor has been replaced, replace the airbag control module. <Ref. to AB-22, Airbag Control Module.>	Go to step **5.**
5	**CHECK FOR ANY OTHER DTC ON DISPLAY.**	Is any other DTC displayed?	Inspect the relevant DTC using "List of Diagnostic Trouble Code (DTC)". <Ref. to AB(diag)-41, List of Diagnostic Trouble Code (DTC).>	Finish the diagnosis.

AA:DTC 52 SIDE AIRBAG SENSOR LH FAILURE

DTC DETECTING CONDITION:

- Side airbag sensor (LH) is faulty.
- Side airbag harness (LH) is faulty.
- Airbag control module is faulty.

CAUTION:

• Before diagnosing the airbag system, be sure to turn the ignition switch OFF, disconnect the ground terminal from battery, and wait more than 20 seconds before starting to work.

• Before replacing the airbag module, seat belt pretensioner, roll connector, control module and sensor, reconnect each part and confirm that the warning light operates properly.

• When inspecting the airbag main harness, disconnect the airbag module connector of the driver's and passenger's seats for safety reasons.

• When inspecting the airbag rear harness, disconnect the side airbag module connector, curtain airbag module connector and seat belt pretensioner connector for safety reasons.

WIRING DIAGRAM:

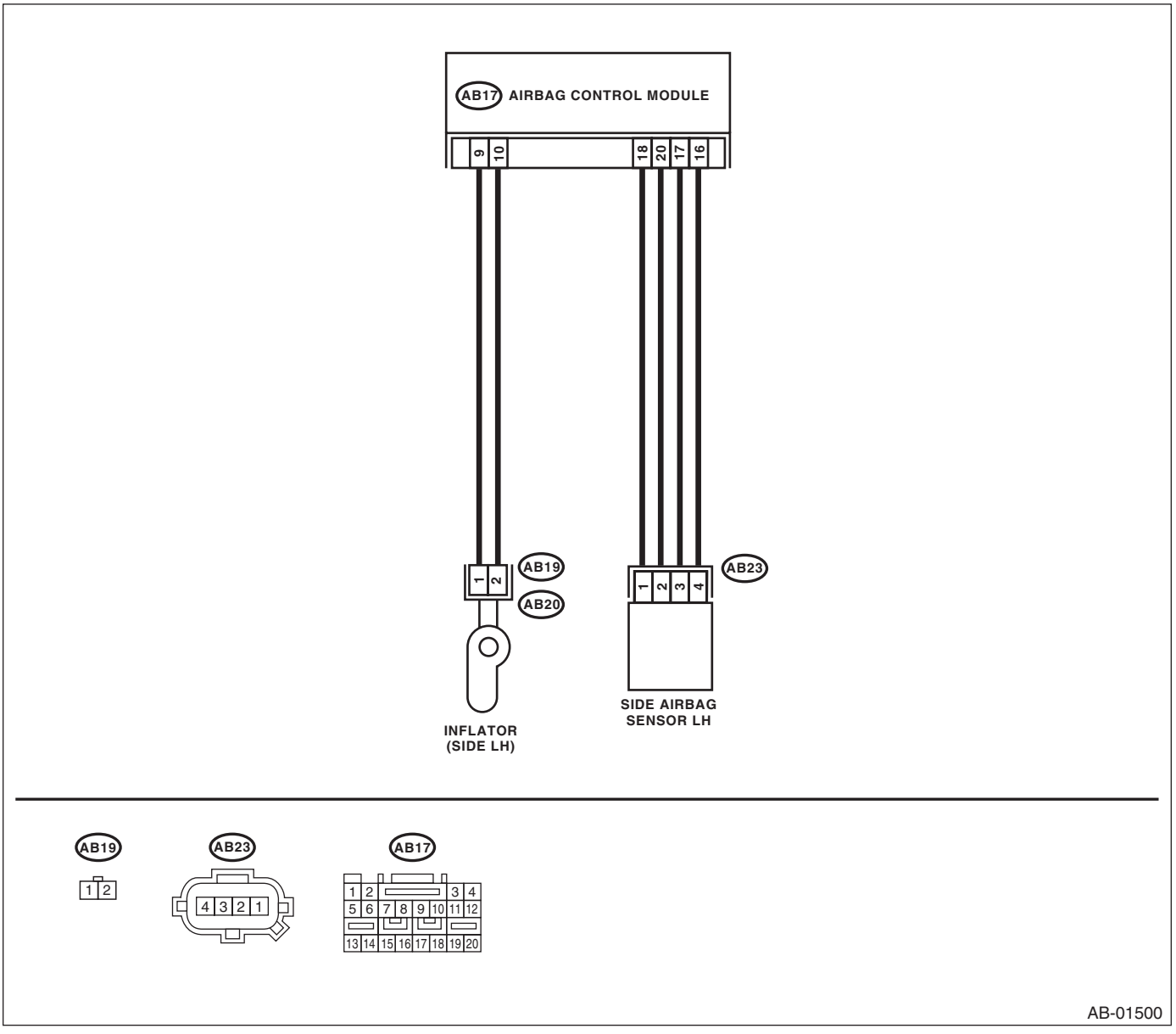

	Step	Check	Yes	No
1	**CHECK POOR CONTACT IN CONNECTOR.** Check if there is poor contact in connector between airbag control module, side airbag module LH and side airbag sensor LH.	Is there poor contact?	Replace the airbag rear harness with body harness.	Go to step **2.**
2	**CHECK AIRBAG REAR HARNESS (SIDE AIRBAG SENSOR HARNESS LH).** 1) Turn the ignition switch OFF, disconnect the battery ground cable, and wait more than 20 seconds. 2) Disconnect the connector (AB21) from seat belt pretensioner (LH). 3) Disconnect the connector (AB31) from curtain airbag module (LH). 4) Disconnect the connector (AB20) from (AB19). 5) Disconnect the connector (AB17) from airbag control module. 6) Connect the connector (1U) in the test harness U to connector (AB17). 7) Disconnect the connector (AB23) from side airbag sensor (LH), and connect the connector (2V) in the test harness V to connector (AB23). 8) Measure the resistance between connector (4U) in the test harness U and connector (3V) in the test harness V. ***Connector & terminal*** ***(4U) No. 3 — (3V) No. 2:*** ***(4U) No. 1 — (3V) No. 1:*** ***(4U) No. 2 — (3V) No. 5:*** ***(4U) No. 4 — (3V) No. 4:***	Is the resistance less than 10 Ω?	Go to step **3.**	Replace the airbag rear harness with body harness.
3	**CHECK AIRBAG REAR HARNESS (SIDE AIRBAG SENSOR HARNESS LH).** Measure the resistance between connector (4U) in the test harness U and chassis ground. ***Connector & terminal*** ***(4U) No. 3 — Chassis ground:*** ***(4U) No. 1 — Chassis ground:*** ***(4U) No. 2 — Chassis ground:*** ***(4U) No. 4 — Chassis ground:***	Is the resistance more than 1 MΩ?	Go to step **4.**	Replace the airbag rear harness with body harness.
4	**CHECK AIRBAG CONTROL MODULE.** 1) Connect all the connectors. 2) Erase the memory. 3) Perform the inspection mode. 4) Read the DTC.	Is the same DTC displayed as in the current diagnosis still being output?	Replace the side airbag sensor (LH). <Ref. to AB-23, Side Airbag Sensor.> When the sensor is not OK though the sensor has been replaced, replace the airbag control module. <Ref. to AB-22, Airbag Control Module.>	Go to step **5.**
5	**CHECK FOR ANY OTHER DTC ON DISPLAY.**	Is any other DTC displayed?	Inspect the relevant DTC using "List of Diagnostic Trouble Code (DTC)". <Ref. to AB(diag)-41, List of Diagnostic Trouble Code (DTC).>	Finish the diagnosis.

AB:DTC 53 SIDE AIRBAG SENSOR RH FAILURE

DTC DETECTING CONDITION:

Side airbag sensor (RH) is faulty.

When DTC 53 is displayed, the circuit within the side airbag sensor (RH) is faulty. Replace the side airbag sensor (RH). <Ref. to AB-23, Side Airbag Sensor.>

AC:DTC 54 SIDE AIRBAG SENSOR LH FAILURE

DTC DETECTING CONDITION:

Side airbag sensor (LH) is faulty.

When DTC 54 is displayed, the circuit within the side airbag sensor (LH) is faulty. Replace the side airbag sensor (LH). <Ref. to AB-23, Side Airbag Sensor.>

AD:DTC 55 SIDE CURTAIN AIRBAG FIRING OUTPUT

This code is displayed when the side airbag module and curtain airbag module are deployed.

Once this code is displayed, the memory cannot be erased. Replace the following parts.

- Airbag control module. <Ref. to AB-22, Airbag Control Module.>
- Front seat with side airbag module. (Operating side) <Ref. to SE-9, Front Seat.>
- Side airbag sensor. (Operating side) <Ref. to AB-23, Side Airbag Sensor.>
- Curtain airbag module. (Operating side) <Ref. to AB-20, Curtain Airbag Module.>
- Curtain airbag sensor. (Operating side) <Ref. to AB-24, Curtain Airbag Sensor.>

AE:DTC 56 CURTAIN AIRBAG SENSOR RH FAILURE

DTC DETECTING CONDITION:

- Curtain airbag sensor (RH) is faulty.
- Curtain airbag harness (RH) is faulty.
- Airbag control module is faulty.

CAUTION:

• Before diagnosing the airbag system, be sure to turn the ignition switch OFF, disconnect the ground terminal from battery, and wait more than 20 seconds before starting to work.

• Before replacing the airbag module, seat belt pretensioner, roll connector, control module and sensor, reconnect each part and confirm that the warning light operates properly.

• When inspecting the airbag main harness, disconnect the airbag module connector of the driver's and passenger's seats for safety reasons.

• When inspecting the airbag rear harness, disconnect the side airbag module connector, curtain airbag module connector and seat belt pretensioner connector for safety reasons.

WIRING DIAGRAM:

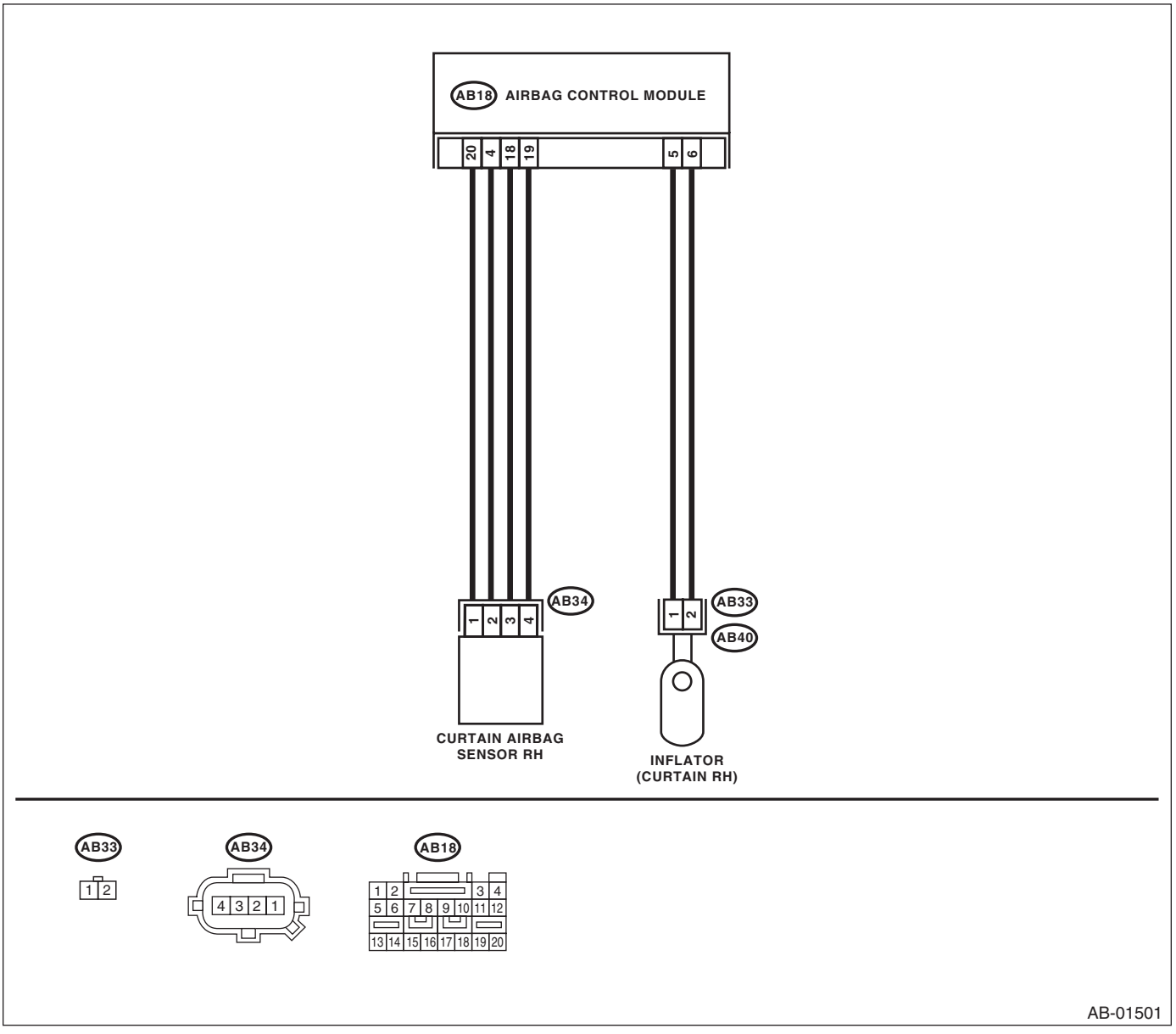

	Step	Check	Yes	No
1	**CHECK POOR CONTACT IN CONNECTOR.** Check if there is poor contact in connector between airbag control module, curtain airbag module RH and curtain airbag sensor RH.	Is there poor contact?	Replace the airbag rear harness with body harness.	Go to step **2.**
2	**CHECK AIRBAG REAR HARNESS (CURTAIN AIRBAG SENSOR HARNESS RH).** 1) Turn the ignition switch OFF, disconnect the battery ground cable, and wait more than 20 seconds. 2) Disconnect the connector (AB26) from seat belt pretensioner (RH). 3) Disconnect the connector (AB24) from side airbag module (RH). 4) Disconnect the connector (AB33) from (AB40). 5) Disconnect the connector (AB18) from airbag control module. 6) Connect the connector (1U) in the test harness U to connector (AB18). 7) Disconnect the connector (AB34) from curtain airbag sensor (RH), and connect the connector (2V) in the test harness V to connector (AB34). 8) Measure the resistance between connector (5U) in the test harness U and connector (3V) in the test harness V. ***Connector & terminal*** ***(5U) No. 14 — (3V) No. 2:*** ***(5U) No. 16 — (3V) No. 1:*** ***(5U) No. 15 — (3V) No. 5:*** ***(5U) No. 13 — (3V) No. 4:***	Is the resistance less than 10 Ω?	Go to step **3.**	Replace the airbag rear harness with body harness.
3	**CHECK AIRBAG REAR HARNESS (CURTAIN AIRBAG SENSOR HARNESS RH).** Measure the resistance between connector (5U) in the test harness U and chassis ground. ***Connector & terminal*** ***(5U) No. 14 — Chassis ground:*** ***(5U) No. 16 — Chassis ground:*** ***(5U) No. 15 — Chassis ground:*** ***(5U) No. 13 — Chassis ground:***	Is the resistance more than 1 MΩ?	Go to step **4.**	Replace the airbag rear harness with body harness.
4	**CHECK AIRBAG CONTROL MODULE.** 1) Connect all the connectors. 2) Erase the memory. 3) Perform the inspection mode. 4) Read the DTC.	Is the same DTC displayed as in the current diagnosis still being output?	Replace the curtain airbag sensor (RH). <Ref. to AB-24, Curtain Airbag Sensor.> When the sensor is not OK though the sensor has been replaced, replace the airbag control module. <Ref. to AB-22, Airbag Control Module.>	Go to step **5.**

Step		Check	Yes	No
5	**CHECK FOR ANY OTHER DTC ON DISPLAY.**	Is any other DTC displayed?	Inspect the relevant DTC using "List of Diagnostic Trouble Code (DTC)". <Ref. to AB(diag)-41, List of Diagnostic Trouble Code (DTC).>	Finish the diagnosis.

AF:DTC 57 CURTAIN AIRBAG SENSOR LH FAILURE

DTC DETECTING CONDITION:

- Curtain airbag sensor (LH) is faulty.
- Curtain airbag harness (LH) is faulty.
- Airbag control module is faulty.

CAUTION:

• Before diagnosing the airbag system, be sure to turn the ignition switch OFF, disconnect the ground terminal from battery, and wait more than 20 seconds before starting to work.

• Before replacing the airbag module, seat belt pretensioner, roll connector, control module and sensor, reconnect each part and confirm that the warning light operates properly.

• When inspecting the airbag main harness, disconnect the airbag module connector of the driver's and passenger's seats for safety reasons.

• When inspecting the airbag rear harness, disconnect the side airbag module connector, curtain airbag module connector and seat belt pretensioner connector for safety reasons.

WIRING DIAGRAM:

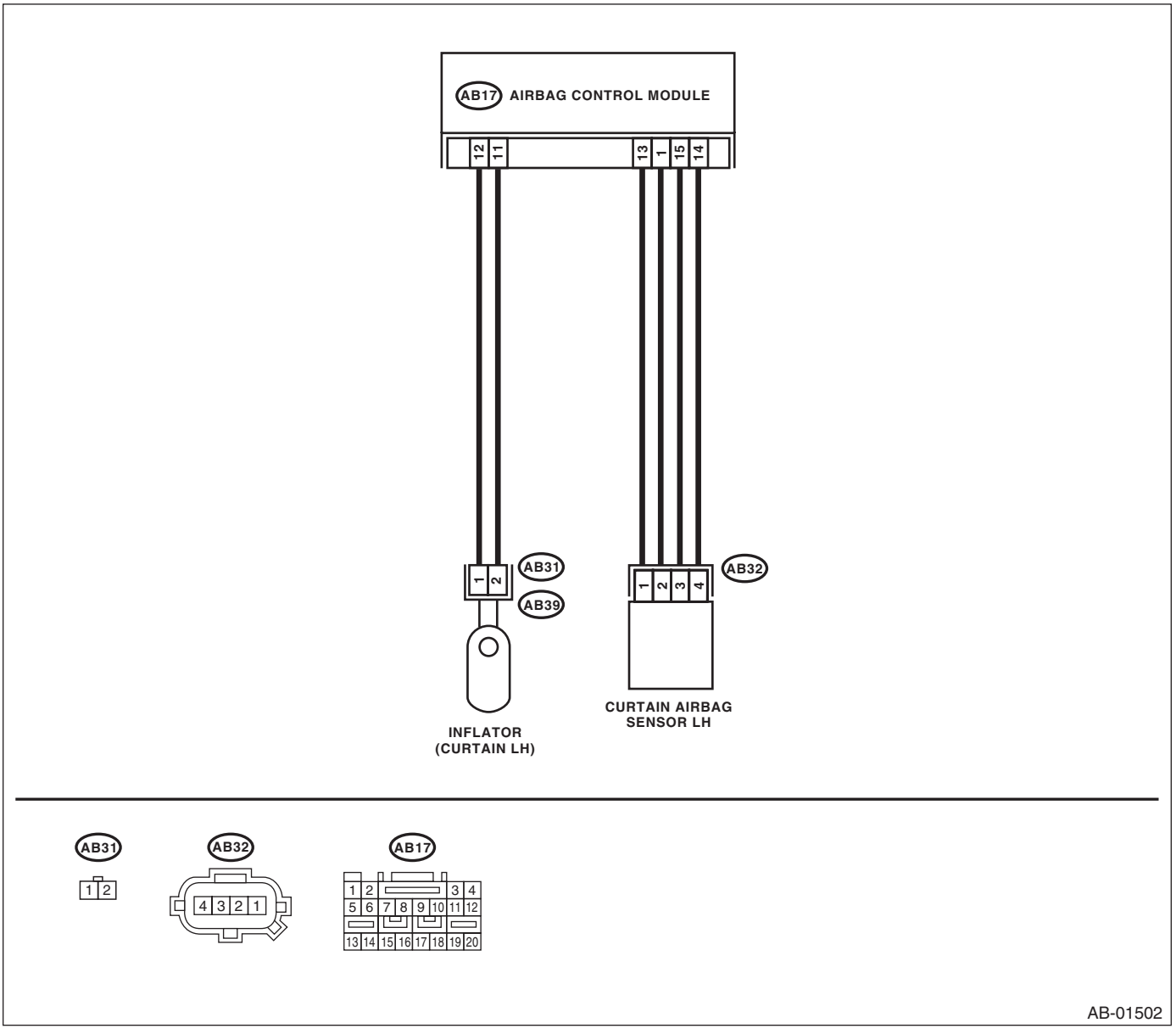

	Step	Check	Yes	No
1	**CHECK POOR CONTACT IN CONNECTOR.** Check if there is poor contact in connector between airbag control module, curtain airbag module LH and curtain airbag sensor LH.	Is there poor contact?	Replace the airbag rear harness with body harness.	Go to step **2.**
2	**CHECK AIRBAG REAR HARNESS (CURTAIN AIRBAG SENSOR HARNESS LH).** 1) Turn the ignition switch OFF, disconnect the battery ground cable, and wait more than 20 seconds. 2) Disconnect the connector (AB21) from seat belt pretensioner (LH). 3) Disconnect the connector (AB19) from side airbag module (LH). 4) Disconnect the connector (AB31) from (AB39). 5) Disconnect the connector (AB17) from airbag control module. 6) Connect the connector (1U) in the test harness U to connector (AB17). 7) Disconnect the connector (AB32) from curtain airbag sensor (LH), and connect the connector (2V) in the test harness V to connector (AB32). 8) Measure the resistance between connector (5U) in the test harness U and connector (3V) in the test harness V. ***Connector & terminal*** ***(5U) No. 11 — (3V) No. 2:*** ***(5U) No. 9 — (3V) No. 1:*** ***(5U) No. 10 — (3V) No. 5:*** ***(5U) No. 12 — (3V) No. 4:***	Is the resistance less than 10 Ω?	Go to step **3.**	Replace the airbag rear harness with body harness.
3	**CHECK AIRBAG REAR HARNESS (CURTAIN AIRBAG SENSOR HARNESS LH).** Measure the resistance between connector (5U) in the test harness U and chassis ground. ***Connector & terminal*** ***(5U) No. 11 — Chassis ground:*** ***(5U) No. 9 — Chassis ground:*** ***(5U) No. 10 — Chassis ground:*** ***(5U) No. 12 — Chassis ground:***	Is the resistance more than 1 MΩ?	Go to step **4.**	Replace the airbag rear harness with body harness.
4	**CHECK AIRBAG CONTROL MODULE.** 1) Connect all the connectors. 2) Erase the memory. 3) Perform the inspection mode. 4) Read the DTC.	Is the same DTC displayed as in the current diagnosis still being output?	Replace the curtain airbag sensor (LH). <Ref. to AB-24, Curtain Airbag Sensor.> When the sensor is not OK though the sensor has been replaced, replace the airbag control module. <Ref. to AB-22, Airbag Control Module.>	Go to step **5.**

Step		Check	Yes	No
5	**CHECK FOR ANY OTHER DTC ON DISPLAY.**	Is any other DTC displayed?	Inspect the relevant DTC using "List of Diagnostic Trouble Code (DTC)". <Ref. to AB(diag)-41, List of Diagnostic Trouble Code (DTC).>	Finish the diagnosis.

AG:DTC 58 CURTAIN AIRBAG SENSOR RH FAILURE

DTC DETECTING CONDITION:

Curtain airbag sensor (RH) is faulty.

When DTC 58 is displayed, the circuit within the curtain airbag sensor (RH) is faulty. Replace the curtain airbag sensor (RH). <Ref. to AB-24, Curtain Airbag Sensor.>

AH:DTC 59 CURTAIN AIRBAG SENSOR LH FAILURE

DTC DETECTING CONDITION:

Curtain airbag sensor (LH) is faulty.

When DTC 59 is displayed, the circuit within the curtain airbag sensor (LH) is faulty. Replace the curtain airbag sensor (LH). <Ref. to AB-24, Curtain Airbag Sensor.>

AI: DTC 61 BELT PRETENSIONER RH FAILURE

DTC DETECTING CONDITION:

- Seat belt pretensioner (RH) circuit is open, shorted or shorted to ground.
- Airbag control module is faulty.
- Pretensioner is faulty.
- Pretensioner harness is faulty.

CAUTION:

• Before diagnosing the airbag system, be sure to turn the ignition switch OFF, disconnect the ground terminal from battery, and wait more than 20 seconds before starting to work.

• Before replacing the airbag module, seat belt pretensioner, roll connector, control module and sensor, reconnect each part and confirm that the warning light operates properly.

• When inspecting the airbag rear harness, disconnect the side airbag module connector, curtain airbag module connector and seat belt pretensioner connector for safety reasons.

WIRING DIAGRAM:

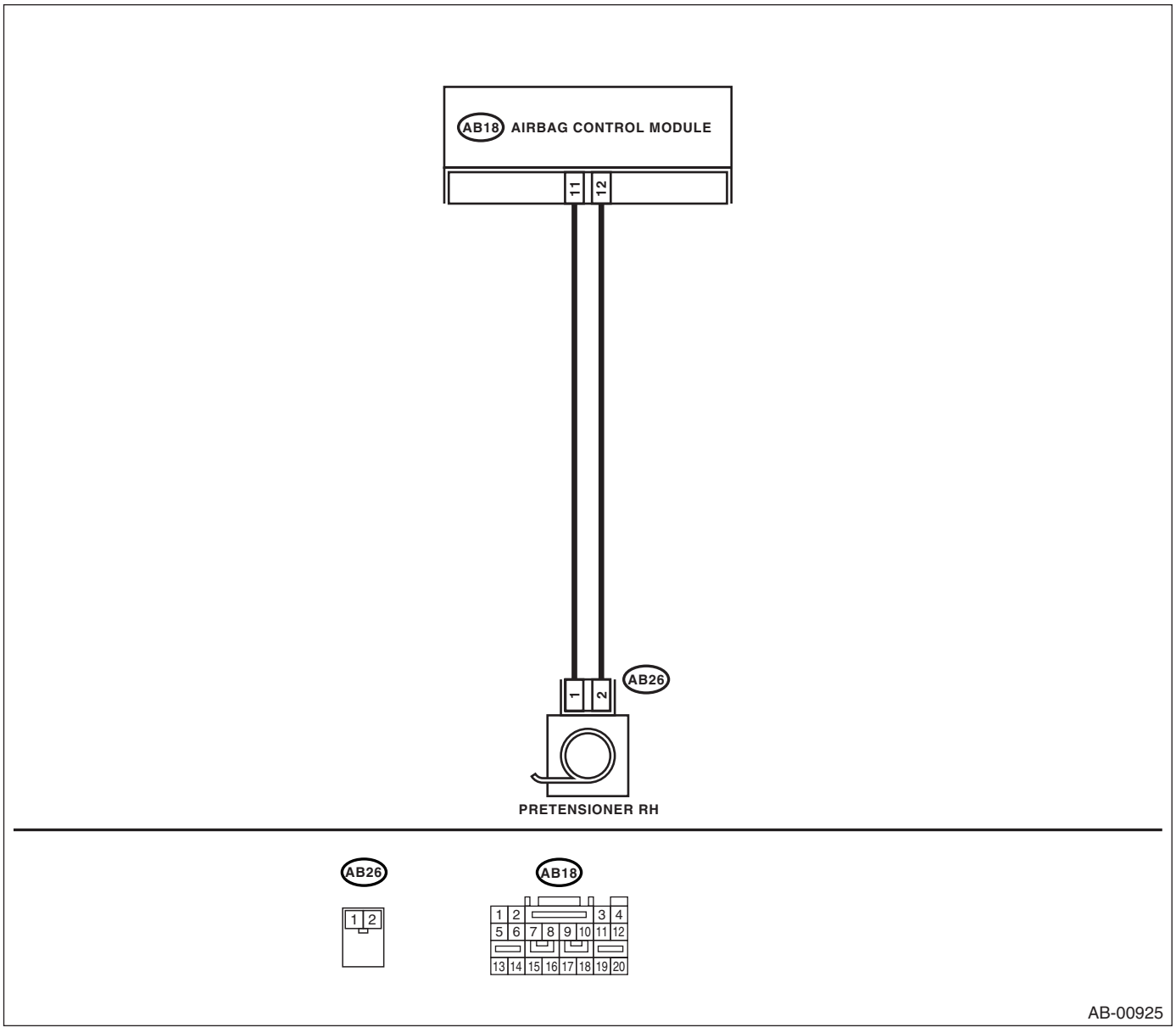

	Step	Check	Yes	No
1	**CHECK POOR CONTACT IN CONNECTOR.** Check if there is poor contact in connector between airbag control module and seat belt pretensioner RH.	Is there poor contact?	Replace the airbag rear harness with body harness.	Go to step **2.**
2	**CHECK SEAT BELT PRETENSIONER.** 1) Turn the ignition switch OFF, disconnect the battery ground cable, and wait more than 20 seconds. 2) Disconnect the connector (AB26) from seat belt pretensioner (RH). 3) Connect the connector (1N) in the test harness N to connector (AB26). 4) Connect the airbag resistor to connector (2N) in the test harness N. 5) Connect the battery ground cable and turn the ignition switch ON.	Does the airbag warning light illuminate for 6 seconds and go off?	Replace the seat belt pretensioner (RH). <Ref. to SB-10, Front Seat Belt.>	Go to step **3.**
3	**CHECK AIRBAG REAR HARNESS (PRETENSIONER HARNESS RH).** 1) Turn the ignition switch OFF, disconnect the battery ground cable, and wait more than 20 seconds. 2) Disconnect the airbag resistor from test harness. 3) Disconnect the connector (AB24) from side airbag module (RH). 4) Disconnect the connector (AB33) from curtain airbag module (RH). 5) Disconnect the connectors (AB17) and (AB18) from airbag control modules. 6) Connect the connector (1U) in the test harness U to connector (AB18). 7) Measure the resistance between connector (3U) in the test harness U and connector (2N) in the test harness N. ***Connector & terminal*** ***(3U) No. 17 — (2N) No. 2:*** ***(3U) No. 19 — (2N) No. 1:***	Is the resistance less than 10 Ω?	Go to step **4.**	Replace the airbag rear harness with body harness.
4	**CHECK AIRBAG REAR HARNESS (PRETENSIONER HARNESS RH).** Measure the resistance between connector (3U) terminals in the test harness U. ***Connector & terminal*** ***(3U) No. 19 — (3U) No. 17:***	Is the resistance more than 1 MΩ?	Go to step **5.**	Replace the airbag rear harness with body harness.
5	**CHECK AIRBAG REAR HARNESS (PRETENSIONER HARNESS RH).** Measure the resistance between connector (3U) in the test harness U and chassis ground. ***Connector & terminal*** ***(3U) No. 17 — Chassis ground:*** ***(3U) No. 19 — Chassis ground:***	Is the resistance more than 1 MΩ?	Go to step **6.**	Replace the airbag rear harness with body harness.
6	**CHECK AIRBAG CONTROL MODULE.** 1) Connect all the connectors. 2) Erase the memory. 3) Perform the inspection mode. 4) Read the DTC.	Is the same DTC displayed as in the current diagnosis still being output?	Replace the airbag control module. <Ref. to AB-22, Airbag Control Module.>	Go to step **7.**

Step		Check	Yes	No
7	**CHECK FOR ANY OTHER DTC ON DISPLAY.**	Is any other DTC displayed?	Inspect the relevant DTC using "List of Diagnostic Trouble Code (DTC)". <Ref. to AB(diag)-41, List of Diagnostic Trouble Code (DTC).>	Finish the diagnosis.

AJ:DTC 62 BELT PRETENSIONER LH FAILURE

DTC DETECTING CONDITION:

- Seat belt pretensioner (LH) circuit is open, shorted or shorted to ground.
- Airbag control module is faulty.
- Pretensioner is faulty.
- Pretensioner harness is faulty.

CAUTION:

• Before diagnosing the airbag system, be sure to turn the ignition switch OFF, disconnect the ground terminal from battery, and wait more than 20 seconds before starting to work.
• Before replacing the airbag module, seat belt pretensioner, roll connector, control module and sensor, reconnect each part and confirm that the warning light operates properly.
• When inspecting the airbag rear harness, disconnect the side airbag module connector, curtain airbag module connector and seat belt pretensioner connector for safety reasons.

WIRING DIAGRAM:

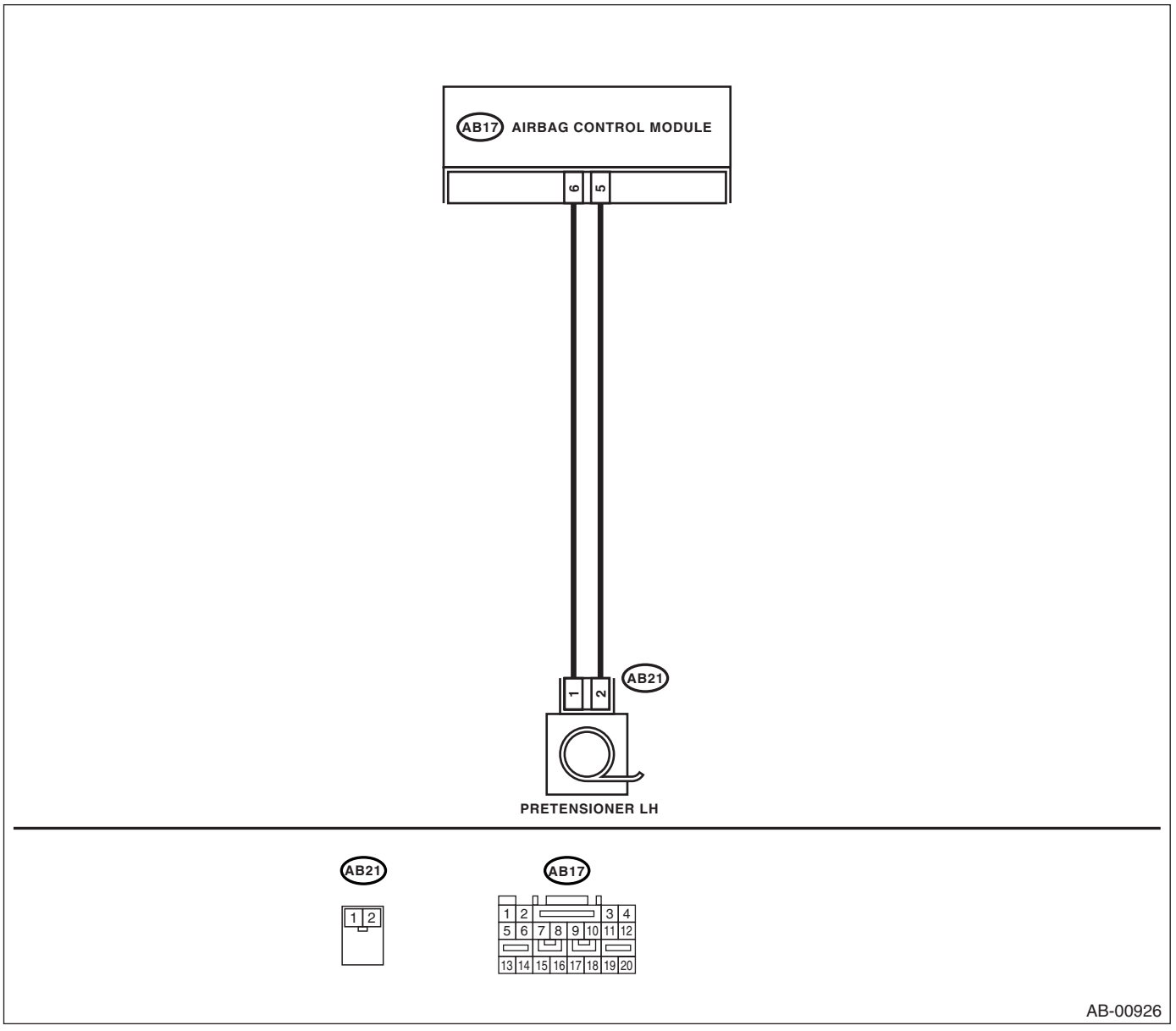

	Step	Check	Yes	No
1	**CHECK POOR CONTACT IN CONNECTOR.** Check if there is poor contact in connector between airbag control module and seat belt pretensioner LH.	Is there poor contact?	Replace the airbag rear harness with body harness.	Go to step **2.**
2	**CHECK SEAT BELT PRETENSIONER.** 1) Turn the ignition switch OFF, disconnect the battery ground cable, and wait more than 20 seconds. 2) Disconnect the connector (AB21) from seat belt pretensioner (LH). 3) Connect the connector (1N) in the test harness N to connector (AB21). 4) Connect the airbag resistor to connector (2N) in the test harness N. 5) Connect the battery ground cable and turn the ignition switch ON.	Does the airbag warning light illuminate for 6 seconds and go off?	Replace the seat belt pretensioner (LH). <Ref. to SB-10, Front Seat Belt.>	Go to step **3.**
3	**CHECK AIRBAG REAR HARNESS (PRETENSIONER HARNESS LH).** 1) Turn the ignition switch OFF, disconnect the battery ground cable, and wait more than 20 seconds. 2) Disconnect the airbag resistor from test harness. 3) Disconnect the connector (AB19) from side airbag module (LH). 4) Disconnect the connector (AB31) from curtain airbag module (LH). 5) Disconnect the connectors (AB17) and (AB18) from airbag control modules. 6) Connect the connector (1U) in the test harness U to connector (AB17). 7) Measure the resistance between connector (3U) in the test harness U and connector (2N) in the test harness N. ***Connector & terminal*** ***(3U) No. 13 — (2N) No. 1:*** ***(3U) No. 11 — (2N) No. 2:***	Is the resistance less than 10 Ω?	Go to step **4.**	Replace the airbag rear harness with body harness.
4	**CHECK AIRBAG REAR HARNESS (PRETENSIONER HARNESS LH).** Measure the resistance between connector (3U) terminals in the test harness U. ***Connector & terminal*** ***(3U) No. 11 — (3U) No. 13:***	Is the resistance more than 1 MΩ?	Go to step **5.**	Replace the airbag rear harness with body harness.
5	**CHECK AIRBAG REAR HARNESS (PRETENSIONER HARNESS LH).** Measure the resistance between connector (3U) in the test harness U and chassis ground. ***Connector & terminal*** ***(3U) No. 11 — Chassis ground:*** ***(3U) No. 13 — Chassis ground:***	Is the resistance more than 1 MΩ?	Go to step **6.**	Replace the airbag rear harness with body harness.
6	**CHECK AIRBAG CONTROL MODULE.** 1) Connect all the connectors. 2) Erase the memory. 3) Perform the inspection mode. 4) Read the DTC.	Is the same DTC displayed as in the current diagnosis still being output?	Replace the airbag control module. <Ref. to AB-22, Airbag Control Module.>	Go to step **7.**

Step		Check	Yes	No
7	**CHECK FOR ANY OTHER DTC ON DISPLAY.**	Is any other DTC displayed?	Inspect the relevant DTC using "List of Diagnostic Trouble Code (DTC)". <Ref. to AB(diag)-41, List of Diagnostic Trouble Code (DTC).>	Finish the diagnosis.

AK:DTC 65 BELT PRETENSIONER RH FAILURE

DTC DETECTING CONDITION:

- Seat belt pretensioner (RH) circuit is shorted to power supply.
- Pretensioner is faulty.
- Pretensioner harness is faulty.
- Airbag control module is faulty.

CAUTION:

• Before diagnosing the airbag system, be sure to turn the ignition switch OFF, disconnect the ground terminal from battery, and wait more than 20 seconds before starting to work.

• Before replacing the airbag module, seat belt pretensioner, roll connector, control module and sensor, reconnect each part and confirm that the warning light operates properly.

• When inspecting the airbag rear harness, disconnect the side airbag module connector, curtain airbag module connector and seat belt pretensioner connector for safety reasons.

WIRING DIAGRAM:

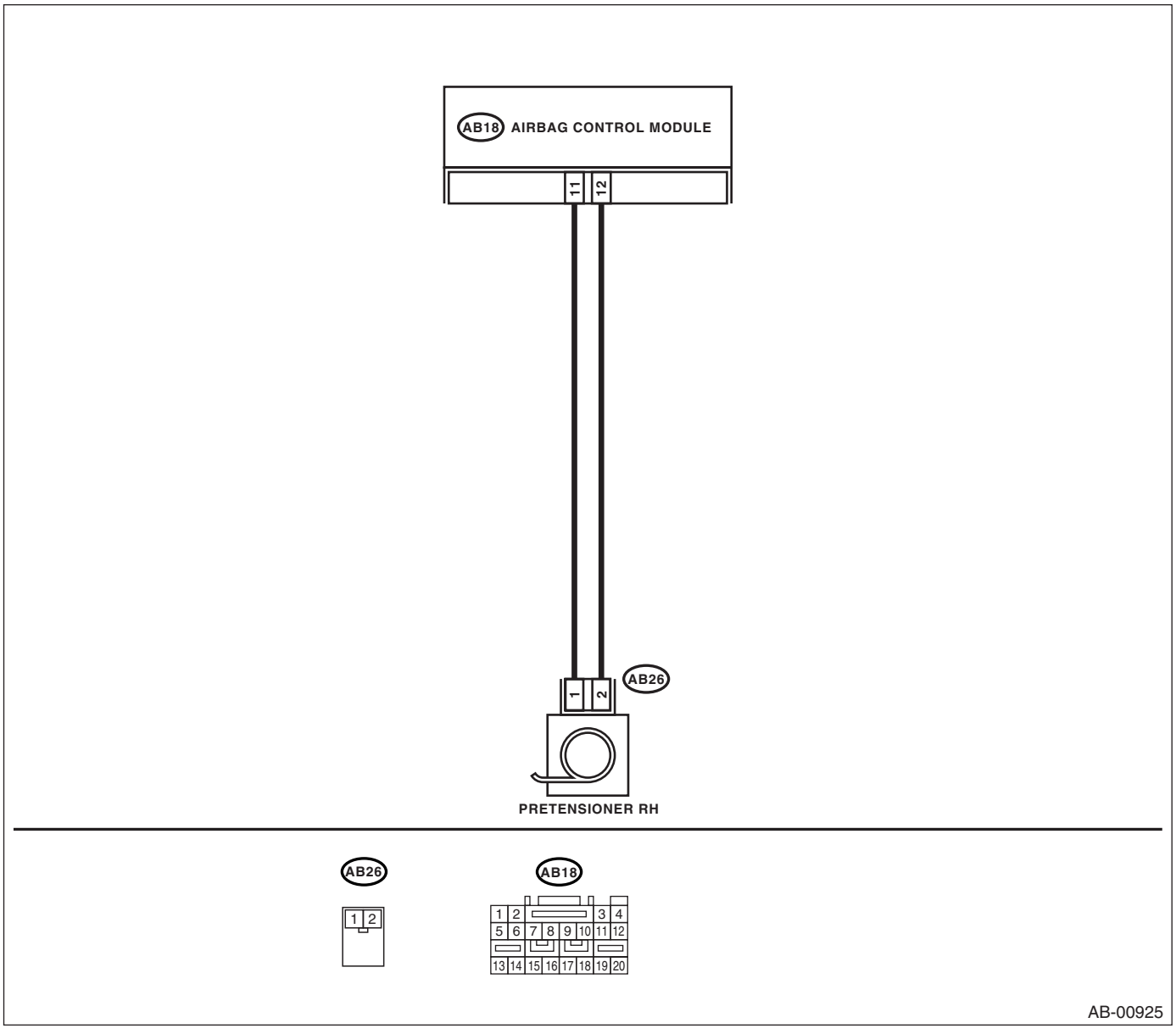

	Step	Check	Yes	No
1	**CHECK POOR CONTACT IN CONNECTOR.** Check if there is poor contact in connector between airbag control module and seat belt pretensioner RH.	Is there poor contact?	Replace the airbag rear harness with body harness.	Go to step **2.**
2	**CHECK SEAT BELT PRETENSIONER.** 1) Turn the ignition switch OFF, disconnect the battery ground cable, and wait more than 20 seconds. 2) Disconnect the connector (AB26) from seat belt pretensioner (RH). 3) Connect the connector (1N) in the test harness N to connector (AB26). 4) Connect the airbag resistor to connector (2N) in the test harness N. 5) Connect the battery ground cable and turn the ignition switch ON.	Does the airbag warning light illuminate for 6 seconds and go off?	Replace the seat belt pretensioner (RH). <Ref. to SB-10, Front Seat Belt.>	Go to step **3.**
3	**CHECK AIRBAG REAR HARNESS (PRETENSIONER HARNESS RH).** 1) Turn the ignition switch OFF, disconnect the battery ground cable, and wait more than 20 seconds. 2) Disconnect the airbag resistor from test harness. 3) Disconnect the connector (AB24) from side airbag module (RH). 4) Disconnect the connector (AB33) from curtain airbag module (RH). 5) Disconnect the connectors (AB17) and (AB18) from airbag control modules. 6) Connect the connector (1U) in the test harness U to connector (AB18). 7) Connect the battery ground cable and turn the ignition switch ON. 8) Measure the voltage between connector (3U) in the test harness U and chassis ground. ***Connector & terminal*** ***(3U) No. 17 (+) — Chassis ground (–):*** ***(3U) No. 19 (+) — Chassis ground (–):***	Is the voltage less than 1 V?	Go to step **4.**	Replace the airbag rear harness with body harness.
4	**CHECK AIRBAG CONTROL MODULE.** 1) Connect all the connectors. 2) Erase the memory. 3) Perform the inspection mode. 4) Read the DTC.	Is the same DTC displayed as in the current diagnosis still being output?	Replace the airbag control module. <Ref. to AB-22, Airbag Control Module.>	Go to step **5.**
5	**CHECK FOR ANY OTHER DTC ON DISPLAY.**	Is any other DTC displayed?	Inspect the relevant DTC using "List of Diagnostic Trouble Code (DTC)". <Ref. to AB(diag)-41, List of Diagnostic Trouble Code (DTC).>	Finish the diagnosis.

AL:DTC 66 BELT PRETENSIONER LH FAILURE

DTC DETECTING CONDITION:

- Seat belt pretensioner (LH) circuit is shorted to power supply.
- Pretensioner is faulty.
- Pretensioner harness is faulty.
- Airbag control module is faulty.

CAUTION:

• Before diagnosing the airbag system, be sure to turn the ignition switch OFF, disconnect the ground terminal from battery, and wait more than 20 seconds before starting to work.

• Before replacing the airbag module, seat belt pretensioner, roll connector, control module and sensor, reconnect each part and confirm that the warning light operates properly.

• When inspecting the airbag rear harness, disconnect the side airbag module connector, curtain airbag module connector and seat belt pretensioner connector for safety reasons.

WIRING DIAGRAM:

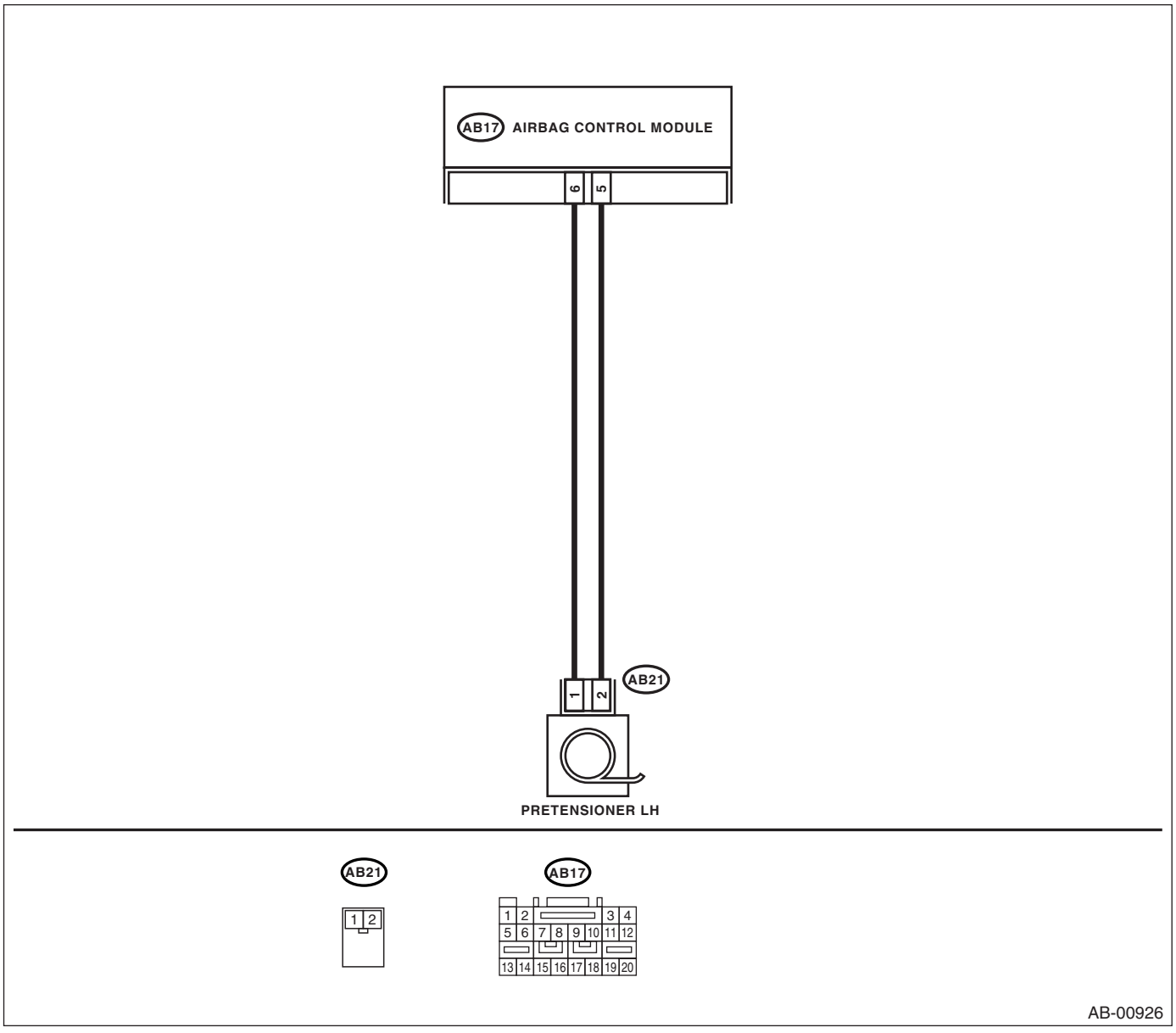

	Step	Check	Yes	No
1	**CHECK POOR CONTACT IN CONNECTOR.** Check if there is poor contact in connector between airbag control module and seat belt pretensioner LH.	Is there poor contact?	Replace the airbag rear harness with body harness.	Go to step **2.**
2	**CHECK SEAT BELT PRETENSIONER.** 1) Turn the ignition switch OFF, disconnect the battery ground cable, and wait more than 20 seconds. 2) Disconnect the connector (AB21) from seat belt pretensioner (LH). 3) Connect the connector (1N) in the test harness N to the connector (AB21). 4) Connect the airbag resistor to connector (2N) in the test harness N. 5) Connect the battery ground cable and turn the ignition switch ON.	Does the airbag warning light illuminate for 6 seconds and go off?	Replace the seat belt pretensioner (LH). <Ref. to SB-10, Front Seat Belt.>	Go to step **3.**
3	**CHECK AIRBAG REAR HARNESS (PRETENSIONER HARNESS LH).** 1) Turn the ignition switch OFF, disconnect the battery ground cable, and wait more than 20 seconds. 2) Disconnect the airbag resistor from test harness. 3) Disconnect the connector (AB19) from side airbag module (LH). 4) Disconnect the connector (AB31) from curtain airbag module (LH). 5) Disconnect the connectors (AB17) and (AB18) from airbag control modules. 6) Connect the connector (1U) in the test harness U to connector (AB17). 7) Connect the battery ground cable and turn the ignition switch ON. 8) Measure the voltage between connector (3U) in the test harness U and chassis ground. ***Connector & terminal*** ***(3U) No. 11 (+) — Chassis ground (–):*** ***(3U) No. 13 (+) — Chassis ground (–):***	Is the voltage less than 1 V?	Go to step **4.**	Replace the airbag rear harness with body harness.
4	**CHECK AIRBAG CONTROL MODULE.** 1) Connect all the connectors. 2) Erase the memory. 3) Perform the inspection mode. 4) Read the DTC.	Is the same DTC displayed as in the current diagnosis still being output?	Replace the airbag control module. <Ref. to AB-22, Airbag Control Module.>	Go to step **5.**
5	**CHECK FOR ANY OTHER DTC ON DISPLAY.**	Is any other DTC displayed?	Inspect the relevant DTC using "List of Diagnostic Trouble Code (DTC)". <Ref. to AB(diag)-41, List of Diagnostic Trouble Code (DTC).>	Finish the diagnosis.

AM:DTC 71 DRIVER'S AIRBAG FAILURE

DTC DETECTING CONDITION:

- Airbag main harness circuit is open, shorted or shorted to ground.
- Airbag module harness (Driver's side) circuit is open, shorted or shorted to ground.
- Roll connector circuit is open, shorted or shorted to ground.
- Driver's airbag module is faulty.
- Airbag control module is faulty.

CAUTION:

• Before diagnosing the airbag system, be sure to turn the ignition switch OFF, disconnect the ground terminal from battery, and wait more than 20 seconds before starting to work.

• Before replacing the airbag module, seat belt pretensioner, roll connector, control module and sensor, reconnect each part and confirm that the warning light operates properly.

• When inspecting the airbag main harness, disconnect the airbag module connector and the seat belt pretensioner of the driver's and passenger's seats for safety reasons.

NOTE:
Prior to starting work, prepare two airbag registers (98299PA040).

WIRING DIAGRAM:

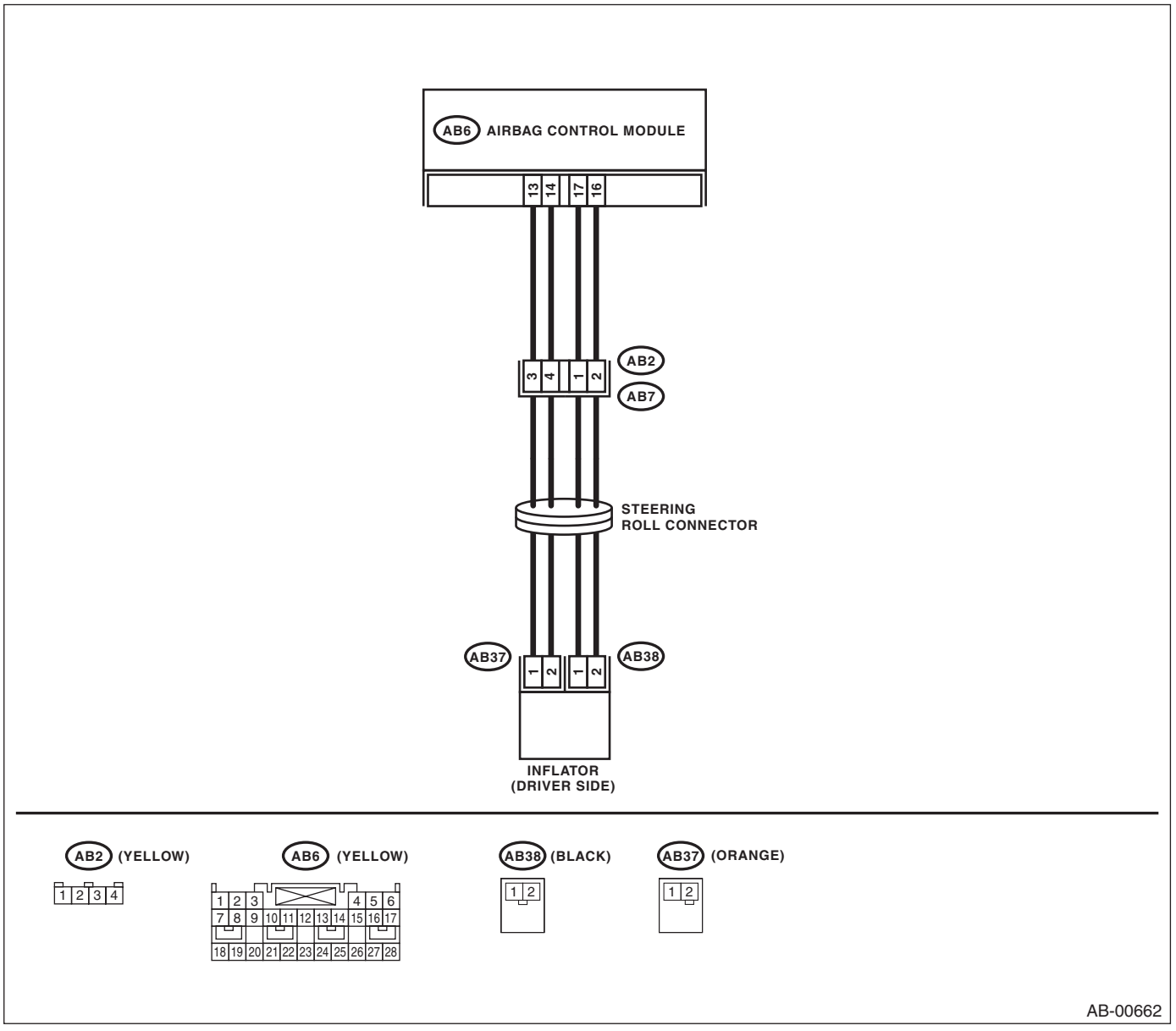

	Step	Check	Yes	No
1	**CHECK POOR CONTACT IN CONNECTOR.** Check if there is poor contact in connector between airbag control module and driver's airbag module.	Is there poor contact?	Replace the airbag main harness with body harness.	Go to step **2.**
2	**CHECK DRIVER'S AIRBAG MODULE.** 1) Turn the ignition switch OFF, disconnect the battery ground cable, and wait more than 20 seconds. 2) Remove the driver's airbag module. 3) Connect the connector (1N) in the test harness N to connector (AB38). 4) Connect the airbag resistor to connector (2N) in the test harness N. 5) Connect the connectors (1Q) in the test harness Q to connector (AB37). 6) Connect the airbag resistor to connector (2Q) in the test harness Q. 7) Connect the battery ground cable and turn the ignition switch ON.	Does the airbag warning light illuminate for 6 seconds and go off?	Replace the driver's airbag module. <Ref. to AB-16, Driver's Airbag Module.>	Go to step **3.**
3	**CHECK ROLL CONNECTOR.** 1) Turn the ignition switch OFF, disconnect the battery ground cable, and wait more than 20 seconds. 2) Disconnect the test harness N from connector (AB38). 3) Disconnect the test harness Q from connector (AB37). 4) Remove the instrument panel lower cover, disconnect the connector (AB7) from (AB2). 5) Connect the connector (1P) in the test harness P to connector (AB2). 6) Connect the airbag resistor to connector (2P) and (3P) in the test harness P. 7) Connect the battery ground cable and turn the ignition switch ON.	Does the airbag warning light illuminate for 6 seconds and go off?	Replace the roll connector. <Ref. to AB-25, Roll Connector.>	Go to step **4.**
4	**CHECK AIRBAG MAIN HARNESS (DRIVER'S AIRBAG HARNESS).** 1) Turn the ignition switch OFF, disconnect the battery ground cable, and wait more than 20 seconds. 2) Disconnect the airbag resistor from connector (2P) and (3P) in the test harness P. 3) Remove the instrument panel side cover of passenger's side and disconnect the connector (AB10) and (AB9). 4) Disconnect the connector (AB6) from airbag control module, and connect the connector (1U) in the test harness U. 5) Measure the resistance between connector (2U) in the test harness U and connector (2P) and (3P) in the test harness P. ***Connector & terminal*** ***(2U) No. 2 — (2P) No. 1:*** ***(2U) No. 4 — (2P) No. 2:*** ***(2U) No. 8 — (3P) No. 3:*** ***(2U) No. 12 — (3P) No. 4:***	Is the resistance less than 10 Ω?	Go to step **5.**	Replace the airbag main harness with body harness.

	Step	Check	Yes	No
5	**CHECK AIRBAG MAIN HARNESS (DRIVER'S AIRBAG HARNESS).** Measure the resistance between connector (2U) terminals in the test harness U and between the connector (2U) and chassis ground. ***Connector & terminal*** ***(2U) No. 2 — (2U) No. 4:*** ***(2U) No. 4 — Chassis ground:*** ***(2U) No. 2 — Chassis ground:*** ***(2U) No. 8 — (2U) No. 12:*** ***(2U) No. 8 — Chassis ground:*** ***(2U) No. 12 — Chassis ground:***	Is the resistance more than 1 MΩ?	Go to step **6.**	Replace the airbag main harness with body harness.
6	**CHECK AIRBAG CONTROL MODULE.** 1) Connect all the connectors. 2) Erase the memory. 3) Perform the inspection mode. 4) Read the DTC.	Is the same DTC displayed as in the current diagnosis still being output?	Replace the airbag control module. <Ref. to AB-22, Airbag Control Module.>	Go to step **7.**
7	**CHECK FOR ANY OTHER DTC ON DISPLAY.**	Is any other DTC displayed?	Inspect the relevant DTC using "List of Diagnostic Trouble Code (DTC)". <Ref. to AB(diag)-41, List of Diagnostic Trouble Code (DTC).>	Finish the diagnosis.

AN:DTC 72 PASSENGER'S AIRBAG FAILURE

DTC DETECTING CONDITION:

- Airbag main harness circuit is open, shorted or shorted to ground.
- Airbag module harness (Passenger's side) circuit is open, shorted or shorted to ground.
- Passenger's airbag module is faulty.
- Airbag control module is faulty.

CAUTION:

• Before diagnosing the airbag system, be sure to turn the ignition switch OFF, disconnect the ground terminal from battery, and wait more than 20 seconds before starting to work.
• Before replacing the airbag module, seat belt pretensioner, roll connector, control module and sensor, reconnect each part and confirm that the warning light operates properly.
• When inspecting the airbag main harness, disconnect the airbag module connector and the seat belt pretensioner of the driver's and passenger's seats for safety reasons.

WIRING DIAGRAM:

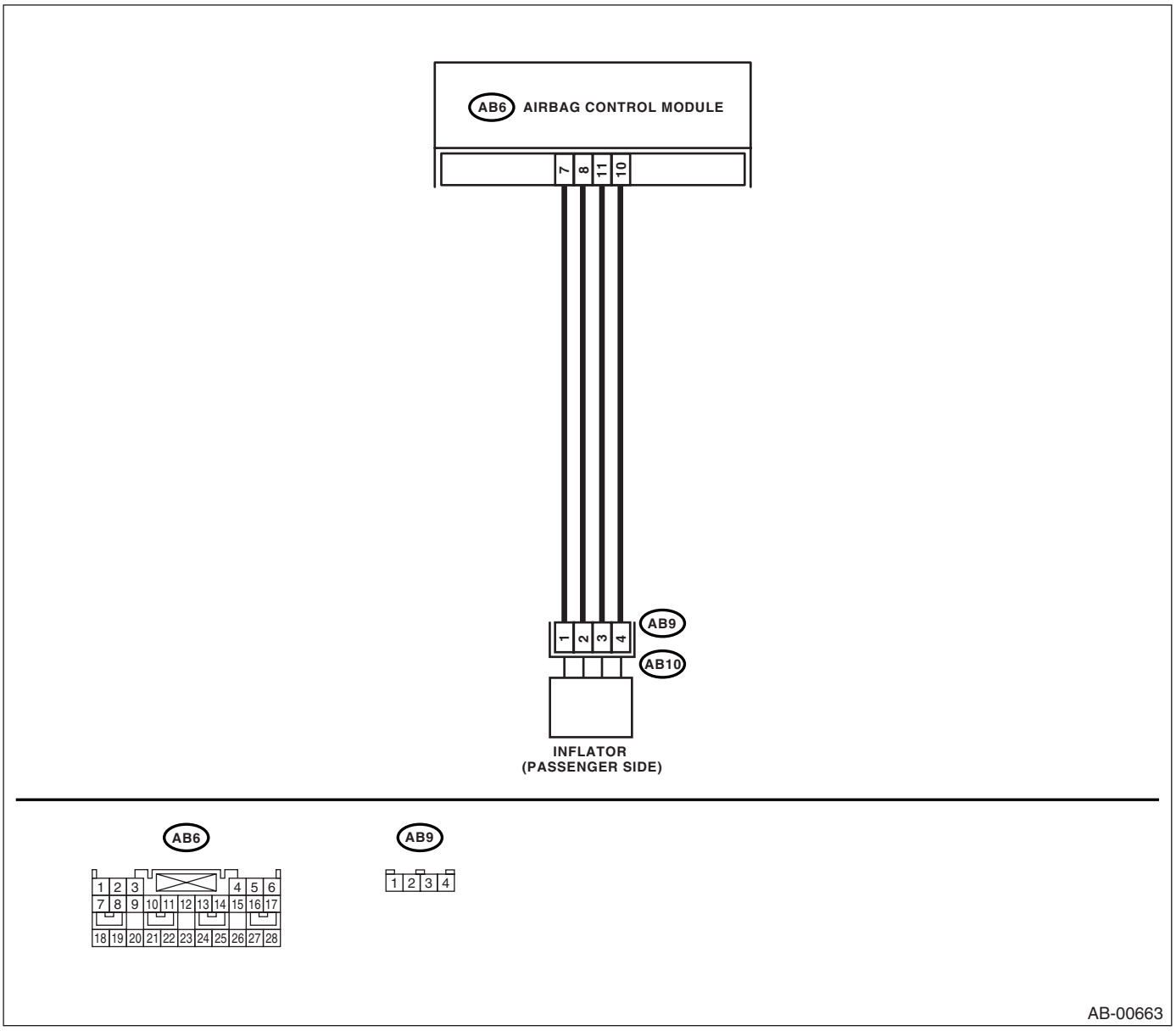

Diagnostic Chart with Trouble Code

	Step	Check	Yes	No
1	**CHECK POOR CONTACT IN CONNECTOR.** Check if there is poor contact in connector between airbag control module and passenger's airbag module.	Is there poor contact?	Replace the airbag main harness with body harness.	Go to step **2.**
2	**CHECK PASSENGER'S AIRBAG MODULE.** 1) Turn the ignition switch OFF, disconnect the battery ground cable, and wait more than 20 seconds. 2) Remove the instrument panel side cover on the passenger's side. 3) Disconnect the connector (AB10) from (AB9). 4) Connect the connector (1P) in the test harness P to connector (AB9). 5) Connect the airbag resistor to connector (2P) and (3P) in the test harness P. 6) Connect the battery ground cable and turn the ignition switch ON.	Does the airbag warning light illuminate for 6 seconds and go off?	Replace the passenger airbag module. <Ref. to AB-17, Passenger's Airbag Module.>	Go to step **3.**
3	**CHECK AIRBAG MAIN HARNESS (PASSENGER'S AIRBAG HARNESS).** 1) Turn the ignition switch OFF, disconnect the battery ground cable, and wait more than 20 seconds. 2) Disconnect the airbag resistor from connector (2P) and (3P) in the test harness P. 3) Remove the instrument panel lower cover, disconnect the connector (AB7) from (AB2). 4) Disconnect the connector (AB6) from airbag control module, and connect the connector (1U) in the test harness U. 5) Measure the resistance between connector (2U) in the test harness U and connector (2P) and (3P) in the test harness P. ***Connector & terminal*** ***(2U) No. 3 — (2P) No. 1:*** ***(2U) No. 5 — (2P) No. 2:*** ***(2U) No. 9 — (3P) No. 3:*** ***(2U) No. 13 — (3P) No. 4:***	Is the resistance less than 10 Ω?	Go to step **4.**	Replace the airbag main harness with body harness.
4	**CHECK AIRBAG MAIN HARNESS (PASSENGER'S AIRBAG HARNESS).** Measure the resistance between connector (2U) terminals in the test harness U and between the connector (2U) and chassis ground. ***Connector & terminal*** ***(2U) No. 3 — (2U) No. 5:*** ***(2U) No. 3 — Chassis ground:*** ***(2U) No. 5 — Chassis ground:*** ***(2U) No. 9 — (2U) No. 13:*** ***(2U) No. 9 — Chassis ground:*** ***(2U) No. 13 — Chassis ground:***	Is the resistance more than 1 MΩ?	Go to step **5.**	Replace the airbag main harness with body harness.
5	**CHECK AIRBAG CONTROL MODULE.** 1) Connect all the connectors. 2) Erase the memory. 3) Perform the inspection mode. 4) Read the DTC.	Is the same DTC displayed as in the current diagnosis still being output?	Replace the airbag control module. <Ref. to AB-22, Airbag Control Module.>	Go to step **6.**

Step		Check	Yes	No
6	**CHECK FOR ANY OTHER DTC ON DISPLAY.**	Is any other DTC displayed?	Inspect the relevant DTC using "List of Diagnostic Trouble Code (DTC)". <Ref. to AB(diag)-41, List of Diagnostic Trouble Code (DTC).>	Finish the diagnosis.

AO:DTC 75 DRIVER'S AIRBAG FAILURE

DTC DETECTING CONDITION:

- Airbag main harness circuit (Driver's side) is shorted to power supply.
- Airbag module harness circuit (Driver's side) is shorted to power supply.
- Roll connector is shorted to the power supply.
- Driver's airbag module is faulty.
- Airbag control module is faulty.

CAUTION:

• Before diagnosing the airbag system, be sure to turn the ignition switch OFF, disconnect the ground terminal from battery, and wait more than 20 seconds before starting to work.

• Before replacing the airbag module, seat belt pretensioner, roll connector, control module and sensor, reconnect each part and confirm that the warning light operates properly.

• When inspecting the airbag main harness, disconnect the airbag module connector and the seat belt pretensioner of the driver's and passenger's seats for safety reasons.

NOTE:
Prior to starting work, prepare two airbag registers (98299PA040).

WIRING DIAGRAM:

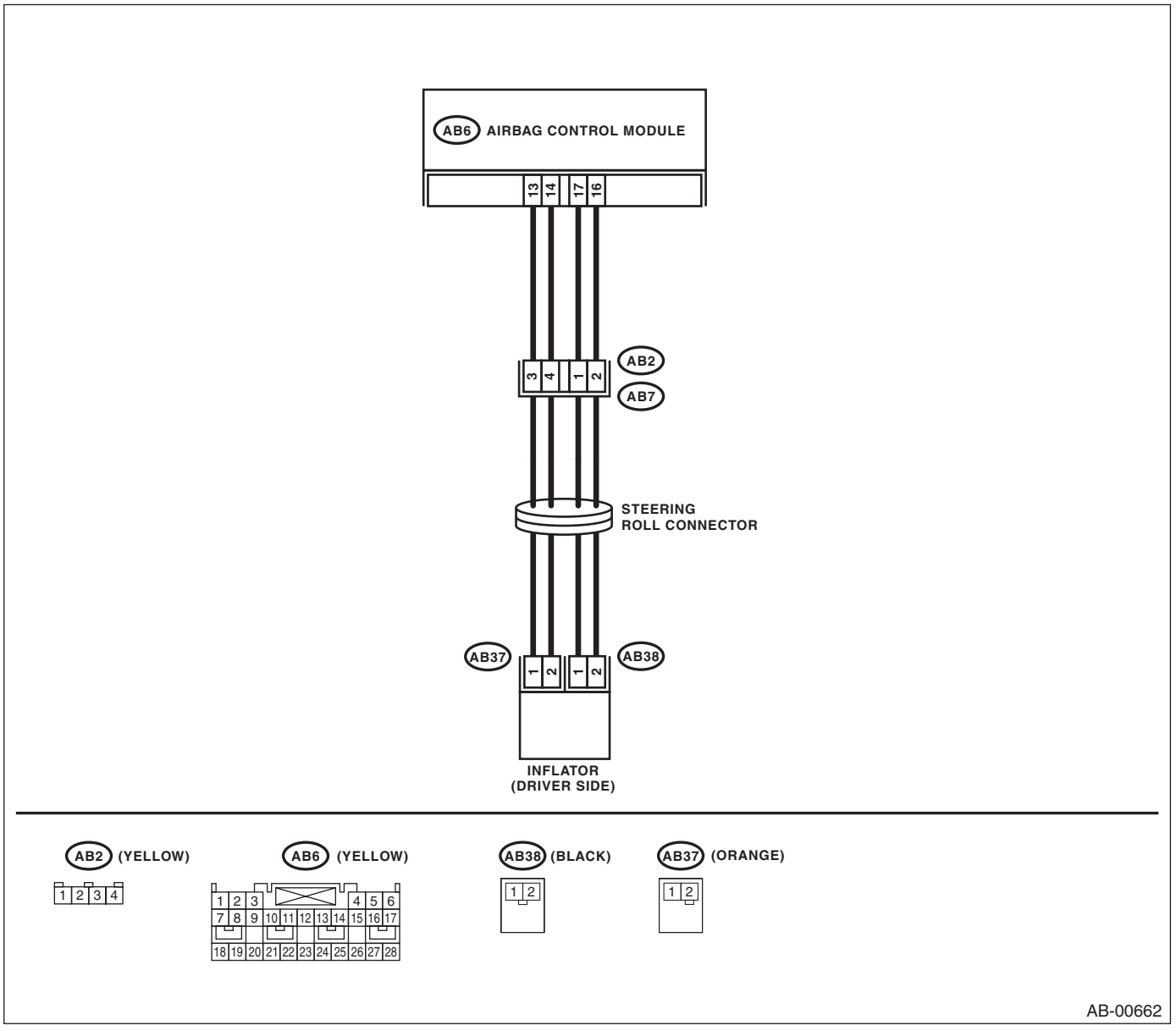

	Step	Check	Yes	No
1	**CHECK POOR CONTACT IN CONNECTOR.** Check if there is poor contact in connector between airbag control module and driver's airbag module.	Is there poor contact?	Replace the airbag main harness with body harness.	Go to step **2.**
2	**CHECK DRIVER'S AIRBAG MODULE.** 1) Turn the ignition switch OFF, disconnect the battery ground cable, and wait more than 20 seconds. 2) Remove the driver's airbag module. 3) Connect the connector (AB38) to connector (1N) in the test harness N. 4) Connect the airbag resistor to connector (2N) in the test harness N. 5) Connect the connectors (1Q) in the test harness Q to the connector (AB37). 6) Connect the airbag resistor to connector (2Q) in the test harness Q. 7) Connect the battery ground cable and turn the ignition switch ON.	Does the airbag warning light illuminate for 6 seconds and go off?	Replace the driver's airbag module. <Ref. to AB-16, Driver's Airbag Module.>	Go to step **3.**
3	**CHECK ROLL CONNECTOR.** 1) Turn the ignition switch OFF, disconnect the battery ground cable, and wait more than 20 seconds. 2) Disconnect the test harness N from connector (AB38). 3) Disconnect the test harness Q from connector (AB37). 4) Remove the instrument panel lower cover, disconnect the connector (AB7) from (AB2). 5) Connect the connector (1P) in the test harness P to connector (AB2). 6) Connect the airbag resistor to connector (2P) and (3P) in the test harness P. 7) Connect the battery ground cable and turn the ignition switch ON.	Does the airbag warning light illuminate for 6 seconds and go off?	Replace the roll connector. <Ref. to AB-25, Roll Connector.>	Go to step **4.**
4	**CHECK AIRBAG MAIN HARNESS (DRIVER'S AIRBAG HARNESS).** 1) Turn the ignition switch OFF, disconnect the battery ground cable, and wait more than 20 seconds. 2) Disconnect the airbag resistor from connector (2P) and (3P) in the test harness P. 3) Remove the instrument panel side cover of passenger's side and disconnect the connector (AB10) and (AB9). 4) Disconnect the connector (AB6) from airbag control module, and connect the connector (1U) in the test harness U. 5) Connect the battery ground cable and turn the ignition switch ON. (engine OFF) 6) Measure the voltage between connector (2U) in the test harness U and chassis ground. ***Connector & terminal*** ***(2U) No. 4 (+) — Chassis ground (–):*** ***(2U) No. 2 (+) — Chassis ground (–):*** ***(2U) No. 8 (+) — Chassis ground (–):*** ***(2U) No. 12 (+) — Chassis ground (–):***	Is the voltage less than 1 V?	Go to step **5.**	Replace the airbag main harness with body harness.

	Step	Check	Yes	No
5	**CHECK AIRBAG CONTROL MODULE.** 1) Connect all the connectors. 2) Erase the memory. 3) Perform the inspection mode. 4) Read the DTC.	Is the same DTC displayed as in the current diagnosis still being output?	Replace the airbag control module. <Ref. to AB-22, Airbag Control Module.>	Go to step **6.**
6	**CHECK FOR ANY OTHER DTC ON DISPLAY.**	Is any other DTC displayed?	Inspect the relevant DTC using "List of Diagnostic Trouble Code (DTC)". <Ref. to AB(diag)-41, List of Diagnostic Trouble Code (DTC).>	Finish the diagnosis.

AP:DTC 76 PASSENGER'S AIRBAG FAILURE

DTC DETECTING CONDITION:

- Airbag main harness circuit (Passenger's side) is shorted to power supply.
- Airbag module harness circuit (Passenger's side) is shorted to power supply.
- Passenger's airbag module is faulty.
- Airbag control module is faulty.

CAUTION:

• Before diagnosing the airbag system, be sure to turn the ignition switch OFF, disconnect the ground terminal from battery, and wait more than 20 seconds before starting to work.
• Before replacing the airbag module, seat belt pretensioner, roll connector, control module and sensor, reconnect each part and confirm that the warning light operates properly.
• When inspecting the airbag main harness, disconnect the airbag module connector and the seat belt pretensioner of the driver's and passenger's seats for safety reasons.

WIRING DIAGRAM:

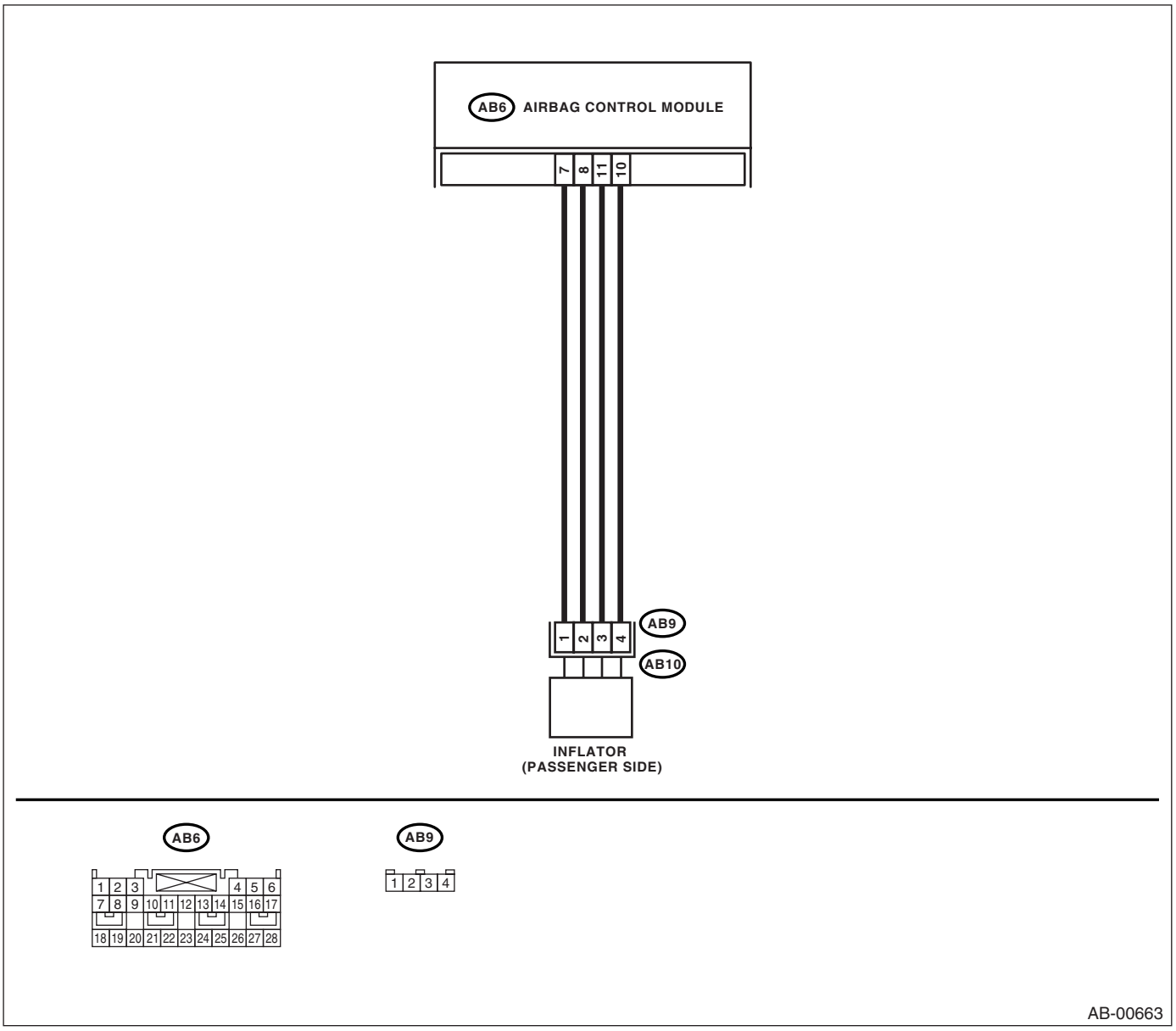

Diagnostic Chart with Trouble Code

	Step	Check	Yes	No
1	**CHECK POOR CONTACT IN CONNECTOR.** Check if there is poor contact in connector between airbag control module and passenger's airbag module.	Is there poor contact?	Replace the airbag main harness with body harness.	Go to step **2.**
2	**CHECK PASSENGER'S AIRBAG MODULE.** 1) Turn the ignition switch OFF, disconnect the battery ground cable, and wait more than 20 seconds. 2) Remove the instrument panel side cover on the passenger's side. 3) Disconnect the connector (AB10) from (AB9). 4) Connect the connector (1P) in the test harness P to connector (AB9). 5) Connect the airbag resistor to connector (2P) and (3P) in the test harness P. 6) Connect the battery ground cable and turn the ignition switch ON.	Does the airbag warning light illuminate for 6 seconds and go off?	Replace the passenger airbag module. <Ref. to AB-17, Passenger's Airbag Module.>	Go to step **3.**
3	**CHECK AIRBAG MAIN HARNESS (PASSENGER'S AIRBAG HARNESS).** 1) Turn the ignition switch OFF, disconnect the battery ground cable, and wait more than 20 seconds. 2) Disconnect the airbag resistor from connector (2P) and (3P) in the test harness P. 3) Remove the instrument panel lower cover, disconnect the connector (AB7) from (AB2). 4) Disconnect the connector (AB6) from airbag control module, and connect the connector (1U) in the test harness U. 5) Measure the voltage between connector (2U) in the test harness U and chassis ground. ***Connector & terminal*** ***(2U) No. 3 (+) — Chassis ground (−):*** ***(2U) No. 5 (+) — Chassis ground (−):*** ***(2U) No. 9 (+) — Chassis ground (−):*** ***(2U) No. 13 (+) — Chassis ground (−):***	Is the voltage less than 1 V?	Go to step **4.**	Replace the airbag main harness with body harness.
4	**CHECK AIRBAG CONTROL MODULE.** 1) Connect all the connectors. 2) Erase the memory. 3) Perform the inspection mode. 4) Read the DTC.	Is the same DTC displayed as in the current diagnosis still being output?	Replace the airbag control module. <Ref. to AB-22, Airbag Control Module.>	Go to step **5.**
5	**CHECK FOR ANY OTHER DTC ON DISPLAY.**	Is any other DTC displayed?	Inspect the relevant DTC using "List of Diagnostic Trouble Code (DTC)". <Ref. to AB(diag)-41, List of Diagnostic Trouble Code (DTC).>	Finish the diagnosis.

AQ:DTC 91 CURTAIN AIRBAG MODULE RH FAILURE

DTC DETECTING CONDITION:

- Curtain airbag harness (RH) is faulty.
- Curtain airbag module (RH) is faulty.
- Airbag control module is faulty.

CAUTION:

• Before diagnosing the airbag system, be sure to turn the ignition switch OFF, disconnect the ground terminal from battery, and wait more than 20 seconds before starting to work.

• Before replacing the airbag module, seat belt pretensioner, roll connector, control module and sensor, reconnect each part and confirm that the warning light operates properly.

• When inspecting the airbag rear harness, disconnect the side airbag module connector, curtain airbag module connector and seat belt pretensioner connector for safety reasons.

WIRING DIAGRAM:

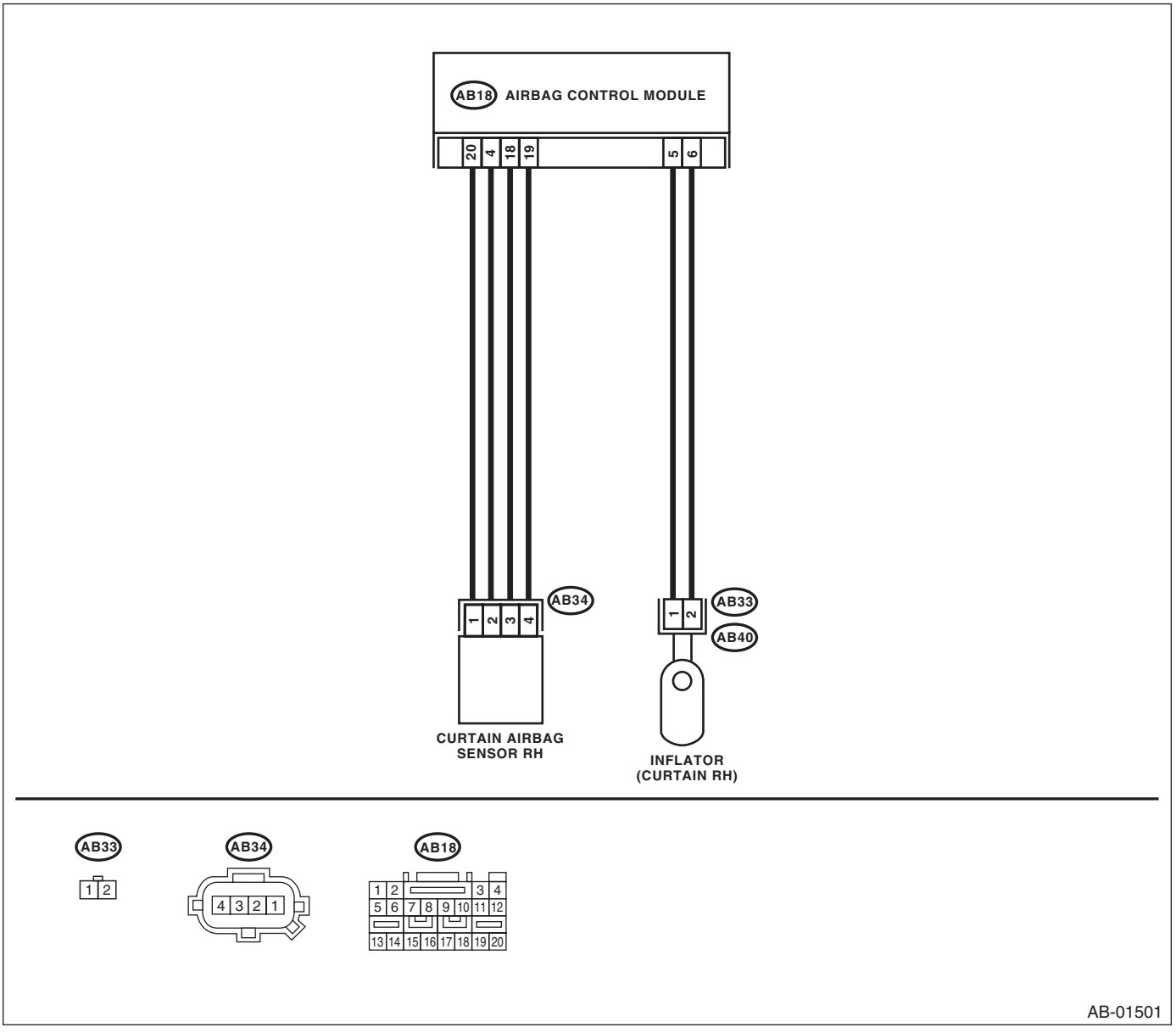

Diagnostic Chart with Trouble Code

	Step	Check	Yes	No
1	**CHECK POOR CONTACT IN CONNECTOR.** Check if there is poor contact in connector between airbag control module, curtain airbag module RH and curtain airbag sensor RH.	Is there poor contact?	Replace the airbag rear harness with body harness.	Go to step **2.**
2	**CHECK CURTAIN AIRBAG MODULE.** 1) Turn the ignition switch OFF, disconnect the battery ground cable, and wait more than 20 seconds. 2) Disconnect the connector (AB33) from (AB40), and connect the connector (1F) in test harness F to connector (AB33). 3) Connect the airbag resistor to connector (3F) in the test harness F. 4) Connect the battery ground cable and turn the ignition switch ON.	Does the airbag warning light illuminate for 6 seconds and go off?	Replace the curtain airbag module (RH). <Ref. to AB-20, Curtain Airbag Module.>	Go to step **3.**
3	**CHECK AIRBAG REAR HARNESS (CURTAIN AIRBAG MODULE HARNESS RH).** 1) Turn the ignition switch OFF, disconnect the battery ground cable, and wait more than 20 seconds. 2) Disconnect the connector (AB26) from seat belt pretensioner (RH). 3) Disconnect the connector (AB24) from side airbag module (RH). 4) Disconnect the airbag resistor from the test harness F. 5) Disconnect the connector (AB18) from airbag control module. 6) Connect the connector (1U) in the test harness U to connector (AB18). 7) Measure the resistance between connector (5U) in the test harness U and connector (3F) in the test harness F. ***Connector & terminal*** ***(5U) No. 6 — (3F) No. 4:*** ***(5U) No. 8 — (3F) No. 3:***	Is the resistance less than 10 Ω?	Go to step **4.**	Replace the airbag rear harness with body harness.
4	**CHECK AIRBAG REAR HARNESS (CURTAIN AIRBAG MODULE HARNESS RH).** Measure the resistance between connector (5U) terminals in the test harness U. ***Connector & terminal*** ***(5U) No. 6 — (5U) No. 8:***	Is the resistance more than 1 MΩ?	Go to step **5.**	Replace the airbag rear harness with body harness.
5	**CHECK AIRBAG REAR HARNESS (CURTAIN AIRBAG MODULE HARNESS RH).** Measure the resistance between connector (5U) in the test harness U and chassis ground. ***Connector & terminal*** ***(5U) No. 6 — Chassis ground:*** ***(5U) No. 8 — Chassis ground:***	Is the resistance more than 1 MΩ?	Go to step **6.**	Replace the airbag rear harness with body harness.
6	**CHECK AIRBAG CONTROL MODULE.** 1) Connect all the connectors. 2) Erase the memory. 3) Perform the inspection mode. 4) Read the DTC.	Is the same DTC displayed as in the current diagnosis still being output?	Replace the airbag control module. <Ref. to AB-22, Airbag Control Module.>	Go to step **7.**

Step		Check	Yes	No
7	**CHECK FOR ANY OTHER DTC ON DISPLAY.**	Is any other DTC displayed?	Inspect the relevant DTC using "List of Diagnostic Trouble Code (DTC)". <Ref. to AB(diag)-41, List of Diagnostic Trouble Code (DTC).>	Finish the diagnosis.

AR:DTC 92 CURTAIN AIRBAG MODULE LH FAILURE

DTC DETECTING CONDITION:

- Curtain airbag harness (LH) is faulty.
- Curtain airbag module (LH) is faulty.
- Airbag control module is faulty.

CAUTION:

• Before diagnosing the airbag system, be sure to turn the ignition switch OFF, disconnect the ground terminal from battery, and wait more than 20 seconds before starting to work.

• Before replacing the airbag module, seat belt pretensioner, roll connector, control module and sensor, reconnect each part and confirm that the warning light operates properly.

• When inspecting the airbag main harness, disconnect the airbag module connector of the driver's and passenger's seats for safety reasons.

• When inspecting the airbag rear harness, disconnect the side airbag module connector, curtain airbag module connector and seat belt pretensioner connector for safety reasons.

WIRING DIAGRAM:

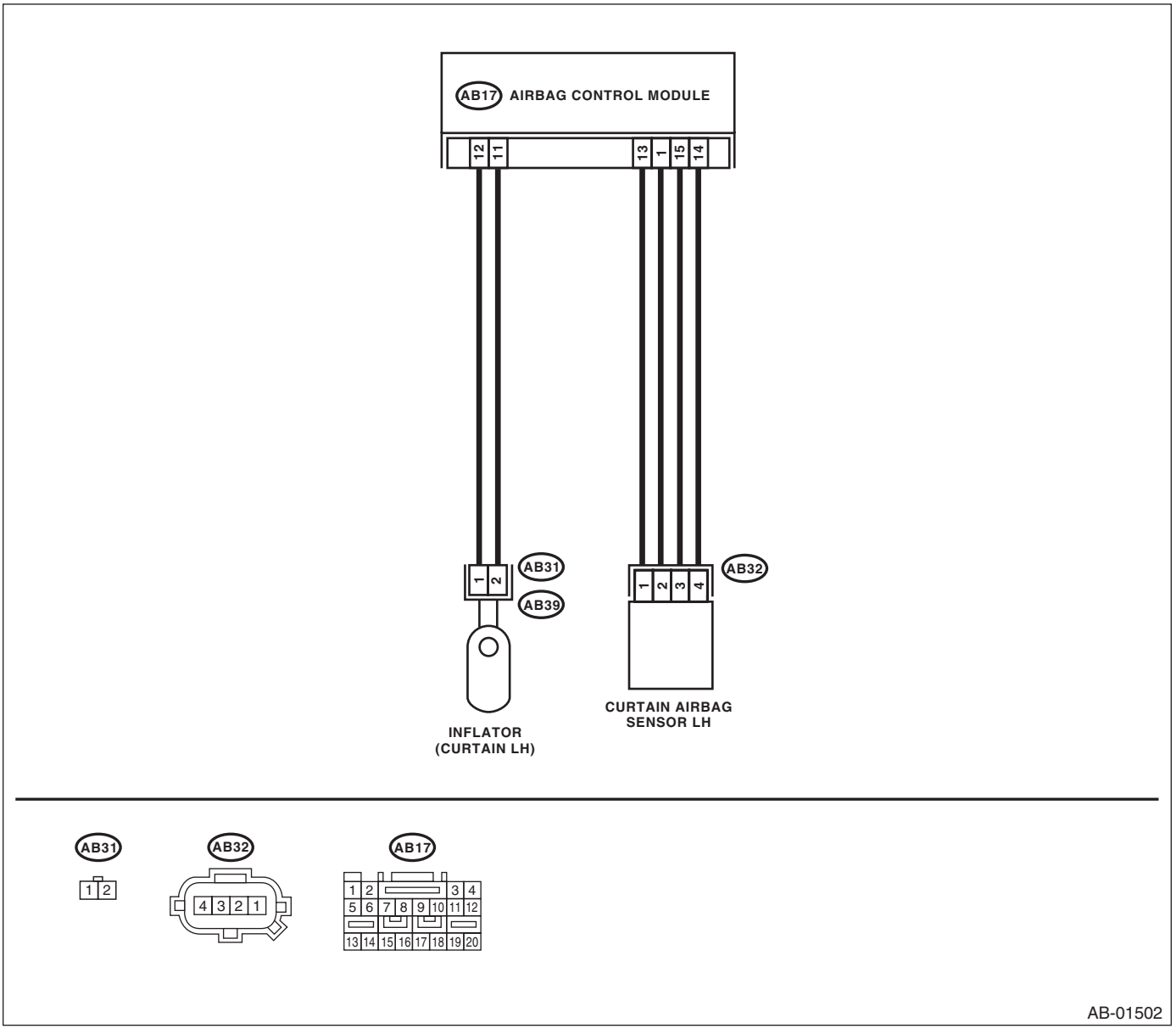

	Step	Check	Yes	No
1	**CHECK POOR CONTACT IN CONNECTOR.** Check if there is poor contact in connector between airbag control module, curtain airbag module LH and curtain airbag sensor LH.	Is there poor contact?	Replace the airbag rear harness with body harness.	Go to step **2.**
2	**CHECK CURTAIN AIRBAG MODULE.** 1) Turn the ignition switch OFF, disconnect the battery ground cable, and wait more than 20 seconds. 2) Disconnect the connector (AB31) from (AB39), and connect the connector (1F) in test harness F to connector (AB31). 3) Connect the airbag resistor to connector (3F) in the test harness F. 4) Connect the battery ground cable and turn the ignition switch ON.	Does the airbag warning light illuminate for 6 seconds and go off?	Replace the curtain airbag module (LH). <Ref. to AB-20, Curtain Airbag Module.>	Go to step **3.**
3	**CHECK AIRBAG REAR HARNESS (CURTAIN AIRBAG MODULE HARNESS LH).** 1) Turn the ignition switch OFF, disconnect the battery ground cable, and wait more than 20 seconds. 2) Disconnect the connector (AB21) from seat belt pretensioner (LH). 3) Disconnect the connector (AB19) from side airbag module (LH). 4) Disconnect the airbag resistor from the test harness F. 5) Disconnect the connector (AB17) from airbag control module. 6) Connect the connector (1U) in the test harness U to connector (AB17). 7) Measure the resistance between connector (5U) in the test harness U and connector (3F) in the test harness F. ***Connector & terminal*** ***(5U) No. 1 — (3F) No. 3:*** ***(5U) No. 3 — (3F) No. 4:***	Is the resistance less than 10 Ω?	Go to step **4.**	Replace the airbag rear harness with body harness.
4	**CHECK AIRBAG REAR HARNESS (CURTAIN AIRBAG MODULE HARNESS LH).** Measure the resistance between connector (5U) terminals in the test harness U. ***Connector & terminal*** ***(5U) No. 1 — (5U) No. 3:***	Is the resistance more than 1 MΩ?	Go to step **5.**	Replace the airbag rear harness with body harness.
5	**CHECK AIRBAG REAR HARNESS (CURTAIN AIRBAG MODULE HARNESS LH).** Measure the resistance between connector (5U) in the test harness U and chassis ground. ***Connector & terminal*** ***(5U) No. 1 — Chassis ground:*** ***(5U) No. 3 — Chassis ground:***	Is the resistance more than 1 MΩ?	Go to step **6.**	Replace the airbag rear harness with body harness.
6	**CHECK AIRBAG CONTROL MODULE.** 1) Connect all the connectors. 2) Erase the memory. 3) Perform the inspection mode. 4) Read the DTC.	Is the same DTC displayed as in the current diagnosis still being output?	Replace the airbag control module. <Ref. to AB-22, Airbag Control Module.>	Go to step **7.**

Step		Check	Yes	No
7	**CHECK FOR ANY OTHER DTC ON DISPLAY.**	Is any other DTC displayed?	Inspect the relevant DTC using "List of Diagnostic Trouble Code (DTC)". <Ref. to AB(diag)-41, List of Diagnostic Trouble Code (DTC).>	Finish the diagnosis.

AS:DTC 95 CURTAIN AIRBAG MODULE RH FAILURE

DTC DETECTING CONDITION:

- Curtain airbag harness (RH) is shorted to power supply.
- Airbag control module is faulty.

CAUTION:

• Before diagnosing the airbag system, be sure to turn the ignition switch OFF, disconnect the ground terminal from battery, and wait more than 20 seconds before starting to work.

• Before replacing the airbag module, seat belt pretensioner, roll connector, control module and sensor, reconnect each part and confirm that the warning light operates properly.

• When inspecting the airbag main harness, disconnect the airbag module connector of the driver's and passenger's seats for safety reasons.

• When inspecting the airbag rear harness, disconnect the side airbag module connector, curtain airbag module connector and seat belt pretensioner connector for safety reasons.

WIRING DIAGRAM:

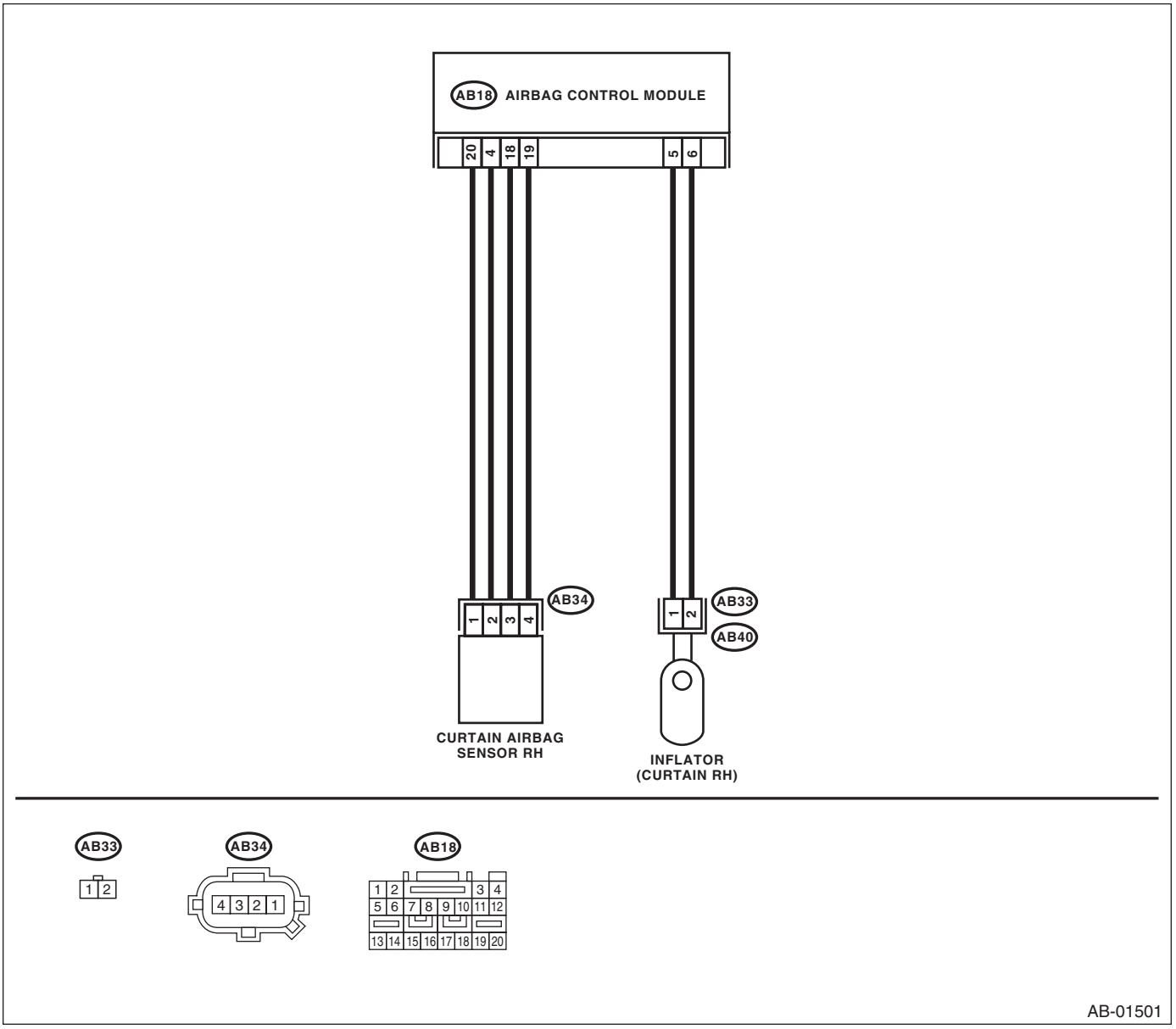

Diagnostic Chart with Trouble Code

	Step	Check	Yes	No
1	**CHECK POOR CONTACT IN CONNECTOR.** Check if there is poor contact in connector between airbag control module, curtain airbag module RH and curtain airbag sensor RH.	Is there poor contact?	Replace the airbag rear harness with body harness.	Go to step **2.**
2	**CHECK CURTAIN AIRBAG MODULE.** 1) Turn the ignition switch OFF, disconnect the battery ground cable, and wait more than 20 seconds. 2) Disconnect the connector (AB33) from (AB40), and connect the connector (1F) in test harness F to connector (AB33). 3) Connect the airbag resistor to connector (3F) in the test harness F. 4) Connect the battery ground cable and turn the ignition switch ON.	Does the airbag warning light illuminate for 6 seconds and go off?	Replace the curtain airbag module (RH). <Ref. to AB-20, Curtain Airbag Module.>	Go to step **3.**
3	**CHECK AIRBAG REAR HARNESS (CURTAIN AIRBAG MODULE HARNESS RH).** 1) Turn the ignition switch OFF, disconnect the battery ground cable, and wait more than 20 seconds. 2) Disconnect the connector (AB26) from seat belt pretensioner (RH). 3) Disconnect the connector (AB24) from side airbag module (RH). 4) Disconnect the airbag resistor from the test harness F. 5) Disconnect the connector (AB18) from airbag control module. 6) Connect the connector (1U) in the test harness U to connector (AB18). 7) Connect the battery ground cable and turn the ignition switch ON. 8) Measure the voltage between connector (5U) in the test harness U and chassis ground. ***Connector & terminal*** ***(5U) No. 6 (+) — Chassis ground (−):*** ***(5U) No. 8 (+) — Chassis ground (−):***	Is the voltage less than 1 V?	Go to step **4.**	Replace the airbag rear harness with body harness.
4	**CHECK AIRBAG CONTROL MODULE.** 1) Connect all the connectors. 2) Erase the memory. 3) Perform the inspection mode. 4) Read the DTC.	Is the same DTC displayed as in the current diagnosis still being output?	Replace the airbag control module. <Ref. to AB-22, Airbag Control Module.>	Go to step **5.**
5	**CHECK FOR ANY OTHER DTC ON DISPLAY.**	Is any other DTC displayed?	Inspect the relevant DTC using "List of Diagnostic Trouble Code (DTC)". <Ref. to AB(diag)-41, List of Diagnostic Trouble Code (DTC).>	Finish the diagnosis.

AT:DTC 96 CURTAIN AIRBAG MODULE LH FAILURE

DTC DETECTING CONDITION:

- Curtain airbag harness (LH) is shorted to power supply.
- Airbag control module is faulty.

CAUTION:

• Before diagnosing the airbag system, be sure to turn the ignition switch OFF, disconnect the ground terminal from battery, and wait more than 20 seconds before starting to work.

• Before replacing the airbag module, seat belt pretensioner, roll connector, control module and sensor, reconnect each part and confirm that the warning light operates properly.

• When inspecting the airbag main harness, disconnect the airbag module connector of the driver's and passenger's seats for safety reasons.

• When inspecting the airbag rear harness, disconnect the side airbag module connector, curtain airbag module connector and seat belt pretensioner connector for safety reasons.

WIRING DIAGRAM:

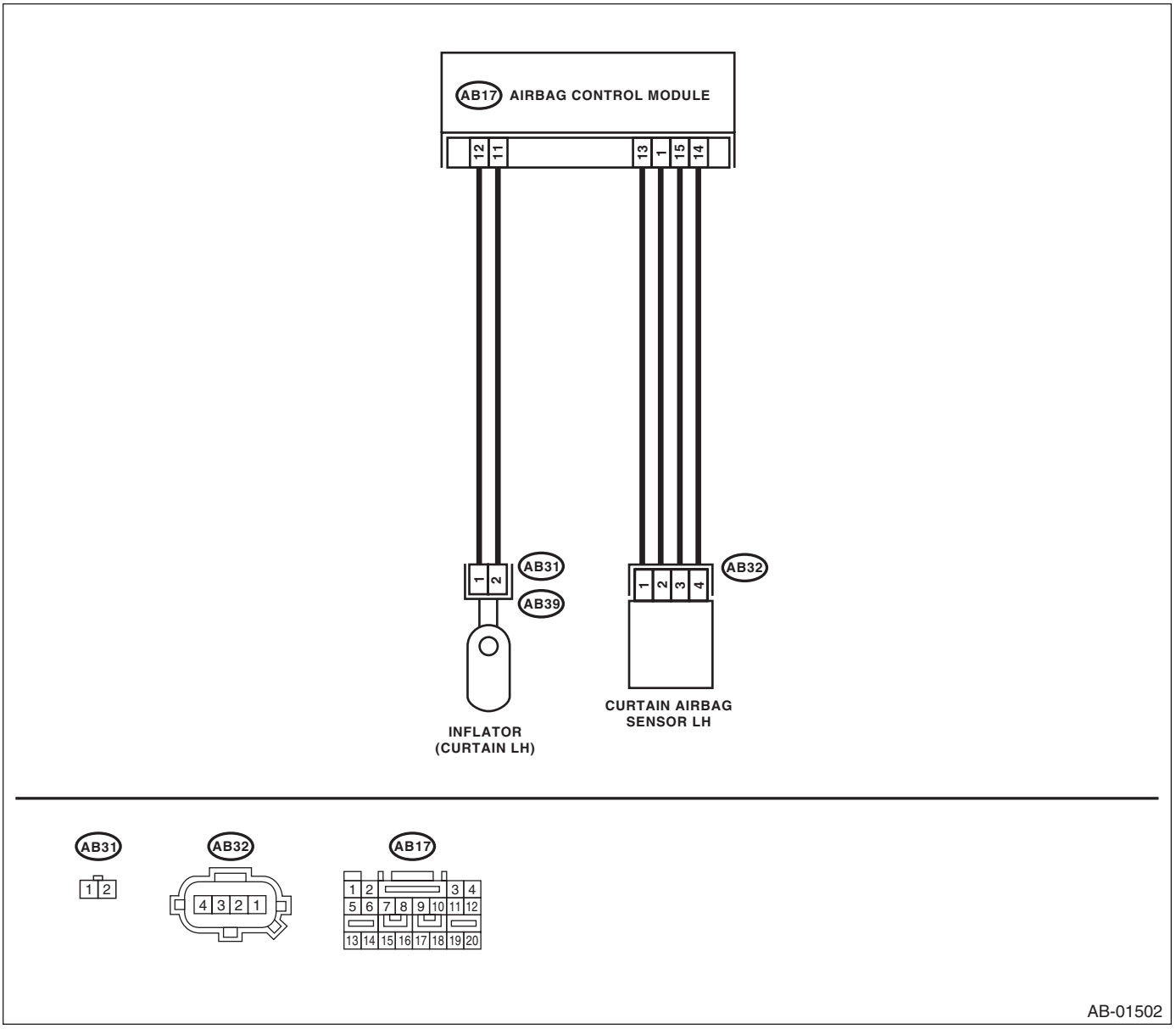

	Step	Check	Yes	No
1	**CHECK POOR CONTACT IN CONNECTOR.** Check if there is poor contact in connector between airbag control module, curtain airbag module LH and curtain airbag sensor LH.	Is there poor contact?	Replace the airbag rear harness with body harness.	Go to step **2.**
2	**CHECK SIDE AIRBAG MODULE.** 1) Turn the ignition switch OFF, disconnect the battery ground cable, and wait more than 20 seconds. 2) Disconnect the connector (AB31) from (AB39), and connect the connector (1F) in test harness F to the connector (AB31). 3) Connect the airbag resistor to connector (3F) in the test harness F. 4) Connect the battery ground cable and turn the ignition switch ON.	Does the airbag warning light illuminate for 6 seconds and go off?	Replace the curtain airbag module (LH). <Ref. to AB-20, Curtain Airbag Module.>	Go to step **3.**
3	**CHECK AIRBAG REAR HARNESS (CURTAIN AIRBAG MODULE HARNESS LH).** 1) Turn the ignition switch OFF, disconnect the battery ground cable, and wait more than 20 seconds. 2) Disconnect the connector (AB21) from seat belt pretensioner (LH). 3) Disconnect the connector (AB19) from side airbag module (LH). 4) Disconnect the airbag resistor from the test harness F. 5) Disconnect the connector (AB17) from airbag control module. 6) Connect the connector (1U) in the test harness U to connector (AB17). 7) Connect the battery ground cable and turn the ignition switch ON. 8) Measure the voltage between connector (5U) in the test harness U and chassis ground. ***Connector & terminal*** ***(5U) No. 1 (+) — Chassis ground (−):*** ***(5U) No. 3 (+) — Chassis ground (−):***	Is the voltage less than 1 V?	Go to step **4.**	Replace the airbag rear harness with body harness.
4	**CHECK AIRBAG CONTROL MODULE.** 1) Connect all the connectors. 2) Erase the memory. 3) Perform the inspection mode. 4) Read the DTC.	Is the same DTC displayed as in the current diagnosis still being output?	Replace the airbag control module. <Ref. to AB-22, Airbag Control Module.>	Go to step **5.**
5	**CHECK FOR ANY OTHER DTC ON DISPLAY.**	Is any other DTC displayed?	Inspect the relevant DTC using "List of Diagnostic Trouble Code (DTC)". <Ref. to AB(diag)-41, List of Diagnostic Trouble Code (DTC).>	Finish the diagnosis.

OCCUPANT DETECTION SYSTEM (DIAGNOSTICS) OD(diag)

		Page
1.	Basic Diagnostic Procedure	2
2.	Check List for Interview	4
3.	General Description	5
4.	Electrical Component Location	8
5.	Control Module I/O Signal	9
6.	Subaru Select Monitor	11
7.	Passenger's Airbag ON/OFF Indicator Light Illumination Pattern	17
8.	Read Diagnostic Trouble Code (DTC)	18
9.	Inspection Mode	19
10.	Clear Memory Mode	20
11.	Diagnostic Procedure when Airbag Warning Light Illuminated	21
12.	List of Diagnostic Trouble Code (DTC)	22
13.	Diagnostic Procedure with Diagnostic Trouble Code (DTC)	23
14.	General Diagnostic Table	29

1. Basic Diagnostic Procedure

A: PROCEDURE

NOTE:
Refer to “Check List for Interview”. <Ref. to OD(diag)-4, Check List for Interview.>

	Step	Check	Yes	No
1	**CHECK PRE-INSPECTION.** 1) Ask the customer when and how the trouble occurred using the interview checklist. <Ref. to OD(diag)-4, Check List for Interview.> 2) Before performing diagnostics, check the components which might affect OD problems. <Ref. to OD(diag)-5, INSPECTION, General Description.>	Is the component that might influence the OD problem normal?	Go to step **2.**	Repair or replace each component.
2	**CHECK INDICATION OF DTC.** 1) Turn the ignition switch to OFF. 2) Connect the Subaru Select Monitor to data link connector. 3) Turn the ignition switch to ON, and Subaru Select Monitor switch to ON. 4) Read the DTC. <Ref. to OD(diag)-18, OPERATION, Read Diagnostic Trouble Code (DTC).> NOTE: If the communication function of the Subaru Select Monitor cannot be executed normally, check the communication circuit. <Ref. to OD(diag)-14, COMMUNICATION FOR INITIALIZING IMPOSSIBLE, INSPECTION, Subaru Select Monitor.> 5) Record all the DTCs and freeze frame data.	Is DTC displayed?	Go to step **4.**	Go to step **3.**
3	**PERFORM GENERAL DIAGNOSTICS.** 1) Inspect using “General Diagnostic Table”. <Ref. to OD(diag)-29, INSPECTION, General Diagnostic Table.> 2) Perform the clear memory mode. <Ref. to OD(diag)-20, OPERATION, Clear Memory Mode.> 3) Perform the inspection mode. <Ref. to OD(diag)-19, PROCEDURE, Inspection Mode.> 4) Read the DTC. <Ref. to OD(diag)-18, OPERATION, Read Diagnostic Trouble Code (DTC).> 5) Check the DTC does not displayed.	Do the OD warning light and airbag warning light go off after starting the engine?	Finish the diagnosis.	Check the combination meter circuit. <Ref. to OD(diag)-21, Diagnostic Procedure when Airbag Warning Light Illuminated.>

	Step	Check	Yes	No
4	**PERFORM DIAGNOSIS.** 1) Refer to “List of Diagnostic Trouble Code (DTC)”. NOTE: For the DTC list, refer to the “List of Diagnostic Trouble Code (DTC)”. <Ref. to OD(diag)-22, LIST, List of Diagnostic Trouble Code (DTC).> 2) Correct the faulty part. 3) Perform the clear memory mode. <Ref. to OD(diag)-20, OPERATION, Clear Memory Mode.> 4) Perform the inspection mode. <Ref. to OD(diag)-19, PROCEDURE, Inspection Mode.> 5) Read the DTC. <Ref. to OD(diag)-18, OPERATION, Read Diagnostic Trouble Code (DTC).>	Is DTC displayed?	Repeat the step 4 until no more DTC is shown.	Finish the diagnosis.

2. Check List for Interview

A: CHECK

Customer's Name		Inspector's Name	
Date vehicle brought in	/ /	Registration no.	
Odometer reading	km miles	V.I.N.	
Date problem occurred	/ /	Registration year	/ /
Weather	❑ Fine ❑ Cloudy ❑ Rainy ❑ Snowy ❑ Others:		
Temperature	°C (°F)		
Road condition	❑ Level road ❑ Uphill ❑ Downhill ❑ Rough road ❑ Others:		
Seat slide position when trouble occurred			
Seat reclining position when trouble occurred			
Check airbag warning light	❑ Normal (After turning the ignition switch to ON, lit for 6 seconds and goes off.) ❑ Remains ON ❑ Remains OFF		
Seat slide	❑ Smooth ❑ Stick ❑ Does not move ❑ Others ( )		
Seat reclining	❑ Smooth ❑ Stick ❑ Does not move ❑ Others ( )		
Is there any heavy goods in the seat back pocket?	❑ Yes ( ) ❑ No		
Is there any material stuck around the seat?	❑ Yes ❑ No		
Damage on body	❑ Yes ❑ No		
DTC output (Occupant detection system)	❑ Yes (Code:) ❑ No		
DTC output (Airbag system)	❑ Yes (Code:) ❑ No		
Sensor output when seat is empty Measured by Subaru Select Monitor*	Rear Left		
	Rear Right		
	Front Left		
	Front Right		
	Wsum		
Sensor output when special tool weight A and special tool weight B loaded Measured by Subaru Select Monitor*	Rear Left		
	Rear Right		
	Front Left		
	Front Right		
	Wsum		

* Measure the sensor output value with the same seat position as system calibration.

3. General Description

A: CAUTION

1. SRS AIRBAG SYSTEM

CAUTION:
• All the airbag system wiring harnesses and connectors are colored yellow. Do not use the electrical test equipment on these circuits.
• Be careful not to damage the airbag system wiring harness and connector when servicing the occupant detection system.

B: INSPECTION

Before performing diagnosis, check the following items which might affect the occupant detection system problems.

1. BATTERY

Measure the battery voltage and specific gravity of electrolyte, and check the electrolyte amount.

Standard voltage:
12 V, or more

Specific gravity:
1.260, or more

Electrolyte:
Between the upper level and lower level

2. AIRBAG SYSTEM

Read the DTC of airbag system, and check that there is no malfunction in airbag system.

Standard:
DTC is not displayed.

C: PREPARATION TOOL

1. SPECIAL TOOL

ILLUSTRATION	TOOL NUMBER	DESCRIPTION	REMARKS
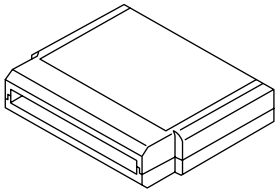 ST24082AA260	24082AA260	CARTRIDGE	Troubleshooting for electrical system.
ST22771AA030	22771AA030	SUBARU SELECT MONITOR KIT	Troubleshooting for electrical system.

ILLUSTRATION	TOOL NUMBER	DESCRIPTION	REMARKS
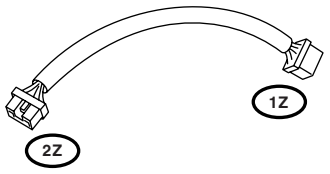 ST98299AG050	98299AG050	TEST HARNESS Z	Used for checking power supply for occupant detection control module harness.
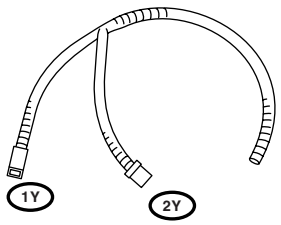 ST98299AG040	98299AG040	TEST HARNESS Y	• Used for checking buckle switch. • Used for checking buckle switch and seat position sensor.
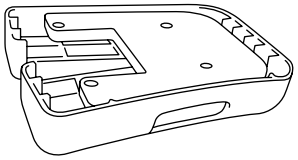 ST98399AG000	98399AG000	SPECIAL TOOL WEIGHT A	• Used for system calibration of occupant detection system. • Used with SPECIAL TOOL WEIGHT B (98399AG010).
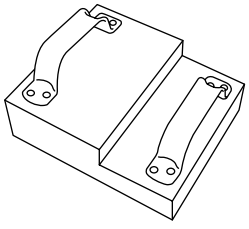 ST98399AG010	98399AG010	SPECIAL TOOL WEIGHT B	• Used for system calibration of occupant detection system. • Used with SPECIAL TOOL WEIGHT A (98399AG000).

ILLUSTRATION	TOOL NUMBER	DESCRIPTION	REMARKS
ST64186AG00A	64186AG00A	SPACER KIT OCCUPANT	Used for adjusting occupant detection system calibration.

NOTE:
Special tool weight A and special tool weight B are supplied in a container as system calibration weight kit.

2. GENERAL TOOL

TOOL NAME	REMARKS
Circuit tester	Used for measuring resistance, voltage and current.

4. Electrical Component Location

A: LOCATION

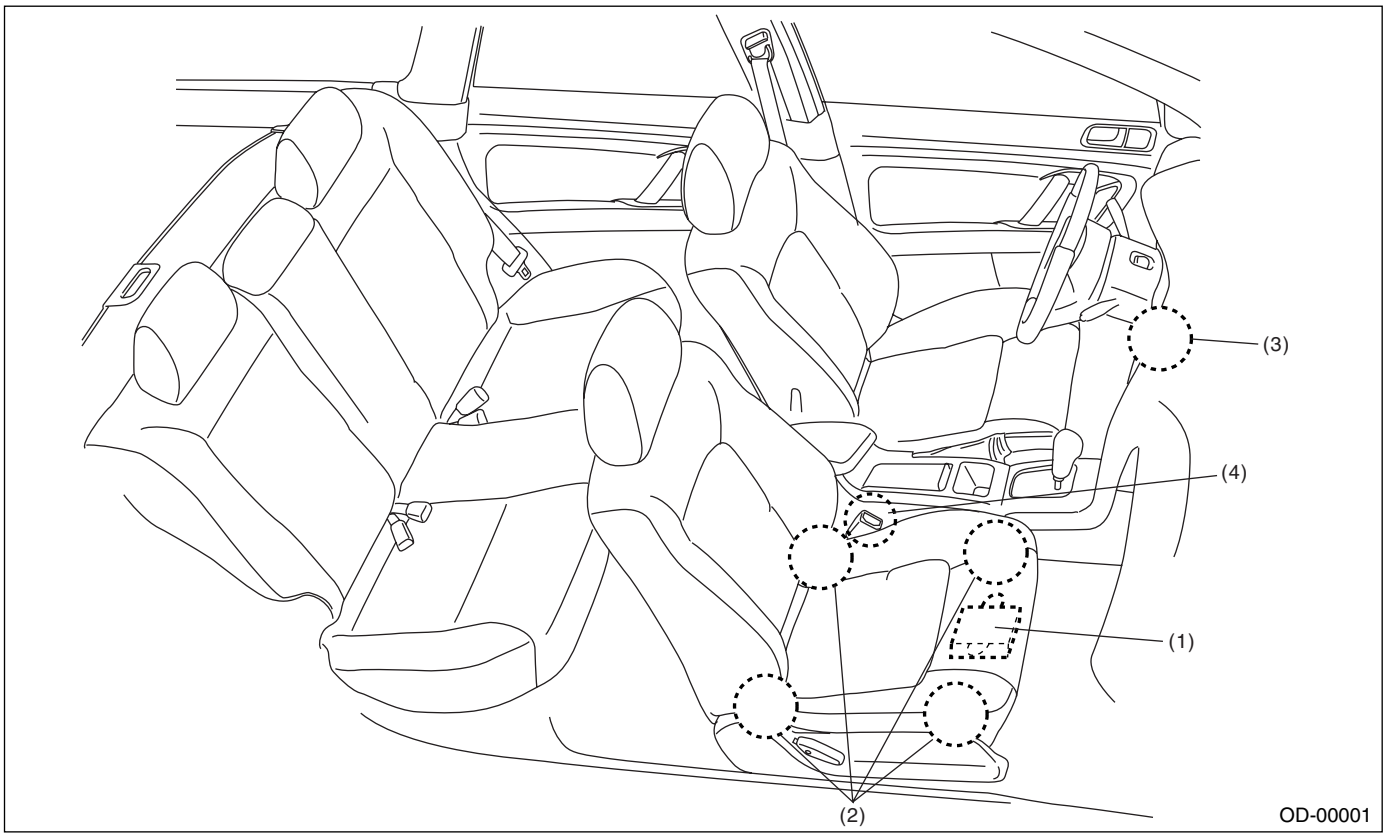

(1) Occupant detection control module
(2) Load cell sensor
(3) Airbag ON/OFF indicator light
(4) Buckle switch (Passenger's seat)

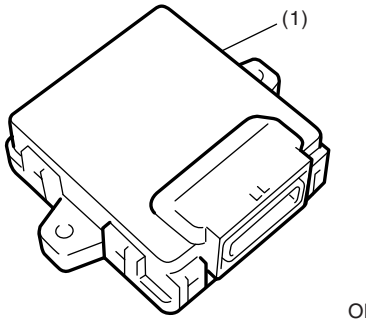

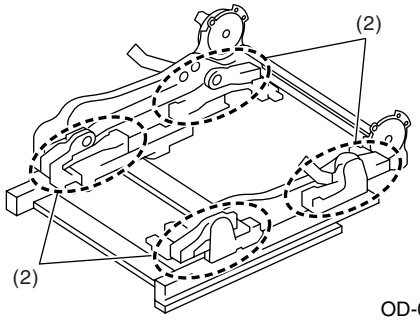

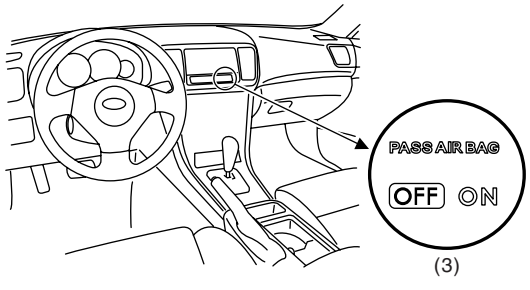

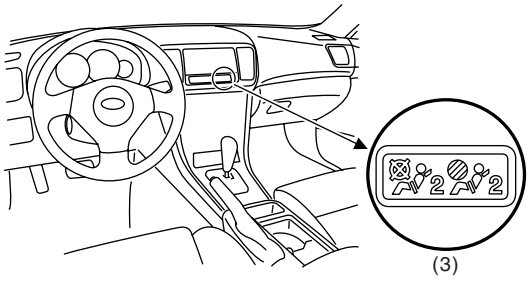

5. Control Module I/O Signal

A: ELECTRICAL SPECIFICATION

CAUTION:
Never disassemble or disconnect the control module, load cell sensor or coupling harness, since each component of occupant detection system is assembled as seat frame assembly. (Disconnection from body harness connector, and disconnection of side airbag, buckle switch and power seat circuit connector are OK.)

Terminal Name		Terminal No.	Input/Output value	Remarks
Battery voltage		26	9 — 16 V	Always
Ignition – SW		12	9 — 16 V	When ignition switch ON
Airbag control module communication	(COM)	13	Open collector terminal	Communication line
Airbag control module communication	(GND)	24	0 V	Communication line
Load cell sensor 1	(Vcc)	8	0 — 5 V	Load cell sensor power supply
	(Vout)	7	0.5 — 4.5 V	Sensor output voltage
	(GND)	20	0 V	Sensor ground
Load cell sensor 2	(Vcc)	6	0 — 5 V	Load cell sensor power supply
	(Vout)	5	0.5 — 4.5 V	Sensor output voltage
	(GND)	18	0 V	Sensor ground
Load cell sensor 3	(Vcc)	4	0 — 5 V	Load cell sensor power supply
	(Vout)	3	0.5 — 4.5 V	Sensor output voltage
	(GND)	16	0 V	Sensor ground
Load cell sensor 4	(Vcc)	2	0 — 5 V	Load cell sensor power supply
	(Vout)	1	0.5 — 4.5 V	Sensor output voltage
	(GND)	14	0 V	Sensor ground
Buckle switch		9	0 — Ignition voltage	Ignition voltage when switch ON
Buckle switch	(GND)	22	0 V	Switch ground
Subaru Select Monitor communication		11	Serial communication	

B: WIRING DIAGRAM

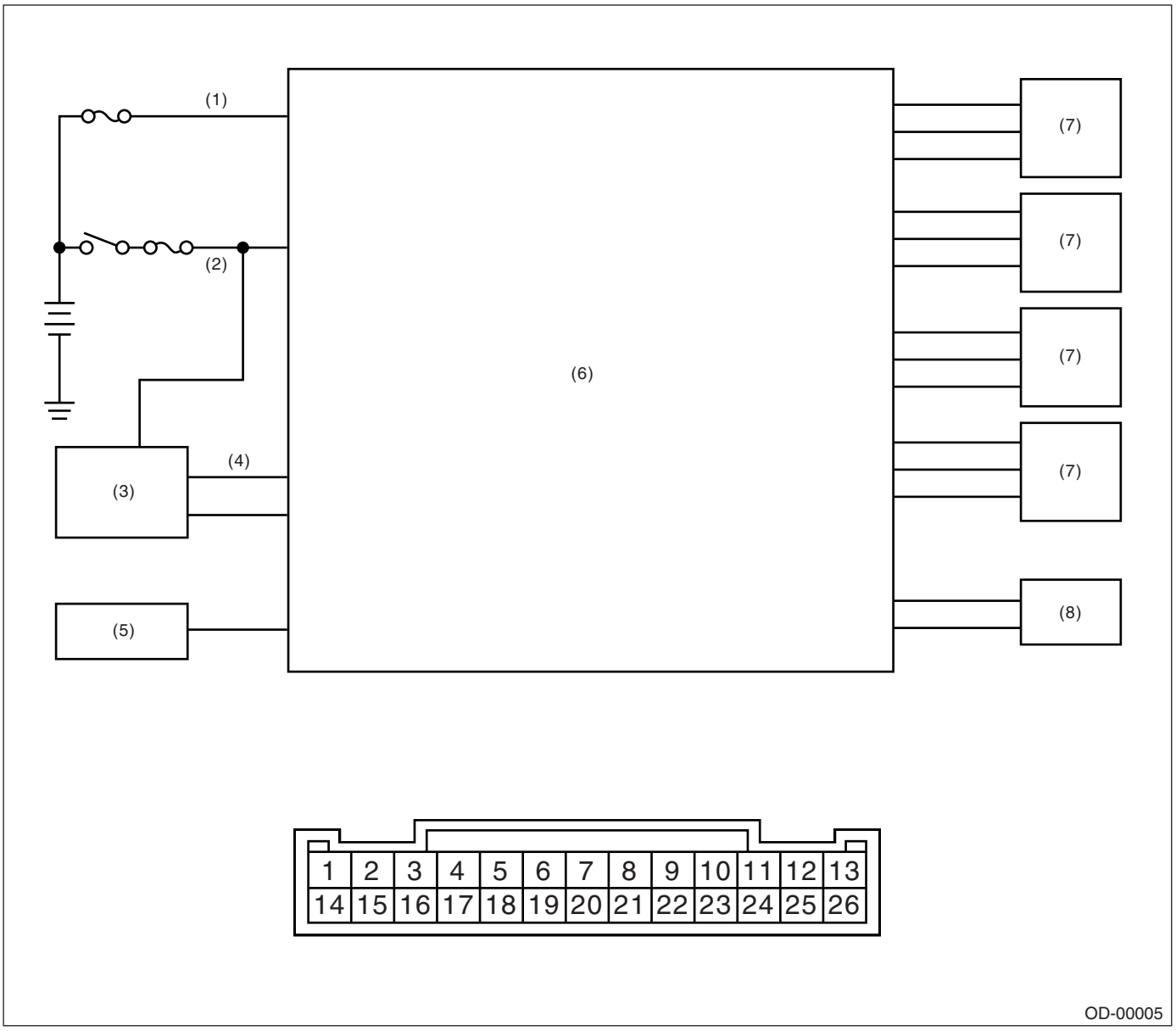

(1) Battery power supply
(2) Ignition power supply
(3) Airbag control module
(4) Airbag control module communication line
(5) Subaru select monitor
(6) Occupant detection control module
(7) Occupant detection sensor 1 — 4
(8) Seat belt buckle RH

6. Subaru Select Monitor

A: OPERATION

1. READ DIAGNOSTIC TROUBLE CODE (DTC)

1) Prepare the Subaru Select Monitor kit. <Ref. to OD(diag)-5, SPECIAL TOOL, PREPARATION TOOL, General Description.>

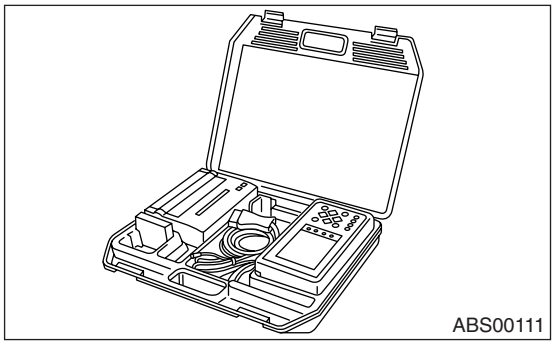

2) Connect the diagnosis cable to Subaru Select Monitor.
3) Insert the cartridge to Subaru Select Monitor. <Ref. to OD(diag)-5, SPECIAL TOOL, PREPARATION TOOL, General Description.>

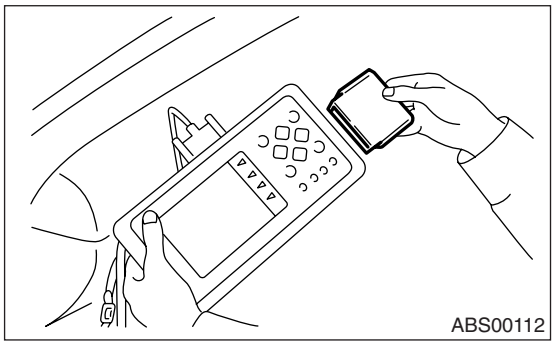

4) Connect the Subaru Select Monitor to data link connector.

(1) Data link connector is located in the lower portion of instrument panel (on the driver's side).

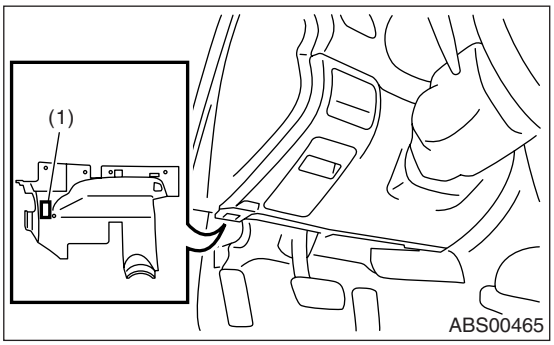

(1) Data link connector

(2) Connect the diagnosis cable to data link connector.

CAUTION:
Do not connect the scan tools except for Subaru Select Monitor.

5) Turn the ignition switch to ON (engine OFF) and Subaru Select Monitor switch to ON.

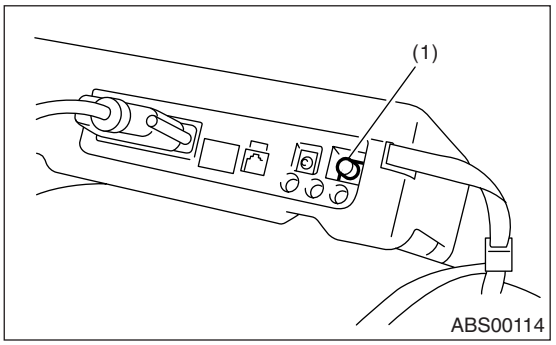

(1) Power switch

6) On the «Main Menu» display screen, select the {Each System Check} and press the [YES] key.
7) On the «System Selection Menu» display screen, select the {Occupant Sensing System} and press the [YES] key.
8) Press the [YES] key after the {Occupant Sensing System} is displayed.
9) On the «Occupant Sensing System» display screen, select the {DTC Display} and press the [YES] key.

NOTE:
• For details concerning operation procedure, refer to "SUBARU SELECT MONITOR OPERATION MANUAL".
• For details concerning DTCs, refer to the "List of Diagnostic Trouble Code (DTC)". <Ref. to OD(diag)-22, List of Diagnostic Trouble Code (DTC).>
• Display all the DTCs detected.
• If a particular DTC is not properly stored in memory (due to a drop in occupant detection control module power supply, etc.) on the occurrence of a problem, the DTC which is suffixed with a question mark appears on the Subaru Select Monitor display. This shows it may be an unreliable reading.

10) If the occupant detection control module cannot communicate with Subaru Select Monitor, check the communication circuit. <Ref. to OD(diag)-14, COMMUNICATION FOR INITIALIZING IMPOSSIBLE, INSPECTION, Subaru Select Monitor.>
11) When DTC is not displayed, check the meter circuit or select monitor communication circuit. <Ref. to OD(diag)-14, INSPECTION, Subaru Select Monitor.>

2. SENSOR DATA OUTPUT

1) On the «Occupant Sensing System» main menu display screen, select the {Sensor Data Output} and press the [YES] key.

NOTE:
Do not touch the vehicle within 20 seconds after pressing the [YES] key. Output value may be changed when sensing the pitching and vibration of the vehicle while reading sensor data output.

2) Sensor output will be displayed in the (*****). Press the [YES] key to move to the main menu.

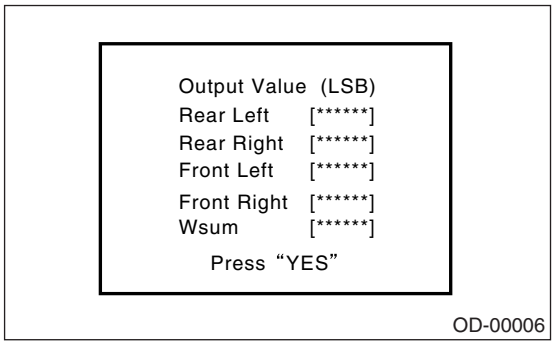

3. CLEAR MEMORY MODE

1) Select the {Occupant Sensing System} from the main menu, and press the [YES] key.
2) On the «Occupant Sensing System» display screen, select the {Clear Memory} and press the [YES] key.
3) When the {Done} is shown on the display, DTCs will be erased.

NOTE:
When the {Cannot erase the DTC stored, perform the diagnosis according to trouble symptom} is shown, read the DTC and perform the diagnosis according to DTC.

4. SYSTEM CALIBRATION

CAUTION:
• When a trouble is occurred during the system calibration resulting in interruption of sensor data output, the DTC 28 {Adjustment / Inspection halt} of occupant detection system will be detected to illuminate the airbag warning light. In this case, perform the system calibration again, or perform the system calibration again after repairing the trouble cause.
• Compartment temperature during the system calibration must be within 0 — 40°C.

1) Park the vehicle on a level surface.
2) Unload the cargo and set the vehicle in curb weight condition.
3) Connect the Subaru Select Monitor to vehicle, and then turn the ignition switch to ON.
4) Turn the Subaru Select Monitor switch to ON.
5) On the «Main Menu» display screen, select the {Each System Check} and press the [YES] key.
6) On the «System Selection Menu» display screen, select the {Occupant Sensing System} and press the [YES] key.
7) After the {2005 LOAD CELL TYPE OCCUPANT DETECTION SYSTEM Press the [YES] key} is displayed, check the model year and press the [YES] key.
8) On the {OCCUPANT DETECTION SYSTEM} display screen, select the {1.System Calibration} and press the [YES] key.
9) When the {Complete all calibration checks, illuminated and a trouble code saved. Continue: "YES", Quit: "NO"} is displayed, press the [YES] key.
10) When the {Diagnostic code check No trouble Continue: "YES", Quit: "NO"} is displayed, press the [YES] key.

NOTE:
When a DTC is detected, {Diagnostic code check some troubles occur See service manual Press "YES" to END} is displayed. Inspect the DTC, and perform the calibration again after repairing trouble cause.

11) When the {Empty the passenger seat Continue: "YES", Quit: "NO"} is displayed, empty the passenger's seat and press the [YES] key.
12) When the {Adjust the passenger seat to the condition shown in Service manual Continue: "YES", Quit: "NO"} is displayed, slide the passenger's seat to the rear most and lock it securely, and lock the backrest in the fore most securely, then press the [YES] key. (For the model with power seat, operate the slide switch or reclining switch fully until no longer moved.)

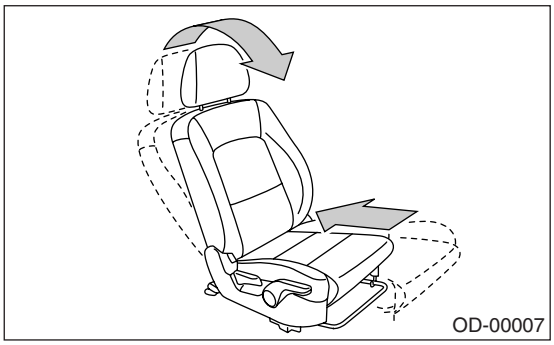

NOTE:
• After pressing the [YES] key, "Now processing ···Wait for a while. Do not touch or give impact to vehicle and seat" is displayed. Do not touch the vehicle within 20 seconds while the message is displayed.
• When the {System calibration is unsuccessful See service manual Press "YES" to END} is displayed, go to step 19.

13) When the {Threshold adjustment Is success fully completed weight inspection in service manual continue: “YES”, Quit: “NO”} is displayed, press the [YES] key.
14) When the {Empty the passenger seat Continue: “YES”, Quit: “NO”} is displayed, make sure the passenger’s seat is empty and press the [YES] key.
15) When the {Adjust the passenger seat to the condition shown with service manual Continue: “YES”, Quit: “NO”} is displayed, check the seat position and press the [YES] key.

NOTE:
• Slide the seat to the rearmost position and lock it securely. Lock the backrest securely in the front most position. (For the model with power seat, operate the slide switch or reclining switch fully until no longer moved.)
• Diagnostic trouble code (DTC) is input when selecting the “NO” in this step.
• After pressing the [YES] key, “Now processing ···Wait for a while. Do not touch or give impact to vehicle and seat” is displayed. Do not touch the vehicle within 20 seconds while the message is displayed.
• When the {System calibration is unsuccessful See service manual Press “YES” to END} is displayed, go to step 19.

16) {input threshold weight mass (lbs) [00.0] Press “YES” After inputting weight mass} is displayed. Input the weight amount (79.1 lbs) and press the [YES] key.

NOTE:
When an incorrect weight amount is entered, error will be generated and the DTC will be input.

17) {Put threshold weight with the position on the passenger seat shown with service manual Continue: “YES”, Quit: “NO”} is displayed. Check the seat position, assemble the weight A and weight B, and then press the [YES] key.
ST1 98399AG000 SPECIAL TOOL WEIGHT A
ST2 98399AG010 SPECIAL TOOL WEIGHT B

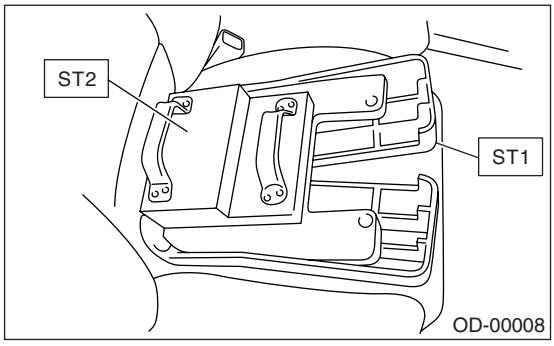

NOTE:
• DTC is detected when selecting the “NO” in this step.
• Place the weight in the seat center, making sure the firm contact with the backrest.
• Do not touch or give any impact to the vehicle within 20 seconds after pressing the [YES] key.
• When the {System calibration is unsuccessful See service manual Press “YES” to END} is displayed, go to step 19.

18) When the {System calibration Is successfully completed Press “YES” to END} is displayed, press the [YES] key to finish the diagnosis.
19) When the {System calibration is unsuccessful See service manual Press “YES” to END} is displayed, the system is malfunctioning. Turn the ignition switch to OFF once. Read the DTC, repair the trouble cause, and then perform the system calibration again. <Ref. to OD(diag)-18, Read Diagnostic Trouble Code (DTC).> <Ref. to OD(diag)-22, List of Diagnostic Trouble Code (DTC).>

CAUTION:
If the system adjustment fails and stop the operation, DTC {Adjustment / Inspection halt} will be recorded and airbag warning light will illuminate. If the DTC except {Adjustment / Inspection halt} is displayed, calibrate the system after the malfunction is repaired.

B: INSPECTION

1. COMMUNICATION FOR INITIALIZING IMPOSSIBLE

DETECTING CONDITION:
Defective harness connector
TROUBLE SYMPTOM:
Communication is impossible between occupant detection control module and Subaru Select Monitor.
WIRING DIAGRAM:

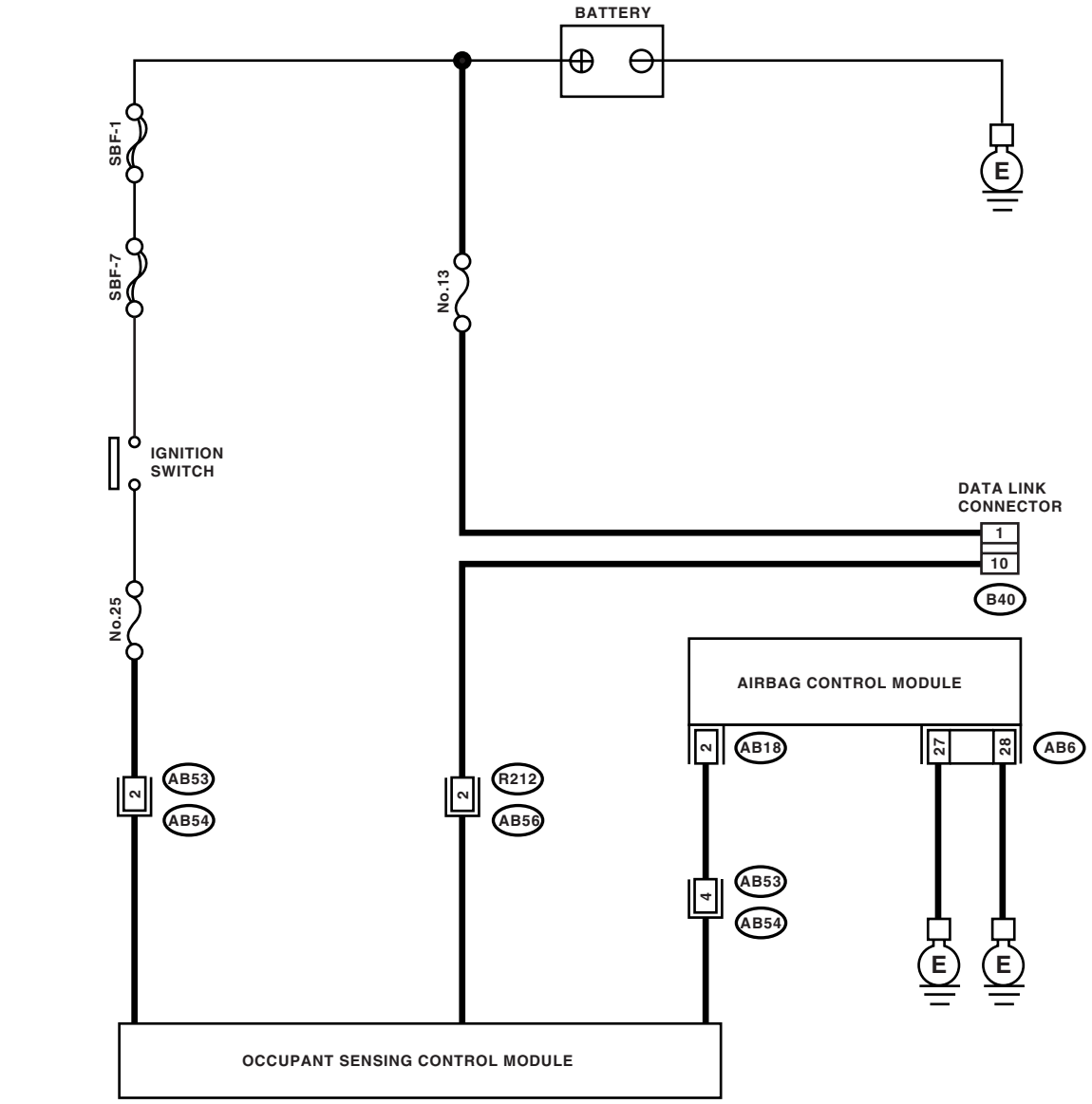

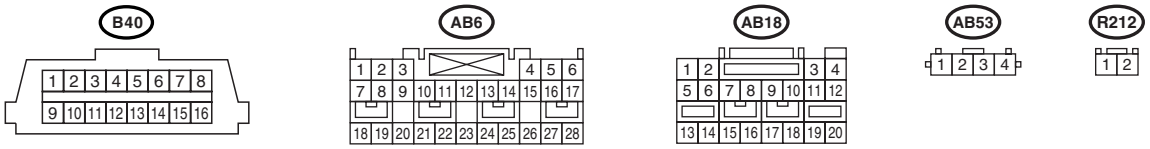

OD-00009

	Step	Check	Yes	No
1	**CHECK IGNITION SWITCH.**	Is the ignition switch ON?	Go to step **2.**	Turn the ignition switch to ON, and select the occupant detection system mode using Subaru Select Monitor.
2	**CHECK BATTERY.** 1) Turn the ignition switch to OFF. 2) Measure the battery voltage.	Is the voltage 11 V or more?	Go to step **3.**	Charge or replace the battery.
3	**CHECK BATTERY TERMINAL.**	Is there poor contact at battery terminal?	Repair or tighten the battery terminal.	Go to step **4.**
4	**CHECK SUBARU SELECT MONITOR COMMUNICATION.** 1) Turn the ignition switch to ON. 2) Using the Subaru Select Monitor, check whether communication to other system can be executed normally.	Are the system name and model year displayed on Subaru Select Monitor?	Go to step **8.**	Go to step **5.**
5	**CHECK OCCUPANT DETECTION CONTROL MODULE CONNECTOR.** Turn the ignition switch to OFF.	Is the occupant detection control module connectors and body harness connectors are connected securely?	Go to step **6.**	Connect the occupant detection control module connector and body harness connector.
6	**CHECK SUBARU SELECT MONITOR COMMUNICATION.** 1) Turn the ignition switch to OFF. 2) Disconnect the occupant detection control module connector. 3) Turn the ignition switch to ON. 4) Check whether communication to other systems can be executed normally.	Are the system name and model year displayed on Subaru Select Monitor?	Replace the seat cushion frame assembly. <Ref. to SE-9, REMOVAL, Front Seat.>	Go to step **7.**
7	**CHECK HARNESS CONNECTOR BETWEEN EACH CONTROL UNIT AND DATA LINK CONNECTOR.** 1) Turn the ignition switch to OFF. 2) Disconnect the occupant detection control module connector (R212). 3) Measure the resistance between data link connector and chassis ground. ***Connector & terminal*** ***(B40) No. 10 — Chassis ground:***	Is the resistance more than 1 MΩ?	Go to step **8.**	Check harness and connector between each control unit and data link connector.
8	**CHECK THE OUTPUT SIGNAL FOR OCCUPANT DETECTION CONTROL MODULE.** 1) Turn the ignition switch to OFF. 2) Measure the voltage between occupant detection control module and chassis ground. ***Connector & terminal*** ***(B40) No. 10 (+) — Chassis ground (−):***	Is the voltage less than 1 V?	Go to step **9.**	Repair and replace the harness connector between each control unit and data link connector.
9	**CHECK HARNESS CONNECTOR BETWEEN OCCUPANT DETECTION CONTROL MODULE AND DATA LINK CONNECTOR.** Measure the resistance between occupant detection control module connector and data link connector. ***Connector & terminal*** ***(R212) No. 2 — (B40) No. 10:***	Is the resistance less than 0.5 Ω?	Go to step **10.**	Repair and replace the harness connector between occupant detection control module and data link connector.

	Step	Check	Yes	No
10	**CHECK POWER SUPPLY CIRCUIT.** 1) Disconnect connector (AB53) from vehicle harness. 2) Connect the test harness Z (AB53) to connector. 3) Turn the ignition switch to ON. (Engine OFF) 4) Measure the voltage between connector (2Z) in the test harness Z and chassis ground. ***Connector & terminal*** ***(2Z) No. 2 (+) — Chassis ground (−):***	Is the voltage 10 V or more?	Go to step **11.**	Repair or replace the vehicle harness.
11	**CHECK HARNESS CONNECTOR BETWEEN OCCUPANT DETECTION CONTROL MODULE AND CHASSIS GROUND.** 1) Turn the ignition switch to OFF. 2) Measure the resistance between connector (2Z) in the test harness Z and chassis ground. ***Connector & terminal*** ***(2Z) No. 1 — Chassis ground:***	Is the resistance less than 10 Ω?	Go to step **12.**	Repair or replace the body harness.
12	**CHECK POOR CONTACT IN CONNECTORS.**	Is there poor contact in control module power supply, ground circuit and data link connector?	Replace the airbag harness.	Replace the seat cushion frame assembly. <Ref. to SE-9, REMOVAL, Front Seat.>

7. Passenger's Airbag ON/OFF Indicator Light Illumination Pattern

A: INSPECTION

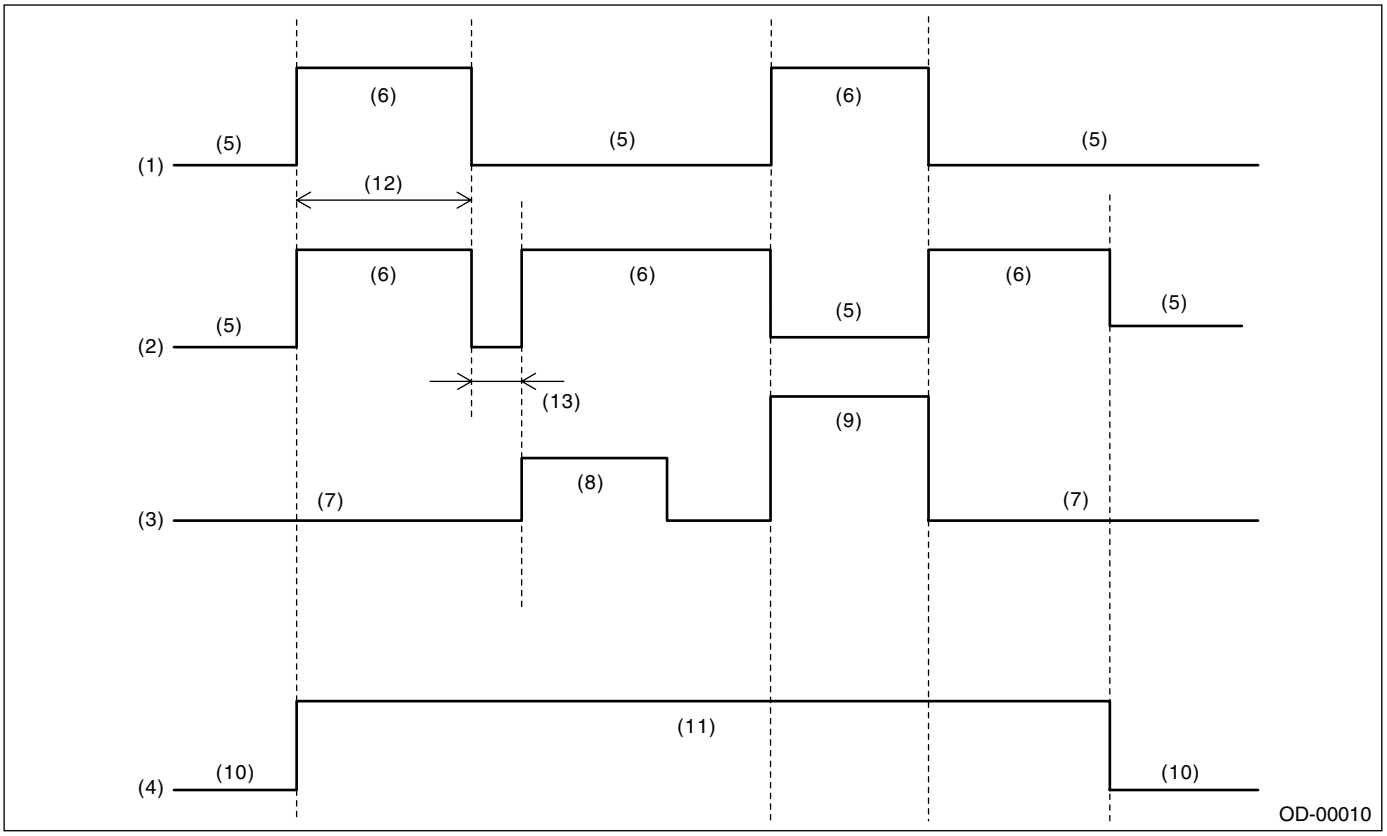

(1)	Passenger's airbag ON indicator light	(4)	Ignition switch	(9)	Adult
(2)	Passenger's airbag OFF indicator light	(5)	Light OFF	(10)	OFF
(3)	Occupant seating	(6)	Light ON	(11)	ON
		(7)	Empty	(12)	Approx. 6 sec.
		(8)	Child	(13)	Approx. 2 sec.

NOTE:
After the ignition switch is ON, the passenger's airbag ON/OFF indicator light for both ON and OFF come on for 6 seconds then turn off for 2 seconds, and then either ON or OFF will be illuminated for occupants.

8. Read Diagnostic Trouble Code (DTC)

A: OPERATION

For details about reading of DTCs, refer to the “SUBARU SELECT MONITOR”. <Ref. to OD(diag)-11, Subaru Select Monitor.>

9. Inspection Mode

A: PROCEDURE

Recreate the circumstance by referring to the conditions described in the checklist.

CAUTION:
• If any damage is observed for vehicle appearance, repair or replace before performing inspection mode.
• If the airbag has been deployed, repair or replace before performing inspection mode.

10.Clear Memory Mode

A: OPERATION

For details concerning DTC clear operation, refer to “Subaru Select Monitor”. <Ref. to OD(diag)-11, Subaru Select Monitor.>

11.Diagnostic Procedure when Airbag Warning Light Illuminated

A: INSPECTION

• When a problem has occurred to occupant detection system, the airbag warning light illuminates to notify the occurrence of malfunction.
• Read the DTC of airbag system, and perform the diagnosis of occupant detection system when the DTC of occupant detection system failure is displayed.

	Step	Check	Yes	No
1	**CHECK AIRBAG WARNING LIGHT.** Turn the ignition switch to ON to check if the airbag warning light illuminates.	Does the airbag warning light illuminates for 6 seconds then go off?	Finish the diagnosis.	Go to step **2.**
2	**CHECK DTC.** Connect the Subaru Select Monitor to data link connector, and read the DTC of airbag system.	Is DTC displayed on Subaru Select Monitor?	Inspect using “Diagnosis procedure with Diagnostic Trouble Code (DTC)” for airbag system. <Ref. to AB(diag)-46, Diagnostic Chart with Trouble Code.>	Go to step **3.**
3	**CHECK DTC.** Read the DTC of occupant detection system using Subaru Select Monitor.	Is the following DTC displayed on Subaru Select Monitor? / Adjustment / Inspection halt / ODS failure / Buckle Switch RH failure	Inspect using “Diagnosis procedure with Diagnostic Trouble Code (DTC)” for occupant detection system. <Ref. to OD(diag)-23, Diagnostic Procedure with Diagnostic Trouble Code (DTC).>	Repair or replace the harness between combination meter and airbag control module.

12.List of Diagnostic Trouble Code (DTC)

A: LIST

DTC No.	Display	Contents of diagnosis	Index No.
29	29 ODS failure	• Occupant detection module grounding circuit is faulty. • Control module is faulty. • Load cell sensor is faulty. • Airbag harness is faulty. • Seat harness is faulty.	<Ref. to OD(diag)-25, DTC 29 ODS FAILURE, Diagnostic Procedure with Diagnostic Trouble Code (DTC).>
37	37 Buckle Switch RH failure	• Buckle switch is shorted. • Buckle switch is open. • Seat harness is faulty. • Control module is faulty.	<Ref. to OD(diag)-26, DTC 37 BUCKLE SWITCH RH FAILURE, Diagnostic Procedure with Diagnostic Trouble Code (DTC).>
29	29 Power supply failure	• Seat harness is faulty. • Airbag harness is faulty. • Control module is faulty. • Blown out fuse	<Ref. to OD(diag)-27, DTC 29 POWER SUPPLY FAILURE, Diagnostic Procedure with Diagnostic Trouble Code (DTC).>
28	28 Adjustment / Inspection halt	• Calibration service is incomplete. • Inspection service has been interrupted. • Other diagnostic trouble code is entered. • Seat position is incorrect. • Seat installation is faulty. • Material is stuck around seat. • Adjustment weight is faulty. • Distortion of vehicle floor • Backrest frame assembly is faulty. • Seat cushion frame assembly is faulty. • Out of range for temperature in the vehicle while adjustment.	<Ref. to OD(diag)-23, DTC 28 ADJUSTMENT / INSPECTION HALT, Diagnostic Procedure with Diagnostic Trouble Code (DTC).>

13.Diagnostic Procedure with Diagnostic Trouble Code (DTC)

A: DTC 28 ADJUSTMENT / INSPECTION HALT

DETECTING CONDITION:

- Seat calibration is incomplete.
- A problem has occurred in the sensor or control module.
- Malfunction occurs on harness.

CAUTION:
If the system calibration or inspection service has been interrupted before completing, the indicator light of airbag system will come on and the DTC will be input.

	Step	Check	Yes	No
1	**PERFORM SYSTEM CALIBRATION.** Perform the system calibration for system using with the Subaru Select Monitor. NOTE: For detail procedure, refer to “System Calibration”. <Ref. to OD(diag)-12, SYSTEM CALIBRATION, OPERATION, Subaru Select Monitor.>	Is system calibration completed correctly?	Perform the clear memory mode. <Ref. to OD(diag)-11, Subaru Select Monitor.> Using Subaru Select Monitor, check that the DTC 28 is not output.	Go to step **2.**
2	**CHECK DTC.** Connect the Subaru Select Monitor to data link connector, and read the DTC.	Is DTC except “DTC 28 Adjustment / Inspection halt” displayed on Subaru Select Monitor?	Inspect using “Diagnosis procedure with Diagnostic Trouble Code (DTC)”. <Ref. to OD(diag)-23, Diagnostic Procedure with Diagnostic Trouble Code (DTC).>	Go to step **3.**
3	**CHECK SEAT.** NOTE: Remove materials interrupting seat slide or heavy materials in back pocket.	Is there a problem on each part of seat? / Do reclining mechanism and slide mechanism operate smoothly and lock securely? / No transformation, crack and inclination are on each part of seat.	Go to step **4.**	Replace problem parts. <Ref. to SE-9, Front Seat.>
4	**CHECK SEAT POSITION.**	Is the seat set in the same position as the system calibration procedure?	Go to step **5.**	Adjust the seat position in system calibration procedure. <Ref. to OD(diag)-12, SYSTEM CALIBRATION, OPERATION, Subaru Select Monitor.>
5	**CHECK WEIGHT FOR SYSTEM CALIBRATION.**	Is weight for system calibration designated in special tools used?	Go to step **6.**	Perform the system calibration using weight for system calibration designated as special tool.

	Step	Check	Yes	No
6	**CHECK SERVICE ENVIRONMENT.** Check that service environment (temperature in vehicle) is in the range of 0 — 40°C (32 — 104°F).	Is the temperature in vehicle in the range of specification?	Go to step **7.**	Perform the system calibration after the compartment temperature is in the range of specification.
7	**CHECK FLOOR PANEL.** Check that floor panel at the seat installation has no distortion or damage.	Is there serious distortion or damage on the floor panel?	Go to step **8.**	Perform the system calibration after repair for distortion or damage.
8	**CHECK CONDITION OF BACKREST INSTALLATION.** 1) Loosen the mounting bolt for seat hinge of backrest frame assembly. 2) Retighten to specified torque. <Ref. to SE-9, Front Seat.> 3) Perform the system calibration.	Is system calibration completed correctly?	Finish the diagnosis.	Go to step **9.**
9	**REPLACE BACKREST FRAME ASSEMBLY.** Replace backrest frame assembly and perform the system calibration.	Is system calibration completed correctly?	Finish the diagnosis.	Go to step **10.**
10	**REPLACE SEAT CUSHION FRAME ASSEMBLY.** Replace backrest frame assembly and perform the system calibration.	Is system calibration completed correctly?	Finish the diagnosis.	Go to step **11.**
11	**INSTALL SPACER KIT.** 1) Remove the mounting bolt for seat cushion frame assembly. 2) Install the spacer between RH seat cushion frame assembly and chassis. 3) Using the attached bolt, tighten seat cushion frame assembly to specified torque. <Ref. to SE-9, Front Seat.> 4) Perform the system calibration.	Is system calibration completed correctly?	Finish the diagnosis.	Go to step **12.**
12	**INSTALL SPACER KIT.** 1) Remove spacer and bolt installed in RH side. 2) Install the spacer between LH seat cushion frame assembly and chassis. 3) Using the attached bolt, tighten seat cushion frame assembly to specified torque. <Ref. to SE-9, Front Seat.> 4) Perform the system calibration.	Is the system calibration completed correctly?	Finish the diagnosis.	Perform diagnosis from step1.

B: DTC 29 ODS FAILURE

DETECTING CONDITION:

- Malfunction is occurred in load cell sensor.
- Malfunction is occurred in occupant detection control module.
- Malfunction is occurred in occupant detection system harness.

CAUTION:
Seat cushion frame assembly is a non-disassemble part.

	Step	Check	Yes	No
1	**PERFORM SYSTEM CALIBRATION.** <Ref. to OD(diag)-12, SYSTEM CALIBRATION, OPERATION, Subaru Select Monitor.>	Is the system calibration completed correctly?	Go to step **2.**	Replace the seat cushion frame assembly. <Ref. to SE-9, REMOVAL, Front Seat.>
2	**READ DTC.** 1) Using Subaru Select Monitor, clear the memory. <Ref. to OD(diag)-12, CLEAR MEMORY MODE, OPERATION, Subaru Select Monitor.> 2) Read the DTC. <Ref. to OD(diag)-11, READ DIAGNOSTIC TROUBLE CODE (DTC), OPERATION, Subaru Select Monitor.>	Is DTC except DTC29 displayed on Subaru Select Monitor?	Perform the diagnosis according to DTC. <Ref. to OD(diag)-22, List of Diagnostic Trouble Code (DTC).>	Finish the diagnosis.

C: DTC 37 BUCKLE SWITCH RH FAILURE

DETECTING CONDITION:

- Buckle switch circuit is shorted to ground.
- Buckle switch circuit is shorted to power supply.
- Buckle switch circuit is open.

WIRING DIAGRAM

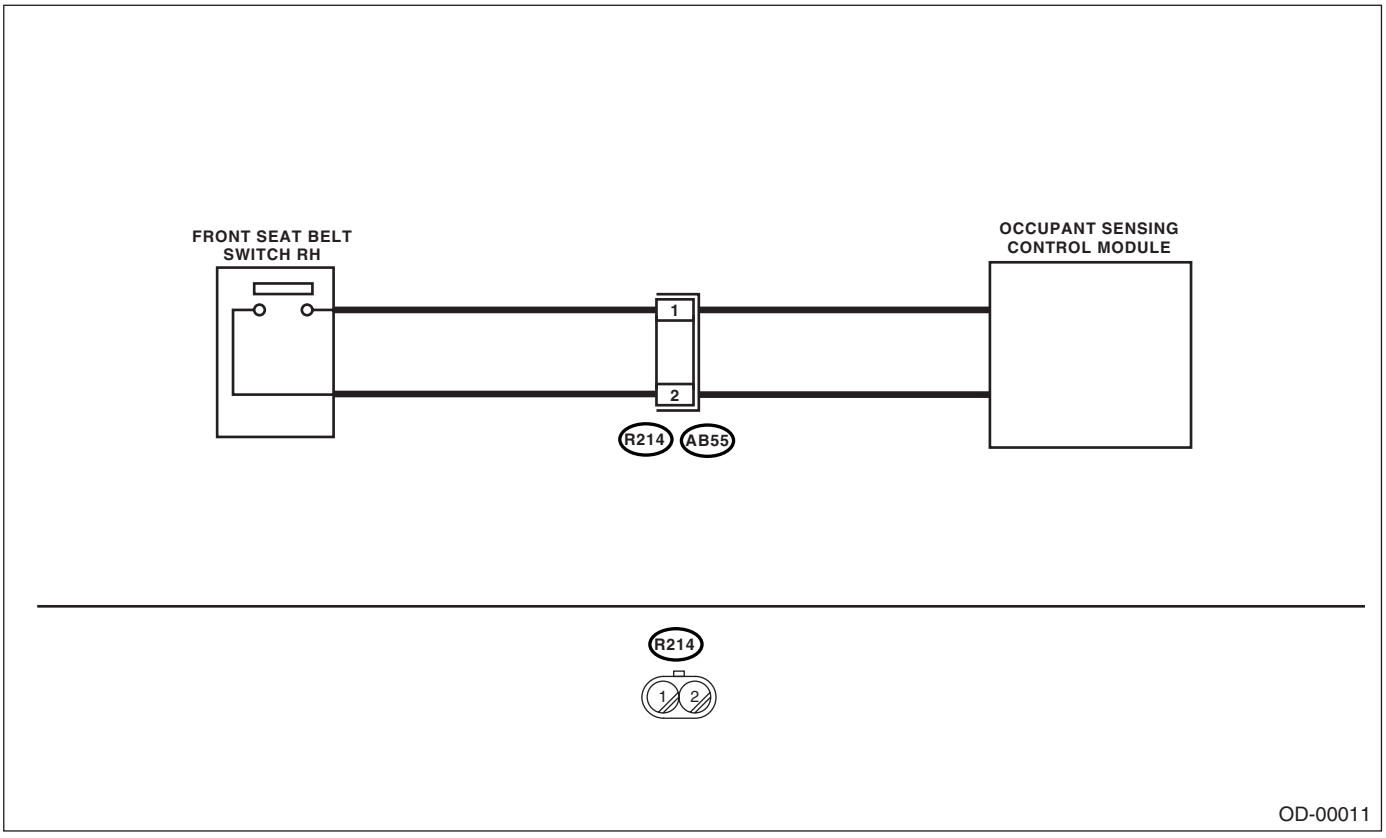

	Step	Check	Yes	No
1	**CHECK BUCKLE SWITCH (RH).** 1) Turn the ignition switch to OFF, disconnect the battery ground cable, and wait more than 20 seconds. 2) Disconnect the seat belt switch connector (R214), connect the connector (1Y) in the test harness Y to connector (AB55). 3) Connect the battery ground cable and turn the ignition switch to ON.	Does the airbag warning light illuminates for 6 seconds then go off?	Replace the buckle switch. <Ref. to SE-10, DISASSEMBLY, Front Seat.>	Replace the seat frame assembly. <Ref. to SE-9, REMOVAL, Front Seat.>

D: DTC 29 POWER SUPPLY FAILURE

DETECTING CONDITION:

- No power is supplied to occupant detection control module.
- Power supply circuit harness is faulty.
- Battery voltage is reduced.

CAUTION:
Seat cushion frame assembly is a non-disassemble part.

WIRING DIAGRAM

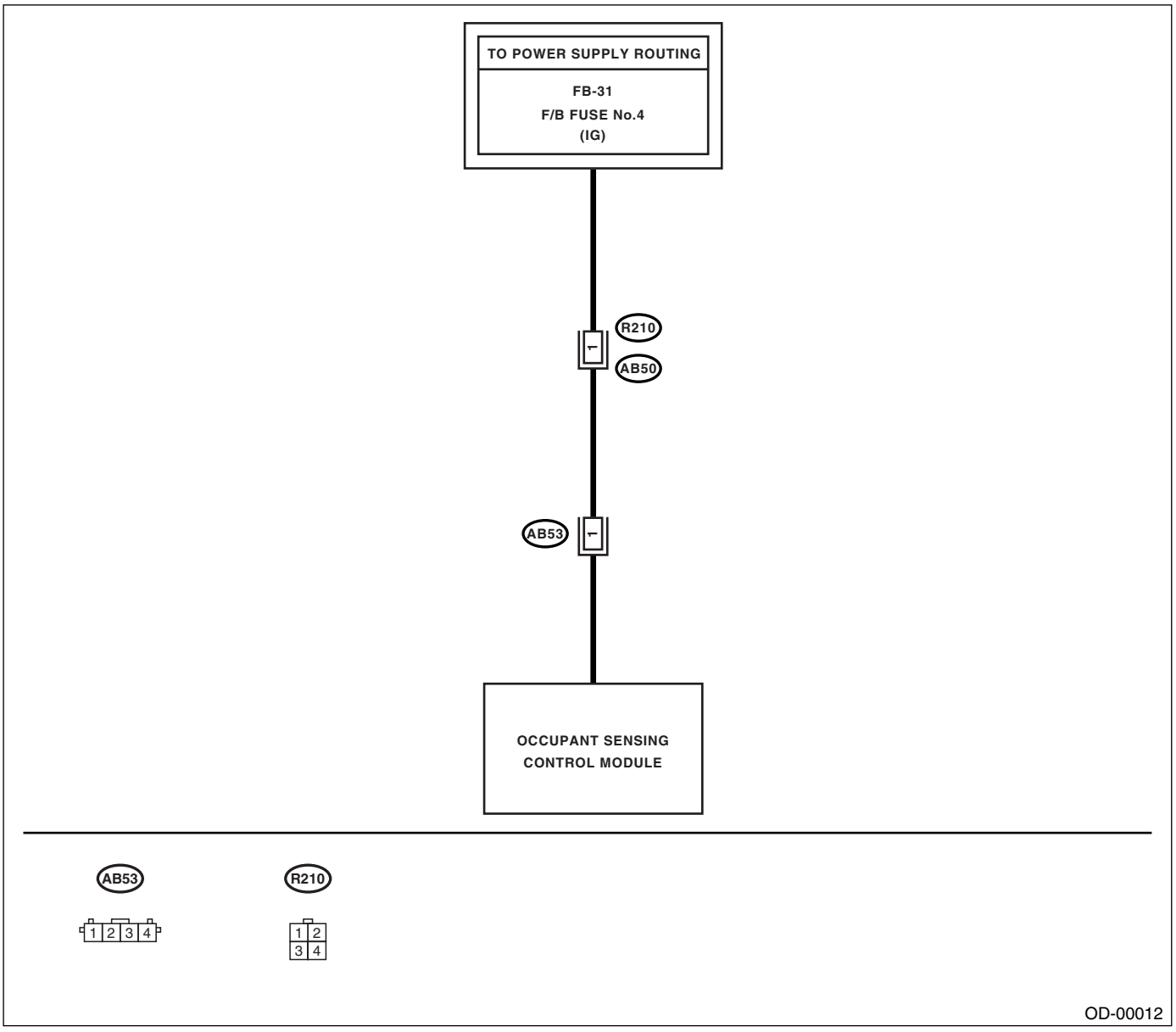

Step		Check	Yes	No
1	**CHECK BATTERY.**	Is the voltage more than 11 V?	Go to step **2.**	Charge or replace the battery.

	Step	Check	Yes	No
2	**CHECK HARNESS.** 1) Turn the ignition switch to OFF, disconnect the battery ground cable, and wait more than 20 seconds. 2) Disconnect the connector (AB53) from body harness. 3) Connect the connector (1Z) in the test harness Z to the connector (AB53). 4) Connect the battery ground cable to battery. 5) Measure the voltage between connector (2Z) in the test harness Z and chassis ground. ***Connector & terminal*** ***(1Z) No. 1 (+) — Chassis ground (−):***	Is the voltage more than 10 V?	Replace the seat cushion frame assembly. <Ref. to SE-9, REMOVAL, Front Seat.>	Go to step **3.**
3	**CHECK FUSE.** 1) Turn the ignition switch to OFF. 2) Remove the fuse No. 7 and perform visual inspection.	Is the fuse No. 7 blown out?	Replace the fuse.	Repair or replace the body harness.

14.General Diagnostic Table

A: INSPECTION

Symptom	Problem parts
Passenger's airbag ON/OFF indicator does not operate.	• Load cell sensor is faulty. • Airbag ON/OFF indicator is faulty. • Condition of installation for passenger's seat is faulty. • Damage for passenger's seat • Damage for floor panel
Passenger's seat belt warning does not operate properly.	• Buckle switch is faulty. • Buckle switch harness is faulty. • Occupant detection control module is faulty. • Passenger's seat control module harness is faulty. • Damage for passenger's seat
The airbag warning light comes on.	• Combination meter is faulty. • Airbag control module is faulty. • Steering roll connector is faulty. • Each airbag module is faulty.

SEAT BELT SYSTEM

SB

		Page
1.	General Description	2
2.	Pretensioner Connector	6
3.	Inspection Locations After a Collision	7
4.	Seat Belt Warning System	8
5.	Front Seat Belt	10
6.	Rear Seat Belt	13

1. General Description

A: COMPONENT

1. FRONT SEAT BELT

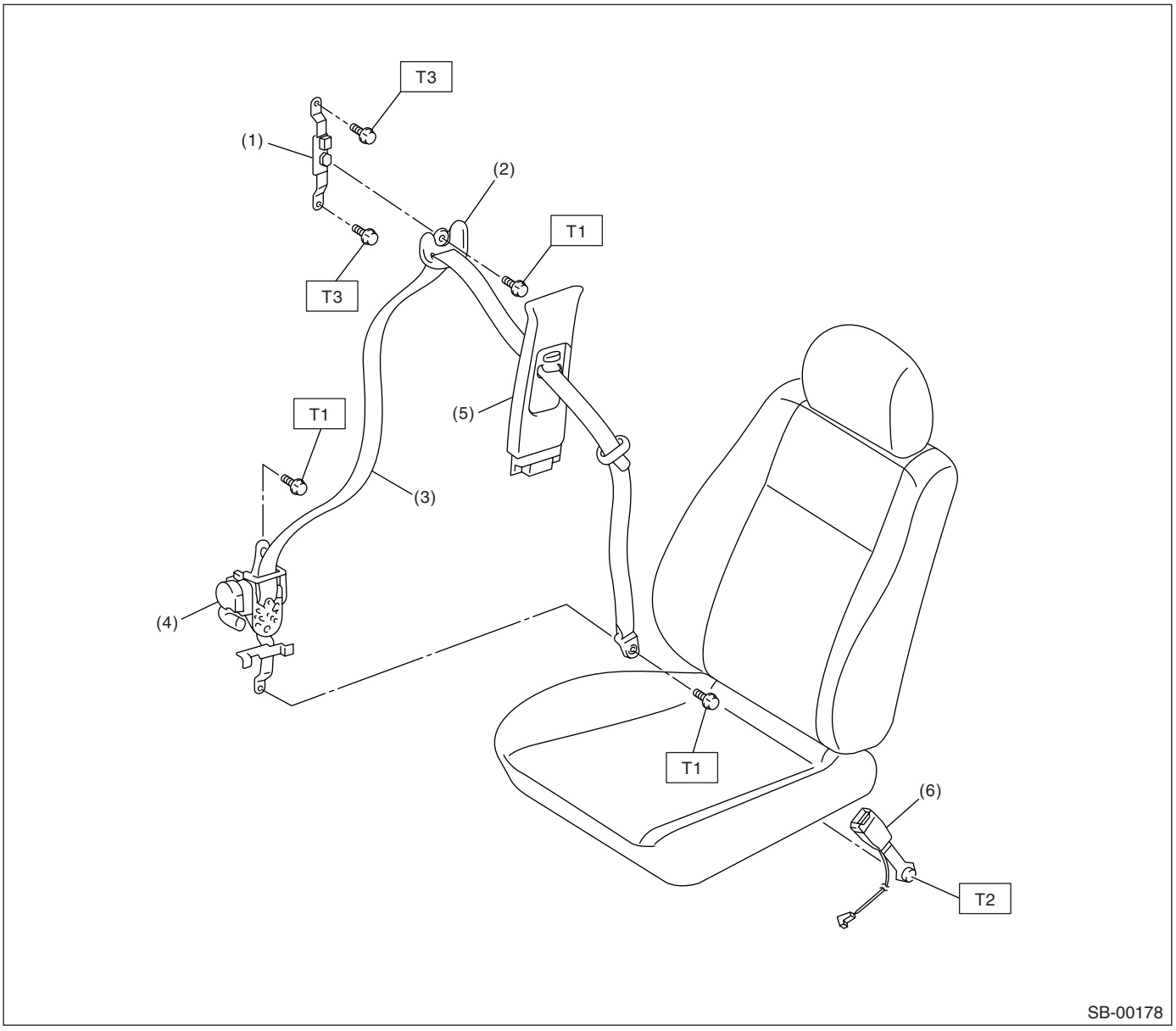

(1)	Adjustable anchor ASSY	(4)	Seat belt retractor	
(2)	Shoulder anchor	(5)	Center pillar upper trim	
(3)	Outer seat belt ASSY	(6)	Inner seat belt ASSY	

Tightening torque: N·m (kgf-m, ft-lb)
T1: 30 (3.1, 22)
T2: 38 (3.9, 28)
T3: 53 (5.4, 39)

2. REAR SEAT BELT (SEDAN MODEL)

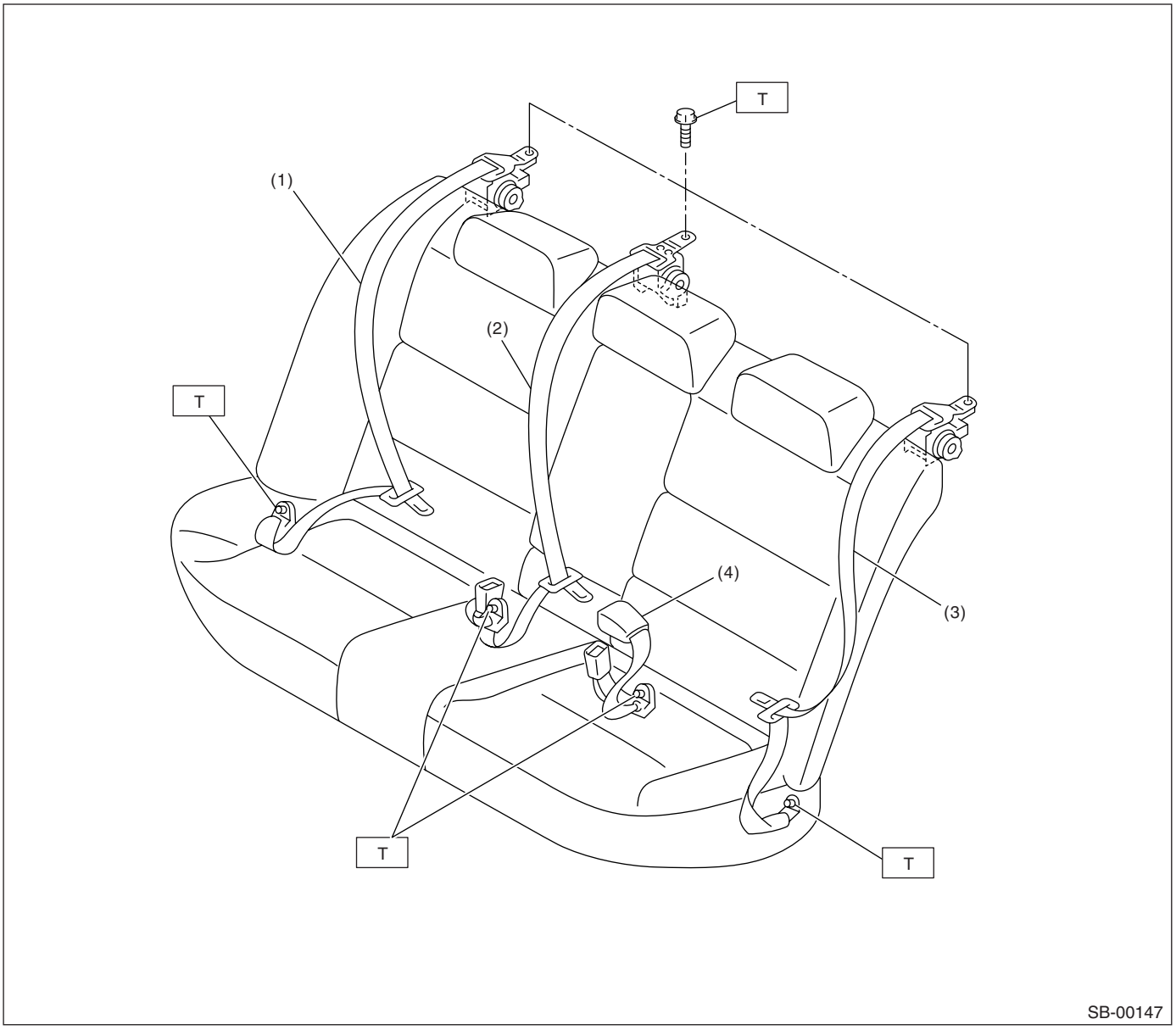

(1) Outer seat belt RH ASSY
(2) Shoulder seat belt center ASSY
(3) Outer seat belt LH ASSY
(4) Center seat belt LH ASSY

Tightening torque: N·m (kgf-m, ft-lb)
T: 30 (3.1, 22)

3. REAR SEAT BELT (WAGON MODEL)

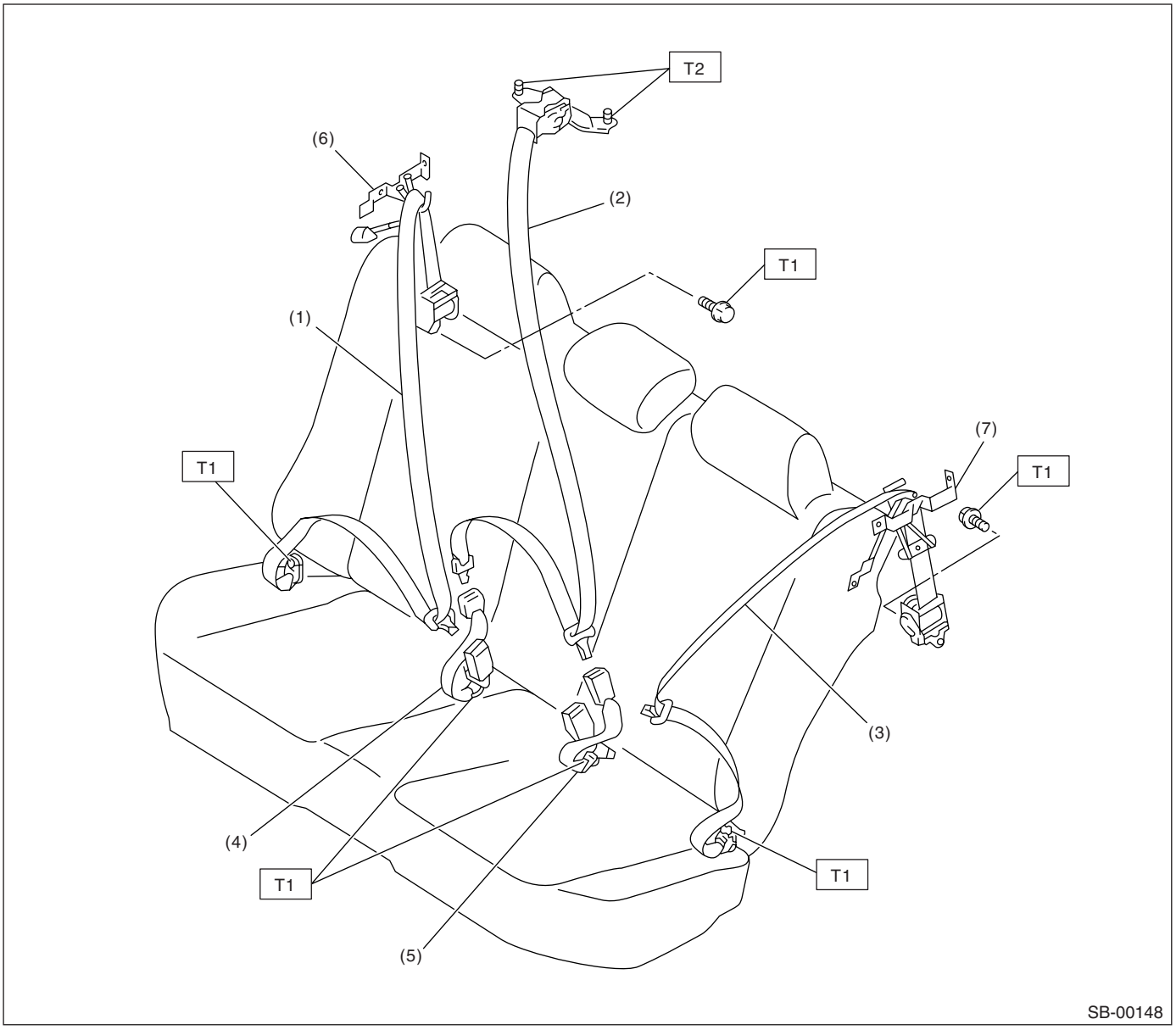

(1) Outer seat belt RH ASSY
(2) Shoulder seat belt center ASSY
(3) Outer seat belt LH ASSY
(4) Center seat belt RH ASSY
(5) Center seat belt LH ASSY
(6) Outer belt guide RH
(7) Outer belt guide LH

Tightening torque: N·m (kgf-m, ft-lb)
T1: 30 (3.1, 22)
T2: 53 (5.4, 39.1)

B: CAUTION

• Before starting service, turn the ignition switch to OFF, disconnect the battery ground cable and wait for 20 seconds or more.
• The pretensioner system has a backup power source. The pretensioner might deploy if you do not wait for 20 seconds or more before starting work.
• Do not drop or apply any impact to the pretensioner.
• If oil, grease or water gets on the pretensioner, wipe it off immediately with a dry cloth.
• Do not expose the pretensioner to high temperature or flame.
• Do not allow current to flow through or voltage to reach the pretensioner. Do not use a circuit tester to check resistance of the pretensioner.
• Do not disassemble or attempt to repair the pretensioner. If it is dented, cracked or deformed, replace it with a new one.
• Do not use the airbag or pretensioner parts from other vehicles. Always replace the parts with new ones.
• When handling a seat belt with deployed pretensioner, wear gloves and goggles. Wash your hands afterwards.
• Do not reuse a seat belt with deployed pretensioner.
• If the material gets in your eyes or on your skin during deployment, wash it away with clean water, and then consult a doctor.

C: PREPARATION TOOL

1. GENERAL TOOL

TOOL NAME	REMARKS
TORX® T50	Used for removing and installing inner belt.

2. Pretensioner Connector

A: REMOVAL

1) Using a flat tip screwdriver, pry the push lock upward to unlock.

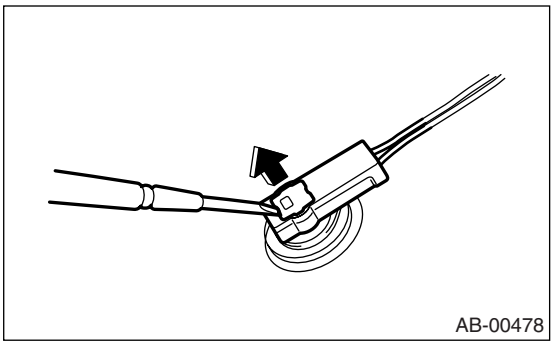

2) Pull out the connector to disconnect it from retractor assembly.

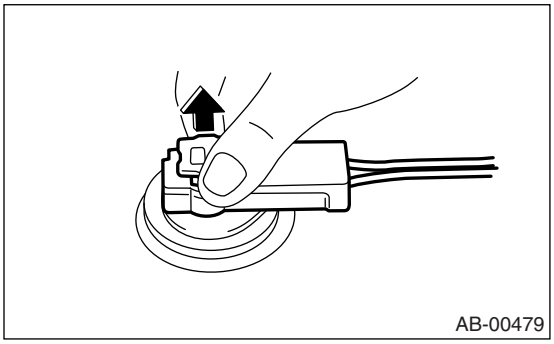

B: INSTALLATION

Connect the connector in the reverse order of disconnection. At this time, be sure to insert the push lock until a connecting sound is heard.

CAUTION:

- **Be sure to insert the connector in until it is locked. Then pull on it gently to make sure that it is locked.**
- **Be sure to push the push lock in securely.**

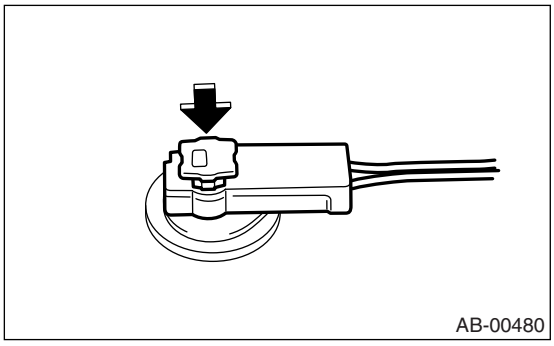

3. Inspection Locations After a Collision

A: INSPECTION

Check for the following, and replace with new parts if necessary.

- Center pillar lower garnish is discolored or cracked.
- Wire harness and connector are damaged.

4. Seat Belt Warning System

A: WIRING DIAGRAM

<Ref. to WI-139, WIRING DIAGRAM, Seat Belt Warning System.>

B: INSPECTION

TROUBLE SYMPTOM:

- Driver's side seat belt warning light does not come on or go off.
- Warning buzzer does not beep.

Step		Check	Yes	No
1	**CHECK BODY INTEGRATED UNIT.** 1) Connect the Subaru Select Monitor to data link connector. 2) Turn the ignition switch to ON. (engine OFF) 3) Turn the Subaru Select Monitor switch to ON. 4) Read the data of driver's seat belt switch using Subaru Select Monitor. <Ref. to LAN(diag)-14, OPERATION, Subaru Select Monitor.>	Is the seat belt switch display OFF?	Go to step **2.**	Go to step **6.**
2	**CHECK SEAT BELT WARNING LIGHT.** Read the data of driver's seat belt warning light using Subaru Select Monitor.	Is the seat belt warning light display ON?	Go to step **3.**	Check the harness between combination meter and body integrated unit.
3	**CHECK BODY INTEGRATED UNIT.** 1) Connect the driver's seat belt. 2) Read the data of driver's seat belt switch using Subaru Select Monitor.	Is the seat belt switch display ON?	Go to step **4.**	Go to step **6.**
4	**CHECK SEAT BELT WARNING LIGHT.** Read the data of driver's seat belt warning light using Subaru Select Monitor.	Is the seat belt warning light display OFF? Also, is the seat belt warning light in the combination meter gone off?	Go to step **5.**	Check the harness between ignition switch and body integrated unit.
5	**CHECK SEAT BELT WARNING BUZZER.** 1) Disconnect the driver's seat belt. 2) Turn the ignition switch to ON.	Does the buzzer beep?	Go to step **6.**	Replace the body integrated unit.
6	**CHECK DRIVER'S SEAT BELT BUCKLE SWITCH.** 1) Connect the driver's seat belt. 2) Measure the voltage between connector (R8) and chassis ground. ***Connector & terminal*** ***(R8) No. 1 (+) — Chassis ground (–):***	Is the voltage more than 10 V?	Go to step **7.**	Repair the harness between driver's seat buckle switch and chassis ground.
7	**CHECK DRIVER'S SEAT BELT BUCKLE SWITCH.** 1) Disconnect the connector (R8) from driver's seat inner belt. 2) Measure the resistance between connector (R8) terminals and chassis ground. ***Connector & terminal*** ***(R8) No. 1 — Chassis ground:*** ***(R8) No. 3 — Chassis ground:***	Is the resistance more than 1 MΩ?	Go to step **8.**	Replace the driver's seat inner belt. <Ref. to SB-10, Front Seat Belt.>
8	**CHECK BODY HARNESS.** Measure the voltage between connector (R167) and chassis ground. ***Connector & terminal*** ***(R167) No. 11 (+) — Chassis ground (–):***	Is the voltage more than 10 V? Also, does the seat belt warning light illuminate?	Go to step **9.**	Repair or replace the driver's seat inner belt and body harness.

	Step	Check	Yes	No
9	**CHECK BODY INTEGRATED UNIT.** Measure the voltage between connector (i84) and chassis ground. ***Connector & terminal*** ***(i84) No. 4 (+) — Chassis ground (−):***	Is the voltage more than 10 V?	Go to step **10.**	Check the body integrated unit.
10	**CHECK COMBINATION METER.** Measure the voltage between connector (R167) and chassis ground. ***Connector & terminal*** ***(R167) No. 20 (+) — Chassis ground (−):***	Is the voltage more than 10 V? Also, does the seat belt warning light illuminate?	Go to step **11.**	Check the body integrated unit.
11	**CHECK COMBINATION METER.** Measure the voltage between connector (i10) and chassis ground. ***Connector & terminal*** ***(i10) No. 9 (+) — Chassis ground (−):***	Is the voltage more than 10 V? Also, does the seat belt warning light illuminate?	Go to step **12.**	Check the combination meter.
12	**CHECK SEAT BELT WARNING SYSTEM.** 1) Disconnect the driver's seat belt. 2) Turn the ignition switch to ON.	Does the seat belt warning buzzer beep and warning light blink for 6 seconds after turning the ignition switch to ON?	Go to step **13.**	Replace the body integrated unit.
13	**CHECK SEAT BELT WARNING SYSTEM.** Wait for 6 seconds from the step 12 condition (seat belt warning buzzer beeps and warning light blinks).	Does the seat belt warning light repeat illuminating/blinking every 15-seconds, and the warning buzzer beep?	Go to step **14.**	Replace the body integrated unit.
14	**CHECK SEAT BELT WARNING SYSTEM.** Connect the driver's seat belt buckle in the step 13 condition (seat belt warning light repeat illuminating/blinking every 15-seconds, and warning buzzer beeps).	Does the seat belt warning light go off and the buzzer stop?	Go to step **15.**	Replace the body integrated unit.
15	**CHECK SEAT BELT WARNING SYSTEM.** Disconnect the driver's seat belt.	Does the seat belt warning light repeat illuminating/blinking every 15-seconds?	Go to step **16.**	Replace the body integrated unit.
16	**CHECK SEAT BELT WARNING SYSTEM.** 1) Lift-up the vehicle. NOTE: Raise all wheels off floor. 2) Start the engine, and set the vehicle speed to more than 15 km/h (9 MPH). NOTE: The speed difference between front and rear wheels may light the ABS or VDC warning light, but this indicates no malfunction. When diagnosis is finished, perform the ABS or VDC memory clearance procedure. <Ref. to ABS(diag)-15, OPERATION, Subaru Select Monitor.> or <Ref. to VDC(diag)-16, OPERATION, Subaru Select Monitor.>	Does the seat belt warning light repeat illuminating/ blinking every 15-seconds?	Go to step **17.**	Replace the body integrated unit.
17	**CHECK SEAT BELT WARNING SYSTEM.** Connect the driver's seat belt in the step 16 condition.	Does the seat belt warning light go off and the buzzer stop?	Go to step **18.**	Replace the body integrated unit.
18	**CHECK SEAT BELT WARNING SYSTEM.** Disconnect the driver's seat belt in the step 17 condition.	Does the seat belt warning light repeat illuminating/ blinking every 15-seconds?	Go to step **19.**	Replace the body integrated unit.
19	**CHECK SEAT BELT WARNING SYSTEM.** Connect the driver's seat belt.	Does the seat belt warning light go off and the buzzer stop?	A temporary poor contact.	Replace the body integrated unit.

5. Front Seat Belt

A: REMOVAL

1. OUTER SEAT BELT ASSEMBLY

1) Fold the backrest all the way forward, and then move the front seat all the way forward.
2) Turn the ignition switch to OFF, disconnect the battery ground cable from battery, and wait for more than 20 seconds before starting work.
3) Remove the seat belt anchor cover of passenger's seat to remove outer seat belt assembly of passenger's side.

- Manual seat

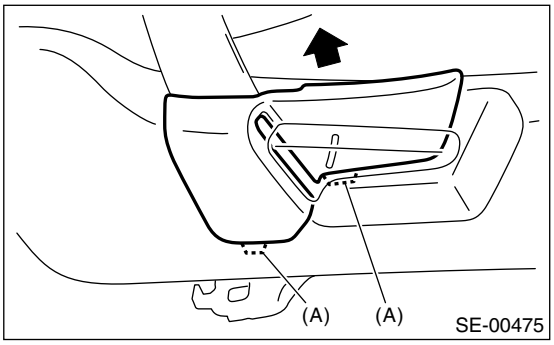

(A) Claw

- Power seat

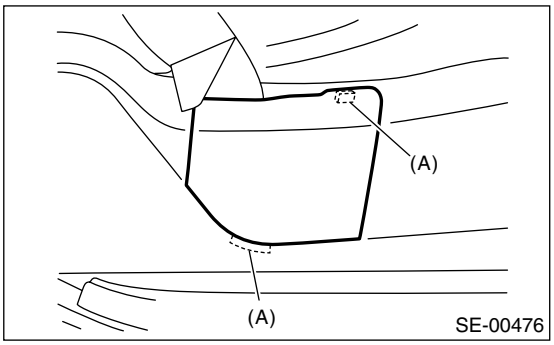

(A) Claw

4) Remove the center pillar lower trim. <Ref. to EI-60, REMOVAL, Lower Inner Trim.>
5) Remove the center pillar upper trim. <Ref. to EI-61, REMOVAL, Upper Inner Trim.>
6) Remove the bolt, and remove the center pillar inner protector lower.

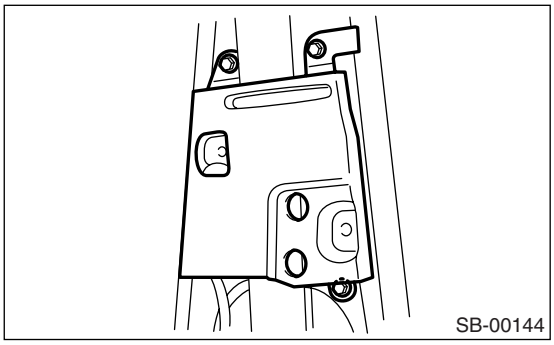

7) Remove the bolt, and then remove the shoulder anchor.

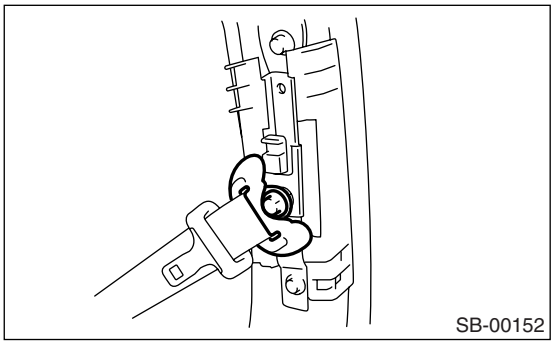

8) Remove the bolt, and then remove the adjustable anchor assembly.

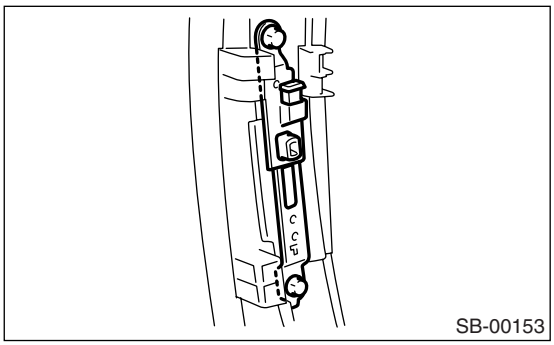

9) Disconnect the pretensioner connector (A), and remove the bolt, and then remove the seat belt retractor.

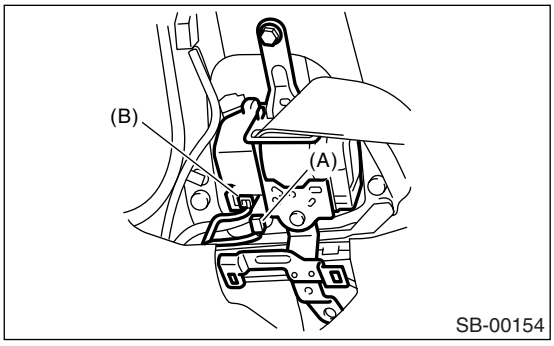

NOTE:
Disconnect the tension reducer connector (B) for the seat belt retractor with tension reducer function.

CAUTION:
• Do not drop or apply any impact to the pretensioner.
• Since the pretensioner and bracket are integrated as a unit, do not disassemble them.

2. INNER SEAT BELT ASSEMBLY

1) Turn the ignition switch to OFF, disconnect the battery ground cable from battery, and wait for more than 20 seconds before starting work.
2) Remove the four bolts in the slide rail LH and RH.
3) Disconnect the seat belt warning light connector under the seat.
4) Remove the harness clips from slide rail.
5) Remove the TORX® bolt, and then remove the inner seat belt assembly.

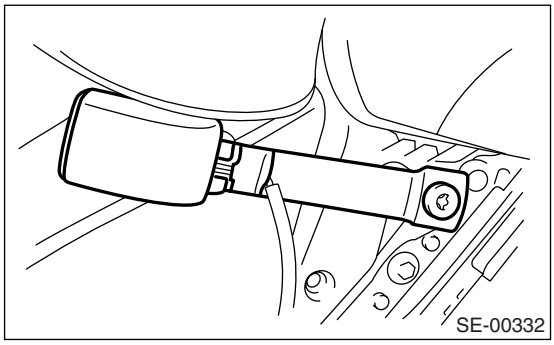
SE-00332

B: INSTALLATION

1. OUTER SEAT BELT ASSEMBLY

Install in the reverse order of removal.

CAUTION:
• The parts of driver and passenger sides are not identical. Before installation, make sure that the correct part is used.
• Be careful not to twist the seat belts during installation.

Tightening torque:
<Ref. to SB-2, FRONT SEAT BELT, COMPONENT, General Description.>

2. INNER SEAT BELT ASSEMBLY

Install in the reverse order of removal.

CAUTION:
• Be sure to perform the system calibration for passenger detection system after passenger's seat installation. <Ref. to OD(diag)-12, SYSTEM CALIBRATION, OPERATION, Subaru Select Monitor.>
Failure to do so may cause improper activation of passenger's airbag.
• After driver's and passenger's inner seat belts installation, check that the seat belt buckle switch operates normally using Subaru Select Monitor on the {Status Data} of «Airbag System». <Ref. to AB(diag)-28, READ STATUS DATA, OPERATION, Subaru Select Monitor.>
Improper buckle switch function may cause airbag system malfunction. Inner seat belt assembly harness (1) must be routed securely as shown in the figure, since it may affect the performances of seat position sensor and occupant detection system.
• Driver's seat

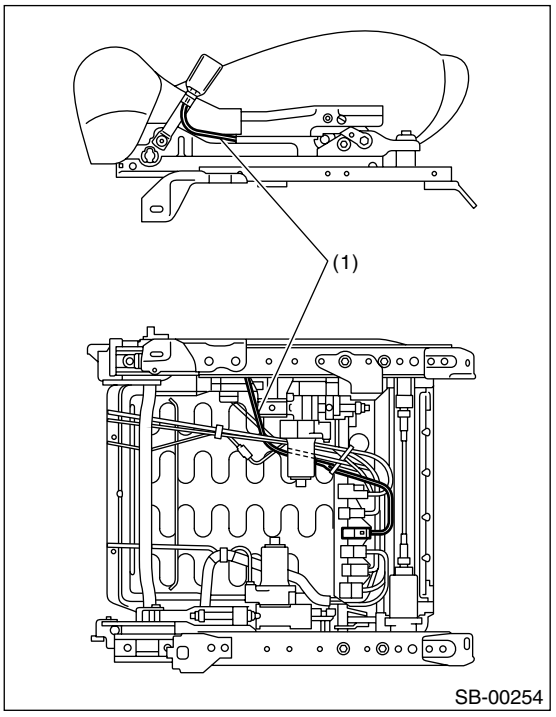

SB-00254

- **Passenger's seat**

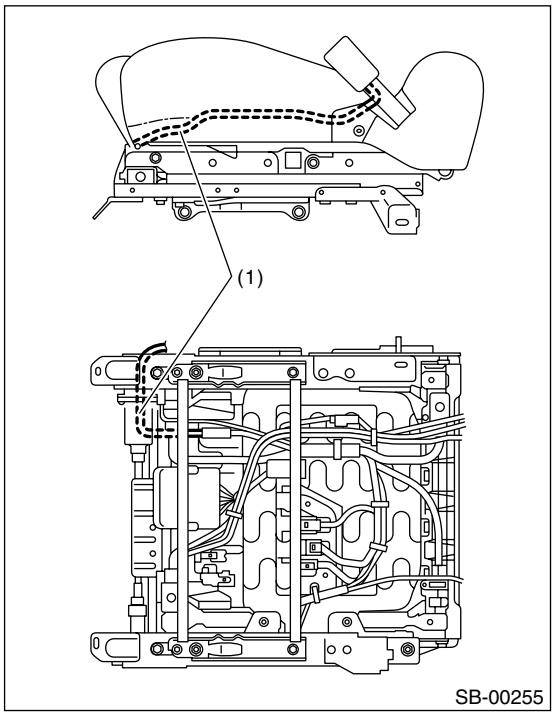

Tightening torque:
<Ref. to SB-2, FRONT SEAT BELT, COMPONENT, General Description.>

C: INSPECTION

1. OUTER SEAT BELT ASSEMBLY

Check for the following, and replace with new parts if necessary.
- Pretensioner is cracked or deformed.
- Seat belt is slackened, bent or worn. Seat belt is abnormally wound or extended.

2. INNER SEAT BELT ASSEMBLY

Check for the following, and replace with new parts if necessary.
- Inner seat belt assembly is deformed or damaged.
- Seat belt buckle cannot be engaged properly.

6. Rear Seat Belt

A: REMOVAL

1. OUTER SEAT BELT RH ASSEMBLY AND LH ASSEMBLY (SEDAN MODEL)

1) Remove the rear seat. <Ref. to SE-20, REMOVAL, Rear Seat.>
2) Remove the seat belt lower anchor bolt.

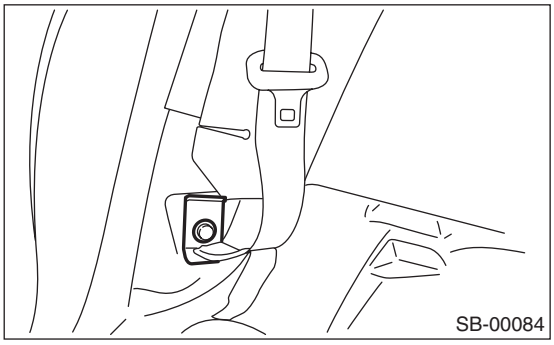
SB-00084

3) Remove the rear quarter trim. <Ref. to EI-62, SEDAN MODEL, REMOVAL, Rear Quarter Trim.>
4) Remove the bolt to remove outer seat belt assembly.

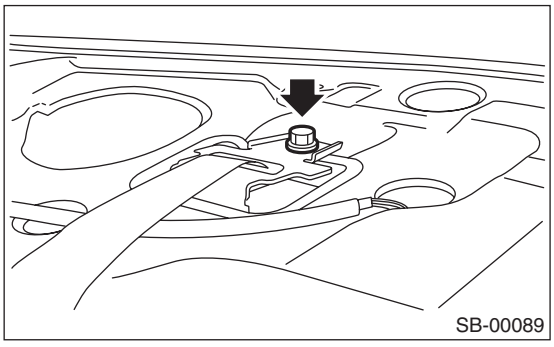
SB-00089

2. SHOULDER SEAT BELT CENTER ASSEMBLY (SEDAN MODEL)

1) Remove the rear seat cushion. <Ref. to SE-20, REMOVAL, Rear Seat.>
2) Remove the seat belt lower anchor bolt.

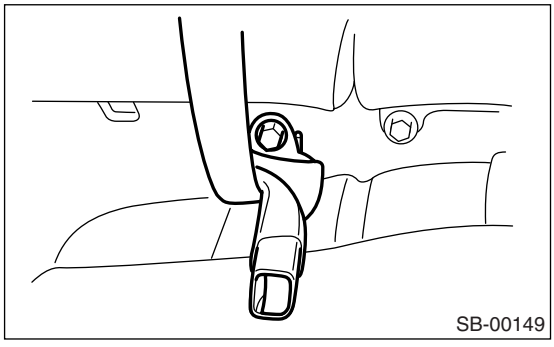
SB-00149

3) Remove the rear quarter trim. <Ref. to EI-62, REMOVAL, Rear Quarter Trim.>
4) Remove the rear shelf trim. <Ref. to EI-69, REMOVAL, Rear Shelf Trim.>
5) Remove the bolt to remove shoulder seat belt assembly.

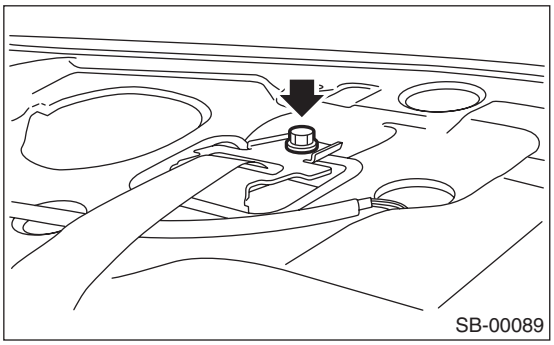
SB-00089

3. CENTER SEAT BELT LH ASSEMBLY (SEDAN MODEL)

1) Remove the rear seat cushion. <Ref. to SE-20, REMOVAL, Rear Seat.>
2) Remove the bolt to remove center seat belt LH assembly.

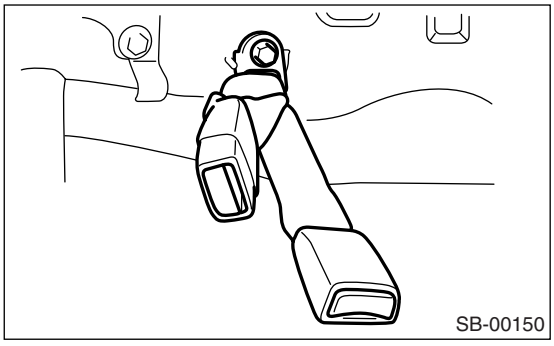
SB-00150

4. OUTER SEAT BELT RH ASSEMBLY AND LH ASSEMBLY (WAGON MODEL)

1) Remove the luggage floor box. <Ref. to EI-73, REMOVAL, Luggage Floor Box.>
2) Remove the rear seat cushion and backrest shoulder. <Ref. to SE-20, SEDAN MODEL, REMOVAL, Rear Seat.>
3) Remove the rear quarter lower trim. <Ref. to EI-62, WAGON MODEL, REMOVAL, Rear Quarter Trim.>
4) Remove the bolt to remove outer seat belt retractor.

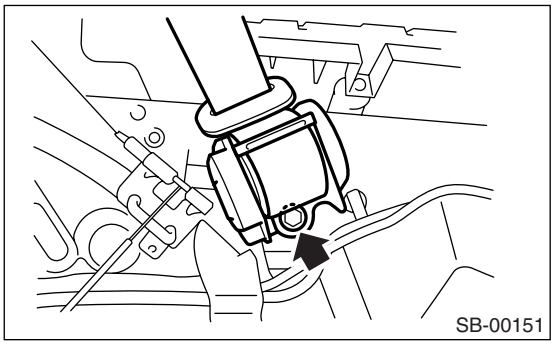
SB-00151

5) Remove the bolts to remove outer seat belt guide.

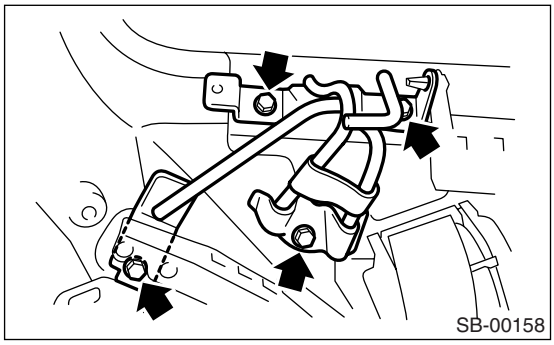

5. SHOULDER SEAT BELT CENTER ASSEMBLY (WAGON MODEL)

1) Remove the quarter rear pillar trim. <Ref. to EI-62, WAGON MODEL, REMOVAL, Rear Quarter Trim.>
2) Remove the cover (A) from roof trim, and then inset it to the inside of roof trim.

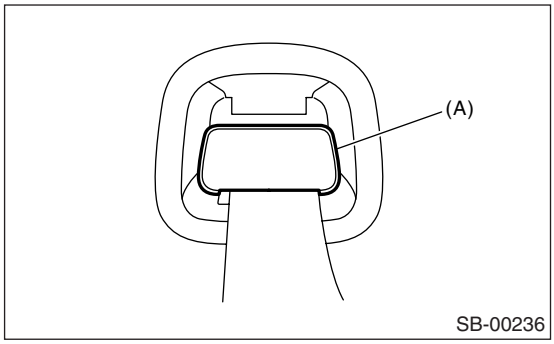

3) Remove the clips, and then lower the roof trim end.

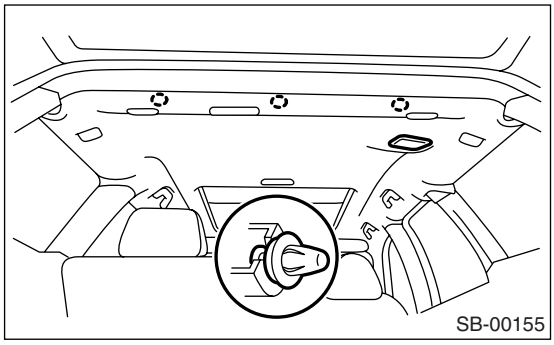

CAUTION:
When removing the roof trim clip, do not pull the roof trim end backward with excessive force, otherwise roof trim may be damaged.

4) Remove the bolt to remove seat belt retractor.

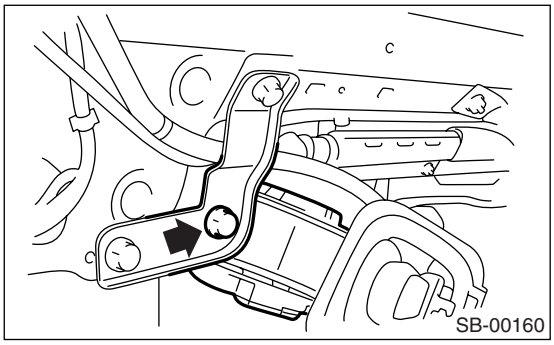

6. CENTER SEAT BELT RH ASSEMBLY AND LH ASSEMBLY (WAGON MODEL)

1) Remove the rear seat cushion. <Ref. to SE-20, SEDAN MODEL, REMOVAL, Rear Seat.>
2) Remove the bolts, and then detach the center seat belt assembly.

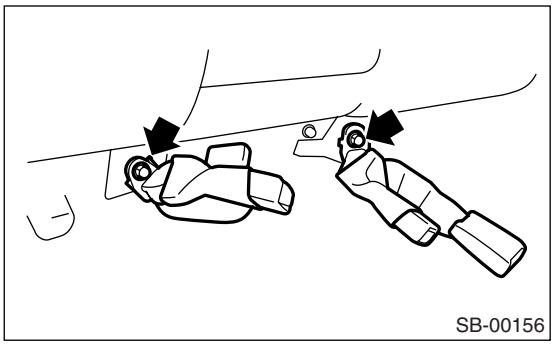

B: INSTALLATION

1. OUTER SEAT BELT RH ASSEMBLY AND LH ASSEMBLY (SEDAN MODEL)

Install in the reverse order of removal.

CAUTION:
• During installation, make sure that the seat belts are not twisted.
• After installation, make sure that the seat belts are smoothly extended and wound.

2. SHOULDER SEAT BELT CENTER ASSEMBLY (SEDAN MODEL)

Install in the reverse order of removal.

CAUTION:
• During installation, make sure that the seat belts are not twisted.
• After installation, make sure that the seat belts are smoothly extended and wound.

3. CENTER SEAT BELT LH ASSEMBLY (SEDAN MODEL)

Install in the reverse order of removal.

CAUTION:
During installation, make sure that the seat belts are not twisted.

4. OUTER SEAT BELT RH ASSEMBLY AND LH ASSEMBLY (WAGON MODEL)

Install in the reverse order of removal.

CAUTION:
• During installation, make sure that the seat belts are not twisted.
• After installation, make sure that the seat belts are smoothly extended and wound.

5. SHOULDER SEAT BELT CENTER ASSEMBLY (WAGON MODEL)

Install in the reverse order of removal.

CAUTION:
• After seat belt guide installation, make sure that the seat belts are wound.

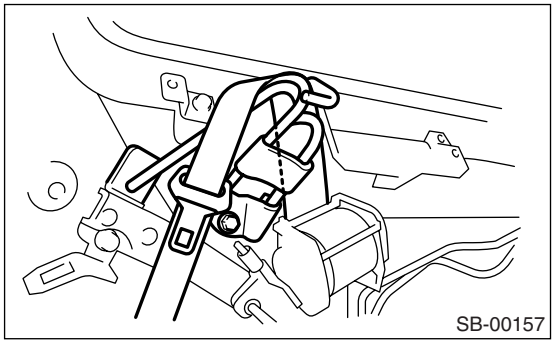

• During installation, make sure that the seat belts are not twisted.
• After installation, make sure that the seat belts are smoothly extended and wound.

6. CENTER SEAT BELT RH ASSEMBLY AND LH ASSEMBLY (WAGON MODEL)

Install in the reverse order of removal.

CAUTION:
During installation, make sure that the seat belts are not twisted.

C: INSPECTION

1. OUTER SEAT BELT RH ASSEMBLY AND LH ASSEMBLY (SEDAN MODEL)

Check for the following, and replace with new parts if necessary.
• Seat belt is slackened, bent or worn. Seat belt is abnormally wound or extended.

2. SHOULDER SEAT BELT CENTER ASSEMBLY (SEDAN MODEL)

Check for the following, and replace with new parts if necessary.
• Seat belt is slackened, bent or worn. Seat belt is abnormally wound or extended.

3. CENTER SEAT BELT LH ASSEMBLY (SEDAN MODEL)

Check for the following, and replace with new parts if necessary.
• Inner belt is deformed or damaged.
• Seat belt buckle cannot be engaged properly.

4. OUTER SEAT BELT RH ASSEMBLY AND LH ASSEMBLY (WAGON MODEL)

Check for the following, and replace with new parts if necessary.
• Seat belt is slackened, bent or worn. Seat belt is abnormally wound or extended.

5. SHOULDER SEAT BELT CENTER ASSEMBLY (WAGON MODEL)

Check for the following, and replace with new parts if necessary.
• Seat belt is slackened, bent or worn. Seat belt is abnormally wound or extended.

6. CENTER SEAT BELT RH ASSEMBLY AND LH ASSEMBLY (WAGON MODEL)

Check for the following, and replace with new parts if necessary.
• Inner belt is deformed or damaged.
• Seat belt buckle cannot be engaged properly.

LIGHTING SYSTEM

LI

		Page
1.	General Description	2
2.	Headlight and Tail Light System	3
3.	Front Fog Light System	4
4.	Turn Signal Light and Hazard Light System	5
5.	Back-up Light System	6
6.	Stop Light System	7
7.	Room Light System	8
8.	Combination Switch (Light)	9
9.	Combination Base Switch Assembly	10
10.	Headlight Assembly	11
11.	Headlight Bulb	13
12.	Front Turn Signal Light Bulb	14
13.	Parking Light Bulb	15
14.	Front Side Marker Light Bulb	16
15.	Front Fog Light Assembly	17
16.	Front Fog Light Bulb	18
17.	Side Turn Signal Light Assembly	19
18.	Rear Combination Light Assembly	20
19.	Tail/Stop Light Bulb	21
20.	Rear Turn Signal Light Bulb	22
21.	Rear Side Marker Light Bulb	23
22.	Back-up Light Assembly	24
23.	Back-up Light Bulb	25
24.	License Plate Light Assembly	26
25.	License Plate Light	27
26.	High-mounted Stop Light	28
27.	Spot Map Light	29
28.	Room Light	30
29.	Luggage Room Light	31
30.	Trunk Room Light	32
31.	Glove Box Light	33
32.	Door Step Light	34
33.	Ignition Switch Illumination	35

1. General Description

A: SPECIFICATION

Headlight	Halogen type low beam		12 V — 55 W
	Halogen type high beam		12 V — 60 W
Front turn signal, parking, front side marker light			12 V — 27/8 W
Front fog light	OUTBACK		12 V — 51 W
	Except for OUTBACK		12 V — 55 W
Side turn signal light			12 V — 2.7 W (LED)
Rear combination light	Stop/tail light		12 V — 21/5 W
	Turn signal light		12 V — 21 W
	Wagon	Rear side marker light	12 V — 5 W
Back-up light	Sedan		12 V — 16 W
	Wagon		12 V — 16 W
License plate light			12 V — 5 W
High-mounted stop light	Sedan		12 V — 21 W
	Wagon		12 V — 1.3 W (LED)
Room light			12 V — 8 W
Spot map light			12 V — 8 W
Luggage room light			12 V — 13 W
Trunk room light			12 V — 5 W
Glove box light			12 V — 1.4 W
Door step light			12 V — 3.5 W

B: CAUTION

- Before removing or installing parts, always disconnect the battery ground cable from battery. When replacing the audio, control module and other parts provided with memory functions, record the memory contents before disconnecting the battery ground cable. Otherwise, the memory will be erased.
- Reassemble the parts in the reverse order of disassembly procedure unless otherwise indicated.
- Adjust parts to the given specifications.
- Connect the connectors securely during reassembly.
- After reassembly, make sure functional parts operate smoothly.

WARNING:

- **The air bag system wiring harness is routed near electrical parts and switches. Air bag system wiring harnesses and connectors are yellow. Do not use the electrical test equipment on these circuits.**
- **Be careful not to damage the air bag system wiring harness when servicing electrical parts and switches.**

C: PREPARATION TOOL

1. GENERAL TOOL

TOOL NAME	REMARKS
Circuit tester	Used for measuring resistance and voltage.

2. Headlight and Tail Light System

A: WIRING DIAGRAM

1. HALOGEN TYPE HEADLIGHT

<Ref. to WI-141, WIRING DIAGRAM, Headlight System.>

2. CLEARANCE LIGHT AND ILLUMINATION LIGHT

<Ref. to WI-147, WIRING DIAGRAM, Clearance Light and Illumination Light System.>

B: INSPECTION

1. HEADLIGHT SWITCH

<Ref. to LI-9, INSPECTION, Combination Switch (Light).>

2. HEADLIGHT RELAY

Measure the resistance between headlight relay terminals when connecting terminal No. 4 to battery positive terminal and terminal No. 3 to battery ground terminal.

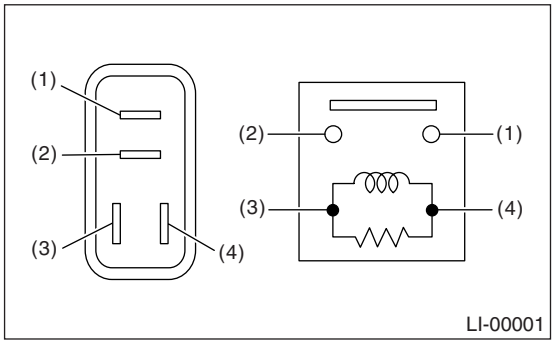

Current	Terminal No.	Standard
Flow	1 and 2	Less than 1 Ω
No flow		More than 1 MΩ

3. TAIL AND ILLUMINATION RELAY

Measure the resistance between tail and illumination relay terminals when connecting terminal No. 4 to battery positive terminal and terminal No. 3 to battery ground terminal.

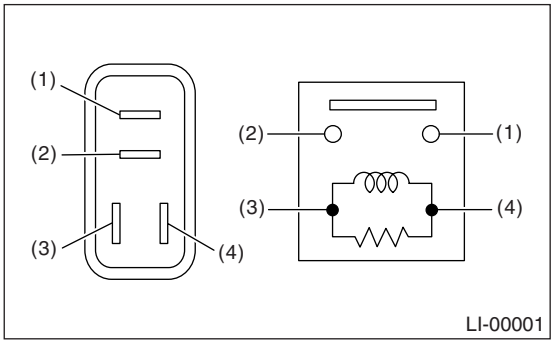

Current	Terminal No.	Standard
Flow	1 and 2	Less than 1 Ω
No flow		More than 1 MΩ

3. Front Fog Light System

A: WIRING DIAGRAM

1. FRONT FOG LIGHT

<Ref. to WI-144, WIRING DIAGRAM, Front Fog Light System.>

B: INSPECTION

1. FRONT FOG LIGHT SWITCH

Measure the resistance between front fog light switch terminals.
<Ref. to LI-9, INSPECTION, Combination Switch (Light).>

2. FRONT FOG LIGHT RELAY

Measure the resistance between front fog light relay terminals when connecting terminal No. 4 to battery positive terminal and terminal No. 3 to battery ground terminal.

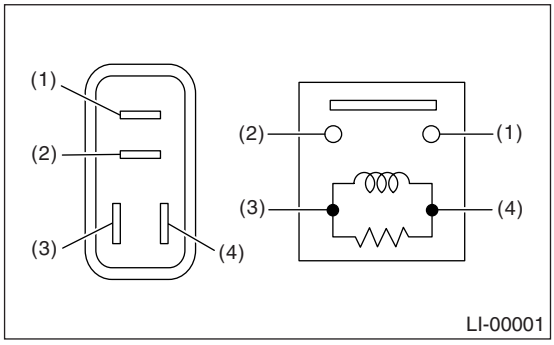

Current	Terminal No.	Standard
Flow	1 and 2	Less than 1 Ω
No flow		More than 1 MΩ

4. Turn Signal Light and Hazard Light System

A: WIRING DIAGRAM

1. TURN SIGNAL LIGHT AND HAZARD LIGHT SYSTEM

<Ref. to WI-151, WIRING DIAGRAM, Turn Signal Light and Hazard Light System.>

B: INSPECTION

1. TURN SIGNAL SWITCH

<Ref. to LI-9, INSPECTION, Combination Switch (Light).>

2. HAZARD SWITCH

Measure the resistance between hazard switch terminals.

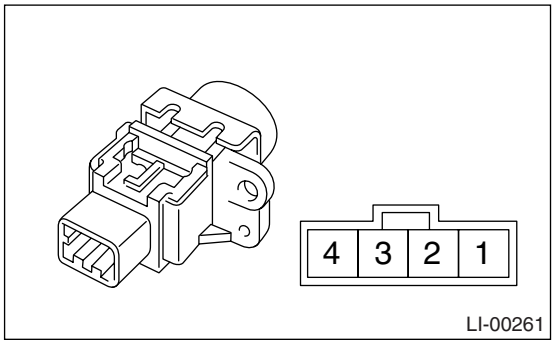

Switch position	Terminal No.	Standard
OFF	2 and 3	More than 1 MΩ
ON		Less than 1 Ω

3. TURN SIGNAL LIGHT AND HAZARD LIGHT MODULE

Connect the battery and turn signal light bulb to the module. The module is properly functioning if it blinks when power is supplied to the circuit.

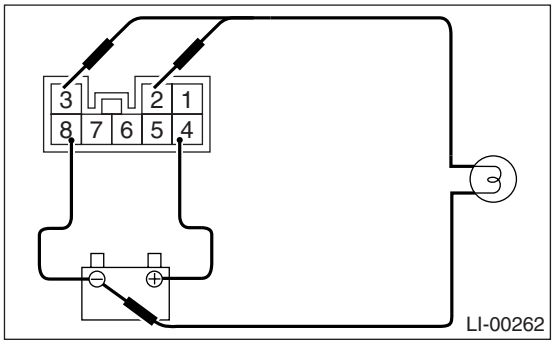

5. Back-up Light System

A: WIRING DIAGRAM

1. BACK-UP LIGHT

<Ref. to WI-145, WIRING DIAGRAM, Back-up Light System.>

B: INSPECTION

1. BACK-UP LIGHT SWITCH (MT MODEL)

Measure the resistance between back-up light switch terminals.

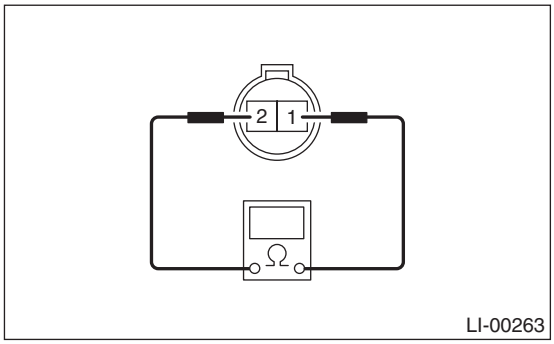

Switch position	Terminal No.	Standard
When shift lever is set in reverse position	1 and 2	Less than 1 Ω
Other positions		More than 1 MΩ

2. INHIBITOR SWITCH (4AT MODEL)

Measure the resistance between inhibitor switch terminals.

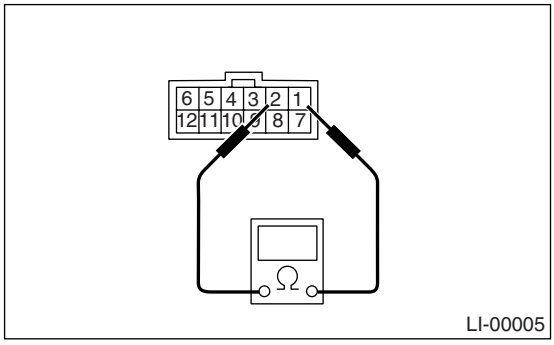

Switch position	Terminal No.	Standard
When the selector lever is in "R" range	1 and 2	Less than 1 Ω
Other positions		More than 1 MΩ

3. BACK-UP LIGHT RELAY (5AT MODEL)

Measure the resistance between back-up light relay terminals when connecting terminal No. 4 to battery positive terminal and terminal No. 3 to battery ground terminal.

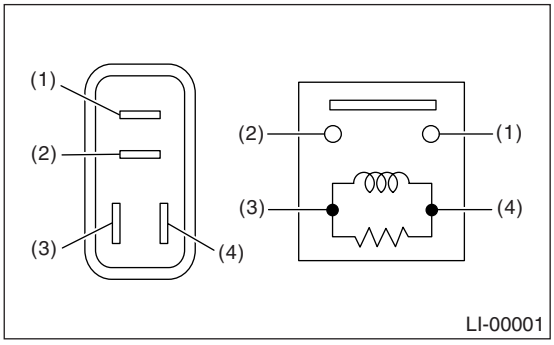

Current	Terminal No.	Standard
Flow	1 and 2	Less than 1 Ω
No flow		More than 1 MΩ

NOTE:
Check other than back-up light relay. <Ref. to 4AT-48, INSPECTION, Inhibitor Switch.>

6. Stop Light System

A: WIRING DIAGRAM

1. STOP LIGHT

<Ref. to WI-146, WIRING DIAGRAM, Stop Light System.>

B: INSPECTION

1. STOP LIGHT SWITCH

Measure the resistance between stop light switch terminals.

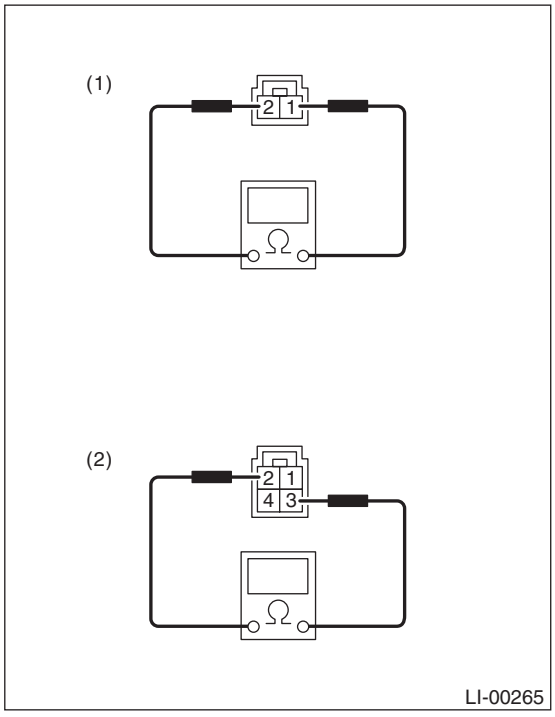

(1) Model without cruise control
(2) Model with cruise control

Switch position	Terminal No.	Standard
When brake pedal is depressed	Model without cruise control: 1 and 2	Less than 1 Ω
When brake pedal is released	Model with cruise control: 2 and 3	More than 1 MΩ

7. Room Light System

A: WIRING DIAGRAM

1. ROOM LIGHT

<Ref. to WI-153, WIRING DIAGRAM, Interior Light System.>

B: INSPECTION

1. DOOR SWITCH

Measure the resistance between door switch terminals.

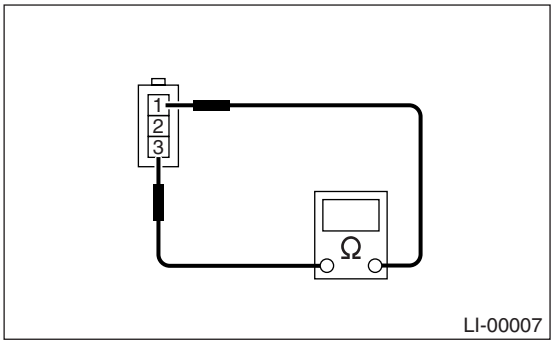

Switch position	Terminal No.	Standard
When door is opened	1 and 3	Less than 1 Ω
When door is closed		More than 1 MΩ

2. REAR GATE LATCH SWITCH

Measure the resistance between rear gate latch switch terminals.

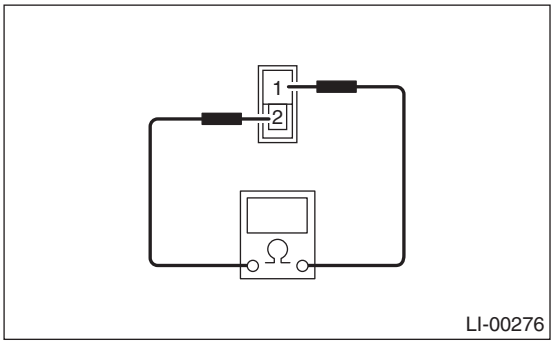

Switch position	Terminal No.	Standard
When rear gate is opened	1 and 2	Less than 1 Ω
When rear gate is closed		More than 1 MΩ

3. TRUNK ROOM LIGHT SWITCH

Measure the resistance between trunk room light switch terminals.

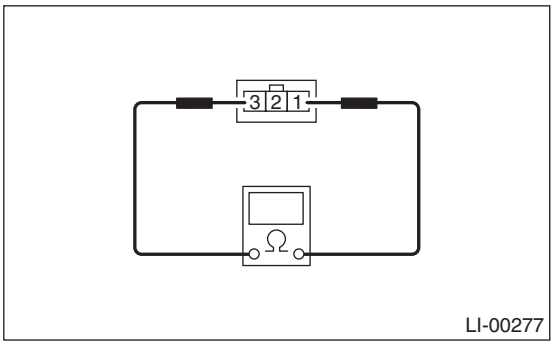

Switch position	Terminal No.	Standard
When trunk lid is opened	1 and 3	Less than 1 Ω
When trunk lid is closed		More than 1 MΩ

8. Combination Switch (Light)

A: REMOVAL

1) Disconnect the ground cable from battery.
2) Remove the screws and remove the steering column cover (upper and lower).

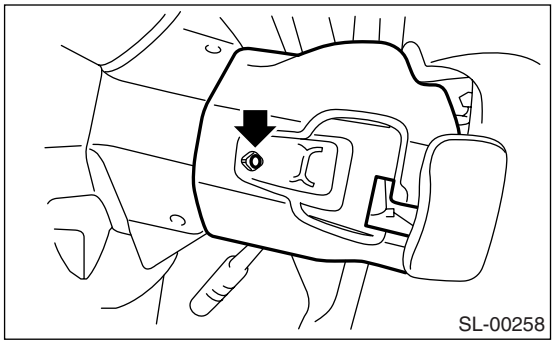

3) Disconnect the connector from combination switch.
4) Remove the screws which secure switch, then remove the combination switch.

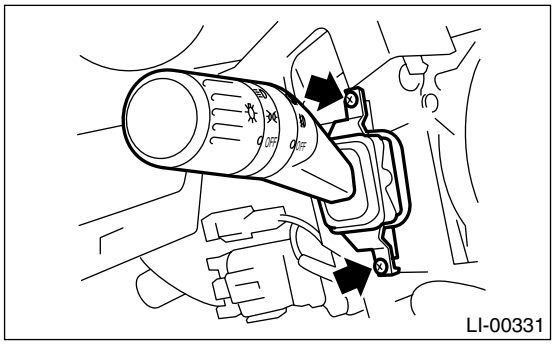

B: INSTALLATION

Install in the reverse order of removal.

C: INSPECTION

Measure the resistance between combination switch terminals.

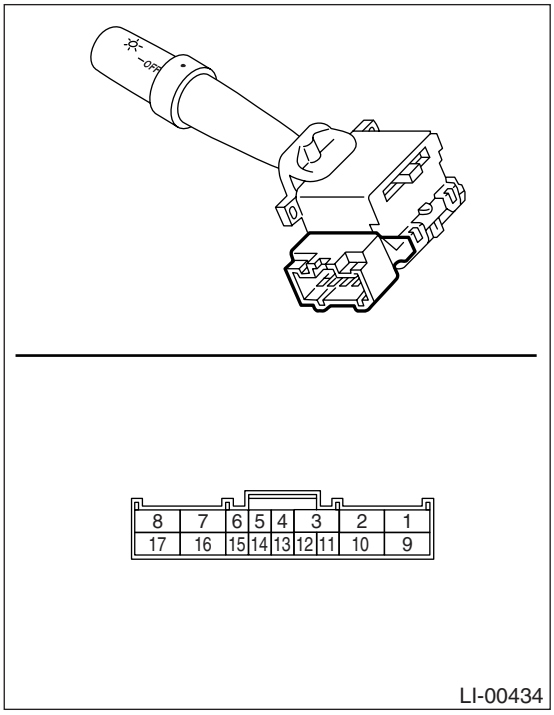

1. LIGHTING SWITCH

Switch position	Terminal No.	Standard
OFF	—	More than 1 MΩ
Tail	14 and 16	Less than 1 Ω
Head	13, 14 and 16	Less than 1 Ω

2. DIMMER & PASSING SWITCH

Switch position	Terminal No.	Standard
Passing	7, 8 and 16	Less than 1 Ω
Low beam	17 and 16	Less than 1 Ω
High beam	7 and 16	Less than 1 Ω

3. TURN SIGNAL SWITCH

Switch position	Terminal No.	Standard
Left	1 and 2	Less than 1 Ω
Neutral	—	More than 1 MΩ
Right	2 and 3	Less than 1 Ω

4. FRONT FOG LIGHT

Switch position	Terminal No.	Standard
OFF	—	More than 1 MΩ
ON	10 and 11	Less than 1 Ω

9. Combination Base Switch Assembly

A: REMOVAL

1) Remove the driver's airbag module. <Ref. to AB-16, REMOVAL, Driver's Airbag Module.>
2) Remove the steering wheel. <Ref. to PS-14, REMOVAL, Steering Wheel.>
3) Remove the screws and remove the steering column lower cover.

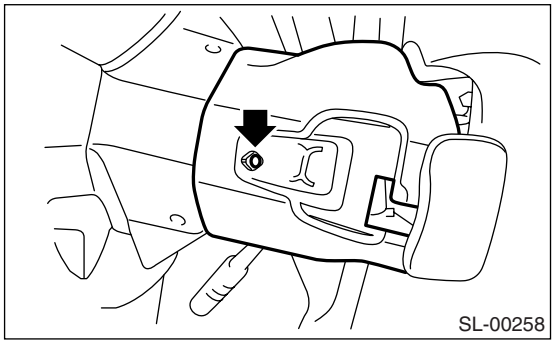
SL-00258

4) Remove the combination switch. <Ref. to LI-9, REMOVAL, Combination Switch (Light).> <Ref. to WW-6, REMOVAL, Combination Switch (Wiper).>
5) Remove the four screws and remove the roll connector.
6) Remove the three screws.

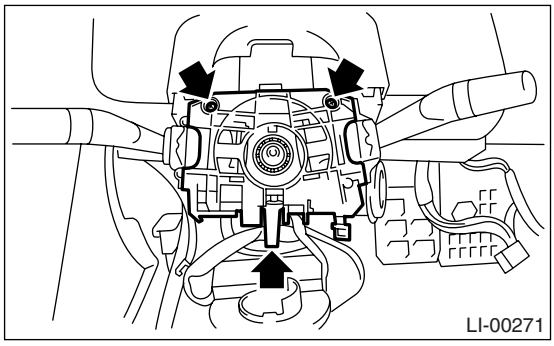
LI-00271

7) Disconnect the connector and remove the combination base switch assembly.

B: INSTALLATION

1) Install in the reverse order of removal.
2) Before installing steering wheel, be sure the direction of roll connector is adjusted with steering. <Ref. to AB-25, ADJUSTMENT, Roll Connector.>

C: INSPECTION

1. COMBINATION BASE SWITCH ASSEMBLY

Inspect the combination base switch assembly and roll connector for crack or deformation. If any damage is found, replace with a new one.

2. PARKING SWITCH

Measure the resistance between parking switch terminals.

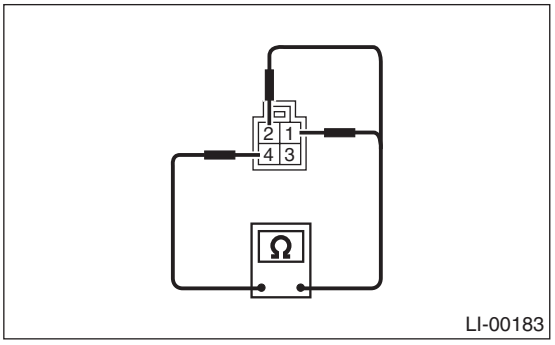

LI-00183

Switch position	Terminal No.	Standard
OFF	2 and 4	Less than 1 Ω
ON	1 and 4	Less than 1 Ω

10.Headlight Assembly

A: REMOVAL

1) Disconnect the ground cable from battery.
2) Remove the air intake duct. (When removing the headlight RH)

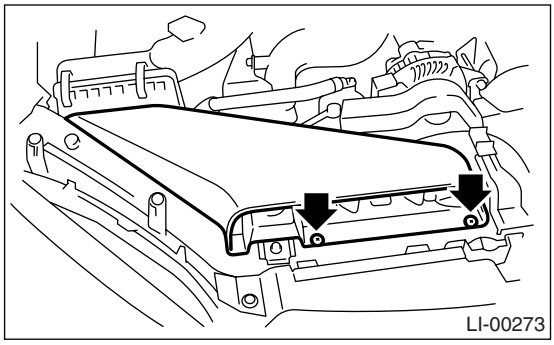

3) Remove the front grille. <Ref. to EI-24, REMOVAL, Front Grille.>
4) Remove the front bumper. <Ref. to EI-30, REMOVAL, Front Bumper.>
5) Disconnect each harness connector.
6) Remove the 5 bolts, disengage the clip, and then detach the headlight assembly.

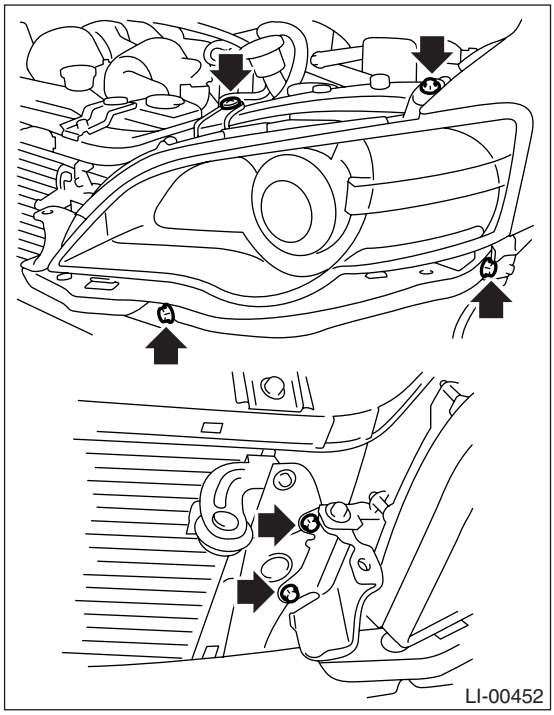

B: INSTALLATION

Install in the reverse order of removal.

C: ADJUSTMENT

1. HEADLIGHT AIMING

NOTE:
Aiming of this headlight can be adjusted only in the vertical direction. It cannot be adjusted in the horizontal direction.

CAUTION:
Turn off the light before adjusting headlight beam level. If the light is necessary to check aiming, do not turn on for more than two minutes.

NOTE:
Before checking the headlight beam level, be sure of the following:
- The area around the headlight has not sustained any accident, damage or other type of deformation.
- Vehicle is parked on a level surface.
- The inflation pressure of tires is correct.
- Vehicle's fuel tank is fully filled.

1) Bounce the vehicle several times to normalize the suspension.
2) Make certain that someone is seated in the driver's seat.
3) Turn the headlights on and then adjust the low beam pattern.

NOTE:
Adjust the headlight aiming by turning the adjusting screw (A).

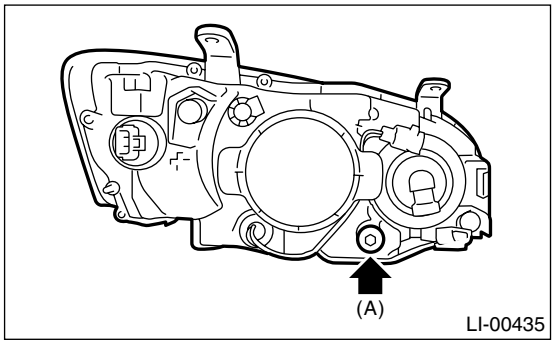

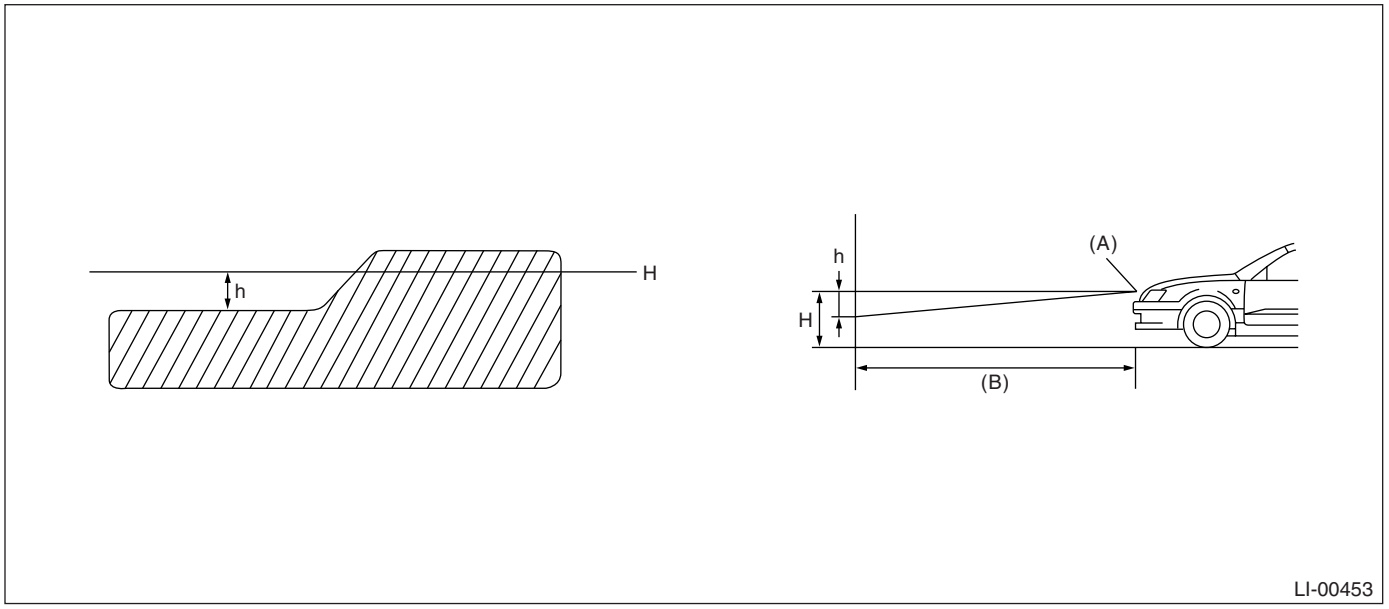

(A) Bulb center marking (B) 3 m (10 ft)

H mm (in)				h mm (in) at 3 m (10 ft)
Sedan		Wagon		
Except for OUTBACK	OUTBACK	Except for OUTBACK	OUTBACK	
640 (25.20)	707 (27.83)	637 (25.08)	707 (27.83)	21 (0.83)

11.Headlight Bulb

A: REMOVAL

1. HIGH BEAM AND LOW BEAM

CAUTION:
• Because the halogen bulb operates at a high temperature, dirt and oil on the bulb surface reduces the bulb's service life. Hold the flange portion when replacing the bulb. Never touch the glass portion.
• Do not leave the headlight without a bulb for a long time. Dust, moisture, etc. entering the headlight may affect its performance.

1) Disconnect the ground cable from battery.
2) Remove the air intake duct. (When removing the headlight bulb RH).

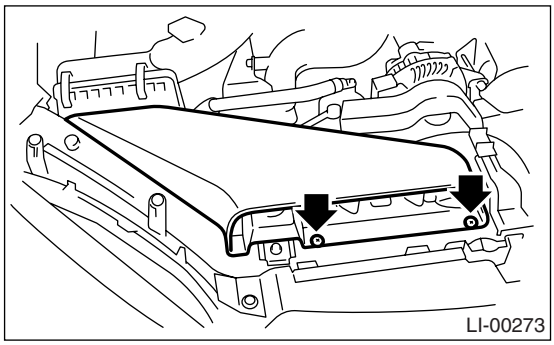
LI-00273

3) Remove the battery cover. (When removing the headlight bulb LH).
4) Tilt the washer tank filler neck. (When removing the headlight bulb LH).
5) Disconnect the harness connector.
6) Remove the bulb assembly (A) to remove high beam. To remove the low beam, remove the back cover (B), and then go to Step 7.

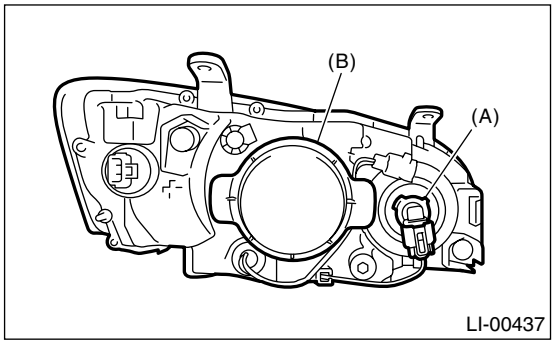

LI-00437

7) Remove the light bulb retaining spring (A) to remove bulb.

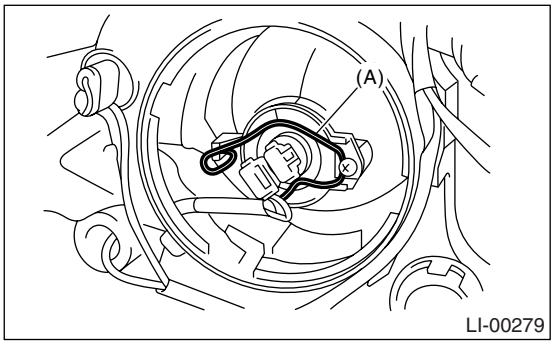

LI-00279

B: INSTALLATION

Install in the reverse order of removal.

C: INSPECTION

1) Visually check the bulb for blow out.
2) Check the bulb specification.
<Ref. to LI-2, SPECIFICATION, General Description.>
3) If NG, replace the bulb with a new one.

12.Front Turn Signal Light Bulb

A: REMOVAL

1) When removing the turn signal light bulb, fully turn the steering wheels to opposite direction from desired turn signal light bulb.

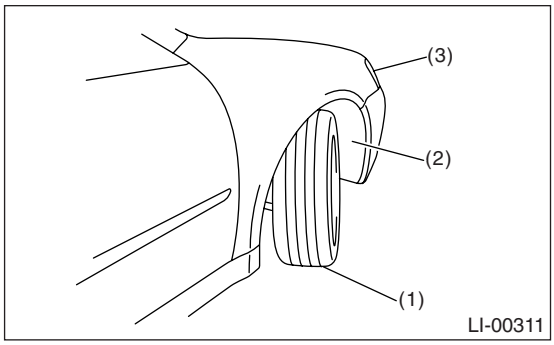

(1) Turn the steering wheel fully.
(2) Mud guard
(3) Front turn signal light

2) Turn the mud guard inward.
3) Turn the socket (A) from wheel arch part, and then remove the front turn signal light bulb.

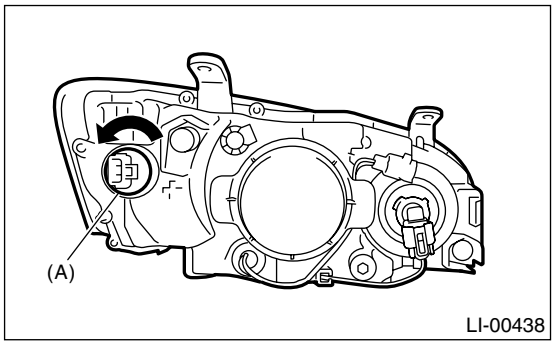

CAUTION:
For 5AT model, remove the turn signal light bulb LH from engine compartment with removing battery, because it can not be removed from wheel arch part.

B: INSTALLATION

Install in the reverse order of removal.

C: INSPECTION

1) Visually check the bulb for blow out.
2) Check the bulb specification.
<Ref. to LI-2, SPECIFICATION, General Description.>
3) If NG, replace the bulb with a new one.

13.Parking Light Bulb

A: SPECIFICATION

The parking light bulb is integrated into front turn signal light bulb as a unit; therefore, refer to “Front Turn Signal Light Bulb” for removal procedure. <Ref. to LI-14, REMOVAL, Front Turn Signal Light Bulb.>

14.Front Side Marker Light Bulb

A: SPECIFICATION

The front marker light bulb is integrated into front turn signal light bulb as a unit; therefore, refer to “Front Turn Signal Light Bulb” for removal procedure. <Ref. to LI-14, REMOVAL, Front Turn Signal Light Bulb.>

15.Front Fog Light Assembly

A: REMOVAL

1. EXCEPT FOR OUTBACK MODEL

1) Disconnect the ground cable from battery.
2) Remove the front fog light cover (A).

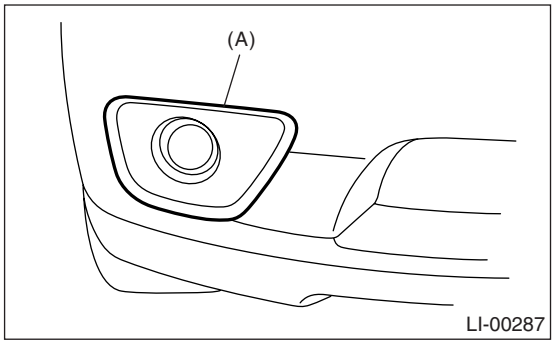

3) Disengage the two clips, and then turn over the lower mud guard.

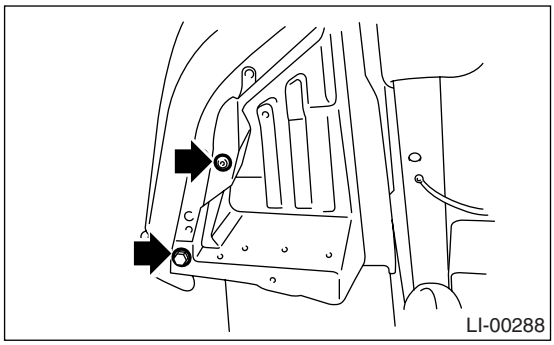

4) Disconnect the harness connector.
5) Remove the mounting bolts, and then detach the fog light assembly by pulling it.

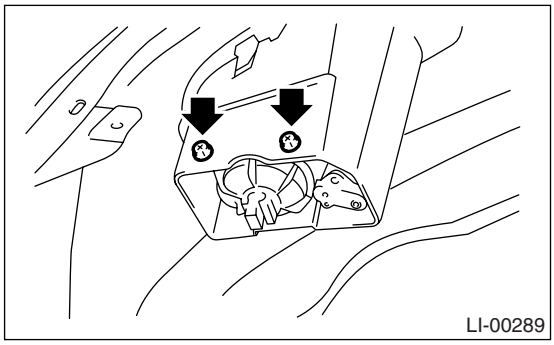

2. OUTBACK MODEL

1) Disconnect the ground cable from battery.
2) Remove the two clips, and then turn over the lower mud guard.

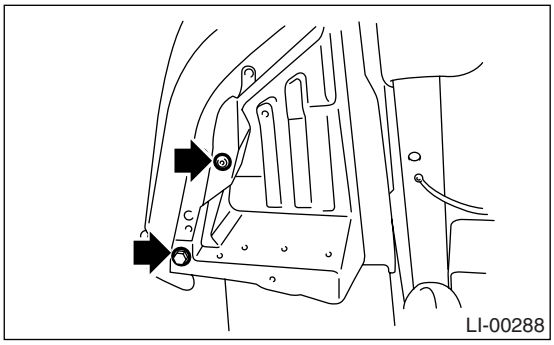

3) Disconnect the harness connector.
4) Remove the mounting nuts and clips, and then detach the fog light assembly by pulling it.

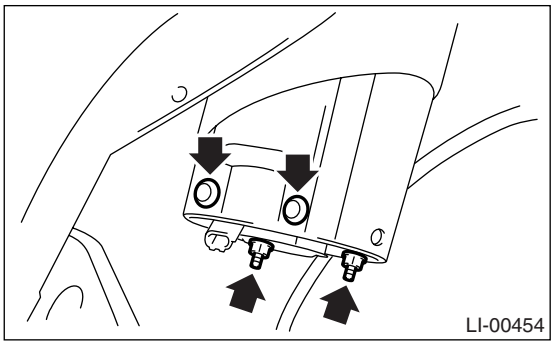

B: INSTALLATION

Install in the reverse order of removal.

16.Front Fog Light Bulb

A: REMOVAL

1) Disconnect the ground cable from battery.
2) Disengage the two clips, and then turn over the lower mud guard.

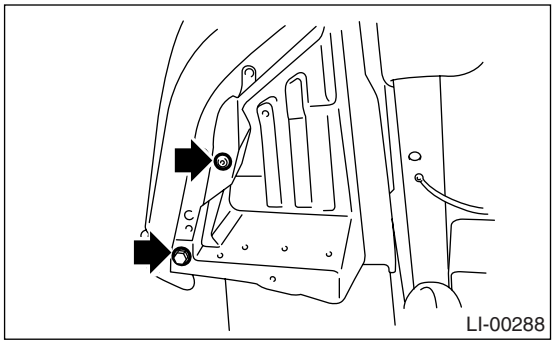

3) Disconnect the harness connector.
4) Remove the back cover.

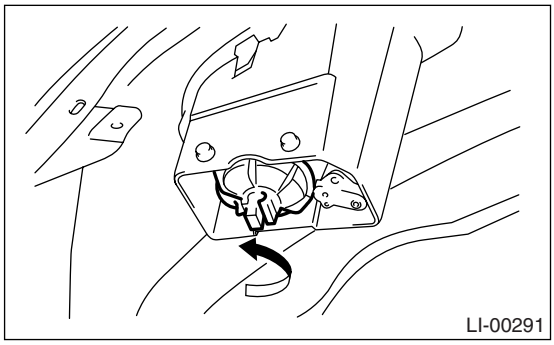

5) Remove the spring retainer then detach the fog light bulb.

B: INSTALLATION

Install in the reverse order of removal.

C: INSPECTION

1) Visually check the bulb for blow out.
2) Check the bulb specification. <Ref. to LI-2, SPECIFICATION, General Description.>
3) If NG, replace the bulb with a new one.

17.Side Turn Signal Light Assembly

A: REMOVAL

1) Disconnect the ground cable from battery.
2) Remove the scalp caps. <Ref. to GW-18, REPLACEMENT, Scalp Cap.>
3) Remove the mirror. <Ref. to GW-21, REPLACEMENT, Outer Mirror.>
4) Disconnect the harness connector, remove the 3 mounting screws and then remove the side turn signal light assembly.

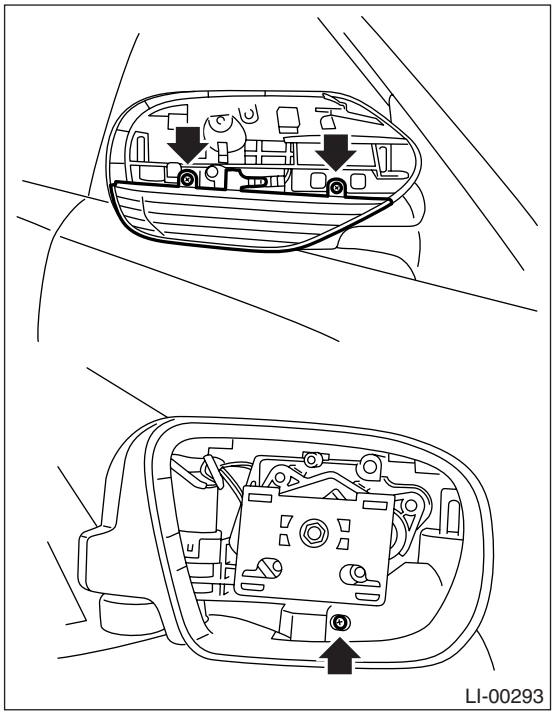

B: INSTALLATION

Install in the reverse order of removal.

C: INSPECTION

1) Install the side turn signal light assembly and check that it blinks normally.
2) If it does not blink normally, replace the side turn signal light assembly with a new one.

NOTE:
Since LED (Light Emitting Diode) is used for side turn signal light, replace the side turn signal light assembly when the LED is powered off.

18.Rear Combination Light Assembly

A: REMOVAL

1. SEDAN MODEL

1) Disconnect the ground cable from battery.
2) Remove the trunk room side trim. <Ref. to EI-70, REMOVAL, Trunk Room Trim.>
3) Remove the four nuts, and then detach the rear combination light after disconnecting the connector.

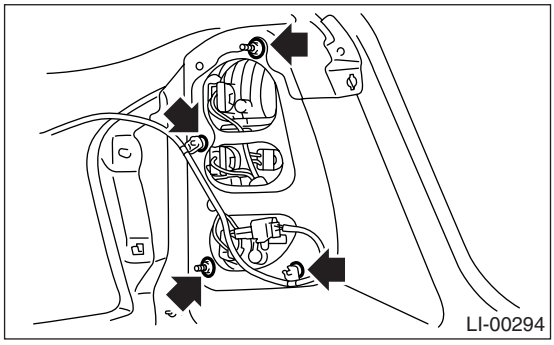

2. WAGON MODEL

1) Disconnect the ground cable from battery.
2) Remove the clips.

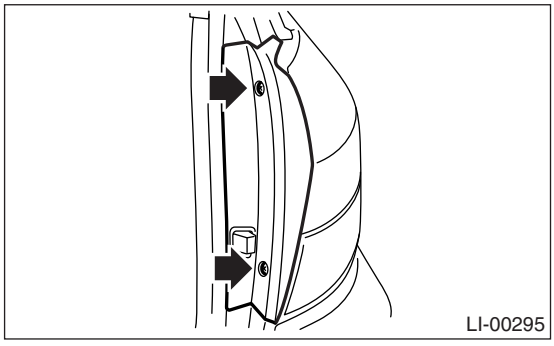

3) While pressing the portion (A), insert your finger or flat-tip screwdriver wrapped with tape into the clearance (B) to remove pawls in the order of (C), (D), (E), and remove the rear combination cover.

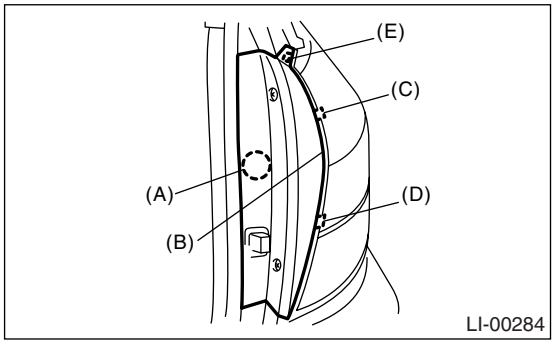

4) Remove the two bolts, and then detach the rear combination light by pulling it to the rear side of vehicle.

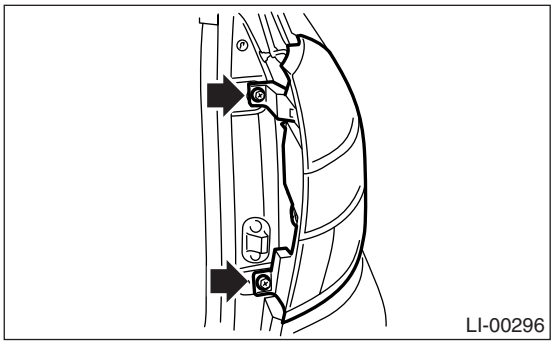

5) Remove the rear combination light after turning the socket of tail/stop light bulb and rear turn signal light bulb to remove the bulbs.

B: INSTALLATION

Install in the reverse order of removal.

19.Tail/Stop Light Bulb

A: REMOVAL

1. SEDAN MODEL

1) Remove the trunk side trim cover.
2) Turn the socket and remove the bulb.

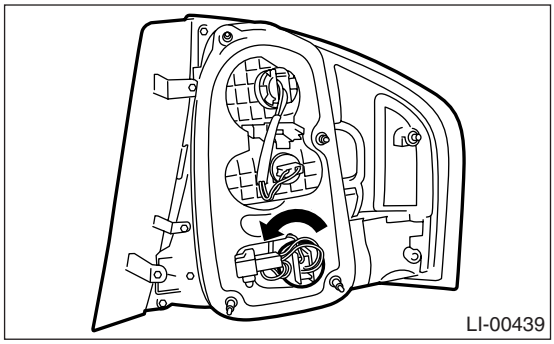

2. WAGON MODEL

1) Remove the rear combination light assembly. <Ref. to LI-20, WAGON MODEL, REMOVAL, Rear Combination Light Assembly.>
2) Turn the socket and remove the bulb.

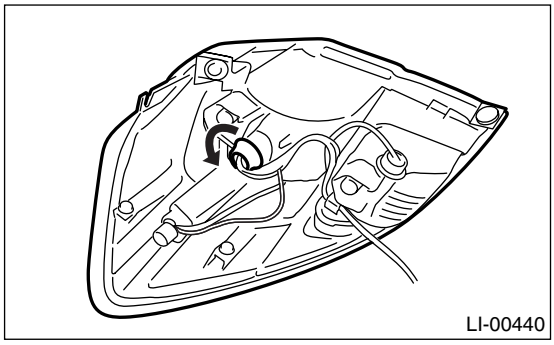

B: INSTALLATION

Install in the reverse order of removal.

C: INSPECTION

1) Visually check the bulb for blow out.
2) Check the bulb specification. <Ref. to LI-2, SPECIFICATION, General Description.>
3) If NG, replace the bulb with a new one.

20.Rear Turn Signal Light Bulb

A: REMOVAL

1. SEDAN MODEL

1) Remove the trunk side trim cover.
2) Turn the socket and remove the bulb.

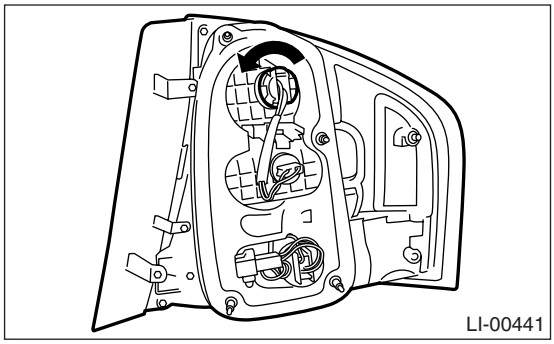

2. WAGON MODEL

1) Remove the rear combination light assembly. <Ref. to LI-20, WAGON MODEL, REMOVAL, Rear Combination Light Assembly.>
2) Turn the socket and remove the bulb.

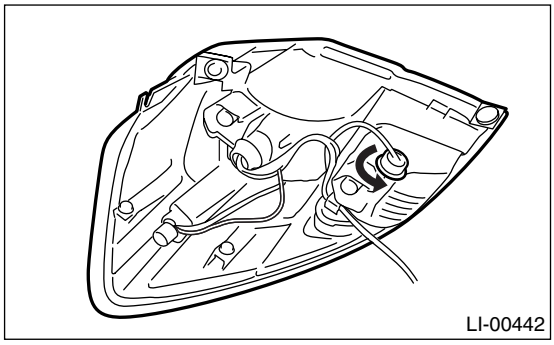

B: INSTALLATION

Install in the reverse order of removal.

C: INSPECTION

1) Visually check the bulb for blow out.
2) Check the bulb specification. <Ref. to LI-2, SPECIFICATION, General Description.>
3) If NG, replace the bulb with a new one.

21.Rear Side Marker Light Bulb

A: REMOVAL

1. SEDAN MODEL

Bulb is not equipped for sedan model, since it is reflex reflector type.

2. WAGON MODEL

1) Remove the rear combination light assembly. <Ref. to LI-20, WAGON MODEL, REMOVAL, Rear Combination Light Assembly.>
2) Turn the socket and remove the bulb.

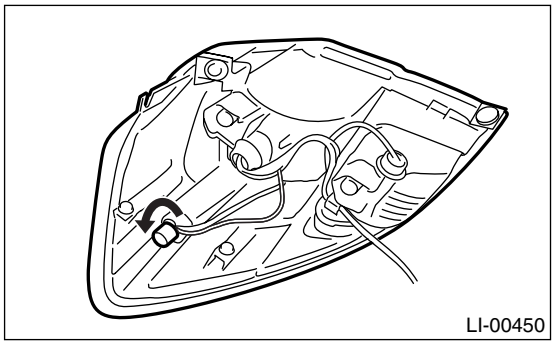

B: INSTALLATION

Install in the reverse order of removal.

C: INSPECTION

1) Visually check the bulb for blow out.
2) Check the bulb specification. <Ref. to LI-2, SPECIFICATION, General Description.>
3) If NG, replace the bulb with a new one.

22.Back-up Light Assembly

A: REMOVAL

1. SEDAN MODEL

Remove the rear combination light. <Ref. to LI-20, REMOVAL, Rear Combination Light Assembly.>

2. WAGON MODEL

1) Remove the rear gate trim. <Ref. to EI-68, REMOVAL, Rear Gate Trim.>
2) Disconnect the harness connectors and remove the rear gate garnish. <Ref. to EI-75, REMOVAL, Rear Gate Garnish.>
3) Remove the mounting nuts and detach the back-up light assembly.

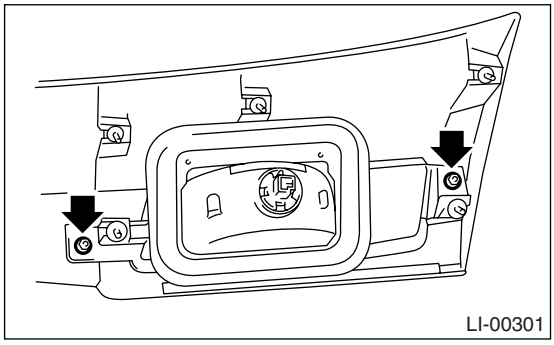

B: INSTALLATION

Install in the reverse order of removal.

23.Back-up Light Bulb

A: REMOVAL

1. SEDAN MODEL

1) Remove the trunk side trim cover.
2) Turn the socket and remove the bulb.

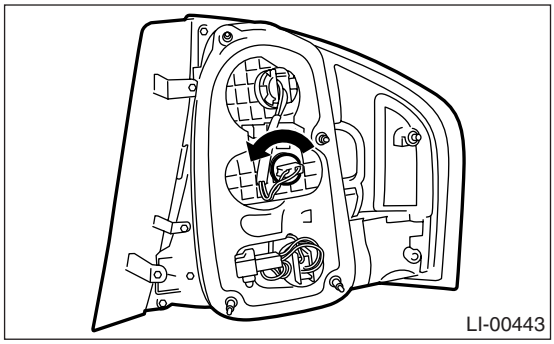

2. WAGON MODEL

1) Remove the bulb inspection cover of rear gate trim.
2) Turn the socket and remove the bulb.

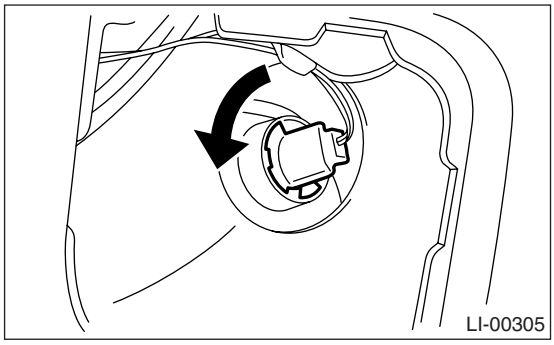

B: INSTALLATION

Install in the reverse order of removal.

C: INSPECTION

1) Visually check the bulb for blow out.
2) Check the bulb specification. <Ref. to LI-2, SPECIFICATION, General Description.>
3) If NG, replace the bulb with a new one.

24.License Plate Light Assembly

A: REMOVAL

1. SEDAN MODEL

1) Remove the trunk lid garnish. <Ref. to EI-74, REMOVAL, Trunk Lid Garnish.>
2) Remove the trunk lid trim. <Ref. to EI-70, TRUNK LID TRIM, REMOVAL, Trunk Room Trim.>
3) Turn and remove the bulb socket (A). Disengage the clip (B) and remove the license plate light assembly.

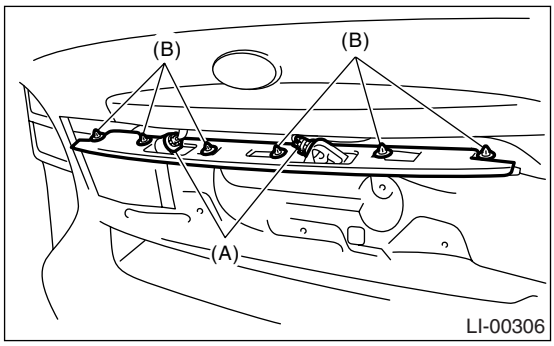

B: INSTALLATION

Install in the reverse order of removal.

25.License Plate Light

A: REMOVAL

1. SEDAN MODEL

1) Remove the trunk lid trim. <Ref. to EI-70, TRUNK LID TRIM, REMOVAL, Trunk Room Trim.>
2) Turn and remove the bulb socket (A).

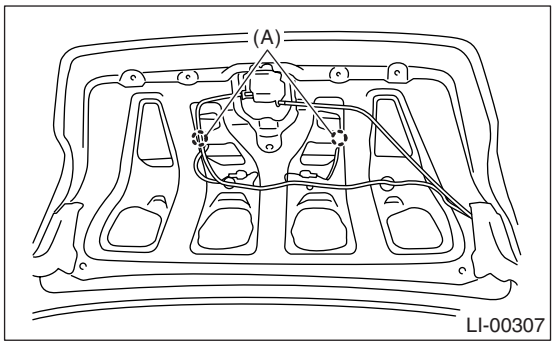

3) Remove the bulb.

2. WAGON MODEL

1) Remove the license plate light mounting screw (A) and then remove the lens (B).

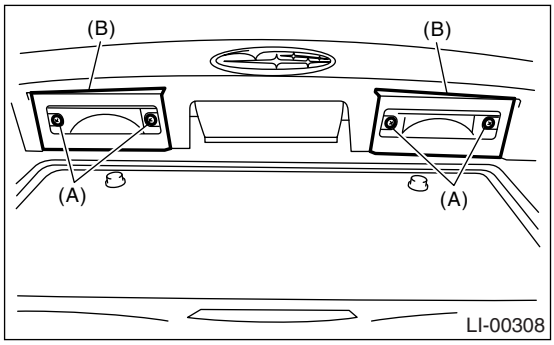

2) Remove the bulb.

B: INSTALLATION

Install in the reverse order of removal.

C: INSPECTION

1) Visually check the bulb for blow out.
2) Check the bulb specification. <Ref. to LI-2, SPECIFICATION, General Description.>
3) If NG, replace the bulb with a new one.

26.High-mounted Stop Light

A: REMOVAL

1. SEDAN MODEL

1) Disconnect the ground cable from battery.
2) Push the high-mounted stop light backward of the vehicle (1), raise the rear portion of it (2) and remove the clips to remove it.

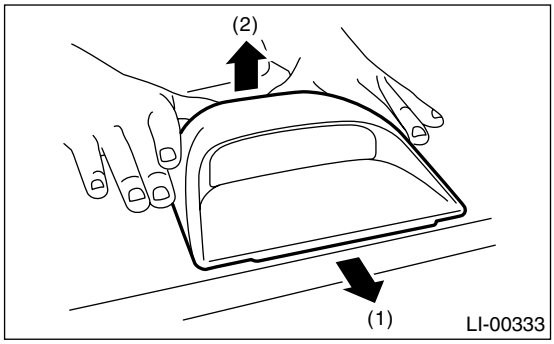

3) Remove the harness from clamp.

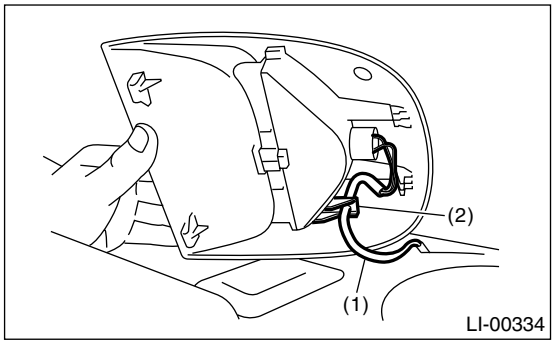

(1) Harness
(2) Clamp

4) Disengage two claws (A), pull out the high-mounted stop light from the cover and remove the claw (B).

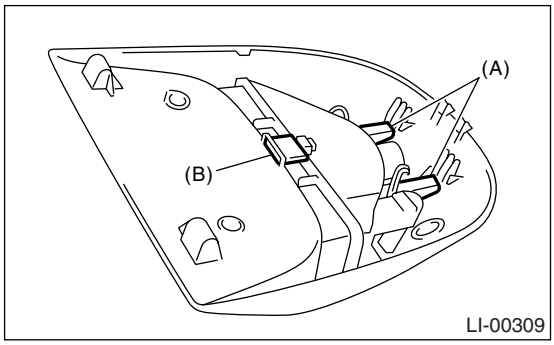

5) Disengage three claws and remove the lens (A).

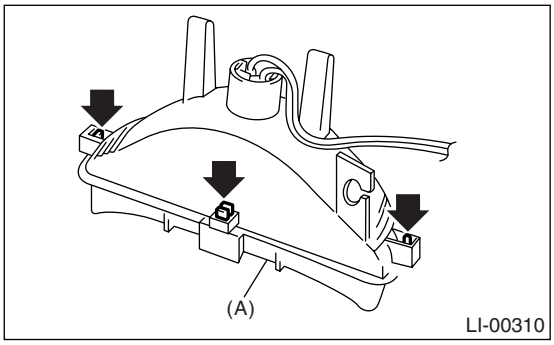

6) Remove the bulb.

2. WAGON MODEL

1) Disconnect the ground cable from battery.
2) Detach the roof spoiler. <Ref. to EI-40, REMOVAL, Roof Spoiler.>
3) Remove the nuts (A), then detach the high-mounted stop light.

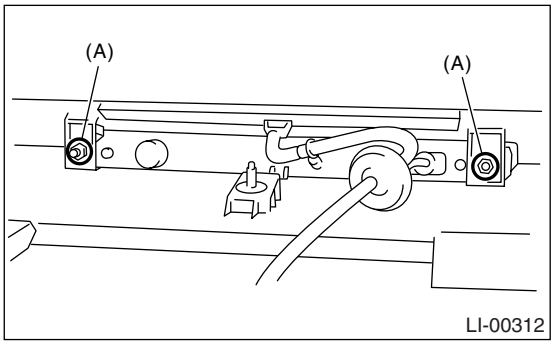

B: INSTALLATION

Install in the reverse order of removal.

C: INSPECTION

1. SEDAN MODEL

1) Visually check the bulb for blow out.
2) Check the bulb specification. <Ref. to LI-2, SPECIFICATION, General Description.>
3) If NG, replace the bulb with a new one.

2. WAGON MODEL

1) Install the high-mounted stop light to test if it illuminates normally.
2) If the high-mounted stop light does not illuminate, replace it with a new one.

NOTE:
Since LED (Light Emitting Diode) is used for the high-mounted stop light of wagon model, replace the high-mounted stop light assembly when the LED is powered off.

27.Spot Map Light

A: REMOVAL

1) Disconnect the ground cable from battery.
2) Remove the lens (A) and spot map light mounting screws (B).

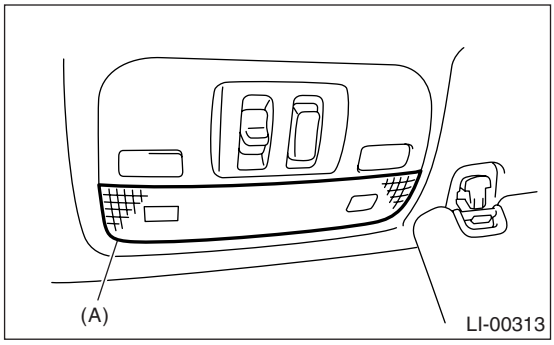

- Model with sunroof

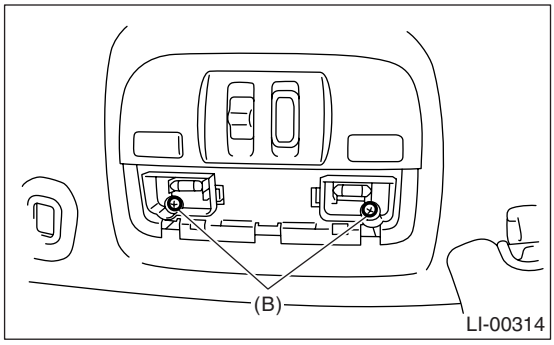

- Model without sunroof

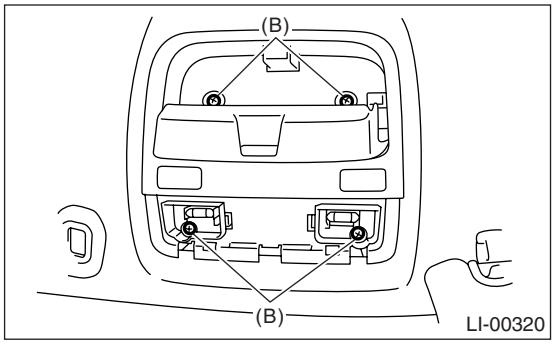

3) Disconnect the harness connectors and remove the spot map light.

B: INSTALLATION

Install in the reverse order of removal.

C: INSPECTION

1. SPOT MAP LIGHT BULB

1) Visually check the bulb for blow out.
2) Check the bulb specification. <Ref. to LI-2, SPECIFICATION, General Description.>
3) If NG, replace the bulb with a new one.

2. SPOT MAP LIGHT SWITCH

Measure the resistance between spot map light switch terminals.

Switch position	Terminal No.	Standard
OFF	—	More than 1 MΩ
ON	1 and 2	18±5.4 Ω

28.Room Light

A: REMOVAL

1) Disconnect the ground cable from battery.
2) Remove the lens (A) and mounting screws (B).

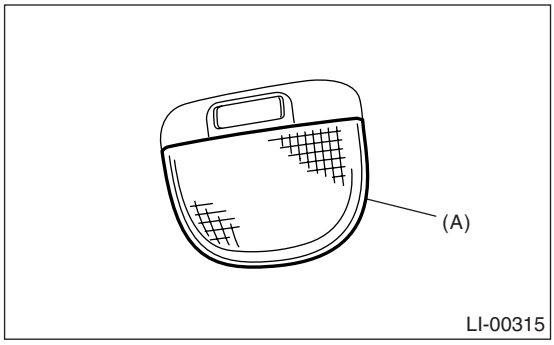

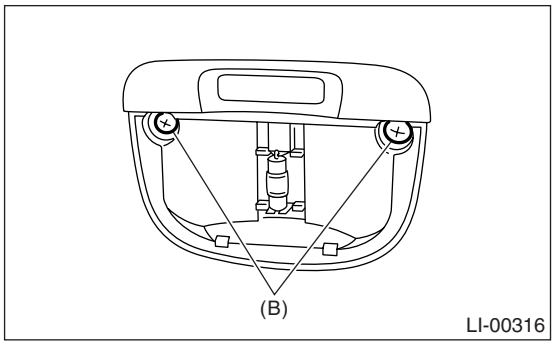

3) Disconnect the harness connector and remove the room light.

B: INSTALLATION

Install in the reverse order of removal.

C: INSPECTION

1. ROOM LIGHT BULB

1) Visually check the bulb for blow out.
2) Check the bulb specification. <Ref. to LI-2, SPECIFICATION, General Description.>
3) If NG, replace the bulb with a new one.

2. ROOM LIGHT SWITCH

Measure the resistance between room light switch terminals.

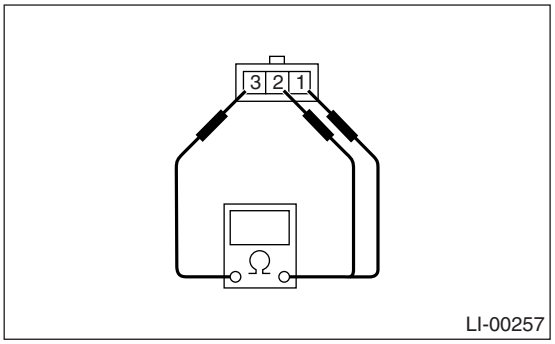

Switch position	Terminal No.	Standard
OFF	—	More than 1 MΩ
ON	1 and 3	1.5±0.5 Ω
DOOR	2 and 3	1.5±0.5 Ω

29.Luggage Room Light

A: REMOVAL

1) Disconnect the ground cable from battery.
2) Remove luggage room light body (A).

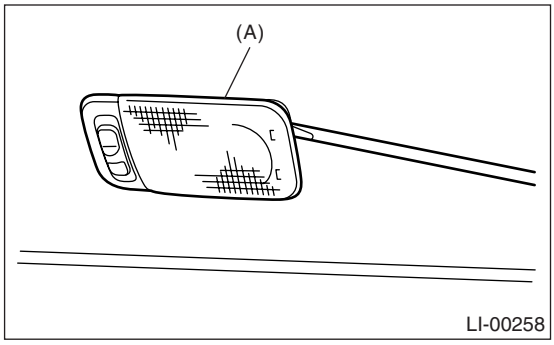

3) Disconnect the harness connector and remove the lens.

B: INSTALLATION

Install in the reverse order of removal.

C: INSPECTION

1. LUGGAGE ROOM LIGHT BULB

1) Visually check the bulb for blow out.
2) Check the bulb specification. <Ref. to LI-2, SPECIFICATION, General Description.>
3) If NG, replace the bulb with a new one.

2. LUGGAGE ROOM LIGHT SWITCH

Measure the resistance between luggage room light switch terminals.

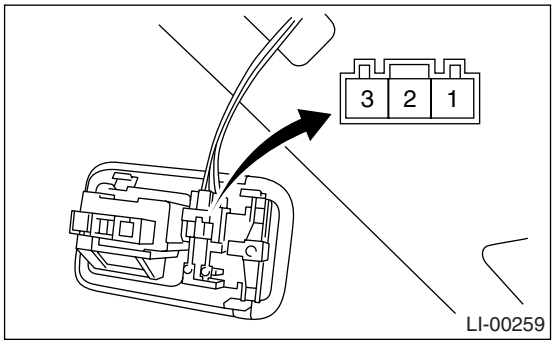

Switch position	Terminal No.	Standard
OFF	—	More than 1 MΩ
ON	1 and 2	1.5±0.5 Ω
DOOR	2 and 3	1.5±0.5 Ω

30.Trunk Room Light

A: REMOVAL

1) Disconnect the ground cable from battery.
2) Turn the trunk room light counterclockwise to 60° to remove it and disconnect the harness connector.

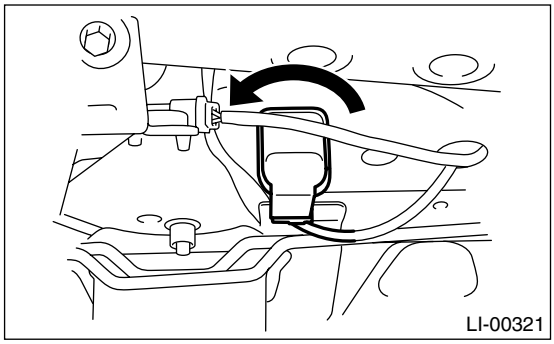

3) Remove the bulb (A).

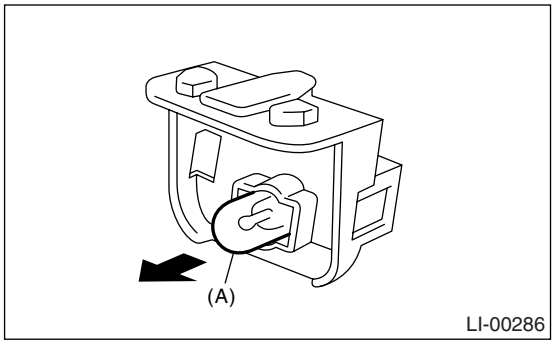

B: INSTALLATION

Install in the reverse order of removal.

C: INSPECTION

1. TRUNK ROOM LIGHT BULB

1) Visually check the bulb for blow out.
2) Check the bulb specification. <Ref. to LI-2, SPECIFICATION, General Description.>
3) If NG, replace the bulb with a new one.

2. TRUNK LID SWITCH (TRUNK ROOM LIGHT SWITCH)

Measure the resistance between trunk lid switch terminals.

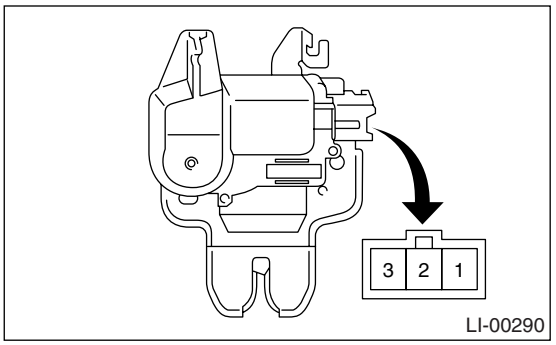

Trunk lid position	Terminal No.	Standard
Close	1 and 3	More than 1 MΩ
Open		1.5±0.5 Ω

31.Glove Box Light

A: REMOVAL

1) Disconnect the ground cable from battery.
2) Remove the glove box. <Ref. to EI-51, REMOVAL, Glove Box.>
3) Disconnect the harness connector.
4) Remove the glove box light.

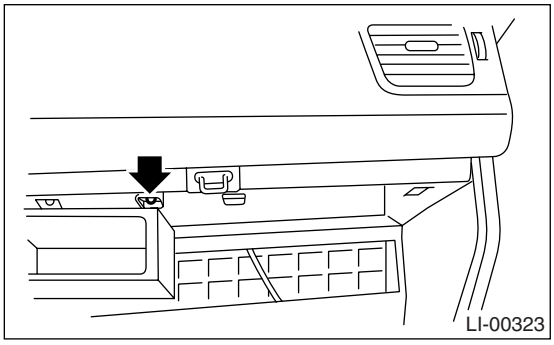

B: INSTALLATION

Install in the reverse order of removal.

C: INSPECTION

1) Visually check the bulb for blow out.
2) Check the bulb specification.
<Ref. to LI-2, SPECIFICATION, General Description.>
3) If NG, replace the bulb with a new one.

32.Door Step Light

A: REMOVAL

1) Disconnect the ground cable from battery.
2) Remove the lens (A), and then remove the door step light bulb.

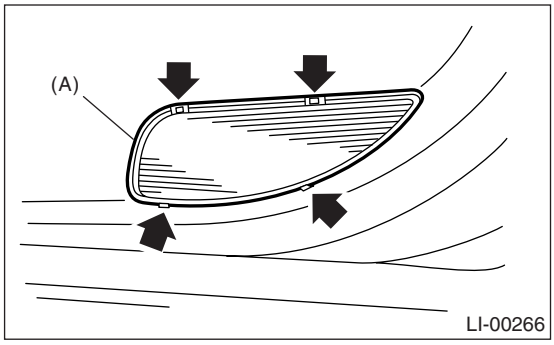

3) Remove the front door trim. <Ref. to EI-48, REMOVAL, Door Trim.>
4) Disconnect the harness connector.
5) Remove the mounting screw from rear side of trim and remove the door step light.

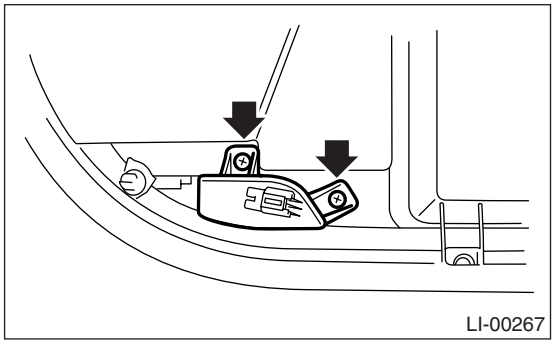

B: INSTALLATION

Install in the reverse order of removal.

C: INSPECTION

1) Visually check the bulb for blow out.
2) Check the bulb specification.
<Ref. to LI-2, SPECIFICATION, General Description.>
3) If NG, replace the bulb with a new one.

33.Ignition Switch Illumination

A: REMOVAL

1) Disconnect the ground cable from battery.
2) Remove the screws and detach the upper column cover and lower column cover.

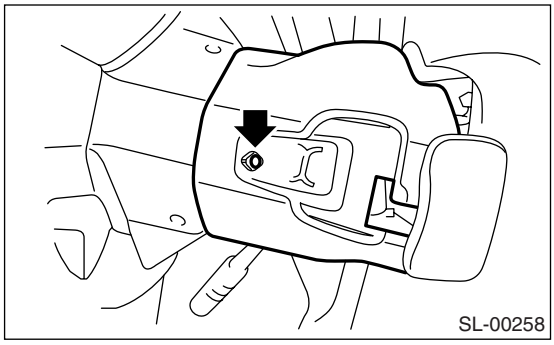

3) Disconnect the ignition switch illumination connector (A).
4) Turn the ignition switch illumination connector to left and disconnect it.

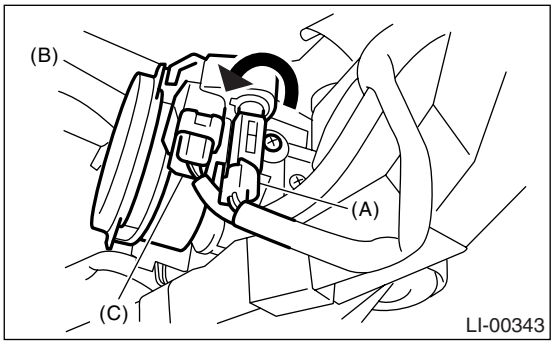

(A) Ignition switch illumination connector
(B) Ignition switch illumination
(C) Immobilizer antenna connector

B: INSTALLATION

Install in the reverse order of removal.

C: INSPECTION

Step		Check	Yes	No
1	**CHECK IGNITION SWITCH ILLUMINATION.** Make sure the ignition switch illumination illuminates when driver's side door is open.	Does the ignition switch illumination illuminate?	Ignition switch illumination is normal.	Go to step **2.**
2	**CHECK IGNITION SWITCH ILLUMINATION.** Make sure the ignition switch illumination blinks when ignition switch is turned to ON.	Does the ignition switch illumination blink?	Check the function setting of body integrated unit. <Ref. to LAN(diag)-2, Basic Diagnostic Procedure.>	Check the ignition switch illumination circuit. <Ref. to SL-21, CHECK IGNITION SWITCH ILLUMINATION, INSPECTION, Keyless Entry System.>

WIPER AND WASHER SYSTEMS

WW

		Page
1.	General Description	2
2.	Wiper and Washer System	5
3.	Combination Switch (Wiper)	6
4.	Wiper Blade	10
5.	Washer Tank and Motor	13
6.	Front Wiper Arm	14
7.	Front Wiper Motor and Link	15
8.	Front Washer Nozzle	16
9.	Rear Wiper Arm	17
10.	Rear Wiper Motor	18
11.	Rear Washer	19

1. General Description

A: SPECIFICATION

Front wiper motor	Input	12 V — 72 W or less
Rear wiper motor	Input	12 V — 42 W or less
Front washer motor	Pump type	Centrifugal
	Input	12 V — 36 W or less
Rear washer motor	Pump type	Centrifugal
	Input	12 V — 36 W or less

B: COMPONENT

1. FRONT WIPER

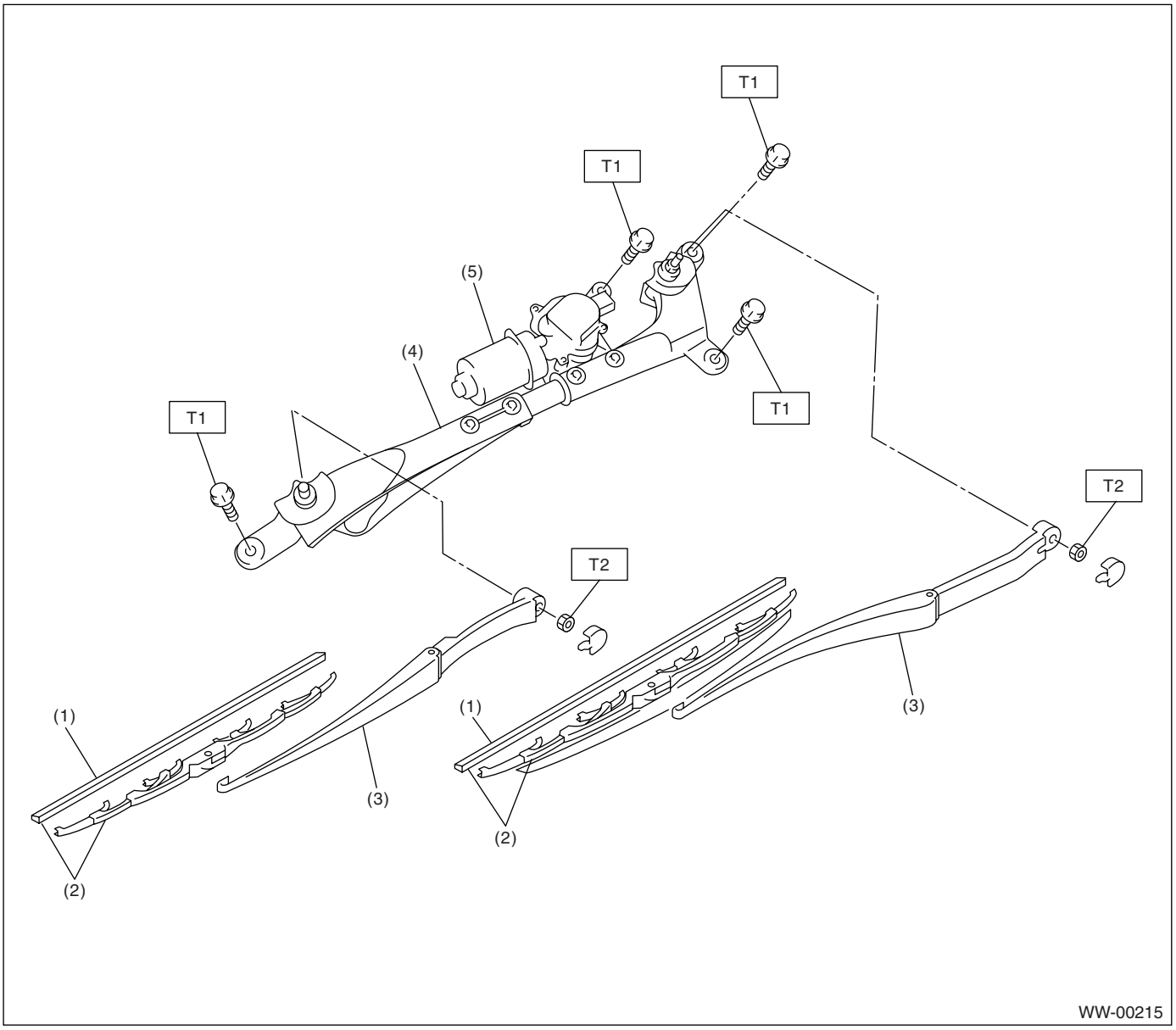

(1) Wiper rubber
(2) Wiper blade ASSY
(3) Wiper arm
(4) Wiper link ASSY
(5) Wiper motor ASSY

Tightening torque: N·m (kgf-m, ft-lb)
T1: 6.0 (0.61, 4.4)
T2: 20 (2.0, 14.5)

2. REAR WIPER (WAGON MODEL)

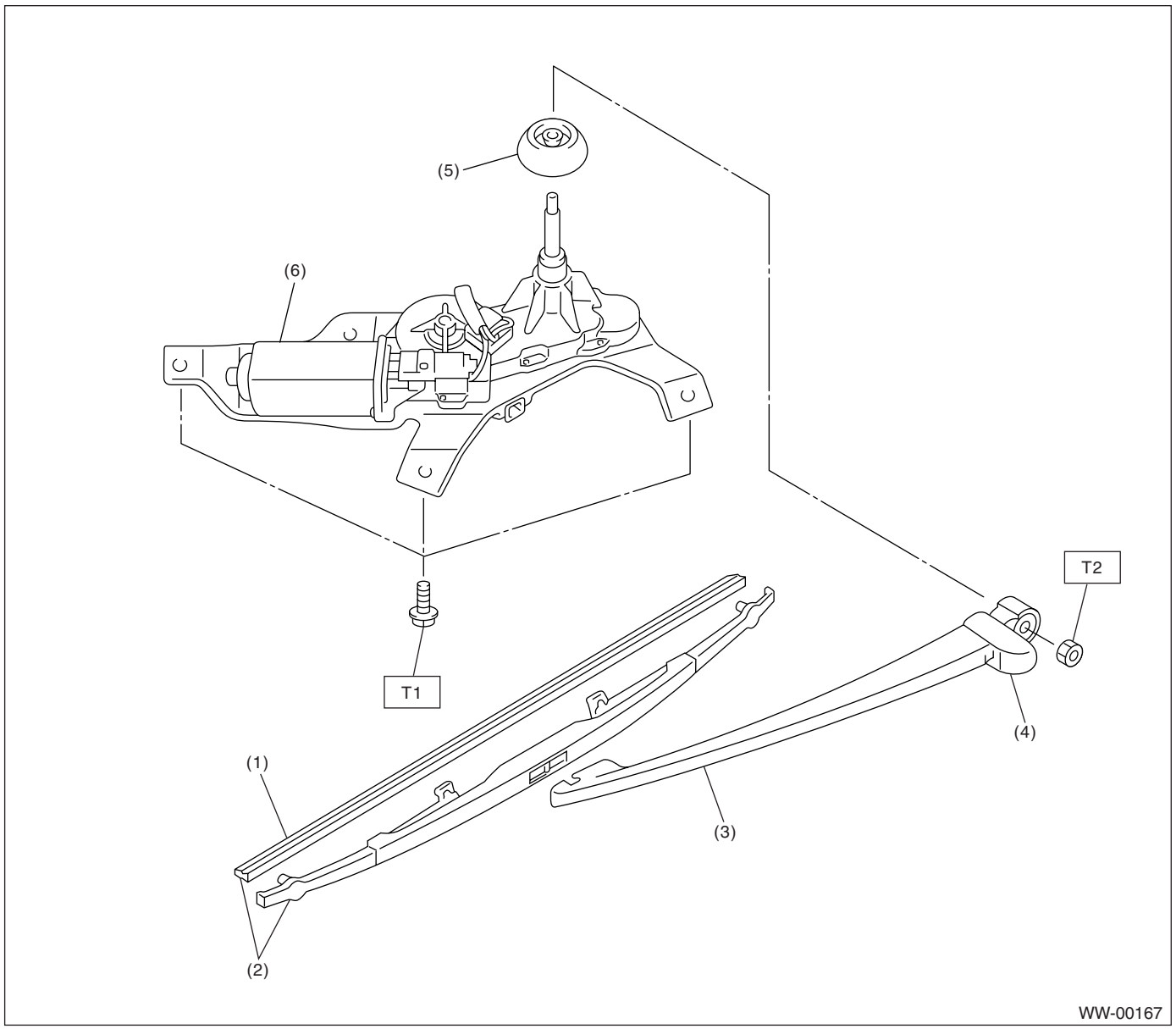

(1)	Wiper rubber	(4)	Wiper arm cover	***Tightening torque: N·m (kgf-m, ft-lb)***
(2)	Wiper blade ASSY	(5)	Cap	***T1: 7.5 (0.77, 6.0)***
(3)	Wiper arm	(6)	Wiper motor ASSY	***T2: 8.0 (0.82, 5.9)***

3. WASHER TANK

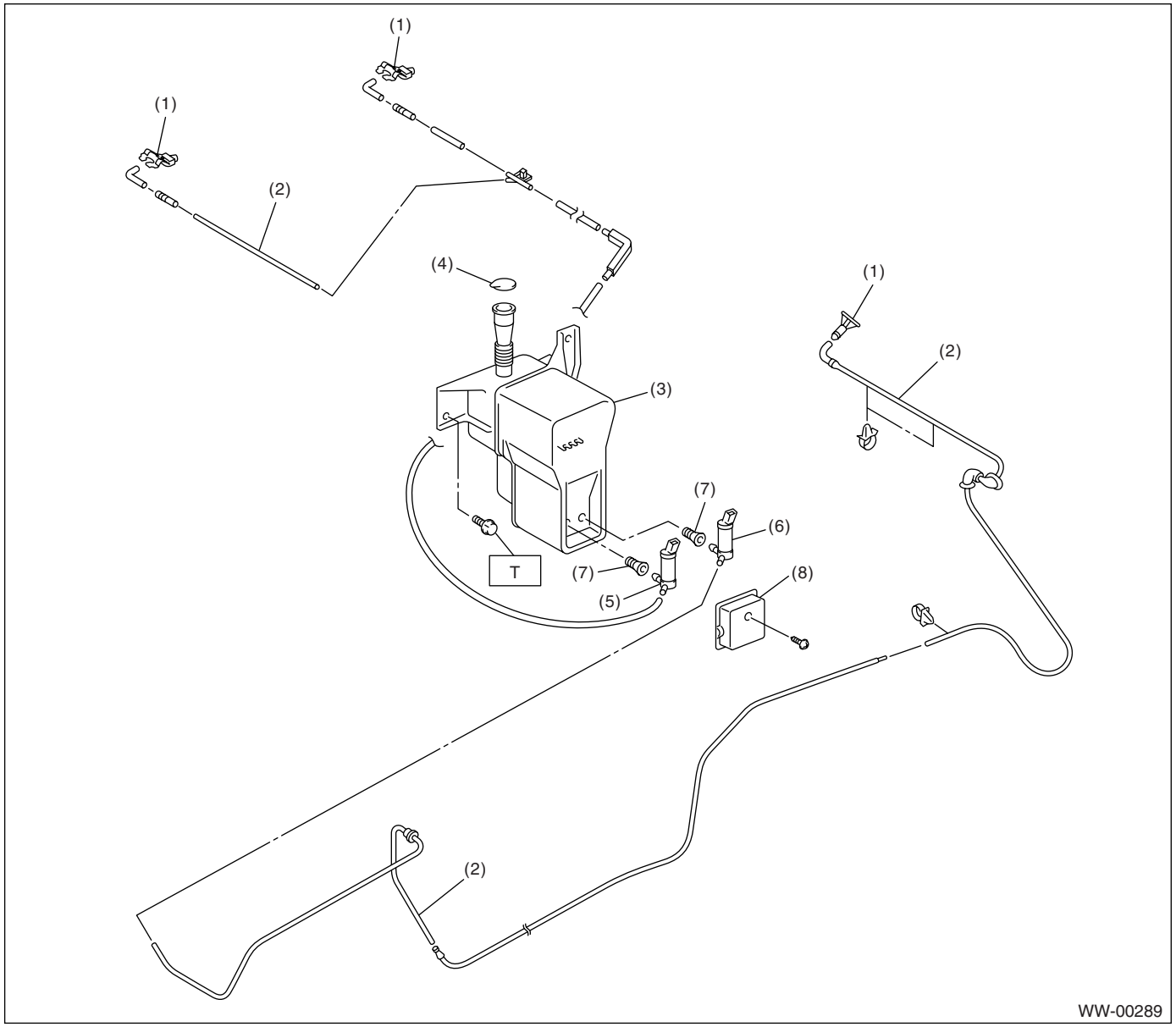

(1) Washer nozzle
(2) Washer hose
(3) Washer tank
(4) Washer tank cap
(5) Front washer motor
(6) Rear washer motor
(7) Grommet
(8) Washer motor cover

Tightening torque: N·m (kgf-m, ft-lb)
T: 6.0 (0.61, 4.4)

C: CAUTION

- Connect the connectors and hoses securely during reassembly.
- After reassembly, make sure functional parts operate smoothly.
- Be careful that wiring harnesses of airbag system pass near electrical parts and switches.
- Wiring harnesses and connectors of all airbag system are yellow color. Do not use a tester equipment on these circuits.
- Care must be taken when connecting the piping hose so that no bending, jamming, etc. are caused.
- Even if a little oil or grease such as silicon oil gets in the tank and washer passages, an oil film is easily formed on the glass, causing the wiper to chatter and judder, therefore, be careful not to let this happen.

2. Wiper and Washer System

A: WIRING DIAGRAM

1. WIPER AND WASHER (FRONT)

<Ref. to WI-157, WIRING DIAGRAM, Front Wiper and Washer System.>

2. WIPER AND WASHER (REAR)

<Ref. to WI-158, WIRING DIAGRAM, Rear Wiper and Washer System.>

B: INSPECTION

Symptom	Repair order
Wiper and washers do not operate.	(1) Wiper fuse (Front: F/B No. 30, Rear: F/B No. 23) (2) Combination switch (3) Wiper motor assembly (4) Wiring harness (5) Body integrated unit (rear wiper only)
Wipers do not operate in LO or HI.	(1) Combination switch (2) Wiper motor assembly (3) Wiring harness
Wipers do not operate in INT.	(1) Combination switch (2) Wiper motor assembly (3) Wiring harness (4) Body integrated unit (rear wiper only)
Washer motor does not operate.	(1) Washer switch (2) Washer motor (3) Wiring harness
Wipers do not operate when washer switch is ON.	(1) Wiper motor assembly (2) Wiring harness
Washer fluid spray does not operate properly.	(1) Washer motor (2) Washer hose and nozzle

3. Combination Switch (Wiper)

A: REMOVAL

1) Disconnect the ground cable from battery.
2) Remove the driver's airbag module. <Ref. to AB-16, REMOVAL, Driver's Airbag Module.>
3) Remove the steering wheel. <Ref. to PS-14, REMOVAL, Steering Wheel.>
4) Remove the screw to remove steering column cover (upper and lower).

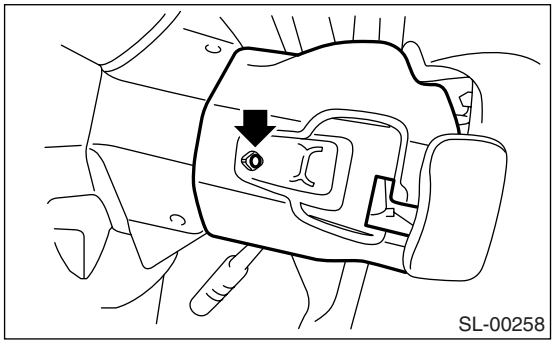

5) Disconnect the connector from combination switch.
6) Remove the three screws, and pull out the combination base switch assembly toward you.

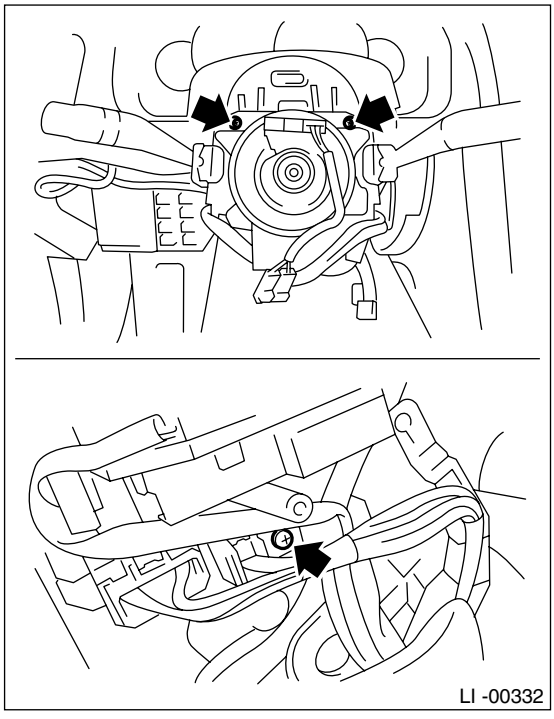

7) Remove the switch securing screw to remove combination switch.

B: INSTALLATION

Install in the reverse order of removal.

C: INSPECTION

1. COMBINATION SWITCH

1) Inspect the continuity between each connector terminal.

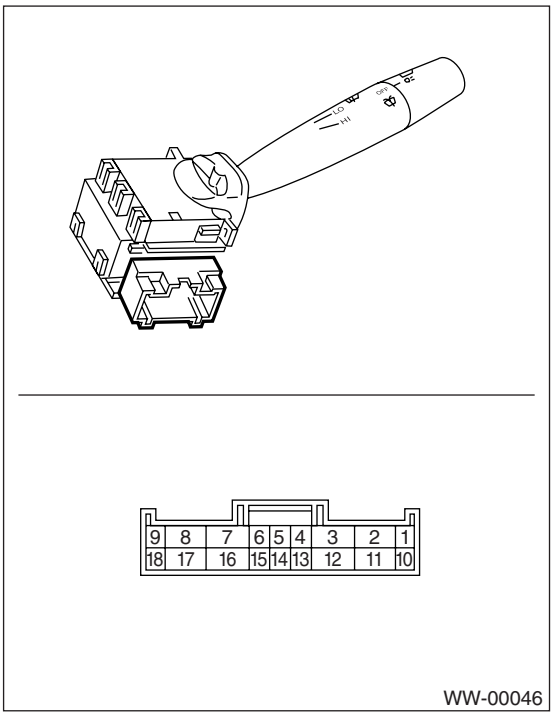

	Switch position	Terminal No.	Standard
Front	OFF	7 and 16	Less than 1 Ω
	INT	7 and 16	Less than 1 Ω
	LO	7 and 17	Less than 1 Ω
	HI	8 and 17	Less than 1 Ω
	Washer ON	2 and 11	Less than 1 Ω
Rear	Washer ON	2 and 12	Less than 1 Ω
	OFF	—	More than 1 MΩ
	INT	2 and 13	Less than 1 Ω
	ON	2 and 10	Less than 1 Ω
	Washer ON	2 and 12 12 and 10 2 and 10	Less than 1 Ω

2) If continuity is not as specified, replace the switch.

2. FRONT WIPER

1) Check with Subaru Select Monitor

	Step	Check	Yes	No
1	**CHECK INPUT SIGNAL TO BODY INTEGRATED UNIT.** When the front wiper switch is operated, check the input signal using Subaru Select Monitor. 1) Connect the Subaru Select Monitor to data link connector. 2) Turn the ignition switch to ON. 3) Select {Body Integrated Unit} from the main menu. 4) Select {Current Data Display & Save}. 5) When the front wiper switch is set to LO or HI, check the input signal.	Is the input signal normal?	End.	Replace the body integrated unit. <Ref. to SL-54, Body Integrated Unit.>

2) Intermittent operation inspection
   (1) Turn the wiper switch to INT.
   (2) Adjust the intermittent control switch to MAX.
   (3) Apply the battery voltage to switch terminal No. 16 and 2.
   (4) Measure the voltage between combination switch terminals.

Terminals
No. 7 — No. 2:

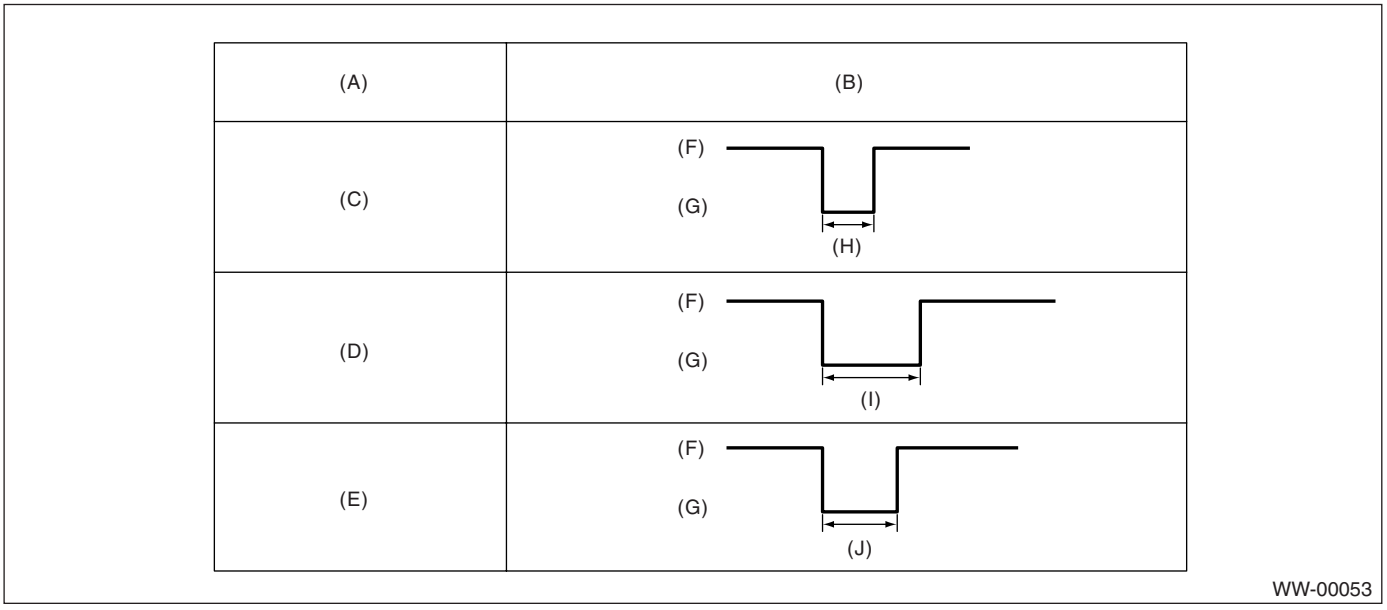

(A) Switch position
(B) Voltage
(C) MIN.
(D) MAX.
(E) Non-intermittent type
(F) 12 V
(G) 0 V
(H) Approx. 2 sec.
(I) 16±6 sec.
(J) 3±1 sec.

3) If operation is not as specified, replace the switch.

3. REAR WIPER

1) Check with Subaru Select Monitor

	Step	Check	Yes	No
1	**CHECK INPUT OF REAR WIPER.** Check the input from body integrated unit using Subaru Select Monitor. 1) Connect the Subaru Select Monitor to data link connector. 2) Turn the ignition switch to ON. 3) Select {Body Integrated Unit} from the main menu. 4) Select {Current Data Display & Save}. 5) Check the input of rear wiper switch.	Is the input normal?	Go to step **2.**	Check the rear wiper switch. <Ref. to WW-6, INSPECTION, Combination Switch (Wiper).>
2	**CHECK OUTPUT OF BODY INTEGRATED UNIT.** When the rear wiper switch is operated, check the output using Subaru Select Monitor. 1) Turn the ignition switch to ON. 2) Operate the rear wiper switch to set to each position of ON and INT. 3) At this time, check the output of body integrated unit.	When it is set to ON, is ON output continuously? When it is set to INT, is ON/OFF output repeatedly? (INT OFF time (when vehicle parked): 12 seconds	Check the rear wiper motor. <Ref. to WW-18, INSPECTION, Rear Wiper Motor.>	Replace the body integrated unit. <Ref. to SL-54, Body Integrated Unit.>

2) Rear wiper motor circuit check

	Step	Check	Yes	No
1	**CHECK POWER SUPPLY CIRCUIT OF REAR WIPER MOTOR.** 1) Disconnect the harness connector of rear wiper motor. 2) Turn the ignition switch to ACC. 3) Measure the voltage between the rear wiper motor harness connector terminal and chassis ground. ***Connector & terminal*** ***(D43) No. 1 (+) — Chassis ground (−):***	Is the voltage more than 10 V?	Go to step **2.**	• Check the fuse (No. 23 in fuse & relay box). • Check the fusible link (No. 6 in main fuse box).
2	**CHECK GROUND CIRCUIT OF REAR WIPER MOTOR.** 1) Turn the ignition switch to OFF. 2) Measure the resistance between the rear wiper motor harness connector terminal and chassis ground. ***Connector & terminal*** ***(D43) No. 3 — Chassis ground:***	Is the resistance less than 10 Ω?	Go to step **3.**	Repair the open circuit of rear wiper motor ground cable.
3	**CHECK HARNESS BETWEEN BODY INTEGRATED UNIT AND REAR WIPER MOTOR.** 1) Turn the ignition switch to OFF. 2) Disconnect the harness connector of body integrated unit. 3) Disconnect the harness connector of rear wiper motor. 4) Measure the resistance between the harness connector terminals of body integrated unit and rear wiper motor. ***Connector & terminal*** ***(B280) No. 1 — (D43) No. 2:*** ***(B280) No. 8 — (D43) No. 4:***	Is the resistance less than 10 Ω?	Go to step **4.**	Repair the open circuit of harness between body integrated unit and rear wiper motor.

Step		Check	Yes	No
4	**CHECK OPERATION OF REAR WIPER MOTOR.** 1) Remove the rear wiper motor. 2) Check the rear wiper motor. <Ref. to WW-18, INSPECTION, Rear Wiper Motor.>	Does the rear wiper motor rotate normally?	End.	Replace the rear wiper motor.

NOTE:
Rear wiper intermittent time (AT model only)

Select lever position (AT model only)	Vehicle speed (km/h (MPH))	Intermittent stopping time (sec.)
Rev	—	Continuous operation
Except reverse mode	80 — (50 —)	3
	50 — 80 (31 — 50)	6
	20 — 50 (12 — 31)	9
	0 — 20 (0 — 12)	12

4. Wiper Blade

A: REMOVAL

CAUTION:
When replacing wiper blades or etc., be sure to stand up the driver side wiper arm first, then passenger side wiper arm next. Also, when putting the wiper arms back, be sure to start with passenger side first, then driver side next. Doing this in the reverse order may result in damage of passenger side wiper arm by hitting with driver side wiper blade.

1. FRONT

While pushing the locking clip (A) up, pull out the blade from arm to the arrow direction.

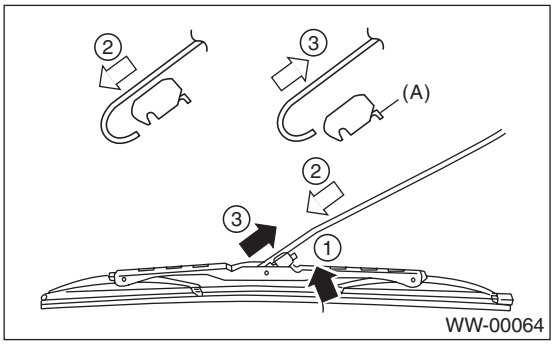

2. REAR

Turn the blade in the direction of arrow (A) and remove it from arm.

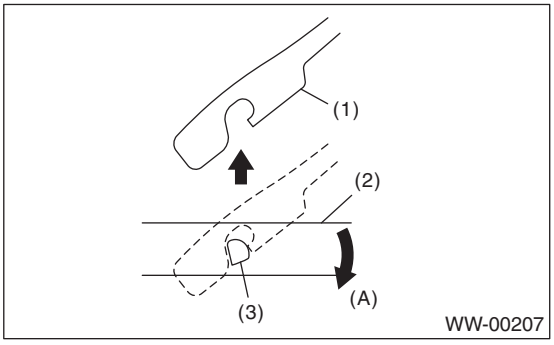

(A) Turn the wiper blade.
(1) Wiper arm
(2) Wiper blade
(3) Installing part of wiper blade

B: INSTALLATION

1) Install in the reverse order of removal.
2) Confirm that the clip is locked securely.

C: DISASSEMBLY

1. METAL TYPE

Pull side (A) of the wiper rubber stopper and remove the rubber from blade assembly.

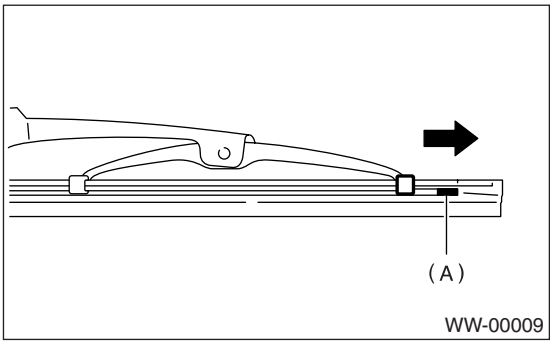

2. RESIN TYPE

Pull the wiper rubber top slightly from the stopper (A) and pull out fully.

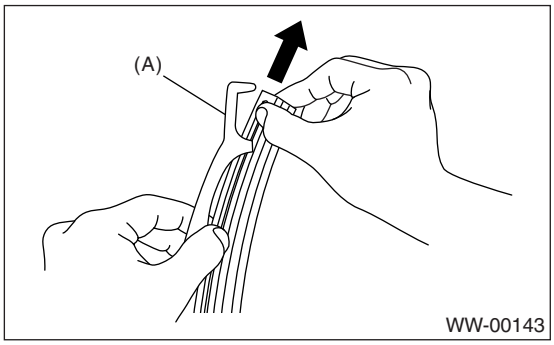

D: ASSEMBLY

1. METAL TYPE

1) Insert the wiper rubber onto blade so that the stopper is in the position shown in the figure.

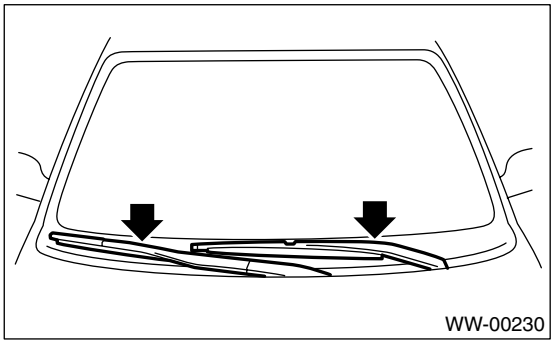

2) Make sure the wiper rubber is securely fastened to the pull stopper (A).

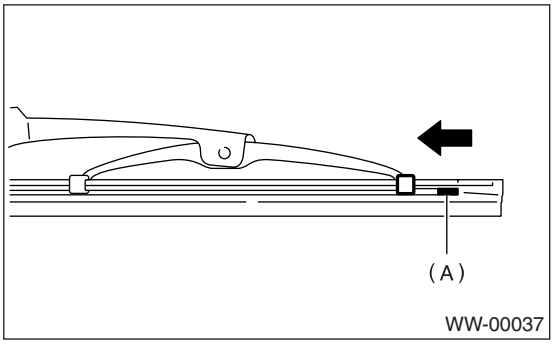

2. RESIN TYPE

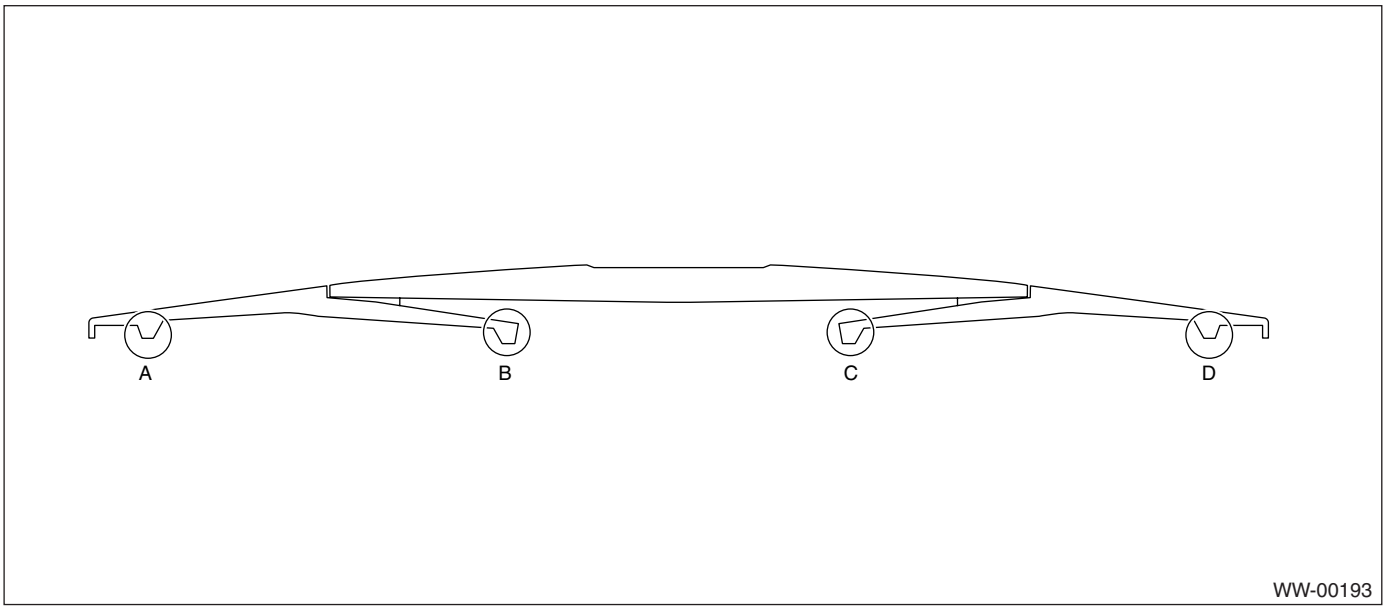

1) Insert the wiper rubber through the claw B.

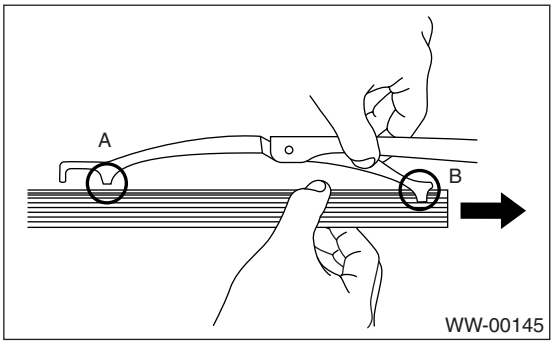

2) Insert the wiper rubber until its top end protrudes approx. 20 mm (0.79 in) from stopper D.

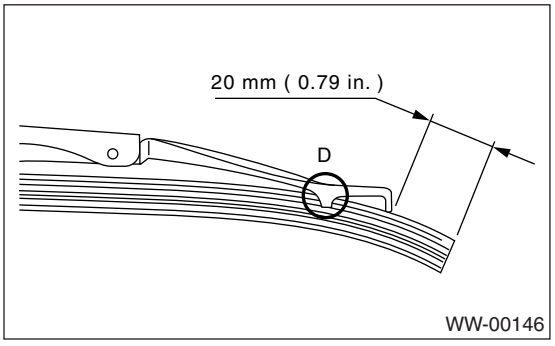

3) Insert the wiper rubber into the claw A.

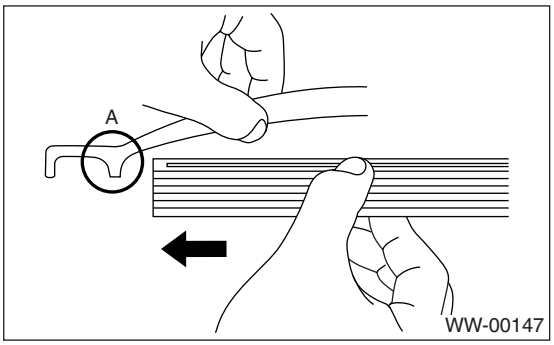

E: INSPECTION

1) When the wiper does not perform well, inspect the followings:
• Make sure the movable part of the wiper blade assembly moves smoothly.
• Make sure the wiper rubber is not deformed or damaged.
2) If damaged, replace with new one.

5. Washer Tank and Motor

A: REMOVAL

1) Open the hood.
2) Disconnect the ground cable from battery.
3) Remove the front bumper. <Ref. to EI-30, REMOVAL, Front Bumper.>
4) Remove the clip holding washer water supply tap.

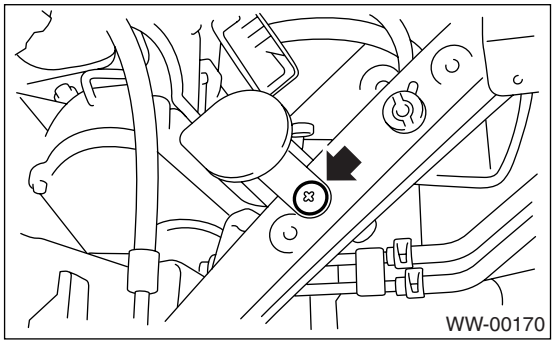

5) Remove the two bolts and one nut, hose, connector and washer motor cover, and then remove the washer tank.

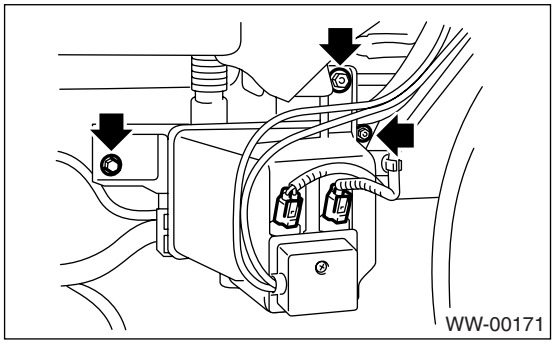

B: INSTALLATION

Install in the reverse order of removal.

Tightening torque:
6.0 N·m (0.61 kgf-m, 4.4 ft-lb)

C: DISASSEMBLY

Pull out the washer motor from tank.

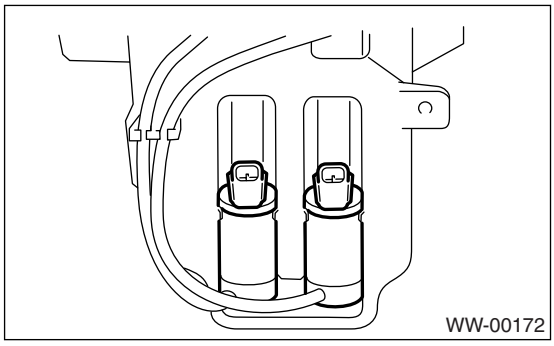

D: ASSEMBLY

1) Assemble in the reverse order of disassembly.
2) Confirm that water does not leak from installation area of motor.

E: INSPECTION

Apply battery voltage to the connector terminal of the washer motor and make sure the motor operates.

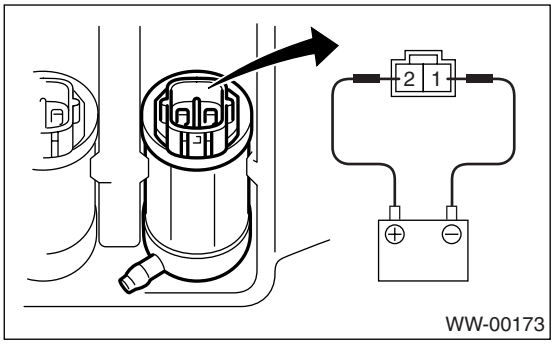

6. Front Wiper Arm

A: REMOVAL

CAUTION:
When replacing wiper blades or etc., be sure to stand up the driver side wiper arm first, then passenger side wiper arm next. Also, when putting the wiper arms back, be sure to start with passenger side first, then driver side next. Doing this in the reverse order may result in damage of passenger side wiper arm by hitting with driver side wiper blade.

1) Open the hood.
2) Remove the cap.
3) Remove the nut to remove wiper arm.

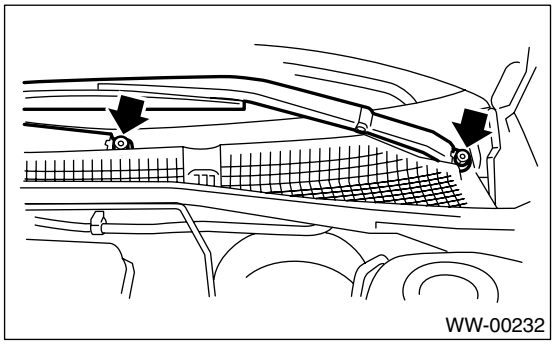
WW-00232

B: INSTALLATION

1) Install in the reverse order of removal.
2) Operate the wiper once.
3) Align the wiper blade to ceramic print point mark (A) of front window panel.

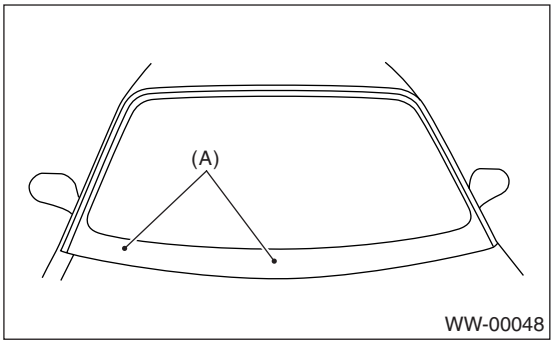

WW-00048

Tightening torque:
Refer to "COMPONENT" of "General Description".
<Ref. to WW-2, FRONT WIPER, COMPONENT, General Description.>

C: ADJUSTMENT

Operate the wiper once. Align the wiper blade to ceramic print point mark (A) of front window panel.

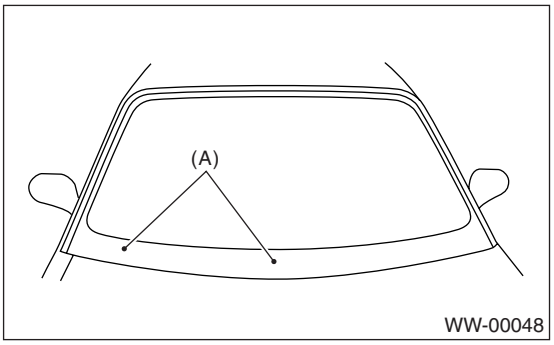

WW-00048

7. Front Wiper Motor and Link

A: REMOVAL

1) Disconnect the ground cable from battery.
2) Remove the cowl panel. <Ref. to EI-39, REMOVAL, Cowl Panel.>
3) Disconnect the connector of wiper motor assembly.
4) Remove the bolt to remove wiper assembly.

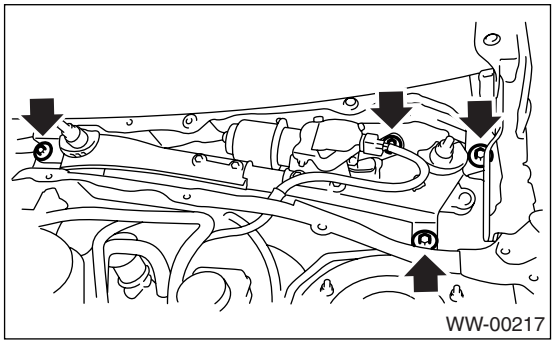
WW-00217

NOTE:
Wiper motor and wiper link can not be disassembled, because those are assembly part.

B: INSTALLATION

Install in the reverse order of removal.

Tightening torque:
Refer to "COMPONENT" of "General Description".
<Ref. to WW-2, FRONT WIPER, COMPONENT, General Description.>

C: INSPECTION

1) When the battery is connected to the terminal of connectors, confirm that the wiper motor operates at low speed.

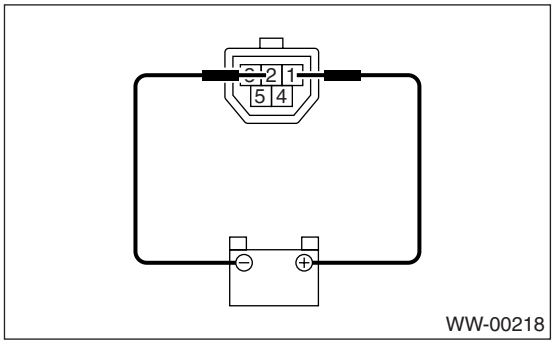

WW-00218

2) When the battery is connected to the terminal of connectors, confirm that the wiper motor operates at high speed.

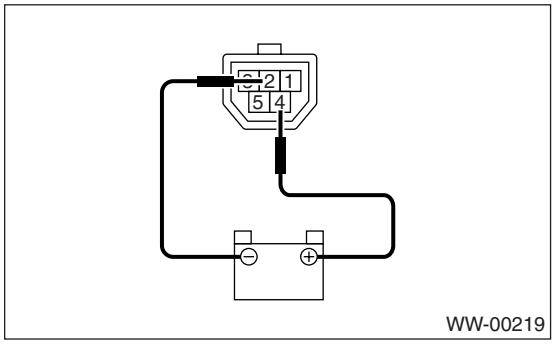

WW-00219

3) Connect the battery to terminals of connector, and remove the terminal connection with wiper motor rotated at low speed, and stop the wiper motor through operation.

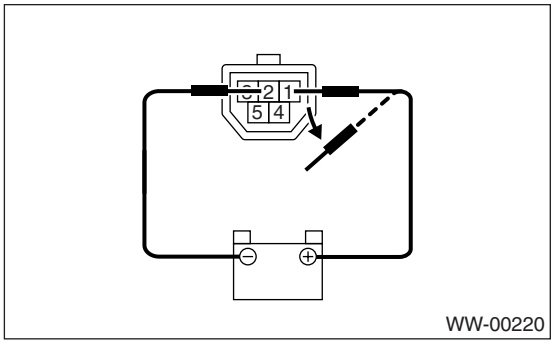

WW-00220

4) Connect the battery and confirm that the wiper motor stops at automatic stop position after the wiper motor operates at low speed again.

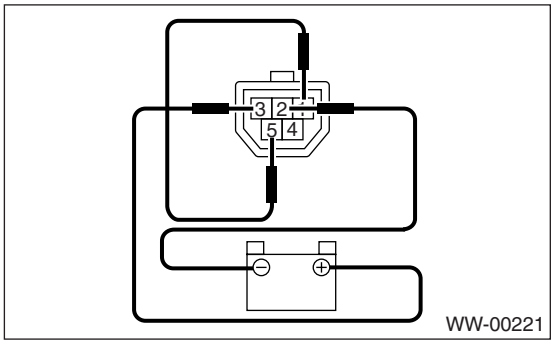

WW-00221

8. Front Washer Nozzle

A: REMOVAL

1) Remove the front hood insulator. <Ref. to EB-13, FRONT HOOD INSULATOR, REMOVAL, Front Hood.>
2) Hold the pawl of washer nozzle (A) toward the arrow direction, and remove the washer nozzle.

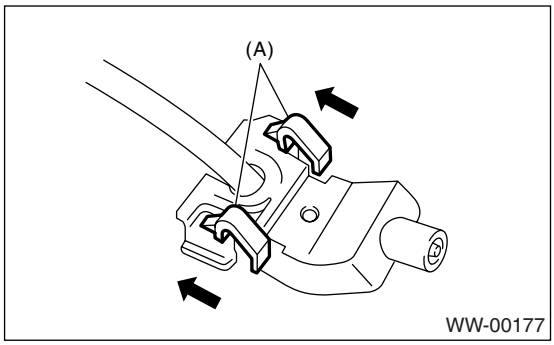

3) Remove the washer hose from washer nozzle.

B: INSTALLATION

1) Install in the reverse order of removal.
2) Adjust the washer nozzle position. <Ref. to WW-16, ADJUSTMENT, Front Washer Nozzle.>

C: INSPECTION

- Make sure the nozzle and hose are not clogged.
- Make sure the hose is not bent.

D: ADJUSTMENT

1) Turn the wiper switch to OFF position.
2) While the vehicle is at standstill, adjust the washer injection position as shown in the figure.

Injection position:
A: 250 mm (9.84 in)
B: 435 mm (17.13 in)

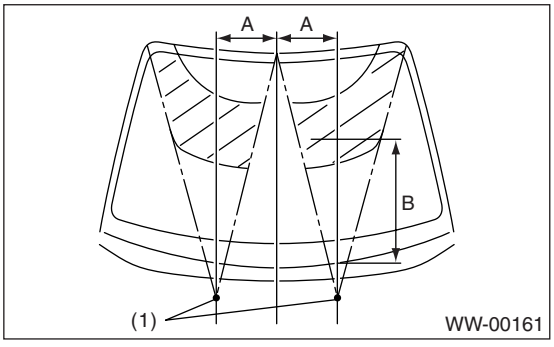

(1) Nozzle

Injection angle should be adjusted with 0.5 mm (0.020 in) thickness steel scale. Use maximum thickness of 0.5 mm steel scale, because the injection slit width of washer nozzle is 0.6 mm (0.024 in). Adjusting with a flat tip driver may damage the injection slit and cause the faulty injection.

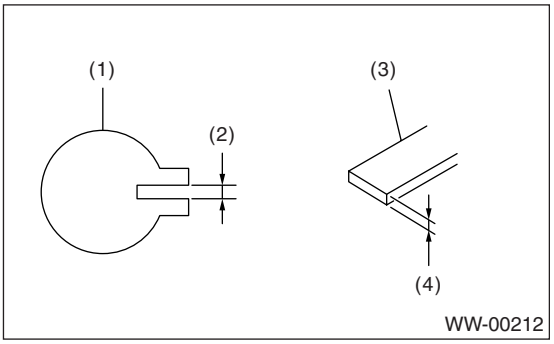

(1) Inside of washer nozzle injection
(2) 0.6 mm (0.024 in)
(3) Steel scale
(4) Max. 0.5 mm (0.020 in)

9. Rear Wiper Arm

A: REMOVAL

1) Detach the wiper arm cover (A).
2) Remove the nut (B) to remove wiper arm.

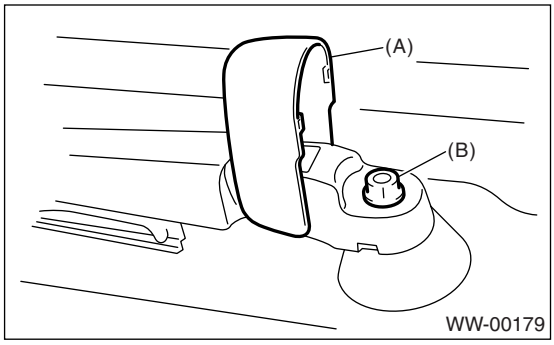

B: INSTALLATION

1) Install in the reverse order of removal.
2) Operate the rear wiper once.
3) Align the blade with the marking (A) of glass.

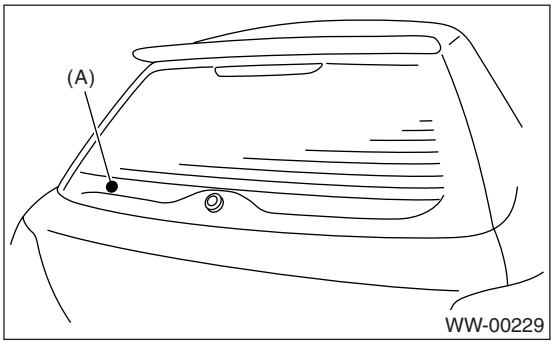

Tightening torque:
Refer to "COMPONENT" of "General Description".
<Ref. to WW-3, REAR WIPER (WAGON MODEL), COMPONENT, General Description.>

C: ADJUSTMENT

1) Operate the rear wiper once.
2) Align the blade with the marking (A) of glass.

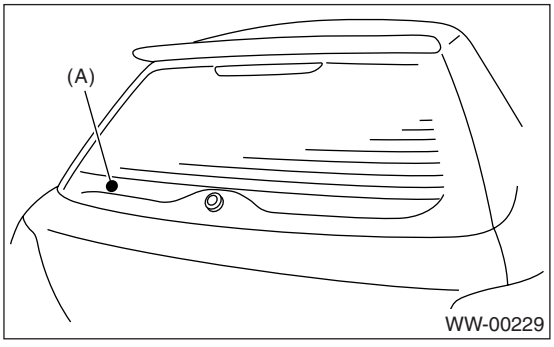

10.Rear Wiper Motor

A: REMOVAL

1) Disconnect the ground cable from battery.
2) Remove the rear wiper arm. <Ref. to WW-17, REMOVAL, Rear Wiper Arm.>
3) Remove the rear gate lower trim. <Ref. to EI-68, REMOVAL, Rear Gate Trim.>
4) Disconnect the harness connector of wiper motor assembly.
5) Remove the bolts to remove wiper motor assembly (A).

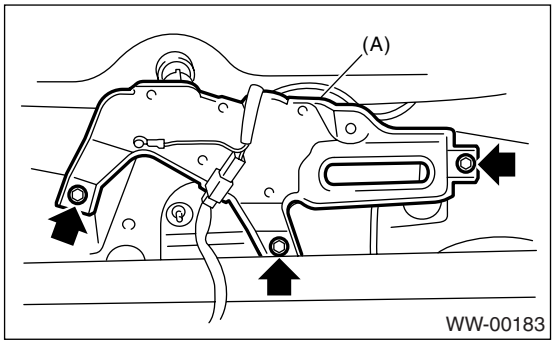

B: INSTALLATION

1) Install in the reverse order of removal.
2) Be sure that the pivot cap with the arrow mark facing up, as shown in the figure.

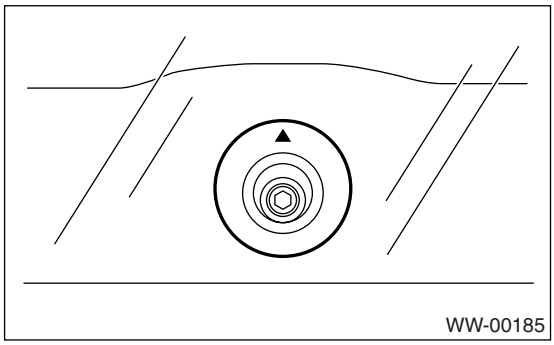

Tightening torque:
Refer to "COMPONENT" of "General Description".
<Ref. to WW-3, REAR WIPER (WAGON MODEL), COMPONENT, General Description.>

C: INSPECTION

1) Connect the battery to wiper motor connector and confirm that wiper motor operates.

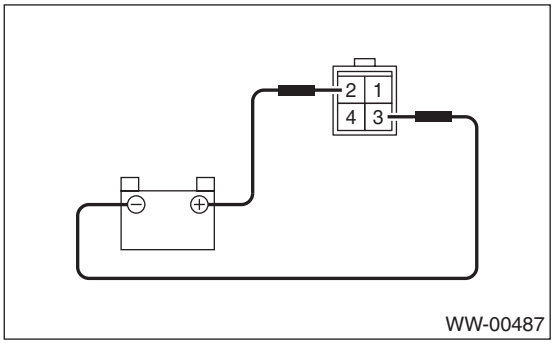

2) Connect the battery to terminals of connector, and remove the terminal connection with wiper motor rotated, and stop the wiper motor through operation.

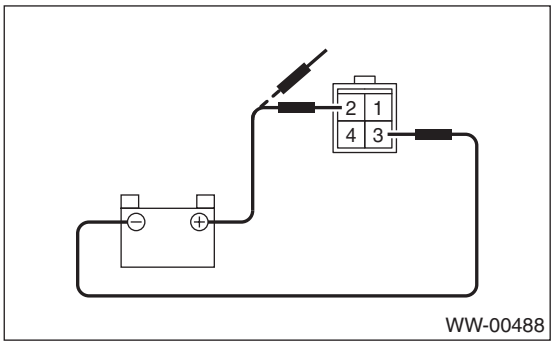

3) Connect the battery and confirm that the wiper motor stops at automatic stop position after the wiper motor operates at low speed again.

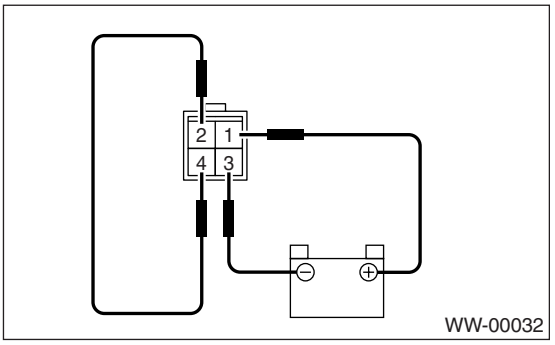

11.Rear Washer

A: REMOVAL

1) Detach the roof spoiler. <Ref. to EI-40, REMOVAL, Roof Spoiler.>
2) Remove the washer hose from washer nozzle.
3) Push the pawl of nozzle from the reverse side of roof spoiler with a flat tip screwdriver or equivalent, and remove the washer nozzle.

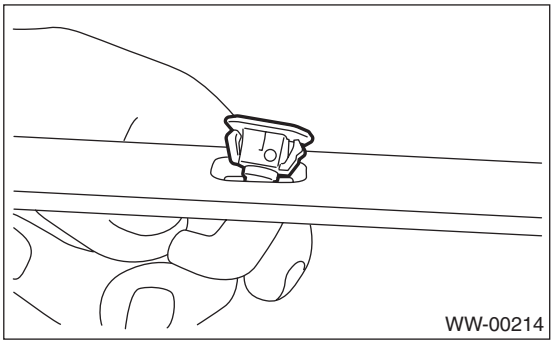

B: INSTALLATION

Install in the reverse order of removal.

C: INSPECTION

- Make sure the nozzle and hose are not clogged.
- Make sure the hose is not bent.
- While the vehicle is at standstill, make sure the washer injection position as shown in the figure.

NOTE:
Washer injection position can not be adjusted.

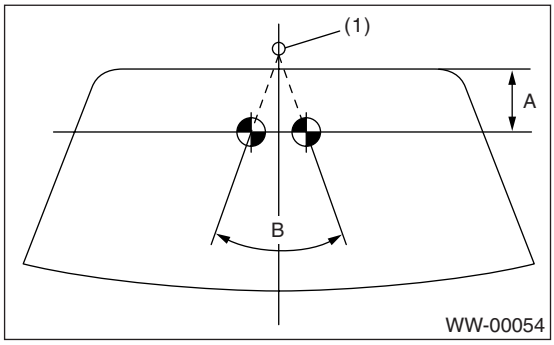

(1) Nozzle
(A) 70 mm (2.76 in)
(B) 70°

ENTERTAINMENT

ET

		Page
1.	General Description	2
2.	Audio System	3
3.	Front Accessory Power Supply Socket System	4
4.	Audio	5
5.	Front Speaker	6
6.	Tweeter	7
7.	Rear Speaker	8
8.	Woofer	9
9.	Antenna	10
10.	Antenna Amplifier	11
11.	Noise Suppressor	12
12.	Front Accessory Power Supply Socket	13
13.	Steering Satellite Switch	14

1. General Description

A: CAUTION

• Before disassembling or reassembling parts, always disconnect the battery ground cable. When replacing the audio, control unit, and other parts provided with memory functions, record the memory contents before disconnecting the battery ground cable. Otherwise, the memory will be erased.
• Reassemble the parts in the reverse order of disassembly unless otherwise indicated.
• Adjust parts to the given specifications.
• Connect the connectors securely during reassembly.
• After reassembly, make sure the functional parts operate smoothly.

B: PREPARATION TOOL

1. GENERAL TOOL

TOOL NAME	REMARKS
Circuit tester	Used for measuring resistance and voltage.
Conductive silver composition (DUPONT No. 4817 or equivalent)	Used for repairing antenna wire.

2. Audio System

A: WIRING DIAGRAM

<Ref. to WI-160, WIRING DIAGRAM, Audio System.>

B: INSPECTION

Symptom	Repair order
No power coming in. (No display and no sound from speakers)	(1) Check the fuse and power supply for audio. (2) Check the audio ground. (3) Remove the audio and repair it.
A specific speaker does not operate.	(1) Check the speaker. (2) Check the output circuit between audio and speaker.
Audio generates noise with engine running.	(1) Check the audio ground. (2) Check the generator. (3) Check the ignition coil. (4) Remove the audio and repair it.
AM and FM modes are weak or noisy.	(1) Check the antenna. (2) Check the antenna amplifier. (3) Check the noise suppressor. (4) Check the audio ground. (5) Remove the audio and repair it.

3. Front Accessory Power Supply Socket System

A: WIRING DIAGRAM

<Ref. to WI-162, WIRING DIAGRAM, Front Accessory Power Supply Socket System.>

4. Audio

A: REMOVAL

1) Disconnect the ground cable from battery.
2) Remove the console box. <Ref. to EI-53, REMOVAL, Console Box.>
3) Remove the console front panel. <Ref. to EI-54, REMOVAL, Center Console.>
4) Remove the console side garnish. <Ref. to EI-54, REMOVAL, Center Console.>

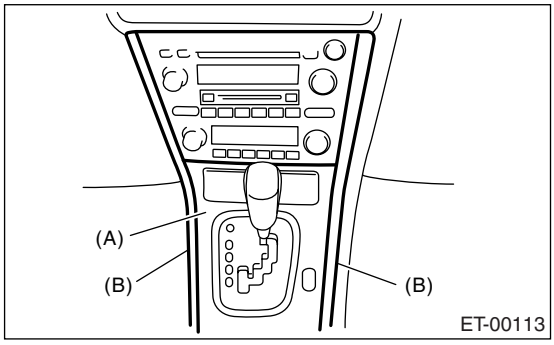

(A) Console front panel
(B) Console side garnish

5) Remove the screws, and slightly pull the audio out from center console.

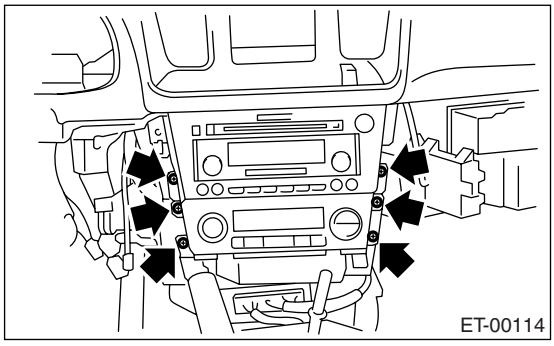

6) Disconnect the harness connector and antenna feeder cord, and then remove the audio.

B: INSTALLATION

Install in the reverse order of removal.

5. Front Speaker

A: REMOVAL

1) Disconnect the ground cable from battery.
2) Remove the front door trim. <Ref. to EI-48, REMOVAL, Door Trim.>
3) Remove the front speaker mounting screws.

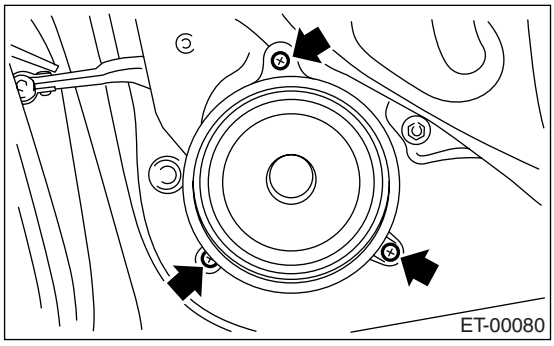

4) Disconnect the harness connector and remove front speaker.

B: INSTALLATION

Install in the reverse order of removal.

6. Tweeter

A: REMOVAL

1) Disconnect the ground cable from battery.
2) Remove the front door trim. <Ref. to EI-48, REMOVAL, Door Trim.>
3) Remove the tweeter mounting screws.

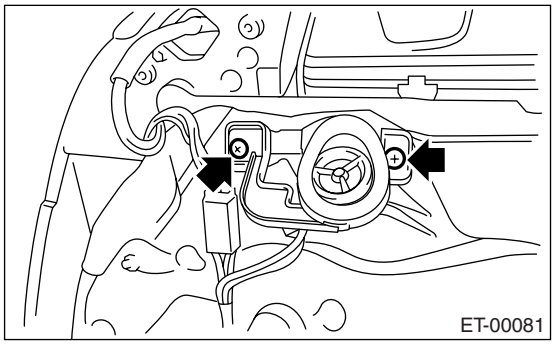

4) Disconnect the harness connector and remove tweeter.

B: INSTALLATION

Install in the reverse order of removal.

7. Rear Speaker

A: REMOVAL

1) Disconnect the ground cable from battery.
2) Remove the rear door trim. <Ref. to EI-48, REMOVAL, Door Trim.>
3) Remove the rear speaker mounting screws.

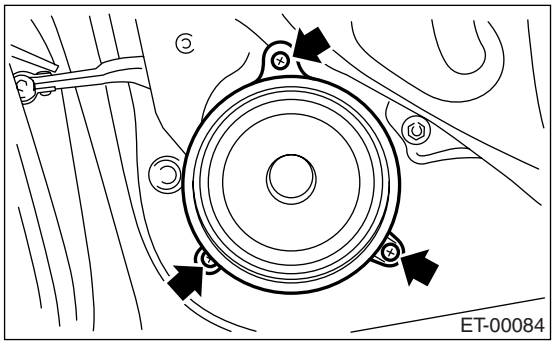

4) Disconnect the harness connector and remove rear speaker.

B: INSTALLATION

Install in the reverse order of removal.

8. Woofer

A: REMOVAL

1) Disconnect the ground cable from battery.
2) Remove the hooks (A) and detach woofer cover. <Ref. to EI-62, REMOVAL, Rear Quarter Trim.>

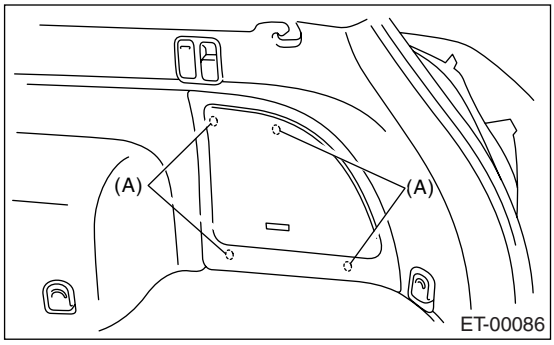

3) Remove the quarter lower trim. <Ref. to EI-62, REMOVAL, Rear Quarter Trim.>
4) Remove the woofer bracket mounting clips (A) and screws, and then remove the woofer bracket.

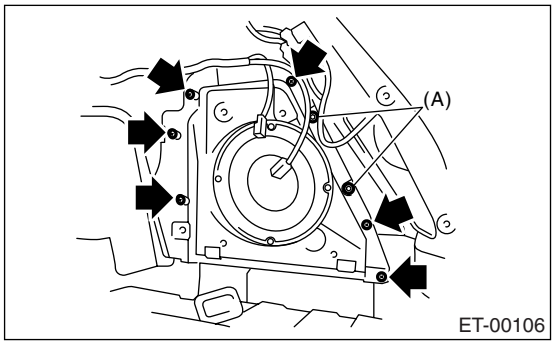

5) Disconnect the harness connector and detach woofer.

B: INSTALLATION

Install in the reverse order of removal.

9. Antenna

A: INSPECTION

Measure the resistance between antenna terminal and each antenna wire.
If an antenna wire is OK, resistance will be less than 1 Ω. If an antenna wire is broken, resistance will be more than 1 MΩ.

NOTE:
When checking the continuity, wind a piece of aluminum foil around the tip of tester probe and press the foil against wire with your finger.

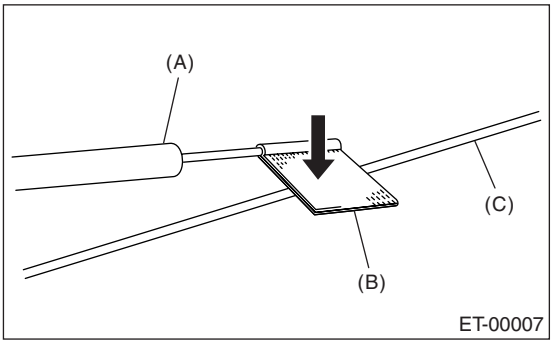

(A) Tester probe
(B) Aluminum foil
(C) Antenna wire

To locate the broken point, move the probe along antenna wire.

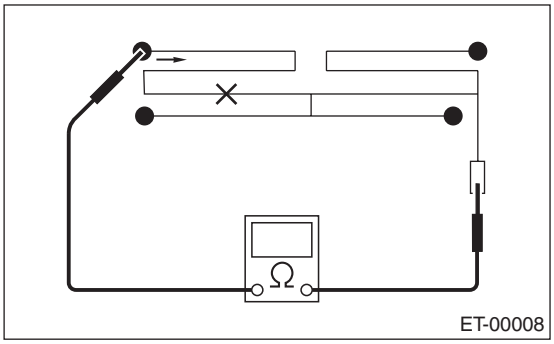

B: REPAIR

1) Clean the antenna wire and surrounding area with a cloth dampened by alcohol.
2) Paste a thin masking film on the glass along broken wire.
3) Apply conductive silver composition (DUPONT No. 4817) on the broken portion with a drawing pen.

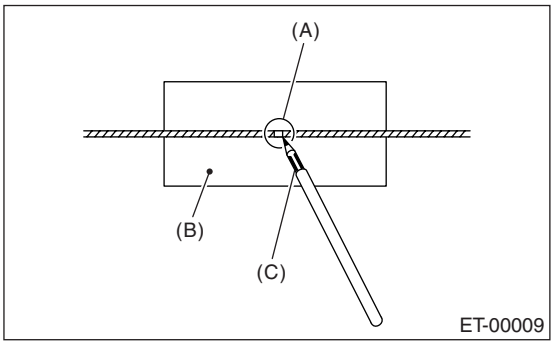

(A) Broken portion
(B) Masking film
(C) Conductive silver composition

4) Dry out the deposited portion.
5) After repair has been completed, measure the resistance in repaired wire.

10.Antenna Amplifier

A: REMOVAL

1. SEDAN MODEL

1) Disconnect the ground cable from battery.
2) Remove the rear quarter trim. <Ref. to EI-62, SEDAN MODEL, REMOVAL, Rear Quarter Trim.>
3) Disconnect the harness connectors and terminals.
4) Remove the curtain airbag module. <Ref. to AB-20, REMOVAL, Curtain Airbag Module.>
5) Remove the screw and detach antenna amplifier.

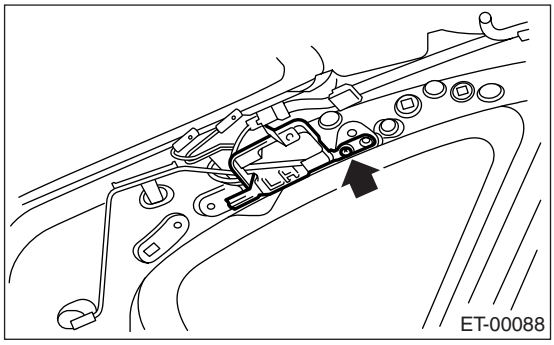

2. WAGON MODEL

1) Disconnect the ground cable from battery.
2) Remove the rear gate trim. <Ref. to EI-68, REMOVAL, Rear Gate Trim.>
3) Disconnect the harness connectors and terminals.
4) Remove the screw and detach antenna amplifier.

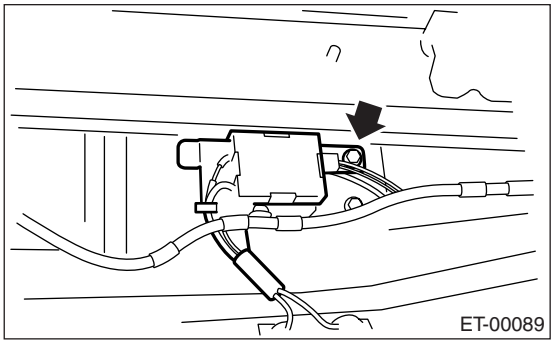

B: INSTALLATION

Install in the reverse order of removal.

C: INSPECTION

Measure the resistance of antenna amplifier.

- Sedan model

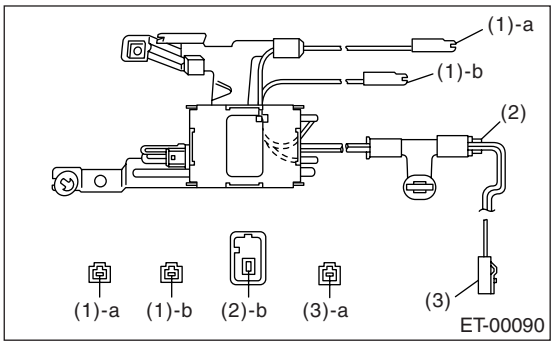

- Wagon model

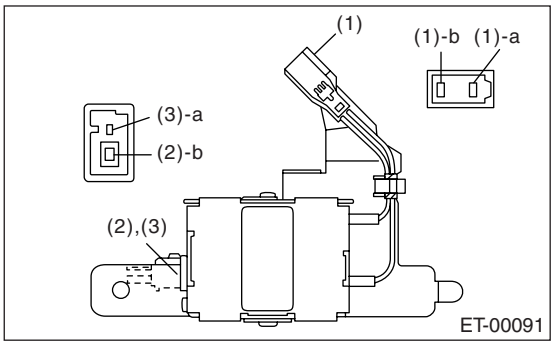

Terminal No.	Standard
(1)-a and Amplifier body	More than 10 kΩ
(1)-b and Amplifier body	More than 10 kΩ
(2)-b and Amplifier body	More than 10 kΩ
(3)-a and Amplifier body	More than 10 kΩ

11.Noise Suppressor

A: REMOVAL

1. SEDAN MODEL

1) Disconnect the ground cable from battery.
2) Remove the rear quarter trim. <Ref. to EI-62, SEDAN MODEL, REMOVAL, Rear Quarter Trim.>
3) Remove the curtain airbag module. <Ref. to AB-20, REMOVAL, Curtain Airbag Module.>
4) Disconnect the harness connector from noise suppressor.
5) Remove the harness clip.
6) Remove the screw and detach noise suppressor.

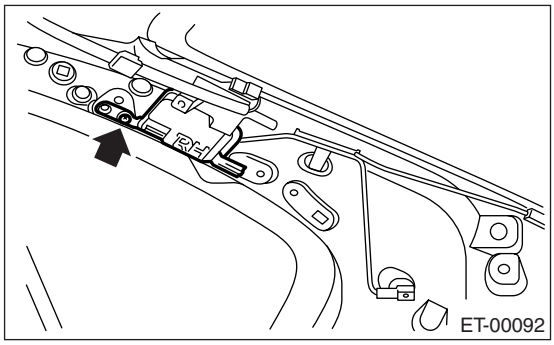

2. WAGON MODEL

1) Disconnect the ground cable from battery.
2) Remove the rear gate trim. <Ref. to EI-68, REMOVAL, Rear Gate Trim.>
3) Disconnect the harness connector from noise suppressor.
4) Remove the screws and detach noise suppressor.

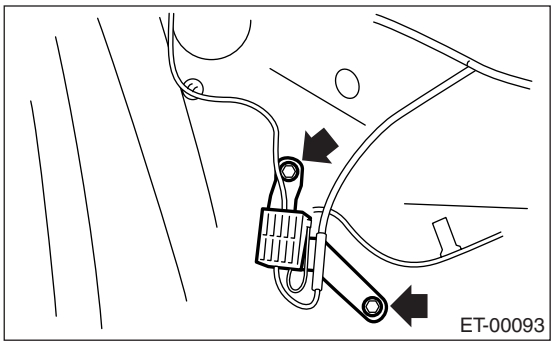

B: INSTALLATION

Install in the reverse order of removal.

12.Front Accessory Power Supply Socket

A: REMOVAL

1. FRONT

1) Disconnect the ground cable from battery.
2) Remove the console front panel. <Ref. to EI-54, REMOVAL, Center Console.>
3) Disconnect the harness connector, and remove the accessory power supply socket.

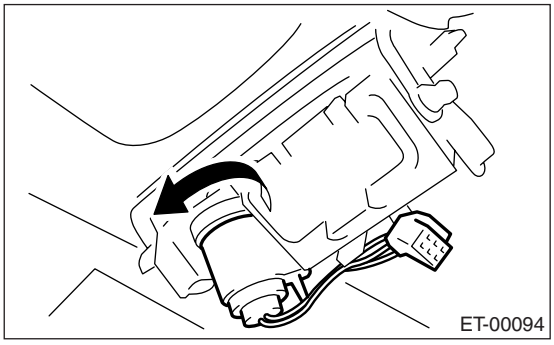

2. REAR

1) Disconnect the ground cable from battery.
2) Remove the console box. <Ref. to EI-53, REMOVAL, Console Box.>
3) Disconnect the harness connector, and remove the accessory power supply socket.

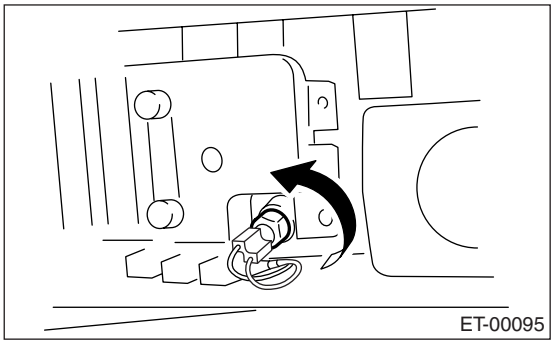

B: INSTALLATION

Install in the reverse order of removal.

13.Steering Satellite Switch

A: REMOVAL

1) Disconnect the ground cable from battery.
2) Set the tire to the straight-ahead position.
3) Remove the airbag module. <Ref. to AB-16, REMOVAL, Driver's Airbag Module.>

WARNING:
With the airbag module equipped, always refer to "Airbag System" when performing the airbag module repair service. <Ref. to AB-16, INSPECTION, Driver's Airbag Module.>

4) Remove the steering wheel. <Ref. to PS-14, REMOVAL, Steering Wheel.>
5) Remove the cover from steering wheel.
6) Remove each one of satellite switch mounting screw from the LH and RH side.

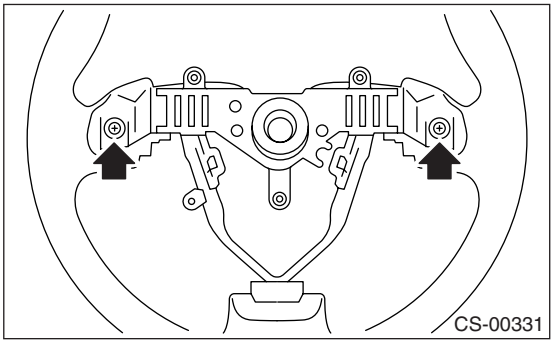

7) Remove the satellite switch.

B: INSTALLATION

Install in the reverse order of removal.

C: INSPECTION

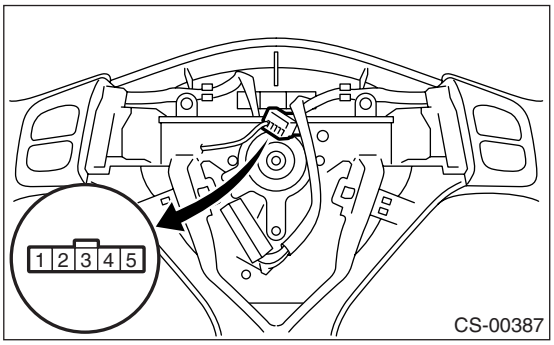

Step		Check	Yes	No
1	**MUTE SWITCH CONTINUITY CHECK.** 1) Press the mute switch. 2) Measure the resistance between satellite switch connector terminals. ***Terminals*** ***No. 1 — No. 2:***	Is the resistance approx. 22 Ω?	Go to step **2.**	Replace the satellite switch.
2	**VOLUME SWITCH CONTINUITY CHECK.** 1) Press the volume switch. 2) Measure the resistance between satellite switch connector terminals. ***Terminals*** ***No. 1 — No. 2: Volume up*** ***No. 1 — No. 2: Volume down***	Is the resistance approx. 90 Ω? (Volume up) Is the resistance approx. 200 Ω? (Volume down)	Go to step **3.**	Replace the satellite switch.
3	**MODE SWITCH CONTINUITY CHECK.** 1) Press the mode switch. 2) Measure the resistance between satellite switch connector terminals. ***Terminals*** ***No. 1 — No. 2:***	Is the resistance approx. 360 Ω?	Go to step **4.**	Replace the satellite switch.
4	**SEEK SWITCH CONTINUITY CHECK.** 1) Press the seek switch. 2) Measure the resistance between satellite switch connector terminals. ***Terminals*** ***No. 1 — No. 2: Seek up*** ***No. 1 — No. 2: Seek down***	Is the resistance approx. 690 Ω? (Seek up) Is the resistance approx. 1.5 kΩ? (Seek down)	Go to step **5.**	Replace the satellite switch.
5	**CHECK SATELLITE SWITCH INSULATION.** 1) Not to operate the satellite switch. 2) Measure the resistance between satellite switch connector terminals. ***Terminals*** ***No. 1 — No. 2:***	Is the resistance approx. 4.7 kΩ?	Satellite switch is normal.	Replace the satellite switch.

COMMUNICATION SYSTEM

COM

Page

1. General Description 2
2. Horn System 3
3. Horn 4
4. Horn Switch....5

1. General Description

A: CAUTION

• Before disassembling or reassembling parts, always disconnect the battery ground cable from battery. When replacing audio, control module, and other parts provided with memory functions, record memory contents before disconnecting the battery ground cable. Otherwise, the memory will be erased.
• Reassemble in reverse order of disassembly, unless otherwise indicated.
• Adjust parts to the given specifications.
• Connect the connectors securely during reassembly.
• After reassembly, make sure functional parts operate smoothly.

B: PREPARATION TOOL

1. GENERAL TOOLS

TOOL NAME	REMARKS
Circuit tester	Used for measuring resistance and voltage.
TORX® BIT T30	Used for removing and installing driver's airbag module.

2. Horn System

A: WIRING DIAGRAM

1. HORN

<Ref. to WI-164, WIRING DIAGRAM, Horn System.>

B: INSPECTION

1. HORN RELAY

Measure the horn relay resistance between terminals (indicated in the table below) when connecting the terminal No. 4 to battery positive terminal and terminal No. 3 to battery ground terminal.

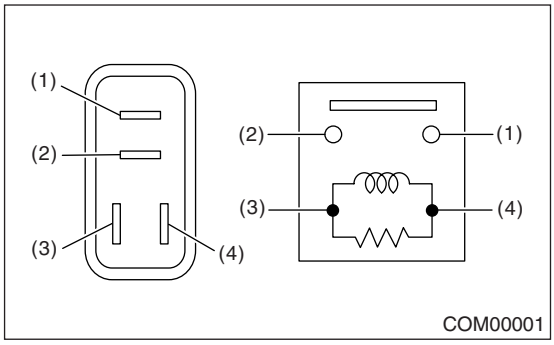

Current	Terminal No.	Standard
Flow	1 and 2	Less than 1 Ω
No Flow		More than 1 MΩ

3. Horn

A: REMOVAL

1) Disconnect the ground cable from battery.
2) Remove the two clips and turn up the lower mud guard RH.

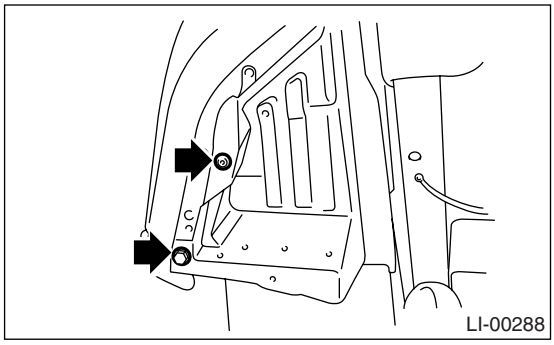

3) Remove the horn bracket mounting bolt (A).
4) Disconnect the harness connector and remove the horn assembly (B).

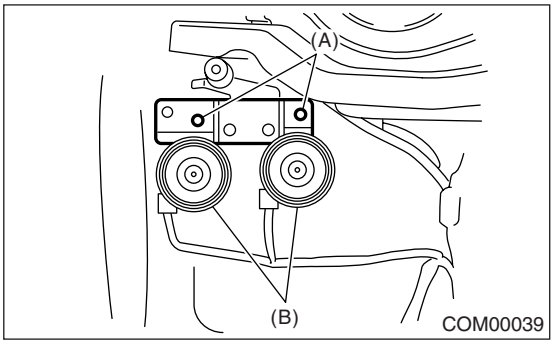

B: INSTALLATION

Install in the reverse order of removal.

C: INSPECTION

With 12 V direct current supplied between horn terminals, check that the horn sounds properly.

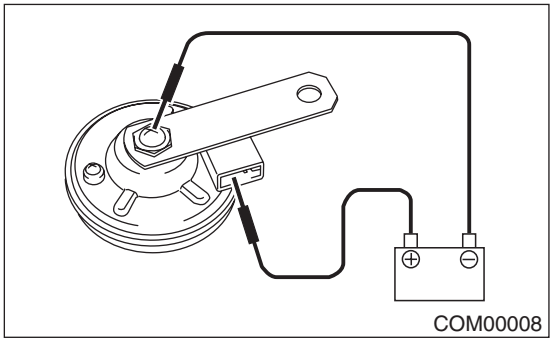

4. Horn Switch

A: REMOVAL

CAUTION:
Before servicing, be sure to read the notes in AB section for proper handling of driver's airbag module. <Ref. to AB-5, CAUTION, General Description.>

NOTE:
Horn switch is a unit with the driver's airbag module.

1) Disconnect the ground cable from battery.
2) Remove the driver's airbag module. <Ref. to AB-16, REMOVAL, Driver's Airbag Module.>

B: INSTALLATION

Install in the reverse order of removal.

C: INSPECTION

Measure the resistance between horn switch terminal and airbag module bracket.

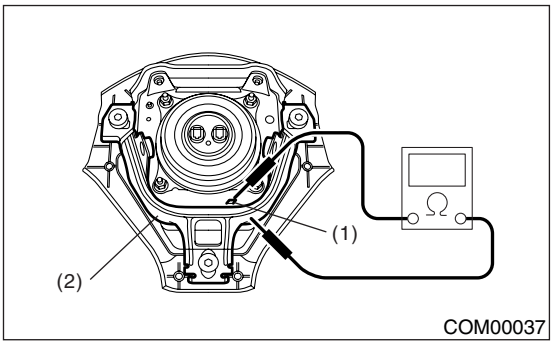

(1) Airbag module bracket
(2) Horn switch terminal

Switch position	Terminal No.	Resistance
When horn switch is pushed	Horn switch terminal and airbag module bracket	Less than 1 Ω
When horn switch is not pushed		More than 1 MΩ

GLASS/WINDOWS/MIRRORS

GW

		Page
1.	General Description	2
2.	Power Window System	8
3.	Power Window Control Switch	9
4.	Front Door Glass	11
5.	Front Regulator and Motor Assembly	16
6.	Remote Control Mirror System	17
7.	Scalp Cap	18
8.	Outer Mirror Assembly	19
9.	Outer Mirror	21
10.	Remote Control Mirror Switch	22
11.	Rear Door Glass	24
12.	Rear Regulator and Motor Assembly	26
13.	Windshield Glass	27
14.	Rear Gate Glass	30
15.	Rear Window Glass	31
16.	Rear Window Defogger System	32
17.	Rear Window Defogger	33
18.	Rear Quarter Glass	35
19.	Sun Roof Glass	36
20.	Rearview Mirror	37
21.	Wiper Deicer System	38
22.	Wiper Deicer Switch	39

1. General Description

A: COMPONENT

1. FIXED GLASS (SEDAN MODEL)

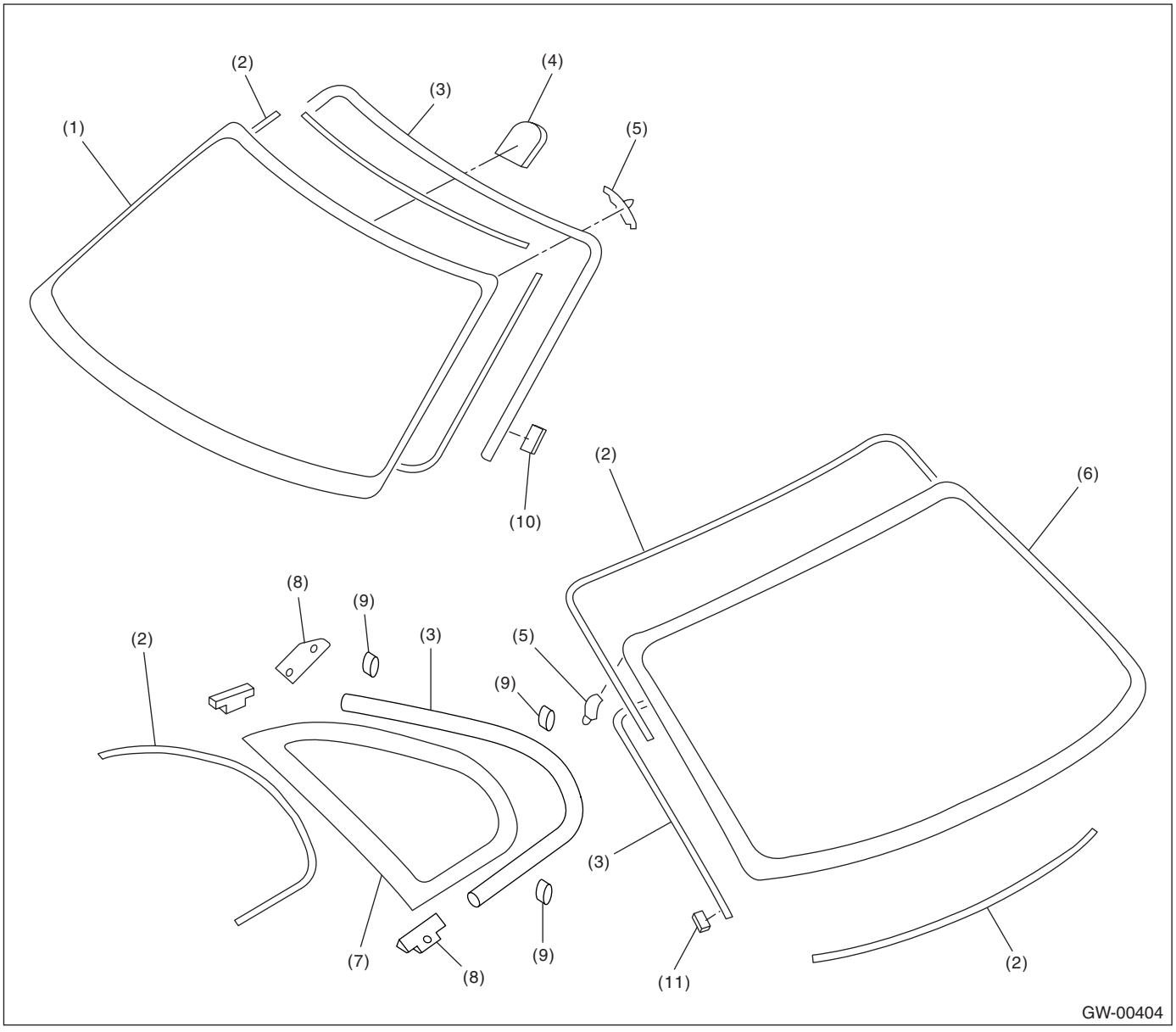

(1) Windshield glass
(2) Dam rubber
(3) Molding
(4) Rearview mirror mount
(5) Locating pin
(6) Rear window glass
(7) Six light glass
(8) Bracket
(9) Clip
(10) Seal
(11) Spacer

2. FIXED GLASS (WAGON MODEL)

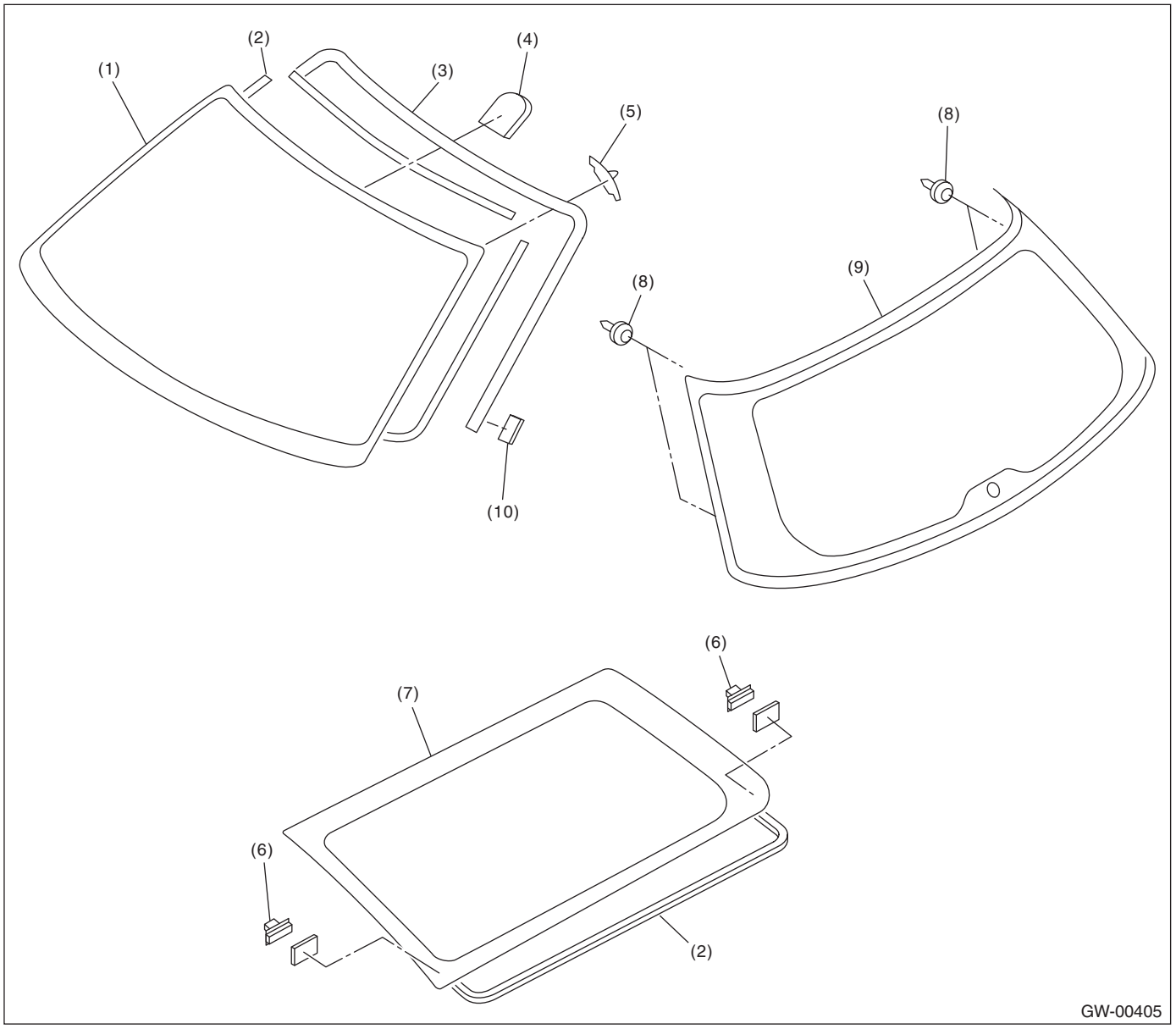

(1) Windshield glass
(2) Dam rubber
(3) Molding
(4) Rearview mirror mount
(5) Locating pin
(6) Fastener
(7) Rear quarter glass
(8) Locating pin
(9) Rear gate glass
(10) Seal

3. FRONT DOOR GLASS

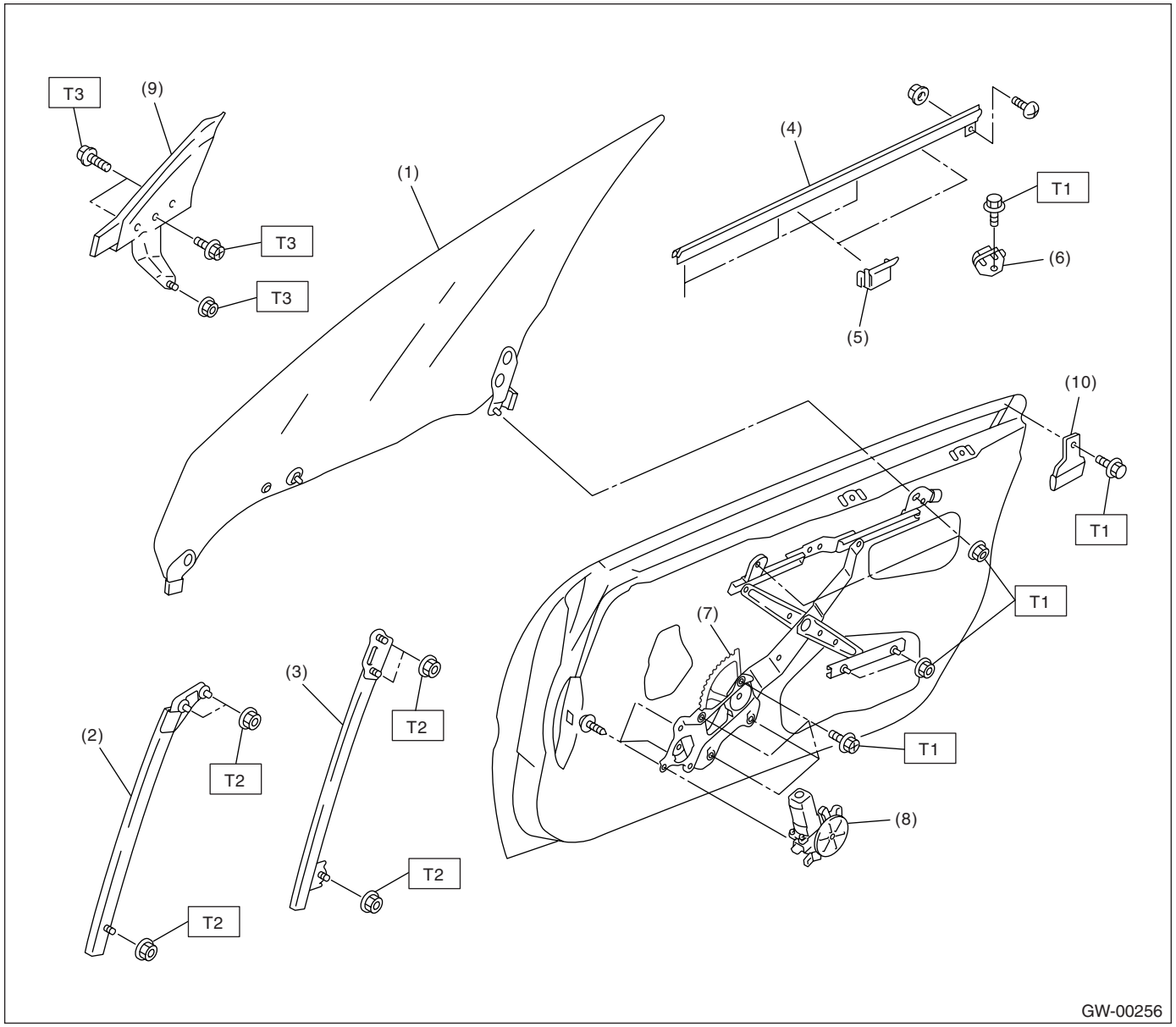

(1)	Glass	(6)	Stabilizer (Inner)
(2)	Door sash (Front)	(7)	Regulator ASSY
(3)	Door sash (Rear)	(8)	Motor ASSY
(4)	Weather strip	(9)	Mirror gusset
(5)	Stabilizer (Outer)	(10)	Guide ASSY

Tightening torque: N·m (kgf-m, ft-lb)
T1: 7.4 (0.75, 5.5)
T2: 13.7 (1.4, 10.1)
T3: 5.9 (0.60, 4.4)

4. REAR DOOR GLASS

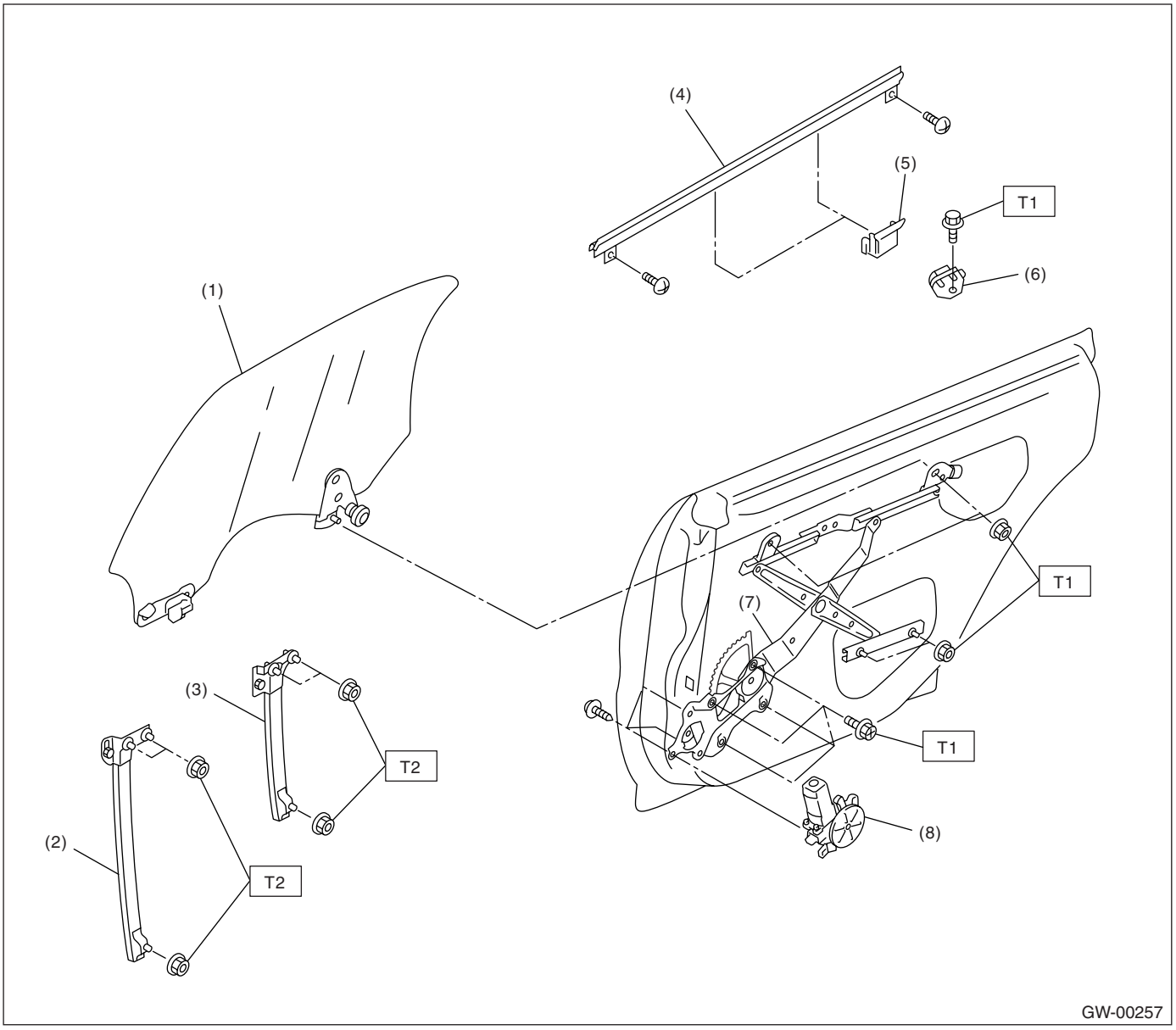

(1) Glass
(2) Door sash (Front)
(3) Door sash (Rear)
(4) Weather strip
(5) Stabilizer (Outer)
(6) Stabilizer (Inner)
(7) Regulator ASSY
(8) Motor ASSY

Tightening torque: N·m (kgf-m, ft-lb)
T1: 7.4 (0.75, 5.5)
T2: 13.7 (1.4, 10.1)

5. MIRROR

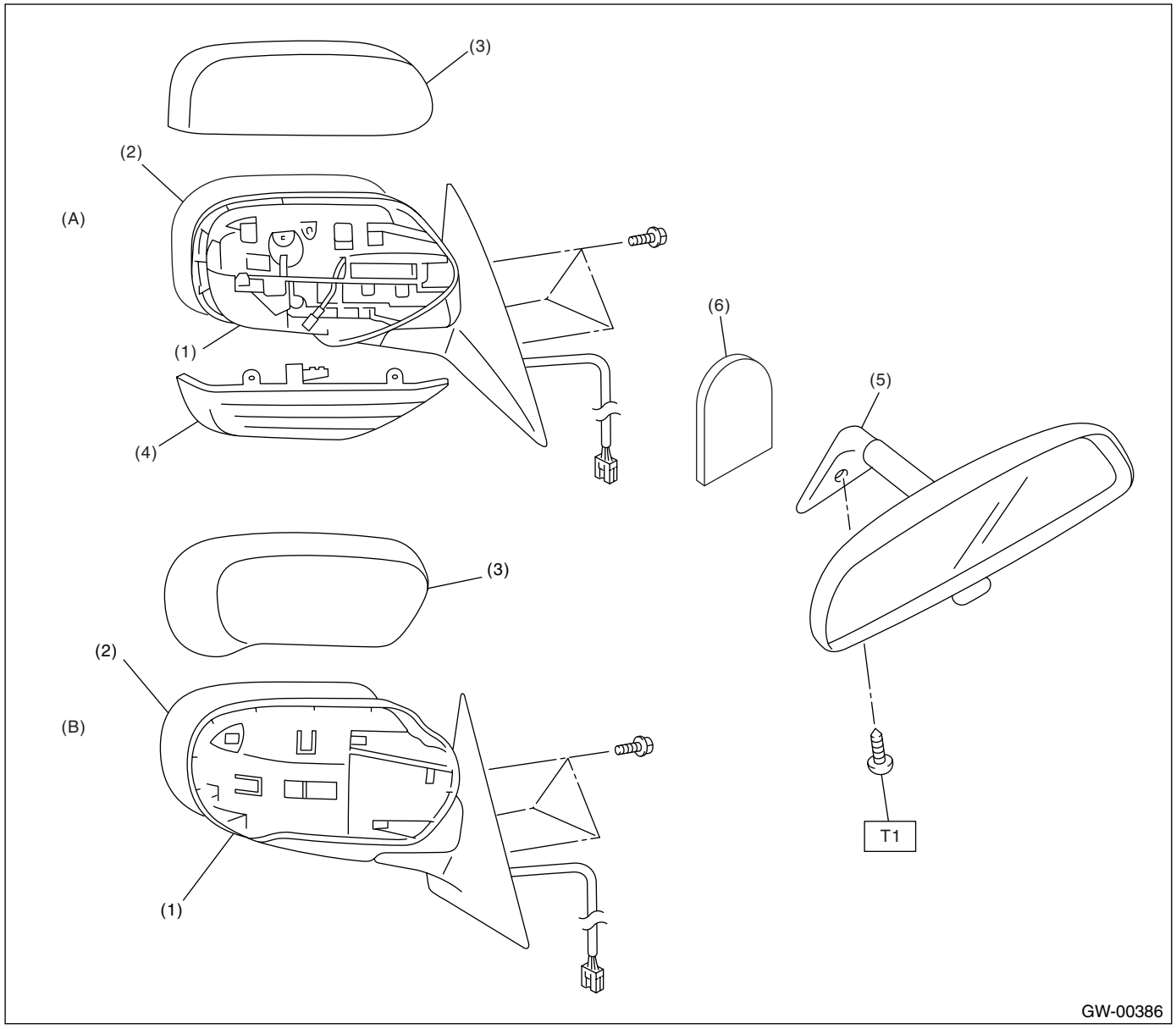

(A) Model with side turn signal light
(B) Model without side turn signal light

(1) Outer mirror
(2) Mirror
(3) Scalp cap
(4) Side turn signal light
(5) Rearview mirror
(6) Mount

Tightening torque: N·m (kgf-m, ft-lb)
T1: 1.9 (0.19, 1)

B: CAUTION

- When electrical connectors are disconnected, always conduct an operational check after connecting them again.
- Avoid impact and damage to the glass.

C: PREPARATION TOOL

1. SPECIAL TOOL

ILLUSTRATION	TOOL NUMBER	DESCRIPTION	REMARKS
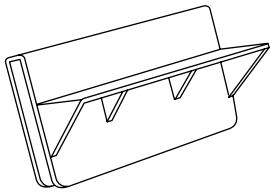 ST61299AE000	61299AE000	SPACER	Used for adjusting the upper end position of front door glass. (Glass thickness: 5 mm (0.197 in))
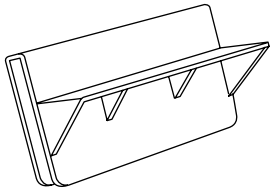 ST61299AE010	61299AE010	SPACER	Used for adjusting the upper end position of rear door glass. (Glass thickness: 4 mm (0.157 in))

2. GENERAL TOOL

TOOL NAME	REMARKS
Circuit tester	Used for checking voltage and continuity.
Piano wire	Used for removing the window glass.
Windshield glass knife	Used for removing the window glass.

2. Power Window System

A: WIRING DIAGRAM

<Ref. to WI-165, Power Window System.>

B: INSPECTION

Symptom	Repair order
All power windows do not operate.	(1) Fuse (SBF-4) (2) Power window circuit breaker (3) Power window relay (4) Wiring harness (5) Body integrated unit
One window does not operate.	(1) Power window main switch (2) Power window sub switch (3) Power window motor (4) Wiring harness
“Window Lock” does not operate.	Power window main switch

3. Power Window Control Switch

A: REMOVAL

1. MAIN SWITCH

1) Disconnect the ground cable from battery.
2) Remove the front door trim. <Ref. to EI-48, REMOVAL, Door Trim.>
3) Disconnect the harness connector.
4) Remove the screws from the reverse side of front door trim to remove the power window main switch.

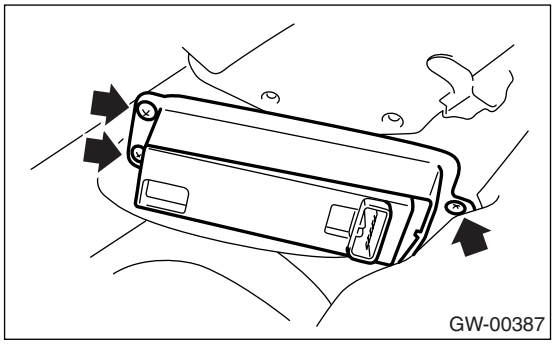

2. SUB SWITCH

1) Disconnect the ground cable from battery.
2) Remove the door trim. <Ref. to EI-48, REMOVAL, Door Trim.>
3) Disconnect the connector.
4) Remove the screws from the reverse side of door trim to remove the power window sub switch.

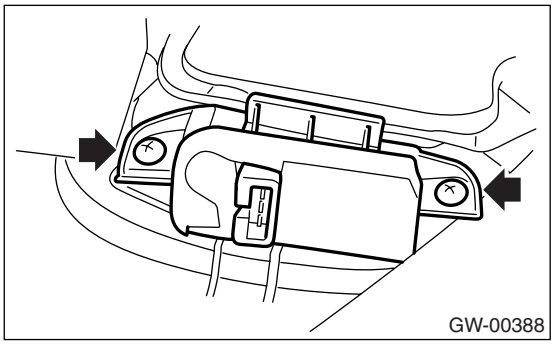

B: INSTALLATION

1. MAIN SWITCH

Install in the reverse order of removal.

2. SUB SWITCH

Install in the reverse order of removal.

C: INSPECTION

1. MAIN SWITCH

Measure switch resistance.

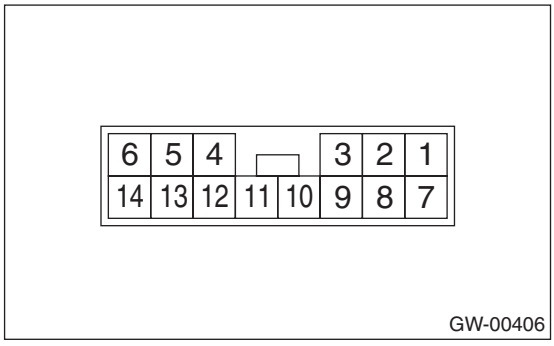

	Switch position	Terminal No.	Standard
Driver's seat	UP	10 and 2, 7 and 1	Less than 1 Ω
	OFF	2 and 7, 1 and 2	Less than 1 Ω
	DOWN	10 and 1, 7 and 2	Less than 1 Ω
	AUTO DOWN	10 and 1, 7 and 2	Less than 1 Ω

	Switch position	Terminal No.	Standard
Passenger's seat	UP	10 and 14, 7 and 11	Less than 1 Ω
	OFF	7 and 14, 7 and 11	Less than 1 Ω
	DOWN	10 and 11, 7 and 14	Less than 1 Ω

	Switch position	Terminal No.	Standard
Rear seat RH	UP	10 and 13, 7 and 12	Less than 1 Ω
	OFF	7 and 13, 7 and 12	Less than 1 Ω
	DOWN	10 and 12, 7 and 13	Less than 1 Ω

	Switch position	Terminal No.	Standard
Rear seat LH	UP	10 and 8, 7 and 9	Less than 1 Ω
	OFF	7 and 8, 7 and 9	Less than 1 Ω
	DOWN	9 and 10, 7 and 8	Less than 1 Ω

Replace the main switch if faulty.

2. SUB SWITCH

Measure switch resistance.

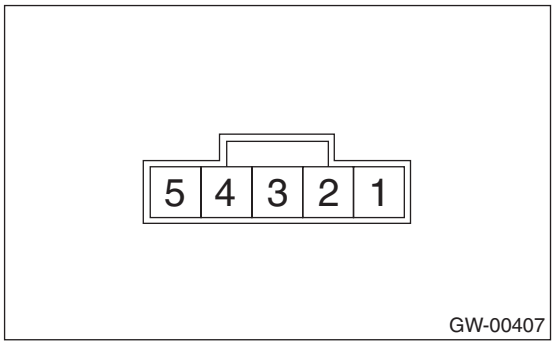

	Switch position	Terminal No.	Standard
Passenger's seat and rear	UP	2 and 3, 4 and 5	Less than 1 Ω
	OFF	1 and 2, 4 and 5	Less than 1 Ω
	DOWN	1 and 2, 3 and 4	Less than 1 Ω

Replace the sub switch if faulty.

4. Front Door Glass

A: REMOVAL

1) Remove the front door trim. <Ref. to EI-48, REMOVAL, Door Trim.>
2) Remove the sealing cover. <Ref. to EB-20, REMOVAL, Front Sealing Cover.>
3) Remove the outer mirror assembly. <Ref. to GW-19, REMOVAL, Outer Mirror Assembly.>
4) Remove the clip (A), and remove the front end of weather strip.

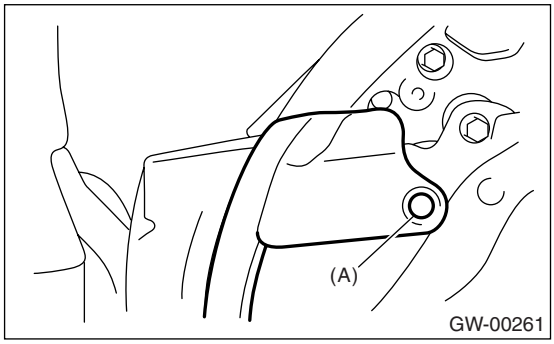

5) Remove the gusset.

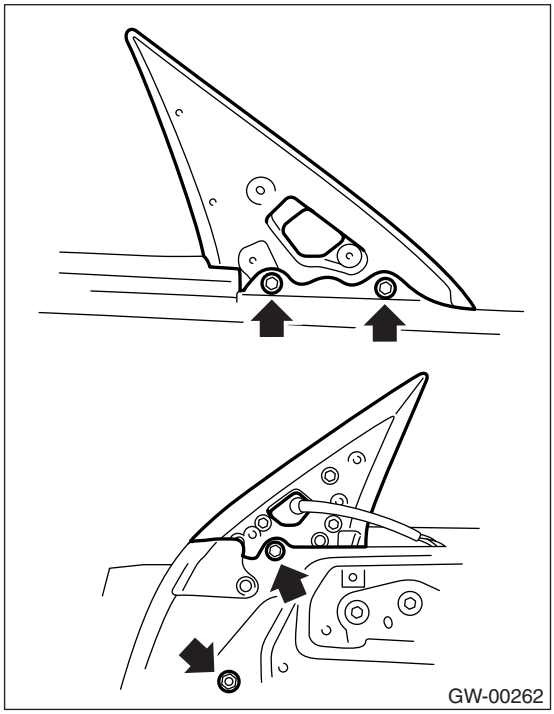

6) Remove the stabilizer.

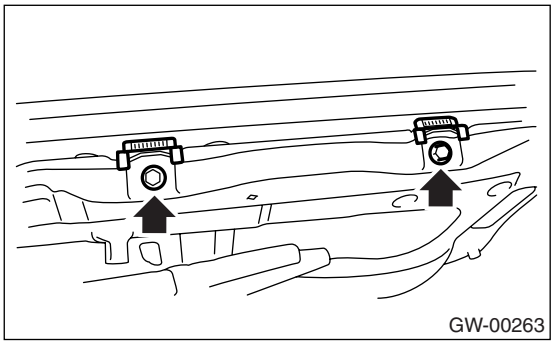

7) Remove the clips (A), and remove the rear end of weather strip.

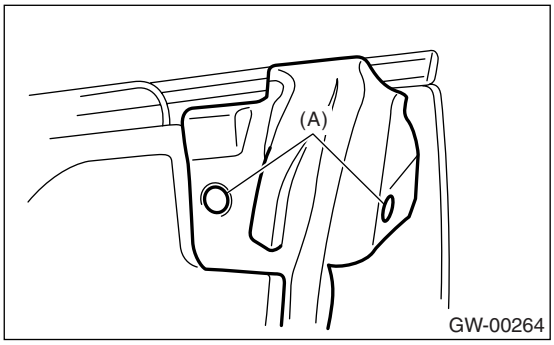

8) Remove the screw (A) from the rear end of weather strip outer to remove weather strip outer.

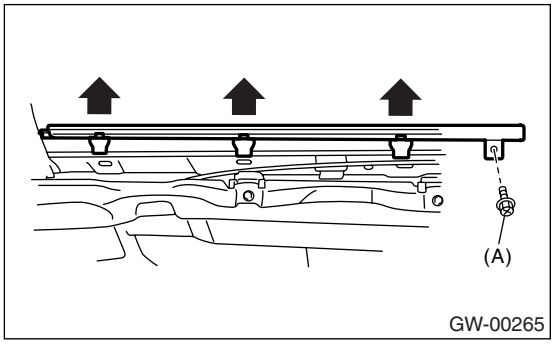

9) Remove the screws to remove guide assembly.
10) Operate the power window switch to move glass to position shown in the figure, and then remove the two nuts through service holes.

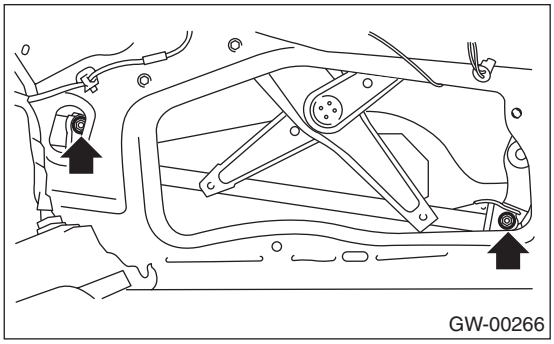

11) Remove the door glass.

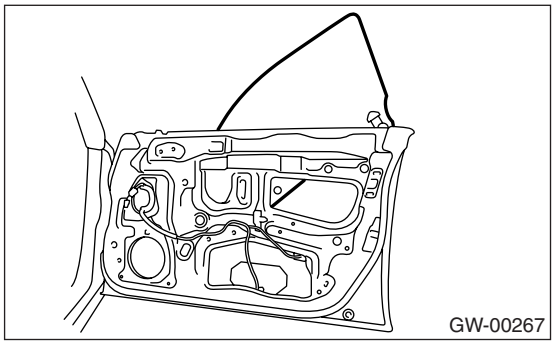

CAUTION:
• Since the gear may be disengaged, do not turn regulator in the closing direction after removal of the glass.
• Avoid impact and damage to the glass.

B: INSTALLATION

1) Install in the reverse order of removal.

CAUTION:
Make sure that glass stay is placed securely in sash.

2) Adjust the front door glass. <Ref. to GW-12, ADJUSTMENT, Front Door Glass.>

Tightening torque:
Refer to "COMPONENT" of "General Description". <Ref. to GW-4, FRONT DOOR GLASS, COMPONENT, General Description.>

C: ADJUSTMENT

NOTE:
Before adjustment, ensure that all adjusting bolts of stabilizer, upper stopper and sash are loose and door glass is raised so that it is in contact with weather strip.

1) Temporarily tighten one adjusting bolt on one side of rear sash at the midpoint of slotted hole in the inner panel.
2) Temporarily tighten the regulator B-channel in a position at the top of slotted hole.
3) Lower the door glass 10 — 15 mm (0.39 — 0.59 in) from fully closed position. While applying outward pressure of 45.0±5.0 N (4.5±0.5 kgf, 9.9±1.1 lb) (F) to upper edge of glass above midpoint of two outer stabilizers, press the inner stabilizer at pressure of 25±5 N (2.5±0.5 kgf, 5.5±1.1 lb) to the glass, then secure it.

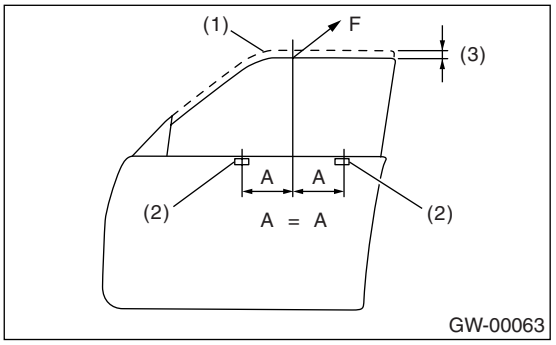

(1) Fully closed position
(2) Stabilizer
(3) 10 — 15 mm (0.39 — 0.59 in)

4) For adjustment of clearance between front glass and center pillar cover, loosen the nuts (A), and move the glass sash back and forward until clearance becomes the value shown.

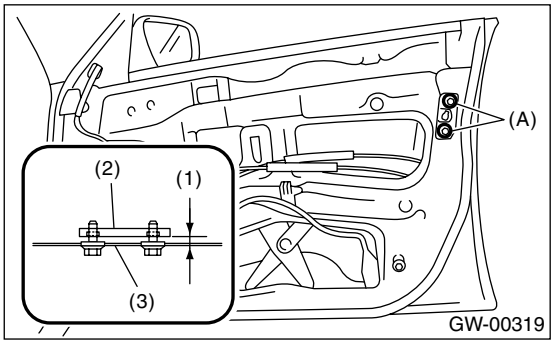

(1) Adjust a line parallel
(2) Sash
(3) Inner panel

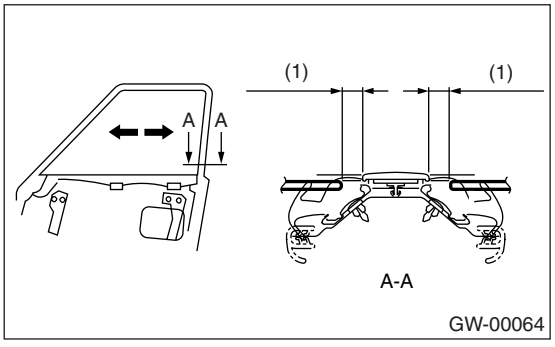

(1) 11 mm (0.433 in)

5) To adjust the upper end and lower end of center pillar, loosen the stopper bolt (A) or nut (B) securing door sash, move the stopper position until the clearance between center pillar cover is equal.

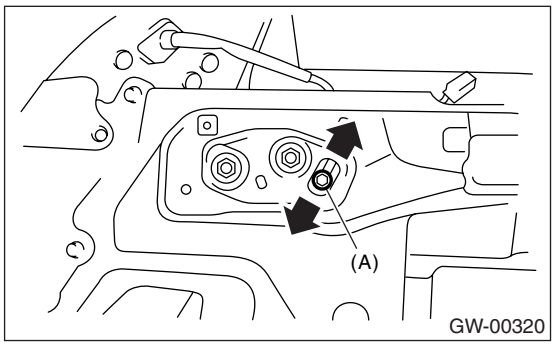

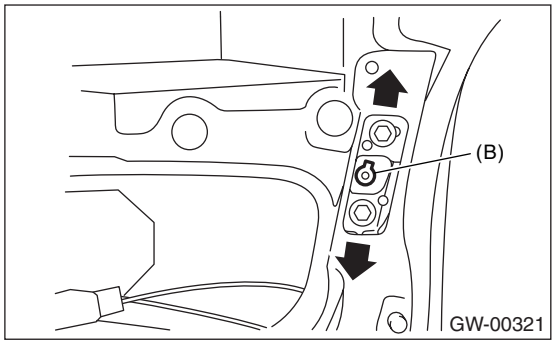

CAUTION:
Perform the measurement of clearance between center pillar at less than 50 mm (1.969 in) from upper end of window glass.

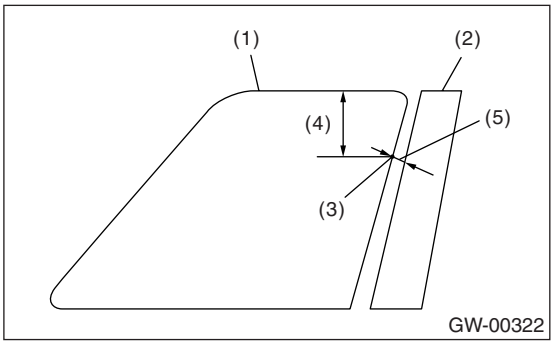

(1) Glass
(2) Center pillar cover
(3) Check point
(4) 50 mm (1.969 in)
(5) 11 mm (0.433 in)

6) Adjust so that the upper and lower ends of center pillar are the same size.

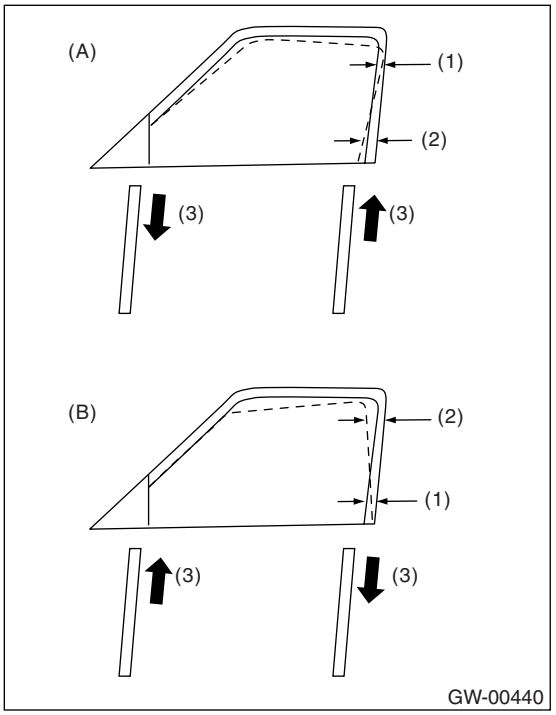

(A) Glass tilts too far rearward
(B) Glass tilts too far forward
(1) Narrow
(2) Wide
(3) Stopper adjusting direction

7) After adjusting the clearance between center pillar, up and down the glass several times to check glass contact to stopper when glass is fully closed. Adjust it to contact the front and rear stopper simultaneously.

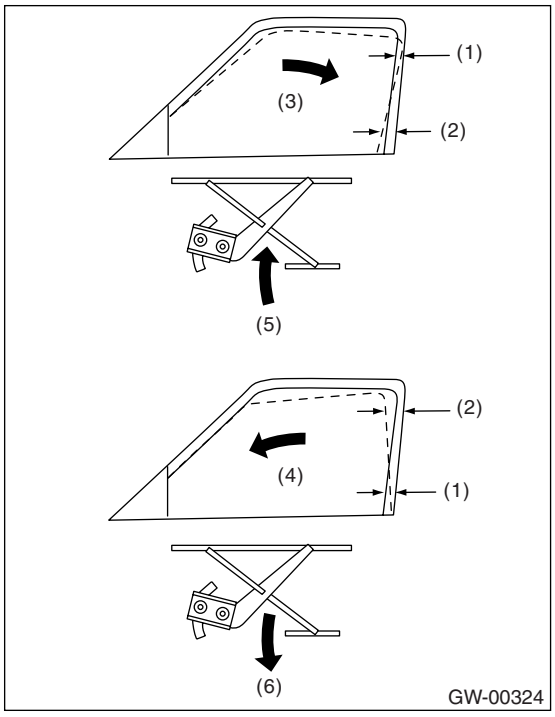

(1) Narrow
(2) Wide
(3) When the stopper of door sash (front) contacts first
(4) When the stopper of door sash (rear) contacts first
(5) Raise B channel
(6) Lower B channel

8) For glass stroke adjustment, install the ST to glass, close the door, and raise the glass with regulator until positional relationship between glass and weather strip becomes as shown. And secure the glass so that the upper stopper correctly touches the glass holder.

ST 61299AE000 SPACER (Glass thickness: 5 mm (0.197 in) for front door glass)

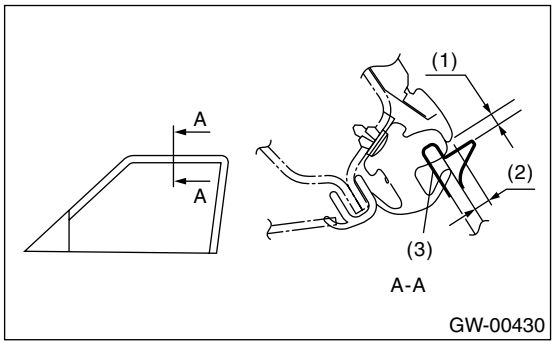

(1) 3.2 — 4.8 mm (0.126 — 0.189 in)
(2) When reusing weather strip: 5.5 mm (0.217 in)
When replacing weather strip: 3.0 mm (0.118 in)
(3) ST

For preventing wind noise, adjust the glass at the position where tip of gusset is raised up a little.

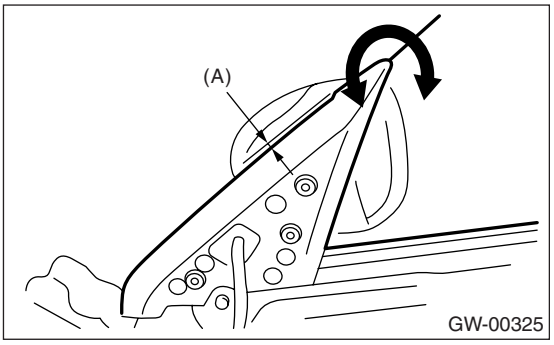

(A) 0 — 1.5 mm (0 — 0.059 in)

9) After stabilizer adjustment, carry out the glass cohesion adjustment. First, visually ensure the positional relationship between retainer & molding and glass of the roof side, and then begin with rear sash adjustment. Install the ST to glass and adjust two adjusting bolts alternately step by step to obtain dimensions shown below (cross-section A).

NOTE:
If two nuts are loosened at the same time, the sash moves back and forth. Therefore, when one nut is adjusted, secure the other.

10) Make the same adjustment of two adjusting bolts of rear sash.

ST 61299AE000 SPACER (Glass thickness: 5 mm (0.197 in) for front door glass)

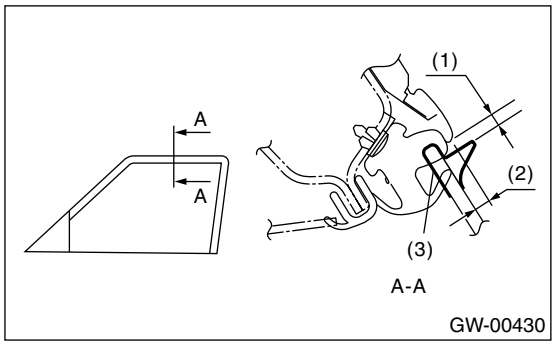

(1) 3.2 — 4.8 mm (0.126 — 0.189 in)
(2) When reusing weather strip: 5.5 mm (0.217 in)
When replacing weather strip: 3.0 mm (0.118 in)
(3) ST

NOTE:
Do not tilt the sash bracket to inner panel during adjustment. Otherwise smooth regulator operation cannot be achieved.

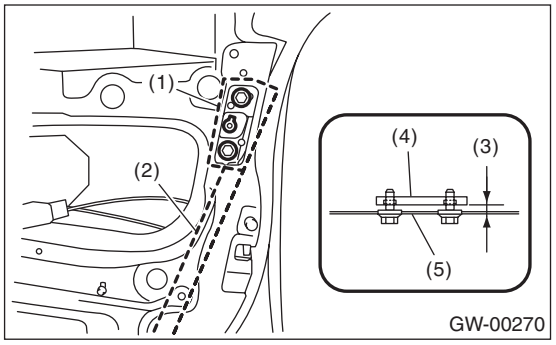

(1) Sash bracket
(2) Rear sash
(3) Adjust a line parallel
(4) Sash
(5) Inner panel

11) Make adjustment of front sash in the same manner as that of rear sash.

NOTE:
Although front and rear sashes must, as a rule, be adjusted in the same manner, in some door installation, the adjustment in a different manner may be required. However, adjustment of one sash to the maximum amount and the other to the minimum amount is not permitted. Such adjustment may result in application of excessive load to regulator.

12) After adjustments, tighten the nuts.

13) After adjustment of the glass, close the door. If there is a gap between outer lip of gusset and glass surface, adjust the gap with adjusting bolt (A) in lower fitting part of gusset to prevent generation of wind noise.

14) During adjustment, loosen the other three clamping bolts.

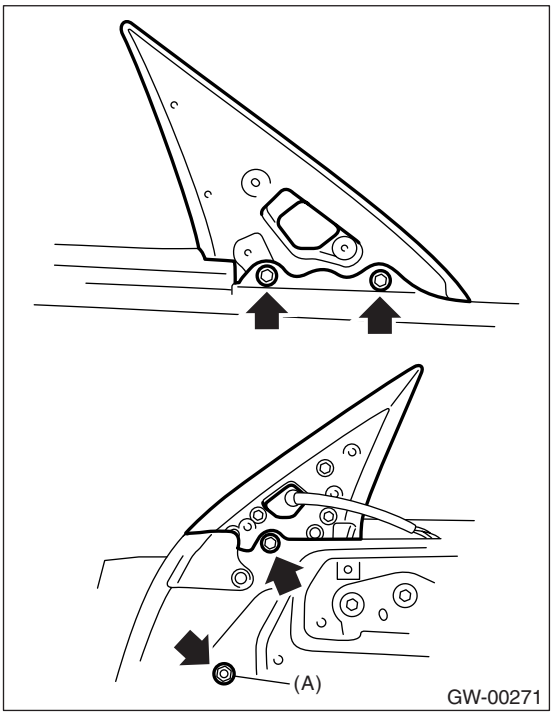

15) After adjustment, tighten the bolts and nuts.

5. Front Regulator and Motor Assembly

A: REMOVAL

1) Remove the door glass. <Ref. to GW-11, REMOVAL, Front Door Glass.>
2) Disconnect the motor connector.
3) Remove the four bolts and two nuts to remove regulator assembly.

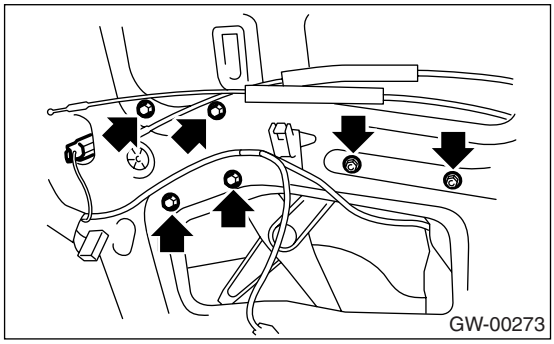

4) Remove the screws to remove motor assembly.

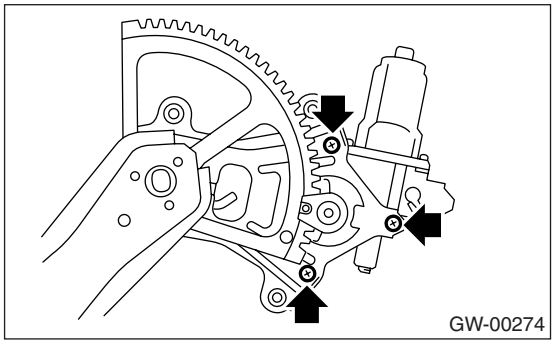

NOTE:
When removing the motor assembly, secure the arm correctly, because the regulator arm moves in the force of balancing spring.

B: INSTALLATION

1) Install in the reverse order of removal.
2) Adjust the front door glass. <Ref. to GW-12, ADJUSTMENT, Front Door Glass.>

Tightening torque:
Refer to "COMPONENT" of "General Description". <Ref. to GW-4, FRONT DOOR GLASS, COMPONENT, General Description.>

C: INSPECTION

1) Make sure that the power window motor rotates properly when the battery voltage is applied to the terminals of motor connector.
2) Change polarity of battery connection to terminals to ensure that the motor rotates in reverse direction.

6. Remote Control Mirror System

A: WIRING DIAGRAM

<Ref. to WI-170, Remote Control Mirror System.>

B: INSPECTION

Symptom	Repair order
All function does not operate.	(1) Fuse (F/B No. 6) (2) Mirror switch (3) Wiring harness
One side of the mirror motor does not operate.	(1) Mirror switch (2) Mirror motor (3) Wiring harness
Mirror heater does not operate.	(1) Mirror switch (2) Mirror heater (3) Wiring harness

7. Scalp Cap

A: REPLACEMENT

1. MODEL WITH SIDE TURN SIGNAL LIGHT

1) Remove the mirror. <Ref. to GW-21, REPLACEMENT, Outer Mirror.>
2) Press-in the upper side clips (A) from inside of door mirror.

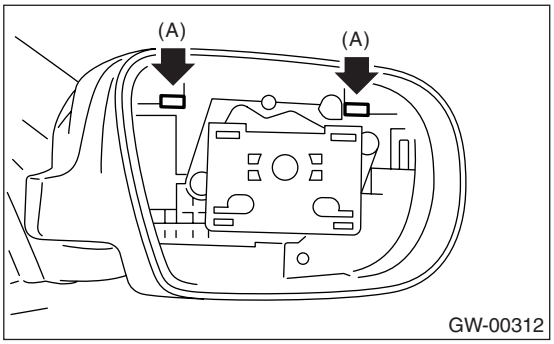

3) Pull the scalp cap frontward of door mirror, remove the upper side clips (A) and lower side hooks (B), and then remove the scalp cap.

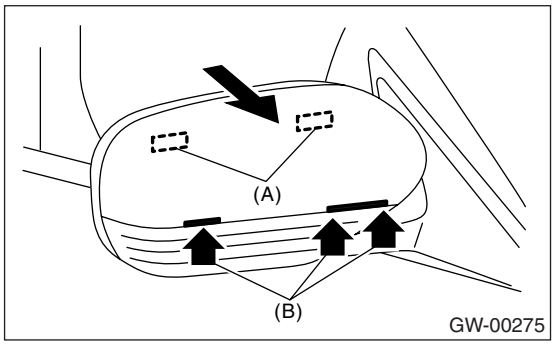

4) Insert the lower hooks (B) of scalp cap to door mirror and push the upper clips (A) in.

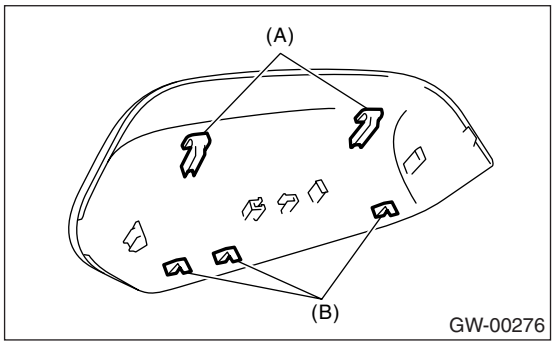

5) Install the scalp cap securely.

CAUTION:
Do not remove the scalp cap forcibly. The lower hooks may be damaged.

2. MODEL WITHOUT SIDE TURN SIGNAL LIGHT

1) Remove the mirror. <Ref. to GW-21, REPLACEMENT, Outer Mirror.>
2) Press-in the clips (A) from inside of door mirror.

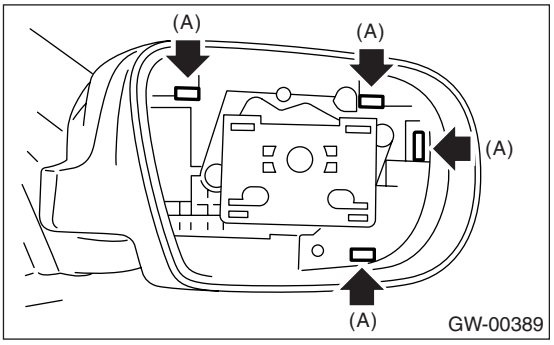

3) Pull the scalp cap frontward of door mirror, and then remove the scalp cap.
4) Mate the backside clip (A) of scalp cap with the clip hole of the outer mirror to install, and then push the scalp cap in.

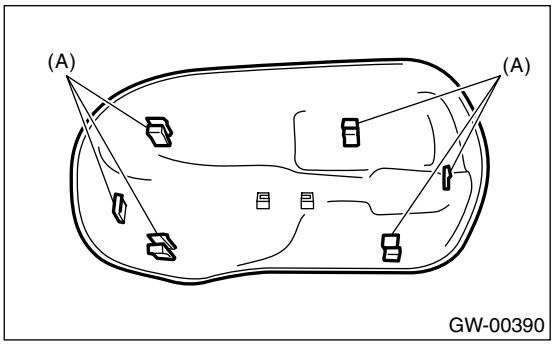

5) Install the scalp cap securely.

8. Outer Mirror Assembly

A: REMOVAL

1) Remove the mirror gusset cover.

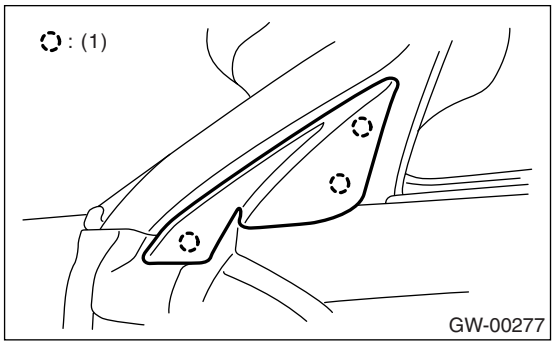

(1) Hook

2) Remove the door trim. <Ref. to EI-48, REMOVAL, Door Trim.>
3) Disconnect the mirror connector.
4) Remove the screws to remove mirror assembly.

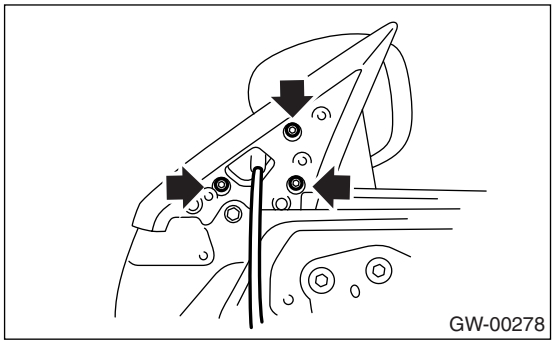

B: INSTALLATION

Install in the reverse order of removal.

C: INSPECTION

Check that the rearview mirror moves properly when the battery voltage is applied to terminals.

- Model with side turn signal light

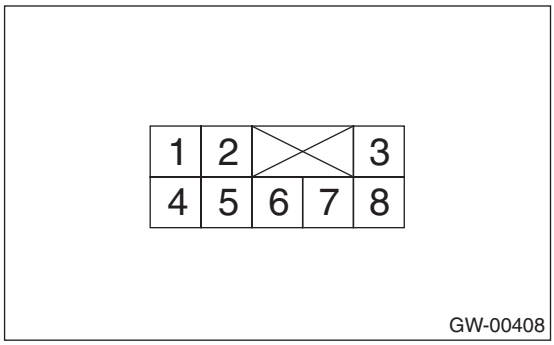

Switch position	Terminal No.
OFF	—
UP	6 (+) and 3 (–) or 8 (–)
DOWN	3 (+) or 8 (+) and 6 (–)
LEFT	7 (+) and 3 (–) or 8 (–)
RIGHT	3 (+) or 8 (+) and 7 (–)

- Model without side turn signal light

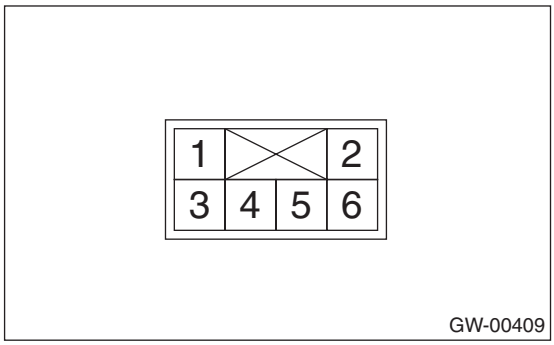

Switch position	Terminal No.
OFF	—
UP	4 (+) and 2 (–) or 6 (–)
DOWN	2 (+) or 6 (+) and 4 (–)
LEFT	5 (+) and 6 (–) or 2 (–)
RIGHT	6 (+) or 2 (+) and 5 (–)

Replace the outer mirror assembly if defective.

9. Outer Mirror

A: REPLACEMENT

1) Face the mirror upward.
2) Use a flat tip screwdriver to remove clip (A).
3) Lift the lower mirror up to remove hooks (B).

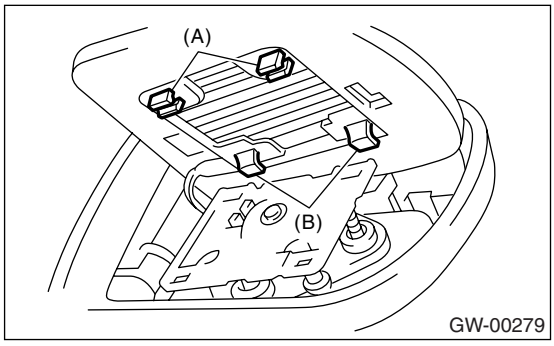

4) Disconnect the mirror heater connector from the end of mirror. (Model with mirror heater)

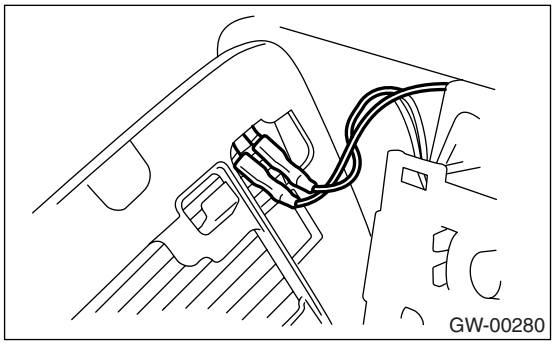

5) Catch the hooks (B) and install clips (A).

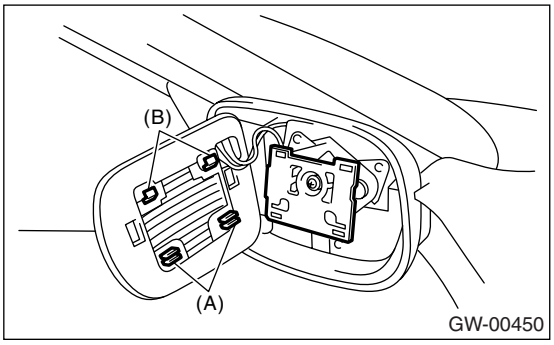

CAUTION:
• When removing the mirror, be careful not to damage the back side of mirror with a flat tip screwdriver.
• When installing the mirror, insert the hook and clip securely.

10. Remote Control Mirror Switch

A: REMOVAL

1) Remove the instrument panel lower cover. <Ref. to EI-50, REMOVAL, Instrument Panel Lower Cover.>
2) Disconnect the connector.

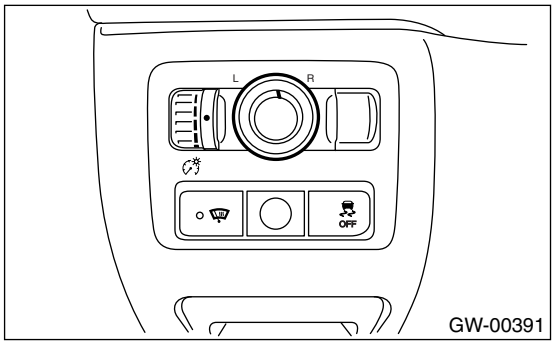

3) Remove the remote control mirror switch from instrument panel lower cover.

B: INSTALLATION

Install in the reverse order of removal.

C: INSPECTION

1. REMOTE CONTROL MIRROR SWITCH

Move the remote control mirror switch to each position and check continuity between terminals.

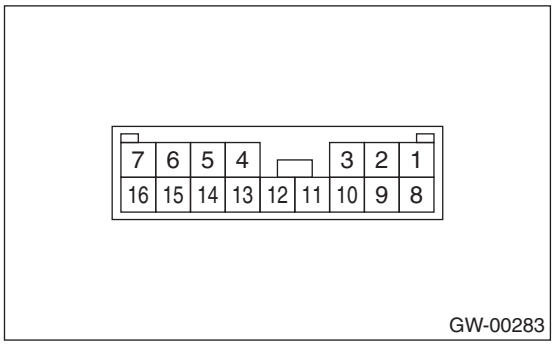

- Change over switch R

Switch position	Terminal No.	Standard
OFF	—	More than 1 MΩ
UP	10 and 12, 15 and 14	Less than 1 Ω
DOWN	10 and 15, 12 and 14	Less than 1 Ω
LEFT	10 and 11, 15 and 14	Less than 1 Ω
RIGHT	10 and 15, 11 and 14	Less than 1 Ω

- Change over switch L

Switch position	Terminal No.	Standard
OFF	—	More than 1 MΩ
UP	10 and 8, 15 and 14	Less than 1 Ω
DOWN	10 and 15, 8 and 14	Less than 1 Ω
LEFT	10 and 9, 15 and 14	Less than 1 Ω
RIGHT	10 and 15, 9 and 14	Less than 1 Ω

Replace the remote control mirror switch if defective.

11.Rear Door Glass

A: REMOVAL

1) Remove the rear door trim. <Ref. to EI-48, REMOVAL, Door Trim.>
2) Remove the sealing cover. <Ref. to EB-24, REMOVAL, Rear Sealing Cover.>
3) Remove the stabilizer.

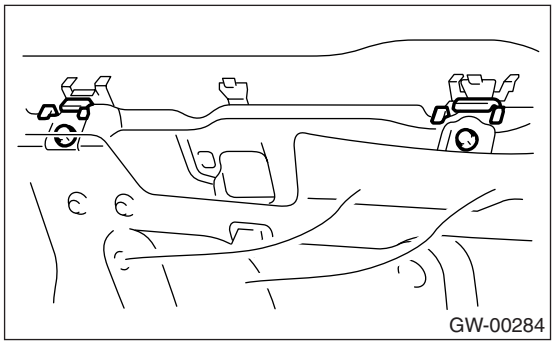
GW-00284

4) Remove the clips (A), and remove the front end and rear end of weather strip.

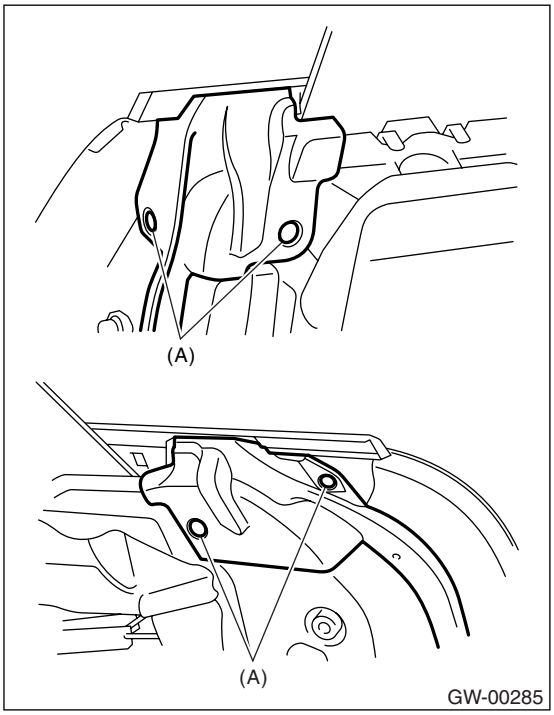

GW-00285

5) Loosen the two screws to remove weather strip outer.

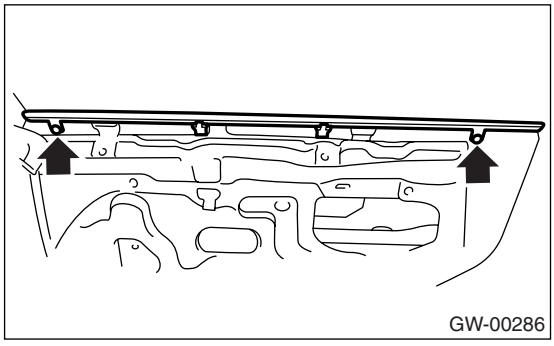
GW-00286

6) Operate the power window switch to move the glass to position shown in the figure, and then remove the two nuts through service holes.

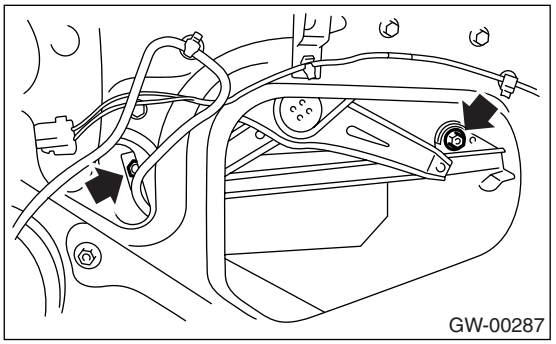
GW-00287

7) Remove the rear sash retaining nuts (A) and move rear sash (B) backward.

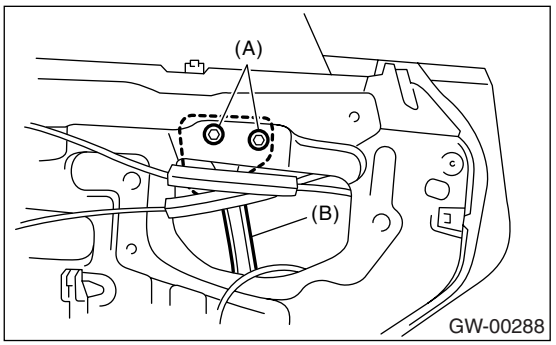

GW-00288

8) Remove the door glass.

CAUTION:
• Since the gear may be disengaged, do not turn regulator in the closing direction after removal of the glass.
• Avoid impact and damage to the glass.

B: INSTALLATION

1) Install in the reverse order of removal.

CAUTION:
Make sure that glass stay is placed securely in sash.

2) Adjust the rear door glass. <Ref. to GW-25, ADJUSTMENT, Rear Door Glass.>

Tightening torque:
Refer to "COMPONENT" of "General Description". <Ref. to GW-5, REAR DOOR GLASS, COMPONENT, General Description.>

C: ADJUSTMENT

NOTE:
The rear door glass, as a rule, should be adjusted in the same manner as front door glass, although they are different in dimension. <Ref. to GW-12, ADJUSTMENT, Front Door Glass.>

1) Adjust the glass position using the following dimensions as a guide line.

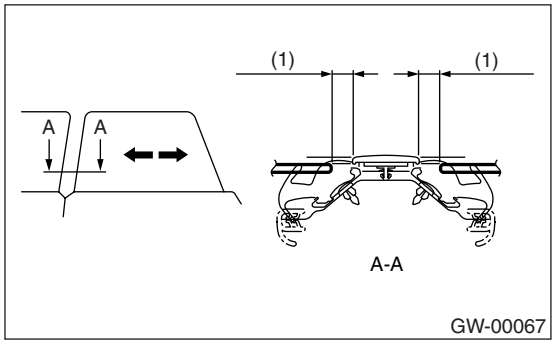

(1) 11 mm (0.433 in)

NOTE:
• If dimensions are smaller than the given dimensions, glass may get caught in weather strip during lifting/lowering operation and may not be fully open.
• After adjustment, move the glass up and down to check whether it is caught.

2) Install the ST to glass and adjust the glass adhesion to the value shown.

ST 61299AE010 SPACER (Glass thickness: 4 mm (0.157 in) for rear door glass)

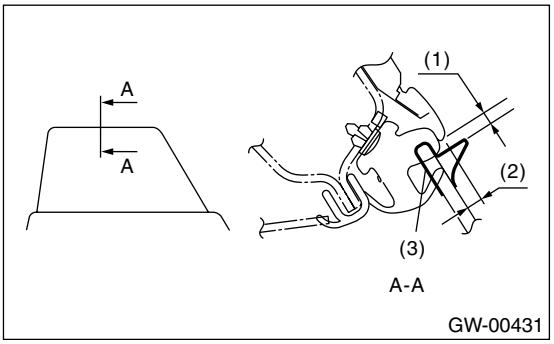

(1) 3.2 — 4.8 mm (0.126 — 0.189 in)
(2) When reusing weather strip: 5.5 mm (0.217 in)
When replacing weather strip: 5.0 mm (0.197 in)
(3) ST

NOTE:
• If rear glass adhesion is higher than necessary, glass may get caught in weather strip of center pillar corner, resulting in early wear of weather strip. Care should be taken for adjustment.
• After adjustment, move the glass up and down to check whether it is caught.

12.Rear Regulator and Motor Assembly

A: REMOVAL

1) Remove the rear door glass. <Ref. to GW-24, REMOVAL, Rear Door Glass.>
2) Remove the nut (A) to remove front sash.

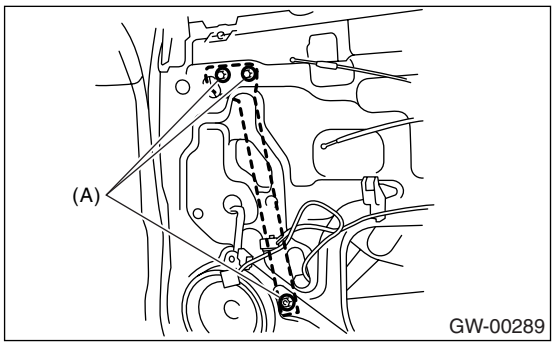

3) Disconnect the motor connector.
4) Remove the four bolts and two nuts to remove regulator assembly.

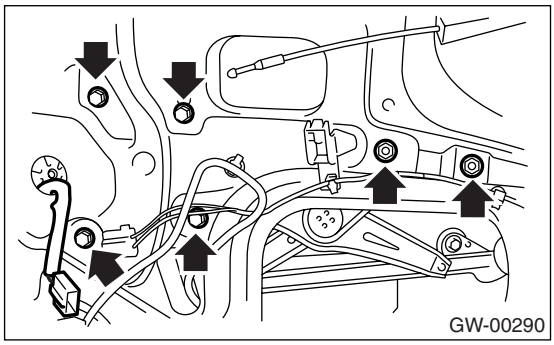

5) Remove the screws to remove motor assembly.

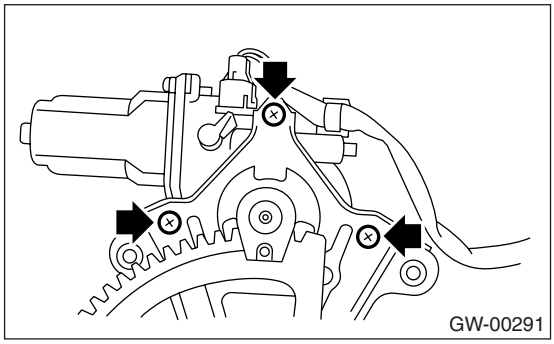

B: INSTALLATION

1) Install in the reverse order of removal.
2) Adjust the rear door glass. <Ref. to GW-25, ADJUSTMENT, Rear Door Glass.>

Tightening torque:
Refer to "COMPONENT" of "General Description". <Ref. to GW-5, REAR DOOR GLASS, COMPONENT, General Description.>

C: INSPECTION

1) Make sure that the power window motor rotates properly when the battery voltage is applied to the terminals of motor connector.
2) Change polarity of battery connection to terminals to ensure that the motor rotates in reverse direction.

13.Windshield Glass

A: REMOVAL

1. USING WINDSHIELD GLASS KNIFE

1) Remove the cowl panel. <Ref. to EI-39, REMOVAL, Cowl Panel.>
2) Remove the molding.
3) Tape the body side of the circumference of windshield glass for protection.
4) Apply sufficient amount of soapy water to the adhesive part.
5) Insert the windshield glass knife into adhesive part.
6) While holding the knife edge and windshield glass edge at a right angle, move the windshield glass knife in parallel to the windshield glass edge along face and edge of windshield glass to cut the adhesive part.

NOTE:
- Do not twist windshield glass knife.
- Cutting of adhesive part shall be started with wider gap between windshield glass and body.

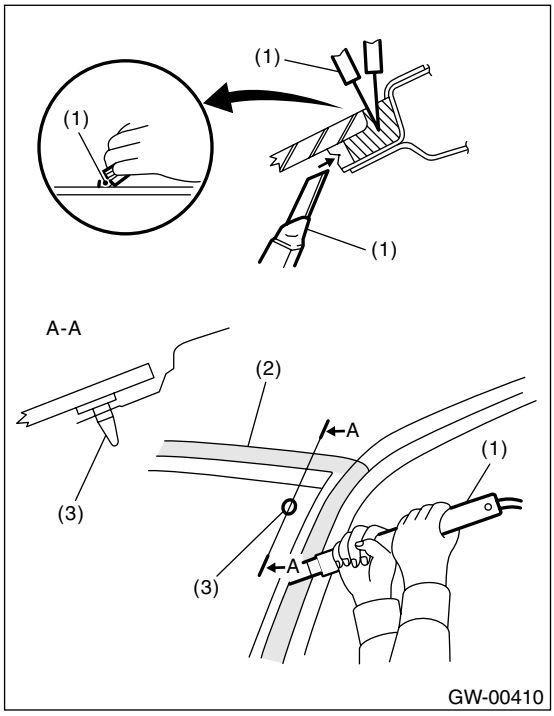

(1) Windshield glass knife
(2) Tape for protection
(3) Locating pin

- Because the locating pins are bonded to the corners of glass, use piano wire to cut the pin.

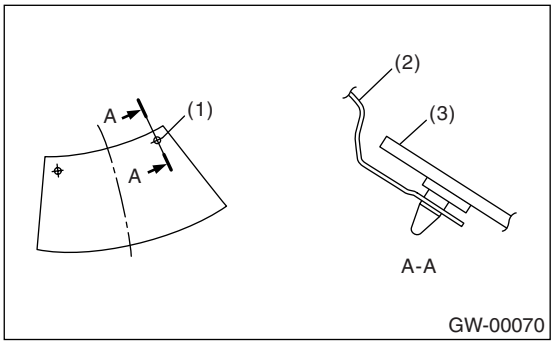

(1) Locating pin
(2) Body panel
(3) Windshield glass

2. USING PIANO WIRE

1) Remove the cowl panel. <Ref. to EI-39, REMOVAL, Cowl Panel.>
2) Remove the molding.
3) Tape the body side of the circumference of windshield glass for protection.
4) Make a hole in the adhesive part using drill or knife.
5) Pass the piano wire through the hole, and attach securely both the wire ends to pieces of wood.

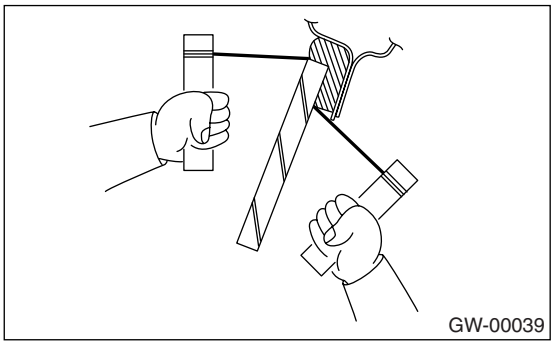

6) Pull the wire ends alternately to cut off the adhesive part.

CAUTION:
• Do not tightly pull the piano wire against the windshield glass edge.
• Be careful not to damage interior and exterior parts.
• When removal is made with area close to instrument panel, place a protection plate over it. Pay particular attention to the removal.
• Do not cross piano wires. Otherwise they may be cut.

B: INSTALLATION

1) Clean the external circumference of windshield glass with alcohol or white gasoline.
2) Remove the adhesive layer on the body using cutter knife to obtain smooth face of 2 mm (0.08 in) thick.

CAUTION:
Be careful not to damage the body and paint surface.

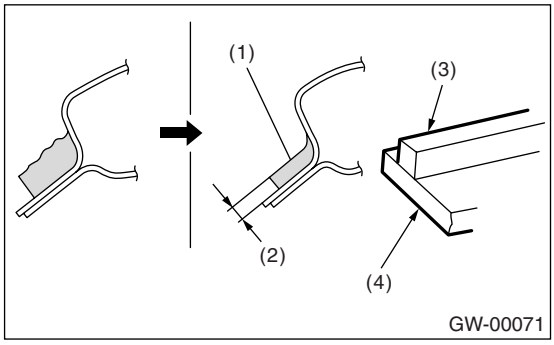

(1) Adhesive
(2) 2 mm (0.08 in)
(3) Dam rubber
(4) Glass

3) Clean the body with alcohol or white gasoline to eliminate cutting power, dust and dirt completely from body.
4) Install the dam rubber.
5) Fit molding mark (B) to notch (A) of glass side and install the molding to entire perimeter of glass.

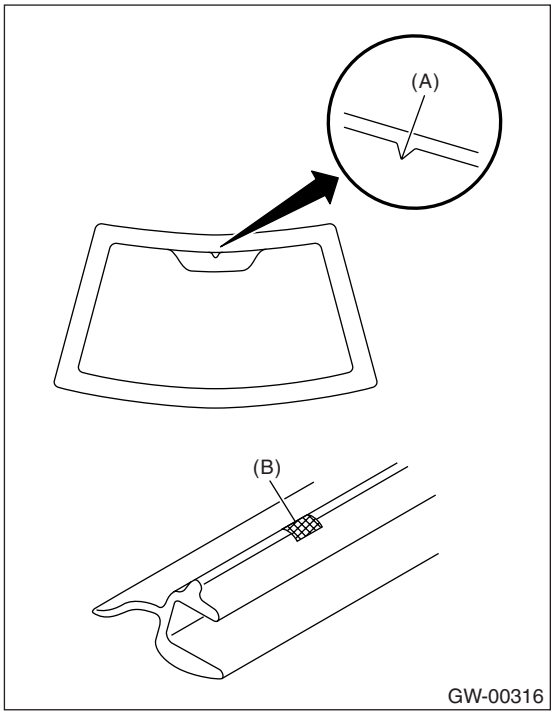

6) Apply two types of primers to the adhesive layer of glass using sponge.

Glass primer:
Dow Automotive
ESSEX U-401, U-402

7) Apply primer to the adhesive layer of body.

Painted surface primer:
Dow Automotive
ESSEX U-413

NOTE:
• Primer once attached to the painted surface of the body and internal trim is hard to wipe off. Mask the circumference of such area.
• Let primer dry for about ten minutes before installing the glass.
• Do not touch the surface coated with primer.

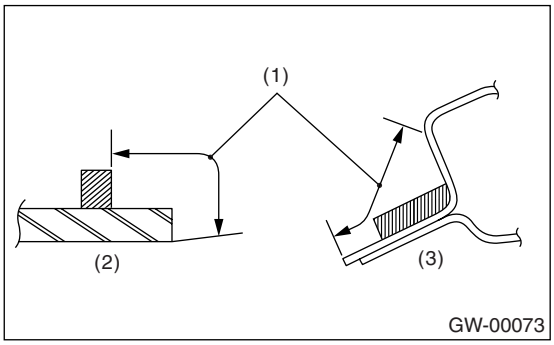

(1) Application of primer
(2) Glass side
(3) Body side

8) Cut off the cartridge nozzle tip as shown and set it in sealant gun.

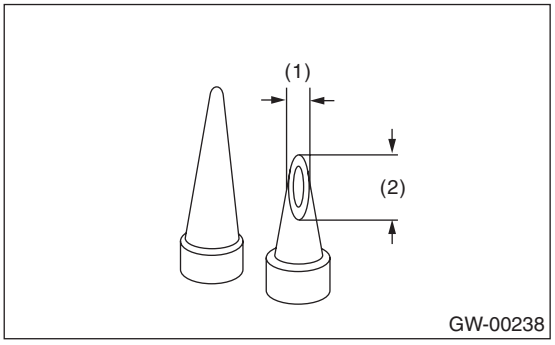

(1) 10 mm (0.39 in)
(2) 15 mm (0.59 in)

9) Apply adhesive to the glass end surface as shown.

Adhesive:
Dow Automotive
ESSEX U-400HV or equivalent

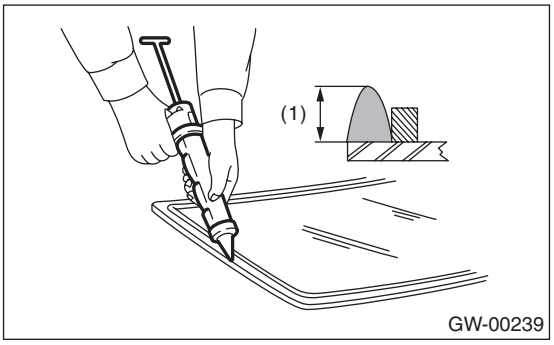

(1) 9 — 12 mm (0.35 — 0.47 in)

10) Fit the locating pins, and install windshield glass using suction rubber cup.

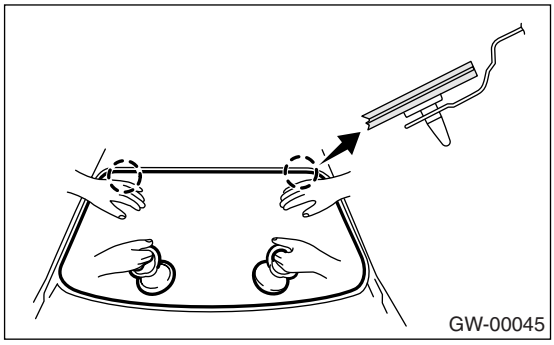

11) Lightly press the windshield glass for tight fit.
12) Make flush the adhesive surface jutted out using spatula.
13) After completion of all work, allow the vehicle to stand for about 24 hours.

NOTE:
• When door is opened/closed after glass is bonded, always lower the door glass and then open/close it carefully.
• Move the vehicle slowly.
• For minimum drying time and vehicle standing time before driving after bonding, follow instructions or instruction manual from the adhesive manufacturer.

14) After curing of adhesive, pour the water on external surface of vehicle to check that there are no water leaks.

NOTE:
When a vehicle is returned to the user, tell him or her that the vehicle should not be subjected to heavy impact for at least three days.

15) Install the cowl panel. <Ref. to EI-39, INSTALLATION, Cowl Panel.>

14.Rear Gate Glass

A: REMOVAL

1) Remove the rear wiper motor. <Ref. to WW-18, REMOVAL, Rear Wiper Motor.>
2) Disconnect the electrical connectors from rear defogger terminal.
3) Remove the glass in the same procedure as for windshield glass. <Ref. to GW-27, REMOVAL, Windshield Glass.>

B: INSTALLATION

1) Apply adhesive in the same procedure as for windshield glass. <Ref. to GW-28, INSTALLATION, Windshield Glass.>
2) Insert the glass clip pin into rear gate hole, and after pushing on the area around the clip pin to secure it, push lightly all around the area to seal it.
3) About one hour after installation, conduct a leak test.

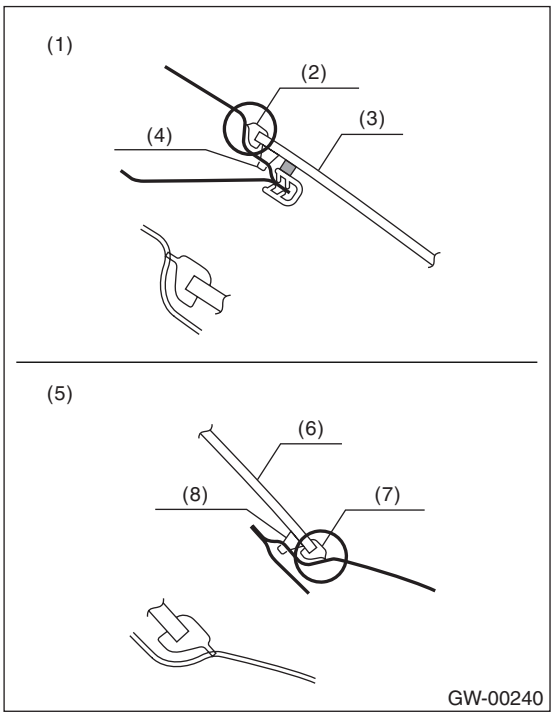

(1) Upside
(2) Molding
(3) Glass
(4) Adhesive
(5) Downside
(6) Glass
(7) Molding
(8) Adhesive

4) After completion of all work, allow the vehicle to stand for about 24 hours.

NOTE:
• When door is opened/closed after glass is bonded, always lower the door glass and then open/close it carefully.
• Move the vehicle slowly.
• For minimum drying time and vehicle standing time before driving after bonding, follow instructions or instruction manual from the adhesive manufacturer.
• When a vehicle is returned to the user, tell him or her that the vehicle should not be subjected to heavy impact for at least three days.

5) Connect the rear defogger terminals.
6) Install the rear wiper. <Ref. to WW-18, INSTALLATION, Rear Wiper Motor.>

15.Rear Window Glass

A: REMOVAL

1) Disconnect the electrical connectors from rear defogger terminal.
2) Remove the glass in the same procedure as for windshield glass. <Ref. to GW-27, REMOVAL, Windshield Glass.>

B: INSTALLATION

1) Bond the dam rubber.

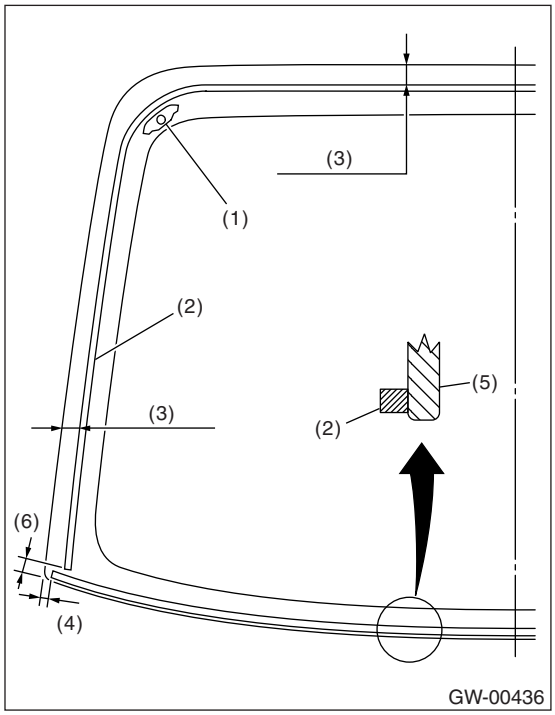

(1) Locating pin (bonded)
(2) Dam rubber
(3) 11 mm (0.433 in)
(4) 4 mm (0.157 in)
(5) Rear window glass
(6) 40 mm (1.575 in)

2) Install the glass in the same procedure as for windshield glass. <Ref. to GW-28, INSTALLATION, Windshield Glass.>
3) Connect the connector to the rear defogger and antenna terminals.
4) After completion of all work, allow the vehicle to stand for about 24 hours.

NOTE:
• When door is opened/closed after glass is bonded, always lower the door glass and then open/close it carefully.
• Move the vehicle slowly.
• For minimum drying time and vehicle standing time before driving after bonding, follow instructions or instruction manual from the adhesive manufacturer.

5) After curing of adhesive, pour the water on external surface of vehicle to check that there are no water leaks.

NOTE:
When a vehicle is returned to the user, tell him or her that the vehicle should not be subjected to heavy impact for at least three days.

16.Rear Window Defogger System

A: WIRING DIAGRAM

<Ref. to WI-169, Rear Defogger System.>

B: INSPECTION

Symptom	Repair order
Rear window defogger does not operate.	(1) Fuse (M/B No. 10) (F/B No. 22) (2) Rear defogger relay (3) Defogger switch (4) Rear defogger condenser (5) Defogger wire (6) Wiring harness (7) Body integrated unit

NOTE:
Rear window defogger system can be customized on the Subaru Select Monitor.

System name	Initial setting	Customize setting
Rear window defogger timer	OFF after 15 min.	Repeat 15 min. operation and 2 min. stop.

17.Rear Window Defogger

A: INSPECTION

1. WITH SUBARU SELECT MONITOR

CAUTION:
Check that the rear window defogger timer is in initial setting or customize setting before inspection.

	Step	Check	Yes	No
1	**CHECK INPUT SIGNAL TO BODY INTEGRATED UNIT.** When the rear window defogger switch is operated, check the input signal using Subaru Select Monitor. 1) Connect the Subaru Select Monitor to data link connector. 2) Turn the ignition switch to ON. 3) Select {Body Integrated Unit} from «Main Menu». 4) Select {Current Data Display & Save}. 5) When the rear window defogger switch is set to ON, check the input signal.	After rear defogger switch is set to ON, does it turn to OFF in 15 minutes? Or does it repeat 15 minutes operation and 2 minutes stop?	END.	Replace the body integrated unit. <Ref. to SL-54, REMOVAL, Body Integrated Unit.>

2. HEAT WIRE INSPECTION

CAUTION:
When wiping stain on glass off with cloth, use a dry and soft cloth and move it along the heat wire to avoid damage to the heat wire.

1) Turn the ignition switch to ON.
2) Turn the defogger switch to ON.
3) Wrap the tips of tester probe with aluminum foil to avoid damage to heat wire.

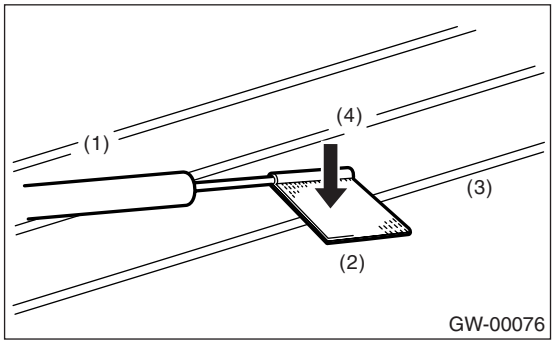

(1) Tester probe
(2) Aluminum foil
(3) Heat wire
(4) Push

4) Measure the voltage at heat wire center with DC voltmeter.

Standard voltage:
Approx. 6 V

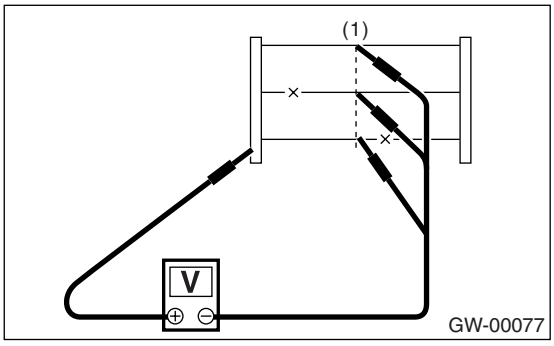

(1) Center of heat wire

Voltage	Criteria
Approx. 6 V	Normal Operation
Approx. 12 V or 0 V	Broken

NOTE:
• If the measured value is 12 volts, heat wire is open between heat wire center and positive (+) terminal of tester probe.
• If zero volt, heat wire is open between wire center and ground.

5) Connect the tester probe of positive lead of voltmeter to positive terminal of heat wire and move tester probe of negative lead along the heat wire up to the negative terminal end. If voltage changes from zero to several volts during movement of tester probe, heat wire is open at the voltage change point.

B: REPAIR

1) Clean the broken portion with alcohol or white gasoline.
2) Mask both side of wire with thin film.
3) Apply the conductive silver composition (DUPONT No. 4817) to the broken portion.

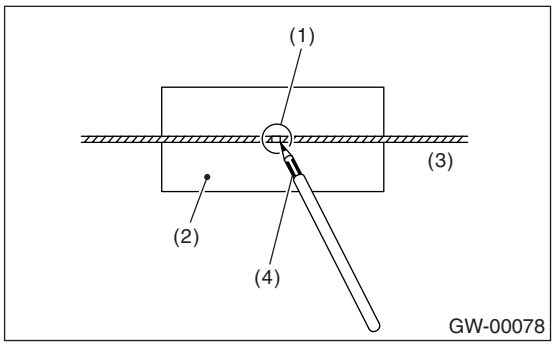

(1) Broken portion
(2) Thin film
(3) Broken wire
(4) Conductive silver composition (DUPONT No. 4817)

4) After repair, check the wire.

18.Rear Quarter Glass

A: REMOVAL

Remove the glass in the same procedure as for windshield glass. <Ref. to GW-27, REMOVAL, Windshield Glass.>

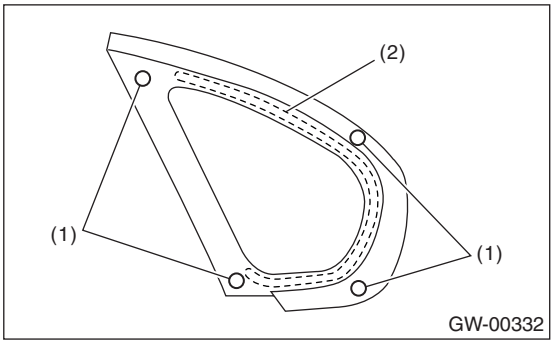

(1) Locating pin
(2) Dam rubber

B: INSTALLATION

1) Install the dam rubber.

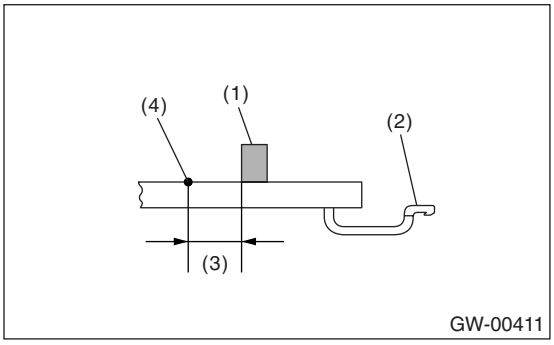

(1) Dam rubber
(2) Molding
(3) 10.5 mm (0.413 in) (constant)
(4) Ceramic terminal

2) Cut out the nozzle head and apply adhesive to the glass end surface as shown.

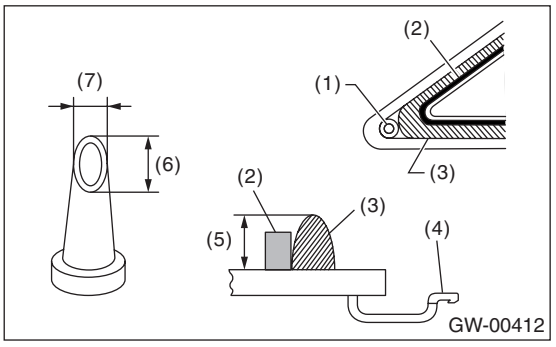

(1) Locating pin
(2) Dam rubber
(3) Adhesive
(4) Molding
(5) 8 — 10 mm (0.31 — 0.39 in)
(6) 15 mm (0.59 in)
(7) 10 mm (0.39 in)

3) Install the glass in the same procedure as for windshield glass. <Ref. to GW-28, INSTALLATION, Windshield Glass.>
4) After completion of all work, allow the vehicle to stand for about 24 hours.

NOTE:
• When door is opened/closed after glass is bonded, always lower the door glass and then open/close it carefully.
• Move the vehicle slowly.
• For minimum drying time and vehicle standing time before driving after bonding, follow instructions or instruction manual from the adhesive manufacturer.

5) After curing of adhesive, pour the water on external surface of vehicle to check that there are no water leaks.

NOTE:
When a vehicle is returned to the user, tell him or her that the vehicle should not be subjected to heavy impact for at least three days.

19.Sun Roof Glass

A: REMOVAL

<Ref. to SR-5, REMOVAL, Glass Lid.>

B: INSTALLATION

<Ref. to SR-6, INSTALLATION, Glass Lid.>

C: ADJUSTMENT

<Ref. to SR-6, ADJUSTMENT, Glass Lid.>

20.Rearview Mirror

A: REMOVAL

1) Remove the TORX® screw (1).
2) Slide the rearview mirror (2) to the upper side of windshield glass (3), and remove the rearview mirror (2) from button (4).

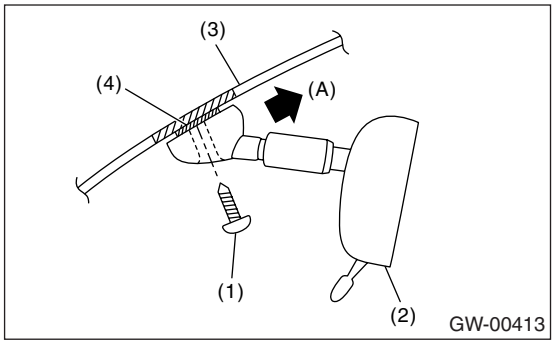

CAUTION:
- **Be careful not to damage the mirror surface.**
- **Be careful not to damage the windshield glass.**

B: INSTALLATION

Install in the reverse order of removal.

Tightening torque:
Refer to "Component" of "Description". <Ref. to GW-6, MIRROR, COMPONENT, General Description.>

CAUTION:
When tightening the mounting TORX® screw, be sure to observe the tightening torque. Otherwise, the mount may be damaged.

C: INSPECTION

Check that the mirror is not damaged.
Check that the spring is not damaged.

21.Wiper Deicer System

A: WIRING DIAGRAM

<Ref. to WI-159, Wiper Deicer System.>

B: INSPECTION

Symptom	Repair order
Wiper deicer does not operate.	(1) Fuse (F/B No. 4, 9) (2) Wiper deicer relay (3) Wiper deicer switch (4) Wiring harness (5) Body integrated unit

Refer to “Rear Window Defogger” for inspection.
<Ref. to GW-33, INSPECTION, Rear Window Defogger.>

NOTE:
Wiper deicer system can be customized on the Subaru Select Monitor.

System name	Initial setting	Customize setting
Wiper deicer timer	OFF after 15 min.	Continuous operation*

*: When one of following items is occurred, finish the continuous operation and goes to OFF after 15 min.
- Ambient temperature that is more than 5°C (41°F) continues for 10 sec.
- Malfunction occurs on ambient temperature sensor
- Vehicle speed that is below 15 km/h (9 MPH) continues 15 min.
- Malfunction occurs on CAN communication

C: REPAIR

Refer to “Rear Window Defogger” for repair.
<Ref. to GW-34, REPAIR, Rear Window Defogger.>

22.Wiper Deicer Switch

A: REMOVAL

1) Remove the instrument panel lower cover. <Ref. to EI-50, REMOVAL, Instrument Panel Lower Cover.>
2) Disconnect the harness connector and remove the wiper deicer switch.

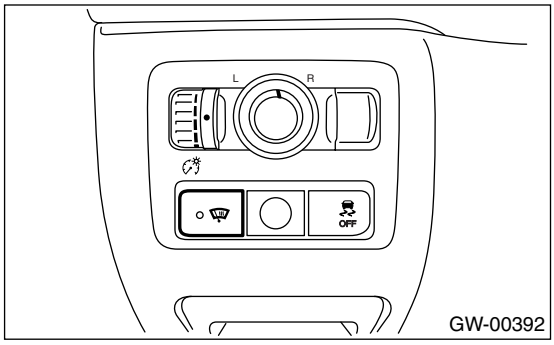

B: INSTALLATION

Install in the reverse order of removal.

C: INSPECTION

1. WITH SUBARU SELECT MONITOR

CAUTION:
Check that the wiper deicer timer is in initial setting or customize setting before inspection.

	Step	Check	Yes	No
1	**CHECK INPUT SIGNAL TO BODY INTEGRATED UNIT.** When the wiper deicer switch is operated, check the input signal using Subaru Select Monitor. 1) Connect the Subaru Select Monitor to data link connector. 2) Turn the ignition switch to ON. 3) Select {Body Integrated Unit} from «Main Menu». 4) Select {Current Data Display & Save}. 5) When the wiper deicer switch is set to ON, check the input signal.	After the wiper deicer switch is set to ON, does it turn to OFF in 15 minutes? Or does it operates continuously?	END.	Replace the body integrated unit. <Ref. to SL-54, REMOVAL, Body Integrated Unit.>

2. CHECK SWITCH

Remove the wiper deicer switch and measure the switch resistance.

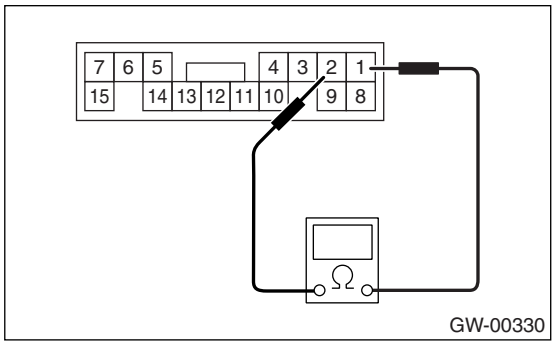

Switch position	Terminal No.	Standard
OFF	1 and 2	More than 1 MΩ
ON		Less than 1 Ω

Replace the wiper deicer switch if faulty.

BODY STRUCTURE

BS

		Page
1.	General Description	2
2.	Datum Dimensions	3
3.	Plastic Parts and Materials	25
4.	List of Plastic Material Notations	28
5.	Body Sealing	29
6.	Anticorrosion Wax	36
7.	Under Coat	41
8.	Anti Chipping Coat	44
9.	Stone Guard Coat	45
10.	Galvanized Sheet Metal	46
11.	Aluminium Sheet Metal	47

1. General Description

A: PREPARATION TOOL

TOOL NAME	REMARKS
Tram tracking gauge	Used for measuring dimension.
Tape measure	Used for measuring dimension.

2. Datum Dimensions

A: MEASUREMENT

NOTE:
• Using a tram tracking gauge, measure all the dimensions.
• When using a tape measure, carefully measure dimensions without letting the tape measure sag or twist.
• Measure the linear dimensions between cores of holes.
• Suffixes “RH” and “LH” indicate right-hand and left-hand.

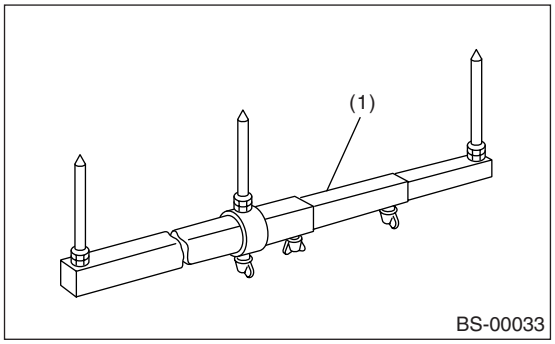

(1) Tram tracking gauge

• Measure at the center of the circle around the outside of the body panel.

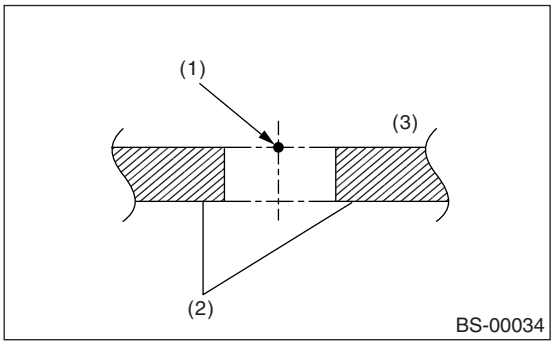

(1) Datum point
(2) Body panel
(3) Outside

1. CENTER STRUCTURE

NOTE:
• The longitudinal dimensions are projected dimensions.
• The height dimensions are the vertical distances from the gauge point on the assumed horizontal line through the side sill flange joint (bending angle point).
• Diagnonal dimensions are the actual dimensions between reference points. The values in brackets are projected dimensions for reference.

Datum Dimensions

Unit: mm

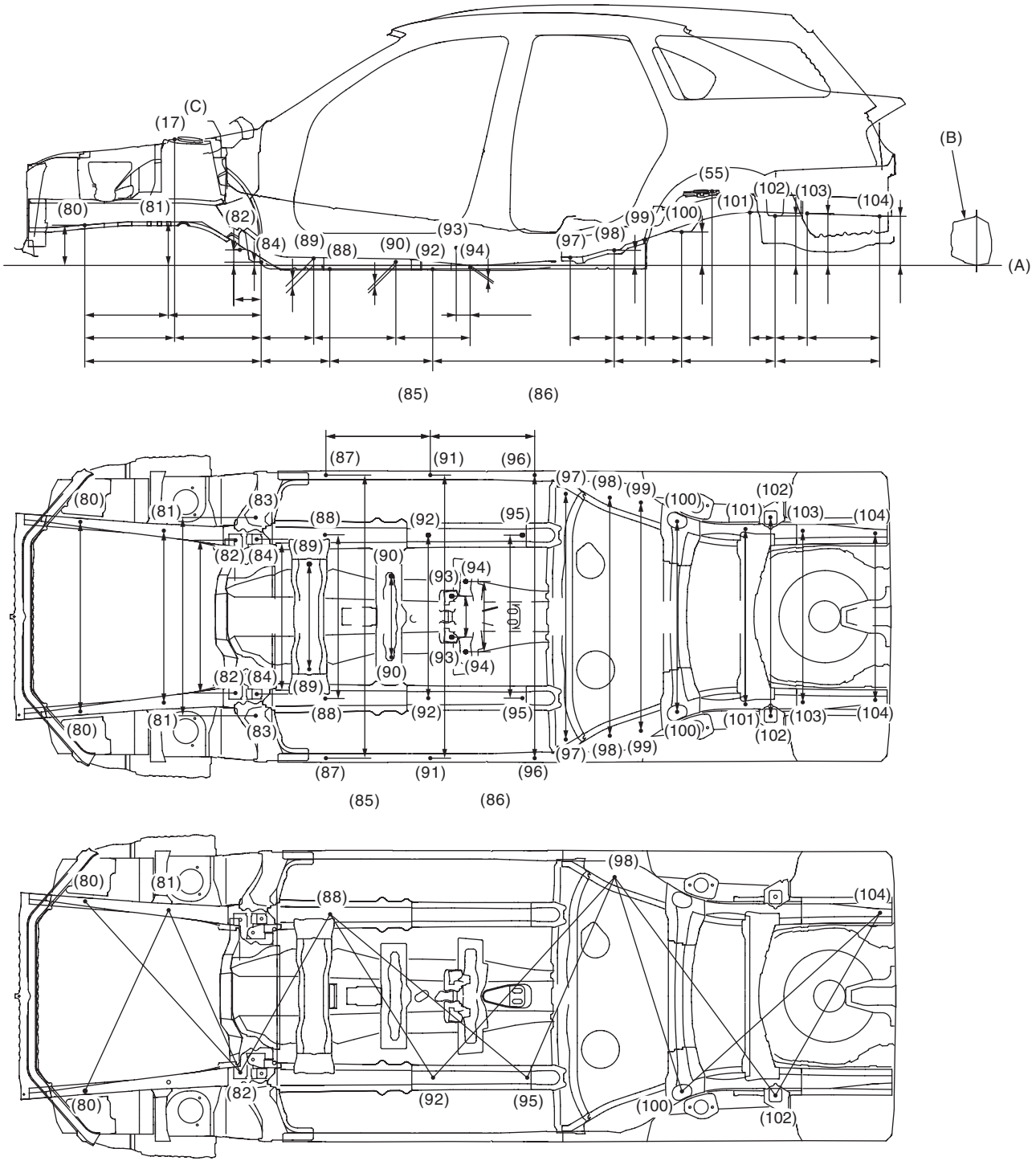

BS-01530

Datum Dimensions

(A) Standard line

(80) Gauge hole (symmetrical)
(81) Front crossmember mounting hole (symmetrical), Lower surface rear
(82) Strut mount mounting hole (symmetrical)
(83) Strut mount mounting hole (symmetrical)
(84) Strut mount mounting hole (symmetrical)
(85) Transmission crossmember mounting hole (symmetrical)
(86) Drain hose mounting hole (symmetrical)
(87) Under cover mounting hole (symmetrical)
(88) Under cover mounting hole (symmetrical)

(B) Side sill

(89) Transmission crossmember mounting hole (symmetrical)
(90) Gauge hole (symmetrical)
(91) Under cover mounting hole (symmetrical)
(92) Under cover mounting hole (symmetrical)
(93) Center bearing mounting hole (symmetrical)
(94) Exhaust cover mounting hole (symmetrical)
(95) Weight reduction hole (symmetrical)
(96) Under cover mounting hole (symmetrical)
(97) Fuel protector mounting hole (symmetrical)

(C) Upper face

(98) Trailing arm mounting hole (symmetrical)
(99) Trailing arm mounting hole (symmetrical)
(100) Rear suspension crossmember mounting hole (symmetrical)
(101) Canister hose mounting hole (symmetrical)
(102) Rear suspension crossmember mounting hole (symmetrical)
(103) Gauge hole (symmetrical)
(104) Weight reduction hole (symmetrical)

Measuring point	Reference dimension mm (in)
(80) from standard line	198 (7.80)
(81) from standard line	212 (8.35)
(82) from standard line	77 (3.03)
(84) from standard line	17 (0.07)
(89) from standard line	(4AT, MT) 35 (1.38) (5AT) 56 (2.20)
(90) from standard line	18 (0.71)
(94) from standard line	–9 (–0.35)
(98) from standard line	75 (2.95)
(100) from standard line	164 (6.46)
(102) from standard line	243 (9.57)
(103) from standard line	255 (10.04)
(104) from standard line	241 (9.49)
(17) to (80)	439 (17.28)
(17) to (84)	423 (16.65)
(80) to (81)	408 (16.06)
(80) to (84)	862 (33.94)
(81) to (84)	454 (17.87)
(82) to (84)	104 (4.09)
(84) to (88)	335 (13.19)
(84) to (89)	(4AT, MT) 257 (10.12) (5AT) 357 (14.06)
(88) to (92)	503 (19.80)
(89) to (90)	302 (11.89)
(90) to (94)	363 (14.29)
(92) to (98)	887 (34.92)
(93) to (94)	68 (2.68)
(97) to (98)	215 (8.46)
(98) to (99)	152 (5.98)
(98) to (100)	329 (12.95)
(99) to (100)	177 (6.97)

Measuring point	Reference dimension mm (in)
(100) to (55)	149 (5.87)
(100) to (102)	457 (17.99)
(101) to (102)	123 (4.84)
(102) to (103)	157 (6.18)
(102) to (104)	505 (19.88)
(103) to (104)	348 (13.70)
(80) RH to (80) LH	926 (36.46)
(81) RH to (81) LH	840 (33.07)
(82) RH to (82) LH	746 (29.37)
(83) RH to (83) LH	968 (38.11)
(84) RH to (84) LH	756 (29.76)
(87) RH to (87) LH	1,382 (54.41)
(87) to (91)	510 (20.08)
(88) RH to (88) LH	800 (31.50)
(89) RH to (89) LH	(4AT, MT) 529 (20.83) (5AT) 433 (17.05)
(90) RH to (90) LH	396 (15.59)
(91) RH to (91) LH	1,382 (54.41)
(91) to (96)	510 (20.08)
(92) RH to (92) LH	796 (31.34)
(93) RH to (93) LH	200 (7.87)
(94) RH to (94) LH	343 (13.50)
(95) RH to (95) LH	796 (31.34)
(96) RH to (96) LH	1,382 (54.51)
(97) RH to (97) LH	1,200 (47.24)
(98) RH to (98) LH	1,163 (45.49)
(99) RH to (99) LH	1,115 (43.90)
(100) RH to (100) LH	930 (36.61)
(101) RH to (101) LH	856 (33.70)
(102) RH to (102) LH	970 (38.19)
(103) RH to (103) LH	836 (32.91)

Datum Dimensions

Measuring point	Reference dimension mm (in)
(104) RH to (104) LH	820 (32.28)
(85)	Height 86 (3.39), Width 620 (24.41)
(86)	Height 117 (4.61), Width 600 (23.62)

Measuring point	Reference dimension/Projected dimension for reference mm (in)
(80) RH to (82) LH	1,135 (44.68)/1,128 (44.41)
(80) RH to (81) LH	973 (38.31)/973 (38.31)
(81) RH to (82) LH	877 (34.53)/867 (34.13)
(82) RH to (88) LH	894 (35.20)/889 (35.00)
(88) RH to (92) LH	943 (37.13)/943 (37.13)
(88) RH to (95) LH	1,251 (49.25)/1,251 (49.25)
(92) RH to (98) LH	1,325 (52.17)/1,321 (52.01)
(95) RH to (98) LH	1,072 (42.20)/1,069 (42.09)
(98) RH to (100) LH	1,101 (43.35)/1,097 (43.19)
(98) RH to (102) LH	1,335 (52.56)/1,325 (52.17)
(100) RH to (104) LH	1,305 (51.38)/1,303 (51.30)
(102) RH to (104) LH	1,028 (40.47)/1,028 (40.47)

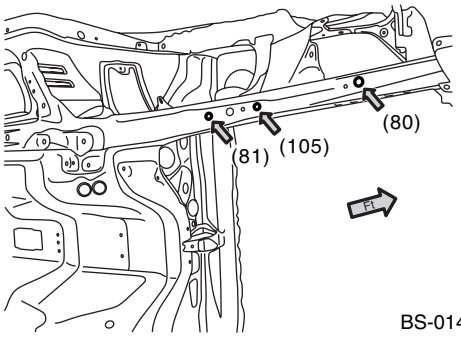

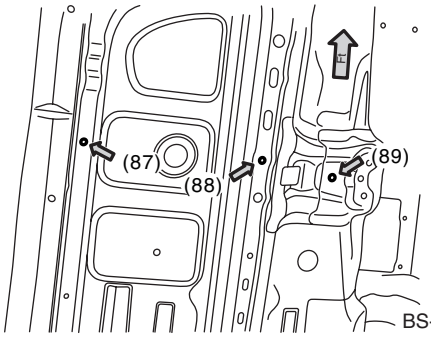

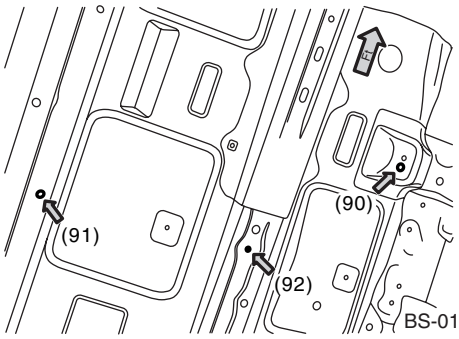

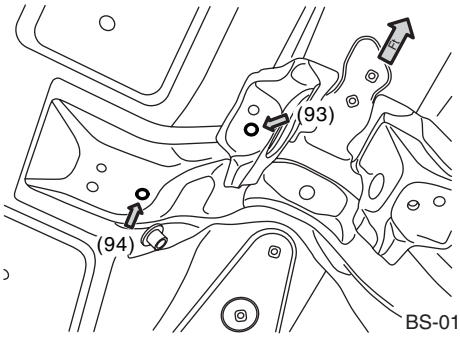

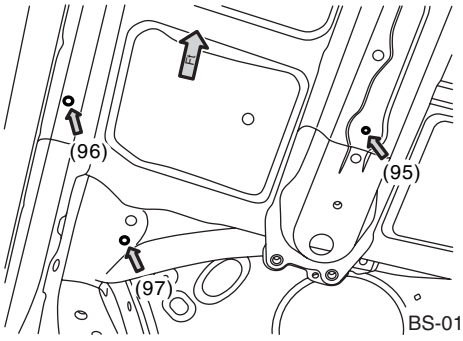

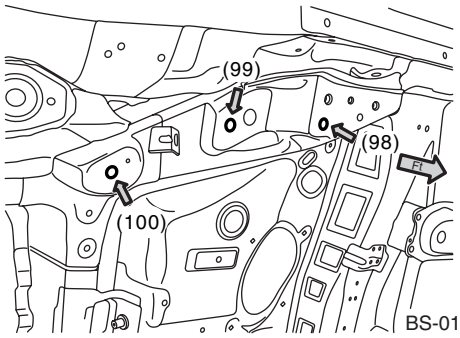

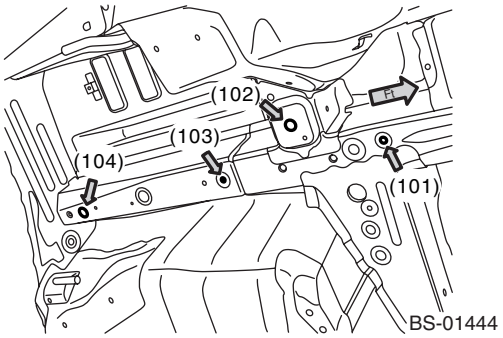

NOTE:
For reference point (17) Strut mounting hole (symmetrical), refer to “Datum Dimensions”. <Ref. to BS-8, FRONT STRUCTURE, MEASUREMENT, Datum Dimensions.>
For reference point (55) Rear suspension mounting hole (symmetrical), refer to “Datum Dimensions”. <Ref. to BS-11, INSIDE, MEASUREMENT, Datum Dimensions.>

2. FRONT STRUCTURE

- Common for wagon and sedan model

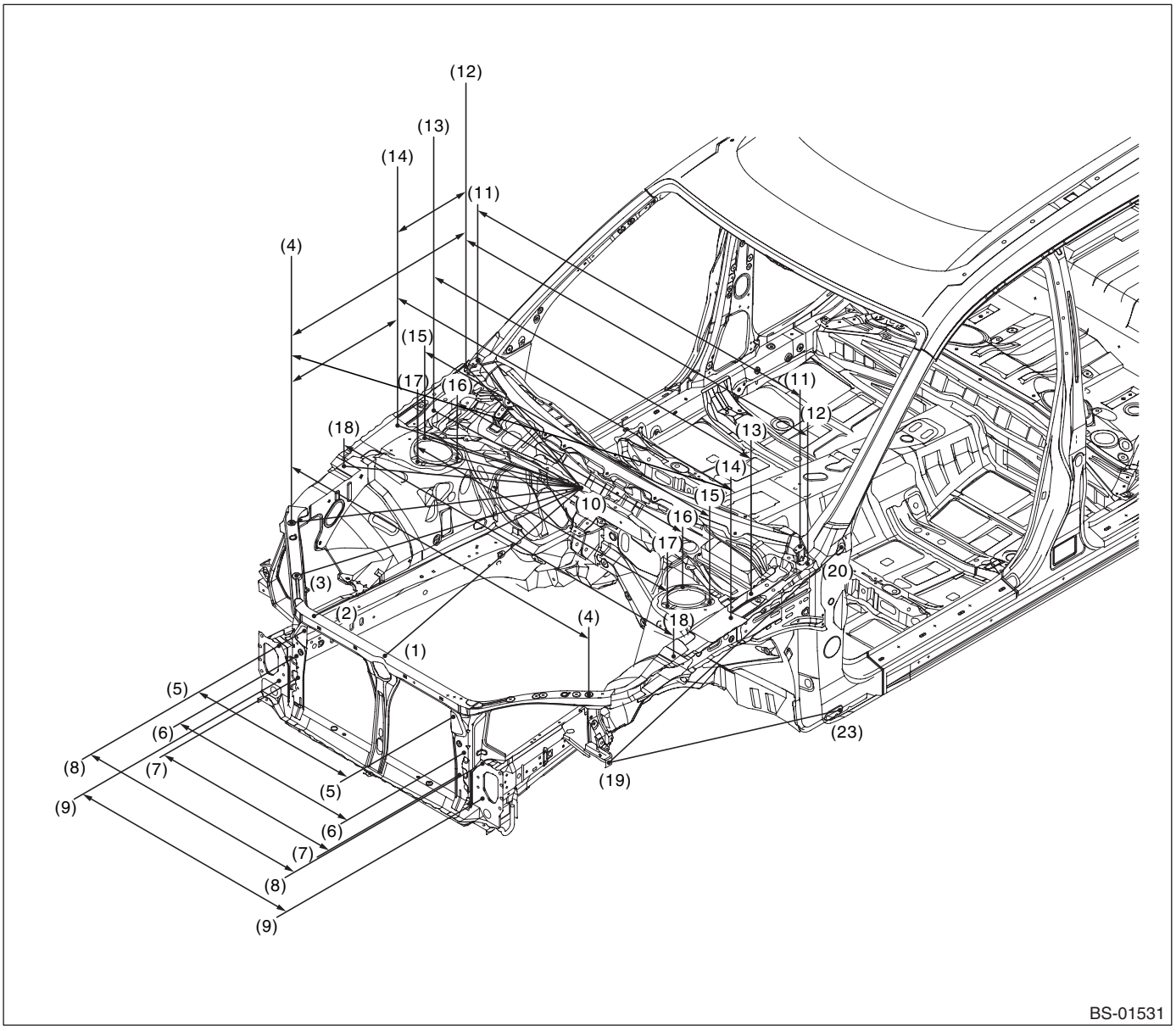

(1) Repair location hole (body center)
(2) Radiator mounting hole
(3) Headlight mounting hole (symmetrical)
(4) Reinforcement fender mounting hole (symmetrical)
(5) Air conditioner condenser mounting hole (symmetrical)
(6) Beam corner side mounting hole (symmetrical)
(7) Heat insulation cover mounting hole (symmetrical)
(8) Bumper beam mounting hole (symmetrical), upper side
(9) Bumper beam mounting hole (symmetrical), lower side
(10) Cowl panel mounting hole (body center)
(11) Fender mounting hole (symmetrical)
(12) Location hole (symmetrical)
(13) Hood hinge mounting hole (symmetrical), front
(14) Fender extension mounting hole (symmetrical)
(15) Strut mount mounting hole (symmetrical), rear outside
(16) Strut mount mounting hole (symmetrical), rear inside
(17) Strut mount mounting hole (symmetrical), front
(18) Fender mounting hole (symmetrical)
(19) Fender mounting hole (symmetrical)
(20) Fender mounting hole (symmetrical)
(23) Fender mounting hole (symmetrical)

Datum Dimensions

Measuring point	Reference dimension mm (in)
(1) — (10)	893 (35.16)
(2) — (10)	948 (37.32)
(3) — (10)	934 (36.77)
(4) — (10)	918 (36.14)
(4) — (4)	1,314 (51.73)
(4) — (12)	882 (34.72)
(4) — (14)	557 (21.93)
(4) RH — (14) LH	1,498 (58.98)
(4) LH — (14) RH	1,498 (58.98)
(5) — (5)	658 (25.91)
(6) — (6)	740 (29.13)
(7) — (7)	700 (27.56)
(8) — (8)	900 (35.43)
(9) — (9)	900 (35.43)
(10) — (11)	755 (29.72)
(10) — (12)	794 (31.26)

Measuring point	Reference dimension mm (in)
(10) — (13)	707 (27.83)
(10) — (14)	745 (29.33)
(10) — (15)	639 (25.16)
(10) — (16)	512 (20.16)
(10) — (17)	585 (23.03)
(10) — (18)	804 (31.65)
(11) — (11)	1,422 (55.98)
(12) — (12)	1,508 (59.37)
(12) — (14)	326 (12.83)
(13) — (13)	1,402 (55.20)
(14) — (14)	1,472 (57.95)
(15) — (15)	1,258 (49.53)
(16) — (16)	995 (39.17)
(17) — (17)	1,104 (43.46)
(18) — (18)	1,456 (57.32)
(19) — (20)	1,064 (41.89)
(19) — (23)	1,035 (40.75)

NOTE:
- The reference points (1) and (10) are at the body center, while the other points are left-right symmetrical.
- The dimensions are the actual dimensions between the reference points.

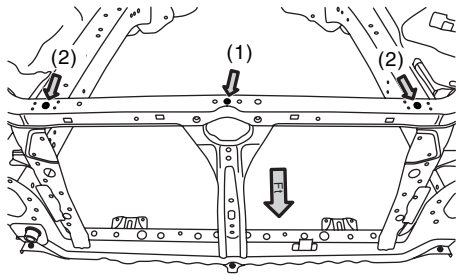

BS-01445

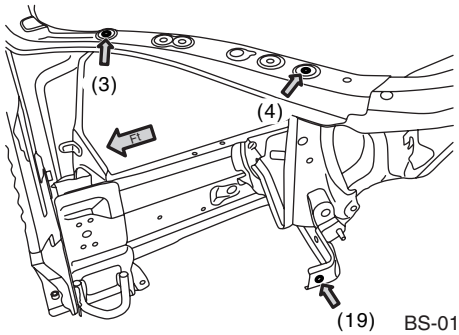

BS-01446

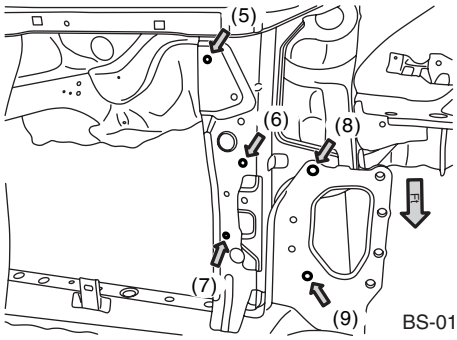

BS-01447

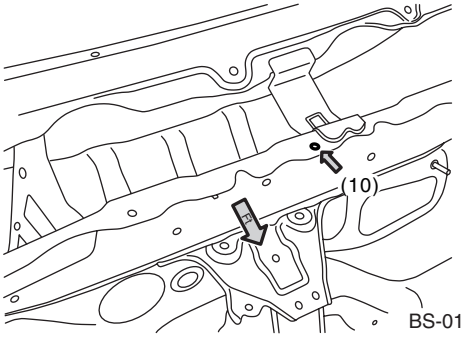

BS-01491

Datum Dimensions

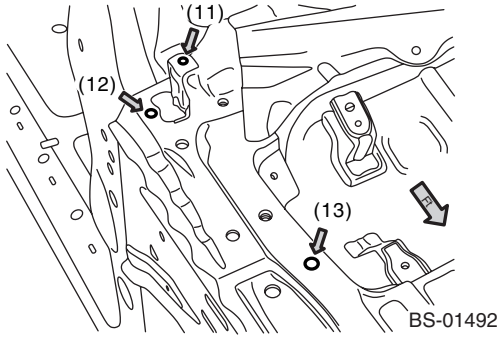

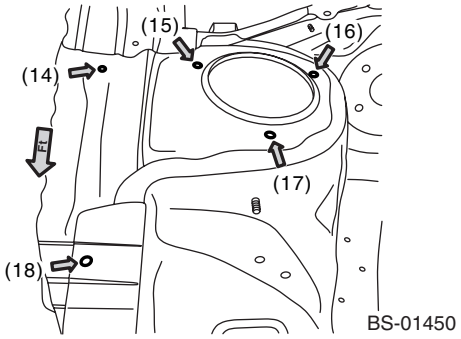

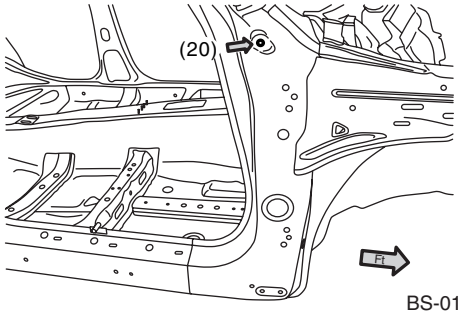

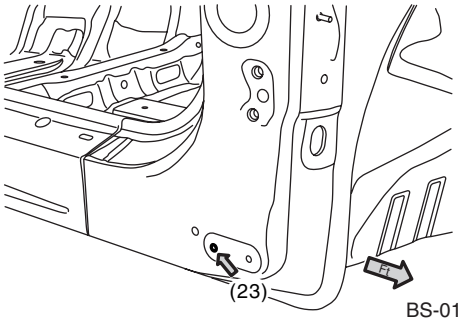

3. INSIDE

- Common for wagon and sedan model, 1

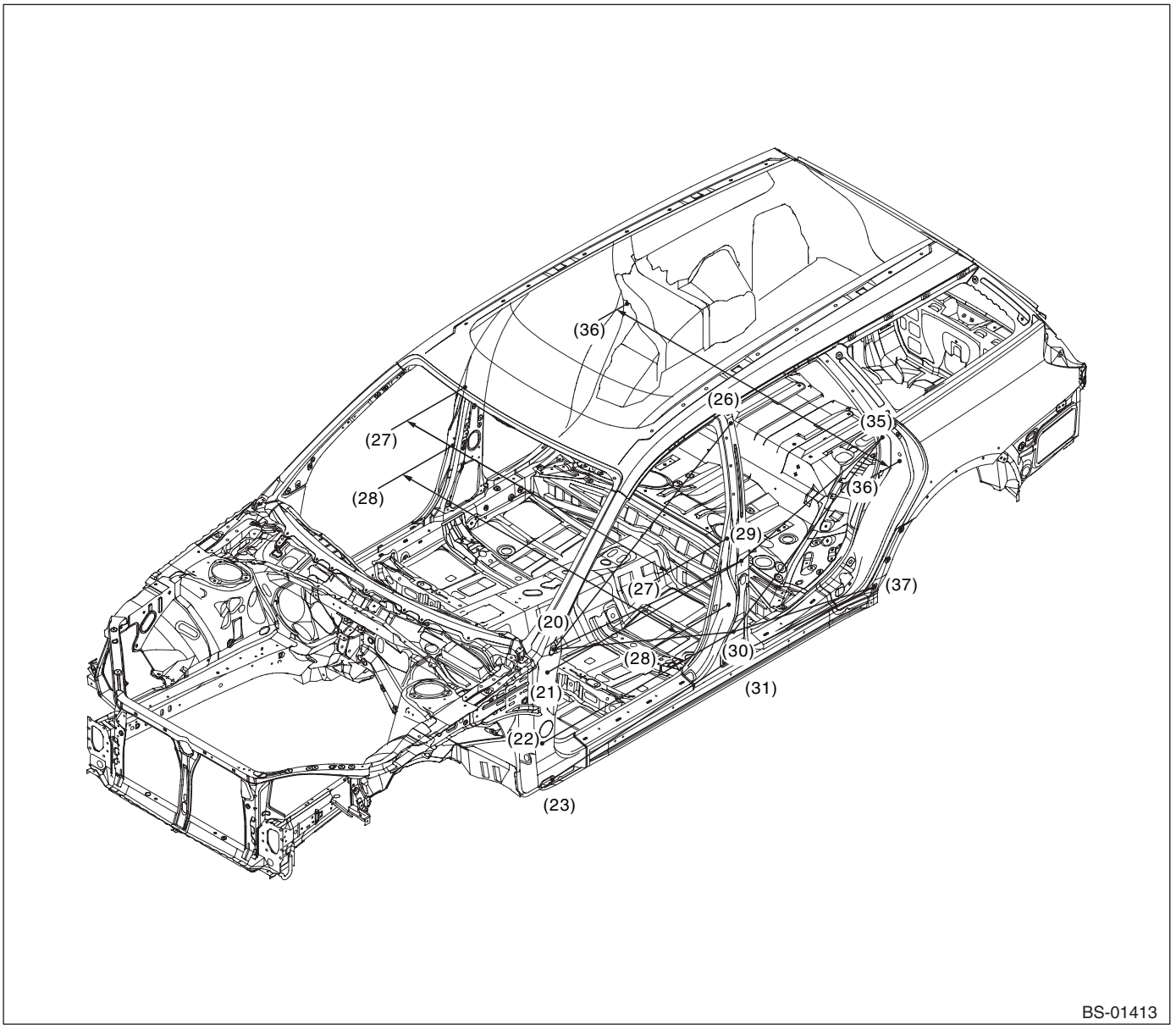

(20) Fender mounting hole (symmetrical)
(21) Front door hinge upper mounting hole (symmetrical), upper side
(22) Front door hinge lower mounting hole (symmetrical), upper side
(23) Fender mounting hole (symmetrical)
(26) Gauge hole (symmetrical)
(27) Weatherstrip mounting hole (symmetrical)
(28) Front door striker mounting hole (symmetrical)
(29) Rear door hinge upper mounting hole (symmetrical)
(30) Rear door hinge lower mounting hole (symmetrical)
(31) Gauge hole (symmetrical)
(35) Weatherstrip mounting hole (symmetrical)
(36) Rear door striker mounting hole (symmetrical)
(37) Protector mounting hole (symmetrical)

Datum Dimensions

Measuring point	Reference dimension mm (in)
(20) — (26)	1,232 (48.50)
(20) — (29)	1,034 (40.71)
(20 — (30)	1,066 (41.97)
(21) — (29)	1,080 (42.52)
(22) — (30)	1,055 (41.54)
(23) — (31)	1,070 (42.13)

Measuring point	Reference dimension mm (in)
(27) — (27)	1,448 (57.01)
(28) — (28)	1,523 (59.96)
(29) — (35)	863 (33.98)
(30 — (35)	1,002 (39.45)
(30) — (37)	753 (29.65)
(31) — (37)	679 (26.73)
(36) — (36)	1,506 (59.29)

NOTE:
- All reference points are left-right symmetrical.
- The dimensions are the actual dimensions between the reference points.

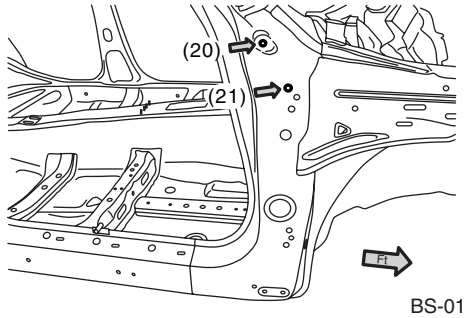

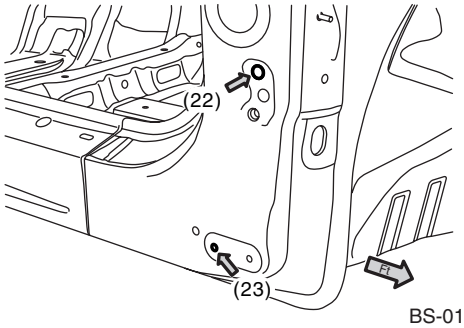

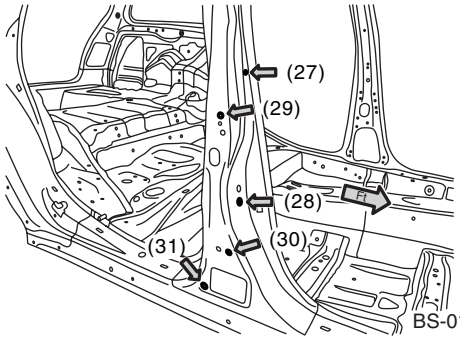

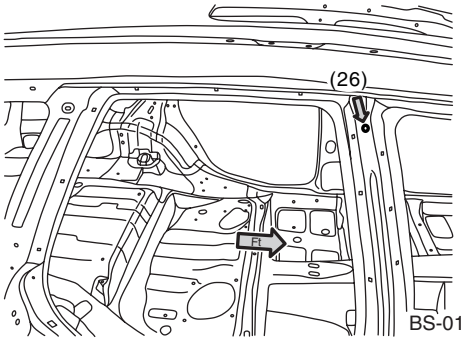

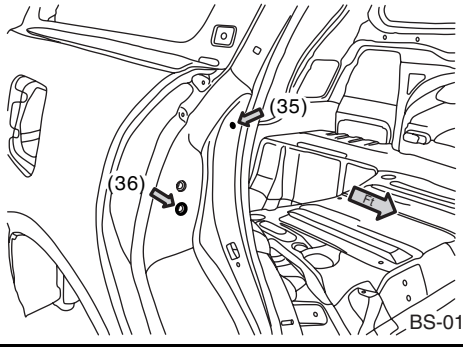

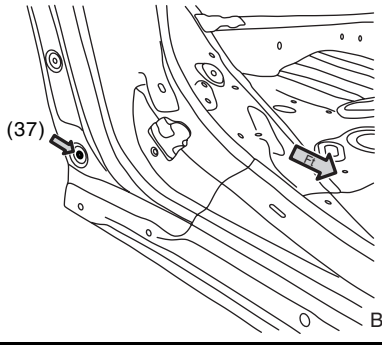

- Common for wagon and sedan model, 2

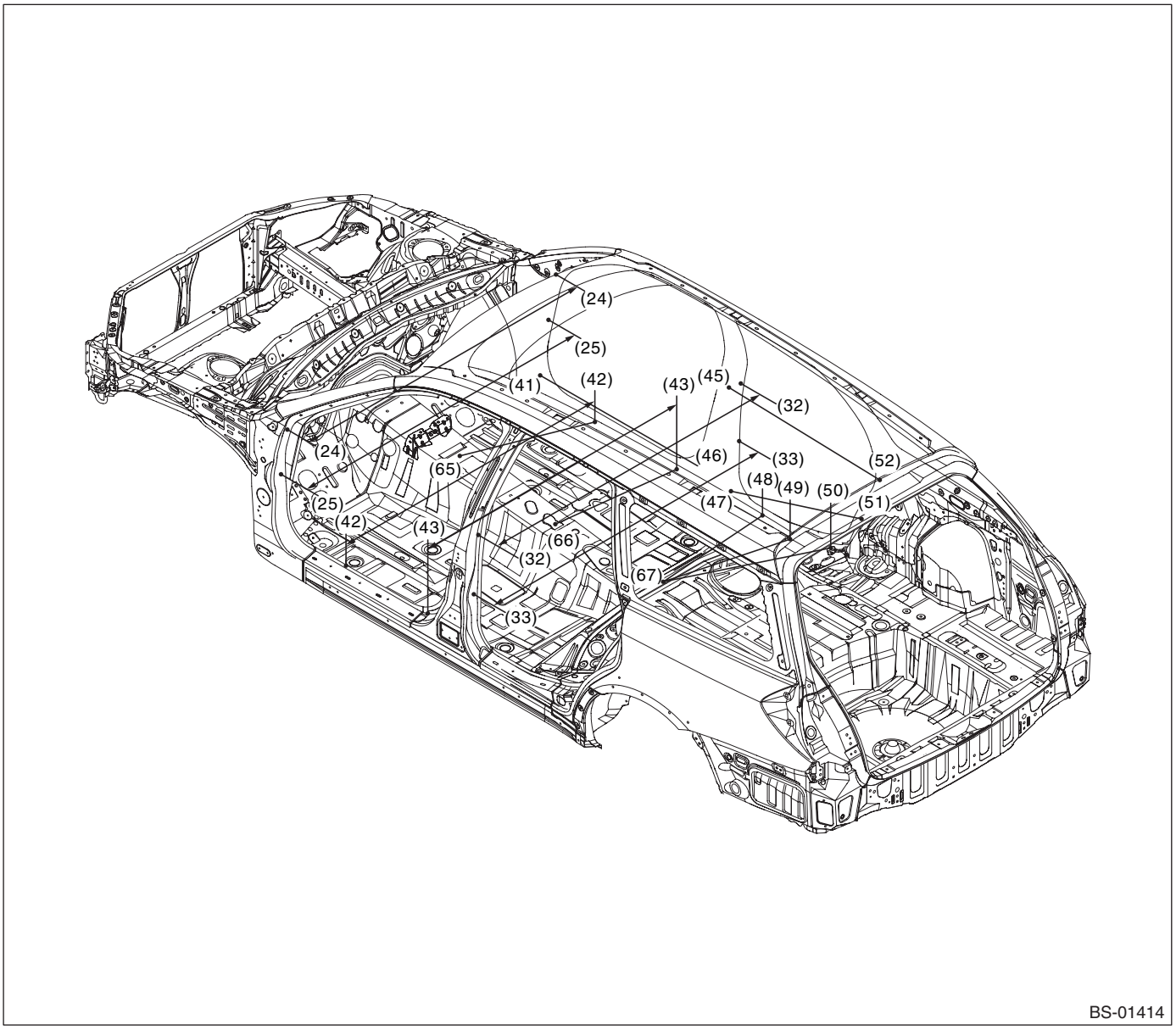

(24) Weatherstrip mounting hole (symmetrical)
(25) Front door checker mounting hole (symmetrical)
(32) Weatherstrip mounting hole (symmetrical)
(33) Rear door checker mounting hole (symmetrical)
(41) Side sill cover mounting hole (symmetrical)
(42) Harness clip mounting hole (symmetrical)
(43) Harness clip mounting hole (symmetrical)
(45) Trim clip mounting hole (symmetrical)
(46) Trim clip mounting hole (symmetrical)
(47) Harness clip mounting hole (symmetrical)
(48) Harness clip mounting hole (symmetrical)
(49) Harness clip mounting hole (symmetrical)
(50) Side sill cover mounting hole (symmetrical)
(51) Gauge hole (symmetrical)
(52) Trim clip mounting hole (symmetrical)
(65) Air bag unit mounting hole (body center)
(66) Hand brake mounting hole (body center)
(67) Floor mat mounting hole (body center)

Datum Dimensions

Measuring point	Reference dimension mm (in)
(24) — (24)	1,482 (58.35)
(25) — (25)	1,476 (58.11)
(32) — (32)	1,448 (57.01)
(33) — (33)	1,464 (57.64)
(41) — (46)	863 (33.98)
(42) — (42)	1,373 (54.06)
(42) — (65)	706 (27.80)

Measuring point	Reference dimension mm (in)
(43) — (43)	1,373 (54.06)
(43) — (66)	693 (27.28)
(45) — (52)	838 (32.99)
(47) — (51)	740 (29.13)
(48) — (67)	711 (27.99)
(49) — (67)	649 (25.55)
(50) — (67)	704 (27.72)

NOTE:
- The reference points (65), (66), and (67) are at the body center, while the other points are left-right symmetrical.
- The dimensions are the actual dimensions between the reference points.

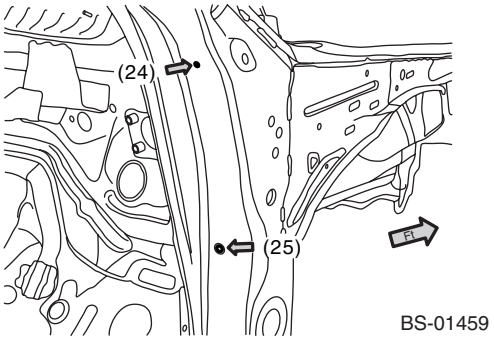

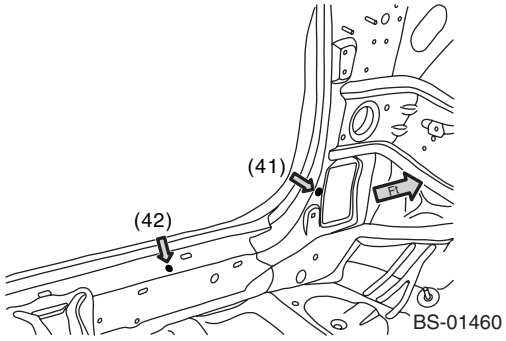

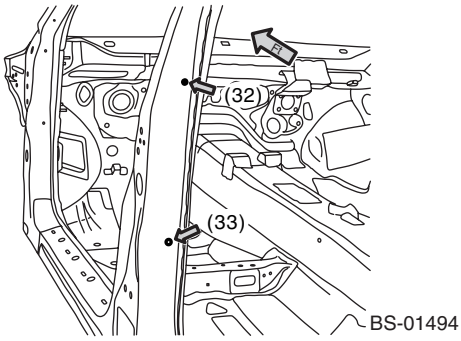

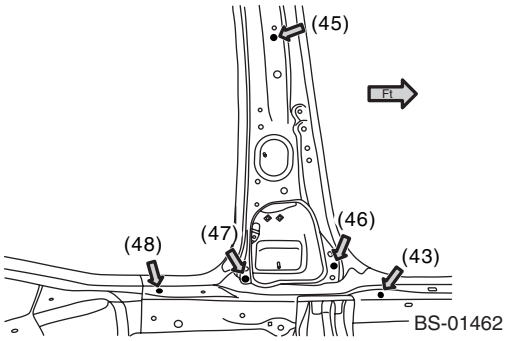

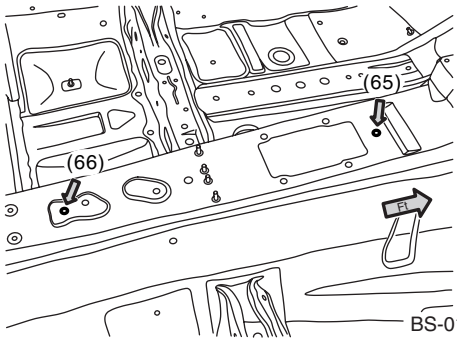

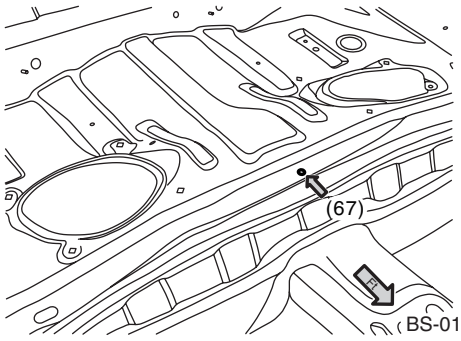

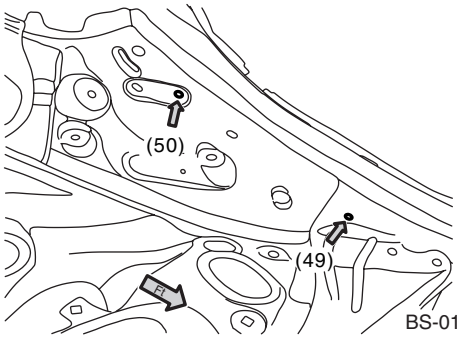
(50)
(49)
FR
BS-01465

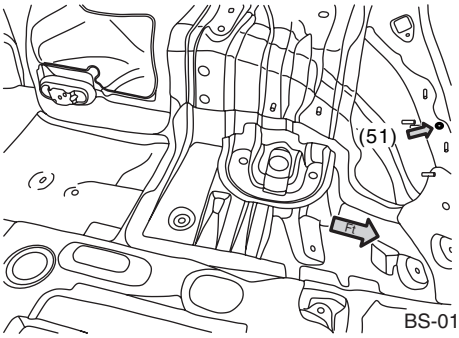
(51)
FR
BS-01466

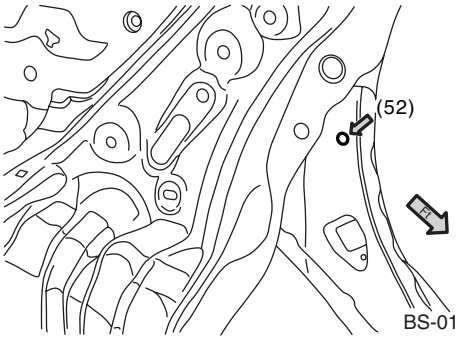
(52)
FR
BS-01467

- Common for wagon and sedan model, 3

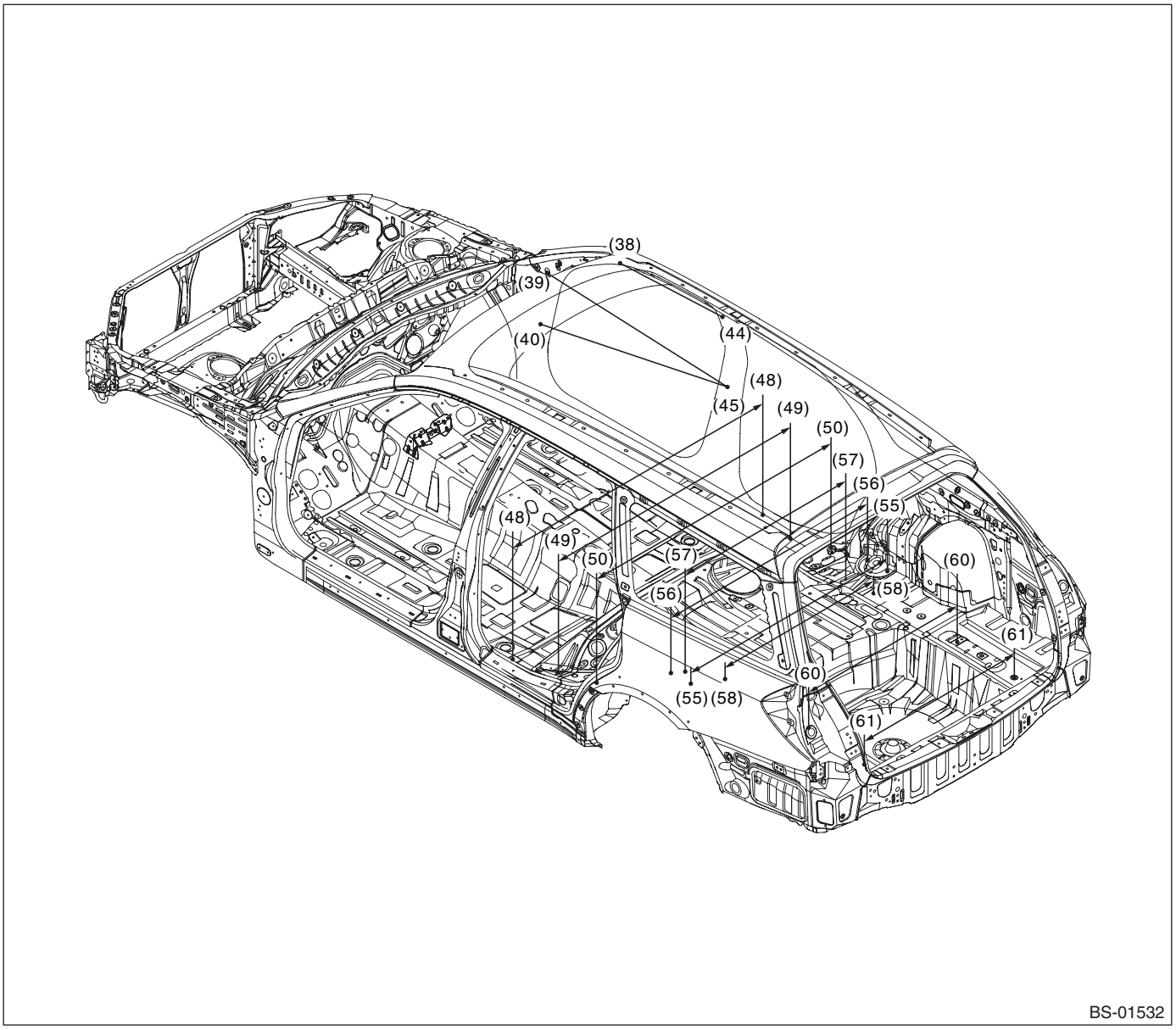

(38) Trim clip mounting hole (symmetrical)
(39) ED hole (symmetrical)
(40) Hood lock lever arrest hole (symmetrical)
(44) Trim clip mounting hole (symmetrical)
(45) Trim clip mounting hole (symmetrical)
(48) Harness clip mounting hole (symmetrical)
(49) Harness clip mounting hole (symmetrical)
(50) Side sill cover mounting hole (symmetrical)
(55) Rear suspension mounting hole (symmetrical), rear
(56) Rear suspension mounting hole (symmetrical), front
(57) Rear seat hinge mounting hole (symmetrical)
(58) Gauge hole (symmetrical)
(60) Gauge hole (symmetrical)
(61) Gauge hole (symmetrical)

Datum Dimensions

Measuring point	Reference dimension mm (in)
(38) — (44)	586 (23.07)
(39) — (45)	993 (39.09)
(40) — (45)	1,043 (41.06)
(48) — (48)	1,380 (54.33)
(49) — (49)	1,280 (50.39)
(50) — (50)	1,294 (50.94)

Measuring point	Reference dimension mm (in)
(55) — (55)	1,084 (42.68)
(56) — (56)	1,090 (42.91)
(57) — (57)	886 (34.88)
(58) — (58)	820 (32.28)
(60) — (60)	820 (32.28)
(61) — (61)	840 (33.07)

NOTE:
- All reference points are left-right symmetrical.
- The dimensions are the actual dimensions between the reference points.

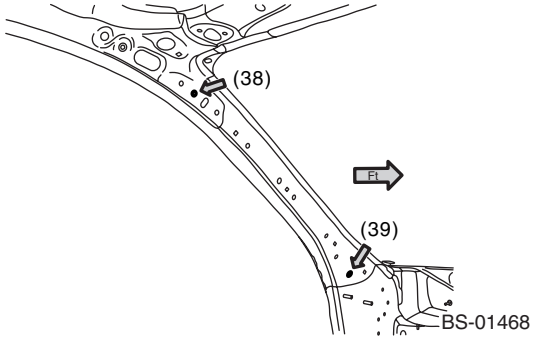

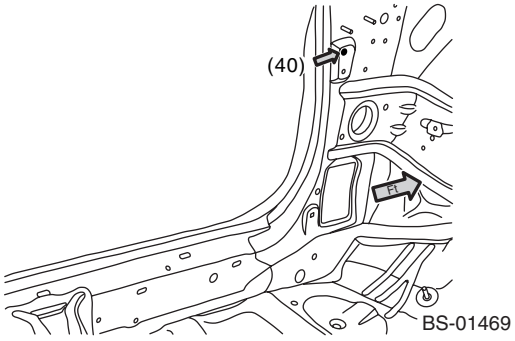

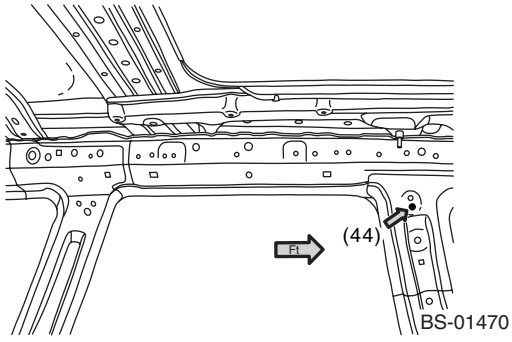

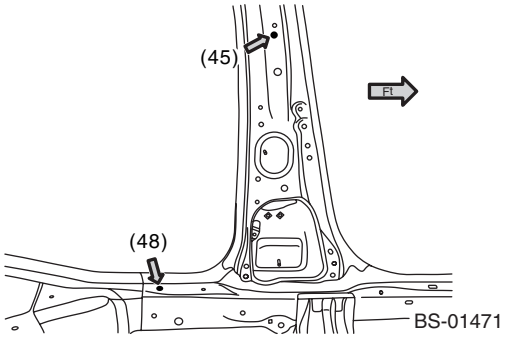

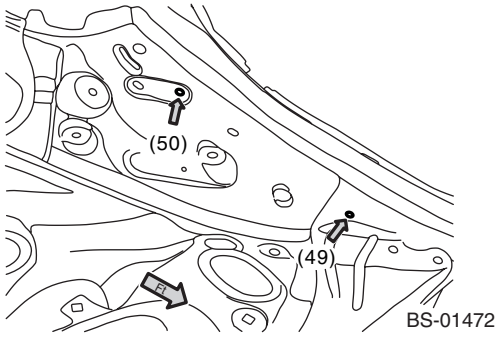

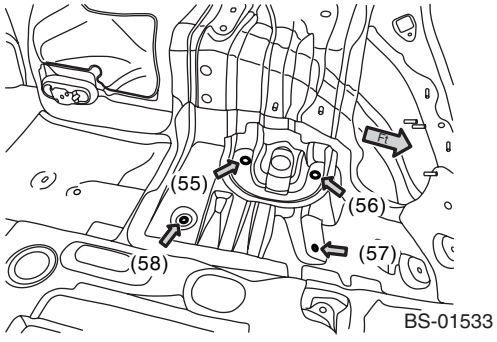

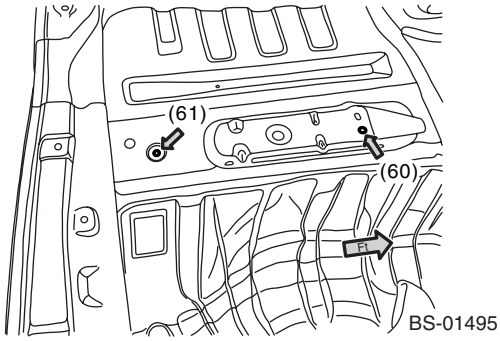
(61)
(60)
FL
BS-01495

4. REAR

- Wagon model

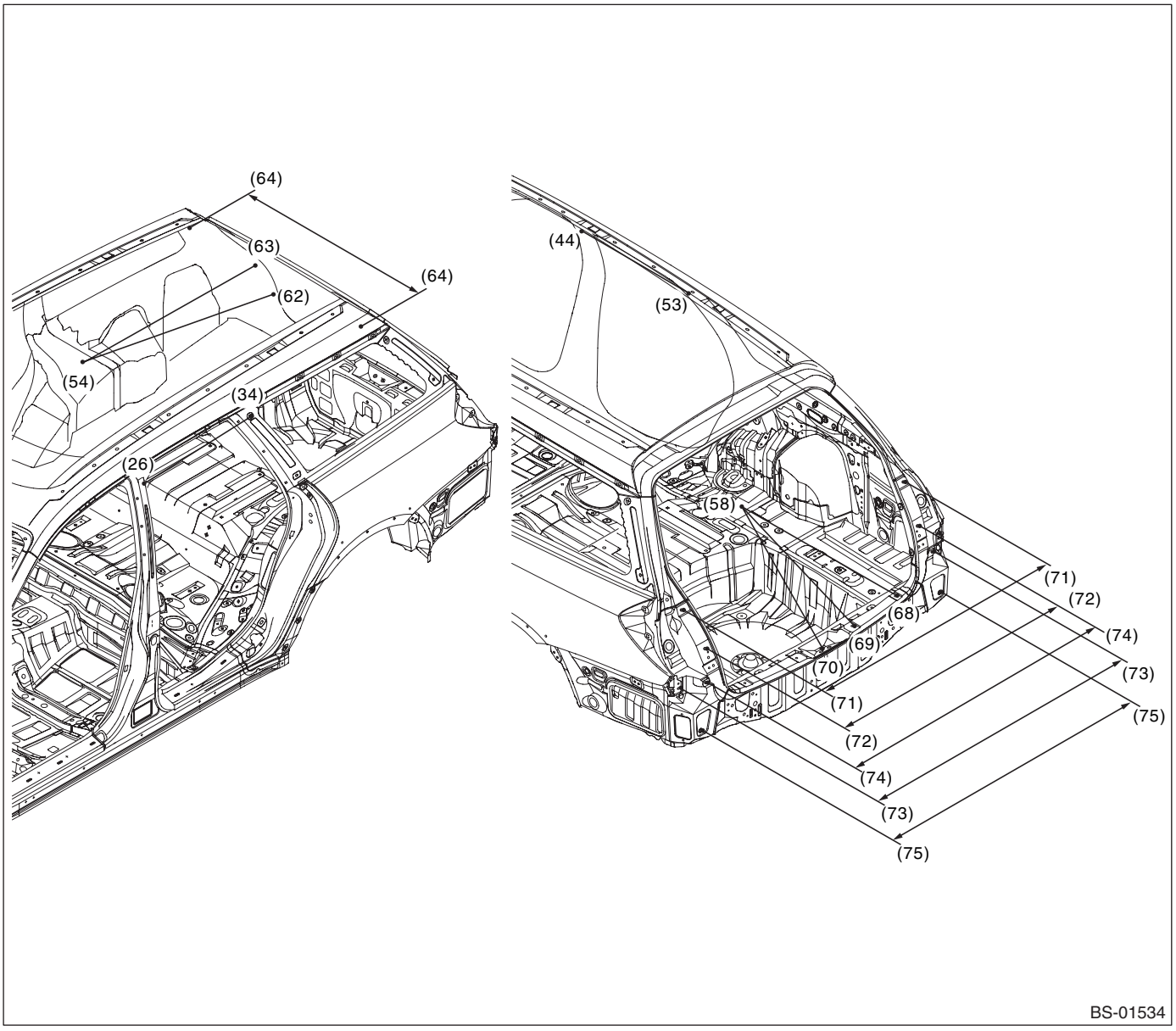

(26) Gauge hole (symmetrical)
(34) Rear quarter glass mounting hole (symmetrical)
(44) Trim clip mounting hole (symmetrical)
(53) Trim clip mounting hole (symmetrical)
(54) Rear seat striker mounting hole (symmetrical)
(58) Gauge hole (symmetrical)
(62) Trim clip mounting hole (symmetrical)
(63) Trim clip mounting hole (symmetrical)
(64) Harness clip mounting hole (symmetrical)
(68) Trim clip mounting hole (symmetrical)
(69) Trim clip mounting hole (symmetrical)
(70) Repair location hole (body center)
(71) Combination light mounting hole (symmetrical)
(72) Buffer mounting hole (symmetrical)
(73) Bumper mounting hole (symmetrical)
(74) Bracket corner mounting hole (symmetrical)
(75) Gauge hole (symmetrical)

Datum Dimensions

Measuring point	Reference dimension mm (in)
(26) — (34)	613 (24.13)
(44) — (53)	591 (23.27)
(54) — (62)	969 (38.15)
(54) — (63)	884 (34.80)
(58) — (68)	900 (35.43)
(58) — (69)	958 (37.72)

Measuring point	Reference dimension mm (in)
(58) — (70)	990 (38.98)
(64) — (64)	944 (37.17)
(71) — (71)	1,224 (48.19)
(72) — (72)	1,173 (46.18)
(73) — (73)	1,438 (56.61)
(74) — (74)	1,250 (49.21)
(75) — (75)	1,320 (59.97)

NOTE:
- The reference point (70) is at the body center, while the other points are left-right symmetrical.
- The dimensions are the actual dimensions between the reference points.

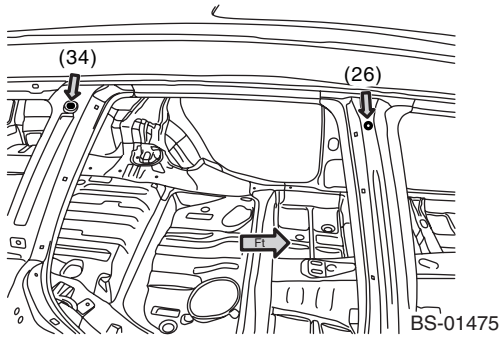

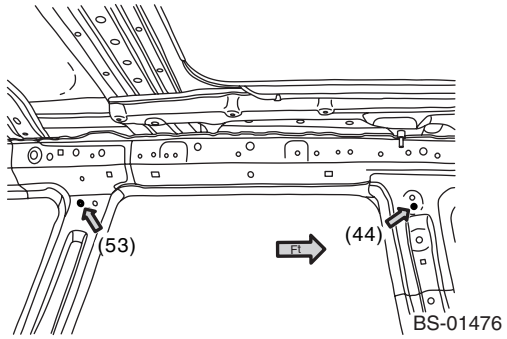

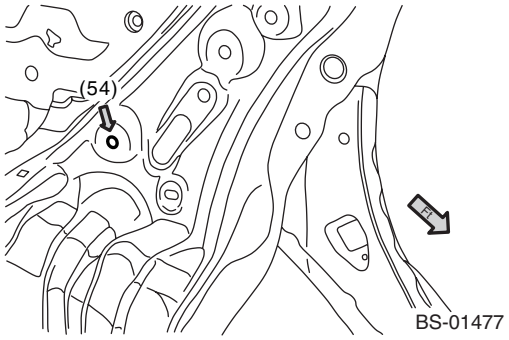

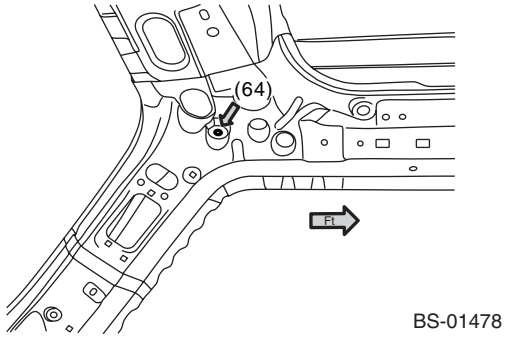

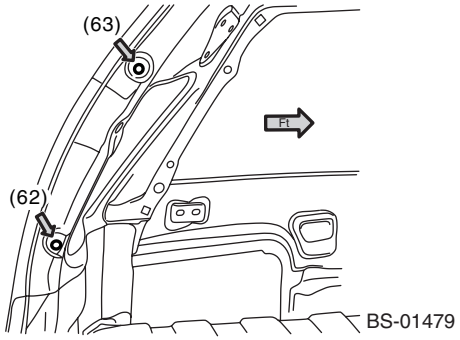

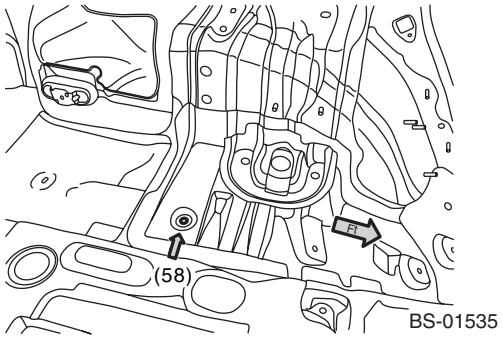

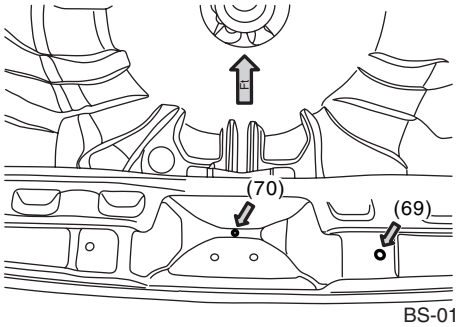

BS-01481

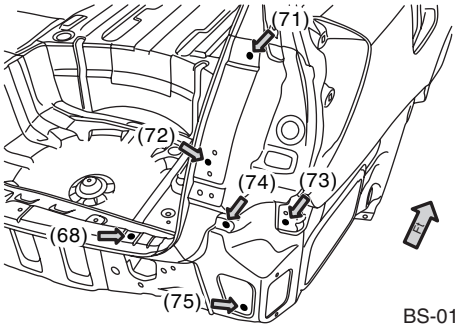

BS-01482

- Sedan model

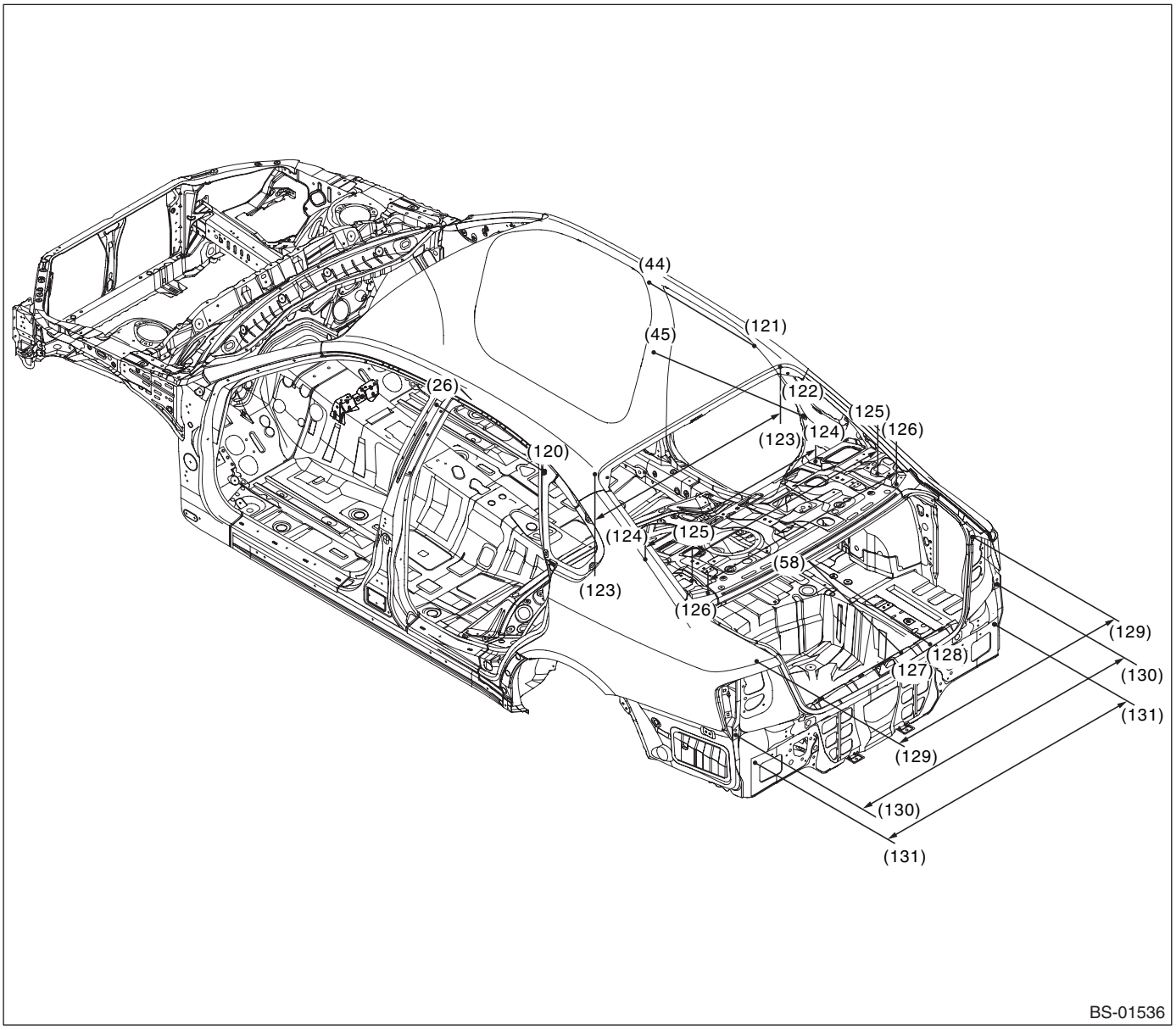

(26) Gauge hole (symmetrical)
(44) Trim clip mounting hole (symmetrical)
(45) Trim clip mounting hole (symmetrical)
(58) Gauge hole (symmetrical)
(120) Six light glass mounting hole (symmetrical)
(121) Trim clip mounting hole (symmetrical)
(122) Trim clip mounting hole (symmetrical)
(123) Sunroof drain hose clip mounting hole (symmetrical)
(124) Trim clip mounting hole (symmetrical)
(125) Harness clip mounting hole (symmetrical)
(126) Gauge hole (symmetrical)
(127) Trim clip mounting hole (symmetrical)
(128) ED hole (symmetrical)
(129) Combination light mounting hole (symmetrical)
(130) Bumper bracket mounting hole (symmetrical)
(131) ED hole (symmetrical)

Measuring point	Reference dimension mm (in)
(26) — (120)	598 (23.54)
(44) — (121)	570 (22.44)
(45) — (122)	835 (32.87)
(58) — (127)	916 (36.06)
(58) — (128)	904 (35.59)
(123) — (123)	1,024 (40.31)

Measuring point	Reference dimension mm (in)
(124) — (124)	940 (37.01)
(125) — (125)	1,024 (40.31)
(126) — (126)	1,040 (40.94)
(129) — (129)	1,191 (46.89)
(130) — (130)	1,442 (56.77)
(131) — (131)	1,322 (52.05)

NOTE:
- All reference points are left-right symmetrical.
- The dimensions are the actual dimensions between the reference points.

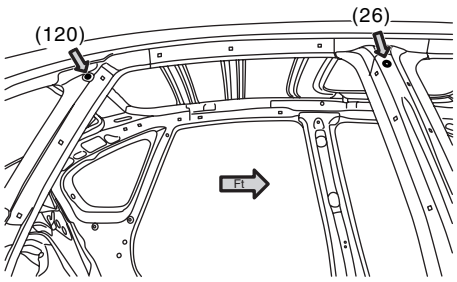

BS-01483

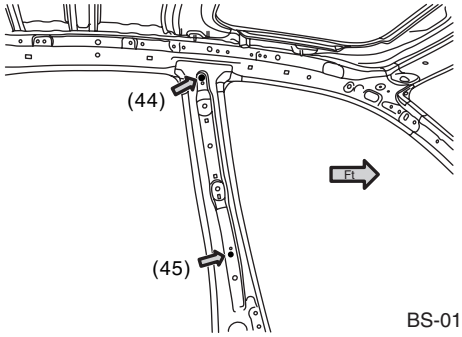

BS-01496

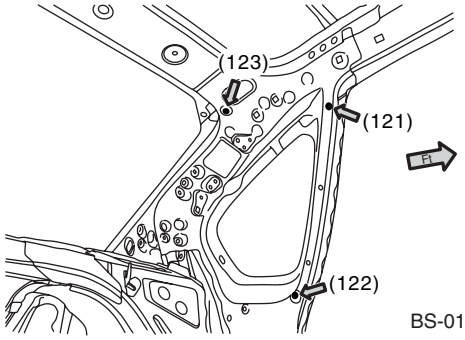

BS-01485

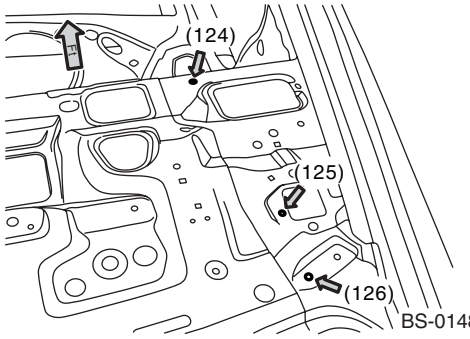

BS-01486

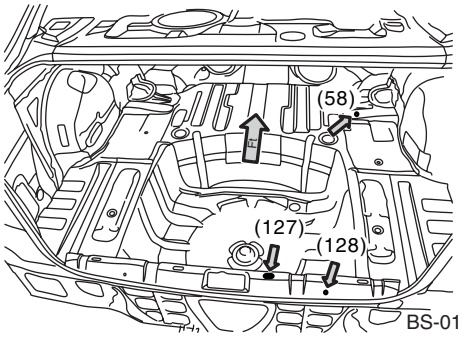

BS-01537

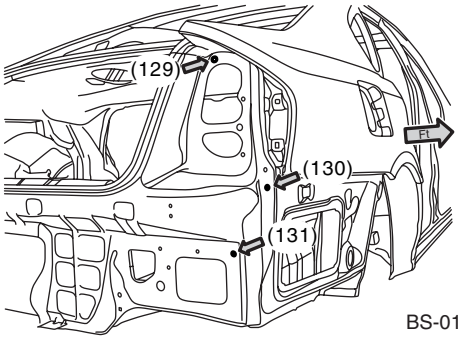

BS-01490

5. SUSPENSION MOUNT

NOTE:
- Longitudinal dimensions are projected dimensions.
- The height dimensions are the vertical distances from the gauge point on the assumed horizontal line through the side sill flange joint (bending angle point).

Datum Dimensions

• For the reference point positions, refer to “Datum Dimensions”. <Ref. to BS-3, CENTER STRUCTURE, MEASUREMENT, Datum Dimensions.>

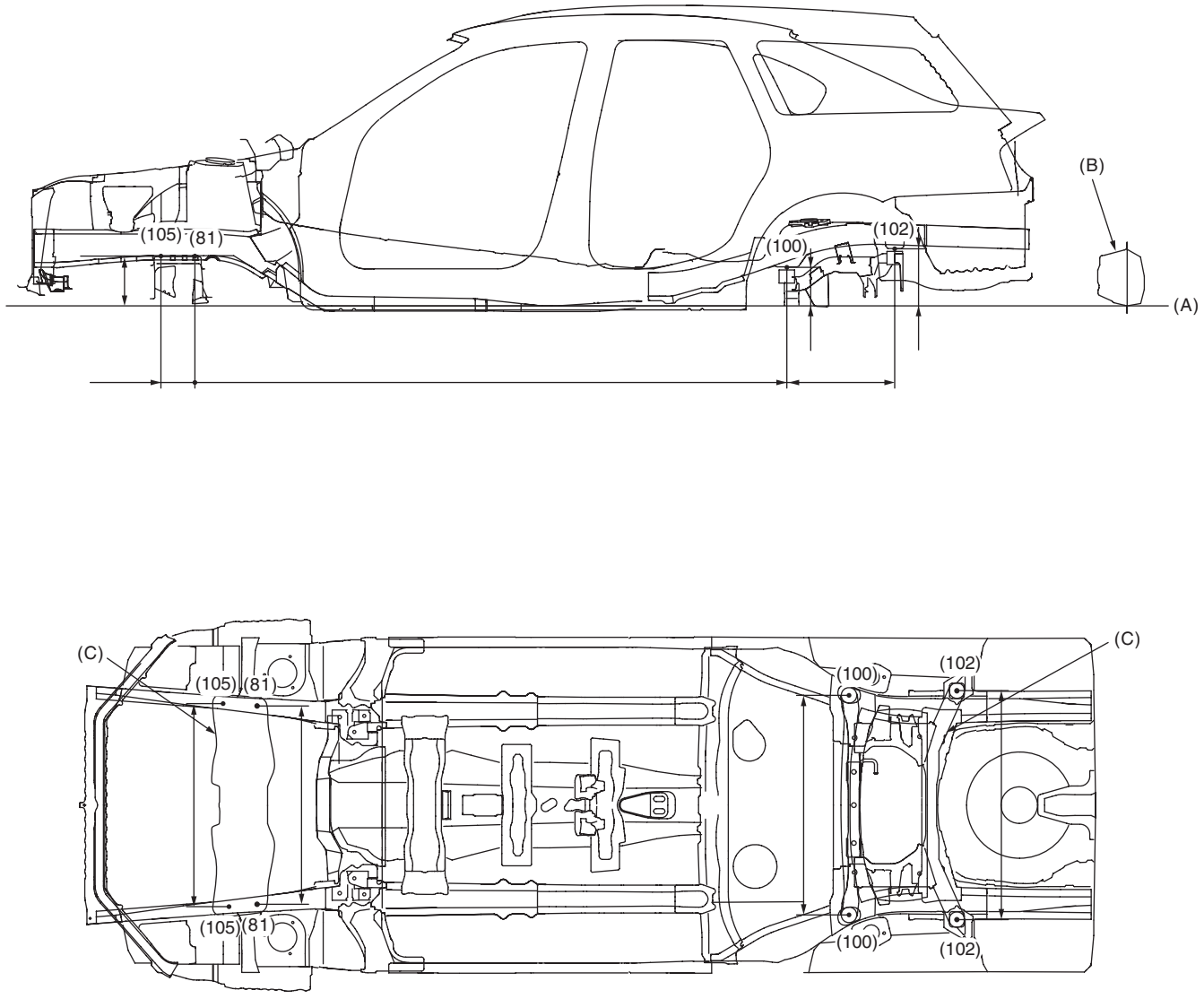

BS-01418

(A)	Standard line	(B)	Side sill	(C)	Crossmember
(81)	Front crossmember mounting hole (symmetrical), rear	(102)	Rear suspension mounting hole (symmetrical)	(105)	Front crossmember mounting hole (symmetrical), front
(100)	Rear suspension mounting hole (symmetrical)				

3. Plastic Parts and Materials

A: SPECIFICATION

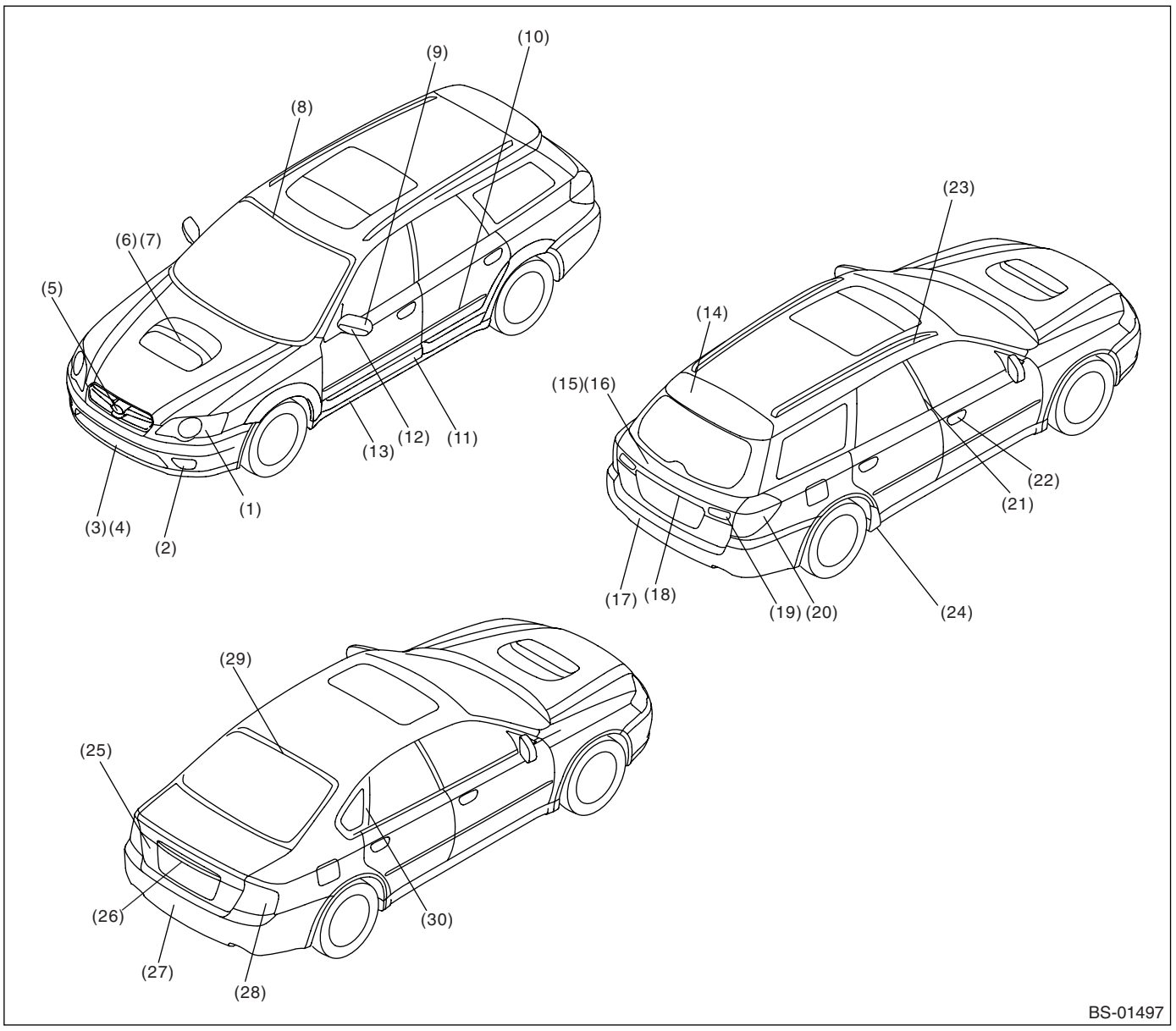

(1)	Headlight	(11)	Side garnish	(21)	Center pillar cover
(2)	Front fog light	(12)	Side turn light	(22)	Door handle
(3)	Front bumper	(13)	Side spoiler	(23)	Roof rail
(4)	Air intake cover	(14)	Rear spoiler	(24)	Rear quater protector
(5)	Front grille	(15)	Rear garnish	(25)	Trunk garnish
(6)	Turbo grille	(16)	License light	(26)	License light
(7)	Hood duct inner	(17)	Rear bumper	(27)	Rear bumper
(8)	Front window moulding	(18)	Rear gate handle	(28)	Rear combination light
(9)	Door mirror	(19)	Backup light	(29)	Rear window moulding
(10)	Side protector	(20)	Rear combination light	(30)	Six light moulding

- Wagon model/Common for wagon and sedan model

No.	Part name		Material
(1)	Headlight	Lens	PC
		Housing	PP
		Extension	PBT + PET
(2)	Front fog light (standard)	Housing	PET
	Front fog light (OUTBACK)	Lens	PC
		Reflector	UP - GF 10
		Bracket	PP - GF 30
(3)	Front bumper	Face	PP
		EA foam	Foamed PP
		Fog light cover	PP
		Hook cover	PP
		Bumper cover (OUTBACK)	PP
(4)	Air intake cover		PP
(5)	Front grille		ABS
(6)	Turbo grille		PA + PPE
(7)	Hood duct inner		PP + EPDM
(8)	Front window moulding		PVC
(9)	Door mirror	Body	ASA
		Inner cover	AES
		Outer cover	ABS
		Mirror holder	PP
(10)	Side protector		PP
(11)	Side garnish	Door body	PC + PET
		Other than door body	PP
		Side sill end cover	PP + EPDM
(12)	Side turn light	Lens	PMMA + PC
		Housing	PC
(13)	Side spoiler	Body	PP
(14)	Rear spoiler	Body	PC + PET
		High mount lens	PMMA
		High mount housing	ABS
(15)	Rear garnish	Body	PC + PET
		Moulding	ABS
(16)	License light	Lens	PC
		Housing	PBT + PET
(17)	Rear bumper	Face	PP
		EA foam	Foamed PP
(18)	Rear gate handle		PP - GF 20
(19)	Backup light	Lens	PMMA
		Housing	ASA
(20)	Rear combination light	Lens	PMMA
		Inner lens	PC
		Housing	ASA
		Reflex reflector	PMMA
		Cover	ASA
(21)	Center pillar cover		ABS
(22)	Door handle	Handle	PPE + PA
		End cover	PP

No.	Part name		Material
(23)	Roof rail	Front cover	PC + PET
		Center cover (OUTBACK)	PC + PET
		Rear cover	PC + PET
(24)	Rear quarter protector		PP
	Front mudguard	Body	PE
		Air flap	TPO
	Rear mudguard		PE
	Under cover	Body	PP
		Flap	TPO
	Splash board		PP
	Cowl panel	Body, side	PP
		Cover	PP
	Rear wiper	Blade	PBT
		Arm	PET
		Arm cover	PBT

- Sedan model

No.	Part name		Material
(25)	Trunk garnish		PC + PET
(26)	License light	Lens	PMMA
		Housing	ASA
(27)	Rear bumper	Face	PP
		EA foam	Foamed PP
(28)	Rear combination light	Lens	PMMA
		Inner lens	PC
		Housing	ASA
		Reflex reflector	PMMA
		Cover	ASA
(29)	Rear window moulding		PVC
(30)	Six light moulding		ABS
	High mount stop light	Lens	PC
		Case	PP
		Reflector	PBT + PET

4. List of Plastic Material Notations

A: SPECIFICATION

Notation symbol	Material name	Notation symbol	Material name
ABS	ABS resin (acrylonitrile/butadiene/styrene/ resin)	PMMA	Polymethyl methacrylate
AES	Acrylonitrile/ethylene/styrene	PP	Polypropylene
ASA	Acrylonitrile/styrene/acrylate	PPE	Poly (phenylene ether)
EPDM	Ethylene/propylene/dien rubber	PP -GF20	Polypropylene (20% glass fiber content)
GF	Glass fiber	PP -GF30	Polypropylene (30% glass fiber content)
PA	Polyamide	PVC	Polyvinyl chloride
PBT	Poly (butylene terephthalate)	SEPM	Styrene/ethylene/propylene rubber
PC	Polycarbonate	TPO	Thermoplastic olefine
PE	Polyethylene	UP	Unsaturated polyester resin
PET	Polyethylene terephthalate	UP -GF10	Unsaturated polyester resin (10% glass fiber content)

5. Body Sealing

A: SPECIFICATION

Used material:
Three Bond 4101 (004403063)

- Common for wagon and sedan model

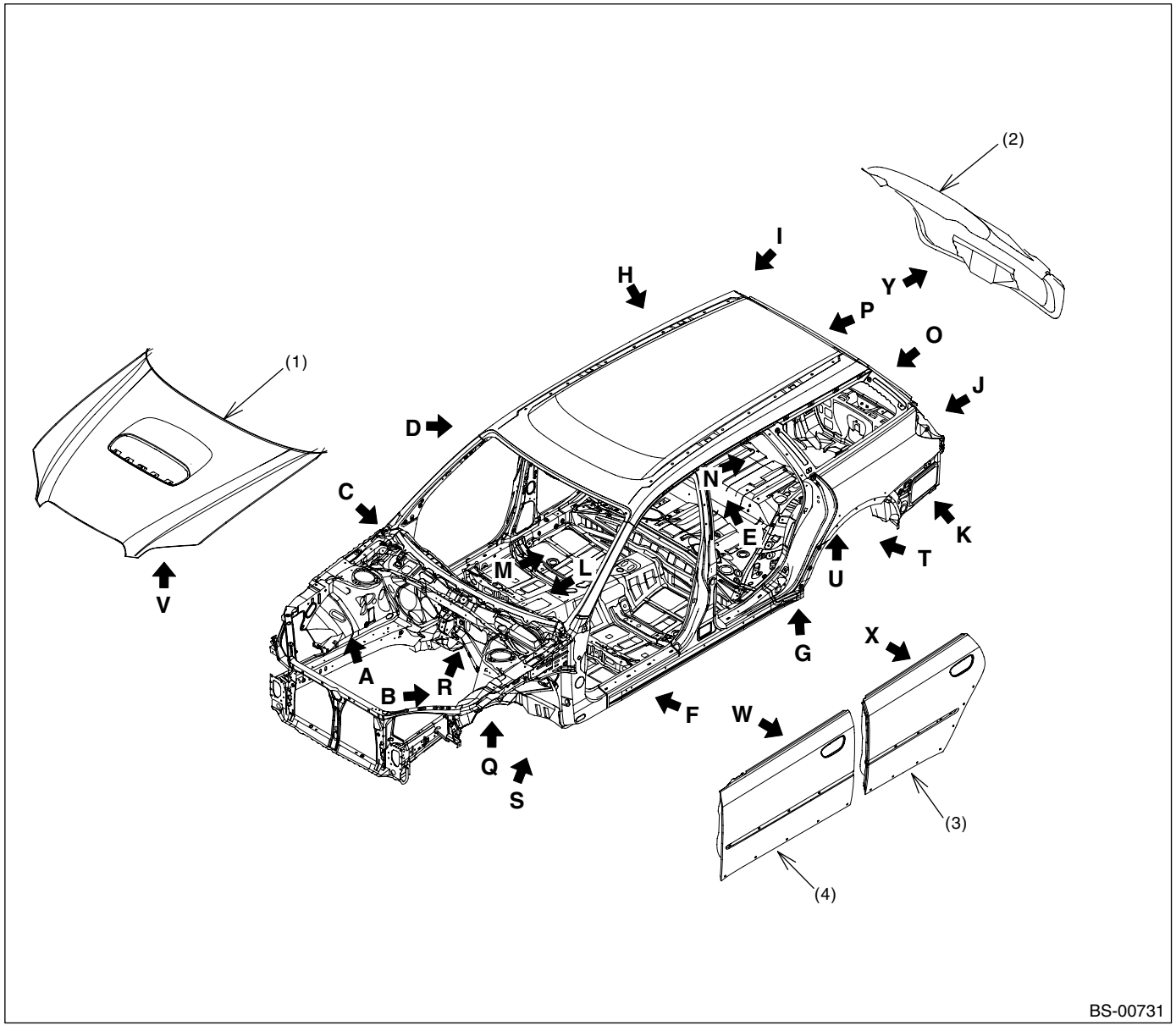

(1) Front hood
(2) Rear gate
(3) Rear door
(4) Front door

View A

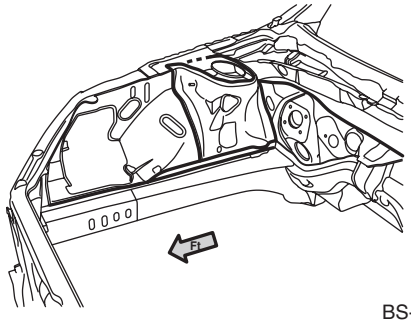

BS-01498

View B

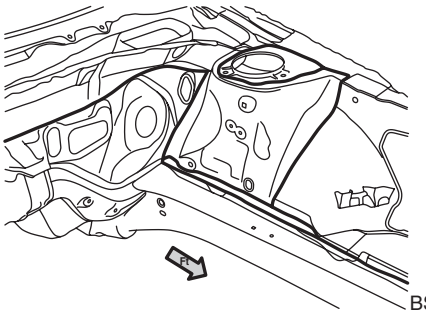

BS-01499

View C

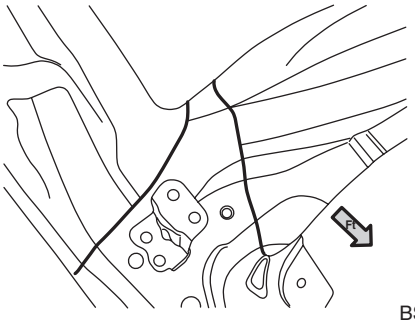

BS-00734

View D

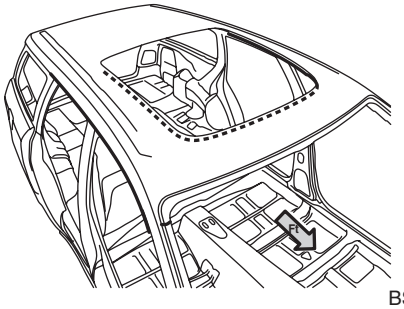

BS-00735

View E

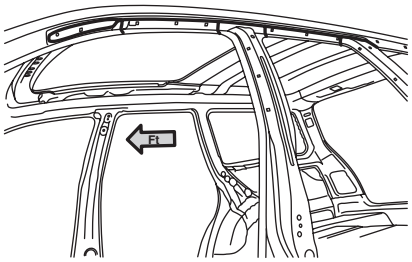

BS-00736

View F

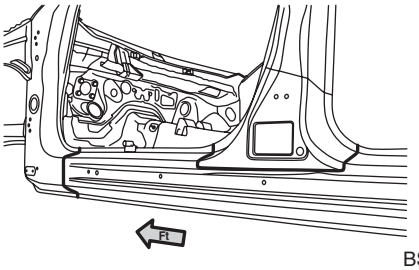

BS-00737

View G

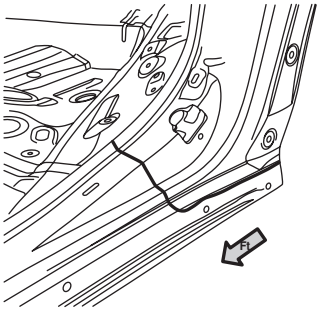

BS-00738

View H

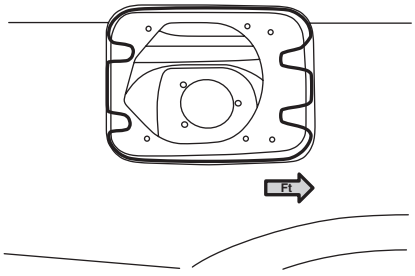

BS-00739

View I

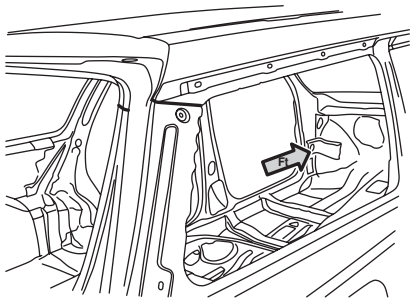

BS-00740

View J

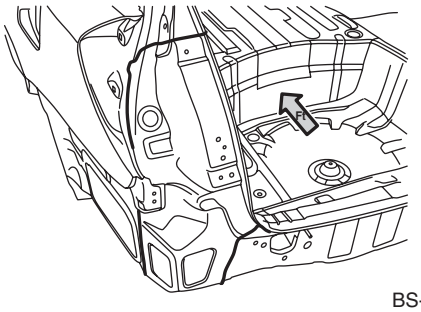

BS-00741

View K

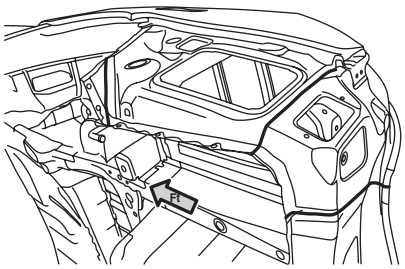

BS-00742

View L

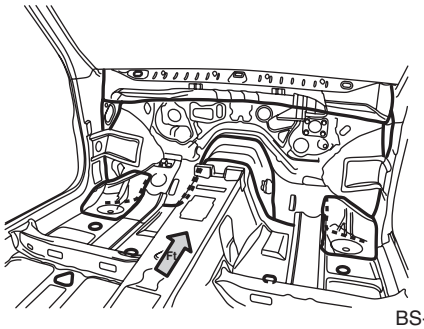

BS-00743

View M

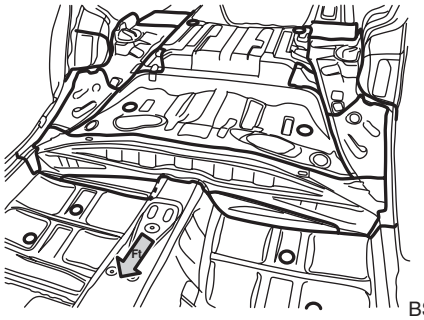

BS-00744

View N

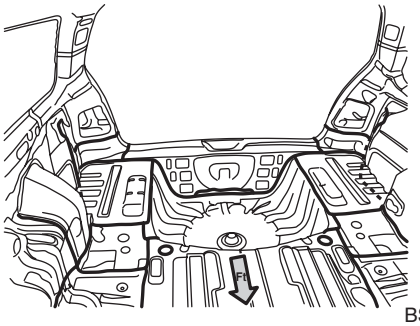

BS-00745

View O

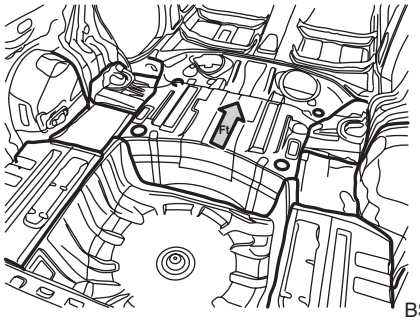

BS-00746

View P

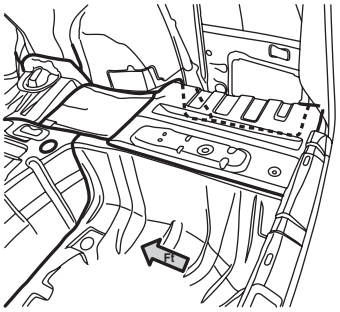

BS-00747

View Q

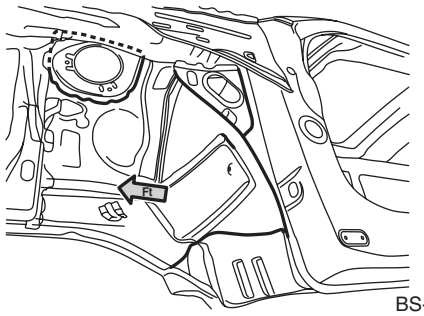

BS-00748

View R

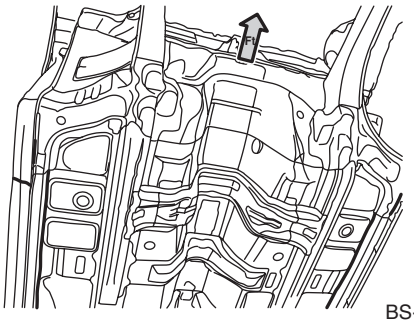

BS-01500

View S

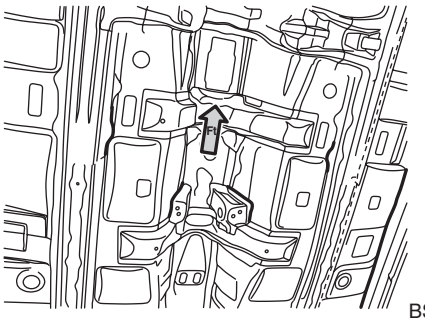

BS-01501

View T

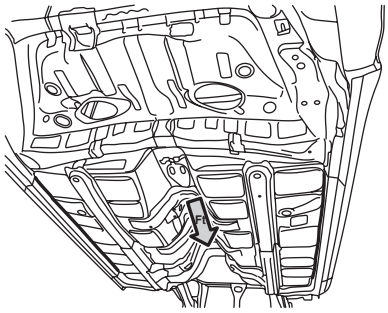

BS-01502

View U

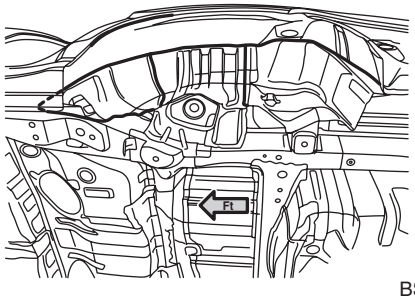

BS-00752

View V

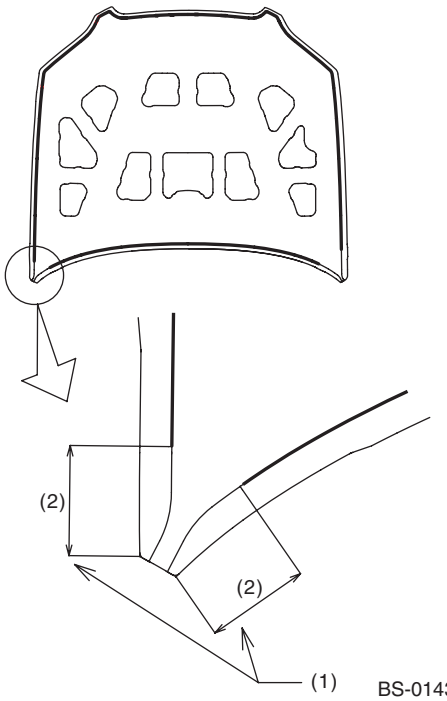

BS-01436

(1) Application not required.
(2) 40 mm (1.57 in)

View W

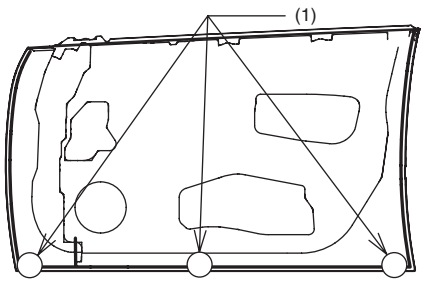

BS-00754

(1) Do not block the water drain holes.

View X

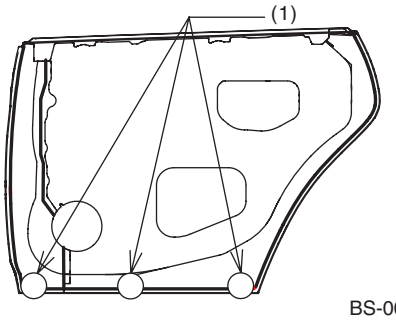

BS-00755

(1) Do not block the water drain holes.

View Y

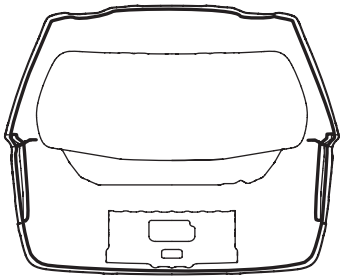

BS-00756

CAUTION:
Sealer already has been applied to hood, door, and rear gate in replacement condition.

- Sedan model

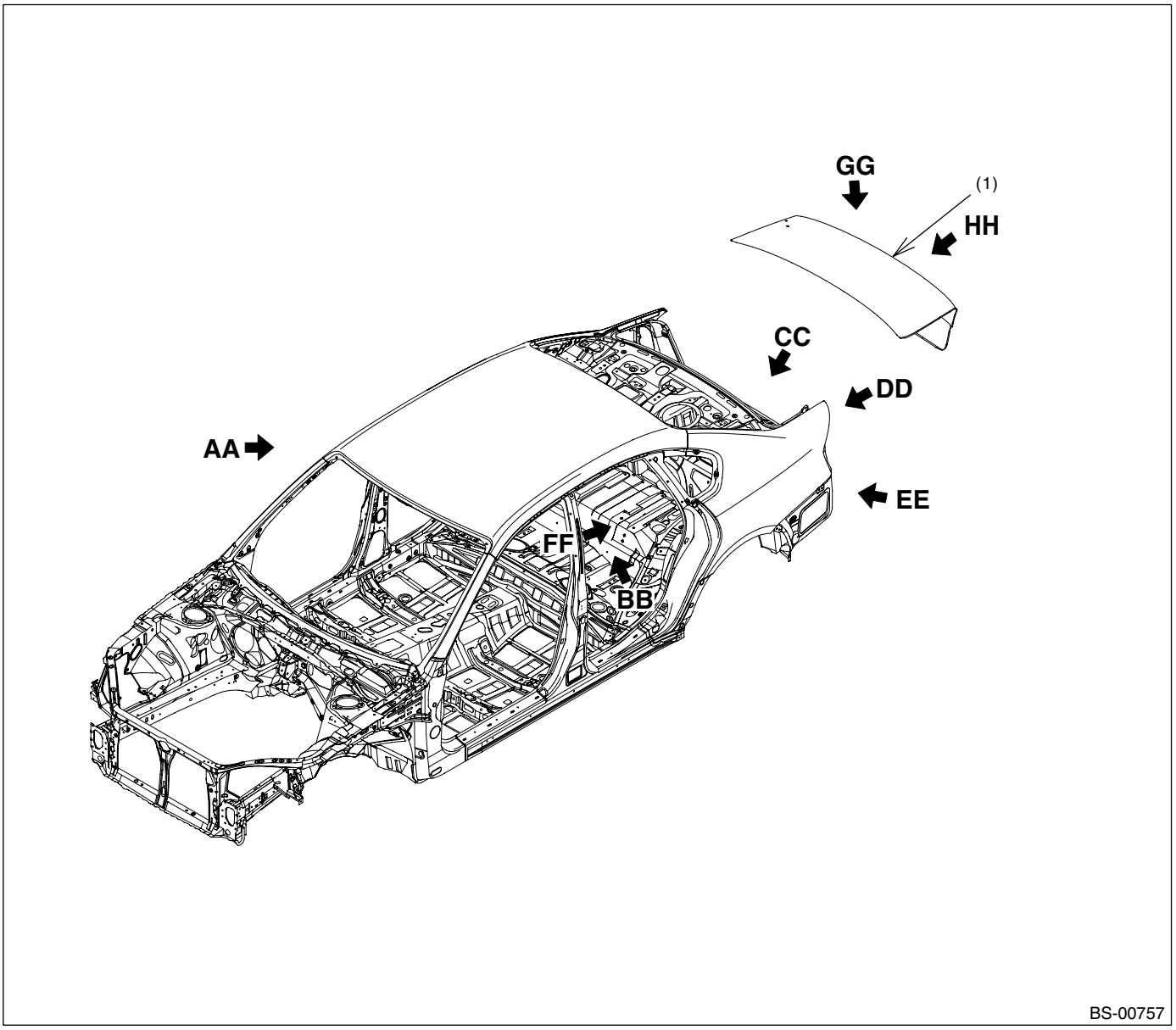

(1) Trunk

View AA

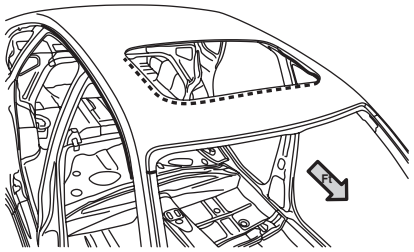

View BB

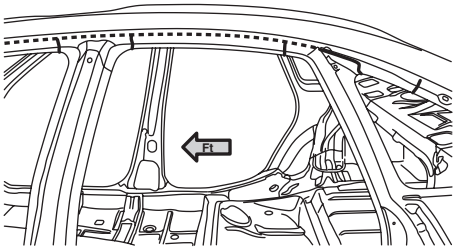

View CC

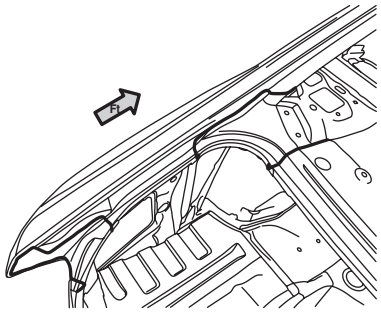

BS-00760

View DD

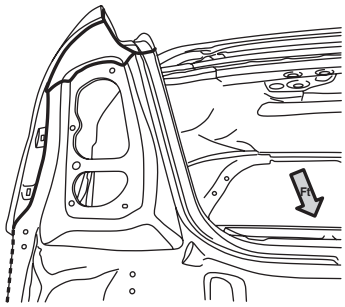

BS-00761

View EE

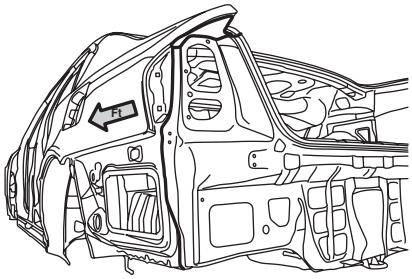

BS-00762

View FF

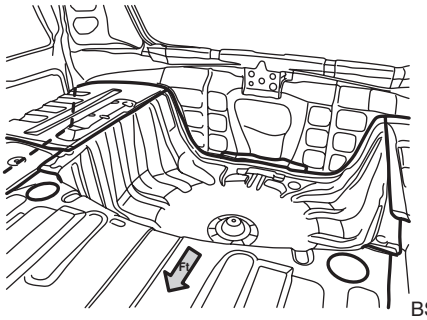

BS-00763

View GG
View HH

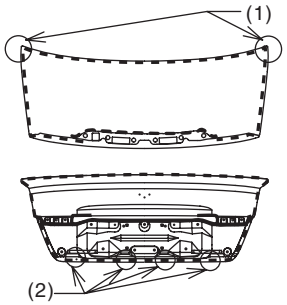

BS-00764

(1) The holes shall be blocked.
(2) Do not block the water drain holes.

CAUTION:
Sealer already has been applied to the trunk in replacement condition.

6. Anticorrosion Wax

A: SPECIFICATION

Used material:
Rust-stop aerosol (K0877YA015)

- Front hood

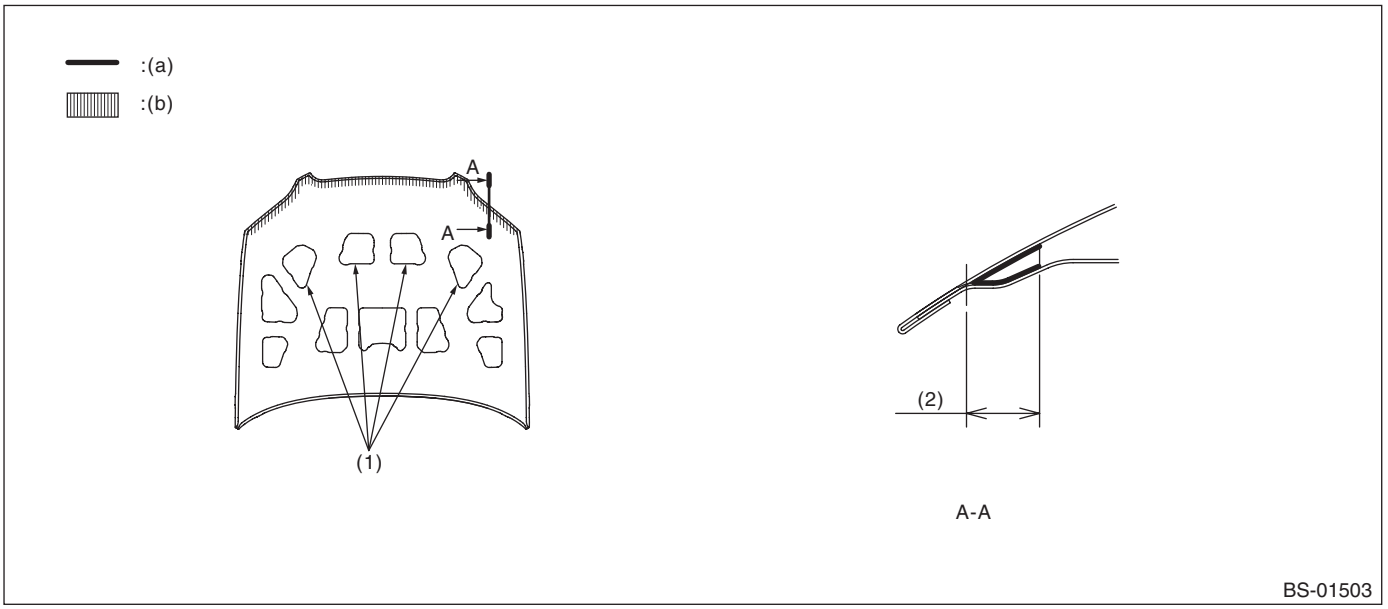

(a) Application thickness = 50 μm or more
(b) Application area
(1) Wax application work openings
(2) 10 mm (0.39 in)

- Door (front, rear)

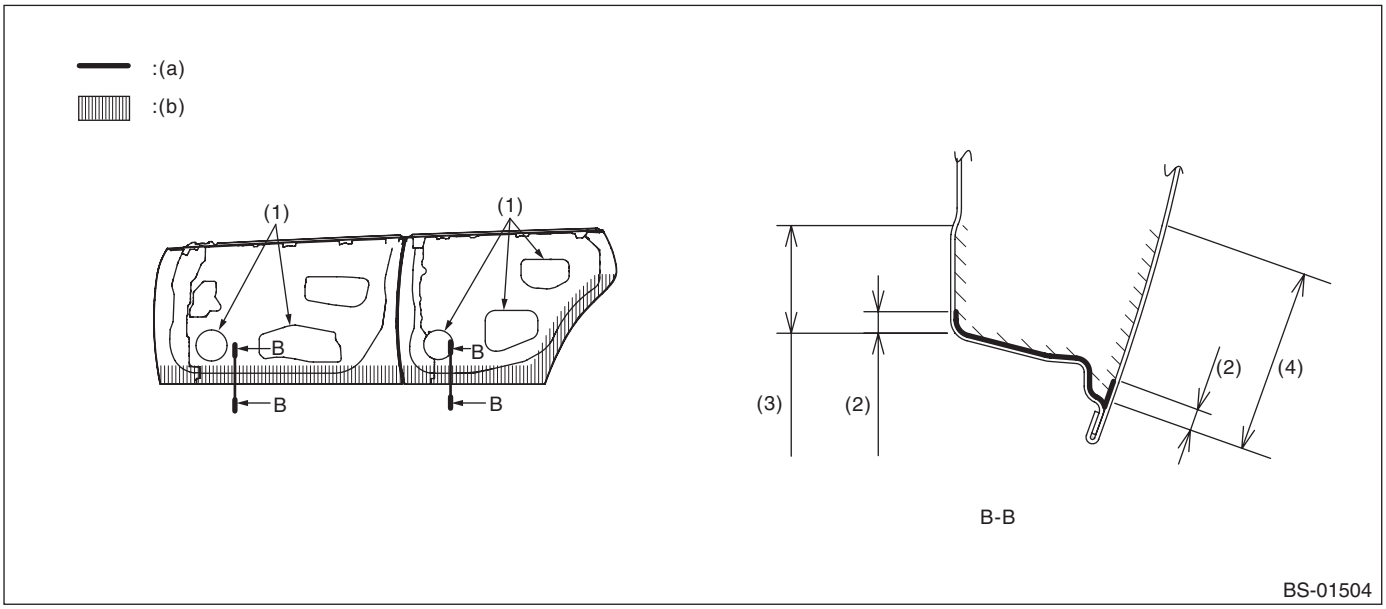

(a) Application thickness = 50 μm or more
(b) Application area

(1) Wax application work openings
(2) 10 mm (0.39 in)
(3) 50 mm (1.97 in)
(4) 90 mm (3.54 in)

- Rear gate

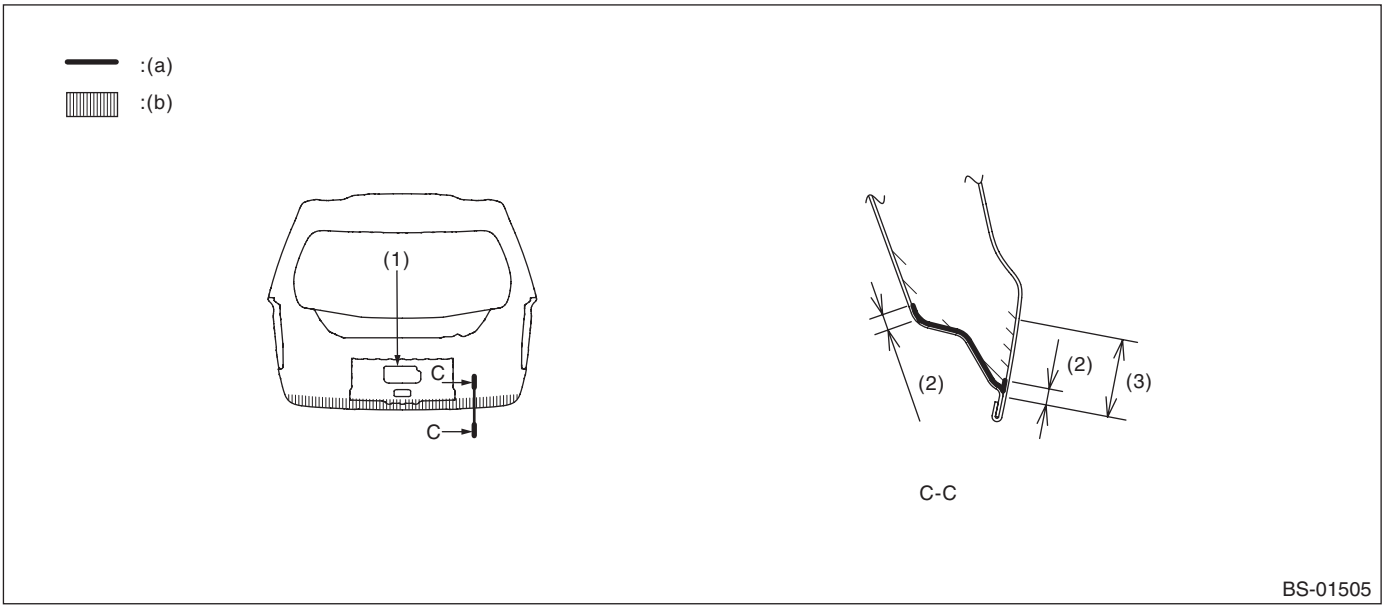

(a) Application thickness = 50 μm or more
(b) Application area

(1) Wax application work openings
(2) 10 mm (0.39 in)
(3) 40 mm (1.57 in)

- Trunk

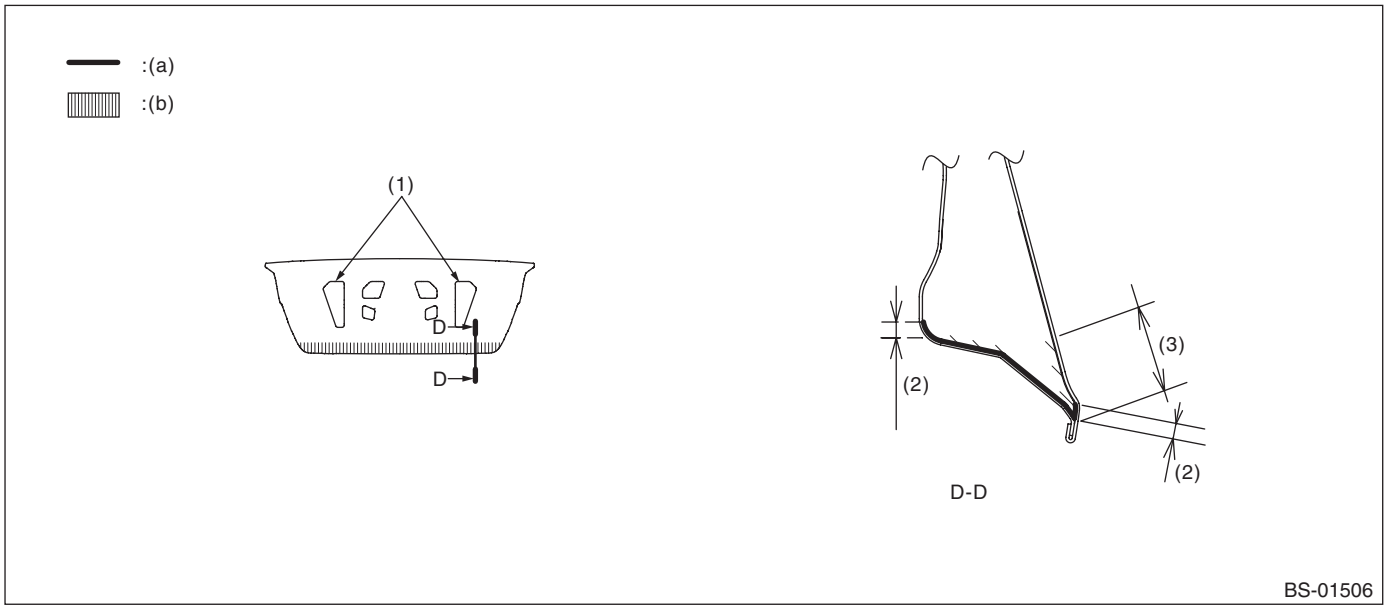

(a) Application thickness = 50 μm or more
(b) Application area
(1) Wax application work openings
(2) 10 mm (0.39 in)
(3) 40 mm (1.57 in)

- Front hood hinge

Apply around the installation outer circumference (indicated range) at two locations on the left and right.

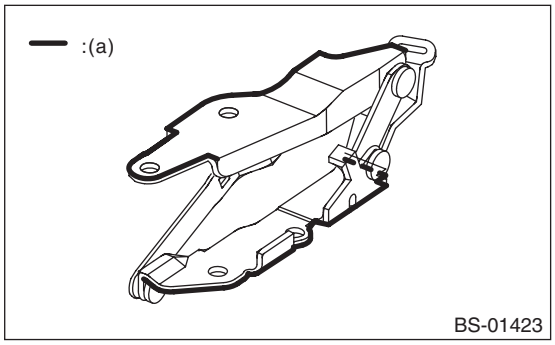

(a) Application thickness = 15 μm or more

- Door hinge

Apply to the installation outer circumference at two locations at the top and bottom (all eight locations).

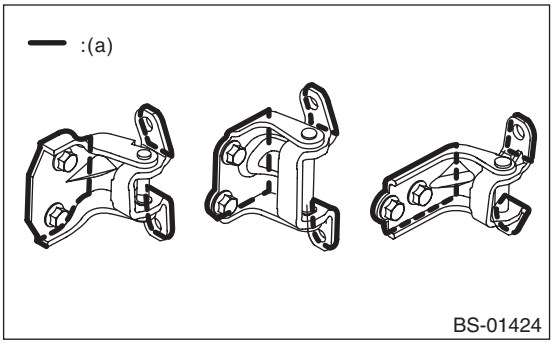

(a) Application thickness = 15 μm or more

- Rear gate hinge

Apply around the installation outer circumference (plate edges) at two locations on the left and right.

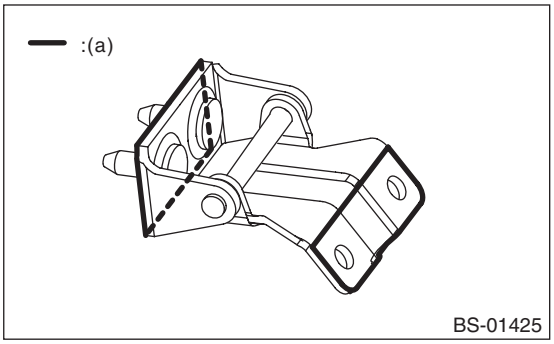

(a) Application thickness = 15 μm or more

- Overall view

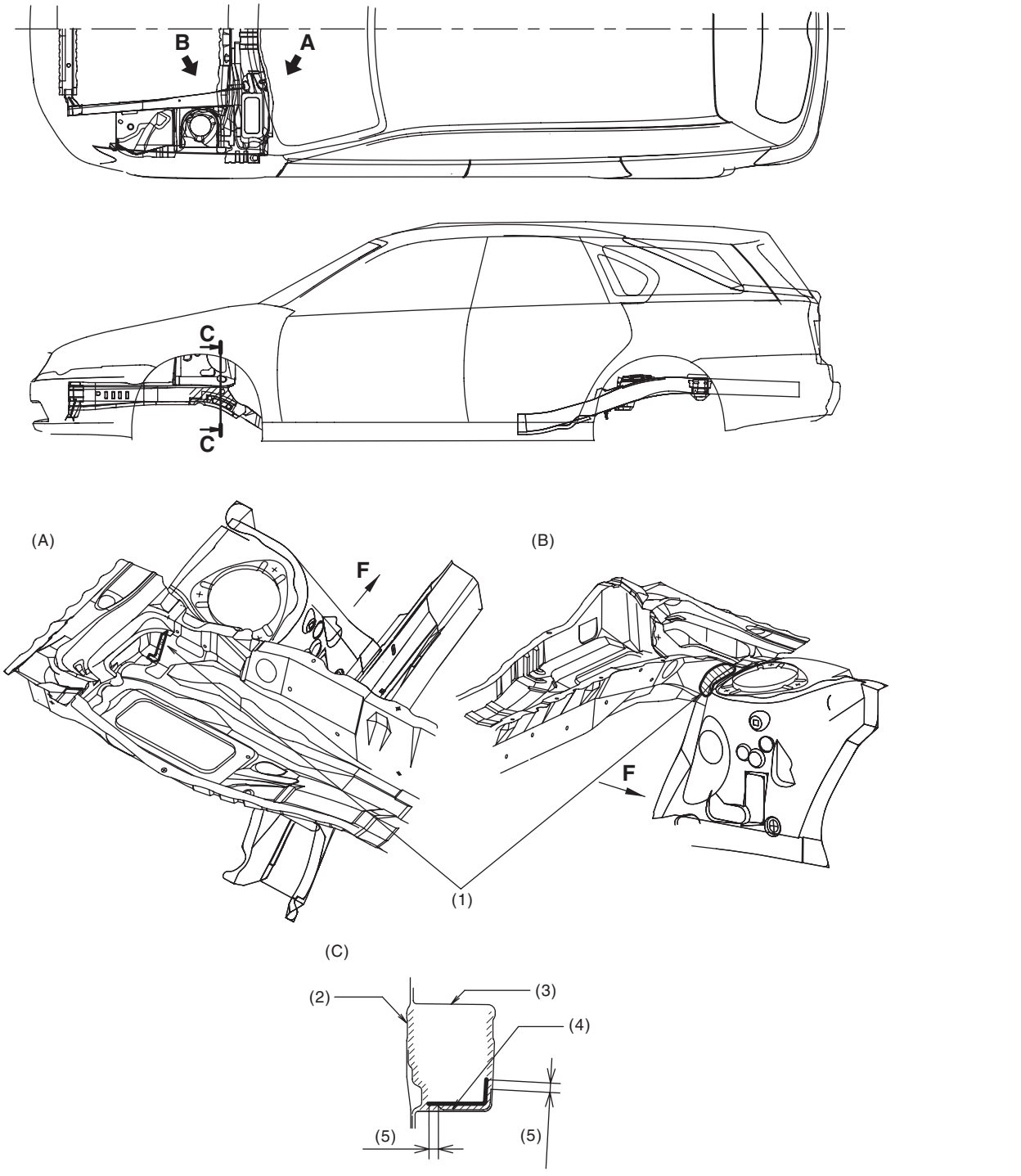

BS-01426

(A)	View A	(B)	View B	(C)	Cross section C — C
(1)	Apply to the contact surface between front suspension bracket and duct (15 μm or more).	(2)	Closing plate	(4)	Reinforcement
		(3)	Front side frame front	(5)	10 mm (0.39 in)

7. Under Coat

A: SPECIFICATION

Repair material:
Three Bond 6115

1) The application thickness is 0.4 mm or more.
2) Take care that under coat does not become attached to other locations than shown in the figures and the following locations.
- High-temperature parts related to the exhaust pipe
- Hoses, tubes, and harness parts
- Installation surfaces of rear suspension, transmission, subframe, etc.

3) Application range
- Side view

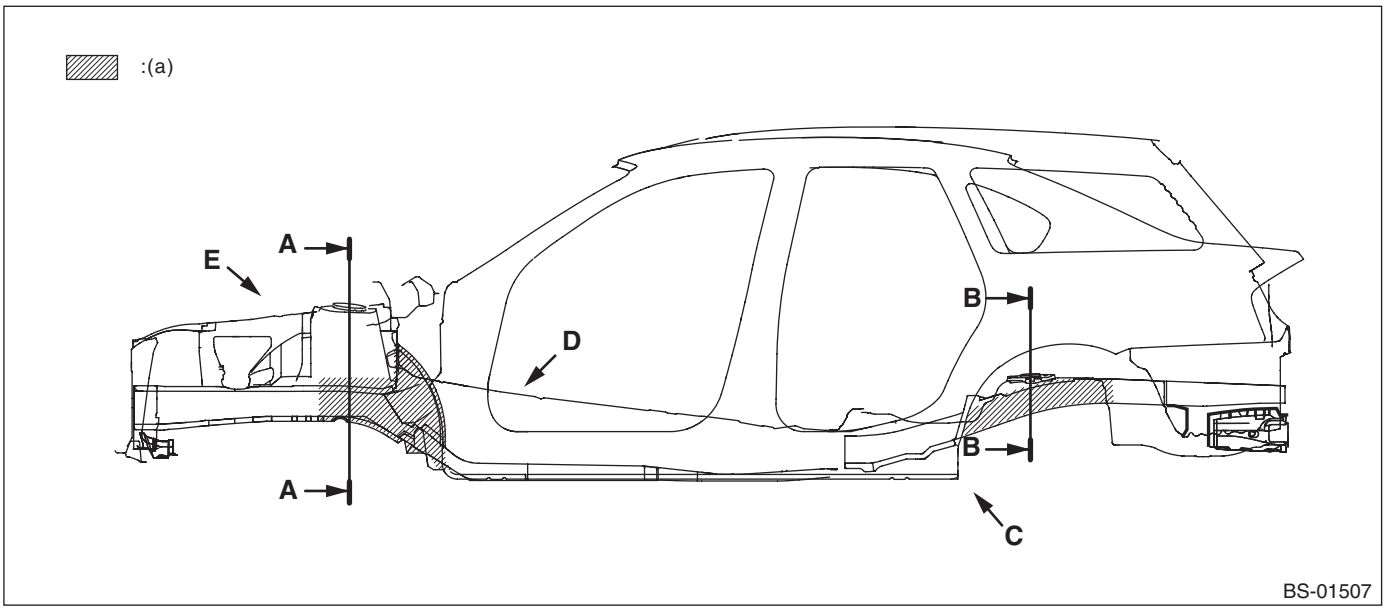

(a) Under coat application locations

- Bottom view/rear view

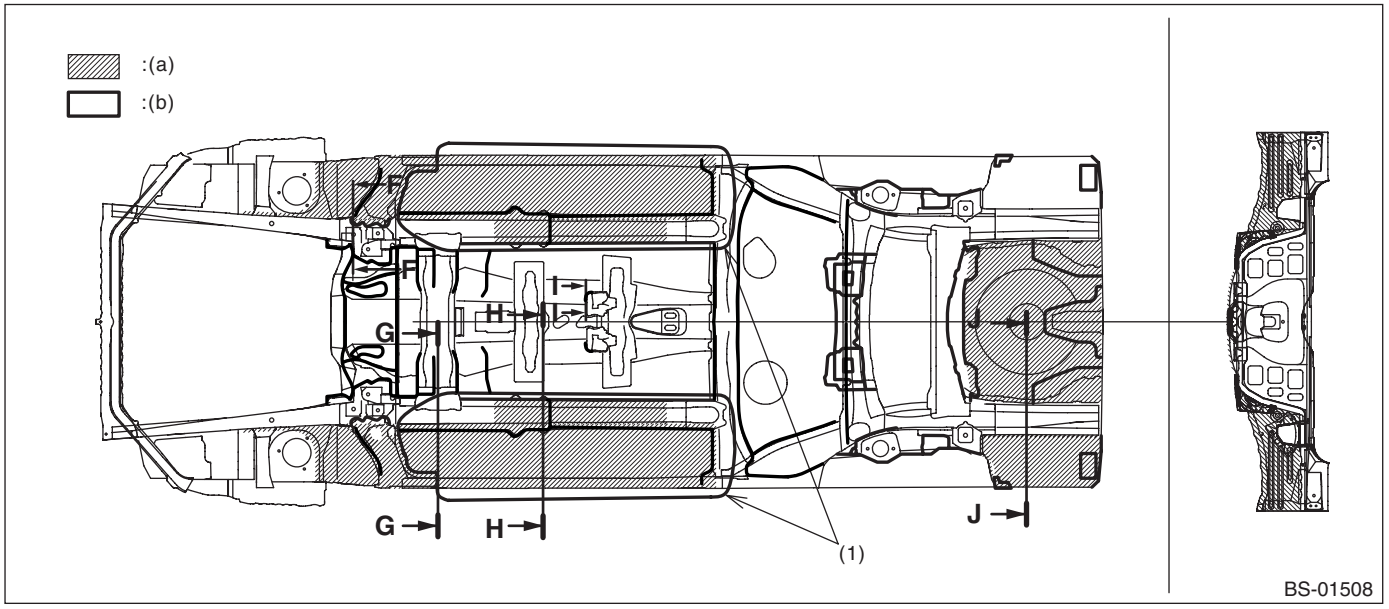

(1) For models with an under cover, no under coat is required in this area.

(a), (b) Under coat application locations

Cross section A — A

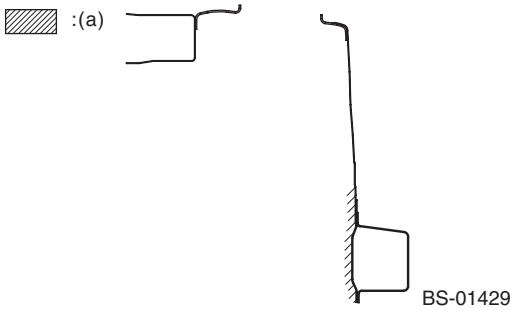

Cross section B — B

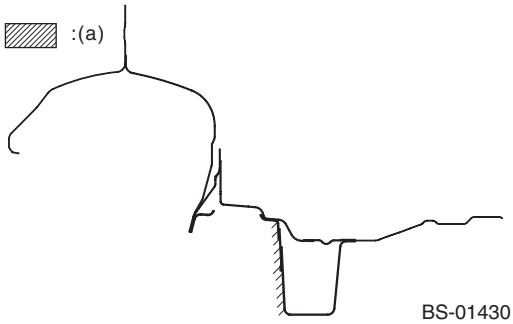

View C

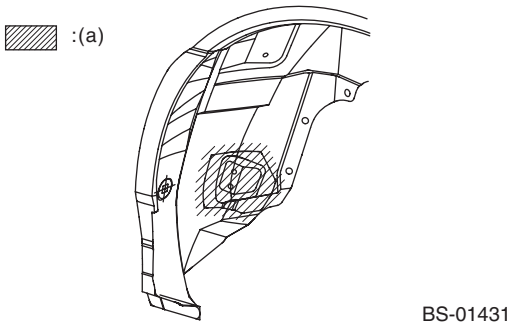

View D

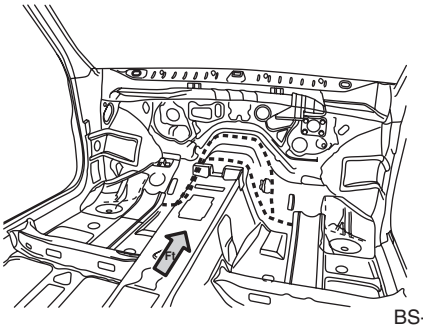

View E

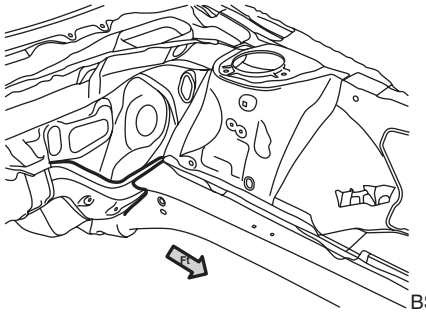

BS-01510

Cross section F — F

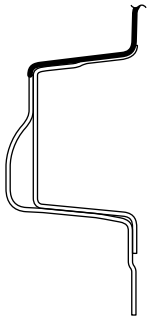

BS-01511

Cross section G — G (rotated 90°)

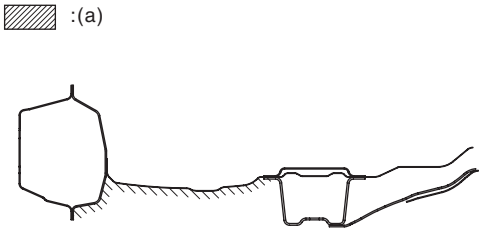

BS-01432

Cross section H — H (rotated 90°)

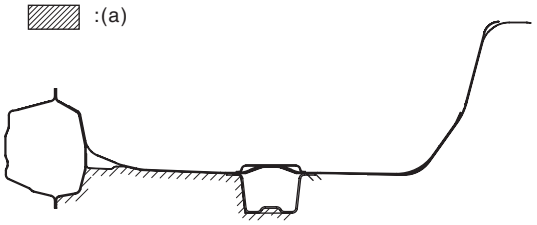

BS-01433

Cross section I — I

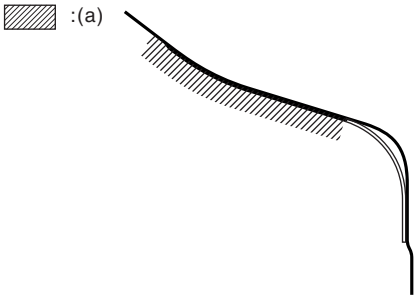

BS-01512

Cross section J — J (rotated 90°)

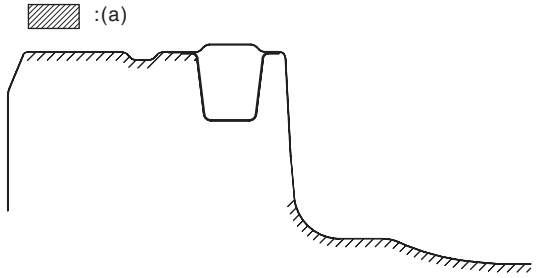

BS-01434

(a) Under coat application locations

8. Anti Chipping Coat

A: SPECIFICATION

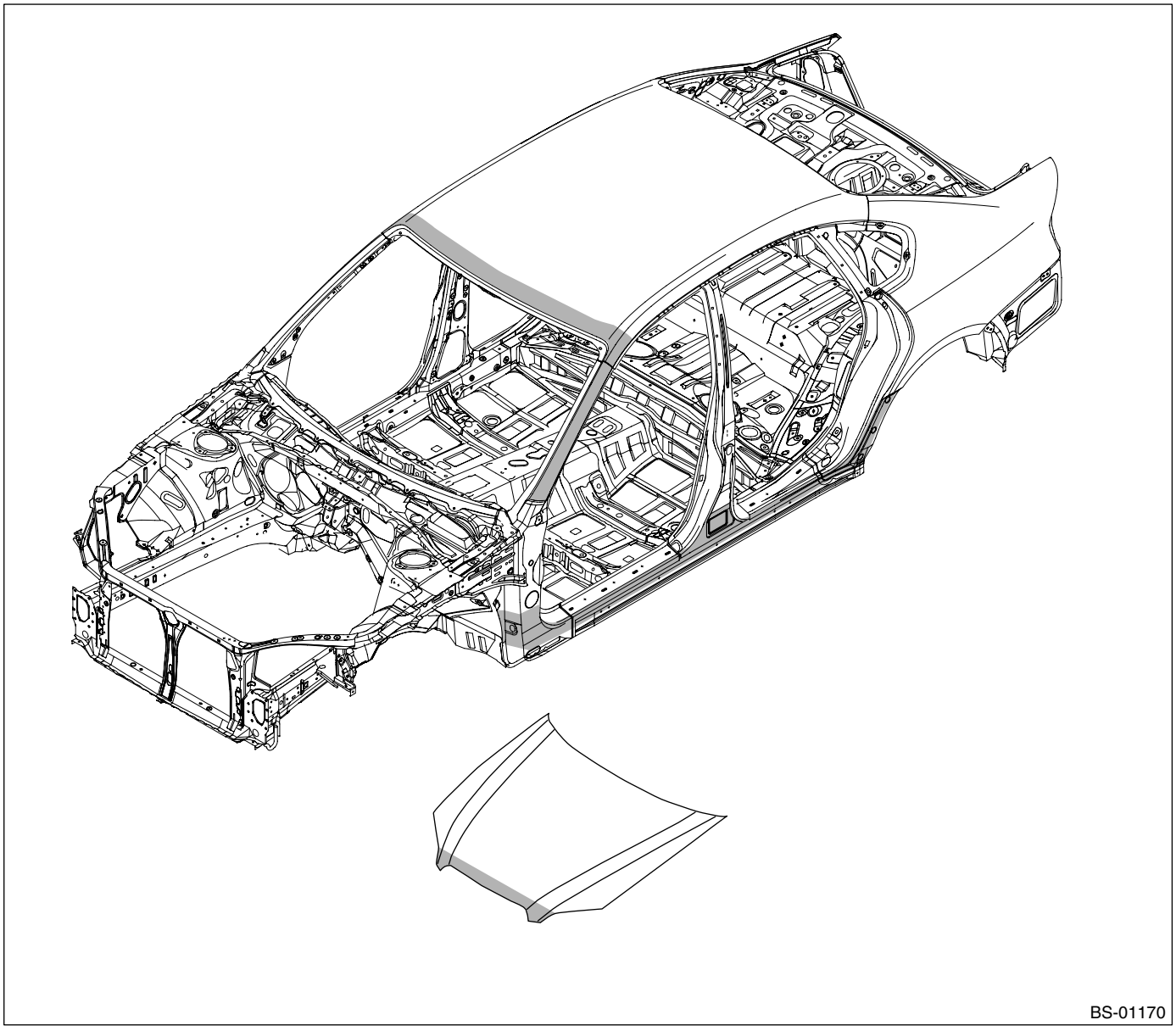

9. Stone Guard Coat

A: SPECIFICATION

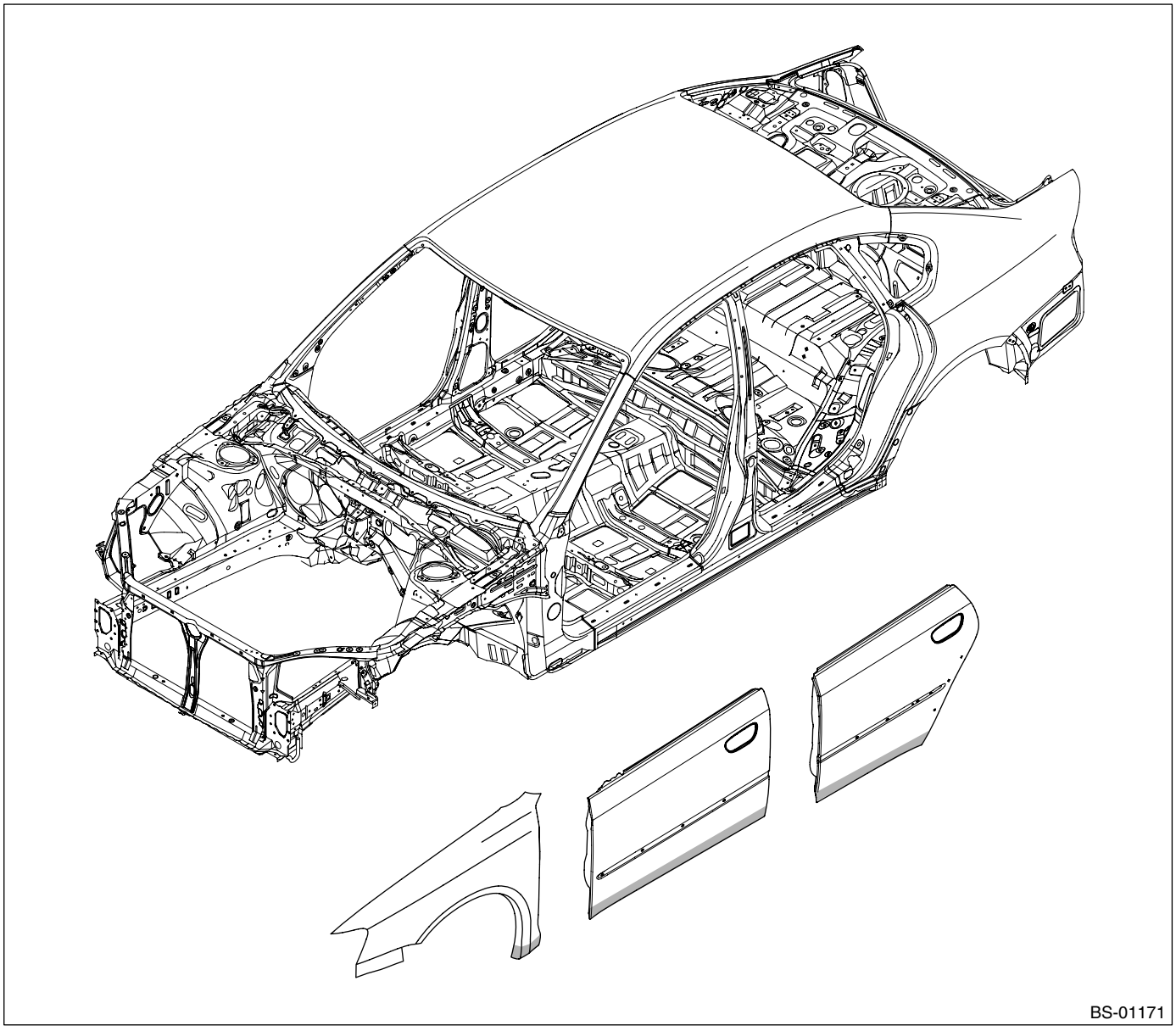

10.Galvanized Sheet Metal

A: SPECIFICATION

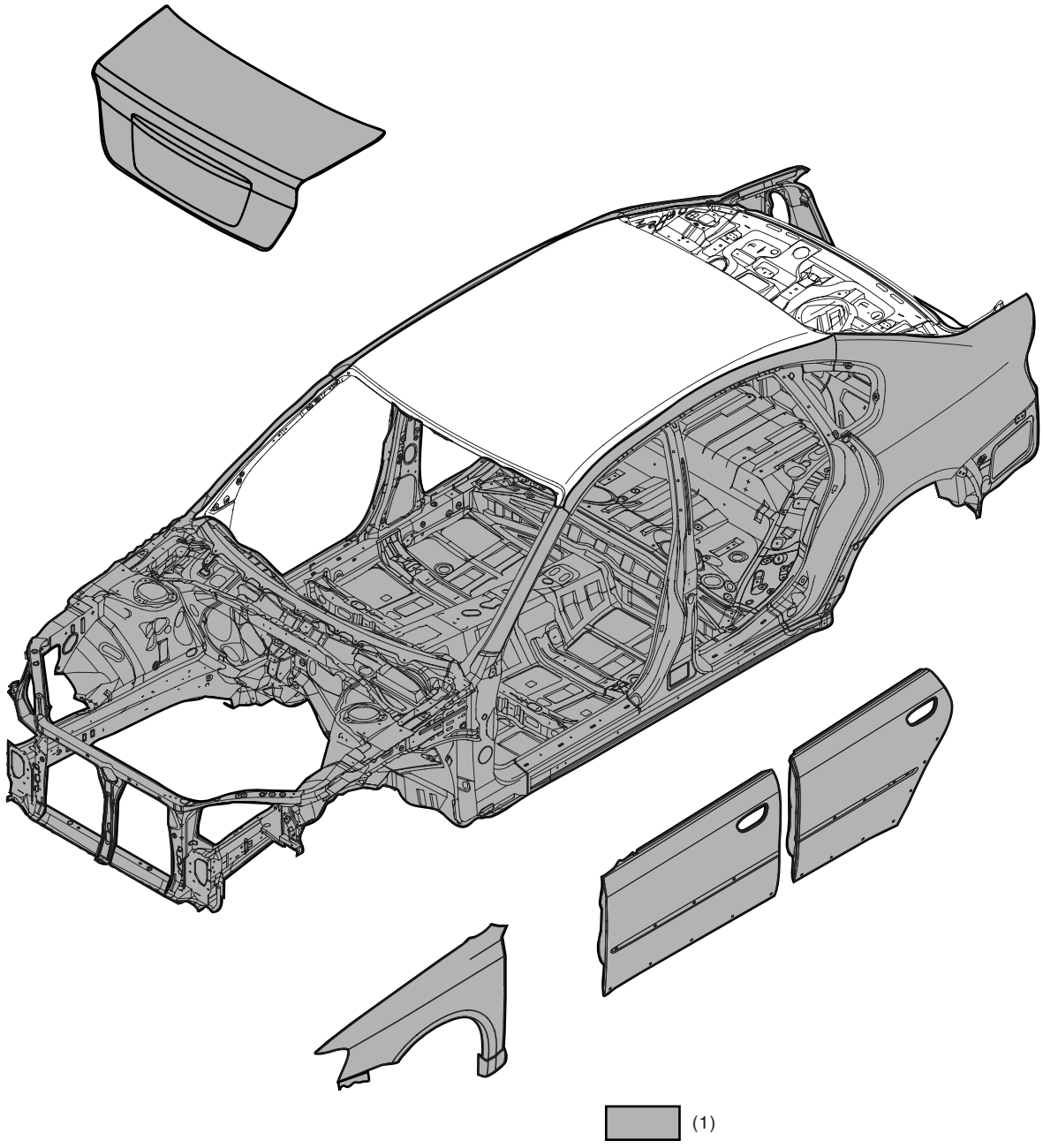

BS-01208

(1) Galvanized on both sides

11.Aluminium Sheet Metal

A: SPECIFICATION

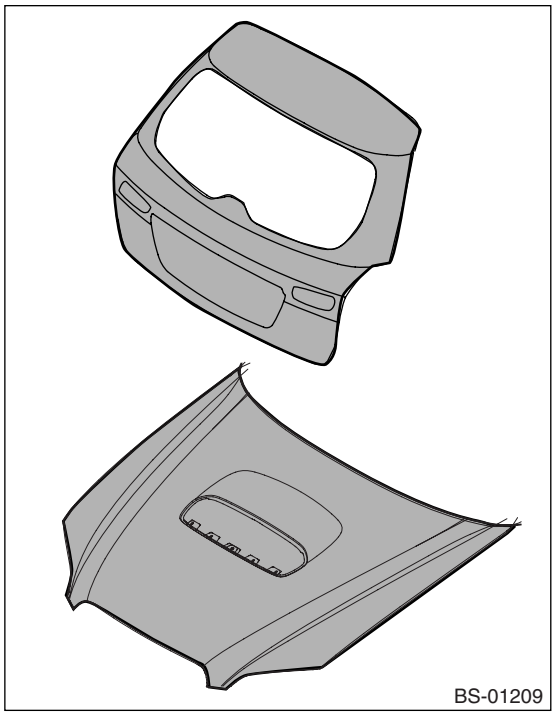

INSTRUMENTATION/DRIVER INFO

IDI

		Page
1.	General Description	2
2.	Combination Meter System	3
3.	Clock System	12
4.	Combination Meter	15
5.	Speedometer	17
6.	Tachometer	18
7.	Fuel Gauge	19
8.	Water Temperature Gauge	20
9.	Clock	21

1. General Description

A: SPECIFICATION

Combination meter	Speedometer	Stepping motor type
	Tachometer	
	Water temperature gauge	
	Fuel gauge	
	Malfunction indicator light	LED
	Oil pressure warning light	
	ABS warning light	
	Airbag warning light	
	Seat belt warning light	
	Door open warning light	
	Brake fluid and parking brake warning light	
	Low fuel warning light	
	Charge warning light	
	ATF temperature warning light	
	AWD warning light	
	Tire pressure warning light	
	Vehicle dynamics control (VDC) warning light	
	Vehicle dynamics control (VDC) indicator light	
	Turn signal indicator light	
	HI-beam indicator light	
	Security indicator light	
	Cruise indicator light	
	Cruise set indicator light	
	Front fog light indicator light	
	SPORT indicator light	
	AT select lever position indicator light	
	Light illumination indicator light	
	Meter illumination light	
	LCD back light	
	Odo/Trip indicator	LCD
	SPORT shift indicator	

B: CAUTION

- Be careful not to damage the meters and instrument panel.
- Be careful not to damage the meter glass.
- Make sure the electrical connector is connected securely.
- After installation, make sure that each meter operates normally.
- Use gloves to avoid damage and getting fingerprints on the glass surface and meter surfaces.
- Do not apply an excessive force on the printed circuit.
- Do not drop or otherwise apply impact.
- When the combination meter of model with immobilizer has been replaced, be sure to perform the registration procedure of immobilizer.

C: PREPARATION TOOL

1. GENERAL TOOL

TOOL NAME	REMARKS
Circuit tester	Used for measuring resistance and voltage.

2. Combination Meter System

A: WIRING DIAGRAM

1. COMBINATION METER

<Ref. to WI-171, WIRING DIAGRAM, Combination Meter System.>

B: INSPECTION

1. SELF-DIAGNOSIS

The self-diagnosis (checking of each meter, warning light, indicator, illumination, LCD, buzzer sound) of combination meter can be performed in the following procedure.
1) Connect the diagnostic connector (A) near the fuse & relay box.

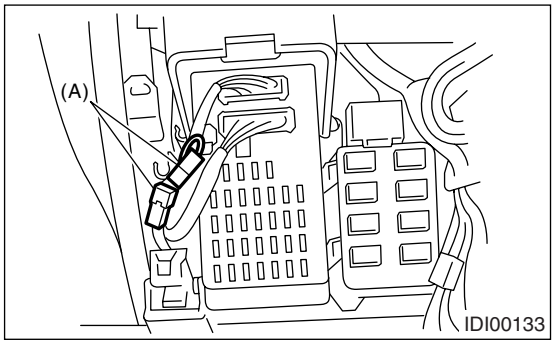

2) Turn the ignition switch to ON.
3) While meter indicator needle deflecting, press the odo/trip meter knob twice.

NOTE:
When odo/trip meter knob is pressed only once, display mode is shifted to DTC display mode. <Ref. to IDI-11, DTC DISPLAY MODE, INSPECTION, Combination Meter System.>

When the self-diagnosis function is operated, the checking of warning light, indicator, and LCD display is performed, hereafter, every pressing the odo/trip meter knob, the operation check is performed in the order of meter, illumination and buzzer. <Ref. to IDI-4, LIST OF SELF-DIAGNOSIS MODE OPERATION, INSPECTION, Combination Meter System.> To cancel the self-diagnosis mode, set the ignition switch to OFF or disconnect the diagnosis connector.

NOTE:
When the engine starts during diagnosis, the self-diagnosis mode is not cancelled, however, once the vehicle starts driving, the self-diagnosis mode is cancelled automatically for safety.

2. LIST OF SELF-DIAGNOSIS MODE OPERATION

Speedometer, tachometer, fuel gauge, water temperature gauge	Microcomputer running type warning light, indicator light	AT select lever position indicator light	Odo/Trip indicator	SPORT shift indicator	Illumination (indicator needle, plate, ring, LCD)	Buzzer (SPORT shift buzzer)
Step 0. Processing to self-diagnosis mode						
Operating initial operation	Initial illuminating	Normal	Normal	Initial illuminating	Initial illuminating	Not beep.
Step 1-1. Check each indication after initial operation						
Repeat the sweep operation (After holding on lowest position for one second, reaches to highest position within 5 seconds, and after holding on highest position for one second, reaches to lowest position within 5 seconds).	Light ON	With the highest brightness, illuminate the position sequentially at a cycle of 1.5 seconds.	Perform the segment check. For the illumination order, refer to the illumination order table.	Perform the segment check. For the illumination order, refer to the illumination order table.	Light at the highest brightness.	Not beep.
Step 1-2. Press the trip knob (trip knob input is not accepted till the meter indicator needle reaches the highest position): sweep complete, AT select lever position indicator display is set						
After completing sweep in step 1-1, back to lowest position.	Light ON	Keep the position indicated when the trip knob is pressed.	Underbar " _ " is displayed.	"1" is displayed.	Light at the highest brightness.	Not beep.
Step 2-1. Press the trip knob, and hold it: Check each meter						
All meters are moved simultaneously in every 0.5 sec. from the lowest position to highest position. Speedometer/ Tachometer: Approx. 5 degrees at every movement. Water temperature gauge/Fuel gauge: Approx. 2 degrees at every movement.	Light OFF	Keep the position indicated that set in step 1-2.	Display the current meter directing angle on odometer. Ex.) Display "135054" when Speedometer/ Tachometer: 135 degree, Water temperature gauge/Fuel gauge: 54 degree.	"▼2" is displayed.	Light at the highest brightness.	Not beep.
Step 2-2. Release the trip knob: Specifying the meter directing position						
Stop at directing position when the trip knob is released.	Light OFF	Keep the position indicated that specified at step 1-2.	Display the current meter directing angle on odometer.	"2" is displayed.	Light at the highest brightness.	Not beep.
Step 3-1. Press the trip knob, and hold it: Check illumination						

Speedometer, tachometer, fuel gauge, water temperature gauge	Microcomputer running type warning light, indicator light	AT select lever position indicator light	Odo/Trip indicator	SPORT shift indicator	Illumination (indicator needle, plate, ring, LCD)	Buzzer (SPORT shift buzzer)
Keep the position that specified at step 2-2.	Light OFF	Varying from the highest brightness (ILL6) to the lowest luminescence (ILL1) every second. After reaching at ILL1, repeat it from ILL6.	Illumination brightness is displayed. (From ILL6 to ILL1)	"▼3" is displayed.	Varying from the highest brightness (ILL6) to the lowest luminescence (ILL1) every second. After reaching at ILL1, repeat it from ILL6.	Not beep.
Step 3-2. Release the trip knob: Specifying the illumination brightness						
Keep the position that specified at step 2-2.	Light OFF	Keep the brightness at the time when the trip knob is released.	Display the brightness at the time when the trip knob is released.	"3" is displayed.	Keep the brightness at the time when the trip knob is released.	Not beep.
Step 4-1. Press the trip knob: Check the beeping of SPORT shift buzzer (AT model)						
All meter indicator needle returns to lowest position.	Light OFF	Light at the highest brightness. Keep the position indicated that set in step 1-2.	Illumination brightness is displayed.	"▲▼8" is displayed. Blinks with buzzer.	Light at the highest brightness.	SPORT shift buzzer beeps.
Step 4-2. Press the trip knob: Check the VDC indicator light (Model with VDC)						
All meter indicator needle returns to lowest position.	VDC warning light and VDC operation indicator light blink.	Light at the highest brightness. Keep the position indicated that set in step 1-2.	Illumination brightness is displayed.	"4" is displayed.	Light at the highest brightness.	Not beep.
Step 5. Press the trip knob: Complete the self-diagnosis 1 cycle						
All meter indicator needle returns to lowest position, and go back to step 1 after completion.						

- Illuminating order table

Illuminating order	1	2	3	4	5	6	7	8	9	10	11	
Trip meter A/B	AB	A	B	A	B	A	B	A	B	A	B	
Odo/trip meter	8888.8 88888 8	00000 00000 0	1111.1 11111 1	22222 22222 2	3333.3 33333 3	44444 44444 4	5555.5 55555 5	66666 66666 6	7777.7 77777 7	88888 88888 8	9999.9 99999 9	
SPORT shift indicator	8	1	2	3	4	5	1	2	3	4	5	Go back to 1 and repeat
▲ ▼	▲ ▼	▲	▼	▲	▼	▲	▼	▲	▼	▲	▼	
AT select lever position indicator	P	P	R	R	R	N	N	N	D	D	D	
Display time (sec.)	1	0.5	0.5	0.5	0.5	0.5	0.5	0.5	0.5	0.5	0.5	

3. SYMPTOM CHART

Symptom	Repair order	Reference
Combination meter assembly does not operate.	(1) Power supply (2) Ground circuit (3) Combination meter	<Ref. to IDI-7, CHECK POWER SUPPLY AND GROUND CIRCUIT, INSPECTION, Combination Meter System.>
Speedometer does not operate.	(1) ABSCM or VDCCM (2) Harness (3) Combination meter	<Ref. to IDI-7, CHECK ABSCM OR VDCCM, INSPECTION, Combination Meter System.>
Tachometer does not operate.	(1) ECM (2) Harness (3) Combination meter	<Ref. to IDI-8, CHECK ENGINE CONTROL MODULE, INSPECTION, Combination Meter System.>
Fuel gauge does not operate.	(1) Communication circuit (2) Fuel level sensor (3) Harness (4) Combination meter	<Ref. to IDI-9, CHECK FUEL LEVEL SENSOR., INSPECTION, Combination Meter System.>
Water temperature gauge does not operate.	(1) Communication circuit (2) Engine coolant temperature sensor (3) Harness (4) Combination meter	<Ref. to IDI-10, CHECK ENGINE COOLANT TEMPERATURE SENSOR., INSPECTION, Combination Meter System.>
Error display is shown on the odo/trip meter.	Communication circuit	<Ref. to IDI-11, COMMUNICATION ERROR DISPLAY, INSPECTION, Combination Meter System.>

CAUTION:
When measuring the voltage and resistance of each control module or sensor, use a tapered pin with a diameter of less than 0.64 mm (0.025 in) in order to avoid poor contact. Do not insert the pin of more than 2 mm (0.08 in) in diameter.

4. CHECK POWER SUPPLY AND GROUND CIRCUIT

	Step	Check	Yes	No
1	**CHECK POWER SUPPLY FOR COMBINATION METER.** 1) Remove the combination meter. <Ref. to IDI-15, REMOVAL, Combination Meter.> 2) Disconnect the combination meter harness connector. 3) Turn the ignition switch to ON. 4) Measure the voltage between combination meter connector and chassis ground. ***Connector & terminal*** ***(i10) No. 3, No. 4 (+) — Chassis ground (–):***	Is the voltage more than 10 V?	Go to step **2.**	Check the harness for open or short between the ignition switch and combination meter.
2	**CHECK POWER SUPPLY FOR COMBINATION METER.** Measure the voltage between combination meter connector and chassis ground. ***Connector & terminal*** ***(i10) No. 1, No. 2 (+) — Chassis ground (–):***	Is the voltage more than 10 V?	Go to step **3.**	Check the harness for open or short between the fuse and combination meter.
3	**CHECK GROUND CIRCUIT OF COMBINATION METER.** 1) Turn the ignition switch to OFF. 2) Measure the resistance of harness between combination meter connector and chassis ground. ***Connector & terminal*** ***(i10) No. 11, No. 12 — Chassis ground:***	Is the resistance less than 10 Ω?	Replace the meter case assembly.	Repair the wiring harness.

5. CHECK ABSCM OR VDCCM

	Step	Check	Yes	No
1	**CHECK VEHICLE SPEED SIGNAL.** 1) Lift up the vehicle and support it with rigid racks. 2) Drive the vehicle faster than 10 km/h (6 MPH). **Warning:** **Be careful not to get caught in the running wheels.** 3) Measure the voltage between combination meter connector and chassis ground. ***Connector & terminal*** ***(i10) No. 19 (+) — Chassis ground (–):***	Is the voltage less than 1 V ←→ 5 V or more?	Replace the meter case assembly.	Go to step **2.**
2	**CHECK HARNESS BETWEEN ABSCM OR VDCCM AND COMBINATION METER.** 1) Turn the ignition switch to OFF. 2) Disconnect the connector from ABSCM or VDCCM and combination meter. 3) Measure the resistance between ABSCM or VDCCM harness connector and combination meter harness connector. ***Connector & terminal*** ***Model without VDC*** ***(B301) No. 23 — (i10) No. 19:*** ***Model with VDC*** ***(B310) No. 36 — (i10) No. 19:***	Is the resistance less than 10 Ω?	Model without VDC: Check the ABSCM. <Ref. to ABS(diag)-2, Basic Diagnostic Procedure.> Model with VDC: Check the VDCCM. <Ref. to VDC(diag)-2, Basic Diagnostic Procedure.>	Repair the wiring harness.

6. CHECK ENGINE CONTROL MODULE

	Step	Check	Yes	No
1	**CHECK ECM SIGNAL.** 1) Start the engine. 2) Measure the voltage between ECM connector and chassis ground. ***Connector & terminal*** ***(B134) No. 23 (+) — Chassis ground (–):***	Is the voltage more than 0 ←→ 14 V?	Go to step **2.**	Check the ECM. <Ref. to EN(H4SO)(diag)-2, Basic Diagnostic Procedure.> <Ref. to EN(H4SOU5)(diag)-2, Basic Diagnostic Procedure.> <Ref. to EN(H4DOTC)(diag)-2, Basic Diagnostic Procedure.> <Ref. to EN(H6DO)(diag)-2, Basic Diagnostic Procedure.>
2	**CHECK HARNESS BETWEEN COMBINATION METER AND ECM.** 1) Turn the ignition switch to OFF. 2) Disconnect the connector from ECM and combination meter. 3) Measure the resistance between ECM harness connector and combination meter harness connector. ***Connector & terminal*** ***(B134) No. 23 — (i10) No. 20:***	Is the resistance less than 10 Ω?	Replace the meter case assembly.	Repair the wiring harness.

7. CHECK FUEL LEVEL SENSOR.

	Step	Check	Yes	No
1	**CHECK COMMUNICATION ERROR DISPLAY.** 1) Set the ignition switch to ON. 2) Check that the error code is displayed in odo/trip meter.	Is the error code “Er xx” displayed in odo/trip meter?	Check the communication circuit. <Ref. to IDI-11, COMMUNICATION ERROR DISPLAY, INSPECTION, Combination Meter System.>	Go to step **2.**
2	**CHECK FUEL LEVEL SENSOR.** 1) Remove the fuel level sensor. <Ref. to FU(H4SO)-51, REMOVAL, Fuel Level Sensor.> <Ref. to FU(H4SO U5)-60, REMOVAL, Fuel Level Sensor.> <Ref. to FU(H4DOTC)-56, REMOVAL, Fuel Level Sensor.> <Ref. to FU(H6DO)-51, REMOVAL, Fuel Level Sensor.> 2) Measure the resistance between fuel level sensor terminals when the float is in FULL or EMPTY position. ***Terminals*** ***No. 1 — No. 4:***	Is the resistance 1.0 — 3.0 Ω (FULL) or 31 — 33 Ω (EMPTY)?	Go to step **3.**	Replace the fuel level sensor.
3	**CHECK FUEL SUB LEVEL SENSOR.** 1) Remove the fuel sub level sensor. <Ref. to FU(H4SO)-52, REMOVAL, Fuel Sub Level Sensor.> <Ref. to FU(H4SO U5)-61, REMOVAL, Fuel Sub Level Sensor.> <Ref. to FU(H4DOTC)-57, REMOVAL, Fuel Sub Level Sensor.> <Ref. to FU(H6DO)-52, REMOVAL, Fuel Sub Level Sensor.> 2) Measure the resistance between fuel sub level sensor terminals when the float is in FULL or EMPTY position. ***Terminals*** ***No. 1 — No. 2:***	Is the resistance 1.0 — 3.0 Ω (FULL) or 61 — 63 Ω (EMPTY)?	Go to step **4.**	Replace the fuel sub level sensor.
4	**CHECK HARNESS BETWEEN FUEL SUB-LEVEL SENSOR AND BODY INTEGRATED UNIT.** 1) Disconnect the connector from body integrated unit. 2) Measure the resistance between fuel sub level sensor harness connector terminal and body integrated unit harness connector terminal. ***Connector & terminal*** ***(R59) No. 1 — (B281) No. 19:***	Is the resistance less than 10 Ω?	Go to step **5.**	Repair the wiring harness.
5	**CHECK HARNESS BETWEEN FUEL LEVEL SENSOR AND FUEL SUB LEVEL SENSOR.** Measure the resistance between fuel level sensor harness connector terminal and fuel sub level sensor harness connector terminal. ***Connector & terminal*** ***(R58) No. 1 — (R59) No. 2:***	Is the resistance less than 10 Ω?	Go to step **6.**	Repair the wiring harness.

	Step	Check	Yes	No
6	**CHECK FUEL LEVEL SENSOR GROUND CIRCUIT.** Measure the resistance between fuel level sensor harness connector terminal and chassis ground. ***Connector & terminal*** ***(R58) No. 4 — Chassis ground:***	Is the resistance less than 10 Ω?	Replace the meter case assembly.	Repair the wiring harness.

8. CHECK ENGINE COOLANT TEMPERATURE SENSOR.

	Step	Check	Yes	No
1	**CHECK COMMUNICATION ERROR DISPLAY.** 1) Set the ignition switch to ON. 2) Check that the error code is displayed in odo/trip meter.	Is the error code “Er xx” displayed in odo/trip meter?	Check the communication circuit. <Ref. to IDI-11, COMMUNICATION ERROR DISPLAY, INSPECTION, Combination Meter System.>	Go to step **2.**
2	**CHECK ENGINE COOLANT TEMPERATURE SENSOR.** Check the engine coolant temperature sensor. <Ref. to EN(H4SO)(diag)-2, Basic Diagnostic Procedure.> <Ref. to EN(H4SO U5)(diag)-2, Basic Diagnostic Procedure.> <Ref. to EN(H4DOTC)(diag)-2, Basic Diagnostic Procedure.> <Ref. to EN(H6DO)(diag)-2, Basic Diagnostic Procedure.>	Is the engine coolant temperature sensor OK?	Replace the meter case assembly.	Replace the engine coolant temperature sensor.

9. COMMUNICATION ERROR DISPLAY

When the following error code is displayed in the odo/trip meter, inspect the communication circuit since the communication malfunction is generated between each control module. <Ref. to LAN(diag)-2, Basic Diagnostic Procedure.>

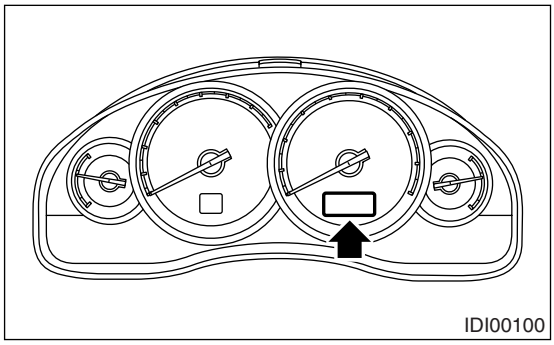

Error code	Remarks

Er IU	Malfunction in integrated unit
Er ––	Simultaneous malfunction of high/low speed CAN communication
Er HC	Malfunction of high-speed CAN communication
Er LC	Malfunction of low-speed CAN communication
Er EG	EGI Communication malfunction
Er TC	TCM Communication malfunction
Er Ab	ABSCM/VDCCM Communication malfunction
Er SP	ABSCM/VDCCM DTC information, vehicle speed pulse malfunction
Er SS	Wheel speed data malfunction

10.DTC DISPLAY MODE

When DTC display mode is operated, {ECM}, {TCM}, {ABSCM/VDCCM} is displayed repeatedly in this order by pressing the odo/trip meter button. DTC is displayed in the following table according to type of control module, receiving DTC, DTC detected, No DTC. If CAN communication is broken down, "-----" is displayed.

Control module	Condition	Display
ECM	Receiving DTC	Trip "A" + "P (blinking)"
	DTC detected	Trip "A" + "Pxxxx"
	No DTC	Trip "A" + "P----"
TCM	Receiving DTC	Trip "B" + "P (blinking)"
	DTC detected	Trip "B" + "Pxxxx"
	No DTC	Trip "B" + "P----"
ABSCM/VDCCM	Receiving DTC	Trip "A" + "C (blinking)"
	DTC detected	Trip "A" + "Cxxxx"
	No DTC	Trip "A" + "C----"
When CAN communication is broken down.	—	"-----"

3. Clock System

A: WIRING DIAGRAM

1. CLOCK

<Ref. to WI-175, WIRING DIAGRAM, Clock System.>

B: INSPECTION

1. SYMPTOM CHART

Symptom	Repair order	Reference
No display is shown.	(1) Power supply (2) Clock body	<Ref. to IDI-13, CHECK POWER SUPPLY AND GROUND CIRCUIT, INSPECTION, Clock System.>
Illumination does not illuminate.	(1) Illumination power supply (2) Clock body	<Ref. to IDI-13, CHECK ILLUMINATION CIRCUIT, INSPECTION, Clock System.>
Brightness does not change even when bright switch is pressed.	(1) Bright switch (2) Clock body	<Ref. to IDI-13, CHECK BRIGHT CIRCUIT, INSPECTION, Clock System.>
“Acc” or “ign” is displayed.	ACC or ignition power supply	<Ref. to IDI-14, CHECK ACC OR IGNITION POWER SUPPLY, INSPECTION, Clock System.>
“Err” is displayed in all items.	(1) Communication circuit between combination meter and clock (2) Clock body	<Ref. to IDI-14, CHECK COMMUNICATION CIRCUIT, INSPECTION, Clock System.>
“Err” is displayed when a specified item is selected.	Communication circuit between combination meter and each control module	<Ref. to IDI-11, COMMUNICATION ERROR DISPLAY, INSPECTION, Combination Meter System.>

2. CHECK POWER SUPPLY AND GROUND CIRCUIT

	Step	Check	Yes	No
1	**CHECK CLOCK POWER SUPPLY.** 1) Disconnect the clock harness connector. 2) Measure the voltage between clock harness connector and chassis ground. ***Connector & terminal*** ***(i59) No. 10 (+) — Chassis ground (–):***	Is the voltage more than 10 V?	Go to step **2.**	Check the harness for open or short between fuse and clock.
2	**CHECK CLOCK GROUND CIRCUIT.** 1) Turn the ignition switch to OFF. 2) Measure the resistance between clock harness connector and chassis ground. ***Connector & terminal*** ***(i59) No. 6 — Chassis ground:***	Is the resistance less than 10 Ω?	Replace the clock body.	Repair the wiring harness.

3. CHECK ILLUMINATION CIRCUIT

	Step	Check	Yes	No
1	**CHECK ILLUMINATION CIRCUIT POWER SUPPLY.** 1) Turn the ignition switch to OFF. 2) Disconnect the clock harness connector. 3) Turn the ignition switch and lighting switch to ON. 4) Measure the voltage between clock harness connector and chassis ground. ***Connector & terminal*** ***(i59) No. 1 (+) — Chassis ground (–):***	Is the voltage more than 10 V?	Replace the clock body.	Check the harness for open or short between fuse and clock.

4. CHECK BRIGHT CIRCUIT

	Step	Check	Yes	No
1	**CHECK BRIGHT CIRCUIT POWER SUPPLY.** 1) Turn the ignition switch to OFF. 2) Disconnect the clock harness connector. 3) Turn the ignition switch to ON. 4) Measure the voltage between clock harness connector and chassis ground. ***Connector & terminal*** ***(i59) No. 2 (+) — Chassis ground (–):***	Is the voltage more than 10 V?	Replace the clock body.	Go to step **2.**
2	**CHECK HARNESS BETWEEN CLOCK AND BODY INTEGRATED UNIT.** 1) Turn the ignition switch to OFF. 2) Disconnect harness connector of body integrated unit. 3) Measure the resistance between clock harness connector and body integrated unit harness connector. ***Connector & terminal*** ***(i59) No. 2 — (i84) No. 30:***	Is the resistance less than 10 Ω?	Replace the body integrated unit.	Repair the wiring harness.

5. CHECK ACC OR IGNITION POWER SUPPLY

	Step	Check	Yes	No
1	**CHECK ACC POWER SUPPLY.** 1) Turn the ignition switch to OFF. 2) Disconnect the clock harness connector. 3) Turn the ignition switch to ACC. 4) Measure the voltage between clock harness connector and chassis ground. ***Connector & terminal*** ***(i59) No. 9 (+) — Chassis ground (−):***	Is the voltage more than 10 V?	Go to step **2.**	Check the open circuit in harness between fuse and clock.
2	**CHECK THE IGNITION POWER SUPPLY.** 1) Turn the ignition switch to ON. 2) Measure the voltage between clock harness connector and chassis ground. ***Connector & terminal*** ***(i59) No. 8 (+) — Chassis ground (−):***	Is the voltage more than 10 V?	Replace the clock body.	Check the open circuit in harness between fuse and clock.

6. CHECK COMMUNICATION CIRCUIT

	Step	Check	Yes	No
1	**CHECK THE HARNESS BETWEEN CLOCK AND COMBINATION METER.** 1) Turn the ignition switch to OFF. 2) Disconnect the harness of clock and combination meter. 3) Measure the resistance between harness connectors of clock and combination meter. ***Connector & terminal*** ***(i59) No. 5 — (i10) No. 18:***	Is the resistance less than 10 Ω?	Go to step **2.**	Repair the wiring harness.
2	**CHECK COMMUNICATION ERROR DISPLAY.** 1) Connect all the disconnected connectors. 2) Turn the ignition switch to ON. 3) Check that the error code is displayed in odo/trip meter.	Is the error code “Er xx” displayed in odo/trip meter?	Check the communication circuit. <Ref. to IDI-11, COMMUNICATION ERROR DISPLAY, INSPECTION, Combination Meter System.>	Replace the clock body.

4. Combination Meter

A: REMOVAL

1) Disconnect the ground cable from battery.
2) Set the tilt steering at the lowest position.
3) Remove the instrument panel lower cover. <Ref. to EI-50, REMOVAL, Instrument Panel Lower Cover.>
4) Remove the screws of combination meter (one for upper side, two for lower side) and pull tilting the meter toward you.

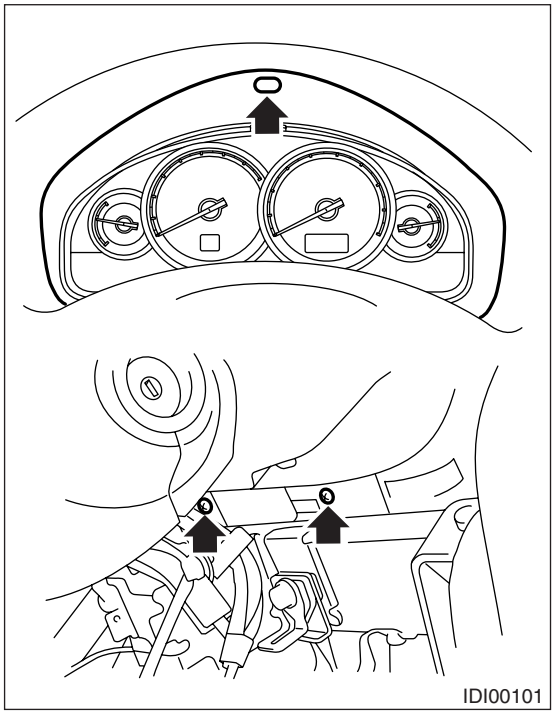

5) Disconnect the connector in the rear side of combination meter to remove meter.

CAUTION:
• Be careful not to damage the meter or instrument panel.
• Pay particular attention to avoid damaging the meter glass.

B: INSTALLATION

Install in the reverse order of removal.

CAUTION:
• Make sure the electrical connector is connected securely.
• Make sure that each meter operates normally.
• When the combination meter of model with immobilizer has been replaced, be sure to perform the registration procedure of immobilizer.

C: DISASSEMBLY

CAUTION:
- **Use gloves to avoid damage and getting fingerprints on the glass surface and meter surfaces.**
- **Be careful not to apply excessive force to the trip knob.**
- **Be sure not to touch the meter indicator needle.**

Remove the pawl (A), and then detach the meter glass assembly (B) and meter panel assembly (C) from meter case assembly (D).

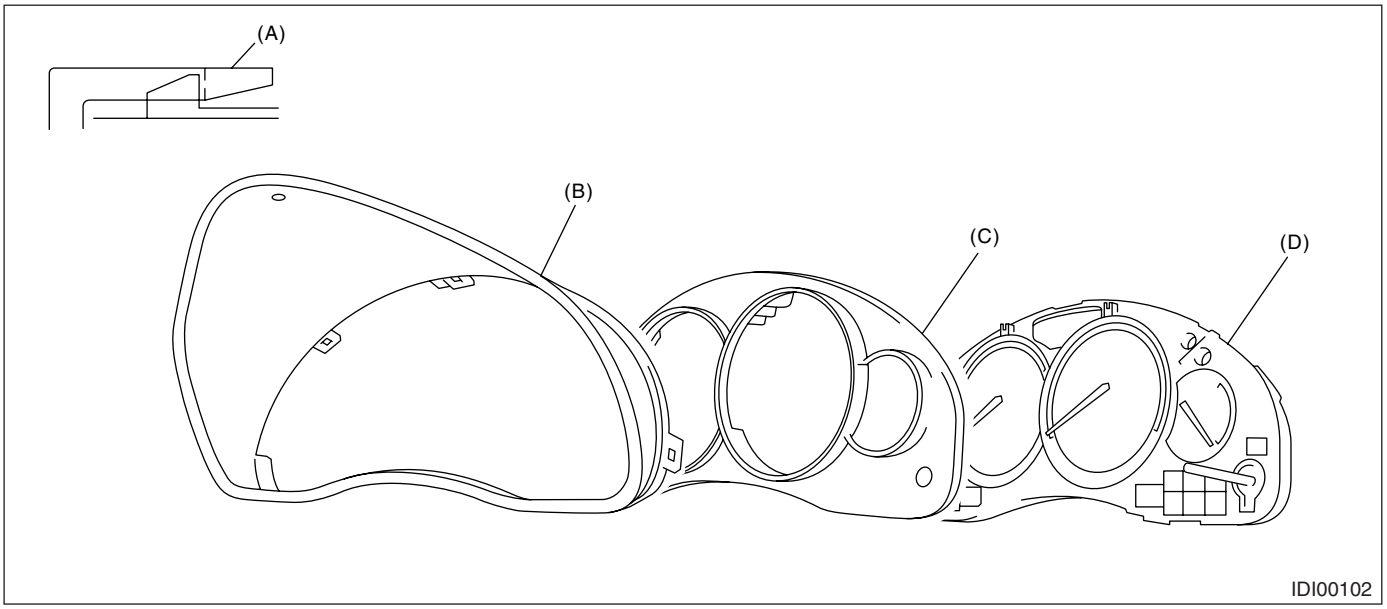

1. BULB REPLACEMENT

LEDs are used for all of warning lights and indicator lights of combination meters, replace the meter case assembly if faulty.

D: ASSEMBLY

Assemble in the reverse order of disassembly.

5. Speedometer

A: SPECIFICATION

Since the meter case assembly cannot be disassembled, do not remove or inspect the speedometer alone. (Do not remove the cover on the back side.)

6. Tachometer

A: SPECIFICATION

Since the meter case assembly cannot be disassembled, do not remove or inspect the tachometer alone. (Do not remove the cover on the back side.)

7. Fuel Gauge

A: SPECIFICATION

Since the meter case assembly cannot be disassembled, do not remove or inspect the fuel gauge alone. (Do not remove the cover on the back side.)

8. Water Temperature Gauge

A: SPECIFICATION

Since the meter case assembly cannot be disassembled, do not remove or inspect the water temperature gauge alone. (Do not remove the cover on the back side.)

9. Clock

A: REMOVAL

1) Disconnect the ground cable from battery.
2) Remove the center air vent grille. <Ref. to AC-46, REMOVAL, Air Vent Grille.>
3) Loosen the screws, and then remove the clock (B) from center air vent grille (A).

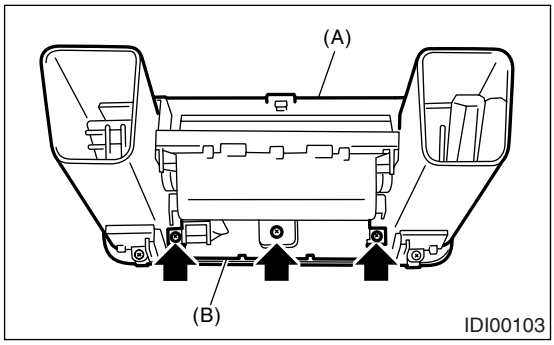

B: INSTALLATION

Install in the reverse order of removal.

SEATS

SE

Page

1. General Description 2
2. Front Seat 9
3. Rear Seat 20
4. Seat Heater System 25

1. General Description

A: COMPONENT

1. FRONT SEAT LH (MANUAL SEAT)

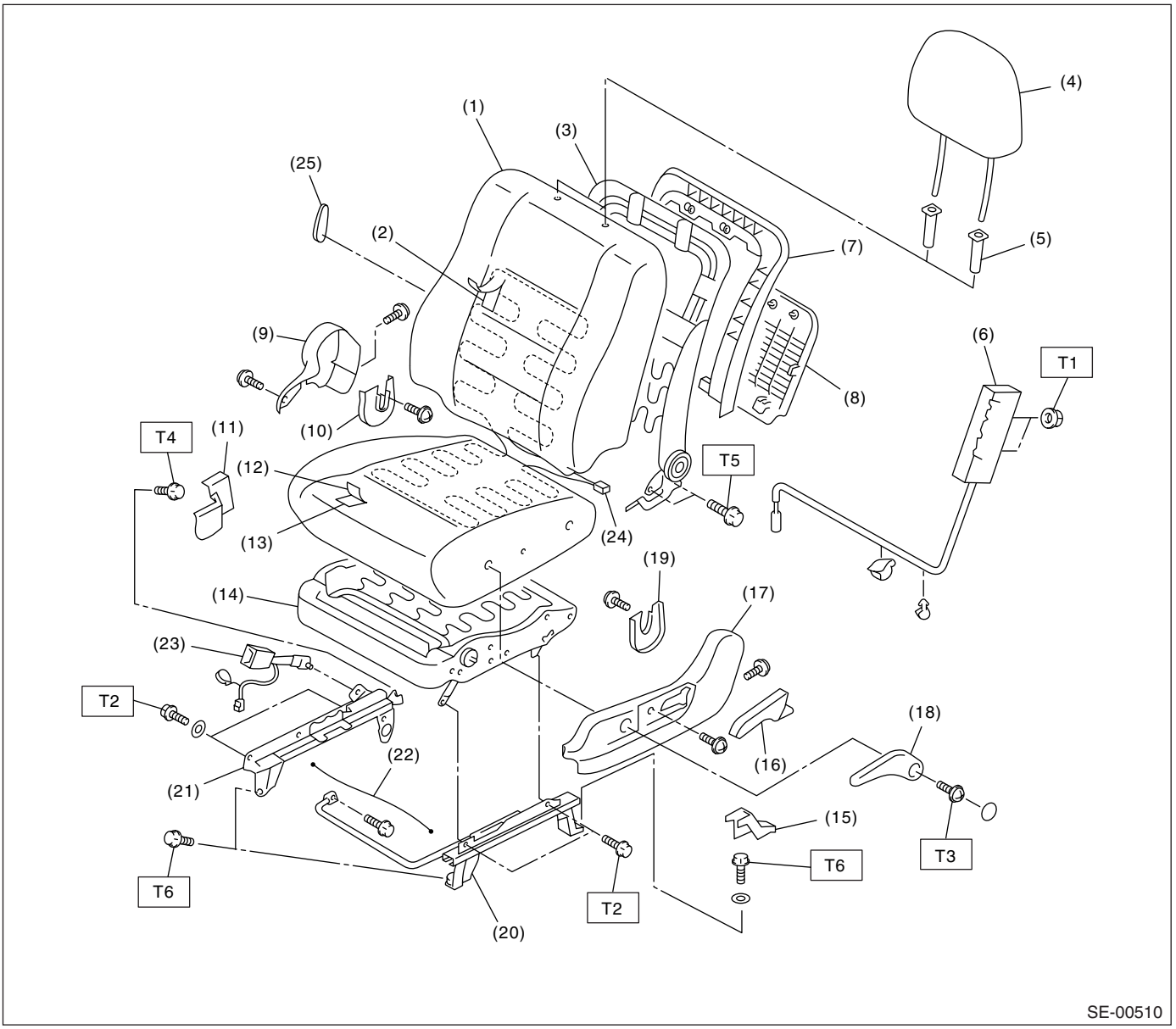

(1)	Backrest cover	(12)	Seat cushion cover	(23)	Inner seat belt
(2)	Backrest pad	(13)	Seat cushion pad	(24)	Seat heater unit
(3)	Backrest frame ASSY	(14)	Seat cushion frame ASSY	(25)	Lumber support lever
(4)	Headrest ASSY	(15)	Rear bolt cover outside		
(5)	Headrest lock bushing	(16)	Reclining lever		
(6)	Side airbag module	(17)	Seat side cover outside		
(7)	Cover frame	(18)	Lifter lever		
(8)	Backrest back cover	(19)	Hinge inner cover LH		
(9)	Seat side cover inside	(20)	Outer slide rail		
(10)	Hinge inner cover RH	(21)	Inner slide rail		
(11)	Rear bolt cover inside	(22)	Connecting wire		

Tightening torque: N·m (kgf-m, ft-lb)	
T1:	*6 (0.61, 4.43)*
T2:	*10 (1.02, 7.38)*
T3:	*22 (2.24, 16.2)*
T4:	*30 (3.06, 22.1)*
T5:	*52 (5.30, 38.4)*
T6:	*53 (5.40, 39.1)*

2. FRONT SEAT LH (POWER SEAT)

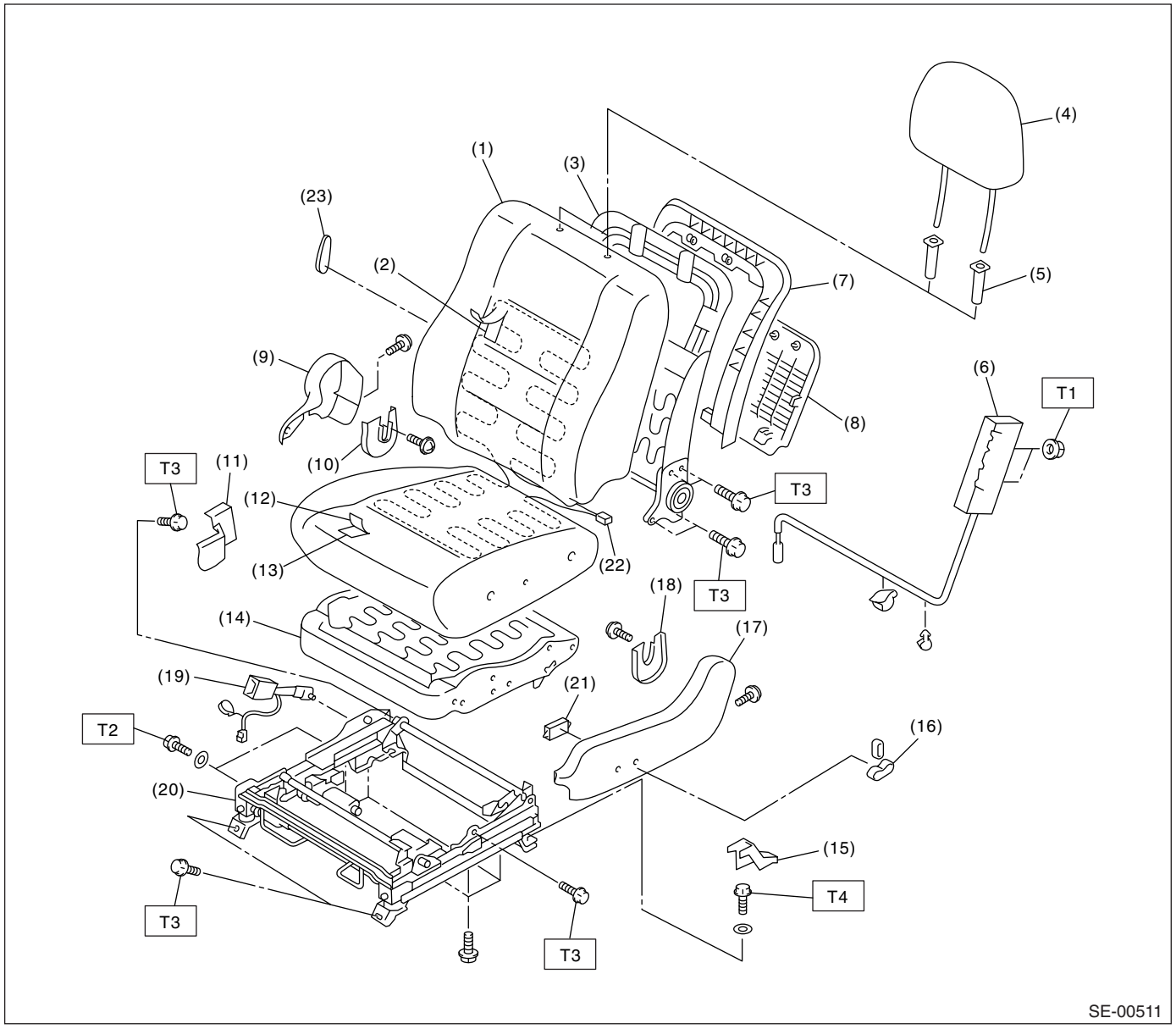

SE-00511

(1) Backrest cover
(2) Backrest pad
(3) Backrest frame ASSY
(4) Headrest ASSY
(5) Headrest lock bushing
(6) Side airbag module
(7) Cover frame
(8) Backrest back cover
(9) Seat side cover inside
(10) Hinge inner cover RH
(11) Rear bolt cover inside
(12) Seat cushion cover
(13) Seat cushion pad
(14) Seat cushion frame ASSY
(15) Rear bolt cover outside
(16) Power seat switch knob
(17) Seat side cover outside
(18) Hinge inner cover LH
(19) Inner seat belt ASSY
(20) Slide rail ASSY
(21) Power seat switch unit
(22) Seat heater unit
(23) Lumber support lever

Tightening torque: N·m (kgf-m, ft-lb)
T1: 6 (0.61, 4.43)
T2: 22 (2.24, 16.2)
T3: 52 (5.30, 38.4)
T4: 53 (5.40, 39.1)

3. FRONT SEAT RH (MANUAL SEAT)

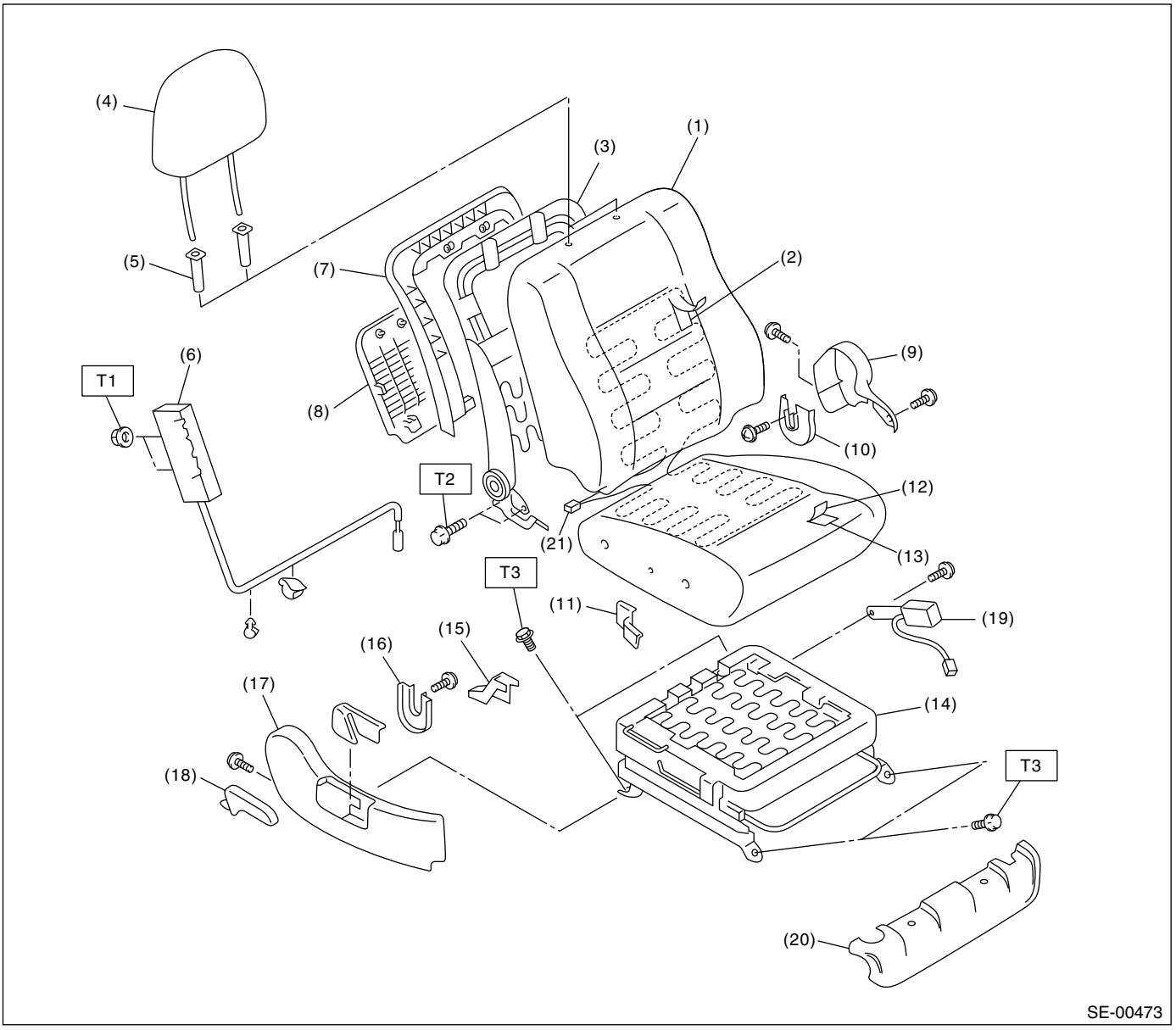

(1) Backrest cover
(2) Backrest pad
(3) Backrest frame ASSY
(4) Headrest ASSY
(5) Headrest lock bushing
(6) Side airbag module
(7) Cover frame
(8) Backrest back cover
(9) Seat cover inside
(10) Hinge inner cover LH
(11) Rear bolt cover inside
(12) Seat cushion cover
(13) Seat cushion pad
(14) Seat cushion frame and slide rail ASSY
(15) Rear bolt cover outside
(16) Hinge inner cover RH
(17) Seat side cover outside
(18) Reclining lever
(19) Inner seat belt ASSY
(20) Front bolt cover
(21) Seat heater unit

Tightening torque: N·m (kgf-m, ft-lb)
T1: 6 (0.61, 4.43)
T2: 52 (5.30, 38.4)
T3: 53 (5.40, 39.1)

4. FRONT SEAT RH (POWER SEAT)

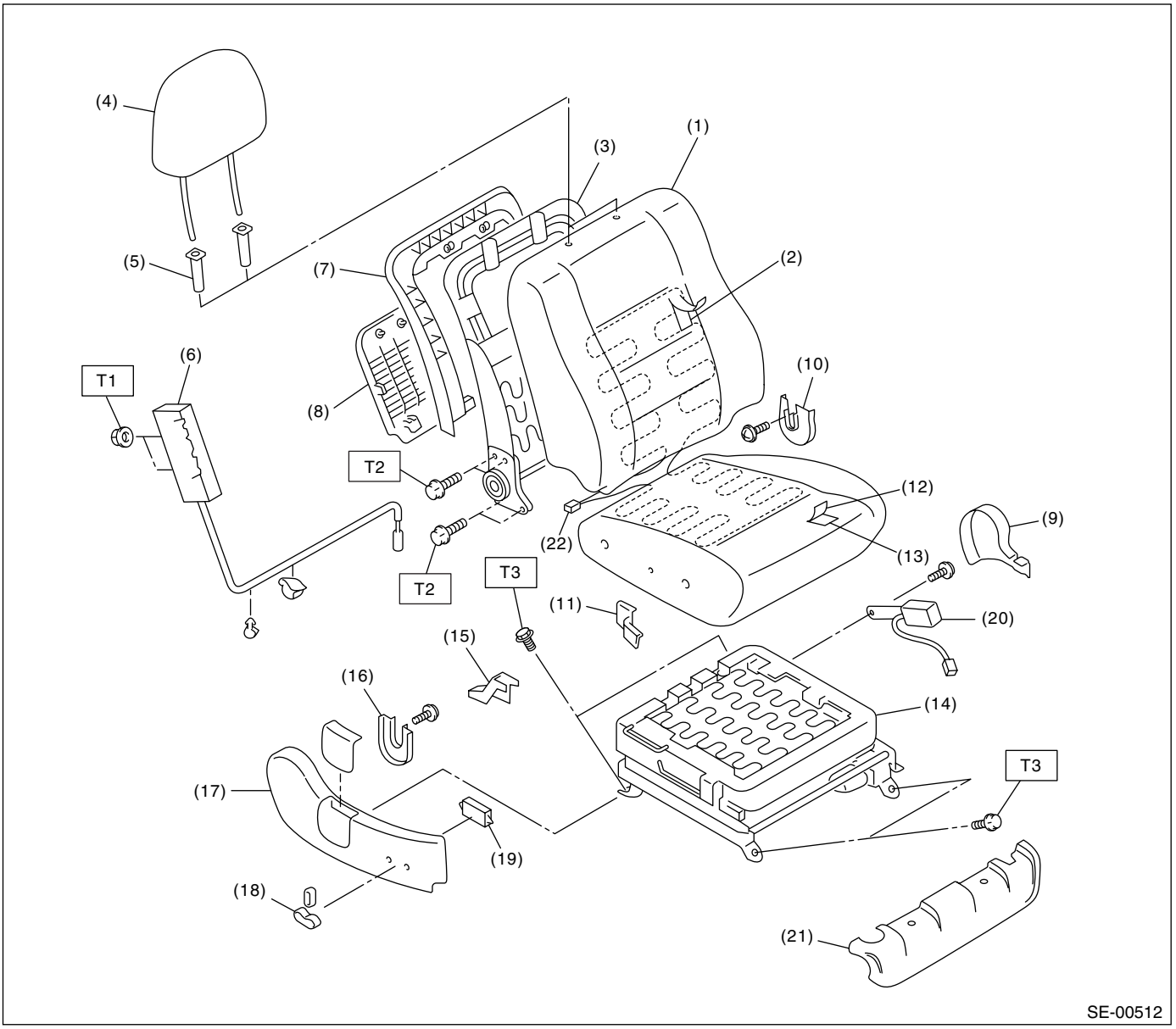

(1) Backrest cover
(2) Backrest pad
(3) Backrest frame ASSY
(4) Headrest ASSY
(5) Headrest lock bushing
(6) Side airbag module
(7) Cover frame
(8) Backrest back cover
(9) Seat side cover inside
(10) Hinge inner cover LH
(11) Rear bolt cover inside
(12) Seat cushion cover
(13) Seat cushion pad
(14) Seat cushion frame and slide rail ASSY
(15) Rear bolt cover outside
(16) Hinge inner cover RH
(17) Seat side cover outside
(18) Power seat switch knob
(19) Power seat switch unit
(20) Inner seat belt ASSY
(21) Front bolt cover
(22) Seat heater unit

Tightening torque: N·m (kgf-m, ft-lb)
T1: 6 (0.61, 4.43)
T2: 52 (5.30, 38.4)
T3: 53 (5.40, 39.1)

5. REAR SEAT (SEDAN MODEL)

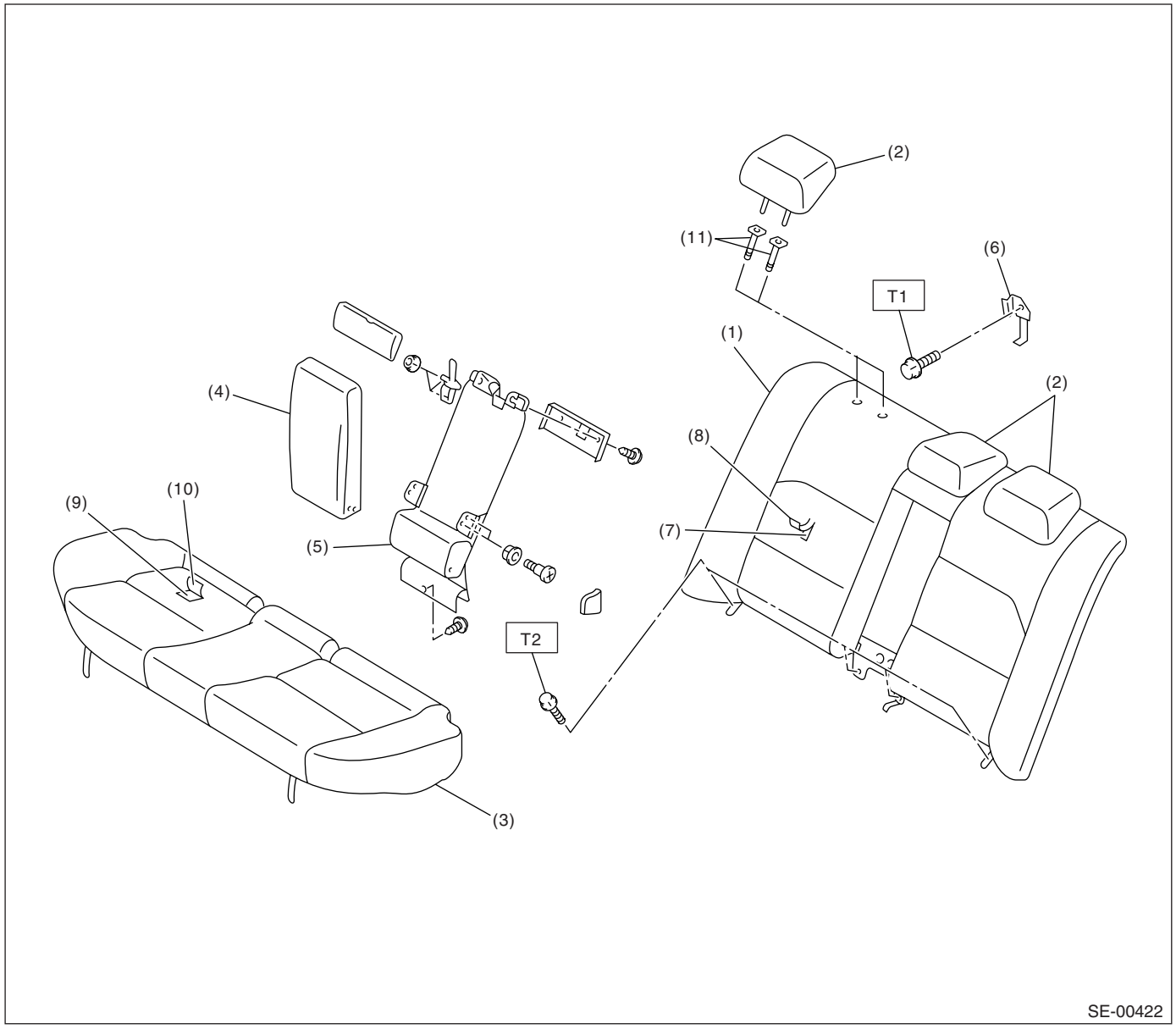

(1) Backrest
(2) Headrest
(3) Cushion
(4) Armrest
(5) Center through frame
(6) Hook
(7) Backrest pad ASSY
(8) Backrest cover ASSY
(9) Rear pad & cushion frame ASSY
(10) Rear cushion cover
(11) Headrest bushing

Tightening torque: N·m (kgf-m, ft-lb)
T1: 10 (1.02, 7.38)
T2: 24.5 (2.5, 18.1)

6. REAR SEAT (WAGON MODEL)

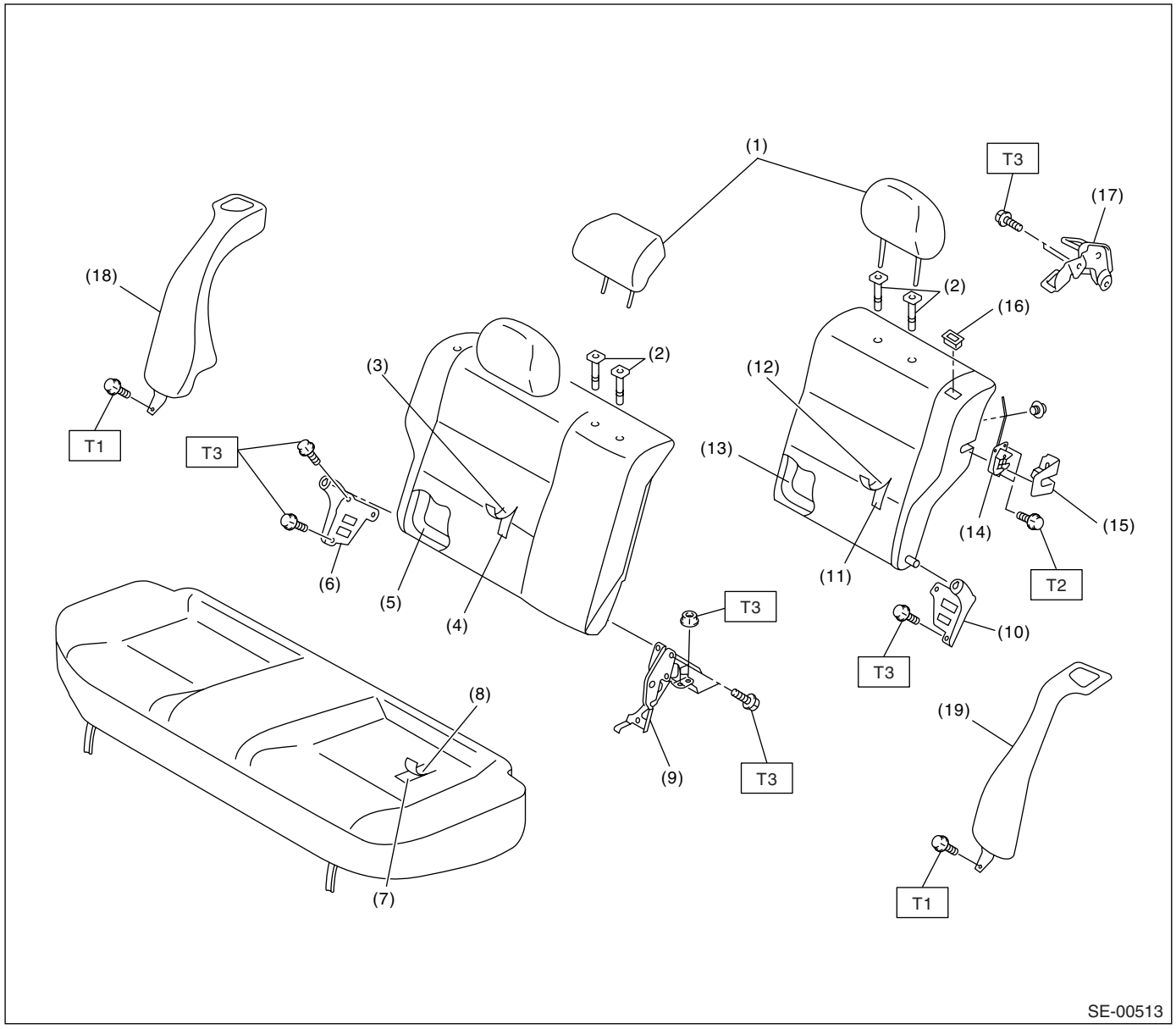

(1) Headrest
(2) Headrest bushing
(3) Backrest cover RH
(4) Backrest pad RH
(5) Backrest frame RH
(6) Hinge ASSY RH
(7) Seat cushion pad
(8) Seat cushion cover
(9) Hinge ASSY center
(10) Hinge ASSY LH
(11) Backrest pad LH
(12) Backrest cover LH
(13) Backrest frame LH
(14) Seat back latch
(15) Seat back latch cover
(16) Holder & button
(17) Striker
(18) Backrest shoulder RH
(19) Backrest shoulder LH

Tightening torque: N·m (kgf-m, ft-lb)
T1: 13.7 (1.40, 10.1)
T2: 22 (2.24, 16.2)
T3: 24.5 (2.5, 18.1)

B: CAUTION

• Be sure to perform the system calibration for occupant detection system after seat installation, when the passenger seat has been removed or even one installing bolt for front passenger seat has been loosened. <Ref. to OD(diag)-12, SYSTEM CALIBRATION, OPERATION, Subaru Select Monitor.> Failure to do so may cause improper activation of passenger's airbag.
• Never disassemble the seat cushion frame assembly and slide rail, remove the occupant detection control module and each load cell sensor, or disconnect the harness connector, since the occupant detection control module, each load cell sensor and harness of occupant detection system (passenger's seat only) are installed as seat frame assembly.
• When removing the front seat from a vehicle equipped with side airbag, follow cautions given in the airbag section. <Ref. to AB-5, CAUTION, General Description.>

C: PREPARATION TOOL

1. GENERAL TOOL

TOOL NAME	REMARKS
Long nose pliers	Used for removing the hog ring.
Hog ring pliers	Used for installing the hog ring.
TORX® T50	Used for removing and installing the inner seat belt.

2. Front Seat

A: REMOVAL

CAUTION:
The airbag system is fitted with a backup power source. After disconnecting the battery ground cable, the airbag may deploy if you do not wait for 20 seconds before starting the repair of airbag system.

1. DRIVER'S SEAT

1) Remove the headrest.
2) Tilt the backrest forward, and move the seat forward.
3) Remove the rear bolt cover, and remove the two bolts at the rear side of slide rail.
4) Move the seat backward, and remove the two bolts at the front side of slide rail.
5) Disconnect the ground cable from battery, and wait for more than 20 seconds before starting work.
6) Disconnect the connector under the seat.
- Seat belt buckle switch connector
- Seat position sensor connector
- Side airbag connector
- Seat heater connector (Model with seat heater)
- Power seat connector (Model with power seat)

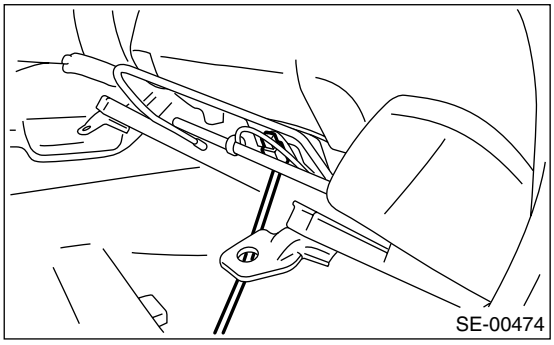
SE-00474

7) Remove the seat from vehicle.

2. PASSENGER'S SEAT

CAUTION:
• Be sure to perform the system calibration for occupant detection system after seat installation, when the passenger seat has been removed or even one installing bolt for front passenger seat has been loosened. <Ref. to OD(diag)-12, SYSTEM CALIBRATION, OPERATION, Subaru Select Monitor.> Failure to do so may cause improper activation of passenger's airbag.

• Never disassemble the seat cushion frame assembly and slide rail, remove the occupant detection control module and each load cell sensor, or disconnect the harness connector, since the occupant detection control module, each load cell sensor and harness of occupant detection system (passenger's seat only) are installed as seat frame assembly.

• If performing the removal of backrest, read the data of load cell sensor using Subaru Select Monitor before removing seat. <Ref. to OD(diag)-12, SENSOR DATA OUTPUT, OPERATION, Subaru Select Monitor.>

1) Remove the headrest.
2) Tilt forward the backrest, and move the seat forward.
3) Remove the rear bolt cover, and remove the bolt at the rear side of slide rail.
4) Move the seat backward, remove the front bolt cover, and then remove the bolt at the front side of slide rail.
5) Remove the battery ground cable, and wait for more than 20 seconds before starting work.
6) Disconnect the all connector of connector holder in the seat cushion backside.

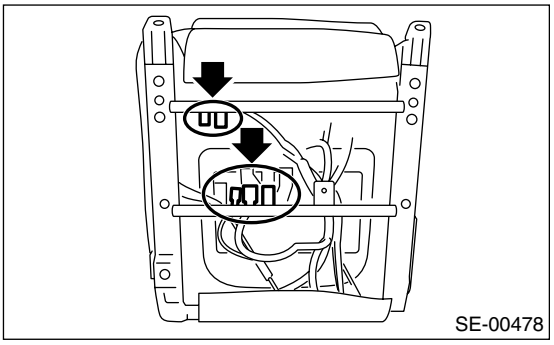
SE-00478

- Coupling connector of occupant detection control module
- Side airbag connector
- Seat harness connector
- Power seat connector (Model with power seat)
- Seat heater connector (Model with seat heater)

7) Remove the seatbelt anchor cover.

NOTE:
It is easy to work with the whole seat tilted backward.

- Manual seat

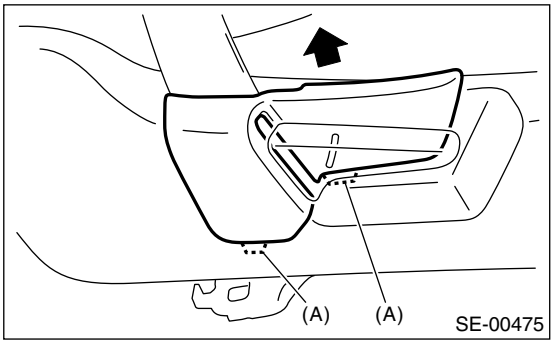

(A) Claw

- Power seat

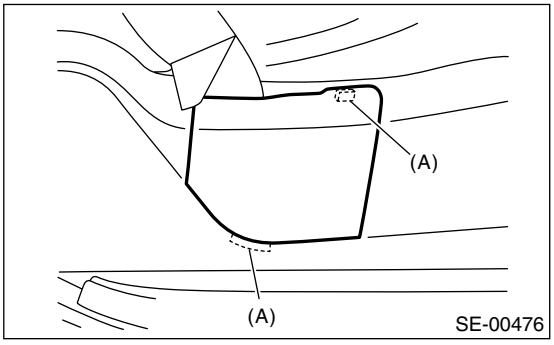

(A) Claw

8) Loosen the TORX® bolt to remove seatbelt anchor.

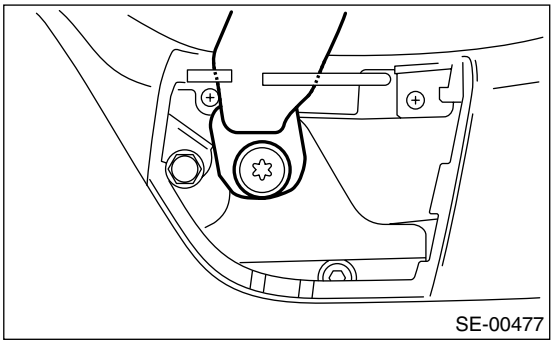

9) Remove the seat from vehicle.

B: INSTALLATION

Install in the reverse order of removal.

NOTE:
Tighten the slide rail installing bolt gradually in several steps to the specified torque in the order as shown in the figure.

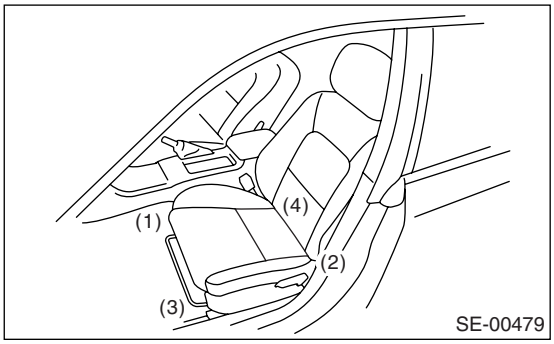

CAUTION:
Be sure to perform the system calibration for occupant detection system after passenger's seat installation. <Ref. to OD(diag)-12, SYSTEM CALIBRATION, OPERATION, Subaru Select Monitor.> Failure to do so may cause improper activation of passenger's airbag.

Tightening torque:
Refer to "COMPONENT" of "General Description". <Ref. to SE-2, COMPONENT, General Description.>

C: DISASSEMBLY

1. DRIVER'S SEAT

• MANUAL SEAT

1) Remove the seat from vehicle. <Ref. to SE-9, REMOVAL, Front Seat.>
2) Remove the seat lifter cover using a flat tip screwdriver and loosen the inner bolt to remove seat lifter lever.

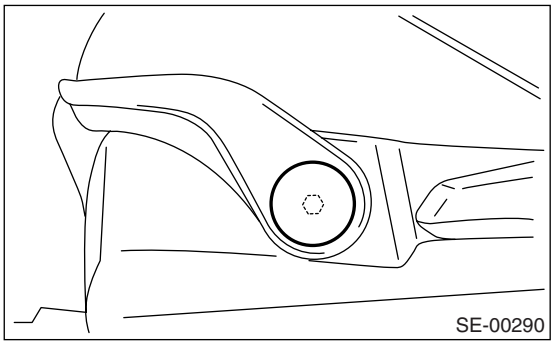

3) Remove the hook (A) and detach reclining lever cover.

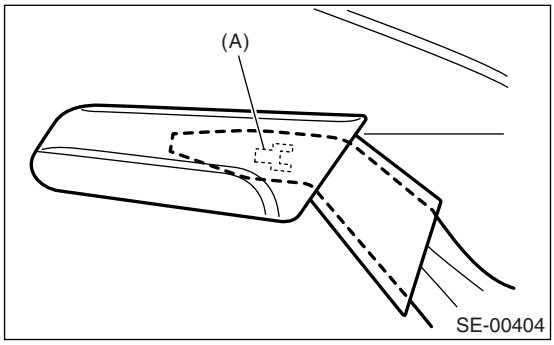

4) Remove the screws (A) and clips (B), and then detach the seat side cover outside.

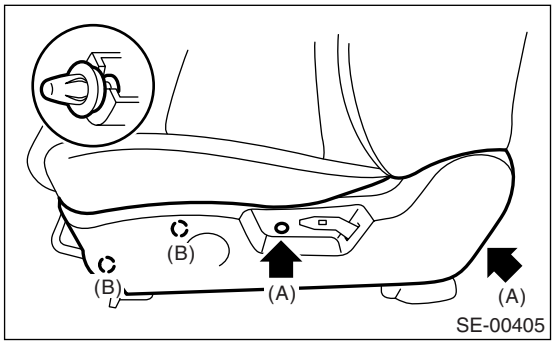

5) Loosen the screws to detach seat side cover inside.

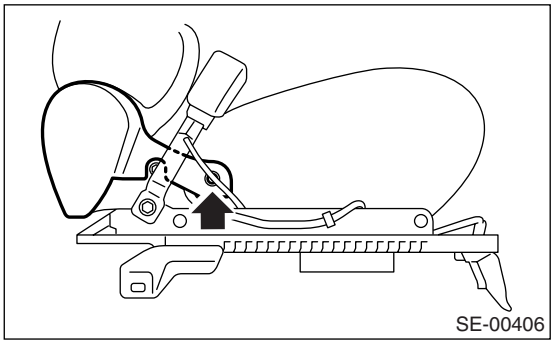

6) Remove the TORX® bolt, and then remove the inner seat belt assembly.

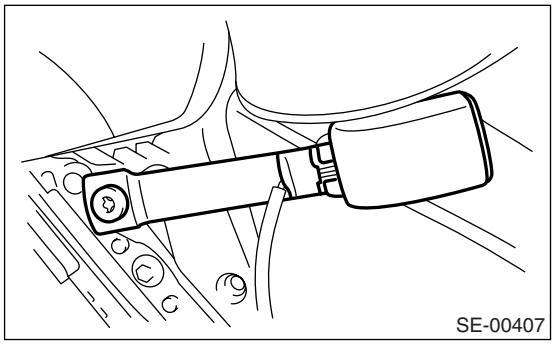

7) Remove the two bolts from reclining hinge on each side.

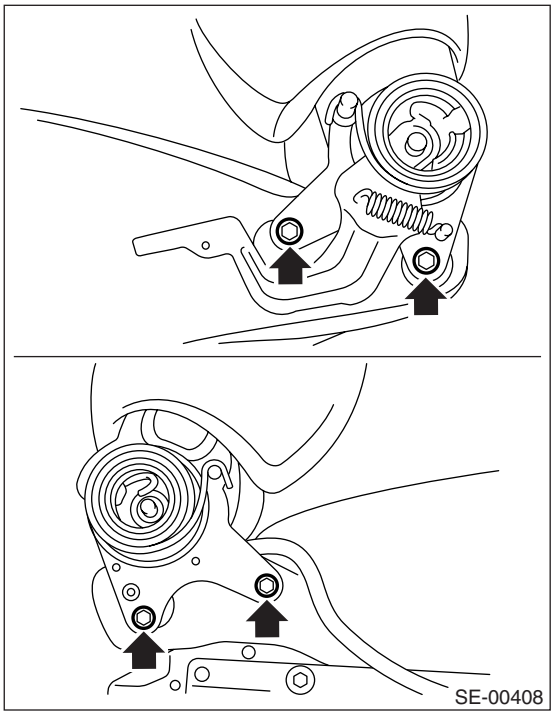

8) Remove the clips and hooks, and then detach the backrest back cover.

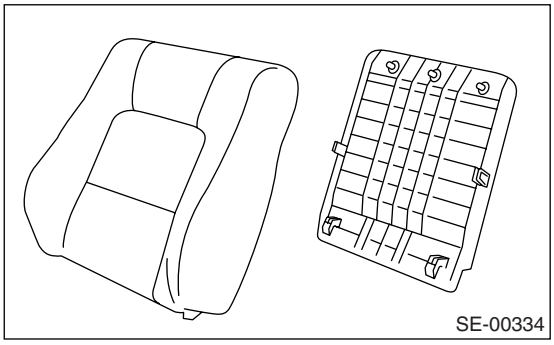

9) Remove the lock clip, and then remove the lumber support lever.

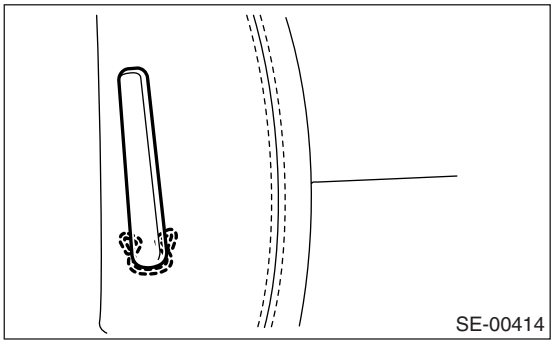

10) Remove the hooks at the rear side of backrest.

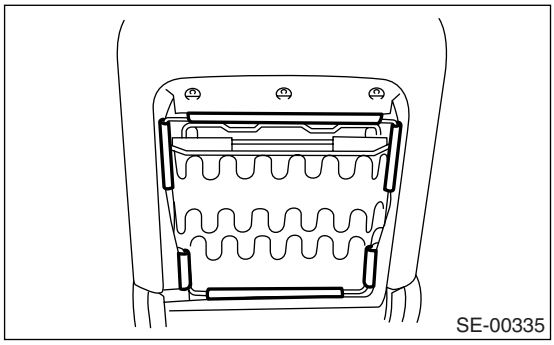

11) Remove the hog rings (A) in the side airbag module installation side.

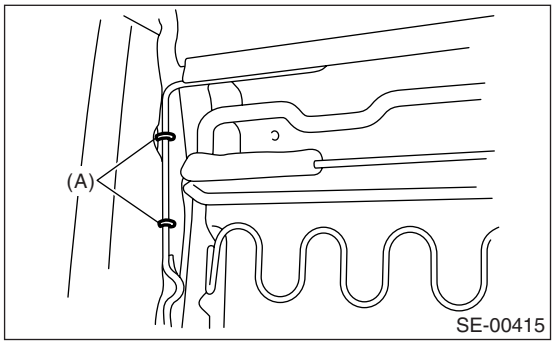

12) Remove the cover frame (A).

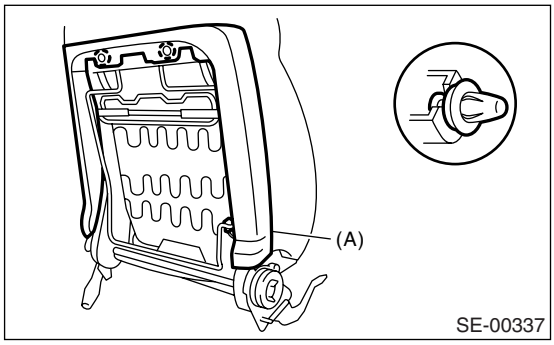

13) Remove the headrest lock bushing.

NOTE:
Push outside to remove it from the inside of seat.

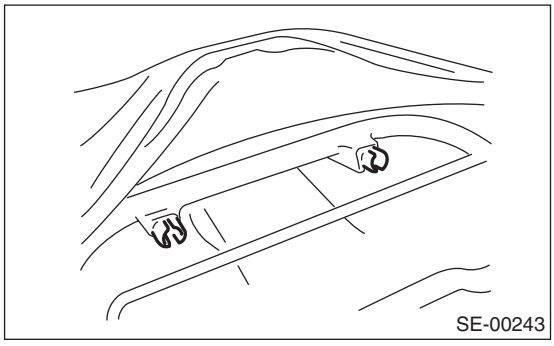

14) Pull out the backrest frame assembly.

15) Remove the hog rings (A) on the front side of backrest, and then remove the backrest cover from backrest.

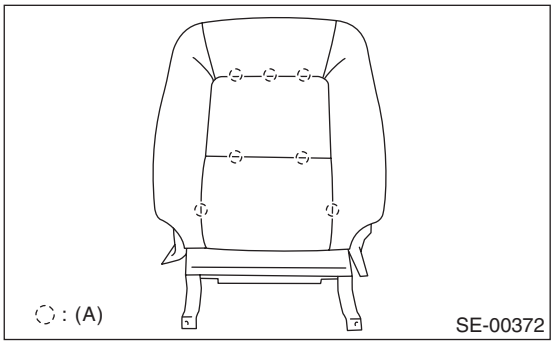

16) Remove the hooks (A), and then remove the seat cushion frame assembly.

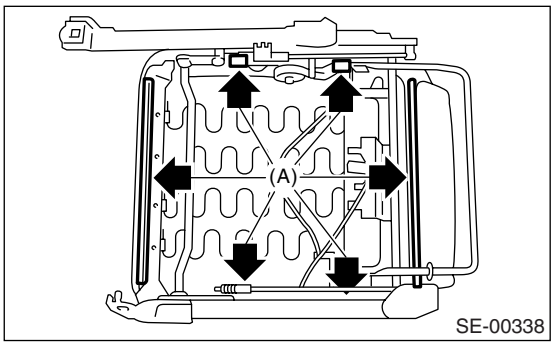

17) Remove the hog rings (A), and then remove the seat cushion cover from seat cushion pad.

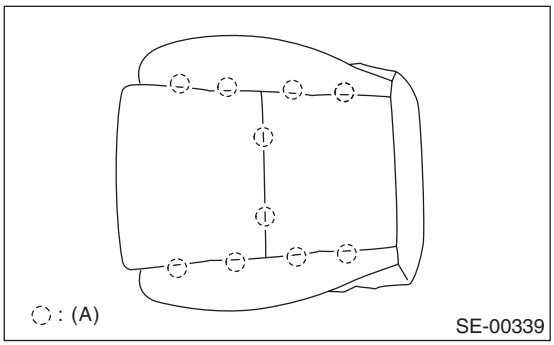

18) Remove the bolt of sliding adjustment bar and connecting wire.

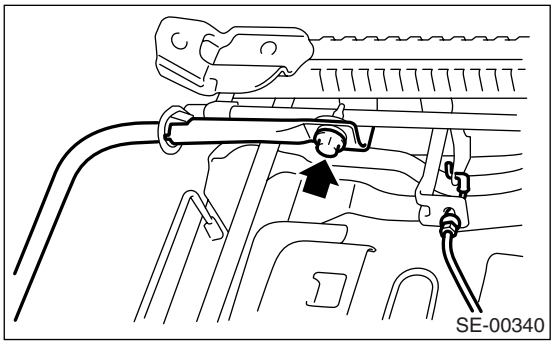

19) Remove the bolts, and then remove the slide rail.

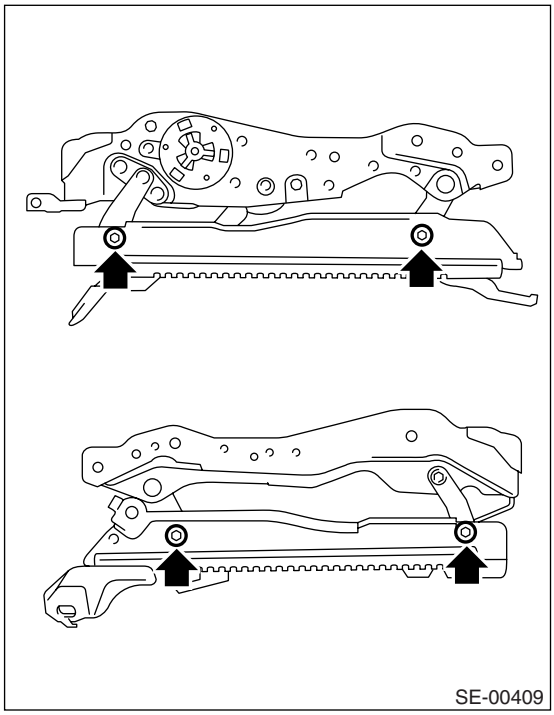

20) Remove the hooks and hog rings at the bottom of headrest, and then remove the headrest cover from headrest.

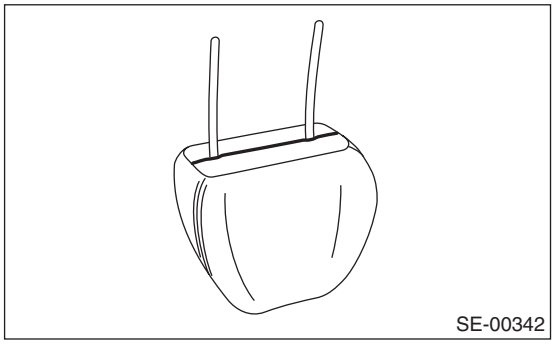

• POWER SEAT

1) Remove the seat from vehicle. <Ref. to SE-9, REMOVAL, Front Seat.>
2) Remove the seat switch knob.

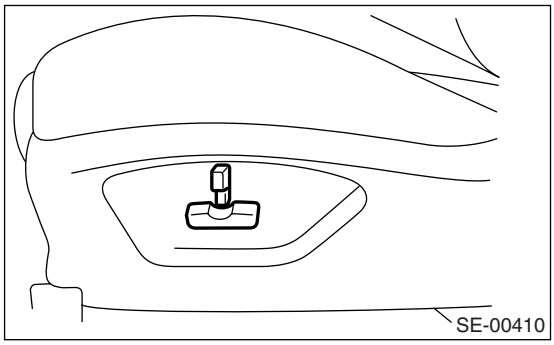

3) Disconnect the connector of reclining motor from the back of seat cushion.

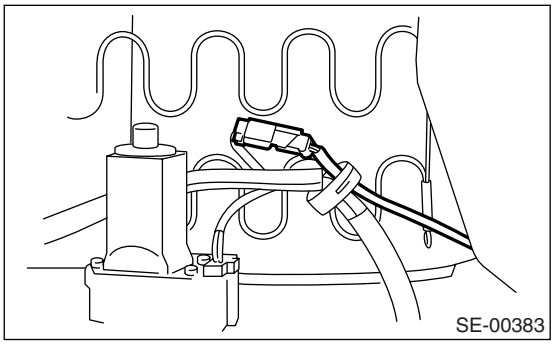

4) Remove the screw (A) and clips (B), and then disconnect the seat switch connector to remove seat side cover outside.

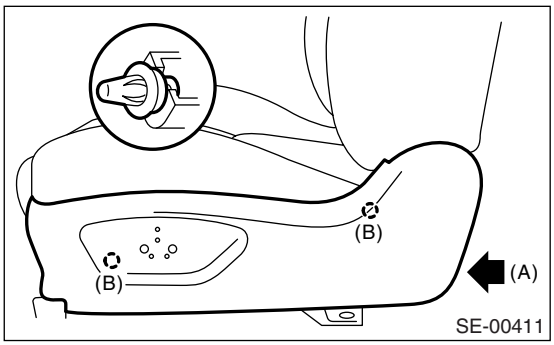

5) Remove the screw (A) and clip (B), and then remove the seat side cover inside.

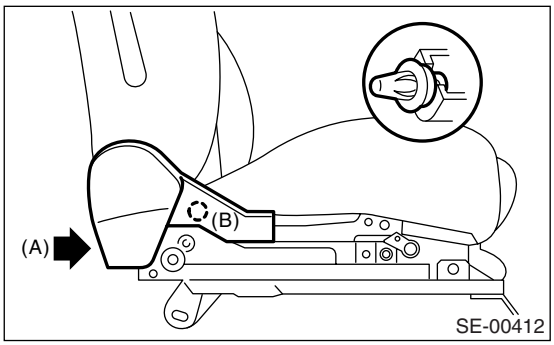

6) Remove the TORX® bolt, and then remove the inner seat belt assembly.

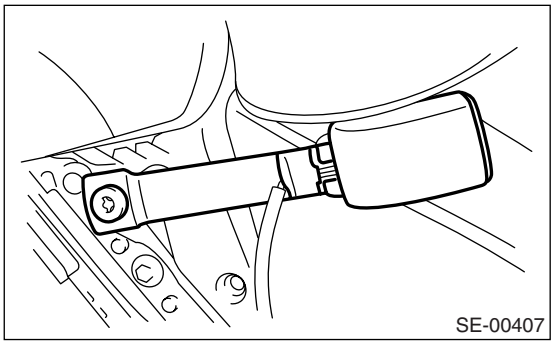

7) Remove the two bolts from the reclining hinge on each left and right side.

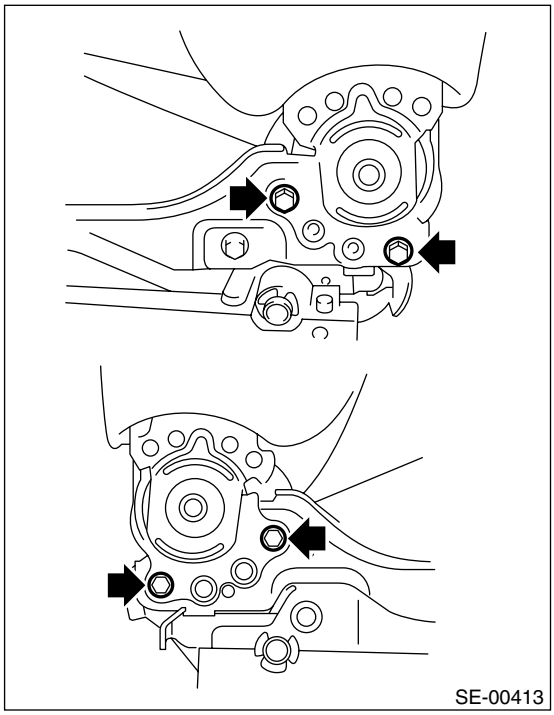
SE-00413

8) Remove the clips and hooks, and then detach the backrest back cover.

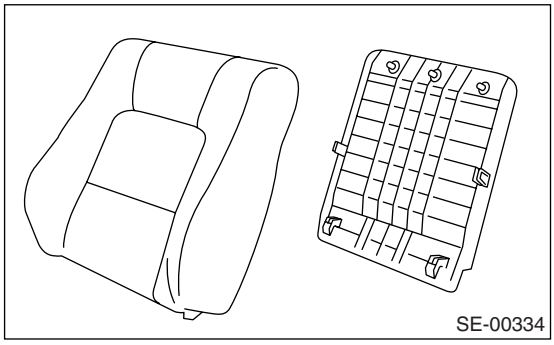
SE-00334

9) Remove the lock clip, and then remove the lumber support lever.

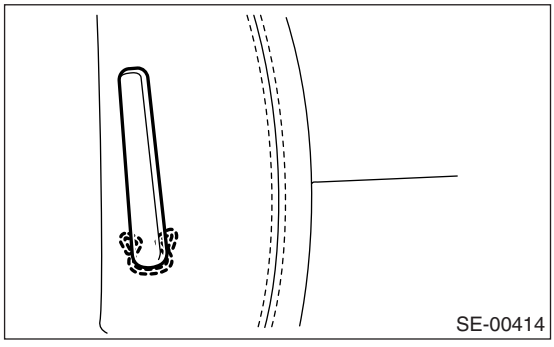
SE-00414

10) Remove the hooks at the rear side of backrest.

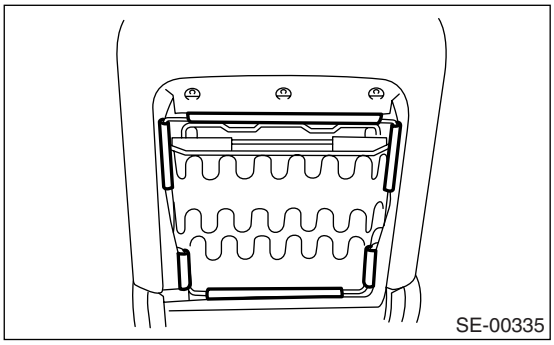
SE-00335

11) Remove the hog rings (A) in the side airbag module installation side.

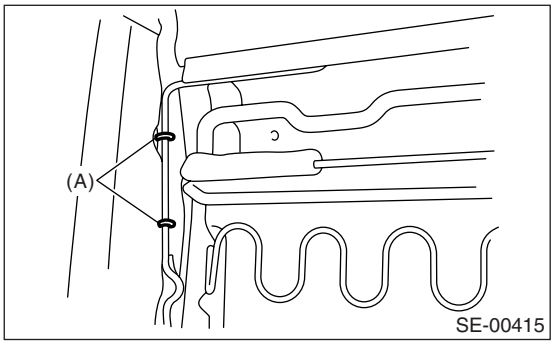

SE-00415

12) Remove the cover frame (A).

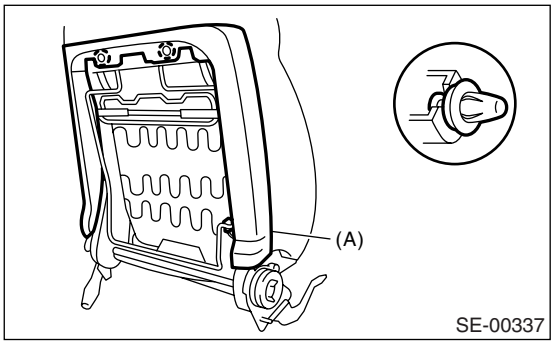

SE-00337

13) Remove the headrest lock bushing.

NOTE:
Push outside to remove it from the inside of seat.

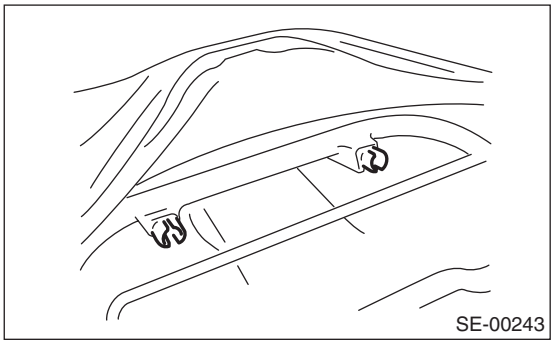
SE-00243

14) Pull out the backrest frame assembly.

15) Remove the two bolts on each left and right side, and then remove the reclining motor assembly.

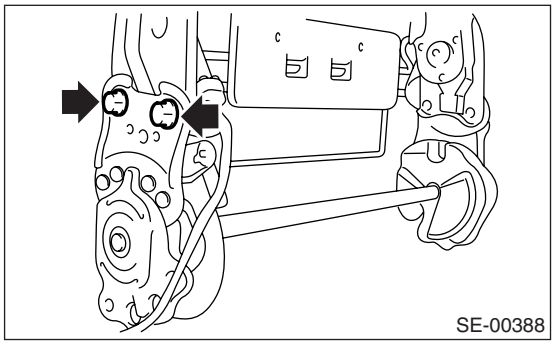

16) Remove the hog rings (A) on the front side of backrest, and then remove the backrest cover from backrest.

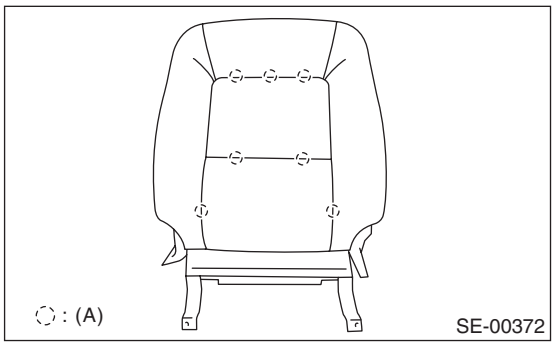

17) Remove the clip (A) and straps (B) on the back of seat cushion.

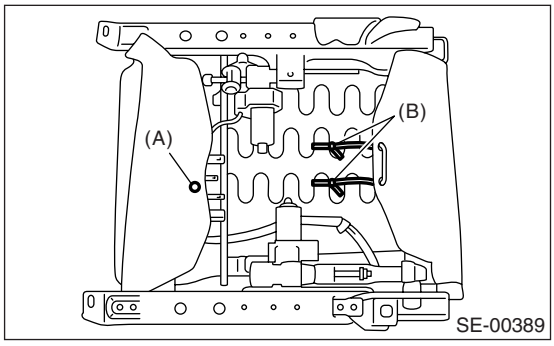

18) Remove the bolt (A) and hook (B) on left and right side, and then remove the seat cushion frame from seat rail assembly.

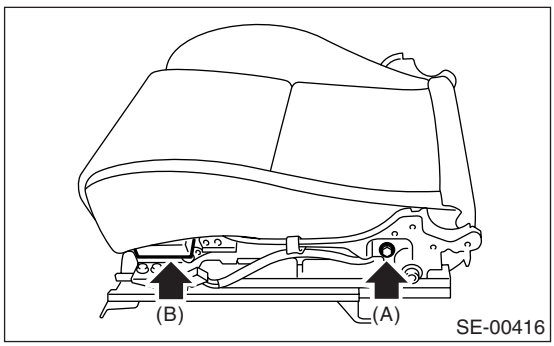

19) Remove the hooks (A), and then remove the seat cushion from seat cushion frame.

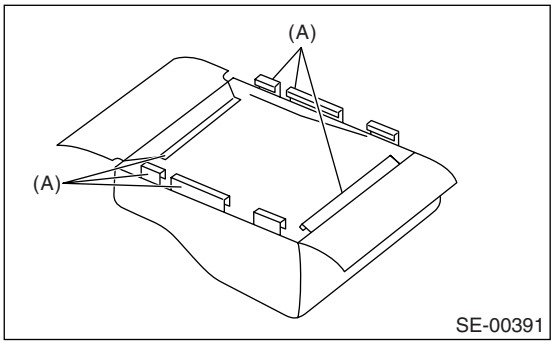

20) Remove the hog rings (A), and then remove the seat cushion cover from seat cushion pad.

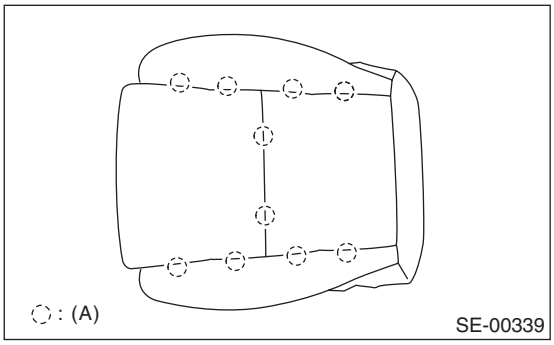

21) Remove the hooks and hog rings at the bottom of headrest, and then remove the headrest cover from headrest.

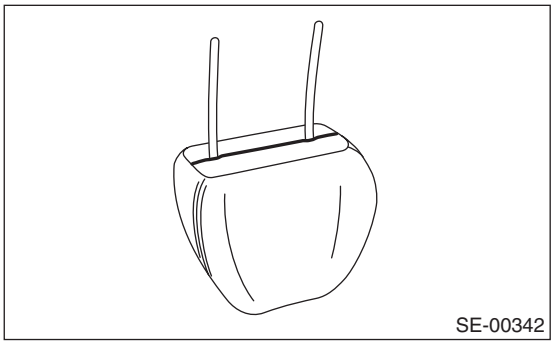

2. PASSENGER'S SEAT

• MANUAL SEAT

CAUTION:

• Never disassemble the seat cushion frame assembly and slide rail, remove the occupant detection control module and each load cell sensor, or disconnect the harness connector, since the occupant detection control module, each load cell sensor and harness of occupant detection system (passenger's seat only) are installed as seat frame assembly.

• If performing the removal of backrest, read the data of load cell sensor using Subaru Select Monitor before removing seat. <Ref. to OD(diag)-12, SENSOR DATA OUTPUT, OPERATION, Subaru Select Monitor.>

1) Remove the seat from vehicle.
2) Remove the reclining lever cover.

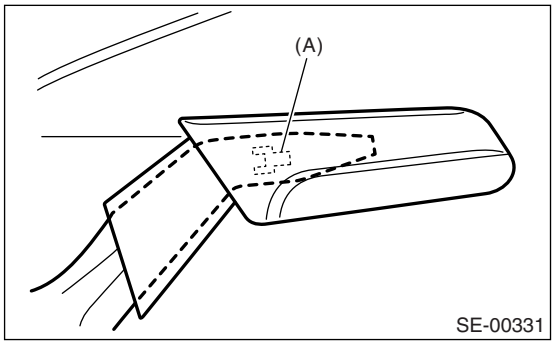

3) Remove the screw (A), clip (B) and claw (C), and then remove the seat side cover outside.

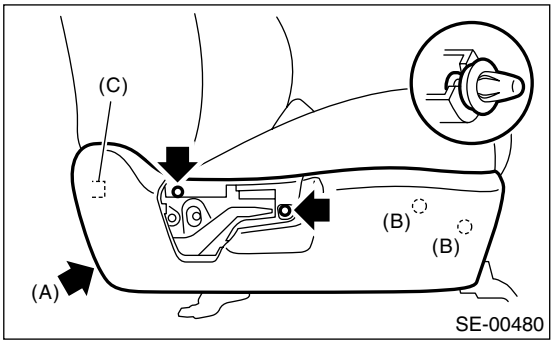

4) Remove the screw (A) and claw (B), and remove the seat side cover inside.

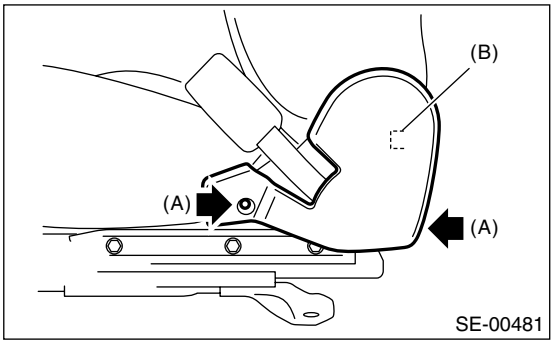

5) Remove the TORX® bolt to remove inner seat belt assembly.

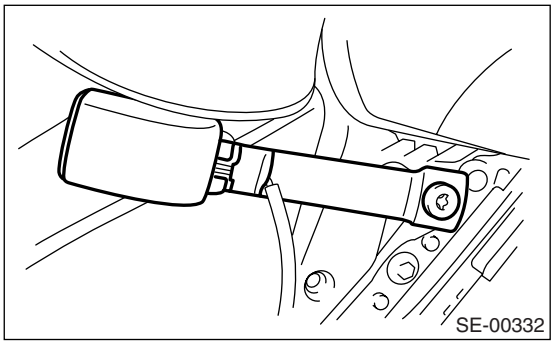

6) Remove the two reclining hinge bolts from each RH and LR side.

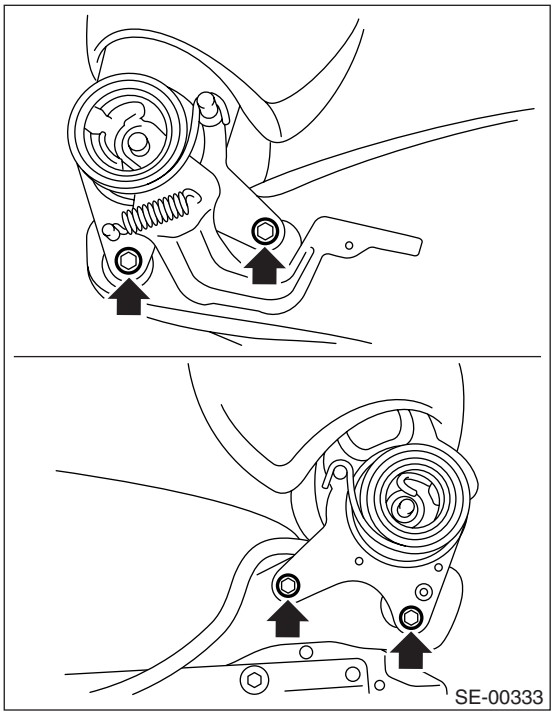

7) Remove the seat cushion pad and cover from seat cushion frame assembly.

CAUTION:
Never disassemble the seat cushion frame assembly and slide rail, remove the occupant detection control module and each load cell sensor, or disconnect the harness connector, since the occupant detection control module, each load cell sensor and harness of occupant detection system (passenger's seat only) are installed as seat frame assembly.

8) Remove the hog rings (A), and then remove the seat cushion cover from seat cushion pad.

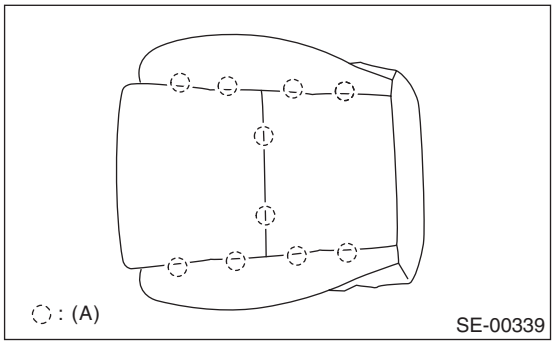

9) Refer to “DRIVER’S SEAT” for disassembly procedure of backrest and headrest.

• POWER SEAT

CAUTION:

• Never disassemble the seat cushion frame assembly and slide rail, remove the occupant detection control module and each load cell sensor, or disconnect the harness connector, since the occupant detection control module, each load cell sensor and harness of occupant detection system (passenger’s seat only) are installed as seat frame assembly.

• If performing the removal of backrest, read the data of load cell sensor using Subaru Select Monitor before removing seat. <Ref. to OD(diag)-12, SENSOR DATA OUTPUT, OPERATION, Subaru Select Monitor.>

1) Remove the seat from vehicle.

2) Remove the screw (A), clip (B) and claw (C), disconnect the connector of power seat switch, and then remove the seat side cover outside.

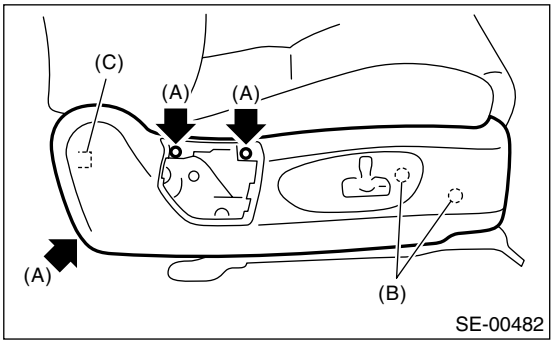

3) Loosen the screw to remove seat side cover inside.

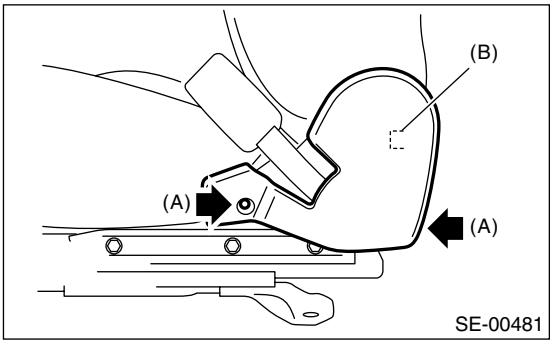

4) Remove the TORX® bolt to remove inner seat belt assembly.

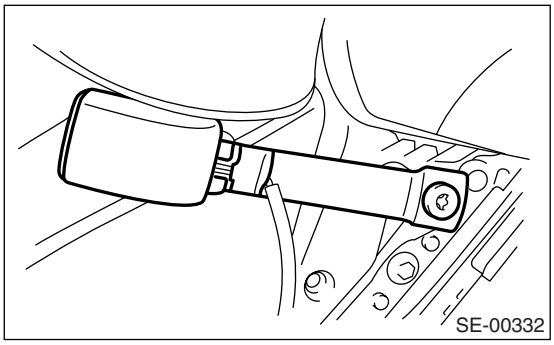

5) Remove the two reclining hinge bolts from each RH and LH side.

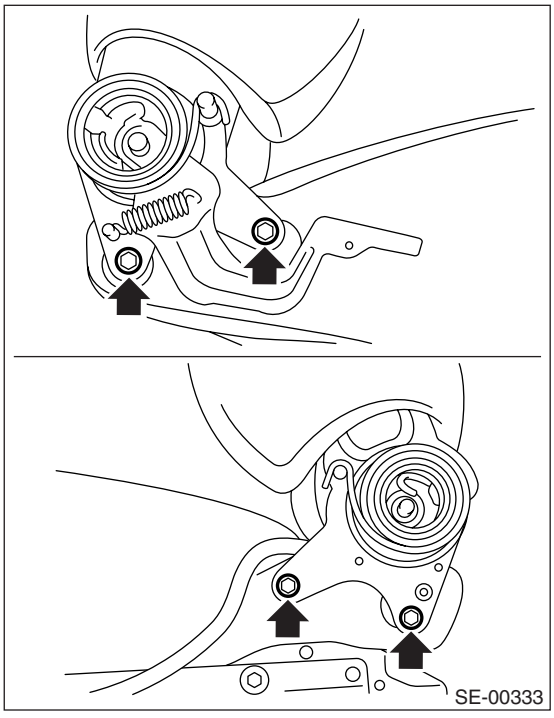

6) Remove the seat cushion pad and cover from seat cushion frame assembly.

CAUTION:
Never disassemble the seat cushion frame assembly and slide rail, remove the occupant detection control module and each load cell sensor, or disconnect the harness connector, since the occupant detection control module, each load cell sensor and harness of occupant detection system (passenger's seat only) are installed as seat frame assembly.

7) Remove the hog rings (A), and then remove the seat cushion cover from seat cushion pad.

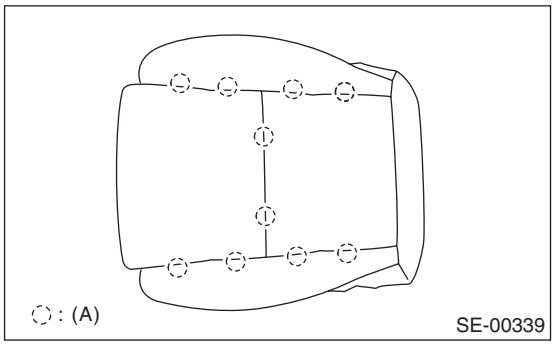

8) Refer to "DRIVER'S SEAT" for disassembly procedure of backrest and headrest.

D: ASSEMBLY

CAUTION:
When the backrest cover is not installed securely, the side airbag module may not be deployed properly, therefore keep strictly to the following procedure.
• Be careful not to stain or damage the backrest cover during assembly.
• Always use new hog rings.
• Secure the hog ring using hog ring pliers.
• Install the hog rings to the specified points securely and make sure that no wrinkle or twisting on the backrest cover.

1. DRIVER'S SEAT

Assemble in the reverse order of disassembly.

NOTE:
• Install the inner seat belt in the procedure described in "Front Seat Belt". <Ref. to SB-11, INNER SEAT BELT ASSEMBLY, INSTALLATION, Front Seat Belt.>
• Install the backrest assembly and seat cushion assembly in the following procedure.

1) Temporarily tighten the four reclining hinge bolts.
2) Place the backrest in the most upright position. (For manual seat, ensure the reclining mechanism locked securely.)
3) Tighten the reclining hinge bolts (1) — (4) in two or three steps by gradually increasing the torque until they reach the specified torque.

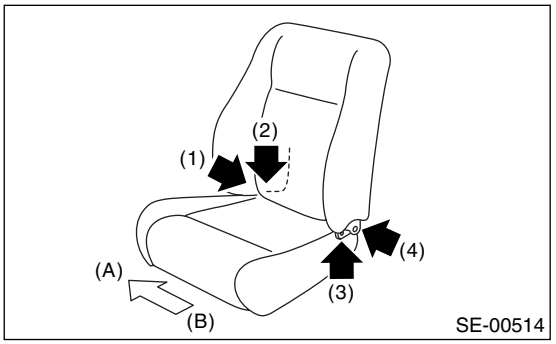

(A) Vehicle inside
(B) Vehicle outside

2. PASSENGER'S SEAT

Assemble in the reverse order of disassembly.
1) Assemble the seat cushion in the reverse order of disassembly.
2) Assemble the backrest in the reverse order of disassembly.
3) When assembling the backrest assembly to seat cushion assembly, fill the gap in the front side of slide rail LH and the back side of slide rail RH with cloth in order to make the seat cushion assembly stable.

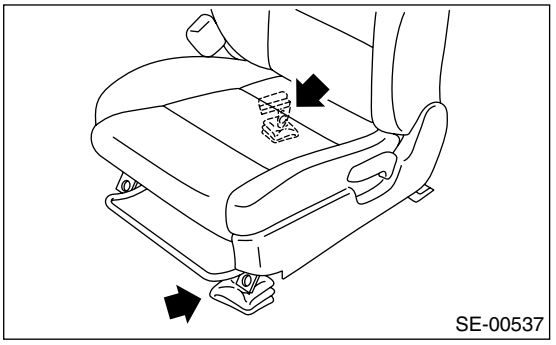

4) Temporarily tighten the reclining hinge bolt in the order of (1) — (4) but not to secure the seat back assembly.

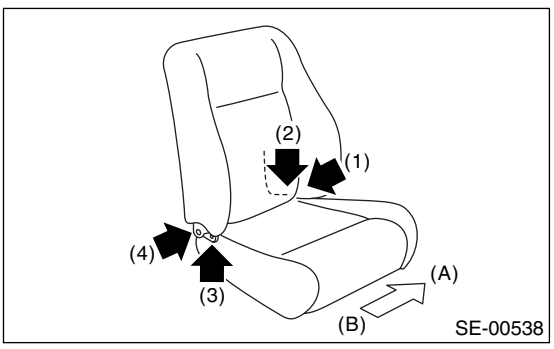

(A) Vehicle inside
(B) Vehicle outside

5) Operate the reclining lever to place the backrest in the most upright position, and check the first lock of recliner.
6) Hold the seat cushion assembly securely, tighten the reclining hinge bolt to the specified torque in the order above.

CAUTION:
Do not touch the backrest assembly when tightening the reclining hinge bolt.

7) Assemble each harnesses, inner belt assembly and each covers in the reverse order of removal.

Tightening torque:
Refer to "COMPONENT" of "General Description". <Ref. to SE-2, COMPONENT, General Description.>

E: INSPECTION

Check that no tear or fray on the backrest cover and seat cushion cover.

NOTE:
When the door side of backrest cover is torn or frayed, the side airbag may not be deployed properly. Replace it with new one in such a case.

3. Rear Seat

A: REMOVAL

1. SEDAN MODEL

1) Remove the two hooks while lifting up the rear seat cushion.

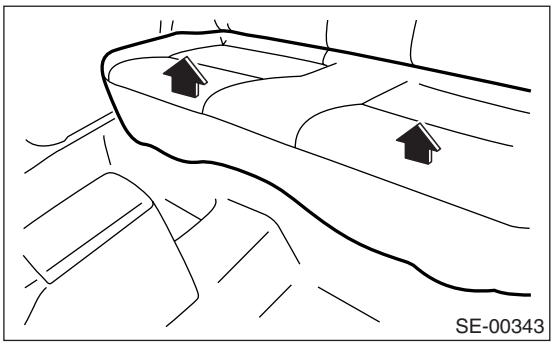

2) Remove the hook (A) by pushing it backward while lifting up the front side of seat cushion to detach seat cushion.

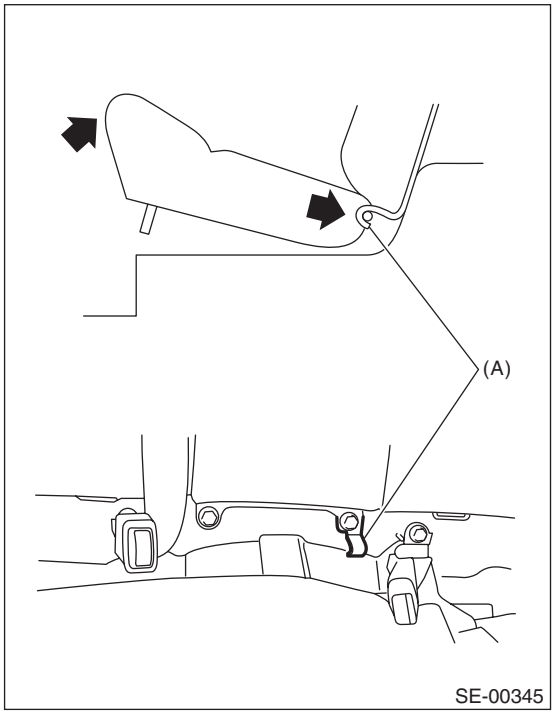

3) Remove the lower anchor bolt of rear center seat belt.

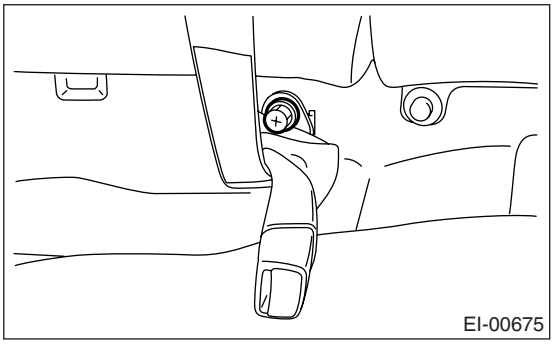

4) Remove the bolts which secure the bottom of backrest.

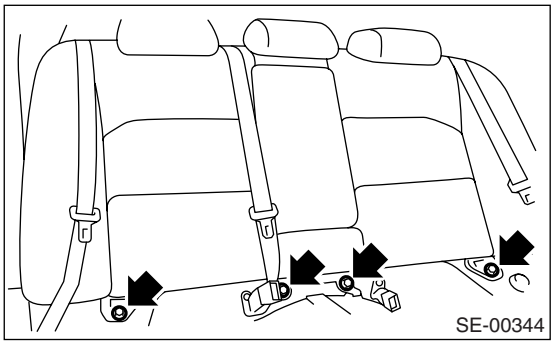

5) Remove the anchor part on backrest side from the hook on body side (A) while lifting up the backrest to detach it from vehicle.

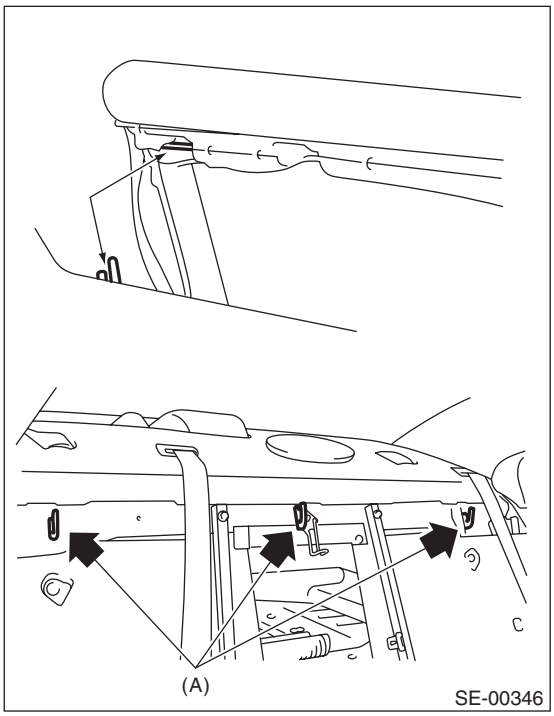

2. WAGON MODEL

1) Disconnect the ground cable from battery.
2) Remove the two hooks while lifting up the rear seat cushion.

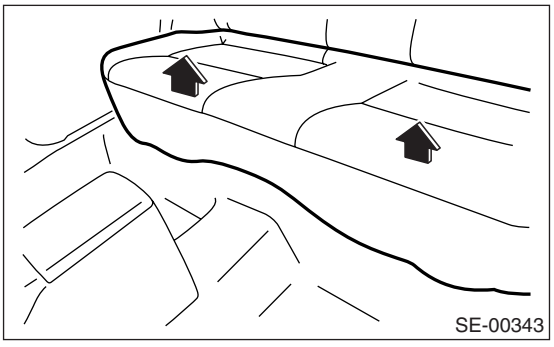

3) Remove the hook (A) by pushing it backward while lifting up the front side of seat cushion to detach seat cushion.

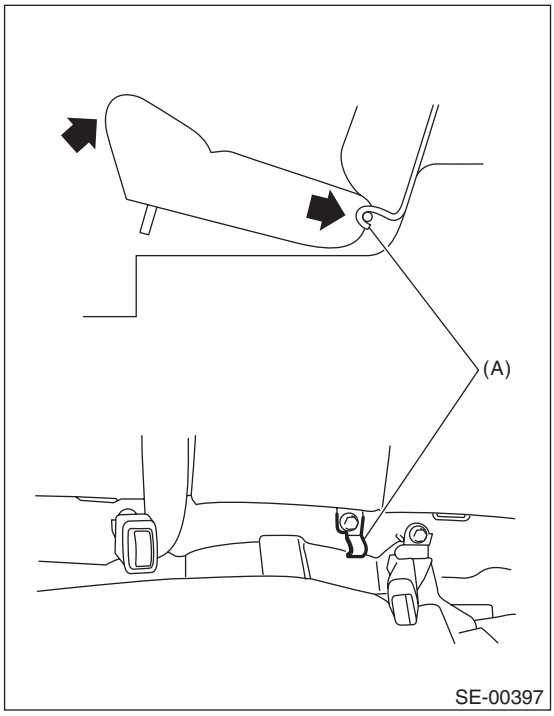

4) Remove the headrest, and then tilt the backrest forward.
5) Remove the luggage floor box. <Ref. to EI-73, REMOVAL, Luggage Floor Box.>
6) Remove the hinge assembly center bolts.

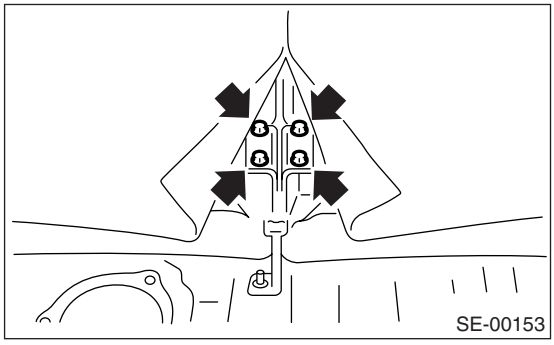

7) Remove the backrest from hinge assembly LH (hinge assembly RH).

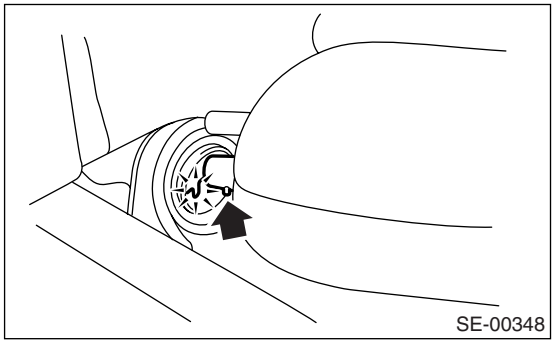

NOTE:
The backrest cannot be detached when the hinge assembly side does not mate with the backrest pin position.

8) Remove the lower anchor bolt (A) of outer seat belt and backrest shoulder bolt (B).

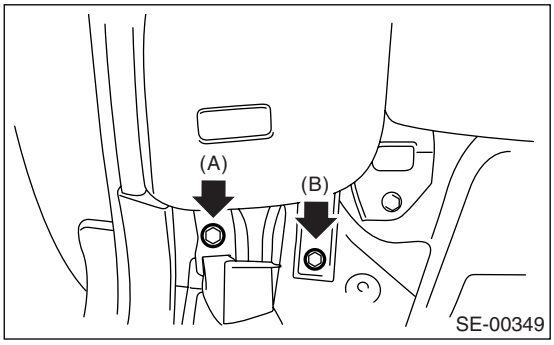

9) Remove the backrest shoulder with lifting it up.

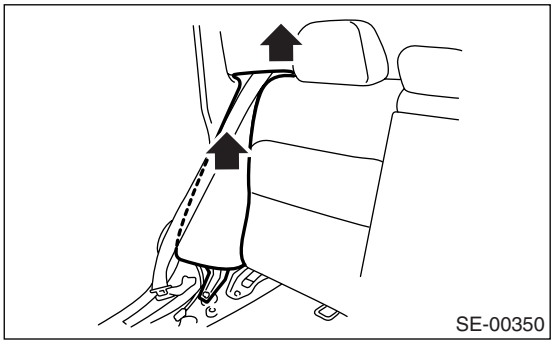

10) Remove the belt cover (A) from backrest shoulder cover, and then pull out the seat belt.

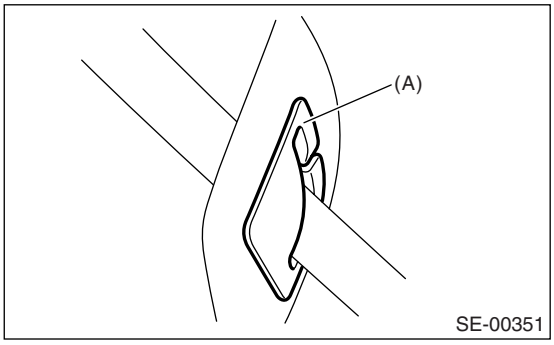

B: INSTALLATION

1. SEDAN MODEL

Install in the reverse order of removal.

NOTE:
• After installing the backrest, make sure that each seat belt operates normally.
• Make sure that they are secured on each hook of vehicle side.

Tightening torque:
Refer to "COMPONENT" of "General Description". <Ref. to SE-6, REAR SEAT (SEDAN MODEL), COMPONENT, General Description.>

2. WAGON MODEL

Install in the reverse order of removal.

NOTE:
• After installing the backrest, make sure that each seat belt operates normally.
• Make sure that they are secured on each hook of vehicle side.

Tightening torque:
Refer to "COMPONENT" of "General Description". <Ref. to SE-7, REAR SEAT (WAGON MODEL), COMPONENT, General Description.>

C: DISASSEMBLY

1. SEDAN MODEL

1) Remove the rear seat. <Ref. to SE-20, SEDAN MODEL, REMOVAL, Rear Seat.>
2) Remove the headrest.
3) Remove the nuts, and then detach the trunk through assembly.

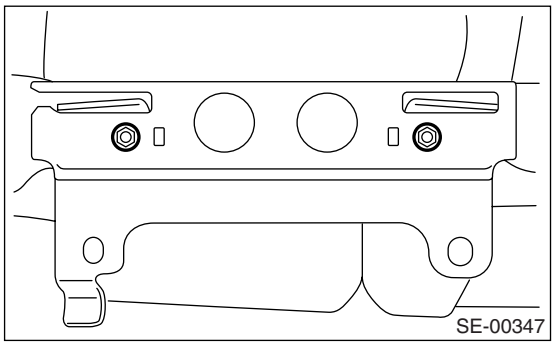

4) Remove the hog rings (A) on the rear side of backrest.

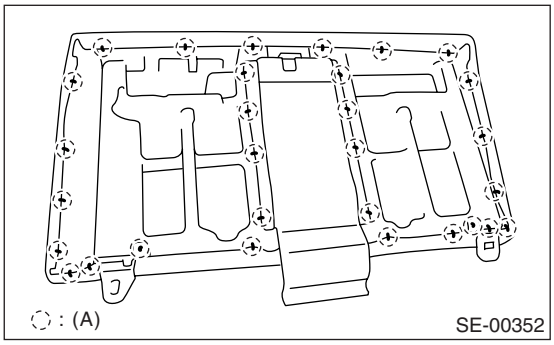

5) Remove the hog rings (A) on the front side of backrest.

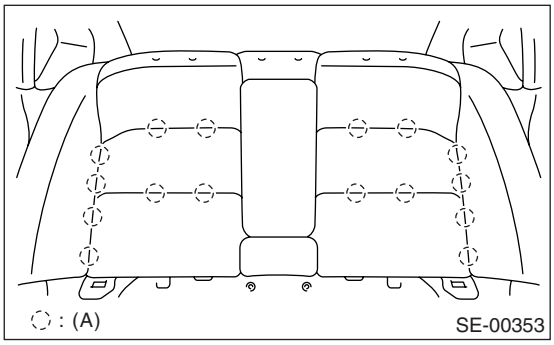

6) Remove both sides of armrest hinge covers, and loosen the screws to remove armrest.

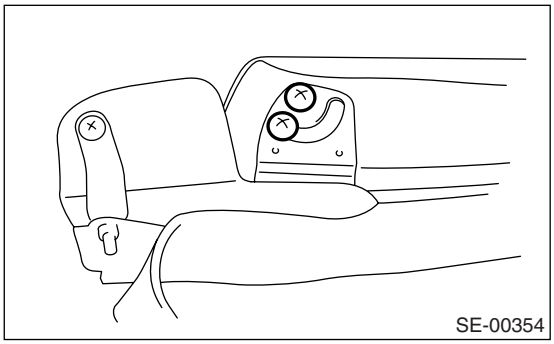

7) Remove the hook, and then detach the center through cover.

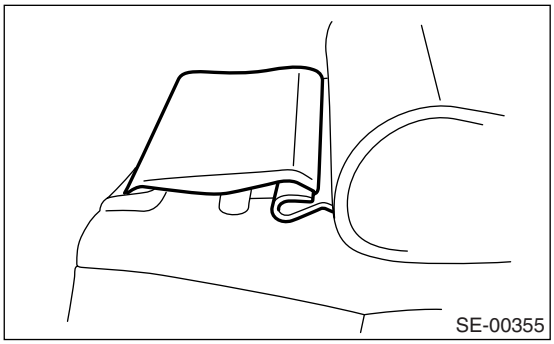

8) Remove the hook, and then remove the armrest cover.

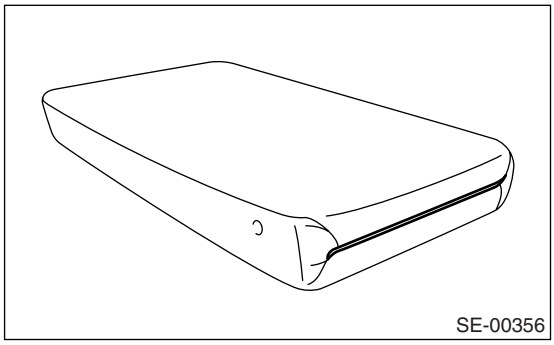

9) Remove the hook and hog ring, and then remove the headrest cover.

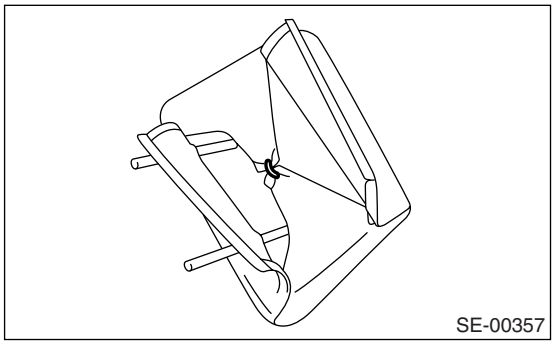

10) Remove the hog rings (A) on the rear side of seat cushion.

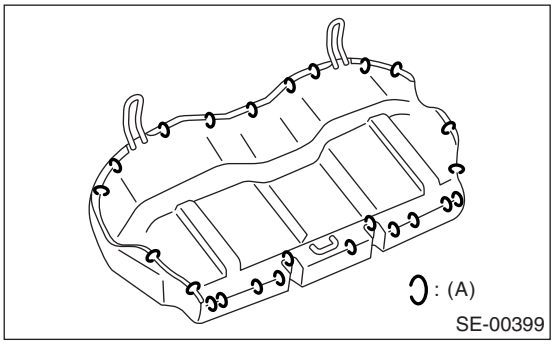

11) Remove the hog rings (A), and then remove the seat cushion cover.

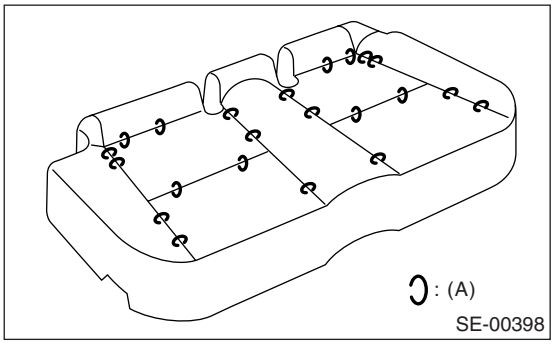

2. WAGON MODEL

1) Remove the rear seat. <Ref. to SE-20, WAGON MODEL, REMOVAL, Rear Seat.>

2) Remove the hooks at the bottom of backrest assembly LH, and then turn over the backrest cover to remove the hog rings (A) and hooks (B).

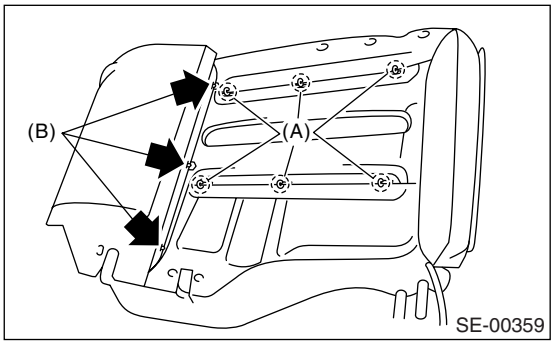

3) Remove the hog rings (A) on the front side of backrest, and then remove the backrest cover.

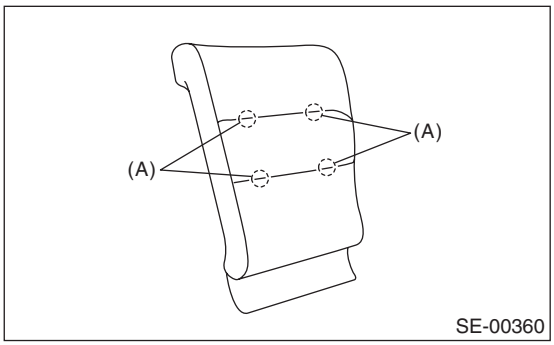

4) Remove the bolts, and then remove the backrest latch.

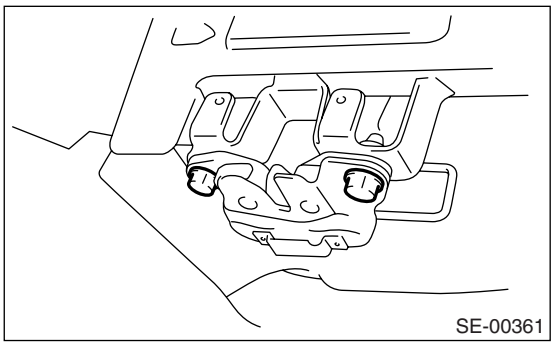

5) Loosen the screws to remove the armrest from backrest assembly RH.

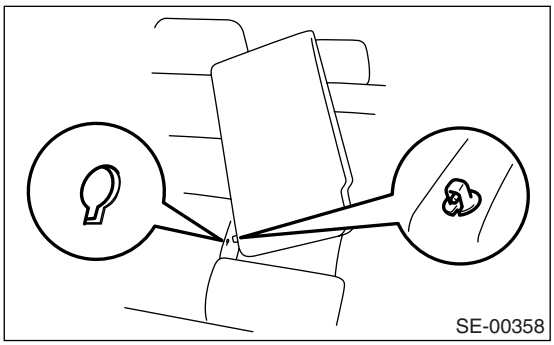

NOTE:
Armrest cannot be removed when backrest assembly RH side does not mate with armrest side pin position.

6) After this operation, refer to the step 2) to disassemble backrest assembly RH.
7) Remove the hook, and then remove the armrest cover.

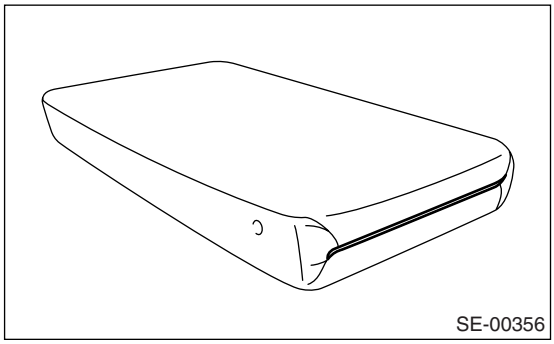
SE-00356

8) Remove the hook and hog ring, and then remove the headrest cover.

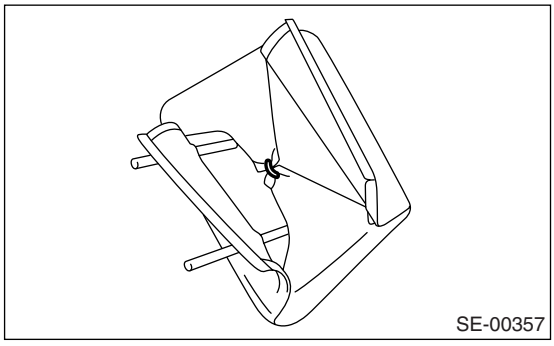
SE-00357

9) Remove the hog rings (A) on the rear side of seat cushion.

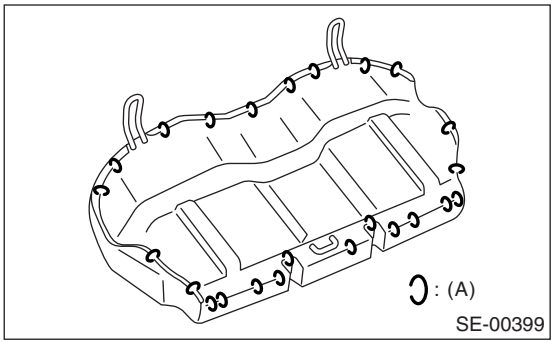

SE-00399

10) Remove the hog rings (A), and then remove the seat cushion cover.

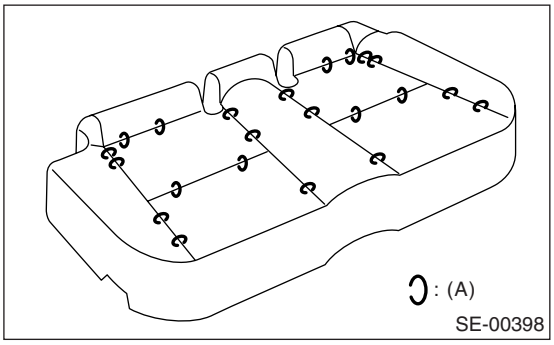

SE-00398

D: ASSEMBLY

Assemble in the reverse order of disassembly.

NOTE:
- Do not contaminate or damage the cover.
- While installing the hog rings, prevent the seat from getting wrinkled.

CAUTION:
- **Always use new hog rings.**
- **Secure the hog ring using hog ring pliers.**
- **Install the hog rings to the specified points securely and be sure to prevent backrest cover from wrinkle or twisting.**

E: INSPECTION

Check that no tear or fray on the seat cover.

4. Seat Heater System

A: REMOVAL

1. SEAT HEATER UNIT

1) Remove the front seats. <Ref. to SE-9, REMOVAL, Front Seat.>
2) Remove the backrest cover and seat cushion cover of front seat. <Ref. to SE-10, DISASSEMBLY, Front Seat.>
3) Remove the hog ring, and then remove the seat heater unit.

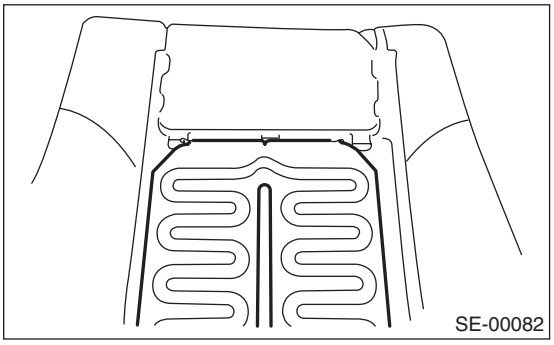

2. SEAT HEATER SWITCH

1) Remove the console box. <Ref. to EI-53, REMOVAL, Console Box.>
2) Remove the seat heater switch from console box.

B: INSTALLATION

Install in the reverse order of removal.

C: INSPECTION

1. WIRING DIAGRAM

<Ref. to WI-138, WIRING DIAGRAM, Power Seat System.>

2. SEAT HEATER UNIT

Disconnect the seat heater unit connector, and check the continuity between terminals of connector.

Connector & terminal
No. 1 — No. 3:
No. 1 — No. 4:
No. 3 — No. 4:

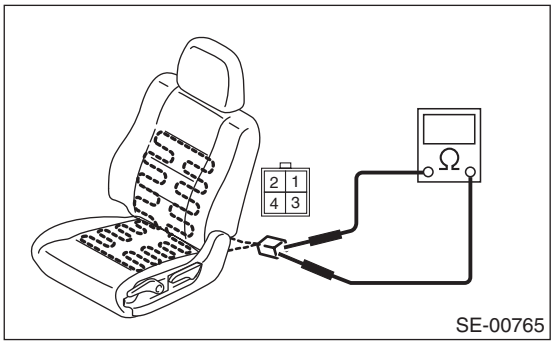

If no continuity exists, replace the seat heater unit with a new part.

3. SEAT HEATER SWITCH

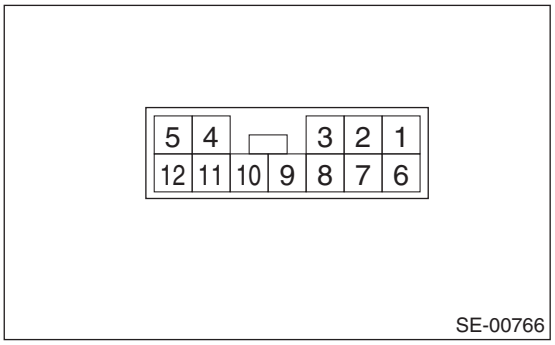

• CHECK THERMISTOR OUTPUT VOLTAGE

1) Connect the battery to the connector.
Connector terminals No. 12 (+):
2) Measure the voltage between connector and chassis ground.

Connector & terminal:
LHD side seat
(C2) No. 8 (+) — Chassis ground (–):
RHD side seat
(C2) No. 6 (+) — Chassis ground (–):

If voltage is not 1.5 V or more, replace the seat heater switch.

• CHECK SWITCH OUTPUT VOLTAGE

1) Connect the battery to the connector.
Connector terminals No. 12 (+):
2) Measure the voltage between connector and chassis ground when turning the switch to other than OFF position.

Connector & terminal:
LHD side seat
(C2) No. 11 (+) — Chassis ground (–):
RHD side seat
(C2) No. 7 (+) — Chassis ground (–):

If voltage does not change from 10 V or more to zero, replace the seat heater switch.

SECURITY AND LOCKS

SL

		Page
1.	General Description	2
2.	Door Lock Control System	7
3.	Keyless Entry System	10
4.	Security System	24
5.	Front Inner Remote	33
6.	Front Outer Handle	34
7.	Front Door Latch & Door Lock Actuator Assembly	35
8.	Front Door Lock Actuator	36
9.	Rear Inner Remote	37
10.	Rear Outer Handle	38
11.	Rear Door Latch & Door Lock Actuator Assembly	39
12.	Rear Door Lock Actuator	40
13.	Rear Gate Outer Handle	41
14.	Rear Gate Latch Assembly	42
15.	Trunk Lid Lock Assembly	43
16.	TrunkLid Release Handle	44
17.	Front Hood Lock Assembly	45
18.	Remote Openers	46
19.	Ignition Key Lock	48
20.	Key Lock Cylinders	49
21.	Security Control Unit	50
22.	Impact Sensor	51
23.	Keyless Entry Control Unit	52
24.	Keyless Buzzer	53
25.	Body Integrated Unit	54
26.	Transmitter	55
27.	Immobilizer Control Unit	56
28.	Immobilizer Antenna	57

1. General Description

A: COMPONENT

1. DOOR LOCK ASSEMBLY

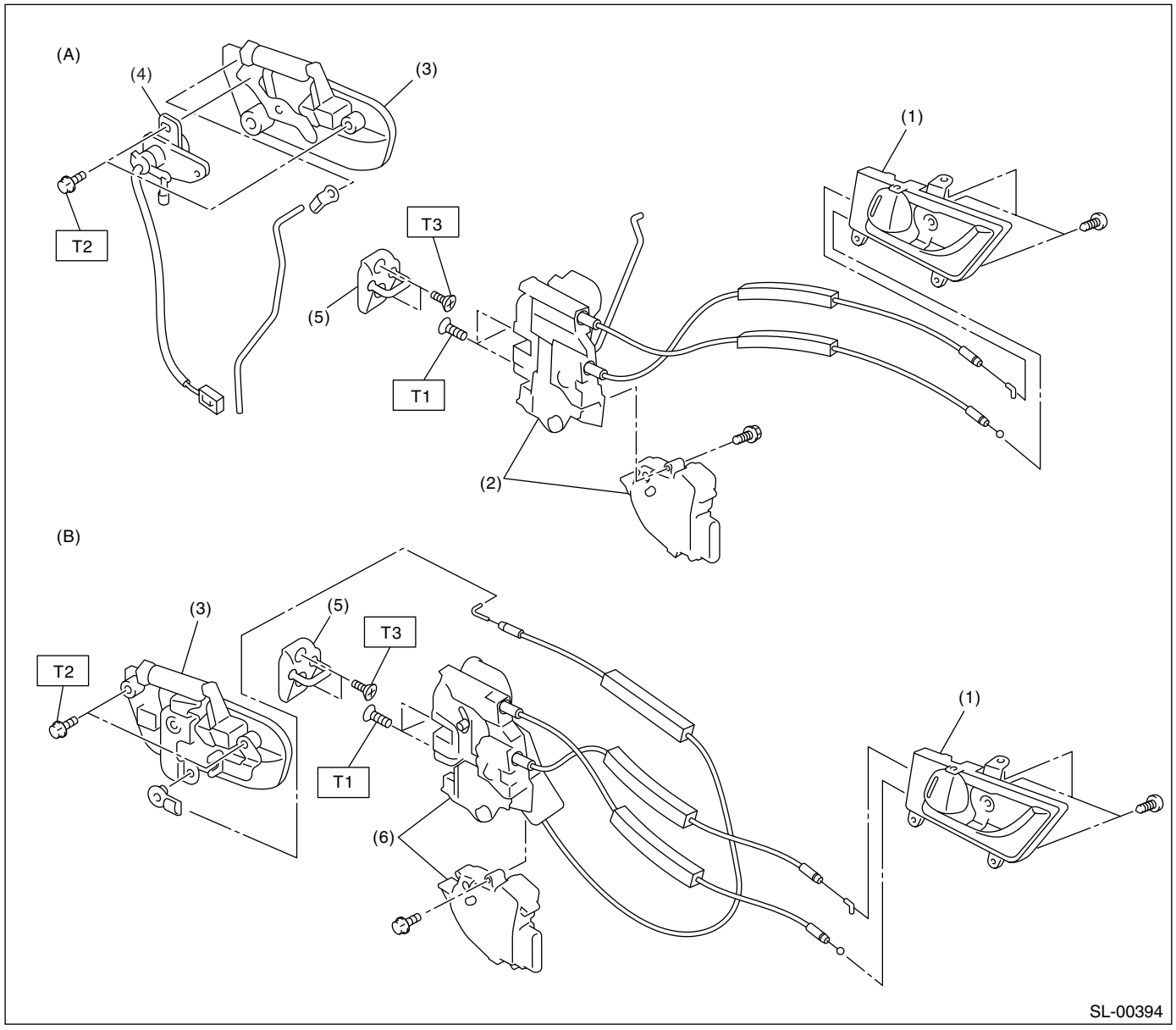

(A) Front
(B) Rear

(1) Inner remote ASSY
(2) Front door latch & door lock actuator ASSY
(3) Door outer handle
(4) Key cylinder (switch)
(5) Striker
(6) Rear door latch & door lock actuator ASSY

Tightening torque: N·m (kgf-m, ft-lb)
T1: 6.5 (0.66, 4.8)
T2: 7.5 (0.76, 5.5)
T3: 18 (1.8, 13.3)

2. TRUNK LID AND REAR GATE LOCK

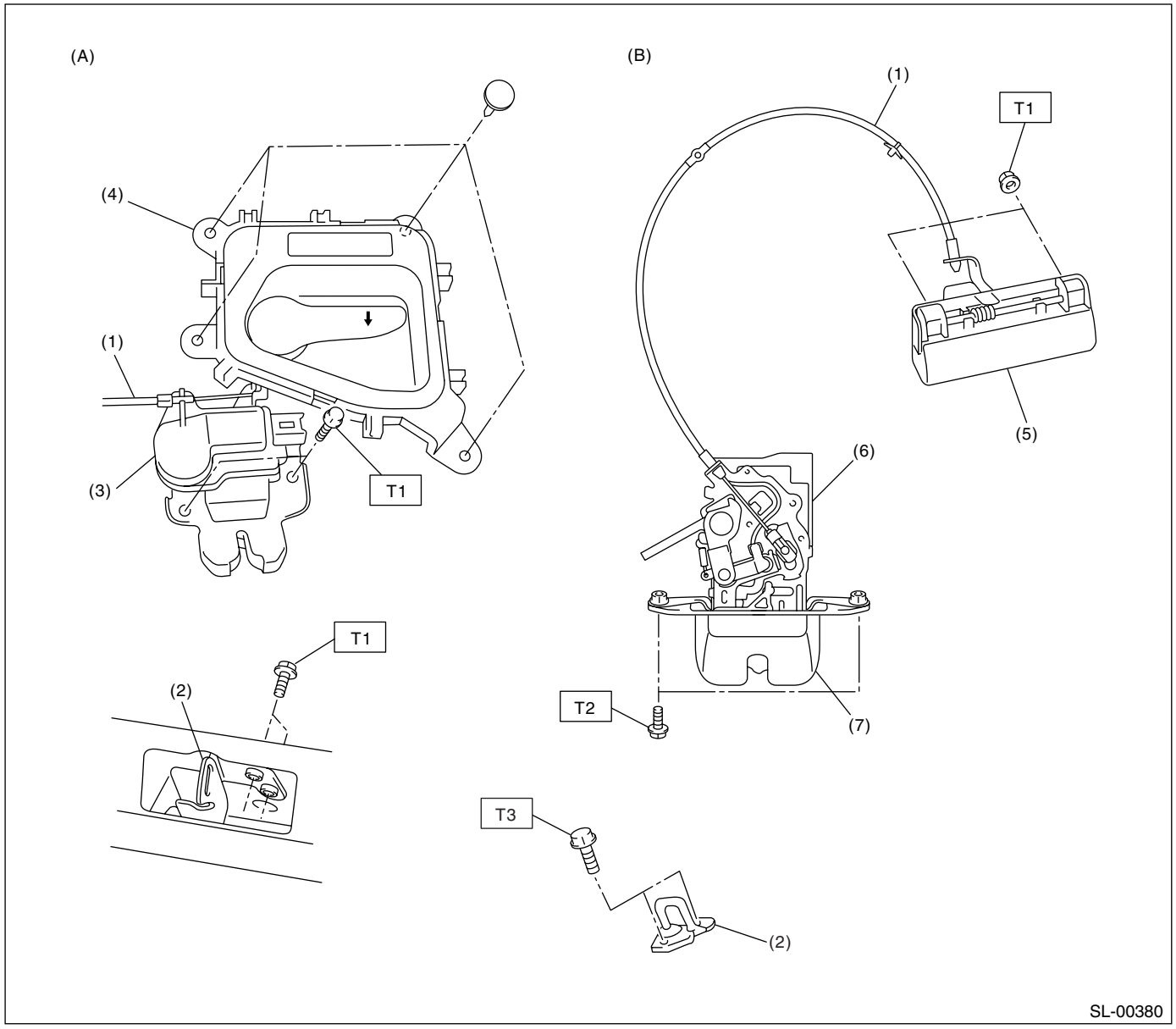

(A) Trunk
(B) Rear gate

(1) Cable
(2) Striker
(3) Trunk lid lock ASSY
(4) Trunk lid release handle
(5) Rear gate outer handle
(6) Rear gate actuator
(7) Rear gate latch

Tightening torque: N·m (kgf-m, ft-lb)
T1: 7.5 (0.76, 5.5)
T2: 18 (1.8, 13.3)
T3: 25 (2.5, 18.4)

3. FRONT HOOD LOCK AND REMOTE OPENERS

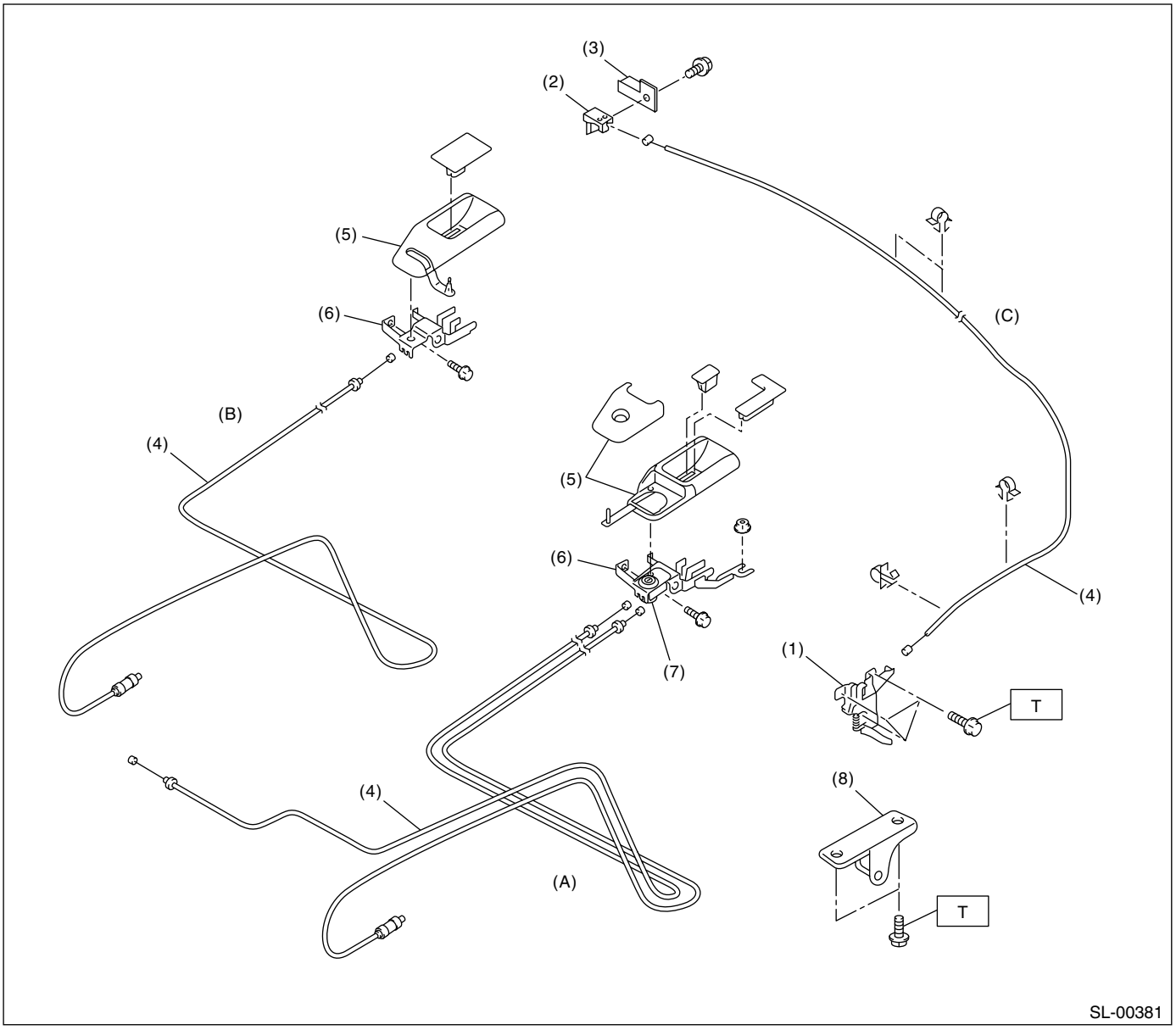

(A) Sedan model
(B) Wagon model
(C) Hood

(1) Front hood lock ASSY
(2) Lever ASSY
(3) Lever ASSY bracket
(4) Cable
(5) Cover
(6) Pull handle ASSY
(7) Key cylinder
(8) Striker

Tightening torque: N·m (kgf-m, ft-lb)
T: 33 (3.36, 24.2)

4. IMMOBILIZER SYSTEM

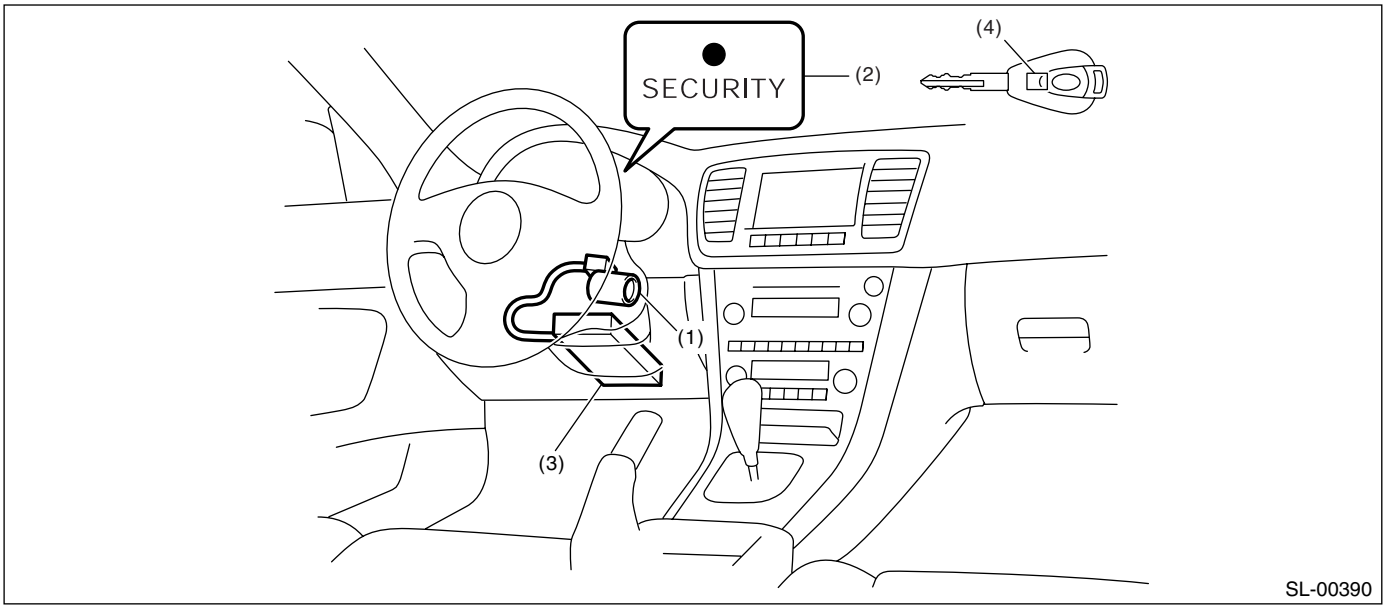

(1) Antenna
(2) Security indicator light (LED bulb)
(3) Body integrated unit
(4) Transponder

5. KEYLESS ENTRY SYSTEM

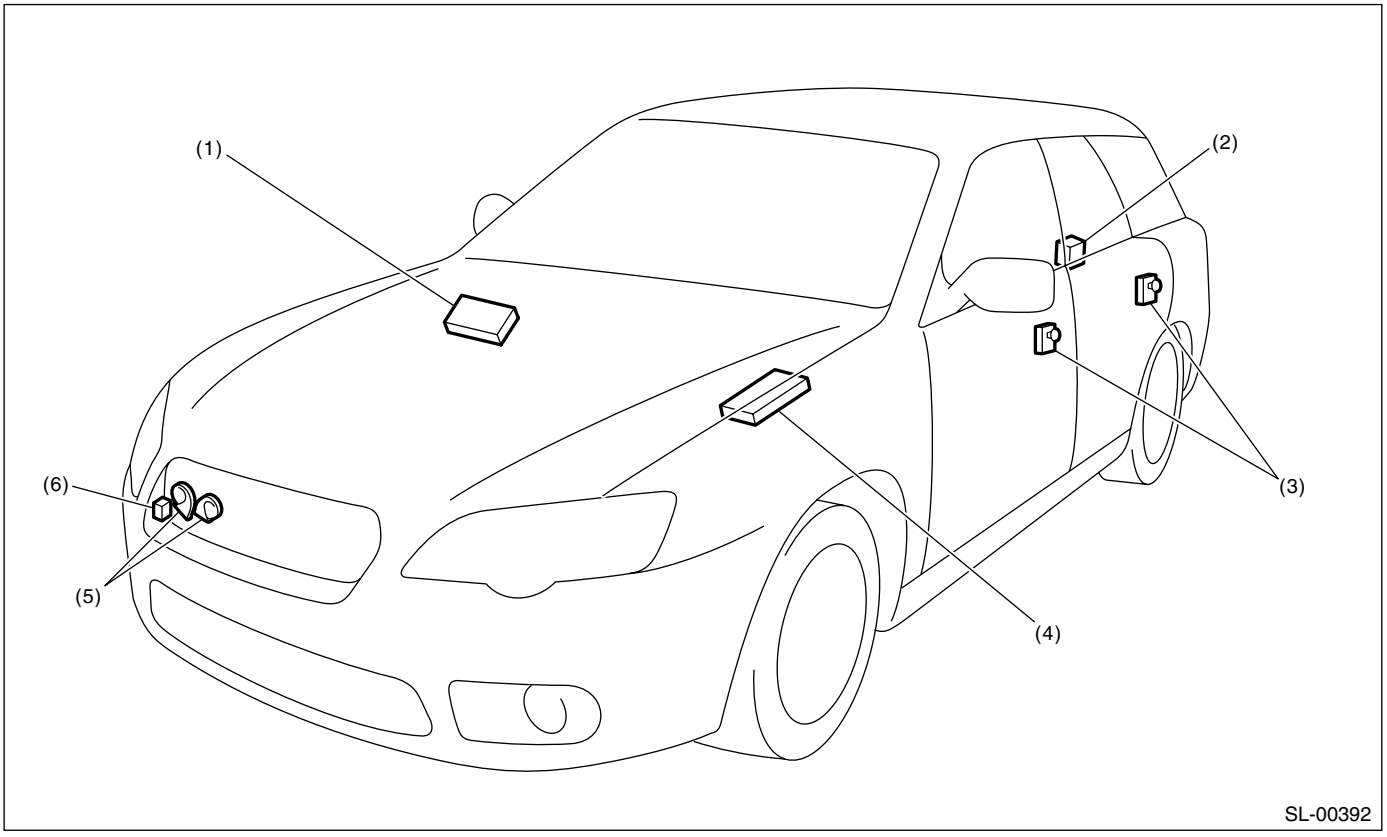

(1) Keyless entry control module
(2) Rear gate latch switch (Wagon)
(3) Door switch
(4) Body integrated unit
(5) Horn
(6) Keyless buzzer

B: CAUTION

• Before disassembling or reassembling parts, always disconnect the battery ground cable. When repairing the audio, control module, etc. which are provided with memory functions, record the memory contents before disconnecting the ground cable from battery. Otherwise, these contents are erased upon disconnection.
• Reassemble the parts in the reverse order of disassembly unless otherwise indicated.
• Adjust the parts to the specifications described in this manual if so designated.
• Connect the connectors securely during reassembly.
• After reassembly, ensure the functional parts operate smoothly.
• The air bag system wiring harness is routed near electrical parts and switches.
• Air bag system wiring harnesses and connectors are yellow. Do not use the electrical test equipment on these circuits.
• Be careful not to damage the airbag system wiring harness when servicing the ignition key cylinder.

C: PREPARATION TOOL

1. SPECIAL TOOL

ILLUSTRATION	TOOL NUMBER	DESCRIPTION	REMARKS
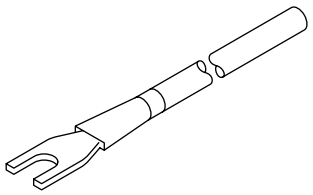 ST-925580000	925580000	PULLER	Used for removing trim clip.

2. GENERAL TOOL

TOOL NAME	REMARKS
Circuit tester	Used for measuring resistance and voltage.
Drill	Used for replacing ignition key lock.
Clip remover	Used for removal of trim.
Clip clamp pliers	Used for removal of various clips and clamps.

2. Door Lock Control System

A: WIRING DIAGRAM

1. DOOR LOCK CONTROL

<Ref. to WI-182, WIRING DIAGRAM, Keyless Entry System.>

B: INSPECTION

1. SYMPTOM CHART

Symptom	Repair order	Reference
The door lock control system does not operate.	1. Check the fuse.	<Ref. to SL-7, CHECK FUSE, INSPECTION, Door Lock Control System.>
	2. Check the power supply and ground circuit for body integrated unit.	<Ref. to SL-8, CHECK POWER SUPPLY AND GROUND CIRCUIT, INSPECTION, Door Lock Control System.>
	3. Check the door lock switch and circuit.	<Ref. to SL-8, CHECK DOOR LOCK SWITCH, INSPECTION, Door Lock Control System.>
	4. Check the door lock actuator and circuit.	<Ref. to SL-9, CHECK DOOR LOCK ACTUATOR AND CIRCUIT, INSPECTION, Door Lock Control System.>
The door lock switch does not operate.	Check the door lock switch.	<Ref. to SL-8, CHECK DOOR LOCK SWITCH, INSPECTION, Door Lock Control System.>
A specific door lock actuator does not operate.	Check the door lock actuator and circuit.	<Ref. to SL-9, CHECK DOOR LOCK ACTUATOR AND CIRCUIT, INSPECTION, Door Lock Control System.>

2. CHECK FUSE

Step		Check	Yes	No
1	**CHECK FUSE.** Remove and visually check the fuse No. 3 (in the fuse and relay box) and No. 7 (in the fuse and relay box).	Is the fuse blown out?	Replace the fuse with a new one.	Check the power supply and ground circuit. <Ref. to SL-8, CHECK POWER SUPPLY AND GROUND CIRCUIT, INSPECTION, Door Lock Control System.>

3. CHECK POWER SUPPLY AND GROUND CIRCUIT

	Step	Check	Yes	No
1	**CHECK POWER SUPPLY.** 1) Disconnect the harness connector of body integrated unit. 2) Measure the voltage between harness connector terminal and chassis ground. ***Connector & terminal*** ***(i84) No. 34 (+) — Chassis ground (–):*** ***(B281) No. 2 (+) — Chassis ground (–):***	Is the voltage more than 10 V?	Go to step **2.**	Check the harness for open or short circuit between body integrated unit and fuse.
2	**CHECK GROUND CIRCUIT.** Measure the resistance between harness connector terminal and chassis ground. ***Connector & terminal*** ***(B280) No. 22 — Chassis ground:*** ***(B281) No. 8, 9 — Chassis ground:***	Is the resistance less than 10 Ω?	The power supply and ground circuit are OK.	Repair the harness.

4. CHECK DOOR LOCK SWITCH

	Step	Check	Yes	No
1	**CHECK DOOR LOCK SWITCH.** Check the input from door lock switch to body integrated unit using Subaru Select Monitor. 1) Connect the Subaru Select Monitor to data link connector. 2) Turn the ignition switch to ON. 3) Select {body integrated unit} from main menu. 4) Select {Current Data Display & Save}. 5) Check the input to body integrated unit by operating the door lock switch.	Is the normal input signal displayed when the door lock switch is moved to LOCK/UNLOCK?	The door lock switch is OK.	Go to step **2.**
2	**CHECK DOOR LOCK SWITCH CIRCUIT.** 1) Disconnect the body integrated unit harness connector. 2) Measure the resistance between the harness connector terminal and chassis ground when moving the door lock switch to LOCK. ***Connector & terminal*** ***(i84) No. 15 — Chassis ground:***	Is the resistance less than 10 Ω?	Go to step **3.**	Go to step **4.**
3	**CHECK DOOR LOCK SWITCH CIRCUIT.** Measure the resistance between the harness connector terminal and chassis ground when the door lock switch is moved to UNLOCK. ***Connector & terminal*** ***(i84) No. 29 — Chassis ground:***	Is the resistance less than 10 Ω?	The door lock switch is OK.	Go to step **4.**
4	**CHECK DOOR LOCK SWITCH.** 1) Disconnect the door lock switch harness connector. 2) Measure the resistance between the door lock switch terminals when moving the door lock switch to LOCK. ***Connector & terminal*** ***Driver's side:*** ***(D7) No. 4 — No. 7:*** ***Passenger's side:*** ***(D125) No. 4 — No. 3:***	Is the resistance less than 1 Ω?	Go to step **5.**	Replace the door lock switch.

	Step	Check	Yes	No
5	**CHECK DOOR LOCK SWITCH.** Measure the resistance between the door lock switch terminals when moving the door lock switch to UNLOCK. ***Connector & terminal*** ***Driver's side:*** ***(D7) No. 5 — No. 7:*** ***Passenger's side:*** ***(D125) No. 1 — No. 3:***	Is the resistance less than 1 Ω?	Check the harness for open circuits or shorts between the body integrated unit and the door lock switch.	Replace the door lock switch.

5. CHECK DOOR LOCK ACTUATOR AND CIRCUIT

	Step	Check	Yes	No
1	**CHECK OUTPUT SIGNAL.** Measure the voltage between the harness connector terminal and chassis ground of body integrated unit when moving the door lock switch to LOCK. ***Connector & terminal*** ***(i84) No. 7 (+) — Chassis ground (−):***	Is the voltage more than 10 V?	Go to step **2.**	Replace the body integrated unit. <Ref. to SL-54, Body Integrated Unit.>
2	**CHECK OUTPUT SIGNAL.** Measure the voltage between the harness connector terminal and chassis ground of body integrated unit when moving the door lock switch to UNLOCK. ***Connector & terminal*** ***Driver's side:*** ***(i84) No. 23 (+) — Chassis ground (−):*** ***Except for driver's side:*** ***(i84) No. 8 (+) — Chassis ground (−):***	Is the voltage more than 10 V?	Go to step **3.**	Replace the body integrated unit. <Ref. to SL-54, Body Integrated Unit.>
3	**CHECK POWER WINDOW MAIN SWITCH OUTPUT SIGNAL.** Measure the voltage between the harness connector terminal of power window main switch and chassis ground when moving the door lock switch to LOCK. ***Connector & terminal*** ***(D7) No. 4 (+) — Chassis ground (−):***	Is the voltage more than 10 V?	Go to step **4.**	Replace the power window main switch. <Ref. to GW-9, Power Window Control Switch.>
4	**CHECK POWER WINDOW MAIN SWITCH OUTPUT SIGNAL.** Measure the voltage between the harness connector terminal of power window main switch and chassis ground when moving the door lock switch to UNLOCK. ***Connector & terminal*** ***(D7) No. 5 (+) — Chassis ground (−):***	Is the voltage more than 10 V?	Go to step **5.**	Replace the power window main switch. <Ref. to GW-9, Power Window Control Switch.>
5	**CHECK DOOR LOCK ACTUATOR.** Check the door lock actuator. • Front Door Lock Actuator <Ref. to SL-36, Front Door Lock Actuator.> • Rear Door Lock Actuator <Ref. to SL-40, Rear Door Lock Actuator.> • Rear Gate Latch Lock Actuator <Ref. to SL-42, Rear Gate Latch Assembly.>	Is the door lock actuator OK?	Check the harness for open or short circuit between body integrated unit and door lock actuator.	Replace the door lock actuator.

3. Keyless Entry System

A: WIRING DIAGRAM

1. KEYLESS ENTRY

<Ref. to WI-182, WIRING DIAGRAM, Keyless Entry System.>

B: ELECTRICAL SPECIFICATION

1. KEYLESS ENTRY CONTROL MODULE

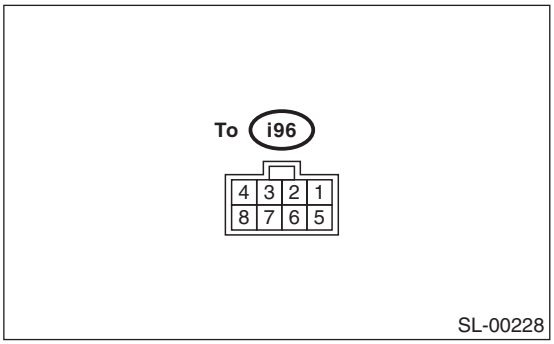

Remarks	Terminal No.	Measuring conditions
Body integrated unit	3 (OUTPUT)	Battery voltage cannot be measured because of digital signal.
Power supply (Backup)	4	Battery voltage is constantly present.
Ground	7	0 V is constantly present.

2. BODY INTEGRATED UNIT

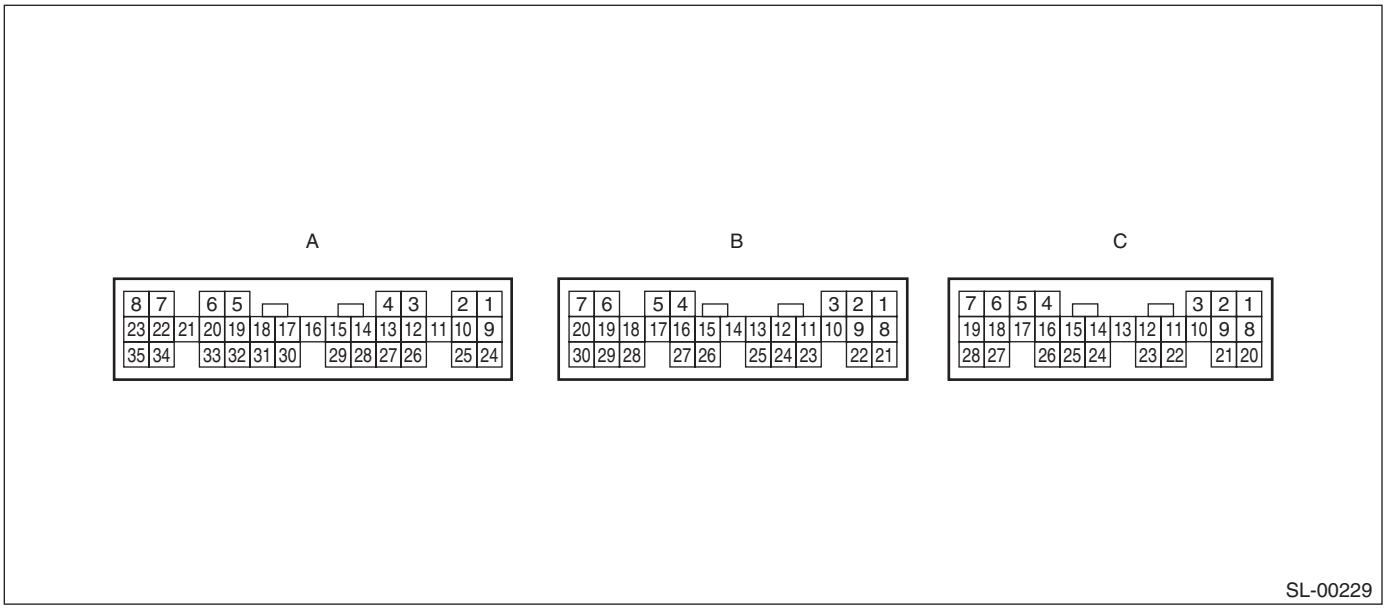

Remarks	Terminal No.	Measuring conditions
Ignition switch (ON)	A1 (INPUT)	Battery voltage is present when ignition switch is turned ON.
Keyless Buzzer	A6 (INPUT)	0 V is present when pressing the LOCK or UNLOCK button of transmitter.
Driver's side front door lock actuator	A7 (OUTPUT)	Battery voltage is present when pressing the LOCK button of transmitter.
Door and rear gate lock actuator	A8 (OUTPUT)	Battery voltage is present when pressing the UNLOCK button of transmitter.
Keyless entry control module	A9 (INPUT)	Communication line (Cannot be measured because of digital signal)

Remarks	Terminal No.	Measuring conditions
Trunk lid switch or rear gate latch switch	A17 (INPUT)	0 V is present when opening the trunk lid or rear gate.
Rear door switch RH	A18 (INPUT)	0 V is present when opening the rear door RH.
Front door switch RH	A19 (INPUT)	0 V is present when opening the front door RH.
Ground	A21	0 V is constantly present.
Trunk lid actuator	A22 (OUTPUT)	Battery voltage is present when pressing the TRUNK button of transmitter.
Front door actuator driver's side	A23 (OUTPUT)	Battery voltage is present when pressing the UNLOCK button of transmitter.
Driver's side power window main switch (door lock switch) Passenger's side door lock switch	A15	0 V is present when pressing the door lock switch to LOCK side.
	A29	0 V is present when pressing the door lock switch to UNLOCK side.
Rear door switch LH	A31 (INPUT)	0 V is present when opening the rear door LH.
Front door switch LH	A32 (INPUT)	0 V is present when opening the front door LH.
Power supply	A34	Battery voltage is constantly present.
Room light	B3 (INPUT)	• 0 V is present when pressing the UNLOCK button of transmitter. • 0 V is present when opening the door.
Power supply	B7	Battery voltage is constantly present.
Horn circuit	B11 (INPUT)	0 V is present when pressing the panic button of transmitter.
Turn signal & hazard circuit	B12 (OUTPUT)	0 V is present when pressing the LOCK button or UNLOCK button of transmitter.
Ground	B22	0 V is constantly present.
Power supply	C1	Battery voltage is constantly present.
Power supply	C2	Battery voltage is constantly present.
Key warning switch	C7 (INPUT)	Battery voltage is present when inserting the key into ignition switch.
Ground	C8	0 V is constantly present.
Ground	C9	0 V is constantly present.

C: INSPECTION

1. SYMPTOM CHART

Symptom	Repair order	Reference
None of the functions of keyless entry system operate.	1. Check the transmitter battery.	<Ref. to SL-14, CHECK TRANSMITTER BATTERY AND FUNCTION, INSPECTION, Keyless Entry System.>
	2. Check the fuse.	<Ref. to SL-15, CHECK FUSE, INSPECTION, Keyless Entry System.>
	3. Check the keyless entry control module.	<Ref. to SL-15, CHECK KEYLESS ENTRY CONTROL MODULE, INSPECTION, Keyless Entry System.>
	4. Check the power supply, ground circuit and registration connector circuit for the body integrated unit.	<Ref. to SL-16, CHECK BODY INTEGRATED UNIT POWER SUPPLY, GROUND CIRCUIT AND REGISTERED CONNECTOR CIRCUIT, INSPECTION, Keyless Entry System.>
	5. Check the key warning switch.	<Ref. to SL-18, CHECK KEY WARNING SWITCH, INSPECTION, Keyless Entry System.>
	6. Check the door switch.	<Ref. to SL-17, CHECK DOOR SWITCH, INSPECTION, Keyless Entry System.>
	7. Check the body integrated unit.	<Ref. to LAN(diag)-2, Basic Diagnostic Procedure.>
The transmitter cannot be registered.	1. Check the key warning switch.	<Ref. to SL-18, CHECK KEY WARNING SWITCH, INSPECTION, Keyless Entry System.>
	2. Check the door lock switch signal.	<Ref. to SL-20, CHECK DOOR LOCK SWITCH, INSPECTION, Keyless Entry System.>
	3. Check ignition switch.	<Ref. to SL-23, CHECK IGNITION SWITCH, INSPECTION, Keyless Entry System.>
	4. Check door switch.	<Ref. to SL-17, CHECK DOOR SWITCH, INSPECTION, Keyless Entry System.>
	5. Check the body integrated unit.	<Ref. to LAN(diag)-2, Basic Diagnostic Procedure.>

Symptom	Repair order	Reference
Door lock or unlock does not operate. NOTE: If the door lock control system does not operate when using the door lock switch, check the door lock control system. <Ref. to SL-7, INSPECTION, Door Lock Control System.>	1. Check the transmitter battery.	<Ref. to SL-14, CHECK TRANSMITTER BATTERY AND FUNCTION, INSPECTION, Keyless Entry System.>
	2. Check the keyless entry control module.	<Ref. to SL-15, CHECK KEYLESS ENTRY CONTROL MODULE, INSPECTION, Keyless Entry System.>
	3. Check the key warning switch.	<Ref. to SL-18, CHECK KEY WARNING SWITCH, INSPECTION, Keyless Entry System.>
	4. Check the door switch.	<Ref. to SL-17, CHECK DOOR SWITCH, INSPECTION, Keyless Entry System.>
	5. Check the body integrated unit.	<Ref. to LAN(diag)-2, Basic Diagnostic Procedure.>
The panic alarm does not operate.	1. Check the transmitter battery and function.	<Ref. to SL-14, CHECK TRANSMITTER BATTERY AND FUNCTION, INSPECTION, Keyless Entry System.>
	2. Check the horn operation.	<Ref. to SL-22, CHECK HORN OPERATION, INSPECTION, Keyless Entry System.>
	3. Check the body integrated unit.	<Ref. to LAN(diag)-2, Basic Diagnostic Procedure.>
Trunk lid unlock does not operate. (Sedan model)	1. Check the transmitter battery.	<Ref. to SL-14, CHECK TRANSMITTER BATTERY AND FUNCTION, INSPECTION, Keyless Entry System.>
	2. Check the keyless entry control module.	<Ref. to SL-15, CHECK KEYLESS ENTRY CONTROL MODULE, INSPECTION, Keyless Entry System.>
	3. Check the key warning switch.	<Ref. to SL-18, CHECK KEY WARNING SWITCH, INSPECTION, Keyless Entry System.>
	4. Check the trunk lid lock actuator.	<Ref. to SL-20, CHECK TRUNK LID LOCK ACTUATOR, INSPECTION, Keyless Entry System.>
	5. Check the body integrated unit.	<Ref. to LAN(diag)-2, Basic Diagnostic Procedure.>
The buzzer chirp and hazard light do not operate.	1. Check the buzzer operation.	<Ref. to SL-22, CHECK KEYLESS BUZZER, INSPECTION, Keyless Entry System.>
	2. Check the hazard light operation.	<Ref. to SL-19, CHECK HAZARD LIGHT OPERATION, INSPECTION, Keyless Entry System.>
	3. Check the body integrated unit.	<Ref. to LAN(diag)-2, Basic Diagnostic Procedure.>
Room light does not operate.	1. Check the room light operation.	<Ref. to SL-19, CHECK ROOM LIGHT OPERATION, INSPECTION, Keyless Entry System.>
	2. Check the body integrated unit.	<Ref. to LAN(diag)-2, Basic Diagnostic Procedure.>

Symptom	Repair order	Reference
Ignition switch illumination does not operate.	1. Check the ignition switch illumination.	<Ref. to SL-21, CHECK IGNITION SWITCH ILLUMINATION, INSPECTION, Keyless Entry System.>
	2. Check the body integrated unit.	<Ref. to LAN(diag)-2, Basic Diagnostic Procedure.>

2. CHECK TRANSMITTER BATTERY AND FUNCTION

Step		Check	Yes	No
1	**CHECK TRANSMITTER BATTERY.** 1) Remove the battery from transmitter. <Ref. to SL-55, REMOVAL, Transmitter.> 2) Check the battery voltage. <Ref. to SL-55, INSPECTION, Transmitter.>	Is the voltage more than 2.5 V?	Go to step **2.**	Replace the transmitter battery. <Ref. to SL-55, Transmitter.>
2	**CHECK TRANSMITTER.** Register the transmitter which operates normally on other vehicles to inspection target vehicle. <Ref. to SL-55, REGISTRATION OF TRANSMITTER WITH SUBARU SELECT MONITOR, REPLACEMENT, Transmitter.> 1) Close all the doors and rear gate of inspection target vehicle. 2) Using transmitter, lock and unlock the doors and rear gate of inspection target vehicle.	Is the inspection target vehicle operates lock and unlock normally?	Go to step **3.**	Due to vehicle malfunction, continue the keyless entry system diagnosis.
3	**CHECK TRANSMITTER.** Register the transmitter of inspection target vehicle to another vehicle which operates keyless system normally. <Ref. to SL-55, REGISTRATION OF TRANSMITTER WITH SUBARU SELECT MONITOR, REPLACEMENT, Transmitter.>	Is the transmitter registered correctly?	Go to step **4.**	Replace the transmitter. <Ref. to SL-55, REGISTRATION OF TRANSMITTER WITH SUBARU SELECT MONITOR, REPLACEMENT, Transmitter.>
4	**CHECK TRANSMITTER.** Check the registered transmitter. 1) Close all the doors and rear gate of the vehicle which operates keyless system normally. 2) Using transmitter, lock and unlock the doors and rear gate of vehicle.	Is the vehicle operates lock and unlock normally?	Transmitter is normal.	Replace the transmitter. <Ref. to SL-55, REGISTRATION OF TRANSMITTER WITH SUBARU SELECT MONITOR, REPLACEMENT, Transmitter.>

CAUTION:
Be sure to reset the transmitter, which is registered from other vehicle to inspection target vehicle, and the vehicle, to which is registered transmitter, to the condition of before inspection. (Register the transmitter to original condition.)

3. CHECK FUSE

Step		Check	Yes	No
1	**CHECK FUSE.** Remove and visually check the fuse No. 3 (in the fuse and relay box) and No. 7 (in the fuse and relay box).	Is the fuse blown out?	Replace the fuse with a new one.	Check the power supply and ground circuit. <Ref. to SL-16, CHECK BODY INTEGRATED UNIT POWER SUPPLY, GROUND CIRCUIT AND REGISTERED CONNECTOR CIRCUIT, INSPECTION, Keyless Entry System.>

4. CHECK KEYLESS ENTRY CONTROL MODULE

Step		Check	Yes	No
1	**CHECK DIAGNOSTIC TROUBLE CODE (DTC)** 1) Connect the Subaru Select Monitor to data link connector. 2) Turn the ignition switch to ON. 3) Select {Body integrated unit} from main menu. 4) Select the {Diagnostic Trouble Code}. 5) Check that the DTC is displayed.	Is DTC B0500 “Keyless UART com. Malfunction” displayed?	Go to step **2.**	Keyless entry control module is normal.
2	**CHECK POWER SUPPLY.** 1) Disconnect the keyless entry control module harness connector. 2) Measure the voltage between the harness connector terminal and chassis ground. ***Connector & terminal*** ***(i96) No. 4 (+) — Chassis ground (−):***	Is the voltage more than 10 V?	Go to step **3.**	Check the harness for open circuits and shorts between the keyless entry control module and fuse.
3	**CHECK GROUND CIRCUIT.** Measure the resistance between the harness connector terminal and chassis ground. ***Connector & terminal*** ***(i96) No. 7 — Chassis ground:***	Is the resistance less than 10 Ω?	Go to step **4.**	Repair the harness.
4	**CHECK KEYLESS ENTRY CONTROL MODULE CIRCUIT.** 1) Disconnect harness connector of body integrated unit. 2) Measure the resistance between harness connector terminals. ***Connector & terminal*** ***(i84) No. 9 — (i96) No. 3:***	Is the resistance less than 10 Ω?	Replace the keyless entry control module. <Ref. to SL-52, Keyless Entry Control Unit.>	Repair the harness.

5. CHECK BODY INTEGRATED UNIT POWER SUPPLY, GROUND CIRCUIT AND REGISTERED CONNECTOR CIRCUIT

	Step	Check	Yes	No
1	**CHECK REGISTRATION CONNECTOR INPUT VOLTAGE.** Measure the voltage between the body integrated unit harness connector and chassis ground. ***Connector & terminal*** ***(B281) No. 22 (+) — Chassis ground (−):***	Is the voltage more than 10 V?	Go to step **2.**	Check the registration connector for disconnection, and the harness for short.
2	**CHECK POWER SUPPLY OF BODY INTEGRATED UNIT.** 1) Disconnect the harness connector of body integrated unit. 2) Measure the voltage between the harness connector terminal and chassis ground. ***Connector & terminal*** ***(B280) No. 7 (+) — Chassis ground (−):*** ***(B281) No. 2 (+) — Chassis ground (−):***	Is the voltage more than 10 V?	Go to step **3.**	Check the harness for open or short between body integrated unit and fuse.
3	**CHECK BODY INTEGRATED UNIT GROUND CIRCUIT.** 1) Disconnect the harness connector of body integrated unit. 2) Measure the resistance between the harness connector terminal and chassis ground. ***Connector & terminal*** ***(B280) No. 22 — Chassis ground:*** ***(B281) No. 8 — Chassis ground:*** ***(B281) No. 9 — Chassis ground:***	Is the resistance less than 10 Ω?	Check the body integrated unit. <Ref. to LAN(diag)-2, Basic Diagnostic Procedure.>	Repair the harness.

6. CHECK DOOR SWITCH

	Step	Check	Yes	No
1	**CHECK DOOR SWITCH CIRCUIT.** Measure the voltage between the body integrated unit harness connector terminal and chassis ground. ***Connector & terminal*** ***Front door RH:*** ***(i84) No. 32 (+) — Chassis ground (−):*** ***Front door LH:*** ***(i84) No. 19 (+) — Chassis ground (−):*** ***Rear door RH:*** ***(i84) No. 18 (+) — Chassis ground (−):*** ***Rear door LH:*** ***(i84) No. 31 (+) — Chassis ground (−):*** ***Rear gate:*** ***(i84) No. 17 (+) — Chassis ground (−):***	Is the voltage 0 V when each door or rear gate is opened?	Go to step **2.**	Go to step **3.**
2	**CHECK DOOR SWITCH CIRCUIT.** Measure the voltage between the body integrated unit harness connector terminal and chassis ground. ***Connector & terminal*** ***Front door RH:*** ***(i84) No. 32 (+) — Chassis ground (−):*** ***Front door LH:*** ***(i84) No. 19 (+) — Chassis ground (−):*** ***Rear door RH:*** ***(i84) No. 18 (+) — Chassis ground (−):*** ***Rear door LH:*** ***(i84) No. 31 (+) — Chassis ground (−):*** ***Rear gate:*** ***(i84) No. 17 (+) — Chassis ground (−):***	Is the voltage more than 10 V when each door or rear gate is closed?	The door switch is OK.	Go to step **3.**
3	**CHECK DOOR SWITCH.** 1) Disconnect the door switch harness connector. 2) Measure the resistance between door switch terminals. ***Connector & terminal*** ***(R12) Front RH door switch:*** ***(R9) Front LH door switch:*** ***(R16) Rear RH door switch:*** ***(R22) Rear LH door switch:*** ***No. 1 — No. 3:*** ***Rear gate latch switch (Wagon model):*** ***(D46) No. 1 — No. 2:***	Is the resistance more than 1 MΩ when door switch is pushed?	Go to step **4.**	Replace the door switch.
4	**CHECK DOOR SWITCH.** Measure the resistance between door switch terminals. ***Connector & terminal*** ***(R12) Front RH door switch:*** ***(R9) Front LH door switch:*** ***(R16) Rear RH door switch:*** ***(R22) Rear LH door switch:*** ***No. 1 — No. 3:*** ***Rear gate latch switch (Wagon model):*** ***(D46) No. 1 — No. 2:***	Is the resistance less than 1 Ω when door switch is released?	Check the harness for open or short between body integrated unit and door switch.	Replace the door switch.

7. CHECK KEY WARNING SWITCH

	Step	Check	Yes	No
1	**CHECK FUSE.** Remove and visually check the fuse No. 14 (in the main fuse box).	Is the fuse blown out?	Replace the fuse with a new one.	Go to step **2.**
2	**CHECK KEY WARNING SWITCH CIRCUIT.** 1) Disconnect the harness connector of body integrated unit. 2) Insert the key into ignition switch. (LOCK position) 3) Measure the voltage between the harness connector terminal and chassis ground. ***Connector & terminal*** ***(B281) No. 7 (+) — Chassis ground (−):***	Is the voltage more than 10 V?	Go to step **3.**	Go to step **4.**
3	**CHECK KEY WARNING SWITCH CIRCUIT.** 1) Remove the key from ignition switch. 2) Measure the voltage between the harness connector terminal and chassis ground. ***Connector & terminal*** ***(B281) No. 7 (+) — Chassis ground (−):***	Is the voltage 0 V?	The key warning switch is OK.	Go to step **4.**
4	**CHECK KEY WARNING SWITCH.** 1) Disconnect the key warning switch harness connector. 2) Insert the key into ignition switch. (LOCK position) 3) Measure the resistance between key warning switch terminals. ***Connector & terminal*** ***(B350) No. 3 — No. 4:***	Is the resistance less than 1 Ω?	Go to step **5.**	Replace the key warning switch.
5	**CHECK KEY WARNING SWITCH.** 1) Remove the key from ignition switch. 2) Measure the resistance between key warning switch terminals. ***Connector & terminal*** ***(B350) No. 3 — No. 4:***	Is the resistance more than 1 MΩ?	Check the following: • Harness for open circuits and shorts between the key warning switch and fuse • Harness for open or short between the body integrated unit and key warning switch	Replace the key warning switch.

8. CHECK ROOM LIGHT OPERATION

	Step	Check	Yes	No
1	**CHECK ROOM LIGHT OPERATION.** Make sure the room light illuminates when the room light switch is turned to ON.	Does the room light illuminate?	Go to step **2.**	Check the room light circuit.
2	**CHECK HARNESS BETWEEN ROOM LIGHT AND BODY INTEGRATED UNIT.** 1) Disconnect the body integrated unit harness connector and room light harness connector. 2) Measure the resistance between the body integrated unit harness connector terminal and room light harness connector terminal. ***Connector & terminal*** ***(B280) No. 3 — (R52) No. 2:***	Is the resistance less than 10 Ω?	The room light operation circuit is OK.	Check the harness for open or short between body integrated unit and room light.

9. CHECK HAZARD LIGHT OPERATION

	Step	Check	Yes	No
1	**CHECK HAZARD LIGHT OPERATION.** Make sure the hazard light blinks when hazard switch is turned to ON.	Does the hazard light blink?	Go to step **2.**	Check the hazard light circuit.
2	**CHECK OUTPUT TO HAZARD LIGHT.** 1) Turn the ignition switch to OFF. 2) Disconnect the key warning switch harness connector. 3) Connect the Subaru Select Monitor to data link connector. 4) Turn the ignition switch to ON. 5) Select {Body integrated unit} from main menu. 6) Select {ECM customizing}. 7) Check {Hazard answer-back setup}, and then switch to ON setting if necessary. 8) Select {Current Data Display & Save}. 9) When operating the LOCK/UNLOCK button of transmitter, check the hazard output signal of body integrated unit.	Is output signal present when operating the transmitter LOCK/UNLOCK button?	Go to step **3.**	Check the body integrated unit. <Ref. to LAN(diag)-2, Basic Diagnostic Procedure.>
3	**CHECK CIRCUIT OF HAZARD LIGHT.** 1) Disconnect the harness connector of body integrated unit. 2) Disconnect the turn signal & hazard unit harness connector. 3) Measure the resistance between harness connector terminals. ***Connector & terminal*** ***(B280) No. 12 — (B32) No. 8:***	Is the resistance less than 10 Ω?	Check the body integrated unit. <Ref. to LAN(diag)-2, Basic Diagnostic Procedure.>	Repair the harness.

10.CHECK TRUNK LID LOCK ACTUATOR

	Step	Check	Yes	No
1	**CHECK TRUNK LID LOCK ACTUATOR.** 1) Turn the ignition switch to OFF. 2) Disconnect the key warning switch harness connector. 3) Connect the Subaru Select Monitor to data link connector. 4) Turn the ignition switch to ON. 5) Select {Body integrated unit} from main menu. 6) Select {Current Data Display & Save}. 7) When operating the TRUNK button of transmitter, check the trunk unlock output signal of body integrated unit.	Is output signal present when operating the transmitter TRUNK button?	Go to step **2.**	Check the body integrated unit. <Ref. to LAN(diag)-2, Basic Diagnostic Procedure.>
2	**CHECK THE CIRCUIT OF TRUNK LID ACTUATOR.** 1) Disconnect harness connector of body integrated unit. 2) Disconnect the trunk lid actuator harness connector. 3) Measure the resistance between harness connectors. ***Connector & terminal*** ***(i84) No. 22 — (R186) No. 2:***	Is the resistance less than 10 Ω?	Go to step **3.**	Repair the harness.
3	**CHECK THE GROUND CIRCUIT OF TRUNK LID ACTUATOR.** 1) Disconnect the trunk lid actuator harness connector. 2) Measure the resistance between the harness connector terminal and chassis ground. ***Connector & terminal*** ***(R186) No. 1 — Chassis ground:***	Is the resistance less than 10 Ω?	Check the trunk lid lock actuator. <Ref. to SL-43, Trunk Lid Lock Assembly.>	Repair the harness.

11.CHECK DOOR LOCK SWITCH

	Step	Check	Yes	No
1	**CHECK DOOR LOCK SWITCH.** Check the input signal from door lock switch to body integrated module using Subaru Select Monitor. 1) Connect the Subaru Select Monitor to data link connector. 2) Turn the ignition switch to ON. 3) Select {Body integrated unit} from main menu. 4) Select {Current Data Display & Save}. 5) Check the input signal to body integrated unit by operating the door lock switch.	Is the normal input signal displayed when the door lock switch is moved to LOCK/UNLOCK?	The door lock switch is OK.	Go to step **2.**
2	**CHECK DOOR LOCK SWITCH CIRCUIT.** 1) Disconnect the body integrated unit harness connector. 2) Measure the resistance between the harness connector terminal and chassis ground when moving the door lock switch to LOCK. ***Connector & terminal*** ***(i84) No. 15 — Chassis ground:***	Is the resistance less than 10 Ω?	Go to step **3.**	Go to step **4.**

	Step	Check	Yes	No
3	**CHECK DOOR LOCK SWITCH CIRCUIT.** Measure the resistance between the harness connector terminal and chassis ground when the door lock switch is moved to UNLOCK. ***Connector & terminal*** ***(i84) No. 29 — Chassis ground:***	Is the resistance less than 10 Ω?	The door lock switch is OK.	Go to step **4.**
4	**CHECK DOOR LOCK SWITCH.** 1) Disconnect the door lock switch harness connector. 2) Measure the resistance between the door lock switch terminals when moving the door lock switch to LOCK. ***Connector & terminal*** ***Driver's side:*** ***(D7) No. 4 — No. 7:*** ***Passenger's side:*** ***(D125) No. 4 — No. 3:***	Is the resistance less than 1 Ω?	Go to step **5.**	Replace the door lock switch.
5	**CHECK DOOR LOCK SWITCH.** Measure the resistance between the door lock switch terminals when moving the door lock switch to UNLOCK. ***Connector & terminal*** ***Driver's side:*** ***(D7) No. 5 — No. 7:*** ***Passenger's side:*** ***(D125) No. 1 — No. 3:***	Is the resistance less than 1 Ω?	Check the harness for open circuits or shorts between the body integrated unit and the door lock switch.	Replace the door lock switch.

12.CHECK IGNITION SWITCH ILLUMINATION

	Step	Check	Yes	No
1	**CHECK FUSE.** Remove and visually check the fuse No. 14 (in the main fuse box).	Is the fuse blown out?	Replace the fuse with a new one.	Go to step **2.**
2	**CHECK POWER SUPPLY.** 1) Disconnect the ignition switch illumination harness connector. 2) Measure the voltage between the harness connector terminal and chassis ground. ***Connector & terminal*** ***(B224) No. 2 (+) — Chassis ground (−):***	Is the voltage more than 10 V?	Go to step **3.**	Check the harness for open circuits and shorts between the ignition switch illumination and fuse.
3	**CHECK IGNITION SWITCH ILLUMINATION CIRCUIT.** 1) Disconnect the harness connector of body integrated unit and ignition switch illumination harness connector. 2) Measure the resistance between body integrated unit harness connector terminal and ignition switch illumination harness connector terminal. ***Connector & terminal*** ***(B280) No. 4 — (B224) No. 1:***	Is the resistance less than 10 Ω?	Replace the ignition switch illumination bulb with a new one. <Ref. to LI-35, REMOVAL, Ignition Switch Illumination.>	Check the harness for open circuits and shorts between the body integrated unit and ignition switch illumination.

13.CHECK HORN OPERATION

	Step	Check	Yes	No
1	**CHECK HORN OPERATION.** Make sure the horn sounds when the horn switch is pushed.	Does the horn sound?	Go to step **2.**	Check the horn circuit.
2	**CHECK HORN OPERATION.** 1) Disconnect the body integrated unit harness connector. 2) Ground the harness connector terminal with a suitable wire. ***Connector & terminal*** ***(B280) No. 11 — Chassis ground:***	Does the horn sound?	Check the body integrated unit. <Ref. to LAN(diag)-2, Basic Diagnostic Procedure.>	Check the harness for open circuits and/or shorts between the body integrated unit and horn relay.

14.CHECK KEYLESS BUZZER

	Step	Check	Yes	No
1	**CHECK KEYLESS BUZZER ON/OFF SWITCH.** 1) Press the UNLOCK button of transmitter once. 2) Press the LOCK/UNLOCK button of transmitter for more than 2 seconds at the same time. 3) When the keyless buzzer is set to ON, buzzer beeps twice, and once when the keyless buzzer is set to OFF. 4) Set the keyless buzzer to ON, and check if the buzzer beeps while operating LOCK/UNLOCK button.	Does the buzzer beep?	Keyless buzzer is normal.	Go to step **2.**
2	**CHECK FOR POWER SUPPLY OF KEYLESS BUZZER.** 1) Turn the ignition switch to OFF. 2) Disconnect the keyless buzzer harness connector. 3) Measure the voltage between the harness connector terminal and chassis ground. ***Connector & terminal*** ***(F102) No. 1 (+) — Chassis ground (−):***	Is the voltage more than 10 V?	Go to step **3.**	Check the harness for open circuits and shorts between the keyless buzzer and fuse.
3	**CHECK FOR GROUND CIRCUIT OF KEYLESS BUZZER.** 1) Disconnect the body integrated unit harness connector. 2) Measure the resistance between harness connector terminals. ***Connector & terminal*** ***(i84) No. 6 — (F102) No. 2:***	Is the resistance less than 10 Ω?	Go to step **4.**	Repair the harness.
4	**CHECK KEYLESS BUZZER.** 1) Remove the keyless buzzer. 2) Install the keyless buzzer to another vehicle which operates keyless buzzer normally, check the buzzer sounds.	Does the keyless buzzer sound?	Check the body integrated unit. <Ref. to LAN(diag)-2, Basic Diagnostic Procedure.>	Replace the key buzzer.

15.CHECK IGNITION SWITCH

	Step	Check	Yes	No
1	**CHECK FUSIBLE LINK.** Remove the fusible link main SBF and SBF-6 (in main fuse box), and visually check.	Is the fusible link blown out?	Replace the fusible link main SBF or SBF-6. If the replace fusible link blown out easily, repair short circuit in harness between fusible link and ignition switch.	Go to step **2.**
2	**CHECK FOR POWER SUPPLY OF IGNITION SWITCH.** 1) Disconnect the ignition switch harness connector. 2) Measure the voltage between harness connector terminal and body ground. ***Connector & terminal*** ***(B72) No. 3 (+) — Chassis ground (−):***	Is the voltage more than 10 V?	Go to step **3.**	Check the harness for open circuits and shorts between the ignition switch and fusible link.
3	**CHECK IGNITION SWITCH.** 1) Insert the ignition key into ignition switch, and turn the each position. 2) Measure the resistance between ignition switch terminals. ***Connector & terminal*** ***No. 3 — No. 4 (ACC position):*** ***No. 3 — No. 4 — No. 6 — No. 1 (ON position):*** ***No. 3 — No. 6 — No. 1 — No. 2 (ST position):***	Is the resistance less than 1 Ω when ignition key turn the each position?	Ignition switch is normal.	Replace the ignition switch with a new one. <Ref. to SL-48, REPLACEMENT, Ignition Key Lock.>

CAUTION:
When the ignition key lock is replaced, all ignition keys also must be registered. <Refer to "IMMOBILIZER TEACHING OPERATION MANUAL">

4. Security System

A: WIRING DIAGRAM

<Ref. to WI-186, WIRING DIAGRAM, Security System.>

B: ELECTRICAL SPECIFICATION

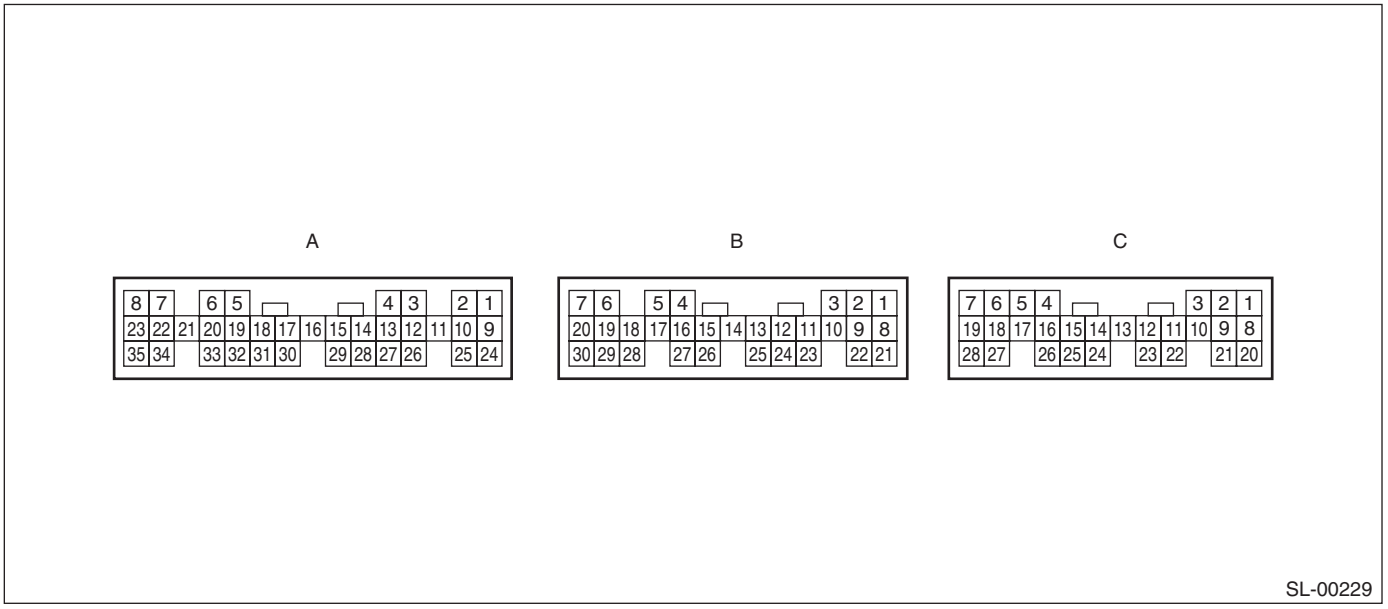

Remarks	Terminal No.	Measuring conditions
Ignition switch	A1 (INPUT)	Battery voltage is present when ignition switch is turned to ON.
Door key cylinder switch	A3	0 V is present when door key cylinder is moved to LOCK side.
Keyless entry control module	A9 (INPUT)	Communication line (Cannot be measured because of digital signal)
Door key cylinder switch	A12	0 V is present when door key cylinder is moved to UNLOCK side.
Trunk lid switch or rear gate latch switch	A17 (INPUT)	0 V is present when the trunk lid or rear gate is opened.
Rear door switch RH	A18 (INPUT)	0 V is present when the rear door RH is opened.
Front door switch LH	A19 (INPUT)	0 V is present when the front door LH is opened.
Rear door switch LH	A31 (INPUT)	0 V is present when the rear door LH is opened.
Front door switch RH	A32	0 V is present when the front door RH is opened.
Security indicator light	A33(INPUT)	Battery voltage is present when the alarm operation is activated.
Horn relay	B11 (OUTPUT)	Battery voltage is present when the alarm operation is activated.
Turn signal & hazard circuit	B12 (OUTPUT)	Battery voltage is present when the alarm operation is activated.
Ground	B22	0 V is constantly present.
Power supply	C2	Battery voltage is constantly present.
Impact sensor	C5	When not applying vibration to impact sensor, it repeat the 0 V and battery voltage in every 45 milliseconds.
Ground	C8	0 V is constantly present.
Ground	C9	0 V is constantly present.

C: INSPECTION

1. BASIC DIAGNOSTICS PROCEDURE

	Step	Check	Yes	No
1	**INITIAL CHECK.** Check the keyless entry system.	Does the keyless entry system operate normally?	Go to step **2.**	Check the keyless entry system. <Ref. to SL-12, INSPECTION, Keyless Entry System.>
2	**CHECK SECURITY ON/OFF SETTING.** 1) Remove the key from ignition switch, and then close all doors. 2) Press the UNLOCK button of transmitter. 3) Check the security indicator light blinking patterns.	Are the security indicator light blinking patterns as follows? • Model with immobilizer: Blinks in every 3 seconds • Model without immobilizer: Always off	Go to step **3.**	Check the security indicator light circuit. <Ref. to SL-30, CHECK SECURITY INDICATOR LIGHT CIRCUIT, INSPECTION, Security System.>
3	**CHECK SECURITY ON/OFF SETTING.** 1) Press the LOCK button of transmitter. 2) Check the security indicator light blinking patterns.	Are the security indicator light blinking patterns as follows? • When the setting of checking lag 0 seconds: Blink twice within 0.5 second in 2 seconds cycle • When the setting of checking lag 30 seconds: Blink three times within 1 second in 0.4 seconds cycle	Go to step **6.**	Go to step **4.**
4	**CHANGE SETTING OF SECURITY SYSTEM.** Change the setting of security system to ON. <Ref. to SL-27, SECURITY SYSTEM ON/OFF SETTING, INSPECTION, Security System.>	Is the setting change completed correctly?	Go to step **5.**	• Check the ignition switch circuit. <Ref. to SL-31, CHECK IGNITION SWITCH CIRCUIT, INSPECTION, Security System.> • Check the door lock switch circuit. <Ref. to SL-20, CHECK DOOR LOCK SWITCH, INSPECTION, Keyless Entry System.>
5	**CHECK SETTING CHANGE OF SECURITY SYSTEM.** 1) Remove the key from ignition switch, and then close all doors. 2) Press the LOCK button of transmitter. 3) Check the security indicator light blinking patterns.	Are the security indicator light blinking patterns as follows? • When the setting of checking lag 0 seconds: Blink twice within 0.5 second in 2 seconds cycle • When the setting of checking lag 30 seconds: Blink three times within 1 second in 0.4 seconds cycle	Go to step **6.**	Replace the body integrated unit. <Ref. to SL-54, Body Integrated Unit.>
6	**CHECK SECURITY SYSTEM OPERATION.** Press the LOCK button on the transmitter and wait for 30 seconds.	Is the blinking pattern of security indicator light “blink twice within 0.5 second in 2 seconds cycle”?	Go to step **7.**	Replace the body integrated unit. <Ref. to SL-54, Body Integrated Unit.>

	Step	Check	Yes	No
7	**CHECK SECURITY SYSTEM CANCEL OPERATION.** Insert the key to door key cylinder to unlock.	Is the blinking pattern of security indicator light as follows? • Model with immobilizer: Blinking in 3-seconds interval • Model without immobilizer: OFF all the time	Press the LOCK button of transmitter, and wait for 30 seconds. Go to step **8.**	Check door key cylinder circuit. <Ref. to SL-32, CHECK DOOR KEY CYLINDER SWITCH AND CIRCUIT, INSPECTION, Security System.>
8	**CHECK SECURITY ALARM OPERATION.** 1) Unlock all doors using the door lock switch on driver's door. 2) Open any door, trunk or rear gate.	Does the security alarm operate when opening any door, trunk or rear gate?	Go to step **9.**	• Check the door switch. <Ref. to SL-28, CHECK DOOR SWITCH, INSPECTION, Security System.> • Check the trunk lid switch or rear gate latch switch. <Ref. to SL-29, CHECK TRUNK LID SWITCH (SEDAN) OR REAR GATE LATCH SWITCH (WAGON), INSPECTION, Security System.>
9	**CHECK SECURITY ALARM OPERATION.** Check the security alarm operation.	Does all security alarm operate? • Horn sounds • Hazard light blinks • Security indicator light on	Go to step **10.**	• Check the horn. <Ref. to SL-30, CHECK HORN, INSPECTION, Security System.> • Check the hazard light. <Ref. to SL-31, CHECK HAZARD LIGHT OPERATION, INSPECTION, Security System.>
10	**CHECK SECURITY ALARM CANCEL OPERATION.** Press any button of transmitter while operating security alarm. Or turn the ignition switch OFF/ON three times.	Does all security alarm stop? • Horn • Hazard light	Go to step **11.**	Check the ignition switch circuit. <Ref. to SL-31, CHECK IGNITION SWITCH CIRCUIT, INSPECTION, Security System.>
11	**CHECK SECURITY SYSTEM CONDITION MEMORY.** Check if the system function properly when the battery is not connected temporally. <Ref. to SL-27, CHECK SECURITY SYSTEM CONDITION MEMORY, INSPECTION, Security System.>	Does the system function properly when the battery is not connected temporally?	Go to step **12.**	Replace the body integrated unit. <Ref. to SL-54, Body Integrated Unit.>

Step		Check	Yes	No
12	**CHECK IMPACT SENSOR.** Check the impact sensor. <Ref. to SL-51, CHECK IMPACT SENSOR, ADJUSTMENT, Impact Sensor.>	Is the sensibility set properly?	Press the UNLOCK button of transmitter, and finish the diagnosis.	Adjust the sensibility. <Ref. to SL-51, IMPACT SENSITIVITY ADJUSTMENT, ADJUSTMENT, Impact Sensor.>

CAUTION:
• Security alarm ON/OFF setting
At the time of shipping from the plant, the security alarm is set to "ON". However, when {Security setting initialization} is performed with the Subaru select monitor, the security alarm automatically is set to "OFF". When security initialization has been performed, always return the ON/OFF setting for the security alarm to "ON".
• Siren YES/NO setting
The {Siren YES/NO} setting of the item {Unit customization} of the Subaru select monitor always shall be set "NO". If it is set to "YES", the horn of the security alarm will not sound.

NOTE:
When the following symptoms appear, inspect the function setting of body integrated unit. <Ref. to LAN(diag)-2, Basic Diagnostic Procedure.>
• The horn does not sound although security is operating.
• When the security is turned on by transmitter, the horn sounds.

2. CHECK SECURITY SYSTEM CONDITION MEMORY

1) Remove the key from ignition switch.
2) Close all the doors, trunk lid and rear gate.
3) Open the hood.
4) Press the LOCK button of transmitter, and then wait until the security indicator light flashes twice for 0.5 sec at intervals of 2 seconds.
5) Disconnect the ground cable from battery.
6) Connect the battery ground cable to battery.
7) Check that the security indicator light blinks twice within 0.5 seconds in 2 seconds cycle. When it does not blink, replace the body integrated unit.

3. SECURITY SYSTEM ON/OFF SETTING

1) Close all the doors and rear gate, sit down on the driver seat. Press the UNLOCK button of transmitter.
2) Repeat turning the ignition switch to ON → OFF three times within 10 seconds, and then stop at ON position.
3) Open the driver's door and close it within 10 seconds. At this time, horn and current setting is displayed on trip meter.
4) Operate the door lock switch as follows within 10 seconds. After the operation, horn.

Setting	Door lock switch operation	Meter display
OFF	Press three times to UNLOCK side	[AL_OF]
ON	Press three times to LOCK side	[AL_ON]

4. CHECK DOOR SWITCH

Step		Check	Yes	No
1	**CHECK INPUT FROM EACH DOOR SWITCH.** 1) Connect the Subaru Select Monitor to data link connector. 2) Turn the ignition switch to ON. 3) Select {body integrated module} from main menu. 4) Select {Current Data Display & Save}. 5) Check the door switch input to the body integrated unit when opening the each door (front RH and LH, rear RH and LH).	Is the input signal present when opening each door (front RH and LH, rear RH and LH)?	The door switch circuit is OK.	When the input signal cannot be detected in some door switch, Go to step **2.**
2	**CHECK DOOR SWITCH CIRCUIT.** 1) Turn the ignition switch to OFF. 2) Disconnect the harness connector of body integrated unit. 3) Disconnect the harness connector of faulty door switch. 4) Measure the resistance between harness connector terminals. ***Connector & terminal*** ***(i84) No. 19 — (R12) No. 1: (front door LH)*** ***(i84) No. 32 — (R9) No. 1: (front door RH)*** ***(i84) No. 31 — (R22) No. 1:(rear door LH)*** ***(i84) No. 18 — (R16) No. 1: (rear door RH)***	Is the resistance less than 10 Ω?	Go to step **3.**	Repair the harness.
3	**CHECK GROUND CIRCUIT OF DOOR SWITCH.** 1) Disconnect the harness connector of faulty door switch. 2) Measure the resistance of harness connector and chassis ground. ***Connector & terminal*** ***(R9) No. 3 — Chassis ground: (front door LH)*** ***(R12) No. 3 — Chassis ground: (front door RH)*** ***(R22) No. 3 — Chassis ground: (rear door LH)*** ***(R16) No. 3 — Chassis ground: (rear door RH)***	Is the resistance less than 10 Ω?	Go to step **4.**	Repair the harness.
4	**CHECK DOOR SWITCH.** 1) Disconnect the harness connector of faulty door switch. 2) Measure the resistance between the door switch terminals. ***Terminals*** ***No. 1 — No. 3:***	Is the resistance more than 1 MΩ when door switch is pushed?	Go to step **5.**	Replace the door switch.
5	**CHECK DOOR SWITCH.** Measure the resistance between the door switch terminals. ***Terminals*** ***No. 1 — No. 3:***	Is the resistance less than 1 Ω when door switch is released?	Check the body integrated unit. <Ref. to LAN(diag)-2, Basic Diagnostic Procedure.>	Replace the door switch.

5. CHECK TRUNK LID SWITCH (SEDAN) OR REAR GATE LATCH SWITCH (WAGON)

	Step	Check	Yes	No
1	**CHECK INPUT FROM TRUNK LID SWITCH OR REAR GATE LATCH SWITCH.** 1) Connect the Subaru Select Monitor to data link connector. 2) Turn the ignition switch to ON. 3) Select {body integrated module} from main menu. 4) Select {Current Data Display & Save}. 5) Check the input signal to the body integrated unit when opening the trunk lid or rear gate.	Is the input signal present when opening the trunk lid or rear gate?	The trunk lid switch or rear gate latch switch is OK.	Go to step **2.**
2	**CHECK CIRCUIT FOR TRUNK LID SWITCH OR REAR GATE LATCH SWITCH.** 1) Turn the ignition switch to OFF. 2) Disconnect the harness connector of body integrated unit. 3) Disconnect the harness connector of trunk lid switch or rear gate latch switch. 4) Measure the resistance between harness connector terminals. ***Connector & terminal*** ***(i84) No. 17 — (D46) No. 2: (Wagon model)*** ***(i84) No. 17 — (R186) No. 3: (Sedan model)***	Is the resistance less than 10 Ω?	Go to step **3.**	Repair the harness.
3	**CHECK GROUND CIRCUIT FOR TRUNK LID SWITCH OR REAR GATE LATCH SWITCH.** 1) Disconnect the harness connector of trunk lid switch or rear gate latch switch. 2) Measure the resistance between the harness connector terminal and chassis ground. ***Connector & terminal*** ***(D46) No. 1 — Chassis ground: (Wagon model)*** ***(R186) No. 1 — Chassis ground: (Sedan model)***	Is the resistance less than 10 Ω?	Go to step **4.**	Repair the harness.
4	**CHECK TRUNK LID SWITCH OR REAR GATE LATCH SWITCH.** 1) Disconnect the harness connector of trunk lid switch or rear gate latch switch. 2) Measure the resistance between switch terminals. ***Terminals*** ***No. 1 — No. 2: (Wagon model)*** ***No. 1 — No. 3: (Sedan model)***	Is the resistance more than 1 MΩ when switch is pushed?	Go to step **5.**	Replace the trunk lid switch or rear gate latch switch.
5	**CHECK TRUNK LID SWITCH OR REAR GATE LATCH SWITCH.** Measure the resistance between switch terminals. ***Terminals*** ***No. 1 — No. 2: (Wagon model)*** ***No. 1 — No. 3: (Sedan model)***	Is the resistance less than 1 Ω when switch is released?	Check the body integrated unit. <Ref. to LAN(diag)-2, Basic Diagnostic Procedure.>	Replace the trunk lid switch or rear gate latch switch.

6. CHECK SECURITY INDICATOR LIGHT CIRCUIT

	Step	Check	Yes	No
1	**CHECK SECURITY INDICATOR LIGHT.** 1) Turn the ignition switch to OFF. 2) Disconnect the harness connector of body integrated unit. 3) Connect the resistor (100 Ω) between body integrated unit harness connector terminal (i84) No. 33 and body ground. ***Connector & terminal*** ***(i84) No. 33 — Chassis ground:***	Does the security indicator light illuminate?	Check the body integrated unit. <Ref. to LAN(diag)-2, Basic Diagnostic Procedure.>	Go to step **2.**
2	**CHECK POWER SUPPLY FOR SECURITY INDICATOR LIGHT.** 1) Disconnect the connector from combination meter. 2) Measure the voltage between the combination meter harness connector terminal and chassis ground. ***Connector & terminal*** ***(i10) No. 1, 2 (+) — Chassis ground (−):***	Is the voltage more than 10 V?	Go to step **3.**	Check the harness for open or short circuit between combination meter and fuse.
3	**CHECK SECURITY INDICATOR LIGHT CIRCUIT.** Measure the resistance between the combination meter harness connector terminal and security control unit harness connector terminal. ***Connector & terminal*** ***(i10) No. 17 — (i84) No. 33:***	Is the resistance less than 10 Ω?	Replace the combination meter. <Ref. to IDI-15, Combination Meter.>	Check the harness for open or short circuit between combination meter and body integrated unit.

7. CHECK HORN

	Step	Check	Yes	No
1	**CHECK HORN OPERATION.** Check the horn sounds when the horn switch is pushed.	Does the horn sound?	Go to step **2.**	Check the horn circuit.
2	**CHECK OUTPUT TO HORN RELAY.** 1) Connect the Subaru Select Monitor to data link connector. 2) Turn the ignition switch to ON. 3) Select {body integrated module} from main menu. 4) Select {Function Check}. 5) Select {Horn Output} and perform.	Does the horn sound?	Horn circuit is OK.	Go to step **3.**
3	**CHECK HORN RELAY CIRCUIT.** 1) Turn the ignition switch to OFF. 2) Disconnect the harness connector of body integrated unit. 3) Disconnect the main fuse box harness connector (B186). 4) Measure the resistance between harness connector terminals. ***Connector & terminal*** ***(B280) No. 11 — (B186) No. 1:***	Is the resistance less than 10 Ω?	Check the body integrated unit. <Ref. to LAN(diag)-2, Basic Diagnostic Procedure.>	Repair the harness.

8. CHECK HAZARD LIGHT OPERATION

	Step	Check	Yes	No
1	**CHECK HAZARD LIGHT OPERATION.** Make sure the hazard light blinks when hazard switch is turned to ON.	Does the hazard light blink?	Go to step **2.**	Check the hazard light circuit.
2	**CHECK OUTPUT TO HAZARD LIGHT.** 1) Turn the ignition switch to OFF. 2) Disconnect the key warning switch harness connector. 3) Connect the Subaru Select Monitor to data link connector. 4) Turn the ignition switch to ON. 5) Select {body integrated module} from main menu. 6) Select the {ECM customizing}. 7) Check the {Hazard answer-back setup}, and then switch to ON setting. 8) Select {Current Data Display & Save}. 9) When operating the LOCK/UNLOCK button of transmitter, check the hazard output signal of body integrated unit.	Is output signal is present when operating the transmitter LOCK/UNLOCK button?	Go to step **3.**	Check the body integrated unit. <Ref. to LAN(diag)-2, Basic Diagnostic Procedure.>
3	**CHECK CIRCUIT OF HAZARD LIGHT.** 1) Turn the ignition switch to OFF. 2) Disconnect the harness connector of body integrated unit. 3) Disconnect the turn signal& hazard unit harness connector. 4) Measure the resistance between harness connector terminals. ***Connector & terminal*** ***(B280) No. 12 — (B32) No. 8:***	Is the resistance less than 10 Ω?	Check the body integrated unit. <Ref. to LAN(diag)-2, Basic Diagnostic Procedure.>	Repair the harness.

9. CHECK IGNITION SWITCH CIRCUIT

	Step	Check	Yes	No
1	**CHECK IGNITION SWITCH VOLTAGE.** 1) Connect the Subaru Select Monitor to data link connector. 2) Turn the ignition switch to ON. 3) Select {body integrated module} from main menu. 4) Select {Current Data Display & Save}. 5) Check the {BATT voltage} and {IG power supply voltage}.	Is the {IG power supply voltage} within ±1 V against {BATT voltage}?	The ignition switch input circuit is OK.	Go to step **2.**
2	**CHECK IGNITION SWITCH CIRCUIT.** 1) Turn the ignition switch to OFF. 2) Disconnect harness connector of body integrated unit. 3) Turn the ignition switch to ON. 4) Measure the voltage between the harness connector terminal and chassis ground. ***Connector & terminal*** ***(i84) No. 1 (+) — Chassis ground (−):***	Is the voltage more than 10 V?	Check the body integrated unit. <Ref. to LAN(diag)-2, Basic Diagnostic Procedure.>	Check harness for open or short circuit between body integrated unit and fuse.

10.CHECK DOOR KEY CYLINDER SWITCH AND CIRCUIT

	Step	Check	Yes	No
1	**CHECK DOOR KEY CYLINDER SWITCH CIRCUIT.** Measure the resistance between harness connector terminal and chassis ground when turning the door key cylinder switch to UNLOCK. ***Connector & terminal*** ***(i84) No. 12 — Chassis ground:***	Is the resistance less than 10 Ω?	Door key cylinder switch is OK.	Go to step **2.**
2	**CHECK DOOR KEY CYLINDER SWITCH.** 1) Disconnect the door key cylinder switch connector. 2) Measure the resistance between door key cylinder switch terminals when turning the door key cylinder switch to LOCK. ***Terminals*** ***No. 1 — No. 2***	Is the resistance less than 1 Ω?	Go to step **3.**	Replace the door key cylinder switch.
3	**CHECK DOOR KEY CYLINDER SWITCH.** Measure the resistance between door key cylinder switch terminals when turning the door key cylinder switch to UNLOCK. ***Terminals*** ***No. 2 — No. 3***	Is the resistance less than 1 Ω?	Check the harness for open or short circuits between body integrated unit and door key cylinder switch.	Replace the door key cylinder switch.

5. Front Inner Remote

A: REMOVAL

1) Remove the door trim. <Ref. to EI-48, REMOVAL, Door Trim.>
2) Remove the back cover (1) of inner remote.
3) Remove the cable (2).
4) Remove the cable end ball (3).
5) Remove the screws (4), and detach the inner remote.

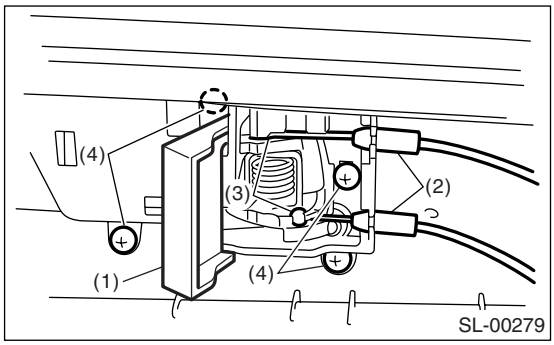

B: INSTALLATION

Install in the reverse order of removal.

NOTE:
Make sure the inner remote works correctly after installation.

C: INSPECTION

1) Check the door opener and door lock cable for deformation. When it is deformed, straighten it because failure operations may occur. When it is unrepairable, replace the front door latch & door lock actuator assembly.
2) Check the handle and cable for smooth operation.

6. Front Outer Handle

A: REMOVAL

1) Raise the front door glass to the top position.
2) Remove the door trim. <Ref. to EI-48, REMOVAL, Door Trim.>
3) Remove the cable from front inner remote. <Ref. to SL-33, REMOVAL, Front Inner Remote.>
4) Remove the sealing cover. <Ref. to EB-20, REMOVAL, Front Sealing Cover.>
5) Remove the rod clamps (1).
6) Remove the bolts (2), and then detach the front outer handle.

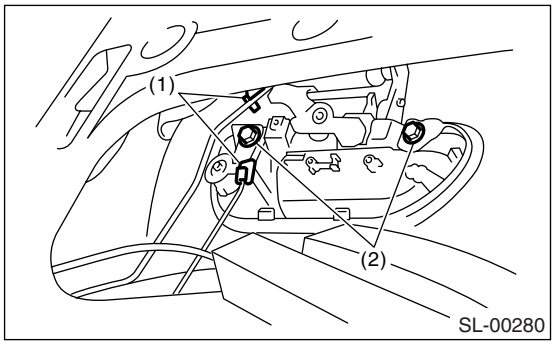

CAUTION:
Do not apply excessive force to remove the handle from door panel. Otherwise door panel may be deformed.

B: INSTALLATION

Install in the reverse order of removal.

NOTE:
Make sure the outer handle works correctly after installation.

C: INSPECTION

1) Check the rod for deformation.
2) Check the lever and rod for smooth operation.

7. Front Door Latch & Door Lock Actuator Assembly

A: REMOVAL

1) Disconnect the ground cable from battery.
2) Remove the front door trim. <Ref. to EI-48, REMOVAL, Door Trim.>
3) Remove the cable from front inner remote. <Ref. to SL-33, REMOVAL, Front Inner Remote.>
4) Remove the sealing cover. <Ref. to EB-20, REMOVAL, Front Sealing Cover.>
5) Remove the front door glass. <Ref. to GW-11, REMOVAL, Front Door Glass.>
6) Remove the rear sash. <Ref. to GW-16, REMOVAL, Front Regulator and Motor Assembly.>
7) Open the handle rod cover of latch assembly.
8) Remove the three screws.

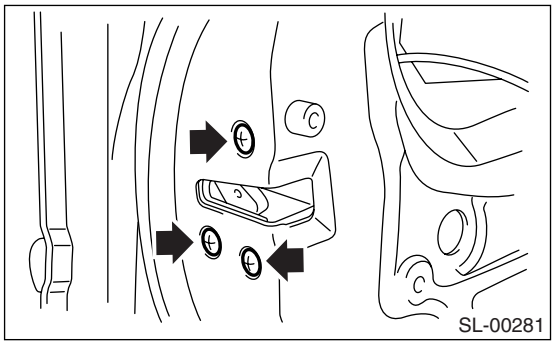

9) Remove the front door latch & door lock actuator assembly, and disconnect the connector.

B: INSTALLATION

Install in the reverse order of removal.

NOTE:
Make sure the lock works correctly after installation.

C: INSPECTION

1) Check the rod and cable for deformation. When it is deformed, straighten it because failure operations may occur. When it is unrepairable, replace the front door latch & door lock actuator assembly.
2) Check the lever, rod and cable for smooth operation.

8. Front Door Lock Actuator

A: REMOVAL

1) Remove the front door latch & door lock actuator assembly. <Ref. to SL-35, REMOVAL, Front Door Latch & Door Lock Actuator Assembly.>
2) Remove the pawl of front door latch security cover, and then remove the cover.
3) Remove the screw from the front door latch and door lock actuator, and then remove the door lock actuator.

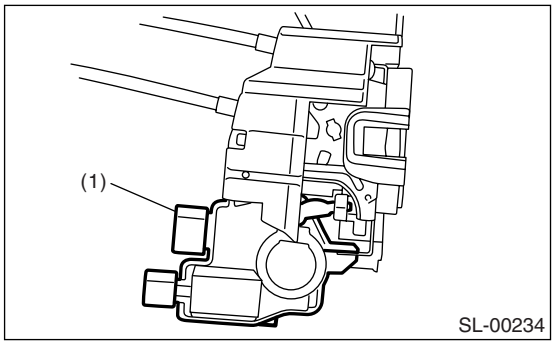

(1) Front door lock actuator

B: INSTALLATION

Install in the reverse order of removal.

NOTE:
Make sure the lock works correctly after installation.

C: INSPECTION

1) Disconnect the door lock actuator harness connector.
2) Connect the battery to door lock actuator terminals.
If defective, replace the door lock actuator.

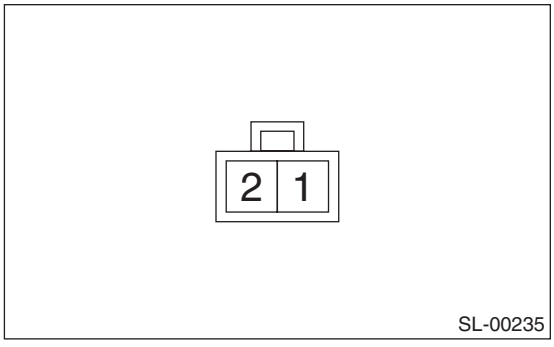

Terminal No.	Actuator operation
No. 2 (+) and No. 1 (–)	Unlocked → Locked
No. 1 (+) and No. 2 (–)	Locked → Unlocked

9. Rear Inner Remote

A: REMOVAL

1) Remove the rear door trim. <Ref. to EI-48, REMOVAL, Door Trim.>
2) Remove the back cover (1) of inner remote.
3) Remove the cable (2).
4) Remove the cable end ball (3).
5) Remove the screws (4), and detach the inner remote handle.

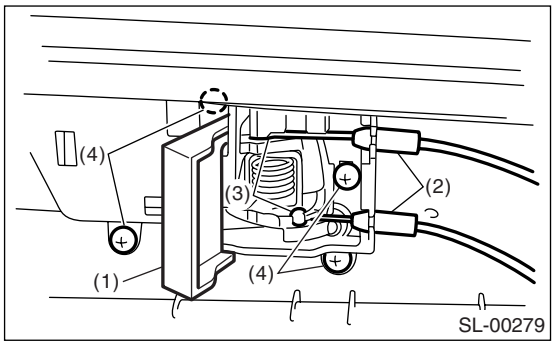

B: INSTALLATION

Install in the reverse order of removal.

NOTE:
Make sure the inner remote works correctly after installation.

C: INSPECTION

1) Check the door opener and door lock cable for deformation. When it is deformed, straighten it because failure operations may occur. When it is unrepairable, replace the rear door latch & door lock actuator assembly.
2) Check the handle and cable for smooth operation.
3) Check the child safety lock for correct operations.

10.Rear Outer Handle

A: REMOVAL

1) Raise the rear door glass to the top position.
2) Remove the rear door trim. <Ref. to EI-48, REMOVAL, Door Trim.>
3) Remove the sealing cover. <Ref. to EB-24, REMOVAL, Rear Sealing Cover.>
4) Remove the rear door latch assembly. <Ref. to SL-39, REMOVAL, Rear Door Latch & Door Lock Actuator Assembly.>
5) Remove the cable from cable clamp (1) of outer handle.
6) Remove the two bolts.

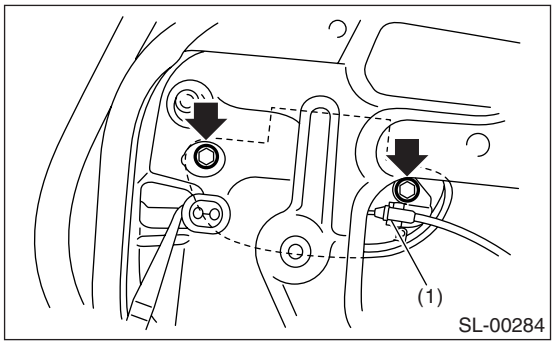

7) Detach the rear outer handle.

CAUTION:
Do not apply excessive force to remove the handle from door panel. Otherwise door panel may be deformed.

B: INSTALLATION

Install in the reverse order of removal.

NOTE:
Make sure the outer handle works correctly after installation.

C: INSPECTION

1) Check the cable for deformation. When it is deformed, straighten it because failure operations may occur. When it is unrepairable, replace the rear door latch & door lock actuator assembly.
2) Check the handle and cable for smooth operation.

11.Rear Door Latch & Door Lock Actuator Assembly

A: REMOVAL

1) Disconnect the ground cable from battery.
2) Remove the rear door trim. <Ref. to EI-48, REMOVAL, Door Trim.>
3) Remove the cable from rear inner remote. <Ref. to SL-37, REMOVAL, Rear Inner Remote.>
4) Remove the sealing cover. <Ref. to EB-24, REMOVAL, Rear Sealing Cover.>
5) Remove the rear door glass. <Ref. to GW-24, REMOVAL, Rear Door Glass.>
6) Remove the rear sash. <Ref. to GW-26, REMOVAL, Rear Regulator and Motor Assembly.>
7) Take out the cable from cable clamp of outer handle.
8) Remove the three screws.

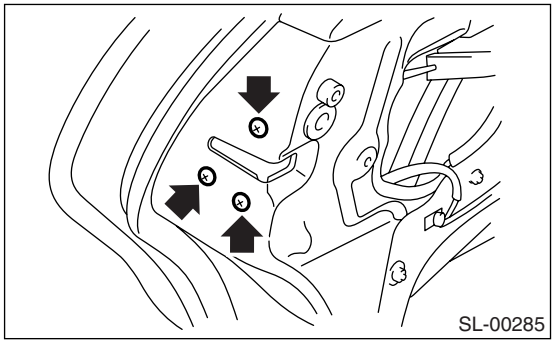

9) Disconnect the connectors, and then remove the rear door latch & door lock actuator assembly.

B: INSTALLATION

Install in the reverse order of removal.

NOTE:
Make sure the lock works correctly after installation.

C: INSPECTION

1) Check the cable for deformation. When it is deformed, straighten it because failure operations may occur. When it is unrepairable, replace the rear door latch & door lock actuator assembly.
2) Check the lever and cable for smooth operation.

12.Rear Door Lock Actuator

A: REMOVAL

1) Remove the rear door latch & door lock actuator assembly. <Ref. to SL-39, REMOVAL, Rear Door Latch & Door Lock Actuator Assembly.>
2) Remove the pawl of rear door latch security cover, and then remove the cover.
3) Remove the screw from the rear door latch and door lock actuator, and then remove the door lock actuator.

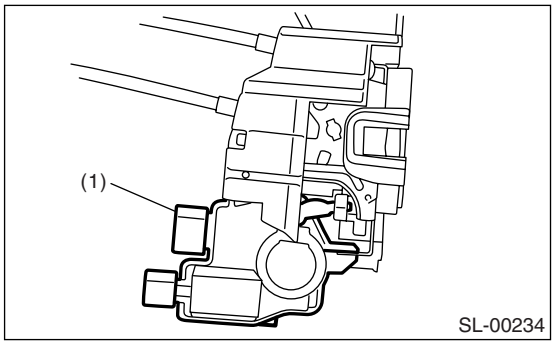

(1) Rear door lock actuator

B: INSTALLATION

Install in the reverse order of removal.

NOTE:
Make sure the lock works correctly after installation.

C: INSPECTION

1) Disconnect the door lock actuator harness connector.
2) Connect the battery to door lock actuator terminals.
If defective, replace the door lock actuator.

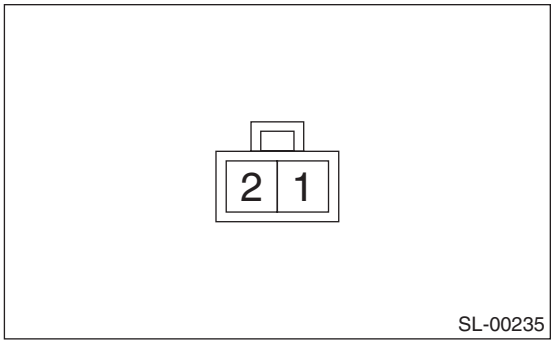

Terminal No.	Actuator operation
No. 2 (+) and No. 1 (–)	Unlocked → Locked
No. 1 (+) and No. 2 (–)	Locked → Unlocked

13.Rear Gate Outer Handle

A: REMOVAL

1) Remove the rear gate trim. <Ref. to EI-68, REMOVAL, Rear Gate Trim.>
2) Remove the rear gate garnish. <Ref. to EI-75, REMOVAL, Rear Gate Garnish.>
3) Remove the two nuts to take out the rear gate outer handle.
4) Remove the cable (1) or rear gate outer handle.

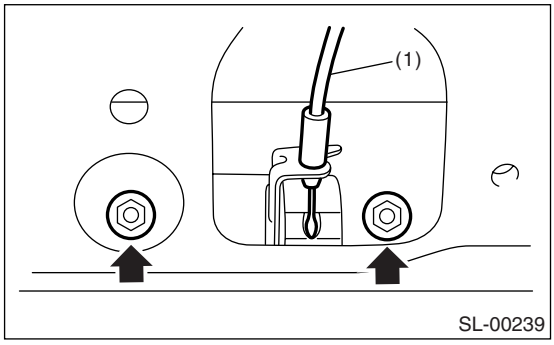

B: INSTALLATION

Install in the reverse order of removal.

NOTE:
Make sure the outer handle works correctly after installation.

C: INSPECTION

1) Check the cable of rear gate handle for deformation.
2) Check the rear gate outer handle and cable of rear gate handle for smooth operation.

14.Rear Gate Latch Assembly

A: REMOVAL

1) Disconnect the ground cable from battery.
2) Remove the rear gate trim. <Ref. to EI-68, REMOVAL, Rear Gate Trim.>
3) Remove the two screws.

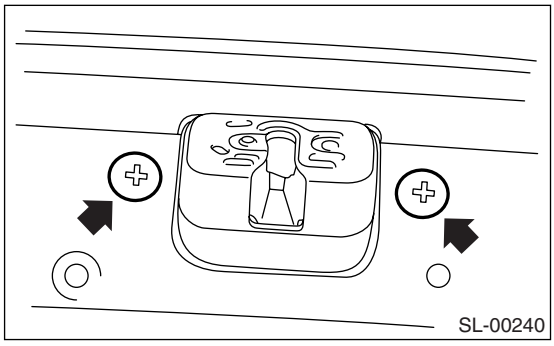

4) Disconnect the each connector and cable of rear gate handle.

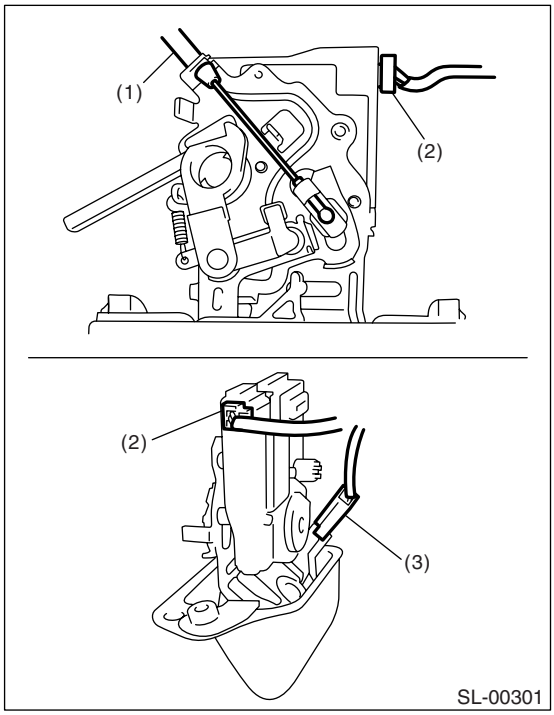

(1) Cable
(2) Rear gate lock actuator connector
(3) Rear gate latch switch connector

5) Remove the rear gate latch assembly.

B: INSTALLATION

Install in the reverse order of removal.

NOTE:
Make sure the lock works correctly after installation.

C: INSPECTION

1) Disconnect the rear gate lock actuator harness connector.
2) Connect the battery to rear gate lock actuator terminals.

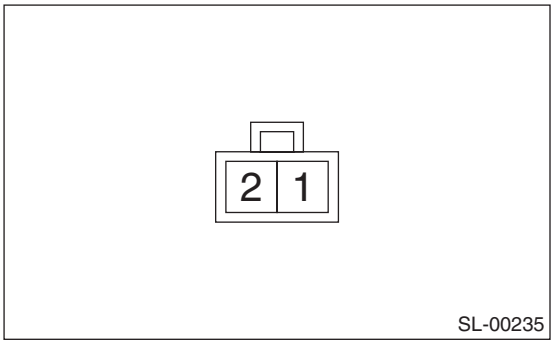

Terminal No.	Actuator operation
No. 2 (+) and No. 1 (–)	Unlocked → Locked
No. 1 (+) and No. 2 (–)	Locked → Unlocked

Replace the rear gate latch assembly if faulty.
3) Check the cable of rear gate handle for deformation.
4) Check the lever and cable of rear gate handle for smooth operation.

15.Trunk Lid Lock Assembly

A: REMOVAL

1) Remove the trunk lid release handle. <Ref. to SL-44, REMOVAL, TrunkLid Release Handle.>
2) Disconnect the connectors and detach the cable of trunk opener.
3) Remove the two bolts to remove trunk lid lock assembly.

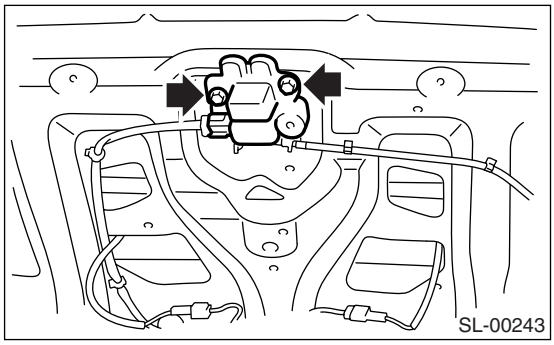

B: INSTALLATION

Install in the reverse order of removal.

NOTE:
- Apply grease to the movable part.
- Make sure the lock works correctly after installation.

C: INSPECTION

1) Disconnect the trunk lid actuator harness connector.
2) Connect the battery to trunk lid actuator terminals.

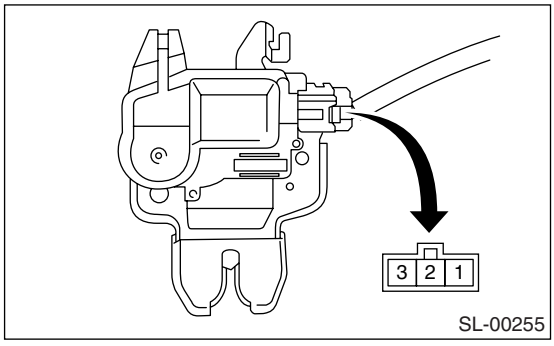

Terminal No.	Actuator operation
No. 2 (+) and No. 1 (–)	Locked → Unlocked

If defective, replace the trunk lid actuator.
3) Check the striker for deformation or abnormal wear.
4) Check the safety lever for improper movement.
5) Check other levers and the spring for rust formation and unsmooth movement.
6) Check the cable of trunk opener for smooth operation.

16.TrunkLid Release Handle

A: REMOVAL

1) Remove the cover (A).

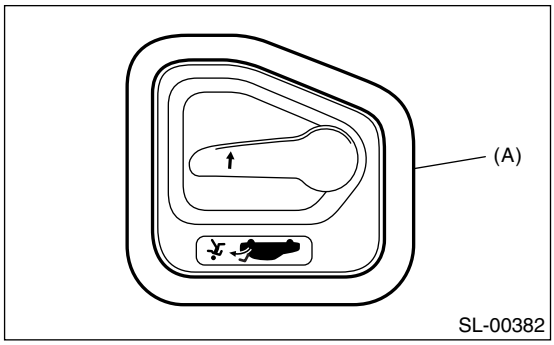

2) Remove the trunk lid trim. <Ref. to EI-70, REMOVAL, Trunk Room Trim.>
3) Remove the four clips to remove trunk lid release handle.

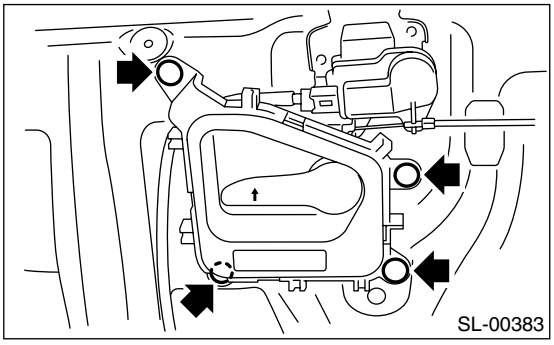

B: INSTALLATION

Install in the reverse order of removal.

C: INSPECTION

Make sure the lever works smoothly.

17.Front Hood Lock Assembly

A: REMOVAL

1) Open the front hood.
2) Remove the bolts, and then detach the front hood lock assembly.
3) Remove the cable from lock assembly.

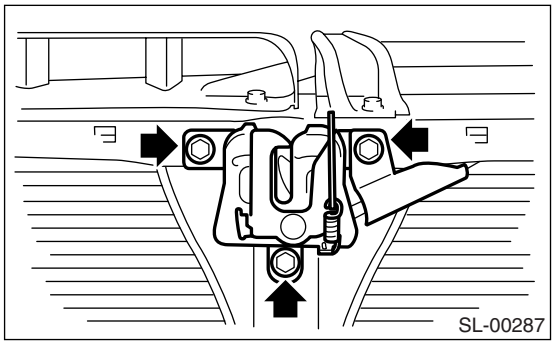

B: INSTALLATION

Install in the reverse order of removal.

NOTE:
- Apply grease to the movable part.
- Make sure the cable works correctly after installation.

C: ADJUSTMENT

Loosen the bolt, and adjust the lock assembly while moving it up and down.

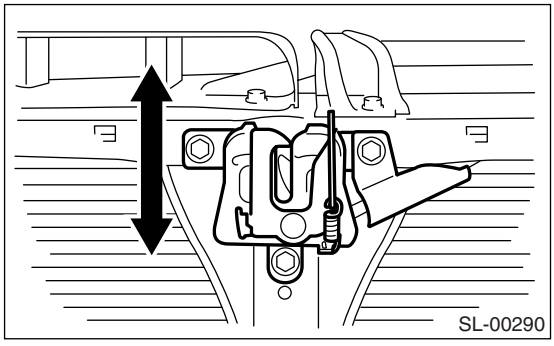

D: INSPECTION

1) Check the striker for deformation or abnormal wear.
2) Check the safety lever for improper movement.
3) Check other levers and the spring for rust formation and unsmooth movement.

18.Remote Openers

A: REMOVAL

1. FRONT HOOD OPENER

1) Remove the cable from hood lock.
2) Remove the bolt, and then detach the opener lever.

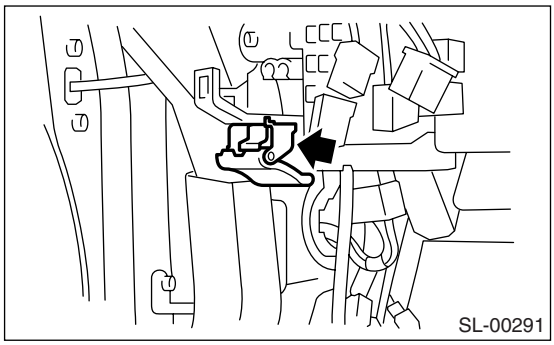

2. TRUNK LID OPENER

1) Remove the rear seat. <Ref. to SE-20, REMOVAL, Rear Seat.>
2) Remove the center pillar lower trim, side sill cover, rear pillar lower trim and floor mat on the driver's side. Remove the clip holding cable.
3) Remove the opener lever (1) and rear cover (2).
4) Remove the pin (3) and remove front cover (4).
5) Remove the bolt and nut, and remove the pull handle assembly (5).

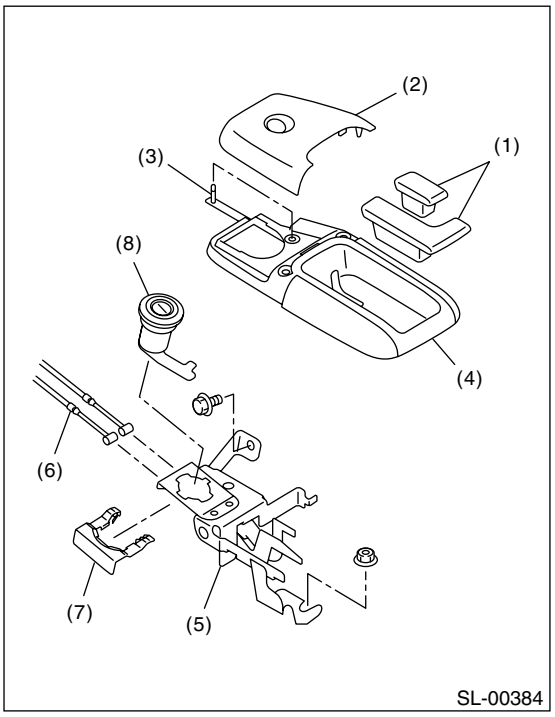

(1) Opener lever
(2) Rear cover
(3) Pin
(4) Front Cover
(5) Pull handle ASSY
(6) Cable
(7) Clamp
(8) Key cylinder

6) Remove the cable from pull handle assembly.
7) Remove the clamp (7) to remove key cylinder (8).

CAUTION:
Remove the key cylinder with its UNLOCK position.

8) Remove the trunk lid lock assembly from trunk lid.

9) Remove the cable from trunk lid lock assembly.

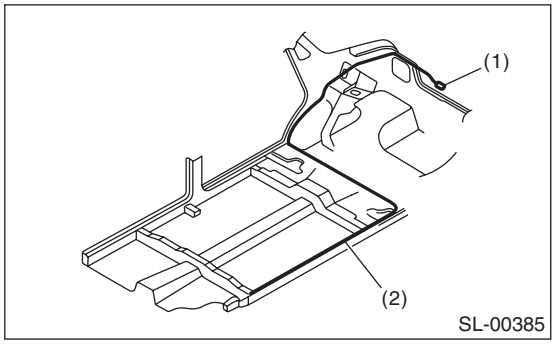

(1) Trunk lid lock ASSY
(2) Cable

3. FUEL FILLER FLAP LID OPENER

• Sedan model

<Ref. to SL-46, TRUNK LID OPENER, REMOVAL, Remote Openers.>

• Wagon model

1) Remove the rear seat. <Ref. to SE-20, REMOVAL, Rear Seat.>
2) Remove the center pillar lower trim, side sill cover, rear pillar lower trim and floor mat on the driver's side. Remove the clip holding cable.
3) Remove the bolt and nut, and then detach the pull handle assembly.

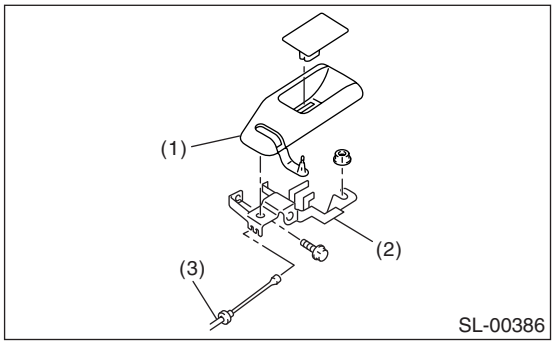

(1) Cover
(2) Pull handle ASSY
(3) Cable

4) Remove the cable from pull handle assembly.
5) Remove the rear quarter trim RH. <Ref. to EI-62, REMOVAL, Rear Quarter Trim.>
6) Rotate the fuel lock inside of the quarter panel to 90° and remove. (Either right or left turn)

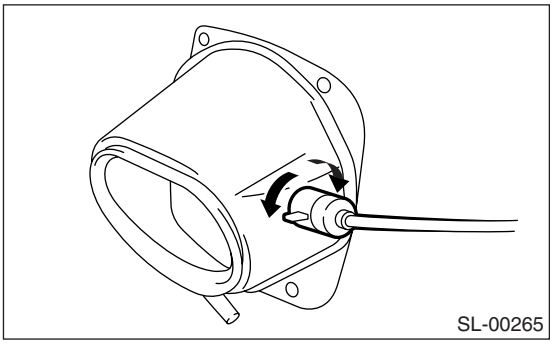

B: INSTALLATION

1. FRONT HOOD OPENER

Install in the reverse order of removal.

2. TRUNK LID OPENER

Install in the reverse order of removal.

CAUTION:
Install the key cylinder with its UNLOCK position.

3. FUEL FILLER FLAP LID OPENER

Install in the reverse order of removal.

C: INSPECTION

Make sure the front hood, trunk lid and fuel filler flap lid open and close smoothly.

19.Ignition Key Lock

A: REPLACEMENT

1) Disconnect the ground cable from battery.
2) Remove the steering column. <Ref. to PS-17, REMOVAL, Tilt Steering Column.>
3) Secure the steering column in a vise. Remove the bolt with a drill.

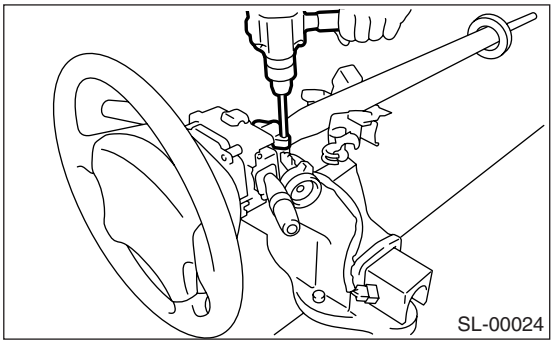
SL-00024

4) Remove the ignition key lock.
5) Using a new bolt, tighten the bolts all the way.

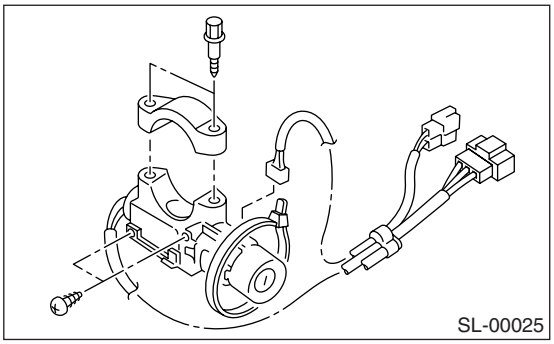
SL-00025

B: INSPECTION

1) Remove the instrument panel lower panel.
2) Remove the lower column cover.
3) Unfasten the fixing clip which secures harness, and then disconnect the connector of the ignition switch from body harness.
4) Turn the ignition key plate to each position and check the continuity between terminals of ignition connector.

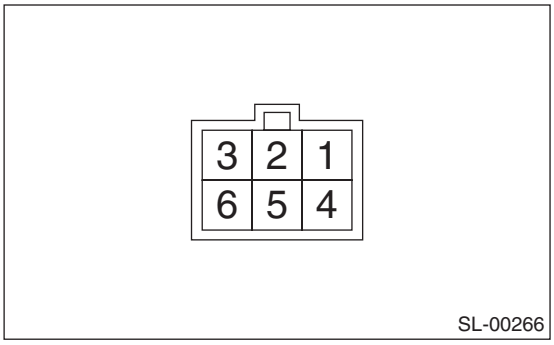

SL-00266

Switch position	Terminal No.	Standard
LOCK	—	—
ACC	No. 3 and No. 4	Less than 1 Ω
ON	No. 3 and No. 1 and No. 4 No. 3 and No. 6	Less than 1 Ω
ST	No. 3 and No. 1 No. 3 and No. 2 and No. 6	Less than 1 Ω

If NG, replace the ignition switch.

20.Key Lock Cylinders

A: REPLACEMENT

1) Raise the front door glass to the top position.
2) Remove the door trim. <Ref. to EI-48, REMOVAL, Door Trim.>
3) Remove the sealing cover.
4) Remove the rod clamp. Remove the bolt. Replace the key cylinder (1).

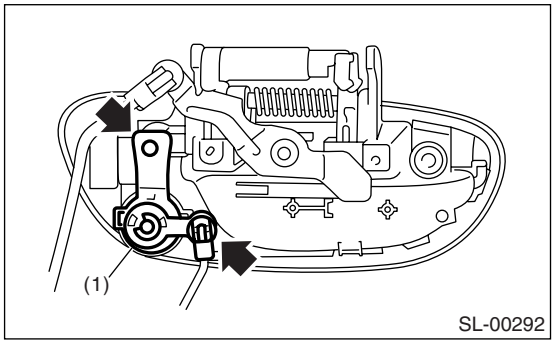

21.Security Control Unit

A: NOTE

The control of security system is carried out in body integrated unit.

B: REMOVAL

<Ref. to SL-54, REMOVAL, Body Integrated Unit.>

C: INSTALLATION

<Ref. to SL-54, INSTALLATION, Body Integrated Unit.>

22.Impact Sensor

A: REMOVAL

1) Remove the key from ignition switch.
2) Close all the doors, trunk lid and rear gate.
3) Press the UNLOCK button of transmitter.
4) Change the setting of impact sensor using Subaru Select Monitor.
5) Disconnect the ground cable from battery.
6) Remove the impact sensor.

B: INSTALLATION

1) Remove the key from ignition switch.
2) Close all the doors, trunk lid and rear gate.
3) Press the UNLOCK button of transmitter.
4) Disconnect the ground cable from battery.
5) Install the impact sensor.
6) Connect the ground cable from battery.
7) Change the setting of impact sensor using Subaru Select Monitor.

C: OPERATION

1. IMPACT SENSOR SETTING USING SUBARU SELECT MONITOR

1) Connect the Subaru Select Monitor to data link connector.
2) Turn the ignition switch to ON.
3) Select {Body Integrated Unit} from the main menu.
4) Select {ECM customizing}.
5) Make a impact monitor setting.
- When installing: ON
- When removing: OFF

6) Make a impact monitor ON/OFF setting.
- When installing: ON
- When removing: OFF

7) Turn the ignition switch to OFF, and then remove the Subaru Select Monitor.

D: ADJUSTMENT

1. CHECK IMPACT SENSOR

1) Remove the key from ignition switch.
2) Close all the windows.
3) Close all the doors, trunk lid and rear gate. Leave open the front hood.
4) Press the LOCK button of transmitter from outside of vehicle.
5) Check that the security indicator light blinks twice within 0.5 seconds in 2 seconds cycle after 30 seconds.
6) Hit the windshield with your palm continuously and check the security alarm operates. Lift up the front hood approx. 12 cm (4.7 in), and then drop it off to check the operation of security alarm.
7) If NG, adjust the impact sensitivity.

2. IMPACT SENSITIVITY ADJUSTMENT

1) Connect the Subaru Select Monitor to data link connector.
2) Turn the ignition switch to ON.
3) Select {Impact Sensor} from the main menu.
4) Make a {Sensitivity Adjustment Mode}.
- Sensitivity can be adjusted in 11 levels (0 to 10).
- Initial setting is 5.
- Smaller number means more sensitive.
- Larger number means less sensitive.

5) Turn the ignition switch to OFF, and then remove the Subaru Select Monitor.

NOTE:
- Set the sensor so as not to let the alarm on normal vibration (reclining to the door, hit the ball and etc.).
- Set the sensor to operate the alarm with hitting the door or window glass, etc. continuously like a mayhem by robbery.
- Ask the customer about parking situation for setting, because the alarm operate when the vibration not only the burglar but also the construction, etc.

23.Keyless Entry Control Unit

A: REMOVAL

1) Disconnect the ground cable from battery.
2) Remove the glove box. <Ref. to EI-51, REMOVAL, Glove Box.>
3) Remove the screw, then remove the keyless entry control module while disconnecting the connector.

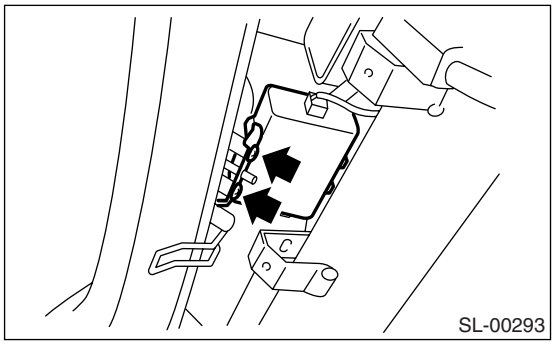

B: INSTALLATION

Install in the reverse order of removal.

24.Keyless Buzzer

A: REMOVAL

1) Disconnect the ground cable from battery.
2) Remove the front bumper. <Ref. to EI-30, REMOVAL, Front Bumper.>
3) Remove the keyless buzzer installed to the backside of horn bracket.

B: INSTALLATION

Install in the reverse order of removal.

C: INSPECTION

Install the keyless buzzer to another vehicle which operates keyless buzzer normally, check the buzzer sounds.

25.Body Integrated Unit

A: REMOVAL

NOTE:
• If replacing the body integrated unit, check the current setting and note it. <Ref. to LAN(diag)-17, CONFIRMATION OF CURRENT SETTING, OPERATION, Subaru Select Monitor.>
• When replacing the body integrated unit, all immobilizer keys also must be replaced and registered again.

1) Disconnect the ground cable from battery.
2) Remove the instrument panel lower cover. <Ref. to EI-50, REMOVAL, Instrument Panel Lower Cover.>
3) Disconnect the connector of body integrated unit.

CAUTION:
Be careful to keep water and other foreign materials away from body integrated unit.

4) Remove the body integrated unit from the body integrated unit mounting bracket using flat tip screwdriver.

CAUTION:
Be careful not to damage the unit when removing it forcibly from the bracket.

5) Remove the clutch pedal stopper arm. (MT model) <Ref. to CL-21, REMOVAL, Clutch Pedal.>
6) Remove two body integrated unit bracket mounting bolts, and remove the bracket.

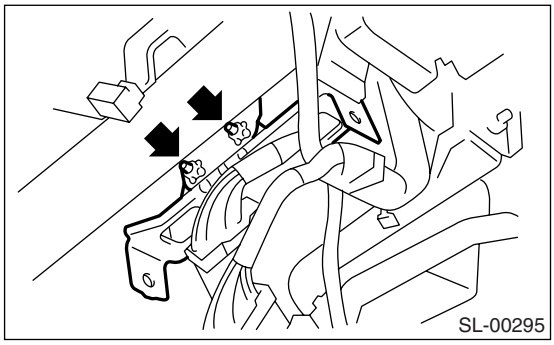

B: INSTALLATION

Install in the reverse order of removal.

NOTE:
• When the same body integrated unit is reintalled in the same vehicle, it is not necessary to register the immobilizer again.
• Make sure it comforms to the current setting condition after installation. <Ref. to LAN(diag)-17, CONFIRMATION OF CURRENT SETTING, OPERATION, Subaru Select Monitor.>

26.Transmitter

A: REMOVAL

1. TRANSMITTER BATTERY

Remove the battery (1) from transmitter.

NOTE:
To prevent static electricity damage to the transmitter printed circuit board, touch the steel area of building with hand to discharge static electricity carried on body or clothes before disassembling the transmitter.

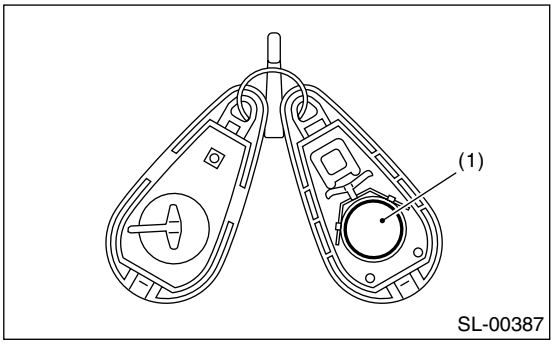

B: INSTALLATION

1. TRANSMITTER BATTERY

Install in the reverse order of removal.

C: INSPECTION

1. TRANSMITTER BATTERY

Measure the voltage between the transmitter battery (+) terminal and (–) terminal.

NOTE:
Battery discharge occurs during the measurement. Complete the measurement within 5 seconds.

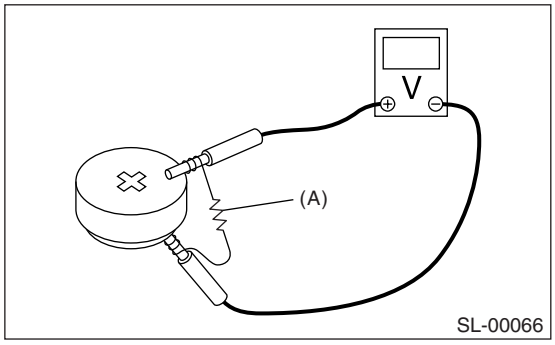

(A) Resistance 47 Ω

Tester connection		Standard
(+)	(–)	
Battery Positive terminal	Battery Ground terminal	2.5 — 3.0 V

If NG, replace the battery. (Use CR2025 or equivalent.)

D: REPLACEMENT

1. REGISTRATION OF TRANSMITTER WITH SUBARU SELECT MONITOR

NOTE:
• A maximum of four transmitter can be registered for each individual vehicle.
• When replacing or adding the transmitter, new registration of transmitter is necessary.

1) Connect the Subaru Select Monitor to vehicle.
2) Turn the ignition switch to ON.
3) From the «Main menu» on the Subaru Select Monitor, select the {2. Check individual system} → {7. Integrated unit mode} → {8. Transmitter ID registration}, and press the [YES] key.
4) Input the 8-digit ID number from the left attached to the plastic bag of transmitter.

NOTE:
Press the [▲] key on the Subaru Select Monitor to increase the number, and the [▼] key to decrease. Press the [<] key to move to the digit in the left, and [>] to the right.

5) The ID number you have entered will be shown. Make sure that the ID number shown is the same as that of plastic bag.
6) Press the [YES] key if the ID number is correct. Press the [NO] key if incorrect, to return to the step 3) and try again.
7) «ID registration in process···» will be displayed and registration started.
8) «ID registration done» will be shown when the process is done.
9) To end, select the «END:NO», and press the [NO] key to return to {8. Transmitter ID registration}. If there are additional transmitters to be registered, select the «Next registration:YES», and press the [YES] key to return to the step 3).

NOTE:
• If the registration fails, «ID registration failed. Try again.» will be shown. Press the [YES] key to return to the {8. Transmitter ID registration} and retry from the step 2).
• «END: NO» is shown on the Subaru Select Monitor when four transmitters have been registered. Press the [NO] key to return to {8. Transmitter ID registration}.

27.Immobilizer Control Unit

A: NOTE

The control of immobilizer system is carried out in body integrated unit.

B: REMOVAL

<Ref. to SL-54, REMOVAL, Body Integrated Unit.>

C: INSTALLATION

Install in the reverse order of removal.

28.Immobilizer Antenna

A: REMOVAL

1) Disconnect the ground cable from battery.
2) Remove the screws, and detach the upper column cover and lower column cover.

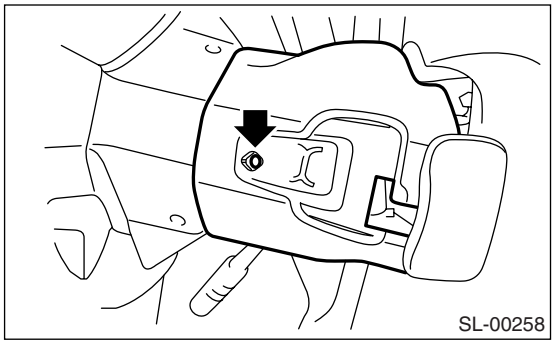

3) Remove the instrument panel lower cover. <Ref. to EI-50, REMOVAL, Instrument Panel Lower Cover.>
4) Disconnect the immobilizer antenna connector (A) and ignition switch lighting connector (B).
5) Loosen the screw and release the lock (D) at opposite side using flat-tip screwdriver (1), and then detach the immobilizer antenna (C).

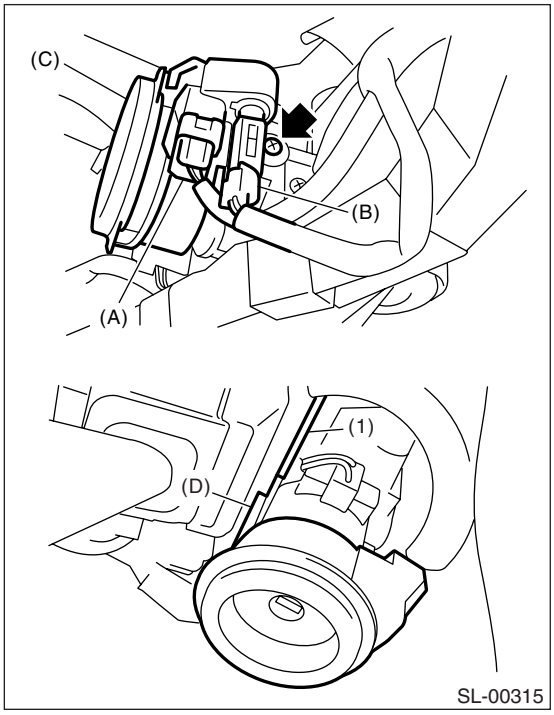

CAUTION:
Do not apply excessive force to remove the immobilizer antenna and lock. Otherwise they may be broken because those parts are the products made of a plastic.

B: INSTALLATION

Install in the reverse order of removal.

Immobilizer Antenna

SUN ROOF/T-TOP/CONVERTIBLE TOP (SUNROOF)

SR

		Page
1.	General Description	2
2.	Sunroof Control System	4
3.	Glass Lid	5
4.	Sunroof Assembly	8
5.	Sunroof Motor	10
6.	Sunroof Switch	13
7.	Sunshade	15

1. General Description

A: COMPONENT

1. SEDAN MODEL

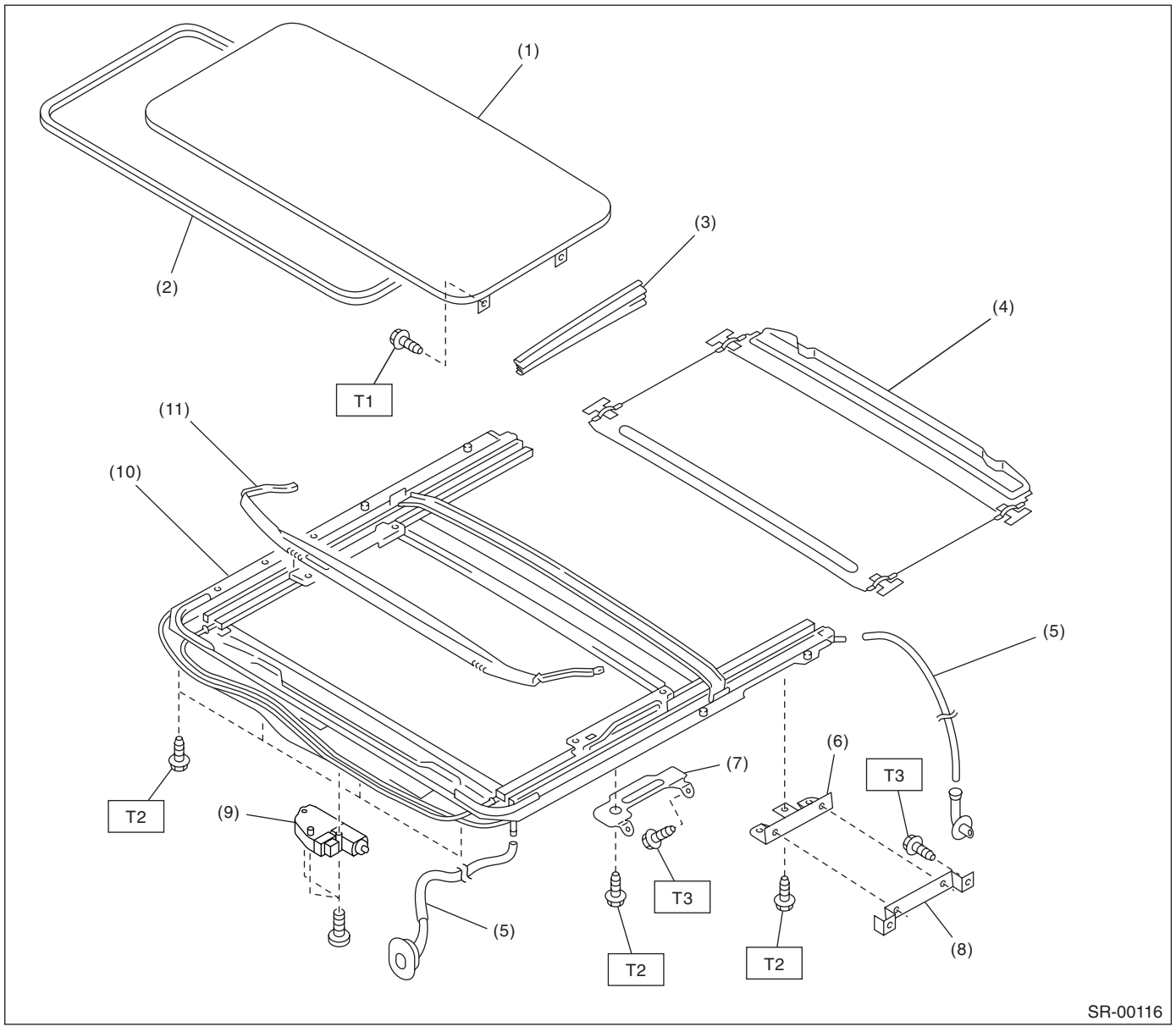

(1) Glass lid
(2) Weatherstrip
(3) Cover
(4) Sunshade
(5) Drain tube
(6) Assist rail bracket (Rear)
(7) Assist rail bracket (Front)
(8) Sunroof bracket (Rear)
(9) Motor ASSY
(10) Frame ASSY
(11) Deflector

Tightening torque: N·m (kgf-m, ft-lb)
T1: 4.5 (0.46, 3.3)
T2: 6.0 (0.61, 4.4)
T3: 7.5 (0.76, 5.3)

2. WAGON MODEL

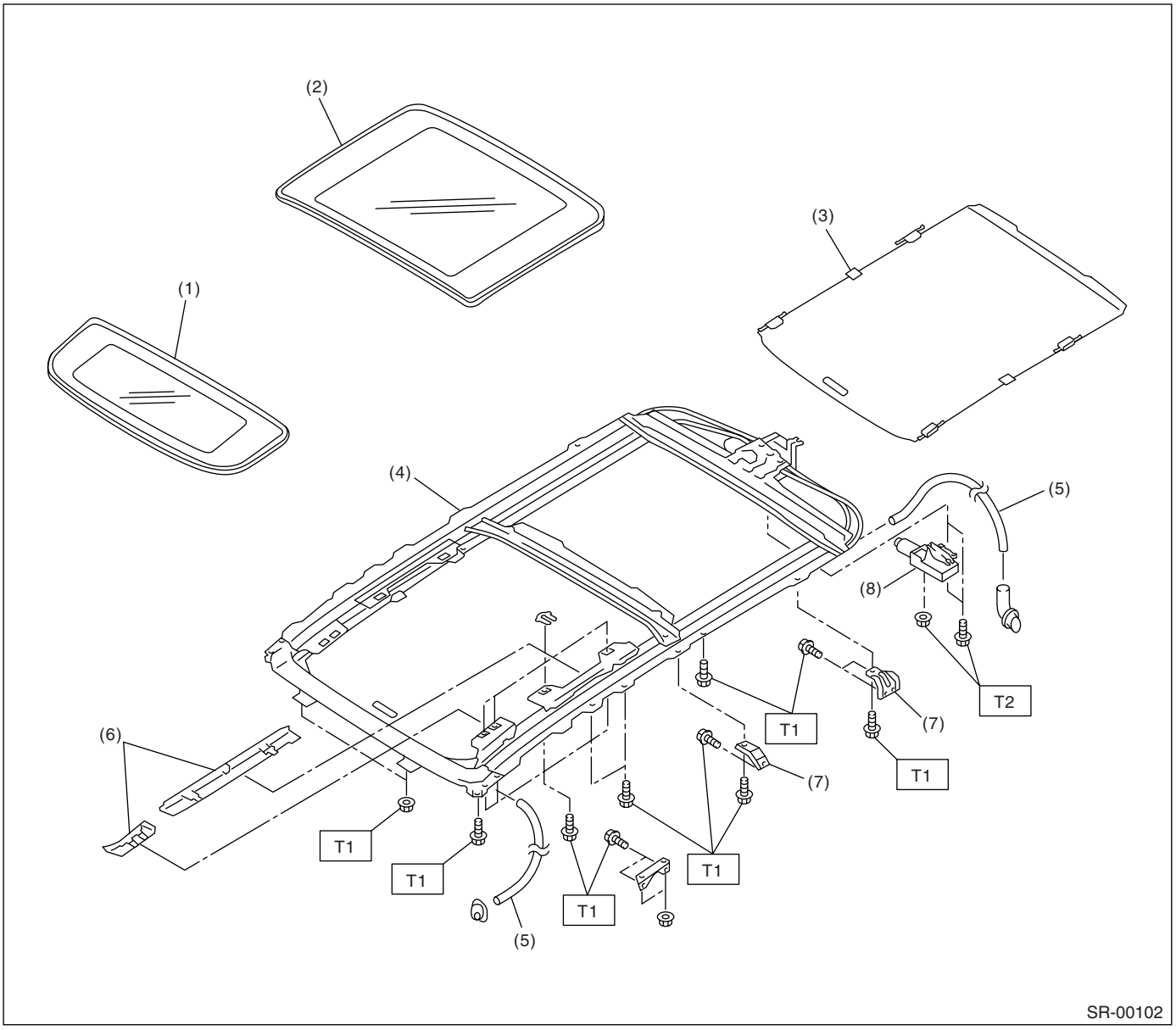

(1) Glass lid (Front)
(2) Glass lid (Rear)
(3) Sunshade
(4) Frame ASSY
(5) Drain tube
(6) Cover (Front and rear)
(7) Frame bracket
(8) Motor ASSY

Tightening torque: N·m (kgf-m, ft-lb)
T1: 7.5 (0.76, 5.3)
T2: 4.5 (0.46, 3.0)

B: CAUTION

- Before disassembling or reassembling parts, always disconnect the battery ground cable. When replacing the audio, control unit, and other parts provided with memory functions, record the memory contents before disconnecting the battery ground cable in order to prevent memory deletion.
- Reassemble the parts in the reverse order of disassembly unless otherwise indicated.
- Adjust parts to the given specifications.
- Connect the connectors securely for reassembly.
- After reassembly, make sure functional parts operate smoothly.

C: PREPARATION TOOL

1. GENERAL TOOL

TOOL NAME	REMARKS
Circuit tester	Used for measuring resistance and voltage.

2. Sunroof Control System

A: WIRING DIAGRAM

1. SUNROOF

<Ref. to WI-180, WIRING DIAGRAM, Sunroof Control System.>

B: INSPECTION

Symptom	Inspection order
Water leakage	(1) Check roof panel and glass lid for improper or poor sealing. (2) Check drain tube for clogging. (3) Check sunroof frame seal and body for improper fit.
Booming noise, wind noise and other noise	(1) Check glass lid and roof panel for improper clearance. (2) Check sunshade and roof trim for improper clearance.
Motor noise	(1) Check installing part of motor for looseness. (2) Check gears and bearings for wear. (3) Check cable for wear. (4) Check cable pipe for deformities.
Failure of sunroof (Motor operates properly.)	(1) Check guide rail for foreign particles. (2) Check guide rail for improper installation. (3) Check parts for mutual interference. (4) Check cable slider for improper clinching. (5) Check cable for improper installation.
Motor does not rotate or rotate improperly.	(1) Check fuse for blown out. (2) Check switch for improper function. (3) Check motor for incorrect terminal voltage. (4) Check the relay for improper operation. (5) Check poor grounding system. (6) Check harness for open or short and terminals for poor connections.
Failure turn of glass lid	Check guide rail for foreign particles.

- Failure turn of glass lid while driving rough road.

Glass lid has auto-reverse function. When applied above specified force to the glass lid, the lid turns back and stops. When operating the glass lid (open or close) while driving the rough road, the lid judges vibration as a force and may causes failure turns. When the failure turn is occurred, the initialize operation is required with following procedure.

1. INITIALIZE OPERATION (SEDAN MODEL)

1) Tilt up the glass lid.
2) Release the switch once, and press the tilt up switch again for 15 seconds.
3) When the glass lid is raised a little and returned to tilt up position, release the switch for the moment. (Initialization of position detecting function)
4) Keep pressing the tilt up switch within 5 seconds from releasing the switch, glass lid tilts down → slides open → slides close operation automatically. (Time gap of more than 5 seconds will result in cancellation of position detecting function.)
5) Initialize operation is completed.

2. INITIALIZE OPERATION (WAGON MODEL)

1) Apply the force to glass lid in the direction of glass lid open while glass lid (rear) is closing, and then reverse the lid five times in a row.
However, in the following situation, the initialize operation is canceled.
- When the lid is fully closed once during auto-reverse operation five times in a row.
- When the interval of auto-reverse operation is more than 30 seconds once.

2) When the operation of glass lid shift to brink operation*, fully close the lid on switch operation.
3) Initialize operation is completed.
*Brink operation: Although keep pressing the switch, glass lid operates only at a moment when the switch is pressed.

3. Glass Lid

A: REMOVAL

1. SEDAN MODEL

1) Completely close the glass lid, and then open the sunshade.
2) Remove the cover (A), and then remove the TORX® bolts (B).

CAUTION:
TORX® bolts are applied with thread locker. If they are removed, replace with new ones.

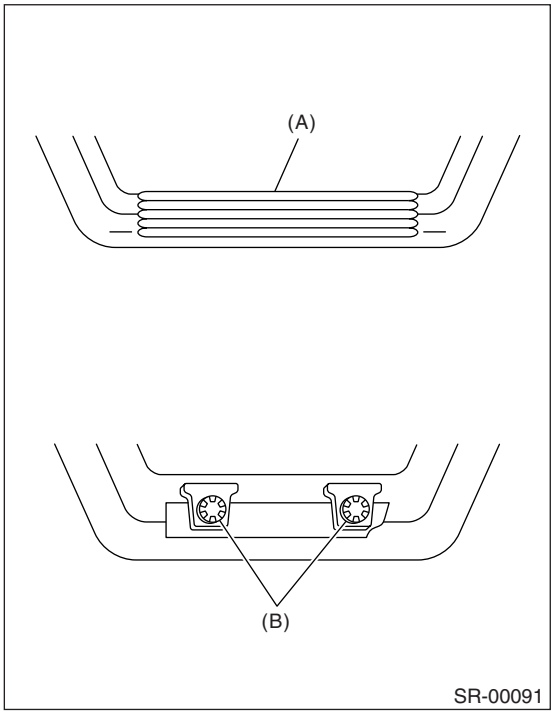

3) Remove the glass lid carefully.

2. WAGON MODEL (FRONT)

1) Open the sunshade.
2) Pull out the cover (A) toward arrow mark, and then remove the nuts (B).

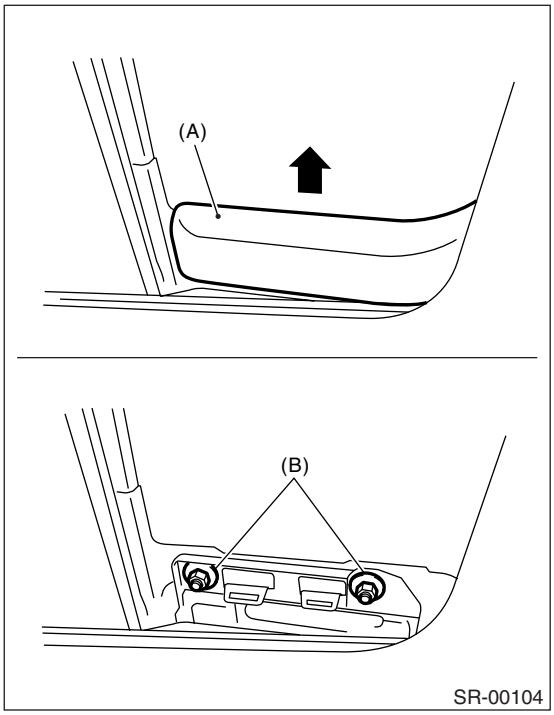

3) Remove the glass lid (front) carefully.

3. WAGON MODEL (REAR)

1) Tilt up the glass lid (front), and then open the sunshade.
2) Remove the cover (A), and then remove the nuts (B).

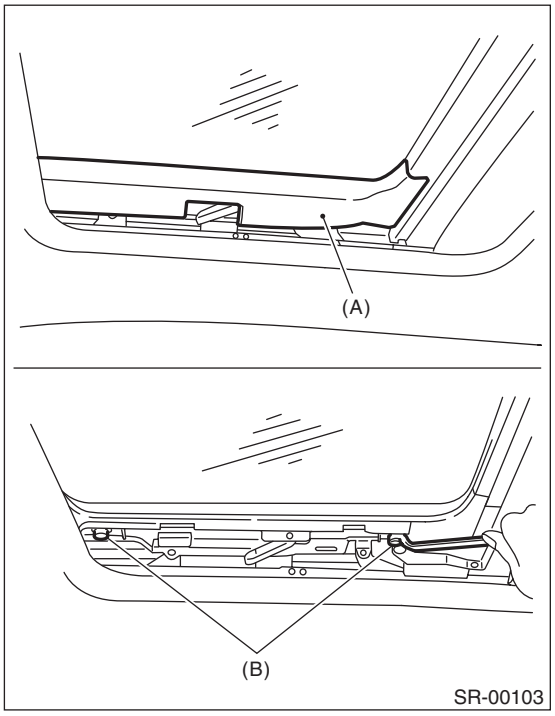

3) Remove the glass lid carefully.

B: INSTALLATION

Install in the reverse order of removal.

C: ADJUSTMENT

1. SEDAN MODEL

Loosen the glass lid mounting TORX® bolts (A), and then adjust the height with moving the lid.

Difference in height between glass lid and roof panel L:
2.0±1.0 mm (0.079±0.039 in)

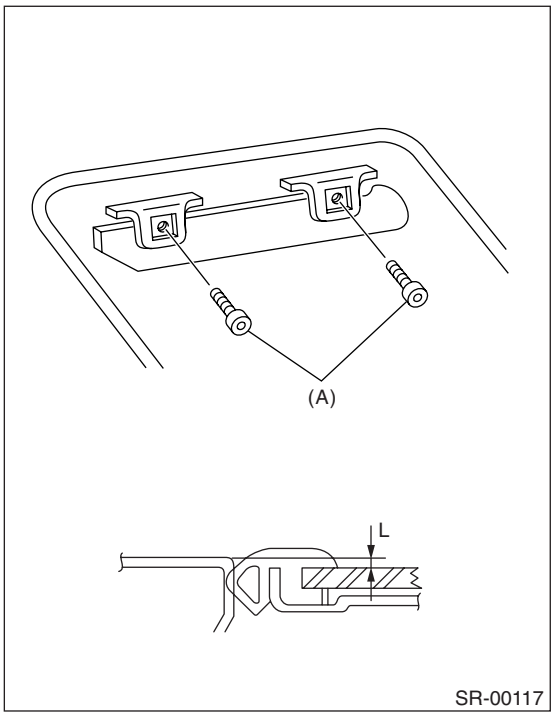

2. WAGON MODEL

Loosen the glass lid installation nuts, and then adjust the height by adding (max: four pieces) or extracting (min: zero piece) shims (B) (standard: two pieces) which installed between glass lid (A) and body.

Difference in height between glass lid and roof panel L:
2.0±1.0 mm (0.079±0.039 in)

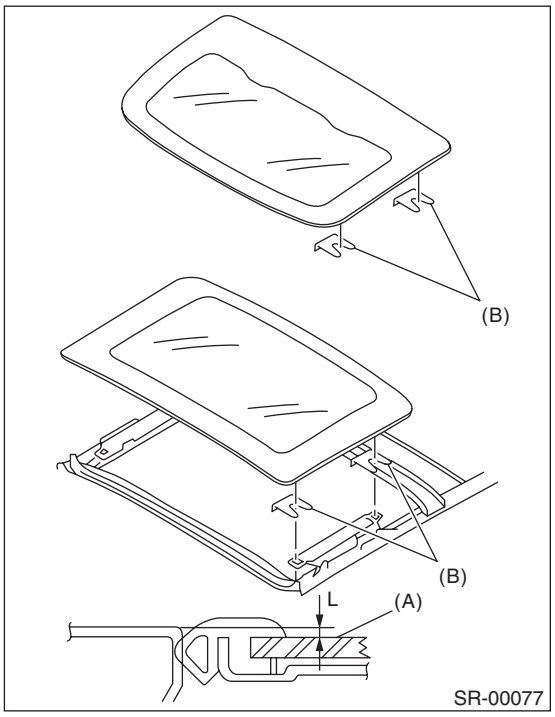

D: FORCED DRIVE

If glass lid dose not operate or is not supplied with power, move the glass lid using the emergency handle (hexagon wrench)*.
*: Emergency handle (L shape general purpose hexagon wrench)
Sedan model: bolt width 4 mm (0.16 in)
Wagon model: bolt width 5 mm (0.20 in)

1. SEDAN MODEL

1) Remove the spot map light. <Ref. to LI-29, REMOVAL, Spot Map Light.>
2) Insert the hexagon wrench securely until it touches the motor shaft edge.
3) Turn the hexagon wrench, and move the glass lid.
- Turning right, the glass lid open.
- Turning left, the glass lid close.

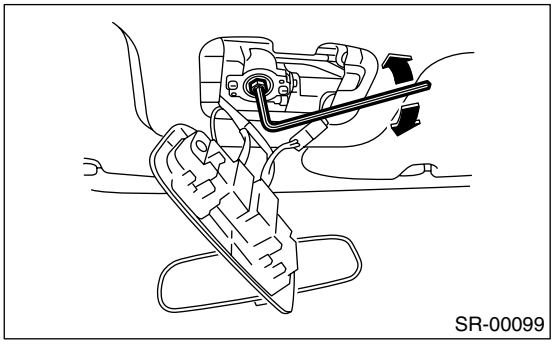

2. WAGON MODEL

1) Slide the slider (A) to vehicle rearward (C), and remove the sun shade from slider by raising the rod (B).

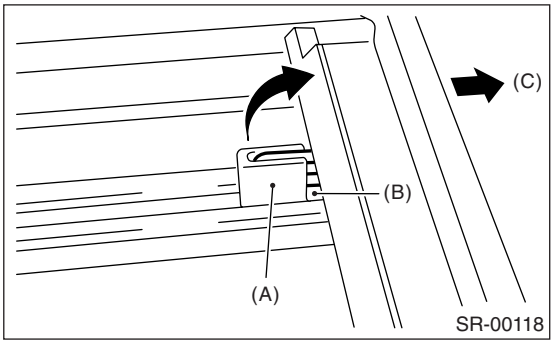

CAUTION:
Be careful not to damage the adjacent parts with rod end when moving the glass lid with emergency handle.

2) Slide the sunshade forward.
3) Remove the plug in the rear side of roof trim.

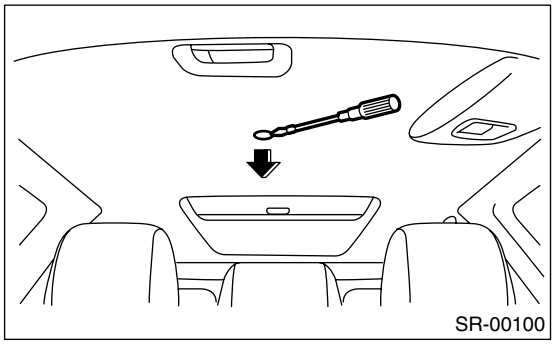

4) Insert the hexagon wrench securely until it touches the motor shaft edge.
5) Turn the hexagon wrench to right, and close the glass lid (front and rear).

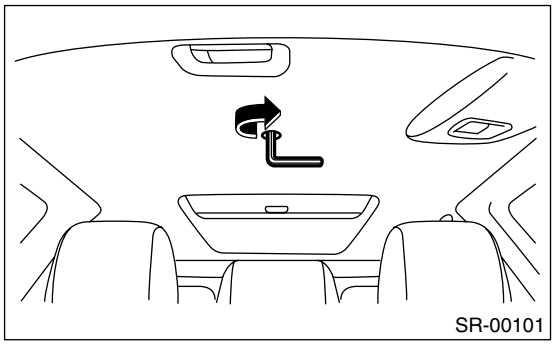

CAUTION:
After forced drive, the initialize operation is required. <Ref. to SR-4, INSPECTION, Sunroof Control System.>

4. Sunroof Assembly

A: REMOVAL

1. SEDAN MODEL

1) Disconnect the ground cable from battery.
2) Remove the roof trim. <Ref. to EI-66, SEDAN MODEL, REMOVAL, Roof Trim.>
3) Disconnect the harness connector of sunroof motor.
4) Remove the glass lid. <Ref. to SR-5, SEDAN MODEL, REMOVAL, Glass Lid.>
5) Remove the drain tube from frame assembly.
6) Remove the assist rail bracket (front) (A) and sunroof bracket (rear) (B).

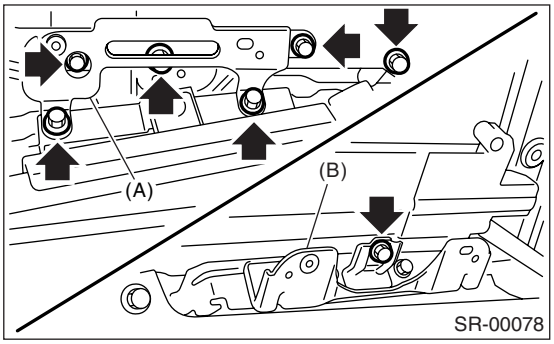

7) Remove the nuts, and then remove the frame assembly.

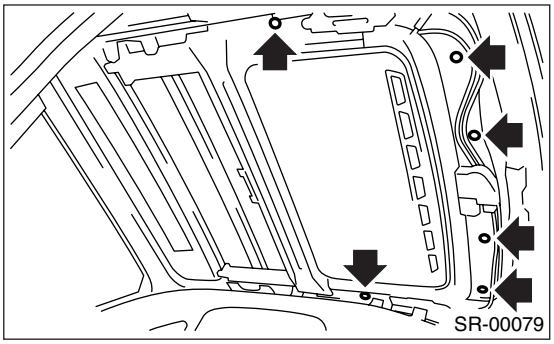

2. WAGON MODEL

1) Disconnect the ground cable from battery.
2) Remove the roof trim. <Ref. to EI-66, WAGON MODEL, REMOVAL, Roof Trim.>
3) Disconnect the harness connector of motor assembly.

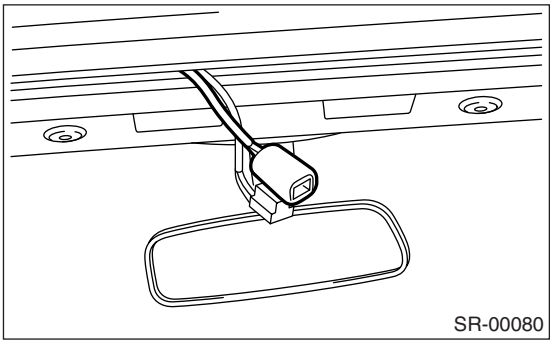

4) Remove the front and rear glass lid. <Ref. to SR-5, WAGON MODEL (FRONT), REMOVAL, Glass Lid.> <Ref. to SR-5, WAGON MODEL (REAR), REMOVAL, Glass Lid.>
5) Remove the installation bolts (A) on rear side frame bracket of frame assembly.

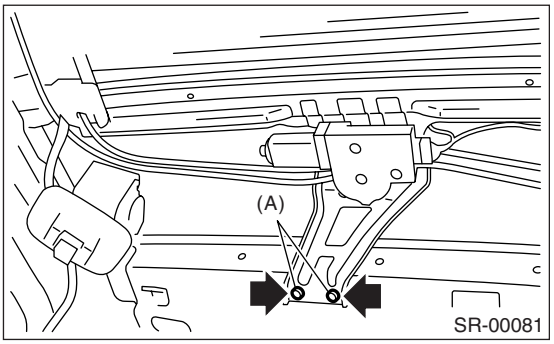

6) Remove the drain tube from frame assembly.
7) Remove the frame bracket (A).

8) Remove the bolts (B) and nuts (C), and then remove the frame assembly.

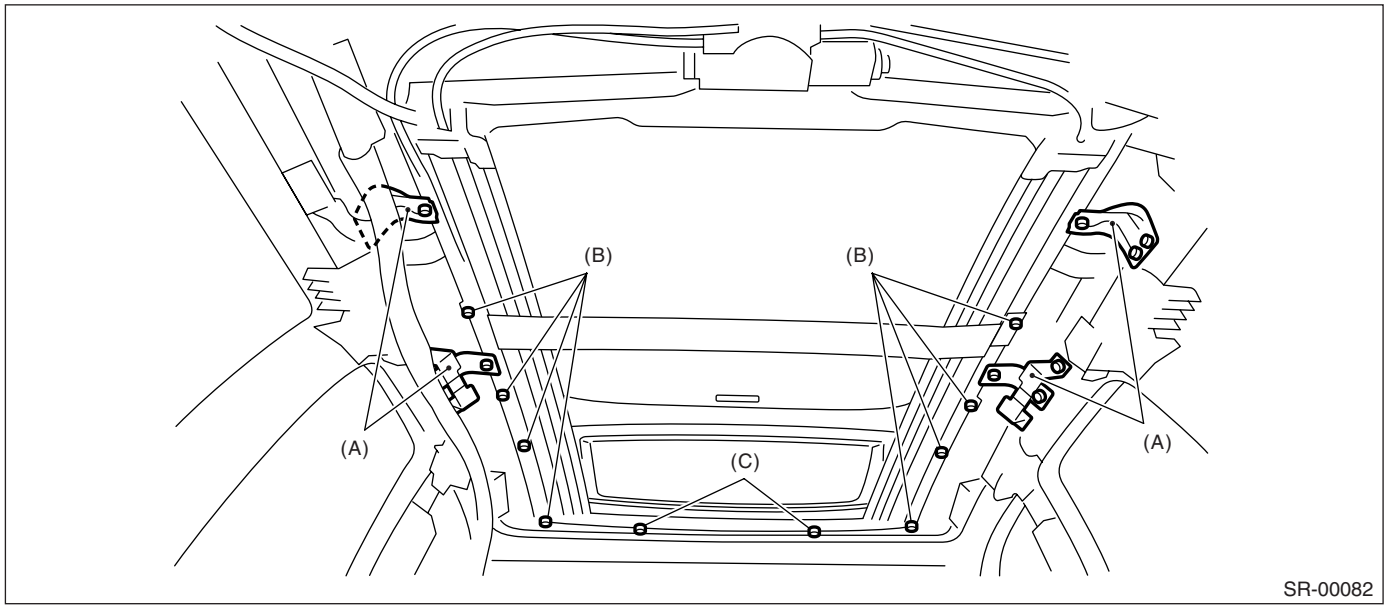

B: INSTALLATION

Install in the reverse order of removal.

CAUTION:
Be careful not to snag the harness.

NOTE:
- Be sure to connect the harness connector.
- When installing the drain tube, insert it securely into drain pipe.

Length A:
15 mm (0.59 in) or more

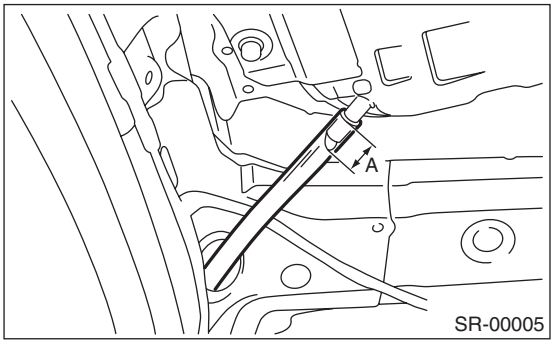

C: DISASSEMBLY

1) Remove the sunroof motor. <Ref. to SR-10, REMOVAL, Sunroof Motor.>
2) Remove the sunshade. <Ref. to SR-15, REMOVAL, Sunshade.>

D: ASSEMBLY

Assemble in the reverse order of disassembly.

5. Sunroof Motor

A: REMOVAL

CAUTION:
• When removing the clip, use great care not to damage the roof trim.
• Never rotate the sunroof motor after removing it.

1. SEDAN MODEL

1) Completely close the glass lid.
2) Disconnect the ground cable from battery.
3) Remove the spot map light. <Ref. to LI-29, REMOVAL, Spot Map Light.>
4) Disconnect the harness connector, and then remove the motor assembly mounting screw.

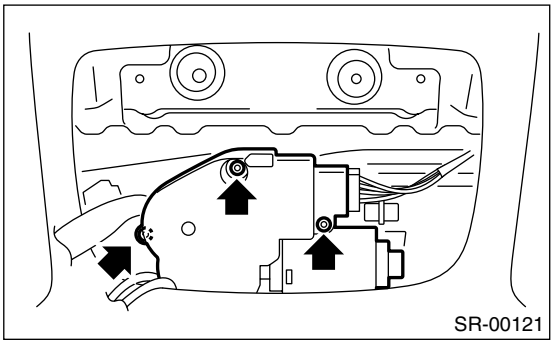

CAUTION:
When removing the motor assembly, secure the cable wires to prevent moves.

2. WAGON MODEL

1) Fully close the glass lid (front) and glass lid (rear).
2) Disconnect the ground cable from battery.
3) Remove the luggage room light. <Ref. to LI-31, REMOVAL, Luggage Room Light.>
4) Remove the roof trim. <Ref. to EI-66, WAGON MODEL, REMOVAL, Roof Trim.>
5) Pass the seat belt tongue located on center of rear seat through the hole, and then pull it out to the opposite side of trim.

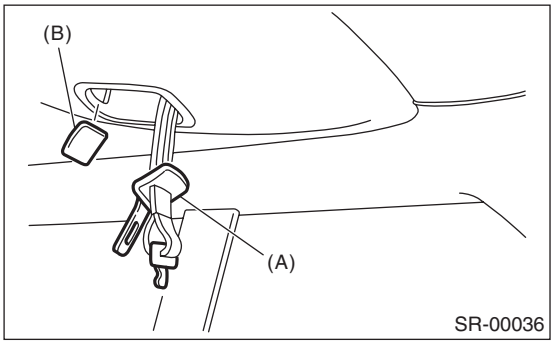

(A) Tongue
(B) Cover

6) Remove the clips, and then drop the rear end of roof trim.
7) Disconnect the harness connector (A), and then remove the motor assembly mounting bolts (B) and nuts (C).

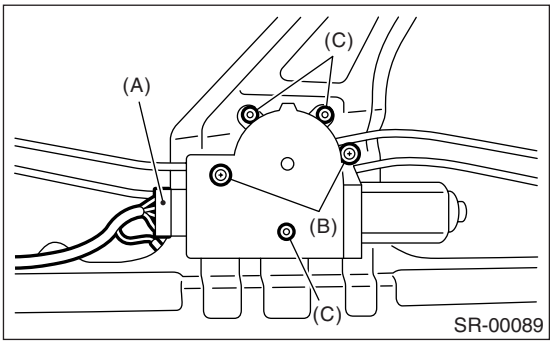

B: INSTALLATION

CAUTION:
When installing the motor assembly, be careful not to move the sunroof cable.

1. SEDAN MODEL

1) Align the coulisse assembly and link assembly in the same position.

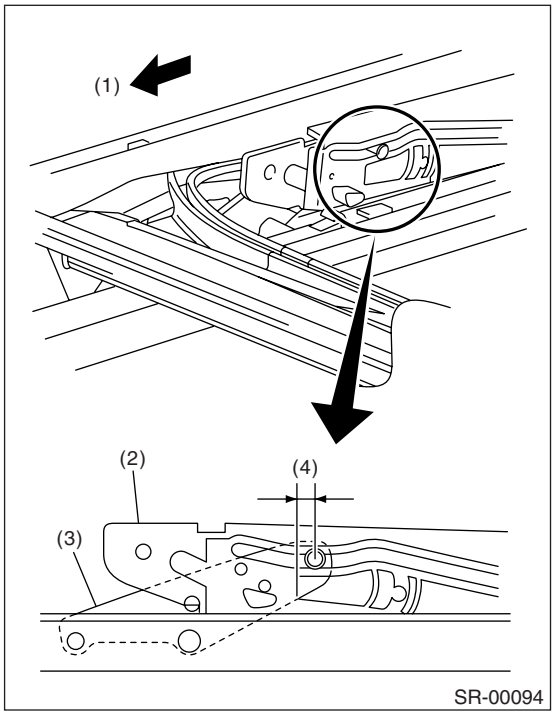

(1) Front
(2) Coulisse ASSY
(3) Link ASSY
(4) 4.7 mm (0.185 in)

2) Install the motor assembly.
3) Connect the harness connector of motor assembly, and then connect the battery ground cable to battery.
4) Perform the initialize operation of motor.
   (1) Tilt up the glass lid.
   (2) Release the switch once, and press the tilt up switch again for 15 seconds.
   (3) When the glass lid is raised a little and on tilt up position, release the switch for the moment.
   (4) Keep pressing the tilt up switch within 5 seconds from releasing the switch, glass lid tilts down → slides open → slides close operation automatically, and then initialize operation is completed.
5) Check the operation of sunroof with following table.

Operation	Switch position
(1) Glass lid closes completely.	Close
(2) Glass lid tilt up to the top position.	Tilt up
(3) Glass lid lowers completely.	Tilt down
(4) Glass lid opens completely.	Open
(5) Glass lid closes 150 mm (5.91 in) away from completely closed position.	Close
(6) Glass lid closes completely.	Close

6) Install the trim in the reverse order of removal.

2. WAGON MODEL

Check that the wedge of glass lid (front) bracket part is contacting in the direction of vehicle front.
At this time, the lid is at fully open position.

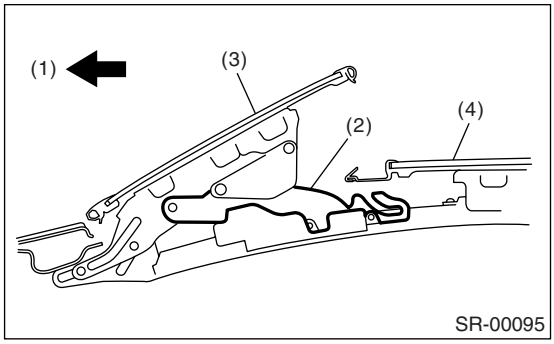

(1) Front
(2) Wedge
(3) Glass lid (Front)
(4) Glass lid (Rear)

1) Install the motor assembly.
2) After the installation of motor assembly, check again that the wedge of glass lid (front) bracket part is contacting in the direction of vehicle front.
3) Connect the harness connector of motor assembly, and then connect the battery ground cable to battery.
4) Perform the initialize operation of motor.
• When replacing the motor with a new one, fully close the glass once and perform the initialization of position, because the movement of glass lid shifts to brink operation.
• When reusing the motor, operate the auto-reverse function five times in a row to shifts brink operation, and then perform the initialization of position.
5) Check the operation of sunroof with following table.

Operation	Switch position
(1) Glass lid (front) and glass lid (rear) closes completely.	Close
(2) Glass lid (front) tilt up to the ventilating position.	Open
(3) Glass lid (front) tilts up to top position, and glass lid (rear) opens near the completely open position.	Open
(4) Glass lid (rear) opens completely.	Open
(5) Glass lid (rear) closes on 150 mm (5.91 in) from rear end of tilted up glass lid (front).	Close
(6) Glass lid (rear) closes completely, and glass lid (front) stops in the ventilating position.	Close
(7) Glass lid (front) lowers, and then glass lid (front) and glass lid (rear) closes completely.	Close

6) Install the trim in the reverse order of removal.

6. Sunroof Switch

A: REMOVAL

1) Disconnect the ground cable from battery.
2) Remove the spot map light lens (A) and sunroof switch mounting screws (B).

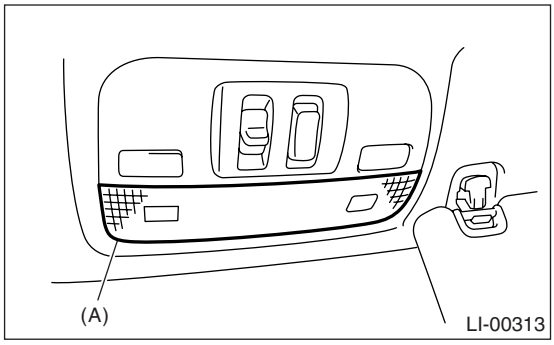

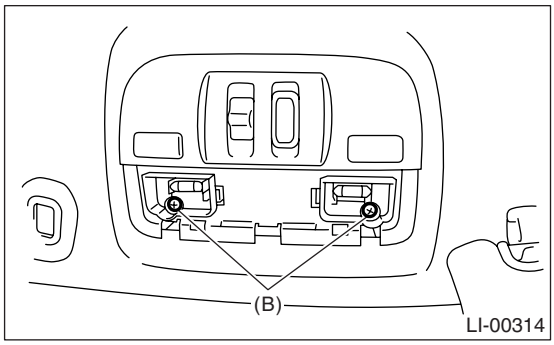

3) Disconnect the harness connector, and then remove the sunroof switch.

B: INSTALLATION

Install in the reverse order of removal.

C: INSPECTION

1. SEDAN MODEL

Measure the sunroof switch resistance.

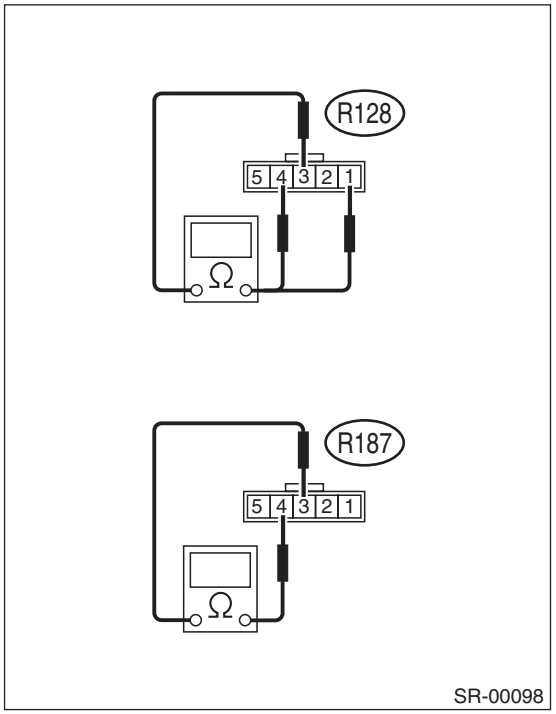

Switch position	Terminal No.	Standard	Connector No.
Open	1 and 3	Less than 1 Ω	R128
Close	3 and 4	Less than 1 Ω	
Tilt up	4 and 3	Less than 1 Ω	R187
Tilt down	3 and 4	Less than 1 Ω	

2. WAGON MODEL

Measure the sunroof switch resistance.

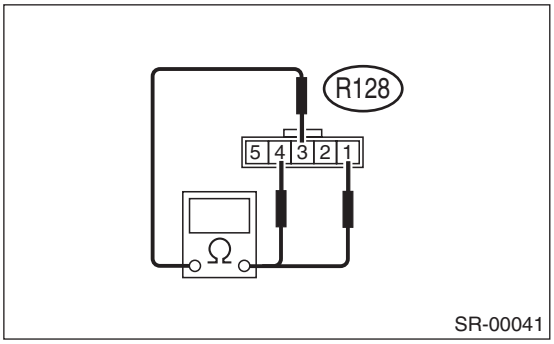

Switch position	Terminal No.	Standard
Open	1 and 3	Less than 1 Ω
Close	3 and 4	Less than 1 Ω

NOTE:
If glass lid does not operate or is not supplied with power, move the glass lid using the emergency handle. <Ref. to SR-6, FORCED DRIVE, Glass Lid.>

7. Sunshade

A: REMOVAL

1. SEDAN MODEL

1) Remove the glass lid. <Ref. to SR-5, SEDAN MODEL, REMOVAL, Glass Lid.>
2) Loosen the TORX® bolts, and remove sunshade bracket (front).

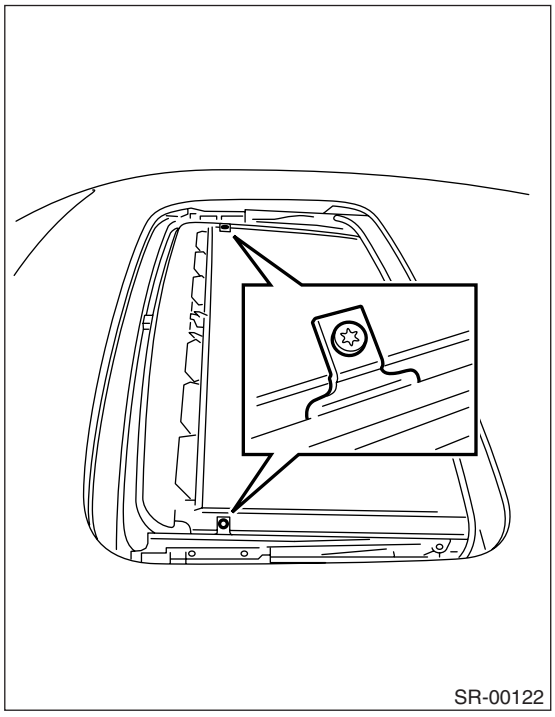

3) Pull out the sunshade until sunshade bracket (rear) is shown, loosen the TORX® bolts, and remove sunshade.

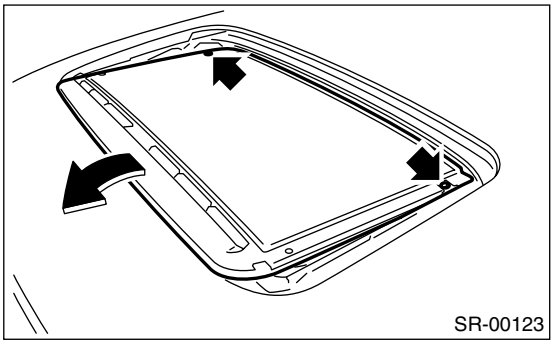

2. WAGON MODEL

1) Remove the frame assembly.
2) Remove the shade stopper (A) of sunshade.

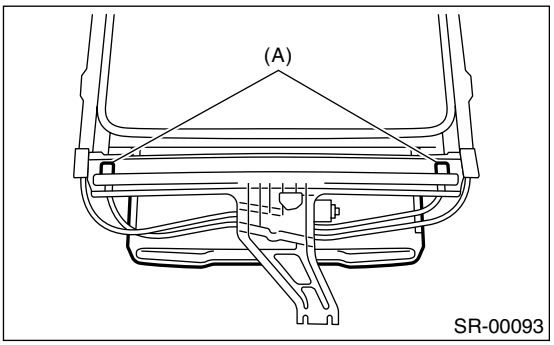

3) Pull out the sunshade (A) from sunroof frame.

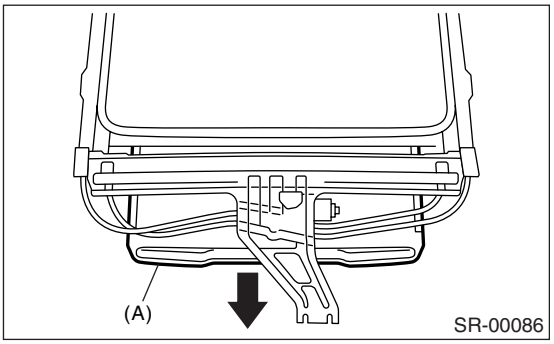

B: INSTALLATION

Install in the reverse order of removal.

C: INSPECTION

1. CHECK FOR MOVING LOAD OF SUNSHADE

1) Attach a spring balance to sunshade edge using a cloth.

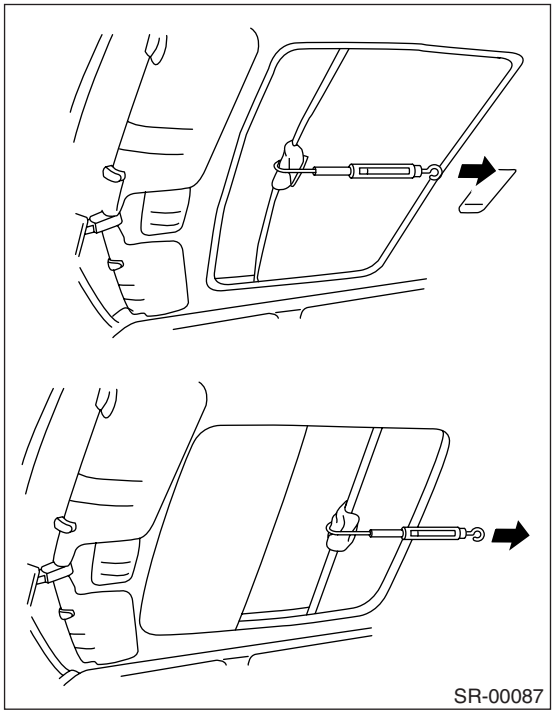

2) Pull the spring balance to measure moving load of the sunshade.

Moving load of sunshade:
Specification
18.0±5.0 N (1.8±0.5 kgf, 13±3.7 lbf)

NOTE:
Moving load is larger at the beginning of pulling a spring balance, so take a spring balance reading while sunshade sliding smoothly.

3) If moving load exceeds specifications, check the glass lid, sunshade and frame assembly for improper installation.

EXTERIOR/INTERIOR TRIM

EI

		Page
1.	General Description	2
2.	Front Grille	24
3.	Front Hood Grille	25
4.	Front Under Cover	26
5.	Floor Under Protector	27
6.	Fuel Tank Protector	28
7.	Mud Guard	29
8.	Front Bumper	30
9.	Rear Bumper	37
10.	Cowl Panel	39
11.	Roof Spoiler	40
12.	Side Sill Spoiler	41
13.	Side Protector	43
14.	Side Garnish	45
15.	Rear Quarter Protector	46
16.	Roof Rail	47
17.	Door Trim	48
18.	Instrument Panel Lower Cover	50
19.	Glove Box	51
20.	Console Box	53
21.	Center Console	54
22.	Instrument Panel Assembly	56
23.	Lower Inner Trim	60
24.	Upper Inner Trim	61
25.	Rear Quarter Trim	62
26.	Sun Visor	64
27.	Assist Grip	65
28.	Roof Trim	66
29.	Rear Gate Trim	68
30.	Rear Shelf Trim	69
31.	Trunk Room Trim	70
32.	Floor Mat	72
33.	Luggage Floor Box	73
34.	Trunk Lid Garnish	74
35.	Rear Gate Garnish	75
36.	Heat Shield Cover	76
37.	Ornament	77

1. General Description

A: COMPONENT

1. FRONT GRILLE

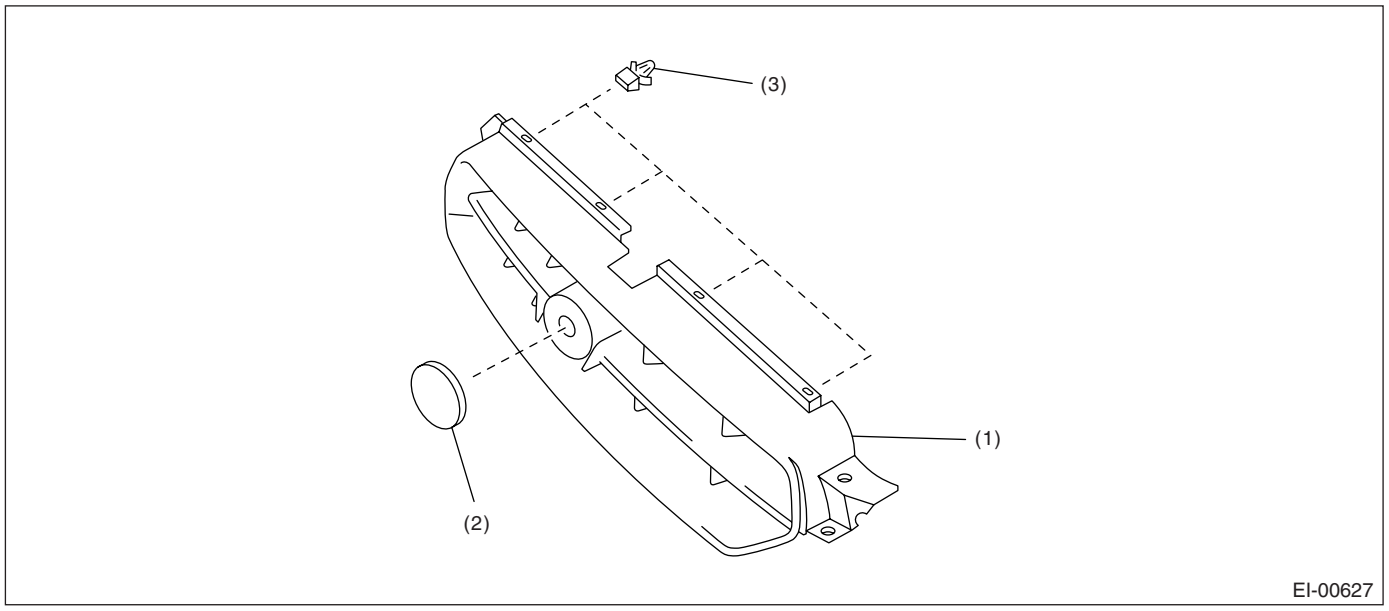

(1) Front grille
(2) Front grille emblem
(3) Front grille clip

2. UNDER COVER

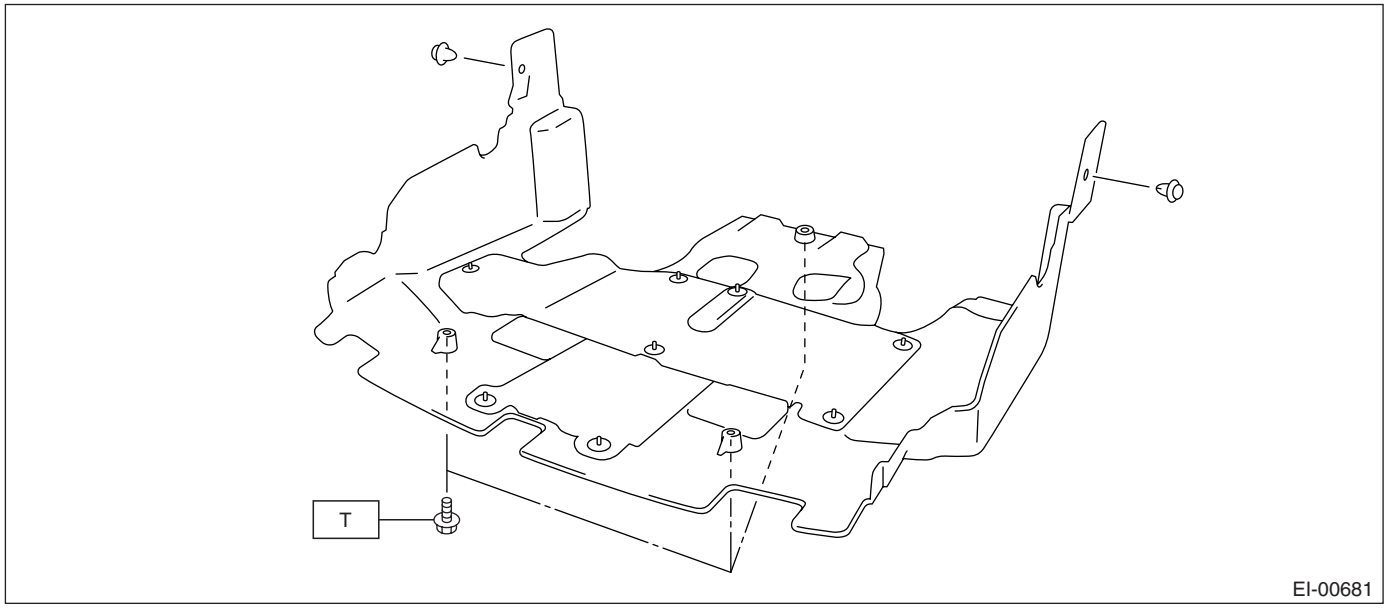

Tightening torque: N·m (kgf-m, ft-lb)
T: 14 (1.42, 10.3)

3. UNDER PROTECTOR

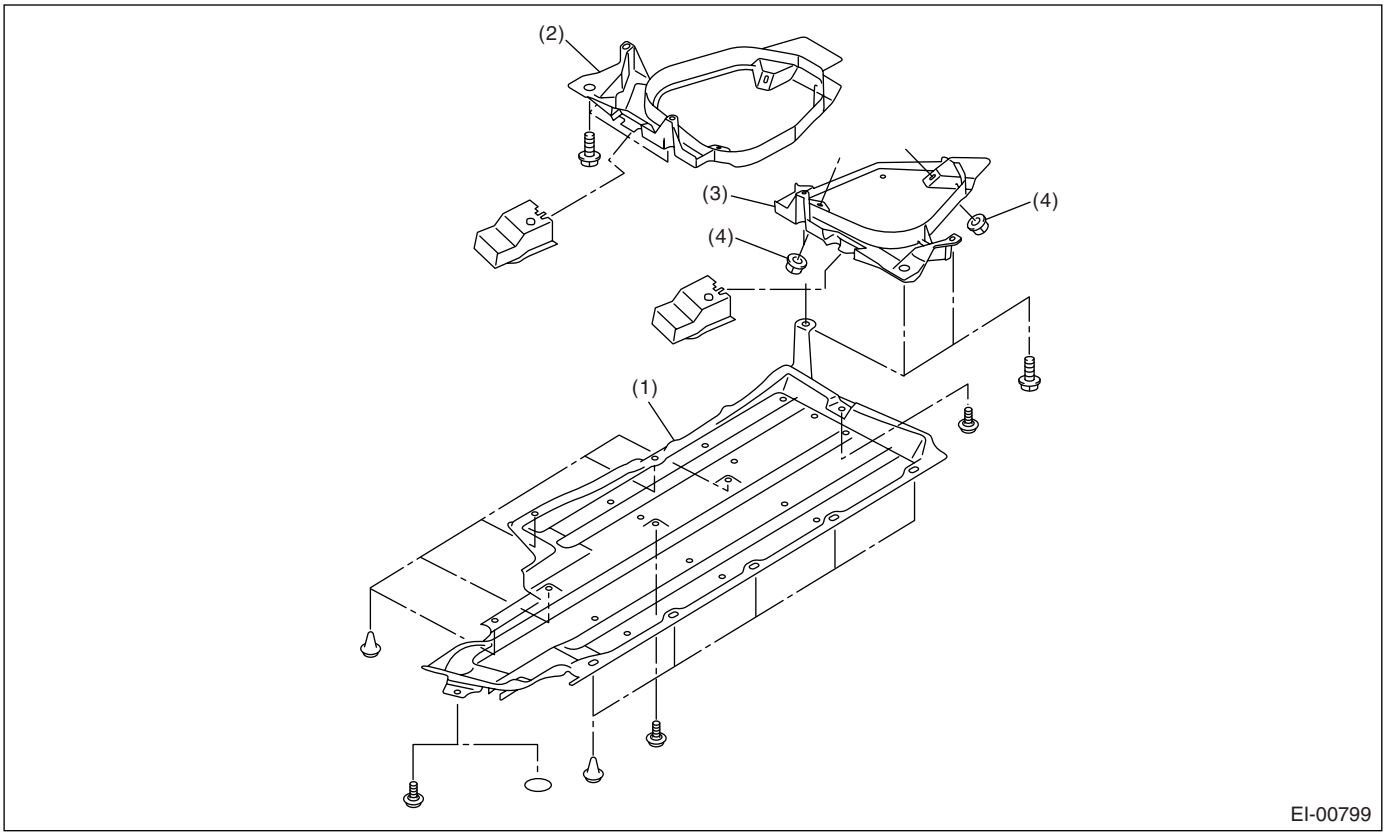

(1) Floor under protector
(2) Fuel tank protector RH
(3) Fuel tank protector LH
(4) Plastic nut

4. FRONT HOOD GRILLE

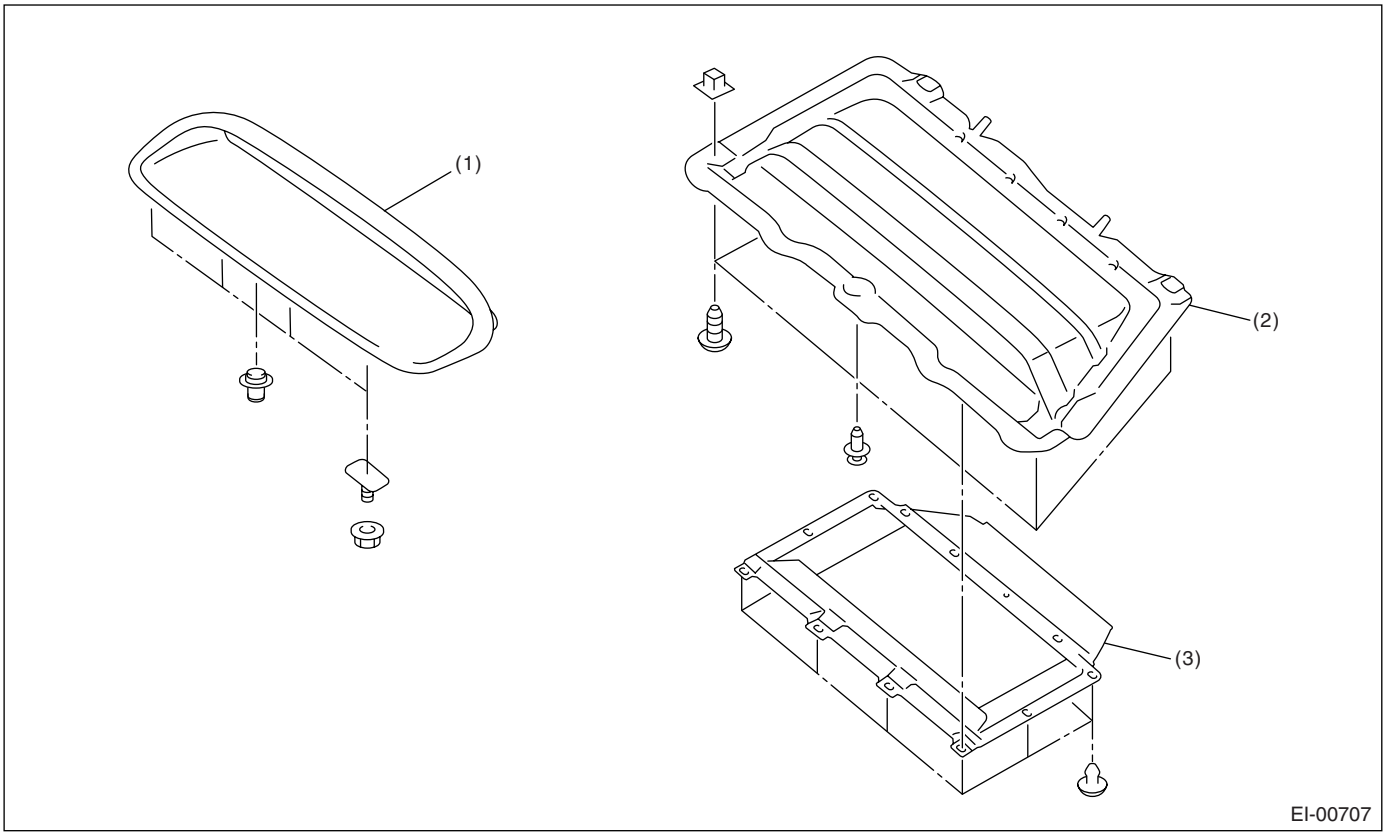

(1) Front hood grille
(2) Grille duct upper
(3) Grille duct lower

5. FRONT BUMPER

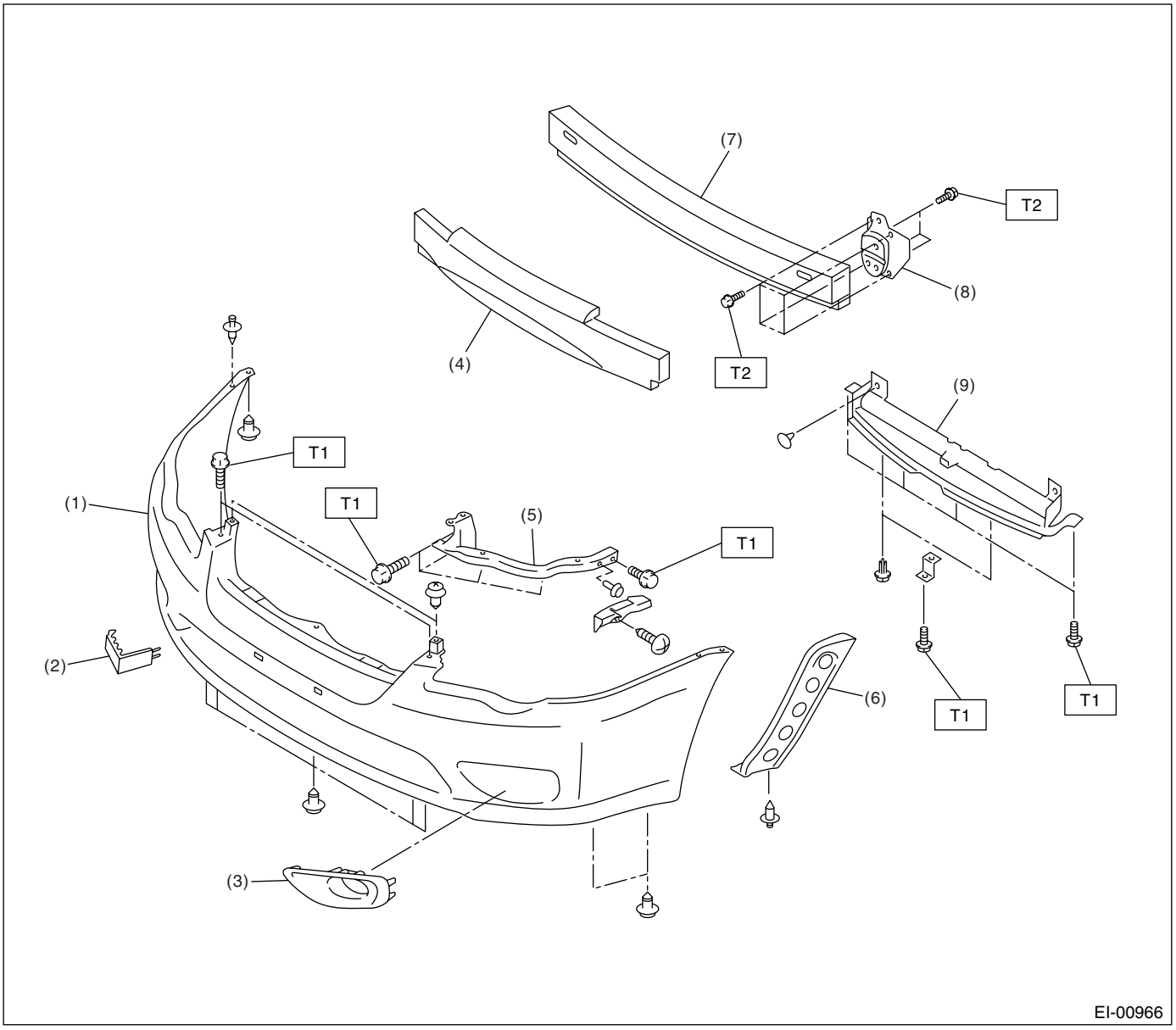

(1) Bumper face
(2) Towing hook cover
(3) Fog light cover
(4) Energy absorber foam upper
(5) Upper bracket
(6) Side bracket
(7) Bumper beam reinforcement
(8) Bumper beam bracket
(9) Radiator guide

Tightening torque: N·m (kgf-m, ft-lb)
T1: 7.5 (0.77, 5.53)
T2: 33 (3.4, 24)

6. REAR BUMPER (SEDAN MODEL)

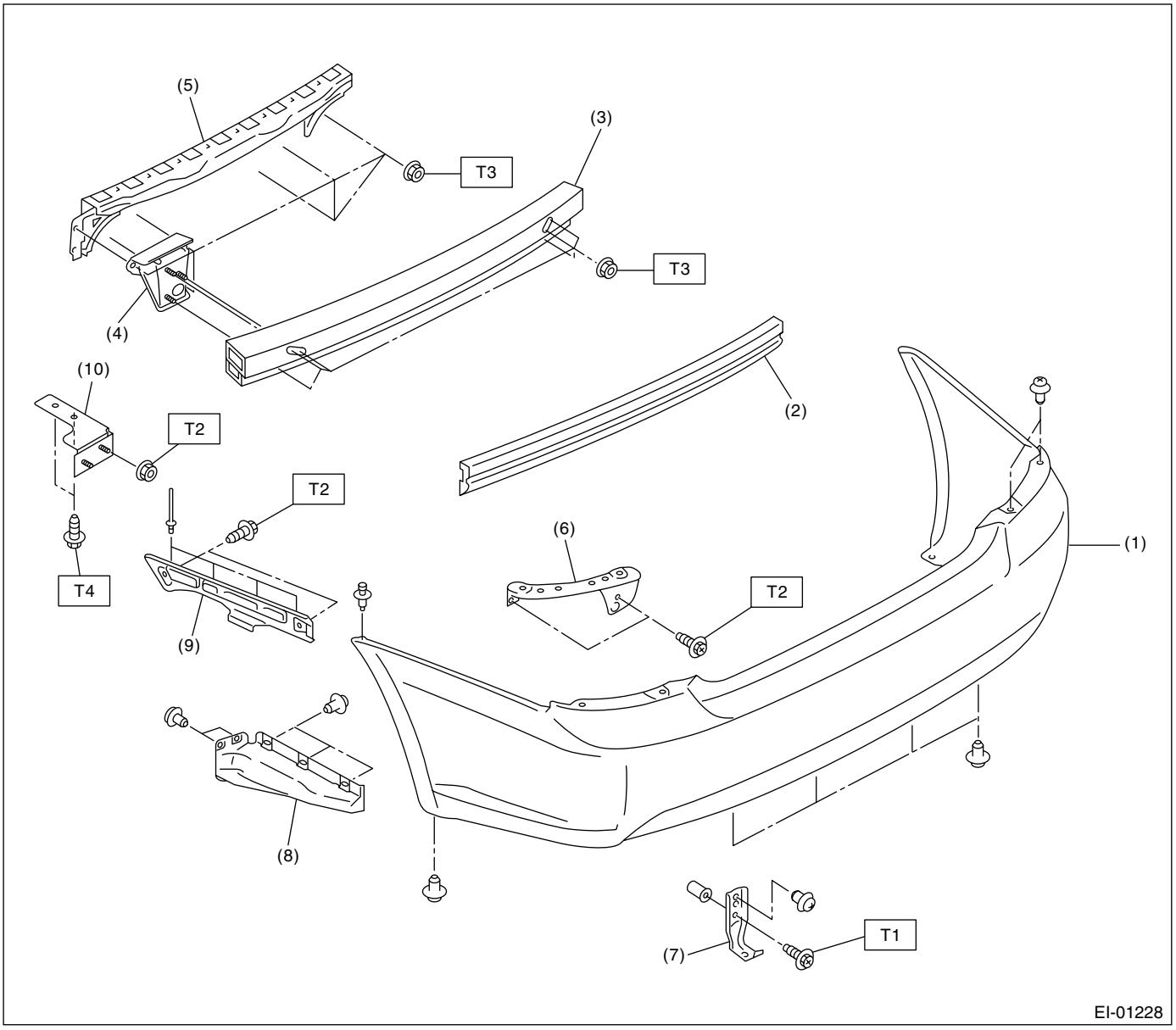

(1) Bumper face
(2) Energy absorber foam
(3) Bumper beam reinforcement
(4) Bumper beam bracket
(5) Beam upper rear
(6) Bracket corner
(7) Lower bracket
(8) Bumper side support lower
(9) Bumper side support upper
(10) Rear bumper gusset (For installing trailer hitch, OUTBACK only)

Tightening torque: N·m (kgf-m, ft-lb)
T1: 2 (0.2, 1.48)
T2: 7.5 (0.77, 5.53)
T3: 33 (3.4, 24)
T4: 72 (7.3, 53.1)

7. REAR BUMPER (WAGON MODEL)

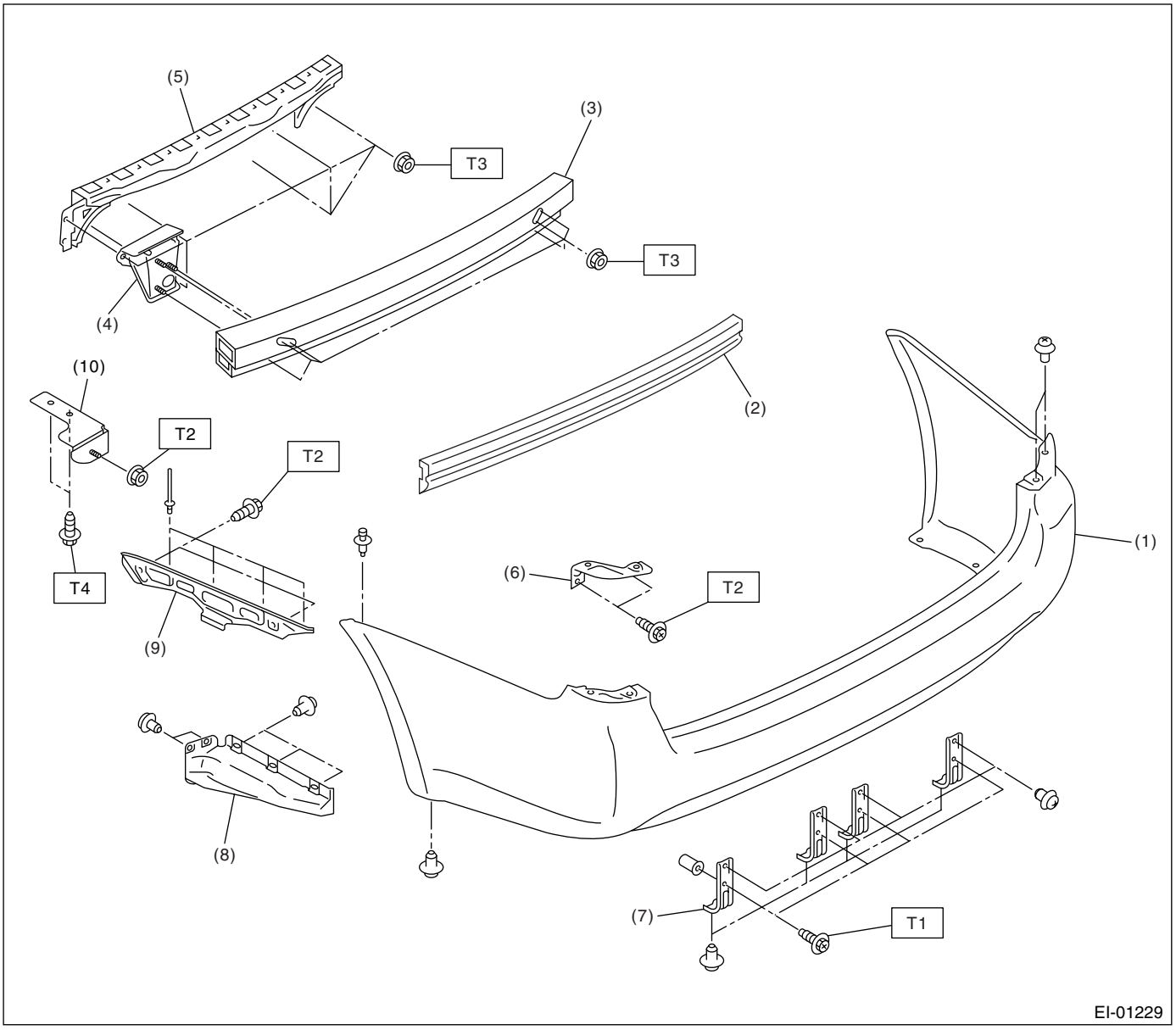

(1) Bumper face
(2) Energy absorber foam
(3) Bumper beam reinforcement
(4) Bumper beam bracket
(5) Beam upper rear
(6) Bracket corner
(7) Lower bracket
(8) Bumper side support lower
(9) Bumper side support upper
(10) Rear bumper gusset (For installing trailer hitch, OUTBACK only)

Tightening torque: N·m (kgf-m, ft-lb)
T1: 2 (0.2, 1.48)
T2: 7.5 (0.77, 5.53)
T3: 33 (3.4, 24)
T4: 72 (7.3, 53.1)

8. MUD GUARD

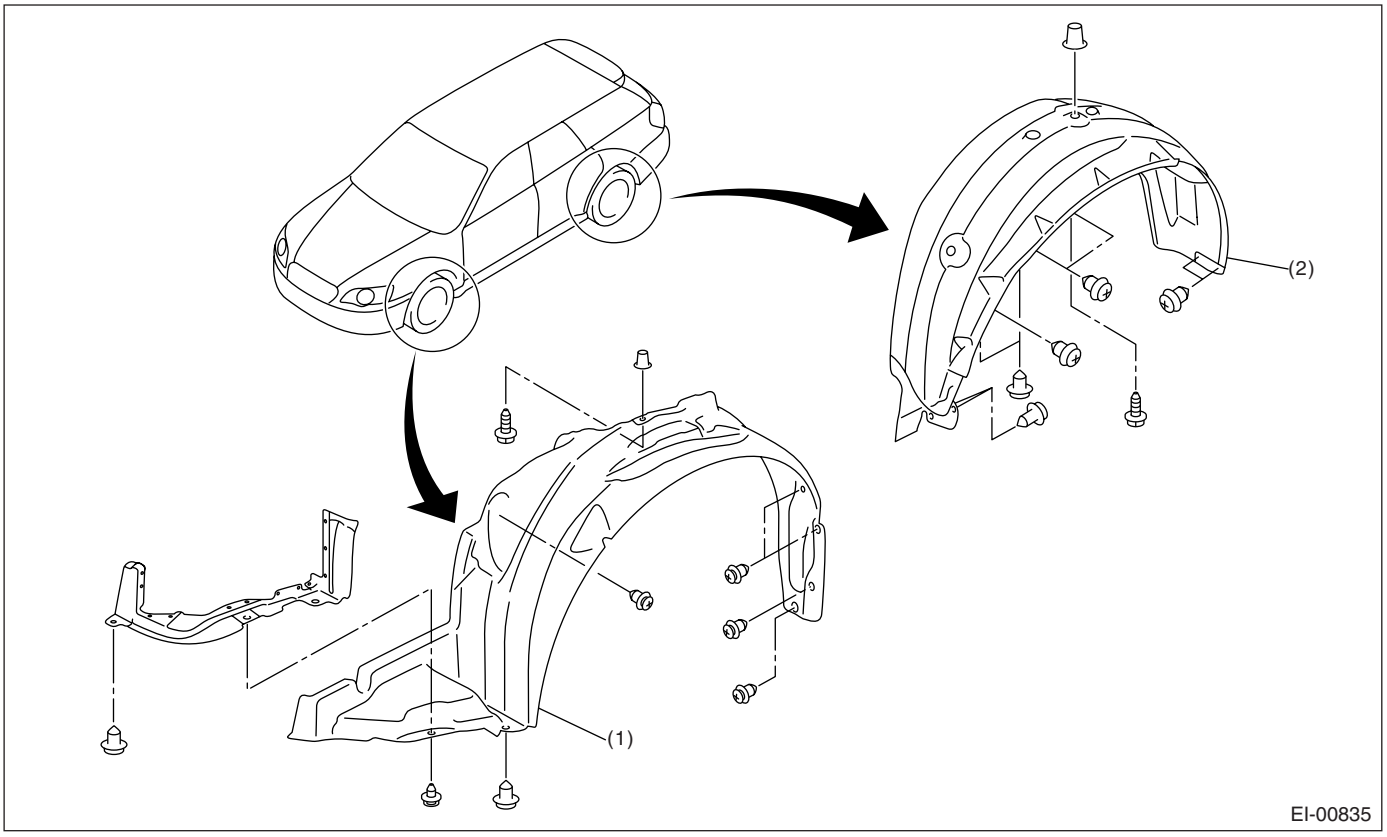

(1) Front mud guard
(2) Rear mud guard

9. COWL PANEL

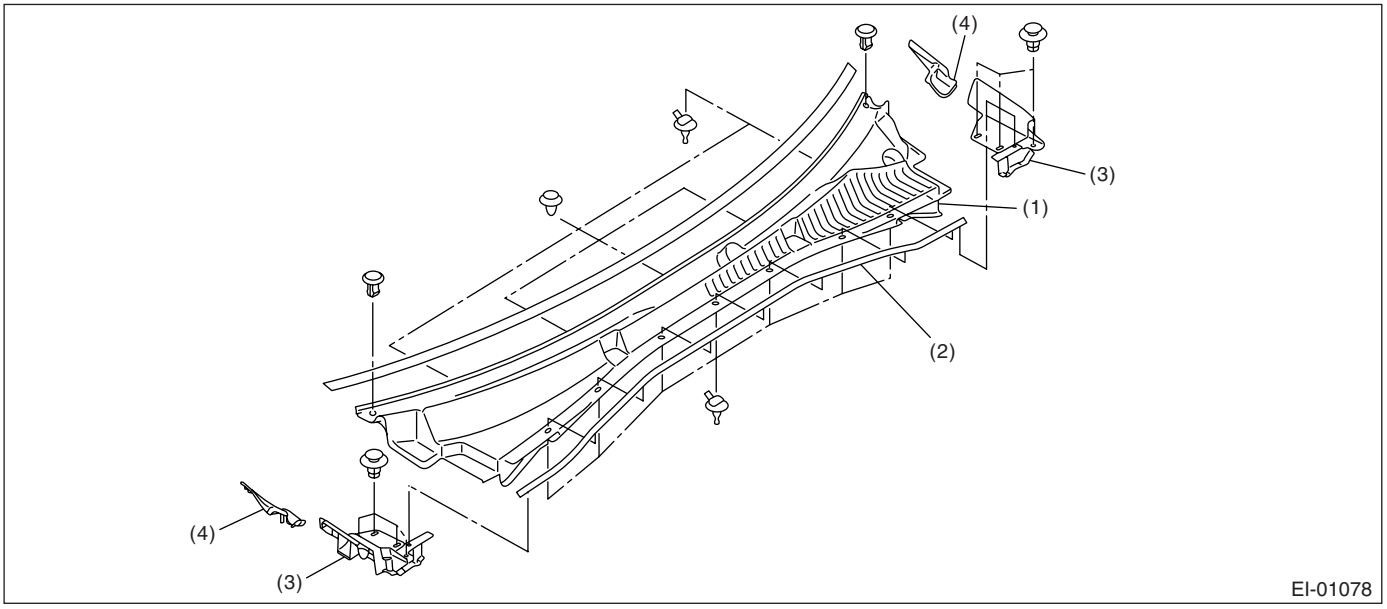

(1) Cowl panel
(2) Weather strip
(3) Cover cowl panel
(4) Cowl side panel

10.ROOF SPOILER

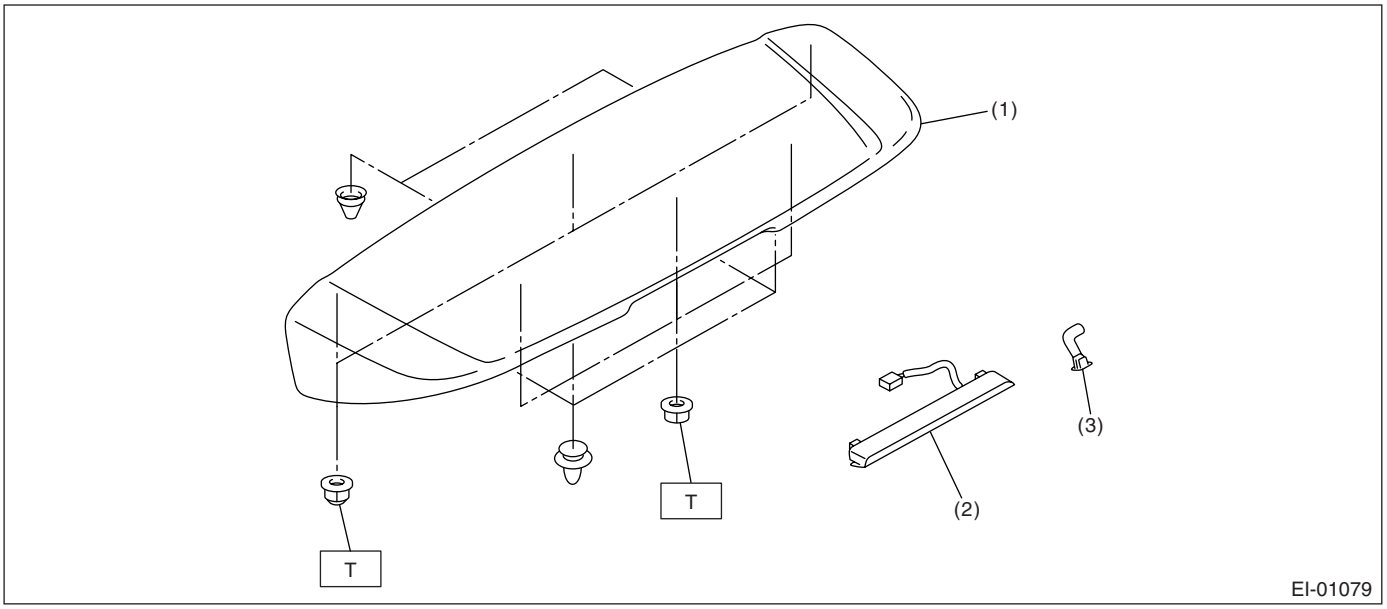

(1) Roof spoiler
(2) High-mounted stop light
(3) Washer nozzle

Tightening torque: N·m (kgf-m, ft-lb)
T: 4.5 (0.46, 3.32)

11.SIDE SILL SPOILER

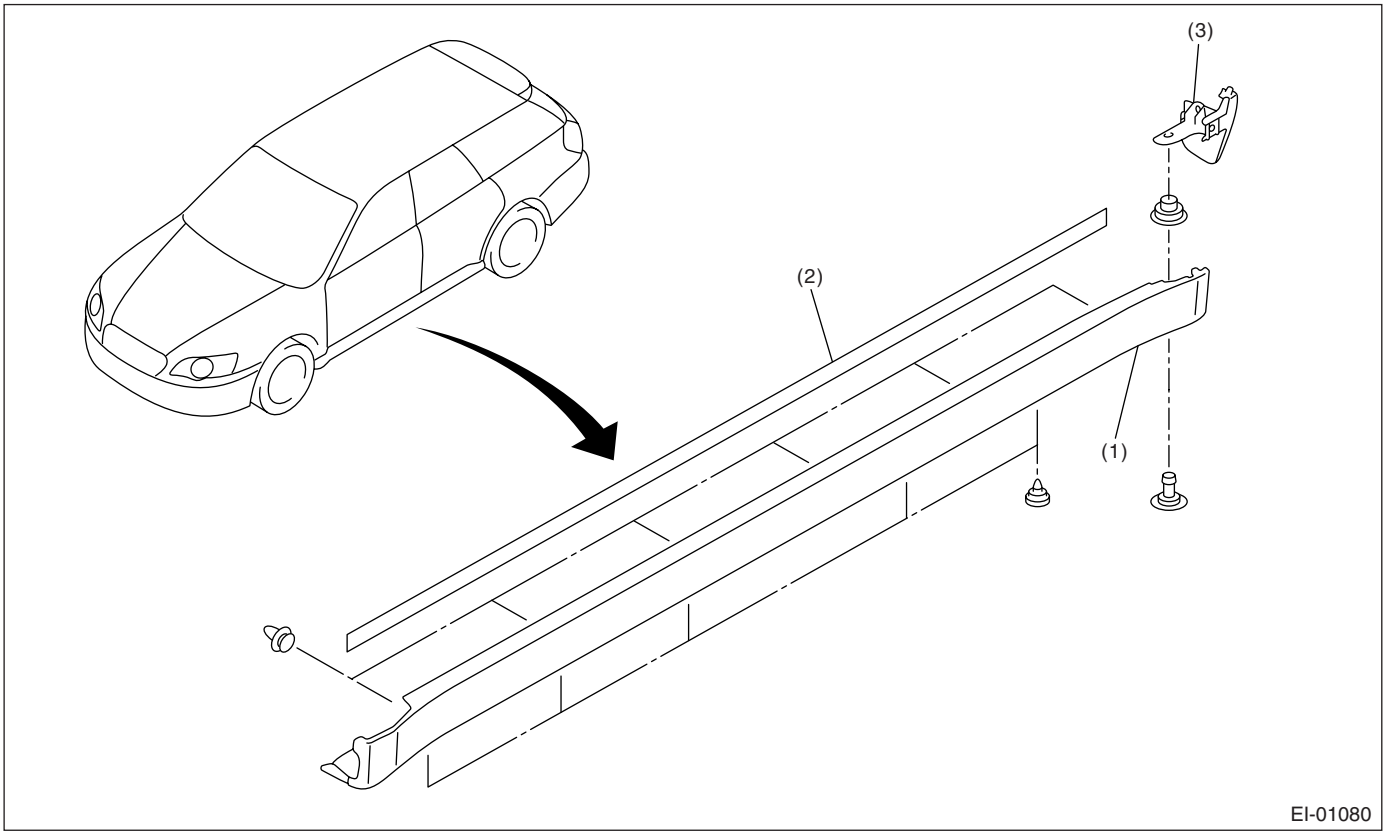

(1) Side sill spoiler
(2) Double-sided tape
(3) Air flap side sill end

12.ROOF RAIL

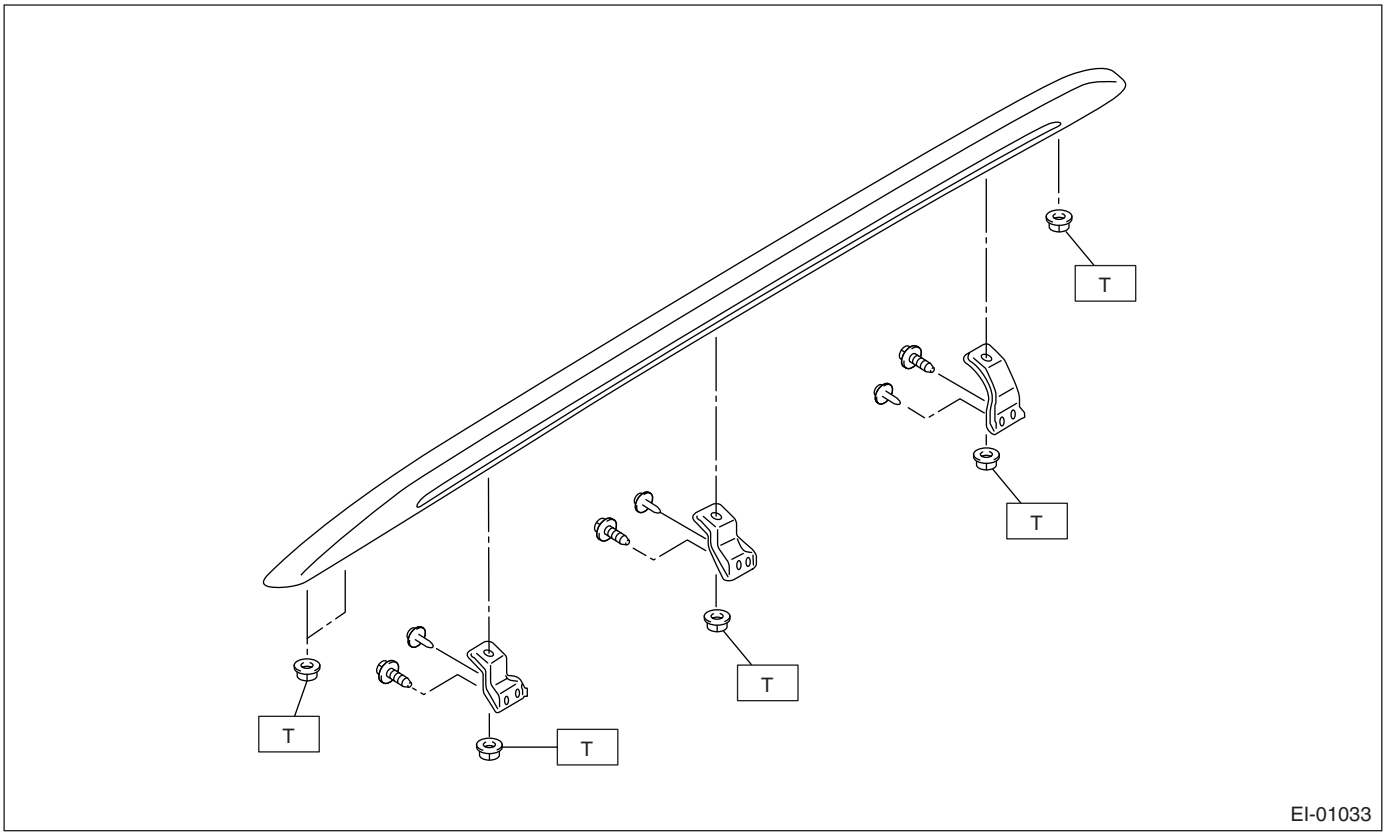

Tightening torque: N·m (kgf-m, ft-lb)
T: 7.5 (0.77, 5.53)

13.SIDE PROTECTOR

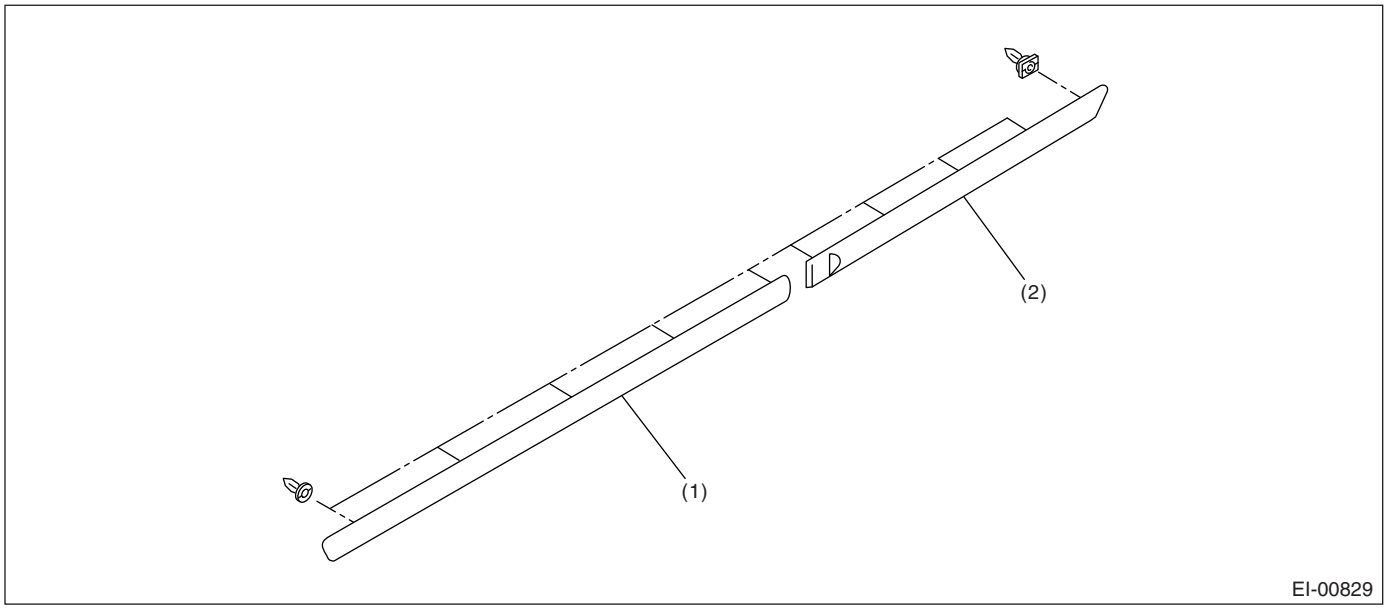

(1) Front door protector
(2) Rear door protector

14.SIDE GARNISH

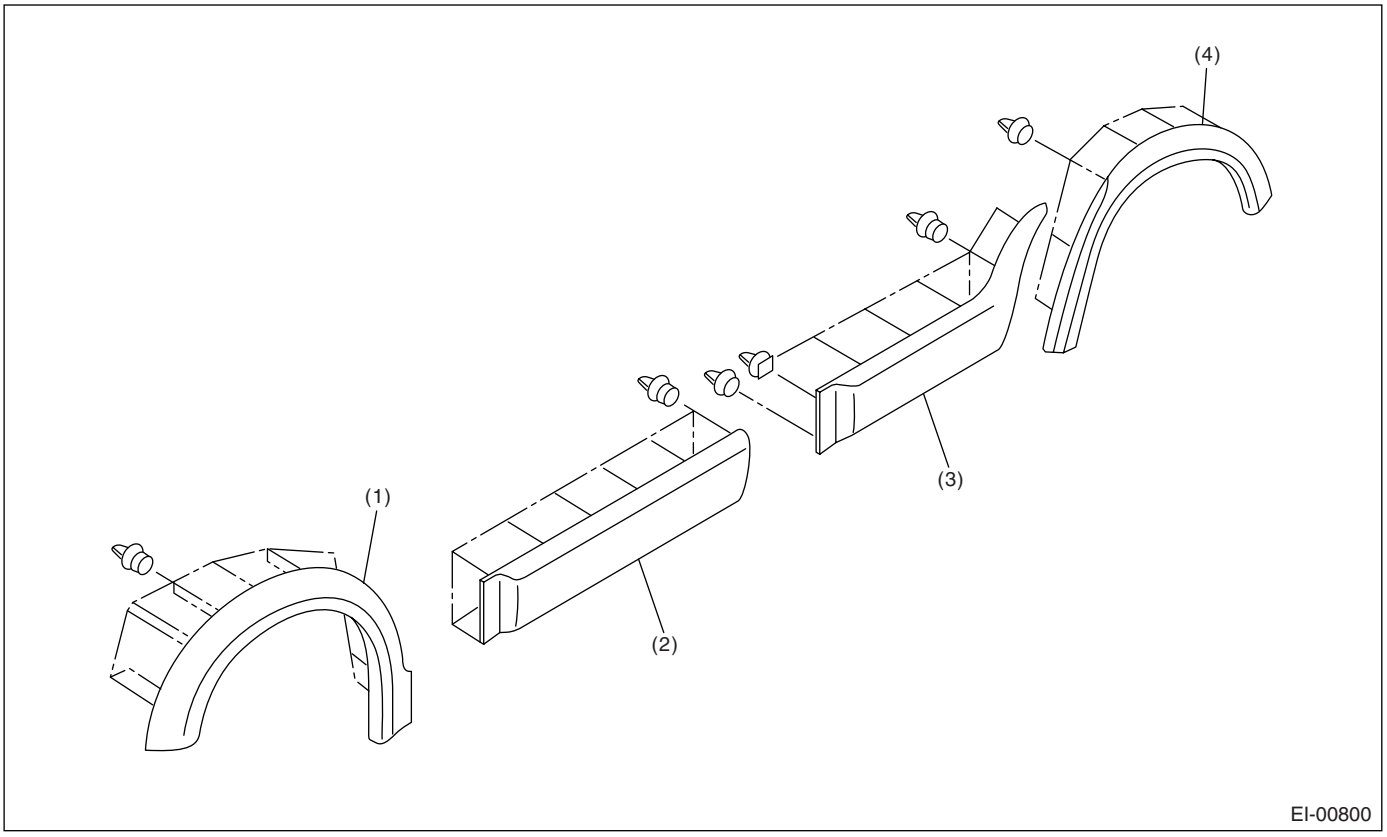

(1) Front fender garnish
(2) Front door garnish
(3) Rear door garnish
(4) Rear quarter garnish

15.TRUNK LID GARNISH

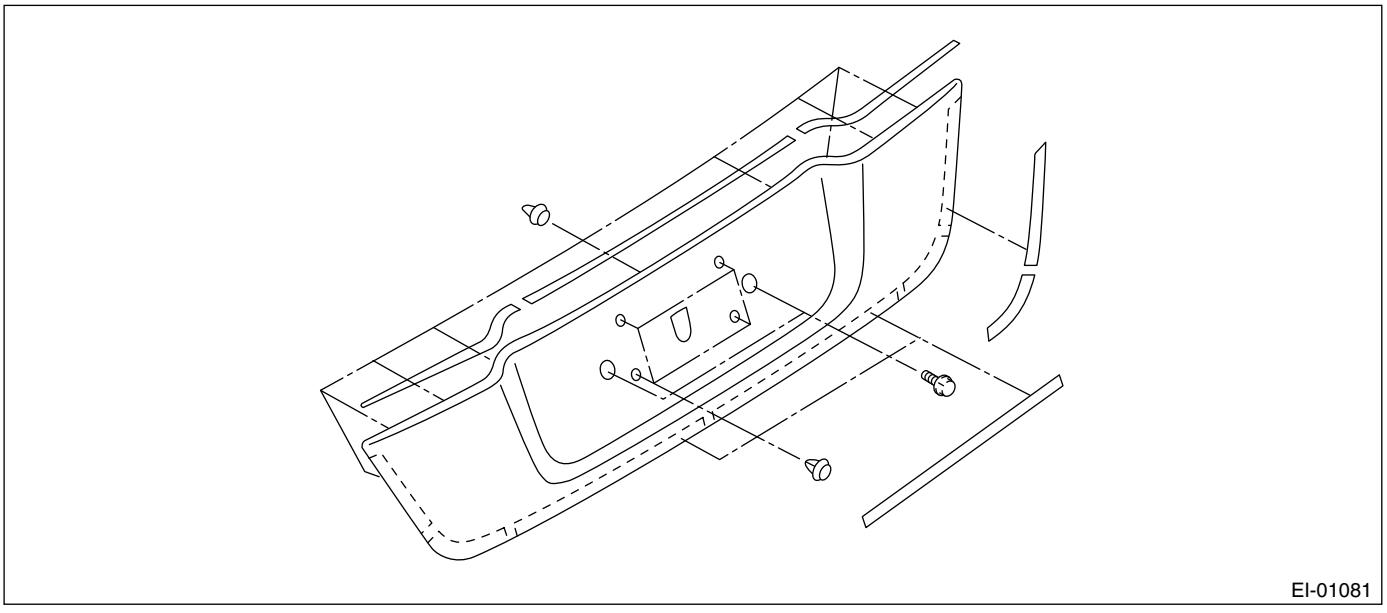

16.REAR GATE GARNISH

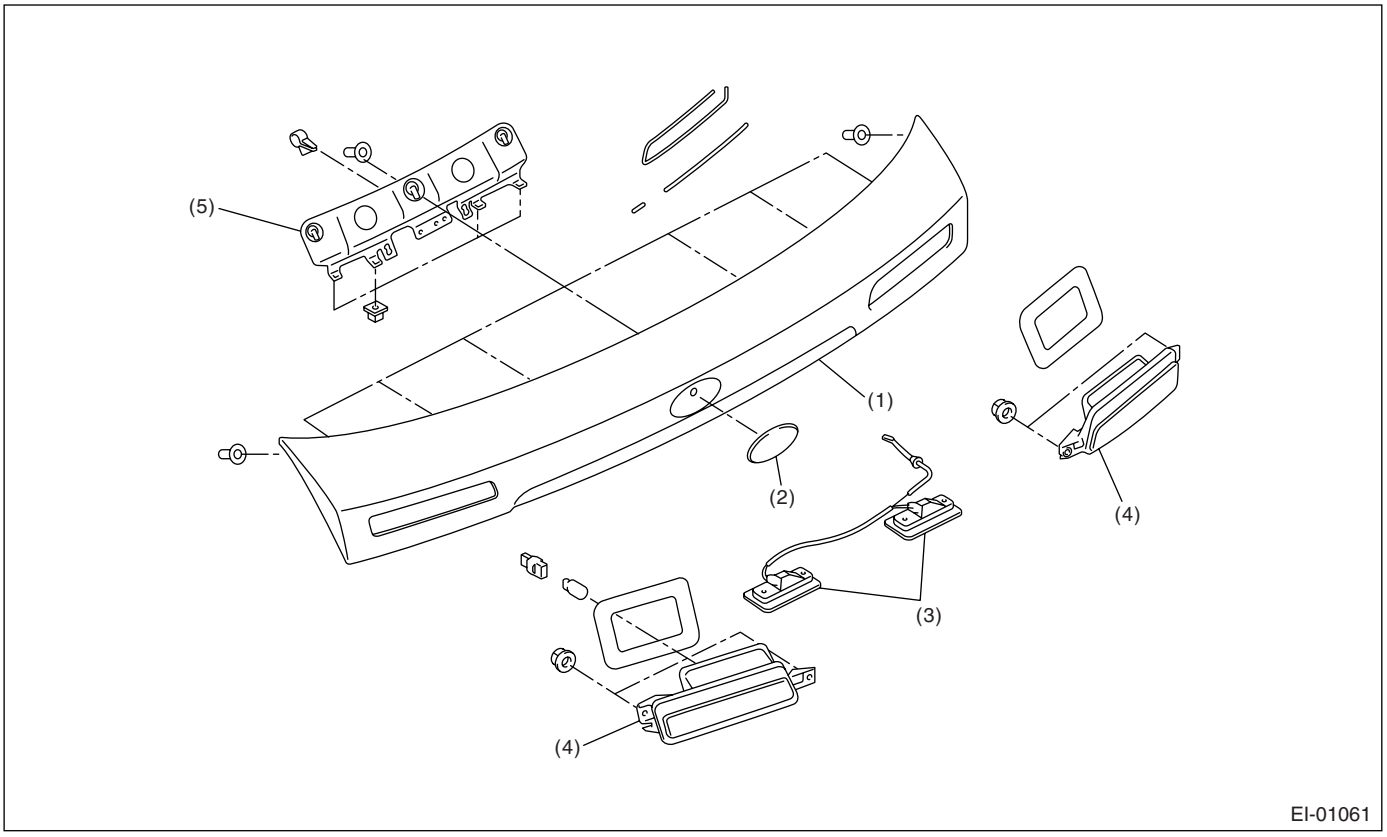

(1) Rear gate garnish
(2) Ornament
(3) License plate light
(4) Back-up light
(5) License plate light bracket

17.DOOR TRIM

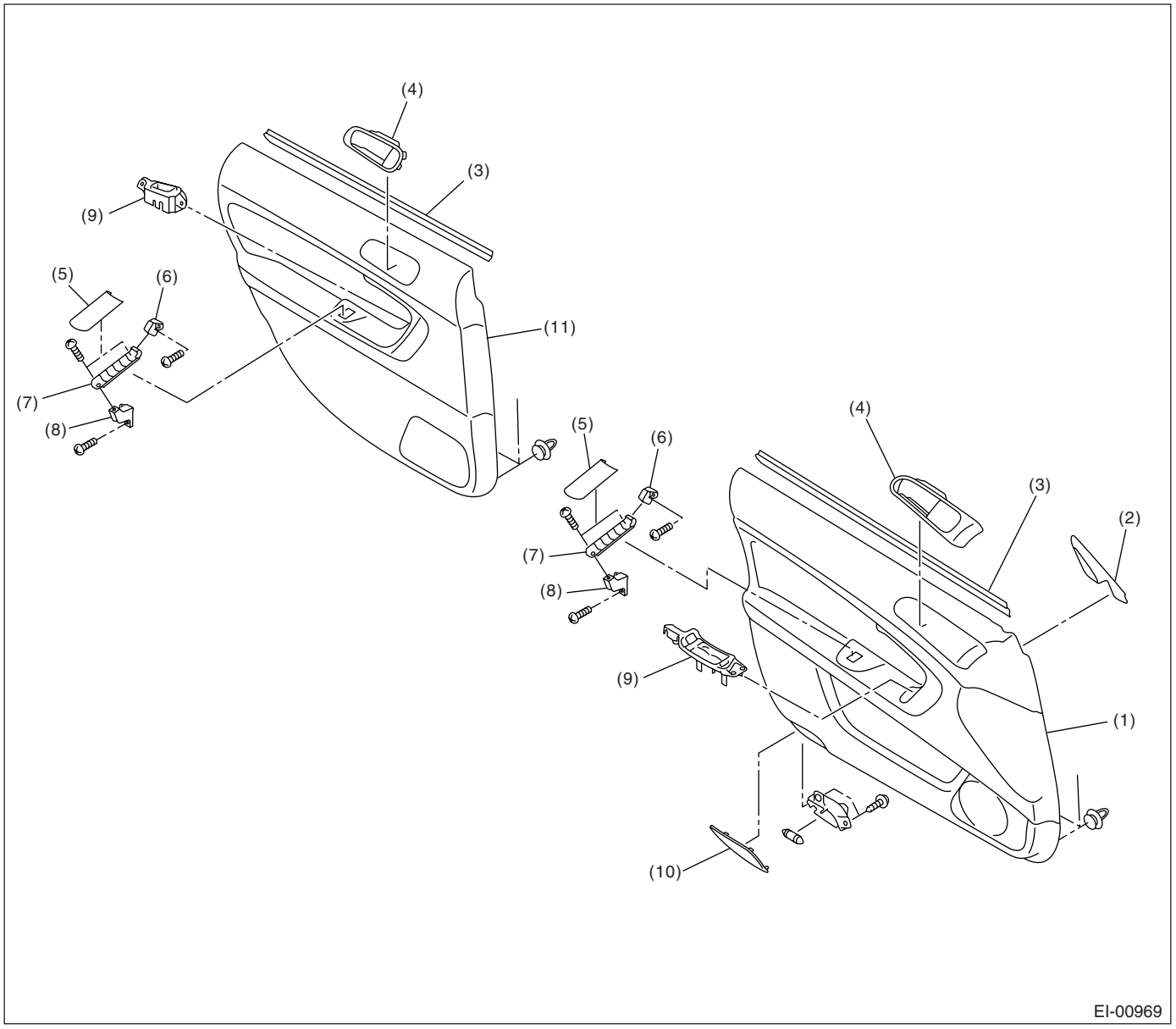

(1) Front door trim
(2) Gusset cover
(3) Upper weather strip
(4) Inner remote cover
(5) Door grip
(6) Door grip bracket upper
(7) Door grip frame
(8) Door grip bracket lower
(9) Power window switch
(10) Step light cover
(11) Rear door trim

18.CONSOLE BOX

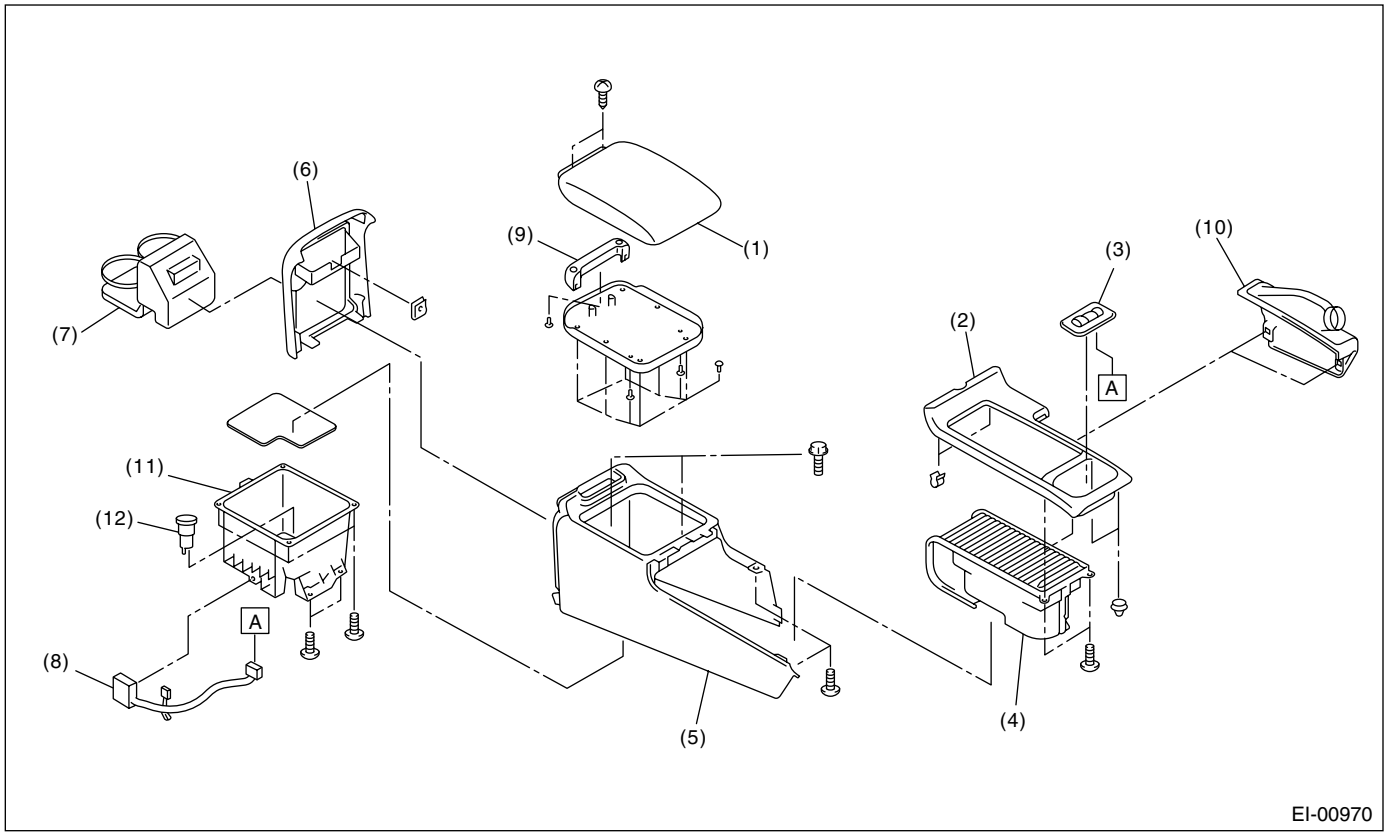

(1) Upper lid
(2) Console cover
(3) Seat heater switch
(4) Front cup holder
(5) Console box outer
(6) Rear lid
(7) Rear cup holder
(8) Console box harness
(9) Lid hinge
(10) Parking brake lever boot
(11) Console pocket
(12) Front accessory power supply socket

19.INSTRUMENT PANEL

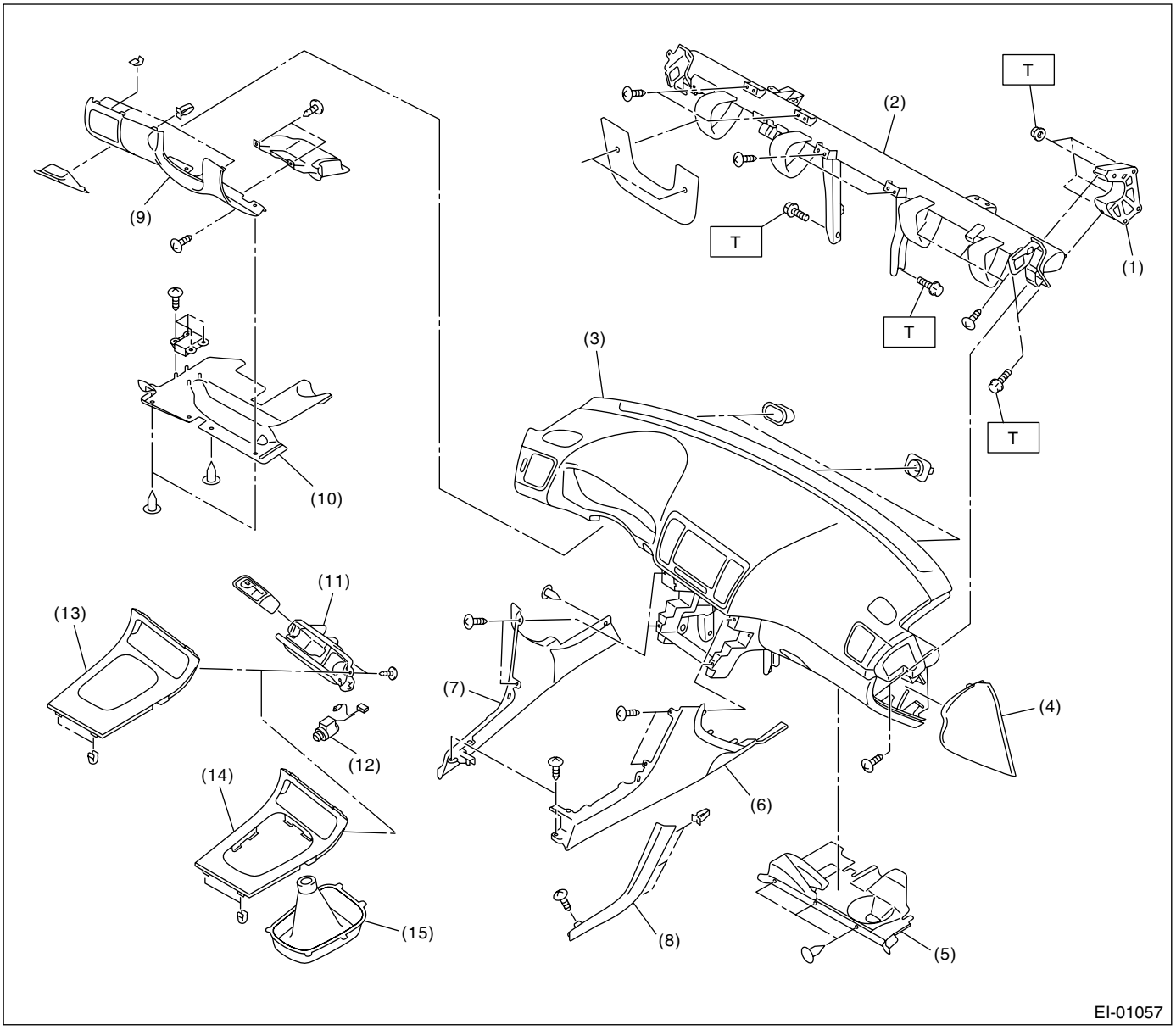

(1) Steering support beam bracket
(2) Steering support beam
(3) Instrument panel pad & frame ASSY
(4) Instrument panel side cover
(5) Glove box lower cover
(6) Console side panel RH
(7) Console side panel LH
(8) Console side garnish
(9) Instrument panel lower cover upper
(10) Instrument panel lower cover under
(11) Ash tray holder
(12) Front accessory power supply socket
(13) Console front panel (AT model)
(14) Console front panel (MT model)
(15) Shift lever boot (MT model)

Tightening torque: N·m (kgf-m, ft-lb)
T: 25 (25.5, 18)

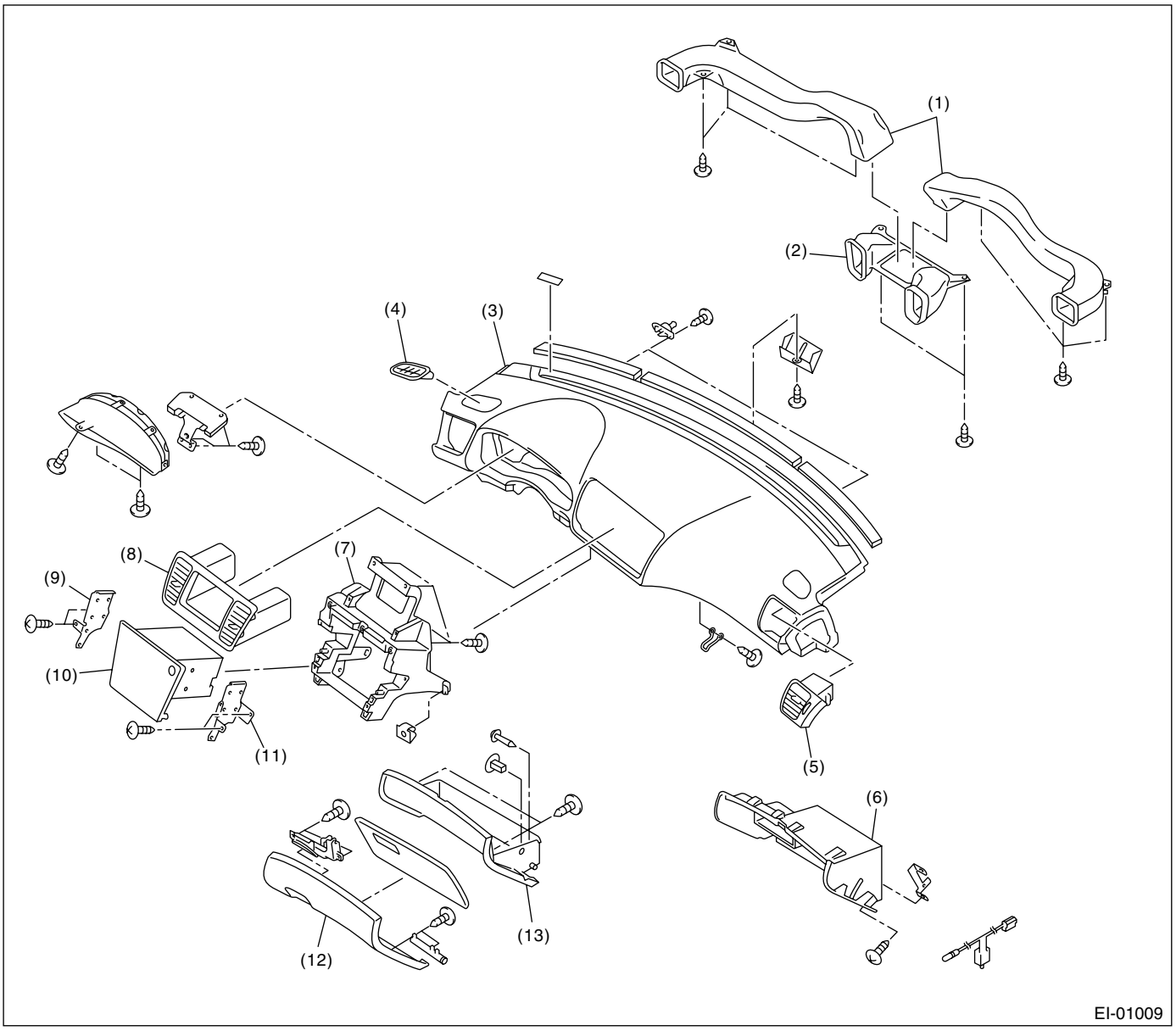

(1) Air vent side duct
(2) Air vent center duct
(3) Instrument panel pad & frame
(4) Air vent defroster grille
(5) Air vent side grille
(6) Glove box panel
(7) Center console frame
(8) Air vent center grille
(9) Audio bracket (LH)
(10) Center panel
(11) Audio bracket (RH)
(12) Glove box lid
(13) Glove box

20.INNER TRIM (SEDAN MODEL)

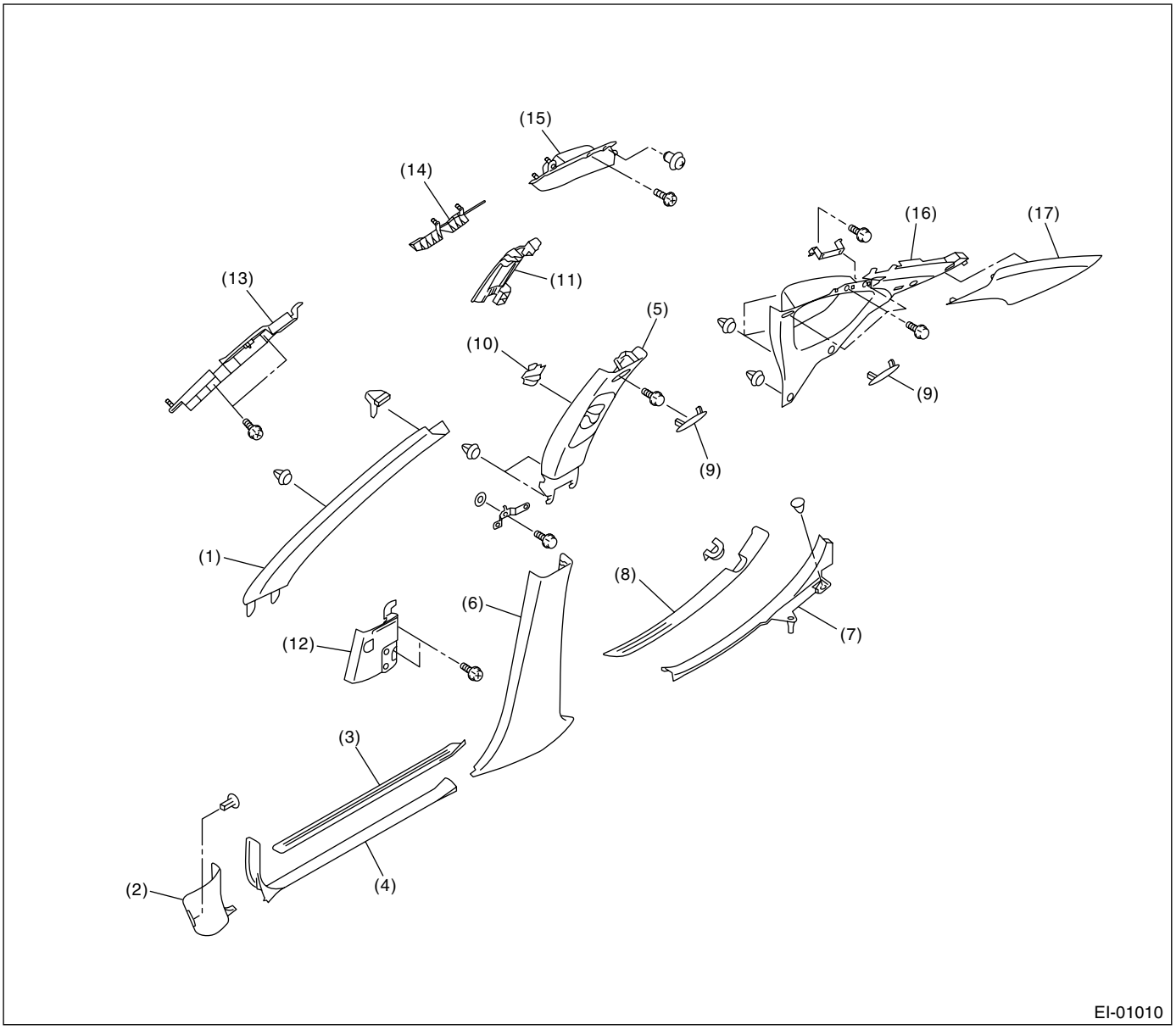

(1) Front pillar upper trim
(2) Front pillar lower trim
(3) Front outside scuff plate
(4) Front inside scuff plate
(5) Center pillar upper trim
(6) Center pillar lower trim
(7) Rear inside scuff plate
(8) Rear outside scuff plate
(9) Bolt cover
(10) Seat belt shoulder anchor adjuster button
(11) Center pillar inner protector upper
(12) Center pillar inner protector lower
(13) Curtain airbag guide front
(14) Curtain airbag guide center
(15) Curtain airbag guide rear
(16) Rear quarter trim front
(17) Rear quarter trim rear

21.INNER TRIM (WAGON MODEL)

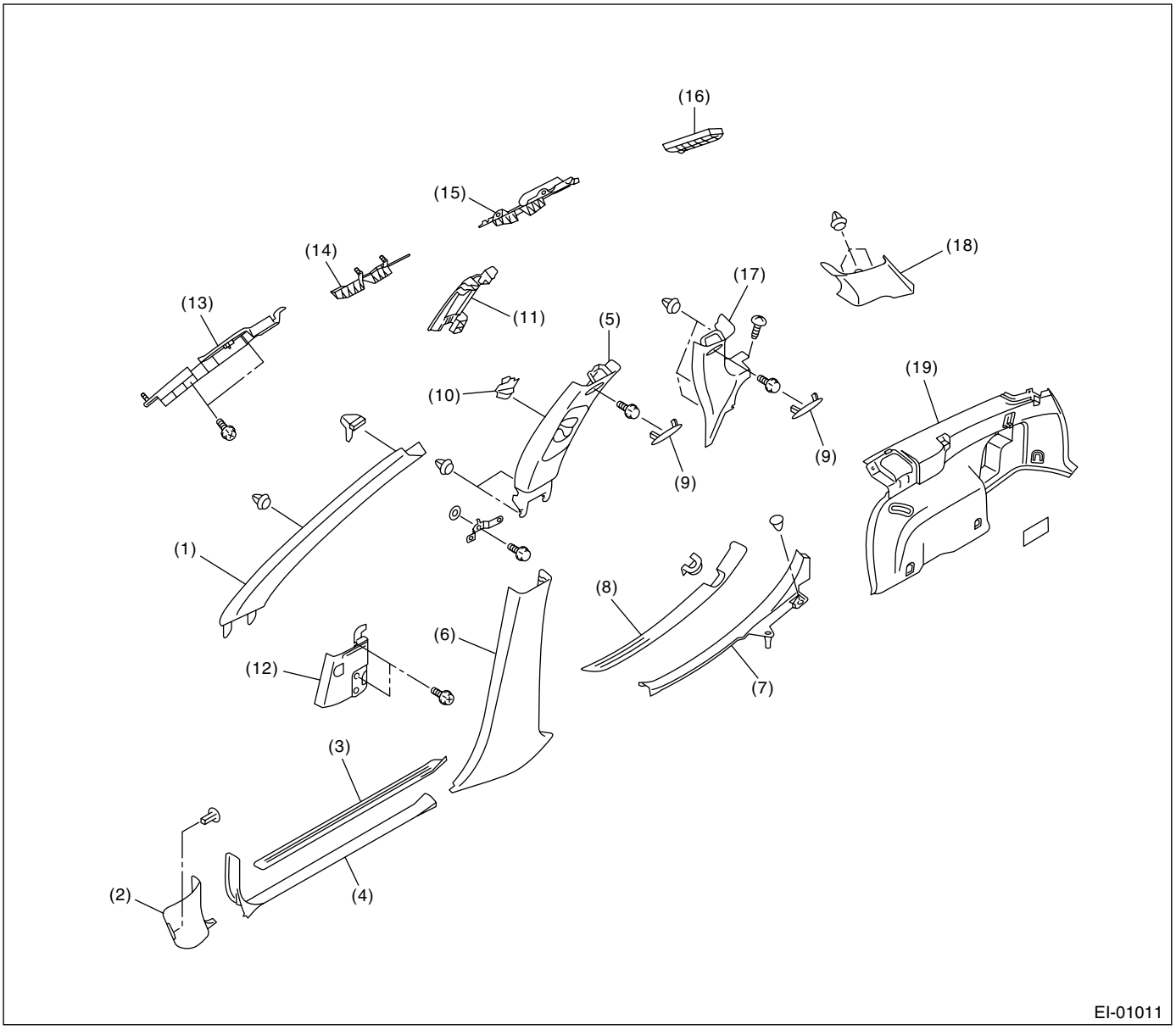

(1) Front pillar upper trim
(2) Front pillar lower trim
(3) Front outside scuff plate
(4) Front inside scuff plate
(5) Center pillar upper trim
(6) Center pillar lower trim
(7) Rear inside scuff plate
(8) Rear outside scuff plate
(9) Bolt cover
(10) Seat belt shoulder anchor adjuster button
(11) Center pillar inner protector upper
(12) Center pillar inner protector lower
(13) Curtain airbag guide front
(14) Curtain airbag guide center
(15) Curtain airbag guide rear
(16) Curtain airbag module protector
(17) Rear quarter front pillar trim
(18) Rear quarter rear pillar trim
(19) Rear quarter lower trim

22.REAR GATE TRIM

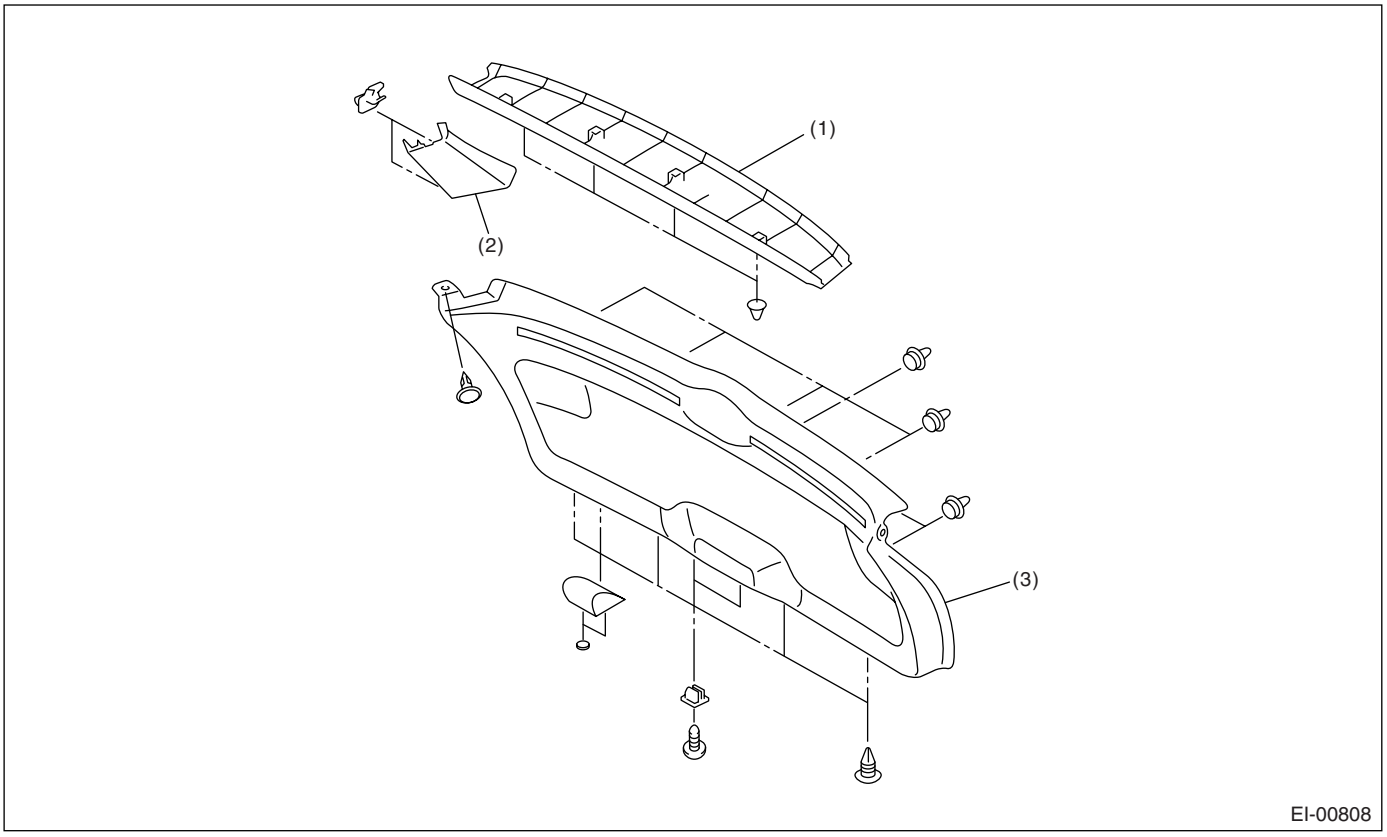

(1) Rear gate panel upper trim (2) Rear gate panel pillar trim (3) Rear gate panel lower trim

23.ROOF TRIM (SEDAN MODEL)

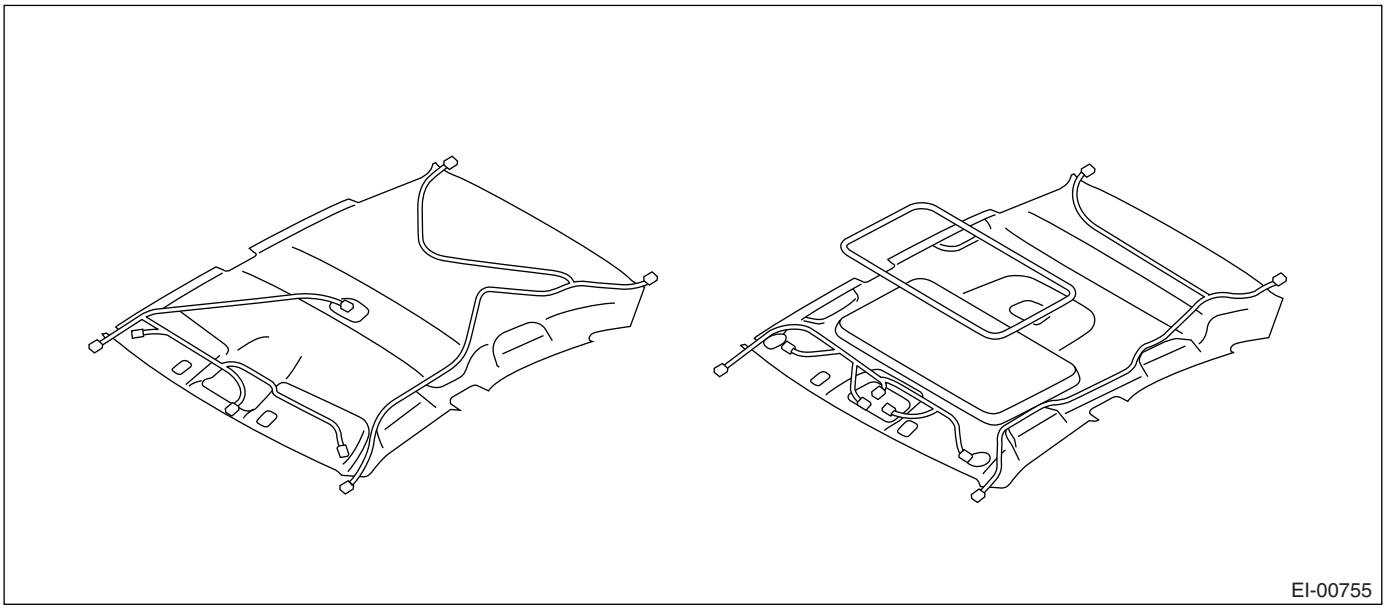

24.ROOF TRIM (WAGON MODEL)

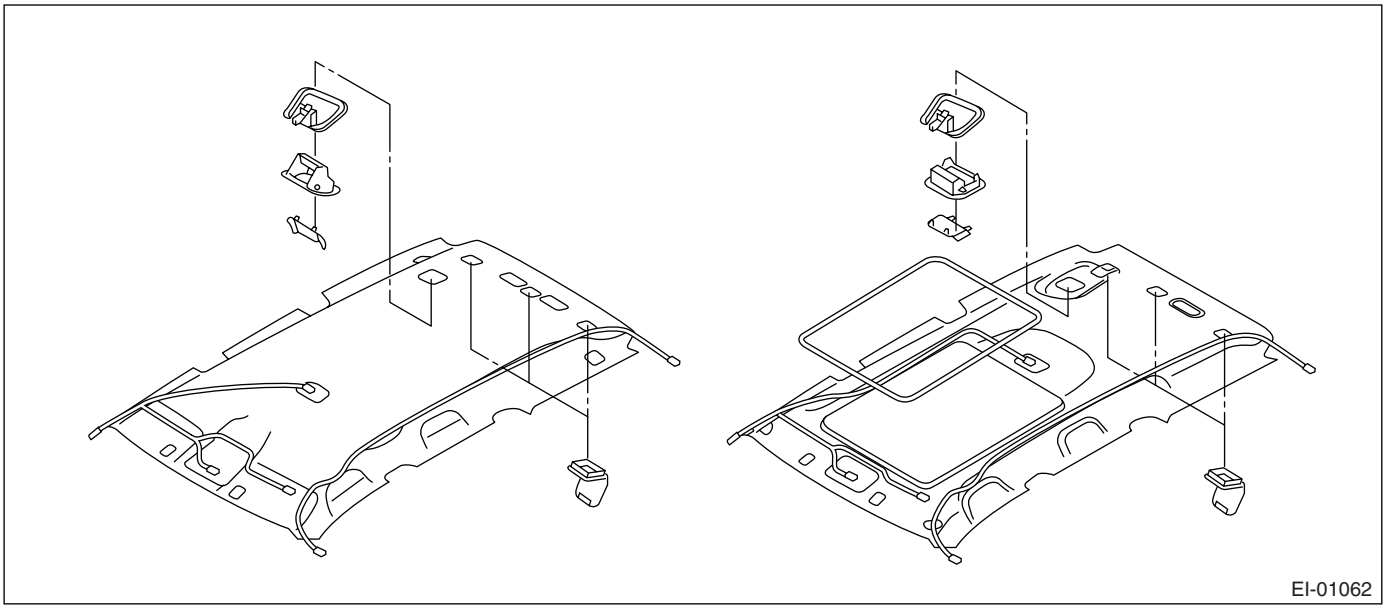

25.TRUNK ROOM TRIM

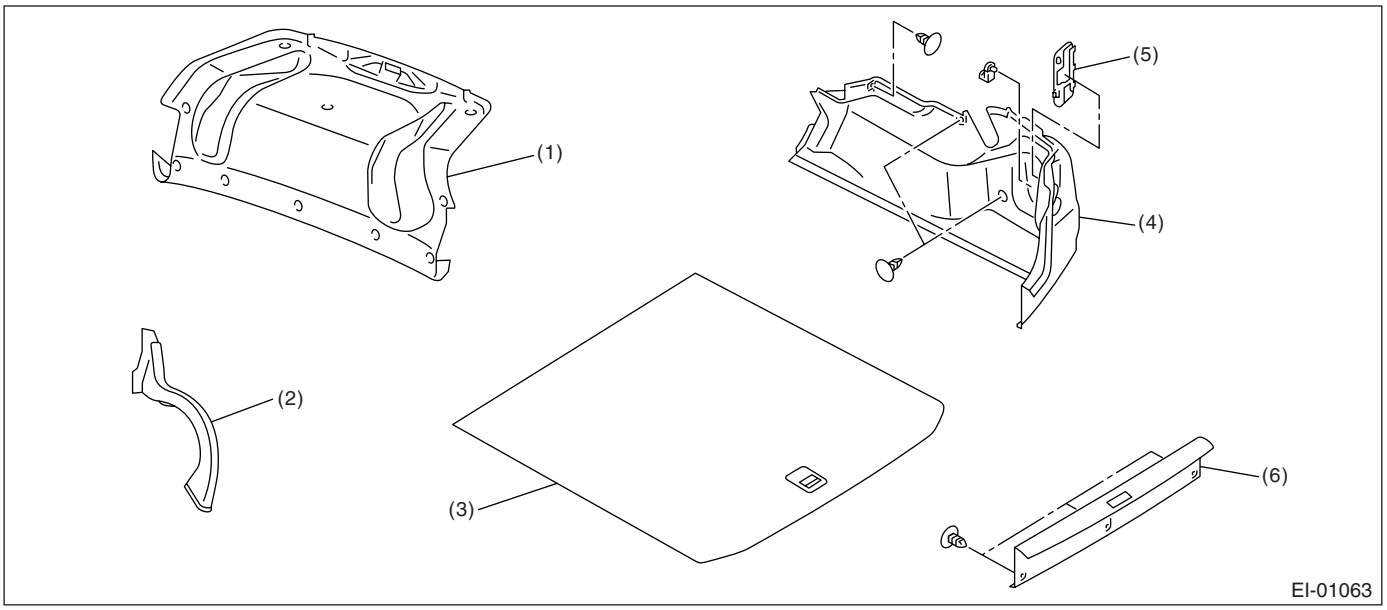

(1) Trunk lid trim
(2) Trunk lid arm cover
(3) Trunk room mat
(4) Trunk side trim
(5) Combination light cover
(6) Trunk room end cover

26.LUGGAGE FLOOR MAT

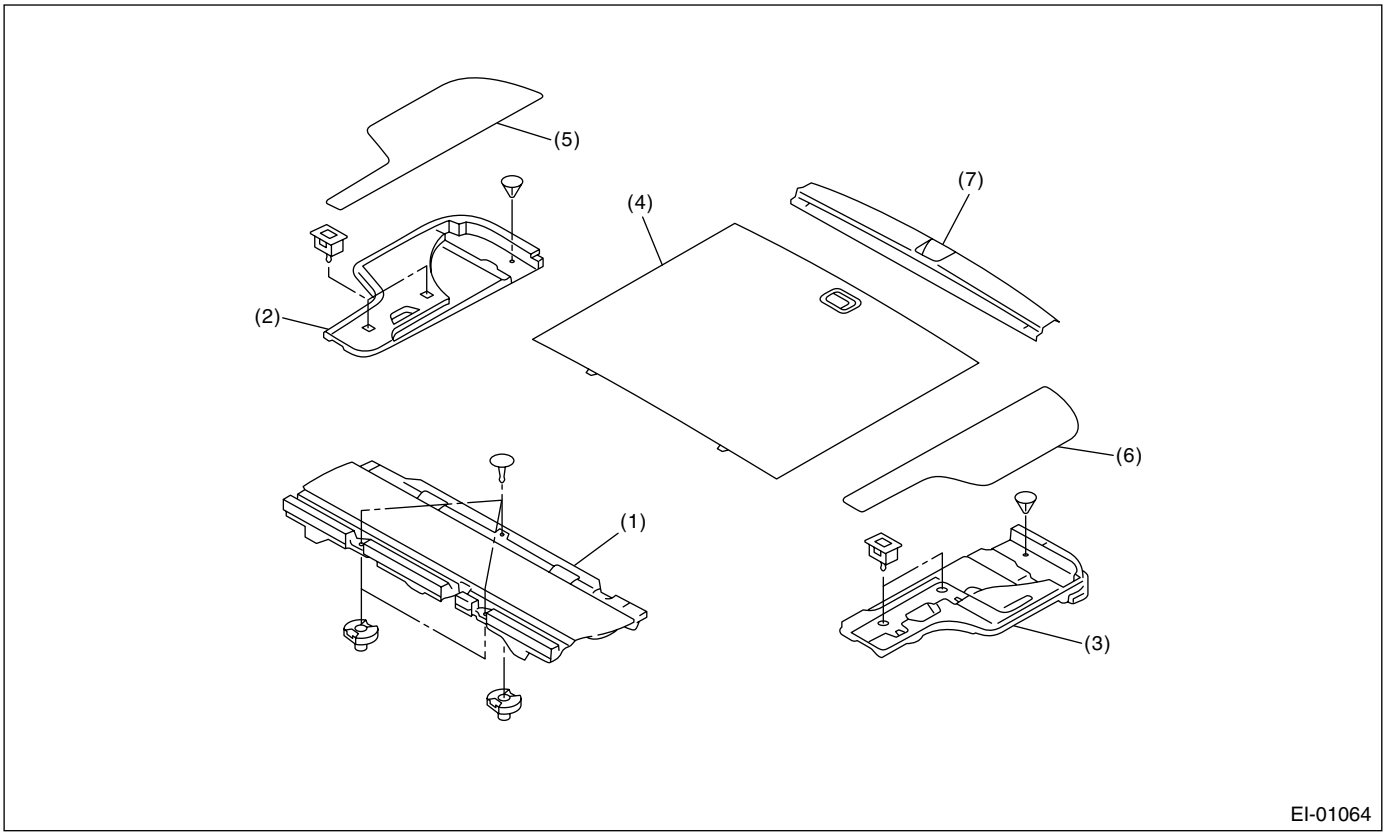

(1) Front floor mat
(2) Floor box (RH)
(3) Floor box (LH)
(4) Center floor mat
(5) Side floor mat (RH)
(6) Side floor mat (LH)
(7) Luggage floor end cover

27.ROOM INNER PARTS

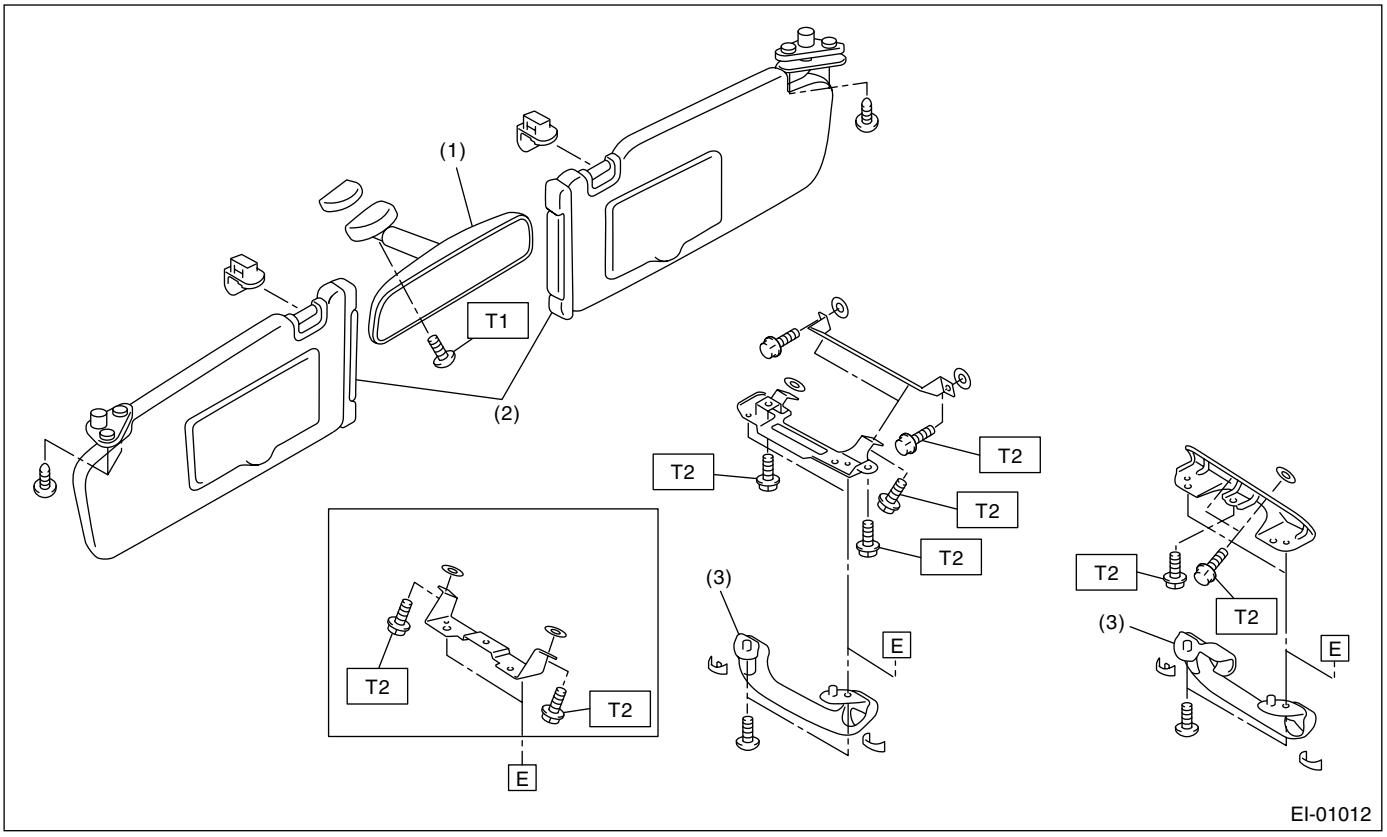

(1) Room mirror
(2) Sun visor
(3) Assist grip

Tightening torque: N·m (kgf-m, ft-lb)
T1: 2.0 (0.2, 1.48)
T2: 7.5 (0.77, 5.53)

28.HEAT SHIELD COVER

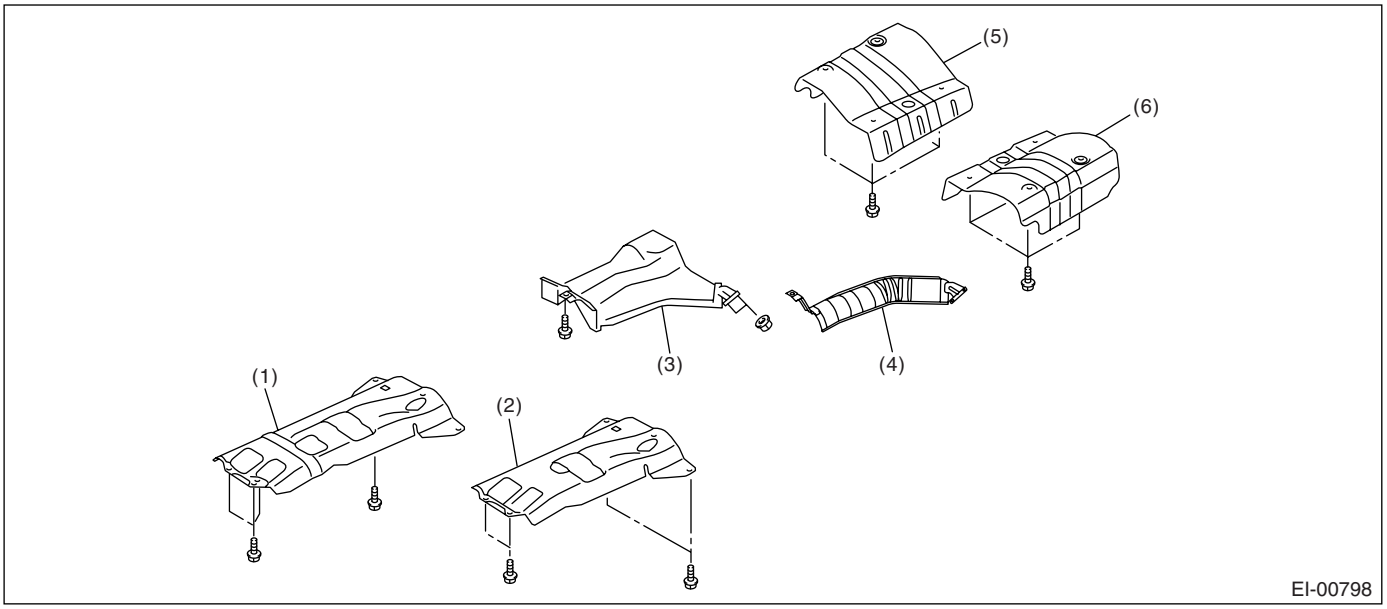

(1) Front heat shield cover (5AT model)
(2) Front heat shield cover (4AT model and MT model)
(3) Center heat shield cover (Turbo model)
(4) Center heat shield cover (Non-turbo model)
(5) Rear heat shield cover RH
(6) Rear heat shield cover LH

B: PREPARATION TOOL

TOOL NAME	REMARKS
Clip remover	Used for removal of trim.
Clip clamp pliers	Used for removal of various clips and clamps.

2. Front Grille

A: REMOVAL

1) Open the hood.
2) Remove the push clips (A), front grille clips (B) and bolt (C) from each side of front grille.

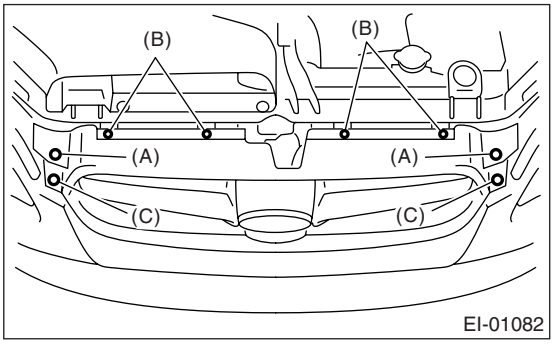

3) Pull lower side of the front grille forward, remove hooks (A), and then remove the front grille from vehicle body.

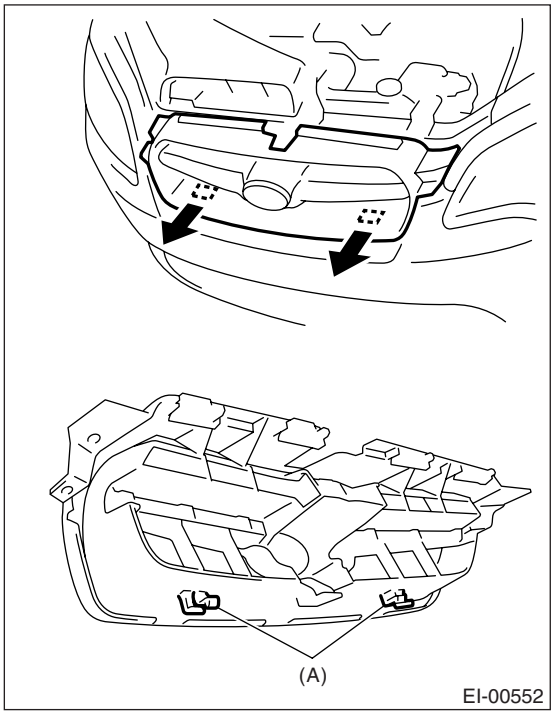

B: INSTALLATION

Install in the reverse order of removal.

3. Front Hood Grille

A: REMOVAL

1) Open the front hood.
2) Remove the front hood insulator. <Ref. to EB-13, FRONT HOOD INSULATOR, REMOVAL, Front Hood.>
3) Remove the screws (A) and clip (B), and remove the front hood duct.

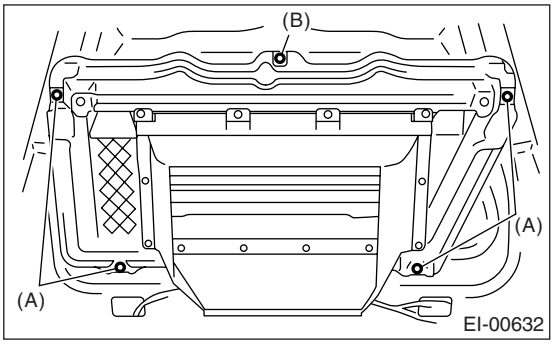

4) Loosen the nuts (A), remove the clip (B), and then remove the front hood grille.

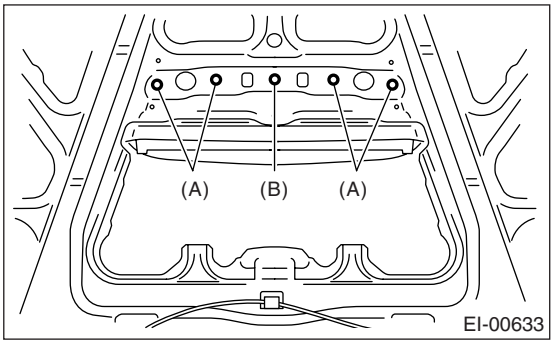

B: INSTALLATION

1) Fit the clip (B) of front hood grille, and install the front hood grille using nuts (A).

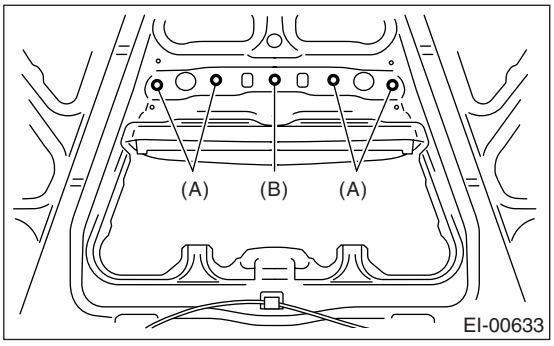

Tightening torque:
4.5 N·m (0.46 kgf-m, 3.32 ft-lb)

2) Insert the hooks (B) of the front hood duct into holes (A) of the front hood.

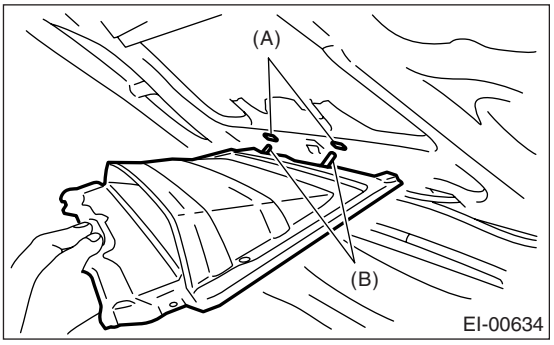

3) Install the front hood duct with the screws (A) and clip (B).

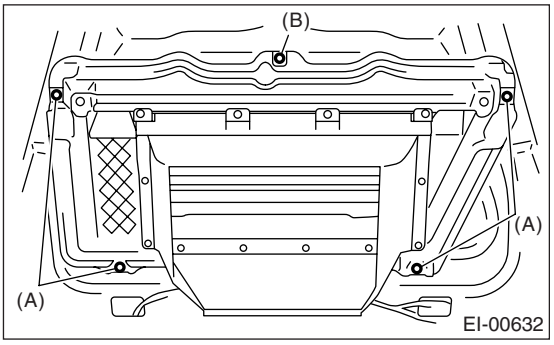

4. Front Under Cover

A: REMOVAL

1) Lift-up the vehicle.
2) Remove the clips (A) in front fender and bolts (B), and then remove the front under cover.

- Large type

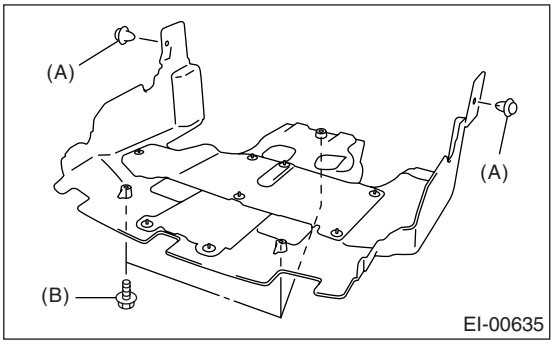

- Small type

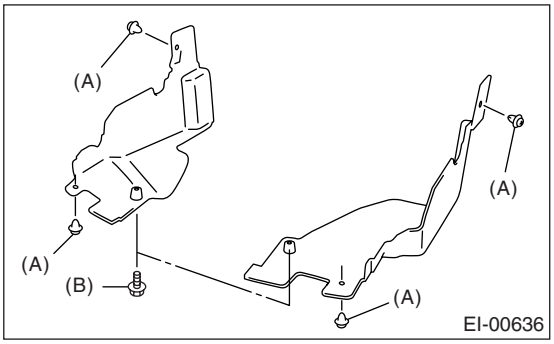

B: INSTALLATION

Install in the reverse order of removal.

Tightening torque:
14 N·m (1.42 kgf-m, 10.3 ft-lb)

5. Floor Under Protector

A: REMOVAL

1) Lift-up the vehicle.

NOTE:
Plate type lift can not be used.

2) Remove the push turn clips (A) and bolts (B), and remove the floor under protector.

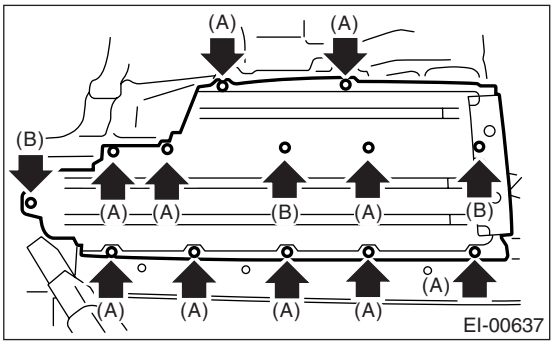

B: INSTALLATION

Install in the reverse order of removal.

6. Fuel Tank Protector

A: REMOVAL

1) Lift-up the vehicle.
2) Remove the bolts (A) and plastic nuts (B), and then remove the fuel tank protector.

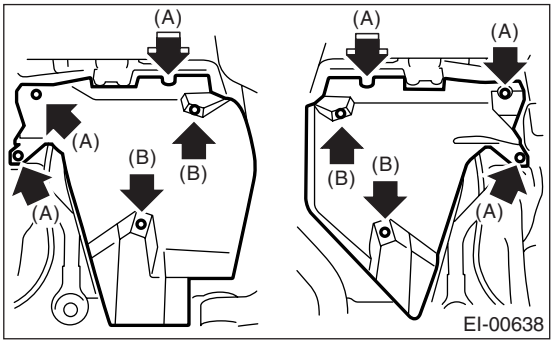

B: INSTALLATION

Install in the reverse order of removal.

Tightening torque:
Bolt
17.5 N·m (1.78 kgf-m, 12.9 ft-lb)

7. Mud Guard

A: REMOVAL

1. FRONT MUD GUARD

1) Jack-up the vehicle.
2) Remove the front wheels.
3) Loosen the screws and clips to remove mud guard.

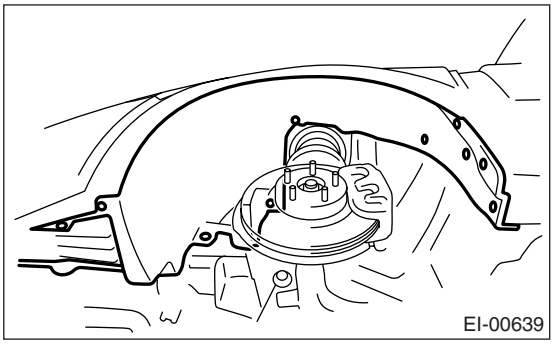

2. REAR MUD GUARD

1) Jack-up the vehicle.
2) Remove the rear wheels.
3) Loosen the screws and clips to remove mud guard.

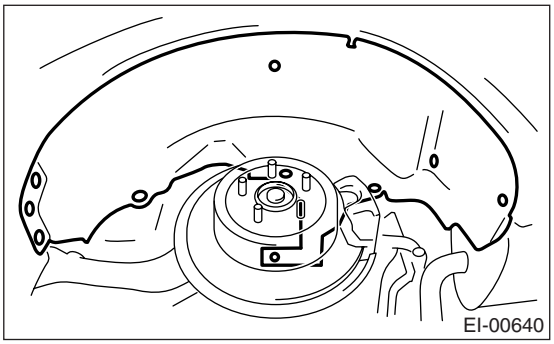

B: INSTALLATION

1. FRONT MUD GUARD

Install in the reverse order of removal.

2. REAR MUD GUARD

Install in the reverse order of removal.

8. Front Bumper

A: REMOVAL

1. FRONT BUMPER FACE

1) Disconnect the ground cable from battery.
2) Remove the front grille. <Ref. to EI-24, REMOVAL, Front Grille.>
3) Turn over the front mud guard, and remove the clips connecting the fender and bumper.

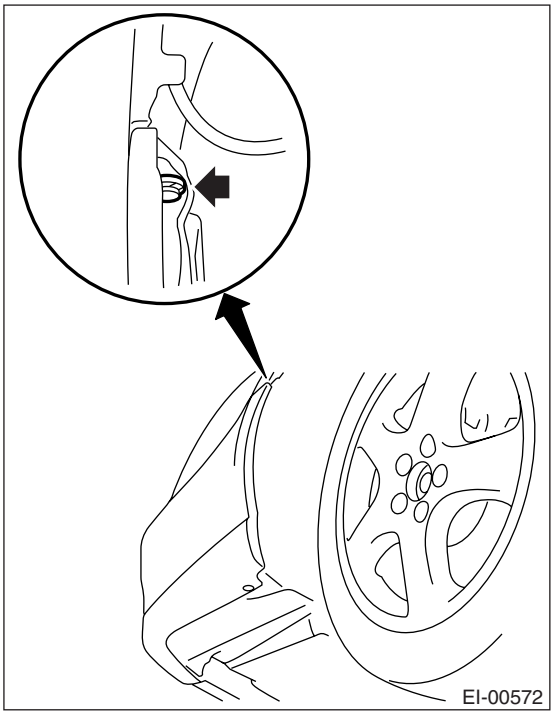

4) Remove the clips at the lower side of bumper.

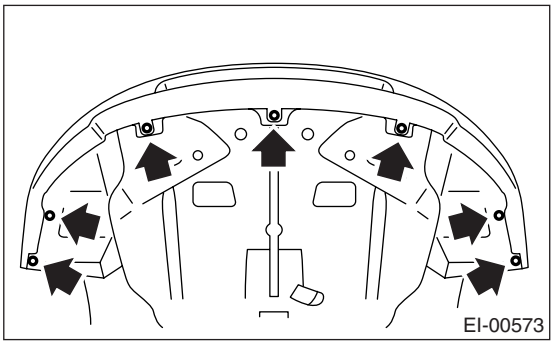

5) Disconnect the fog light connector. (Model with fog light)
6) Remove the bumper from vehicle body.
7) Remove the fog light from bumper face. <Ref. to LI-17, REMOVAL, Front Fog Light Assembly.>

2. FRONT BUMPER BEAM ASSEMBLY

1) Disconnect the ground cable from battery.
2) Remove the front grille. <Ref. to EI-24, REMOVAL, Front Grille.>
3) Remove the front bumper face. <Ref. to EI-30, FRONT BUMPER FACE, REMOVAL, Front Bumper.>
4) Remove the energy absorber foam from bumper beam.
5) Remove the upper bracket.

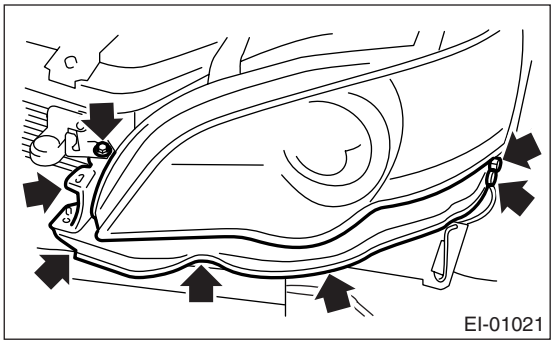

6) Remove the bolts, and remove the bumper beam assembly from vehicle body.

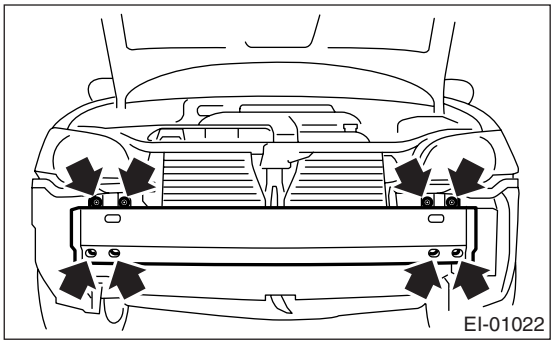

NOTE:
After all bolts are removed, raise the whole bumper beam a little to remove it from vehicle body.

7) Remove the bolts and nuts, and disassemble the bumper beam.

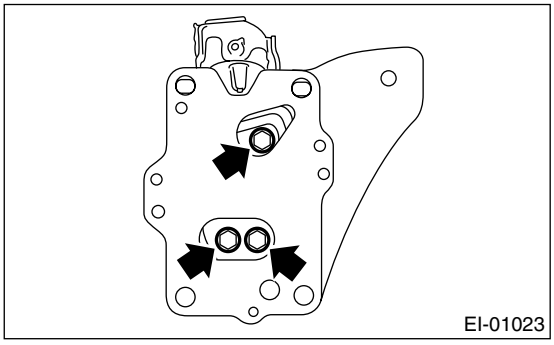

8) Remove the under cover.

9) Remove the bolts and clips, and remove the radiator guide.

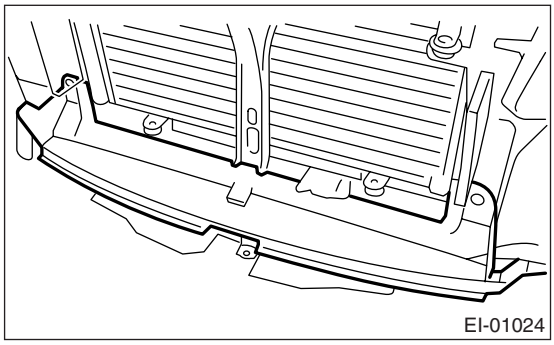

B: INSTALLATION

1. FRONT BUMPER FACE

1) Install in the reverse order of removal.
2) Fit the slider (A) to the guide plate (B) securely.

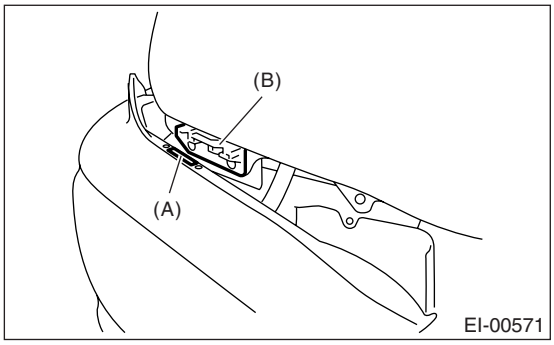

2. FRONT BUMPER BEAM ASSEMBLY

Install in the reverse order of removal.

Tightening torque:
Refer to "COMPONENT" of "General Description". <Ref. to EI-5, FRONT BUMPER, COMPONENT, General Description.>

C: REPAIR

1. COATING METHOD FOR PP BUMPER

Process No.	Process name	Job contents	
1	Bumper installation	Place the bumper on a paint worktable as required. Use the paint worktable conforming to inner shape of bumper when possible.	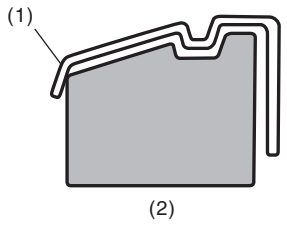 EI-00234 (1) Bumper (2) Set bumper section
2	Masking	Mask specified part (black base) with masking tape. Use masking tape for PP (example, Nichiban No. 533, etc.).	
3	Degreasing, cleaning	Clean all parts to be painted with white gasoline, normal alcohol, etc. to remove dirt, oil, fat, etc.	
4	Primer paint	Apply primer to all parts to be painted, using spray gun. Use primer (clear).	
5	Drying	Dry at normal temperature [10 — 15 min. at 20°C (68°F)]. In half-dried condition, PP primer paint is dissolved by solvent, e.g. thinner, etc. Therefore, if dust or dirt must be removed, use ordinary alcohol, etc.	
6	Top coat paint (I)	Non-colored	Metallic paint
		Use section (block) paint for top coat. • Paint to be used (for each color): Solid paint Hardener PB Thinner T-301 • Mixing ratio: Main agent vs. hardener = 4:1 • Viscosity: 10 — 13 sec./20°C (68°F) • Film thickness: 35 — 45 μ • Spraying pressure: 245 — 343 kPa (2.5 — 3.5 kg/cm^2, 36 — 50 psi)	Use section (block) paint for top coat. • Paint to be used (for each color): Metallic paint Hardener PB Thinner T-306 • Mixing ratio: Main agent vs. hardener = 10:1 • Viscosity: 10 — 13 sec./20°C (68°F) • Film thickness: 15 — 20 μ • Spraying pressure: 245 — 343 kPa (2.5 — 3.5 kg/cm^2, 36 — 50 psi)
7	Drying	Not required.	Dry at normal temperature [more than 10 min. at 20°C (68°F)]. In half-dried condition, avoid dust, dirt.
8	Top coat paint (II)	Not required.	Apply a clear coat to parts with top coat paint (I), three times, at 5 — 7 minutes intervals. • Paint to be used: Metallic paint Hardener PB Thinner T-301 • Mixing ratio: Clear coat vs. hardener = 6:1 • Viscosity: 14 — 16 sec./20°C (68°F) • Film thickness: 25 — 30 μ • Spraying pressure: 245 — 343 kPa (2.5 — 3.5 kg/cm^2, 36 — 50 psi)
9	Drying	60°C (140°F), 60 min. or 80°C (176°F), 30 min. If higher than 80°C (176°F), PP may be deformed. Keep maximum temperature at 80°C (176°F).	
10	Inspection	Paint check.	
11	Masking removal	Remove masking tape applied in process No. 2.	

2. REPAIR INSTRUCTIONS FOR COLORED PP BUMPER

NOTE:
All PP bumpers are provided with a grained surface, and if the surface is damaged, it cannot normally be restored to its former condition. Damages limited to the shallow scratches that cause only a change in the luster of the base material or coating, can be almost fully restored. Before repairing a damaged area, explain this point to the customer and obtain an understanding about the matter. Repair methods are outlined below, based on a classification of the extent of damage.

1) Minor damage causing only a change in the lustre of the bumper due to a light touch
Almost restorable.

Process No.	Process name	Job contents	
1	Cleaning	Clean the area to be repaired using water.	
2	Sanding	Grind the repairing area with #500 sand paper in a “feathering” motion.	
3	Finish	Resin section	Coated section
		Repeatedly apply wax to the affected area using a soft cloth (such as flannel). Recommended wax: NITTO KASEI Soft 99 TIRE WAX BLACK, or equivalent.	Perform either the same process as for the resin section or process No. 18 and subsequent in the “3)” section, depending on the degree and nature of damage.
		Polish the waxed area with a clean cloth after 5 to 10 minutes.	

2) Deep damage caused by scratching with fences, etc.
A dent cannot be repaired but a whitened or swelled part can be removed.

Process No.	Process name	Job contents	
1	Cleaning	Clean damaged area with water.	
2	Removal of damaged area	Cut off protruding area, if any, due to collision, using a putty knife.	
3	Sanding	Grind the affected area with #100 to #500 sand paper.	
4	Finish	Resin section	Coated section
		Same as Process No. 3 in the “1)” section.	Perform Process No. 12 and subsequent operations in the “3)” section.

3) Deep damage such as a break or hole that requires filling
Much of the peripheral grained surface must be sacrificed for repair. The degree of restoration is not really worth the expense. (The surface, however, will become almost flush with adjacent areas.)
Recommended repair kit: PP Part Repair Kit (NRM)

Process No.	Process name	Job contents	
1	Bumper removal	Remove the bumper as required.	
2	Removal of parts	Remove the parts built into bumper as required.	
3	Bumper placement	Place the bumper on a paint worktable as required. It is recommended to use the paint worktable conforming to internal shape of bumper.	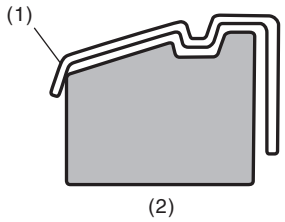 EI-00234 (1) Bumper (2) Set bumper section
4	Surface preparation	Remove dust, oil, etc. from areas to be repaired and surrounding areas, using a suitable solvent (NRM No. 900 Precleno, white gasoline, or alcohol, etc.).	

<table>
<tr><th>Process No.</th><th>Process name</th><th colspan="2">Job contents</th></tr>
<tr><td>5</td><td>Cutting</td><td>If nature of damage are cracks or holes, cut a guide slit of 20 to 30 mm (0.79 to 1.18 in) in length along the crack or hole up to the bumper's base surface. Then, bevel or "vee-out" the affected area using a knife or grinder.</td><td> 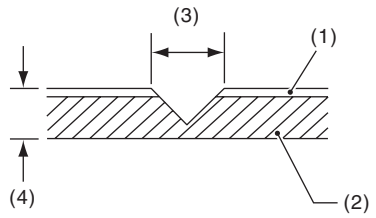

EI-00235
(1) Paint surface
(2) PP base surface
(3) 20 — 30 mm (0.79 — 1.18 in)
(4) 3 mm (0.12 in)</td></tr>
<tr><td>6</td><td>Sanding (I)</td><td colspan="2">Grind beveled surface with sand paper (#40 to #60) to smooth finish.</td></tr>
<tr><td>7</td><td>Cleaning</td><td colspan="2">Clean the sanded surface with the same solvent as used in Process No. 4.</td></tr>
<tr><td rowspan="2">8</td><td rowspan="2">Temporary welding</td><td colspan="2">Grind the side just opposite the beveled area with sand paper (#40 to #60) and clean using a solvent.
Temporarily spot-weld the side, using a PP welding rod and heater gun.</td></tr>
<tr><td colspan="2"> 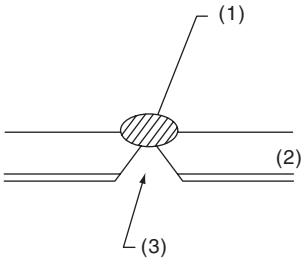

EI-00236
(1) Welded point (Use heater gun and PP welding rod)
(2) PP base surface
(3) Beveled section
NOTE:
• Do not melt welding rod until it flows out. This results in reduced strength.
• Leave the welded spot unattended until it cools completely.</td></tr>
<tr><td rowspan="2">9</td><td rowspan="2">Welding</td><td colspan="2">Using a heater gun and PP welding rod, weld the beveled spot while melting the rod and damaged area.</td></tr>
<tr><td colspan="2"> 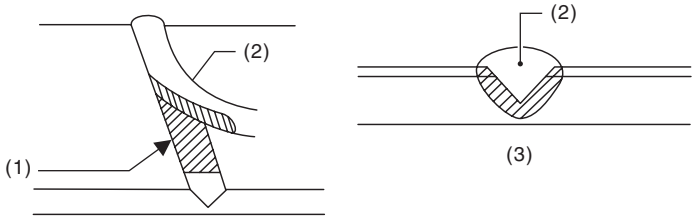

EI-00237
(1) Welding rod
(2) Melt hatched area
(3) Section
NOTE:
• Melt the sections indicated by hatched area.
• Do not melt the welding rod until it flows out, in order to provide strength.
• Always keep the heater gun 1 to 2 cm (0.4 to 0.8 in) away from the welding spot.
• Leave the welded spot unattended until it cools completely.</td></tr>
</table>

<table>
<tr><th>Process No.</th><th>Process name</th><th colspan="2">Job contents</th></tr>
<tr><td rowspan="3">10</td><td rowspan="3">Sanding (II)</td><td colspan="2">Remove excess part of weld with a putty knife. If a drill or disc wheel is used instead of the knife, operate it at a rate lower than 1,500 rpm and grind the excess part little by little. A higher rpm will cause the PP substrate to melt from the heat.</td></tr>
<tr><td colspan="2"> 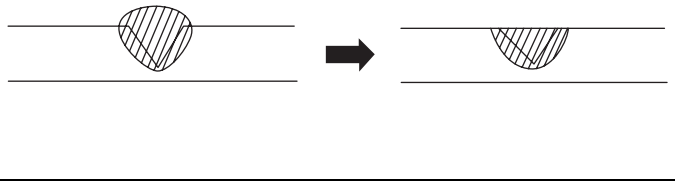
EI-00042</td></tr>
<tr><td colspan="2">Sand the welded spot smooth with #240 sand paper.</td></tr>
<tr><td>11</td><td>Masking</td><td colspan="2">Mask the black substrate section using masking tape.
Recommended masking tape: Nichiban No. 533 or equivalent</td></tr>
<tr><td>12</td><td>Cleaning/ degreasing</td><td colspan="2">Completely clean the entire coated area, using solvent similar to that used in Process No. 4.</td></tr>
<tr><td>13</td><td>Primer coating</td><td colspan="2">Apply a coat of primer to the repaired surface and its surrounding areas. Mask these areas, if necessary.
Recommended primer: Mp/ 364 PP Primer
NOTE:
Be sure to apply coat of primer at a spraying pressure of 245 — 343 kPa (2.5 — 3.5 kg/cm^2, 36 — 50 psi) with a spray gun.</td></tr>
<tr><td>14</td><td>Leave unattended</td><td colspan="2">Leave the repaired area unattended at 20°C (68°F) for 10 to 15 minutes until primer is half-dry.
NOTE:
If dirt or dust comes in contact with the coated area, wipe it off with a cloth with alcohol. (Do not use thinner since the coated area tends to melt.)</td></tr>
<tr><td>15</td><td>Primer surfacer coating</td><td colspan="2">Apply a coat of primer surfacer to the repaired area two or three times at an interval of 3 to 5 minutes.
Recommended surfacer:
• UPS 300 Flex Primer
• No. 303 UPS 300 Exclusive hardener
• NPS 725 Exclusive Reducer (thinner)
• Mixing ratio:
2 : 1 (UPS 300 : No. 303)
• Viscosity: 12 — 14 sec./20°C (68°F)
• Coating film thickness: 40 — 50 μ</td></tr>
<tr><td>16</td><td>Drying</td><td colspan="2">Allow the coated surface to dry for 20 minutes at 20°C (68°F) [or 30 minutes at 60°C (140°F)].</td></tr>
<tr><td>17</td><td>Sanding (III)</td><td colspan="2">Sand the coated surface and its surrounding areas using #400 sand paper and water.</td></tr>
<tr><td>18</td><td>Cleaning/ degreasing</td><td colspan="2">Same as Process No. 12.</td></tr>
<tr><td rowspan="2">19</td><td rowspan="2">Top coat (I)</td><td>Non-colored</td><td>Metallic paint</td></tr>
<tr><td>Use a “block” coating method.
• Recommended paint:
Suncryl (SC)
No. 307 Flex Hardener
SC Reducer (thinner)
• Mixing ratio:
Suncryl (SC) vs. No. 307 Flex Hardener = 3 : 1
• Viscosity: 11 — 13 sec./20°C (68°F)
• Coating film thickness: 40 — 50 μ
• Spraying pressure: 245 — 343 kPa
(2.5 — 3.5 kg/cm^2, 36 — 50 psi)</td><td>Use a “block” coating method.
• Recommended paint:
Suncryl (SC)
No. 307 Flex Hardener
SC Reducer (thinner)
• Mixing ratio:
Suncryl (SC) vs. No. 307 Flex Hardener = 3 : 1
• Viscosity: 11 — 13 sec./20°C (68°F)
• Coating film thickness: 20 — 30 μ
• Spraying pressure: 245 — 343 kPa
(2.5 — 3.5 kg/cm^2, 36 — 50 psi)</td></tr>
</table>

Process No.	Process name	Job contents	
20	Leave unattended	Not required.	Leave unattended at 20°C (68°F) for at least 10 minutes until the topcoated area is half-dry. NOTE: Be careful to keep dust or dirt from coming in contact with the affected area.
21	Top coat (II)	Not required.	Apply a clear coat three times at an interval of 3 to 5 minutes. • Recommended paint: SC710 Overlay Clear No. 307 Flex Hardener SC Reducer (thinner) • Mixing ratio: Suncryl (SC) vs. No. 307 Flex Hardener = 3 : 1 • Viscosity: 10 — 13 sec./20°C (68°F) • Coating film thickness: 20 — 30 μ • Spraying pressure: 245 — 343 kPa (2.5 — 3.5 kg/cm^2, 36 — 50 psi)
22	Drying	Allow the coated surface to dry for 2 hours at 20°C (68°F) or 30 minutes at 60°C (140°F). NOTE: Do not allow the temperature to exceed 80°C (176°F) since this will deform the PP substrate.	
23	Inspection	Carefully check the condition of the repaired area.	
24	Masking removal	Remove the masking tape applied in Process No. 11 and 13.	
25	Parts installation	Install parts on the bumper in reverse order of removal.	
26	Bumper installation	Install the bumper.	

9. Rear Bumper

A: REMOVAL

1. REAR BUMPER FACE

1) Disconnect the ground cable from battery.
2) Remove the rear combination light assembly. <Ref. to LI-20, REMOVAL, Rear Combination Light Assembly.>
3) Remove the two clips.

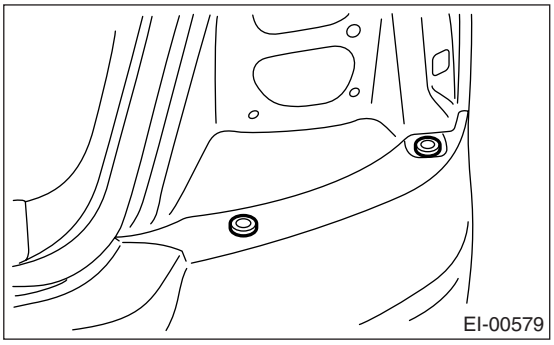

4) Turn over the mud guard, and remove the bolt (A) inside wheel house, and the clips (B) on the lower side of bumper.

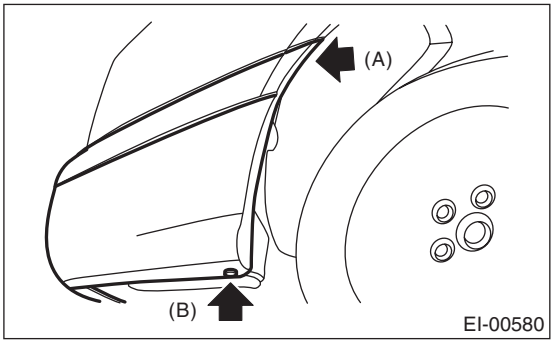

5) Remove the clips on the lower side of rear bumper.

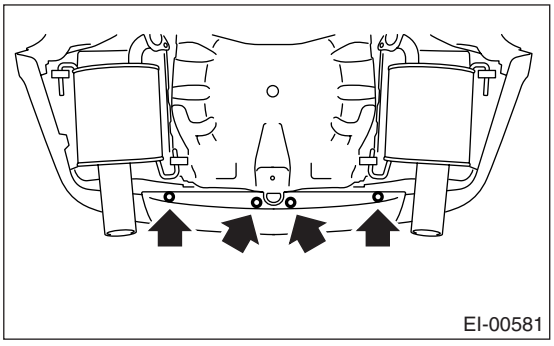

6) Remove the service hole cover, and remove the bolt.

- Sedan model: trunk side trim

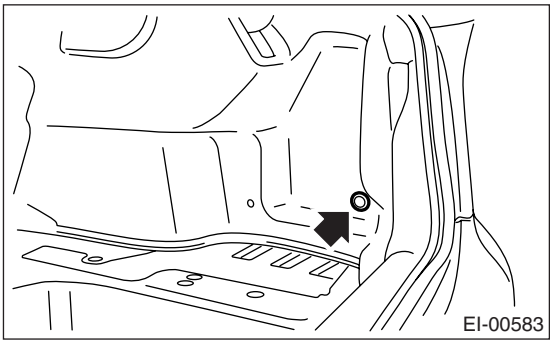

- Wagon model: rear quarter lower trim

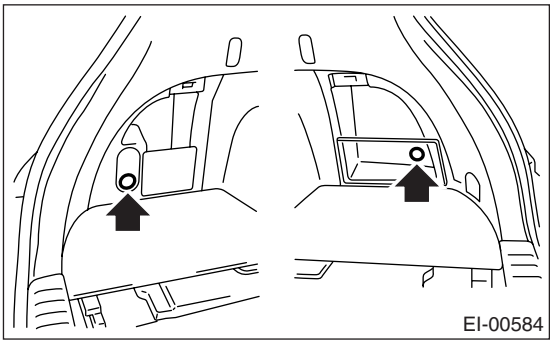

NOTE:
For model with woofer, remove the woofer cover.

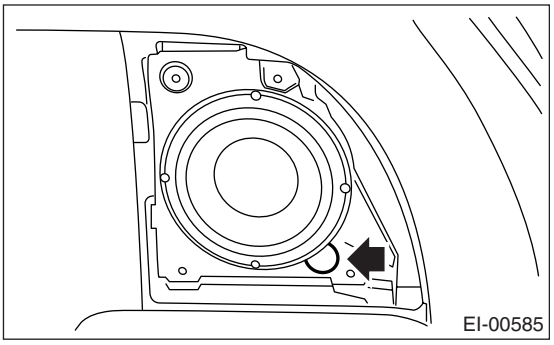

7) Remove the rear bumper from vehicle body.

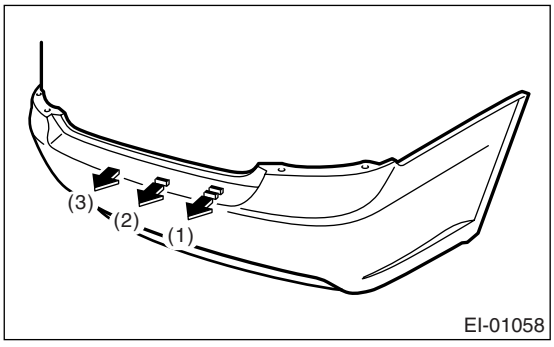

NOTE:
- Do not pull with a excessive force. Otherwise the bracket installation area may be damaged.
- When removing the bumper face from bracket, it is easier to remove from the end in order.

2. REAR BUMPER BRACKET

1) Remove the rear bumper face from vehicle body.
2) Remove the rear bumper bracket corner from vehicle body. (both sides)

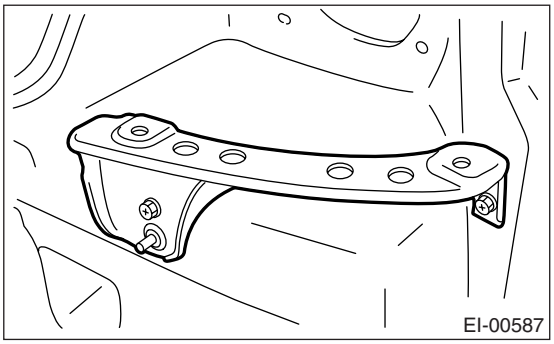

3) Remove the lower brackets from vehicle body.
- Sedan model: 2 places

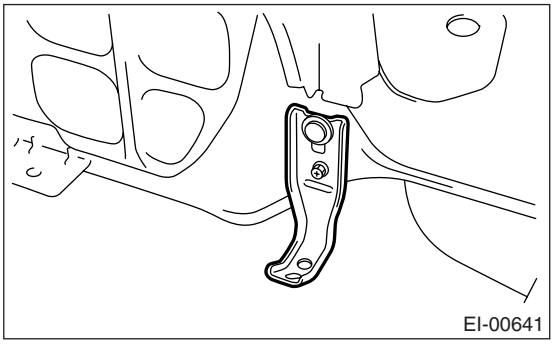

- Wagon model: 4 places

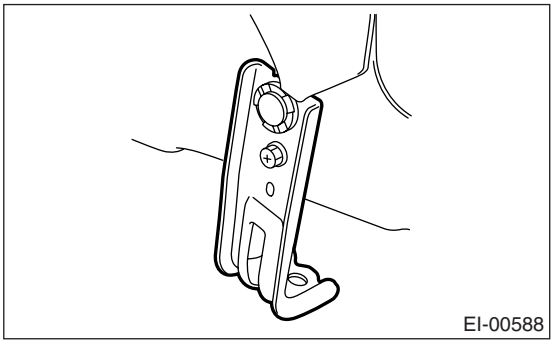

3. REAR BUMPER BEAM ASSEMBLY

1) Disconnect the ground cable from battery.
2) Remove the rear bumper face. <Ref. to EI-37, REAR BUMPER FACE, REMOVAL, Rear Bumper.>
3) Remove the energy absorber foam.
4) Remove the nuts, and remove the beam main reinforcement from vehicle body.

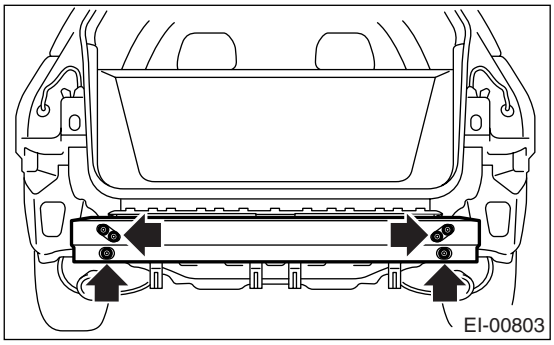

5) Remove the nuts, and remove the bumper beam bracket and beam upper rear from vehicle body.

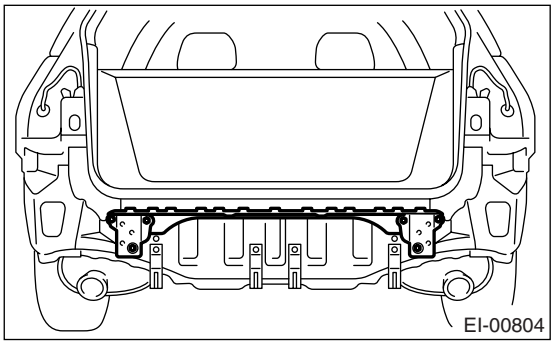

B: INSTALLATION

1. REAR BUMPER FACE

1) Install the beam upper rear to vehicle body.
2) Install the bumper face to vehicle body.

NOTE:
If the bumper face is easily come off the beam upper rear, adjust the hook area of the bracket side.

3) Install in the reverse order of removal.

Tightening torque:
Refer to "COMPONENT" of "General Description".
<Ref. to EI-6, REAR BUMPER (SEDAN MODEL), COMPONENT, General Description.>

2. REAR BUMPER BRACKET

Install in the reverse order of removal.

3. REAR BUMPER BEAM ASSEMBLY

Install in the reverse order of removal.

C: REPAIR

Refer to the description for front bumper repair. <Ref. to EI-30, REMOVAL, Front Bumper.>

10.Cowl Panel

A: REMOVAL

1) Open the hood.
2) Remove the wiper arm. <Ref. to WW-14, REMOVAL, Front Wiper Arm.>
3) Remove the weather strip clip, and remove the weather strip.

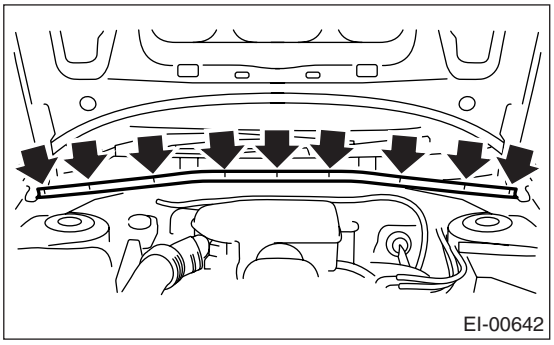
EI-00642

NOTE:
If the weather strip clip is removed with excessive force, the weather strip may be damaged. Be sure to use a clip remover to remove.

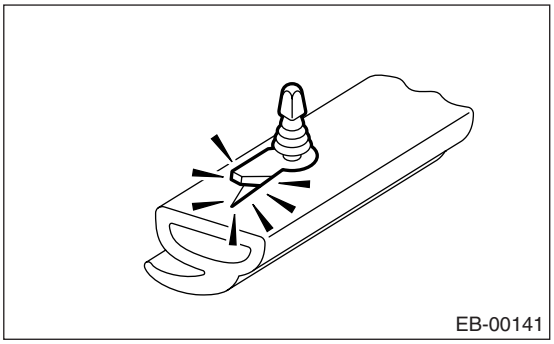
EB-00141

4) Remove the clip, and remove the cover cowl panel.

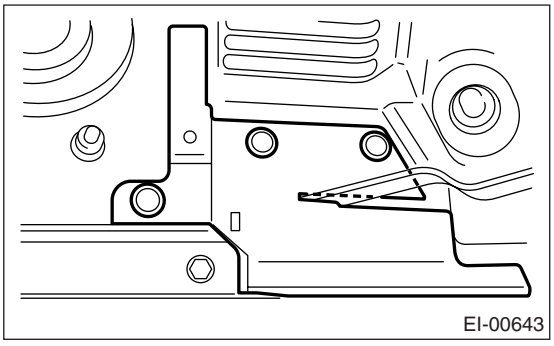
EI-00643

5) Remove the cowl panel side and clip (A).

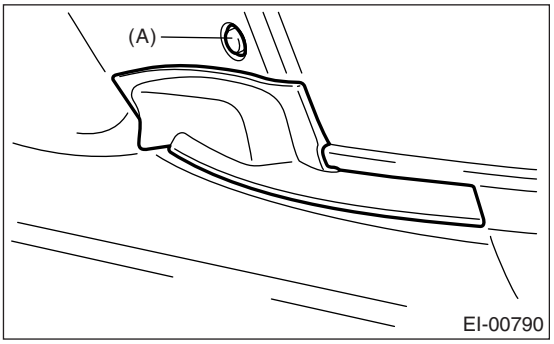

EI-00790

6) Remove the clips (A), and remove the cowl panel.

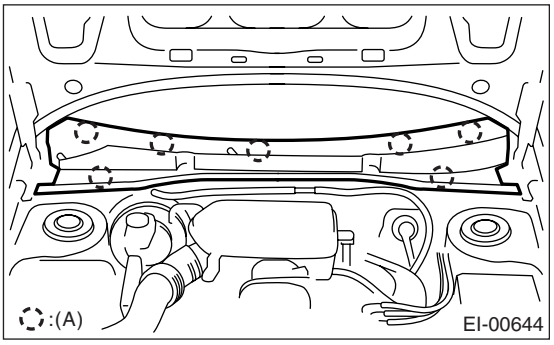

EI-00644

B: INSTALLATION

Install in the reverse order of removal.

11.Roof Spoiler

A: REMOVAL

1) Disconnect the ground cable from battery.
2) Remove the rear gate trim. <Ref. to EI-68, REMOVAL, Rear Gate Trim.>
3) Disconnect the connector of the high mounted stop light and the washer hose of rear washer.
4) Remove the nut and plastic caps.

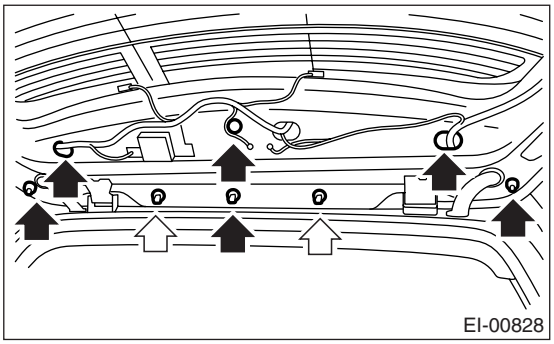

5) Remove the clips, and remove the roof spoiler.

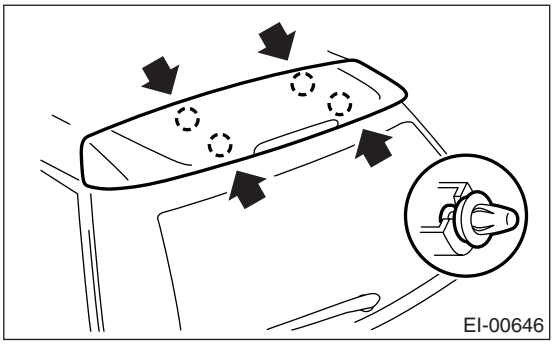

B: INSTALLATION

Install in the reverse order of removal.

Tightening torque:
4.5 N·m (0.46 kgf-m, 3.32 ft-lb)

12.Side Sill Spoiler

A: REMOVAL

Remove the clips (two for front fender arch area, six for side sill spoiler lower area), and remove the side spoiler.

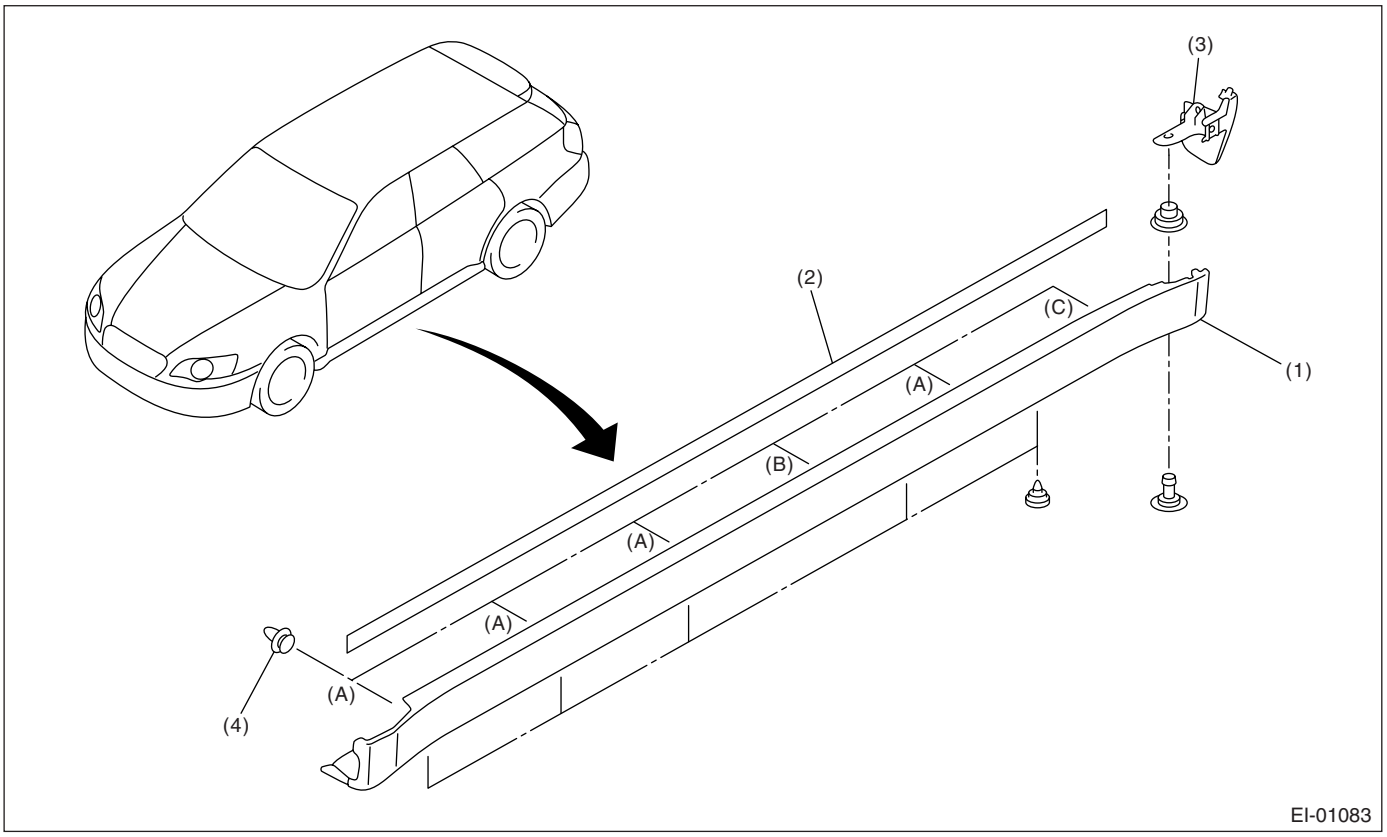

(1)	Side sill spoiler	(3)	End cover	(4)	Clip
(2)	Double-sided tape				
(A)	Gray clip	(B)	Green clip	(C)	Black clip

NOTE:
When peel the double sided tape, reference to removal procedure of side protector. <Ref. to EI-43, REMOVAL, Side Protector.>

B: INSTALLATION

Install in the reverse order of removal.

NOTE:
For the rearmost clip securing side sill spoiler, install through the end cover.

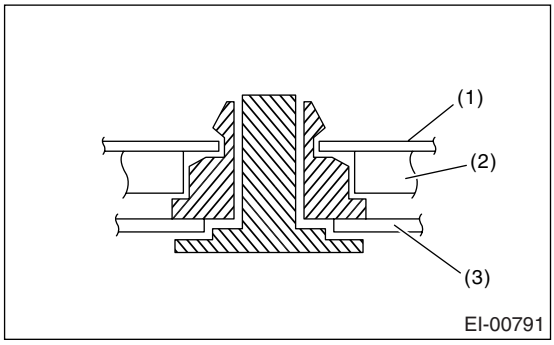

(1) Vehicle body
(2) End cover
(3) Side sill spoiler

13.Side Protector

A: REMOVAL

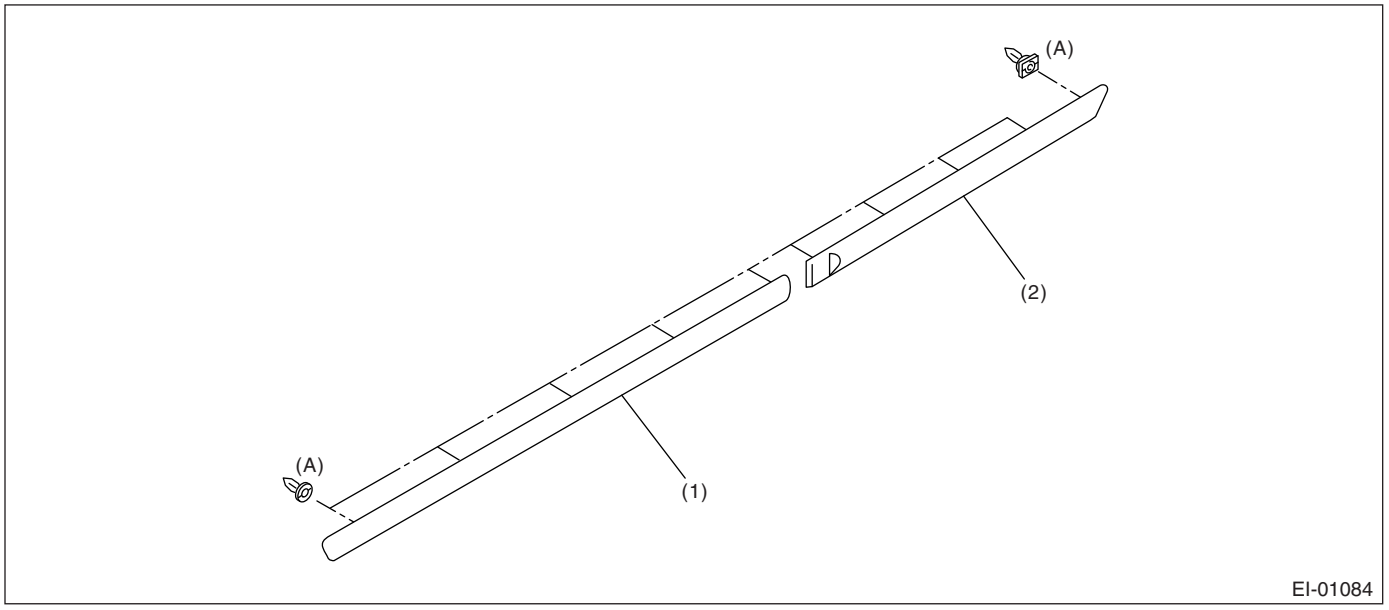

(1) Front door protector (2) Rear door protector (A) White clip

1) Slide in a thin thread (A) of 0.8 mm (0.031 in) diameter or less (fishing line etc.) between body and protector, cut the double-sided tape, and pull the protector toward you, and remove the clip using clip remover.

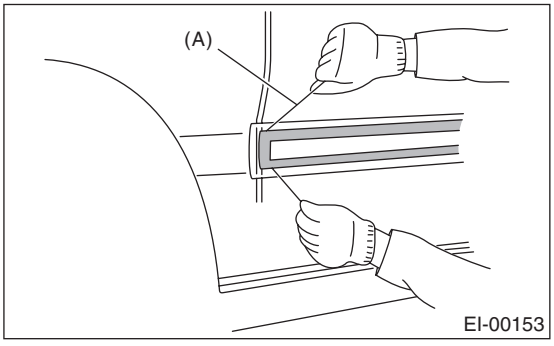

NOTE:
• To optimize the effect of solvent, slide the thread along body without removing the double-sided tape on the surface of body and spoiler.
• If it is difficult to detach the double-sided tape, warm up to approx. 40°C (104°F).

• If the double-sided tape remains thick on the surface due to interfacial peeling, apply the solvent after slicing off the double-sided tape using a cutter.

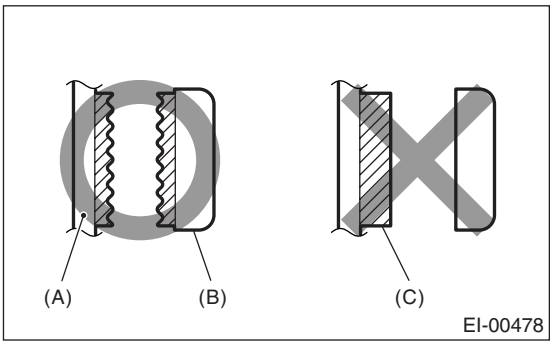

(A) Panel
(B) Side protector
(C) Double-sided tape

2) Apply masking tape around the double-sided tape remaining on the surface of body or spoiler.
3) Apply solvent uniformly on double-sided tape using a brush.

CAUTION:
• Do not use the solvent to the body which is repaired with lacquer paint.
• Wipe off immediately when the solvent is touched on surface of the body or spoiler.

Solvent:
3M 8907 or equivalent

4) Cover the area where solvent is applied using plastic wrap (A), and then heat the double-sided tape for 5 to 10 minutes in 40 — 60°C (104 — 140°F) using a heat lamp (B).

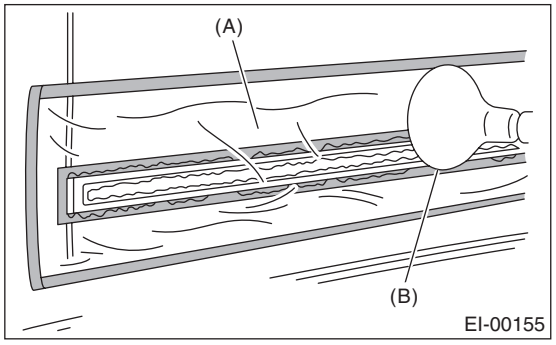

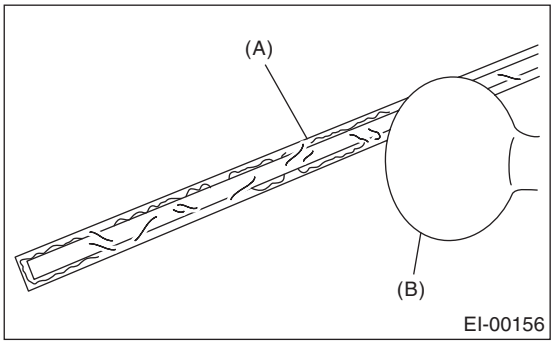

CAUTION:
Do not heat the double-sided tape until the surface becomes white and excessively dried.

5) Remove the double-sided tape using a plastic spatula.
6) After completely removing the double-sided tape, detach the masking tape and clean the surface using a cotton cloth damped with white gasoline.

B: INSTALLATION

1) Apply primer to the protector surface where the double-sided tape to be adhered, and then adhere the double-sided tape as shown in the figure.

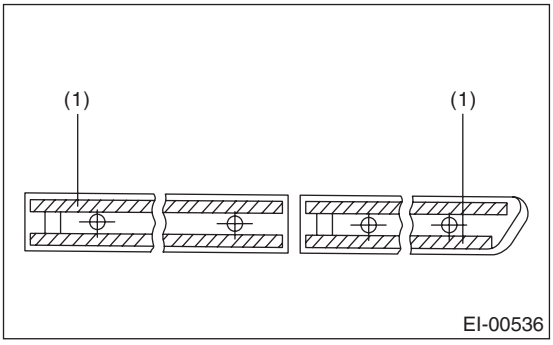

(1) Double-sided tape: thickness 1.2 mm (0.047 in), width 5mm (0.197 in)

Primer:
3M K-500 or equivalent

Double-sided tape:
3M 5531-5 or equivalent

2) Heat the adhering part using a heat lamp.
Body side: 40 — 60°C (104 — 140°F)
Protector side: 20 — 30°C (68 — 86°F)
3) Detach the double-sided tape backing sheet, align the clip position, and then adhere to the body using care to avoid air entering.

CAUTION:
To keep the adhesion, do not wash the vehicle within 24 hours from installation.

14.Side Garnish

A: REMOVAL

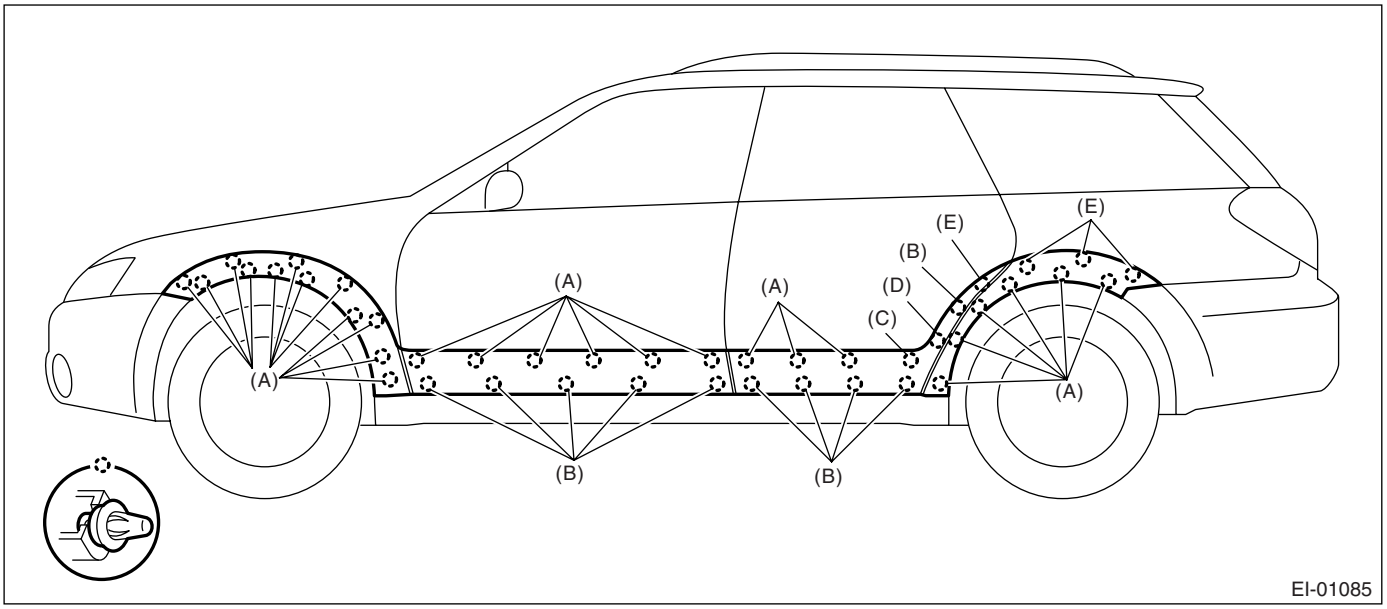

(A) Black clip
(B) White clip
(C) Pink clip
(D) Gray clip
(E) Green clip

1) Remove the side sill spoiler. <Ref. to EI-41, REMOVAL, Side Sill Spoiler.>
2) For removal of side garnish, refer to the removal procedure of “Side Protector”. <Ref. to EI-43, REMOVAL, Side Protector.>

B: INSTALLATION

Check the color of clip, and then install in the reverse order of removal.

15.Rear Quarter Protector

A: REMOVAL

1) Remove the side sill spoilers. <Ref. to EI-41, REMOVAL, Side Sill Spoiler.>
2) Remove the clips (A) with rotating it rearward using the fender arch as a fulcrum, and then remove the rear quarter protector.

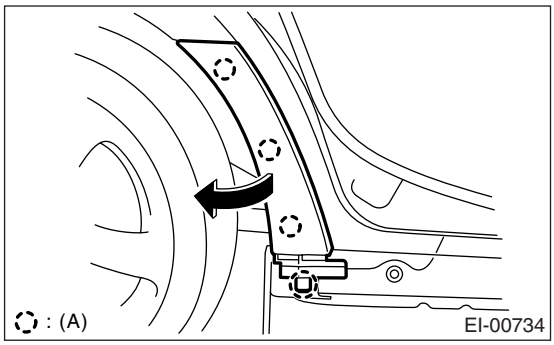

B: INSTALLATION

Install in the reverse order of removal.

16.Roof Rail

A: REMOVAL

1) Remove the roof trim. <Ref. to EI-66, REMOVAL, Roof Trim.>
2) Remove the six nuts.

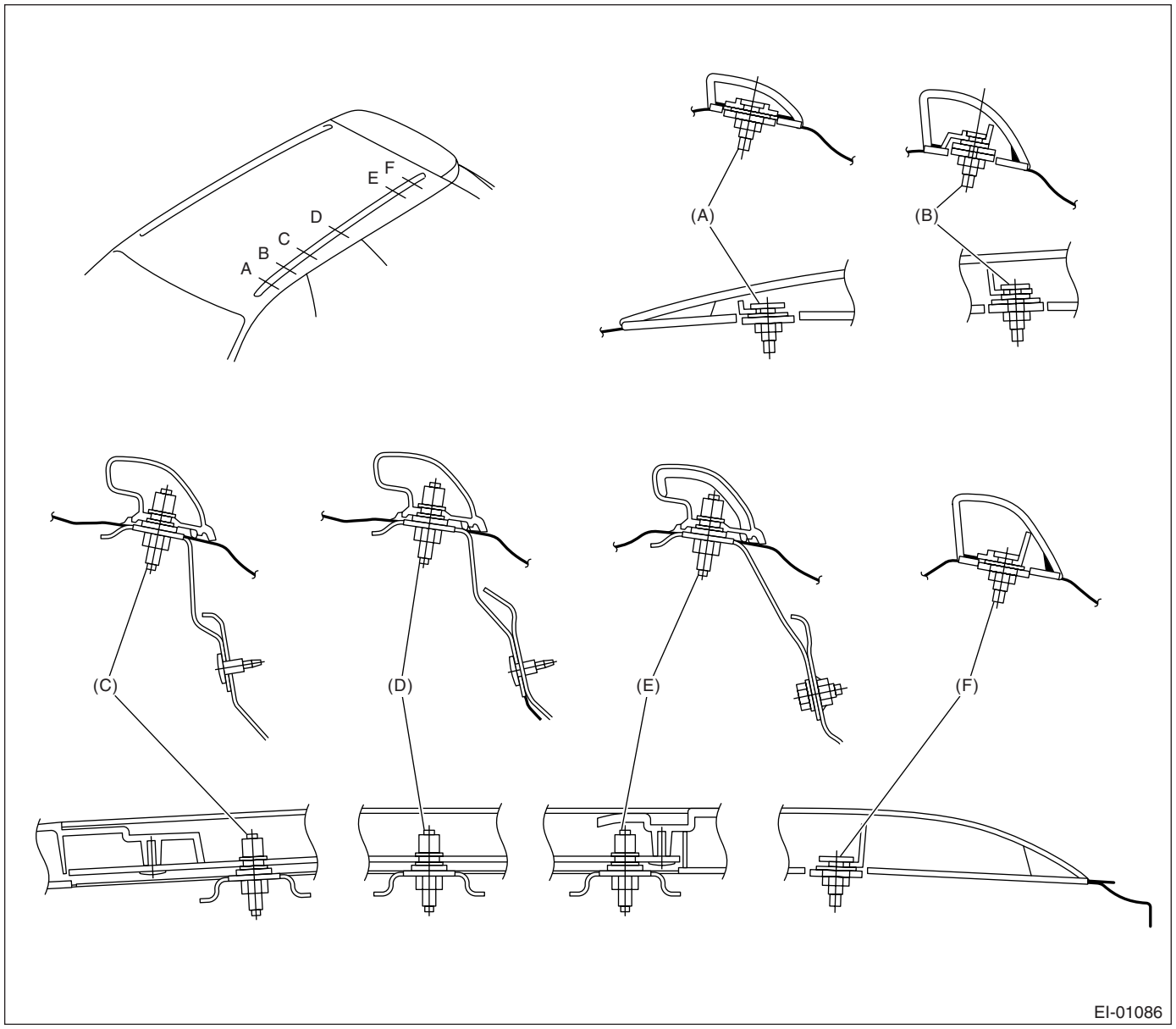

NOTE:
Perform the removing procedures by referring to above illustration. (OUTBACK model)

B: INSTALLATION

Install in the reverse order of removal.

CAUTION:
When removing or installing the roof rail, be careful not to scratch the body panel with the stud bolt of roof rail.

Tightening torque:
7.5 N·m (0.76 kgf-m, 5.53 ft-lb)

17.Door Trim

A: REMOVAL

1) Disconnect the ground cable from battery.
2) Remove the cover (A) at inner remote area.

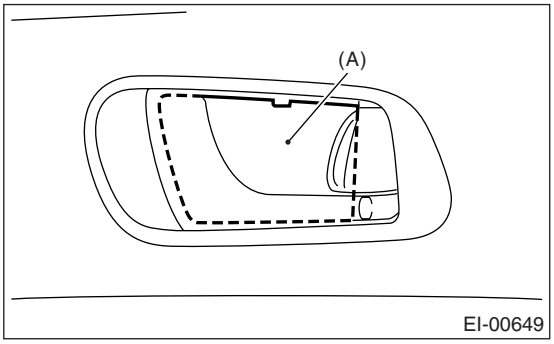

3) Push the root of hand grip up ward, and remove the hand grip cover by twisting it to the vehicle frontward direction.

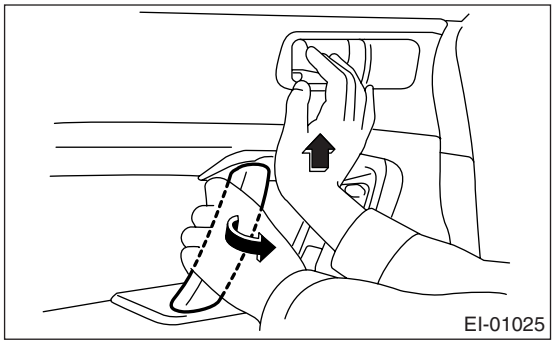

LH side: Counterclockwise
RH side: Clockwise

NOTE:
If the above procedure does not work, use a flat-tip screw driver to pry out the upper side of hand grip cover to remove, with the protection tape attached to both door trim and flat-tip screwdriver.

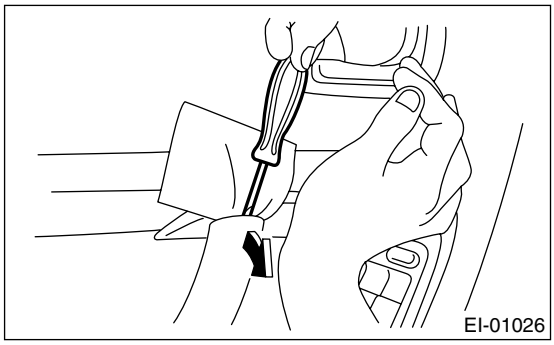

4) Loosen the screws.

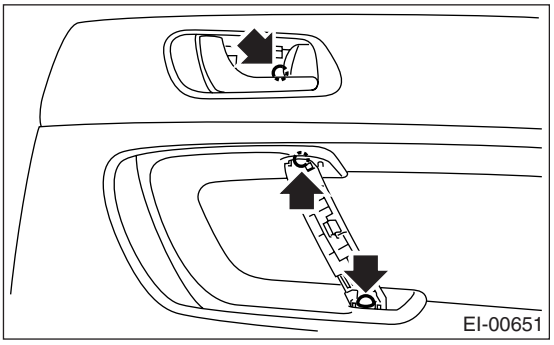

5) Remove the clips, and disconnect each connector and wire to remove door trim.

- Front door trim

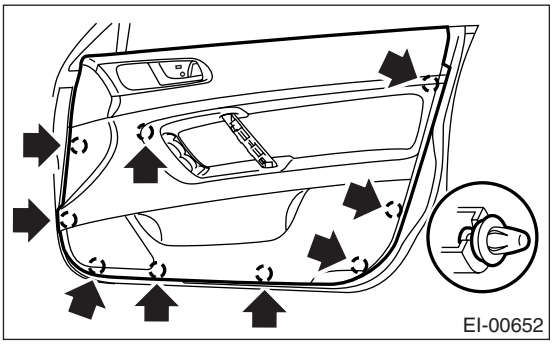

- Rear door trim

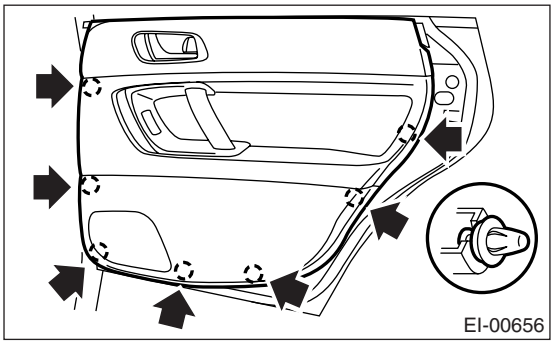

B: INSTALLATION

Install in the reverse order of removal.

NOTE:
Be careful not to install the hand grip cover and plate clip of hand grip in the wrong direction.

- Hand grip cover (front and rear door)

Convex upward

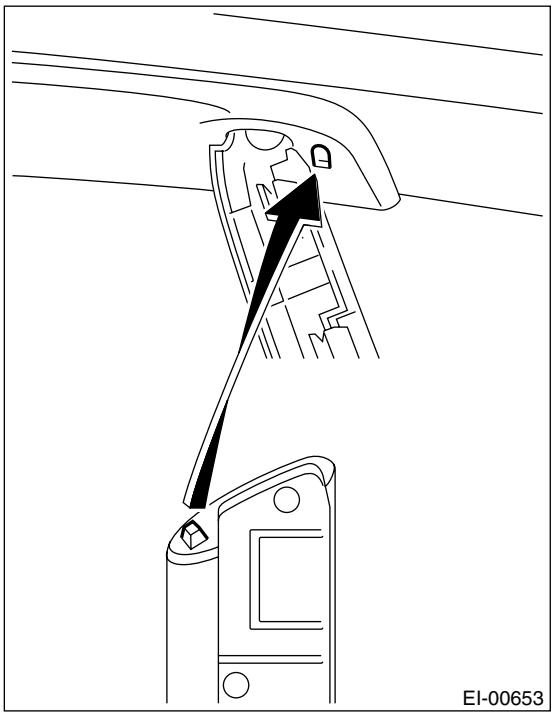

• Bottom clip of the front door faces the opposite direction

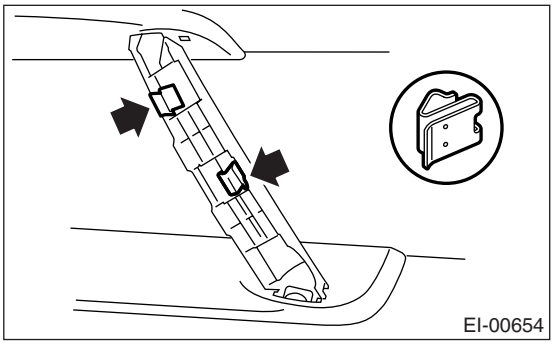

• Lower side of the hand grip cover for front door has pawl part.
• The lowest clip of rear door faces the opposite direction

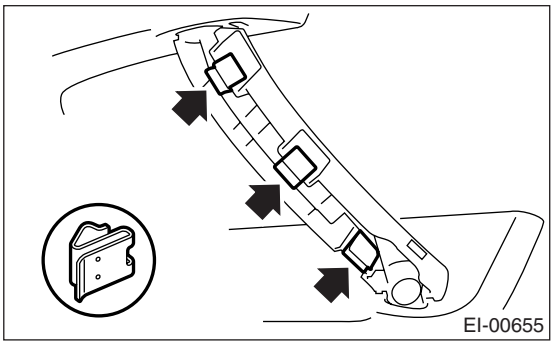

18.Instrument Panel Lower Cover

A: REMOVAL

1) Disconnect the ground cable from battery.
2) Remove the front door inside scuff plate (A) and front pillar lower trim (B). <Ref. to EI-60, REMOVAL, Lower Inner Trim.>

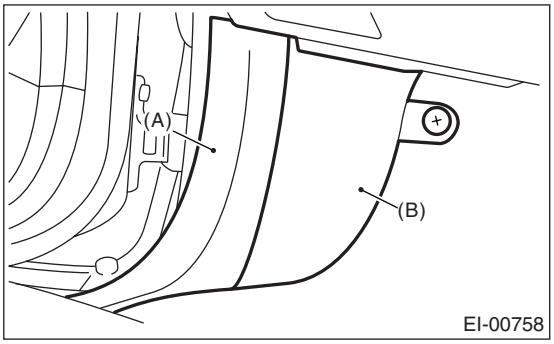

3) Remove the clips, and remove the instrument panel lower cover under.

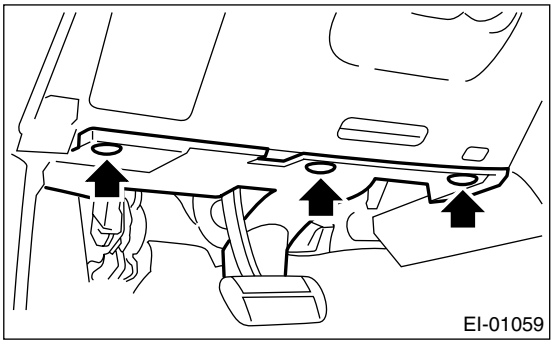

4) Loosen the screw (A), disconnect the connectors, and remove the instrument panel lower cover upper.

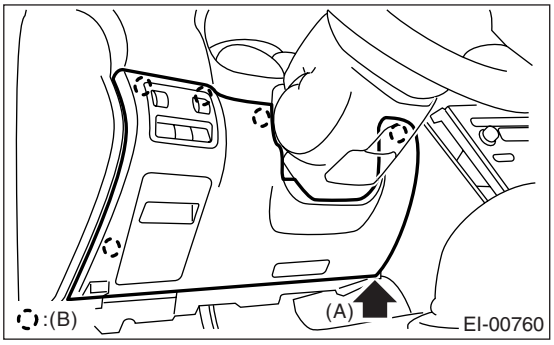

(B) Clip

B: INSTALLATION

Install in the reverse order of removal.

19.Glove Box

A: REMOVAL

1) Disconnect the ground cable from battery.
2) Remove the console box. <Ref. to EI-53, REMOVAL, Console Box.>
3) Remove the console front panel.

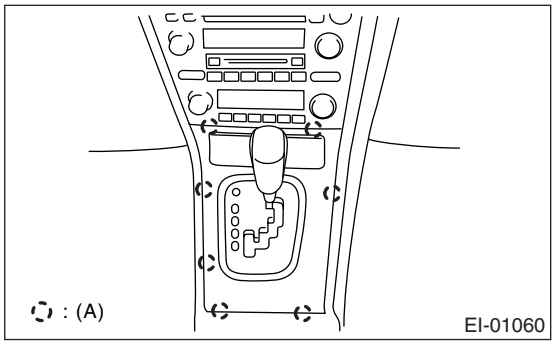

(A) Hook

NOTE:
For AT model, remove the ring indicator.
For MT model, remove the shift knob.

4) Remove the console side garnish.

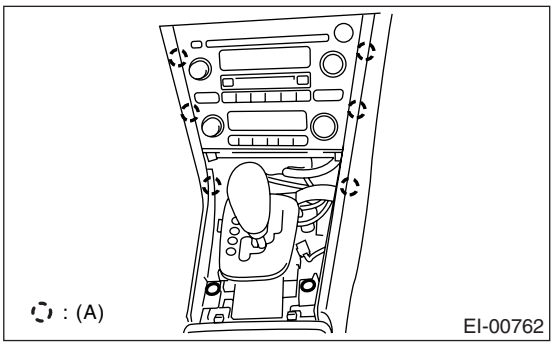

(A) Hook

5) Remove the front inside scuff plate (A) and front pillar lower trim (B). <Ref. to EI-60, REMOVAL, Lower Inner Trim.>

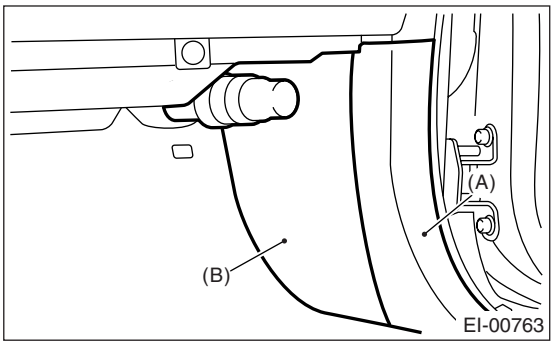

6) Remove the clip, and remove the glove box lower cover.

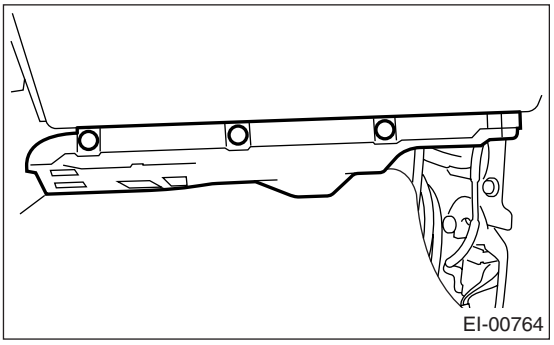

7) Remove the console side panel.

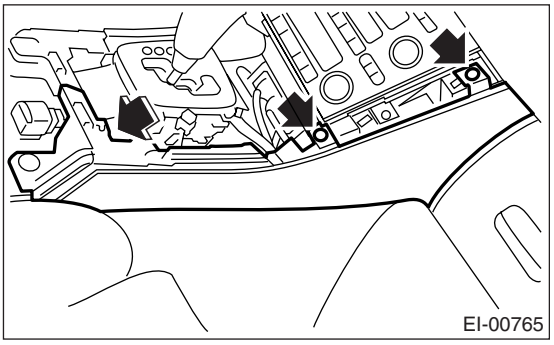

8) Remove the instrument panel side cover, and remove the clip.

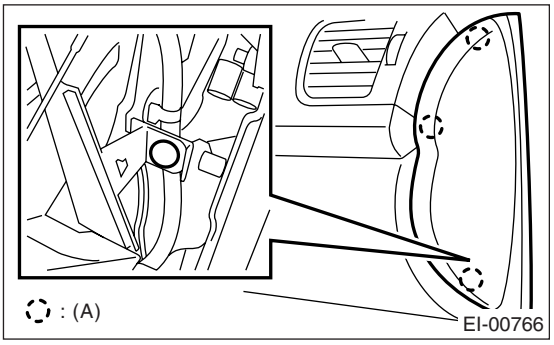

(A) Clip

9) Remove the screw, and remove the glove box.

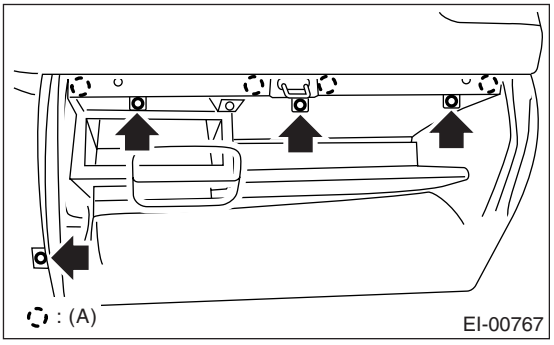

(A) Clip

B: INSTALLATION

Install in the reverse order of removal.

20.Console Box

A: REMOVAL

1) Disconnect the ground cable from battery.
2) Remove the parking brake lever cover.

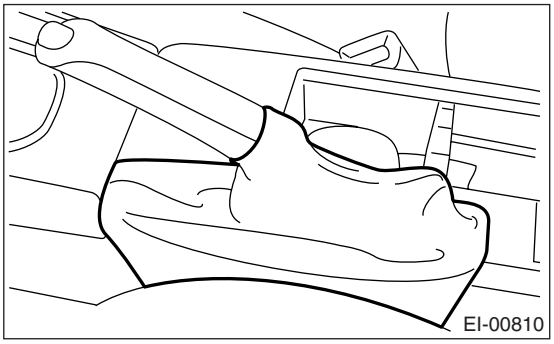

3) Remove the bolts and clips.

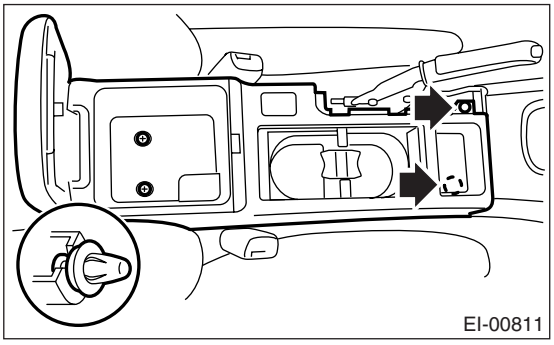

4) Disconnect the connector, and remove the console box.

B: INSTALLATION

Install in the reverse order of removal.

21.Center Console

A: REMOVAL

1) Disconnect the ground cable from battery.
2) Remove the console box. <Ref. to EI-53, REMOVAL, Console Box.>
3) Remove the console front panel.

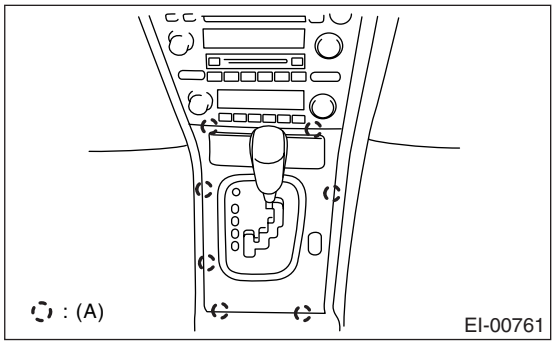

(A) Hook

NOTE:
For AT model, remove the ring indicator.
For MT model, remove the shift knob.

4) Loosen the screw, remove the hook, and remove the console side garnish.

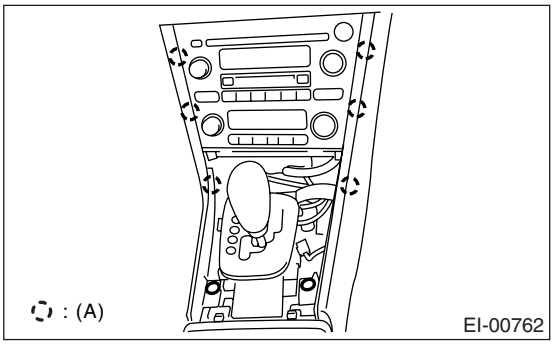

(A) Hook

5) Remove the instrument panel lower cover. <Ref. to EI-50, REMOVAL, Instrument Panel Lower Cover.>

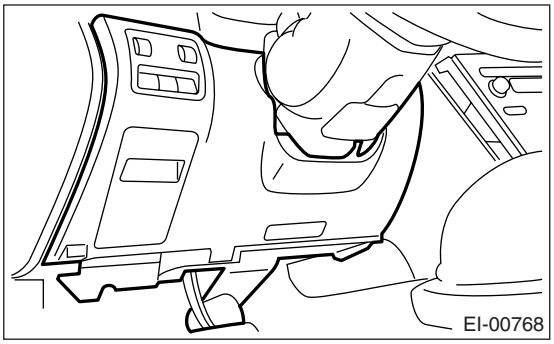

6) Remove the clip at the console side panel tip.

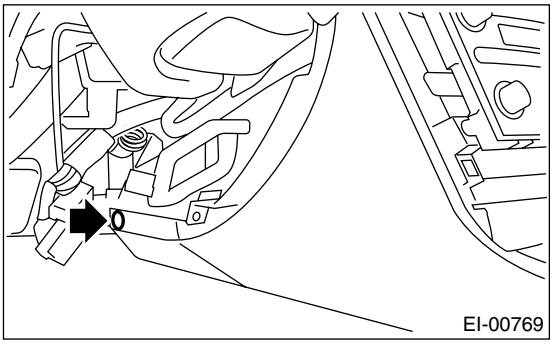

7) Remove the passenger side front inside scuff plate (A) and front pillar lower trim (B). <Ref. to EI-60, REMOVAL, Lower Inner Trim.>

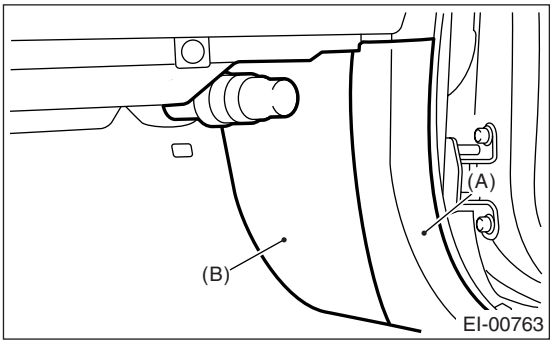

8) Remove the clip, and remove the glove box lower cover.

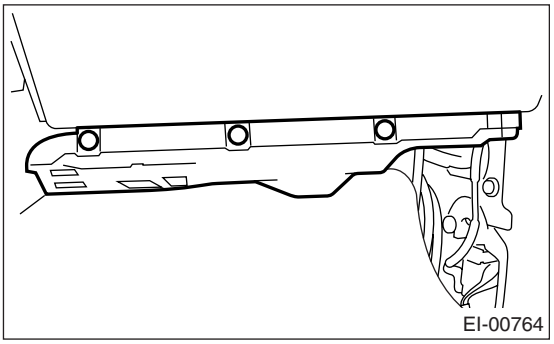

9) Remove the screws, and remove the console side panel.

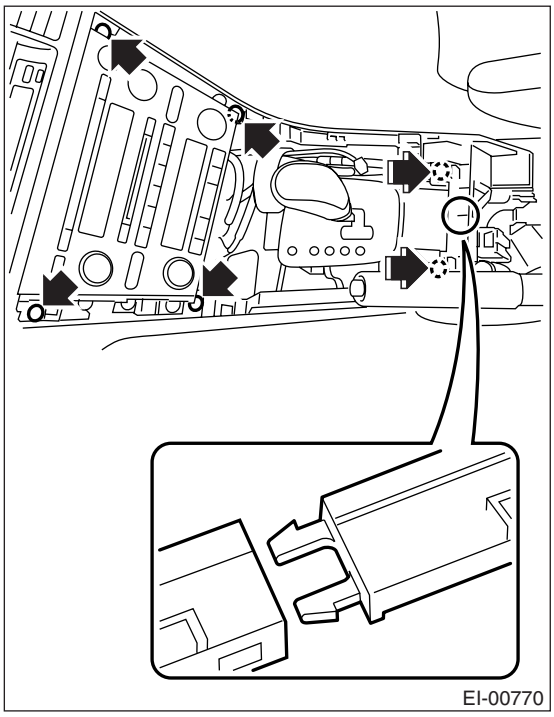

10) Loosen the screws to pull out the audio unit assembly, and disconnect the connector to remove audio unit.

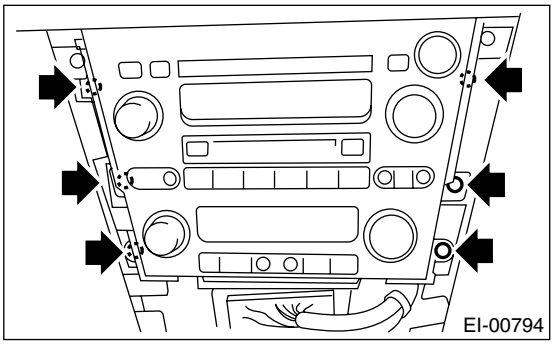

NOTE:
Audio unit assembly can be removed without removing the console side panel.

B: INSTALLATION

Install in the reverse order of removal.

22.Instrument Panel Assembly

A: REMOVAL

1. INSTRUMENT PANEL (EXCLUDING STEERING SUPPORT BEAM)

CAUTION:
Be careful to the harness of airbag system when servicing the instrument panel. Damage may cause the system malfunction.

1) Disconnect the ground cable from battery.
2) Remove the front pillar upper trim. <Ref. to EI-61, REMOVAL, Upper Inner Trim.>
3) Remove the console box. <Ref. to EI-53, REMOVAL, Console Box.>
4) Remove the center console. <Ref. to EI-54, REMOVAL, Center Console.>
5) Remove the instrument panel lower cover. <Ref. to EI-50, REMOVAL, Instrument Panel Lower Cover.>
6) Remove the glove box. <Ref. to EI-51, REMOVAL, Glove Box.>
7) Remove the combination meter assembly. <Ref. to IDI-15, REMOVAL, Combination Meter.>
8) Remove the screws.

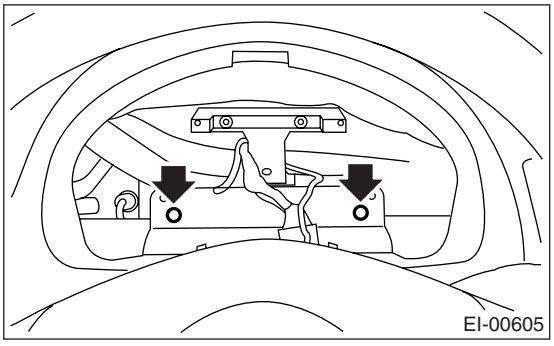
EI-00605

9) Remove the driver side instrument panel side cover, and remove the screws.

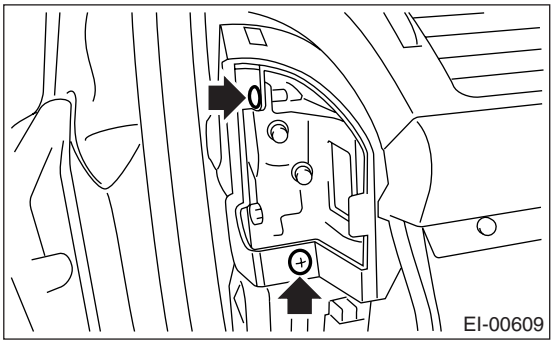
EI-00609

10) Remove the screw at the side of center console.

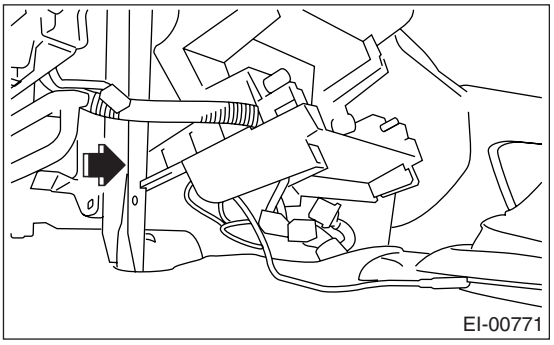
EI-00771

11) Remove the center air vent grille of instrument panel. <Ref. to AC-46, CENTER GRILLE, REMOVAL, Air Vent Grille.>
12) Remove the screws.

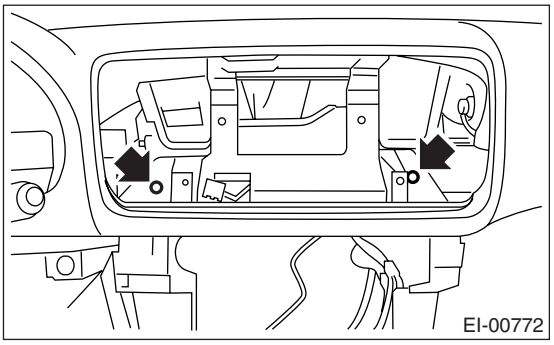
EI-00772

13) Remove the screws at side of passenger side instrument panel.

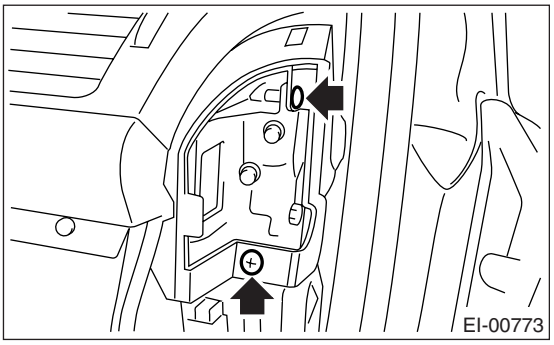
EI-00773

14) Remove the bolts securing passenger side airbag module to the steering support beam.

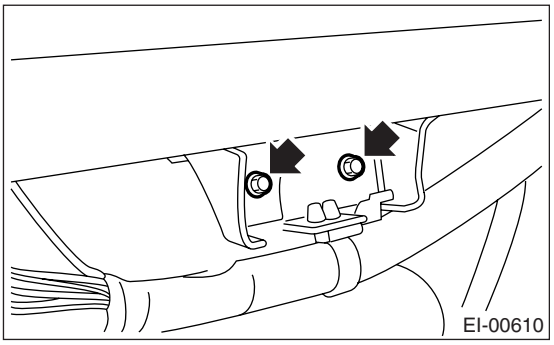
EI-00610

15) Disconnect the connectors, and remove the instrument panel from vehicle body.

NOTE:
• If necessary, make matching marks for easy reassembly.
• When storing the removed instrument panel, be sure to prepare a table or the like to put instrument panel on to prevent damage.

16) Remove the side air vent grille. <Ref. to AC-46, REMOVAL, Air Vent Grille.>
17) Remove the heater vent duct. <Ref. to AC-48, REMOVAL, Heater Vent Duct.>
18) Loosen the screws to remove center console frame.

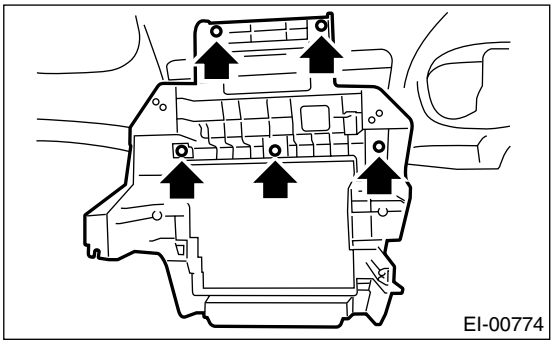
EI-00774

19) Loosen the screws to remove meter bracket.

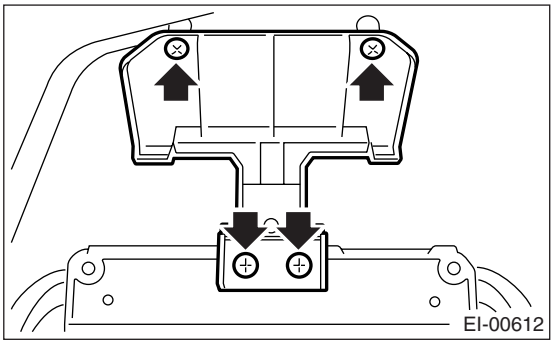
EI-00612

20) Loosen the screws to remove instrument panel matching pins.

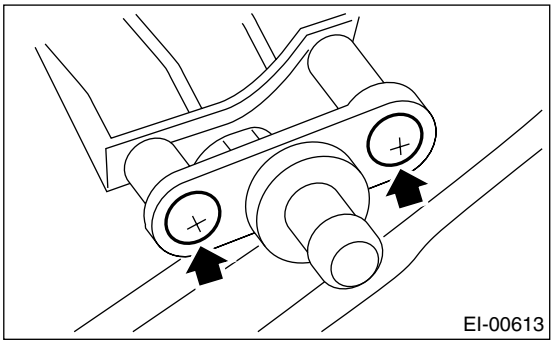
EI-00613

21) Loosen the screws to remove glove box striker.

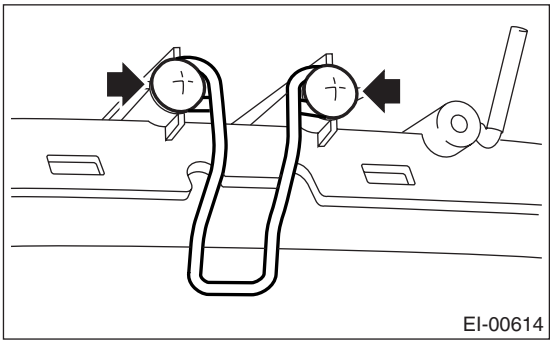
EI-00614

22) Remove the pawl, and remove the passenger's airbag module.

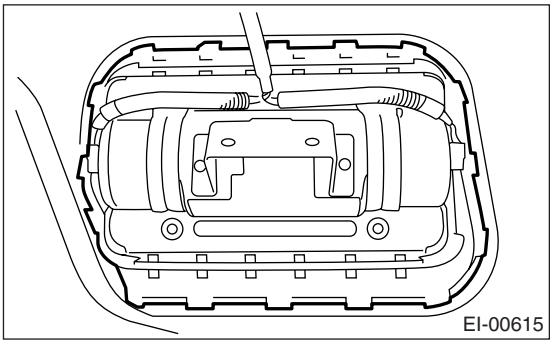
EI-00615

2. STEERING SUPPORT BEAM

1) Remove the instrument panel. <Ref. to EI-56, INSTRUMENT PANEL (EXCLUDING STEERING SUPPORT BEAM), REMOVAL, Instrument Panel Assembly.>
2) Remove the steering shaft assembly. <Ref. to PS-17, REMOVAL, Tilt Steering Column.>
3) Remove each harness clip, and remove the harness from steering support beam.

NOTE:
If necessary, make matching marks for easy reassembly.

4) Remove the bolt and remove steering support beam.

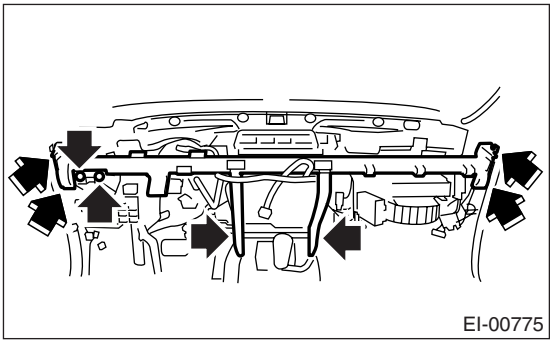
EI-00775

5) Remove the steering support beam bracket.

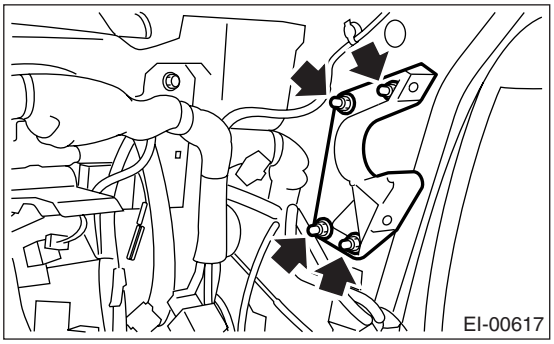

3. INSTRUMENT PANEL ASSEMBLY (INCLUDING STEERING SUPPORT BEAM)

CAUTION:
Be careful to the harness of airbag system when servicing the instrument panel. Damage may cause the system malfunction.

1) Remove the front pillar upper trim. <Ref. to EI-61, REMOVAL, Upper Inner Trim.>
2) Remove the center console. <Ref. to EI-54, REMOVAL, Center Console.>
3) Remove the instrument panel lower cover. <Ref. to EI-50, REMOVAL, Instrument Panel Lower Cover.>
4) Remove the glove box. <Ref. to EI-51, REMOVAL, Glove Box.>
5) Remove the steering shaft assembly. <Ref. to PS-17, REMOVAL, Tilt Steering Column.>
6) Remove the driver side instrument panel side cover, and remove the bolts.

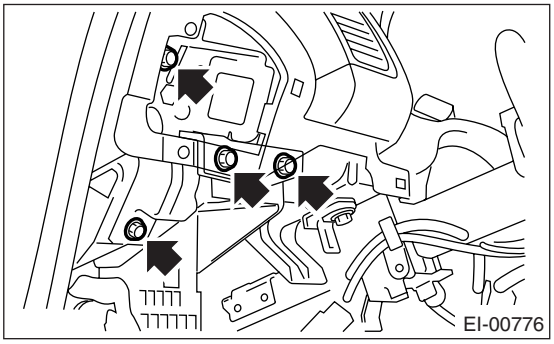

7) Remove the bolts at the side of passenger side instrument panel.

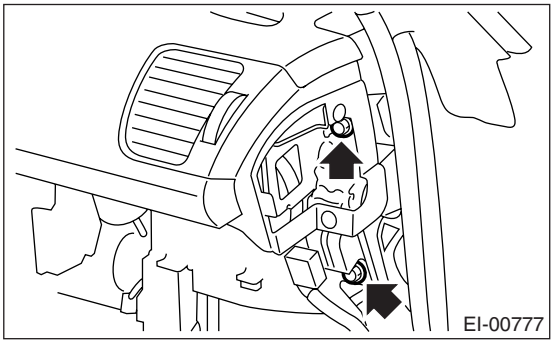

8) Loosen the bolts on the center console side.

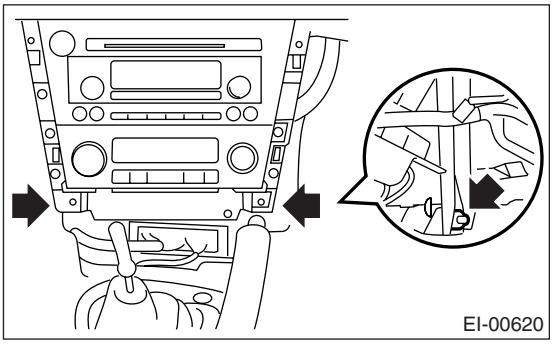

9) Disconnect each connector, and remove the instrument assembly.

NOTE:
If necessary, make matching marks for easy reassembly.

B: INSTALLATION

1. INSTRUMENT PANEL (EXCLUDING STEERING SUPPORT BEAM)

1) Insert the matching pins (3 places) on the instrument panel tip into the grommet (A) and (B) on the body panel side.

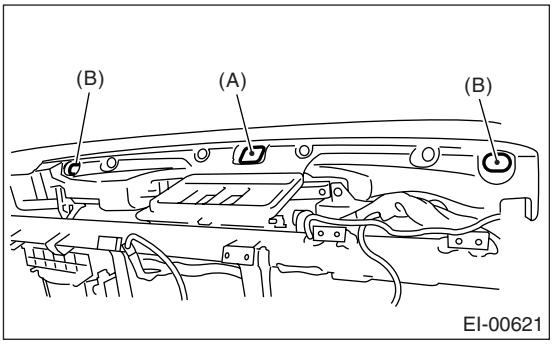

2) Check the inserted state of matching pins, and pull the harness around.
3) Tighten the instrument panel with screw, and recheck the installation of instrument panel and the state of pulled harness.
4) Install in the reverse order of removal.

NOTE:
How to install the insulator and pad:
- Adhesive

Use polyurethane adhesive. Also connect the instrument panel after evaporating during assembly, since the smell may permeate the compartment.
- Double-side tape

Use generic double-side tape. Use double-sided adhesive tape having extra-strength.

- Installing position

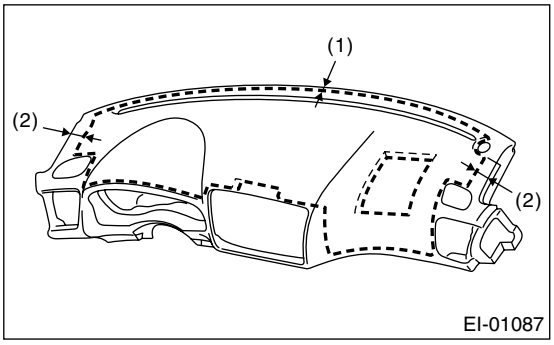

(1) 10 mm
(2) 40 mm

Make clearance for 10 mm from instrument panel front edge, and 40 mm from both side edges when taping.

2. STEERING SUPPORT BEAM

1) Temporarily tighten the steering support beam with bolt, and pull the harness around.
2) Make sure that there is no mutual interference in each pedal, and tighten the each bolt.

Tightening torque:
25 N·m (25.5 kgf-m, 18 ft-lb)

3) Install in the reverse order of removal.

3. INSTRUMENT PANEL ASSEMBLY (INCLUDING STEERING SUPPORT BEAM)

1) Insert the matching pins (3 places) on the instrument panel tip into the grommet (A) and (B) on the body panel side.

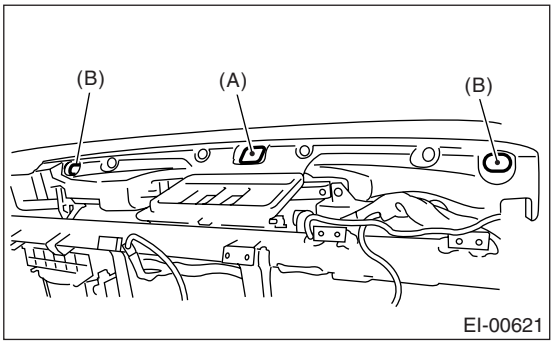

2) Check the inserted state of matching pins, and pull the harness around.
3) Temporarily tighten the steering support beam with bolt, and pull the harness around.
4) Make sure that there is no mutual interference in each pedal, and tighten the each bolt.

Tightening torque:
25 N·m (25.5 kgf-m, 18 ft-lb)

5) Install in the reverse order of removal.

23.Lower Inner Trim

A: REMOVAL

1) Remove the hook, and remove the inside scuff plate.

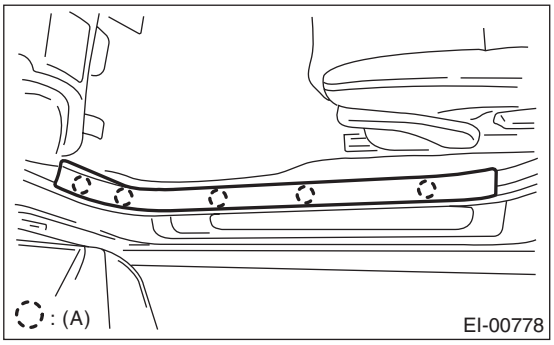

(A) Hook

2) Remove the door molding (A), and remove the outside scuff plate.

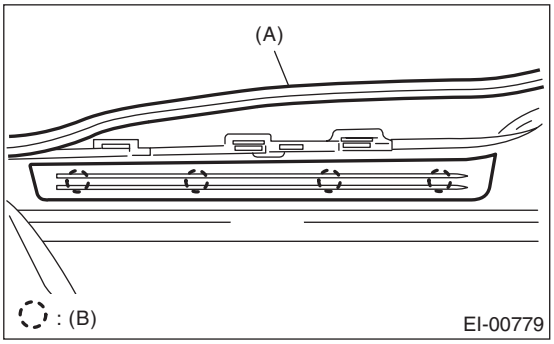

(B) Clip

3) Remove the clip (A), and remove the front pillar lower trim.

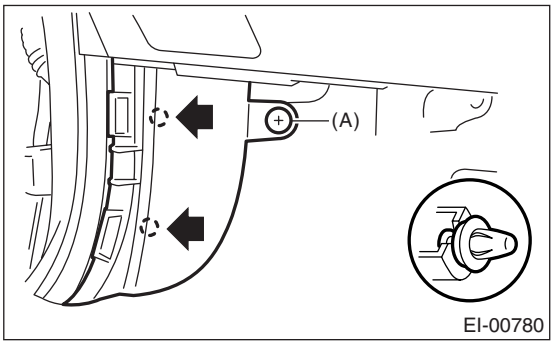

4) Remove the rear seat cushion. <Ref. to SE-20, REMOVAL, Rear Seat.>

5) Remove the clip (A), and remove the inside scuff plate.

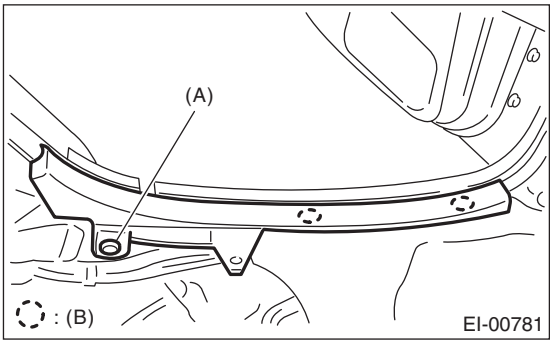

(B) Hook

6) Remove the door molding (A) and door catcher cover (B), and then remove the outside scuff plate.

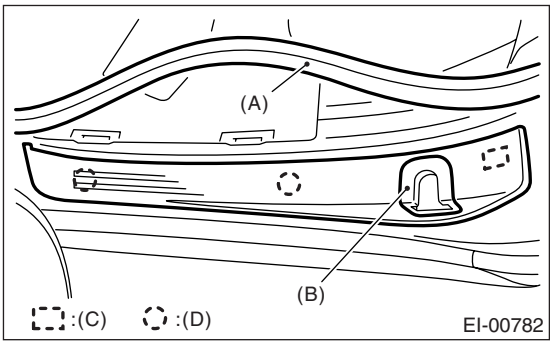

(C) Hook with plate clip
(D) Clip

7) Remove the clips of the center pillar lower trim.

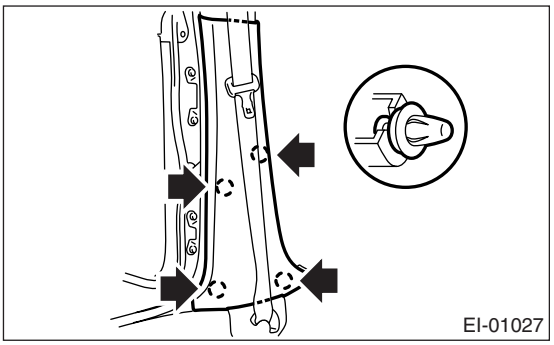

B: INSTALLATION

Install in the reverse order of removal.

24.Upper Inner Trim

A: REMOVAL

1) From the top side of trim, remove the metal clip using flat tip driver.

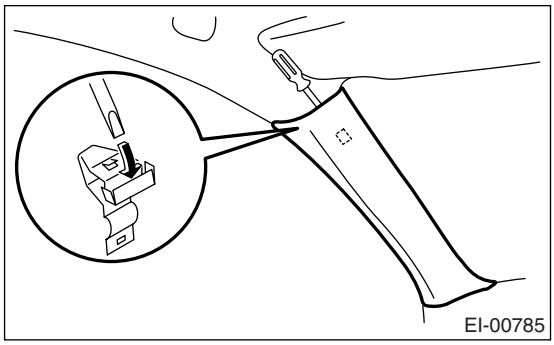

CAUTION:
When metal clip is removed or damaged, replace the both of trim and metal clip with new ones.

2) Remove the front pillar upper trim.

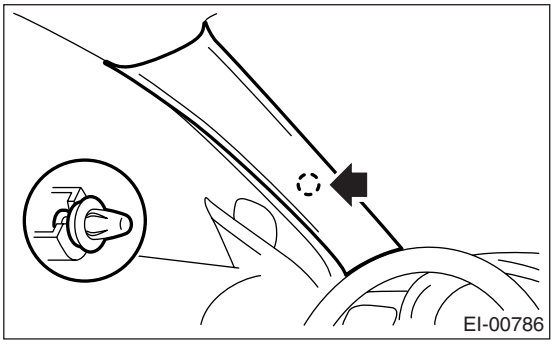

3) Remove the front inside scuff plate, rear inside scuff plate and center pillar lower trim. <Ref. to EI-60, REMOVAL, Lower Inner Trim.>

4) Remove the cap on the upper side of pillar trim, and remove the bolt inside.

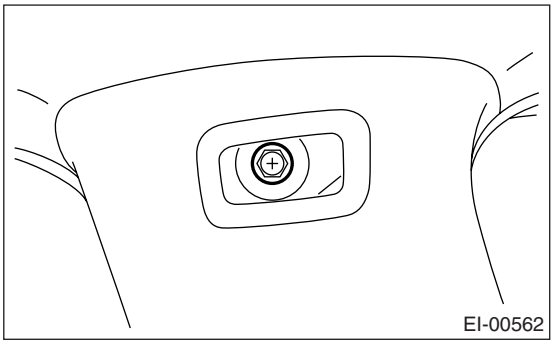

5) Remove the center pillar upper trim.

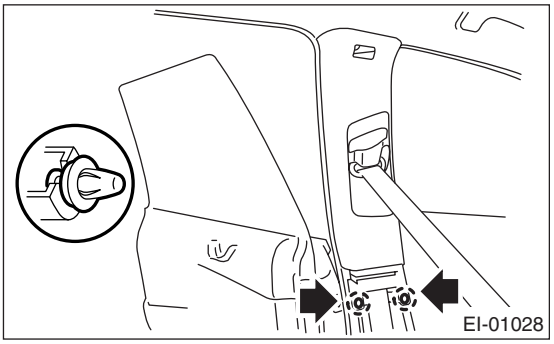

6) Remove the seat belt lower anchor bolt at center pillar lower port. (Driver's seat)

7) Refer to the removal procedure of "Front Seat Belt". (Passenger's seat). <Ref. to SB-10, OUTER SEAT BELT ASSEMBLY, REMOVAL, Front Seat Belt.>

B: INSTALLATION

Install in the reverse order of removal.

25.Rear Quarter Trim

A: REMOVAL

1. SEDAN MODEL

1) Remove the rear seat. <Ref. to SE-20, SEDAN MODEL, REMOVAL, Rear Seat.>
2) Turn over the trim, and remove the quarter trim rear by pressing the claw (A) of metal clip using flat tip screwdriver or the like.

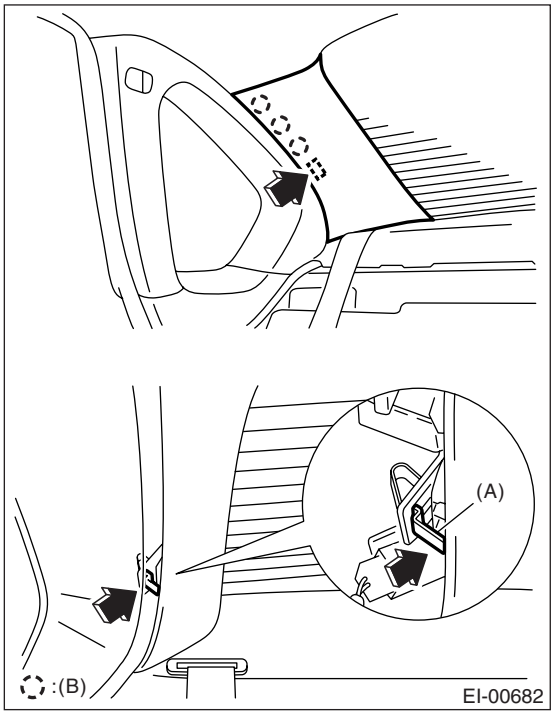

(B) Hook

CAUTION:
When metal clip is removed or damaged, replace the bolt of trim and metal clip with new ones.

3) Remove the cap on the upper side of trim, and remove the bolt inside.

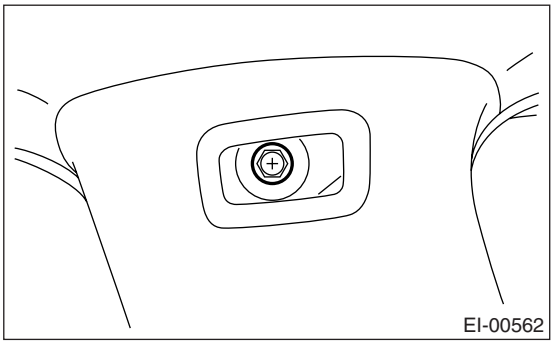

4) Remove the bolts (A), and remove the quarter trim (front).

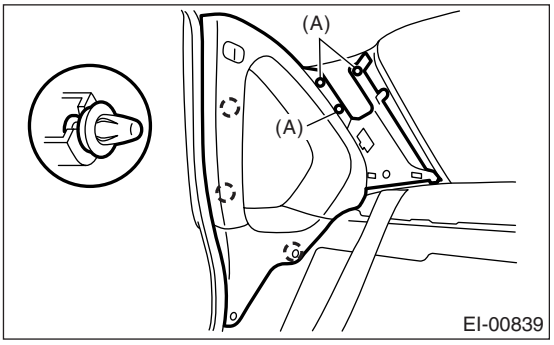

2. WAGON MODEL

1) Remove the rear seat cushion and backrest shoulder. <Ref. to SE-20, WAGON MODEL, REMOVAL, Rear Seat.>
2) Remove the cap on the upper side of pillar trim, and remove the bolt inside.

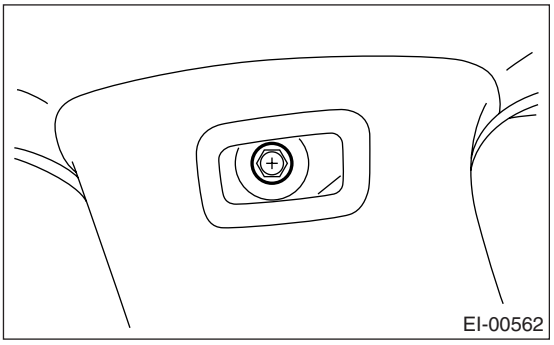

3) Remove the clip, and remove the quarter front pillar trim.

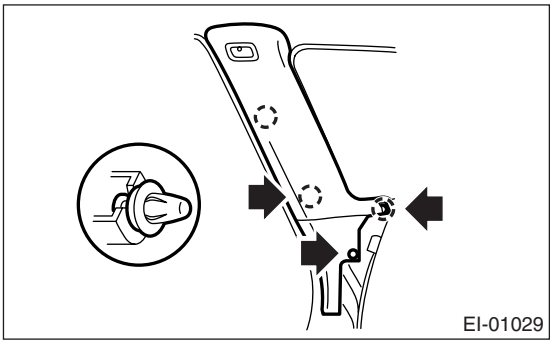

4) Remove the quarter rear pillar trim.

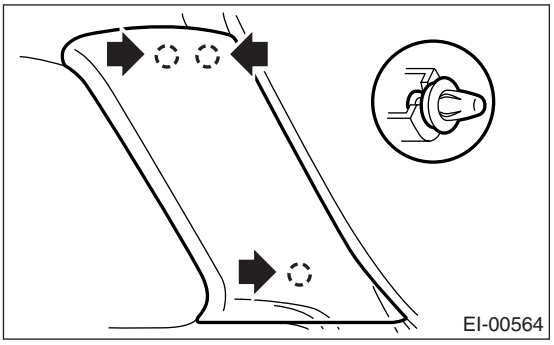

5) Remove the luggage floor box. <Ref. to EI-73, REMOVAL, Luggage Floor Box.>
6) Remove the luggage floor end cover.

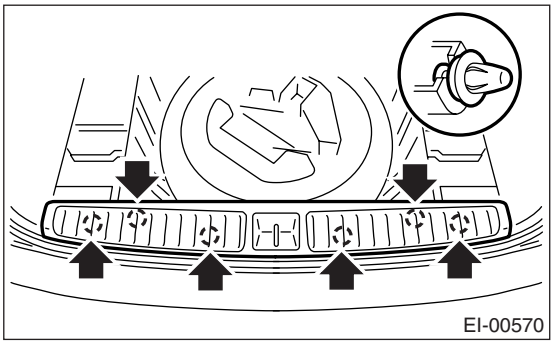

7) Remove the woofer cover. (Model with woofer)

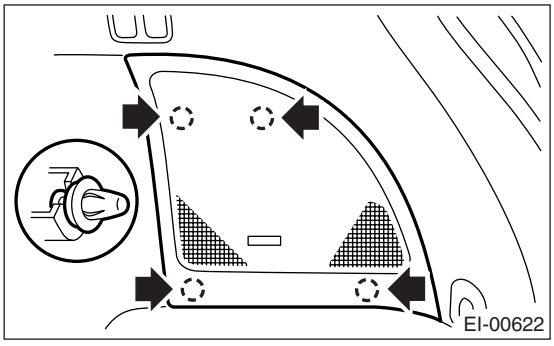

8) Remove the screws (A) and bolts (B), and remove the quarter lower trim.

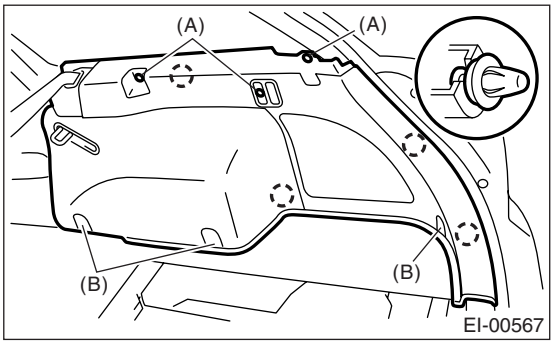

NOTE:
• Remove the screw cover on the tonneau cover installing part.
• Pull out the shopping bag hook, remove the screw on back.

B: INSTALLATION

1. SEDAN MODEL

Install in the reverse order of removal.

2. WAGON MODEL

Install in the reverse order of removal.

26.Sun Visor

A: REMOVAL

1) Remove the cover, loosen the mounting screws, and remove the sun visor.

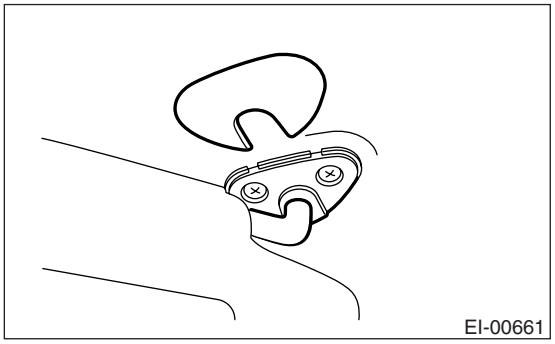

2) Disconnect the connector. (Model with vanity mirror light)
3) Press the (A) on both side using flat tip driver, pull the sun visor hook and remove it.

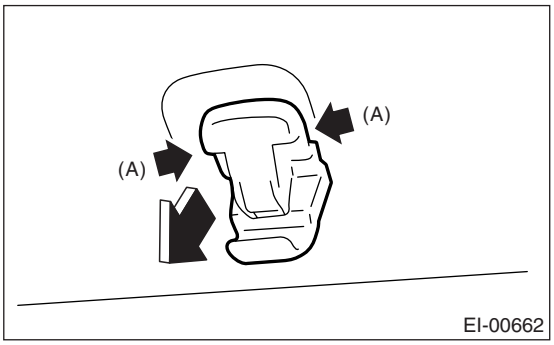

B: INSTALLATION

Install in the reverse order of removal.

27.Assist Grip

A: REMOVAL

1) Remove the screw cover, and remove the screw inside.
2) Pull the left side of assist grip toward you, and rotate the right side of it counterclockwise to remove.

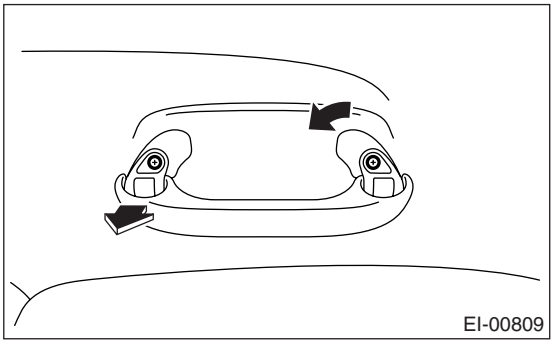

3) Remove the roof trim. <Ref. to EI-66, REMOVAL, Roof Trim.>
4) Remove the bolts, and remove the assist grip bracket.

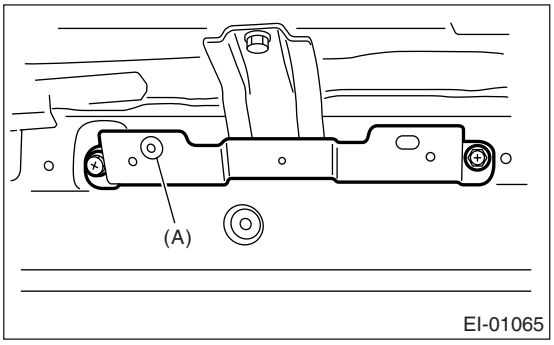

(A) Grommet

B: INSTALLATION

Install in the reverse order of removal.

CAUTION:
Be sure to install the grommet to assist grip bracket.
When install the assist grip without grommet, it may cause the faulty returning.

28.Roof Trim

A: REMOVAL

1. SEDAN MODEL

1) Disconnect the ground cable from battery.
2) Remove the front seats. <Ref. to SE-9, REMOVAL, Front Seat.>
3) Remove the rear seat. <Ref. to SE-20, REMOVAL, Rear Seat.>
4) Remove the console box. <Ref. to EI-53, REMOVAL, Console Box.>
5) Remove the center console. <Ref. to EI-54, REMOVAL, Center Console.>
6) Remove the select lever. (AT model)
<Ref. to CS-20, REMOVAL, Select Lever.>
7) Remove the spot map light. <Ref. to LI-29, REMOVAL, Spot Map Light.>
8) Remove the room light. <Ref. to LI-30, REMOVAL, Room Light.>
9) Remove the sun visor. <Ref. to EI-64, REMOVAL, Sun Visor.>
10) Remove the assist grip. <Ref. to EI-65, REMOVAL, Assist Grip.>
11) Remove the upper inner trim. <Ref. to EI-61, REMOVAL, Upper Inner Trim.>
12) Remove the rear quarter trim. <Ref. to EI-62, SEDAN MODEL, REMOVAL, Rear Quarter Trim.>
13) Remove the sunroof opening trim. (Model with sunroof)

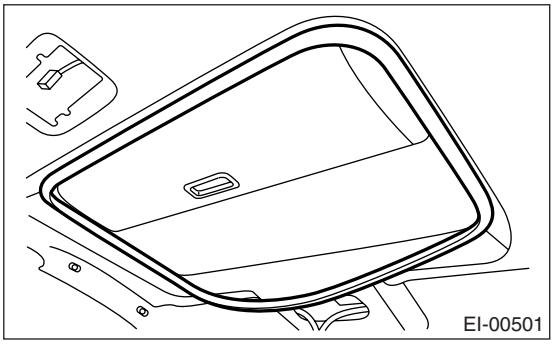

14) Remove the clips and each harness, and remove the roof trim.
15) Pull out the roof trim from vehicle.

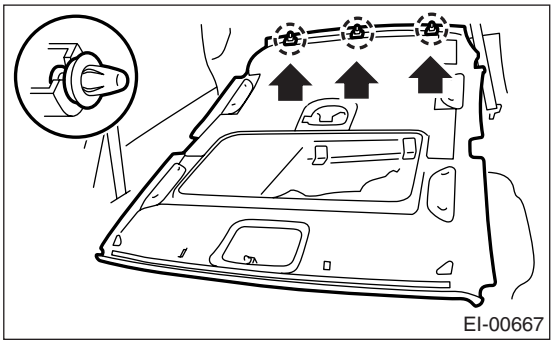

2. WAGON MODEL

1) Disconnect the ground cable from battery.
2) Remove the spot map light. <Ref. to LI-29, REMOVAL, Spot Map Light.>
3) Remove the room light. <Ref. to LI-30, REMOVAL, Room Light.>
4) Remove the luggage room light. <Ref. to LI-31, REMOVAL, Luggage Room Light.>
5) Remove the sun visor. <Ref. to EI-64, REMOVAL, Sun Visor.>
6) Remove the assist grip. <Ref. to EI-65, REMOVAL, Assist Grip.>
7) Remove the upper inner trim. <Ref. to EI-61, REMOVAL, Upper Inner Trim.>
8) Remove the rear quarter trim. <Ref. to EI-62, WAGON MODEL, REMOVAL, Rear Quarter Trim.>

CAUTION:
Do not remove the roof end trim with excessive force. Otherwise roof trim may be damaged.
Roof trim and roof end trim are fastened by rivets.

9) Remove the sunroof opening trim. (Model with sunroof)

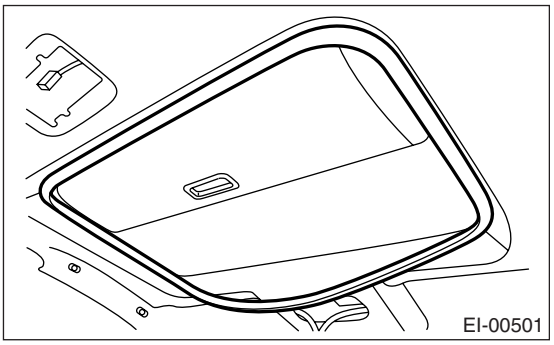

10) Remove the clips and each harness, pull out the rear center seat belt, and remove the roof trim.

CAUTION:
Do not remove the roof end trim with excessive force. Otherwise roof trim may be damaged.

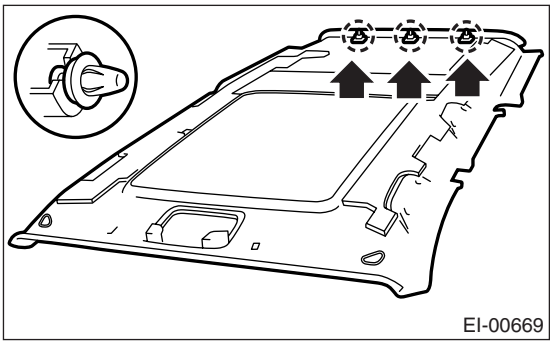

B: INSTALLATION

1. SEDAN MODEL

Install in the reverse order of removal.

2. WAGON MODEL

Install in the reverse order of removal.

29.Rear Gate Trim

A: REMOVAL

1) Remove the clips (A), and remove the rear gate pillar trim.

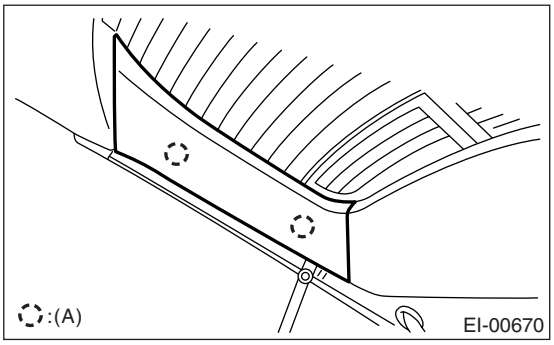

2) Remove the clips, and detach the rear gate upper trim.

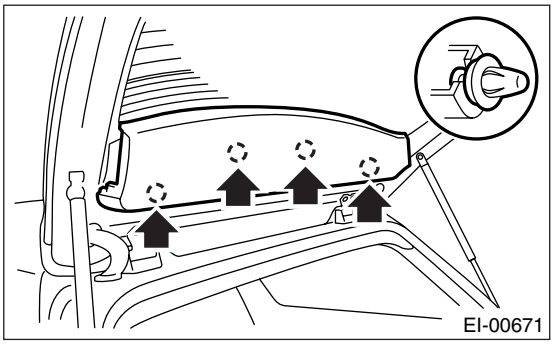

3) Remove the cover in the inner handle, loosen the inside screw.
4) Turn over the weather strip, and remove the clips.

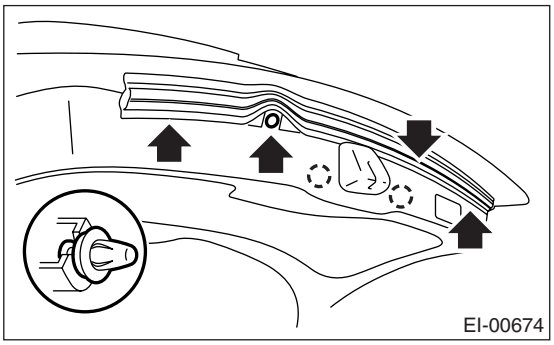

5) Remove the clips (A), remove the rear gate lower trim.

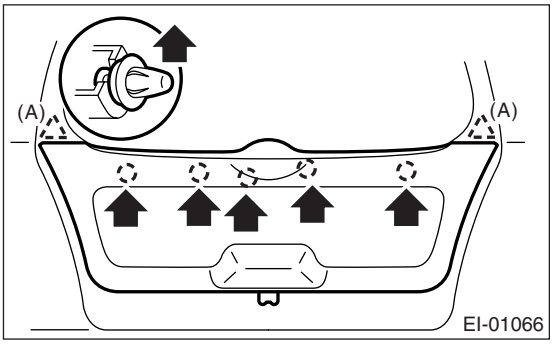

6) Remove the rear gate weather strip.

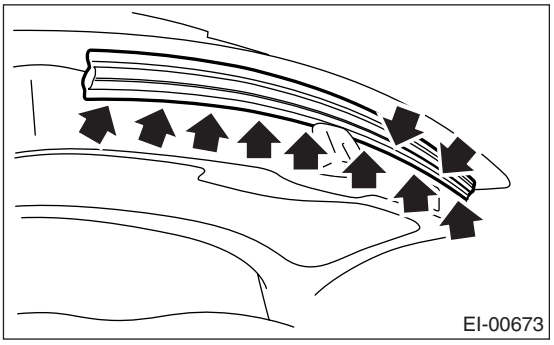

NOTE:
If the weather strip clip is removed with excessive force, the weather strip may be damaged. Be sure to use a clip remover to remove.

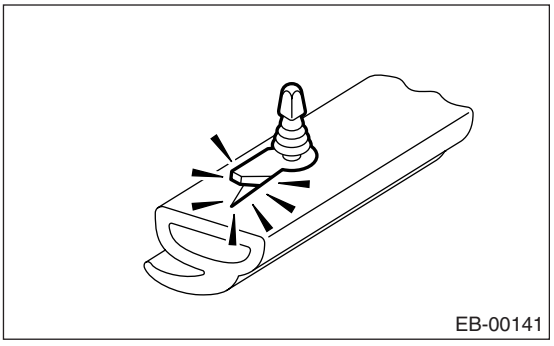

B: INSTALLATION

Install in the reverse order of removal.

30.Rear Shelf Trim

A: REMOVAL

1) Disconnect the ground cable from battery.
2) Remove the rear quarter trim. <Ref. to EI-62, SEDAN MODEL, REMOVAL, Rear Quarter Trim.>
3) Remove the high-mounted stop light. <Ref. to LI-28, REMOVAL, High-mounted Stop Light.>
4) Remove the rear seat cushion. <Ref. to SE-20, WAGON MODEL, REMOVAL, Rear Seat.>
5) Remove the lower anchor bolt of rear center seat belt.

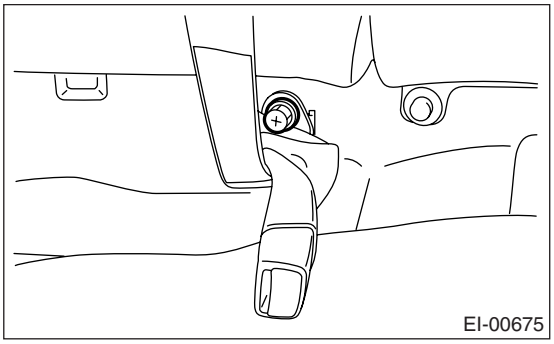

6) After disconnecting the high-mounted stop light harness connector (A) and removing the five clips, remove the rear shelf trim with pulling it frontward.

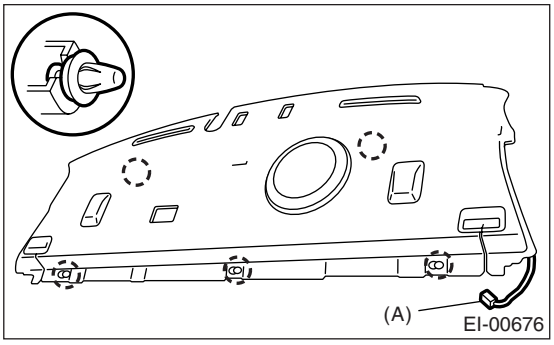

B: INSTALLATION

Install in the reverse order of removal.

NOTE:
Securely insert the vehicle body panel into the hook of rear shelf trim center, and then install the rear shelf trim.

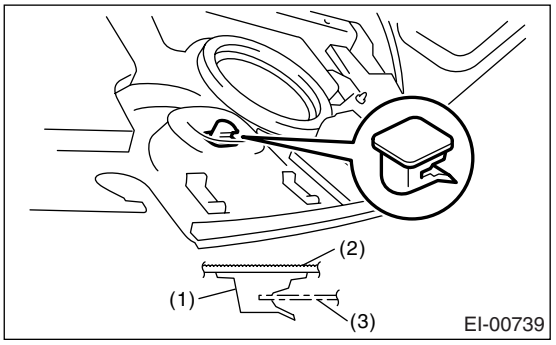

(1) Hook
(2) Rear shelf trim
(3) Vehicle body panel

31.Trunk Room Trim

A: REMOVAL

1. TRUNK LID TRIM

1) Remove the trim clips and stopper rubbers, and remove the trunk lid trim.

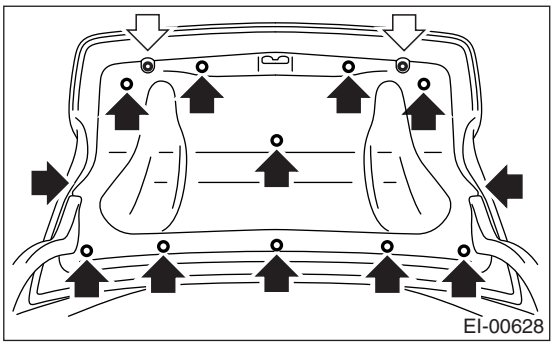

2) Remove the four pawls, and then remove trunk handle cover (1).

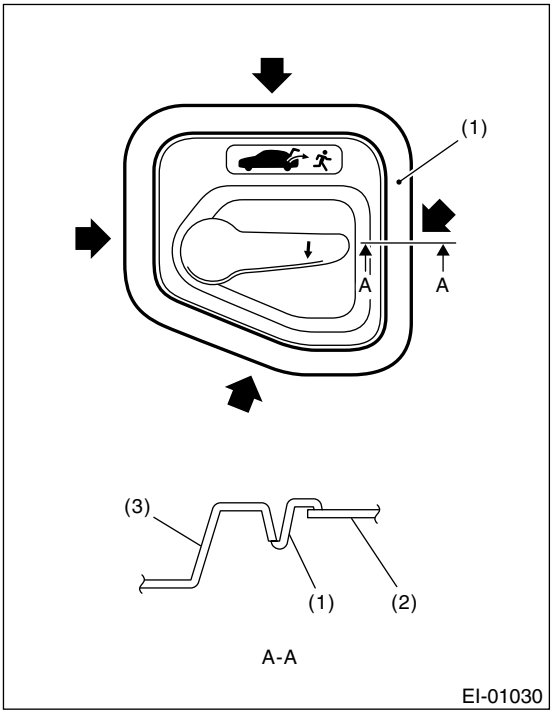

(1) Trunk handle cover
(2) Trunk lid trim
(3) Trunk release handle

3) Remove the clip (A) of trunk side trim, and then remove the trunk lid arm cover.

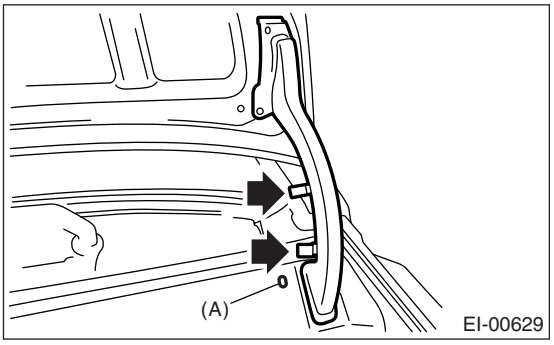

2. TRUNK ROOM TRIM

1) Remove the trunk room mat.

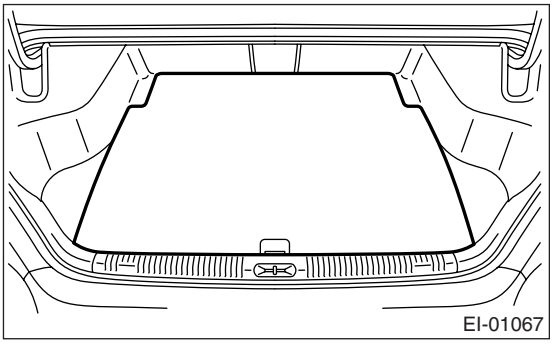

2) Remove the trim clips (A), and remove the trunk room end cover.

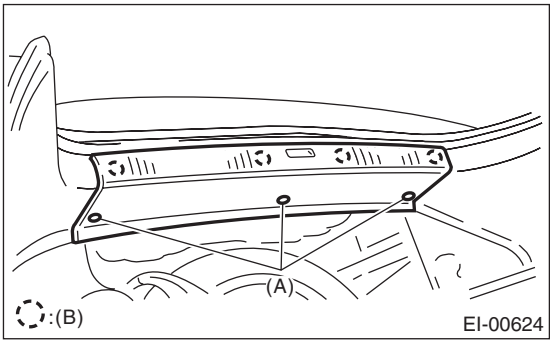

(B) Clip

3) Remove the rear seat backrest, and then remove the trim clips at the front side of trunk side trim. <Ref. to SE-20, WAGON MODEL, REMOVAL, Rear Seat.>

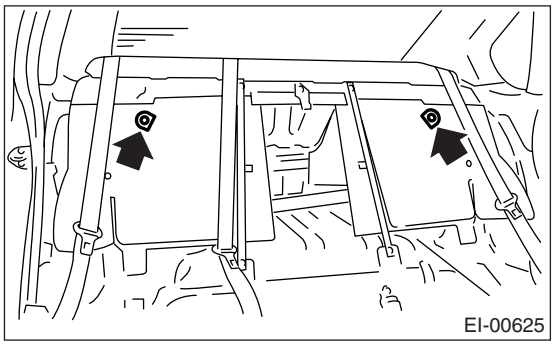

4) Insert the flat tip driver from the lower side of trunk hook, and then remove the trunk hook with rotating it 90°.

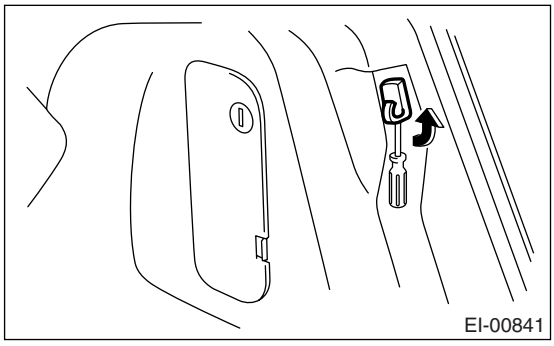

5) Remove the trim clips, and remove the trunk side trim.

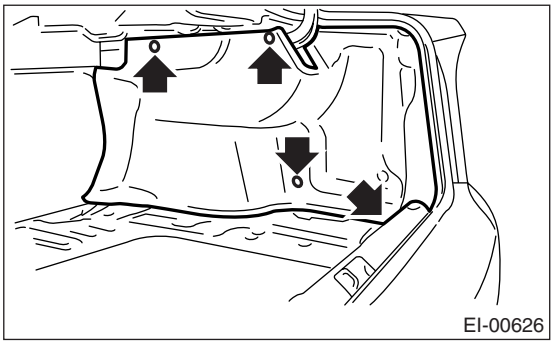

B: INSTALLATION

1. TRUNK LID TRIM

Install in the reverse order of removal.

2. TRUNK ROOM TRIM

Install in the reverse order of removal.

32.Floor Mat

A: REMOVAL

1) Remove the front seats. <Ref. to SE-9, REMOVAL, Front Seat.>
2) Remove the rear seat cushion. <Ref. to SE-20, REMOVAL, Rear Seat.>
3) Remove the console box. <Ref. to EI-53, Console Box.>
4) Remove the console side panel. <Ref. to EI-54, REMOVAL, Center Console.>
5) Remove the lower inner trim. <Ref. to EI-60, REMOVAL, Lower Inner Trim.>
6) Remove the footrest. (MT model)
7) Remove the clips from floor mat.
8) Remove the mat hook on both side.
9) Remove the mat from toe board area.
10) Remove the mat from rear heater duct.
11) Roll the mat, and then take it out of opened rear door.

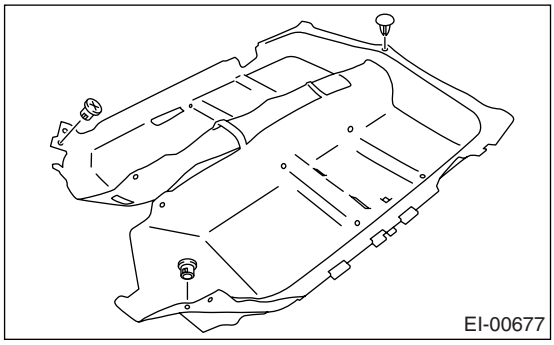

B: INSTALLATION

Install in the reverse order of removal.

NOTE:
- Secure the mat firmly with hook and clip.
- Insert the mat edge firmly into the groove of side sill cover.

33.Luggage Floor Box

A: REMOVAL

1) Remove the luggage floor mat.
2) Remove the clips, and remove the luggage floor box.

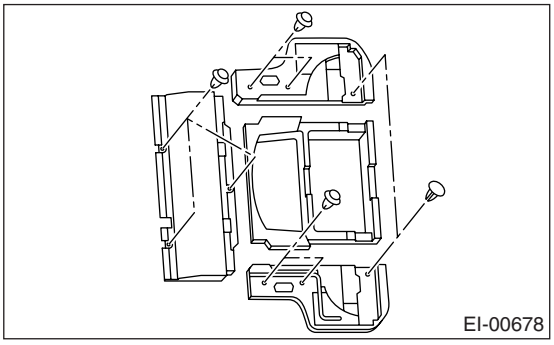

B: INSTALLATION

Install in the reverse order of removal.

34.Trunk Lid Garnish

A: REMOVAL

1) Remove the license plate, loosen the bolts (A).

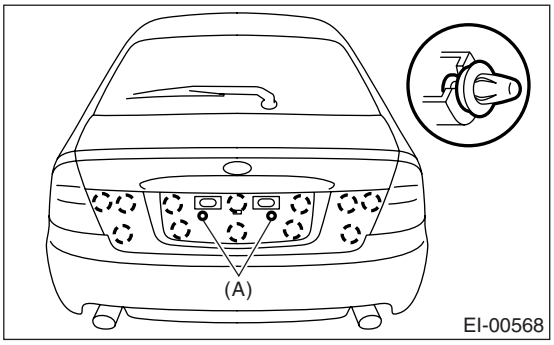

2) Remove the clip in the upper corner of trunk lid garnish.

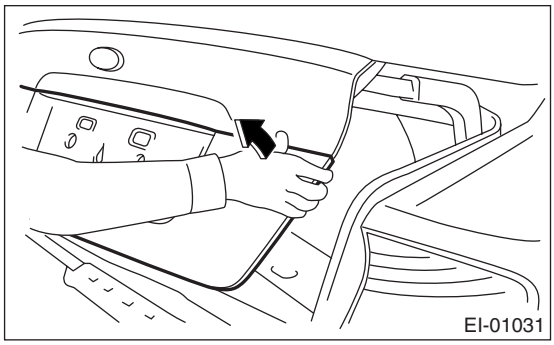

3) Remove the trunk lid garnish in the order from the end of it, by accessing it through the gap between trunk lid garnish and trunk lid panel.

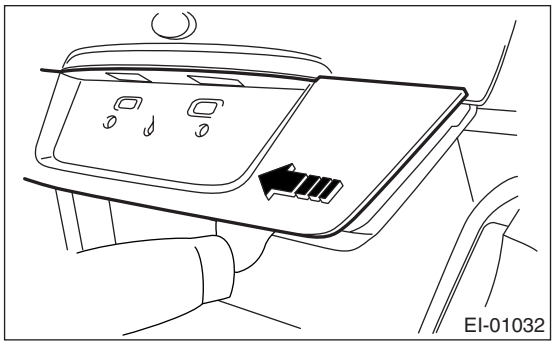

B: INSTALLATION

Install in the reverse order of removal.

Tightening torque:
7.5 N·m (0.77 kgf-m, 5.53 ft-lb)

35.Rear Gate Garnish

A: REMOVAL

1) Remove the rear gate trim. <Ref. to EI-68, REMOVAL, Rear Gate Trim.>
2) Remove the clip (A), and remove the rear gate panel side cover.

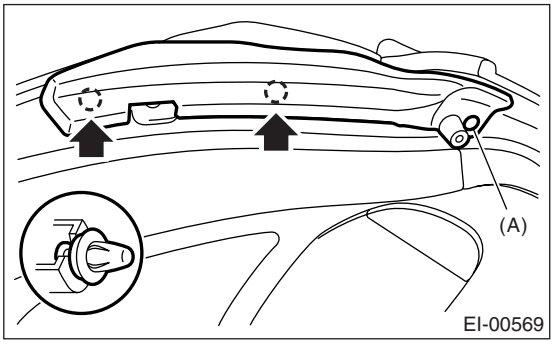

3) Remove the hexagon cap nut.

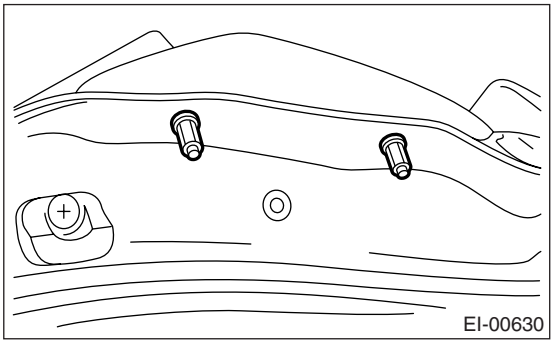

4) Remove the nuts, disconnect each connector, and remove the rear gate garnish.

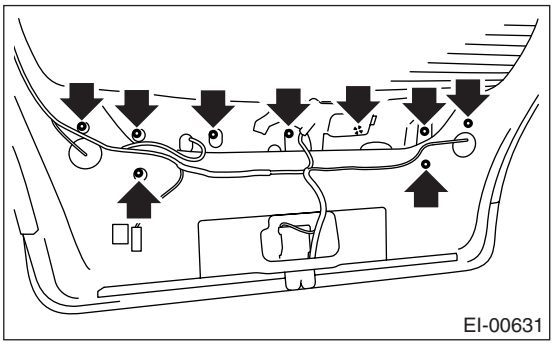

B: INSTALLATION

Install in the reverse order of removal.

36.Heat Shield Cover

A: REMOVAL

1. FRONT HEAT SHIELD COVER

Remove the four bolts to remove front heat shield cover.

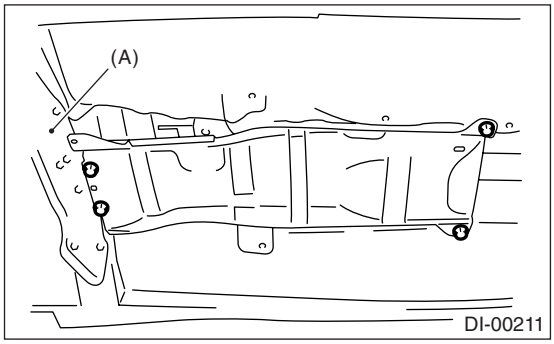

(A) Transmission mount

2. CENTER HEAT SHIELD COVER

Remove the nut and bolt to remove center heat shield cover.

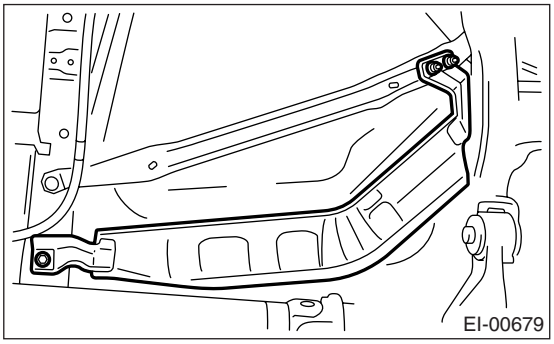

3. REAR HEAT SHIELD COVER

1) Remove the muffler. <Ref. to EX(H4SO)-10, REMOVAL, Muffler.> <Ref. to EX(H4DOTC)-13, REMOVAL, Muffler.>
2) Remove the four bolts to remove rear heat shield cover.

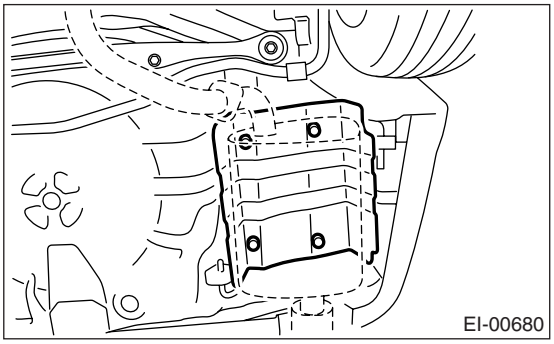

B: INSTALLATION

Install in the reverse order of removal.

37.Ornament

A: INSTALLATION

1. LETTER MARK

Adhere the letter mark with following dimension.

- Sedan model

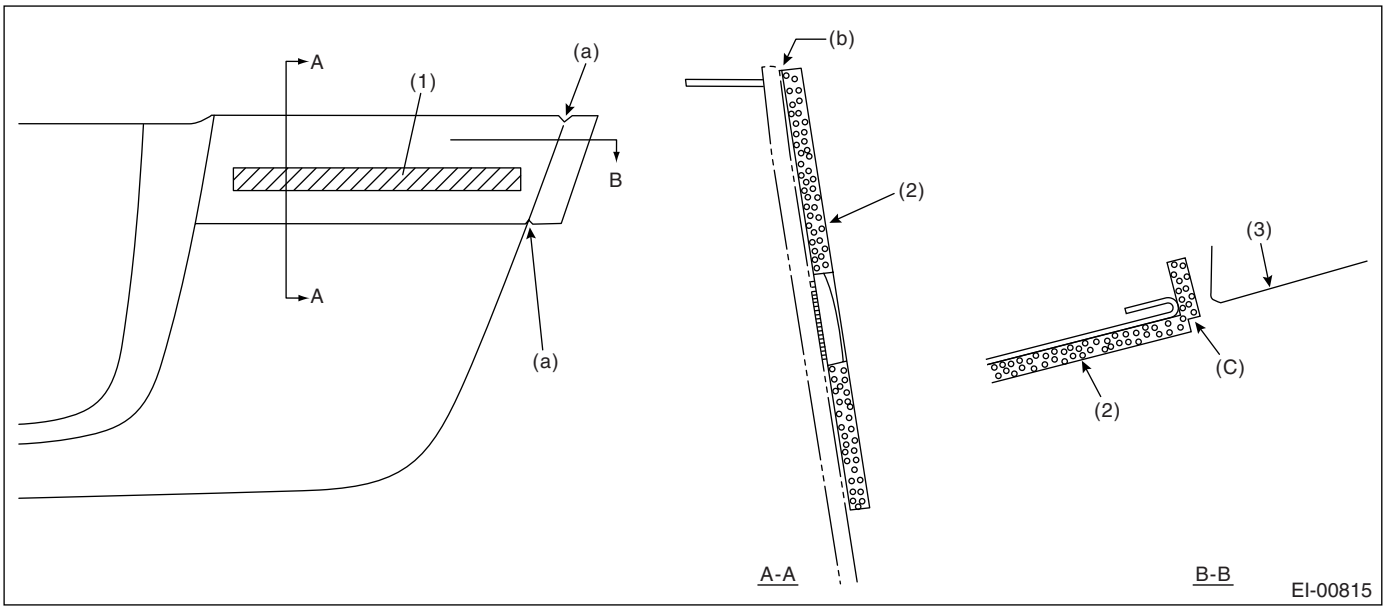

(a)	Apply the apply tape with aligning the cut out to the end of trunk lid garnish.	(b)	Apply the apply tape with aligning R stop on the top end of trunk lid garnish.	(c)	Align the slit of apply tape to panel end.
(1)	Letter mark	(2)	Apply tape	(3)	Rear combination light

• Wagon model

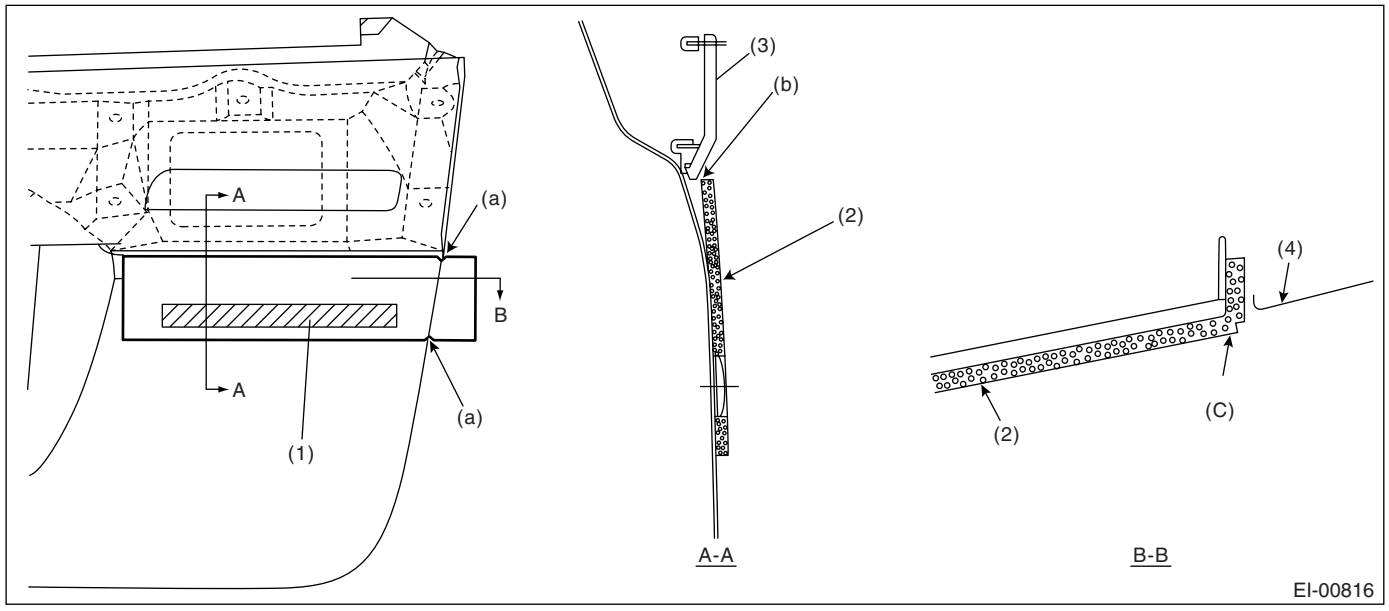

(a) Apply the apply tape with aligning the cut out to the end of rear gate panel.
(b) Apply the apply tape with aligning outer bottom end of rear gate garnish.
(c) Align the slit of apply tape to panel end.
(1) Letter mark
(2) Apply tape
(3) Rear gate garnish
(4) Rear combination light

2. AWD STICKER

Apply the AWD sticker from inside of glass with following dimension.

• Sedan model

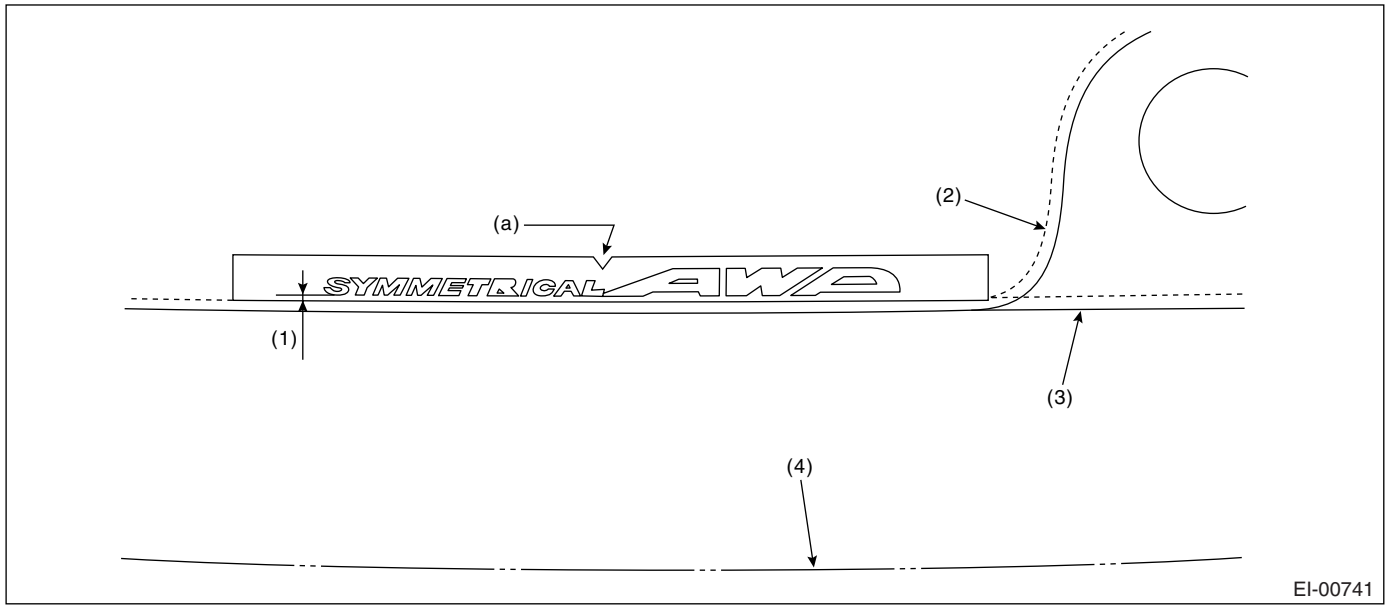

(a) Apply the apply tape with aligning the cut out to the end of rear glass center.
(1) 1 mm (0.04 in)
(2) Gradation end of ceramic print (with rear wiper)
(3) Gradation end of ceramic print (without rear wiper)
(4) End of rear glass

- Wagon model (RH side)

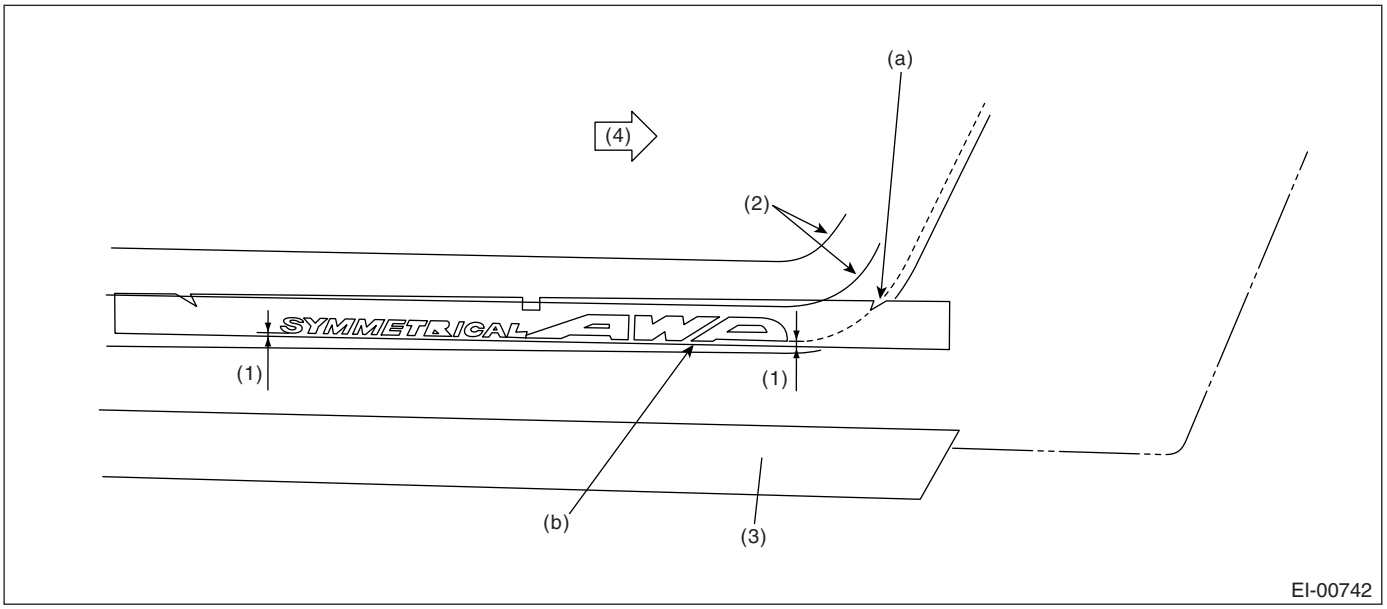

- Wagon model (LH side)

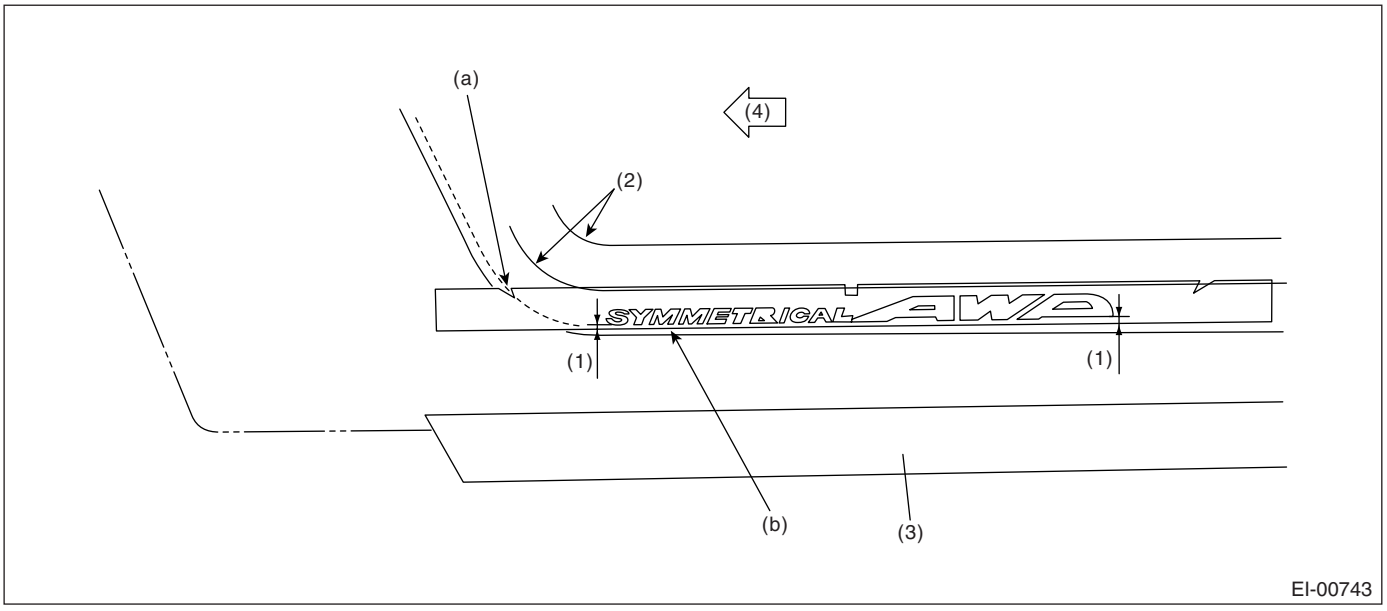

(a) Apply the apply tape with aligning the cut out to the ceramic print.
(b) Gradation end of ceramic print
(1) 1 mm (0.04 in)
(3) Molding
(4) Front side of vehicle
(2) Glass antenna wire

EXTERIOR BODY PANELS

EB

		Page
1.	General Description	2
2.	Front Hood	13
3.	Front Fender	16
4.	Front Door	17
5.	Front Sealing Cover	20
6.	Rear Door	21
7.	Rear Sealing Cover	24
8.	Trunk Lid	25
9.	Rear Gate	27

1. General Description

A: SPECIFICATION

1. SIDE

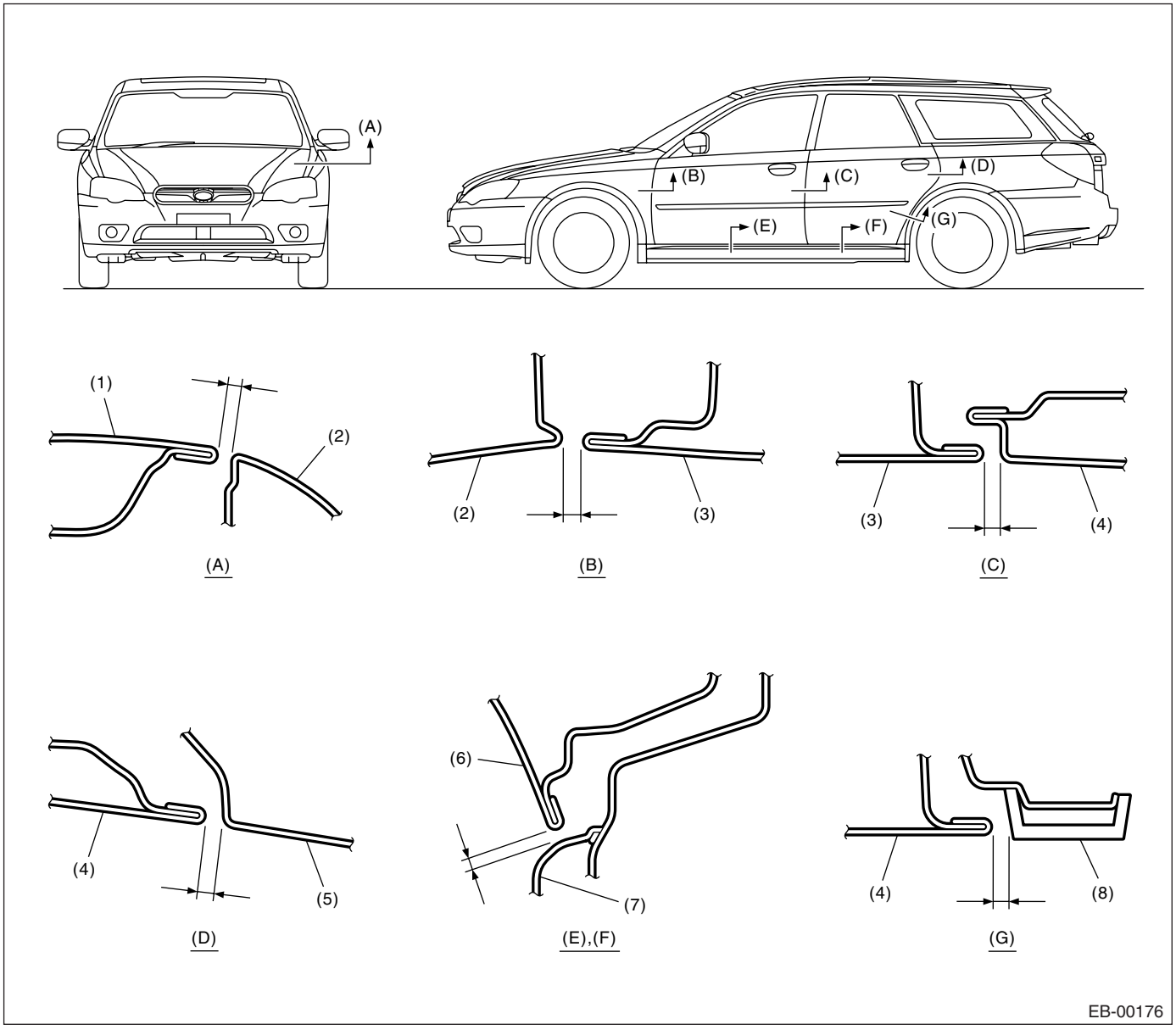

(1) Front hood panel
(2) Front fender panel
(3) Front door panel
(4) Rear door panel
(5) Rear quarter panel
(6) Door panel
(7) Side sill
(8) Rear quarter lower protector

Section	Part	Standard value
(A)	Front hood panel to Front fender panel	3.5±1.0 mm (0.14±0.04 in)
(B)	Front fender panel to Front door panel	4.65±1.0 mm (0.18±0.04 in)
(C)	Front door panel to Rear door panel	5.1±1.0 mm (0.20±0.04 in)
(D)	Rear door panel to Rear quarter panel	4.6±1.0 mm (0.18±0.04 in)
(E), (F)	Door panel to Side sill	6.0±1.0 mm (0.24±0.04 in)
(G)	Rear door panel to Rear quarter lower protector	5.0±1.0 mm (0.20±0.04 in)

2. FRONT

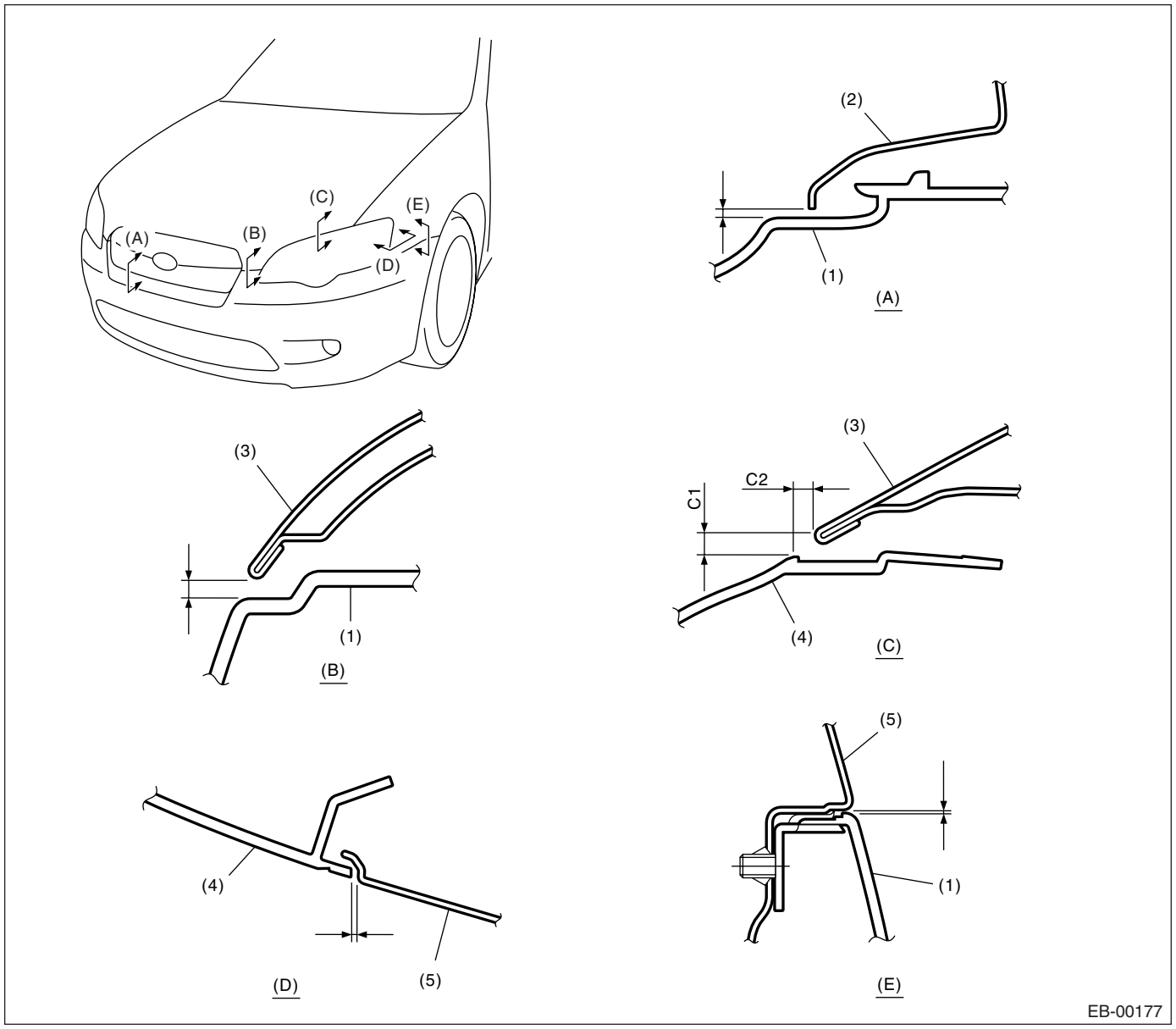

(1) Front bumper
(2) Front grille
(3) Front hood panel
(4) Headlight
(5) Front fender panel

Section	Part	Standard value
(A)	Front bumper to Front grille (Longitudinal direction)	1.0±0.7 mm (0.04±0.03 in)
(B)	Front hood panel to Front bumper	4.0 — 6.0 mm (0.16 — 0.24 in)
(C)	Front hood panel to Headlight	C1: 6.0±1.0 mm (0.24±0.04 in) C2: 5.0±1.0 mm (0.20±0.04 in)
(D)	Front fender panel to Headlight	2.0±1.0 mm (0.08±0.04 in)
(E)	Front fender panel to Front bumper	1.0±0.7 mm (0.04±0.03 in)

3. REAR (SEDAN MODEL)

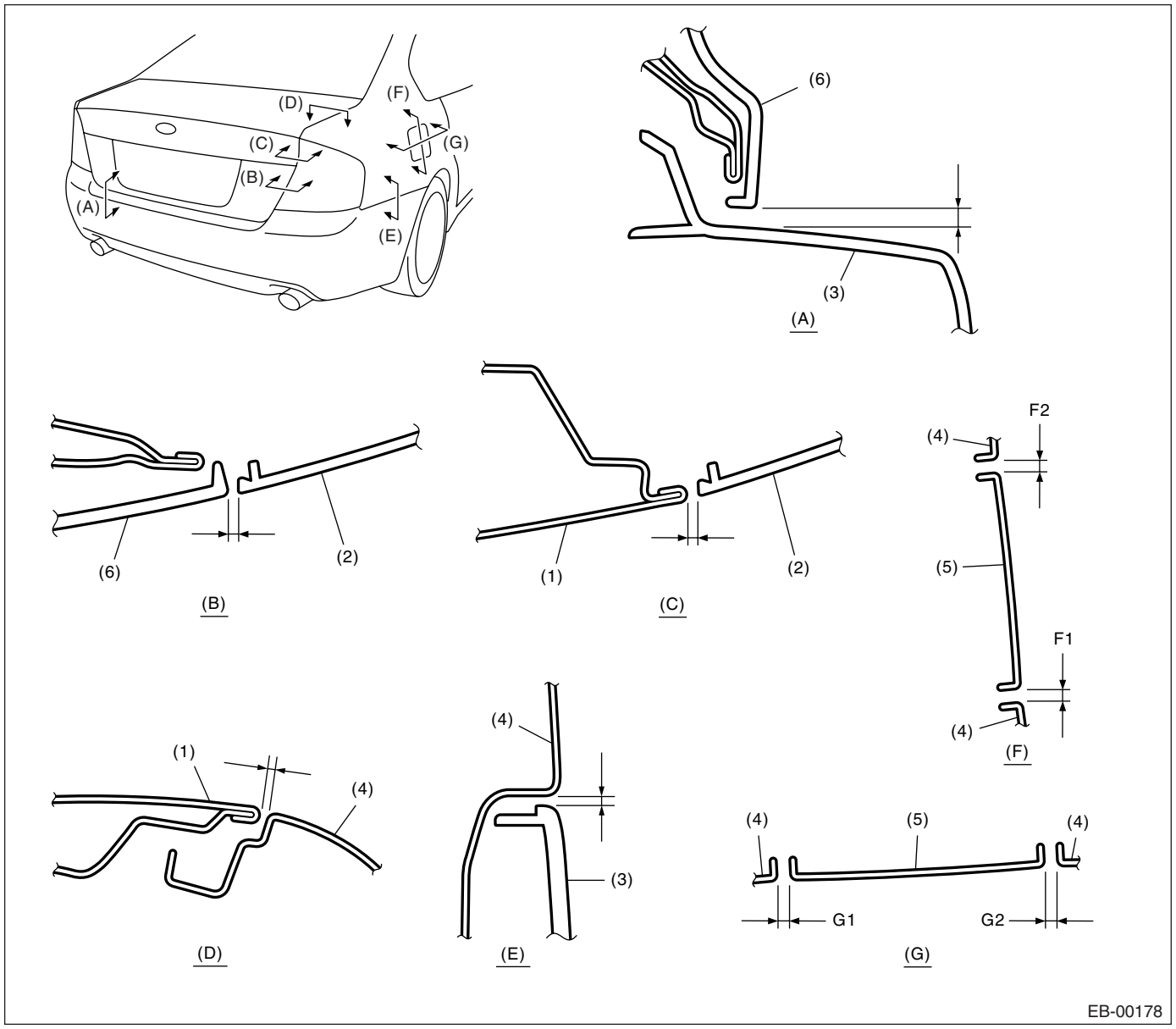

(1) Trunk lid panel
(2) Rear combination light
(3) Rear bumper
(4) Rear fender panel
(5) Fuel filler flap lid
(6) Trunk lid garnish

Section	Part	Standard value
(A)	Trunk lid garnish to Rear bumper	7.0±1.5 mm (0.28±0.06 in)
(B)	Trunk lid garnish to Rear combination light	4.0±1.0 mm (0.16±0.04 in)
(C)	Trunk lid panel to Rear combination light	3.5±1.0 mm (0.14±0.04 in)
(D)	Trunk lid panel to Rear fender panel	3.5±1.0 mm (0.14±0.04 in)
(E)	Rear fender panel to Rear bumper	1.0±0.7 mm (0.04±0.03 in)
(F)	Rear fender panel to Fuel filler flap lid (Longitudinal direction)	F1: 3.7±0.5 mm (0.15±0.02 in) F2: 3.4±0.5 mm (0.13±0.02 in)
(G)	Rear fender panel to Fuel filler flap lid (Lateral direction)	G1, G2: 3.5±0.5 mm (0.14±0.02 in)

4. REAR (WAGON MODEL)

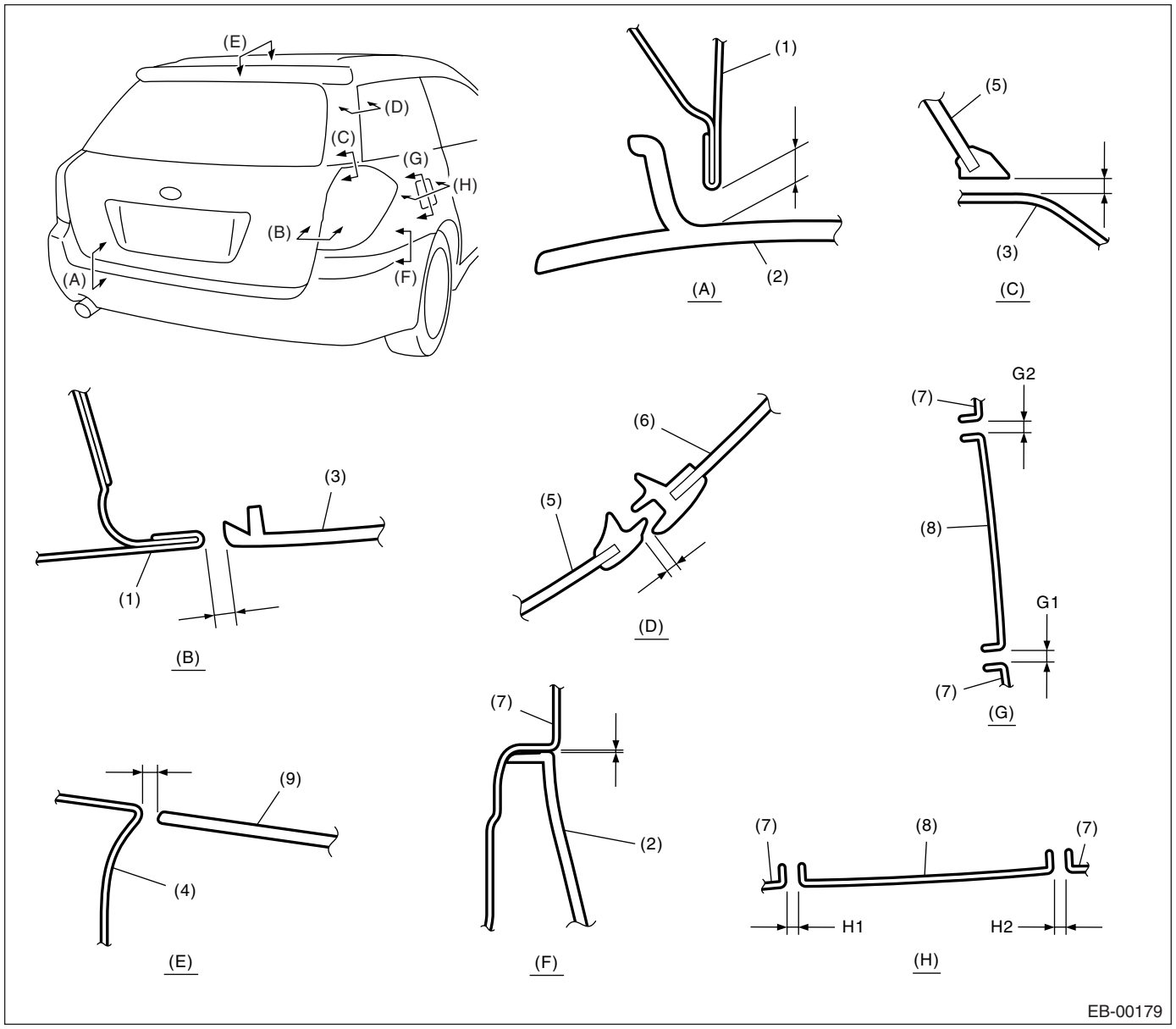

(1) Rear gate panel
(2) Rear bumper
(3) Rear combination light
(4) Roof panel
(5) Rear gate glass
(6) Door quarter glass
(7) Rear fender panel
(8) Fuel filler flap lid
(9) Roof spoiler

Section	Part	Standard value
(A)	Rear gate panel to Rear bumper	8.0±1.5 mm (0.31±0.06 in)
(B)	Rear gate panel to Rear combination light	5.1±1.0 mm (0.20±0.04 in)
(C)	Rear gate glass to Rear combination light	5.5±1.0 mm (0.22±0.04 in)
(D)	Rear gate glass to Rear quarter glass	4.0±1.5 mm (0.16±0.06 in)
(E)	Roof panel to Roof spoiler	5.5±1.0 mm (0.22±0.04 in)
(F)	Rear fender panel to Rear bumper	1.0±0.7 mm (0.04±0.03 in)
(G)	Rear fender panel to Fuel filler flap lid (Longitudinal direction)	G1: 3.7±0.5 mm (0.15±0.02 in) G2: 3.4±0.5 mm (0.13±0.02 in)
(H)	Rear fender panel to Fuel filler flap lid (Lateral direction)	H1, H2: 3.5±0.5 mm (0.14±0.02 in)

B: COMPONENT

1. FRONT HOOD

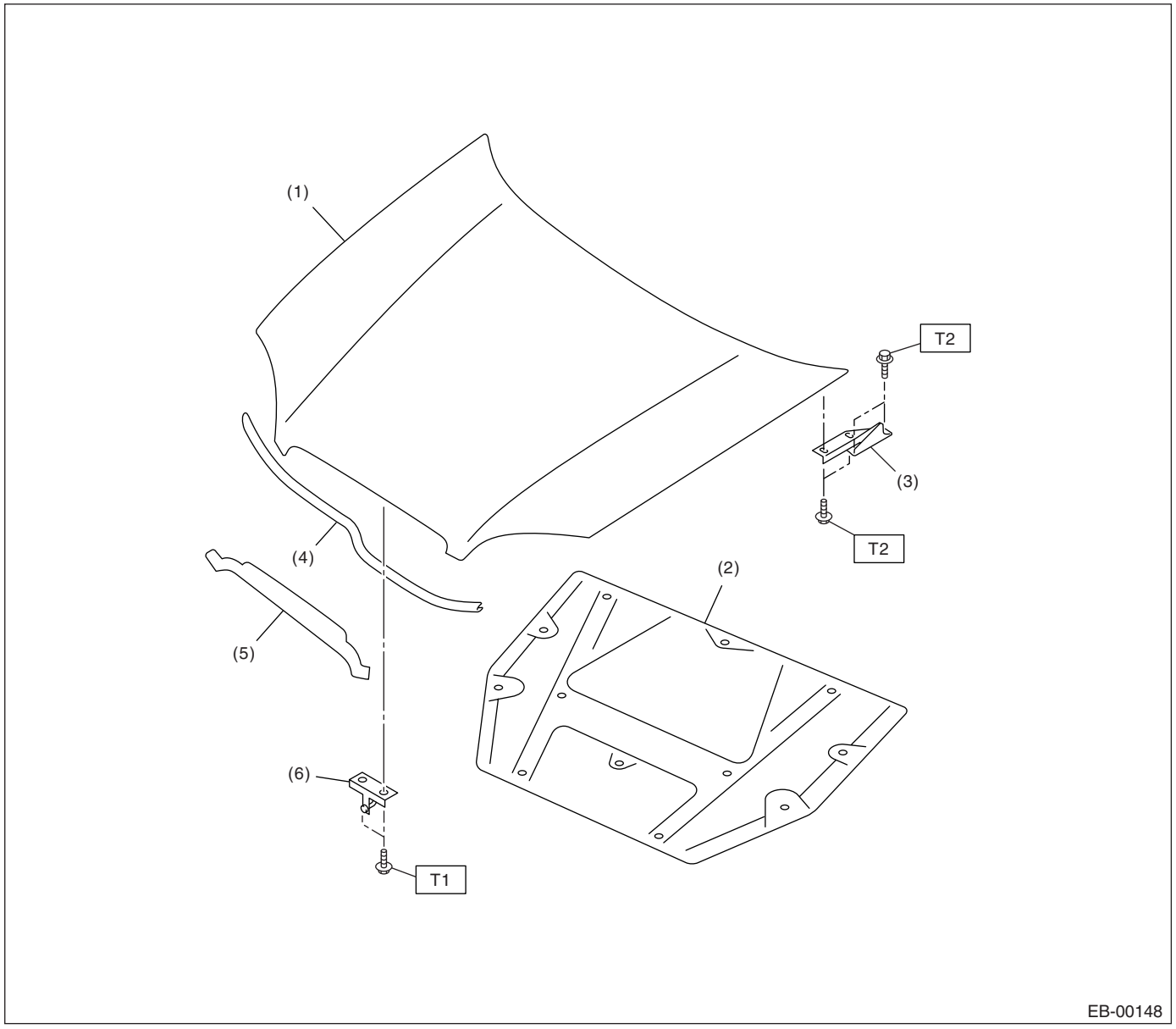

(1)	Front hood panel	(4)	Intake duct weather strip	***Tightening torque: N·m (kgf-m, ft-lb)***
(2)	Front hood insulator	(5)	Front hood weather strip	***T1: 33 (3.4, 24.5)***
(3)	Front hood hinge	(6)	Front hood striker	***T2: 24.5 (2.5, 18.1)***

2. FRONT FENDER PANEL

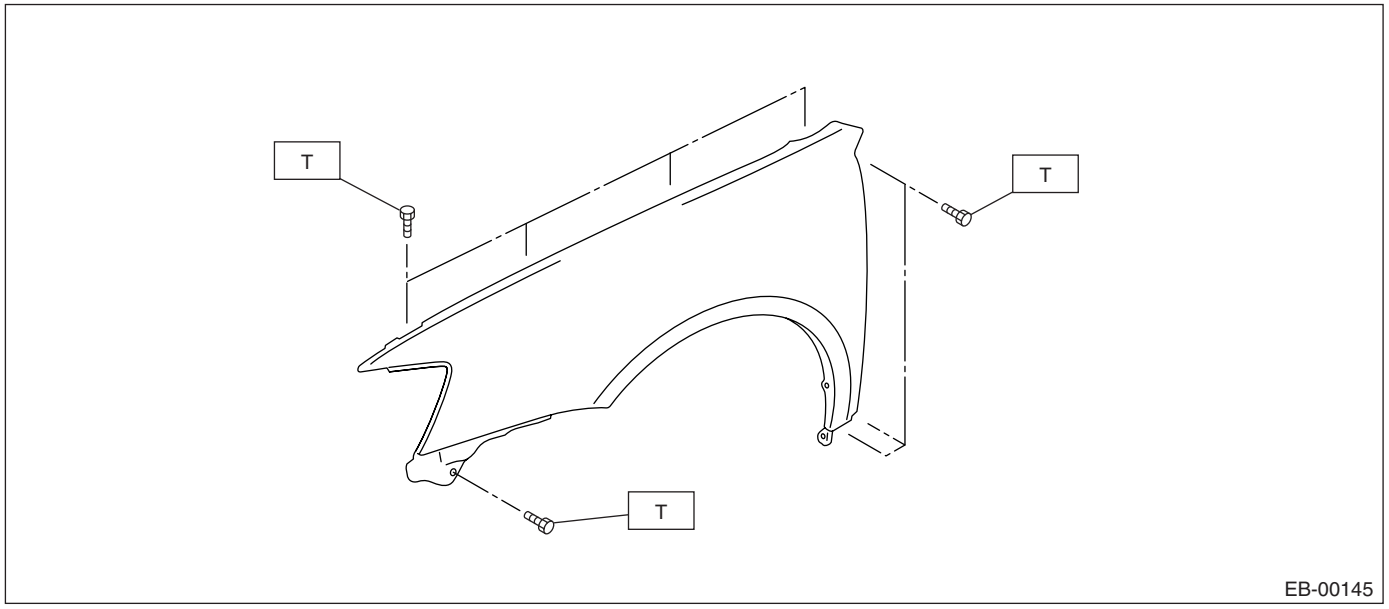

Tightening torque: N·m (kgf-m, ft-lb)
T: 7.4 (0.75, 5.5)

3. FRONT DOOR PANEL

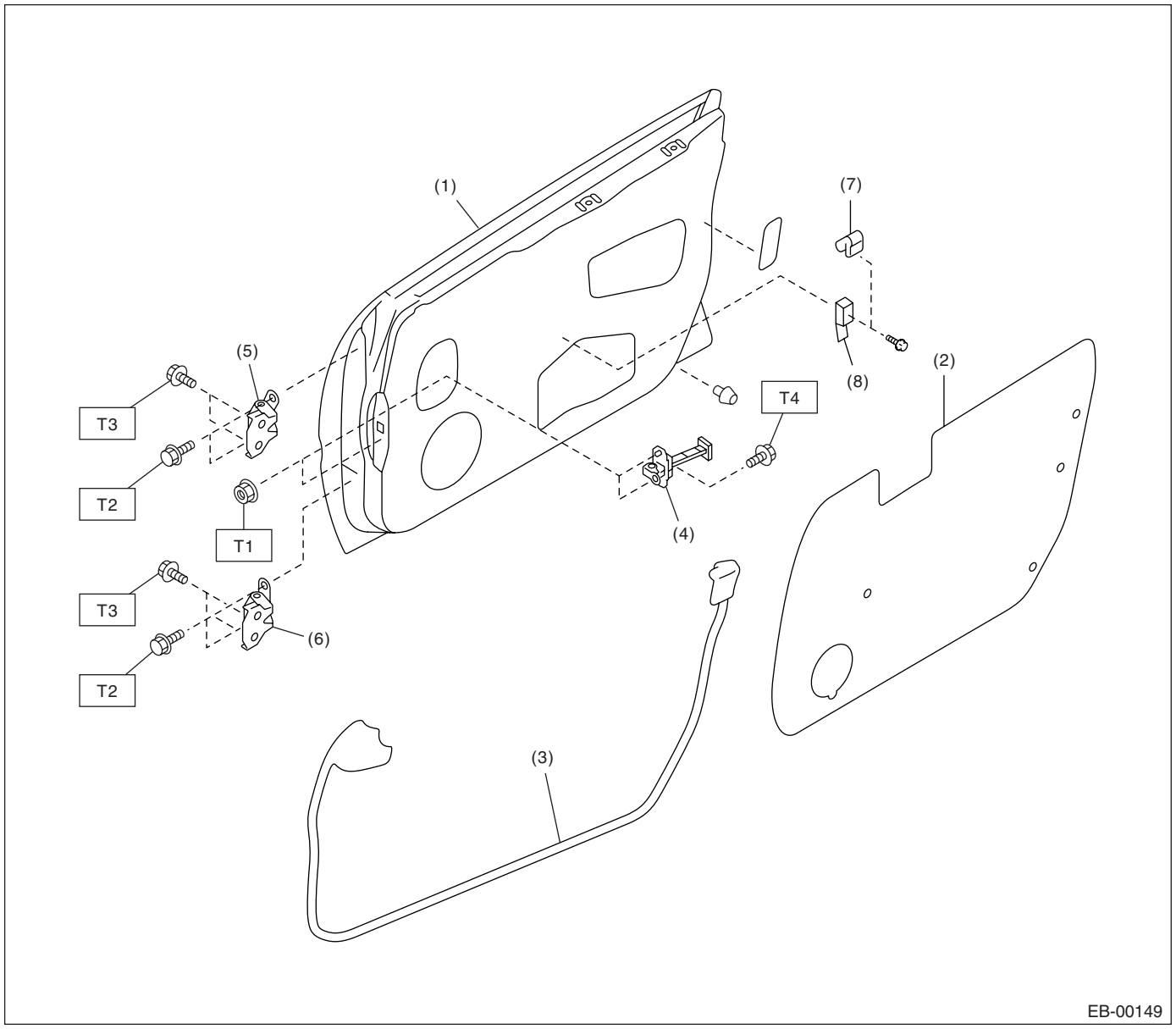

(1) Front door panel
(2) Sealing cover
(3) Front door weather strip
(4) Checker
(5) Upper hinge
(6) Lower hinge
(7) Door trim bracket upper
(8) Door trim bracket lower

Tightening torque: N·m (kgf-m, ft-lb)
T1: 7.4 (0.75, 5.5)
T2: 24.5 (2.5, 18.1)
T3: 29.4 (3.0, 21.7)
T4: 32.3 (3.3, 23.8)

4. REAR DOOR PANEL

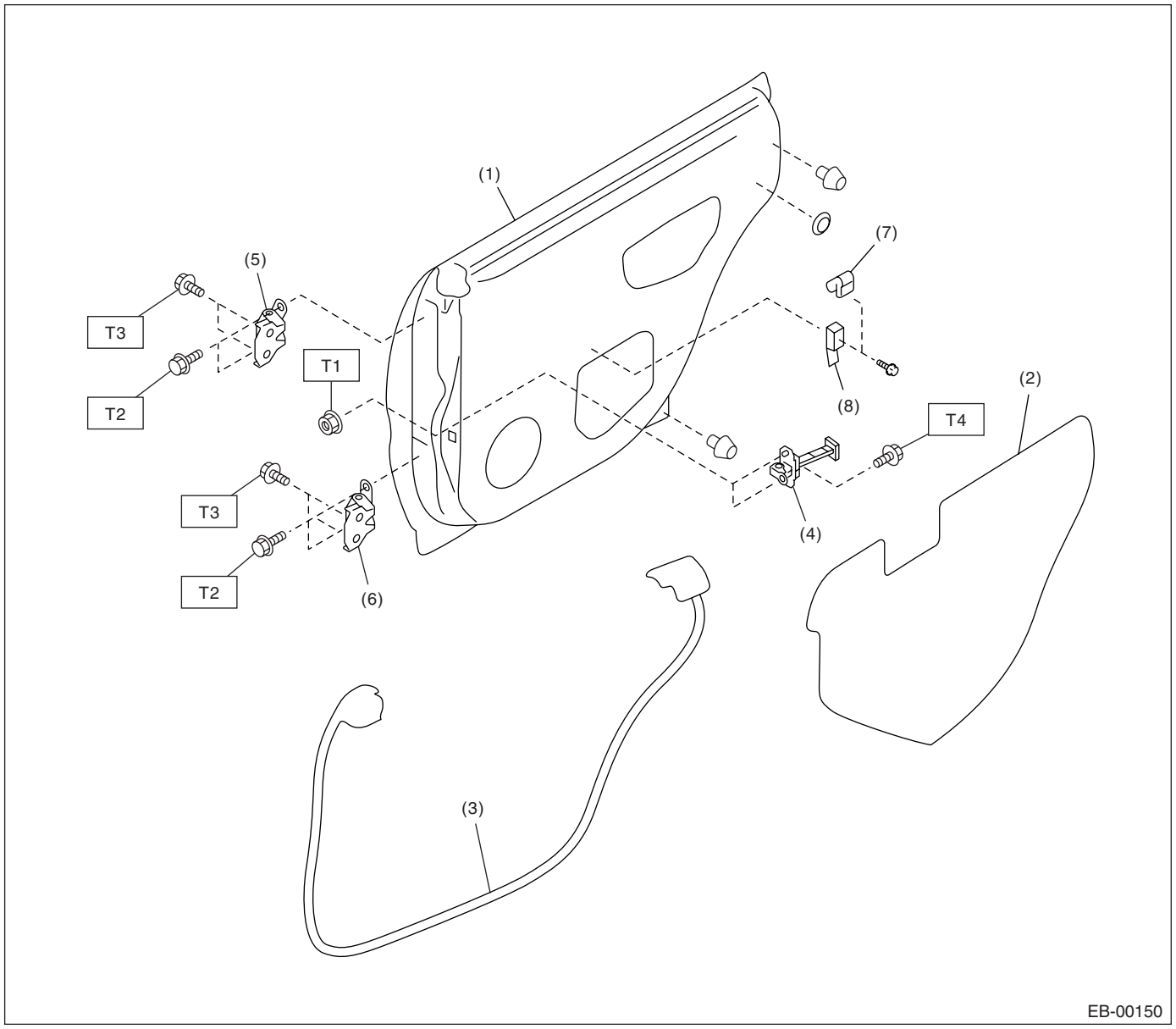

(1) Rear door panel
(2) Sealing cover
(3) Rear door weather strip
(4) Checker
(5) Upper hinge
(6) Lower hinge
(7) Door trim bracket upper
(8) Door trim bracket lower

Tightening torque: N·m (kgf-m, ft-lb)
T1: 7.4 (0.75, 5.5)
T2: 24.5 (2.5, 18.1)
T3: 29.4 (3.0, 21.7)
T4: 32.3 (3.3, 23.8)

5. TRUNK LID PANEL

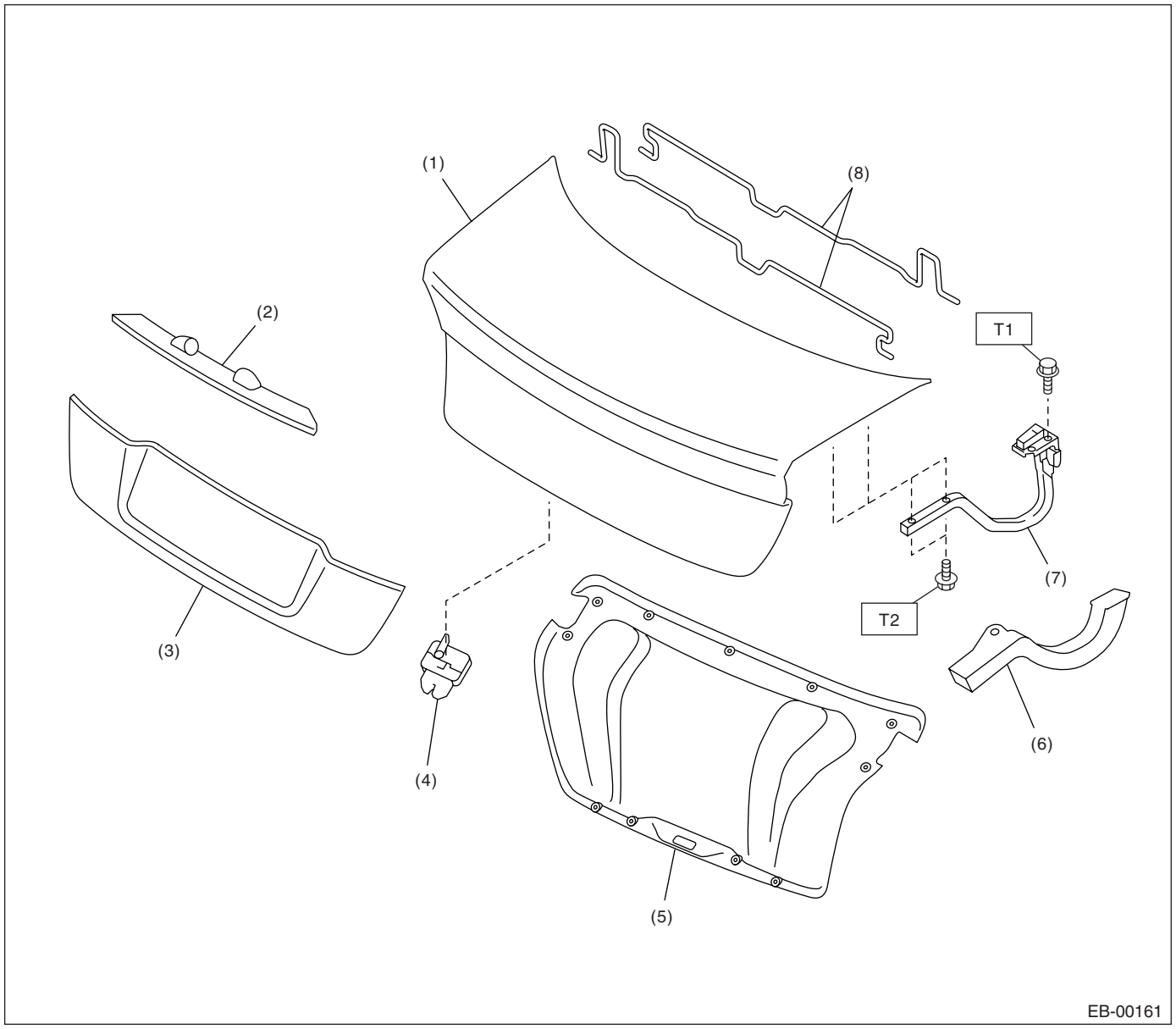

(1) Trunk lid panel
(2) License plate light cover
(3) Trunk lid garnish
(4) Trunk lid lock ASSY
(5) Trunk lid trim
(6) Trunk lid arm cover
(7) Trunk lid arm ASSY
(8) Torsion bar

Tightening torque: N·m (kgf-m, ft-lb)
T1: 17.6 (1.8, 12.9)
T2: 14 (1.43, 10.3)

6. REAR GATE PANEL

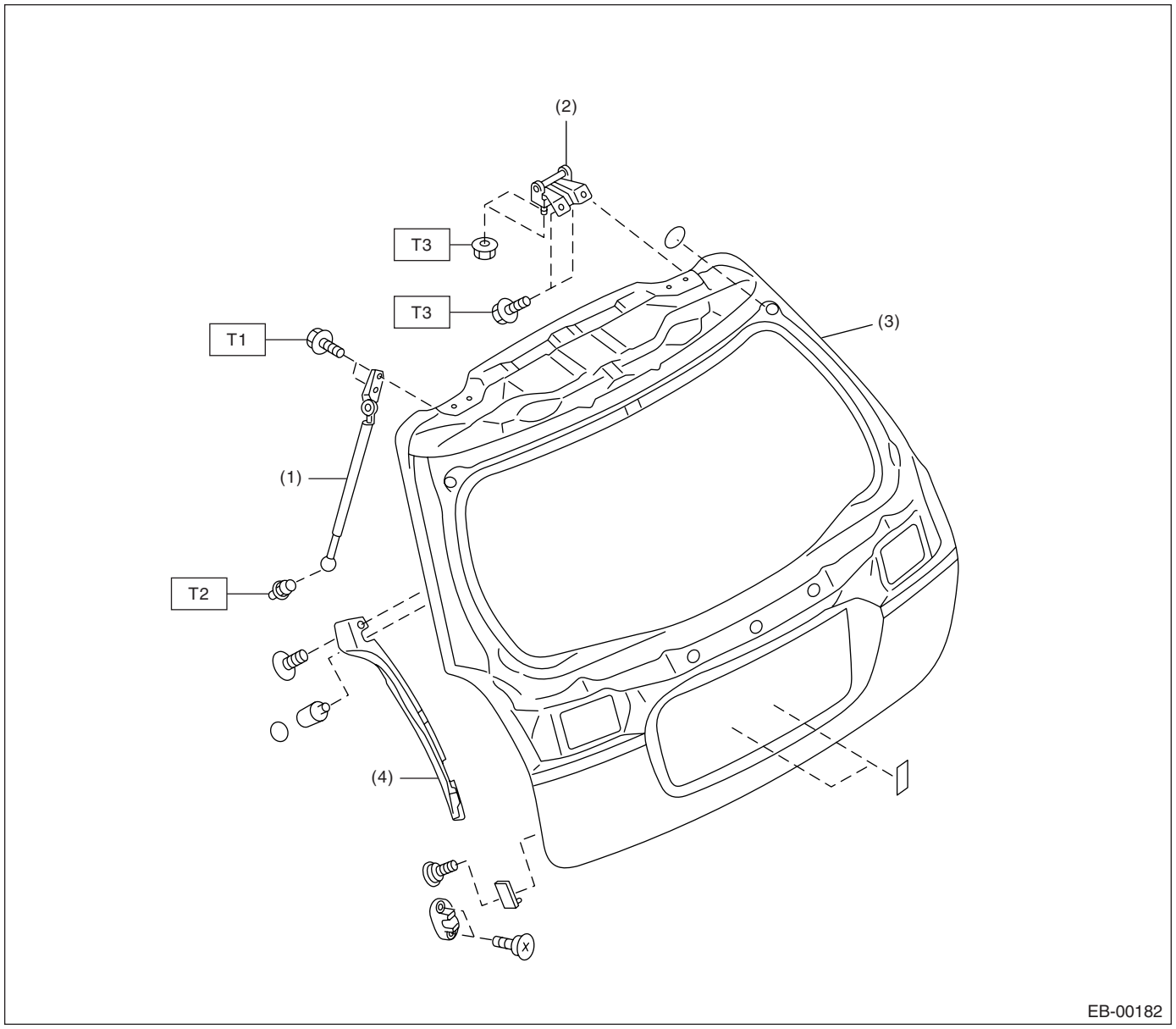

(1) Rear gate damper stay
(2) Hinge
(3) Rear gate panel
(4) Rear gate side panel cover

Tightening torque: N·m (kgf-m, ft-lb)
T1: 7.5 (0.76, 5.5)
T2: 14 (1.43, 10.3)
T3: 25 (2.6, 18.4)

C: CAUTION

- Exterior body panels are heavy. Do not drop and damage the panels. During removal and installation, do not damage the panel painting surface.
- While removing mounting bolts, using assistance devices such as a support jack will help to support the panel.
- Be careful not to lose small parts.

D: PREPARATION TOOL

1. SPECIAL TOOL

ILLUSTRATION	TOOL NUMBER	DESCRIPTION	REMARKS
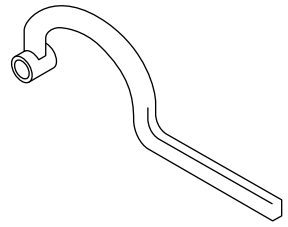 ST-925610000	925610000	WRENCH	Used for removing and installing door hinge.
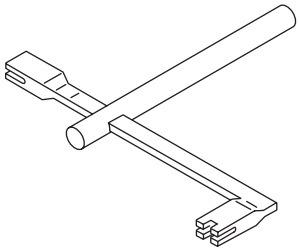 ST-927780000	927780000	REMOVER	Used for removing and installing trunk torsion bar.

2. GENERAL TOOL

TOOL NAME	REMARKS
Support jack	Used for supporting door panel.
Clip remover	Used for removing various types of clips.

2. Front Hood

A: REMOVAL

1. FRONT HOOD INSULATOR

1) Open the front hood.
2) Release the clips to remove front hood insulator.

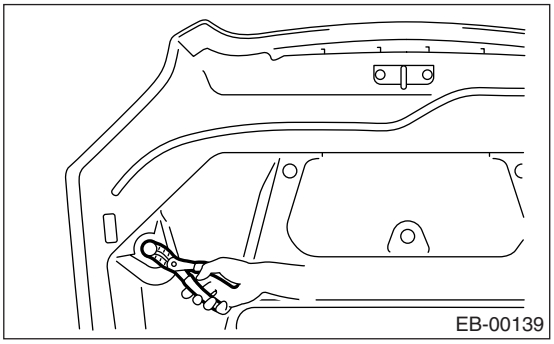

2. FRONT HOOD WEATHER STRIP

1) Open the front hood.
2) Remove the clips, and remove the front hood weather strip (A) and intake duct weather strip (B).

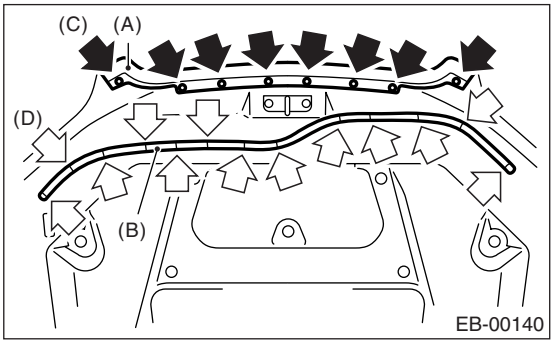

(C) Clip
(D) Weather strip clip

NOTE:
If the weather strip clip is removed with excessive force, the weather strip may be damaged. Be sure to use clip remover to remove.

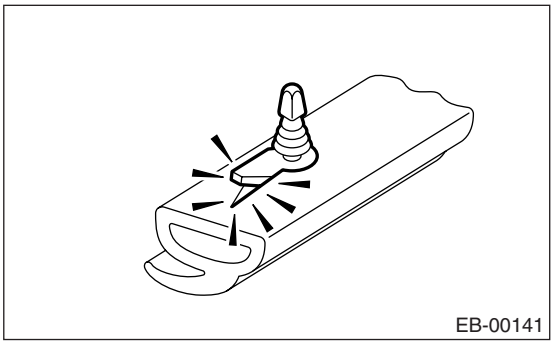

3. FRONT HOOD HINGE

1) Remove the bolts, and remove the front hood panel. <Ref. to EB-14, FRONT HOOD PANEL, REMOVAL, Front Hood.>

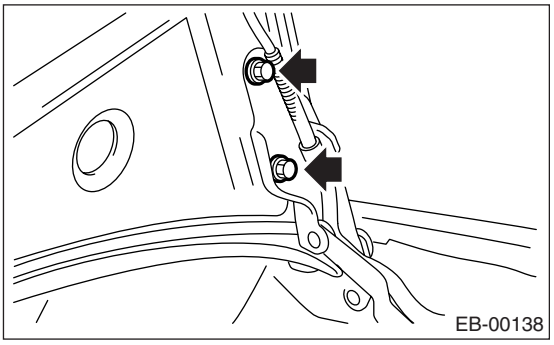

2) Remove the clips, and remove the cowl side panel front.

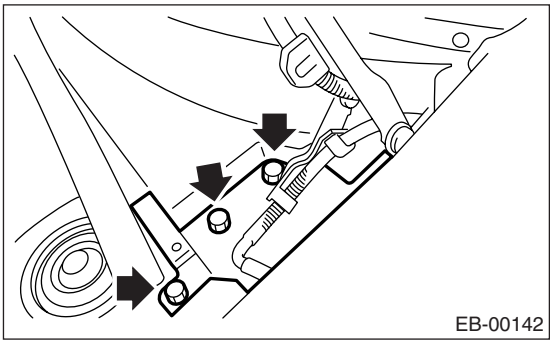

3) Remove the clamp (A) of the window washer hose, and remove bolt of the hinge.

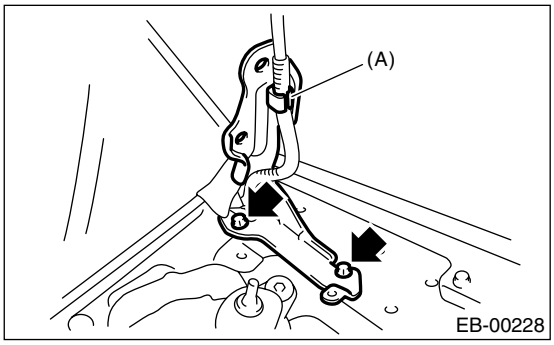

4. FRONT HOOD STRIKER

1) Open the front hood.
2) Remove the bolt, and remove the front hood striker.

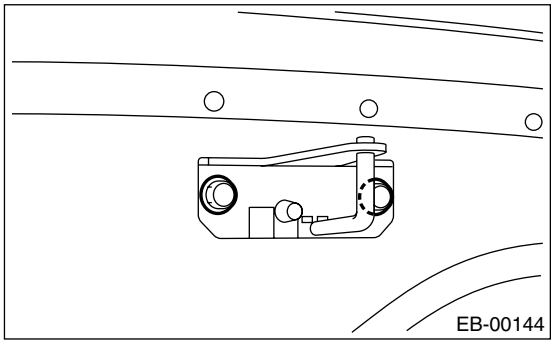

5. FRONT HOOD PANEL

1) Open the front hood to remove the window washer hose.

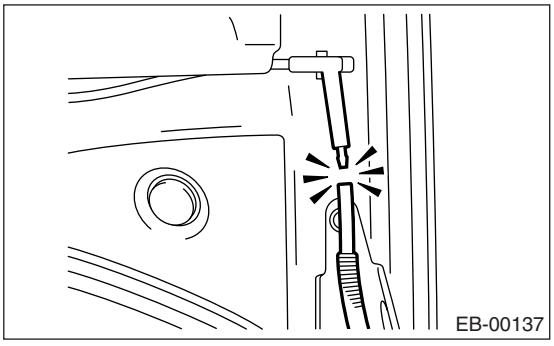

2) Remove the front hood insulator.
<Ref. to EB-13, FRONT HOOD INSULATOR, REMOVAL, Front Hood.>
3) Remove the front hood weather strip.
<Ref. to EB-13, FRONT HOOD WEATHER STRIP, REMOVAL, Front Hood.>
4) Remove the front hood striker.
<Ref. to EB-14, FRONT HOOD STRIKER, REMOVAL, Front Hood.>
5) Remove the front hood duct. (Turbo model)
<Ref. to EI-25, REMOVAL, Front Hood Grille.>
6) Remove the window washer hose and nozzle.
<Ref. to WW-16, REMOVAL, Front Washer Nozzle.>
7) Remove the bolts, and remove the front hood panel from front hood hinge.

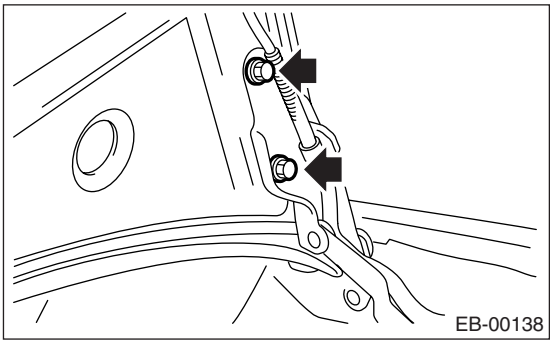

B: INSTALLATION

1. FRONT HOOD INSULATOR

Install in the reverse order of removal.

NOTE:
Be careful not to catch the window washer hose in.

2. FRONT HOOD WEATHER STRIP

Install in the reverse order of removal.

3. FRONT HOOD HINGE

Install in the reverse order of removal.

Tightening torque:
24.5 N·m (2.5 kgf-m, 18.1 ft-lb)

4. FRONT HOOD STRIKER

Install in the reverse order of removal.

Tightening torque:
33 N·m (3.4 kgf-m, 24.5 ft-lb)

5. FRONT HOOD PANEL

Install in the reverse order of removal.

Tightening torque:
24.5 N·m (2.5 kgf-m, 18.1 ft-lb)

C: ADJUSTMENT

1) Adjust the clearance between front hood panel and front fender panel. Clearance must be equal at both sides. For the dimension of clearance, refer to “SPECIFICATION” in “General Description”. <Ref. to EB-2, SPECIFICATION, General Description.>

2) Use the hinge mounting bolts to align the front hood longitudinal and lateral position.

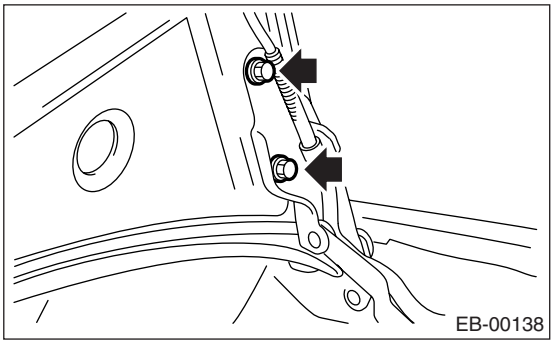

3) Adjust the height at the front end of hood. <Ref. to SL-45, ADJUSTMENT, Front Hood Lock Assembly.>
4) Rotate the hood buffer to adjust lateral height.

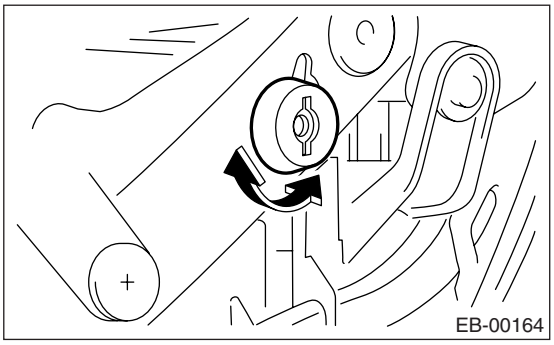

3. Front Fender

A: REMOVAL

1) Disconnect the ground cable from battery.
2) Remove the side sill spoilers. <Ref. to EI-41, REMOVAL, Side Sill Spoiler.>
3) Remove the front grille. <Ref. to EI-24, REMOVAL, Front Grille.>
4) Remove the front bumper face. <Ref. to EI-30, REMOVAL, Front Bumper.>
5) Remove the headlight assembly. <Ref. to LI-11, REMOVAL, Headlight Assembly.>
6) Remove the mud guard. <Ref. to EI-29, REMOVAL, Mud Guard.>
7) Remove the cowl panel side.

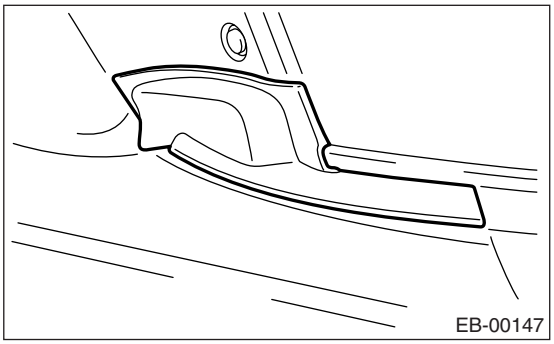
EB-00147

8) Remove the bolt, and remove the front fender panel.

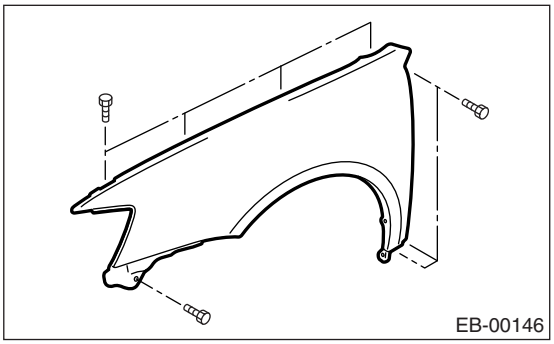
EB-00146

B: INSTALLATION

1) Install in the reverse order of removal.
2) Install with attention to make uniform clearance between front fender panel and front hood panel. For the dimension of clearance, refer to “SPECIFICATION” in “General Description”. <Ref. to EB-2, SPECIFICATION, General Description.>

Tightening torque:
7.4 N·m (0.75 kgf-m, 5.5 ft-lb)

4. Front Door

A: REMOVAL

1. FRONT DOOR PANEL

1) Disconnect the ground cable from battery.
2) Remove the front door trim. <Ref. to EI-48, REMOVAL, Door Trim.>
3) Remove the outer mirror assembly. <Ref. to GW-19, REMOVAL, Outer Mirror Assembly.>
4) Remove the front door speaker. <Ref. to ET-6, REMOVAL, Front Speaker.>
5) Pull back the sealing cover. <Ref. to EB-20, REMOVAL, Front Sealing Cover.>
6) Remove the gusset and front door glass. <Ref. to GW-11, REMOVAL, Front Door Glass.>
7) Remove the door sash, and remove the front door regulator and motor. <Ref. to GW-16, REMOVAL, Front Regulator and Motor Assembly.>
8) Remove the front door latch assembly. <Ref. to SL-35, REMOVAL, Front Door Latch & Door Lock Actuator Assembly.>
9) Remove the front outer handle. <Ref. to SL-34, REMOVAL, Front Outer Handle.>
10) Remove the screw to remove door trim bracket.

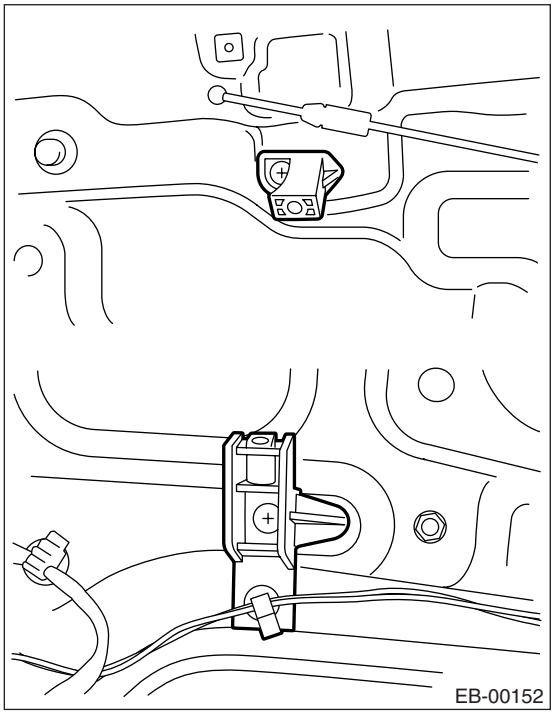
EB-00152

11) Remove the front door weather strip.

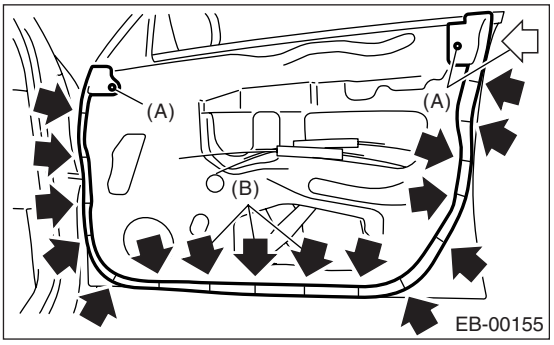

EB-00155

(A) Pin clip
(B) Weather strip clip

NOTE:
If the weather strip clip is removed with excessive force, the weather strip may be damaged. Be sure to use clip remover to remove.

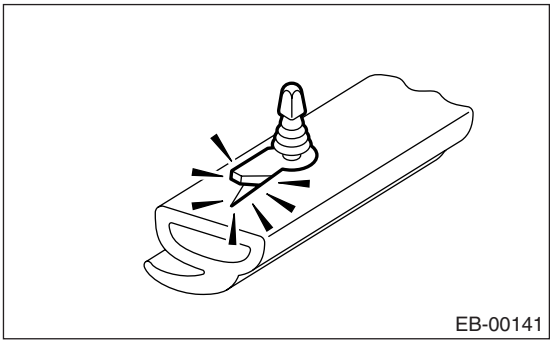
EB-00141

12) Remove the bolts and nuts to remove door checker.

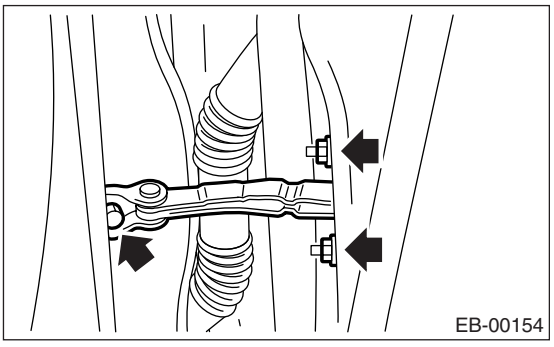
EB-00154

13) Remove the front door. <Ref. to EB-17, FRONT DOOR ASSEMBLY, REMOVAL, Front Door.>

2. FRONT DOOR ASSEMBLY

1) Disconnect the ground cable from battery.
2) Remove the front pillar lower trim. <Ref. to EI-60, REMOVAL, Lower Inner Trim.>
3) Remove the instrument panel lower cover or glove box lower cover. <Ref. to EI-50, REMOVAL, Instrument Panel Lower Cover.> or <Ref. to EI-51, REMOVAL, Glove Box.>

4) Disconnect the connector of door harness from body harness.

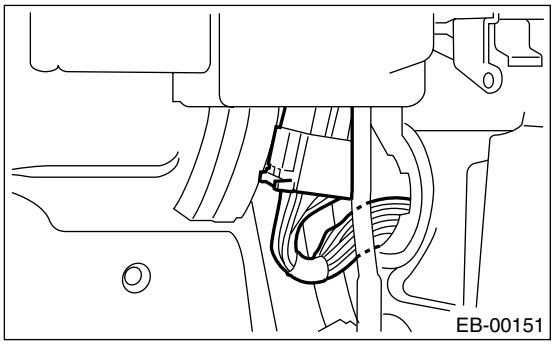

5) Put a wooden block on jack, and place the jack under the front door. Support the door with a jack to protect it from damage.

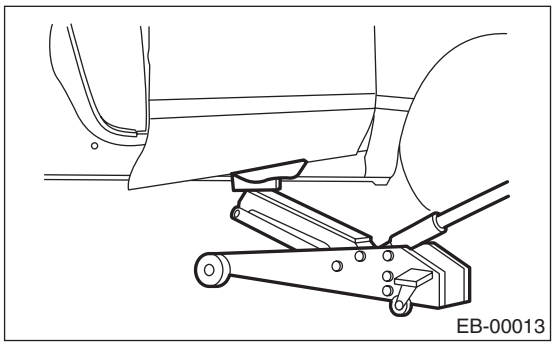

6) Remove the bolt from door checker.

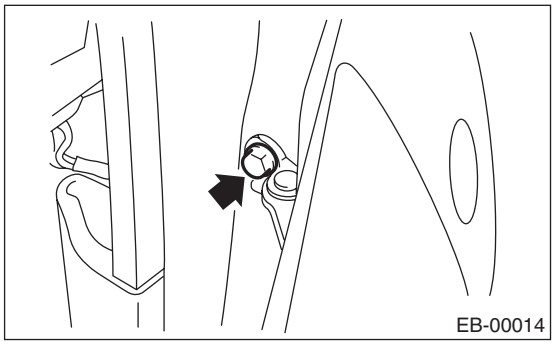

7) Remove the door-side bolts for upper and lower hinges to remove front door panel.

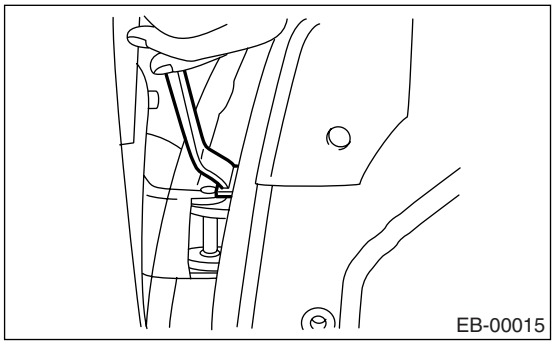

8) Remove the door hinge from vehicle.

B: INSTALLATION

1. FRONT DOOR PANEL

Install in the reverse order of removal.

Tightening torque:
Refer to "COMPONENT" of "General Description".
<Ref. to EB-8, FRONT DOOR PANEL, COMPONENT, General Description.>

2. FRONT DOOR ASSEMBLY

1) Put a wooden block on jack and place the front door on it.

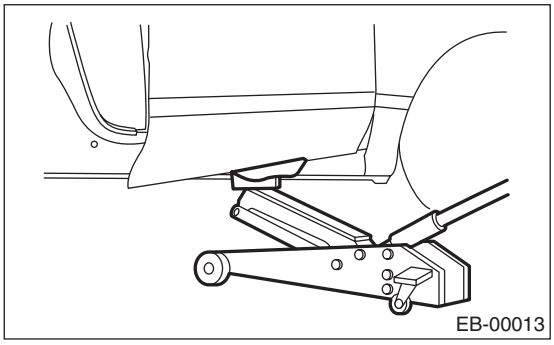

2) Apply grease to the sliding area of door hinges, and install the door hinge to vehicle.
3) Install the front door to upper hinge and lower hinge adjusting by jack.
4) Tighten the bolt of door checker.
5) Connect the door harness connector, and install the instrument panel lower cover.
6) Install the front pillar lower trim.

Tightening torque:
Refer to "COMPONENT" of "General Description".
<Ref. to EB-8, FRONT DOOR PANEL, COMPONENT, General Description.>

C: ADJUSTMENT

1) Using the ST, loosen the body-side bolts of upper and lower hinges to align the front door panel longitudinal and lateral position.
ST 925610000 DOOR HINGE WRENCH

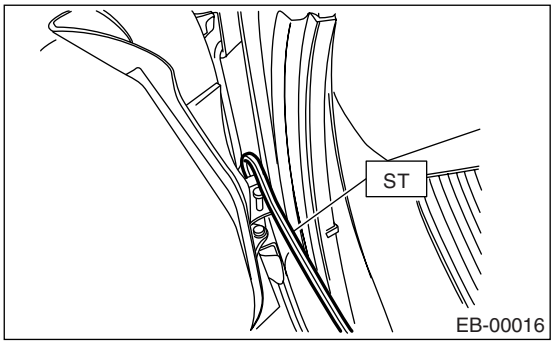

2) Loosen the screws (A), and tap the striker (B) using plastic hammer to adjust the gap between rear end surface of front door panel and front end surface of rear door.

CAUTION:
Do not use an impact wrench. Welding area on the striker nut plate is easily broken.

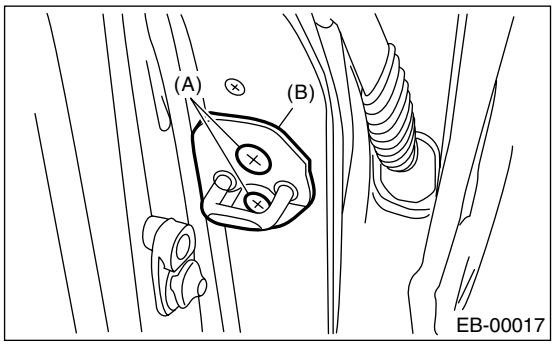

5. Front Sealing Cover

A: REMOVAL

1) Disconnect the ground cable from battery.
2) Remove the front door trim. <Ref. to EI-48, REMOVAL, Door Trim.>
3) Remove the front speaker. <Ref. to ET-6, REMOVAL, Front Speaker.>
4) Pull back the sealing cover.

NOTE:
• Carefully remove the butyl tape. Excessive force will easily break the cover.
• If cover is broken, replace it with a new one.

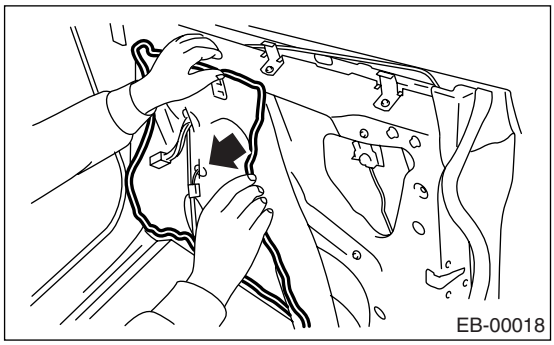

B: INSTALLATION

1) Install in the reverse order of removal.
2) When replacing the sealing cover, use butyl tape.
3) Press the butyl tape-applied area firmly to prevent any floating on surface.

Butyl tape:
3M 8626 or equivalent

NOTE:
• Apply a uniform bead of butyl tape.
• Attach the sealing cover, keeping it from becoming wrinkled.
• Breaks in the bead will allow water leakage and contamination.

C: INSPECTION

If the sealing cover is damaged, replace it with a new one.

6. Rear Door

A: REMOVAL

1. REAR DOOR PANEL

1) Disconnect the ground cable from battery.
2) Remove the rear door trim. <Ref. to EI-48, REMOVAL, Door Trim.>
3) Remove the rear speaker. <Ref. to ET-8, REMOVAL, Rear Speaker.>
4) Pull back the sealing cover. <Ref. to EB-24, REMOVAL, Rear Sealing Cover.>
5) Remove the rear door glass. <Ref. to GW-24, REMOVAL, Rear Door Glass.>
6) Remove the door sash and rear door regulator and motor assembly. <Ref. to GW-26, REMOVAL, Rear Regulator and Motor Assembly.>
7) Remove the rear door latch. <Ref. to SL-39, REMOVAL, Rear Door Latch & Door Lock Actuator Assembly.>
8) Remove the rear outer handle. <Ref. to SL-38, REMOVAL, Rear Outer Handle.>
9) Remove the screw to remove door trim bracket.

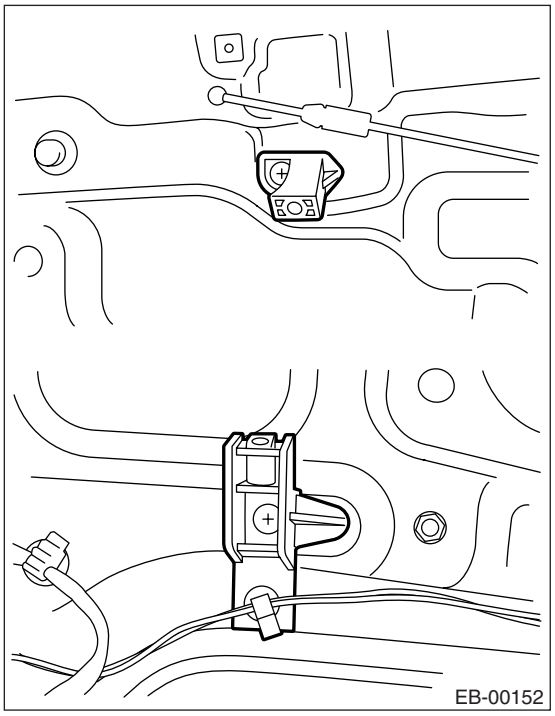

10) Remove the rear door weather strip.

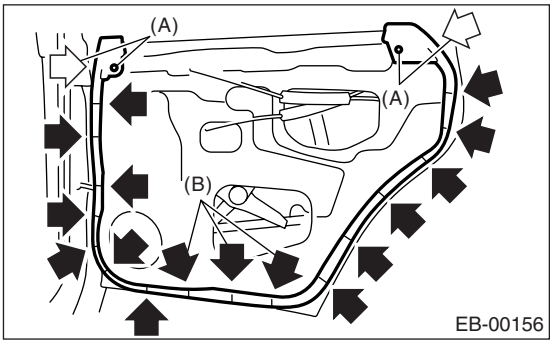

(A) Pin clip
(B) Weather strip clip

NOTE:
If the weather strip clip is removed with excessive force, the weather strip may be damaged. Be sure to use clip remover to remove.

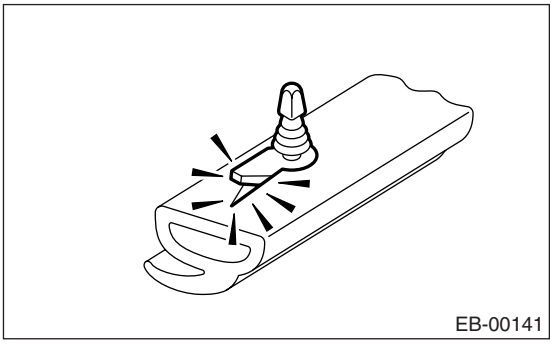

11) Remove the bolts and nuts to remove door checker.

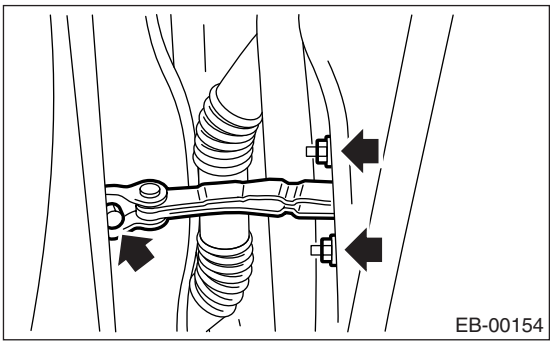

12) Remove the rear door. <Ref. to EB-21, REAR DOOR ASSEMBLY, REMOVAL, Rear Door.>

2. REAR DOOR ASSEMBLY

1) Disconnect the ground cable from battery.
2) Remove the center pillar lower trim. <Ref. to EI-60, REMOVAL, Lower Inner Trim.>

3) Remove the center pillar inner protector lower.

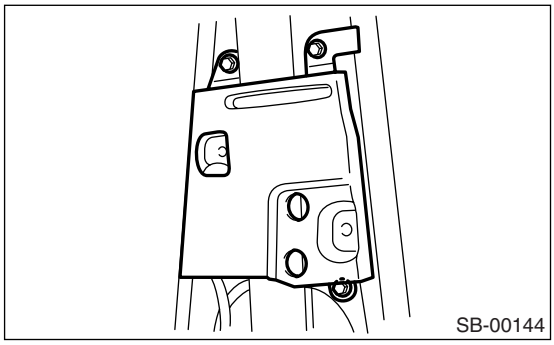

4) Remove the harness holder (A), and disconnect the door harness connector inside of pillar.

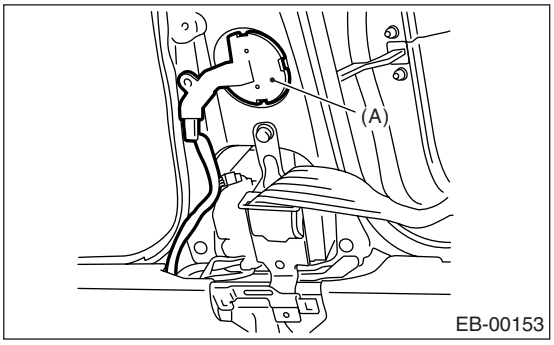

5) Put a wooden block on jack, and place the jack under the rear door. Support the rear door with the jack to protect it from damage.

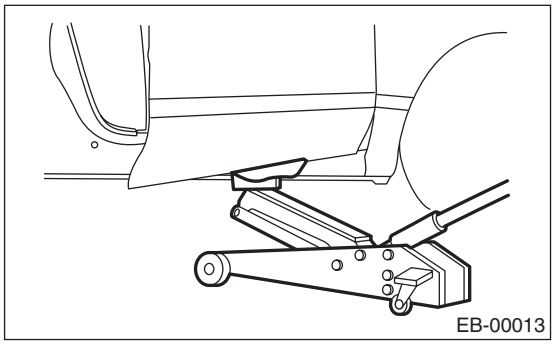

6) Remove the bolt from door checker.

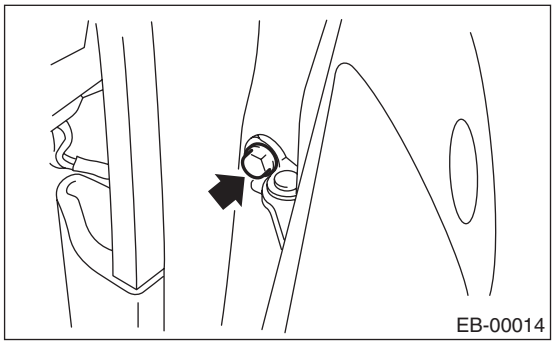

7) Remove the door-side bolts for upper and lower hinges to remove the rear door panel.

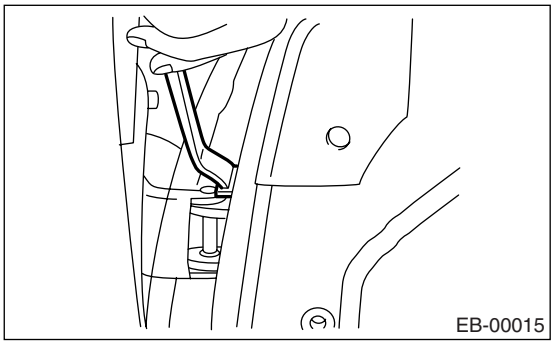

8) Remove the door hinge from vehicle.

B: INSTALLATION

1. REAR DOOR PANEL

Install in the reverse order of removal.

Tightening torque:
Refer to "COMPONENT" of "General Description".
<Ref. to EB-9, REAR DOOR PANEL, COMPONENT, General Description.>

2. REAR DOOR ASSEMBLY

1) Put a wooden block on jack, and place the rear door on it.

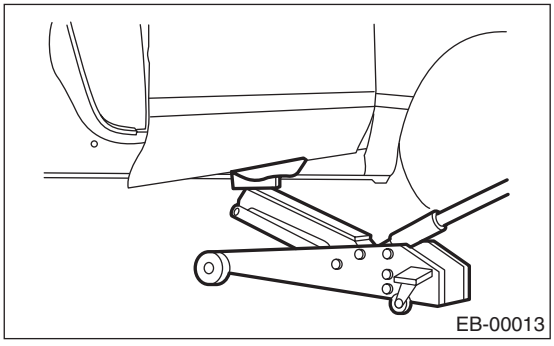

2) Apply grease to sliding area of the door hinges.
3) Install the rear door to upper hinge and lower hinge adjusting by jack.
4) Tighten the bolt of door checker.
5) Connect the door harness connector, and install the center pillar inner protector.
6) Install the center pillar lower trim.

Tightening torque:
Refer to "COMPONENT" of "General Description".
<Ref. to EB-9, REAR DOOR PANEL, COMPONENT, General Description.>

C: ADJUSTMENT

1) Open the rear door, loosen the door-side bolts of upper and lower hinges to align the rear door panel longitudinal and lateral position.

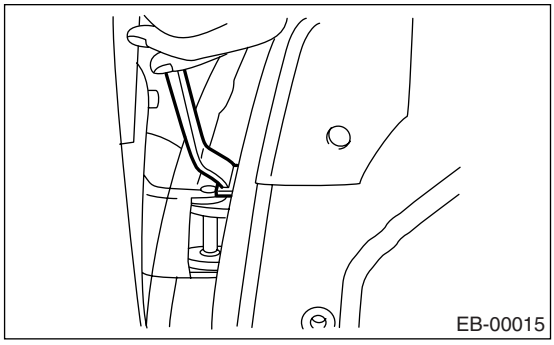

2) Loosen the screws (A), and tap the striker (B) using plastic hammer to adjust the gap between rear end surface of rear door panel and body surface.

CAUTION:
Do not use an impact wrench. Welding area on the striker nut plate is easily broken.

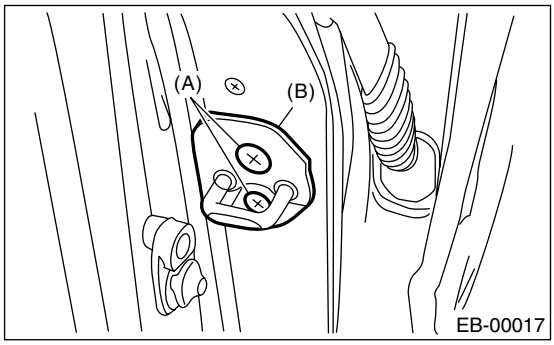

7. Rear Sealing Cover

A: REMOVAL

1) Disconnect the ground cable from battery.
2) Remove the rear door trim. <Ref. to EI-48, REMOVAL, Door Trim.>
3) Pull back the sealing cover.

NOTE:
• Carefully remove the butyl tape. Excessive force will easily break the cover.
• If cover is broken, replace it with a new one.

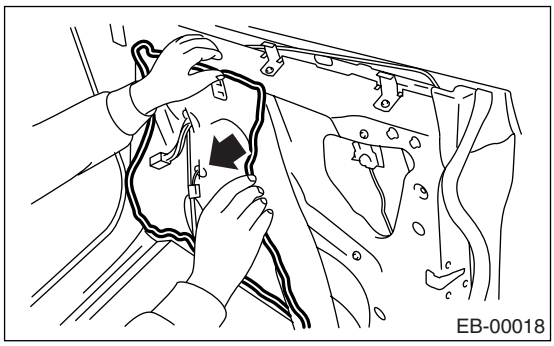

B: INSTALLATION

1) Install in the reverse order of removal.
2) When replacing the sealing cover, use butyl tape.
3) Press the butyl tape-applied area firmly to prevent any floating on surface.

Butyl tape:
3M 8626 or equivalent

NOTE:
• Apply a uniform bead of butyl tape.
• Attach the sealing cover, keeping it from becoming wrinkled.
• Breaks in the bead will allow water leakage and contamination.

C: INSPECTION

If the sealing cover is damaged, replace it with a new one.

8. Trunk Lid

A: REMOVAL

1. TORSION BAR

1) Open the trunk lid.
2) Using the ST, remove the torsion bar from hinge link.
ST 927780000 REMOVER

CAUTION:
During removal and installation, carefully handle the torsion bar, because it will generate reactive force.

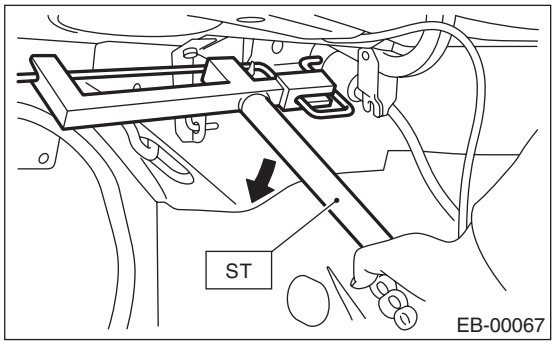

3) Remove the torsion bars RH/LH.

2. TRUNK LID ARM

1) Disconnect the ground cable from battery.
2) Open the trunk lid to remove the trunk lid trim, trunk lid arm cover and trunk room trim. <Ref. to EI-70, TRUNK ROOM TRIM, REMOVAL, Trunk Room Trim.>
3) Disconnect the trunk lid release cable. <Ref. to SL-43, REMOVAL, Trunk Lid Lock Assembly.>
4) Disconnect each connector, and remove the harness clip, etc.
5) Remove the trunk lid mounting bolts to remove the trunk lid panel from trunk lid arm.

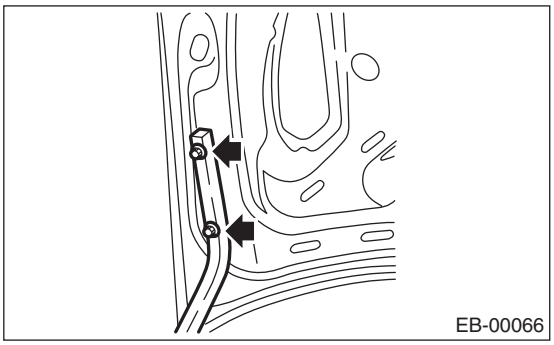

6) Remove the torsion bar from trunk lid hinge link. <Ref. to EB-25, TORSION BAR, REMOVAL, Trunk Lid.>
7) Remove the rear shelf trim. <Ref. to EI-69, REMOVAL, Rear Shelf Trim.>
8) Remove the bolts to remove trunk lid arm.

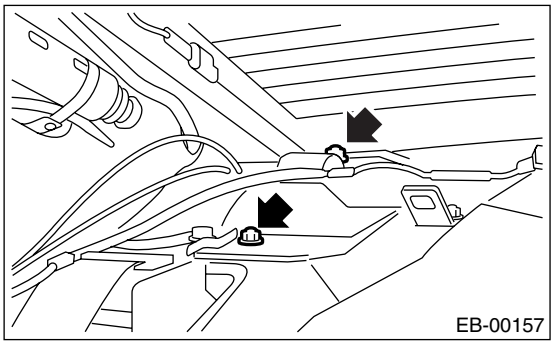

3. TRUNK LID PANEL

1) Disconnect the ground cable from battery.
2) Open the trunk lid to remove trunk lid trim and trunk lid arm cover. <Ref. to EI-70, TRUNK ROOM TRIM, REMOVAL, Trunk Room Trim.>
3) Disconnect the connector to remove trunk lid harness.
4) Remove the trunk lid lock assembly. <Ref. to SL-43, REMOVAL, Trunk Lid Lock Assembly.>
5) Remove the trunk lid garnish. <Ref. to EI-74, REMOVAL, Trunk Lid Garnish.>
6) Remove the license plate light cover.

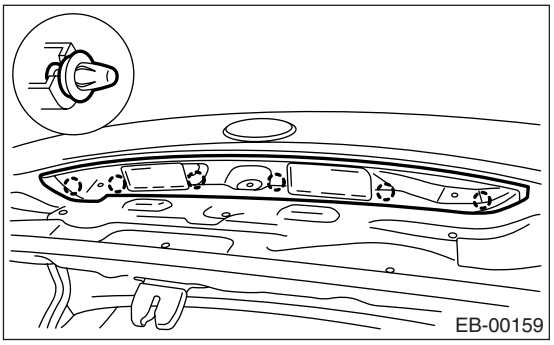

7) Remove the bolts to remove the trunk lid panel from trunk lid arm.

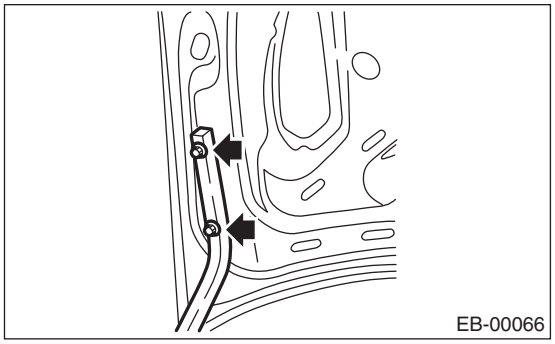

B: INSTALLATION

1. TORSION BAR

1) Install in the reverse order of removal.
2) Apply grease to the rotating area of hinges and of torsion bar.

2. TRUNK LID ARM

Install in the reverse order of removal.

Tightening torque:
17.6 N·m (1.8 kgf-m, 12.9 ft-lb)

3. TRUNK LID PANEL

1) Install in the reverse order of removal.
2) Install with attention to make uniform clearance around the trunk lid panel. For the dimension of clearance, refer to “SPECIFICATION” in “General Description”. <Ref. to EB-2, SPECIFICATION, General Description.>

Tightening torque:
14 N·m (1.43 kgf-m, 10.3 ft-lb)

9. Rear Gate

A: REMOVAL

1. REAR GATE PANEL

1) Disconnect the ground cable from battery.
2) Open the rear gate.
3) Remove the rear gate trim. <Ref. to EI-68, REMOVAL, Rear Gate Trim.>
4) Remove the rear gate garnish. <Ref. to EI-75, REMOVAL, Rear Gate Garnish.>
5) Remove the rear wiper arm. <Ref. to WW-17, REMOVAL, Rear Wiper Arm.>
6) Remove the rear wiper motor. <Ref. to WW-18, REMOVAL, Rear Wiper Motor.>
7) Remove the rear gate outer handle. <Ref. to SL-41, REMOVAL, Rear Gate Outer Handle.>
8) Remove the rear gate latch assembly. <Ref. to SL-42, REMOVAL, Rear Gate Latch Assembly.>
9) Detach the roof spoiler. <Ref. to EI-40, REMOVAL, Roof Spoiler.>
10) Remove the harness clip of each connector from rear gate panel.
11) Remove the weather strip clips (A), and remove the rear gate panel weather strip.

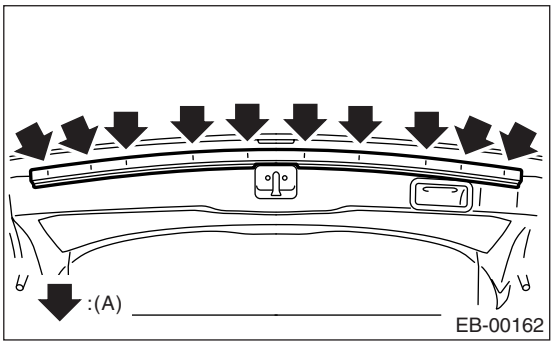

NOTE:
If the weather strip clip is removed with excessive force, the weather strip may be damaged. Be sure to use clip remover to remove.

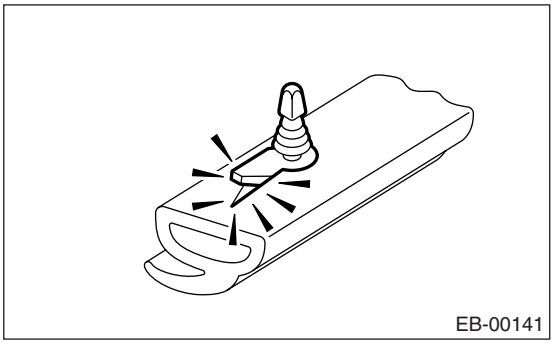

12) Remove the rubber duct (A) connection, and pull out the harness and washer hose from rear gate.

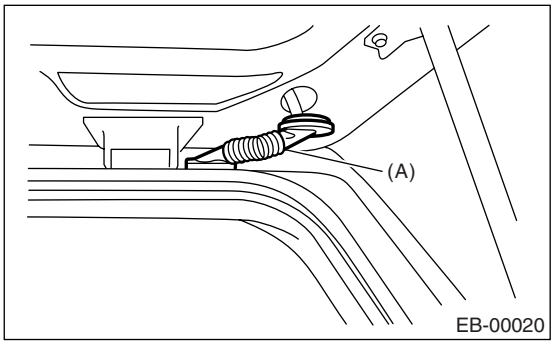

13) Before removing the rear gate damper stay, prevent the rear gate from closing using prop or the like.

CAUTION:
If the prop comes off, operators may get injured and vehicle may get damaged. Make sure to support the rear gate with secure material to prevent injury or damage.

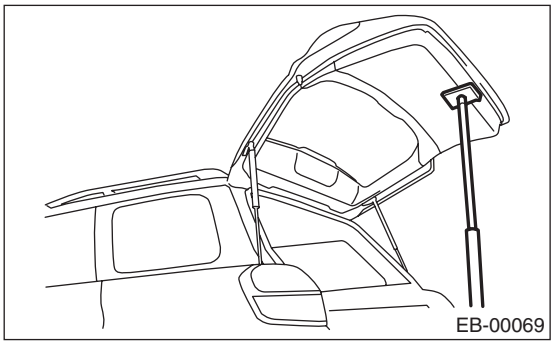

14) Remove the mounting bolts of rear gate damper stay.

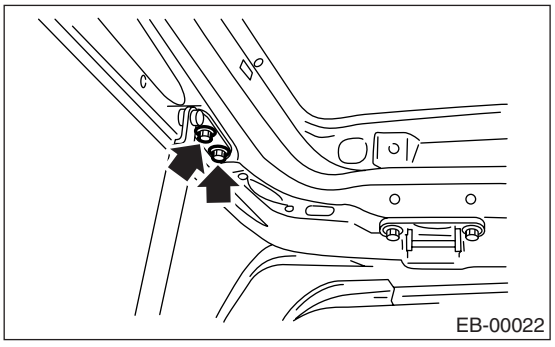

15) Remove the rear gate hinge bolts, and remove the rear gate panel.

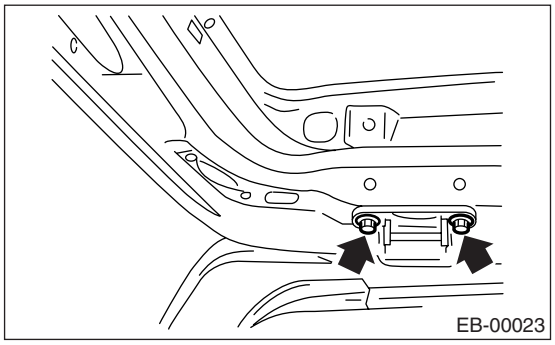
EB-00023

16) Remove the rear gate hinge from vehicle.

2. REAR GATE DAMPER STAY

CAUTION:
- **Do not damage piston rods and oil seals.**
- **Never disassemble cylinders; They contain gas.**

1) Open the rear gate.
2) Before removing the rear gate damper stay, prevent the rear gate from closing using prop or the like.

CAUTION:
If the prop comes off, operators may get injured and vehicle may get damaged. Make sure to support the rear gate with secure material to prevent injury or damage.

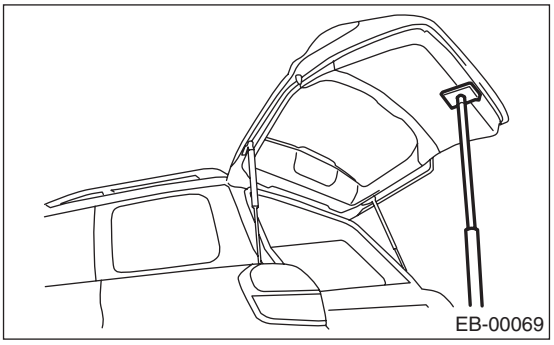
EB-00069

3) Remove the mounting bolts of rear gate damper stay.

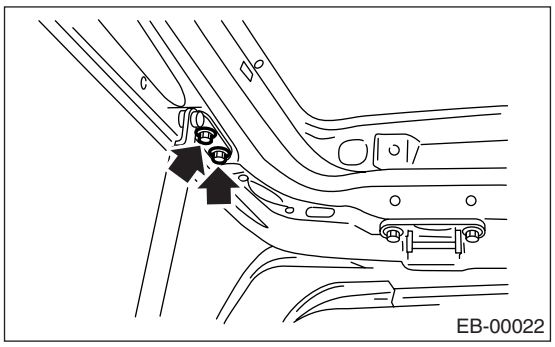
EB-00022

4) Remove the clips and then detach the rear combination light covers.

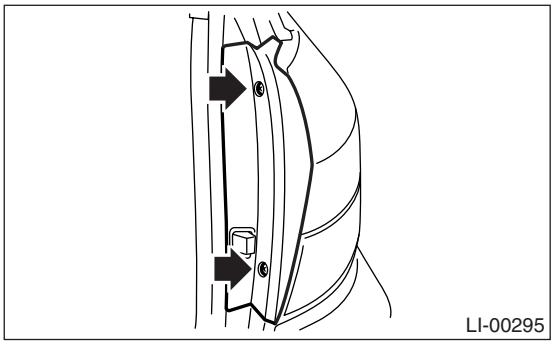
LI-00295

5) Remove the mounting bolt (A), and remove the damper stay.

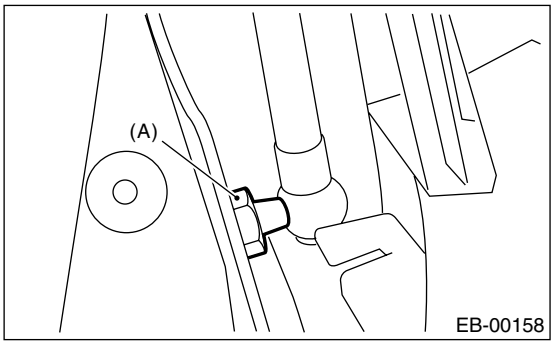

EB-00158

B: INSTALLATION

1. REAR GATE PANEL

1) Install in the reverse order of removal.
2) Install with attention to make uniform clearance between rear gate panel and body. For the dimension of clearance, refer to “SPECIFICATION” in “General Description”. <Ref. to EB-2, SPECIFICATION, General Description.>

Tightening torque:
25 N·m (2.6 kgf-m, 18.4 ft-lb)

2. REAR GATE DAMPER STAY

1) Prevent the rear gate from closing using prop or the like.

CAUTION:
If the prop comes off, operators may get injured and vehicle may get damaged. Make sure to support the rear gate with secure material to prevent injury or damage.

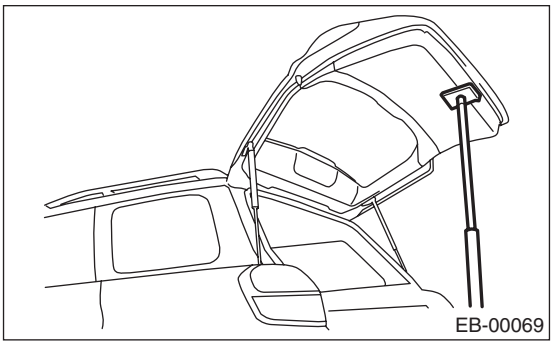

2) Install in the reverse order of removal.

Tightening torque:
Refer to "COMPONENT" of "General Description".
<Ref. to EB-11, REAR GATE PANEL, COMPONENT, General Description.>

C: DISPOSAL

1. REAR GATE DAMPER STAY

CAUTION:
The gas is colorless, odorless and harmless. However, gas pressure may spray cutting powder or oil. Be sure to wear dust-resistant goggles.

1) Cover with a vinyl sack as shown in the figure.

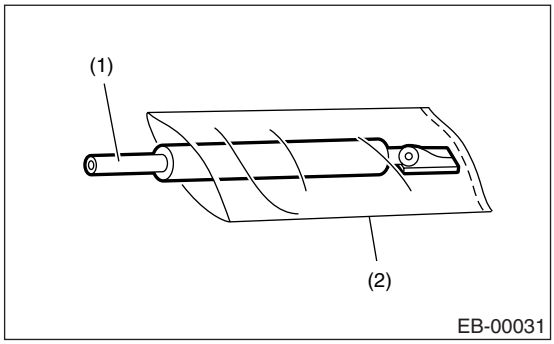

(1) Rear gate damper stay
(2) Vinyl sack

NOTE:
Prevent the vinyl sack from being caught by drill cutting edge.

2) Lift the body side slightly with piston rods fully extended, and secure the body side with vise.
Drill a hole in 2 to 3 mm (0.08 to 0.12 in) diameter at a point 10 to 200 mm (0.39 to 7.87 in) from door side, and bleed rear gate damper stay gas completely.

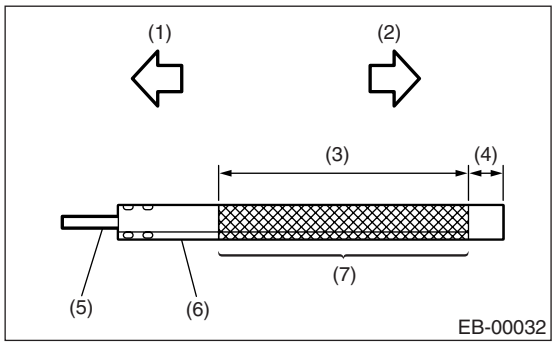

(1) Body side
(2) Door side
(3) 190 mm (7.48 in)
(4) 10 mm (0.39 in)
(5) Piston rod
(6) Cylinder
(7) Portion to be drilled

CRUISE CONTROL SYSTEM

CC

Page

1. General Description 2
2. Cruise Control Unit....4
3. Cruise Control Command Switch 5
4. Stop Light & Brake Switch....6
5. Clutch Switch 7
6. Inhibitor Switch....8
7. Neutral Position Switch 9

1. General Description

A: COMPONENT

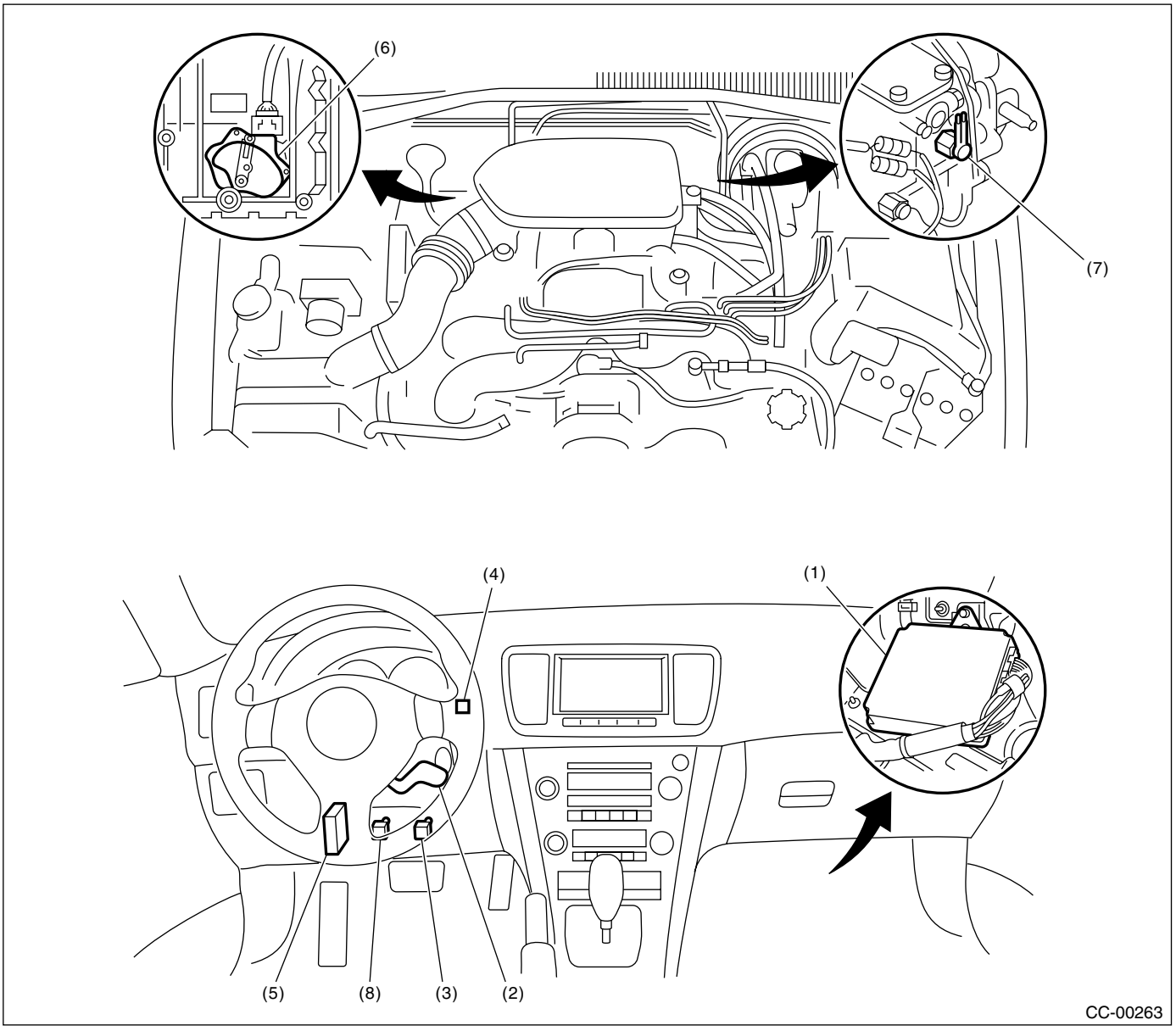

(1) Engine control module (ECM)
(2) Cruise control command switch
(3) Stop light and brake switch
(4) Cruise indicator light and cruise set indicator light
(5) Transmission control module (TCM) (AT model)
(6) Inhibitor switch (AT model)
(7) Neutral position switch (MT model)
(8) Clutch switch (MT model)

B: CAUTION

• Before disassembling or reassembling parts, always disconnect the battery ground cable from battery. When repairing the audio, control module, etc. which are provided with memory functions, record the memory contents before disconnecting the ground cable from battery. Otherwise, the memory will be erased.
• Reassemble the parts in the reverse order of disassembly unless otherwise indicated.
• Adjust the parts to specifications specified in this manual.
• Connect the connectors securely during reassembly.
• After reassembly, ensure functional parts operate properly.

C: PREPARATION TOOL

TOOL NAME	REMARKS
Circuit tester	Used for measuring resistance and voltage.

2. Cruise Control Unit

A: NOTE

The control of cruise control system is carried out in Engine control module (ECM).

B: REMOVAL

<Ref. to FU(H4SO)-35, REMOVAL, Engine Control Module (ECM).> <Ref. to FU(H4SO U5)-44, REMOVAL, Engine Control Module (ECM).> <Ref. to FU(H4DOTC)-39, REMOVAL, Engine Control Module (ECM).> <Ref. to FU(H6DO)-34, REMOVAL, Engine Control Module (ECM).>

C: INSTALLATION

<Ref. to FU(H4SO)-35, INSTALLATION, Engine Control Module (ECM).> <Ref. to FU(H4SO U5)-44, INSTALLATION, Engine Control Module (ECM).> <Ref. to FU(H4DOTC)-39, INSTALLATION, Engine Control Module (ECM).> <Ref. to FU(H6DO)-34, INSTALLATION, Engine Control Module (ECM).>

3. Cruise Control Command Switch

A: REMOVAL

WARNING:
Before servicing, be sure to read the notes in the "AB" section for proper handling of the driver's airbag module. <Ref. to AB-5, CAUTION, General Description.>

1) Set the front wheels in straight ahead position.
2) Turn the ignition switch to OFF.
3) Disconnect the ground cable from battery and wait for at least 20 seconds before starting work.
4) Using TORX® BIT T30 (Tamper resistant type), loosen the two TORX® bolts which secure driver's airbag module.

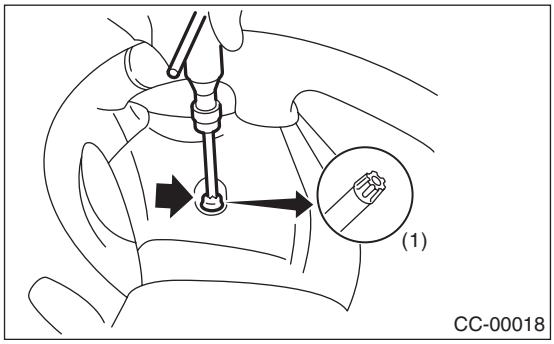

(1) TORX® BIT T30

5) Disconnect the airbag module connector on back of the airbag module.
6) Remove the steering wheel. <Ref. to PS-14, REMOVAL, Steering Wheel.>
7) Remove the four screws to remove the lower cover from steering wheel.

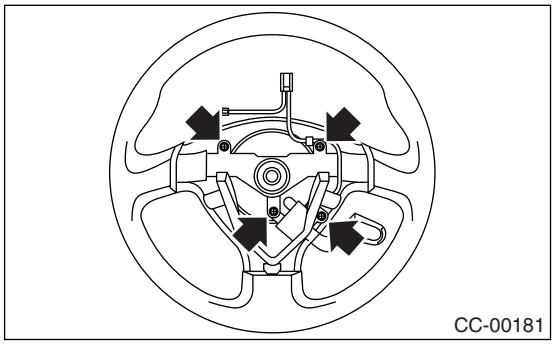

8) Remove one screw to remove the cruise control command switch from lower cover.

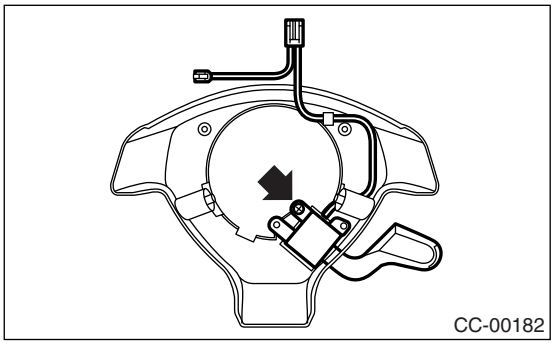

B: INSTALLATION

Install in the reverse order of removal.

C: INSPECTION

Measure the cruise control command switch resistance.

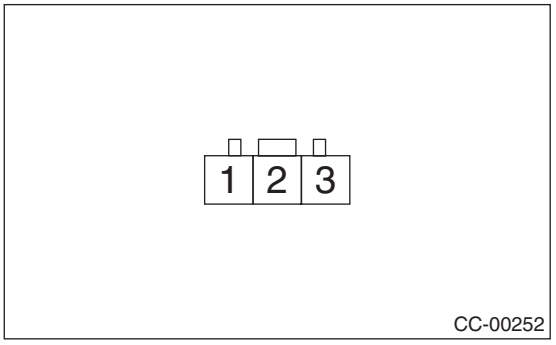

Switch	Area	Terminal No.	Standard
CANCEL SET/COAST RESUME/ ACCEL	ALL OFF	2 and 3	Approx. 4 kΩ
CANCEL	ON	2 and 3	Less than 1 Ω
SET/COAST	ON	2 and 3	Approx. 250 Ω
RESUME/ ACCEL	ON	2 and 3	Approx. 1500 Ω
MAIN	OFF	1 and 2	More than 1 MΩ
	ON	1 and 2	Less than 1 Ω

If NG, replace the cruise control command switch.

4. Stop Light & Brake Switch

A: REMOVAL

1) Disconnect the ground cable from battery.
2) Disconnect the connector from stop light and brake switch, and then remove the switch. <Ref. to BR-41, REMOVAL, Stop Light Switch.>

B: INSTALLATION

Install in the reverse order of removal.

C: INSPECTION

Measure the resistance of brake switch (A) and stop light switch (B).

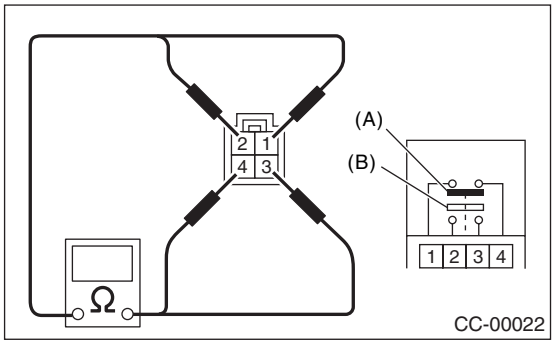

Switch	Pedal	Terminal No.	Standard
Brake	Released	1 and 4	Less than 1 Ω
	Depressed	1 and 4	More than 1 MΩ
Stop Light	Released	2 and 3	More than 1 MΩ
	Depressed	2 and 3	Less than 1 Ω

If NG, replace the stop light and brake switch.

5. Clutch Switch

A: REMOVAL

1) Disconnect the ground cable from battery.
2) Disconnect the connector from clutch switch, and then remove the switch. <Ref. to CL-21, DISASSEMBLY, Clutch Pedal.>

B: INSTALLATION

Install in the reverse order of removal.

C: INSPECTION

Measure the clutch switch resistance.

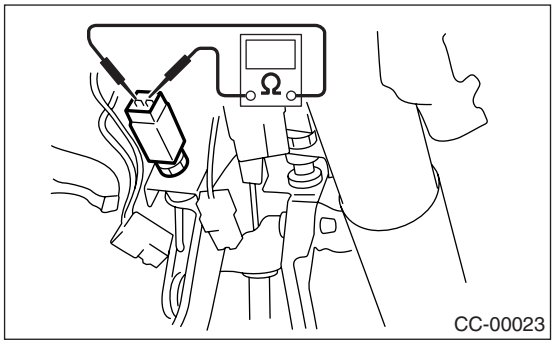

Switch	Pedal	Terminal No.	Standard
Clutch	Released	1 and 2	Less than 1 Ω
	Depressed	1 and 2	More than 1 MΩ

If NG, replace the clutch switch.

6. Inhibitor Switch

A: REMOVAL

1) Disconnect the ground cable from battery.
2) Disconnect the connector from inhibitor switch, and then remove the switch. <Ref. to 4AT-48, REMOVAL, Inhibitor Switch.>

B: INSTALLATION

Install in the reverse order of removal.

C: INSPECTION

Measure the inhibitor switch resistance.

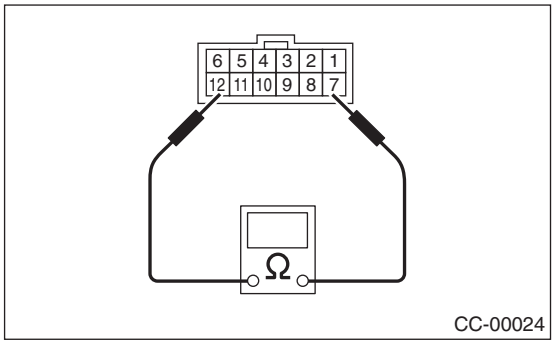

Selector lever position	Terminal No.	Standard
P	7 and 12	Less than 1 Ω
N		Less than 1 Ω
Except P and N		More than 1 MΩ

If NG, replace the inhibitor switch.

7. Neutral Position Switch

A: REMOVAL

1) Disconnect the ground cable from battery.
2) Disconnect the connector from neutral position switch, and then remove the switch. <Ref. to 5MT-34, BACK-UP LIGHT SWITCH AND NEUTRAL POSITION SWITCH, REMOVAL, Switches and Harness.>

B: INSTALLATION

Install in the reverse order of removal.

C: INSPECTION

Measure the neutral position switch resistance.

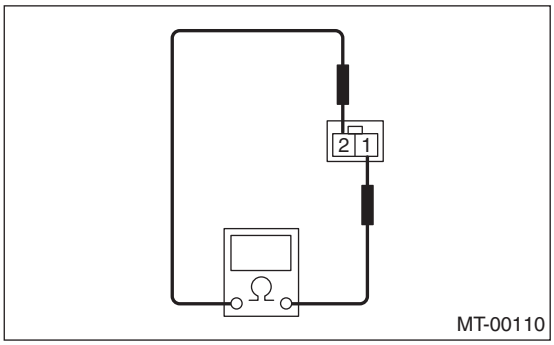

Gear shift position	Terminal No.	Standard
Neutral position	1 and 2	Less than 1 Ω
Other positions		More than 1 MΩ

If NG, replace the neutral position switch.

CRUISE CONTROL SYSTEM (DIAGNOSTICS)

CC(ETC)(diag)

Page

1. Basic Diagnostic Procedure 2
2. General Description 4
3. Electrical Component Location 5
4. Engine Control Module (ECM) I/O Signal 6
5. Subaru Select Monitor....8
6. Diagnostics with Phenomenon....10
7. List of Diagnostic Trouble Code (DTC) 12
8. Diagnostic Procedure with Diagnostic Trouble Code (DTC) 15

1. Basic Diagnostic Procedure

A: PROCEDURE

	Step	Check	Yes	No
1	**CHECK MALFUNCTION INDICATOR LIGHT.** Ensure the malfunction indicator light illuminates.	Does the malfunction indicator light illuminate?	Go to step **5.**	Go to step **2.**
2	**CHECK CRUISE INDICATOR LIGHT.** Ensure the cruise indicator light blinks.	Does the cruise indicator light blink?	Go to step **5.**	Go to step **3.**
3	**CHECK CRUISE CONTROL MAIN SWITCH OPERATION.** Check the cruise control main switch operation. (Ensure the cruise indicator light illuminates.)	Is the cruise control main switch turned on? (Does the cruise indicator light illuminate?)	Go to step **4.**	Go to phenomenon 1. <Ref. to CC(ETC)(diag)-10, DIAGNOSTIC PROCEDURE WITH PHENOMENON, Diagnostics with Phenomenon.>
4	**CHECK CRUISE CONTROL SET OPERATION.** Check the cruise control set operation.	Can the cruise control be set while driving at more than 40 km/h (25 MPH)?	Go to step **6.**	Go to step **5.**
5	**PERFORM CRUISE CANCEL CONDITIONS DIAGNOSIS.** Perform the cruise cancel conditions diagnosis.	Is DTC displayed?	Go to “List of Diagnostic Trouble Code (DTC)”. <Ref. to CC(ETC)(diag)-12, List of Diagnostic Trouble Code (DTC).>	Go to phenomenon 2. <Ref. to CC(ETC)(diag)-10, DIAGNOSTIC PROCEDURE WITH PHENOMENON, Diagnostics with Phenomenon.>
6	**CHECK CRUISE SET INDICATOR LIGHT.** Ensure the cruise set indicator light illuminates.	Does the cruise set indicator light illuminate?	Go to step **7.**	Go to phenomenon 3. <Ref. to CC(ETC)(diag)-10, DIAGNOSTIC PROCEDURE WITH PHENOMENON, Diagnostics with Phenomenon.>
7	**CHECK VEHICLE SPEED IS HELD WITHIN SET SPEED.** Make sure the vehicle speed is held within set speed.	Is vehicle speed held within set speed ±3 km/h (±2 MPH)? (Make an inspection on a level road.)	Go to step **8.**	Go to phenomenon 4. <Ref. to CC(ETC)(diag)-10, DIAGNOSTIC PROCEDURE WITH PHENOMENON, Diagnostics with Phenomenon.>
8	**CHECK RESUME/ACCEL OPERATION.** Check the RESUME/ACCEL switch operation.	Does the vehicle speed increase or return to set speed after RESUME/ACCEL switch has been pressed?	Go to step **9.**	Go to phenomenon 5. <Ref. to CC(ETC)(diag)-10, DIAGNOSTIC PROCEDURE WITH PHENOMENON, Diagnostics with Phenomenon.>

	Step	Check	Yes	No
9	**CHECK SET/COAST OPERATION.** Check the SET/COAST switch operation.	Does the vehicle speed decrease after SET/COAST switch has been pressed?	Go to step **10.**	Go to phenomenon 6. <Ref. to CC(ETC)(diag)-10, DIAGNOSTIC PROCEDURE WITH PHENOMENON, Diagnostics with Phenomenon.>
10	**CHECK CANCEL OPERATION.** Check the CANCEL switch operation.	Is the cruise control released after CANCEL switch has been pressed?	Go to step **11.**	Go to phenomenon 7. <Ref. to CC(ETC)(diag)-10, DIAGNOSTIC PROCEDURE WITH PHENOMENON, Diagnostics with Phenomenon.>
11	**CHECK CRUISE CONTROL RELEASE OPERATION.** Check the cruise control release operation.	Is the cruise control released after brake pedal has been depressed?	Go to step **12.**	Go to phenomenon 8. <Ref. to CC(ETC)(diag)-10, DIAGNOSTIC PROCEDURE WITH PHENOMENON, Diagnostics with Phenomenon.>
12	**CHECK CRUISE CONTROL RELEASE OPERATION.** Check the cruise control release operation.	Is the cruise control released after shifting to the neutral position?	Go to step **13.**	Go to phenomenon 9. <Ref. to CC(ETC)(diag)-10, DIAGNOSTIC PROCEDURE WITH PHENOMENON, Diagnostics with Phenomenon.>
13	**CHECK CRUISE CONTROL RELEASE OPERATION.** Check the cruise control release operation.	Is the cruise control released after depressing the clutch pedal?	Finish the diagnosis.	Go to phenomenon 10. <Ref. to CC(ETC)(diag)-10, DIAGNOSTIC PROCEDURE WITH PHENOMENON, Diagnostics with Phenomenon.>

2. General Description

A: CAUTION

Airbag system wiring harness is routed near the cruise control command switch.

CAUTION:
• All airbag system wiring harnesses and connectors are yellow. Do not use the electrical test equipment on these circuits.
• Be careful not to damage the airbag system wiring harness when servicing the cruise control command switch.

B: PREPARATION TOOL

1. SPECIAL TOOL

ILLUSTRATION	TOOL NUMBER	DESCRIPTION	REMARKS
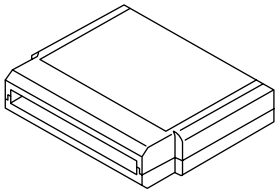 ST24082AA260	24082AA260	CARTRIDGE	Troubleshooting for electrical system
ST22771AA030	22771AA030	SUBARU SELECT MONITOR KIT	Troubleshooting for electrical system

2. GENERAL TOOL

TOOL NAME	REMARKS
Circuit tester	Used for measuring resistance, voltage and ampere.

C: INSPECTION

Measure the battery voltage and specific gravity of electrolyte.

Standard voltage:
12 V or more

Specific gravity:
More than 1.260

3. Electrical Component Location

A: LOCATION

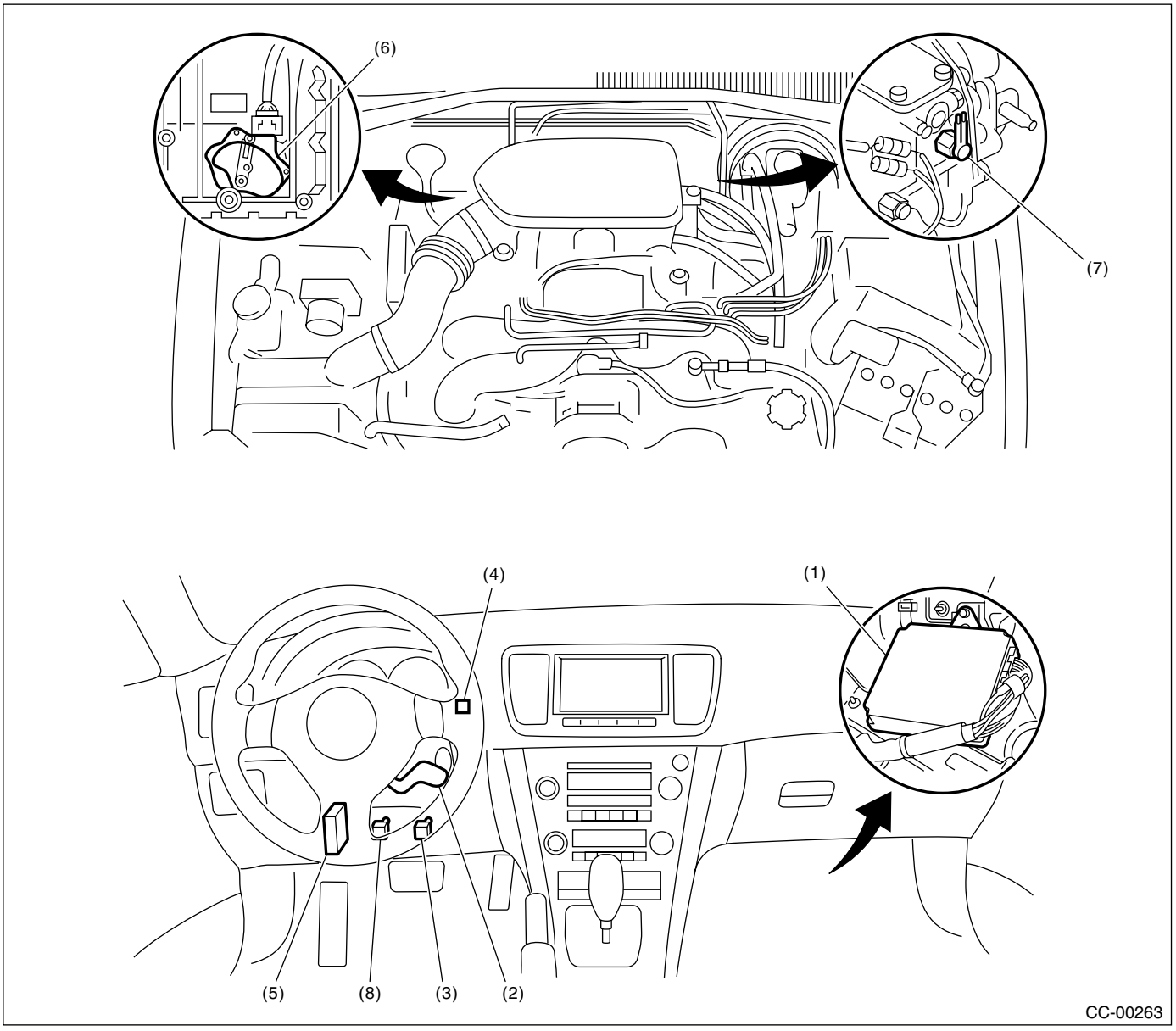

(1) Engine control module (ECM)
(2) Cruise control command switch
(3) Stop and brake switch
(4) Cruise indicator light and cruise set indicator light
(5) Transmission control module (TCM) (AT model)
(6) Inhibitor switch (AT model)
(7) Neutral position switch (MT model)
(8) Clutch switch (MT model)

4. Engine Control Module (ECM) I/O Signal

A: ELECTRICAL SPECIFICATION

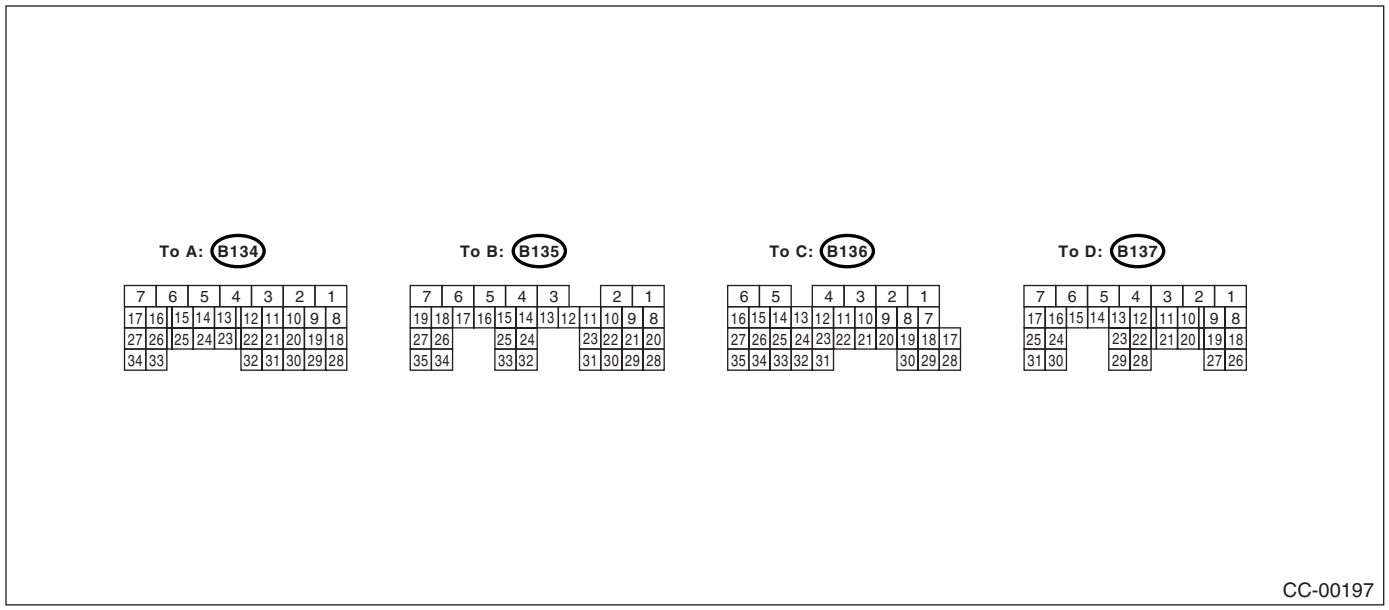

Content		Terminal No.	Measurement Condition and I/O Signal (Idling with ignition ON: Except cruise set light)
Main power supply	VB (CONTROL 1) VB (CONTROL 2)	B6 B5	• Battery voltage is present when the main power is turned ON. • “0 V” voltage is present when the main power is turned OFF.
Command Switch		C11	• “0 V” voltage is present when the command switch is turned to CANCEL position. • “Approx. 1 V” voltage is present when the command switch is turned to SET/COAST position. • “Approx. 3 V” voltage is present when the command switch is turned to RESUME/ACCEL position. • “Approx. 4 V” voltage is present when the command switch is released.
Brake switch 1 (Brake switch)		C9	• Battery voltage is present when the brake pedal is released. • “0 V” voltage is present when the brake pedal is depressed.
Brake switch 2 (Stop light switch)		C8	• Battery voltage is present when the brake pedal is depressed. • “0 V” voltage is present when the brake pedal is released.
Main switch		C7	• “0 V” voltage is present while the main switch is pressed or turned on. • Battery voltage is present when the main switch is turned OFF.
Ground	GND (CONTROL 1) GND (CONTROL 2)	D2 D1	—
Ignition switch		D14	• Battery voltage is present when the ignition switch is turned ON. • “0 V” voltage is present when the ignition switch is turned OFF.
Clutch switch (MT model)		SOHC model: C10 Turbo model: A1	• “0 V” voltage is present when the clutch pedal is depressed. • Battery voltage is present when the clutch pedal is released.
Neutral position switch (MT model)		D9	• “0 V” voltage is present when the shift lever is set in any position except neutral. • “Approx. 5 V” voltage is present when the shift lever is set in neutral position.
Neutral signal (AT model)		D9	• “Approx. 5 V” voltage (4AT model) or battery voltage (5AT model) is present when the shift lever is set in any position except “P” or “N”. • “0 V” voltage is present when the shift lever is set in “P” or “N” position.

B: WIRING DIAGRAM

<Ref. to WI-125, WIRING DIAGRAM, Cruise Control System.>

5. Subaru Select Monitor

A: OPERATION

1. GENERAL DESCRIPTION

For the on-board diagnosis function of the cruise control system, use Subaru Select Monitor.
The on-board diagnosis function operates under two categories, which are used depending on the type of problems;

1) Cruise Control Cancel Conditions Diagnosis:
   (1) This category of diagnosis requires actual vehicle driving in order to determine the cause, as when cruise speed is cancelled during driving although cruise cancel condition is not entered.
   (2) Cruise control memory in ECM stores the cancel condition (Code No.) which occurred during driving. When there are plural cancel conditions (Code No.), they are shown on the Subaru Select Monitor.

CAUTION:
• The cruise control memory stores not only the cruise "cancel" which occurred (although "cancel" operation is not entered by the driver), but also the "cancel" condition input by the driver.
• The content of memory is cleared when ignition switch or cruise control main switch is turned OFF.

2) Real-time Diagnosis:
Real-time diagnosis function is used to determine whether or not the input signal system is in good order, according to the signal emitted from switches, sensors, etc.
   (1) Vehicle cannot be driven at cruise speed when problem occurs in the cruise control system or its associated circuits.
   (2) Monitor the signal conditions from switches and sensors.

2. CRUISE CANCEL CONDITIONS DIAGNOSIS

1) Prepare the Subaru Select Monitor kit.

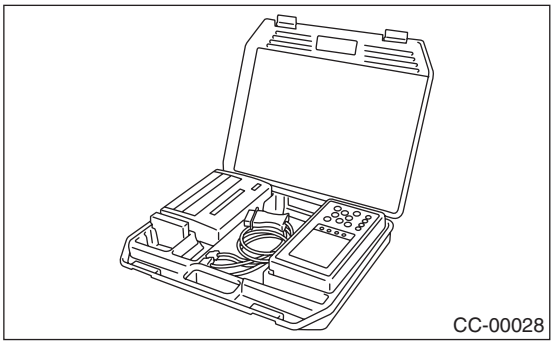
CC-00028

2) Connect the diagnosis cable to Subaru Select Monitor.

3) Insert the cartridge to Subaru Select Monitor. <Ref. to CC(ETC)(diag)-4, SPECIAL TOOL, PREPARATION TOOL, General Description.>

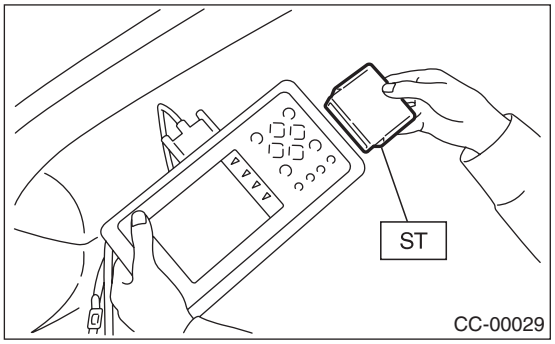

CC-00029

4) Connect the Subaru Select Monitor to data link connector.
   (1) Data link connector is located in the lower portion of instrument panel (on the driver's side).

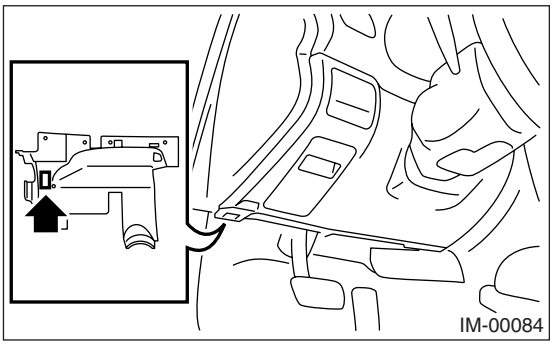
IM-00084

   (2) Connect the diagnosis cable to data link connector.

5) Start the engine and turn the cruise control main switch to ON.
6) Turn the Subaru Select Monitor switch to ON.

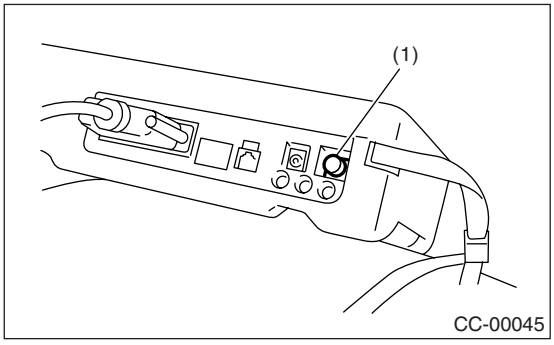

CC-00045

(1) Power switch

7) On the «Main Menu» display screen, select the {Each System Check} and press the [YES] key.
On the system selection display screen, select the {Engine} and press the [YES] key. Press the [YES] key after the information of engine type is displayed.
8) Drive vehicle at least 40 km/h (25 MPH) with cruise speed set.

9) If the cruise speed is canceled by itself (without doing any cancel operations), DTC will display on the screen when selecting the {Check Cancel Code} and pressing the [YES] key on the engine malfunction diagnosis display screen.

CAUTION:
• When performing diagnostics, observe the legal speed of the road.
• DTC will also displayed when cruise control cancel is effected by driver. Do not confuse.
• Put a co-worker in the vehicle to assist the diagnosis during driving.

NOTE:
DTC will be cleared by turning ignition switch or cruise control main switch to OFF.

3. REAL-TIME DIAGNOSIS

1) Connect the Subaru Select Monitor.
2) Turn the ignition switch and cruise control main switch to ON.
3) Turn the Subaru Select Monitor switch to ON.
4) On the «Main Menu» display screen, select the {Each System Check} and press the [YES] key.
5) On the «System Selection Menu» display screen, select the {Engine} and press the [YES] key.
6) Press the [YES] key after the information of engine type is displayed.
7) On the «Cruise Control Diagnosis» display screen, select the {Current Data Display/Save}, and then press the [YES] key.
8) Make sure that normal indication is displayed when operated as follows:
• Depress/release the brake pedal. (Stop light switch and brake switch turn ON.)
• Turn the main switch to ON.
• Turn the “CANCEL” switch to ON.
• Turn ON the “SET/COAST” switch.
• Turn ON the “RESUME/ACCEL” switch.
• Depress or release the clutch pedal.
• Place the shift lever in any position except neutral.

NOTE:
• For details concerning operation procedure, refer to “SUBARU SELECT MONITOR OPERATION MANUAL”.
• For DTC, refer to “List of Diagnostic Trouble Code (DTC)”. <Ref. to CC(ETC)(diag)-12, List of Diagnostic Trouble Code (DTC).>

6. Diagnostics with Phenomenon

A: DIAGNOSTIC PROCEDURE WITH PHENOMENON

Phenomenon		Checking item	Reference
1	Cruise control main switch is not turned to ON. (Cruise indicator light does not illuminate.)	(1) Check the cruise indicator light.	<Ref. to CC(ETC)(diag)-11, CHECK CRUISE INDICATOR LIGHT AND CRUISE SET INDICATOR LIGHT., Diagnostics with Phenomenon.>
		(2) Check the cruise control command switch.	<Ref. to CC(ETC)(diag)-15, DTC 11, 15, 21 AND 24 CRUISE CONTROL COMMAND SWITCH, Diagnostic Procedure with Diagnostic Trouble Code (DTC).>
2	Cruise control cannot be set.	(1) Check the cruise control command switch.	<Ref. to CC(ETC)(diag)-15, DTC 11, 15, 21 AND 24 CRUISE CONTROL COMMAND SWITCH, Diagnostic Procedure with Diagnostic Trouble Code (DTC).>
		(2) Check the stop light switch and brake switch.	<Ref. to CC(ETC)(diag)-17, DTC 12 AND 25 STOP LIGHT SWITCH AND BRAKE SWITCH, Diagnostic Procedure with Diagnostic Trouble Code (DTC).>
		(3) Check the clutch switch.	<Ref. to CC(ETC)(diag)-19, DTC 13 CLUTCH SWITCH, Diagnostic Procedure with Diagnostic Trouble Code (DTC).>
		(4) Check the neutral position switch.	<Ref. to CC(ETC)(diag)-21, DTC 14 NEUTRAL POSITION SWITCH, Diagnostic Procedure with Diagnostic Trouble Code (DTC).>
		(5) Check the vehicle speed sensor.	<Ref. to CC(ETC)(diag)-26, DTC 22 AND 32 VEHICLE SPEED SENSOR, Diagnostic Procedure with Diagnostic Trouble Code (DTC).>
3	Cruise set indicator light does not illuminate.	Check the cruise set indicator light.	<Ref. to CC(ETC)(diag)-11, CHECK CRUISE INDICATOR LIGHT AND CRUISE SET INDICATOR LIGHT., Diagnostics with Phenomenon.>
4	Vehicle speed is not held within set speed ±3 km/h (±2 MPH).	Inspect the vehicle speed sensor.	<Ref. to CC(ETC)(diag)-26, DTC 22 AND 32 VEHICLE SPEED SENSOR, Diagnostic Procedure with Diagnostic Trouble Code (DTC).>
5	Vehicle speed does not increase or does not return to set speed after RESUME/ ACCEL switch has been pressed.	Check the RESUME/ACCEL switch.	<Ref. to CC(ETC)(diag)-15, DTC 11, 15, 21 AND 24 CRUISE CONTROL COMMAND SWITCH, Diagnostic Procedure with Diagnostic Trouble Code (DTC).>
6	Vehicle speed does not decrease after SET/COAST switch has been pressed.	Check the SET/COAST switch.	<Ref. to CC(ETC)(diag)-15, DTC 11, 15, 21 AND 24 CRUISE CONTROL COMMAND SWITCH, Diagnostic Procedure with Diagnostic Trouble Code (DTC).>
7	Cruise control is not released after CANCEL switch has been pressed.	Check the CANCEL switch.	<Ref. to CC(ETC)(diag)-15, DTC 11, 15, 21 AND 24 CRUISE CONTROL COMMAND SWITCH, Diagnostic Procedure with Diagnostic Trouble Code (DTC).>
8	Cruise control is not released after brake pedal has been depressed.	Check the stop light switch and brake switch.	<Ref. to CC(ETC)(diag)-17, DTC 12 AND 25 STOP LIGHT SWITCH AND BRAKE SWITCH, Diagnostic Procedure with Diagnostic Trouble Code (DTC).>
9	Cruise control is not released after shifting to the neutral position.	Check the neutral position switch.	<Ref. to CC(ETC)(diag)-21, DTC 14 NEUTRAL POSITION SWITCH, Diagnostic Procedure with Diagnostic Trouble Code (DTC).>
10	Cruise control is not released after clutch pedal has been depressed.	Check the clutch switch.	<Ref. to CC(ETC)(diag)-19, DTC 13 CLUTCH SWITCH, Diagnostic Procedure with Diagnostic Trouble Code (DTC).>

B: CHECK CRUISE INDICATOR LIGHT AND CRUISE SET INDICATOR LIGHT.

TROUBLE SYMPTOM:

Cruise control can be set, but the cruise indicator light and cruise set indicator light do not illuminate.

	Step	Check	Yes	No
1	**CHECK CRUISE INDICATOR LIGHT AND CRUISE SET INDICATOR LIGHT.** 1) Perform the self-diagnosis for combination meter. <Ref. to IDI-3, SELF-DIAGNOSIS, INSPECTION, Combination Meter System.> 2) Check the cruise indicator light and cruise set indicator light illuminate.	Does the cruise indicator light and cruise set indicator light illuminate?	Go to step **2.**	Replace the meter case assembly. <Ref. to IDI-15, Combination Meter.>
2	**CHECK LAN COMMUNICATION CIRCUIT ERROR DISPLAY.** 1) Turn the ignition switch to ON again after completing self-diagnosis. 2) Check that communication error is displayed on the odo/trip meter in combination meter.	Is the error code “Er xx” displayed on odo/trip meter?	Check the LAN communication circuit. <Ref. to LAN(diag)-2, Basic Diagnostic Procedure.>	Replace the ECM. <Ref. to FU(H4SO)-35, Engine Control Module (ECM).> <Ref. to FU(H4SOU5)-44, Engine Control Module (ECM).> <Ref. to FU(H4DOTC)-39, Engine Control Module (ECM).> <Ref. to FU(H6DO)-34, Engine Control Module (ECM).>

7. List of Diagnostic Trouble Code (DTC)

A: LIST

DTC	Item	Contents of diagnosis	Reference
11	Main switch	Main switch of cruise control command switch is turned to OFF, and then the cruise control is released.	This DTC is indicated without operating the main switch. <Ref. to CC(ETC)(diag)-15, DTC 11, 15, 21 AND 24 CRUISE CONTROL COMMAND SWITCH, Diagnostic Procedure with Diagnostic Trouble Code (DTC).>
12	Stop and brake switch	Stop light switch or brake switch is turned to ON, and then the cruise control is released.	This DTC is indicated without depressing the brake pedal. <Ref. to CC(ETC)(diag)-17, DTC 12 AND 25 STOP LIGHT SWITCH AND BRAKE SWITCH, Diagnostic Procedure with Diagnostic Trouble Code (DTC).>
13	Clutch switch	Clutch switch is turned to ON, and then the cruise control is released.	This DTC is indicated without depressing the brake pedal. <Ref. to CC(ETC)(diag)-19, DTC 13 CLUTCH SWITCH, Diagnostic Procedure with Diagnostic Trouble Code (DTC).>
14	Neutral switch	Neutral position switch is turned to ON, and then the cruise control is released.	This DTC is indicated without shifting to neutral position. <Ref. to CC(ETC)(diag)-21, DTC 14 NEUTRAL POSITION SWITCH, Diagnostic Procedure with Diagnostic Trouble Code (DTC).>
15	Cancel switch	Cancel switch is turned to ON, and then the cruise control is released.	This DTC is indicated without operating the cancel switch. <Ref. to CC(ETC)(diag)-15, DTC 11, 15, 21 AND 24 CRUISE CONTROL COMMAND SWITCH, Diagnostic Procedure with Diagnostic Trouble Code (DTC).>
16	Ignition switch	Ignition switch is turned to OFF, and then the cruise control is released.	This DTC is indicated without operating the ignition switch. <Ref. to CC(ETC)(diag)-25, DTC 16 IGNITION SWITCH, Diagnostic Procedure with Diagnostic Trouble Code (DTC).>

DTC	Item	Contents of diagnosis	Reference
21	Cruise Control Switch Malfunction When Ignition Switch Is Turned To ON	When the ignition switch is turned to ON, each switch of cruise control command switch is already turned to ON.	This DTC is indicated without operating the main switch. <Ref. to CC(ETC)(diag)-15, DTC 11, 15, 21 AND 24 CRUISE CONTROL COMMAND SWITCH, Diagnostic Procedure with Diagnostic Trouble Code (DTC).>
22	Vehicle Speed Variation Malfunction	Malfunction of vehicle speed signal variation is detected.	<Ref. to CC(ETC)(diag)-26, DTC 22 AND 32 VEHICLE SPEED SENSOR, Diagnostic Procedure with Diagnostic Trouble Code (DTC).>
23	Engine Related Sensor Malfunction	Malfunction related to engine is detected.	<Ref. to EN(H4SO)(diag)-2, Basic Diagnostic Procedure.> <Ref. to EN(H4SO U5)(diag)-2, Basic Diagnostic Procedure.> <Ref. to EN(H4DOTC)(diag)-2, Basic Diagnostic Procedure.> <Ref. to EN(H6DO)(diag)-2, Basic Diagnostic Procedure.>
24	Cruise Control Related Switch Malfunction	Command switch malfunction is detected. (When the switch is being pressed ON for an abnormal period of time (about two minutes), open circuit is detected.)	This DTC is indicated with normal operation. <Ref. to CC(ETC)(diag)-15, DTC 11, 15, 21 AND 24 CRUISE CONTROL COMMAND SWITCH, Diagnostic Procedure with Diagnostic Trouble Code (DTC).>
25	Brake Switch Input Circuit Malfunction	Malfunction of brake switch input circuit in ECM is detected.	<Ref. to CC(ETC)(diag)-17, DTC 12 AND 25 STOP LIGHT SWITCH AND BRAKE SWITCH, Diagnostic Procedure with Diagnostic Trouble Code (DTC).>
26	Engine speed signal	• Abnormal increase of engine speed is detected. • Gear is placed in Neutral, 1st or Reverse positions.	Cruise in more than 2nd shift position.
32	Out of Vehicle Speed of Cruise Control Operation	• Controlled vehicle speed decreased under the limit during cruising. • Set operation was performed out of vehicle speed available for setting. • Resume operation was performed without memorized vehicle speed.	This DTC is displayed though the vehicle speed is increased to the speed available for cruise set and set operation was performed again. <Ref. to CC(ETC)(diag)-26, DTC 22 AND 32 VEHICLE SPEED SENSOR, Diagnostic Procedure with Diagnostic Trouble Code (DTC).>

DTC	Item	Contents of diagnosis	Reference
33	WAIT is prohibited after operating accelerator pedal.	Controlled vehicle speed increased above the limit during cruising.	This DTC is displayed when driving at higher speed than appropriate cruise control speed. In this case, lower the vehicle speed to the speed available for cruise set, and perform cruise set operation again.
34	Prohibited when accelerator pedal position large is continued.	The vehicle has been driven at higher speed than set vehicle speed for an abnormal period of time (about 10 minutes) during cruise driving.	This DTC is displayed when driving for a long period of time at higher speed than appropriate cruise set vehicle speed by operating accelerator pedal. In this case, release the cruise set.
35	Prohibited when vehicle speed feedback unavailable.	Set vehicle speed cannot keep because of some reasons (steep uphill, parking brake, abnormal decrease of engine output, etc.) during cruise driving.	This DTC is displayed when driving condition is not suitable for cruise control. Perform cruise set operation again after eliminating the estimated cause.
41	VDC/TCS operation	Vehicle dynamics control (VDC) or TCS is operated during cruise driving or cruise setting.	This DTC is displayed when driving condition is not suitable for cruise control. Perform cruise set operation again after eliminating the estimated cause.
42	High speed CAN communication malfunction	High speed CAN communication malfunction is detected during cruise driving or cruise setting.	<Ref. to LAN(diag)-2, Basic Diagnostic Procedure.>
43	ABS/VDC malfunction	ABS or vehicle dynamics control (VDC) system malfunction is detected during cruise driving or cruise setting.	<Ref. to ABS(diag)-2, Basic Diagnostic Procedure.> or <Ref. to VDC(diag)-2, Basic Diagnostic Procedure.>
44	Body integrated module malfunction	Body integrated module system malfunction is detected during cruise driving or cruise setting.	<Ref. to LAN(diag)-2, Basic Diagnostic Procedure.>
45	Meter malfunction	Combination meter malfunction is detected during cruise driving or cruise setting.	<Ref. to LAN(diag)-2, Basic Diagnostic Procedure.>

8. Diagnostic Procedure with Diagnostic Trouble Code (DTC)

A: DTC 11, 15, 21 AND 24 CRUISE CONTROL COMMAND SWITCH

TROUBLE SYMPTOM:

- Cruise control cannot be set. (Cancelled immediately.)
- Cruise control cannot be released.

WIRING DIAGRAM:

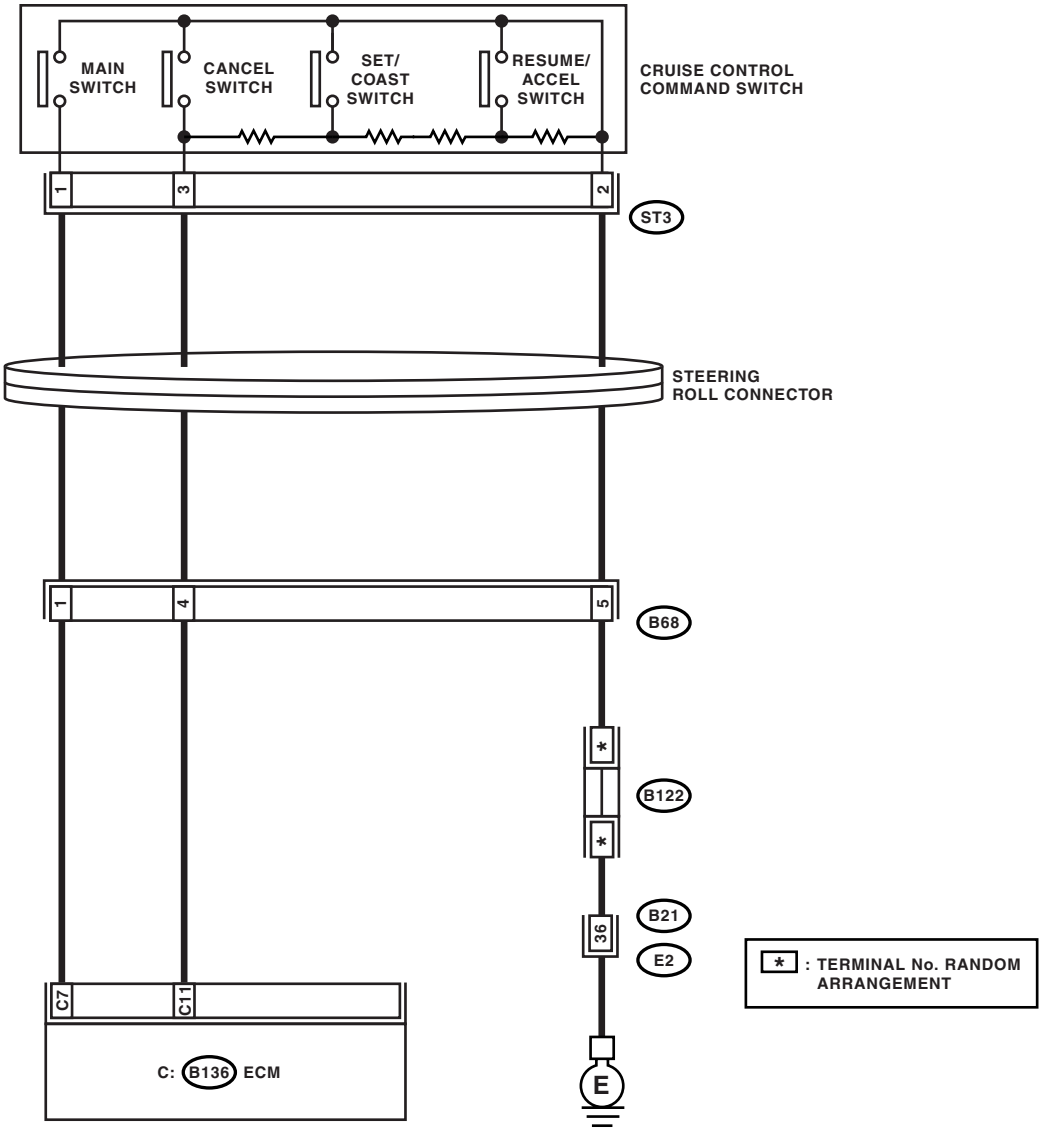

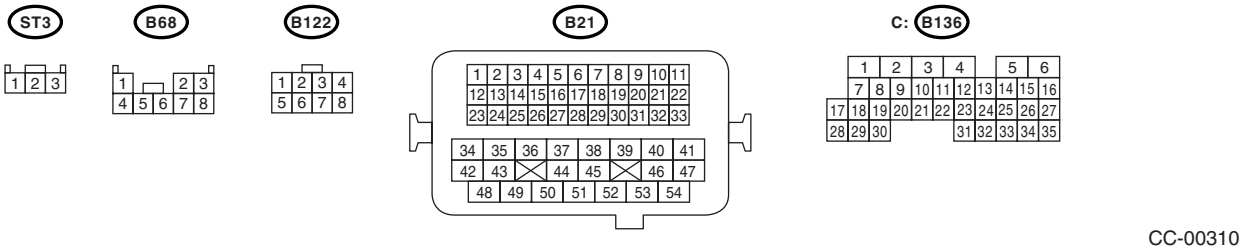

CC-00310

	Step	Check	Yes	No
1	**CHECK CRUISE CONTROL COMMAND SWITCH.** 1) Remove the driver's airbag module. <Ref. to AB-16, REMOVAL, Driver's Airbag Module.> 2) Disconnect the harness connector of cruise control command switch. 3) Turn the ignition switch to ON. 4) Measure the voltage between harness connector terminal and chassis ground. ***Connector & terminal*** ***(ST3) No. 1 (+) — Chassis ground (−):*** ***(ST3) No. 3 (+) — Chassis ground (−):***	Is the voltage more than 5 V?	Go to step **2.**	Check the harness for open or short circuit between cruise control command switch and ECM.
2	**INSPECTION FOR CANCEL SWITCH.** 1) Turn the ignition switch to OFF. 2) Remove the cruise control command switch. <Ref. to CC-5, REMOVAL, Cruise Control Command Switch.> 3) Measure the resistance between switch terminals when CANCEL switch is pressed and not pressed. ***Terminals*** ***No. 2 — No. 3:***	Is the resistance less than 1 Ω when CANCEL switch is pressed? Is the resistance approx. 4 kΩ when CANCEL switch is not pressed?	Go to step **3.**	Replace the cruise control command switch. <Ref. to CC-5, Cruise Control Command Switch.>
3	**CHECK SET/COAST SWITCH.** Measure the resistance between switch terminals when SET/COAST switch is pressed and not pressed. ***Terminals*** ***No. 2 — No. 3:***	Is the resistance approx. 250 Ω when SET/COAST switch is pressed? Is the resistance approx. 4 kΩ when SET/COAST switch is not pressed?	Go to step **4.**	Replace the cruise control command switch. <Ref. to CC-5, Cruise Control Command Switch.>
4	**CHECK RESUME/ACCEL SWITCH CIRCUIT.** Measure the resistance between switch terminals when RESUME/ACCEL switch is pressed and not pressed. ***Terminals*** ***No. 2 — No. 3:***	Is the resistance approx. 1500 Ω when RESUME/ACCEL switch is pressed? Is the resistance approx. 4 kΩ when RESUME/ACCEL switch is not pressed?	Replace the ECM. <Ref. to FU(H4SO)-35, Engine Control Module (ECM).> <Ref. to FU(H4SOU5)-44, Engine Control Module (ECM).> <Ref. to FU(H4DOTC)-39, Engine Control Module (ECM).> <Ref. to FU(H6DO)-34, Engine Control Module (ECM).>	Replace the cruise control command switch. <Ref. to CC-5, Cruise Control Command Switch.>

B: DTC 12 AND 25 STOP LIGHT SWITCH AND BRAKE SWITCH

TROUBLE SYMPTOM:

- Cruise control cannot be set.
- Cruise control cannot be released.

WIRING DIAGRAM:

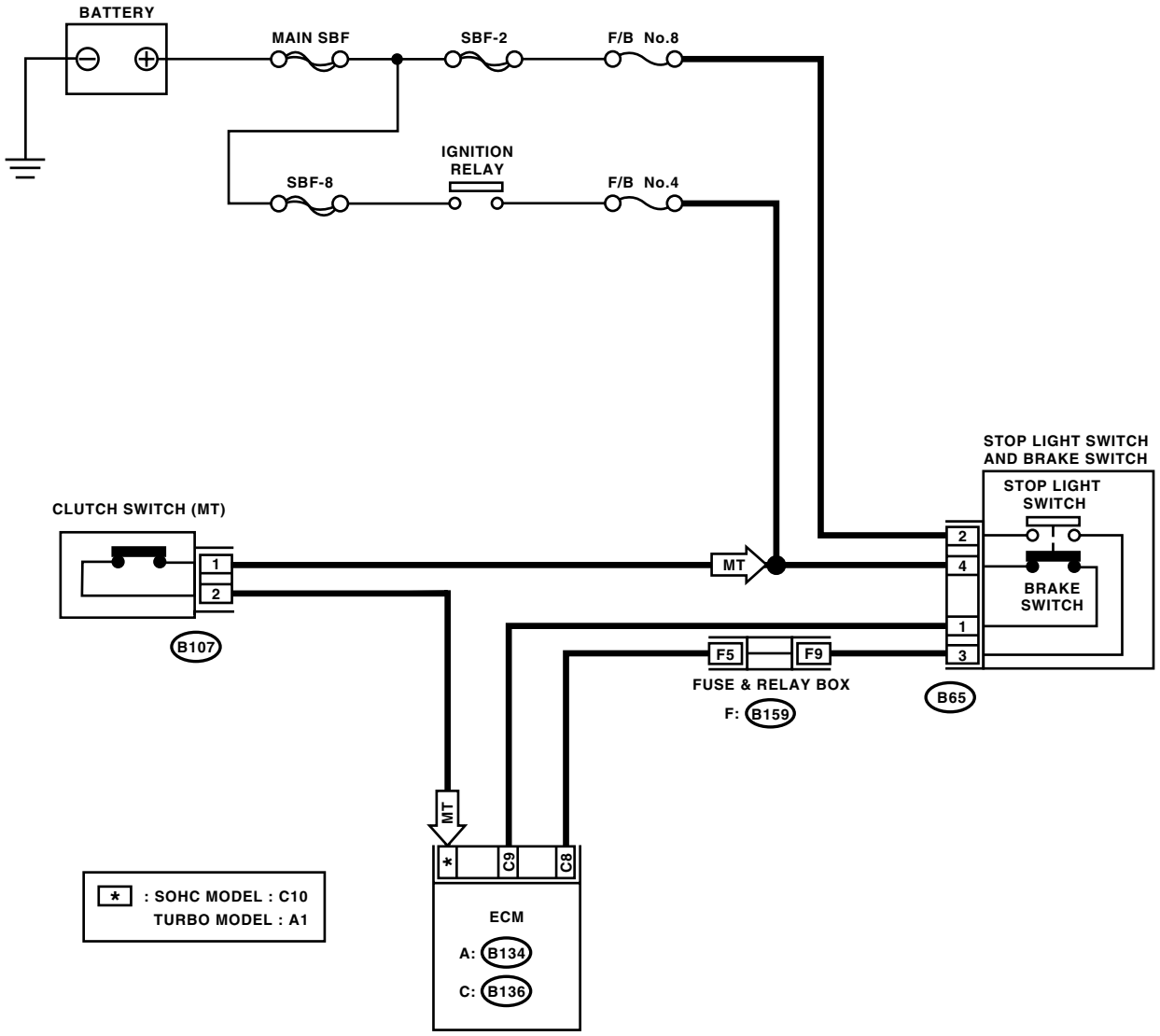

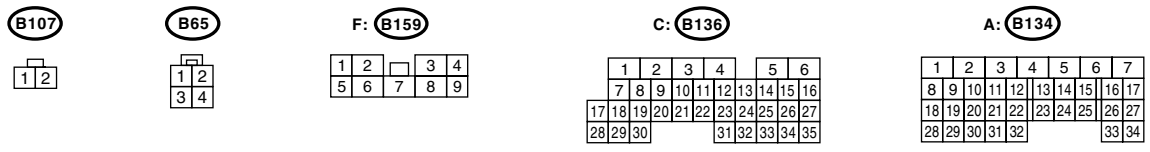

CC-00367

	Step	Check	Yes	No
1	**CHECK STOP LIGHT SWITCH AND BRAKE SWITCH CIRCUIT.** 1) Turn the ignition switch to OFF. 2) Disconnect the stop light switch and brake switch harness connector. 3) Turn the ignition switch to ON. 4) Measure the voltage between harness connector terminal and chassis ground. ***Connector & terminal*** ***(B65) No. 2 (+) — Chassis ground (–):***	Is the voltage more than 10 V?	Go to step **2.**	• Check fuse No. 8 (in fuse & relay box). • Check the harness for open or short between stop light/brake switch and fuse & relay box.
2	**CHECK STOP LIGHT SWITCH AND BRAKE SWITCH CIRCUIT.** Measure the voltage between harness connector terminal and chassis ground. ***Connector & terminal*** ***(B65) No. 4 (+) — Chassis ground (–):***	Is the voltage more than 10 V?	Go to step **3.**	• Check fuse No. 4 (in fuse & relay box). • Check the harness for open or short between stop light/brake switch and fuse & relay box.
3	**CHECK STOP LIGHT SWITCH AND BRAKE SWITCH CIRCUIT.** 1) Turn the ignition switch to OFF. 2) Disconnect the harness connector of ECM. 3) Measure the resistance between ECM harness connector terminal and stop light switch and brake switch harness connector terminal. ***Connector & terminal*** ***(B136) No. 8 — (B65) No. 3:*** ***(B136) No. 9 — (B65) No. 1:***	Is the resistance less than 10 Ω?	Go to step **4.**	Repair the harness.
4	**CHECK STOP LIGHT SWITCH AND BRAKE SWITCH.** Remove and check the stop light switch and brake switch. <Ref. to CC-6, Stop Light & Brake Switch.>	Are the stop light switch and brake switch OK?	Replace the ECM. <Ref. to FU(H4SO)-35, Engine Control Module (ECM).> <Ref. to FU(H4SO U5)-44, Engine Control Module (ECM).> <Ref. to FU(H4DOTC)-39, Engine Control Module (ECM).> <Ref. to FU(H6DO)-34, Engine Control Module (ECM).>	Replace the stop light switch and brake switch.

C: DTC 13 CLUTCH SWITCH

TROUBLE SYMPTOM:

- Cruise control cannot be set.
- Cruise control cannot be released.

WIRING DIAGRAM:

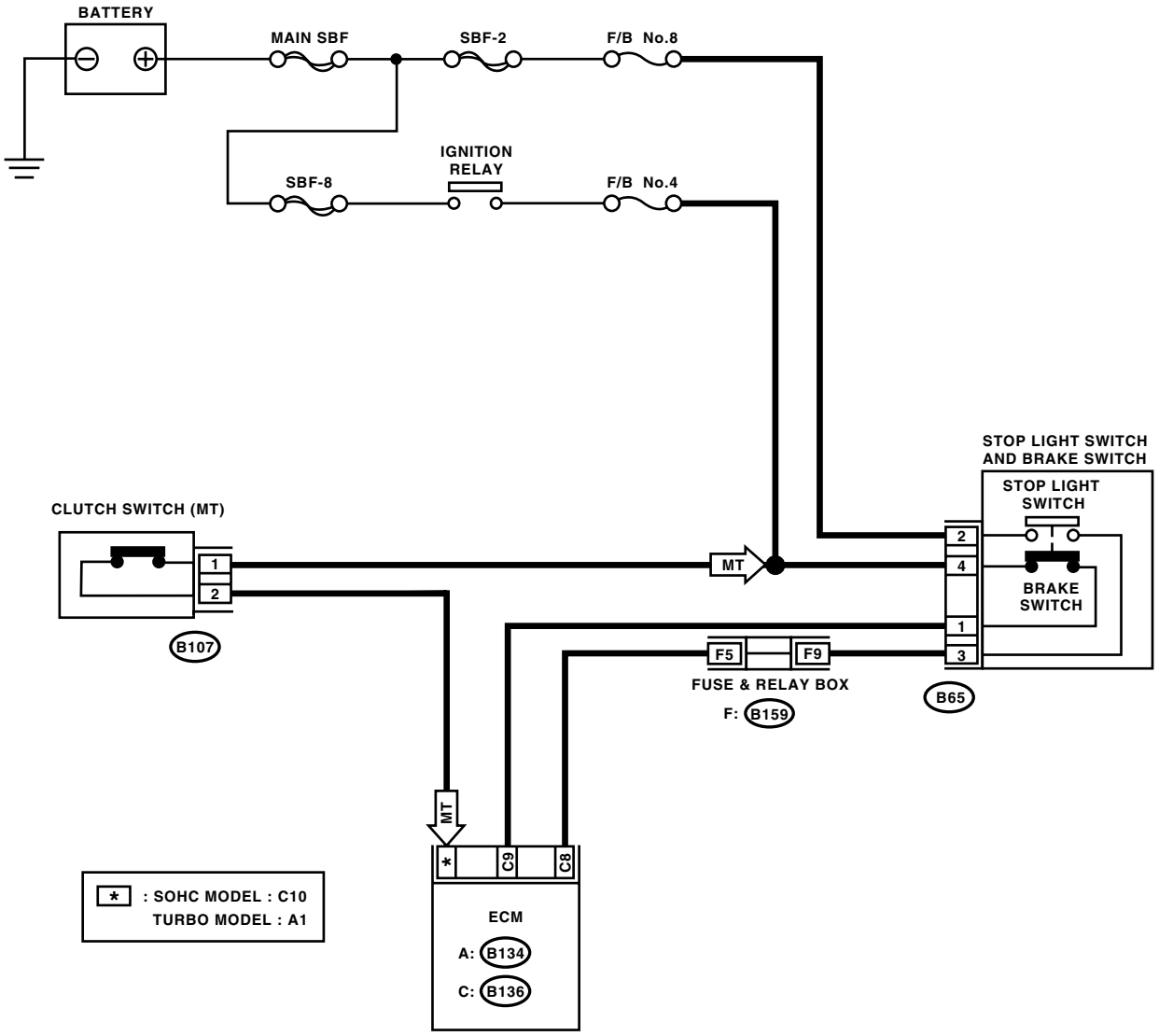

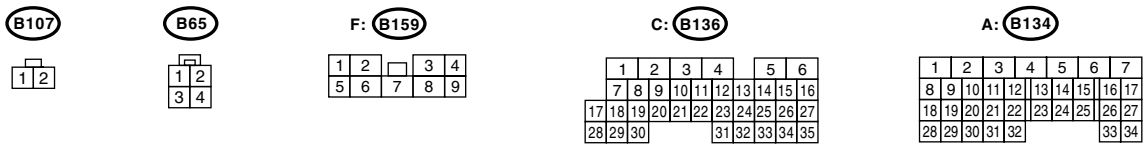

CC-00367

Diagnostic Procedure with Diagnostic Trouble Code (DTC)

	Step	Check	Yes	No
1	**CHECK CLUTCH SWITCH CIRCUIT.** 1) Turn the ignition switch to OFF. 2) Disconnect the clutch switch harness connector. 3) Turn the ignition switch to ON. 4) Measure the voltage between harness connector terminal and chassis ground. ***Connector & terminal*** ***(B107) No. 1 (+) — Chassis ground (−):***	Is the voltage more than 10 V?	Go to step **2.**	• Check fuse No. 4 (in fuse & relay box). • Check the harness for open or short between clutch switch and fuse & relay box.
2	**CHECK CLUTCH SWITCH CIRCUIT.** 1) Turn the ignition switch to OFF. 2) Disconnect the ECM harness connector. 3) Measure the resistance between clutch switch harness connector terminal and ECM harness connector terminal. ***Connector & terminal*** ***SOHC model:*** ***(B107) No. 2 — (B136) No. 10:*** ***Turbo model:*** ***(B107) No. 2 — (B134) No. 1:***	Is the resistance less than 10 Ω?	Go to step **3.**	Repair the harness.
3	**CHECK CLUTCH SWITCH.** Remove and check the clutch switch. <Ref. to CC-7, Clutch Switch.>	Is the clutch switch OK?	Replace the ECM. <Ref. to FU(H4SO)-35, Engine Control Module (ECM).> <Ref. to FU(H4SOU5)-44, Engine Control Module (ECM).> <Ref. to FU(H4DOTC)-39, Engine Control Module (ECM).>	Replace the clutch switch.

D: DTC 14 NEUTRAL POSITION SWITCH

TROUBLE SYMPTOM:

Cruise control cannot be set.

WIRING DIAGRAM:

- 5AT model

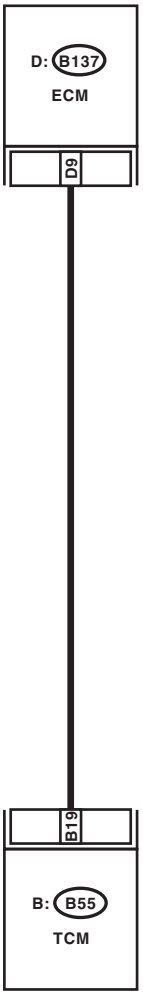

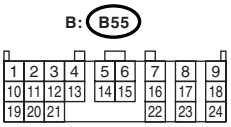

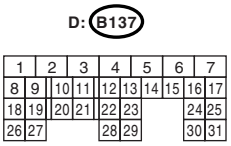

CC-00219

- MT and 4AT model

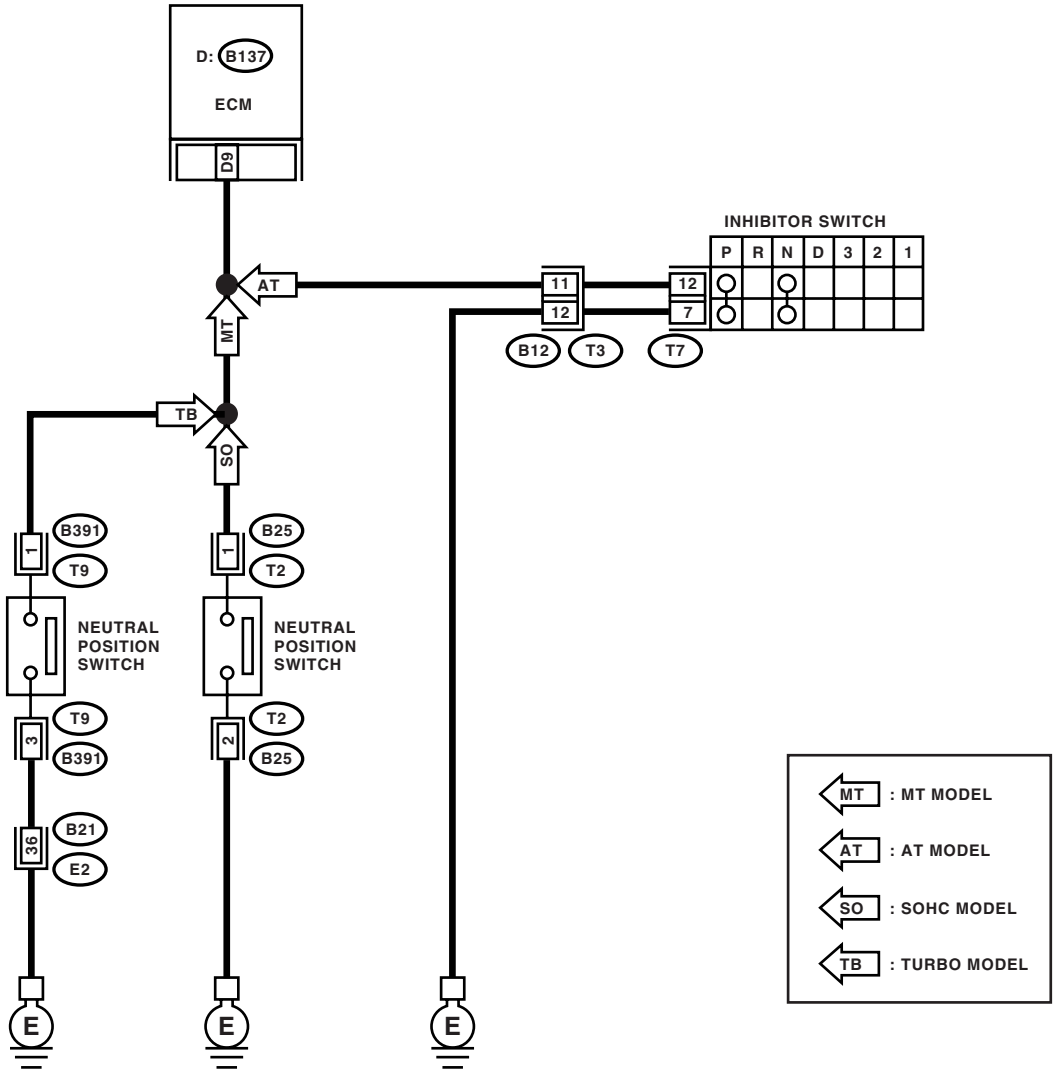

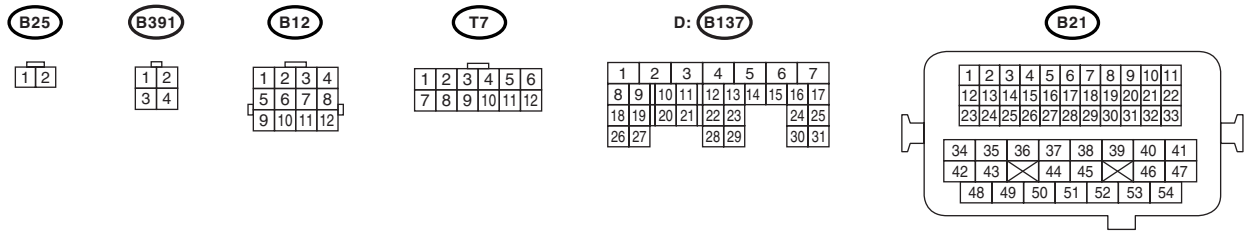

CC-00312

Step		Check	Yes	No
1	**CHECK VEHICLE FOR SPECIFICATION.** Check the vehicle for specification.	Is the transmission type 5AT?	Go to step **2.**	Go to step **5.**

	Step	Check	Yes	No
2	**CHECK NEUTRAL POSITION SWITCH.** 1) Connect the Subaru Select Monitor to data link connector. 2) Turn the ignition switch and Subaru Select Monitor switch to ON. 3) Select {Engine} from the main menu. 4) Then, select {Current Data Display & Save}. 5) Check the neutral position switch signal by shifting the select lever to "P" or "N" range.	Is ON displayed in the Subaru Select Monitor when the select lever is in "P" or "N" range? Or is OFF displayed in the Subaru Select Monitor when the select lever is in other than "P" or "N" range?	Replace the ECM. <Ref. to FU(H4DOTC)-39, Engine Control Module (ECM).> <Ref. to FU(H6DO)-34, Engine Control Module (ECM).>	Go to step **3.**
3	**CHECK TCM OUTPUT VOLTAGE.** 1) Turn the ignition switch to ON. 2) Measure the voltage between TCM harness connector terminal and chassis ground. ***Connector & terminal*** ***(B55) No. 19 (+) — Chassis ground (−):***	Is the voltage more than 10 V when the select lever is in other than "P" or "N" range? Or is the voltage less than 1 V when the select lever is in "P" or "N" range?	Go to step **4.**	Inspect the TCM. <Ref. to 5AT(diag)-2, Basic Diagnostic Procedure.>
4	**CHECK HARNESS BETWEEN TCM AND ECM.** 1) Turn the ignition switch to OFF. 2) Disconnect the harness connector from TCM and ECM. 3) Measure the resistance between TCM harness connector terminal and ECM harness connector terminal. ***Connector & terminal*** ***(B137) No. 9 — (B55) No. 19:***	Is the resistance less than 10 Ω?	Replace the ECM. <Ref. to FU(H4DOTC)-39, Engine Control Module (ECM).> <Ref. to FU(H6DO)-34, Engine Control Module (ECM).>	Repair the wiring harness.
5	**CHECK TRANSMISSION TYPE.**	Is the transmission type 4AT?	Go to step **6.**	Go to step **9.**
6	**CHECK INHIBITOR SWITCH CIRCUIT.** 1) Turn the ignition switch to OFF. 2) Disconnect the inhibitor switch harness connector. 3) Turn the ignition switch to ON. 4) Measure the voltage between harness connector terminal and chassis ground. ***Connector & terminal*** ***(T7) No. 12 (+) — Chassis ground (−):***	Is the voltage approx. 5 V?	Go to step **7.**	Check the harness for open or short between inhibitor switch and ECM.
7	**CHECK INHIBITOR SWITCH CIRCUIT.** 1) Turn the ignition switch to OFF. 2) Disconnect the starter motor harness connector. 3) Measure the resistance between inhibitor switch harness connector terminal and chassis ground. ***Connector & terminal*** ***(T7) No. 7 — Chassis ground:***	Is the resistance less than 10 Ω?	Go to step **8.**	Repair the harness.
8	**CHECK INHIBITOR SWITCH.** Remove and check the inhibitor switch. <Ref. to CC-8, Inhibitor Switch.>	Is the inhibitor switch OK?	Replace the ECM. <Ref. to FU(H4SO)-35, Engine Control Module (ECM).> <Ref. to FU(H4SOU5)-44, Engine Control Module (ECM).>	Replace the inhibitor switch.

	Step	Check	Yes	No
9	**CHECK NEUTRAL POSITION SWITCH CIRCUIT.** 1) Turn the ignition switch to OFF. 2) Disconnect the neutral position switch harness connector. 3) Turn the ignition switch to ON. 4) Measure the voltage between harness connector terminal and chassis ground. ***Connector & terminal*** ***SOHC model:*** ***(B25) No. 1 (+) — Chassis ground (–):*** ***Turbo model:*** ***(B391) No. 1 (+) — Chassis ground (–):***	Is the voltage approx. 5 V?	Go to step **10.**	Check the harness for open or short between neutral position switch and ECM.
10	**CHECK NEUTRAL POSITION SWITCH CIRCUIT.** 1) Turn the ignition switch to OFF. 2) Measure the resistance between neutral position switch harness connector terminal and chassis ground. ***Connector & terminal*** ***SOHC model:*** ***(B25) No. 2 — Chassis ground:*** ***Turbo model:*** ***(B391) No. 3 — Chassis ground:***	Is the resistance less than 10 Ω?	Go to step **11.**	Repair the harness.
11	**CHECK NEUTRAL POSITION SWITCH.** Remove and check the neutral position switch. <Ref. to CC-9, Neutral Position Switch.>	Is the neutral position switch OK?	Replace the ECM. <Ref. to FU(H4SO)-35, Engine Control Module (ECM).> <Ref. to FU(H4SOU5)-44, Engine Control Module (ECM).> <Ref. to FU(H4DOTC)-39, Engine Control Module (ECM).>	Replace the neutral position switch.

E: DTC 16 IGNITION SWITCH

TROUBLE SYMPTOM:

Cruise control cannot be set.

WIRING DIAGRAM:

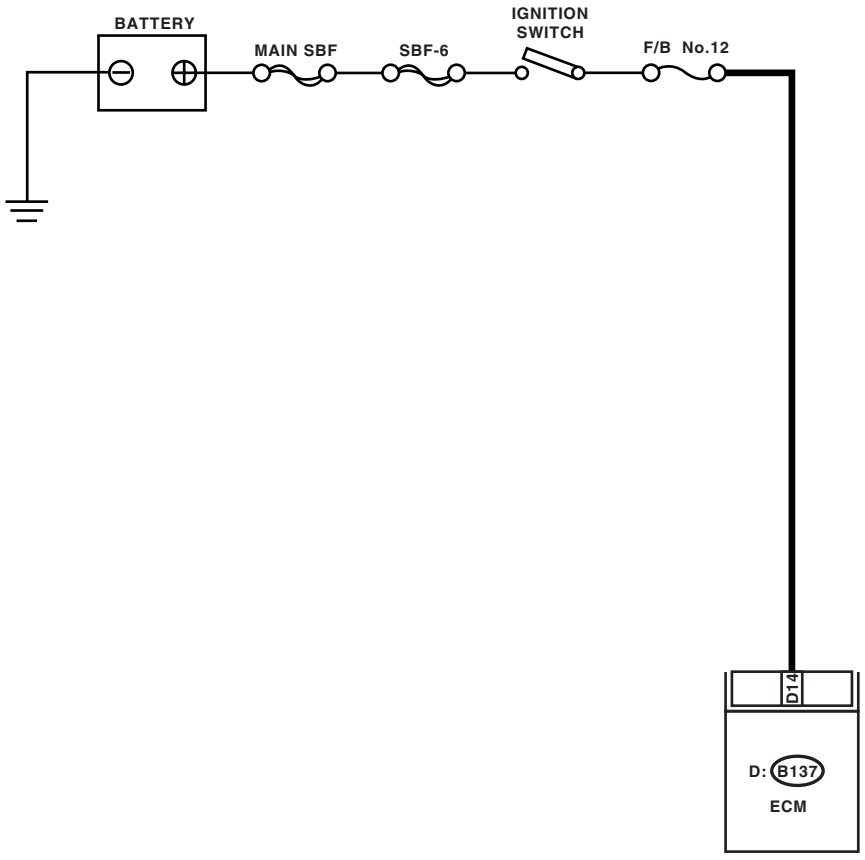

D: B137

1	2	3	4	5	6	7
8	9	10	11	12	13	14	15	16	17
18	19	20	21	22	23	24	25
26	27	28	29	30	31

CC-00368

	Step	Check	Yes	No
1	**CHECK IGNITION SWITCH CIRCUIT.** 1) Turn the ignition switch to OFF. 2) Disconnect the ECM harness connector. 3) Turn the ignition switch to ON. 4) Measure the voltage between harness connector terminal and chassis ground. ***Connector & terminal*** ***(B137) No. 14 (+) — Chassis ground (−):***	Is the voltage more than 10 V?	Check poor contact in ECM connector.	• Check fuse No. 12 (in fuse & relay box). • Check the harness for open or short circuit between ignition switch and ECM.

F: DTC 22 AND 32 VEHICLE SPEED SENSOR

DIAGNOSIS:

Disconnection or short circuit of vehicle speed sensor system.

TROUBLE SYMPTOM:

Cruise control cannot be set. (Cancelled immediately.)

	Step	Check	Yes	No
1	**CHECK ABS WARNING LIGHT.** 1) Turn the ignition switch to ON. 2) After the combination meter initial operation is completed, confirm that the ABS warning light continues to illuminate.	Does the ABS warning light continue to illuminate?	Check ABSCM or VDCCM <Ref. to ABS(diag)-2, Basic Diagnostic Procedure.> or <Ref. to VDC(diag)-2, Basic Diagnostic Procedure.>	Go to step **2.**
2	**CHECK LAN COMMUNICATION CIRCUIT ERROR DISPLAY.** Check that the communication error is displayed on the odo/trip meter in combination meter.	Is the error code “Er xx” displayed on odo/trip meter?	Check the LAN communication circuit. <Ref. to LAN(diag)-2, Basic Diagnostic Procedure.>	Replace the ECM. <Ref. to FU(H4SO)-35, Engine Control Module (ECM).> <Ref. to FU(H4SO U5)-44, Engine Control Module (ECM).> <Ref. to FU(H4DOTC)-39, Engine Control Module (ECM).> <Ref. to FU(H6DO)-34, Engine Control Module (ECM).>

IMMOBILIZER (DIAGNOSTICS)

IM(diag)

Page

1. Basic Diagnostic Procedure 2
2. General Description 3
3. Electrical Component Location 5
4. Immobilizer Control Module I/O Signal....6
5. Subaru Select Monitor....7
6. Read Diagnostic Trouble Code (DTC) 9
7. Clear Memory Mode....10
8. Diagnostics Chart for Security Indicator Light 11
9. List of Diagnostic Trouble Code (DTC) 15
10. Diagnostic Procedure with Diagnostic Trouble Code (DTC) 17

1. Basic Diagnostic Procedure

A: PROCEDURE

	Step	Check	Yes	No
1	**CHECK SECURITY INDICATOR LIGHT.** 1) Turn the ignition switch to “OFF” or “ACC”. 2) Wait for more than 60 seconds.	Does the security indicator light blink?	Go to step **2.**	Check the security indicator light circuit. <Ref. to IM(diag)-11, CHECK SECURITY INDICATOR CIRCUIT, INSPECTION, Diagnostics Chart for Security Indicator Light.>
2	**CHECK KEY SWITCH.** Remove the key from ignition switch.	Does the security indicator light blink within 1 second after removing ignition key?	Go to step **3.**	Check the key switch circuit. <Ref. to IM(diag)-13, CHECK KEY SWITCH CIRCUIT, INSPECTION, Diagnostics Chart for Security Indicator Light.>
3	**CHECK SECURITY INDICATOR LIGHT.** Turn the ignition switch to ON.	Does the security indicator light go off?	Go to step **5.**	Go to step **4.**
4	**CHECK ENGINE START.** Turn the ignition switch to START.	Does the starter operate?	Check the LAN communication circuit. <Ref. to LAN(diag)-2, Basic Diagnostic Procedure.>	Check the DTC display (body integrated unit). Go to step **7.**
5	**CHECK ENGINE START.** Turn the ignition switch to START.	Does the starter operate?	Go to step **6.**	Check the LAN communication circuit. <Ref. to LAN(diag)-2, Basic Diagnostic Procedure.>
6	**CHECK ENGINE START.** Turn the ignition switch to START.	Does the engine start?	Immobilizer system is OK.	Check the DTC display (ECM). Go to step **7.**
7	**CHECK ANY OTHER DTC ON DISPLAY.** 1) Turn the ignition switch to OFF. 2) Connect the Subaru Select Monitor to data link connector. <Ref. to IM(diag)-7, Subaru Select Monitor.> 3) Turn the ignition switch and Subaru Select Monitor switch to ON. 4) Read DTC on display.	Is the DTC displayed on screen?	Go to step **8.**	Repair the related parts.
8	**PERFORM THE DIAGNOSIS.** 1) Inspect using the “Diagnostic Procedure with Diagnostic Trouble Code (DTC)”. <Ref. to IM(diag)-17, Diagnostic Procedure with Diagnostic Trouble Code (DTC).> 2) Repair the trouble cause. 3) Perform clear memory mode. 4) Read DTC again.	Is the DTC displayed on screen?	Inspect using the “Diagnostic Procedure with Diagnostic Trouble Code (DTC)”. <Ref. to IM(diag)-17, Diagnostic Procedure with Diagnostic Trouble Code (DTC).>	Finish the diagnosis.

2. General Description

A: CAUTION

CAUTION:

• Airbag system wiring harnesses and connectors are yellow. Do not use the electrical test equipment on these circuits.

• Be careful not to damage the airbag system wiring harness.

• While diagnostic items are being checked, do not operate radios, portable telephones, etc. which emit electromagnetic waves near or inside the vehicle.

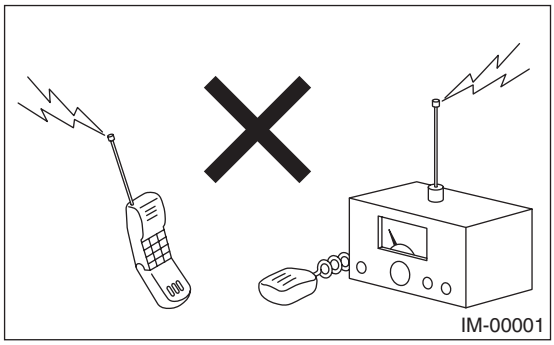

• When turning the ignition switch to ON or OFF while diagnostic items are being checked, do not allow keys with different ID codes close to the ignition switch. If the ignition key is in a key holder, remove it from the holder before carrying out diagnosis.

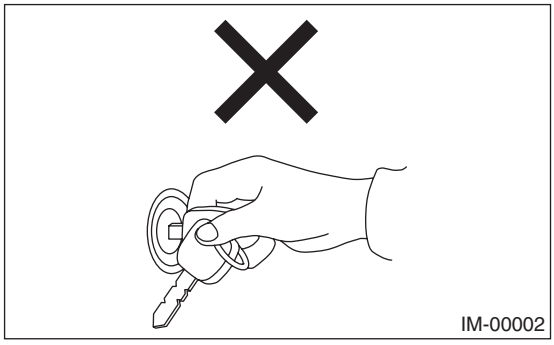

• When repeatedly turning the ignition switch to ON or OFF while diagnostic items are being checked, it should be switched in cycles of "ON" for at least 5 seconds → "OFF" for at least 8 seconds.

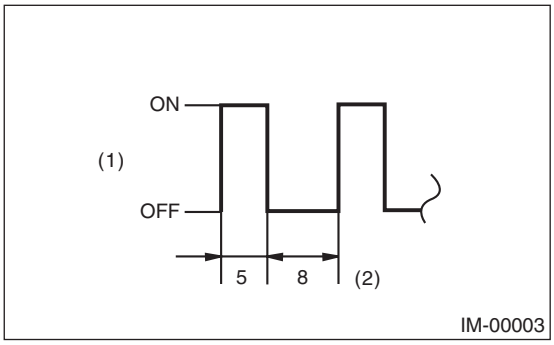

(1) Ignition switch position
(2) Sec.

• If the engine fails to start with a registered ignition key, detach the ignition key from ignition switch and wait for approx. 1 second until security indicator light begins to flash. And then start the engine again.

• Before checking the diagnostic items, obtain all keys for the vehicle to be checked possessed by owner.

B: PREPARATION TOOL

1. SPECIAL TOOL

ILLUSTRATION	TOOL NUMBER	DESCRIPTION	REMARKS
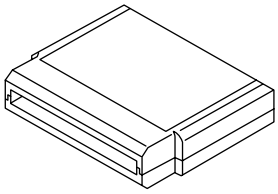 ST24082AA260	24082AA260	CARTRIDGE	Troubleshooting for electrical system.
ST22771AA030	22771AA030	SUBARU SELECT MONITOR KIT	Troubleshooting for electrical system.

2. GENERAL TOOL

TOOL NAME	REMARKS
Circuit tester	Used for measuring resistance, voltage and ampere.

3. Electrical Component Location

A: LOCATION

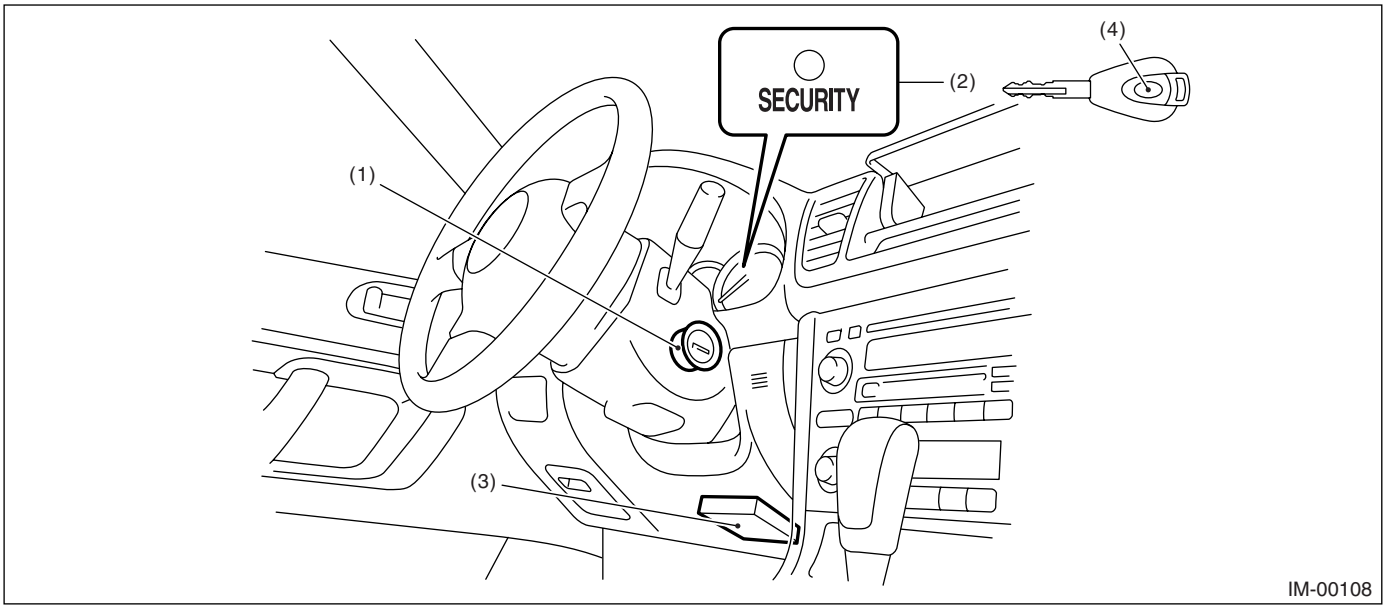

(1) Antenna
(2) Security indicator light (LED bulb)
(3) Body integrated unit
(4) Transponder

4. Immobilizer Control Module I/O Signal

A: WIRING DIAGRAM

1. IMMOBILIZER

<Ref. to WI-124, WIRING DIAGRAM, Immobilizer System.>

5. Subaru Select Monitor

A: OPERATION

1. HOW TO USE SUBARU SELECT MONITOR

1) Prepare the Subaru Select Monitor kit.

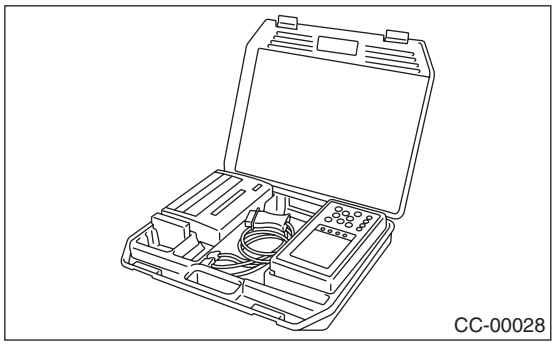

2) Connect the diagnosis cable to Subaru Select Monitor.
3) Insert the cartridge to Subaru Select Monitor.

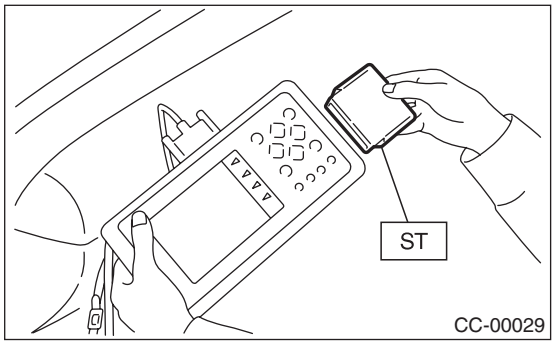

4) Connect the Subaru Select Monitor to data link connector.
(1) Data link connector is located in the lower portion of the instrument panel (on the driver's side).

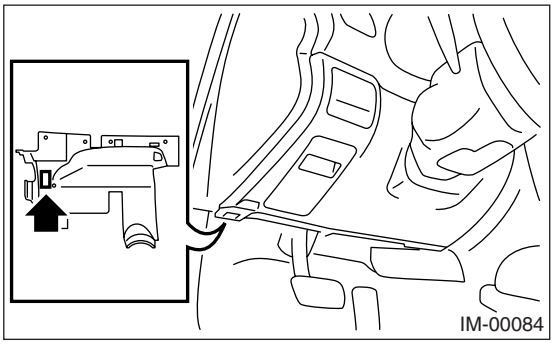

(2) Connect the diagnosis cable to data link connector.

CAUTION:
Do not connect the scan tools except for Subaru Select Monitor.

5) Turn the ignition switch to ON (engine OFF), and the Subaru Select Monitor switch to ON.

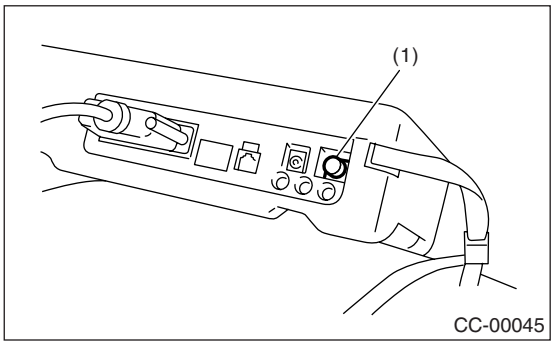

(1) Power switch

6) Using the Subaru Select Monitor, call up DTCs and various data, then record them.

2. READ DIAGNOSTIC TROUBLE CODE (DTC) FOR ENGINE AND BODY INTEGRATED UNIT

Refer to Read Diagnostic Trouble Code for information about how to indicate DTC. <Ref. to IM(diag)-9, Read Diagnostic Trouble Code (DTC).>

3. COMMUNICATION LINE CHECK

NOTE:
The communication line between ECM and body integrated module can be checked in "System Operation Check Mode". This is referred to as "Communication line check".
1) Connect the Subaru Select Monitor.
2) On the «Main Menu» display screen, select the {Each System Check} and press the [YES] key.
3) On the «System Selection Menu» display screen, select the {Engine} and press the [YES] key.
4) Press the [Yes] key after the information of engine type has been displayed.
5) On the «Engine Diagnosis» display screen, select the {System Operation Check Mode} and press the [YES] key.
6) On the «System operation check mode» display, select the {security system}.
7) Start the communication line check.
8) Is «Communication Line not Shorted» displayed on screen?
If displayed, go to step 9).
If "NO", go to step 10).
9) After diagnostic results, it is determined that the circuit is not shorted. Finish the communication line check.

10) If a problem is detected, repair the trouble cause. <Ref. to IM(diag)-21, DTC P1572 IMM CIRCUIT FAILURE (EXCEPT ANTENNA CIRCUIT), Diagnostic Procedure with Diagnostic Trouble Code (DTC).>

6. Read Diagnostic Trouble Code (DTC)

A: OPERATION

1. ECM

1) On the «Main Menu» display screen, select the {Each System Check} and press the [YES] key.
2) On the «System Selection Menu» display screen, select the {Engine Control System} and press the [YES] key.
3) Press the [YES] key after the information of engine type is displayed.
4) On the «Engine Diagnosis» display screen, select the {Diagnostic Code(s) Display}, and then press the [YES] key.
5) On the «Diagnostic Code(s) Display» display screen, select the {Current Diagnostic Code(s)} or {History Diagnostic Code(s)}, and then press the [YES] key.

NOTE:
• For detailed operation procedure, refer to the SUBARU SELECT MONITOR OPERATION MANUAL.
• For detailed concerning DTC, refer to the List of DTC. <Ref. to IM(diag)-15, LIST, List of Diagnostic Trouble Code (DTC).>

2. BODY INTEGRATED UNIT

1) On the «Main Menu» display screen, select the {Each System Check} and press the [YES] key.
2) On the «System Selection Menu» display screen, select the {Integ. unit mode} and press the [YES] key.
3) Press the [YES] key after the {Integ. unit mode} is displayed.
4) On the «Integ. unit mode failure diag» display screen, select the {Diagnostic Code(s) Display} and press the [YES] key.

NOTE:
• For detailed operation procedure, refer to the SUBARU SELECT MONITOR OPERATION MANUAL.
• For detailed concerning DTC, refer to the List of DTC. <Ref. to IM(diag)-15, LIST, List of Diagnostic Trouble Code (DTC).>

7. Clear Memory Mode

A: OPERATION

1. ECM

1) On the «Main Menu» display screen, select the {Each System Check} and press the [YES] key.
2) On the «System Selection Menu» display screen, select the {Engine Control System} and press the [YES] key.
3) Press the [YES] key after the information of engine type is displayed.
4) On the «Engine Diagnosis» display screen, select the {Clear Memory} and press the [YES] key.
5) When the 'Done' are shown on the display screen, turn the Subaru Select Monitor and ignition switch to OFF.

NOTE:
• After the memory has been cleared, the idle air control solenoid valve must be initialized. To execute this procedure, turn the ignition switch to ON. Wait 3 seconds before starting the engine.
• For detailed operation procedure, refer to the SUBARU SELECT MONITOR OPERATION MANUAL.

2. BODY INTEGRATED UNIT

1) On the «Main Menu» display screen, select the {Each System Check} and press the [YES] key.
2) On the «System Selection Menu» display screen, select the {Integ. unit mode} and press the [YES] key.
3) Press the [YES] key after the {Integ. unit mode} is displayed.
4) On the «Integ. unit mode failure diag» display screen, select the {Clear Memory} and press the [YES] key.
5) When the 'Done' are shown on the display screen, turn the Subaru Select Monitor and ignition switch to OFF.

NOTE:
For detailed operation procedure, refer to the SUBARU SELECT MONITOR OPERATION MANUAL.

8. Diagnostics Chart for Security Indicator Light

A: INSPECTION

1. CHECK SECURITY INDICATOR CIRCUIT

WIRING DIAGRAM:

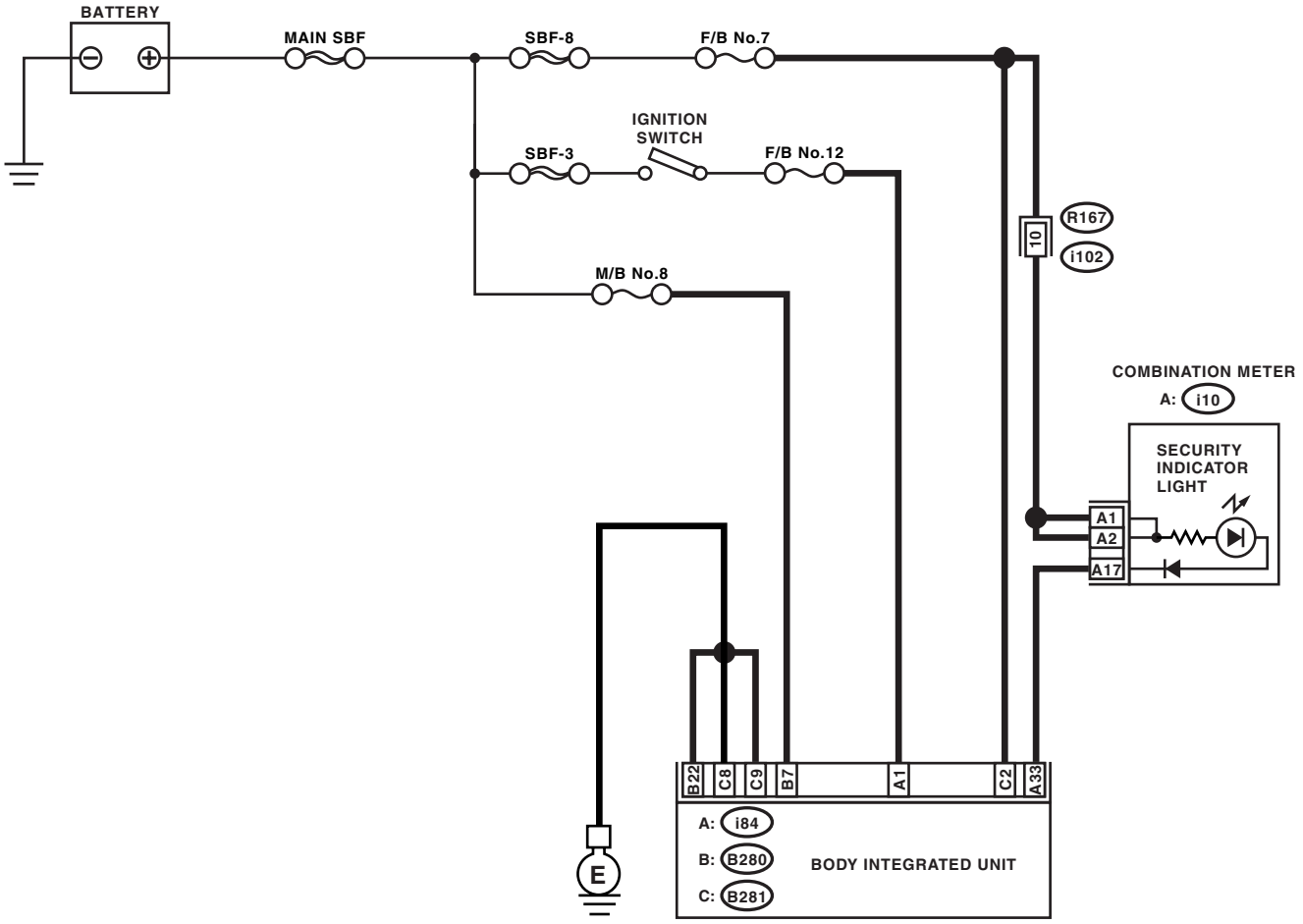

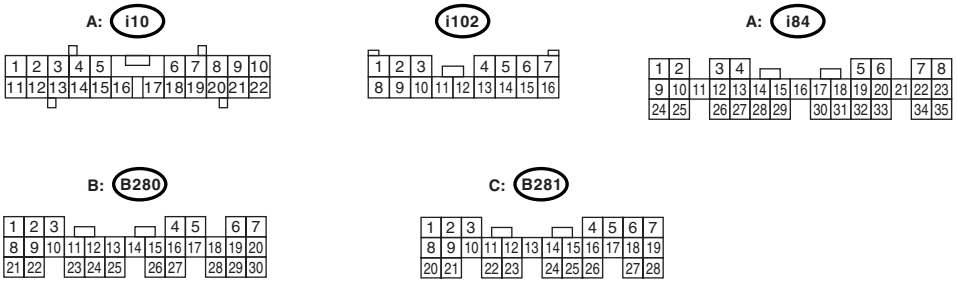

IM-00109

Diagnostics Chart for Security Indicator Light

	Step	Check	Yes	No
1	**CHECK SECURITY INDICATOR LIGHT.** 1) Turn the ignition switch to OFF. 2) Disconnect the harness connector from body integrated unit. 3) Connect the resistor (100 Ω) between body integrated unit harness connector terminal (i84) No. 33 and chassis ground.	Does the security indicator light illuminate?	Go to step **2.**	Go to step **5.**
2	**CHECK BODY INTEGRATED UNIT GROUND CIRCUIT.** Measure the resistance between body integrated unit harness connector terminal and chassis ground. ***Connector & terminal*** ***(B280) No. 22 — Chassis ground:*** ***(B281) No. 8, No. 9 — Chassis ground:***	Is the resistance less than 10 Ω?	Go to step **3.**	Repair the open circuit of body integrated unit ground circuit.
3	**CHECK BODY INTEGRATED UNIT IGNITION CIRCUIT.** 1) Turn the ignition switch to ON. (engine OFF) 2) Measure the voltage between body integrated unit harness connector terminal and chassis ground. ***Connector & terminal*** ***(i84) No. 1 (+) — Chassis ground (−):***	Is the voltage more than 10 V?	Go to step **4.**	Check the harness for open or short circuit between body integrated unit and ignition switch.
4	**CHECK BODY INTEGRATED UNIT POWER SUPPLY CIRCUIT.** 1) Turn the ignition switch to OFF. 2) Measure the voltage between body integrated unit harness connector terminal and chassis ground. ***Connector & terminal*** ***(B280) No. 7 (+) — Chassis ground (−):*** ***(B281) No. 2 (+) — Chassis ground (−):***	Is the voltage more than 10 V?	Replace the body integrated unit <Ref. to SL-54, Body Integrated Unit.> and replace the all ignition keys (including transponder). Execute the registration procedure next. Refer to “REGISTRATION MANUAL FOR IMMOBILIZER”.	Check the harness for open or short circuit between body integrated unit and fuse.
5	**CHECK COMBINATION METER CIRCUIT.** 1) Remove the combination meter. <Ref. to IDI-15, Combination Meter.> 2) Measure the voltage between the combination meter harness connector terminal and chassis ground. ***Connector & terminal*** ***(i10) No. 1, No. 2 (+) — Chassis ground (−):***	Is the voltage more than 10 V?	Go to step **6.**	Check the harness for open or short circuit between combination meter and fuse.
6	**CHECK COMBINATION METER CIRCUIT.** Measure the resistance between body integrated unit harness connector terminal and combination meter harness connector terminal. ***Connector & terminal*** ***(i84) No. 33 — (i10) No. 17:***	Is the resistance less than 10 Ω?	LED bulb malfunction. Replace the combination meter case assembly. <Ref. to IDI-16, DISASSEMBLY, Combination Meter.>	Repair the harness/connector.

2. CHECK KEY SWITCH CIRCUIT

WIRING DIAGRAM:

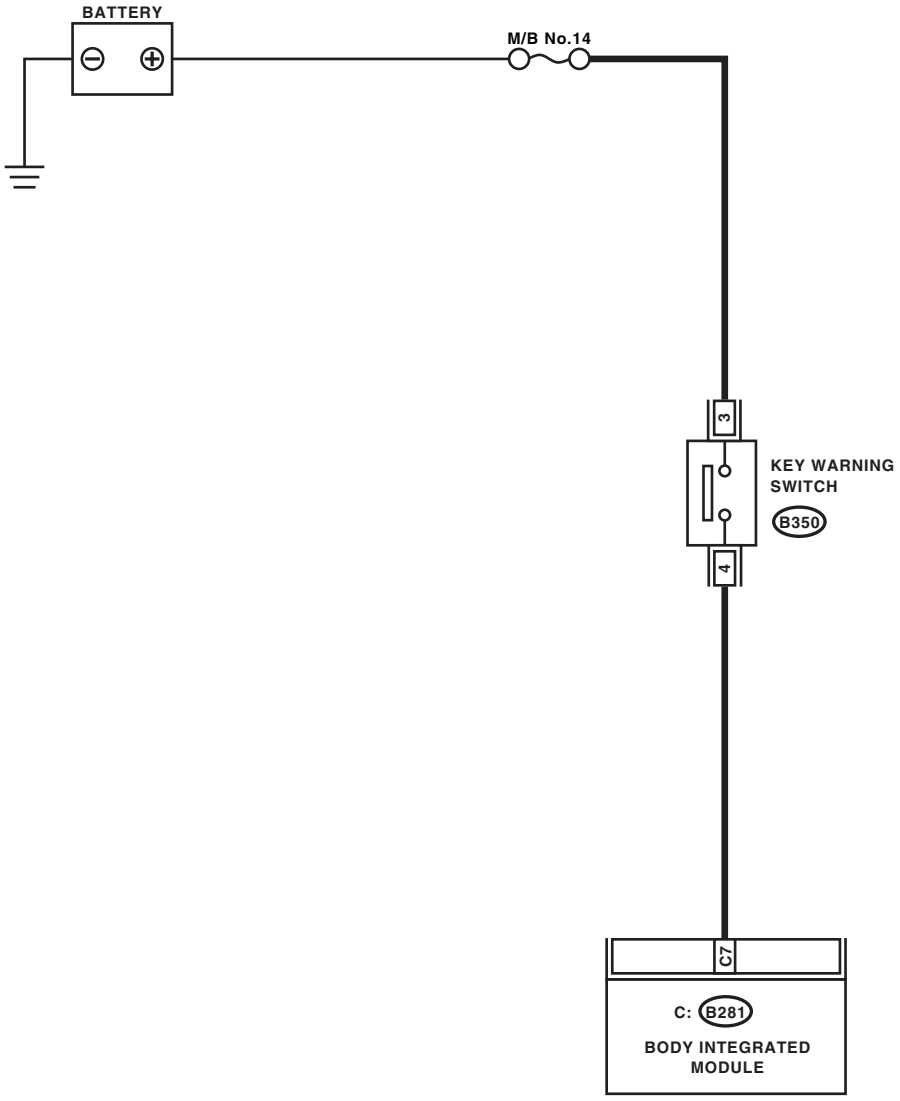

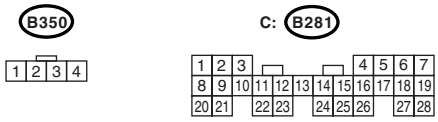

IM-00078

Diagnostics Chart for Security Indicator Light

	Step	Check	Yes	No
1	**CHECK POWER SUPPLY CIRCUIT.** 1) Disconnect the harness connector from key warning switch. 2) Turn the ignition switch to “ACC” or “LOCK” (with key inserted). 3) Measure the voltage between key warning switch harness connector terminal and chassis ground. ***Connector & terminal*** ***(B350) No. 3 (+) — Chassis ground (−):***	Is the voltage more than 10 V?	Go to step **2.**	Check the harness for open or short circuit between key warning switch and fuse.
2	**CHECK KEY WARNING SWITCH.** 1) Insert the ignition key to ignition switch. (OFF or ACC) 2) Measure the resistance between key warning switch terminals. ***Connector & terminal*** ***No. 3 — No. 4:***	Is the resistance less than 1 Ω?	Go to step **3.**	Replace the key warning switch.
3	**CHECK KEY WARNING SWITCH.** 1) Remove the ignition key from ignition switch. 2) Measure the resistance between key warning switch terminals. ***Connector & terminal*** ***No. 3 — No. 4:***	Is the resistance more than 1 MΩ?	Go to step **4.**	Replace the key warning switch.
4	**CHECK HARNESS BETWEEN KEY WARNING SWITCH AND BODY INTEGRATED UNIT.** 1) Disconnect the harness connector from key warning switch. 2) Disconnect the harness connector from body integrated unit. 3) Measure the resistance between key warning switch harness connector terminal and body integrated unit harness connector terminal. ***Connector & terminal*** ***(B350) No. 4 — (B281) No. 7:***	Is the resistance less than 10 Ω?	Replace the body integrated unit <Ref. to SL-54, Body Integrated Unit.> and replace the all ignition keys (including transponder). Execute the registration procedure next. Refer to “REGISTRATION MANUAL FOR IMMOBILIZER”.	Repair the harness between key warning switch and body integrated unit.

9. List of Diagnostic Trouble Code (DTC)

A: LIST

1. ECM

DTC	Item	Contents of diagnosis	Index No.
P0513	Incorrect Immobilizer Key	Incorrect immobilizer key (Use of unregistered key in body integrated unit)	<Ref. to IM(diag)-17, DTC P0513 INCORRECT IMMOBILIZER KEY, Diagnostic Procedure with Diagnostic Trouble Code (DTC).>
P1570	ANTENNA	Faulty antenna	<Ref. to IM(diag)-18, DTC P1570 ANTENNA, Diagnostic Procedure with Diagnostic Trouble Code (DTC).>
P1571	Reference Code Incompatibility	Reference code incompatibility between body integrated unit and ECM	<Ref. to IM(diag)-20, DTC P1571 REFERENCE CODE INCOMPATIBILITY, Diagnostic Procedure with Diagnostic Trouble Code (DTC).>
P1572	EGI — Immobilizer Communication (Except Antenna Circuit)	Communication failure between body integrated unit and ECM	<Ref. to IM(diag)-21, DTC P1572 IMM CIRCUIT FAILURE (EXCEPT ANTENNA CIRCUIT), Diagnostic Procedure with Diagnostic Trouble Code (DTC).>
P1574	Key — Immobilizer Communication	Failure of body integrated unit to verify key (transponder) ID code	<Ref. to IM(diag)-24, DTC P1574 KEY COMMUNICATION FAILURE, Diagnostic Procedure with Diagnostic Trouble Code (DTC).>
P1576	EGI Control Module EEPROM	ECM malfunctioning	<Ref. to IM(diag)-24, DTC P1576 EGI CONTROL MODULE EEPROM, Diagnostic Procedure with Diagnostic Trouble Code (DTC).>
P1577	IMM Control Module EEPROM	Body integrated unit malfunctioning	<Ref. to IM(diag)-24, DTC P1577 IMM CONTROL MODULE EEPROM, Diagnostic Procedure with Diagnostic Trouble Code (DTC).>
P1578	Meter malfunctioning	Reference code incompatibility between body integrated unit and combination meter	<Ref. to IM(diag)-25, DTC P1578 METER FAILURE, Diagnostic Procedure with Diagnostic Trouble Code (DTC).>

NOTE:
Perform the engine DTC when the DTC except for immobilizer DTC is detected.
<Ref. to EN(H4DOTC)(diag)-71, List of Diagnostic Trouble Code (DTC).> <Ref. to EN(H6DO)(diag)-71, List of Diagnostic Trouble Code (DTC).>

2. BODY INTEGRATED UNIT

DTC	Item	Contents of diagnosis	Index No.	Relation between ECM and DTC
B0401	M collation NG	Reference code incompatibility between body integrated unit and combination meter	<Ref. to IM(diag)-25, DTC P1578 METER FAILURE, Diagnostic Procedure with Diagnostic Trouble Code (DTC).>	P1578
B0402	Immobilizer Key collation NG	• Incorrect immobilizer key (Use of unregistered key in body integrated unit) • Faulty antenna	<Ref. to IM(diag)-17, DTC P0513 INCORRECT IMMOBILIZER KEY, Diagnostic Procedure with Diagnostic Trouble Code (DTC).> <Ref. to IM(diag)-18, DTC P1570 ANTENNA, Diagnostic Procedure with Diagnostic Trouble Code (DTC).> or <Ref. to IM(diag)-24, DTC P1574 KEY COMMUNICATION FAILURE, Diagnostic Procedure with Diagnostic Trouble Code (DTC).>	• P0513 • P1570 • P1574
B0403	E/G request NG	Communication failure between body integrated unit and ECM	<Ref. to IM(diag)-21, DTC P1572 IMM CIRCUIT FAILURE (EXCEPT ANTENNA CIRCUIT), Diagnostic Procedure with Diagnostic Trouble Code (DTC).>	P1572

NOTE:
• Immobilizer system perform the starter relay control. When the body integrated unit detect the inconformity of reference code, immediately out put the starter relay cut signal to ECM, and then ECM stop the starter relay operation. In this case, engine does not start, and DTC is not recorded in ECM. Check that the engine does not start on the DTC of body integrated unit.
• DTC B0401 and B0402 is recorded as freeze frame data when the ignition switch is turned to OFF. When trying to start the engine with unregistered immobilizer key, DTC is not displayed on Subaru Select Monitor immediately. Turn the ignition switch to OFF once and turn to ON again before checking DTC. At this time (when turning the ignition switch to ON again), be careful that the DTC is displayed as freeze frame data even with the registered immobilizer key.

10.Diagnostic Procedure with Diagnostic Trouble Code (DTC)

A: DTC P0513 INCORRECT IMMOBILIZER KEY

DTC DETECTING CONDITION:

Incorrect immobilizer key (Use of unregistered key in body integrated unit)

	Step	Check	Yes	No
1	**PERFORM TEACHING OPERATION ON IGNITION KEY.** Perform teaching operation on all keys of the vehicle. Refer to “REGISTRATION MANUAL FOR IMMOBILIZER”.	Is the teaching operation for all keys completed?	END.	Replace the ignition keys (including transponder) which cannot be registered. Go to step **2.**
2	**PERFORM TEACHING OPERATION ON IGNITION KEY.** Perform teaching operation on all keys of the vehicle. Refer to “REGISTRATION MANUAL FOR IMMOBILIZER”.	Is the teaching operation for all keys completed?	END.	Replace the body integrated unit <Ref. to SL-54, Body Integrated Unit.> and replace all the ignition keys (including transponder). Execute the registration procedure next. Refer to “REGISTRATION MANUAL FOR IMMOBILIZER”.

B: DTC P1570 ANTENNA

DTC DETECTING CONDITION:

Faulty antenna

WIRING DIAGRAM:

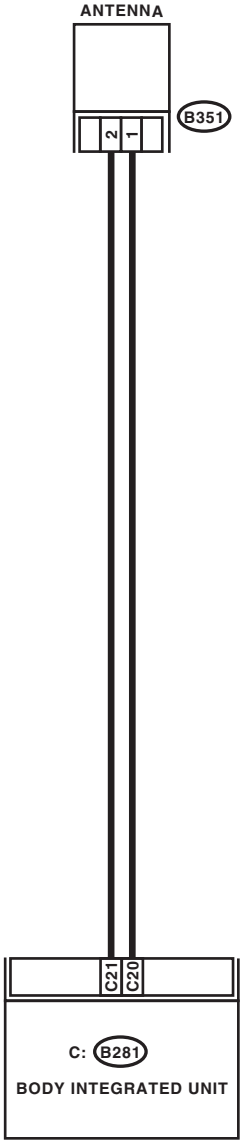

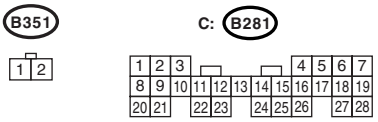

IM-00110

	Step	Check	Yes	No
1	**CHECK ANTENNA CIRCUIT.** 1) Turn the ignition switch to OFF. 2) Disconnect the harness connector from antenna. <Ref. to SL-57, Immobilizer Antenna.> 3) Measure the resistance of antenna circuit. ***Connector & terminal*** ***(B351) No. 1 — No. 2:***	Is the resistance less than 10 Ω?	Go to step **2.**	Replace the antenna. <Ref. to SL-57, Immobilizer Antenna.>
2	**CHECK ANTENNA CIRCUIT.** 1) Disconnect the harness connector from body integrated unit. 2) Measure the resistance between harness connector and chassis ground. ***Connector & terminal*** ***(B281) No. 21 — Chassis ground:***	Is the resistance less than 10 Ω?	Repair the harness.	Go to step **3.**
3	**CHECK ANTENNA CIRCUIT.** Measure the resistance between harness connector and chassis ground. ***Connector & terminal*** ***(B281) No. 20 — Chassis ground:***	Is the resistance less than 10 Ω?	Repair the harness.	Go to step **4.**
4	**CHECK ANTENNA CIRCUIT.** 1) Turn the ignition switch to ON. (engine OFF) 2) Measure the voltage between harness connector and chassis ground. ***Connector & terminal*** ***(B281) No. 21 (+) — Chassis ground (−):***	Is the voltage 0 V?	Go to step **5.**	Repair the harness.
5	**CHECK ANTENNA CIRCUIT.** Measure the voltage between harness connector and chassis ground. ***Connector & terminal*** ***(B281) No. 20 (+) — Chassis ground (−):***	Is the voltage 0 V?	Go to step **6.**	Repair the harness between body integrated unit and antenna, because there is short circuit with battery voltage line or ignition switch “ON” line.
6	**CHECK BODY INTEGRATED UNIT FUNCTION.** 1) Turn the ignition switch to OFF. 2) Connect the harness connector to body integrated unit. 3) Insert the key to ignition switch, and measure the changes in voltage between antenna harness connectors. ***Connector & terminal*** ***(B281) No. 20 (+) — Chassis ground (−):***	Is the voltage −30 to 30 V? (Approx. 0.1 second after inserting the key) Is the voltage 0 V? (Approx. 1 second after inserting the key)	Go to step **7.**	Replace the body integrated unit <Ref. to SL-54, Body Integrated Unit.> and replace all the ignition keys (including transponder). Execute the registration procedure next. Refer to “REGISTRATION MANUAL FOR IMMOBILIZER”.

	Step	Check	Yes	No
7	**CHECK IGNITION KEY (TRANSPONDER).** 1) Remove the key from ignition switch. 2) Start the engine using other keys that have undergone the teaching operation, furnished with vehicle.	Does the engine start?	Replace all the ignition keys (including transponder). Execute the registration procedure next. Refer to “REGISTRATION MANUAL FOR IMMOBILIZER”.	Replace the body integrated unit <Ref. to SL-54, Body Integrated Unit.> and replace the all ignition keys (including transponder). Execute the registration procedure next. Refer to “REGISTRATION MANUAL FOR IMMOBILIZER”.

C: DTC P1571 REFERENCE CODE INCOMPATIBILITY

DTC DETECTING CONDITION:

Reference code incompatibility between body integrated unit and ECM

	Step	Check	Yes	No
1	**PERFORM TEACHING OPERATION ON IGNITION KEY.** Perform teaching operation on all keys of the vehicle. Refer to “REGISTRATION MANUAL FOR IMMOBILIZER”.	Is the teaching operation for all keys completed?	END.	Go to step **2.**
2	**CHECK ANY OTHER DTC ON DISPLAY.**	Is any other immobilizer DTC displayed?	Inspect relevant DTC using “List of Diagnostic Trouble Code (DTC)” <Ref. to IM(diag)-15, List of Diagnostic Trouble Code (DTC).> Execute the registration procedure next. Refer to “REGISTRATION MANUAL FOR IMMOBILIZER”.	Replace the ECM. <Ref. to FU(H4DOTC)-39, Engine Control Module (ECM).> <Ref. to FU(H6DO)-34, Engine Control Module (ECM).> Replace the body integrated unit <Ref. to SL-54, Body Integrated Unit.> and replace all the ignition keys (including transponder). Execute the registration procedure next. Refer to “REGISTRATION MANUAL FOR IMMOBILIZER”.

D: DTC P1572 IMM CIRCUIT FAILURE (EXCEPT ANTENNA CIRCUIT)

DTC DETECTING CONDITION:

Communication failure between body integrated unit and ECM

WIRING DIAGRAM:

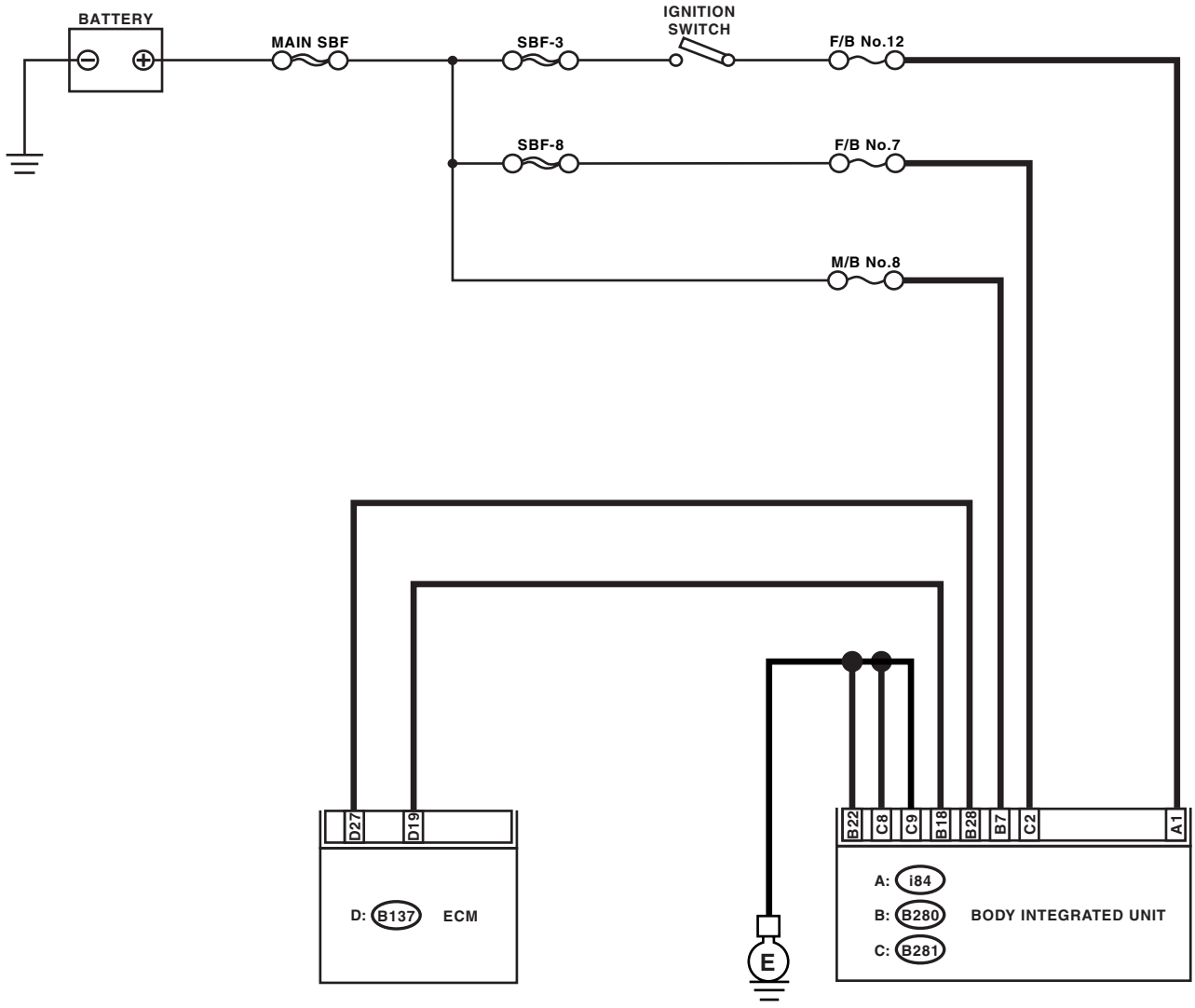

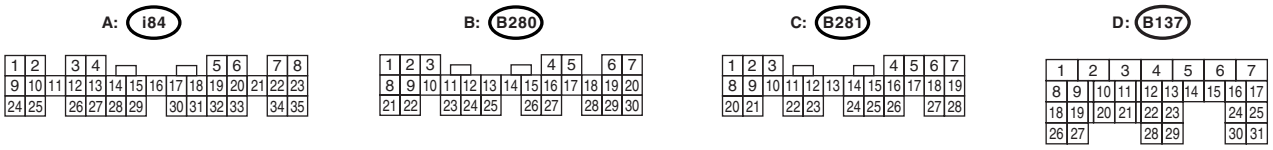

IM-00111

	Step	Check	Yes	No
1	**CHECK BODY INTEGRATED UNIT POWER SUPPLY CIRCUIT.** 1) Turn the ignition switch to OFF. 2) Disconnect the harness connector from body integrated unit. 3) Measure the voltage between body integrated unit harness connector terminal and chassis ground. ***Connector & terminal*** ***(B280) No. 7 (+) — Chassis ground (−):*** ***(B281) No. 2 (+) — Chassis ground (−):***	Is the voltage more than 10 V?	Go to step **2.**	Check the harness for open or short circuit between body integrated unit and fuse.
2	**CHECK BODY INTEGRATED UNIT POWER SUPPLY CIRCUIT.** 1) Turn the ignition switch to ON. (engine OFF) 2) Measure the voltage between body integrated unit harness connector terminal and chassis ground. ***Connector & terminal*** ***(i84) No. 1 (+) — Chassis ground (−):***	Is the voltage more than 10 V?	Go to step **3.**	Check the harness for open or short circuit between body integrated unit and ignition switch.
3	**CHECK BODY INTEGRATED UNIT GROUND CIRCUIT.** 1) Turn the ignition switch to OFF. 2) Measure the resistance between body integrated unit harness connector terminal and chassis ground. ***Connector & terminal*** ***(B280) No. 22 — Chassis ground:*** ***(B281) No. 8, No. 9 — Chassis ground:***	Is the resistance less than 10 Ω?	Go to step **4.**	Repair the open circuit of body integrated unit ground circuit.
4	**CHECK HARNESS BETWEEN BODY INTEGRATED UNIT AND ECM.** 1) Disconnect the harness connector from body integrated unit and ECM. 2) Measure the resistance between body integrated unit harness connector terminal and ECM connector terminal. ***Connector & terminal*** ***(B280) No. 18 — (B137) No. 19:***	Is the resistance less than 10 Ω?	Go to step **5.**	Repair the open circuit of harness between body integrated unit and ECM.
5	**CHECK HARNESS BETWEEN BODY INTEGRATED UNIT AND ECM.** Measure the resistance between body integrated unit harness connector terminal and ECM connector terminal. ***Connector & terminal*** ***(B280) No. 28 — (B137) No. 27:***	Is the resistance less than 10 Ω?	Go to step **6.**	Repair the open circuit of harness between body integrated unit and ECM.
6	**CHECK HARNESS OF COMMUNICATION LINE.** 1) Turn the ignition switch to ON. (engine OFF) 2) Measure the voltage between body integrated unit harness connector terminal and chassis ground. ***Connector & terminal*** ***(B280) No. 18, No. 28 (+) — Chassis ground (−):***	Is the voltage 0 V?	Go to step **7.**	Repair the harness between body integrated unit and ECM, because there is short circuit with battery voltage line or ignition switch “ON” line.

	Step	Check	Yes	No
7	**CHECK HARNESS OF COMMUNICATION LINE.** Measure the voltage between harness connector terminal and engine ground. ***Connector & terminal*** ***(B137) No. 19, No. 27 (+) — Engine ground (−):***	Is the voltage 0 V?	Go to step **8.**	Repair the harness between body integrated unit and ECM, because there is short circuit with battery voltage line or ignition switch "ON" line.
8	**CHECK ECM BY COMMUNICATION LINE CHECK.** 1) Connect the harness connector to ECM. 2) Disconnect the harness connector from body integrated unit. 3) Start the communication line check. <Ref. to IM(diag)-7, COMMUNICATION LINE CHECK, OPERATION, Subaru Select Monitor.>	Does "Communication Line not Shorted" appear on the screen?	Replace the body integrated unit <Ref. to SL-54, Body Integrated Unit.> and replace the all ignition keys (including transponder). Execute the registration procedure next. Refer to "REGISTRATION MANUAL FOR IMMOBILIZER".	Replace the ECM. <Ref. to FU(H4DOTC)-39, Engine Control Module (ECM).> <Ref. to FU(H6DO)-34, Engine Control Module (ECM).> Perform the registration procedure next. Refer to "REGISTRATION MANUAL FOR IMMOBILIZER".

E: DTC P1574 KEY COMMUNICATION FAILURE

DTC DETECTING CONDITION:

Failure of body integrated unit to verify key (transponder) ID code

	Step	Check	Yes	No
1	**CHECK BODY INTEGRATED UNIT FUNCTION.** Insert the key to ignition switch (LOCK position), and measure the changes in voltage between antenna connectors. ***Connector & terminal*** ***(B351) No. 1 (+) — Chassis ground (−):***	Is the voltage −30 to 30 V? (Approx. 0.1 second after inserting the key) Is the voltage 0 V? (Approx. 1 second after inserting the key)	Go to step **2.**	Replace the body integrated unit <Ref. to SL-54, Body Integrated Unit.> and replace the all ignition keys (including transponder). Execute the registration procedure next. Refer to “REGISTRATION MANUAL FOR IMMOBILIZER”.
2	**CHECK IGNITION KEY (TRANSPONDER).** 1) Remove the key from ignition switch. 2) Start the engine using other keys that have undergone the teaching operation, furnished with vehicle.	Does the engine start?	Replace all the ignition keys (including transponder). Execute the registration procedure next. Refer to “REGISTRATION MANUAL FOR IMMOBILIZER”.	Replace the body integrated unit <Ref. to SL-54, Body Integrated Unit.> and replace the all ignition keys (including transponder). Execute the registration procedure next. Refer to “REGISTRATION MANUAL FOR IMMOBILIZER”.

F: DTC P1576 EGI CONTROL MODULE EEPROM

DTC DETECTING CONDITION:

ECM malfunctioning

1. REPLACE ECM

Replace the ECM. <Ref. to FU(H4DOTC)-39, Engine Control Module (ECM).> <Ref. to FU(H6DO)-34, Engine Control Module (ECM).>
Perform the registration procedure next. Refer to “REGISTRATION MANUAL FOR IMMOBILIZER”.

G: DTC P1577 IMM CONTROL MODULE EEPROM

DTC DETECTING CONDITION:

Body integrated unit malfunctioning

1. REPLACE BODY INTEGRATED UNIT

Replace the body integrated unit <Ref. to SL-54, Body Integrated Unit.> and replace the all ignition keys (including transponder). Execute the registration procedure next. Refer to “REGISTRATION MANUAL FOR IMMOBILIZER”.

H: DTC P1578 METER FAILURE

DTC DETECTING CONDITION:

Reference code incompatibility between body integrated unit and combination meter

1. CHECK LAN COMMUNICATION SYSTEM

Inspect LAN communication system in the following situation. <Ref. to LAN(diag)-2, Basic Diagnostic Procedure.>

- DTC of body integrated unit B0300, B0301, B0302, B0111 or B0321 is displayed.
- “Er IU” or “Er LC” is displayed in odo/trip meter on combination meter.

2. REPLACE COMBINATION METER

Replace the combination meter. <Ref. to IDI-15, REMOVAL, Combination Meter.> Execute the registration procedure of all immobilizer part (combination meter and etc.) next. Refer to “REGISTRATION MANUAL FOR IMMOBILIZER”.

NOTE:
When the combination meter has been replaced, be sure to perform the registration procedure of immobilizer.

LAN SYSTEM (DIAGNOSTICS)

LAN(diag)

		Page
1.	Basic Diagnostic Procedure	2
2.	Check List for Interview	3
3.	General Description	5
4.	Electrical Component Location	7
5.	Control Module I/O Signal	9
6.	Subaru Select Monitor	14
7.	Read Diagnostic Trouble Code (DTC)	24
8.	Clear Memory Mode	25
9.	Read Current Data	26
10.	Function Setting (Customize)	27
11.	List of Diagnostic Trouble Code (DTC)	28
12.	Diagnostic Procedure with Diagnostic Trouble Code (DTC)	30
13.	General Diagnostic Table	81

1. Basic Diagnostic Procedure

A: PROCEDURE

1. WITH SUBARU SELECT MONITOR

CAUTION:
• Subaru Select Monitor is required for reading DTC, performing diagnosis and reading current data.
• Remove foreign matter (dust, water and oil etc.) from the body integrated unit connector during removal and installation.
• For the model with immobilizer, registration of immobilizer may be needed after the replacement of controller and etc. For detail procedure, refer to "REGISTRATION MANUAL FOR IMMOBILIZER".

NOTE:
• To check harness for broken wires or short circuits, shake the problem part or connector.
• Check List for Interview <Ref. to LAN(diag)-3, Check List for Interview.>

	Step	Check	Yes	No
1	**CHECK PRE-INSPECTION.** 1) Ask the customer when and how the trouble occurred using interview check list. <Ref. to LAN(diag)-3, Check List for Interview.> 2) Check the display of communication error display. (Combination meter, odo/trip meter)	Is communication error displayed?	Go to step **3**	Go to step **2**
2	**BASIC INSPECTION.** Check the components which might affect body control. <Ref. to LAN(diag)-5, INSPECTION, General Description.>	Is the component that might influence the body control problem normal?	Go to step **3**	Repair or replace each unit.
3	**CHECK INDICATION OF DTC.** 1) Read the DTC. <Ref. to LAN(diag)-14, READ DIAGNOSTIC TROUBLE CODE (DTC), OPERATION, Subaru Select Monitor.> NOTE: If the communication function of the Subaru Select Monitor cannot be executed normally, check the communication circuit. <Ref. to LAN(diag)-30, COMMUNICATION FOR INITIALIZING IMPOSSIBLE, Diagnostic Procedure with Diagnostic Trouble Code (DTC).> 2) Record all DTCs.	Is DTC displayed?	Go to step **5**	Go to step **4**
4	**PERFORM THE GENERAL DIAGNOSTICS.** Inspect using "General Diagnostics Table". <Ref. to LAN(diag)-81, General Diagnostic Table.>	Is the result of inspection OK?	LAN system is normal.	Go to step **5**
5	**PERFORM THE DIAGNOSIS.** 1) Fix the wrong part. 2) Perform the clear memory mode. <Ref. to LAN(diag)-20, CLEAR MEMORY MODE, OPERATION, Subaru Select Monitor.> 3) Read DTC. <Ref. to LAN(diag)-14, READ DIAGNOSTIC TROUBLE CODE (DTC), OPERATION, Subaru Select Monitor.>	Is DTC displayed?	Repeat step 5 until DTC is not shown.	Finish the diagnosis.

2. Check List for Interview

A: CHECK

Inspect the following items about the vehicle's state.

1. DISPLAY OF COMMUNICATION ERROR

Communication error is displayed in odo/trip meter.	When and how often are they displayed? ❑ Always ❑ Sometimes ❑ Only once
	Which communication error is displayed? (Record them all) ❑ Er IU (Fail in the body integrated unit) ❑ Er HC (Fail of high-speed CAN) ❑ Er LC (Fail of low-speed CAN) ❑ Er –– (Fails of both high-speed and low-speed CAN) ❑ Er EG (Fail of EGI communication counter) ❑ Er TC (Fail of TCM communication counter) ❑ Er Ab (Fail of vehicle dynamics control (VDC)/ABS communication counter)
Ignition key position	❑ OFF ❑ ACC ❑ ON (before starting engine) ❑ START ❑ ON (after Engine starting, engine is running) ❑ ON (after Engine starting, engine is at a standstill)
Timing	❑ Immediately after turning the ignition to ON ❑ Immediately after turning the ignition to START

2. DISPLAY IN COMBINATION METER

Display in combination meter	a) Display of temperature gauge	❑ OK / ❑ NG
	b) Display of fuel gauge	❑ OK / ❑ NG
Display of other indicators	c) Malfunction indicator light	❑ ON / ❑ OFF
	d) SPORT indicator light (AT warning light)	❑ ON / ❑ OFF
	e) ABS warning light/Vehicle dynamics control (VDC) warning light	❑ ON / ❑ OFF
	f) Security indicator light	❑ ON / ❑ Blink / ❑ OFF
	g) Seat belt warning light (Driver's seat)	❑ ON / ❑ OFF
	h) Seat belt warning light (Passenger's seat)	❑ ON / ❑ OFF

3. SYMPTOMS

Behavior of vehicle	a) Illumination volume control is not available.	❑ Yes / ❑ No
	b) Rear wiper does not operate.	❑ Yes / ❑ No
	c) Wiper deicer does not operate.	❑ Yes / ❑ No
	d) Rear defogger does not operate.	❑ Yes / ❑ No
	e) Door lock does not operate.	❑ Yes / ❑ No
	f) Trunk/rear gate lock does not operate	❑ Yes / ❑ No
	g) Driver's door lock does not operate.	❑ Yes / ❑ No
	h) Shift lock does not operate.	❑ Yes / ❑ No
	i) Key illumination blinks.	❑ Yes / ❑ No

4. CONDITIONS UNDER WHICH TROUBLE OCCURS

Driving condition	❑ At standstill (While idling)			
	❑ When the vehicle is running	Vehicle speed	km/h (MPH)	
	❑ When accelerating	Acceleration	km/h (MPH) to	km/h (MPH)
	❑ Decelerating (With braking)	Deceleration	km/h (MPH) to	km/h (MPH)
	❑ Decelerating (Without braking)	Deceleration	km/h (MPH) to	km/h (MPH)
	❑ Flat road ❑ Uphill ❑ Downhill ❑ Gravel road ❑ Bumpy road ❑ Snowy road			
	Does it occur when operating any part? Operated part: Trouble Symptom:			
	Are other troubles occurred? From where: Trouble Symptom:			

3. General Description

A: CAUTION

1. SRS AIRBAG SYSTEM

Airbag system wiring harness is routed near the body integrated unit and twisted pair line.

CAUTION:
• All airbag system wiring harness and connectors are colored yellow. Do not use the electrical test equipment on these circuits.
• Be careful not to damage the Airbag system wiring harness when servicing the body integrated unit and LAN system.

2. LAN SYSTEM

• Bus line of LAN system is twisted pair line. Be careful not to bypass or partly unbind the twisted pair line.
• Do not make clearance between bus lines (CAN High, CAN Low).
• Difference of bus line length should be within 10 cm (3.94 in).
• Fray near the connector should be within 8 cm (3.14 in).

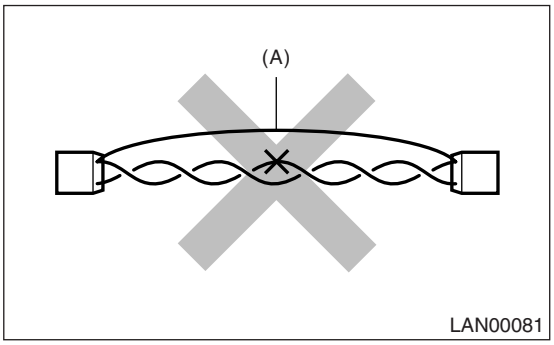

(A) Bypass wire connection

• If the characteristics of the twisted pair line is changed, it may cause extremely weakness to the noise.
• When repairing the harness, connect the wires using soldering and protect it with insulating tape, etc.

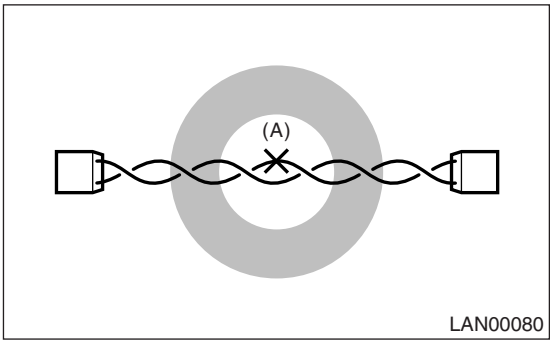

(A) Soldering and protection with insulating tape

B: INSPECTION

Before performing diagnostics, check the following items which might affect body integrated unit malfunctions.
1) Measure the battery voltage and check electrolyte.

Standard voltage: 12 V, or more

Specific gravity: Above 1.260

2) Check the fuse condition.
Make sure that ampere of the fuse is setting value, and it is not blown out.
3) Check the connecting condition of harness and harness connector.
4) Confirm settings of body integrated unit are corresponded to vehicle equipment. <Ref. to LAN(diag)-18, REGISTRATION BODY INTEGRATED UNIT (EQUIPMENT SETTING), OPERATION, Subaru Select Monitor.>
5) Confirm setting are corresponded to vehicle equipment by function setting (ECM customizing) of body integrated unit. <Ref. to LAN(diag)-21, FUNCTION SETTING (ECM CUSTOMIZING), OPERATION, Subaru Select Monitor.>
6) Confirm “Factory initial setting” of body integrated unit registrations is “Market”.
7) Confirm key illumination does not blink with ignition switch turned to ON.

C: PREPARATION TOOL

1. SPECIAL TOOL

ILLUSTRATION	TOOL NUMBER	DESCRIPTION	REMARKS
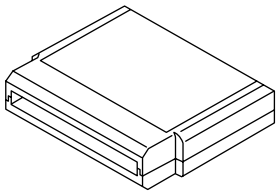 ST24082AA260	24082AA260	CARTRIDGE	Troubleshooting for electrical system.
ST22771AA030	22771AA030	SUBARU SELECT MONITOR KIT	Troubleshooting for electrical system.

2. GENERAL TOOL

TOOL NAME	REMARKS
Circuit tester	Used for measuring resistance, voltage and ampere.

4. Electrical Component Location

A: LOCATION

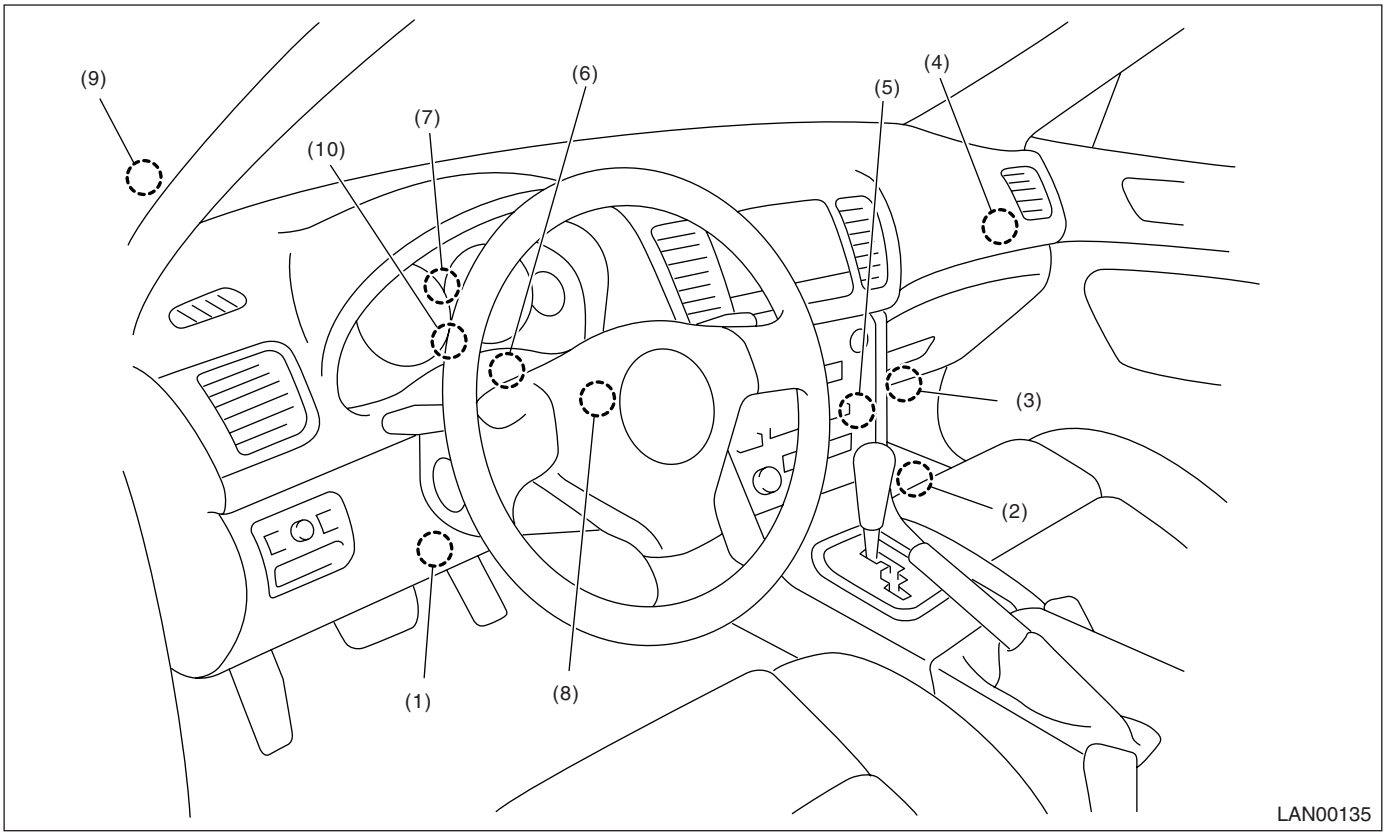

(1) Body integrated unit
(2) Engine control module (ECM)
(3) Auto A/C control unit
(4) Keyless entry control module (Antenna)
(5) A/C control panel
(6) Transmission control module (TCM)
(7) Combination meter
(8) Steering angle sensor
(9) ABSCM&H/U or VDCCM&H/U (In engine compartment)
(10) Odo/trip meter

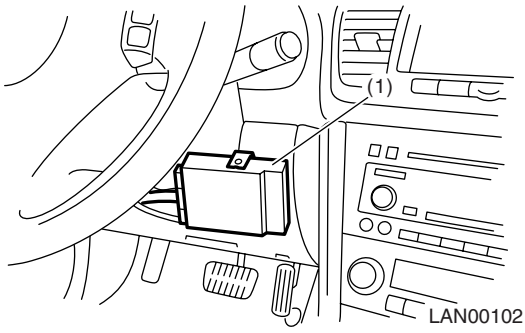

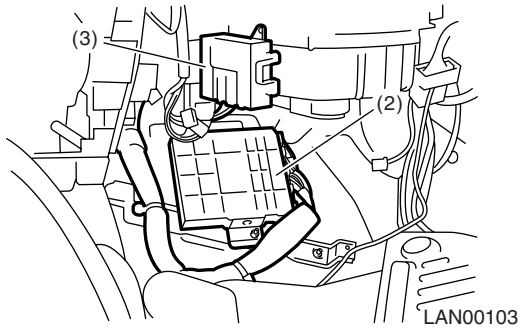

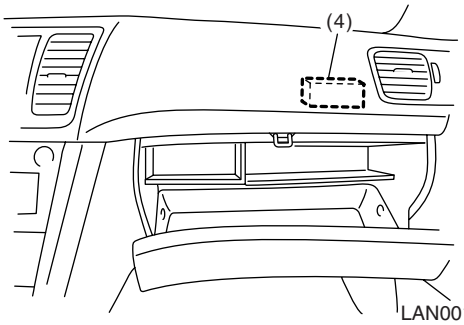
(4)
LAN00136

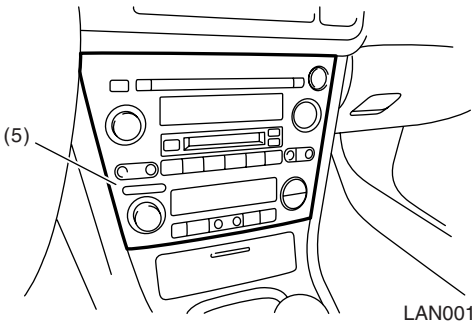
(5)
LAN00137

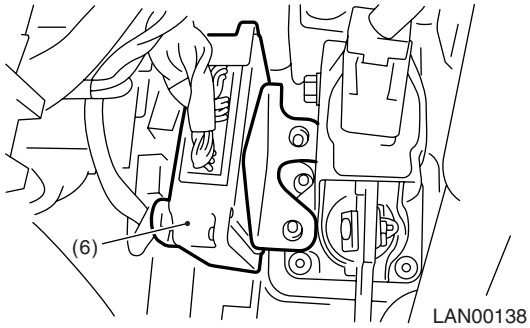
(6)
LAN00138

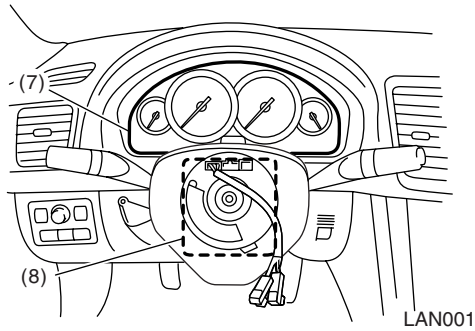
(7)
(8)
LAN00139

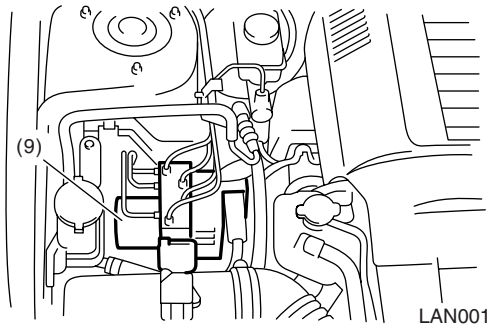
(9)
LAN00140

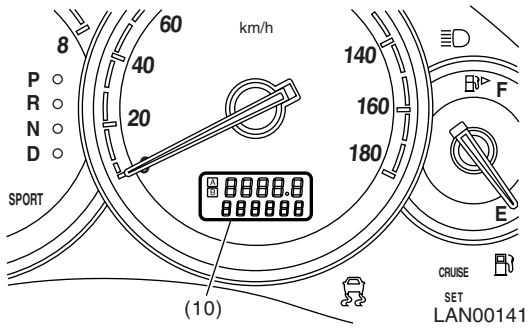
km/h
8
40
60
20
140
160
180
P
R
N
D
SPORT
F
E
CRUISE
SET
(10)
LAN00141

5. Control Module I/O Signal

A: ELECTRICAL SPECIFICATION

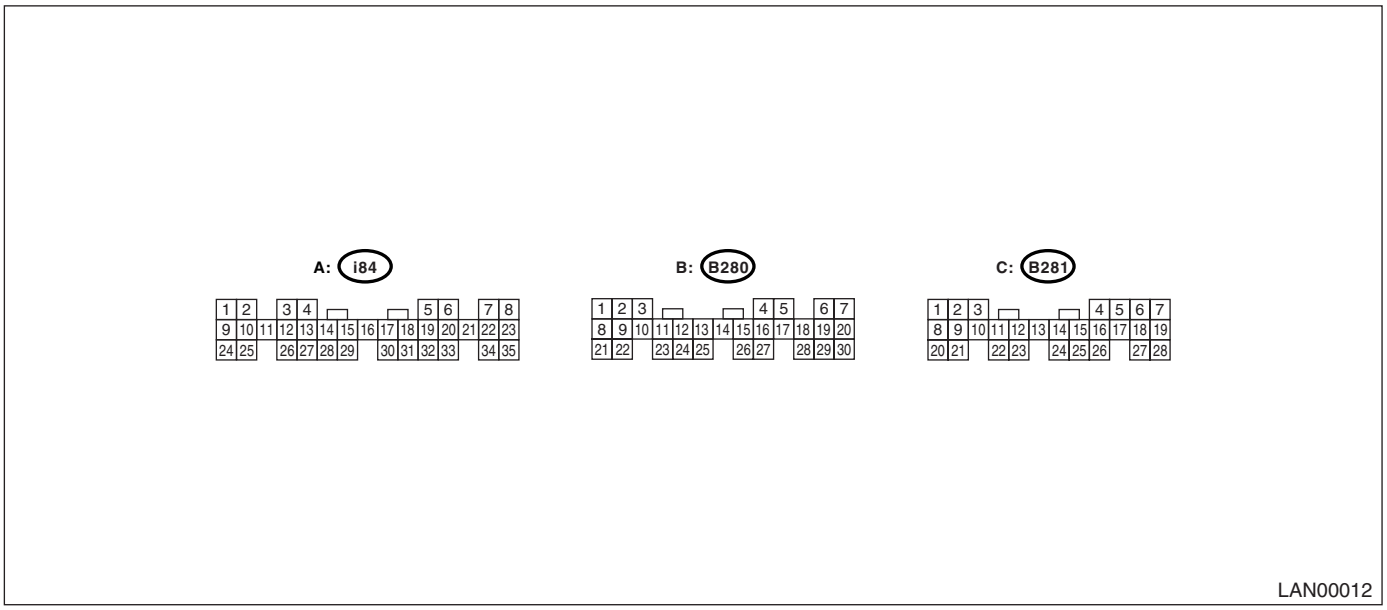

Description	Connector No.	Terminal No.	Signal (V or Ω)	NOTE
			Ignition switch ON (engine OFF)	
System control power supply	B281	C2	10 — 13 V	Always
Backup power supply	B280	B7	10 — 13 V	Always
Ignition power supply	i84	A1	10 — 13 V	Ignition ON
ACC power supply	i84	A24	10 — 13 V	ACC ON
Ground	i84	A21	Less than 1 Ω	Always
	B281	C9		
	B281	C8		
	B280	B22		
Key warning switch	B281	C7	10 — 13 V	When ignition key inserted
Stop light switch	B281	C23	10 — 13 V	When brake pedal depressed
Illumination volume (Vi1)	i84	A10	4.5 — 5.5 V	Small light ON
Illumination volume (Vi 2)	i84	A2	0.5 — 4.5 V	—
Illumination volume (Vi 3)	i84	A25	Less than 1 Ω	Ground circuit
Illumination output	i84	A5	10 — 13 V	Small light ON
Front fog light input	B281	C17	10 — 13 V	Front fog light ON
Headlight input	B281	C16	10 — 13 V	Headlight ON (Both of Hi, Lo)
Door switch input Driver's seat	i84	A19	Less than 1 V (10 — 13 V at OFF)	Driver's door open (ON)
Door switch input Passenger's seat	i84	A32	Less than 1 V (10 — 13 V at OFF)	Passenger's door open (ON)
Door switch input Rear RH seat	i84	A18	Less than 1 V (10 — 13 V at OFF)	Rear RH door open (ON)
Door switch input Rear LH seat	i84	A31	Less than 1 V (10 — 13 V at OFF)	Rear LH door open (ON)
Door switch Trunk/Rear gate	i84	A17	Less than 1 V (10 — 13 V at OFF)	Trunk/Rear gate open (ON)

Control Module I/O Signal

Description	Connector No.	Terminal No.	Signal (V or Ω)	NOTE
			Ignition switch ON (engine OFF)	
Illumination control switch	i84	A30	10 — 13 V (at dimmer ON)	Extinct the clock and audio illumination
Manual switch (LOCK)	i84	A15	Less than 1 Ω	Door lock switch ON
Manual switch (UNLOCK)	i84	A29	Less than 1 Ω	Door lock switch ON
Door lock power supply	i84	A34	10 — 13 V	
All door LOCK output	i84	A7	10 — 13 V	Manual, door key switch ON
All door UNLOCK output	i84	A8	10 — 13 V	Manual, door key switch ON
Trunk/Rear gate UNLOCK output	i84	A22	10 — 13 V	When the trunk open signal received with keyless entry (Sedan model)
Key/shift lock power supply	B281	C1	10 — 13 V	
Shift lock output	B280	B6	10 — 13 V	Ignition switch ON, at “P” range, foot brake ON
Wiper deicer switch	i84	A14	Less than 1 Ω	Wiper deicer switch ON
Wiper deicer relay output	B280	B14	Less than 1 Ω	Wiper deicer relay ON
Rear defogger switch	i84	A28	Less than 1 Ω	Rear defogger switch ON
Rear defogger relay output	B281	B16	Less than 1 Ω	Rear defogger relay ON
Shift switch (ON)	B281	C26	Less than 1 Ω	At Manual mode
Shift switch (UP)	B281	C15	Less than 1 Ω	At Manual mode UP
Shift switch (DOWN)	B281	C25	Less than 1 Ω	At Manual mode DOWN
“P” range switch	B281	C13	Less than 1 Ω	
Impact sensor	B281	C5	Less than 1 Ω	Impact sensor ON (Model with immobilizer)
Fuel level sensor	B281	C19	0 — 102.3 Ω	
Ambient sensor	B281	C3	0.5 — 4.5 V	SIG
	B281	C10	Less than 1 Ω	GND
Seat belt switch (driver’s seat)	i84	A4	Less than 1 Ω	Driver’s seat belt worn
Seat belt switch (passenger’s seat)	i84	A13	Less than 1 Ω	Passenger’s seat belt worn
Seat belt warning light (driver’s seat)	i84	A20	Less than 1 Ω	Driver’s seat belt worn
Seat belt warning light (passenger’s seat)	B281	C24	Less than 1 Ω	Passenger’s seat belt worn
Sedan/Wagon identification switch	B281	C11	10 — 13 V (Sedan model) 0 — 5 V (Wagon model)	
Rear wiper switch (ON)	B281	C6	Less than 1 Ω	Rear wiper switch ON
Rear wiper switch (INT)	B281	C18	Less than 1 Ω	Rear wiper switch ON
Rear washer switch	B281	C27	Less than 1 Ω	Rear washer switch ON
Rear wiper power supply	B280	B21	10 — 13 V	
Rear wiper ON output	B280	B1	10 — 13 V	Rear wiper switch ON
Rear wiper return	B280	B8	Less than 1 Ω	At wiper reversing
		B1 — B8	Less than 1 Ω	
Room light output	B280	B3	Less than 1 Ω	When LOCK, UNLOCK with keyless entry

Description	Connector No.	Terminal No.	Signal (V or Ω)	NOTE
			Ignition switch ON (engine OFF)	
Key ring illumination output	B280	B4	Less than 1 Ω	Ignition key removed, driver door open
Turn hazard output	B280	B12	Less than 1 Ω	When operating keyless entry answer back
Keyless buzzer output	i84	A6	Less than 1 Ω	When operating keyless entry answer back
Security indicator light	i84	A33	Less than 1 Ω	At ignition key removed, immobilizer operating
Kick down switch	B280	B12	Less than 1 Ω	Kick down switch ON
Keyless communication	i84	A9	2 — 10 V	At keyless entry signal received
High-speed CAN circuit (Hi)	B280	B20	Between B20 — B30 Serial communication	At communicating (sending and receiving)
High-speed CAN circuit (Lo)	B280	B30		
Low-speed CAN circuit 1 (Hi)	i84	A26	Between A25 — A26 Serial communication	At communicating (sending and receiving)
Low-speed CAN circuit 1 (Lo)	i84	A25		
Low-speed CAN circuit 2 (Hi)	B280	B26	Between B25 — B27 Serial communication	At communicating (sending and receiving) (Model with auto A/C)
Low-speed CAN circuit 2 (Lo)	B280	B27		
Immobilizer antenna	B281	C20 — C21	Serial communication	
Immobilizer communication (Main)	B280	B18 (Back-up B28)	Serial communication	
Subaru Select Monitor communication	B280	B19	Serial communication	

B: WIRING DIAGRAM

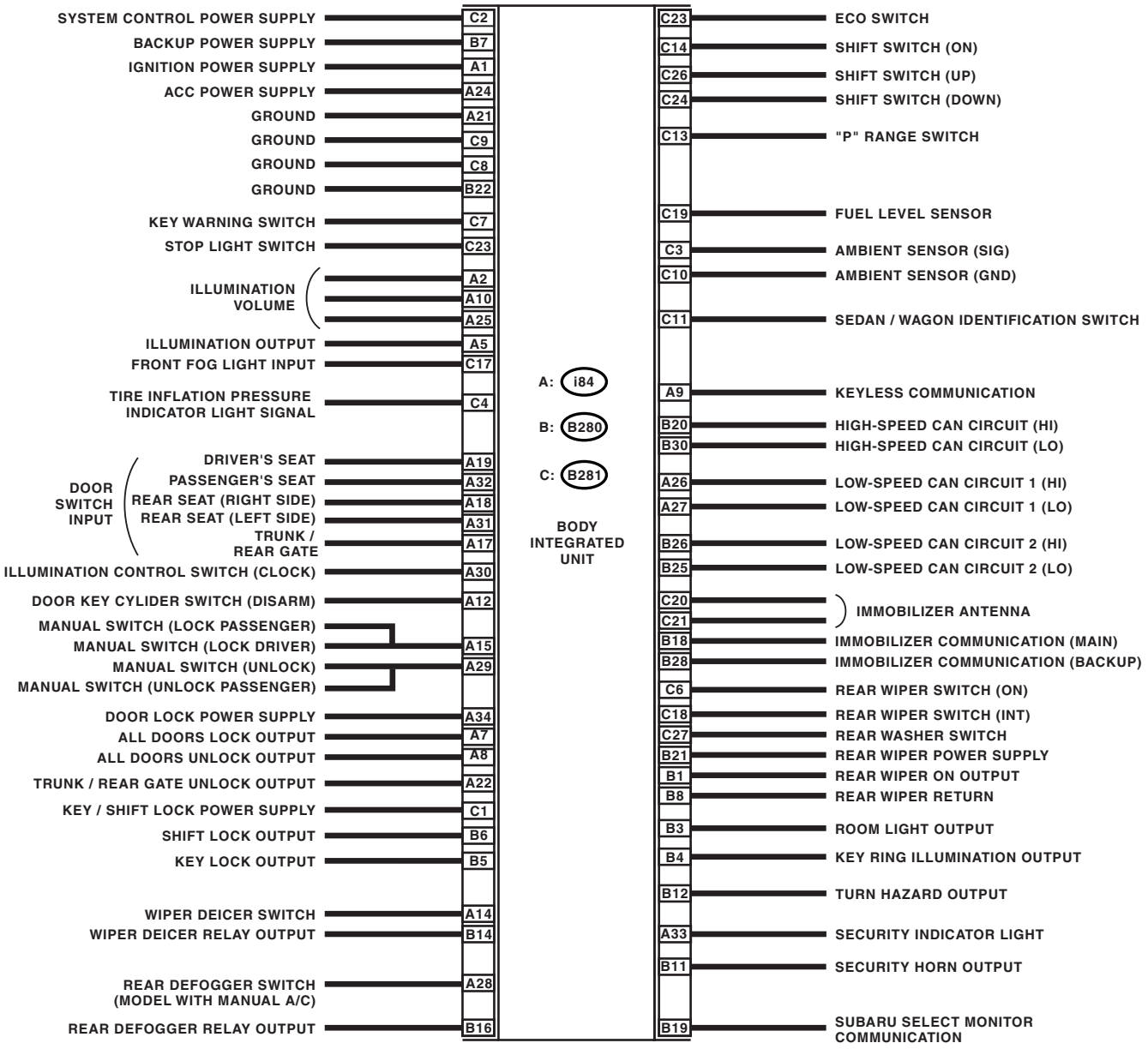

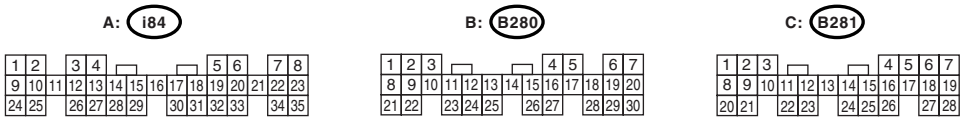

LAN00142

C: LAN SYSTEM

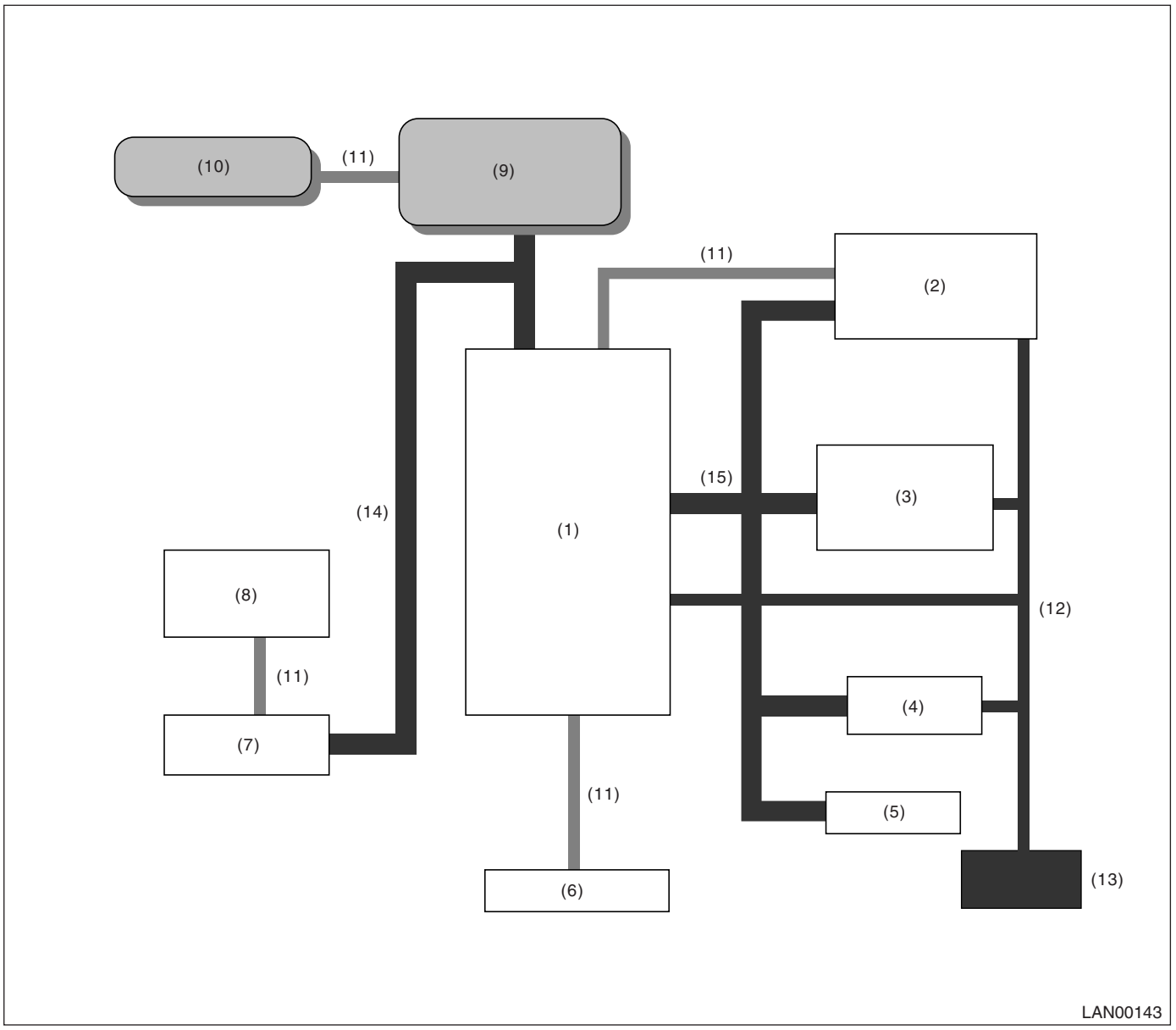

(1) Body integrated unit
(2) ECM
(3) TCM
(4) VDC/ABSCM
(5) Steering angle sensor
(6) Keyless entry receiver
(7) A/C control unit
(8) Audio or A/C control panel
(9) Combination meter
(10) Clock
(11) Exclusive communication line
(12) Subaru Select Monitor communication line
(13) Subaru Select Monitor
(14) Low speed CAN (Body control system)
(15) High speed CAN (Driving control system)

6. Subaru Select Monitor

A: OPERATION

1. READ DIAGNOSTIC TROUBLE CODE (DTC)

NOTE:
• DTC is displayed in the sequence of inputting. (When inputting more than two simultaneously, DTC is displayed in the sequence of priority.)
• When more than two DTCs are displayed, perform the diagnosis of top of them.

1) Prepare the Subaru Select Monitor kit.

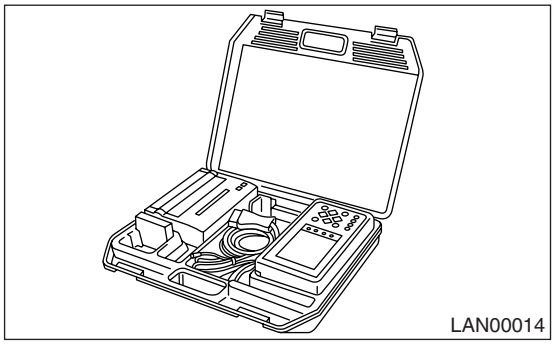

2) Connect the diagnosis cable to Subaru Select Monitor.
3) Insert the cartridge to Subaru Select Monitor. <Ref. to LAN(diag)-6, SPECIAL TOOL, PREPARATION TOOL, General Description.>

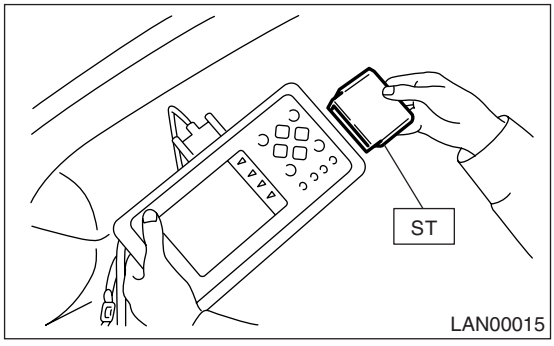

4) Connect the Subaru Select Monitor to data link connector.
Data link connector is located in the lower portion of the instrument panel (on the driver's side).

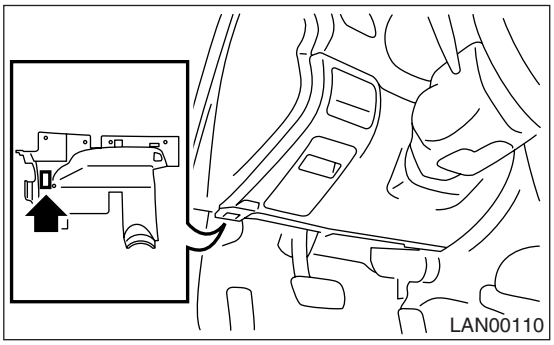

CAUTION:
Do not connect scan tools except for Subaru Select Monitor.

5) Turn the ignition switch to ON (engine OFF) and turn the Subaru Select Monitor switch to ON.

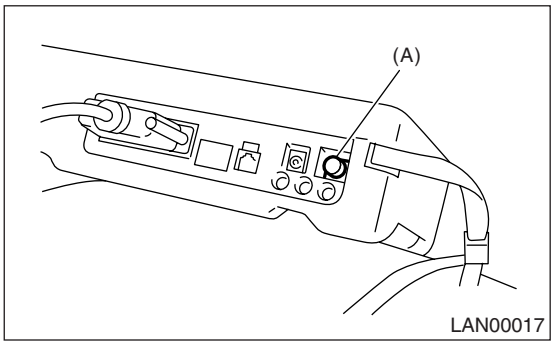

(A) Power switch

6) On the «Main Menu» display screen, select the {Each System Check} and press the [YES] key.
7) On the «System Selection Menu» display screen, select the {Integ. Unit mode} and press the [YES] key.
8) On the «Integ. Unit mode failuer diag» display screen, select the {Diagnostic Code(s) Display} and press the [YES] key.

NOTE:
• For details concerning operation procedure, refer to "SUBARU SELECT MONITOR OPERATION MANUAL".
• For details concerning DTCs, refer to the List of Diagnostic Trouble Code (DTC). <Ref. to LAN(diag)-28, List of Diagnostic Trouble Code (DTC).>

2. READ CURRENT DATA

1) On the «Main Menu» display screen, select the {Each System Check} and press the [YES] key.
2) On the «System Selection Menu» display screen, select the {Integ. Unit mode} and press the [YES] key.
3) On the «Integ. Unit mode failuer diag» display screen, select the {Current Data Display & Save} and press the [YES] key.
4) On the «Current Data Display & Save» display screen, select the {12 Data Display} and press the [YES] key.
5) Using the scroll key, scroll the display screen up or down until the desired data is shown.
- A support list contains both of analog and digital data, and they are shown in the following table.

3. DISPLAY OF ANALOG DATA

Items to be displayed	Unit of measure	NOTE
BATT Voltage (Control)	10 — 15 V	—
BATT Voltage (BACK UP)	10 — 15 V	—
IG power supply voltage	10 — 15 V	—
ACC voltage	10 — 15 V	—
Illumination VR voltage	0 — 5 V	—
Illumi. output d-ratio	0 — 100%	—
ambient temp sensor V	0 — 5 V	—
Ambient temperature	−40 — 87.5°C	—
Fuel level voltage	0 — 8 V	—
Fuel level resistance	0 — 102.3 Ω	Body integrated unit input value
key-lock solenoid V	6 — 12 V	—
number of regist.	0 — 4	—
Front Wheel Speed	km/h	—
VDC/ABS latest f-code	DTC display (Temporarily)	This is normal when the DTC is not input though this code is displayed
Blower fan steps	0 — 2 level	0: OFF, 1: Low, 2: More than 2 level
Fuel level resistance2	0 — 102.3 Ω	Body integrated unit output
Fuel consumption	cc/s	—
Coolant Temp.	−40 — 130°C	—
Vehicle lateral G	m/s^2	—
SPORT Shift Stages	0 — 7 levels	(0: light OFF, 6: fail, 7: ATF temperature High/Low)
Shift Position	0 — 7 levels	(8 is no input)
Off delay time	OFF, Short, Normal, Long	—
Auto lock time	20, 30, 40, 50, 60 seconds	—

4. DISPLAY OF ON/OFF DATA

Items to be displayed	Unit of measure
key-lock warning SW	ON/OFF
Stop Light Switch	ON/OFF
Front fog lamp SW input	ON/OFF
Rear fog lamp SW input	ON/OFF
lighting SW input	ON/OFF
Door key-lock SW input	ON/OFF
Door unlock SW input	ON/OFF
Driver's door SW input	ON/OFF
P-door SW input	ON/OFF
Rear right door SW input	ON/OFF
Rear left door SW input	ON/OFF
R Gate SW input	ON/OFF
Manual lock SW input	ON/OFF
Manual unlock SW input	ON/OFF
Lock SW (front hood)	ON/OFF
Bright SW input	ON/OFF
Tiptronic Mode Switch	ON/OFF
TIP UPSW input	ON/OFF
TIP DOWN SW input	ON/OFF
P SW	ON/OFF
R wiper ON SW input	ON/OFF
R wiper INT SW input	ON/OFF
R washer SW input	ON/OFF
wiper deicer SW input	ON/OFF
Rear Defogger SW	ON/OFF
Driver's Seat SW input	ON/OFF
P seatbelt SW input	ON/OFF
Fr wiper input	ON/OFF
Registration SW input	ON/OFF
Identification SW input	ON/OFF
Rr defogger output	ON/OFF
lock actuat. LOCK output	ON/OFF
All seat UNLOCK output	ON/OFF
D-seat UNLOCK output	ON/OFF
R gate/trunk UNLK output	ON/OFF
Double lock output	ON/OFF
R wiper output	ON/OFF
Shift Lock Solenoid	ON/OFF
Key locking output	ON/OFF
wiper deicer SW input	ON/OFF
Starter cutting output	ON/OFF
Hazard Output	ON/OFF
Keyless Buzzer Output	ON/OFF
Horn Output	ON/OFF
Siren Output	ON/OFF
D-belt warning light O/P	ON/OFF
P-belt warning light O/P	ON/OFF
Illumination lamp O/P	ON/OFF
Room lamp output	ON/OFF
key illumi. lamp o/p	ON/OFF

Items to be displayed	Unit of measure
R fog lamp output	ON/OFF
R fog lamp monitor	ON/OFF
Immobilizer lamp output	ON/OFF
Keyless operation 1	Registration/Normal
Keyless operation 2	Clear/Normal
CC Main Lamp	On/Off
CC Set Lamp	On/Off
SPORT Lamp	On/Off
SPORT Blink	Blink/Off
ATF Temperature Lamp	On/Off
ATF Blink	Blink/Off
Tire diameter abnormal 1	On/Off
Tire diameter abnormal 2	Blink/Off
SPORT Shift (UP)	UP/OFF
SPORT Shift (DOWN)	DOWN/OFF
SPORT Shift (buzzer 1)	ON/OFF
SPORT Shift (buzzer 2)	ON/OFF
ABS/VDC Judging	ABS/VDC
ADA Existence Judging	Yes/No
Small lamp SW	ON/OFF
Headlamp	ON/OFF
Headlight HI	ON/OFF
Turn signal LH	ON/OFF
Turn signal RH	ON/OFF
Rr Defogger SW	ON/OFF
Australia Judging Flag	Australia/Others
Tire 18inch flag	18 in/others
Number of cylinders	4 cylinders/6 cylinders
Cam shaft specification	SOHC/DOHC
Turbo	Turbo/Non-turbo
E/G displacement (2.5L)	2.5 L/ OFF
E/G displacement (3.0L)	3.0 L/ OFF
AT/MT identification terminal	AT model/MT model
E/G cooling fan	ON/OFF
Heater cock valve	ON/OFF
Power window (Up)	ON/OFF
Power window (Down)	ON/OFF
Keyless buzzer	ON/OFF
Bright Request	ON/OFF
P/W ECM Failure	NG/OK
Keyless Hook SW	ON/OFF
Door lock SW (Open)	ON/OFF
Door lock SW (Close)	ON/OFF
Door Key SW (Open)	ON/OFF
Door Key SW (Close)	ON/OFF
Under hook registration	ON/OFF
Hook registration end	ON/OFF
Unlock request	ON/OFF
Center display failure	OK/NG
NAVI Failure	OK/NG

Items to be displayed	Unit of measure
IE Bus failure	Can not use
Auto A/C failure	OK/NG
EBD Warning Light	OK/OFF
ABS Warning Light	OK/OFF
VDC OFF flag	ON/OFF
VDC/ABS OK B	OK/NG
VDC/ABS condition	0 — 4
Destinat.	0 — 16
Touch SW	0 — 64

NOTE:
For details concerning operation procedure, refer to “SUBARU SELECT MONITOR OPERATION MANUAL”.

5. CONFIRMATION OF CURRENT SETTING

1) On the «Main Menu» display screen, select the {Each System Check} and press the [YES] key.
2) On the «System Selection Menu» display screen, select the {Integ. Unit mode} and press the [YES] key.
3) On the «Integ. Unit mode failuer diag» display screen, select the {Current Data Display & Save} and press the [YES] key.
4) On the «Current Data Display & Save» display screen, select the {12 Data Display} and press the [YES] key.
5) Using the scroll key, scroll the display screen up or down until the desired data is shown.
6) Display the following items and record the settings.
Required items for new registration (Except for system not equipped)

Item	Item to confirm				Remarks
Key No. to register	1	2	3	4	Registered ID type
Off delay	OFF	Long	Normal	Short	Setting for lighting off time
Auto-lock	60, 50, 40, 30, 20		OFF		(Unit sec.)
Rr defogger op. mode	Normal		Continuous		
Wiper deicer op. mode	Normal		Continuous		Optional setting
Security Alarm Setup	ON		OFF		
Impact Sensor Setup	ON		OFF		Optional setting
Alarm monitor delay setting	ON		OFF		
Lockout prevention	ON		OFF		
Impact Sensor	Yes		No		Optional setting
Siren setting	Yes		No		Optional setting
Answer-back buzzer setup	ON		OFF		Not equipped
Hazard answer-back setup	ON		OFF		
Automatic locking setup	ON		OFF		
Ans.-back Buzzer	Yes		No		Not equipped
Auto locking	Yes		No		
Door open warning (prevention of battery run-out)	Yes		No		
A/C ECM setting	Yes		No		Model with auto A/C
P/W ECM setting	Yes		No		Not equipped
Center display failure	Yes		No		Model with center display
Wiper deicer	Yes		No		Optional setting
Rear fog light setting	Yes		No		Optional setting
Factory initial setting	Manufacture		Market		Not change to Manufacture mode

6. REGISTRATION BODY INTEGRATED UNIT (EQUIPMENT SETTING)

CAUTION:
Body integrated unit is core of LAN system, and also can select the function of all vehicle system control. It is possible to control the original functions of vehicle when registrations of body integrated unit and function setting are corresponded to vehicle equipment.
If registrations and function setting are different from vehicle equipment, vehicle system does not operate normally and diagnosis cannot be performed correctly. Pay attention to items below.
• Be sure to correspond registrations and function settings to vehicle equipment.
• Do not change the settings of vehicle improperly.
• Confirm key illumination does not blink or "Factory initial setting" of body integrated unit registrations is "Market". If "Factory initial setting" is set to "Factory", key illumination blinks with ignition key turned to ON to give warning of unconfirmed settings.
• Key illumination does not blink with ignition switch turned to ON and go off with door closed.
• Be sure to register immobilizer if body integrated unit is replaced with a new one. (Model with immobilizer)
• Make a registration of immobilizer when the parts replaced related to immobilizer. Refer to "REGISTRATION MANUAL FOR IMMOBILIZER".

1) Turn the ignition switch to OFF.
2) Connect the Subaru Select Monitor to data link connector.

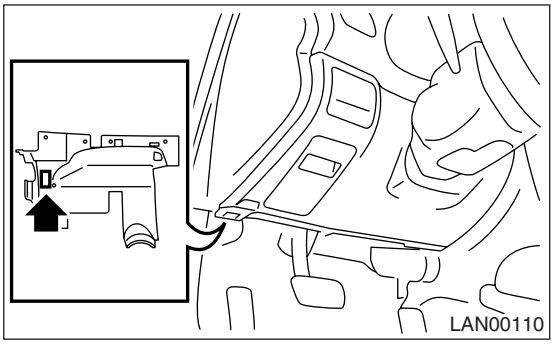

3) Turn the ignition switch to ON and Subaru Select Monitor to ON.

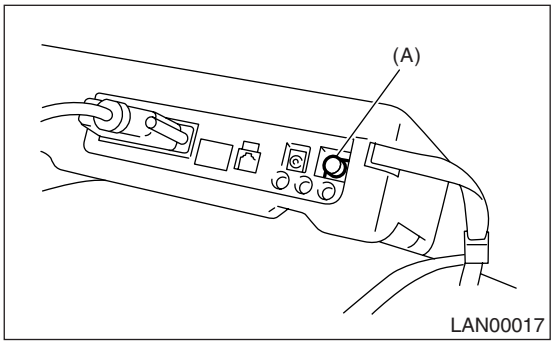

(A) Power switch

4) On the «Main Menu» display screen, select the {Each System Check} and press the [YES] key.
5) On the «Each System Check» display screen, select the {Integ. Unit mode} and then select the "ECM customizing".

6) Change the setting with UP/DOWN key and press the [YES] key.
- List of body integrated unit registration item

NOTE:
Setting is different depending on grade of vehicle.

Data		Initial setting	Registration	Remarks
21	A/C ECM setting	OFF	ON	Illumination control does not operate if A/C ECM setting is set to “OFF” in case of model with auto A/C.
			OFF	If A/C ECM setting is set to “ON” in case of model without auto A/C, illumination change to night illumination and it is difficult to be recognized.
22	P/W ECM setting	OFF	ON	Be sure to set P/W ECM setting to “OFF”.
			OFF	
23	Center display failure	OFF	ON	Set to “OFF” in case of model with center display.
			OFF	
24	Wiperdeicer	OFF	ON	ON signal does not output with operation of wiper deicer switch if Wiperdeicer is set to “OFF” in model with wiper deicer.
			OFF	
25	Rear fog light setting	OFF	ON	Vehicle is controlled in rear fog light equipped mode.
			OFF	Vehicle is controlled in rear fog light no-equipped mode. (Be sure to set to “OFF” in model without rear fog light.
26	Factory initial setting (Reset of body integrated unit)	Factory	Factory (Reset)	If Factory initial setting is set to “Factory”, registrations of items above is changed to “OFF”. Be sure to set to “Market”.
			Market (Settlement)	

CAUTION:
- **It is possible to control the original functions of vehicle when registrations of body integrated unit and function setting are corresponded to vehicle equipment.**
- **When body integrated unit is new one or “Factory” mode, key illumination blinks to show equipment settings does not completed.**
- **Be sure not to change Factory initial setting except installation of new body integrated unit.**

NOTE:
“Factory” mode:
- Body integrated unit has not been set yet. It can be recognized by key illumination blinking with ignition switch turned to ON.
- All body integrated units for repair parts are set to “Factory” mode. When replacing a body integrated unit, be sure to perform the registration operation.

“Market” mode:
Each settings have been set. It can be recognized by key illumination coming on in concocting with room light and going off with ignition switch turned to ON.

7) Perform the Factory setting. On the «ECM customizing» display screen of Subaru Select Monitor, select the {Factory initial setting} and press the [YES] key.
8) Change the mode from Factory into Market.
9) Replace the immobilizer cartridge, and register the immobilizer key. (Model with immobilizer)
10) Perform the registration according to the procedures of “IMMOBILIZER REGISTRATION MANUAL”.
11) When key registration is completed, “Do you want to register remote engine start?” is displayed. Perform the registration only if equipped.
12) Perform the function setting (ECM customizing).
<Ref. to LAN(diag)-21, FUNCTION SETTING (ECM CUSTOMIZING), OPERATION, Subaru Select Monitor.>

NOTE:
For details concerning operation procedure, refer to “SUBARU SELECT MONITOR OPERATION MANUAL”.

7. CLEAR MEMORY MODE

1) On the «Main Menu» display screen, select the {2. Each System Check} and press the [YES] key.
2) On the «System Selection Menu» display screen, select the {Integ. Unit mode} and press the [YES] key.
3) Press [YES] key after displayed the information of body integrated unit type.
4) On the «Integ. Unit mode failuer diag» display screen, select the {Clear Memory} and press the [YES] key.

Display	Contents to be monitored
Clear memory?	Clear function of DTC and freeze frame data

5) When the “Done” are shown on the display screen, turn the ignition switch to OFF.

NOTE:
For detailed operation procedure, refer to “SUBARU SELECT MONITOR OPERATION MANUAL”.

8. FREEZE FRAME DATA

NOTE:
• Data stored at the time of trouble occurrence is shown on display.
• Freeze frame data will be memorized maximum to 20.
• If freeze frame data is not stored in memory correctly (caused by low power supply of body integrated unit), DTC will be displayed with “?” on the head of it in the Subaru Select Monitor display. This shows it may be an unreliable reading.

9. FUNCTION SETTING (ECM CUSTOMIZING)

1) On the «Main Menu» display screen, select the {Each System Check} and press the [YES] key.
2) On the «System Selection Menu» display screen, select the {Integ. Unit mode} and press the [YES] key.
3) On the «Integ. Unit mode failuer diag» display screen, select the {ECM customizing} and press the [YES] key.
4) Change the setting with UP/DOWN key and press the [YES] key.

- List of function setting item (ECM customizing)

No.	Data	Initial setting value	Customize setting	Remarks	
1	Off delay time	Normal		Delay time below can be selected by setting.	
				After door closed	After key unlock
			OFF	0 sec.	0 sec.
			Short	3 sec.	10 sec.
			Normal	5 sec.	20 sec.
			Long	8 sec.	30 sec.
2	Auto-lock time	30 sec.	0 — 60 seconds	Workable when Auto locking is set to “ON” and Automatic locking setup is “ON” Time can be changed by 10 seconds: 0 (OFF) — 60 (maximum).	
3	Rr defogger op. mode	15 min.	15 min.	Rear defogger stops in 15 minutes automatically after switch is turned to ON.	
			Continuation	Rear defogger repeats active condition for 15 minutes and inactive condition for 2 minutes until switch is turned to OFF.	
4	Wiper deicer op. mode	15 min.	15 min.	Wiper deicer stops in 15 minutes automatically after switch is turned to ON.	
			Continuation	Wiper deicer repeats active condition for 15 minutes and inactive condition for 2 minutes until switch is turned to OFF.	
5	Security Alarm Setup	OFF	ON	Security alarm (horn or siren) in active condition	
			OFF	Security alarm in inactive condition	
6	Impact Sensor Setup	OFF	ON	Workable when Impact Sensor Setup is set to “ON” Impact sensor in active condition	
			OFF	Impact sensor in inactive condition (Set Impact Sensor Setup of model without impact sensor to “OFF”.)	
7	Alarm monitor delay setting	ON		After doors are locked by keyless entry system operated, Alarm monitor starts in following time.	
			ON	Delay time is 30 seconds.	
			OFF	Delay time is 0 second.	
8	Lockout prevention	ON	ON	Lockout prevention in active condition (Lockout prevention does not operate if safety knob is locked by hand.)	
			OFF	Lockout prevention in inactive condition	
9	Impact sensor (OP)	OFF	ON	Vehicle is controlled in impact sensor equipped mode. (Set Impact sensor to “OFF” in model without impact sensor. If Impact sensor is set to “ON”, hazard, horn or siren operate after doors are locked by keyless entry system operated (Alarm monitor starting).	
			OFF	Vehicle is controlled in impact sensor no-equipped mode.	
10	Siren setting	OFF	ON	Siren sounds when alarm operates. (Set Siren setting to “OFF” in model without siren. Horn does not sound if Siren setting is set to “ON”.)	
			OFF	Horn sounds when alarm operates.	

No.	Data	Initial setting value	Customize setting	Remarks
11	Answer-back buzzer setup	ON	ON	Workable when Answer-back buzzer setup is set to “ON” When lock/unlock is selected by keyless entry system operated, answer-back buzzer sounds.
			OFF	When lock/unlock is selected by keyless entry system operated, answer-back buzzer does not sound.
12	Hazard answer-back setup	ON	ON	Workable when Hazard answer-back setup is set to “ON” When lock/unlock is selected by keyless entry system operated, hazard answer-back operates.
			OFF	When lock/unlock is selected by keyless entry system operated, hazard answer-back does not operate.
13	Automatic locking setup	ON	ON	Workable when Automatic locking setup is set to “ON” When lock/unlock is selected by keyless entry system operated, automatic locking operates.
			OFF	When lock/unlock is selected by keyless entry system operated, automatic locking does not operate.
14	Ans.-back Buzzer	ON	ON	Vehicle is controlled in answer-back buzzer equipped mode.
			OFF	Vehicle is controlled in answer-back buzzer non-equipped mode. (Set Ans.-back Buzzer to “OFF” in model without answer back buzzer.)
15	Auto locking	ON	ON	Vehicle is controlled in auto locking equipped mode.
			OFF	Vehicle is controlled in auto locking non-equipped mode. (Set Auto locking to “OFF” in model without answer-back buzzer.)
16	Initial Keyless Setting	—	—	—
			Execution	Settings of keyless entry system are initialized. (No. 2: 30 sec., No. 11: ON, No. 12: ON, No. 13: ON, No. 14: ON)
17	Initial button setting	—	—	—
			Execution	Settings of each function are initialized. (No. 1: Normal, No. 3: 15 min., No. 4: 15 min., No. 8: ON)
18	Initial Security setting	—	—	—
			Execution	Settings of security system are initialized. (No. 5: OFF, No. 6: OFF, No. 7: ON, No. 10: OFF)
19	Passive Alarm (Not used)	OFF	ON	Workable when passive arming is set to “ON”.
			OFF	
20	Door open warning (prevention of battery run-out)	OFF	ON	If detecting door open for 30 minutes, room light, key illumination and door warning light are turned off to prevent battery run-out.
			OFF	Room light, key illumination and door warning light is not turned off.

5) After setting, make sure that vehicle equipment is same as the setting changed in the {Current Data Display & Save}.

CAUTION:
- **It is possible to control the original functions of vehicle when settings above are corresponded to vehicle equipment.**
- **Do not change the settings except for setting above during operation of function setting.**
- **Be sure not to change “Factory” initial setting except in installation of new body integrated unit.**

NOTE:
For details concerning operation procedure, refer to “SUBARU SELECT MONITOR OPERATION MANUAL”.

10.FUNCTION CHECK

In order to check the body integrated unit function, inspect the body integrated unit and actuator using Subaru Select Monitor without operating switches.
1) On the «Main Menu» display screen, select the {Each System Check} and press the [YES] key.
2) On the «System Selection Menu» display screen, select the {Integ. Unit mode} and press the [YES] key.
3) On the «Integ. Unit mode failuer diag» display screen, select the {System Operation Check Mode} and press the [YES] key.
4) Select item to operate on the «System Operation Check Mode» display screen with “UP/Down key”, and press the [YES] key.

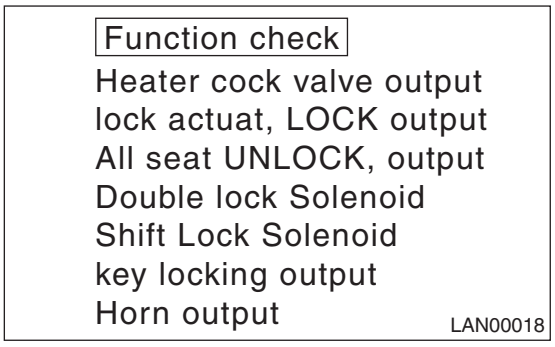

5) Pressing [YES] starts, [NO] cancels the operation and [YES] returns to the System Operation Check Mode display screen.

NOTE:
If not equipped (based on area or condition), process will not go on.

7. Read Diagnostic Trouble Code (DTC)

A: OPERATION

1. WITHOUT SUBARU SELECT MONITOR

NOTE:
Use the Subaru Select Monitor, because DTCs can not be read out.

2. WITH SUBARU SELECT MONITOR

For details concerning DTC reading procedure, refer to “Subaru Select Monitor”. <Ref. to LAN(diag)-14, READ DIAGNOSTIC TROUBLE CODE (DTC), OPERATION, Subaru Select Monitor.>

8. Clear Memory Mode

A: OPERATION

1. WITHOUT SUBARU SELECT MONITOR

NOTE:
Use the Subaru Select Monitor for Clear Memory Mode.

2. WITH SUBARU SELECT MONITOR

For detailed procedures of clearing DTC, refer to “SUBARU SELECT MONITOR”. <Ref. to LAN(diag)-20, CLEAR MEMORY MODE, OPERATION, Subaru Select Monitor.>

9. Read Current Data

A: OPERATION

1) On the «Main Menu» display screen, select the {Each System Check} and press the [YES] key.
2) On the «System Selection Menu» display screen, select the {Integ. Unit mode} and press the [YES] key.
3) On the «Integ. Unit mode failuer diag» display screen, select the {Current Data Display & Save} and press the [YES] key.
4) On the «Data Display Menu» screen, select the {12 Data Display} and press the [YES] key.
5) Using the scroll key, scroll the display screen up or down until the desired data is shown.
<Ref. to LAN(diag)-15, DISPLAY OF ANALOG DATA, OPERATION, Subaru Select Monitor.> <Ref. to LAN(diag)-16, DISPLAY OF ON/OFF DATA, OPERATION, Subaru Select Monitor.> <Ref. to LAN(diag)-17, CONFIRMATION OF CURRENT SETTING, OPERATION, Subaru Select Monitor.>

10.Function Setting (Customize)

A: OPERATION

1. WITH SUBARU SELECT MONITOR

For detailed procedures of function setting (ECM customizing), refer to “SUBARU SELECT MONITOR”. <Ref. to LAN(diag)-21, FUNCTION SETTING (ECM CUSTOMIZING), OPERATION, Subaru Select Monitor.>

11.List of Diagnostic Trouble Code (DTC)

A: LIST

DTC	Item	Content of diagnosis	NOTE
None	Communication for initializing impossible	Open or short in Subaru Select Monitor communication line.	<Ref. to LAN(diag)-30, COMMUNICATION FOR INITIALIZING IMPOSSIBLE, Diagnostic Procedure with Diagnostic Trouble Code (DTC).>
None	DTC is not stored.	Internal error of combination meter.	<Ref. to LAN(diag)-33, DIAGNOSTIC TROUBLE CODE (DTC) IS NOT STORED, Diagnostic Procedure with Diagnostic Trouble Code (DTC).>
B0100	Integ. unit system error	Body integrated unit internal error	<Ref. to LAN(diag)-33, DTC B0100 INTEG. UNIT SYSTEM ERROR, Diagnostic Procedure with Diagnostic Trouble Code (DTC).>
B0101	BATT power supply (Control) error	Open or short in battery power supply control circuit	<Ref. to LAN(diag)-34, DTC B0101 BATT P/SUPPLY MALFUNCTION CONT., Diagnostic Procedure with Diagnostic Trouble Code (DTC).>
B0102	BATT p/supply malfunction cont.	Open or short in BATT power backup circuit	<Ref. to LAN(diag)-36, DTC B0102 BATT P/SUPPLY MALFUNCTION CONT., Diagnostic Procedure with Diagnostic Trouble Code (DTC).>
B0103	IGN power failure	Open or short in IGN power supply circuit	<Ref. to LAN(diag)-38, DTC B0103 IGNITION POWER FAILURE, Diagnostic Procedure with Diagnostic Trouble Code (DTC).>
B0104	ACC power failure	Open or short in ACC power supply circuit	<Ref. to LAN(diag)-40, DTC B0104 ACC POWER FAILURE, Diagnostic Procedure with Diagnostic Trouble Code (DTC).>
B0105	Key interlock circuit abnormal	Ground short of key interlock circuit	<Ref. to LAN(diag)-42, DTC B0105 KEY INTERLOCK CIRCUIT ABNORMAL, Diagnostic Procedure with Diagnostic Trouble Code (DTC).>
B0106	shift lock circuit Failure	Ground short of shift lock circuit	<Ref. to LAN(diag)-44, DTC B0106 SHIFT LOCK CIRCUIT FAILURE, Diagnostic Procedure with Diagnostic Trouble Code (DTC).>
B0201	High speed CAN fail · error counter abnormal	Malfunction of high-speed CAN communication	<Ref. to LAN(diag)-46, DTC B0201 CAN-HS COUNTER ABNORMAL, Diagnostic Procedure with Diagnostic Trouble Code (DTC).>
B0202	CAN-HS bus off	Any unit is cut communication.	<Ref. to LAN(diag)-50, DTC B0202 CAN-HS BUS OFF, Diagnostic Procedure with Diagnostic Trouble Code (DTC).>
B0211	CAN-HS (EGI) data abnormal	Received error data from ECM.	<Ref. to LAN(diag)-54, DTC B0211 CAN-HS ECM DATA ABNORMAL, Diagnostic Procedure with Diagnostic Trouble Code (DTC).>
B0212	CAN-HS (TCM) data abnormal	Received error data from TCM.	<Ref. to LAN(diag)-56, DTC B0212 CAN-HS TCM DATA ABNORMAL, Diagnostic Procedure with Diagnostic Trouble Code (DTC).>
B0213	CAN-HS VDC/ABS data abnormal	Received error data from VDC/ABS unit.	<Ref. to LAN(diag)-58, DTC B0213 CAN-HS VDC/ABS DATA ABNORMAL, Diagnostic Procedure with Diagnostic Trouble Code (DTC).>
B0221	CAN-HS ECM no-receive data	Not received error data from ECM.	<Ref. to LAN(diag)-60, DTC B0221 CAN-HS ECM NO-RECEIVE DATA, Diagnostic Procedure with Diagnostic Trouble Code (DTC).>
B0222	CAN-HS TCM no-receive data	Not received error data from TCM	<Ref. to LAN(diag)-64, DTC B0222 CAN-HS TCM NO-RECEIVE DATA, Diagnostic Procedure with Diagnostic Trouble Code (DTC).>

DTC	Item	Content of diagnosis	NOTE
B0223	CAN-HS VDC/ABS no-receive data	Not received error data from VDC/ABS unit.	<Ref. to LAN(diag)-66, DTC B0223 CAN-HS VDC/ABS NO-RECEIVE DATA, Diagnostic Procedure with Diagnostic Trouble Code (DTC).>
B0300	CAN-LS malfunction	Open or short in low-speed CAN circuit, on each side or both sides.	<Ref. to LAN(diag)-68, DTC B0300 CAN-LS MALFUNCTION, Diagnostic Procedure with Diagnostic Trouble Code (DTC).>
B0301	CAN-LS fail / error counter abnormal	Malfunction of low-speed CAN communication	<Ref. to LAN(diag)-71, DTC B0301 CAN-LS COUNTER ABNORMAL, Diagnostic Procedure with Diagnostic Trouble Code (DTC).>
B0302	CAN-LS bus off	Any unit is cut communication.	<Ref. to LAN(diag)-73, DTC B0302 CAN-LS BUS OFF, Diagnostic Procedure with Diagnostic Trouble Code (DTC).>
B0311	CAN-LS meter unit data abnormal	Received error data from meter.	<Ref. to LAN(diag)-76, DTC B0311 CAN-LS METER UNIT DATA ABNORMAL, Diagnostic Procedure with Diagnostic Trouble Code (DTC).>
B0321	CAN-LS meter no-receive data	Not received error data from meter	<Ref. to LAN(diag)-77, DTC B0321 CAN-LS METER NO-RECEIVE DATA, Diagnostic Procedure with Diagnostic Trouble Code (DTC).>
B0401	M collation NG	Malfunction related immobilizer	<Ref. to IM(diag)-15, List of Diagnostic Trouble Code (DTC).>
B0402	Immobilizer Key collation NG	Malfunction related immobilizer	<Ref. to IM(diag)-15, List of Diagnostic Trouble Code (DTC).>
B0403	E/G request NG	Malfunction related immobilizer	<Ref. to IM(diag)-15, List of Diagnostic Trouble Code (DTC).>
B0500	Keyless UART com. Malfunction	Open or short circuit in keyless UART circuit	<Ref. to LAN(diag)-79, DTC B0500 KEYLESS UART COM. MALFUNCTION, Diagnostic Procedure with Diagnostic Trouble Code (DTC).>

12.Diagnostic Procedure with Diagnostic Trouble Code (DTC)

A: COMMUNICATION FOR INITIALIZING IMPOSSIBLE

NOTE:
- DTC is displayed in the sequence of the amount of counter numbers.
- When more than two DTCs are displayed, perform the diagnosis of top of them.

DIAGNOSIS:
Subaru Select Monitor communication line is open or shorted.
TROUBLE SYMPTOM:
Not communicable with Subaru Select Monitor.
WIRING DIAGRAM:

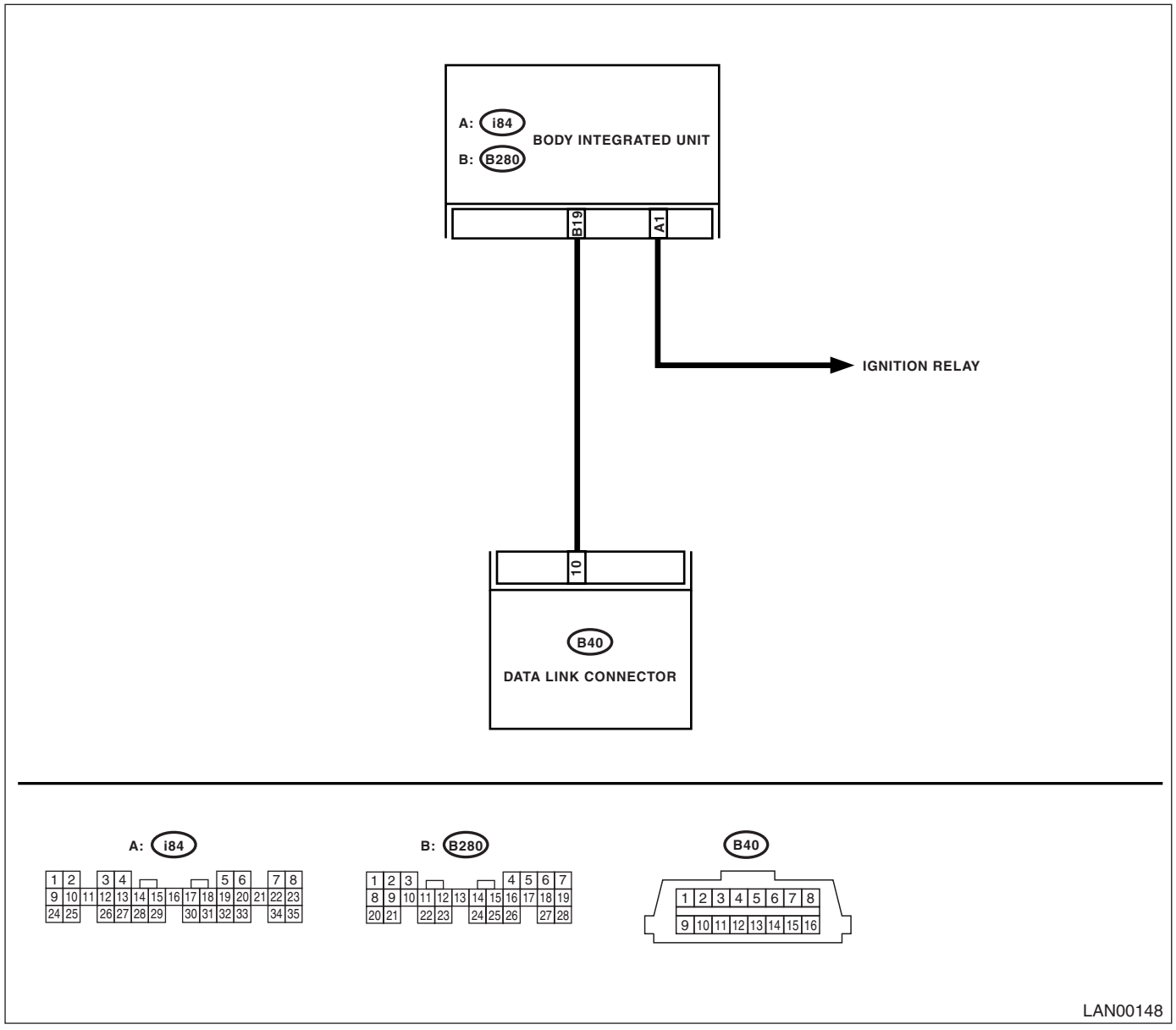

	Step	Check	Yes	No
1	**CHECK IGNITION SWITCH.**	Is the ignition switch ON?	Go to step **2**	Turn the ignition switch to ON, and select Integ. Unit mode using Subaru Select Monitor.
2	**CHECK BATTERY.** 1) Turn the ignition switch to OFF. 2) Measure the battery voltage.	Is the voltage more than 11 V?	Go to step **3**	Charge or replace the battery.
3	**CHECK BATTERY TERMINAL.**	Is there poor contact at battery terminal?	Repair or tighten the battery terminal.	Go to step **4**
4	**CHECK COMMUNICATION OF SUBARU SELECT MONITOR.** 1) Turn the ignition switch to ON. 2) Using the Subaru Select Monitor, check whether communication to other systems can be executed normally.	Are system and model year displayed?	Go to step **7**	Go to step **5**
5	**CHECK COMMUNICATION OF SUBARU SELECT MONITOR.** 1) Turn the ignition switch to OFF. 2) Disconnect the body integrated unit connector. 3) Turn the ignition switch to ON. 4) Check whether communication to other systems can be executed normally.	Are system and model year displayed?	Go to step **7**	Go to step **6**
6	**CHECK HARNESS CONNECTOR BETWEEN EACH CONTROL UNIT AND SUBARU SELECT MONITOR.** 1) Turn the ignition switch to ON. 2) Disconnect the body integrated unit connector. 3) Measure the resistance between data link connector and chassis ground. ***Connector & terminal*** ***(B40) No. 10 — Chassis ground:***	Is the resistance more than 1 MΩ?	Go to step **7**	Repair the harness and connector between each control unit and Subaru Select Monitor.
7	**CHECK OUTPUT SIGNAL TO BODY INTEGRATED UNIT.** 1) Turn the ignition switch to ON. 2) Measure the voltage between body integrated unit and chassis ground. ***Connector & terminal*** ***(B40) No. 10 (+) — Chassis ground (−):***	Is the voltage less than 1 V?	Go to step **8**	Repair the harness and connector between each control unit and Subaru Select Monitor.
8	**CHECK HARNESS CONNECTOR BETWEEN BODY INTEGRATED UNIT AND DATA LINK CONNECTOR.** Measure the resistance between body integrated unit and data link connector. ***Connector & terminal*** ***(B40) No. 10 — (B280) No. 19:***	Is the resistance less than 1 Ω?	Go to step **9**	Repair the harness and connector between body integrated unit and Subaru Select Monitor.
9	**CHECK INSTALLATION OF BODY INTEGRATED UNIT CONNECTOR.** Turn the ignition switch to OFF.	Is the body integrated unit connector inserted into body integrated unit until the clamp locks onto it?	Go to step **10**	Insert the body integrated unit connector into body integrated unit.

	Step	Check	Yes	No
10	**CHECK POWER SUPPLY CIRCUIT.** 1) Turn the ignition switch to ON (engine OFF). 2) Measure the ignition voltage between body integrated unit connector and chassis ground. ***Connector & terminal*** ***(i84) No. 1 (+) — Chassis ground (−):***	Is the voltage more than 10 V?	Go to step **11**	Repair the open circuit of harness between the body integrated unit and battery.
11	**CHECK HARNESS CONNECTOR BETWEEN BODY INTEGRATED UNIT AND CHASSIS GROUND.** 1) Turn the ignition switch to OFF. 2) Disconnect the connector from body integrated unit. 3) Measure the harness resistance between the body integrated unit and chassis ground. ***Connector & terminal*** ***(B280) No. 19 — Chassis ground:***	Is the resistance more than 1 MΩ?	Go to step **12**	Repair the poor contact of harness between the body integrated unit and ground.
12	**CHECK POOR CONTACT IN CONNECTORS.**	Is there poor contact at control unit ground and Subaru Select Monitor?	Replace the body integrated unit. <Ref. to SL-54, Body Integrated Unit.>	Repair the poor contact connector.

CAUTION:
When replacing body integrated unit on the model with immobilizer system, refer to "REGISTRATION MANUAL FOR IMMOBILIZER".

B: DIAGNOSTIC TROUBLE CODE (DTC) IS NOT STORED

DTC DETECTING CONDITION:

Defective combination meter

DIAGNOSIS:

- Communication error display in odo/trip meter is not cleared.
- “No trouble code” is displayed on Subaru Select Monitor.

NOTE:
If DTC is not displayed on Subaru Select Monitor, LAN communication System should be OK.

	Step	Check	Yes	No
1	**CHECK COMMUNICATION ERROR DISPLAY WITH COMBINATION METER.** Turn the ignition switch to ON.	Is the communication error displayed?	Check DTC.	Go to step **2**
2	**CHECK COMBINATION METER.** Perform the self-diagnosis of combination meter.	Is combination meter OK?	Go to step **3**	Replace the combination meter. <Ref. to IDI-15, Combination Meter.>
3	**CHECK BODY INTEGRATED UNIT.** 1) Display the current data of ECM using Subaru Select Monitor. 2) Check data of “body integrated unit data received”.	Is the “Yes” displayed?	Go to step **4**	Replace the body integrated unit. <Ref. to SL-54, Body Integrated Unit.>
4	**CHECK BODY INTEGRATED UNIT.** 1) Display the current data of ECM using Subaru Select Monitor. 2) Check data of “body integrated unit counter update”.	Is the “Yes” displayed?	Repair the poor contact connector.	Replace the body integrated unit. <Ref. to SL-54, Body Integrated Unit.>

C: DTC B0100 INTEG. UNIT SYSTEM ERROR

DTC DETECTING CONDITION:

System error in body integrated unit

TROUBLE SYMPTOM:

- Check light comes on in the combination meter, and displays communication error display “Er IU”.
- LAN communication immobilizer function may not be executed normally.

	Step	Check	Yes	No
1	**CHECK ALL DTCS.**	Is DTC concerning ECM displayed?	Go to step **2**	Replace the body integrated unit. <Ref. to SL-54, Body Integrated Unit.>
2	**CHECK DTC CONCERNING ECM.**	Is output DTC on ECM concerning CAN communication error?	Replace the body integrated unit. <Ref. to SL-54, Body Integrated Unit.>	Perform the diagnosis according to DTC concerning ECM.

D: DTC B0101 BATT P/SUPPLY MALFUNCTION CONT.

DTC DETECTING CONDITION:

BATT power supply control circuit is open or shorted.

TROUBLE SYMPTOM:

No malfunction occurs with back-up power supply function.

NOTE:

When some B0102 BATT p/supply malfunction backup are output at the same time, all function of body integrated unit may not function.

WIRING DIAGRAM:

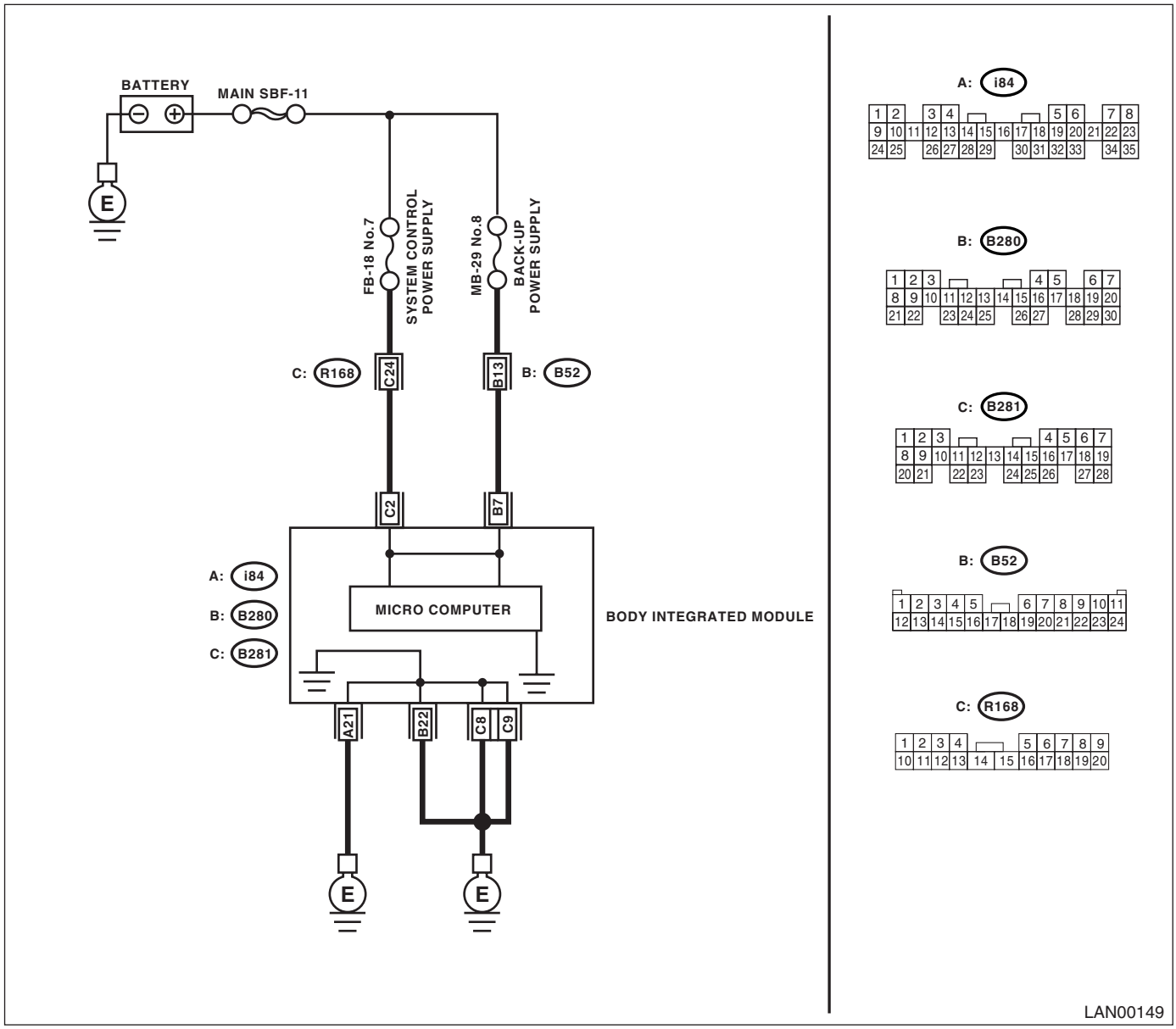

	Step	Check	Yes	No
1	**CHECK FUSE (No. 7).** 1) Turn the ignition switch to OFF. 2) Remove the fuse (No. 7).	Is the fuse blown out?	Replace the fuse (No. 7). If the replaced fuse has blown out easily, repair the short circuit in harness between fuse (No. 7) and body integrated unit.	Go to step **2**
2	**CONTINUITY CHECK OF WIRING HARNESS.** 1) Disconnect the connector (B281) from body integrated unit. 2) Measure the voltage between body integrated unit connector and chassis ground. ***Connector & terminal*** ***(B281) No. 2 (+) — Chassis ground (−):***	Is the voltage more than 10 V?	Go to step **3**	Repair the harness for open or shorted circuit between body integrated unit and fuse.
3	**CHECK POOR CONTACT IN CONNECTORS.**	Is there poor contact in body integrated unit connector?	Repair the poor contact connector.	Go to step **4**
4	**CHECK BODY INTEGRATED UNIT HARNESS.** 1) Connect all the connectors. 2) Perform the clear memory mode. 3) Read DTC.	Is the same DTC displayed?	Replace the body integrated unit. <Ref. to SL-54, Body Integrated Unit.>	Temporary poor contact occurs.

E: DTC B0102 BATT P/SUPPLY MALFUNCTION CONT.

DTC DETECTING CONDITION:

BATT power backup circuit is open or shorted.

TROUBLE SYMPTOM:

- Engine malfunction indicator light may be illuminates.
- Keyless entry, room light, key illumination does not operate.
- “En IU” may display in combination meter.

NOTE:

When some B0101 BATT p/supply malfunction cont. are output at the same time, all function of body integrated unit may not function.

WIRING DIAGRAM:

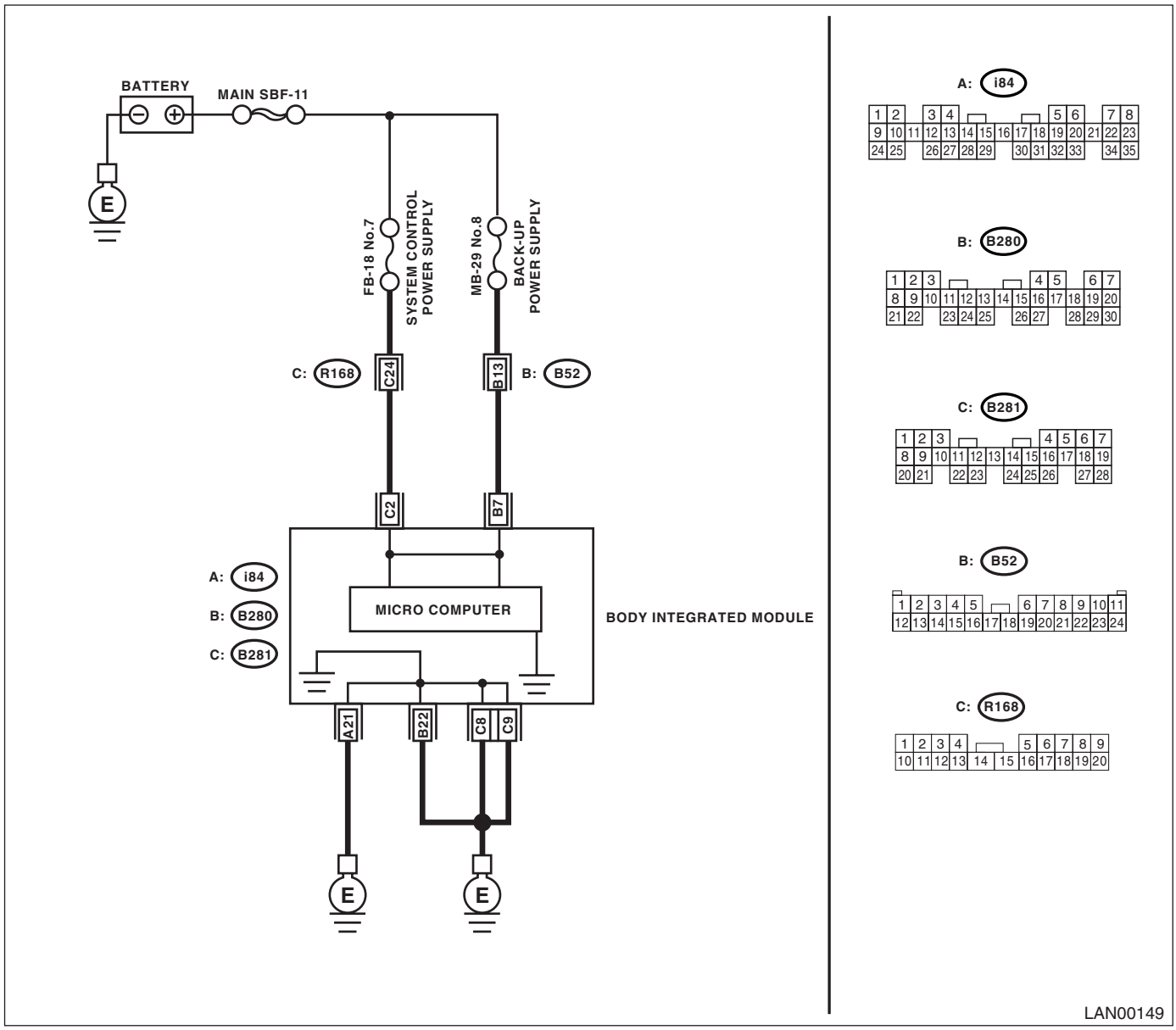

	Step	Check	Yes	No
1	**CHECK FUSE (No. 8).** 1) Turn the ignition switch to OFF. 2) Remove the fuse (No. 8).	Is the fuse blown out?	Replace the fuse (No. 8). If the replaced fuse has blown out easily, repair the short circuit in harness between fuse (No. 8) and body integrated unit.	Go to step **2**
2	**CONTINUITY CHECK OF WIRING HARNESS.** 1) Disconnect the connector (B280) from body integrated unit. 2) Measure the voltage between body integrated unit connector and chassis ground. ***Connector & terminal*** ***(B280) No. 7 (+) — Chassis ground (−):***	Is the voltage more than 10 V?	Go to step **3**	Repair the harness for open or shorted circuit between body integrated unit and fuse.
3	**CHECK POOR CONTACT IN CONNECTORS.**	Is there poor contact in body integrated unit connector?	Repair the poor contact connector.	Go to step **4**
4	**CHECK BODY INTEGRATED UNIT HARNESS.** 1) Connect all the connectors. 2) Perform the clear memory mode. 3) Read DTC.	Is the same DTC displayed?	Replace the body integrated unit. <Ref. to SL-54, Body Integrated Unit.>	Temporary poor contact occurs.

F: DTC B0103 IGNITION POWER FAILURE

DTC DETECTING CONDITION:

IGN power supply circuit is open or shorted.

TROUBLE SYMPTOM:

Symptom that illuminating engine malfunction indicator light, “Er HC” high speed CAN error display may be occurred.

WIRING DIAGRAM:

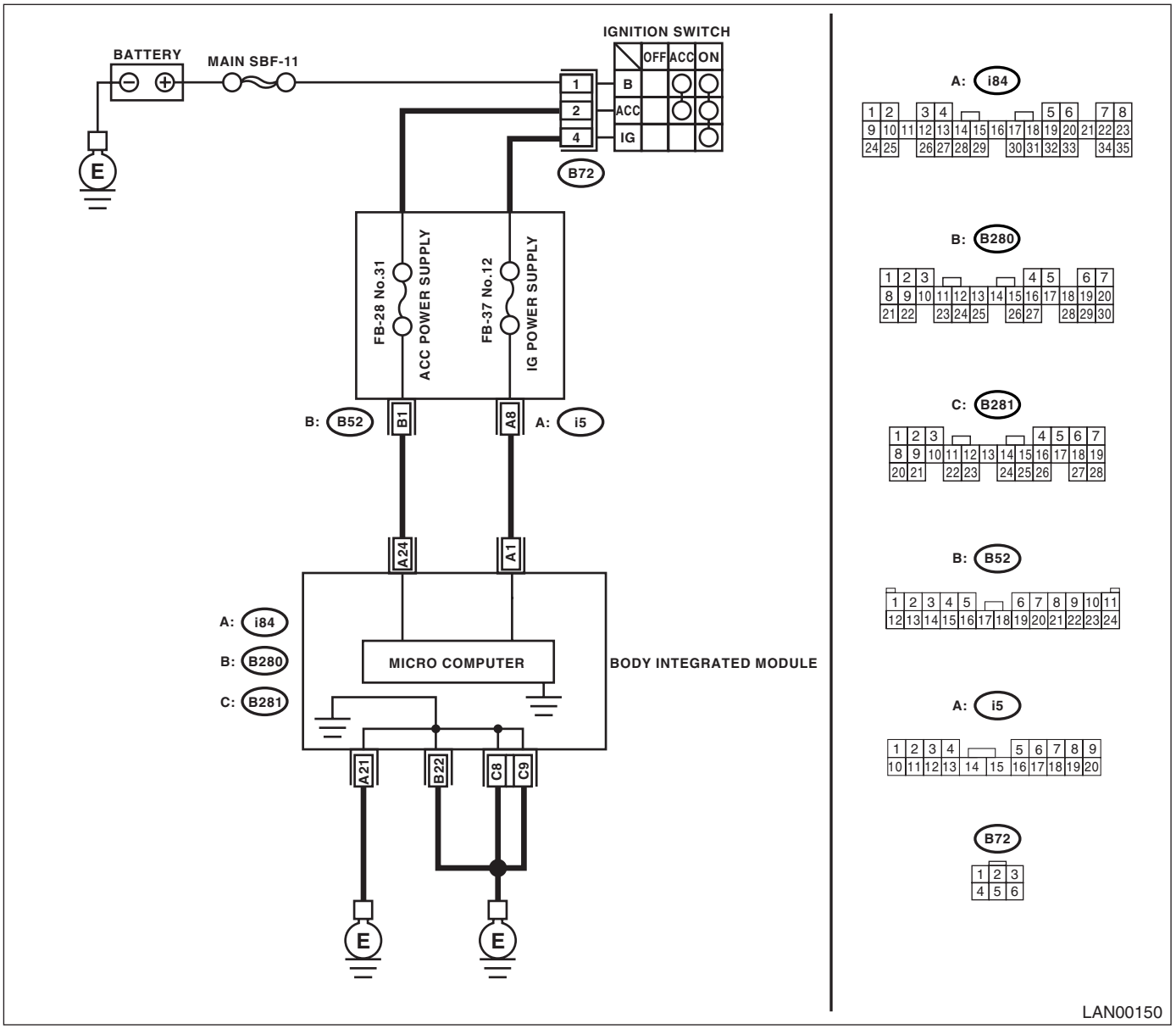

Step		Check	Yes	No
1	**CHECK FUSE (No. 12).** 1) Turn the ignition switch to OFF. 2) Remove the fuse (No. 12).	Is the fuse blown out?	Replace the fuse (No. 12). If the replaced fuse has blown out easily, repair the short circuit in harness between fuse (No. 12) and body integrated unit.	Go to step **2**

	Step	Check	Yes	No
2	**CONTINUITY CHECK OF WIRING HARNESS.** 1) Disconnect the connector (i84) from body integrated unit. 2) Turn the ignition switch to ON. 3) Measure the voltage between body integrated unit connector and chassis ground. ***Connector & terminal*** ***(i84) No. 1 (+) — Chassis ground (−):***	Is the voltage more than 10 V?	Go to step **3**	Repair the harness for open or shorted circuit between body integrated unit and fuse.
3	**CHECK POOR CONTACT IN CONNECTOR.**	Is there poor contact in body integrated unit connector?	Repair the poor contact connector.	Go to step **4**
4	**CHECK BODY INTEGRATED UNIT HARNESS.** 1) Connect all the connectors. 2) Perform the clear memory mode. 3) Read DTC.	Is the same DTC displayed?	Replace the body integrated unit. <Ref. to SL-54, Body Integrated Unit.>	Temporary poor contact occurs.

G: DTC B0104 ACC POWER FAILURE

DTC DETECTING CONDITION:

ACC power supply circuit is open or shorted.

TROUBLE SYMPTOM:

Rear wiper may not operate on ACC.

WIRING DIAGRAM:

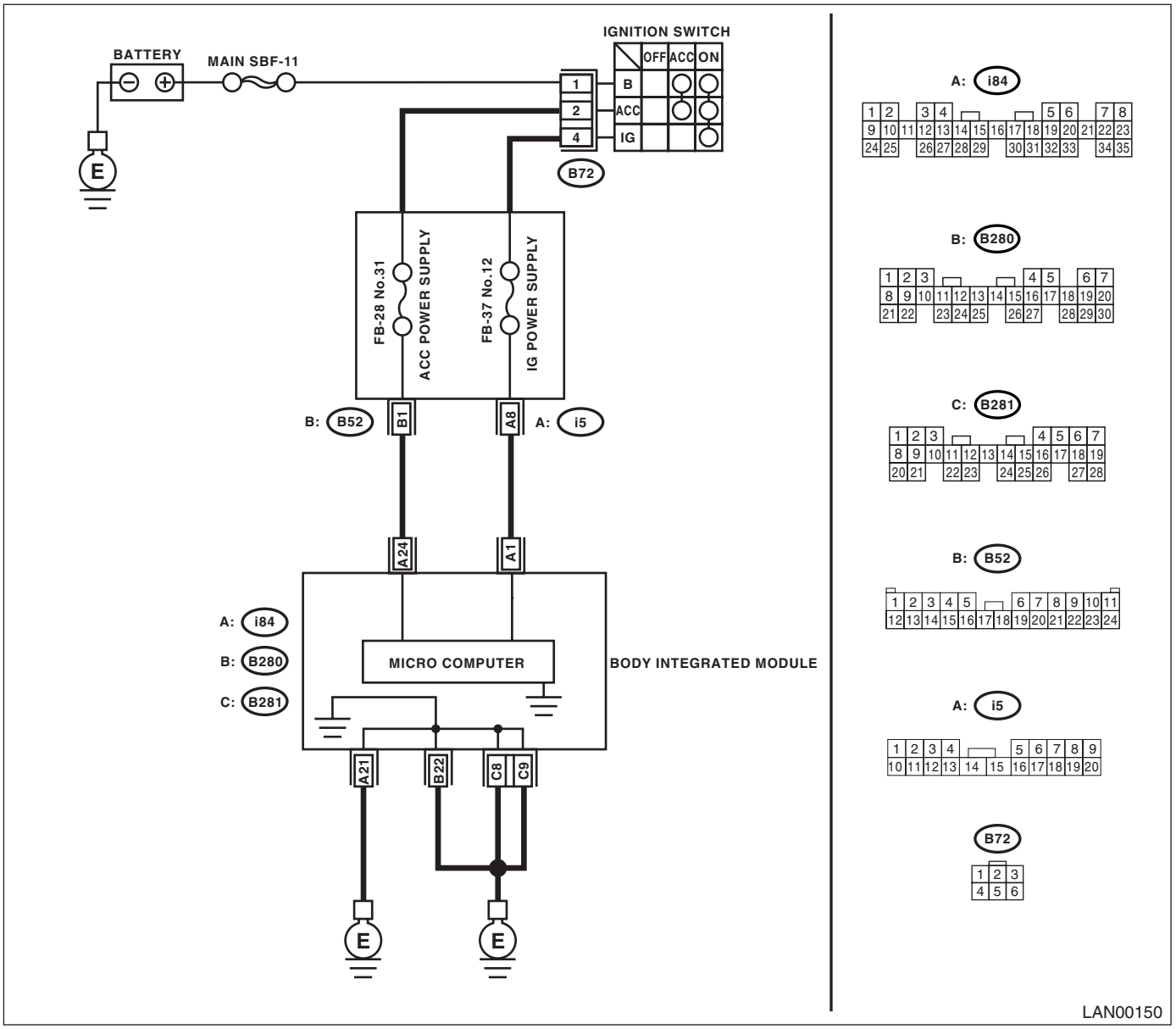

Step		Check	Yes	No
1	**CHECK FUSE (No. 31).** 1) Turn the ignition switch to OFF. 2) Remove the fuse (No. 31).	Is the fuse blown out?	Replace the fuse (No. 31). If the replaced fuse has blown out easily, repair the short circuit in harness between fuse (No. 31) and body integrated unit.	Go to step **2**

	Step	Check	Yes	No
2	**CONTINUITY CHECK OF WIRING HARNESS.** 1) Disconnect the connector (i84) from body integrated unit. 2) Turn the ignition switch to ON. 3) Measure the voltage between body integrated unit connector and chassis ground. ***Connector & terminal*** ***(i84) No. 24 (+) — Chassis ground (−):***	Is the voltage more than 10 V?	Go to step **3**	Repair the harness for open or shorted circuit between body integrated unit and fuse.
3	**CHECK POOR CONTACT IN CONNECTOR.**	Is there poor contact in body integrated unit connector?	Repair the poor contact connector.	Go to step **4**
4	**CHECK BODY INTEGRATED UNIT HARNESS.** 1) Connect all the connectors. 2) Perform the clear memory mode. 3) Read DTC.	Is DTC displayed?	Replace the body integrated unit. <Ref. to SL-54, Body Integrated Unit.>	Temporary poor contact occurs.

H: DTC B0105 KEY INTERLOCK CIRCUIT ABNORMAL

DTC DETECTING CONDITION:

Key interlock circuit is shorted to ground.

TROUBLE SYMPTOM:

- No input of key interlock power supply
- Key interlock does not release or remain locked.

WIRING DIAGRAM:

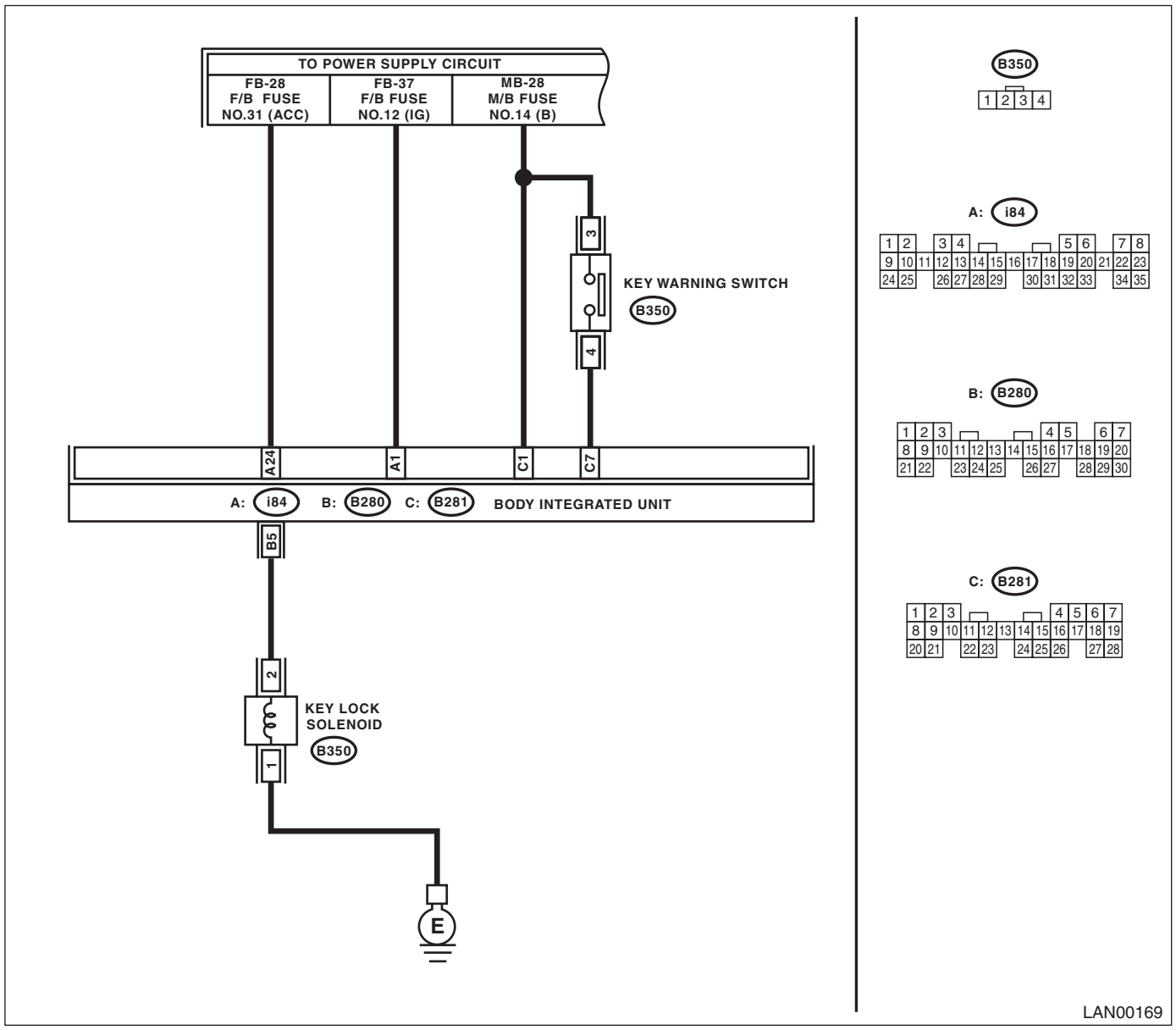

Step		Check	Yes	No
1	**CHECK KEY LOCK SOLENOID.** 1) Disconnect the connector of the key lock solenoid. 2) Measure the internal resistance of key lock solenoid. ***Connector & terminal (B350) No. 1 — No. 2:***	Is the resistance between 10 — 30 Ω?	Go to step **2**.	Replace the key lock solenoid.

	Step	Check	Yes	No
2	**CHECK GROUND CIRCUIT.** 1) Disconnect the connector of the key lock solenoid. 2) Measure the resistance between the key lock solenoid connector and chassis ground. ***Connector & terminal*** ***(B350) No. 1 — Chassis ground:***	Is the resistance less than 10 Ω?	Go to step **3**.	Check the key lock solenoid ground circuit for open circuit or for proper installation, and repair the ground circuit if faultly.
3	**CHECK HARNESS.** 1) Disconnect the body integrated unit connector (B280) and the key lock solenoid connector (B350). 2) Measure the resistance between body integrated unit connector and chassis ground. ***Connector & terminal*** ***(B280) No. 5 — Chassis ground:***	Is the resistance 1 MΩ or more?	Replace the body integrated unit. <Ref. to SL-54, Body Integrated Unit.>	Repair the short circuit of harness or replace harness.

I: DTC B0106 SHIFT LOCK CIRCUIT FAILURE

DTC DETECTING CONDITION:

Shift lock circuit is ground shorted.

TROUBLE SYMPTOM:

Key interlock does not unlock or lock.

WIRING DIAGRAM:

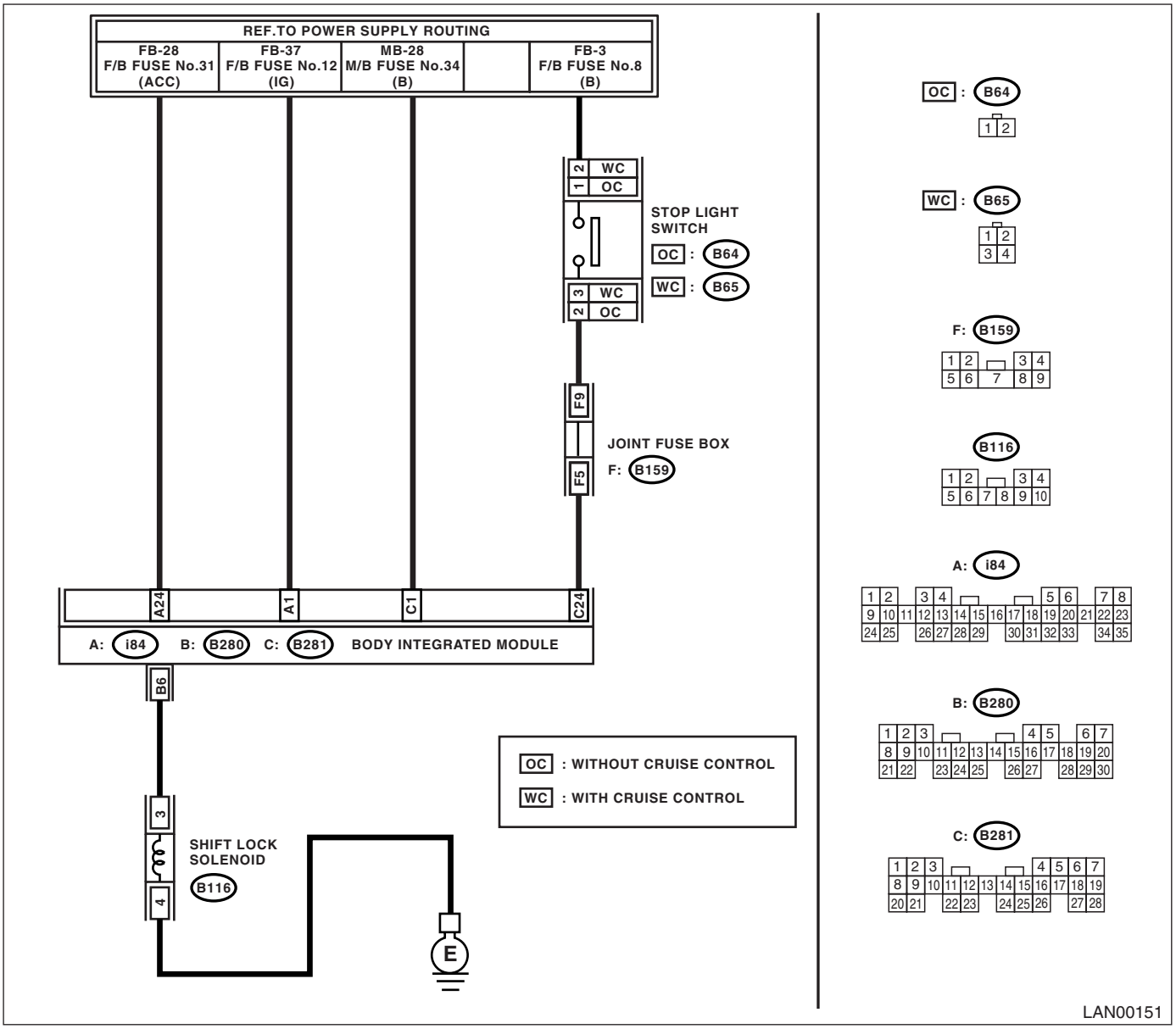

Step		Check	Yes	No
1	**CHECK HARNESS.** 1) Disconnect the body integrated unit connector (B280). 2) Measure the resistance between body integrated unit connector and chassis ground. ***Connector & terminal*** ***(B280) No. 6 — Chassis ground:***	Is the resistance 10 — 30 Ω?	Go to step **5**	Go to step **2**

	Step	Check	Yes	No
2	**CHECK HARNESS.** 1) Disconnect the body integrated unit connector (B280). 2) Disconnect the shift lock solenoid connector. 3) Measure the resistance between body integrated unit connector and shift lock solenoid connector. ***Connector & terminal*** ***(B280) No. 6 — (B116) No. 3:***	Is the resistance less than 10 Ω?	Go to step **3**	Repair or replace the open or short circuit of harness.
3	**CHECK SHIFT LOCK SOLENOID.** 1) Disconnect the shift lock solenoid connector. 2) Measure the internal resistance of shift lock solenoid. ***Connector & terminal*** ***(B116) No. 3 — No. 4:***	Is the resistance 10 — 30 Ω?	Go to step **4**	Replace the shift lock solenoid.
4	**CHECK GROUND CIRCUIT.** 1) Disconnect the shift lock solenoid connector. 2) Measure the resistance between shift lock solenoid connector and chassis ground. ***Connector & terminal*** ***(B116) No. 4 — Chassis ground:***	Is the resistance less than 10 Ω?	Temporary poor contact occurs. Check the connection of each terminals, and then repair them if necessary.	Replace the body integrated unit. <Ref. to SL-54, Body Integrated Unit.>
5	**CHECK HARNESS.** 1) Disconnect the body integrated unit connector (B280) and shift lock solenoid connector (B116). 2) Measure the resistance between body integrated unit connector (B280) and chassis ground. ***Connector & terminal*** ***(B280) No. 6 — Chassis ground:***	Is the resistance more than 1 MΩ?	Replace the body integrated unit. <Ref. to SL-54, Body Integrated Unit.>	Repair or replace the short circuit of harness.

J: DTC B0201 CAN-HS COUNTER ABNORMAL

DTC DETECTING CONDITION:

High speed CAN communication of body integrated unit which monitoring the error data and non-received data are faulty.

TROUBLE SYMPTOM:

- "Er HC" is displayed in odo/trip meter.
- Engine malfunction indicator light illuminates.

WIRING DIAGRAM:

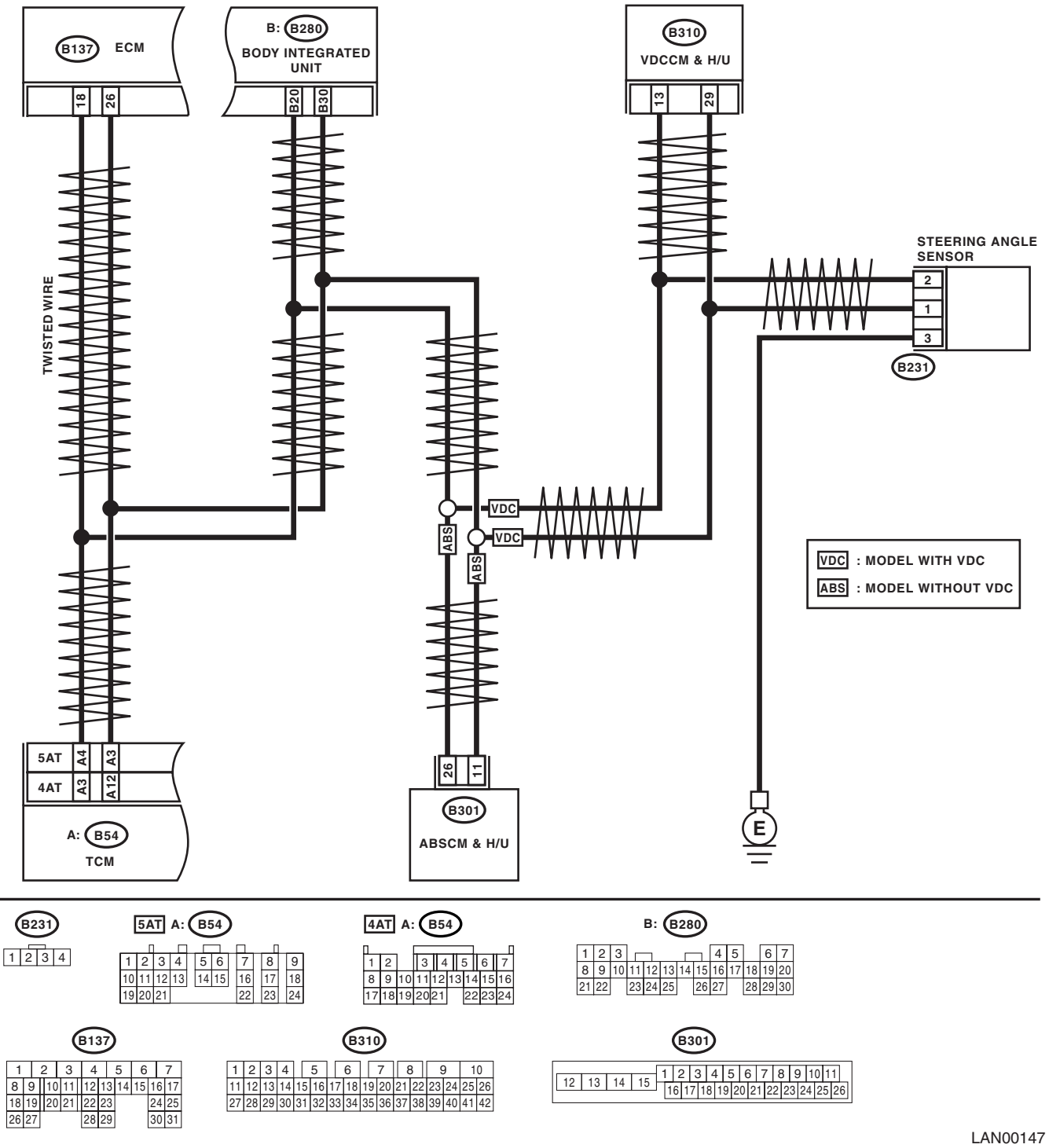

	Step	Check	Yes	No
1	**CHECK HARNESS.** 1) Disconnect the body integrated unit connector (B280). 2) Connect the tester to No. 20 — No. 30 connector on body side, and measure the resistance. ***Connector & terminal*** ***(B280) No. 20 — No. 30:***	Is the resistance 55 — 65 Ω?	Go to step **5**	Go to step **2**
2	**CHECK HARNESS.** Connect the tester to No. 20 — No. 30 connector on body side, and measure the resistance. ***Connector & terminal*** ***(B280) No. 20 — No. 30:***	Is the resistance less than 10 Ω?	Go to step **14**	Go to step **3**
3	**CHECK HARNESS.** Connect the tester to No. 20 — No. 30 connector on body side, and measure the resistance. ***Connector & terminal*** ***(B280) No. 20 — No. 30:***	Is the resistance 110 — 130 Ω?	Go to step **15**	Go to step **4**
4	**CHECK HARNESS.** Connect the tester to No. 20 — No. 30 connector on body side, and measure the resistance. ***Connector & terminal*** ***(B280) No. 20 — No. 30:***	Is the resistance more than 30 MΩ?	Repair or replace the open circuit in body integrated unit harness.	Go to step **5**
5	**CHECK HARNESS.** Connect the tester to No. 20 — Chassis ground connector on body side, and measure the resistance. ***Connector & terminal*** ***(B280) No. 20 — Chassis ground:***	Is the resistance less than 10 Ω?	Repair or replace the ground short circuit in harness.	Go to step **6**
6	**CHECK HARNESS.** Connect the tester to No. 30 — Chassis ground connector on body side, and measure the resistance. ***Connector & terminal*** ***(B280) No. 30 — Chassis ground:***	Is the resistance less than 10 Ω?	Repair or replace the ground short circuit in harness.	Go to step **7**
7	**CHECK HARNESS.** 1) Connect the tester to No. 20 — Chassis ground connector on body side. 2) Turn the ignition switch to ON, and measure the voltage. ***Connector & terminal*** ***(B280) No. 20 (+) — Chassis ground (−):***	Is the voltage more than 6 V?	Go to step **18**	Go to step **8**
8	**CHECK HARNESS.** 1) Connect the tester to No. 30 — Chassis ground connector on body side. 2) Turn the ignition switch to ON, and measure the voltage. ***Connector & terminal*** ***(B280) No. 30 (+) — Chassis ground (−):***	Is the voltage more than 6 V?	Go to step **19**	Go to step **9**
9	**CHECK CONTROL UNIT. (GO TO STEP 10. EXCEPT FOR MODEL WITH VDC.)** 1) Connect the body integrated unit connector. 2) Perform the clear memory. 3) Disconnect the steering angle sensor connector (B231) and read the DTC. <Ref. to LAN(diag)-14, READ DIAGNOSTIC TROUBLE CODE (DTC), OPERATION, Subaru Select Monitor.>	Is the DTC B0201 displayed?	Go to step **10**	Replace the steering angle sensor. <Ref. to VDC-16, REPLACEMENT, Steering Angle Sensor.>

	Step	Check	Yes	No
10	**CHECK CONTROL UNIT. (GO TO STEP 11. EXCEPT FOR AT MODEL.)** 1) Connect the steering angle sensor connector. 2) Perform the clear memory. 3) Disconnect the TCM connector (B54) and read the DTC.	Is the DTC B0201 displayed?	Go to step **11**	Replace the TCM. <Ref. to 5AT-60, REMOVAL, Transmission Control Module (TCM).>
11	**CHECK CONTROL UNIT. (VDC/ABS MODEL)** 1) Connect the TCM connector. 2) Perform the clear memory. 3) Disconnect the VDC/ABS connector (B301 or B310) and read the DTC.	Is the DTC B0201 displayed?	Go to step **12**	Replace the VDC/ABSCM. <Ref. to VDC-7, REMOVAL, VDC Control Module and Hydraulic Control Unit (VDCCM/U).> <Ref. to ABS-6, REMOVAL, ABS Control Module and Hydraulic Control Unit (ABSCM&H/U).>
12	**CHECK ECM.** 1) Connect all the control unit connector. 2) Check data of “body integrated unit data received” from the current data display of ECM.	Is the “Yes” displayed?	Go to step **13**	Replace the body integrated unit.
13	**CHECK BODY INTEGRATED UNIT.** Check data of “body integrated unit counter update” in the ECM data display using Subaru Select Monitor.	Is the “Yes” displayed?	Replace the ECM.<Ref. to FU(H4SO)-35, REMOVAL, Engine Control Module (ECM).> <Ref. to FU(H4SO U5)-44, REMOVAL, Engine Control Module (ECM).> <Ref. to FU(H6DO)-34, REMOVAL, Engine Control Module (ECM).> <Ref. to FU(H4DOTC)-39, REMOVAL, Engine Control Module (ECM).>	Replace the body integrated unit. <Ref. to SL-54, REMOVAL, Body Integrated Unit.>
14	**CHECK HARNESS.** 1) Disconnect the body integrated unit connector (B280). 2) Connect the tester to No. 20 — No. 30 connector on body side, and measure the resistance. 3) Disconnect the connector of each control unit. ***Connector & terminal*** ***(B280) No. 20 — (B280) No. 30:***	Is there any control unit in which the resistance was changed from less than 10 Ω?	Replace the relevant control unit.	Repair or replace the short circuit in harness.

	Step	Check	Yes	No
15	**CHECK HARNESS.** 1) Disconnect the VDC/ABSCM connector. 2) Connect the tester to No. 20 — No. 30 connector on body side, and measure the resistance. ***Connector & terminal*** ***(B280) No. 20 — (B280) No. 30:***	Does the resistance change to more than 30 MΩ?	Replace the VDC/ABSCM. <Ref. to VDC-7, REMOVAL, VDC Control Module and Hydraulic Control Unit (VDCCM/U).> <Ref. to ABS-6, REMOVAL, ABS Control Module and Hydraulic Control Unit (ABSCM&H/U).>	Go to step **16**
16	**CHECK HARNESS.** 1) Connect the VDC/ABSCM, and disconnect the ECM connector (B136 or B137). 2) Connect the tester to No. 20 — No. 30 connector on body side, and measure the resistance. ***Connector & terminal*** ***(B280) No. 20 — (B280) No. 30:***	Does the resistance change to more than 30 MΩ?	Replace the ECM.	Go to step **17**
17	**CHECK HARNESS.** 1) Disconnect all the control unit (Body integrated unit, ECM, TCM, VDC/ABS, steering angle sensor). 2) Connect the tester to No. 20 — No. 30 connector on body side, and measure the resistance. ***Connector & terminal*** ***(B280) No. 20 — (B280) No. 30:***	Is the resistance more than 30 MΩ?	A temporary poor contact.	Repair or replace the short circuit in harness.
18	**CHECK HARNESS.** 1) Connect the tester to body integrated unit connector on body side. 2) Turn the ignition switch to ON, and disconnect the unit connectors in the order. (TCM: B54, VDC/ABS: B301, B310, ECM: B137, B135, Steering angle sensor: B231) ***Connector & terminal*** ***(B280) No. 20 — Chassis ground:***	Is there any unit in which the voltage was lowered from more than 6 V upon disconnection?	Replace the relevant unit.	Repair or replace the short circuit in harness.
19	**CHECK HARNESS.** 1) Connect the tester to body integrated unit connector on body side. 2) Turn the ignition switch to ON, and disconnect the unit connectors in the order. (TCM: B54, VDC/ABS: B301, B310, ECM: B137, B135, Steering angle sensor: B231) ***Connector & terminal*** ***(B280) No. 30 (+) — Chassis ground (−):***	Is there any unit in which the voltage was lowered from more than 6 V upon disconnection?	Replace the relevant unit.	Repair or replace the short circuit in harness.

K: DTC B0202 CAN-HS BUS OFF

DTC DETECTING CONDITION:

- Locate the unit or CAN line which trouble occurs, and repair and replace it.
- Not received data and error data may be detected at the same time.

TROUBLE SYMPTOM:

"Er HC" is displayed in odo/trip meter.

WIRING DIAGRAM:

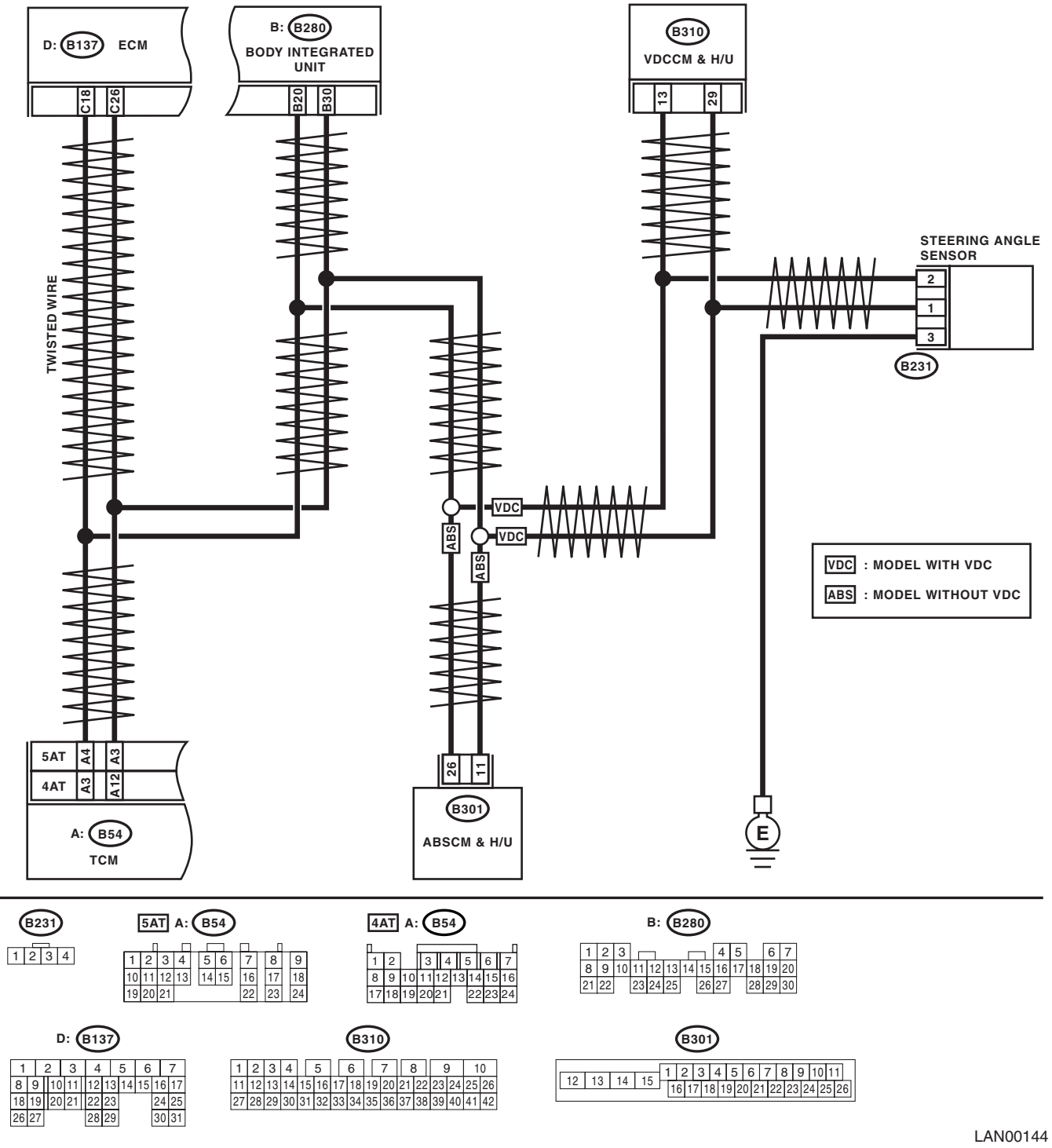

	Step	Check	Yes	No
1	**CHECK TCM.** 1) Disconnect the TCM connector (B54). 2) Perform the clear memory of body integrated unit. <Ref. to LAN(diag)-20, CLEAR MEMORY MODE, OPERATION, Subaru Select Monitor.> 3) Read DTC of body integrated unit.	Is DTC (B0202) displayed?	Go to step **2**	Replace the TCM. <Ref. to 4AT-124, Transmission Control Device.> <Ref. to 5AT-60, Transmission Control Module (TCM).>
2	**CHECK STEERING ANGLE SENSOR.** 1) Disconnect the steering angle sensor connector (B231). 2) Perform the clear memory mode of body integrated unit. <Ref. to LAN(diag)-20, CLEAR MEMORY MODE, OPERATION, Subaru Select Monitor.> 3) Read DTC of body integrated unit.	Is DTC (B0202) displayed?	Go to step **3**	Replace the steering angle sensor. <Ref. to VDC-16, REPLACEMENT, Steering Angle Sensor.>
3	**CHECK BODY INTEGRATED UNIT.** 1) Disconnect the body integrated unit connector (B280). 2) Read the data between VDC/ABSCM and ECM. Check item: • Engine speed • Average front wheel speed (value on constant driving)	Engine speed, front wheel speed is correctly communicated. (Appears same value)	Replace the body integrated unit. <Ref. to SL-54, Body Integrated Unit.>	Go to step **4**
4	**CHECK HARNESS.** 1) Disconnect the body integrated unit connector (B280). 2) Measure the resistance between harness connector terminals. ***Connector & terminal*** ***(B280) No. 20 — No. 30:***	Is the resistance 55 — 65 Ω?	Go to step **10**	Go to step **5**
5	**CHECK HARNESS.** 1) Disconnect the body integrated unit connector (B280). 2) Measure the resistance between harness connector terminals. ***Connector & terminal*** ***(B280) No. 20 — No. 30:***	Is the resistance 115 — 125 Ω?	Go to step **7**	Go to step **6**
6	**CHECK HARNESS.** 1) Disconnect the harness connector of body integrated unit. 2) Measure the resistance between harness connector terminals. ***Connector & terminal*** ***(B280) No. 20 — No. 30:***	Is the resistance more than 30 MΩ?	Open harness on related line of body integrated unit. Repair or replace the open circuit of harness.	Go to step **7**
7	**CHECK HARNESS.** 1) Disconnect the VDC/ABSCM connector (ABS:B301, VDC:310). 2) Measure the resistance between harness connector terminals. ***Connector & terminal*** ***ABS*** ***(B301) No. 11 — No. 26:*** ***VDC*** ***(B310) No. 13 — No. 29:***	Is the resistance 115 — 125 Ω?	Go to step **8**	Go to step **9**

	Step	Check	Yes	No
8	**CHECK VDC/ABSCM.** 1) Disconnect the VDC/ABSCM connector (ABS:B301, VDC:310). 2) Measure the resistance between VDC/ABSCM terminals. ***Connector & terminal*** ***ABS*** ***(B301) No. 11 — No. 26:*** ***VDC*** ***(B310) No. 13 — No. 29:***	Is the resistance 115 — 125 Ω?	Go to step **9**	Open harness in end resistance of VDC/ABSCM. Replace the VDC/ABSCM. <Ref. to ABS-6, ABS Control Module and Hydraulic Control Unit (ABSCM&H/U).> <Ref. to VDC-7, VDC Control Module and Hydraulic Control Unit (VDCCM/U).>
9	**CHECK ECM.** 1) Disconnect the ECM connector (B137). 2) Measure the resistance between ECM connector terminals. ***Connector & terminal*** ***(B137) No. 18 — No. 26:***	Is the resistance 115 — 125 Ω?	Repair or replace the open circuit of harness connector.	Open harness in end resistance of ECM. Replace the ECM. <Ref. to FU(H4SO)-35, Engine Control Module (ECM).> <Ref. to FU(H4SOU5)-44, Engine Control Module (ECM).> <Ref. to FU(H4DOTC)-39, Engine Control Module (ECM).> <Ref. to FU(H6DO)-34, Engine Control Module (ECM).>
10	**CHECK HARNESS.** 1) Disconnect the body integrated unit connector (B280). 2) Measure the resistance between body integrated unit connector and chassis ground. ***Connector & terminal*** ***(B280) No. 20 — Chassis ground:*** ***(B280) No. 30 — Chassis ground:***	Is the resistance less than 10 Ω? (Ground)	Repair or replace the ground short circuit of the harness.	Go to step **11**
11	**CHECK HARNESS.** 1) Disconnect the body integrated unit connector (B280). 2) Measure the voltage between body integrated unit connector and chassis ground. ***Connector & terminal*** ***(B280) No. 20 (+) — Chassis ground (−):*** ***(B280) No. 30 (+) — Chassis ground (−):***	Is the voltage more than 6 V? (Power)	Repair or replace the short circuit of harness.	Go to step **12**
12	**CHECK DTC.** Read the DTC of ECM using Subaru Select Monitor. <Ref. to EN(H4SO)(diag)-27, READ DIAGNOSTIC TROUBLE CODE (DTC) FOR ENGINE (NORMAL MODE), OPERATION, Subaru Select Monitor.> <Ref. to EN(H4DOTC)(diag)-28, READ DIAGNOSTIC TROUBLE CODE (DTC) FOR ENGINE (NORMAL MODE), OPERATION, Subaru Select Monitor.>	Is DTC other than “CAN communication” displayed?	Perform the diagnosis according to DTC.	Go to step **13**

Step		Check	Yes	No
13	**CHECK DTC.** Read the DTC of VDC/ABSCM using Subaru Select Monitor. <Ref. to ABS(diag)-15, READ DIAGNOSTIC TROUBLE CODE (DTC), OPERATION, Subaru Select Monitor.> <Ref. to VDC(diag)-16, READ DIAGNOSTIC TROUBLE CODE (DTC), OPERATION, Subaru Select Monitor.>	Is DTC other than “CAN communication” displayed?	Perform the diagnosis according to DTC.	Go to step **14**
14	**CHECK DTC.** Read the DTC of TCM using Subaru Select Monitor. <Ref. to 4AT(D)(diag)-14, READ DIAGNOSTIC TROUBLE CODE (DTC), OPERATION, Subaru Select Monitor.> <Ref. to 5AT(diag)-15, READ DIAGNOSTIC TROUBLE CODE (DTC), OPERATION, Subaru Select Monitor.>	Is DTC other than “CAN communication” displayed?	Perform the diagnosis according to DTC.	Replace the body integrated unit. <Ref. to SL-54, Body Integrated Unit.>

L: DTC B0211 CAN-HS ECM DATA ABNORMAL

DTC DETECTING CONDITION:

Defective data from ECM.

TROUBLE SYMPTOM:

“Er HC” or “Er EG” is displayed in odo/trip meter.

WIRING DIAGRAM:

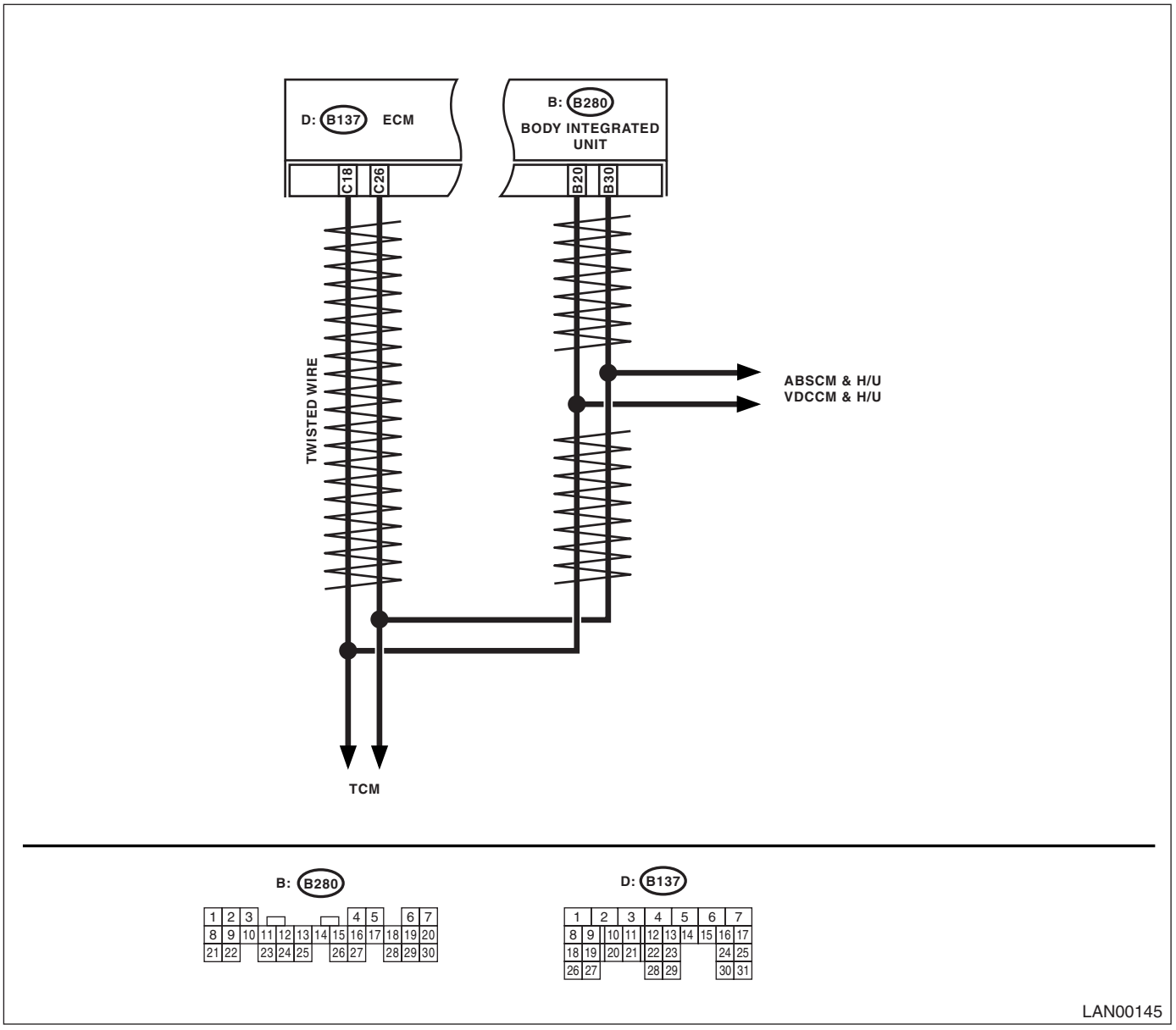

Step		Check	Yes	No
1	**CHECK ECM.** Read the DTC of ECM using Subaru Select Monitor.	Is DTC other than “CAN communication” displayed?	Perform the diagnosis according to DTC.	Replace the ECM. <Ref. to FU(H4SO)-35, Engine Control Module (ECM).> <Ref. to FU(H4SOU5)-44, Engine Control Module (ECM).> <Ref. to FU(H4DOTC)-39, Engine Control Module (ECM).> <Ref. to FU(H6DO)-34, Engine Control Module (ECM).>

M: DTC B0212 CAN-HS TCM DATA ABNORMAL

DTC DETECTING CONDITION:

TCM error, or harness between the main harness splice and TCM is open or short, the connector is not connected securely and the terminal has poor caulking.

TROUBLE SYMPTOM:

- SPORT indicator light blinks.
- “Er HC” or “Er tC” is displayed in odo/trip meter.

WIRING DIAGRAM:

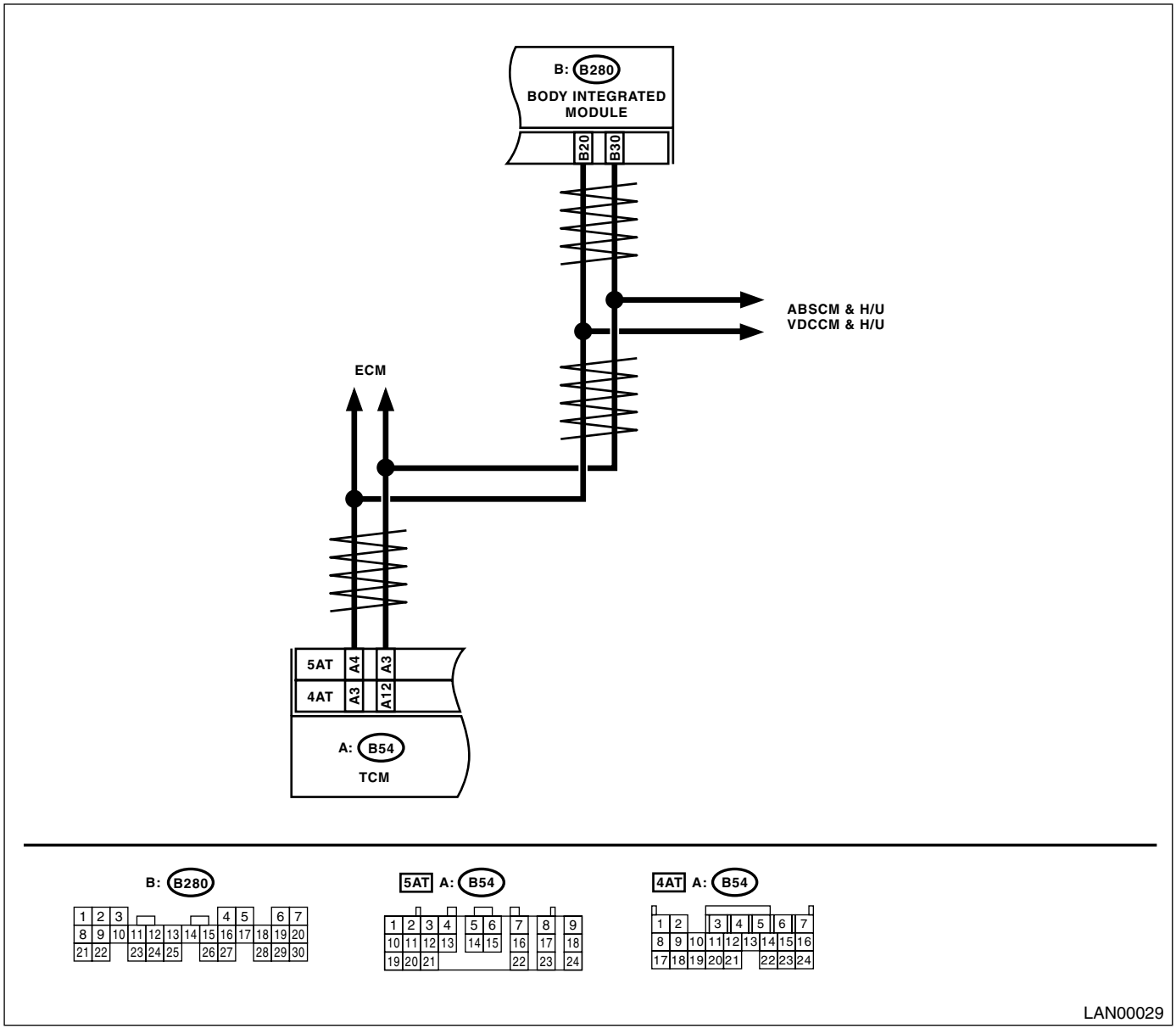

	Step	Check	Yes	No
1	**CHECK TCM.** Read the DTC of TCM using Subaru Select Monitor. <Ref. to 4AT(D)(diag)-14, READ DIAGNOSTIC TROUBLE CODE (DTC), OPERATION, Subaru Select Monitor.> <Ref. to 5AT(diag)-15, READ DIAGNOSTIC TROUBLE CODE (DTC), OPERATION, Subaru Select Monitor.>	Is DTC other than “CAN communication” displayed?	Perform the diagnosis according to DTC.	Replace the TCM. <Ref. to 4AT-64, Transmission Control Module (TCM).> <Ref. to 5AT-60, Transmission Control Module (TCM).>

N: DTC B0213 CAN-HS VDC/ABS DATA ABNORMAL

DTC DETECTING CONDITION:

VDC/ABSCM body error, or harness between the main harness splice and TCM is open or short, the connector is not connected securely and the terminal has poor caulking.

TROUBLE SYMPTOM:

- ABS warning light and VDC warning light come on.
- "Er HC" or "Er Ab" is displayed in odo/trip meter.

WIRING DIAGRAM:

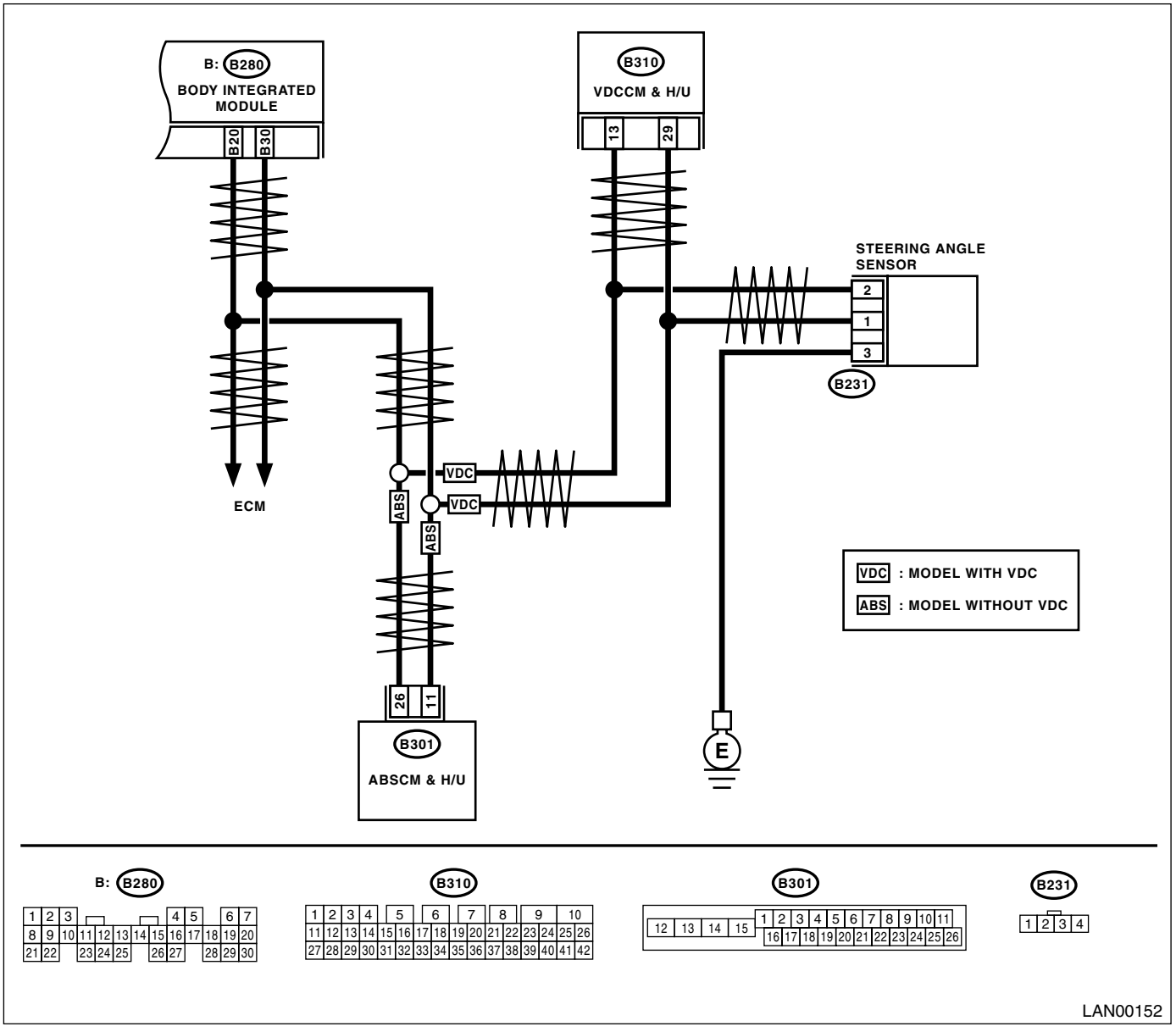

	Step	Check	Yes	No
1	**CHECK VDC/ABSCM.** Read the DTC of VDC/ABSCM using Subaru Select Monitor.	Is DTC other than “CAN communication” displayed?	Perform the diagnosis according to DTC.	Replace the VDC/ABSCM. <Ref. to ABS-6, ABS Control Module and Hydraulic Control Unit (ABSCM&H/U).> <Ref. to VDC-7, VDC Control Module and Hydraulic Control Unit (VDCCM/U).>

O: DTC B0221 CAN-HS ECM NO-RECEIVE DATA

DTC DETECTING CONDITION:

Defective ECM. (If error is in the main harness, Diagnostic Trouble Code (DTC) P0600 High-speed CAN circuit is input simultaneously.)

TROUBLE SYMPTOM:

- Engine malfunction indicator light illuminates.
- “Er HC” is displayed in odo/trip meter.

WIRING DIAGRAM:

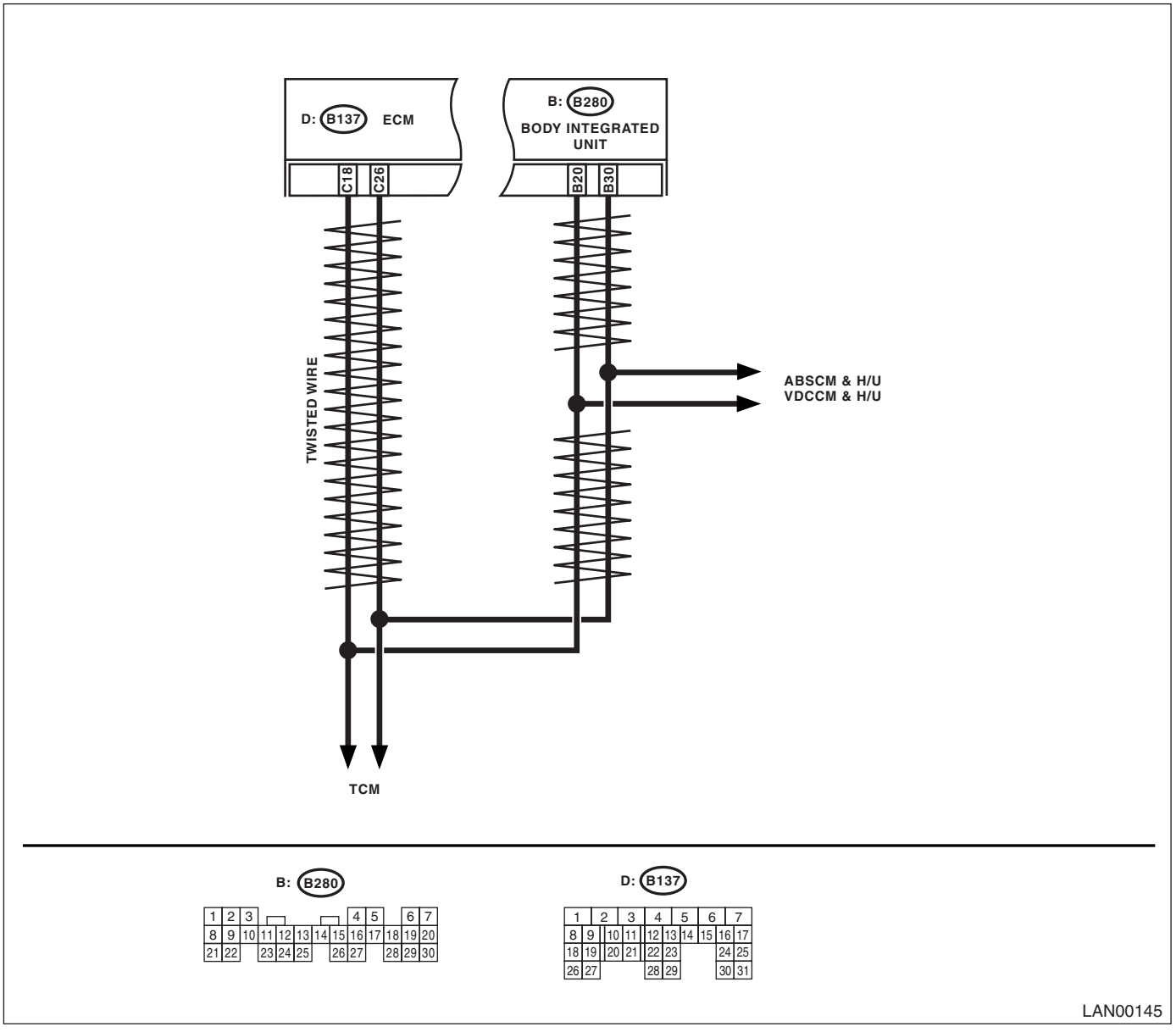

	Step	Check	Yes	No
1	**CHECK HARNESS.** 1) Disconnect the body integrated unit connector (B280). 2) Measure the resistance between harness connectors. ***Connector & terminal*** ***(B280) No. 20 — No. 30:***	Is the resistance 55 — 65 Ω? (Standard 60 Ω)	Read the DTC of ECM. Perform the diagnosis according to DTC. <Ref. to EN(H4SO)(diag)-27, READ DIAGNOSTIC TROUBLE CODE (DTC) FOR ENGINE (NORMAL MODE), OPERATION, Subaru Select Monitor.> <Ref. to EN(H4SO U5)(diag)-28, READ DIAGNOSTIC TROUBLE CODE (DTC) FOR ENGINE (NORMAL MODE), OPERATION, Subaru Select Monitor.> <Ref. to EN(H4DOTC)(diag)-28, READ DIAGNOSTIC TROUBLE CODE (DTC) FOR ENGINE (NORMAL MODE), OPERATION, Subaru Select Monitor.> <Ref. to EN(H6DO)(diag)-26, READ DIAGNOSTIC TROUBLE CODE (DTC) FOR ENGINE (NORMAL MODE), OPERATION, Subaru Select Monitor.>	Go to step **2**
2	**CHECK HARNESS.** 1) Disconnect the body integrated unit connector (B280). 2) Measure the resistance between harness connectors. ***Connector & terminal*** ***(B280) No. 20 — No. 30:***	Is the resistance 115 — 125 Ω? (End resistance or main line is open)	Go to step **3**	Related line of body integrated unit is open when ∞ Ω. Repair or replace the open circuit of harness.
3	**CHECK HARNESS.** 1) Disconnect the ECM connector (B137). 2) Measure the resistance between harness connector terminals. ***Connector & terminal*** ***(B137) No. 18 — No. 26:***	Is the resistance 115 — 125 Ω? (End resistance standard 120 Ω)	Go to step **4**	Go to step **5**

Step		Check	Yes	No
4	**CHECK ECM.** 1) Disconnect the ECM connector (B137). 2) Measure the resistance between ECM connector terminals. ***Connector & terminal*** ***(B137) No. 18 — No. 26:***	Is the resistance 115 — 125 Ω?	Read the DTC of ECM. Perform the diagnosis according to DTC. <Ref. to EN(H4SO)(diag)-27, READ DIAGNOSTIC TROUBLE CODE (DTC) FOR ENGINE (NORMAL MODE), OPERATION, Subaru Select Monitor.> <Ref. to EN(H4SOU5)(diag)-28, READ DIAGNOSTIC TROUBLE CODE (DTC) FOR ENGINE (NORMAL MODE), OPERATION, Subaru Select Monitor.> <Ref. to EN(H4DOTC)(diag)-28, READ DIAGNOSTIC TROUBLE CODE (DTC) FOR ENGINE (NORMAL MODE), OPERATION, Subaru Select Monitor.> <Ref. to EN(H6DO)(diag)-26, READ DIAGNOSTIC TROUBLE CODE (DTC) FOR ENGINE (NORMAL MODE), OPERATION, Subaru Select Monitor.>	End resistance is open. Replace the ECM. <Ref. to FU(H4SO)-35, Engine Control Module (ECM).> <Ref. to FU(H4SOU5)-44, Engine Control Module (ECM).> <Ref. to FU(H4DOTC)-39, Engine Control Module (ECM).> <Ref. to FU(H6DO)-34, Engine Control Module (ECM).>
5	**CHECK HARNESS.** 1) Disconnect the ECM connector (B137). 2) Measure the resistance between harness connector and chassis ground. ***Connector & terminal*** ***(B137) No. 18 — Chassis ground:*** ***(B137) No. 26 — Chassis ground:***	Is the resistance less than 10 Ω?	Repair or replace the short circuit of harness.	Go to step **6**

	Step	Check	Yes	No
6	**CHECK HARNESS.** 1) Disconnect the body integrated unit connector (B280), ECM connector (B137), TCM connector (B54), ABS (B301)/VDC (B310) CM connector. 2) Measure the input voltage between harness connector and chassis ground while turning the ignition switch to ON. ***Connector & terminal*** ***(B280) No. 20 (+) — Chassis ground (−):*** ***(B280) No. 30 (+) — Chassis ground (−):***	Is the voltage more than 6 V?	Repair or replace the short circuit of harness.	Read the DTC of ECM. Perform the diagnosis according to DTC. <Ref. to EN(H4SO)(diag)-27, READ DIAGNOSTIC TROUBLE CODE (DTC) FOR ENGINE (NORMAL MODE), OPERATION, Subaru Select Monitor.> <Ref. to EN(H4SOU5)(diag)-28, READ DIAGNOSTIC TROUBLE CODE (DTC) FOR ENGINE (NORMAL MODE), OPERATION, Subaru Select Monitor.> <Ref. to EN(H4DOTC)(diag)-28, READ DIAGNOSTIC TROUBLE CODE (DTC) FOR ENGINE (NORMAL MODE), OPERATION, Subaru Select Monitor.> <Ref. to EN(H6DO)(diag)-26, READ DIAGNOSTIC TROUBLE CODE (DTC) FOR ENGINE (NORMAL MODE), OPERATION, Subaru Select Monitor.>

P: DTC B0222 CAN-HS TCM NO-RECEIVE DATA

DTC DETECTING CONDITION:

TCM error, or harness between the main harness splice and TCM is open or short, the connector is not connected securely and the terminal has poor caulking.

TROUBLE SYMPTOM:

- Engine malfunction indicator light illuminates.
- "Er HC" is displayed in odo/trip meter.

WIRING DIAGRAM:

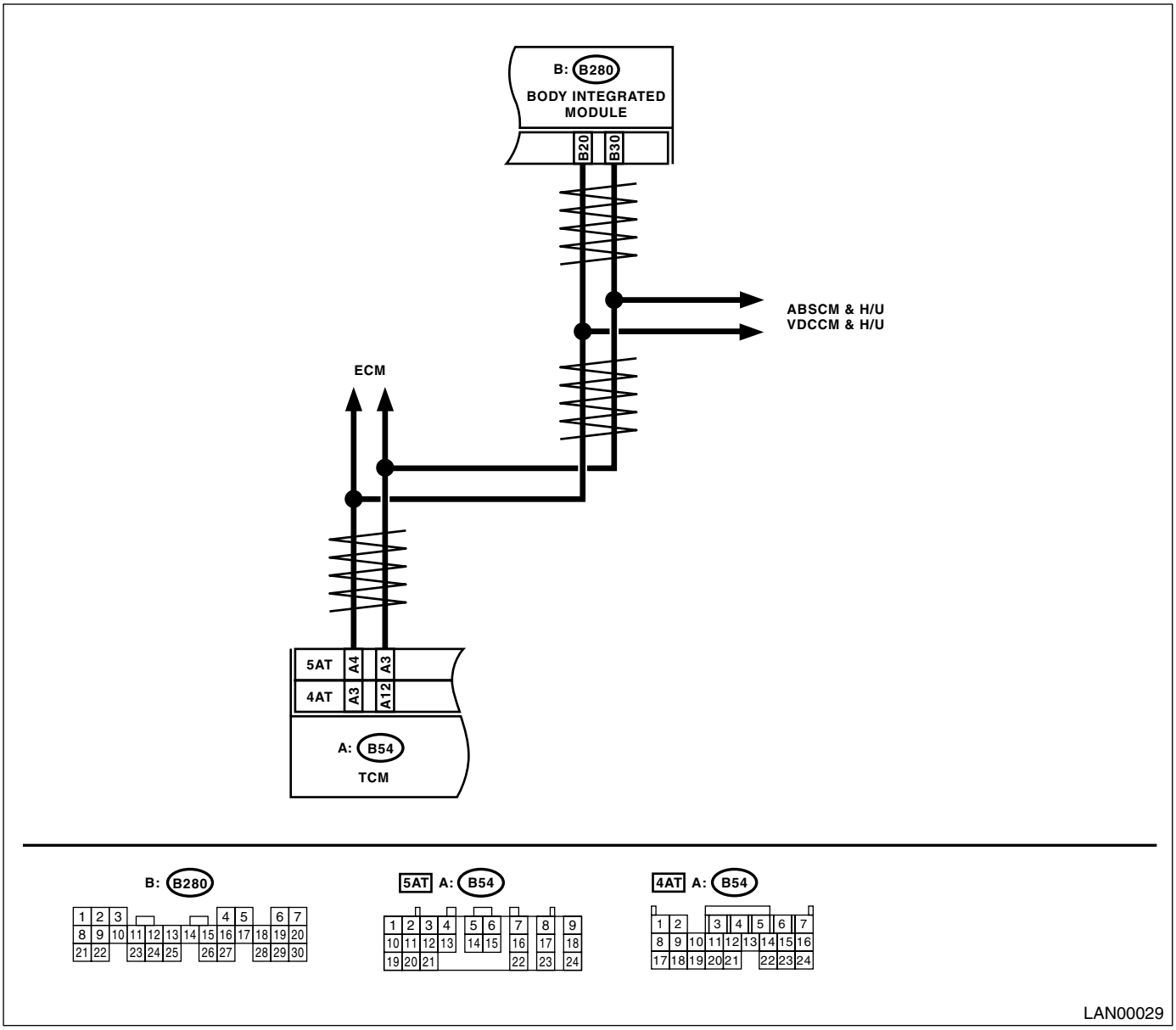

Step		Check	Yes	No
1	**CHECK HARNESS.** 1) Disconnect the TCM connector (B54) 2) Measure the resistance between harness connector terminals. ***Connector & terminal*** ***4AT MODEL*** ***(B54) No. 3 — No. 12:*** ***5AT MODEL*** ***(B54) No. 3 — No. 4:***	Is the resistance ∞ Ω?	Open harness in related lines of TCM. Repair or replace the open circuit of harness.	Go to step **2**

	Step	Check	Yes	No
2	**CHECK TCM.** Read the DTC of TCM using Subaru Select Monitor. <Ref. to 4AT(D)(diag)-14, READ DIAGNOSTIC TROUBLE CODE (DTC), OPERATION, Subaru Select Monitor.> <Ref. to 5AT(diag)-15, READ DIAGNOSTIC TROUBLE CODE (DTC), OPERATION, Subaru Select Monitor.>	Is DTC other than “CAN communication” displayed?	Perform the diagnosis according to DTC.	Replace the TCM. <Ref. to 4AT-64, Transmission Control Module (TCM).> <Ref. to 5AT-60, Transmission Control Module (TCM).>

Q: DTC B0223 CAN-HS VDC/ABS NO-RECEIVE DATA

DTC DETECTING CONDITION:

Defective VDC/ABSCM. (If error is in the main harness, DTC P0600 High-speed CAN circuit is input at the same time.)

TROUBLE SYMPTOM:

- ABS warning light and VDC warning light come on.
- "Er HC" is displayed in odo/trip meter.

WIRING DIAGRAM:

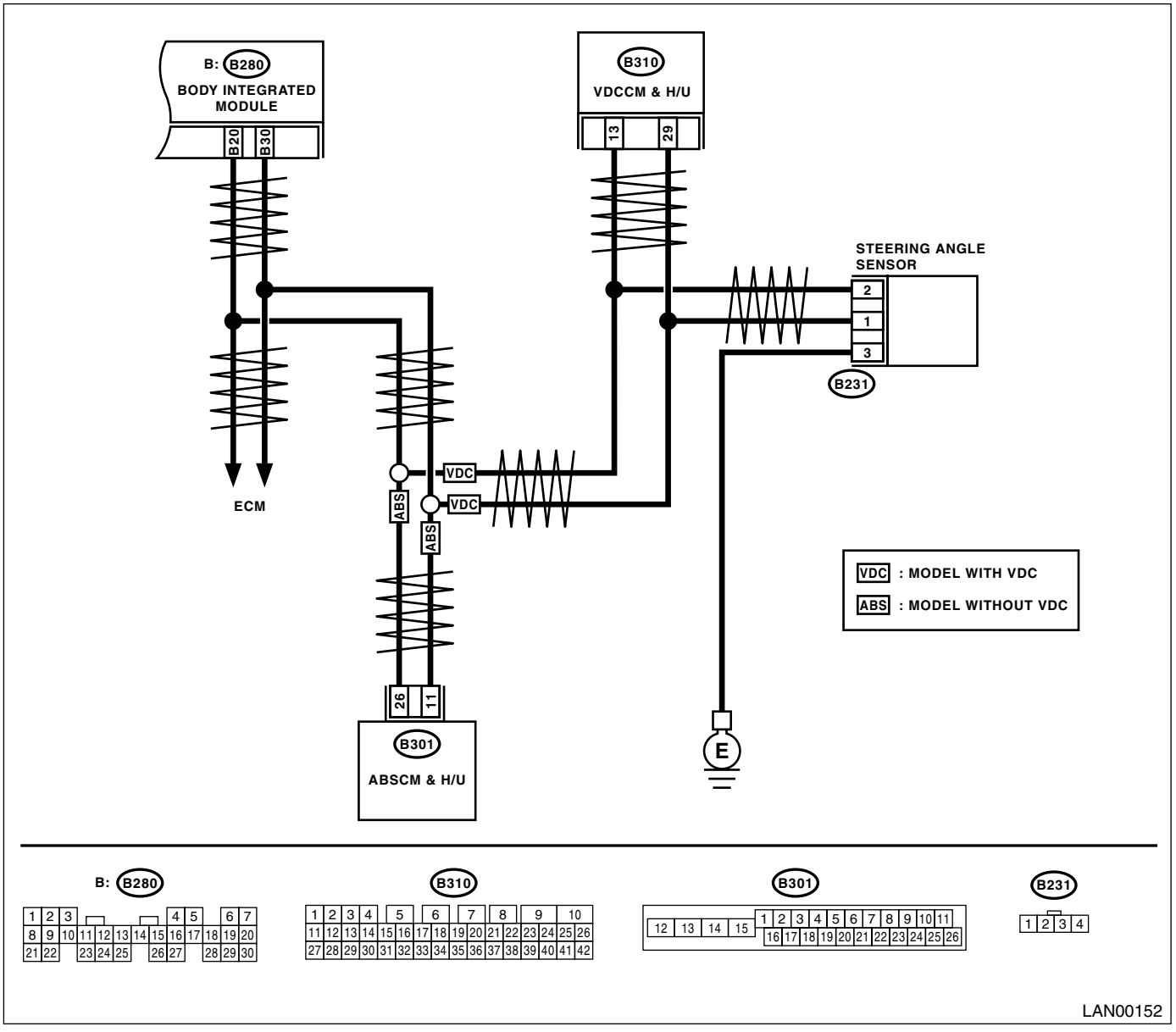

Step		Check	Yes	No
1	**CHECK HARNESS.** 1) Disconnect the harness connector of body integrated unit. 2) Measure the resistance between harness connector terminals. ***Connector & terminal (B280) No. 20 — No. 30:***	Is the resistance 55 — 65 Ω?	Read the DTC of VDC/ABSCM, and perform the diagnosis according to DTC.	Go to step **2**

	Step	Check	Yes	No
2	**CHECK HARNESS.** 1) Disconnect the harness connector of body integrated unit. 2) Measure the resistance between harness connector terminals. ***Connector & terminal*** ***(B280) No. 20 — No. 30:***	Is the resistance 115 — 125 Ω?	Go to step **5**	Go to step **3**
3	**CHECK HARNESS.** 1) Disconnect the harness connector of body integrated unit. 2) Measure the resistance between the harness connector terminal and chassis ground. ***Connector & terminal*** ***(B280) No. 20 — Chassis ground:*** ***(B280) No. 30 — Chassis ground:***	Is the resistance ∞ Ω?	Open harness on related line of body integrated unit. Repair or replace the open circuit of harness.	Go to step **4**
4	**CHECK HARNESS.** 1) Disconnect the harness connector of body integrated unit. 2) Measure the voltage between the harness connector terminal and chassis ground. (Ignition switch ON) ***Connector & terminal*** ***(B280) No. 20 (+) — Chassis ground (−):*** ***(B280) No. 30 (+) — Chassis ground (−):***	Is the voltage more than 6 V?	Repair or replace the short circuit of harness.	Go to step **5**
5	**CHECK END RESISTANCE.** 1) Disconnect the VDC/ABSCM harness connector. 2) Measure the resistance between VDC/ABSCM connector terminals. ***Connector & terminal*** ***ABS*** ***(B301) No. 11 — No. 26:*** ***VDC*** ***(B310) No. 13 — No. 29:***	Is the resistance between 115 — 125 Ω?	Go to step **6**	End resistance is opened. Replace the VDC/ABSCM. <Ref. to ABS-6, ABS Control Module and Hydraulic Control Unit (ABSCM&H/U).> <Ref. to VDC-7, VDC Control Module and Hydraulic Control Unit (VDCCM/U).>
6	**CHECK HARNESS.** 1) Disconnect the body integrated unit connector (B280) and VDC/ABSCM connector (ABS:B301, VDC:310). 2) Measure the resistance between harness connector terminals. ***Connector & terminal*** ***ABS*** ***(B301) No. 11 — (B280) No. 30:*** ***(B301) No. 26 — (B280) No. 20:*** ***VDC*** ***(B310) No. 13 — (B280) No. 20:*** ***(B310) No. 29 — (B280) No. 30:***	Is the resistance less than 10 Ω?	Go to step **7**	Main wiring harness opened. Repair or replace the open circuit of harness.
7	**CHECK VDC/ABSCM.** 1) Connect all the connectors. 2) Read the DTC of VDC/ABSCM using Subaru Select Monitor.	Is DTC other than “CAN communication” displayed?	Perform the diagnosis according to DTC concerning VDC/ABSCM.	Temporary poor contact occurs. Check the connecting condition of connector and terminals.

R: DTC B0300 CAN-LS MALFUNCTION

DTC DETECTING CONDITION:

Either end of low-speed CAN communication line is open or shorted, the connector is not connected properly, or the terminal has poor crimping.

TROUBLE SYMPTOM:

“Er LC” is displayed in odo/trip meter, but communicating function is OK.

WIRING DIAGRAM:

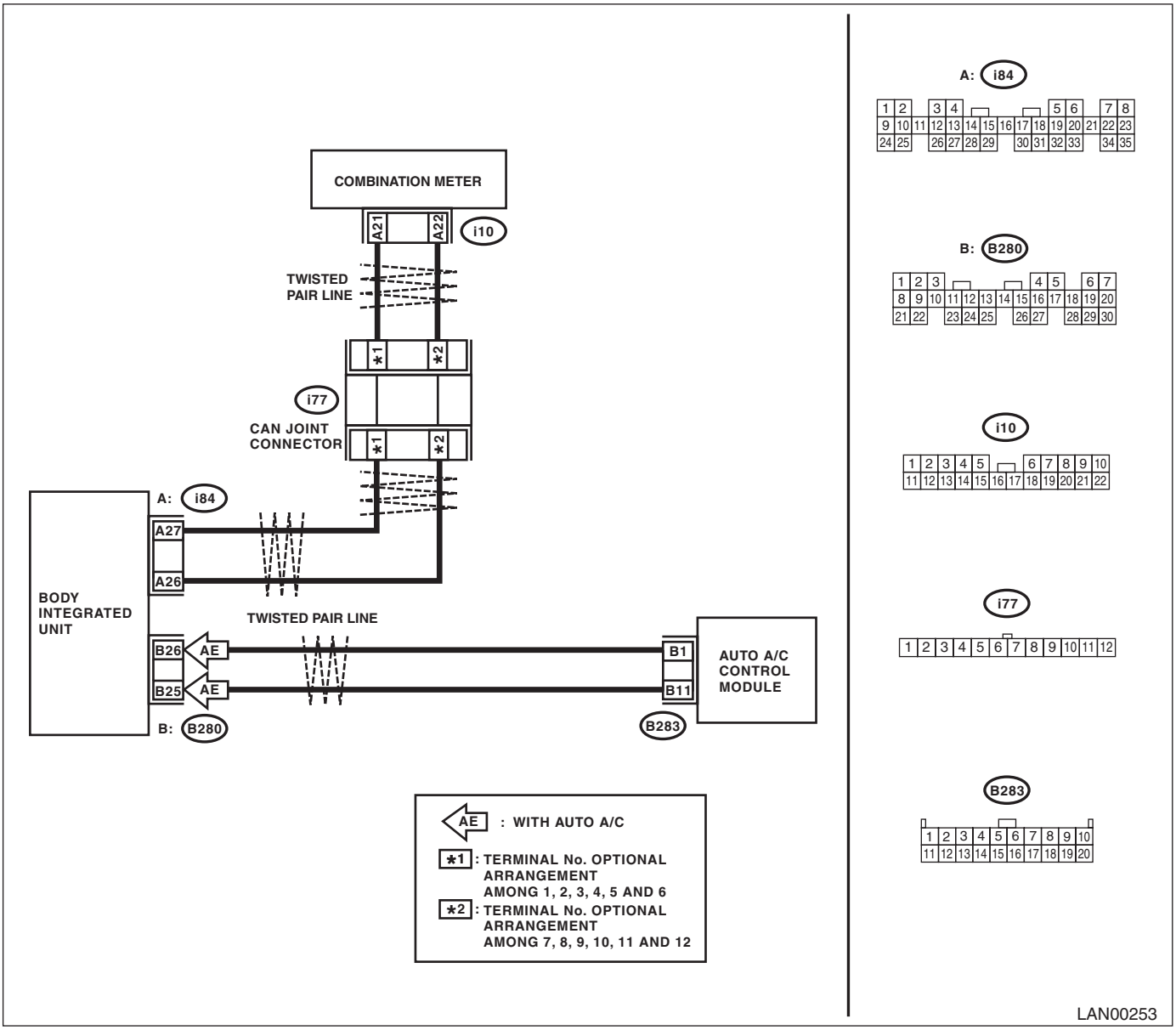

Step		Check	Yes	No
1	**CHECK DTC.** Read the DTC of body integrated unit using Subaru Select Monitor.	Is there any DTC other than B0300?	Perform the diagnosis according to other DTC.	Go to step **2**.
2	**CHECK DTC.** Check the DTC displayed in the body integrated unit.	Is the DTC displayed currently malfunctioning?	Check the connection of harness connector. Go to step **3**.	Go to step **3**.
3	**CHECK DTC.** Turn the ignition switch to OFF and read the DTC again.	Is B0300 displayed currently malfunctioning?	Go to step **4**.	Temporary poor contact occurs.

	Step	Check	Yes	No
4	**CHECK CURRENT DATA.** Connect the Subaru Select Monitor and display current data of the body integrated unit (auto A/C fail).	Is OK displayed?	Go to step **5**.	Perform auto A/C self-diagnosis. <Ref. to AC(diag)-10, Diagnostic Chart for Self-Diagnosis, .>,
5	**CHECK AUTO A/C ECM.** 1) Turn the ignition switch to OFF. 2) Disconnect the auto A/C ECM connector (B283). 3)Turn the ignition switch to ON and read the DTC.	Does B0300 disappear?	Go to step **6**.	Go to step **7**.
6	**CHECK HARNESS.** 1) Disconnect the body integrated unit connector (B280) and auto A/C control module connector (B283). 2) Measure the resistance between body integrated unit connector and auto A/C control module connector. ***Connector & terminal*** ***(B283) No. 1 — (B280) No. 26:*** ***(B283) No. 11 — (B280) No. 25:***	Is the harness in normal condition?	Replace the auto A/C ECM. <Ref. to AC-33, Control Unit (Auto A/C Model), .>	Repair or replace the open circuit of harness.
7	**CHECK CURRENT DATA.** Connect the Subaru Select Monitor and display current data of the body integrated unit (meter fail).	Is OK displayed?	Go to step **8**.	Replace the combination meter. <Ref. to IDI-15, REMOVAL, Combination Meter.>
8	**CHECK COMBINATION METER.** 1) Turn the ignition switch to OFF. 2) Disconnect the combination meter connector. 3) Turn the ignition switch to ON.	Is B0300 detected?	Go to step **10**.	Go to step **9**.
9	**CHECK HARNESS.** 1) Disconnect the combination meter connector (i10). 2) Check for open and short circuits between the body integrated unit and combination meter connectors. ***Connector & terminal*** ***(i10) No. 21 — (i84) No. 27:*** ***(i10) No. 22 — (i84) No. 26:***	Is the harness in normal condition?	Replace the combination meter. <Ref. to IDI-15, REMOVAL, Combination Meter.>	Repair or replace the open or short circuit of harness.
10	**CHECK HARNESS.** 1) Disconnect the CAN junction connector (i77) and the body integrated unit connector (i84). 2) Measure the resistance between connector terminals. ***Connector & terminal*** ***(i84) No. 27 — (i77) No. 2:*** ***(i84) No. 26 — (i77) No. 8:*** NOTE: The junction connector of i77 is in user defined alignment.	Is the resistance less than 10 Ω?	Go to step **11**.	Repair the short circuit of harness or replace harness.

	Step	Check	Yes	No
11	**CHECK HARNESS.** 1) Disconnect the combination meter connector. 2) Measure the resistance between the junction connector and the combination meter connector. ***Connector & terminal*** ***(i10) No. 21 — (i77) No. 1:*** ***(i10) No. 22 — (i77) No. 7:***	Is the resistance less than 10 Ω?	Go to step **12**.	Repair the open circuit of harness or replace harness.
12	**CHECK HARNESS.** 1) Disconnect the body integrated unit connector (B280) and auto A/C control module connector (B283). 2) Measure the resistance between body integrated unit connector and auto A/C control module connector. ***Connector & terminal*** ***(B283) No. 1 — (B280) No. 26:*** ***(B283) No. 11 — (B280) No. 25:***	Is the resistance less than 10 Ω?	Go to step **13**.	Repair the open circuit of harness or replace harness.
13	**CHECK HARNESS.** 1) Connect the junction connector. 2) Measure the resistance between body integrated unit connector and chassis ground. ***Connector & terminal*** ***(B280) No. 25 — Chassis ground:*** ***(B280) No. 26 — Chassis ground:*** ***(i84) No. 26 — Chassis ground:*** ***(i84) No. 27 — Chassis ground:***	Is the resistance less than 10 Ω?	Repair the short circuit of harness or replace harness.	Go to step **14**.
14	**CHECK HARNESS.** 1) Turn the ignition switch to ON. 2) Measure the voltage between body integrated unit connector and chassis ground. ***Connector & terminal*** ***(B280) No. 25 (+) — Chassis ground (-):*** ***(B280) No. 26 (+) — Chassis ground (-):*** ***(i84) No. 26 (+) — Chassis ground (-):*** ***(i84) No. 27 (+) — Chassis ground (-):***	Is the voltage 6 V or more?	Repair the short circuit of harness or replace harness.	Replace the body integrated unit. <Ref. to SL-54, REMOVAL, Body Integrated Unit.>

S: DTC B0301 CAN-LS COUNTER ABNORMAL

DTC DETECTING CONDITION:

Find the unit in which trouble occurs and open or short CAN line, and repair and replace them.
(Free running counter error may be detected at the same time from the unit in which the malfunction occurs.)

TROUBLE SYMPTOM:

"Er LC" is displayed in odo/trip meter.

	Step	Check	Yes	No
1	**CHECK DTC.** Read the DTC of body integrated unit using Subaru Select Monitor.	Is there any DTC other than B0301?	Perform the diagnosis according to other DTC.	Go to step **2**.
2	**CHECK DTC.** Check the DTC displayed in the body integrated unit.	Is the DTC displayed currently malfunctioning?	Check the connection of harness connector. Go to step **3**.	Go to step **3**.
3	**CHECK DTC.** Turn the ignition switch to OFF and read the DTC again.	Is B0301 currently malfunctioning?	Go to step **4**.	Temporary poor contact occurs.
4	**CHECK CURRENT DATA.** Connect the Subaru Select Monitor and display current data of the body integrated unit (auto A/C fail).	Is OK displayed?	Go to step **5**.	Perform auto A/C self-diagnosis. <Ref. to AC(diag)-10, Diagnostic Chart for Self-Diagnosis, .>
5	**CHECK AUTO A/C ECM.** 1) Turn the ignition switch to OFF. 2) Disconnect the auto A/C ECM connector. 3) Turn the ignition switch to ON.	Does the communications error display disappear?	Go to step **6**.	Go to step **7**.
6	**CHECK HARNESS.** 1) Disconnect the body integrated unit connector (B280) and auto A/C control module connector (B283). 2) Check for open and short circuits between body integrated unit connector and auto A/C control module connector. ***Connector & terminal*** ***(B283) No. 11 — (B280) No. 26:*** ***(B283) No. 1 — (B280) No. 25:***	Is the harness in normal condition?	Replace the auto A/C ECM. <Ref. to AC-33, Control Unit (Auto A/C Model), .>	Repair or replace the open or short circuit of harness.
7	**CHECK CURRENT DATA.** Connect the Subaru Select Monitor and display current data of the body integrated unit (meter fail).	Is OK displayed?	Go to step **8**.	Replace the combination meter. <Ref. to IDI-15, REMOVAL, Combination Meter.>
8	**CHECK COMBINATION METER.** 1) Turn the ignition switch to OFF. 2) Disconnect the combination meter connector. 3) Turn the ignition switch to ON.	Is B0301 detected?	Go to step **9**.	Replace the combination meter. <Ref. to IDI-15, REMOVAL, Combination Meter.>
9	**CHECK HARNESS.** 1) Disconnect the combination meter connector (i10). 2) Check for open and short circuits between the body integrated unit and combination meter connectors. ***Connector & terminal*** ***(i10) No. 21 — (i84) No. 27:*** ***(i10) No. 22 — (i84) No. 26:***	Is the harness in normal condition?	Go to step **10**.	Repair or replace the open or short circuit of harness.

	Step	Check	Yes	No
10	**CHECK COMBINATION METER.** 1) Display the current data of body integrated unit using Subaru Select Monitor. 2) Display the door switch in analog data. 3) Read the display of data and combination meter when each door is opened/closed.	Do the body integrated unit data indicator and combination meter indicator change according to operation?	Go to step **11**.	Go to step **13**.
11	**CHECK AUTO A/C CONTROL MODULE.** 1) Display the current data of body integrated unit using Subaru Select Monitor. 2) Display the number of blower fan levels in the analog data. 3) Read the data display when the number of blower fan levels is changed on air conditioner control part.	Does the data display change?	Go to step **12**.	Go to step **14**.
12	**CHECK AUTO A/C CONTROL MODULE HARNESS.** 1) Disconnect the auto A/C control module connector. 2) Disconnect the body integrated unit connector. 3) Measure the resistance between the body integrated unit and auto A/C control module harness. ***Connector & terminal*** ***(B280) No. 26 — (B283) No. 1:*** ***(B280) No. 25 — (B283) No. 11:***	Is the resistance less than 10 Ω?	Go to step **14**.	Repair the open circuit of harness or replace harness.
13	**CHECK COMBINATION METER HARNESS.** 1) Disconnect the combination meter connector. 2) Disconnect the body integrated unit connector. 3) Measure the resistance between the body integrated unit and combination meter connector. ***Connector & terminal*** ***(i84) No. 27 — (i10) No. 21:*** ***(i84) No. 26 — (i10) No. 22:***	Is the resistance less than 10 Ω?	Go to step **15**.	Repair the open circuit of harness or replace harness.
14	**CHECK AUTO A/C CONTROL MODULE.** Perform auto A/C control module self-diagnosis. <Ref. to AC(diag)-10, A/C CONTROL SYSTEM SELF-DIAGNOSIS, OPERATION, Diagnostic Chart for Self-Diagnosis.>	Is the self-diagnosis OK?	Go to step **15**.	Replace the auto A/C ECM. <Ref. to AC-33, Control Unit (Auto A/C Model), .>
15	**CHECK COMBINATION METER.** Perform self-diagnosis for the combination meter system. <Ref. to IDI-3, SELF-DIAGNOSIS, INSPECTION, Combination Meter System.>	Is the self-diagnosis OK?	Go to step **16**.	Replace the combination meter. <Ref. to IDI-15, REMOVAL, Combination Meter.>
16	**CHECK THE BODY INTEGRATED UNIT.** Read the data of “body integrated unit data received” on ECM data display using Subaru Select Monitor.	Is the “Yes” displayed?	Go to step **17**.	Replace the body integrated unit. <Ref. to SL-54, REMOVAL, Body Integrated Unit.>
17	**CHECK THE BODY INTEGRATED UNIT.** Read the data of “body integrated unit counter update” on ECM data display using Subaru Select Monitor.	Is the “Yes” displayed?	Temporary poor contact occurs. Check the connection of connector.	Replace the body integrated unit. <Ref. to SL-54, REMOVAL, Body Integrated Unit.>

T: DTC B0302 CAN-LS BUS OFF

DTC DETECTING CONDITION:

Because of a lot of error data occurred, some units have been disconnected not to affect other units. Communication failure from the unit in which error is occurred is input at the same time.

TROUBLE SYMPTOM:

"Er LC" is displayed in odo/trip meter.

WIRING DIAGRAM:

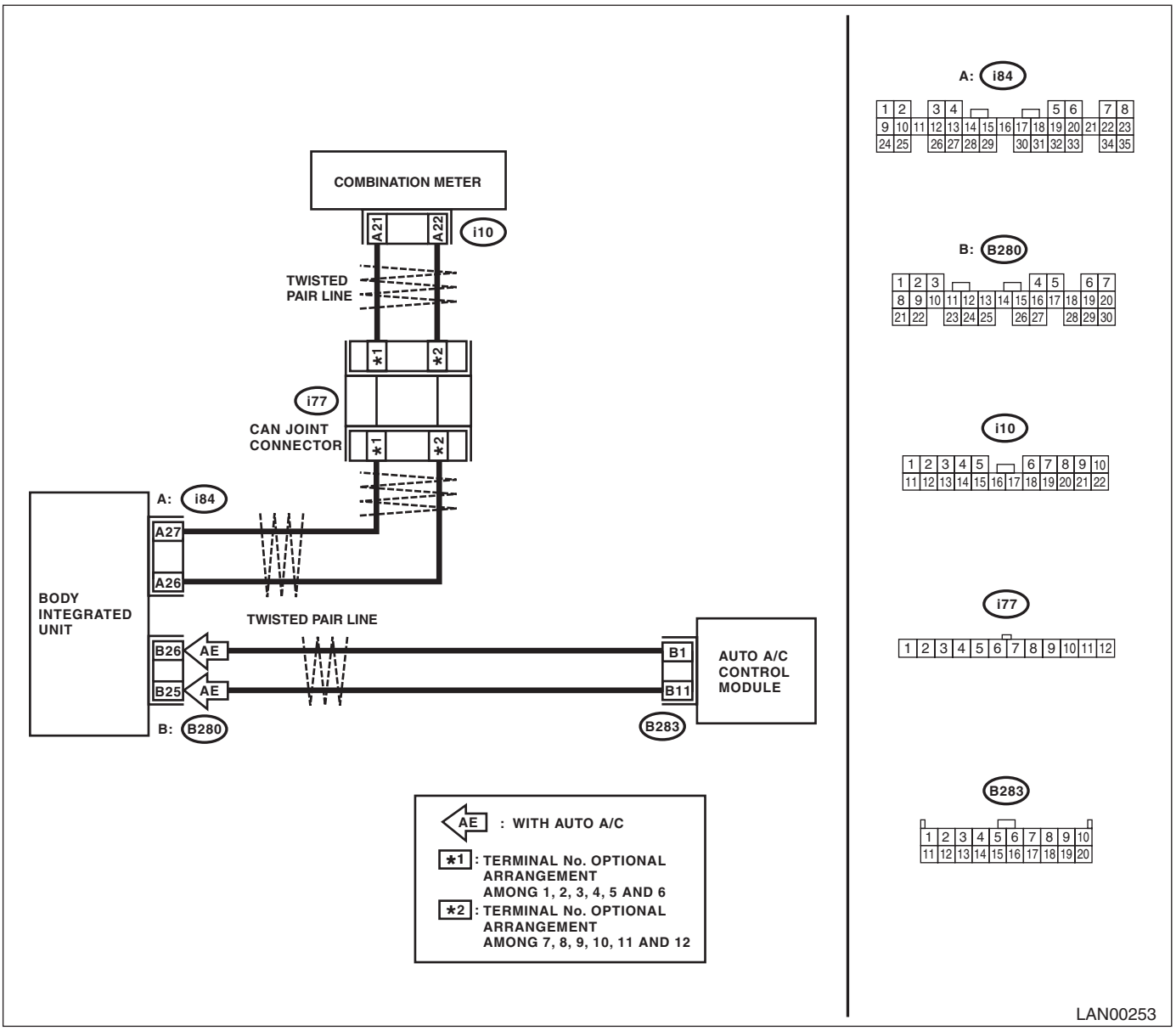

Step		Check	Yes	No
1	**CHECK DTC.** Read the DTC of body integrated unit using Subaru Select Monitor.	Is there any DTC other than B0302?	Perform the diagnosis according to other DTC.	Go to step **2**.
2	**CHECK DTC.** Check the DTC displayed in the body integrated unit.	Is the DTC displayed currently malfunctioning?	Check the connection of harness connector. Go to step **3**.	Go to step **3**.
3	**CHECK DTC.** Turn the ignition switch to OFF and read the DTC again.	Is B0302 currently malfunctioning?	Go to step **4**.	Temporary poor contact occurs.

	Step	Check	Yes	No
4	**CHECK CURRENT DATA.** Connect the Subaru Select Monitor and display current data of the body integrated unit (auto A/C fail).	Is OK displayed?	Go to step **5**.	Perform auto A/C self-diagnosis. <Ref. to AC(diag)-10, OPERATION, Diagnostic Chart for Self-diagnosis.>
5	**CHECK AUTO A/C ECM.** 1) Turn the ignition switch to OFF. 2) Disconnect the auto A/C ECM connector. 3) Turn the ignition switch to ON.	Does B0302 disappear?	Go to step **6**.	Go to step **7**.
6	**CHECK HARNESS.** 1) Disconnect the body integrated unit connector (B280) and auto A/C control module connector (B283). 2) Check for open and short circuits between body integrated unit connector and auto A/C control module connector. ***Connector & terminal*** ***(B283) No. 1 — (B280) No. 26:*** ***(B283) No. 11 — (B280) No. 25:***	Is the harness in normal condition?	Replace the auto A/C ECM. <Ref. to AC-33, Control Unit (Auto A/C Model), .>	Repair or replace the open or short circuit of harness.
7	**CHECK CURRENT DATA.** Connect the Subaru Select Monitor and display current data of the body integrated unit (meter fail).	Is OK displayed?	Go to step **8**.	Replace the combination meter. <Ref. to IDI-15 REMOVAL, Combination Meter.>
8	**CHECK COMBINATION METER.** 1) Turn the ignition switch to OFF. 2) Disconnect the combination meter connector. 3) Turn the ignition switch to ON.	Is DTC B0302 detected?	Go to step **9**.	Replace the combination meter. <Ref. to IDI-15 REMOVAL, Combination Meter.>
9	**CHECK HARNESS.** 1) Disconnect the combination meter connector (i10). 2) Check for open and short circuits between the body integrated unit connector and combination meter connector. ***Connector & terminal*** ***(i10) No. 21 — (i84) No. 27:*** ***(i10) No. 22 — (i84) No. 26:***	Is the harness in normal condition?	Go to step **10**.	Repair or replace the open or short circuit of harness.
10	**CHECK COMBINATION METER.** 1) Display the current data of body integrated unit using Subaru Select Monitor. 2) Display the door switch in analog data. 3) Read the display of data and combination meter when each door is opened/closed.	Do the body integrated unit data indicator and combination meter indicator change according to the operation?	Go to step **11**.	Go to step **12**.
11	**CHECK AUTO A/C CONTROL MODULE HARNESS.** 1) Disconnect the auto A/C control module connector. 2) Disconnect the body integrated unit connector. 3) Measure the resistance between the body integrated unit and auto A/C control module harness. ***Connector & terminal*** ***(B280) No. 26 — (B283) No. 1:*** ***(B280) No. 25 — (B283) No. 11:***	Is the resistance less than 10 Ω?	Go to step **12**.	Repair or replace the open or short circuit of harness.

	Step	Check	Yes	No
12	**CHECK COMBINATION METER HARNESS.** 1) Disconnect the combination meter connector. 2) Disconnect the body integrated unit connector. 3) Measure the resistance between the body integrated unit and combination meter connector. ***Connector & terminal*** ***(i84) No. 27 — (i10) No. 21:*** ***(i84) No. 26 — (i10) No. 22:***	Is the resistance less than 10 Ω?	Go to step **13**.	Repair the open circuit of harness or replace harness.
13	**CHECK AUTO A/C CONTROL MODULE.** Perform auto A/C control module self-diagnosis. <Ref. to AC(diag)<Ref. to AC(diag)-10, Diagnostic Chart for Self-Diagnosis, .>	Is the self-diagnosis OK?	Go to step **14**.	Replace the auto A/C control module. <Ref. to AC-33, Control Unit (Auto A/C Model), .>
14	**CHECK COMBINATION METER.** Perform self-diagnosis for the combination meter system. <Ref. to IDI-3, SELF-DIAGNOSIS, INSPECTION, Combination Meter System.>	Is the self-diagnosis OK?	Replace the body integrated unit. <Ref. to SL-54, REMOVAL, Body Integrated Unit.>	Replace the combination meter. <Ref. to IDI-15, REMOVAL, Combination Meter.>

U: DTC B0311 CAN-LS METER UNIT DATA ABNORMAL

DTC DETECTING CONDITION:

Combination meter error, or harness between the main harness splice and combination meter is open or short, the connector is not connected securely and the terminal has poor caulking.

TROUBLE SYMPTOM:

"Er Lc" is displayed in odo/trip meter.

WIRING DIAGRAM:

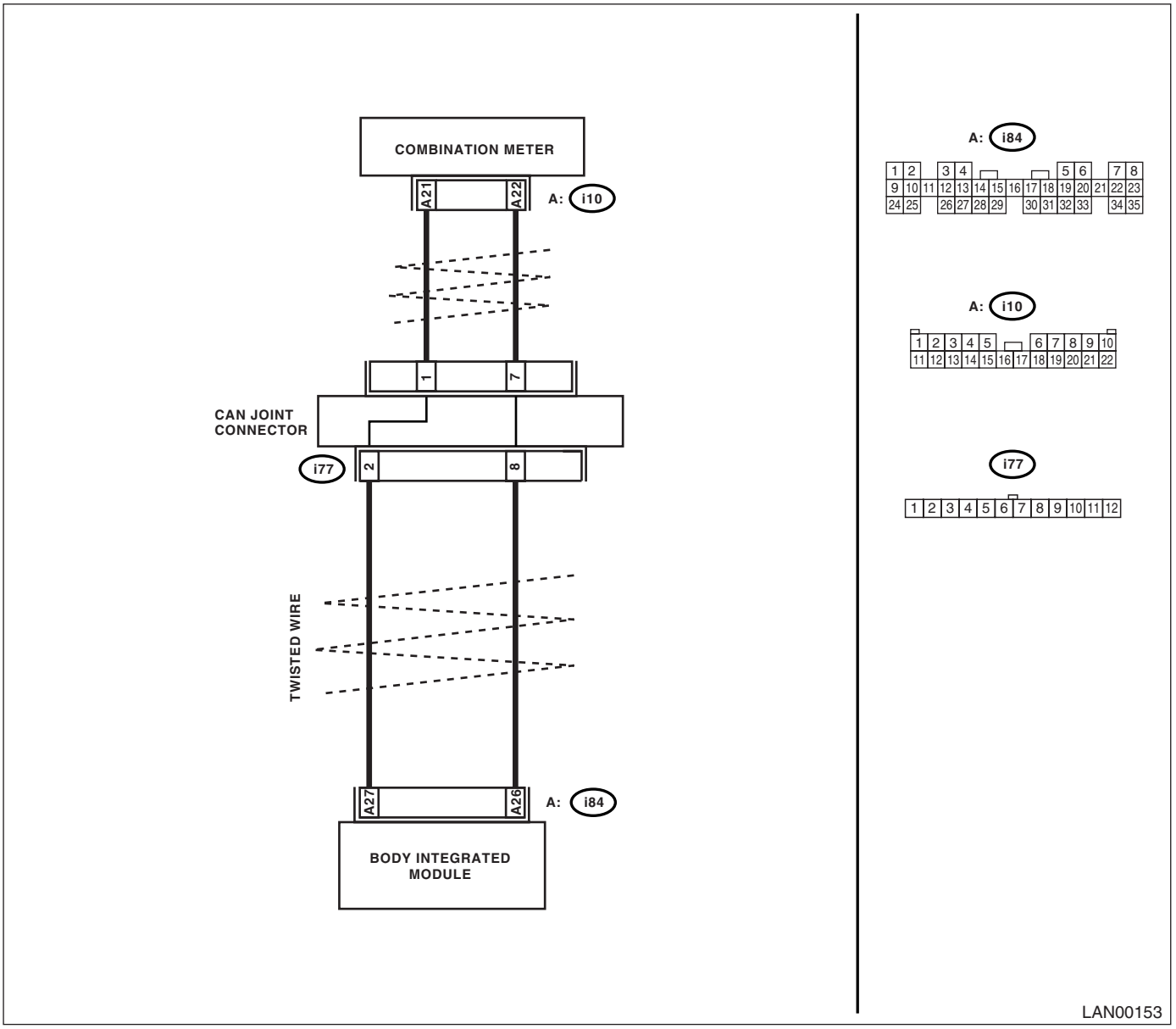

Step		Check	Yes	No
1	**CHECK COMBINATION METER.** Perform the self-diagnosis for combination meter. <Ref. to IDI-3, SELF-DIAGNOSIS, INSPECTION, Combination Meter System.>	Is the self-diagnosis OK?	Read the DTC again, and then perform the diagnosis according to DTC displayed on the top.	Replace the combination meter. <Ref. to IDI-15, Combination Meter.>

V: DTC B0321 CAN-LS METER NO-RECEIVE DATA

DTC DETECTING CONDITION:

Combination meter unit error, or harness between the main harness splice and combination meter unit is open or short, the connector is not connected securely and the terminal has poor caulking.

TROUBLE SYMPTOM:

Fail mode occurs because the data is not received from combination meter unit.

WIRING DIAGRAM:

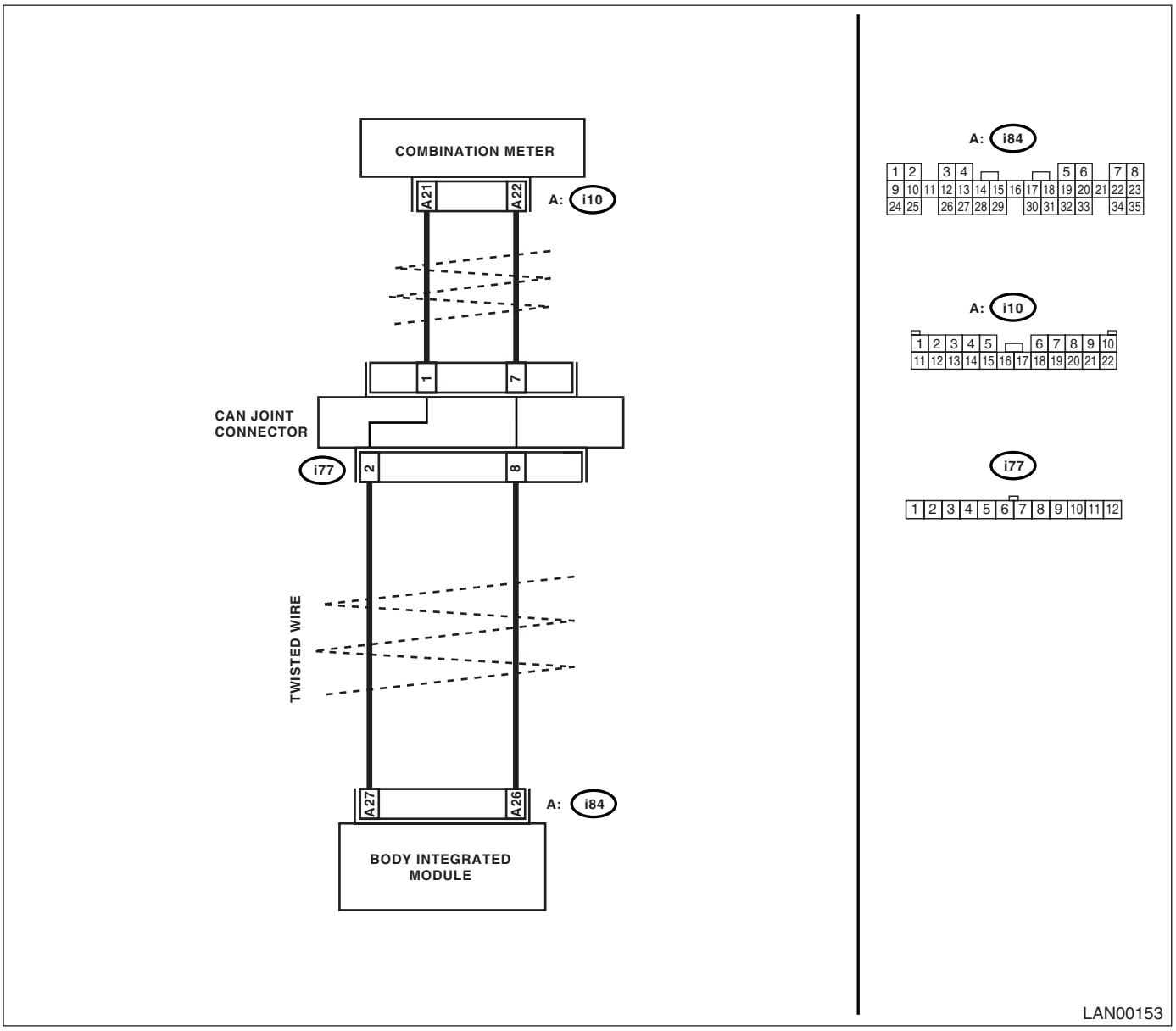

	Step	Check	Yes	No
1	**CHECK COMMUNICATION LINE.** 1) Warm up the engine. 2) Compare the data of body integrated unit and combination meter using Subaru Select Monitor. Check item: • Engine speed • Each door switch • P switch	Is the data displayed same?	Go to step **2**	Perform the self-diagnosis for combination meter. <Ref. to IDI-3, SELF-DIAGNOSIS, INSPECTION, Combination Meter System.>
2	**CHECK HARNESS.** 1) Disconnect the body integrated unit, combination meter connector. 2) Measure the resistance between harness connectors. ***Connector & terminal*** ***(i10) No. 21 — (i84) No. 27:*** ***(i10) No. 26 — (i84) No. 26:***	Is the resistance less than 10 Ω?	Go to step **4**	Go to step **3**
3	**CHECK HARNESS.** 1) Disconnect the CAN joint connector (i77) with connector of unit is disconnected. 2) Measure the resistance between harness connector. ***Connector & terminal*** ***(i10) No. 21 — (i77) No. 1:*** ***(i10) No. 26 — (i77) No. 7:*** ***(i84) No. 27 — (i77) No. 2:*** ***(i84) No. 26 — (i77) No. 8:***	Is the resistance less than 10 Ω?	Go to step **4**	Repair or replace the open circuit of harness.
4	**CHECK HARNESS.** Measure the resistance between harness connector (i77) and chassis ground. ***Connector & terminal*** ***(i77) No. 1 — Chassis ground:*** ***(i77) No. 7 — Chassis ground:*** ***(i77) No. 2 — Chassis ground:*** ***(i77) No. 8 — Chassis ground:***	Is the resistance less than 10 Ω?	Repair or replace the short circuit of harness.	Go to step **5**
5	**CHECK HARNESS.** 1) Turn the ignition switch to ON. 2) Measure the voltage between harness connector (i77) and chassis ground. ***Connector & terminal*** ***(i77) No. 1 (+) — Chassis ground (−):*** ***(i77) No. 7 (+) — Chassis ground (−):*** ***(i77) No. 2 (+) — Chassis ground (−):*** ***(i77) No. 8 (+) — Chassis ground (−):***	Is the voltage more than 6 V?	Repair or replace the short circuit of harness.	Go to step **6**
6	**CHECK COMBINATION METER.** Perform the self-diagnosis for combination meter. <Ref. to IDI-3, SELF-DIAGNOSIS, INSPECTION, Combination Meter System.>	Is the self-diagnosis OK?	Temporary poor contact occurs.	Check the connection of connector. Replace the combination meter. <Ref. to IDI-15, Combination Meter.>

W: DTC B0500 KEYLESS UART COM. MALFUNCTION

DTC DETECTING CONDITION:

UART between keyless control unit and body integrated unit is open or shorted, connector is not connected securely, the terminal has poor caulking.

TROUBLE SYMPTOM:

Door lock does not operate with keyless.

WIRING DIAGRAM:

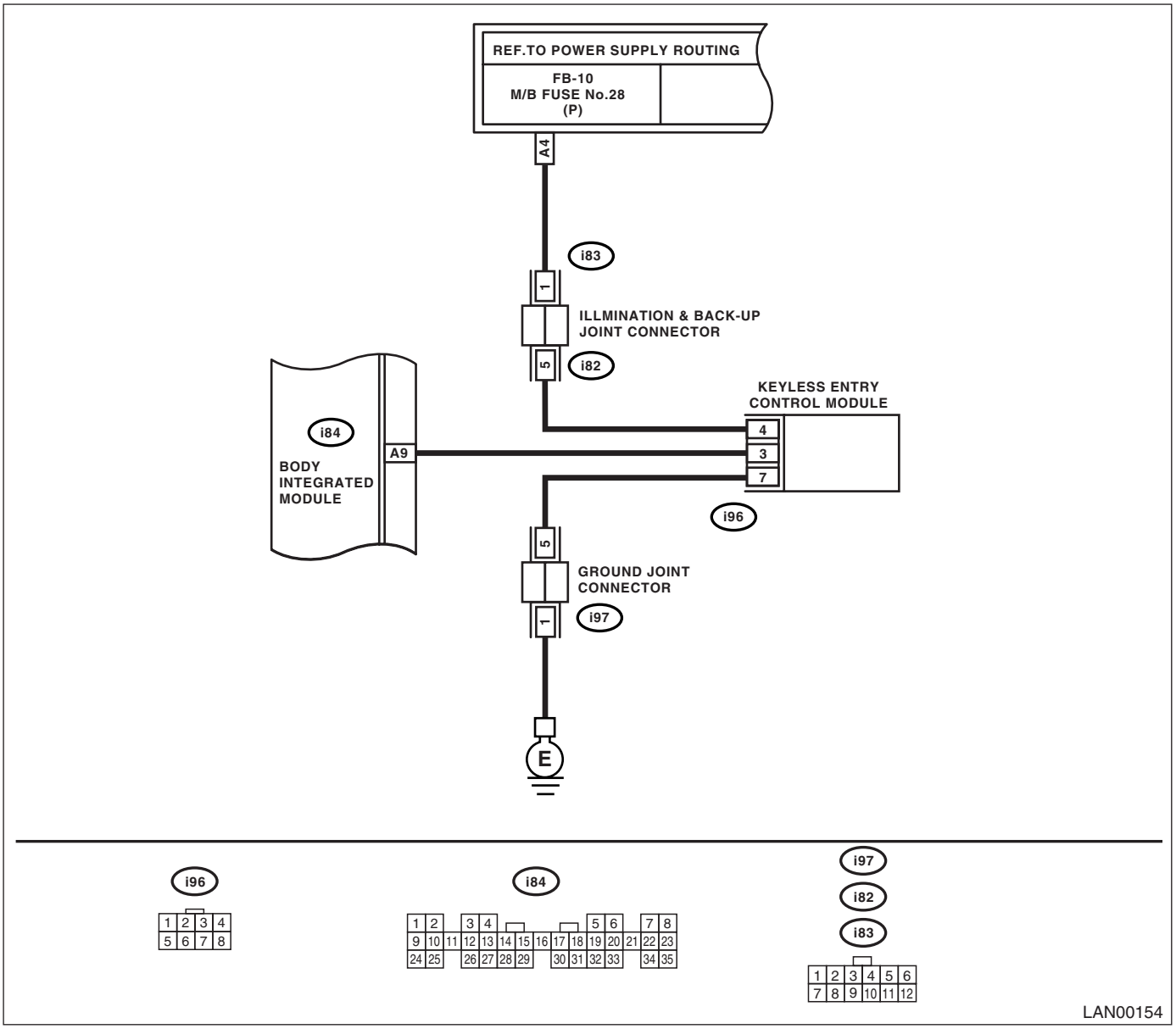

Step		Check	Yes	No
1	**CHECK HARNESS.** 1) Disconnect the body integrated unit connector (i84) and keyless entry control module connector (i96). 2) Measure the resistance between harness. ***Connector & terminal*** ***(i84) No. 9 — (i96) No. 3:***	Is the resistance less than 10 Ω?	Go to step **2**	Repair or replace the open circuit of harness.

	Step	Check	Yes	No
2	**CHECK HARNESS.** Measure the resistance between harness connector and chassis ground. ***Connector & terminal*** ***(i84) No. 9 — Chassis ground:***	Is the resistance less than 1 MΩ?	Repair or replace the short circuit of harness.	Go to step **3**
3	**CHECK HARNESS.** 1) Turn the ignition switch to ON. 2) Measure the voltage between harness connector and chassis ground. ***Connector & terminal*** ***(i84) No. 9 (+) — Chassis ground (−):***	Is the voltage more than 6 V?	Repair or replace the short circuit of harness.	Go to step **4**
4	**OPERATION CHECK.** Check the door lock operation when the doors LOCK/UNLOCK using manual LOCK switch.	Does it operate on switch operation?	Go to step **5**	Replace the body integrated unit. <Ref. to SL-54, Body Integrated Unit.>
5	**OPERATION CHECK.** 1) Disconnect the key warning switch connector (B350). 2) Close all the door, and then perform the LOCK/UNLOCK operation on keyless entry operation.	Does it operate?	Check key warning switch.	Replace the keyless entry control module. <Ref. to SL-52, Keyless Entry Control Unit.>

13.General Diagnostic Table

A: INSPECTION

Read the DTC or inspect and diagnose the following data in the current data display using Subaru Select Monitor.

1. LAN SYSTEM

Item	Operation	Specifications		NOTE
		YES	NO	
Diagnostic code	DTC is not displayed when inspecting all DTCs.	DTC is not displayed.	Perform the diagnosis according to DTC.	—
Engine coolant temperature	Check the current data display of ECM, TCM and body integrated unit, and make sure all data have same values.	Same values	Inspect LAN system.	If engine coolant temperature sensor is not OK, inspect the sensor circuit.
R defogger SW	It turns to ON when pressing switch. (Low-speed CAN is OK)	Turns to ON.	Inspect rear defogger switch.	Rear defogger switch is connected with Low-speed CAN.
R defogger output	When switch input, it is output.	Output	Replace the body integrated unit.	If not operate with output, check the rear defogger relay.
Door lock SW	When locked with door lock switch, it turns to ON.	Turns to ON.	Inspect door lock switch.	Door lock switch is connected with Low-speed CAN.
Door lock actuator	When locked with door lock switch, it is output.	Output	Replace the body integrated unit.	—

2. BODY INTEGRATED UNIT

Item	Operation	Specifications		NOTE
		YES	NO	
Illumination VR power supply	Operate the illumination volume, illumination light is controlled with changing of data display voltage.	Illumination light is controlled with changing of data.	Inspect the illumination volume.	—
Fuel level resistance	Check the fuel level resistance and fuel level resistance 2. Both resistances are same.	Same values	Inspect body integrated unit.	Compare the input and output values of body integrated unit.
R wiper SW input	When rear wiper SW to ON, data display turns to ON.	Turns to ON.	Inspect rear wiper switch.	—
R wiper output	When rear wiper switch to ON, output signal turns to ON.	Turns to ON.	Replace the body integrated unit.	If not operate with output turned to ON, check the rear wiper motor.
Keyless Entry	Keyless entry LOCK/UNLOCK the doors.	Operate	Inspect the keyless antenna.	If the antenna is OK, replace the body integrated unit.
Brake SW	When brake pedal is depressed, it turns to ON.	Turns to ON.	Inspect brake switch.	—
Shift lock solenoid	The shift lock releases when depressing the brake pedal.	Released	Inspect the shift lock.	—
Body integrated unit registration function setting	Does Vehicle equipment correspond to setting values?	Correspondence	Reconfigure the values according to vehicle equipment.	—
Customize	When changing customize setting, the registration completes correctly.	Registered	Inspect body integrated unit.	—

General Diagnostic Table

Item	Operation	Specifications		NOTE
		YES	NO	
Manual mode	Switch the shift (UP/DOWN) on Manual mode. Indicator is changed in 1 — 2.	Change	Inspect the shift lever.	—
Function check	Each checking item operate correctly. (Except for not equipped)	Operate	Inspect for non-functional actuator.	—
Security	After looking with keyless entry system and open the door, security system is armed and the horn sounds.	Horn sounds. (Security system operates.)	Inspect the security system.	—

WIRING SYSTEM SECTION

WIRING SYSTEM WI

This service manual has been prepared to provide SUBARU service personnel with the necessary information and data for the correct maintenance and repair of SUBARU vehicles.
This manual includes the procedures for maintenance, disassembling, reassembling, inspection and adjustment of components and diagnostics for guidance of experienced mechanics.
Please peruse and utilize this manual fully to ensure complete repair work for satisfying our customers by keeping their vehicle in optimum condition. When replacement of parts during repair work is needed, be sure to use SUBARU genuine parts.

All information, illustration and specifications contained in this manual are based on the latest product information available at the time of publication approval.

FUJI HEAVY INDUSTRIES LTD. G2350BE7

WIRING SYSTEM

WI

		Page
1.	Basic Diagnostic Procedure	3
2.	Working Precautions	15
3.	Power Supply Circuit	16
4.	Ground Circuit	23
5.	Engine Electrical System	34
6.	AT Control System	90
7.	AT Shift Lock Control System	106
8.	TPM Control System	107
9.	Anti-lock Brake System	108
10.	Vehicle Dynamics Control System	110
11.	Air Conditioning System	113
12.	Airbag System	120
13.	Immobilizer System	124
14.	Cruise Control System	125
15.	CAN Communication System	131
16.	Radiator Fan System	133
17.	Charging System	135
18.	Starter System	136
19.	Power Seat System	138
20.	Seat Belt Warning System	139
21.	Seat Heater System	140
22.	Headlight System	141
23.	Front Fog Light System	144
24.	Back-up Light System	145
25.	Stop Light System	146
26.	Clearance Light and Illumination Light System	147
27.	Turn Signal Light and Hazard Light System	151
28.	Interior Light System	153
29.	Front Wiper and Washer System	157
30.	Rear Wiper and Washer System	158
31.	Wiper Deicer System	159
32.	Audio System	160
33.	Front Accessory Power Supply Socket System	162
34.	Rear Accessory Power Supply System	163
35.	Horn System	164
36.	Power Window System	165
37.	Rear Defogger System	169
38.	Remote Control Mirror System	170
39.	Combination Meter System	171
40.	Clock System	175
41.	Fuel Gauge System	176
42.	Coolant Temperature System	177
43.	Oil Pressure Warning System	178

44. Parking Brake / Brake Fluid Level Warning System 179
45. Sunroof Control System 180
46. Keyless Entry System 182
47. Security System 186
48. OP Connector System 189
49. Harness Components Location 190
50. Front Wiring Harness 192
51. Bulkhead Wiring Harness (In Engine Compartment) 194
52. Bulkhead Wiring Harness (In Compartment) 196
53. Engine Wiring Harness and Transmission Cord 199
54. Instrument Panel Wiring Harness 207
55. Rear Wiring Harness 209
56. Door Cord 215
57. Rear Wiring Harness and Trunk Lid Cord 217
58. Rear Wiring Harness and Rear Gate Cord 219
59. Harness Repair Kit 221

1. Basic Diagnostic Procedure

A: BASIC PROCEDURES

1. GENERAL DESCRIPTION

The most important purpose of diagnostics is to determine which part is malfunctioning quickly, to save time and labor.

2. IDENTIFICATION OF TROUBLE SYMPTOM

Determine what the problem is based on the symptom.

3. PROBABLE CAUSE OF TROUBLE

Look at the wiring diagram and check the system's circuit. Then check the switch, relay, fuse, ground, etc.

4. LOCATION AND REPAIR OF TROUBLE

1) Using the diagnostics, narrow down the causes.
2) If necessary, use a voltmeter, ohmmeter, etc.
3) Before replacing certain component parts (switch, relay, etc.), check the power supply, ground, for open wiring harness, poor connectors, etc. If no problem is encountered, check the component parts.

5. SYSTEM OPERATION CHECK

After repairing, ensure that the system operates properly.

B: BASIC INSPECTION

1. VOLTAGE MEASUREMENT

1) Using a voltmeter, connect the negative lead to a good ground point or negative battery terminal and the positive lead to the connector or component terminal.
2) Contact the positive lead of the voltmeter on connector (A). The voltmeter will indicate a voltage.
3) Shift the positive lead to connector (B). The voltmeter will indicate no voltage.

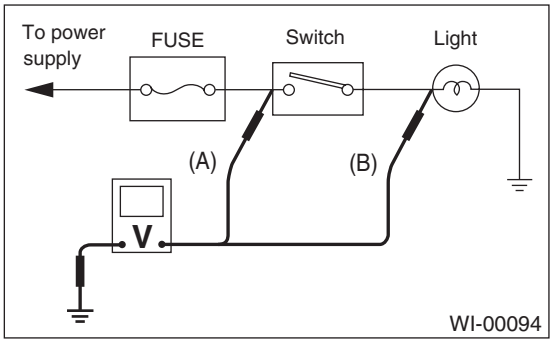

4) With the test set-up held as it is, turn the switch ON. The voltmeter will indicate a voltage and, at the same time, the light will come on.
5) The circuit is in good order. If a problem such as a light failing to illuminate occurs, use the procedures outlined above to track down the malfunction.

2. CIRCUIT CONTINUITY CHECKS

1) Disconnect the battery terminal or connector so there is no voltage between the check points.
Contact the two leads of an ohmmeter to each of the check points.
If the circuit has diodes, reverse the two leads and check again.
2) Use an ohmmeter to check for diode continuity.
When contacting the negative lead to the diode positive side and the positive lead to the negative side, there should be continuity.
When contacting the two leads in reverse, there should be no continuity.

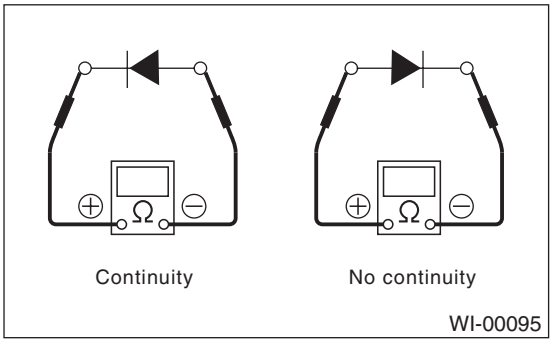

3) Symbol "❍ — ❍" indicates that continuity exists between two points or terminals. For example, when a switch position is at "3", continuity exists among terminals 1, 3 and 6, as shown in the table below.

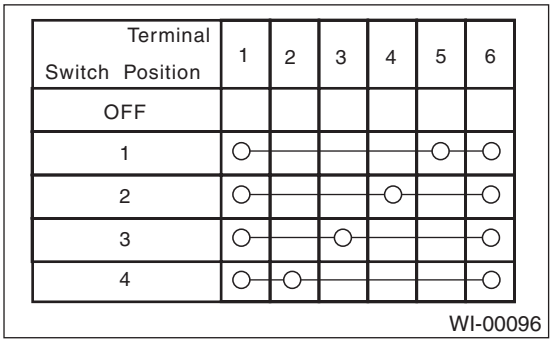

Terminal / Switch Position	1	2	3	4	5	6
OFF						
1	○				○	○
2	○			○		○
3	○		○			○
4	○	○				○

3. HOW TO DETERMINE AN OPEN CIRCUIT

1) WITH VOLTMETER:
An open circuit is determined by measuring the voltage between respective connectors and ground using a voltmeter, starting with the connector closest to the power supply. The power supply must be turned ON so that current flows in the circuit. If voltage is not present between a particular connector and ground, the circuit between that connector and the previous connector is open.

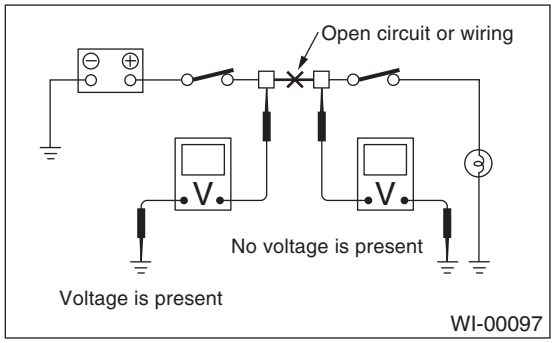

2) WITH OHMMETER:
Disconnect all connectors affected, and check continuity in the wiring between adjacent connectors. When the ohmmeter indicates “infinite”, the wiring is open.

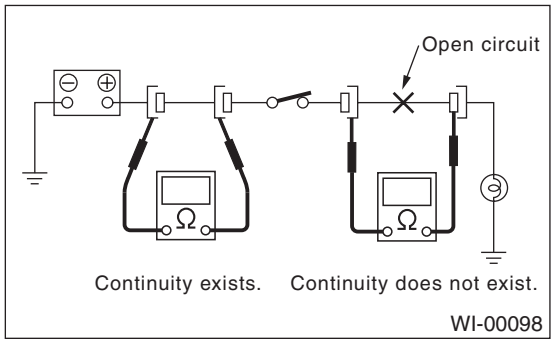

4. HOW TO DETERMINE A SHORT CIRCUIT

1) WITH TEST LIGHT:
Connect a test light (rated at approx. 3 watts) in place of the blown fuse and allow current to flow through the circuit. Disconnect one connector at a time from the circuit. Starting with the one located farthest from the power supply. If the test light goes out when a connector is disconnected, the wiring between that connector and the next connector (farther from the power supply) is shorted.

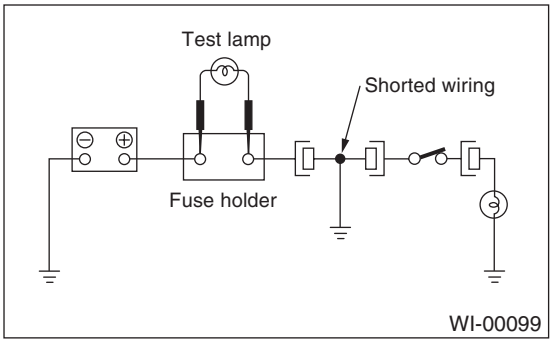

2) WITH OHMMETER:
Disconnect all affected connectors, and check continuity between each connector and ground. When the ohmmeter indicates continuity between a particular connector and a ground, that connector is shorted.

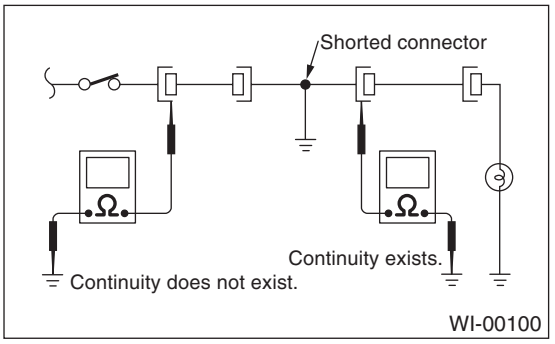

C: HOW TO READ WIRING DIAGRAMS

1. WIRING DIAGRAM

The wiring diagram of each system is illustrated so that you can understand the path through which the electric current flows from the battery.
Sketches and codes are used in the diagrams. They should read as follows:

- Each connector and its terminal position are indicated by a sketch of the connector in a disconnected state which is viewed from the front.

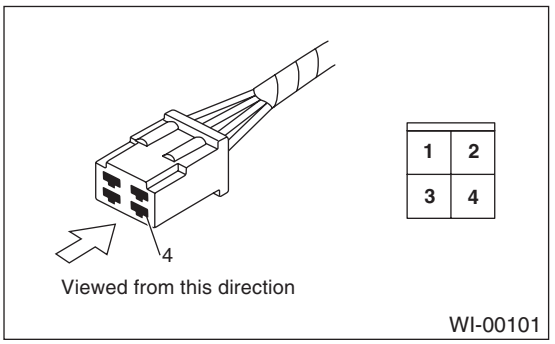

• The number of poles or pins, presence of a lock are indicated in the sketch of each connector. In the sketch, the highest pole number refers to the number of poles which the connector has. For example, the sketch of the connector shown in figure indicates the connector has 9 poles.

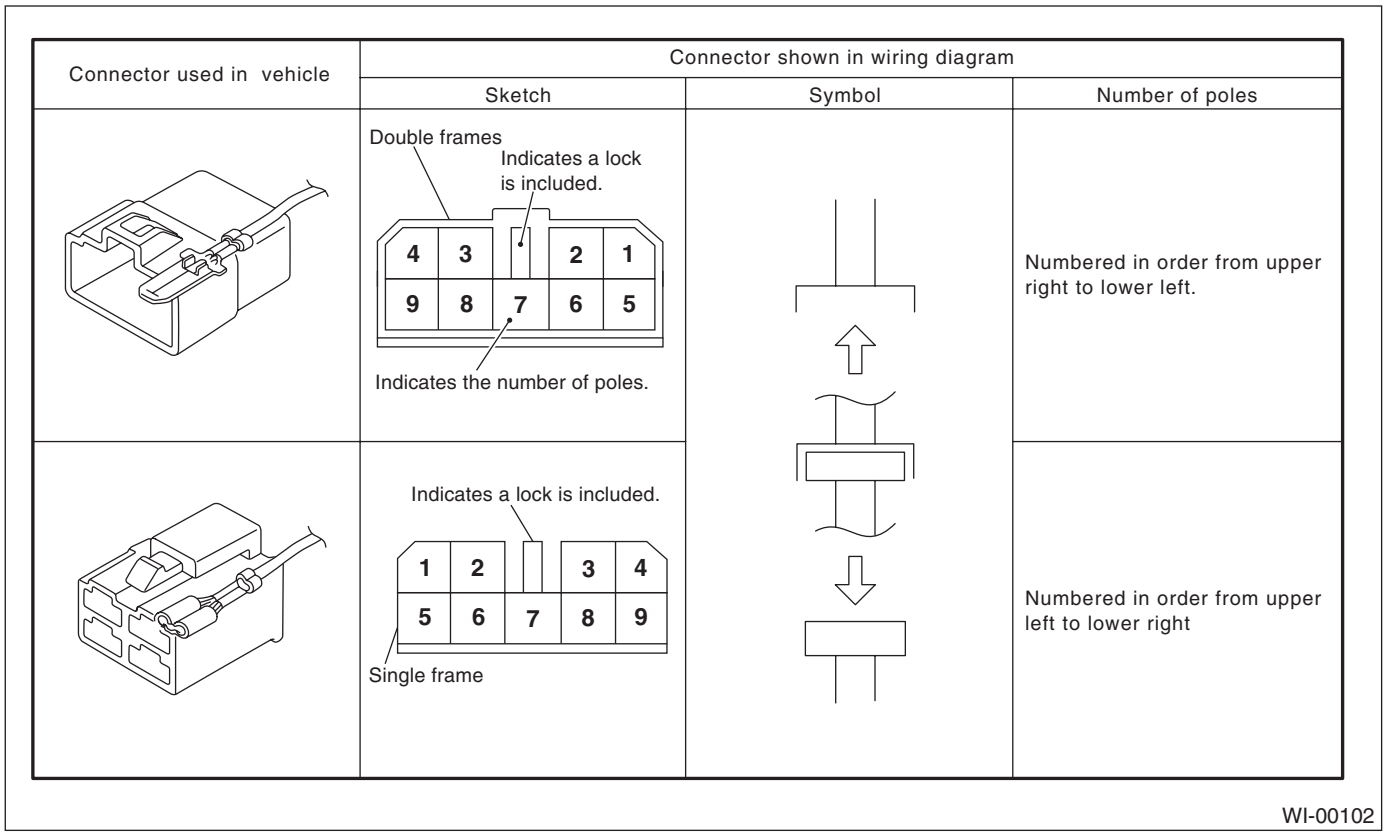

• When one set of connectors is viewed from the front side, the pole numbers of one connector are symmetrical to those of the other. When these two connectors are connected as a unit, the poles which have the same number are joined.

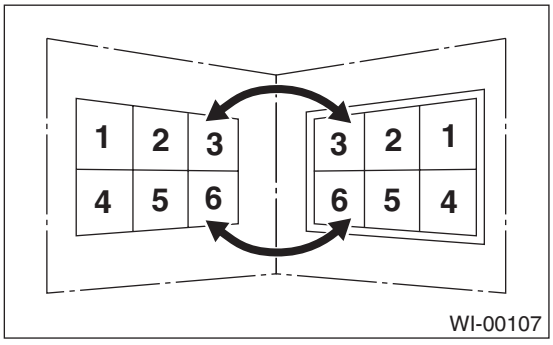

• WIRING DIAGRAM:
The connectors are numbered along with the number of poles, external colors, and mating connections in the accompanying list.
• The sketch of each connector in the wiring diagram usually shows the (A) side of the connector. The relationship between the wire color, terminal number and connector is described in the figure.

NOTE:
A wire which runs in one direction from a connector terminal sometimes may have a different color from that which runs in the other direction from that terminal.

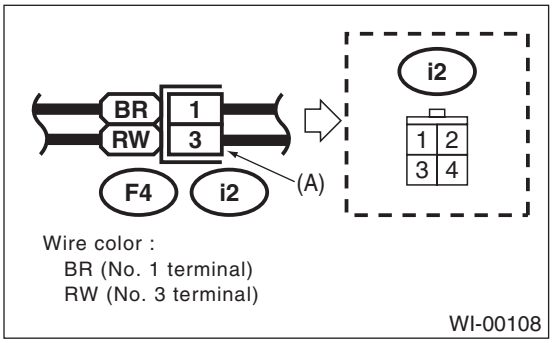

• In the wiring diagram, connectors which have no terminal number refer to one-pole types. Sketches of these connectors are omitted intentionally.

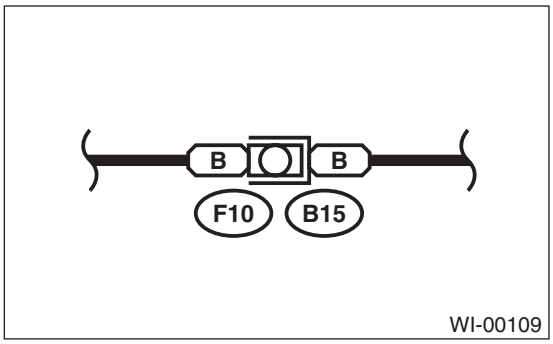

• The following color codes are used to indicate the colors of the wires.

Color code	Color
L	Blue
B	Black
Y	Yellow
G	Green
R	Red
W	White
Br	Brown
Lg	Light green
Gr	Gray
P	Pink
Or	Orange
Sb	Sky blue
V	Purple
SA	Sealed (Inner)
SB	Sealed (Outer)

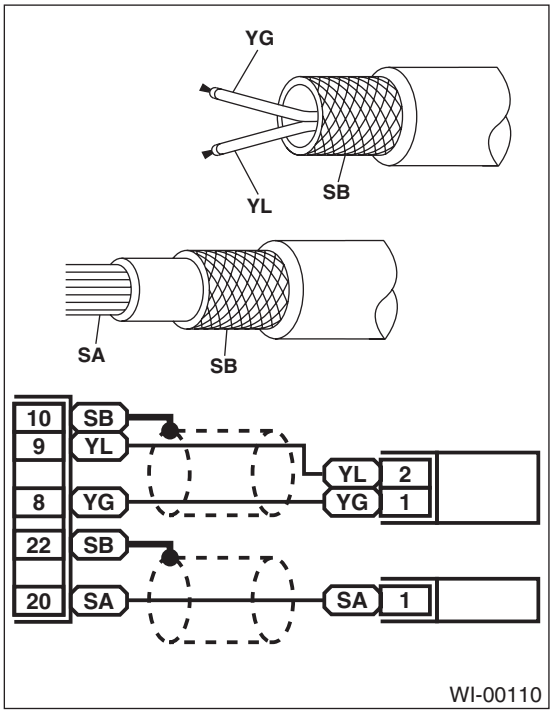

• The wire color code, which consists of two letters (or three letters including Br or Lg), indicates the standard color (base color of the wire covering) by its first letter and the stripe marking by its second letter.

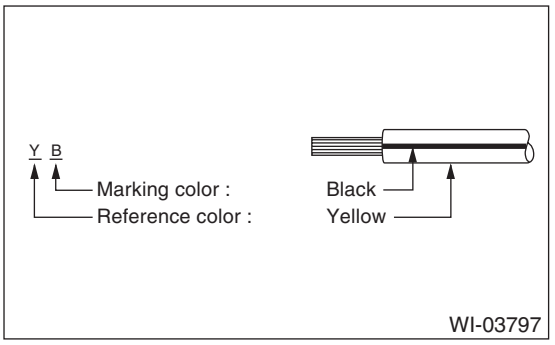

• The table lists the nominal sectional areas and allowable currents of the wires.

CAUTION:
When replacing or repairing a wire, be sure to use the same size and type of the wire which was originally used.

NOTE:
• The allowable current in the table indicates the tolerable amperage of each wire at an ambient temperature of 40°C (104°F).
• The allowable current changes with ambient temperature. Also, it changes if a bundle of more than two wires is used.

Nominal sectional area mm^2	No. of strands/ strand diameter	Outside diameter of wiring mm	Allowable current Amps/ 40°C (104°F)
0.3	7/0.26	1.8	7
0.5	7/0.32	2.2 (or 2.0)	12
0.75	30/0.18	2.6 (or 2.4)	16
0.85	11/0.32	2.4 (or 2.2)	16
1.25	16/0.32	2.7 (or 2.5)	21
2	26/0.32	3.1 (or 2.9)	28
3	41/0.32	3.8 (or 3.6)	38
5	65/0.32	4.6 (or 4.4)	51
8	50/0.45	5.5	67

• Each unit is either directly grounded to the body or indirectly grounds through a harness ground terminal. Different symbols are used in the wiring diagram to identify the two grounding systems.

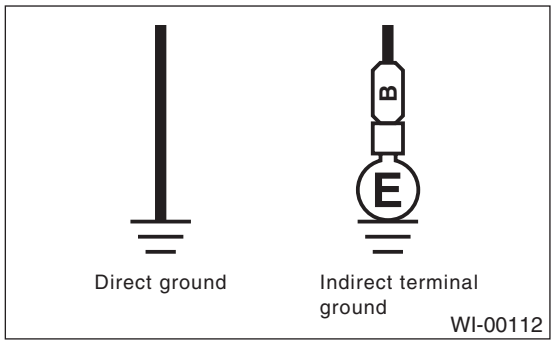

• The ground points shown in the wiring diagram refer to the following:

NOTE:
All wiring harnesses are provided with a ground point which should be securely connected.

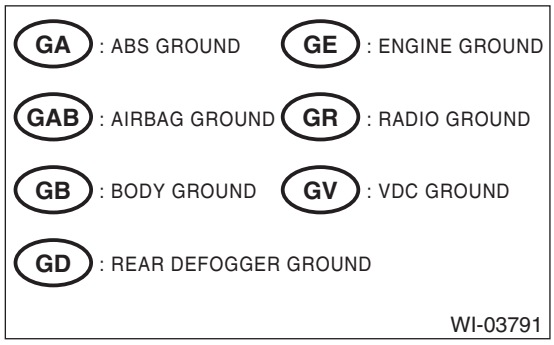

- Relays are classified as normally-open or normally-closed.

The normally-closed relay has one or more contacts. The wiring diagram shows the relay mode when the energizing circuit is OFF.

Relay type		Energizing circuit OFF	Energizing circuit ON
Normally-open type	4-pole	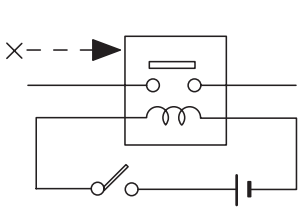	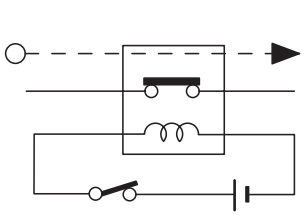
	6-pole	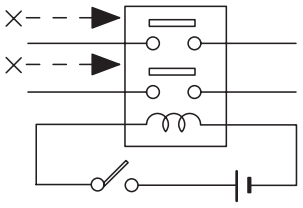	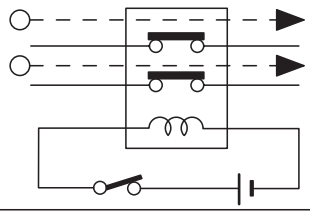
Normally-closed type	4-pole	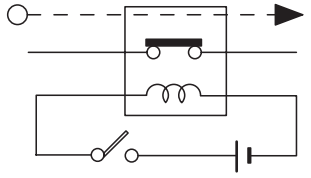	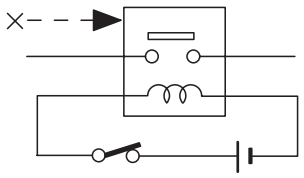
Mixed type	6-pole	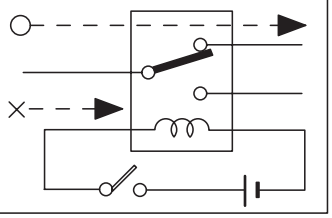	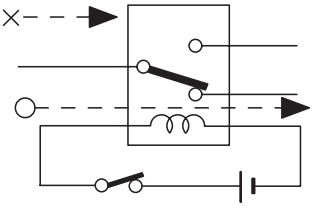

Key to symbols:

○ ⟶ : Current flows.

× ⟶ : Current does not flow.

WI-00114

• Each connector number shown in the wiring diagram corresponds to that in the wiring harness. The location of each connector in the actual vehicle is determined by reading the first character of the connector (for example, a “F” for F8, “i” for i16, etc.) and the type of wiring harness. The first character of each connector number corresponds to the area or system of the vehicle.

Symbol	Wiring harness and cord
F	Front wiring harness
B	Bulkhead wiring harness
E	Engine wiring harness
T	Transmission cord
D	Door cord LH & RH, Rear gate cord Rear door cord LH & RH, Rear defogger cord
i	Instrument panel wiring harness
R	Rear wiring harness, Fuel tank cord, Roof cord, Rear gate cord, Rear defogger ground cord (Sedan model)
AB	Airbag wiring harness

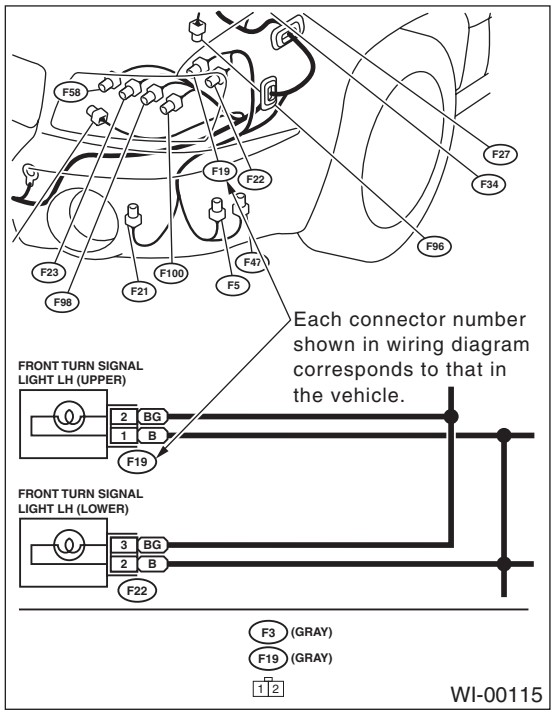

D: SYMBOLS IN WIRING DIAGRAMS

A number of symbols are used in each wiring diagram to easily identify parts or circuits.

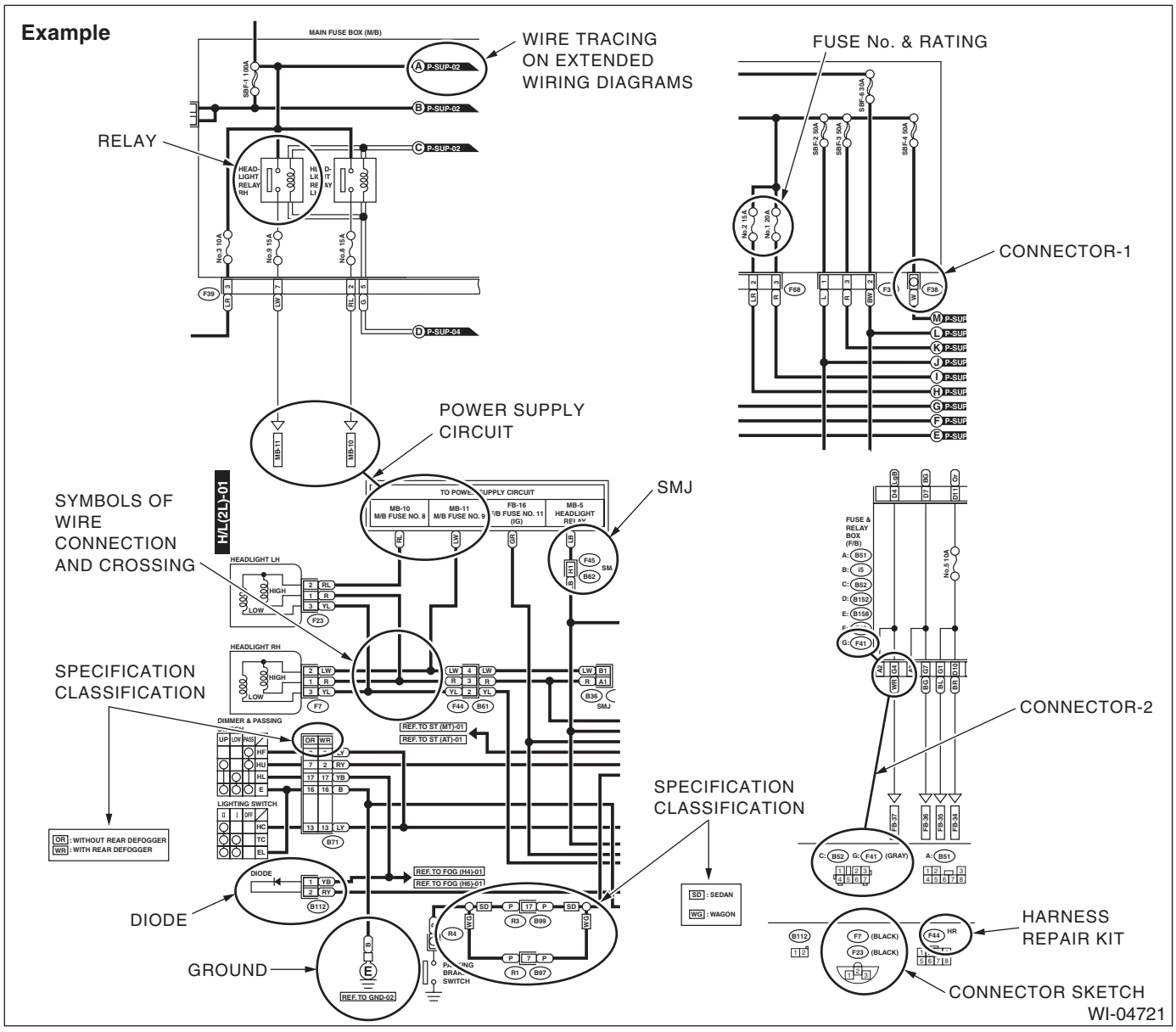

1. RELAY

A symbol used to indicate a relay.

2. CONNECTOR 1

The sketch of the connector indicates the one-pole types.

3. WIRING CONNECTION

Some wiring diagrams are indicated in foldouts for convenience. Wiring destinations are indicated where necessary by corresponding symbols. (When two pages are needed for clear indication)

4. FUSE No. & RATING

The “FUSE No. & RATING” corresponds with that used in the fuse box (main fuse box, fuse and joint box).

5. CONNECTOR 2

- Each connector is indicated by a symbol.
- Each terminal number is indicated in the corresponding wiring diagram in an abbreviated form.
- For example, terminal number “G4” refers to No. 4 terminal of connector (G: F41) shown in the connector sketch.

6. CONNECTOR SKETCH

• Each connector sketch clearly identifies the shape and color of a connector as well as terminal locations. Non-colored connectors are indicated in natural color.
• When more than two types of connector number are indicated in a connector sketch, it means that the same type connectors are used.

7. GROUND

Each grounding point can be located easily by referring to the corresponding wiring harness.

8. DIODE

A symbol is used to indicate a diode.

9. WIRE TRACING ON EXTENDED WIRING DIAGRAMS

For a wiring diagram extending over at least two pages, a symbol (consisting of the same characters with arrows), facilitates wire tracing from one page to the next.
A ←→ A, B ←→ B

10.SYMBOLS OF WIRE CONNECTION AND CROSSING

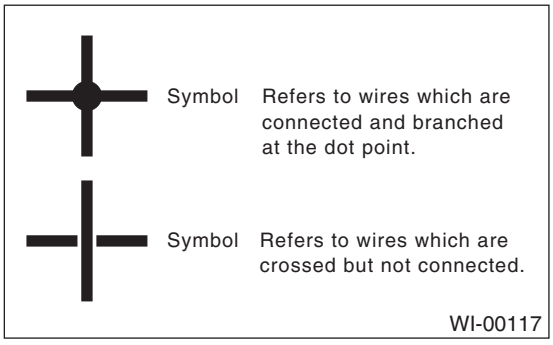

11.POWER SUPPLY CIRCUIT

A symbol is used to indicate the power supply in each wiring diagram.
“MB-5”, “MB-6”, etc., which are used as power-supply symbols throughout the text, correspond with those shown in the “POWER SUPPLY CIRCUIT” in the wiring diagram.
Accordingly, using the “POWER SUPPLY CIRCUIT” and wiring diagrams permits service personnel to understand the entire electrical arrangement of a system.

12.CLASSIFICATION BY SPECIFICATION

When the wiring diagram differ according to vehicle specifications, the specification difference is described by using abbreviations.

13.HARNESS REPAIR KIT

The connector adapting to Harness repair kit is shown as “HR” in the right-upper of connector number.
Refer to “Harness Repair Kit” for harness repair kit. <Ref. to WI-221, SPECIFICATION, Harness Repair Kit.>

E: CONNECTOR SYMBOL IN WIRING HARNESS

A number of connector symbols are used in each wiring diagram to easily identify the wiring harness connectors.

Standard type: Female		
Pole: From 1 to 8	Pole: From 9 to 20	Pole: More than 21
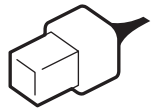	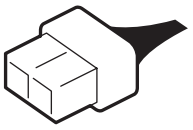	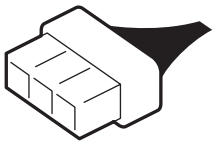
	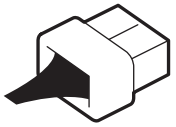	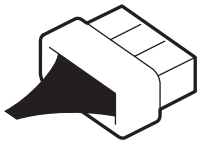
Standard type: Male		
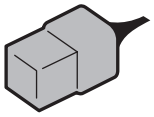	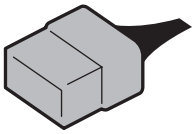	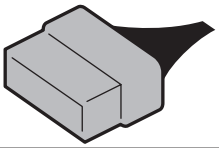
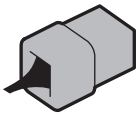	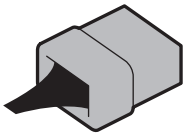	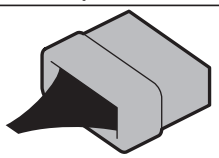

Water proof type: Female		
Pole: From 1 to 8	Pole: From 9 to 20	Pole: More than 21
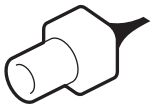		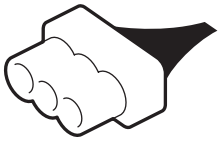
		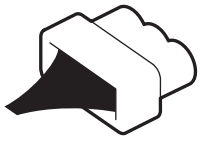
Water proof type: Male		
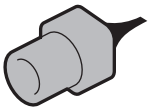	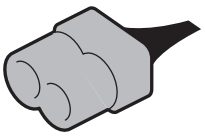	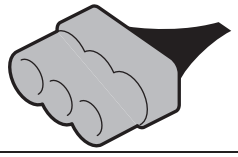
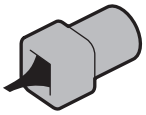	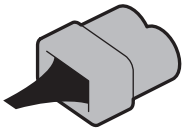	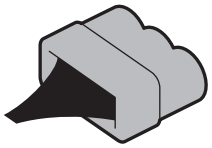

WI-02445

F: ABBREVIATION IN WIRING DIAGRAMS

Abbr.	Full name
ABS	Antilock Brake System
ACC	Accessory
A/C	Air conditioner
AD	Auto Down
AT	Automatic transmission
AU	Auto Up
A/B	Airbag
A/F	Air/Fuel (Air fuel ratio sensor)
ATF	Automatic transmission fluid
AWD	All Wheel Drive
B, BAT	Battery
CPC	Canister Purge Control
D	Drive Range
DN	Down
E	Ground
ELR	Emergency Locking Retractor
F/B	Fuse & Relay box
FL1.5	Fusible Link 1.5 mm^2
H/L	Headlight
I/F	Interface
IG	Ignition
Illumi.	Illumination
INT	Intermittent
LH	Left Hand
Lo	Low
M	Motor
M/B	Main fuse box
MG	Magnet
Mi	Middle
MT	Manual transmission
N	Neutral Range
OCV	Oil flow control solenoid valve
OP	Optional Parts or Open
P	Parking Range
PASS	Passing
R	Reverse Range
RH	Right Hand
SBF	Slow Blow Fuse
ST	Starter
SW	Switch
TGV	Tumble generated valve
U, UP	Up
VDC	Vehicle Dynamics Control
VVL	Variable Valve Lift
WASH	Washer

2. Working Precautions

A: PRECAUTIONS WHEN WORKING WITH THE PARTS MOUNTED ON THE VEHICLE

1) When working under a vehicle which is jacked-up, always be sure to use rigid rack.
2) The parking brake must always be applied during working. Also, in automatic transmission vehicles, keep the select lever set to the P (Parking) range.
3) Be sure the workshop is properly ventilated when running the engine. Further, be careful not to touch the belt or fan while the engine is operating.
4) Be careful not to touch hot metal parts, especially the radiator and exhaust system immediately after the engine has been turned off.

B: PRECAUTIONS IN TROUBLE DIAGNOSIS AND REPAIR OF ELECTRIC PARTS

1) The battery cable must be disconnected from the battery's (–) terminal, and the ignition switch must be set to the OFF position, unless otherwise required by the diagnostics.
2) Securely fasten the wiring harness with clamps and slips so that the harness does not interfere with the body end parts or edges and bolts or screws.
3) When installing parts, be careful not to catch them on the wiring harness.
4) When disconnecting a connector, do not pull the wires, but pull while holding the connector body.

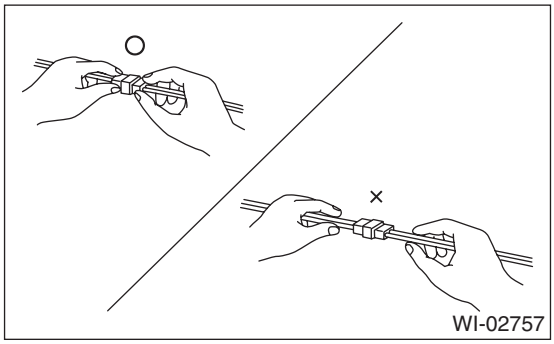

5) Some connectors are provided with a lock. One type of such a connector is disconnected by pushing the lock, and the other, by moving the lock up. In either type the lock shape must be identified before attempting to disconnect the connector.

To connect, insert the connector until it snaps and confirm that it is tightly connected.

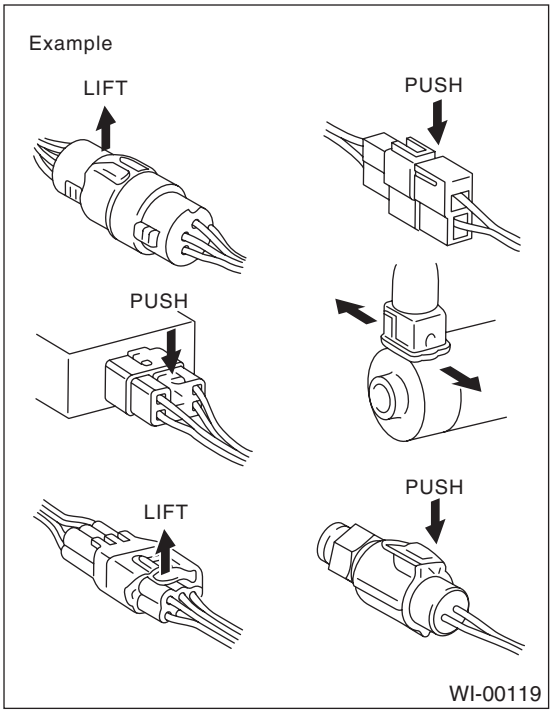

6) When checking continuity between connector terminals, or measuring voltage across the terminal and ground, always contact tester probe(s) on terminals from the wiring connection side. If the probe is too thick to gain access to the terminal, use "mini" test leads.
To check water-proof connectors (which are not measurable from the wiring side), contact test probes on the terminal side. Be careful not to bend or damage the terminals.

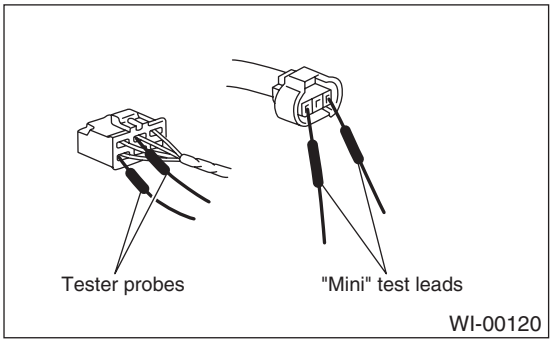

7) Sensors, relays, electrical unit, etc., are sensitive to strong impacts.
Handle them with care so that they are not dropped or mishandled.

3. Power Supply Circuit

A: WIRING DIAGRAM

P-SUP-01

P-SUP-01

MAIN FUSE BOX (M/B)

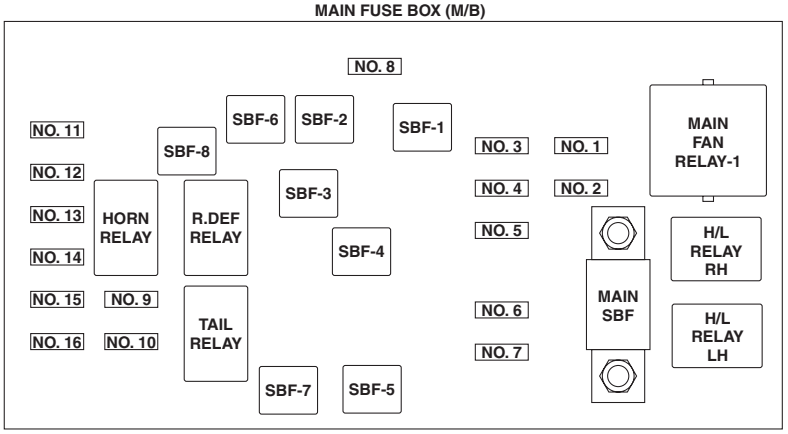

FUSE & RELAY BOX (F/B)

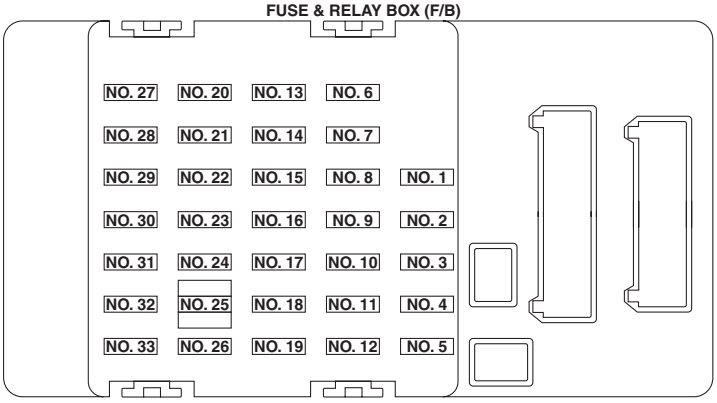

WI-05253

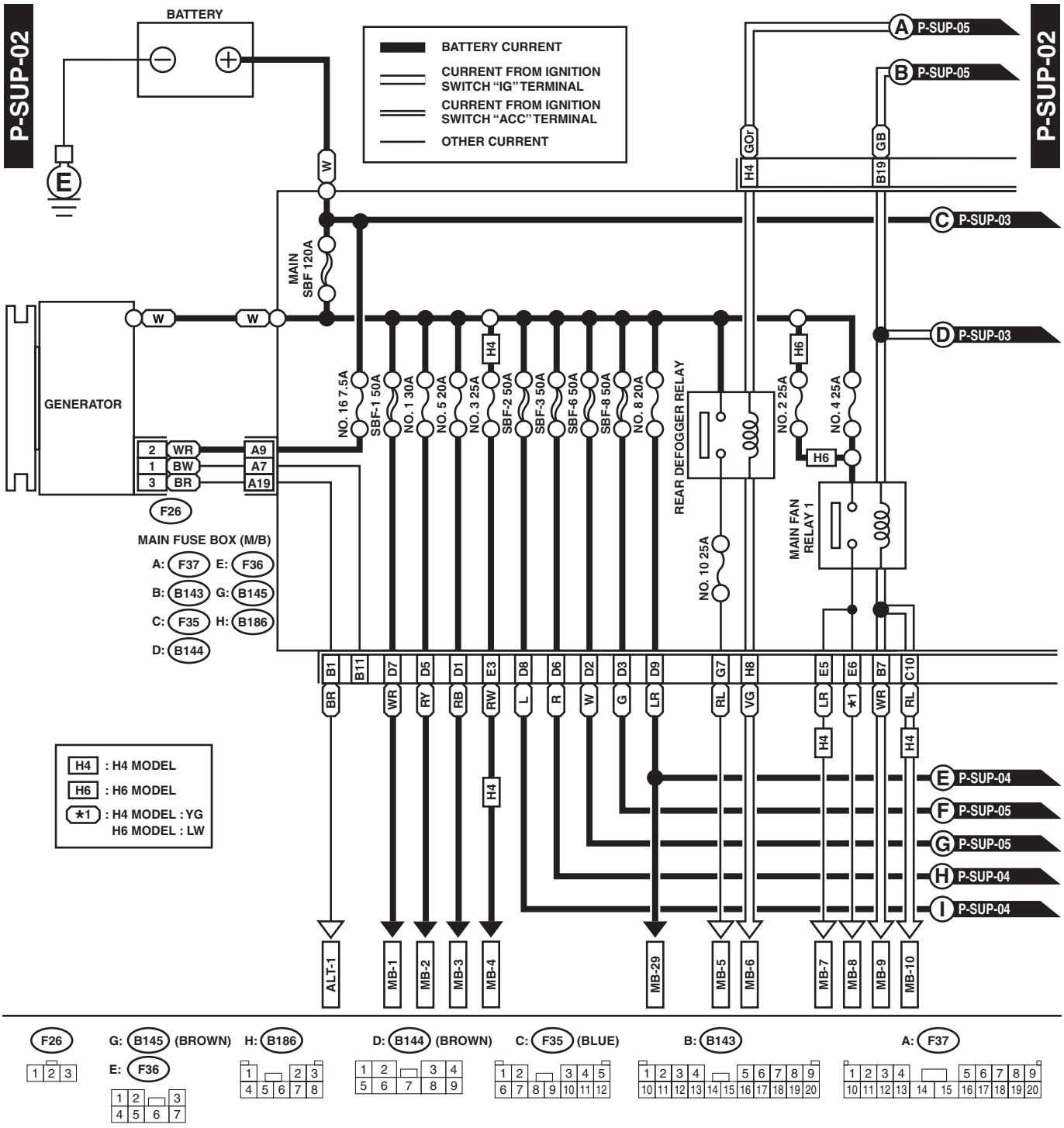
P-SUP-02
P-SUP-02
BATTERY
BATTERY CURRENT
CURRENT FROM IGNITION SWITCH "IG" TERMINAL
CURRENT FROM IGNITION SWITCH "ACC" TERMINAL
OTHER CURRENT
A P-SUP-05
B P-SUP-05
C P-SUP-03
D P-SUP-03
E P-SUP-04
F P-SUP-05
G P-SUP-05
H P-SUP-04
I P-SUP-04
GENERATOR
MAIN SBF 120A
NO. 16 7.5A
SBF-1 50A
NO. 1 30A
NO. 5 20A
NO. 3 25A
SBF-2 50A
SBF-3 50A
SBF-6 50A
SBF-8 50A
NO. 8 20A
NO. 10 25A
REAR DEFOGGER RELAY
NO. 2 25A
NO. 4 25A
MAIN FAN RELAY 1
MAIN FUSE BOX (M/B)
A: F37 E: F36
B: B143 G: B145
C: F35 H: B186
D: B144
F26
H4 : H4 MODEL
H6 : H6 MODEL
*1 : H4 MODEL : YG
H6 MODEL : LW
ALT-1
MB-1
MB-2
MB-3
MB-4
MB-29
MB-5
MB-6
MB-7
MB-8
MB-9
MB-10

F26
G: B145 (BROWN)
E: F36
H: B186
D: B144 (BROWN)
C: F35 (BLUE)
B: B143
A: F37

WI-05254

Power Supply Circuit

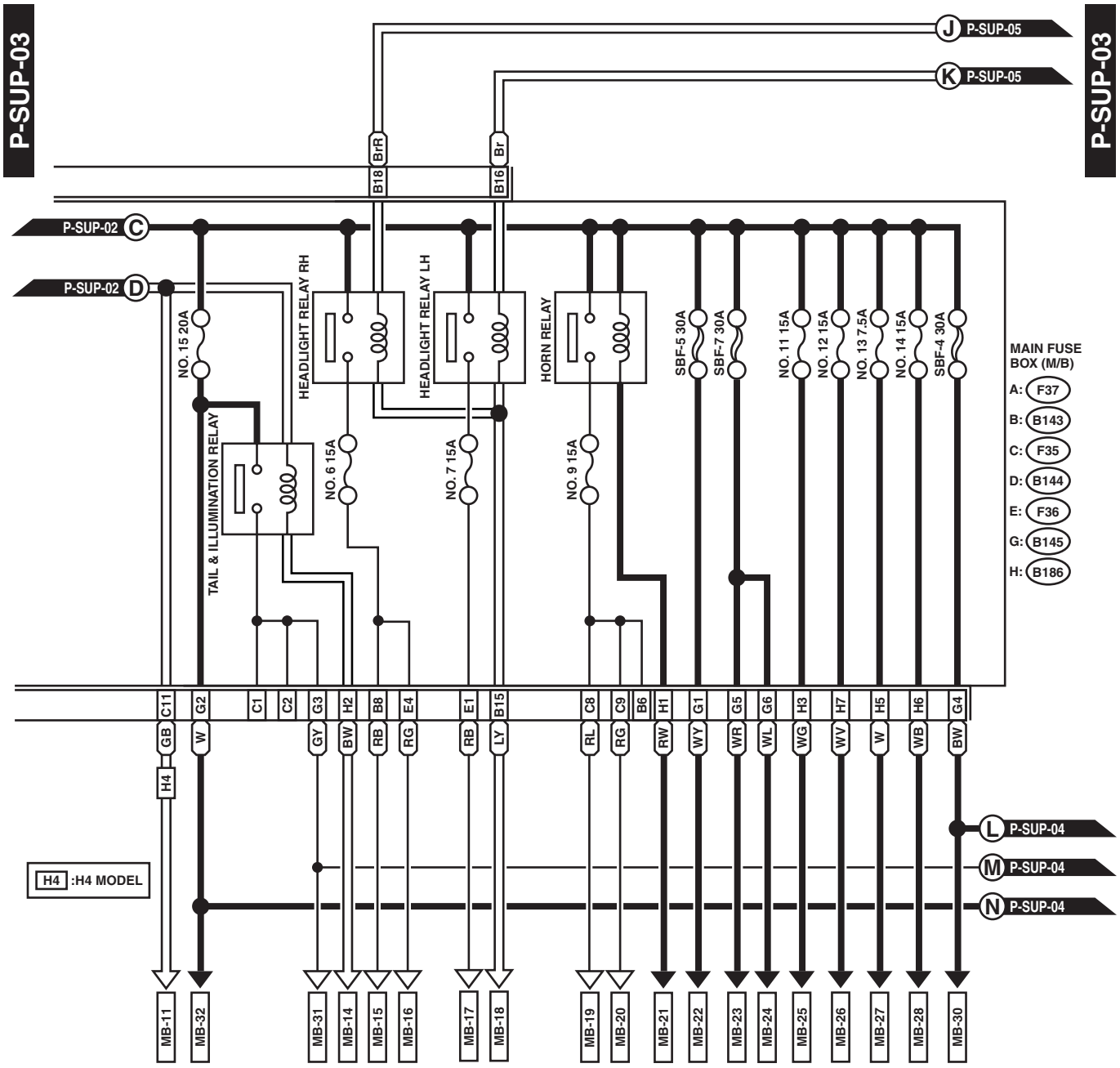

WI-05255

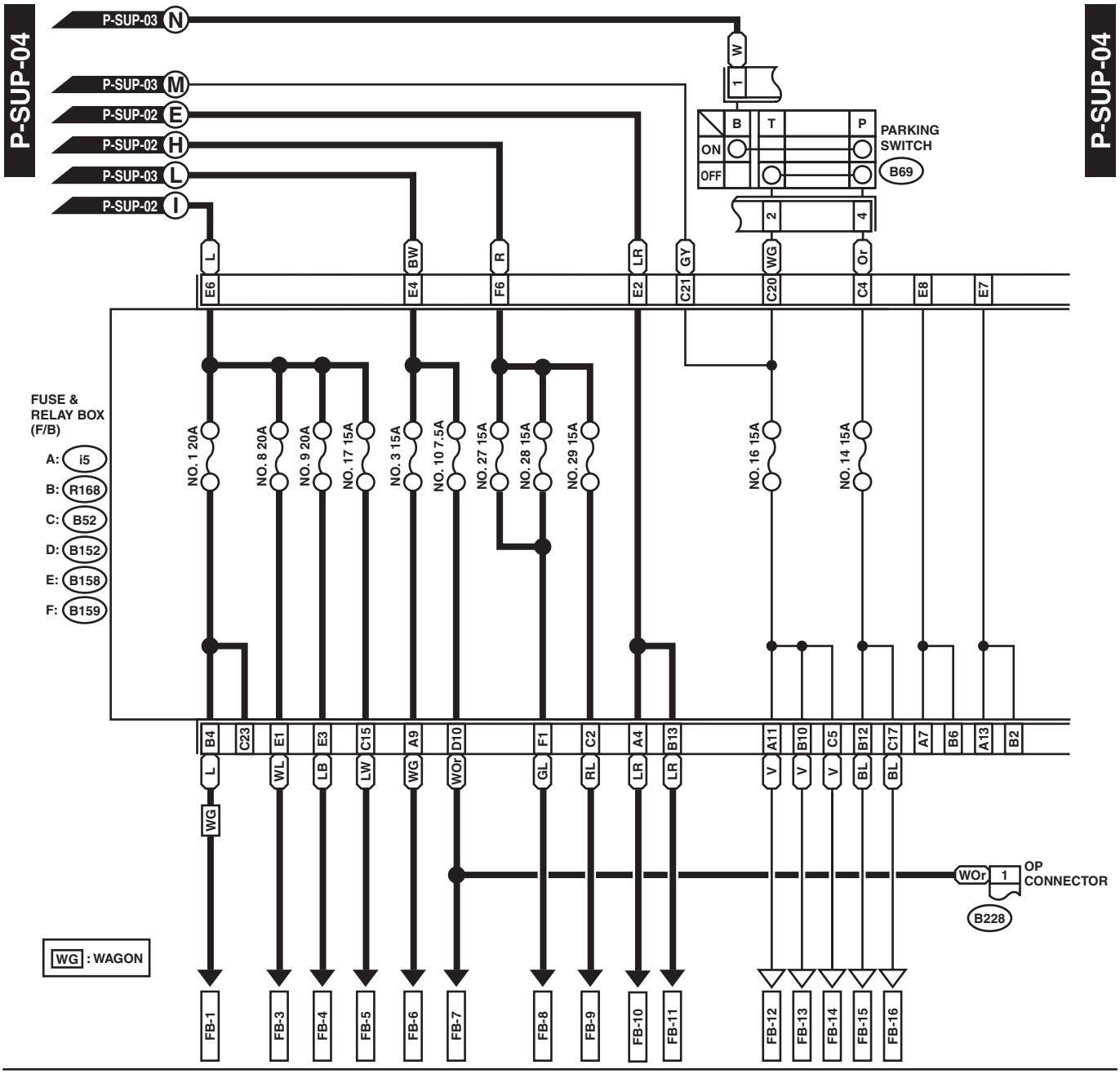
P-SUP-04
P-SUP-03 N
P-SUP-03 M
P-SUP-02 E
P-SUP-02 H
P-SUP-03 L
P-SUP-02 I
W
1
B
T
P
ON
OFF
PARKING SWITCH
B69
2
4
L
BW
R
LR
GY
WG
Or
E6
E4
F6
E2
C21
C20
C4
E8
E7
FUSE & RELAY BOX (F/B)
A: i5
B: R168
C: B52
D: B152
E: B158
F: B159
NO. 1 20A
NO. 8 20A
NO. 9 20A
NO. 17 15A
NO. 3 15A
NO. 10 7.5A
NO. 27 15A
NO. 28 15A
NO. 29 15A
NO. 16 15A
NO. 14 15A
B4
C23
E1
E3
C15
A9
D10
F1
C2
A4
B13
A11
B10
C5
B12
C17
A7
B6
A13
B2
L
WL
LB
LW
WG
WOr
GL
RL
LR
LR
V
V
V
BL
BL
WG
WOr
1
OP CONNECTOR
B228
WG : WAGON
FB-1
FB-3
FB-4
FB-5
FB-6
FB-7
FB-8
FB-9
FB-10
FB-11
FB-12
FB-13
FB-14
FB-15
FB-16

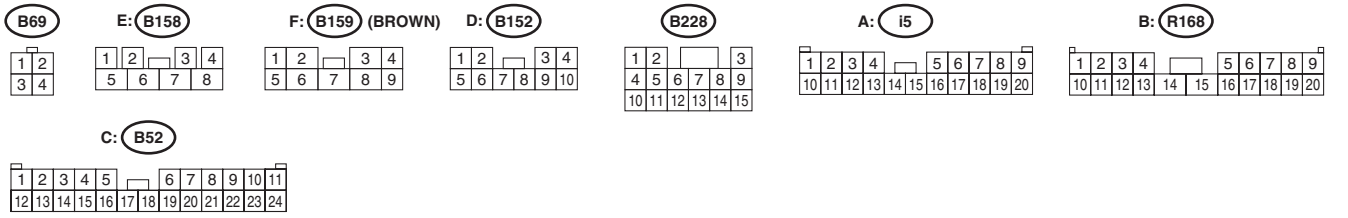
B69
E: B158
F: B159 (BROWN)
D: B152
B228
A: i5
B: R168
C: B52

WI-05256

Power Supply Circuit

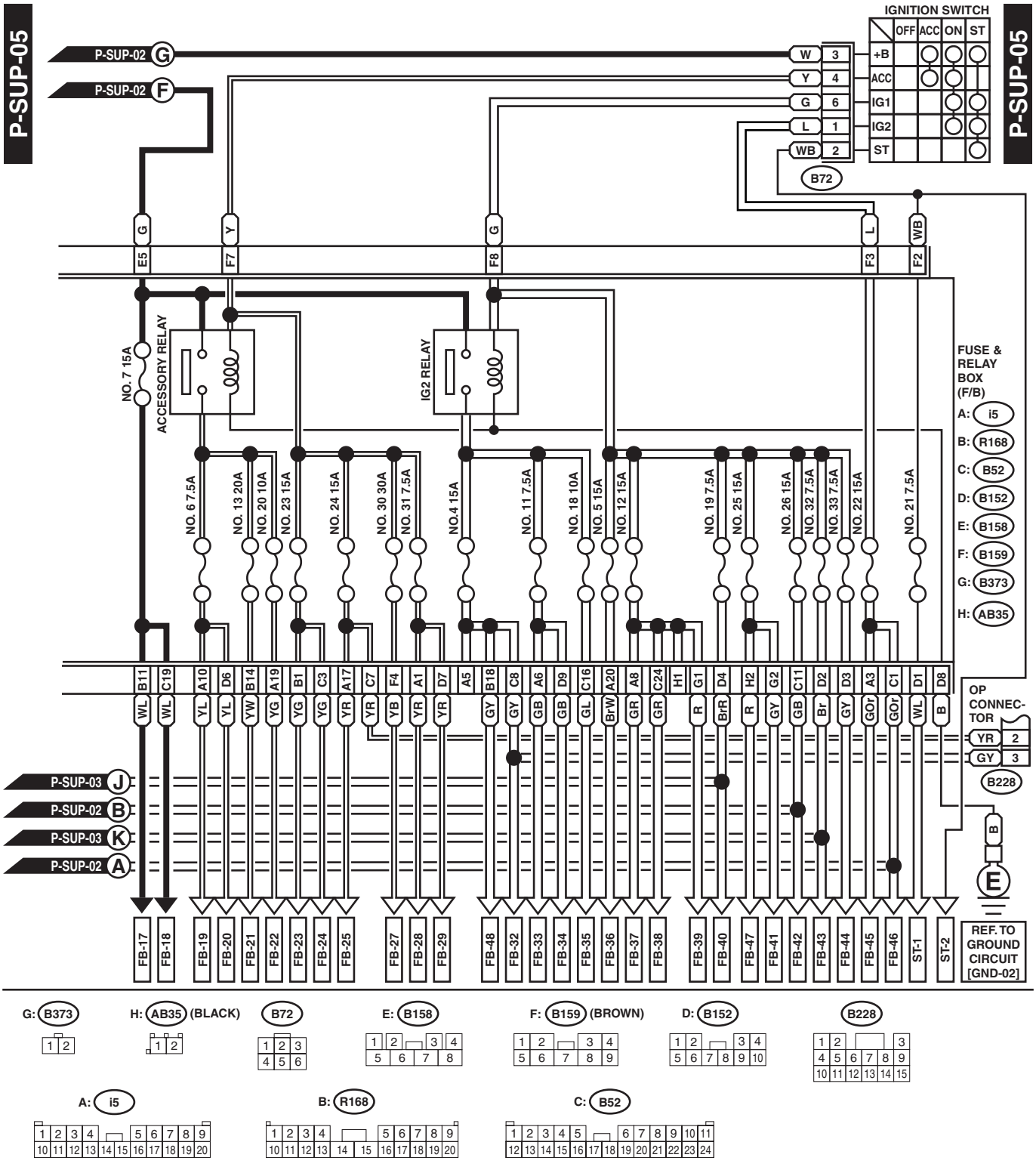

WI-05257

No.	Load
MB-1	ABS control module VDC control module
MB-2	ABS control module VDC control module
MB-4	Sub fan relay
MB-5	Auto A/C control module Condenser Mirror heater relay Rear defogger
MB-6	Body integrated unit
MB-7	Main fan relay 2
MB-8	Main fan motor PWM controller
MB-9	ECM
MB-10	Main fan relay 2
MB-11	Main fan relay 2
MB-14	Lighting switch OP connector
MB-15	Combination meter
MB-16	Headlight RH
MB-17	Headlight LH
MB-18	OP connector Daytime running light control module
MB-19	Horn (HI)
MB-20	Horn (LO)
MB-21	Body integrated unit Horn switch
MB-22	Oxygen sensor relay Main relay
MB-23	Oxygen sensor relay Main relay
MB-24	Electronic throttle control relay
MB-25	Fuel pump relay
MB-26	TCM
MB-27	Data link connector ECM
MB-28	Body integrated unit Key switch illumination Key warning switch Turn signal and hazard module
MB-29	Auto A/C control module Body integrated unit Interior light Spot map light
MB-30	Power window circuit breaker
MB-31	F/B fuse No. 16
MB-32	Parking light switch
ALT-1	ECM
ST-1	ECM Starter relay Security relay Clutch switch (MT model)
ST-2	Starter relay
FB-3	Stop light and brake switch

No.	Load
FB-4	Mirror heater relay Wiper deicer relay
FB-5	Seat heater relay
FB-6	Body integrated unit
FB-7	OP connector
FB-8	Blower fan relay
FB-9	Front fog light relay
FB-10	Audio Clock Keyless entry control module Step light LH Step light RH
FB-11	Luggage room light (Wagon model) Trunk room light (Sedan model)
FB-12	Clock
FB-13	Seat heater switch
FB-14	OP connector AT indicator illumination light Satellite switch illumination light
FB-17	Combination meter TPM control module Impact sensor Occupant detection control module OP connector
FB-18	Body integrated unit
FB-19	Remote control mirror switch
FB-20	Seat heater relay Vanity mirror illumination LH Vanity mirror illumination RH
FB-21	Rear accessory power supply socket Seat heater switch
FB-22	Front accessory power supply socket
FB-23	Rear wiper motor
FB-24	Body integrated unit Rear washer motor
FB-25	Audio Clock
FB-26	OP connector
FB-27	Front wiper motor Front wiper switch Front washer motor
FB-28	Body integrated unit
FB-29	Auto A/C control module TCM
FB-31	Impact sensor
FB-32	Stop light and brake switch Clutch switch (MT/Cruise) ECM OP connector Line end check connector Seat belt warning light Sunroof control module Sunroof switch Wiper deicer relay
FB-33	Clock
FB-34	Turn signal and hazard module

No.	Load
FB-35	Back-up light relay (5AT model) Back-up light switch (MT model) Inhibitor switch (4AT model) Daytime running light control module
FB-36	Combination meter
FB-37	Body integrated unit
FB-38	ECM Fuel pump relay Ignition coil P-VIGN relay (5AT model) Rear vehicle speed sensor (4AT model) TCM
FB-39	Airbag control module
FB-41	Airbag control module
FB-42	Power window relay
FB-44	ABS control module VDC control module
FB-45	A/C control panel
FB-46	A/C relay Auto A/C control module Blower fan relay FRESH/RECIRC actuator Mode actuator Pressure switch Sub fan relay
FB-47	Occupant detection control module
FB-48	TPM control module

4. Ground Circuit

A: WIRING DIAGRAM

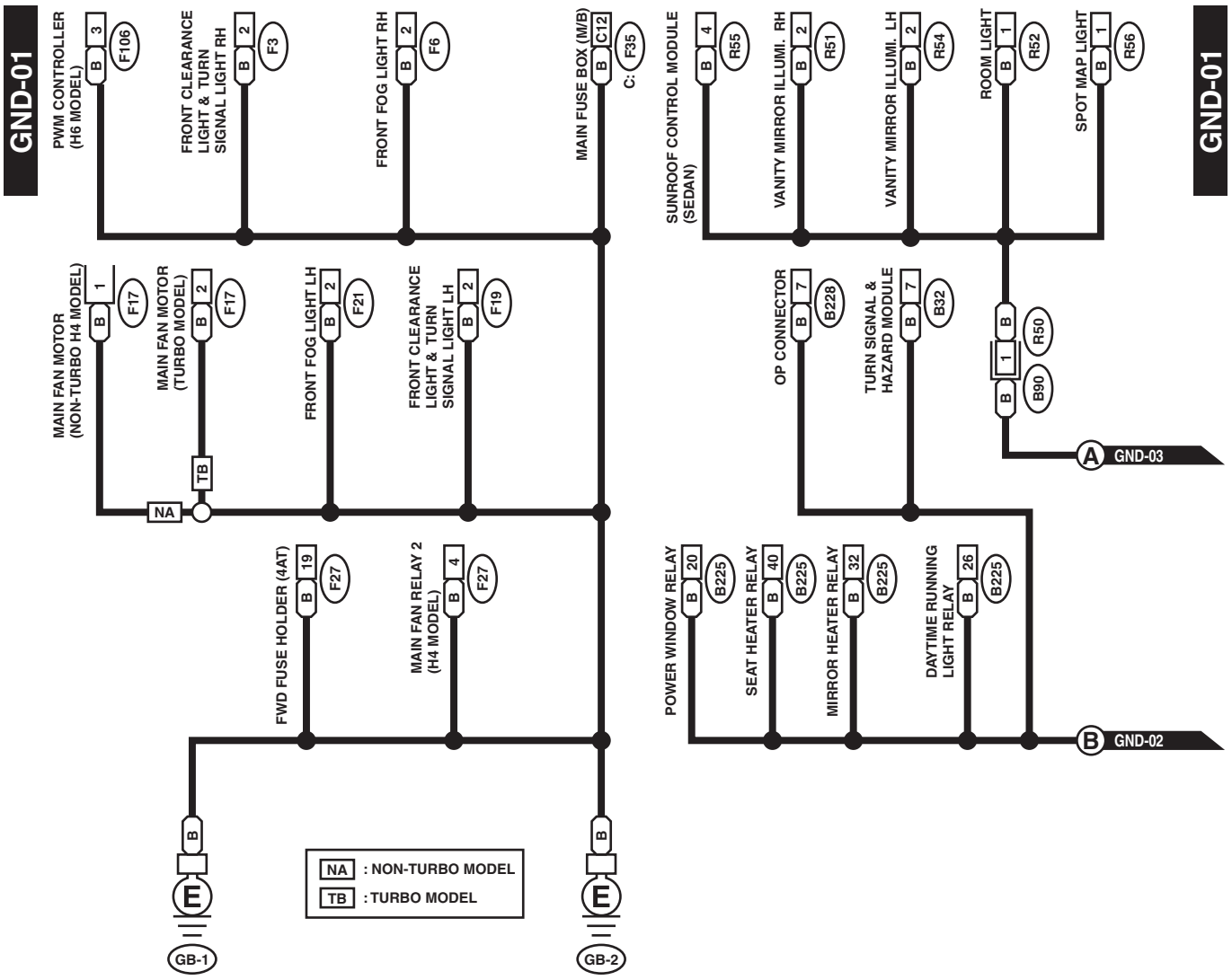

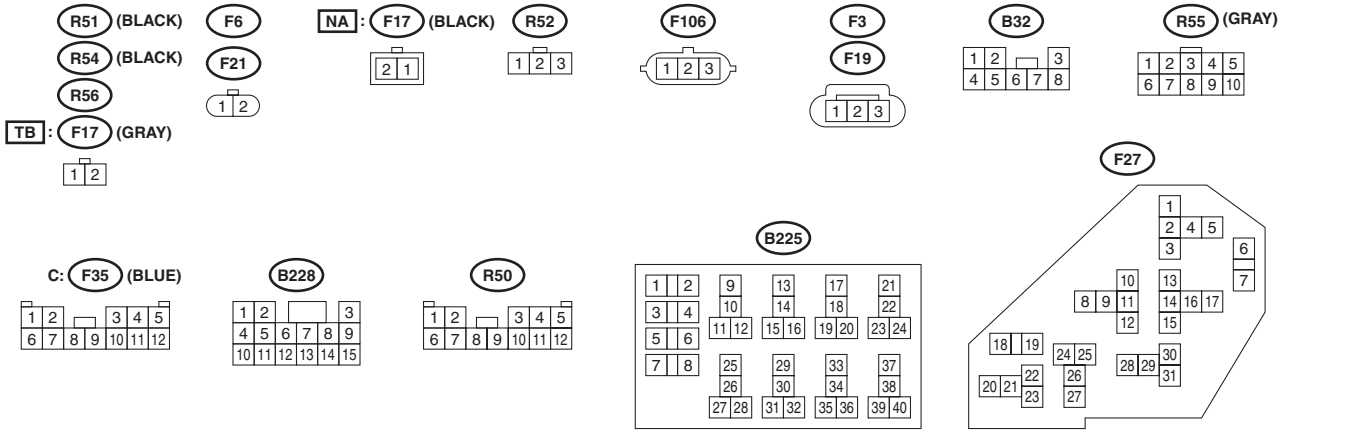

WI-05258

Ground Circuit

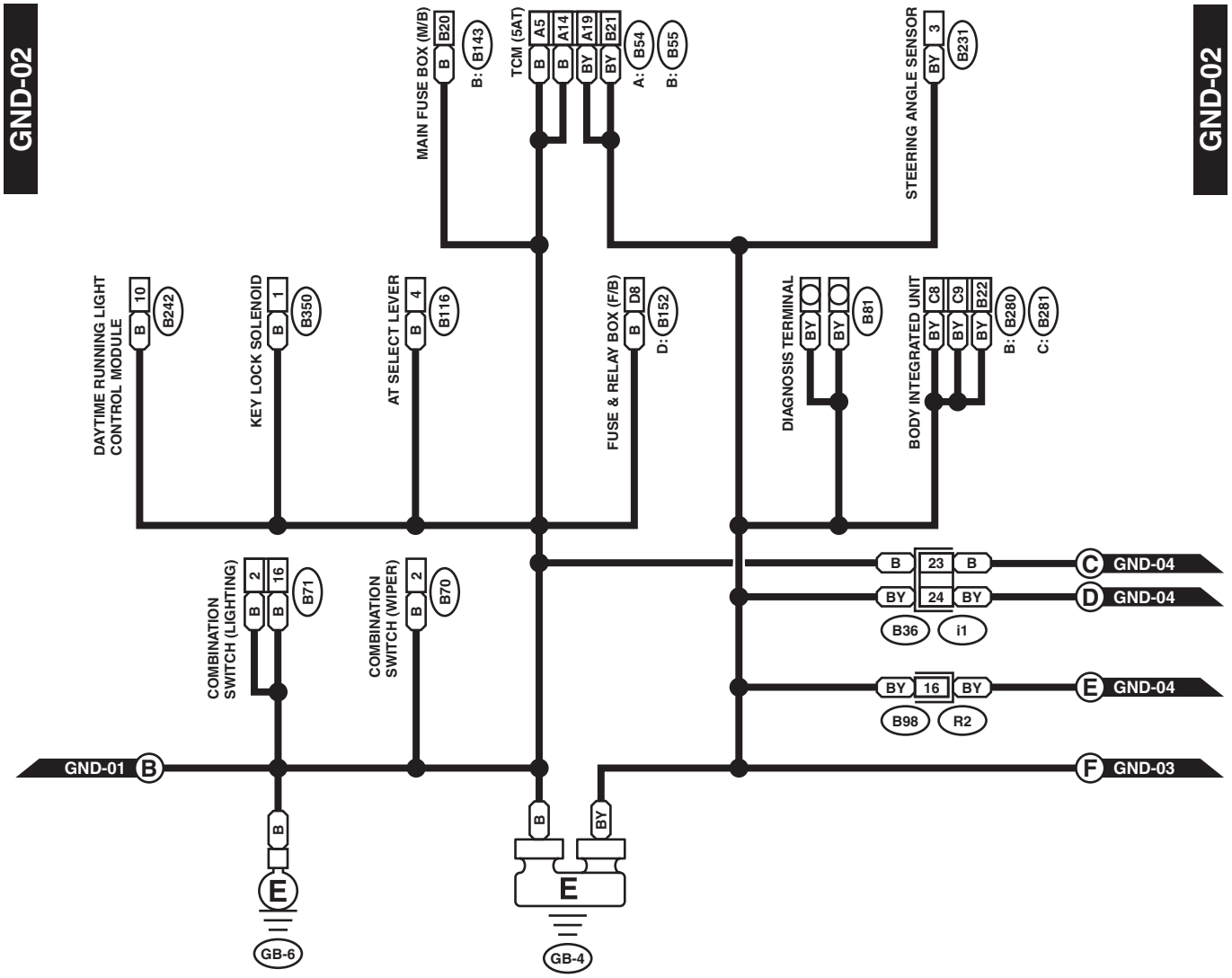

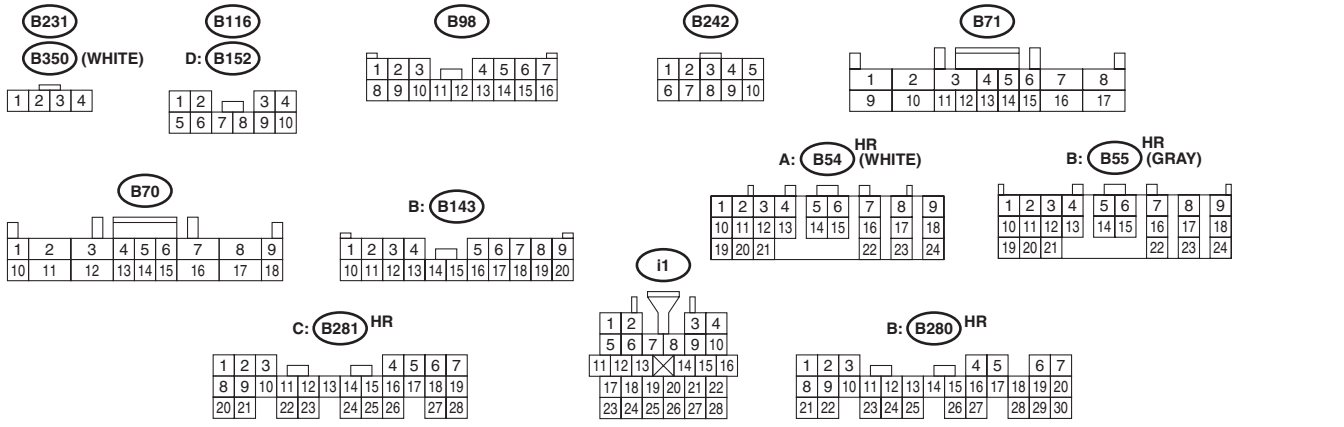

WI-05259

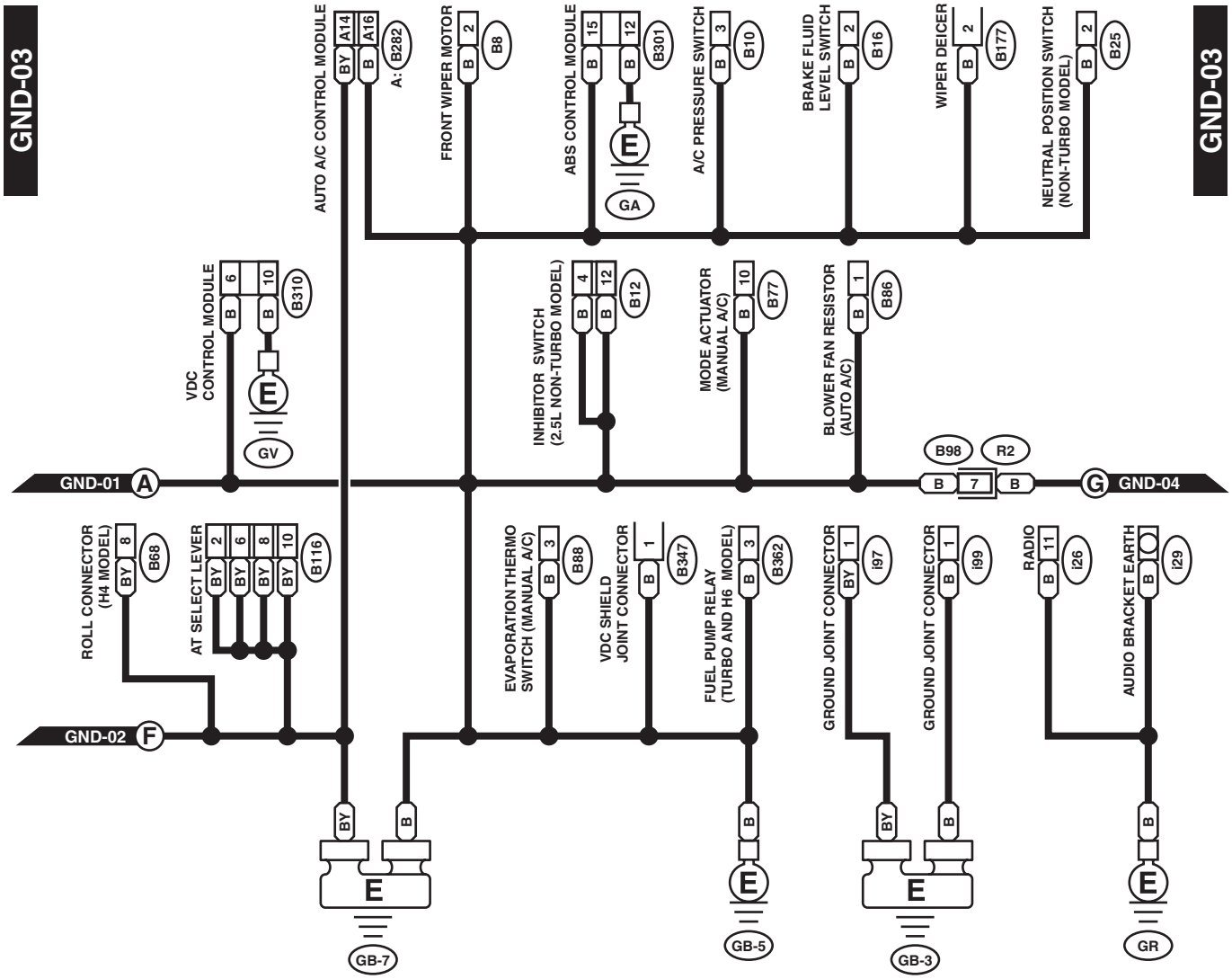
GND-03
GND-03
AUTO A/C CONTROL MODULE
A14
A16
BY
B
A: B282
FRONT WIPER MOTOR
B8
ABS CONTROL MODULE
B301
GA
A/C PRESSURE SWITCH
B10
BRAKE FLUID LEVEL SWITCH
B16
WIPER DEICER
B177
NEUTRAL POSITION SWITCH (NON-TURBO MODEL)
B25
VDC CONTROL MODULE
B310
GV
INHIBITOR SWITCH (2.5L NON-TURBO MODEL)
B12
MODE ACTUATOR (MANUAL A/C)
B77
BLOWER FAN RESISTOR (AUTO A/C)
B86
B98
R2
GND-01
A
G
GND-04
ROLL CONNECTOR (H4 MODEL)
B68
AT SELECT LEVER
B116
EVAPORATION THERMO SWITCH (MANUAL A/C)
B88
VDC SHIELD JOINT CONNECTOR
B347
FUEL PUMP RELAY (TURBO AND H6 MODEL)
B362
GROUND JOINT CONNECTOR
i97
GROUND JOINT CONNECTOR
i99
RADIO
i26
AUDIO BRACKET EARTH
i29
GND-02
F
GB-7
GB-5
GB-3
GR

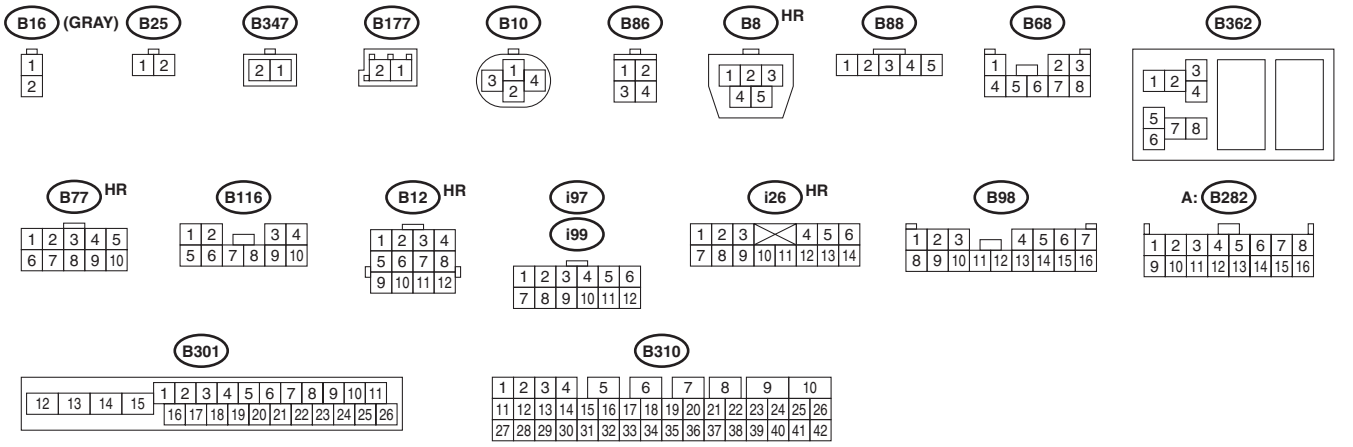
B16 (GRAY)
B25
B347
B177
B10
B86
B8 HR
B88
B68
B362
B77 HR
B116
B12 HR
i97
i99
i26 HR
B98
A: B282
B301
B310

WI-05260

Ground Circuit

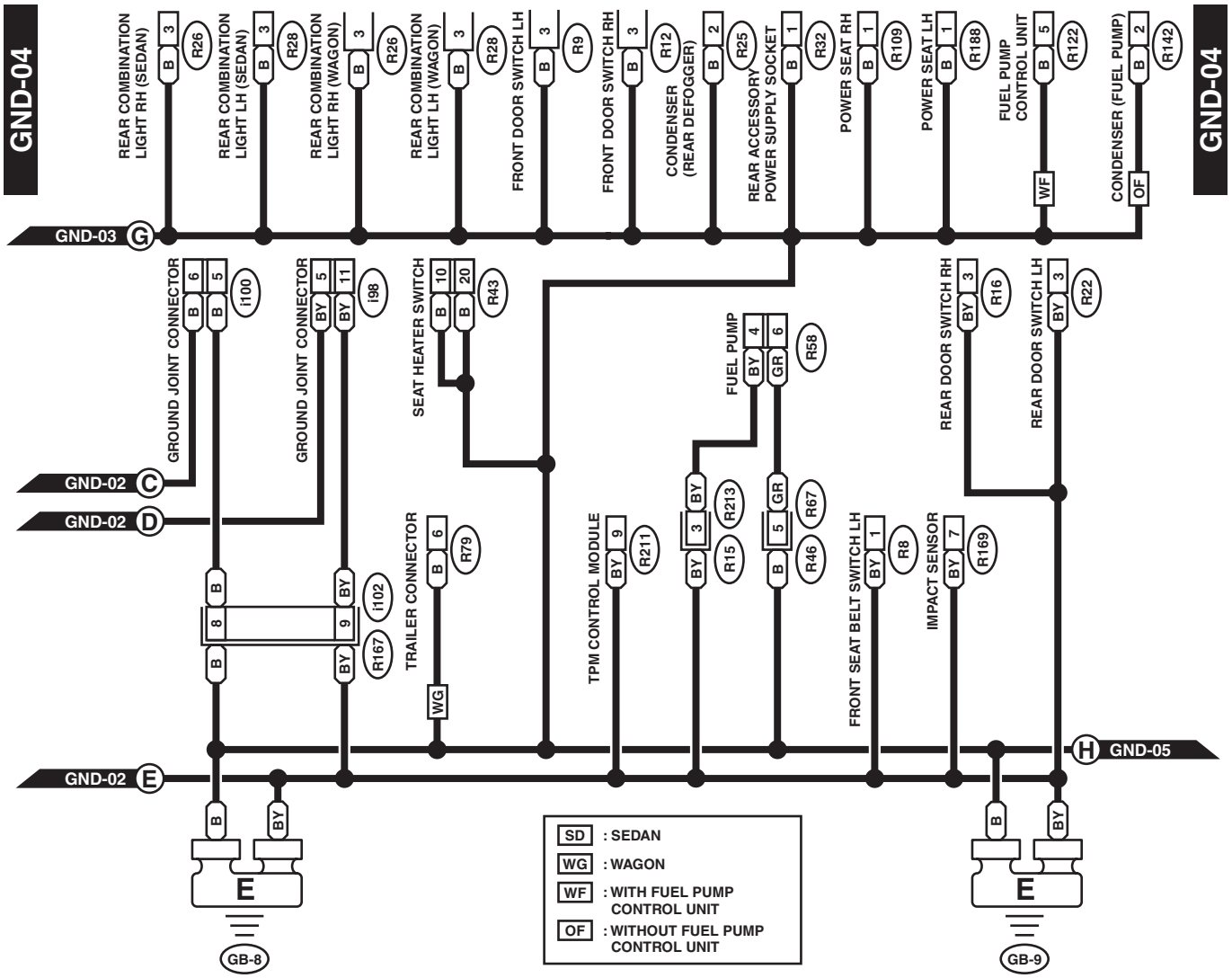

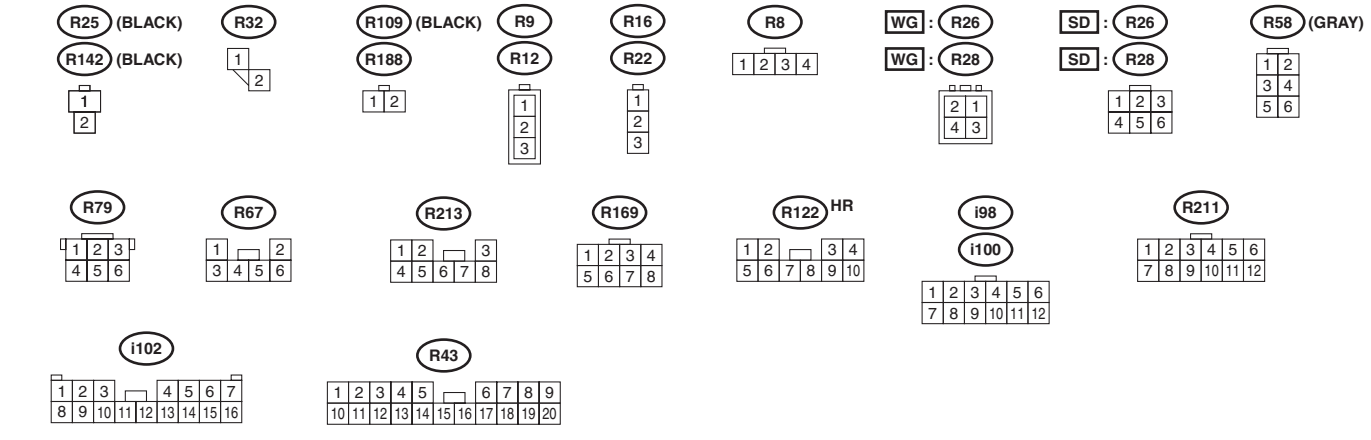

WI-05261

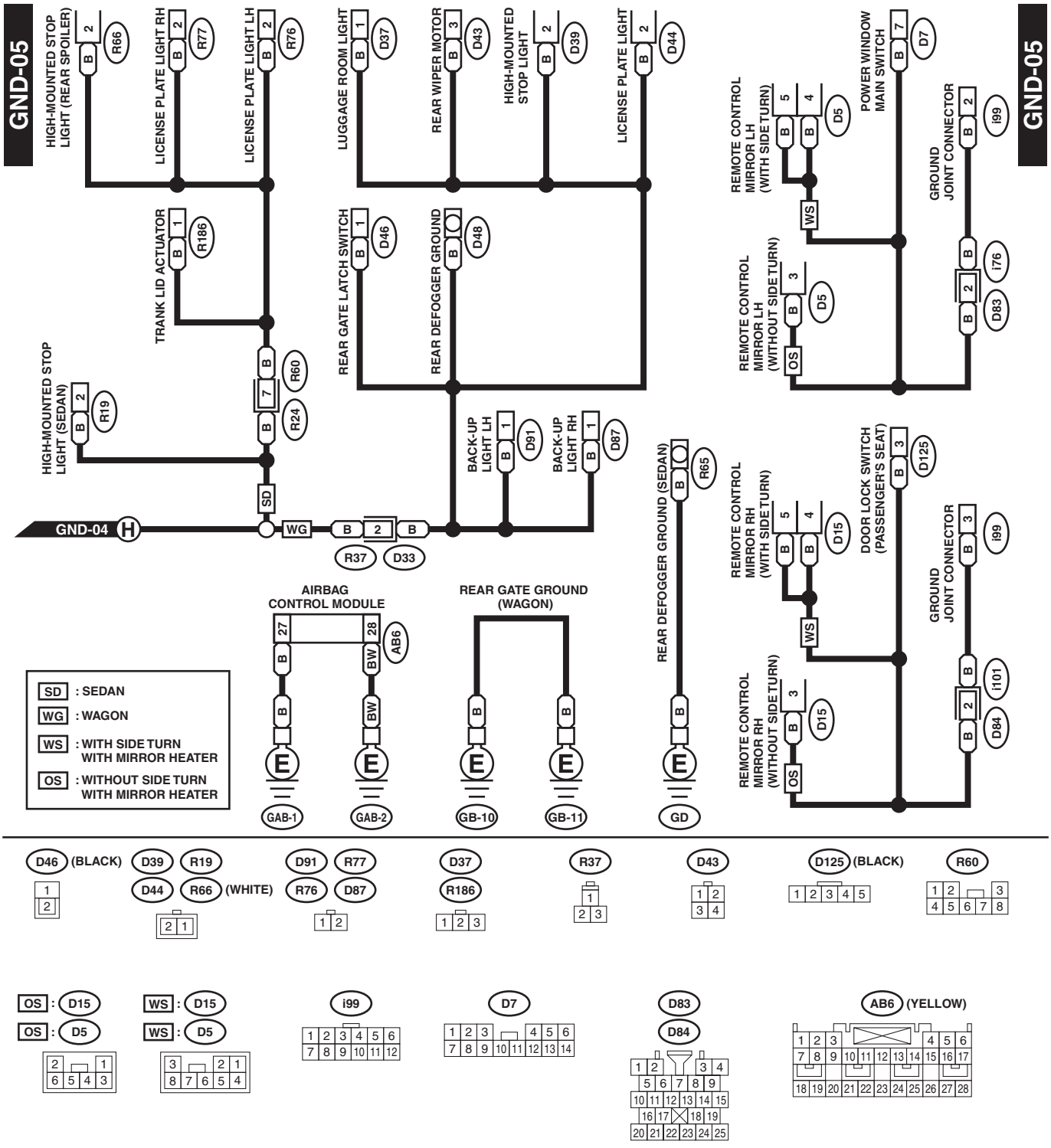
GND-05
HIGH-MOUNTED STOP LIGHT (REAR SPOILER)
LICENSE PLATE LIGHT RH
LICENSE PLATE LIGHT LH
LUGGAGE ROOM LIGHT
REAR WIPER MOTOR
HIGH-MOUNTED STOP LIGHT
LICENSE PLATE LIGHT
POWER WINDOW MAIN SWITCH
REMOTE CONTROL MIRROR LH (WITH SIDE TURN)
GROUND JOINT CONNECTOR
TRANK LID ACTUATOR
REAR GATE LATCH SWITCH
REAR DEFOGGER GROUND
REMOTE CONTROL MIRROR LH (WITHOUT SIDE TURN)
HIGH-MOUNTED STOP LIGHT (SEDAN)
BACK-UP LIGHT LH
BACK-UP LIGHT RH
GND-04
REAR DEFOGGER GROUND (SEDAN)
DOOR LOCK SWITCH (PASSENGER'S SEAT)
REMOTE CONTROL MIRROR RH (WITH SIDE TURN)
REMOTE CONTROL MIRROR RH (WITHOUT SIDE TURN)
AIRBAG CONTROL MODULE
REAR GATE GROUND (WAGON)
SD : SEDAN
WG : WAGON
WS : WITH SIDE TURN WITH MIRROR HEATER
OS : WITHOUT SIDE TURN WITH MIRROR HEATER
GAB-1
GAB-2
GB-10
GB-11
GD
D46 (BLACK)
D39 D19 D44 R66 (WHITE)
D91 R77 R76 D87
D37 R186
R37
D43
D125 (BLACK)
R60
OS : D15 OS : D5
WS : D15 WS : D5
i99
D7
D83 D84
AB6 (YELLOW)

WI-05262

GND-06

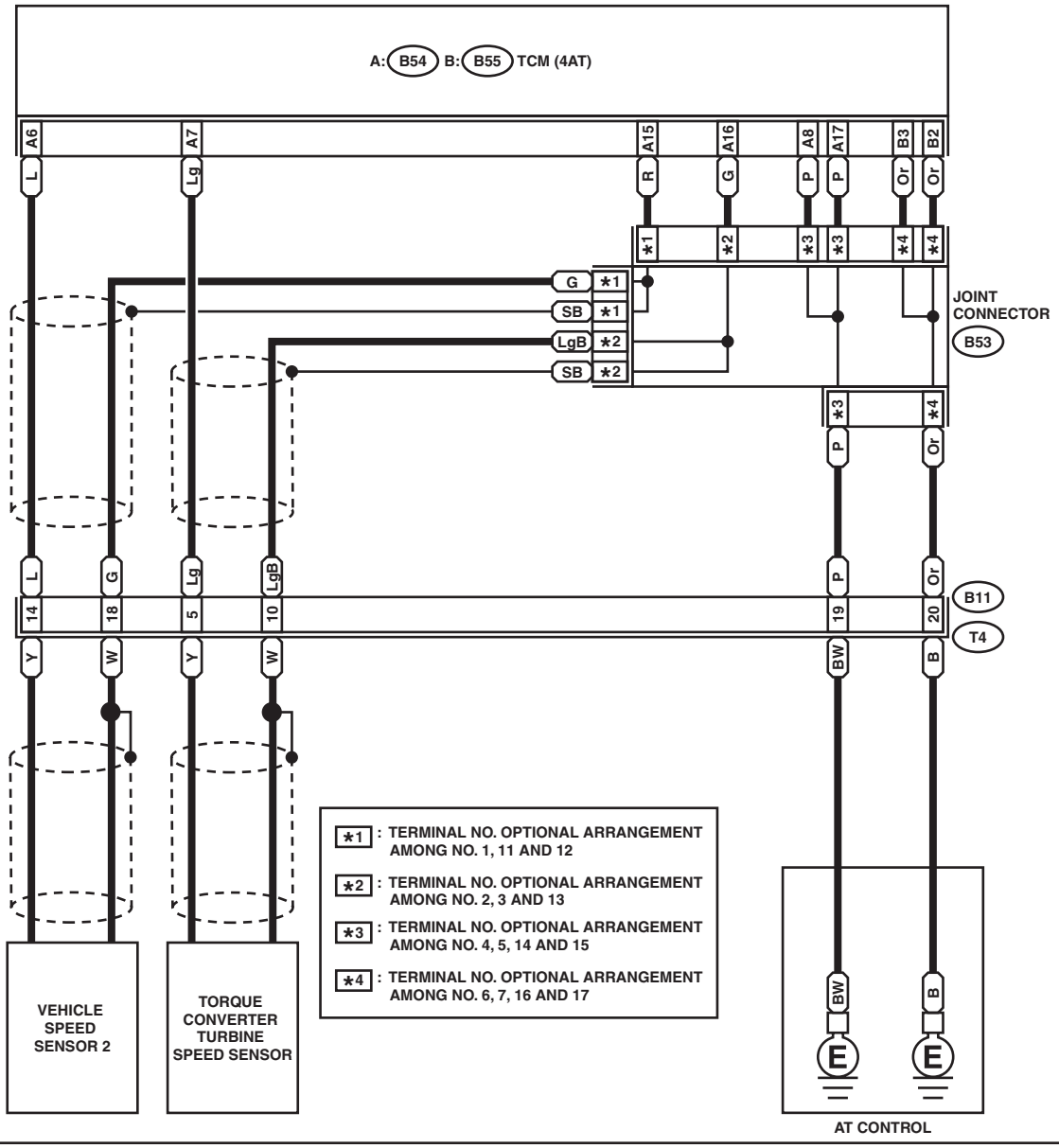

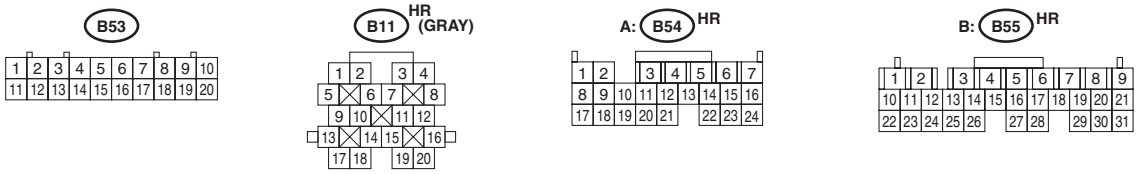

WI-05263

GND-07

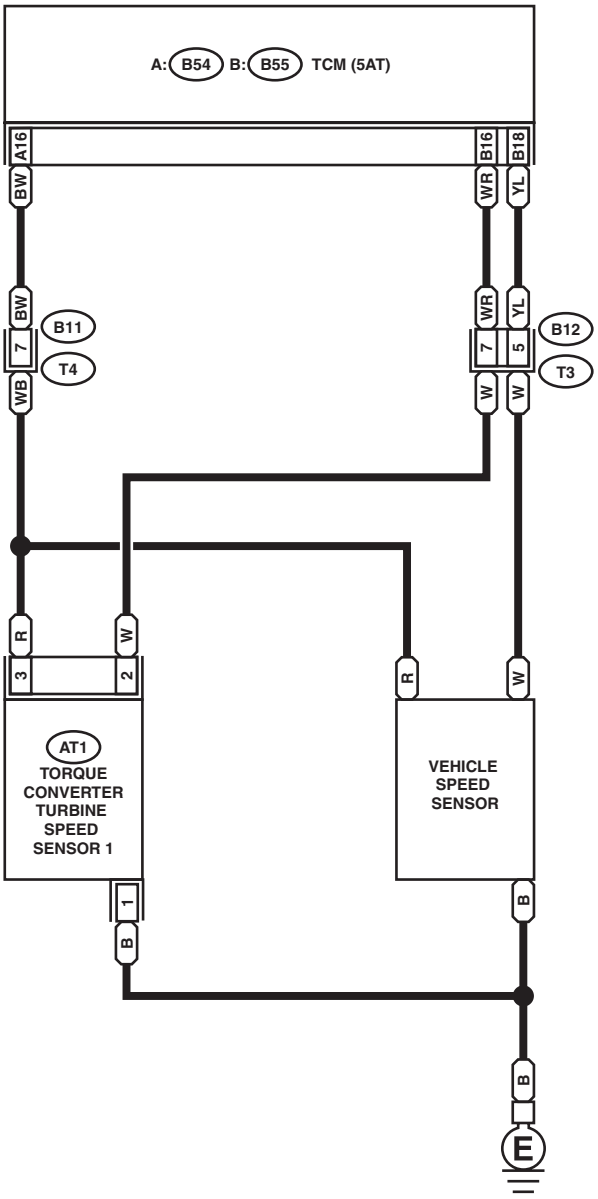

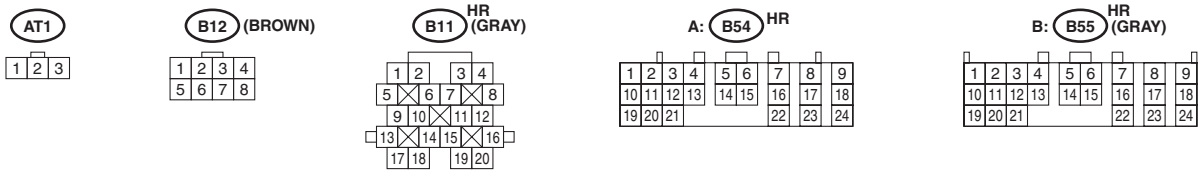

WI-05264

GND-08

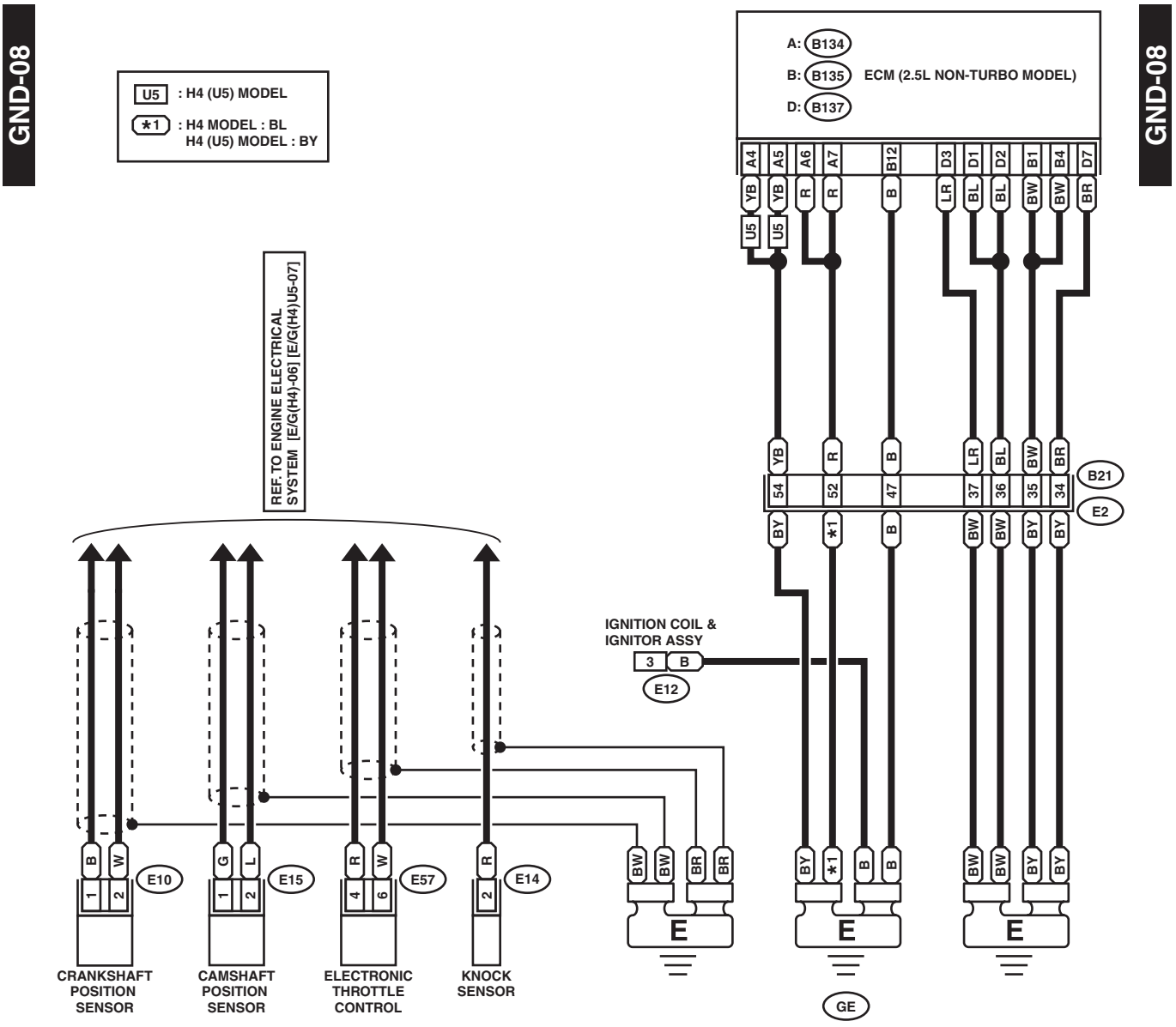

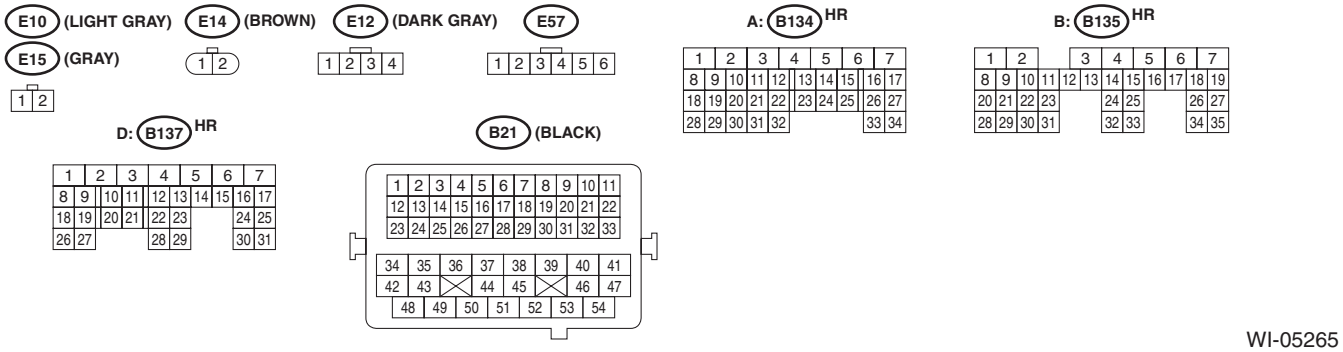

WI-05265

GND-08

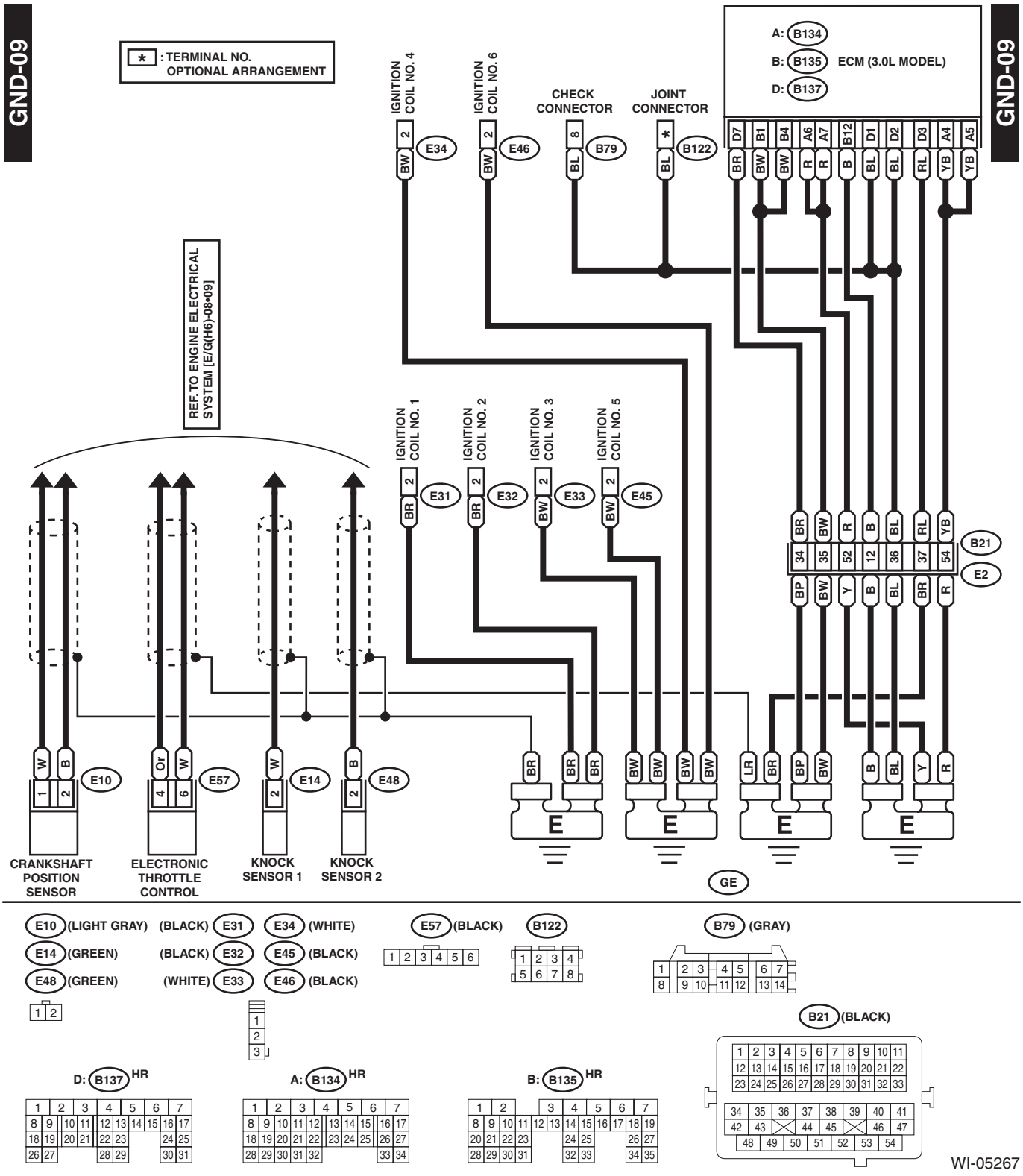

E10 (LIGHT GRAY) (BLACK) E31 E34 (WHITE)
E14 (GREEN) (BLACK) E32 E45 (BLACK)
E48 (GREEN) (WHITE) E33 E46 (BLACK)

E57 (BLACK)

B122

B79 (GRAY)

D: B137 HR

A: B134 HR

B: B135 HR

B21 (BLACK)

WI-05267

Ground Circuit

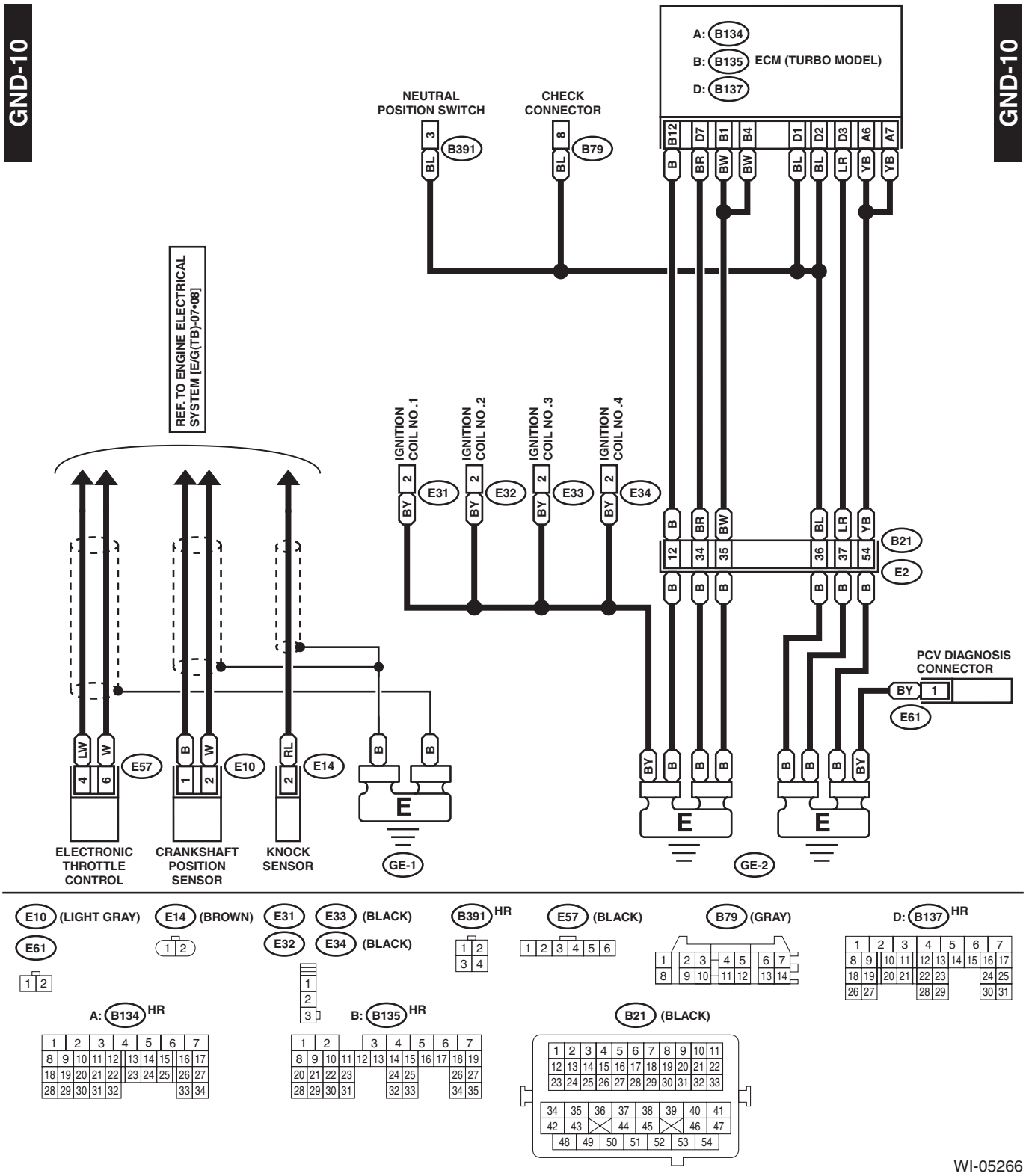

WI-05266

5. Engine Electrical System

A: WIRING DIAGRAM

1. 2.5 L NON-TURBO MODEL

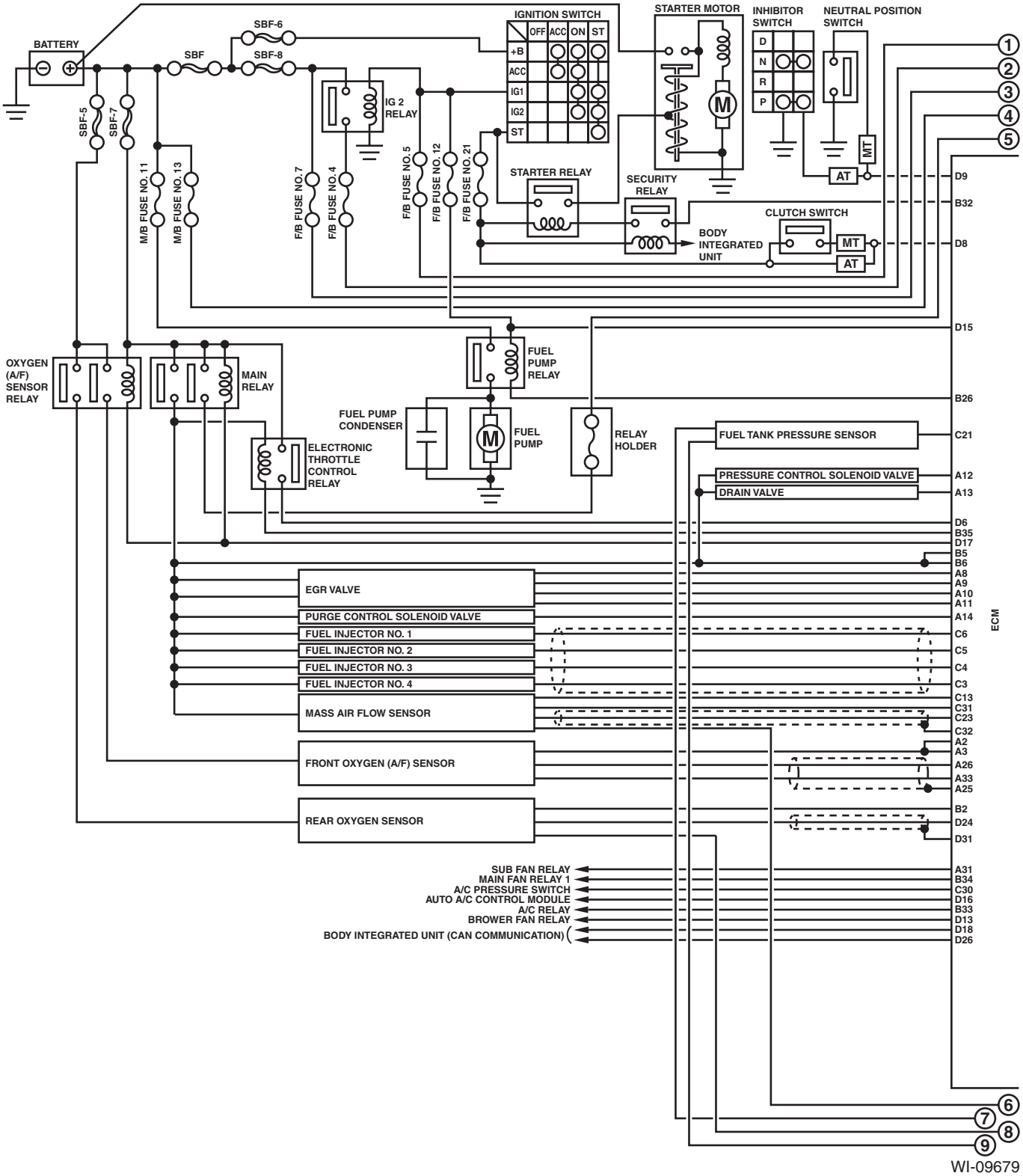

WI-09679

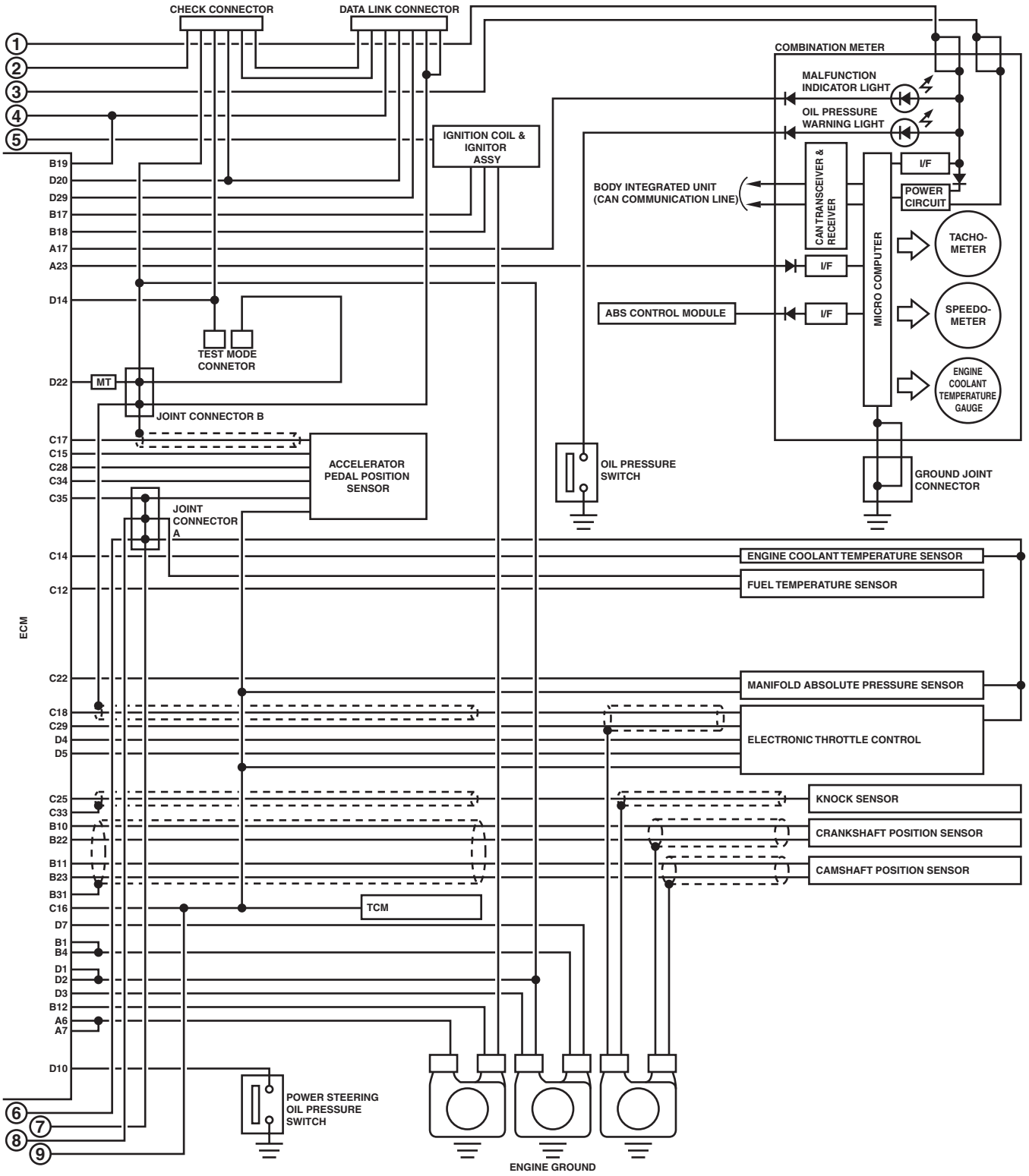
CHECK CONNECTOR
DATA LINK CONNECTOR
COMBINATION METER
MALFUNCTION INDICATOR LIGHT
OIL PRESSURE WARNING LIGHT
IGNITION COIL & IGNITOR ASSY
BODY INTEGRATED UNIT (CAN COMMUNICATION LINE)
CAN TRANSCEIVER & RECEIVER
I/F
POWER CIRCUIT
MICRO COMPUTER
TACHO-METER
SPEEDO-METER
ENGINE COOLANT TEMPERATURE GAUGE
ABS CONTROL MODULE
TEST MODE CONNETOR
MT
JOINT CONNECTOR B
ACCELERATOR PEDAL POSITION SENSOR
OIL PRESSURE SWITCH
GROUND JOINT CONNECTOR
JOINT CONNECTOR A
ECM
ENGINE COOLANT TEMPERATURE SENSOR
FUEL TEMPERATURE SENSOR
MANIFOLD ABSOLUTE PRESSURE SENSOR
ELECTRONIC THROTTLE CONTROL
KNOCK SENSOR
CRANKSHAFT POSITION SENSOR
CAMSHAFT POSITION SENSOR
TCM
POWER STEERING OIL PRESSURE SWITCH
ENGINE GROUND
B19
D20
D29
B17
B18
A17
A23
D14
D22
C17
C15
C28
C34
C35
C14
C12
C22
C18
C29
D4
D5
C25
C33
B10
B22
B11
B23
B31
C16
D7
B1
B4
D1
D2
D3
B12
A6
A7
D10

WI-05315

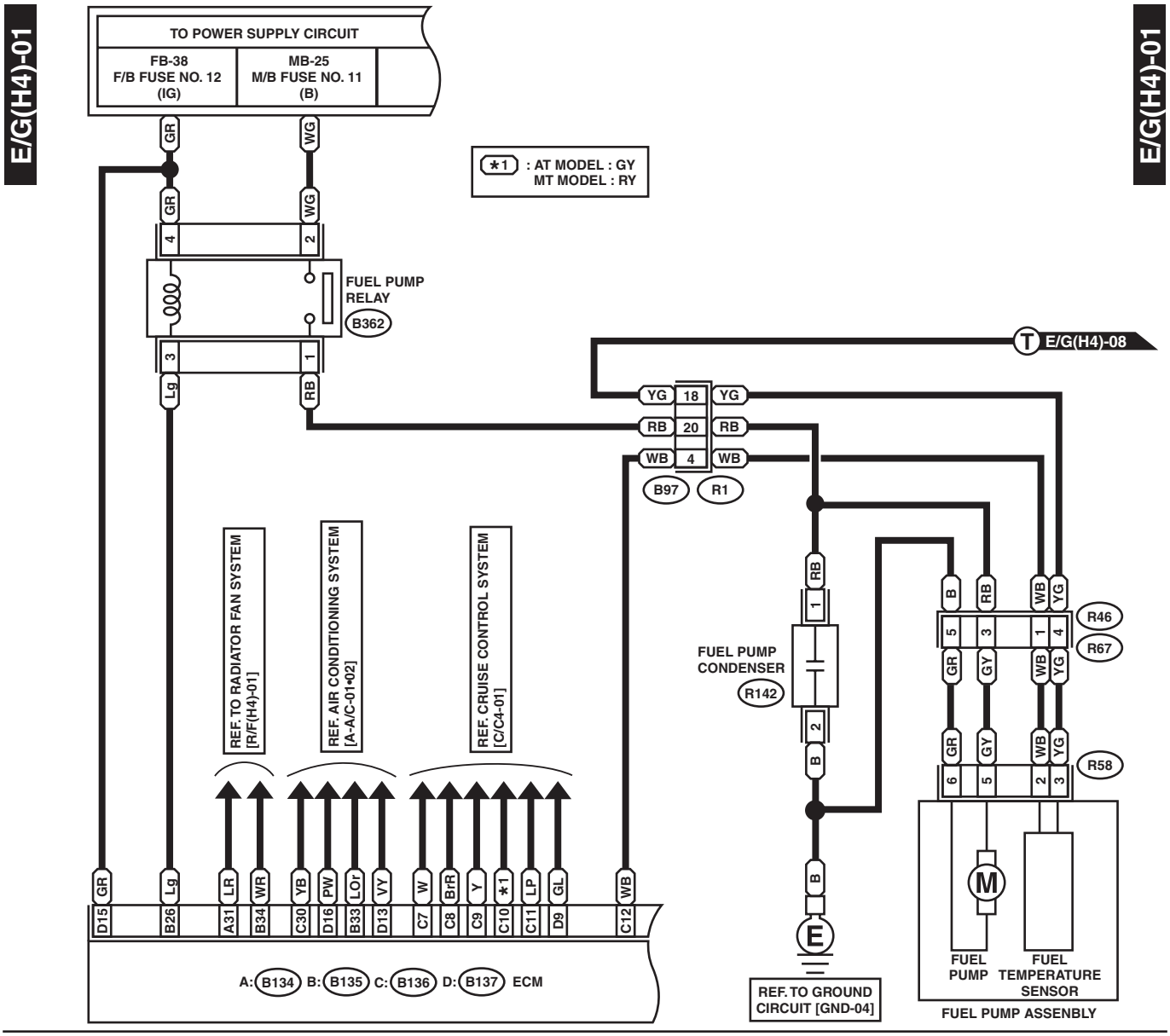
E/G(H4)-01
E/G(H4)-01
TO POWER SUPPLY CIRCUIT
FB-38
F/B FUSE NO. 12
(IG)
MB-25
M/B FUSE NO. 11
(B)
*1 : AT MODEL : GY
MT MODEL : RY
FUEL PUMP
RELAY
B362
E/G(H4)-08
B97
R1
REF. TO RADIATOR FAN SYSTEM [R/F(H4)-01]
REF. AIR CONDITIONING SYSTEM [A-A/C-01•02]
REF. CRUISE CONTROL SYSTEM [C/C4-01]
FUEL PUMP
CONDENSER
R142
R46
R67
R58
A: B134 B: B135 C: B136 D: B137 ECM
REF. TO GROUND
CIRCUIT [GND-04]
FUEL
PUMP
FUEL
TEMPERATURE
SENSOR
FUEL PUMP ASSEMBLY

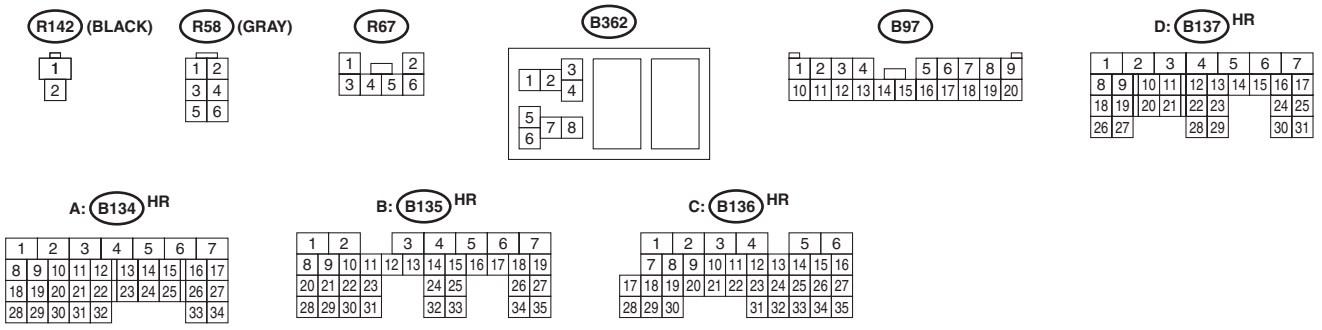
R142 (BLACK)
R58 (GRAY)
R67
B362
B97
D: B137 HR
A: B134 HR
B: B135 HR
C: B136 HR

WI-05316

E/G(H4)-02

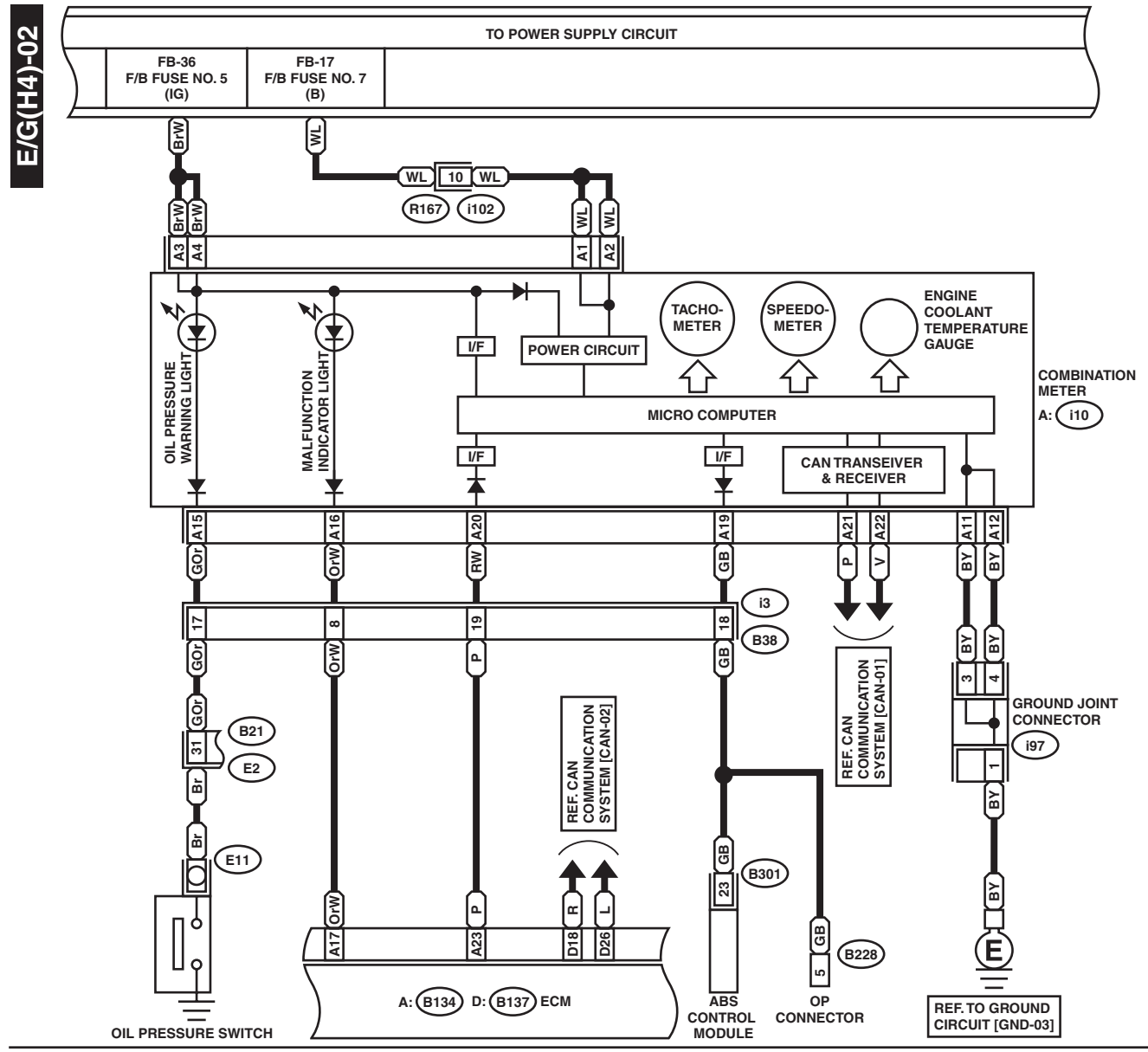

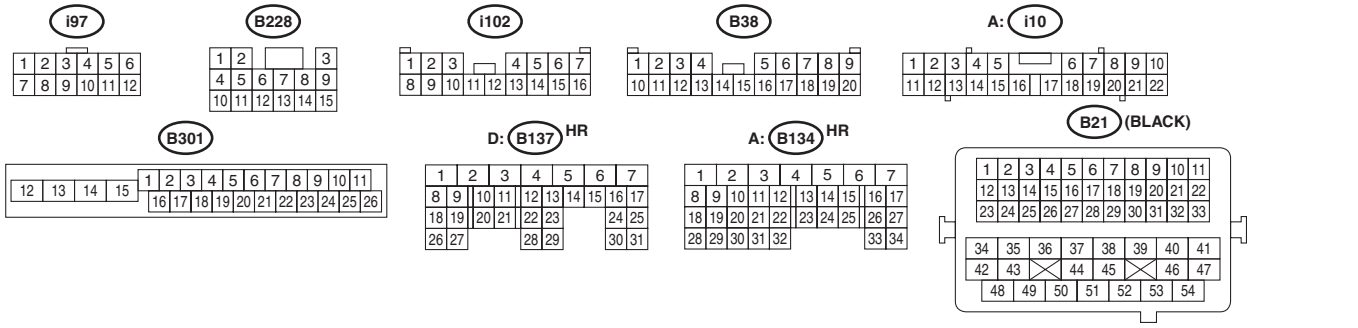

WI-05317

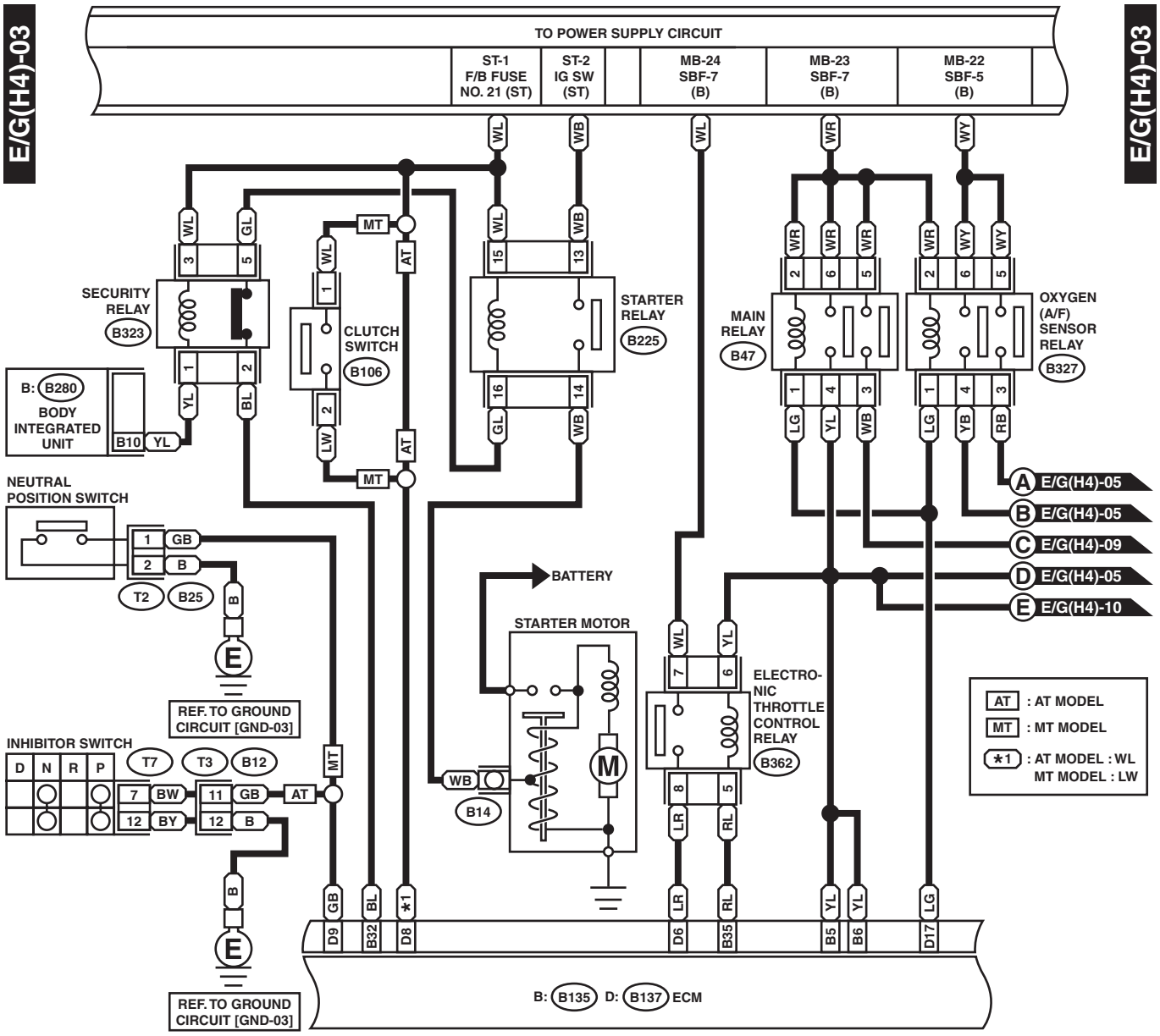
E/G(H4)-03
E/G(H4)-03
TO POWER SUPPLY CIRCUIT
ST-1 F/B FUSE NO. 21 (ST)
ST-2 IG SW (ST)
MB-24 SBF-7 (B)
MB-23 SBF-7 (B)
MB-22 SBF-5 (B)
SECURITY RELAY B323
CLUTCH SWITCH B106
STARTER RELAY B225
MAIN RELAY B47
OXYGEN (A/F) SENSOR RELAY B327
B: B280 BODY INTEGRATED UNIT
NEUTRAL POSITION SWITCH
BATTERY
STARTER MOTOR
ELECTRO-NIC THROTTLE CONTROL RELAY B362
INHIBITOR SWITCH
REF. TO GROUND CIRCUIT [GND-03]
REF. TO GROUND CIRCUIT [GND-03]
B: B135 D: B137 ECM
A E/G(H4)-05
B E/G(H4)-05
C E/G(H4)-09
D E/G(H4)-05
E E/G(H4)-10
AT : AT MODEL
MT : MT MODEL
*1 : AT MODEL : WL
MT MODEL : LW

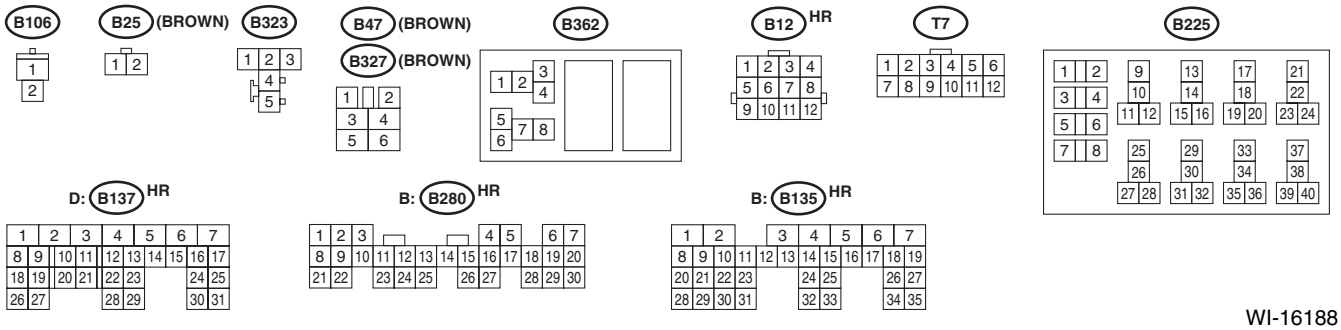
B106
B25 (BROWN)
B323
B47 (BROWN)
B327 (BROWN)
B362
B12 HR
T7
B225
D: B137 HR
B: B280 HR
B: B135 HR

WI-16188

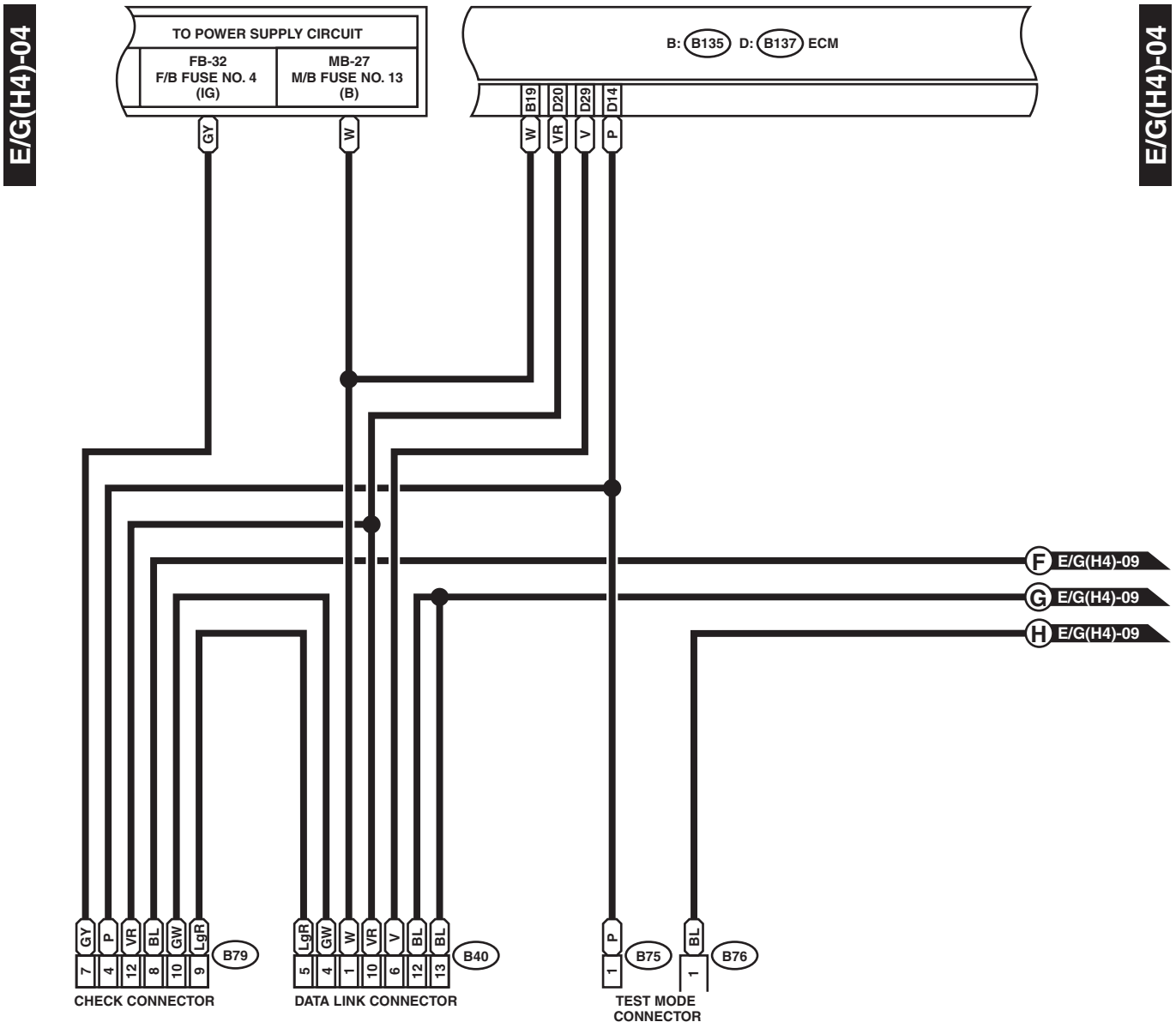
E/G(H4)-04
E/G(H4)-04
TO POWER SUPPLY CIRCUIT
FB-32
F/B FUSE NO. 4
(IG)
MB-27
M/B FUSE NO. 13
(B)
B: B135 D: B137 ECM
B19
D20
D29
D14
GY
W
W
VR
V
P
F E/G(H4)-09
G E/G(H4)-09
H E/G(H4)-09
GY P VR BL GW LgR
7 4 12 8 10 9
B79
CHECK CONNECTOR
LgR GW W VR V BL BL
5 4 1 10 6 12 13
B40
DATA LINK CONNECTOR
P
1
B75
BL
1
B76
TEST MODE
CONNECTOR

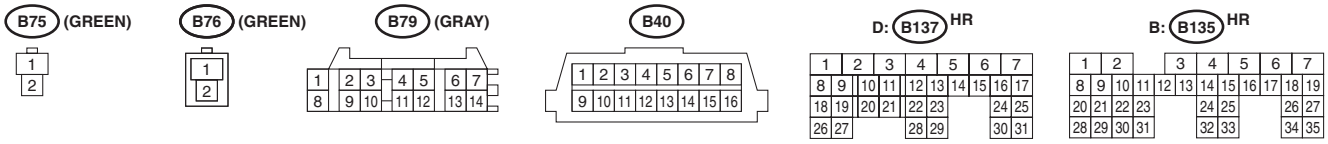
B75 (GREEN)
B76 (GREEN)
B79 (GRAY)
B40
D: B137 HR
B: B135 HR

WI-05319

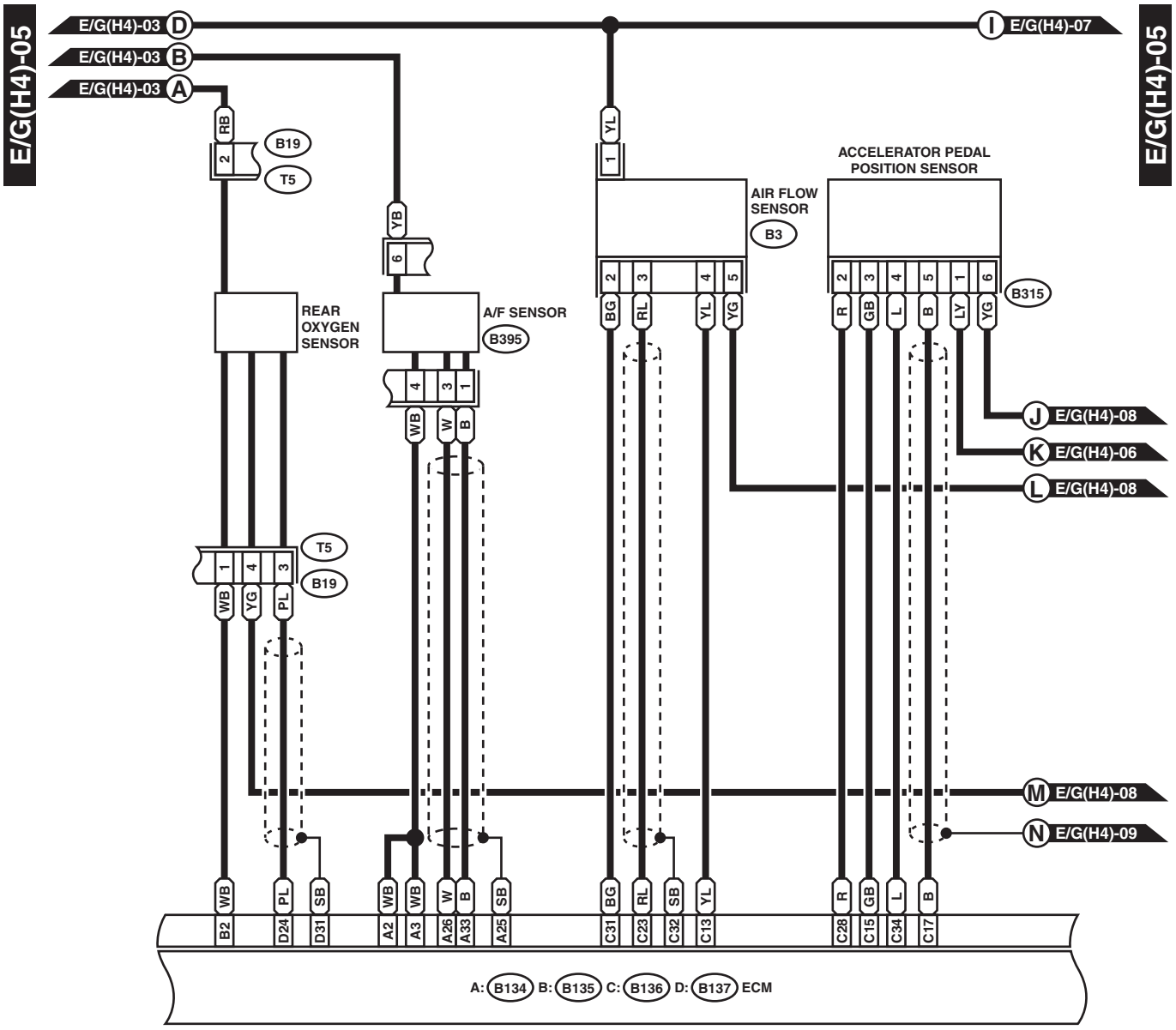
E/G(H4)-05
E/G(H4)-03 D
E/G(H4)-03 B
E/G(H4)-03 A
I E/G(H4)-07
E/G(H4)-05
RB
B19
T5
YB
YL
AIR FLOW SENSOR
B3
ACCELERATOR PEDAL POSITION SENSOR
B315
REAR OXYGEN SENSOR
A/F SENSOR
B395
BG
RL
YL
YG
R
GB
L
B
LY
J E/G(H4)-08
K E/G(H4)-06
L E/G(H4)-08
WB
W
PL
SB
M E/G(H4)-08
N E/G(H4)-09
B2
D24
D31
A2
A3
A26
A33
A25
C31
C23
C32
C13
C28
C15
C34
C17
A: B134 B: B135 C: B136 D: B137 ECM

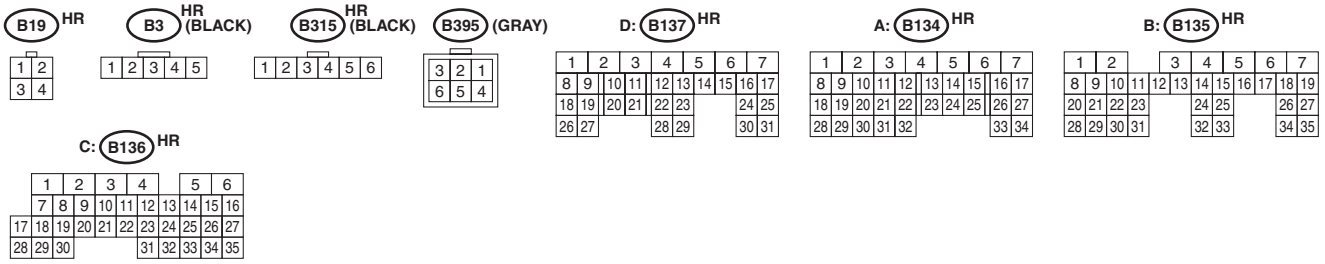
B19 HR
B3 HR (BLACK)
B315 HR (BLACK)
B395 (GRAY)
D: B137 HR
A: B134 HR
B: B135 HR
C: B136 HR

WI-05320

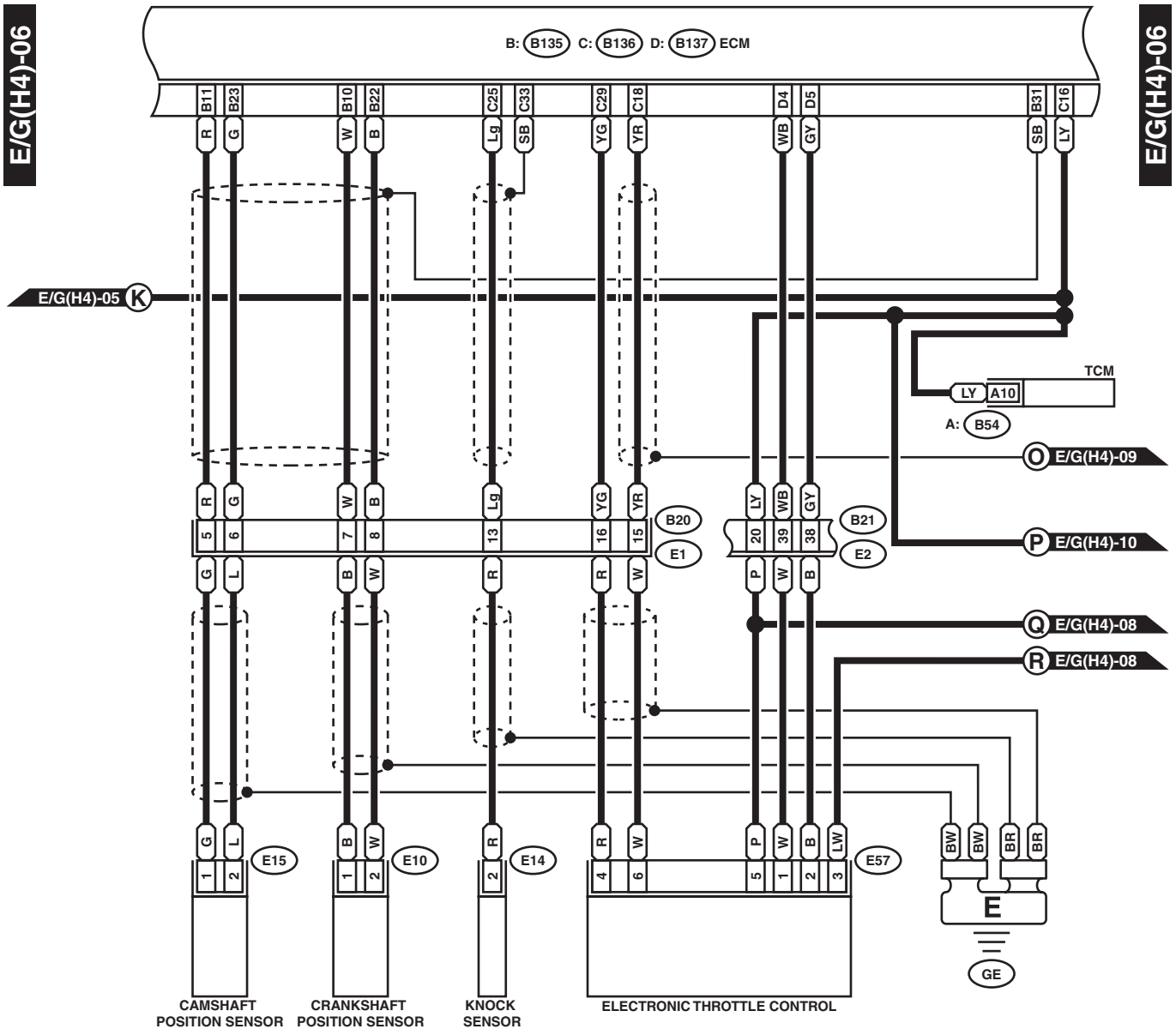
E/G(H4)-06
E/G(H4)-06
B: B135 C: B136 D: B137 ECM
B11 B23 B10 B22 C25 C33 C29 C18 D4 D5 B31 C16
R G W B Lg SB YG YR WB GY SB LY
E/G(H4)-05 K
TCM
LY A10
A: B54
O E/G(H4)-09
P E/G(H4)-10
Q E/G(H4)-08
R E/G(H4)-08
B20
B21
E1
E2
E15
E10
E14
E57
E
GE
CAMSHAFT POSITION SENSOR
CRANKSHAFT POSITION SENSOR
KNOCK SENSOR
ELECTRONIC THROTTLE CONTROL

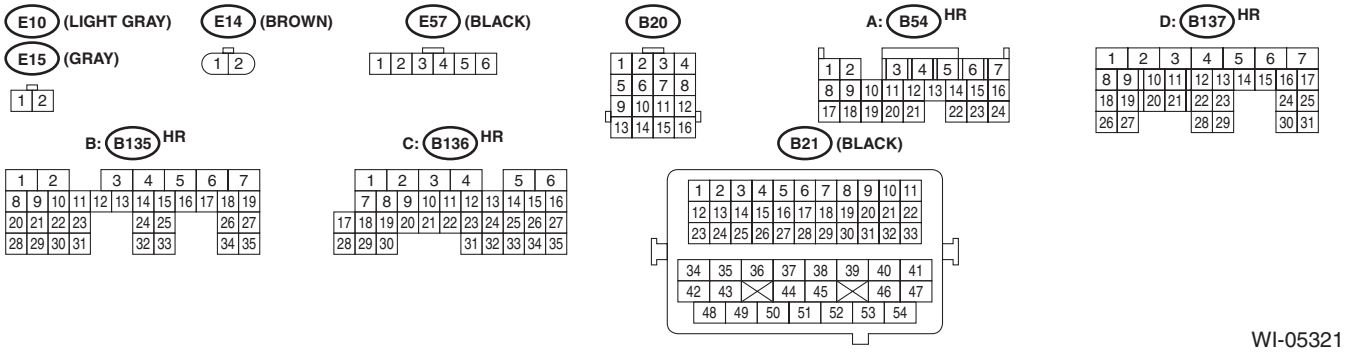
E10 (LIGHT GRAY)
E15 (GRAY)
E14 (BROWN)
E57 (BLACK)
B20
A: B54 HR
D: B137 HR
B: B135 HR
C: B136 HR
B21 (BLACK)

WI-05321

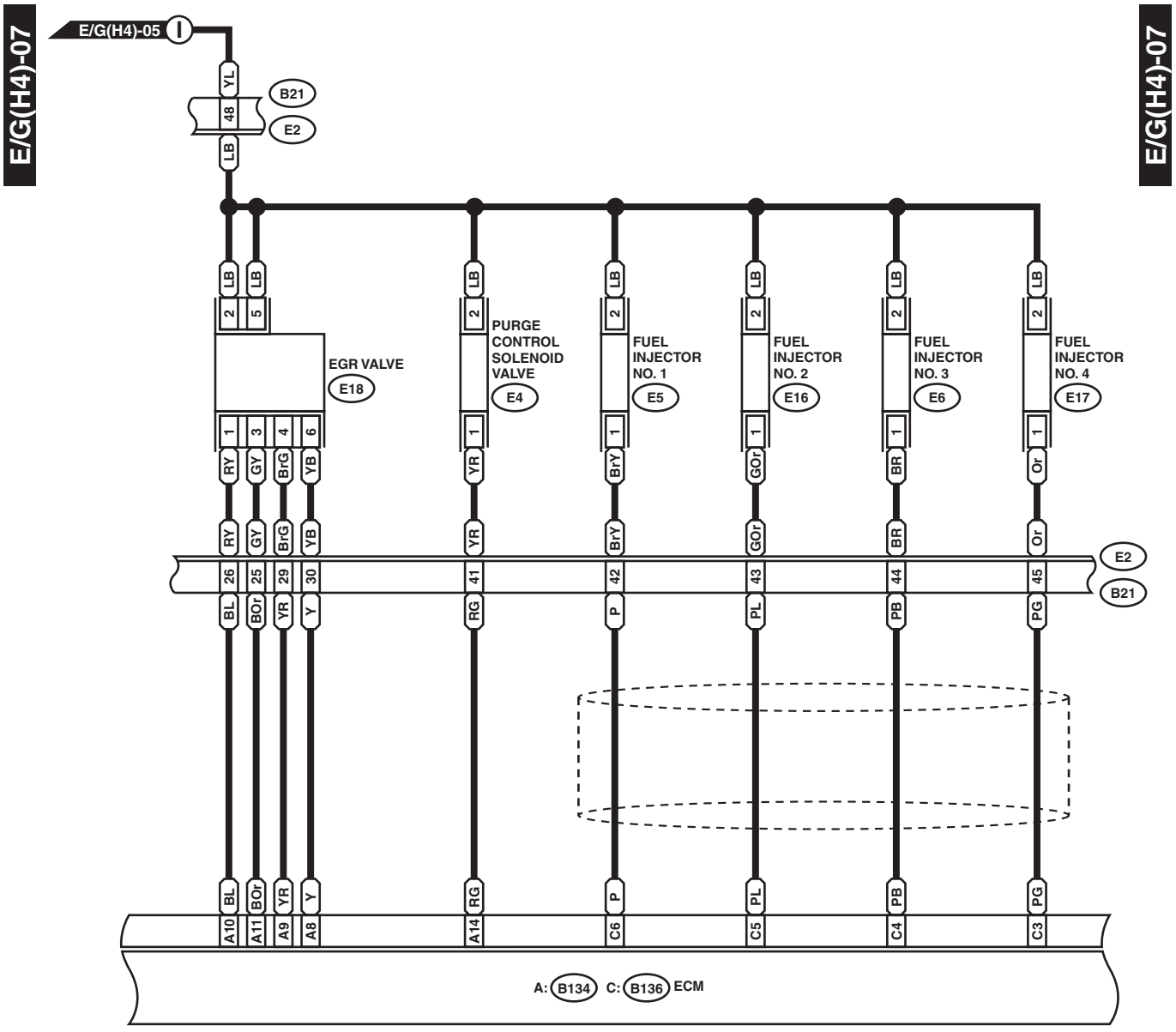
E/G(H4)-07
E/G(H4)-05
YL
48
B21
E2
LB
2
5
EGR VALVE
E18
1
3
4
6
RY
GY
BrG
YB
PURGE CONTROL SOLENOID VALVE
E4
YR
FUEL INJECTOR NO. 1
E5
BrY
FUEL INJECTOR NO. 2
E16
GOr
FUEL INJECTOR NO. 3
E6
BR
FUEL INJECTOR NO. 4
E17
Or
26
25
29
30
41
42
43
44
45
BL
BOr
YR
Y
RG
P
PL
PB
PG
A10
A11
A9
A8
A14
C6
C5
C4
C3
A: B134 C: B136 ECM

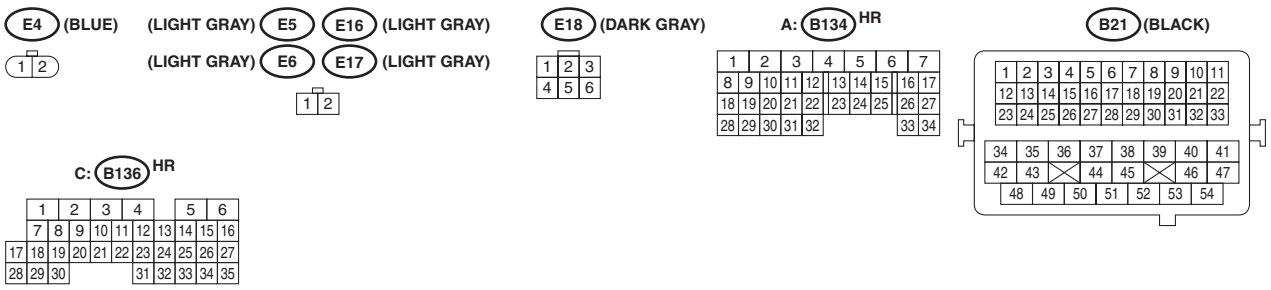
E4 (BLUE)
E5 (LIGHT GRAY)
E16 (LIGHT GRAY)
E6 (LIGHT GRAY)
E17 (LIGHT GRAY)
E18 (DARK GRAY)
A: B134 HR
B21 (BLACK)
C: B136 HR

WI-05322

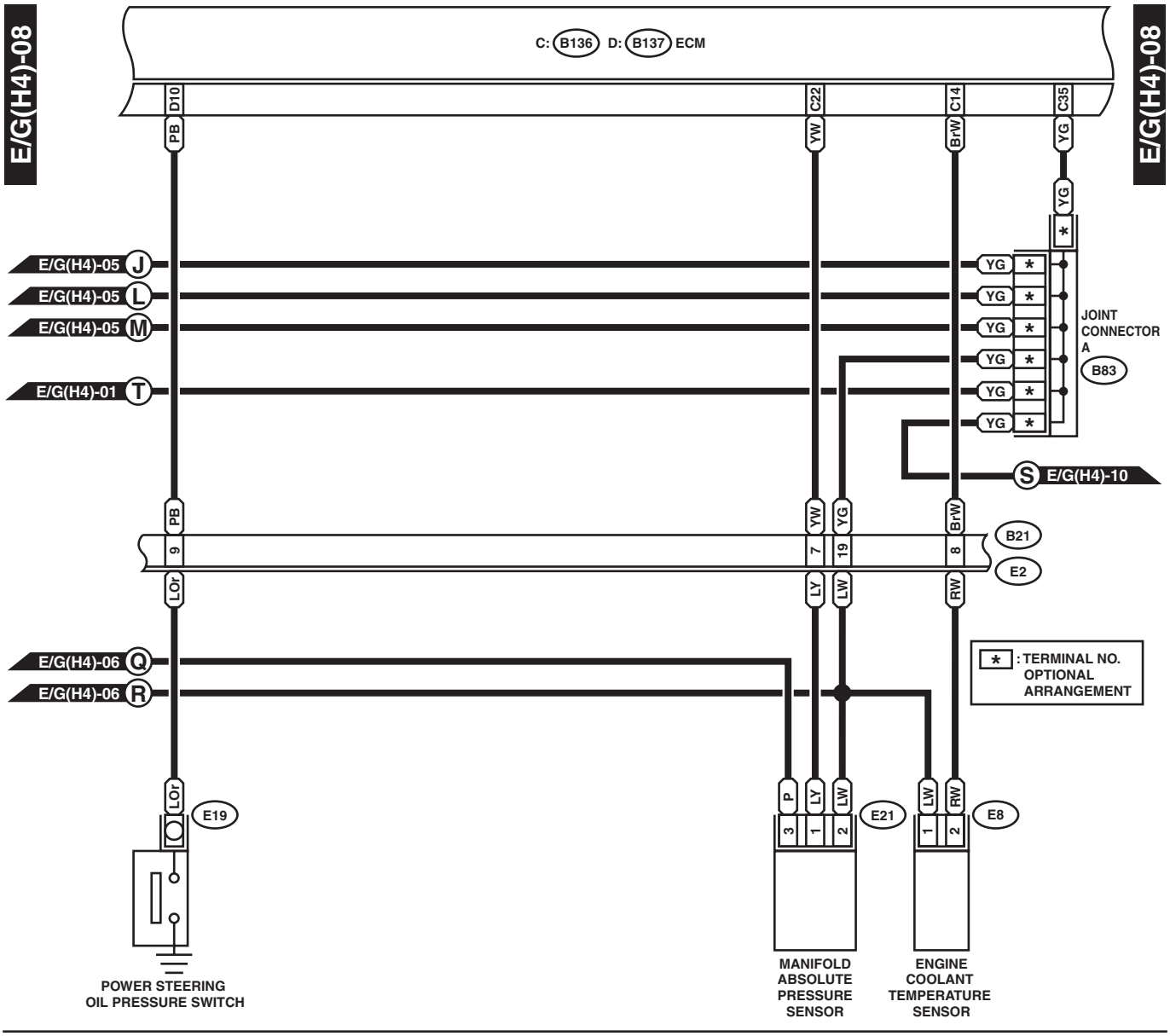
E/G(H4)-08
E/G(H4)-08
C: B136 D: B137 ECM
D10
C22
C14
C35
PB
YW
Br·W
YG
YG
*
E/G(H4)-05 J
E/G(H4)-05 L
E/G(H4)-05 M
E/G(H4)-01 T
JOINT CONNECTOR A
B83
S E/G(H4)-10
B21
E2
9
7
19
8
LOr
LY
LW
RW
E/G(H4)-06 Q
E/G(H4)-06 R
: TERMINAL NO. OPTIONAL ARRANGEMENT
E19
E21
E8
P
POWER STEERING OIL PRESSURE SWITCH
MANIFOLD ABSOLUTE PRESSURE SENSOR
ENGINE COOLANT TEMPERATURE SENSOR

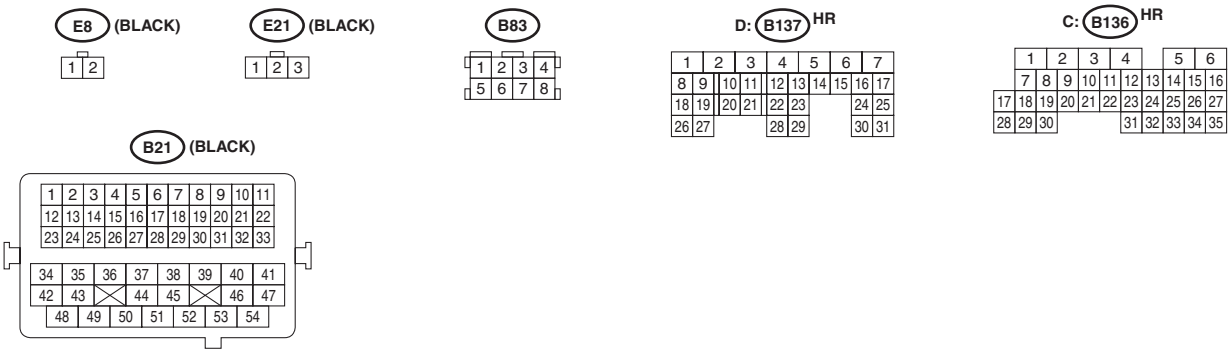
E8 (BLACK)
E21 (BLACK)
B83
D: B137 HR
C: B136 HR
B21 (BLACK)

WI-05323

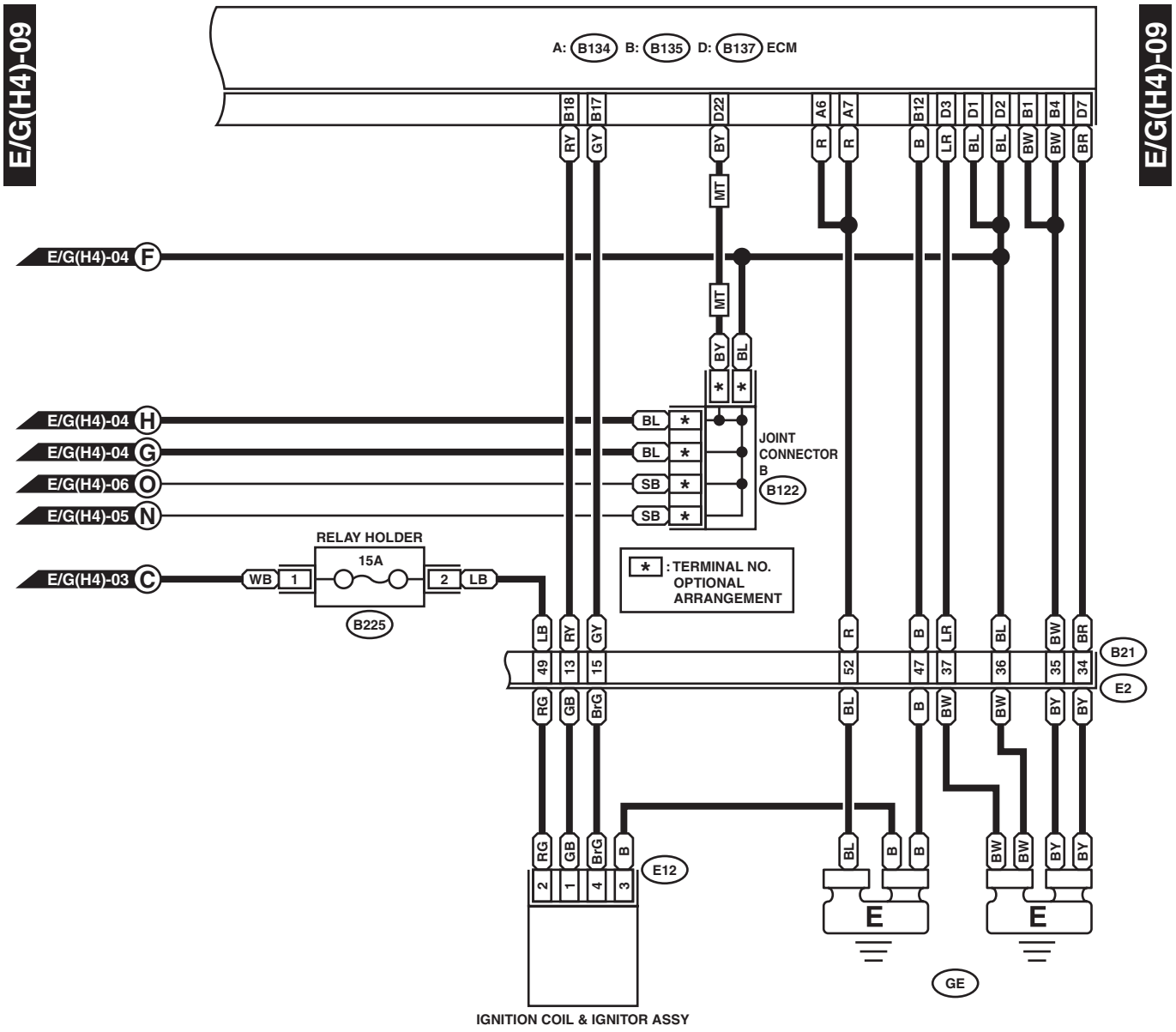
E/G(H4)-09
E/G(H4)-09
A: B134 B: B135 D: B137 ECM
B18 B17 D22 A6 A7 B12 D3 D1 D2 B1 B4 D7
RY GY BY R R B LR BL BL BW BW BR
MT
E/G(H4)-04 F
MT
BY BL
E/G(H4)-04 H
E/G(H4)-04 G
E/G(H4)-06 O
E/G(H4)-05 N
BL
BL
SB
SB
JOINT CONNECTOR B
B122
RELAY HOLDER
15A
E/G(H4)-03 C
WB 1
2 LB
B225
* : TERMINAL NO. OPTIONAL ARRANGEMENT
LB RY GY R B LR BL BW BR
49 13 15 52 47 37 36 35 34
B21
E2
RG GB BrG BL B BW BW BY BY
RG GB BrG B
2 1 4 3
E12
BL B B BW BW BY BY
E E
GE
IGNITION COIL & IGNITOR ASSY

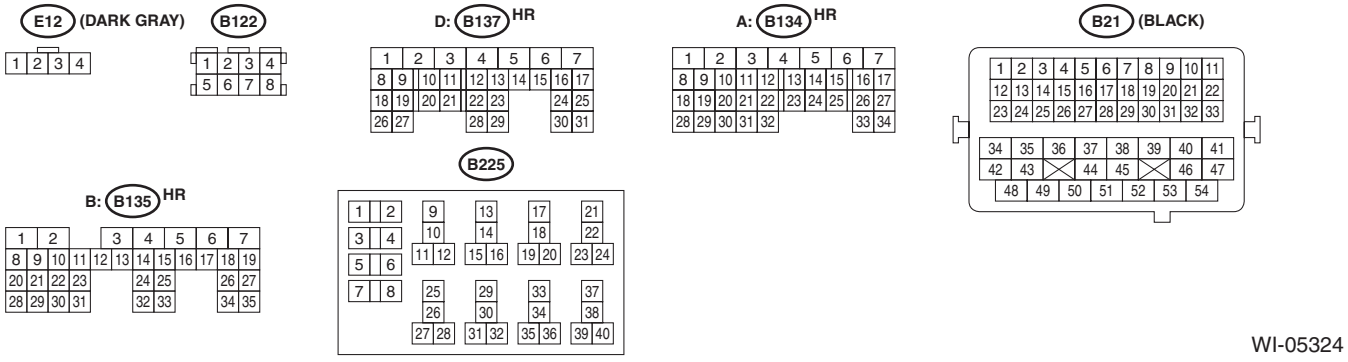
E12 (DARK GRAY)
B122
D: B137 HR
A: B134 HR
B21 (BLACK)
B: B135 HR
B225

WI-05324

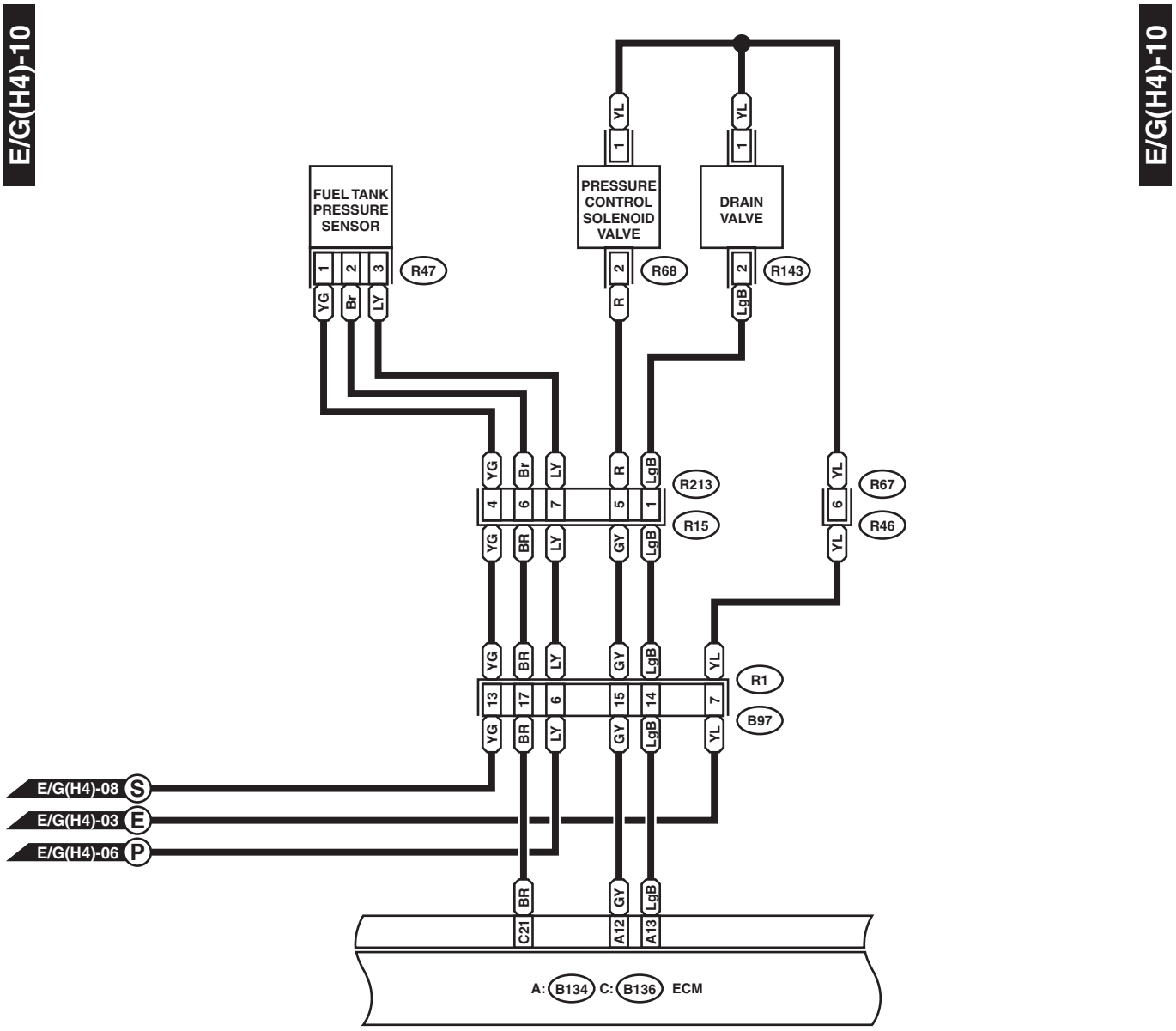
E/G(H4)-10
E/G(H4)-10
FUEL TANK PRESSURE SENSOR
PRESSURE CONTROL SOLENOID VALVE
DRAIN VALVE
R47
R68
R143
R213
R15
R67
R46
R1
B97
E/G(H4)-08 S
E/G(H4)-03 E
E/G(H4)-06 P
A: B134 C: B136 ECM

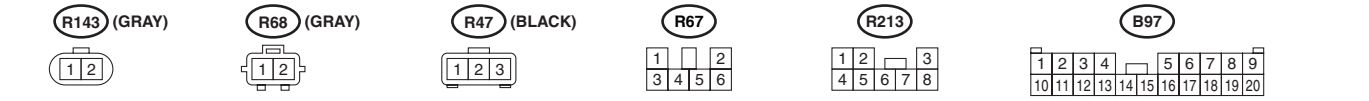
R143 (GRAY)
R68 (GRAY)
R47 (BLACK)
R67
R213
B97

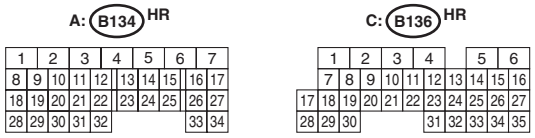
A: B134 HR
C: B136 HR

WI-09680

2. 2.5 L NON-TURBO (U5) MODEL

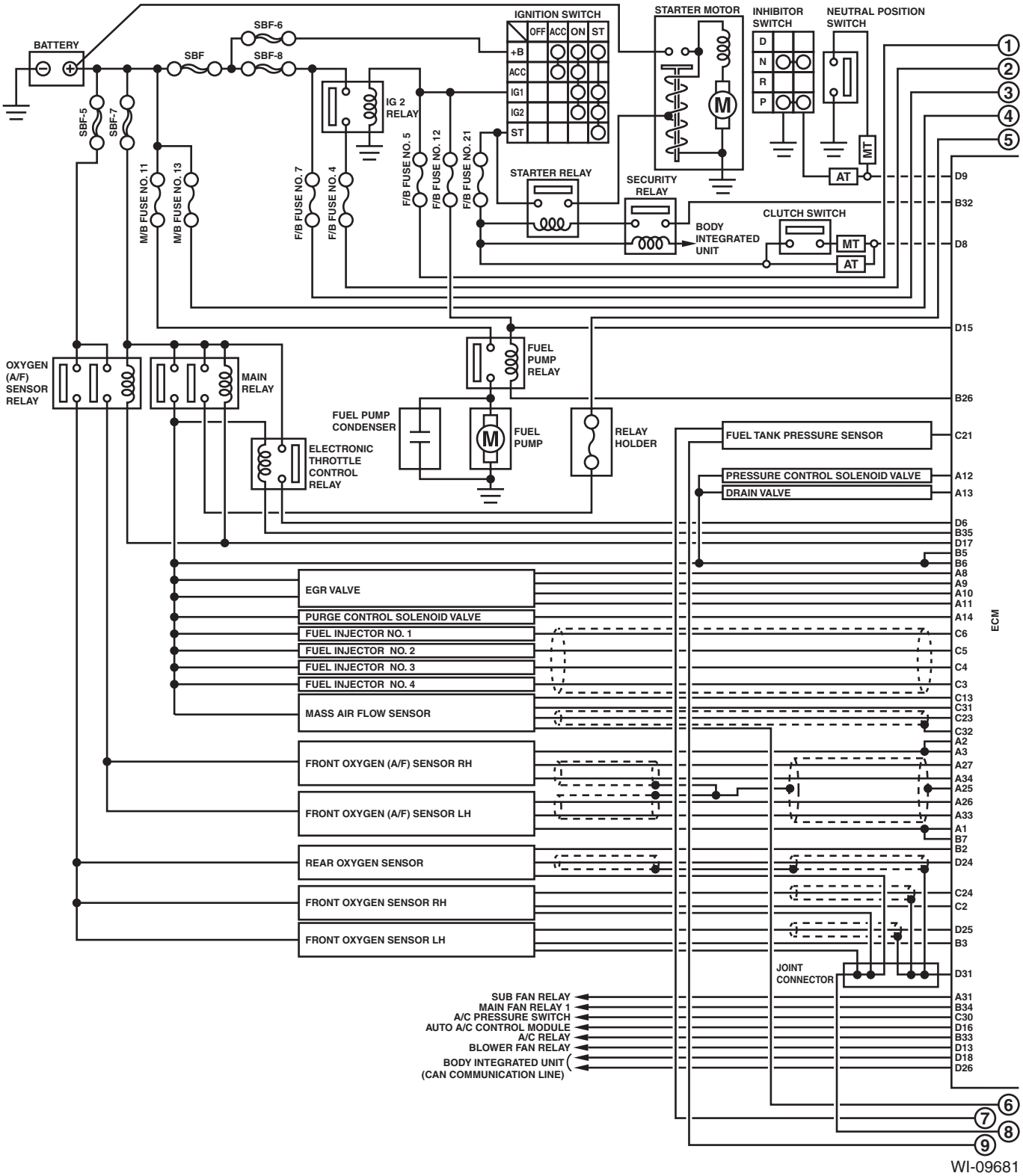

WI-09681

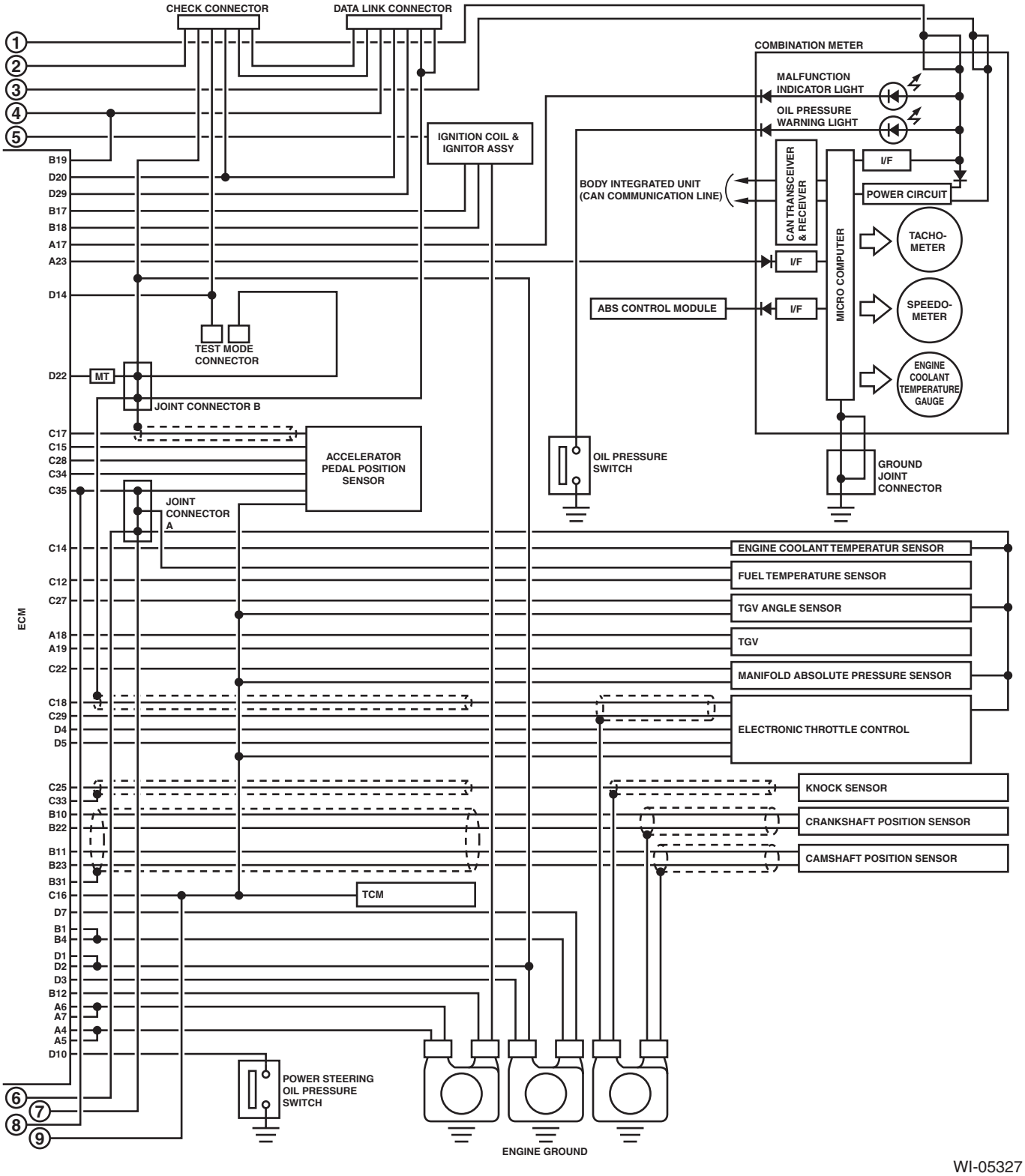
CHECK CONNECTOR
DATA LINK CONNECTOR
COMBINATION METER
MALFUNCTION INDICATOR LIGHT
OIL PRESSURE WARNING LIGHT
IGNITION COIL & IGNITOR ASSY
BODY INTEGRATED UNIT (CAN COMMUNICATION LINE)
CAN TRANSCEIVER & RECEIVER
I/F
POWER CIRCUIT
MICRO COMPUTER
TACHO-METER
SPEEDO-METER
ENGINE COOLANT TEMPERATURE GAUGE
ABS CONTROL MODULE
TEST MODE CONNECTOR
MT
JOINT CONNECTOR B
ACCELERATOR PEDAL POSITION SENSOR
OIL PRESSURE SWITCH
GROUND JOINT CONNECTOR
JOINT CONNECTOR A
ECM
ENGINE COOLANT TEMPERATUR SENSOR
FUEL TEMPERATURE SENSOR
TGV ANGLE SENSOR
TGV
MANIFOLD ABSOLUTE PRESSURE SENSOR
ELECTRONIC THROTTLE CONTROL
KNOCK SENSOR
CRANKSHAFT POSITION SENSOR
CAMSHAFT POSITION SENSOR
TCM
POWER STEERING OIL PRESSURE SWITCH
ENGINE GROUND
B19
D20
D29
B17
B18
A17
A23
D14
D22
C17
C15
C28
C34
C35
C14
C12
C27
A18
A19
C22
C18
C29
D4
D5
C25
C33
B10
B22
B11
B23
B31
C16
D7
B1
B4
D1
D2
D3
B12
A6
A7
A4
A5
D10
1
2
3
4
5
6
7
8
9

WI-05327

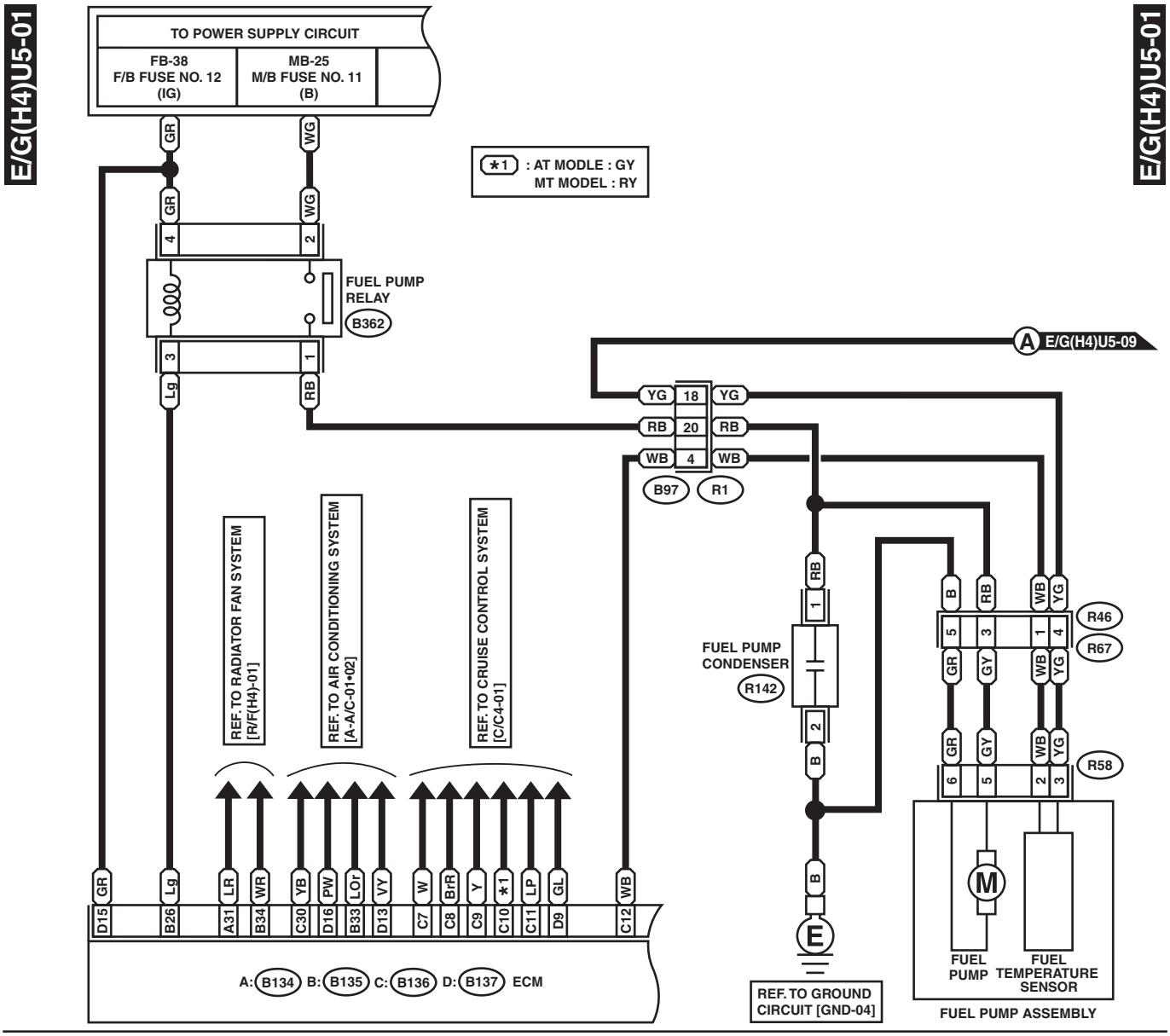
E/G(H4)U5-01
E/G(H4)U5-01
TO POWER SUPPLY CIRCUIT
FB-38
F/B FUSE NO. 12
(IG)
MB-25
M/B FUSE NO. 11
(B)
*1 : AT MODLE : GY
MT MODEL : RY
FUEL PUMP
RELAY
B362
A E/G(H4)U5-09
B97
R1
REF. TO RADIATOR FAN SYSTEM [R/F(H4)-01]
REF. TO AIR CONDITIONING SYSTEM [A-A/C-01•02]
REF. TO CRUISE CONTROL SYSTEM [C/C4-01]
FUEL PUMP
CONDENSER
R142
R46
R67
R58
A: B134 B: B135 C: B136 D: B137 ECM
REF. TO GROUND
CIRCUIT [GND-04]
FUEL
PUMP
FUEL
TEMPERATURE
SENSOR
FUEL PUMP ASSEMBLY

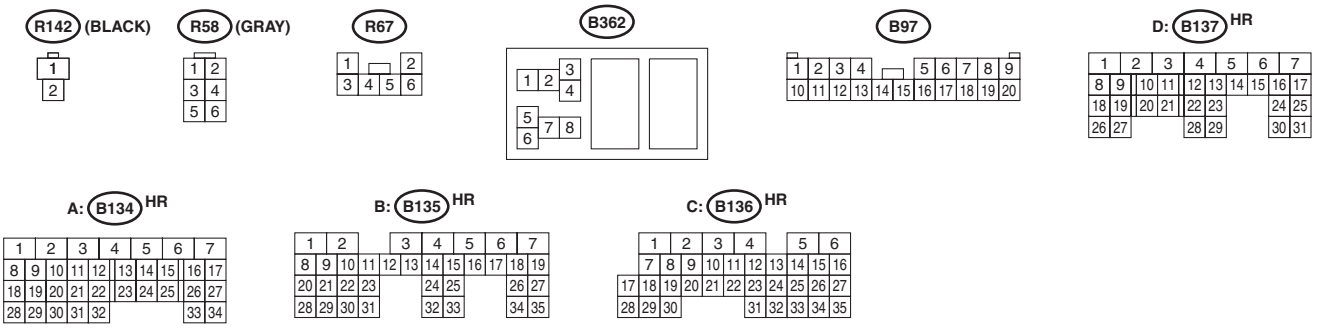
R142 (BLACK)
R58 (GRAY)
R67
B362
B97
D: B137 HR
A: B134 HR
B: B135 HR
C: B136 HR

WI-05328

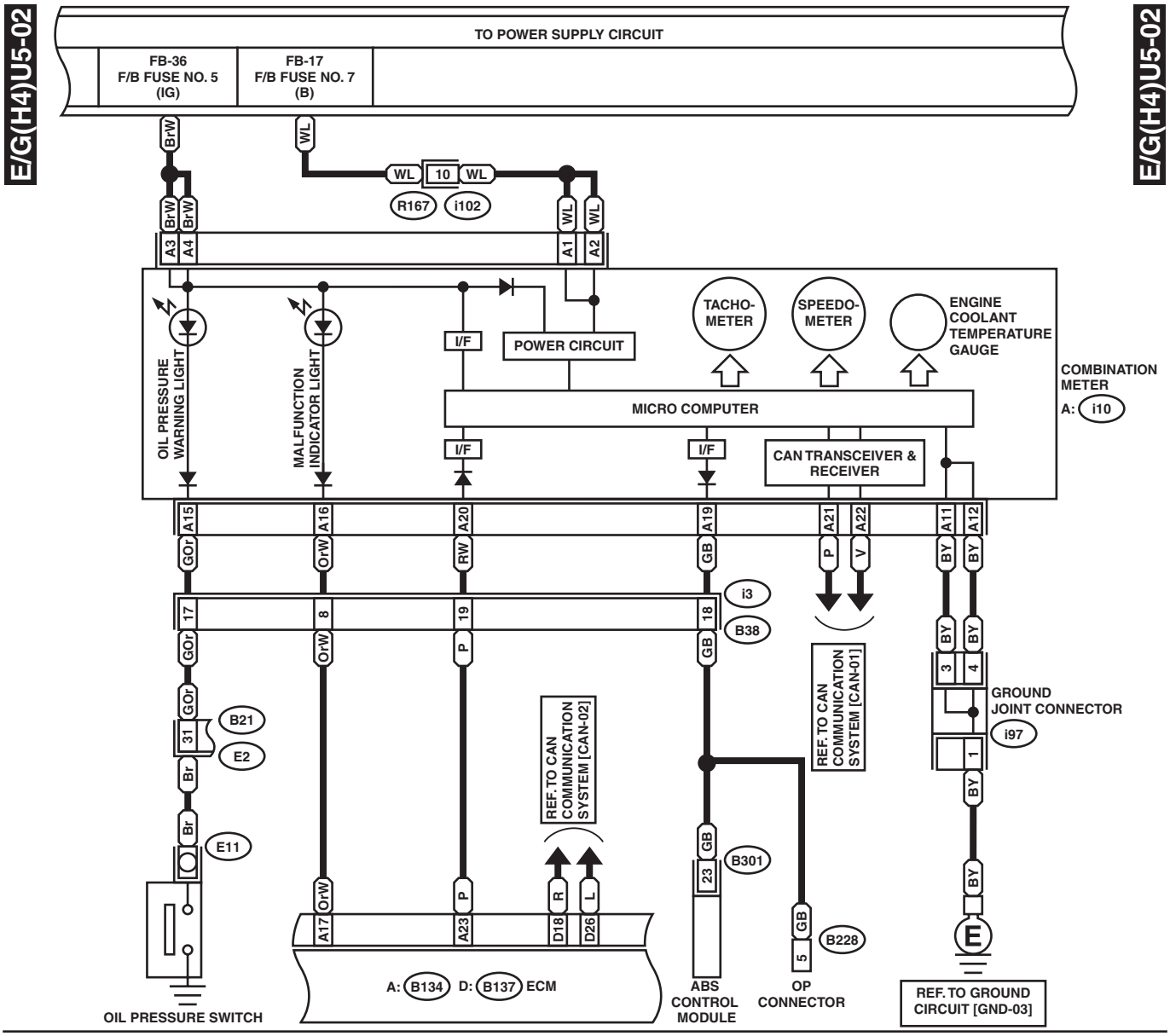
E/G(H4)U5-02
E/G(H4)U5-02
TO POWER SUPPLY CIRCUIT
FB-36
F/B FUSE NO. 5
(IG)
FB-17
F/B FUSE NO. 7
(B)
BrW
WL
WL
10
WL
R167
i102
BrW
BrW
WL
WL
A3
A4
A1
A2
TACHO-METER
SPEEDO-METER
ENGINE COOLANT TEMPERATURE GAUGE
COMBINATION METER
A: i10
OIL PRESSURE WARNING LIGHT
MALFUNCTION INDICATOR LIGHT
I/F
POWER CIRCUIT
MICRO COMPUTER
I/F
I/F
CAN TRANSCEIVER & RECEIVER
A15
A16
A20
A19
A21
A22
A11
A12
GOr
OrW
RW
GB
P
V
BY
BY
i3
17
8
19
18
B38
3
4
GOr
OrW
P
GB
BY
BY
GROUND JOINT CONNECTOR
i97
B21
31
GOr
E2
REF. TO CAN COMMUNICATION SYSTEM [CAN-01]
REF. TO CAN COMMUNICATION SYSTEM [CAN-02]
1
Br
BY
Br
E11
GB
B301
23
OrW
P
R
L
BY
GB
B228
5
A17
A23
D18
D26
A: B134 D: B137 ECM
ABS CONTROL MODULE
OP CONNECTOR
REF. TO GROUND CIRCUIT [GND-03]
OIL PRESSURE SWITCH
i97
B228
i102
B38
A: i10
B301
D: B137 HR
A: B134 HR
B21 (BLACK)

WI-05329

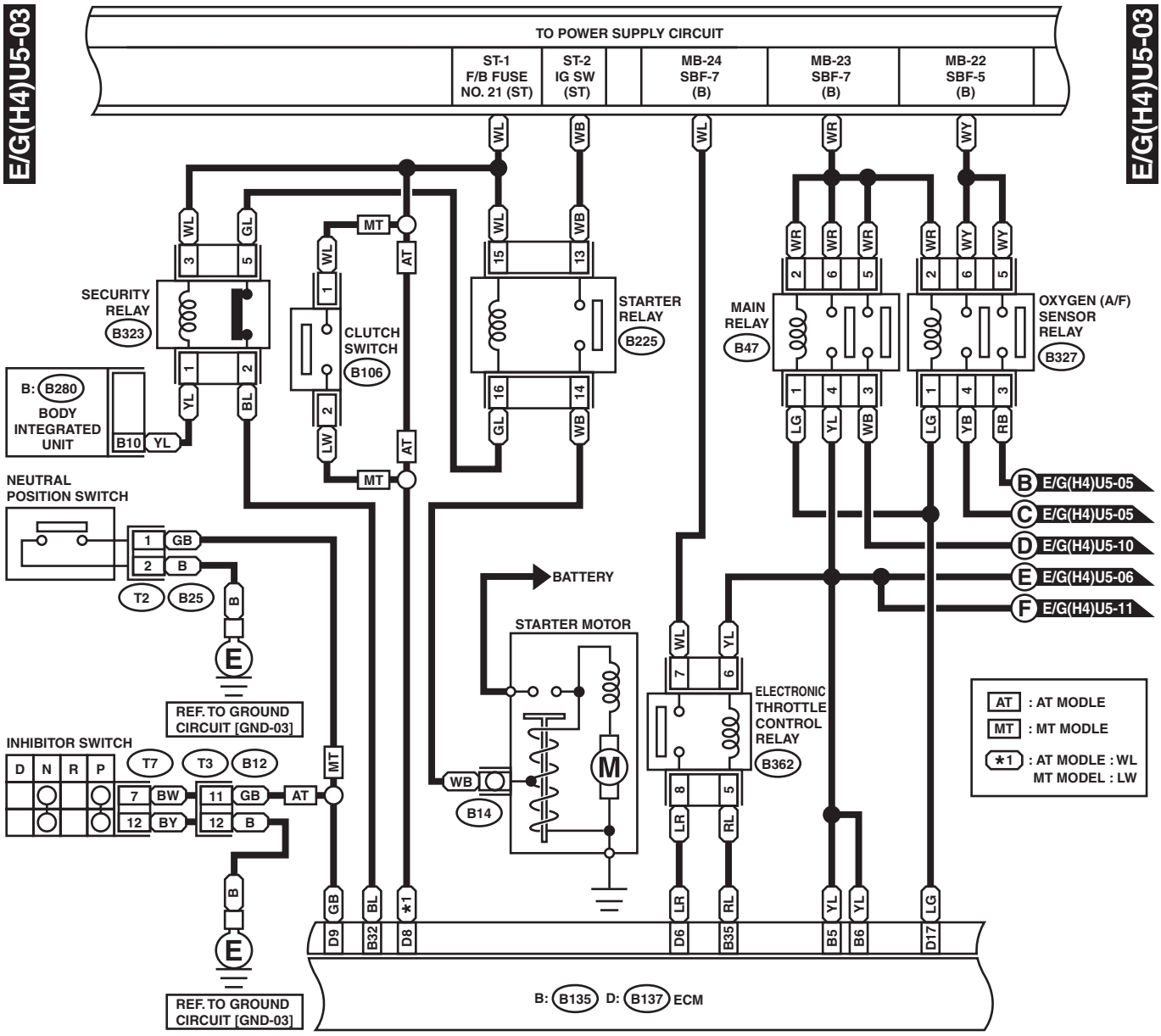
E/G(H4)U5-03
E/G(H4)U5-03
TO POWER SUPPLY CIRCUIT
ST-1 F/B FUSE NO. 21 (ST)
ST-2 IG SW (ST)
MB-24 SBF-7 (B)
MB-23 SBF-7 (B)
MB-22 SBF-5 (B)
SECURITY RELAY B323
CLUTCH SWITCH B106
STARTER RELAY B225
MAIN RELAY B47
OXYGEN (A/F) SENSOR RELAY B327
B: B280 BODY INTEGRATED UNIT
NEUTRAL POSITION SWITCH
INHIBITOR SWITCH
BATTERY
STARTER MOTOR
ELECTRONIC THROTTLE CONTROL RELAY B362
REF. TO GROUND CIRCUIT [GND-03]
REF. TO GROUND CIRCUIT [GND-03]
B: B135 D: B137 ECM
B E/G(H4)U5-05
C E/G(H4)U5-05
D E/G(H4)U5-10
E E/G(H4)U5-06
F E/G(H4)U5-11
AT : AT MODLE
MT : MT MODLE
*1 : AT MODLE : WL
MT MODEL : LW
B106
B25 (BROWN)
B323
B47 (BROWN)
B327 (BROWN)
B362
B12 HR
T7
B225
D: B137 HR
B: B280 HR
B: B135 HR

WI-16189

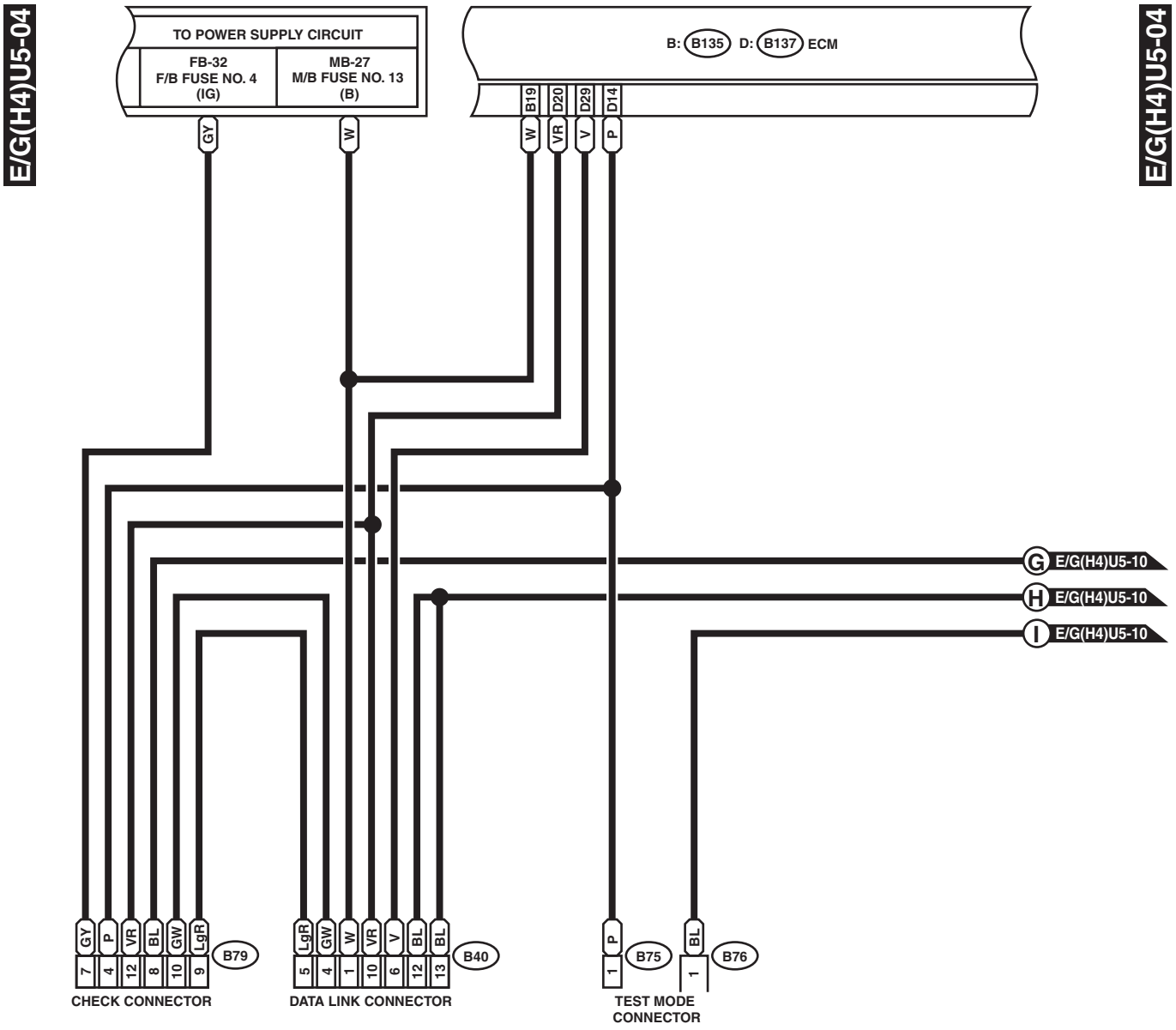
E/G(H4)U5-04
E/G(H4)U5-04
TO POWER SUPPLY CIRCUIT
FB-32
F/B FUSE NO. 4
(IG)
MB-27
M/B FUSE NO. 13
(B)
B: B135 D: B137 ECM
B19
D20
D29
D14
GY
W
W
VR
V
P
G E/G(H4)U5-10
H E/G(H4)U5-10
I E/G(H4)U5-10
GY P VR BL GW LgR
7 4 12 8 10 9
B79
CHECK CONNECTOR
LgR GW W VR V BL BL
5 4 1 10 6 12 13
B40
DATA LINK CONNECTOR
P
1
B75
BL
1
B76
TEST MODE
CONNECTOR

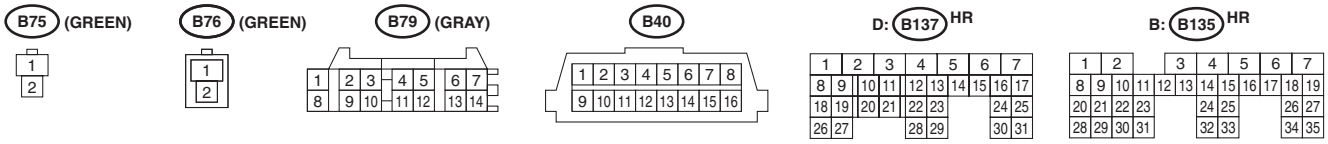
B75 (GREEN)
B76 (GREEN)
B79 (GRAY)
B40
D: B137 HR
B: B135 HR

WI-05331

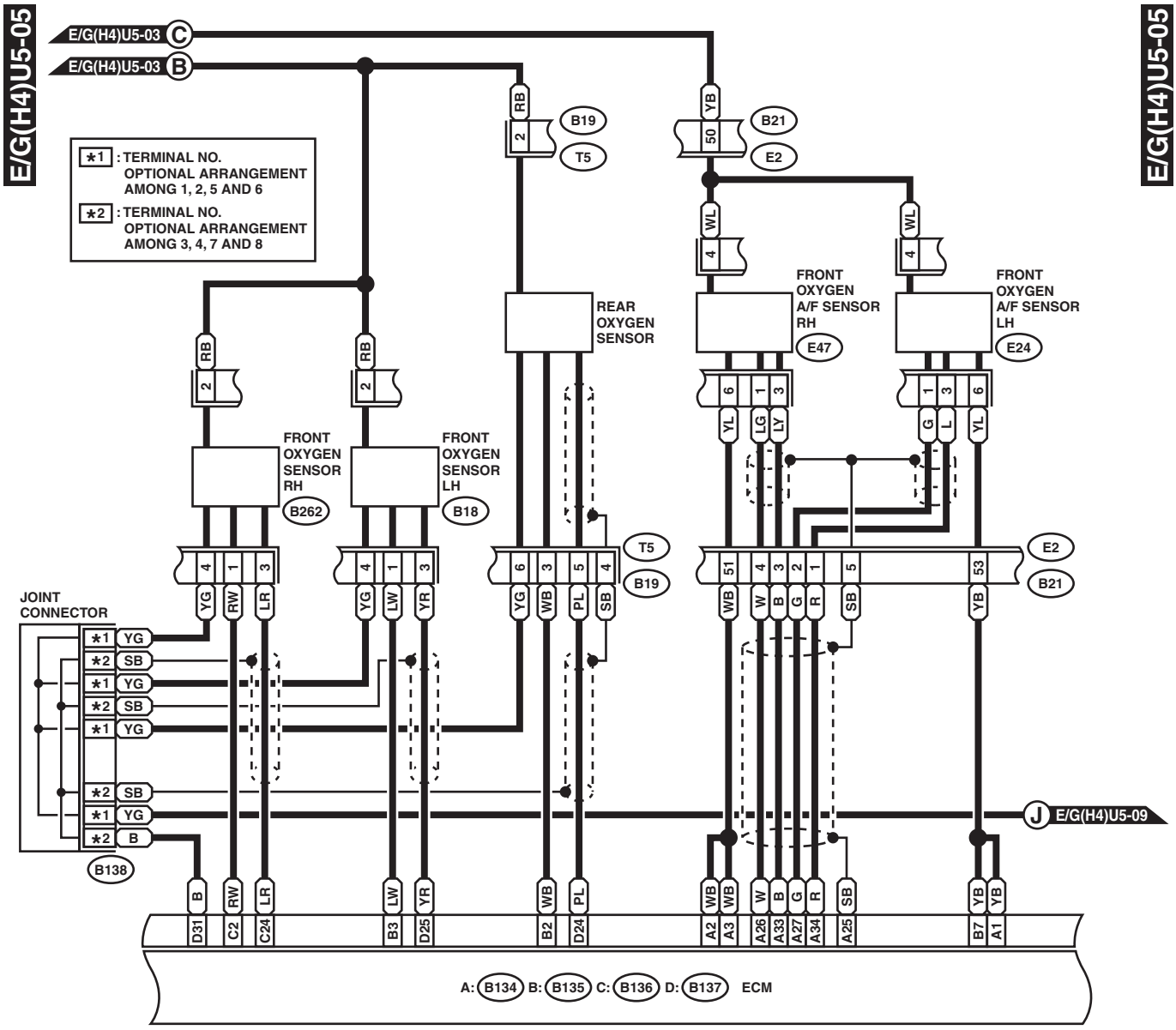
E/G(H4)U5-05
E/G(H4)U5-03 C
E/G(H4)U5-03 B
*1 : TERMINAL NO. OPTIONAL ARRANGEMENT AMONG 1, 2, 5 AND 6
*2 : TERMINAL NO. OPTIONAL ARRANGEMENT AMONG 3, 4, 7 AND 8
REAR OXYGEN SENSOR
FRONT OXYGEN A/F SENSOR RH
E47
FRONT OXYGEN A/F SENSOR LH
E24
FRONT OXYGEN SENSOR RH
B262
FRONT OXYGEN SENSOR LH
B18
B19
T5
B21
E2
JOINT CONNECTOR
B138
J E/G(H4)U5-09
A: B134 B: B135 C: B136 D: B137 ECM

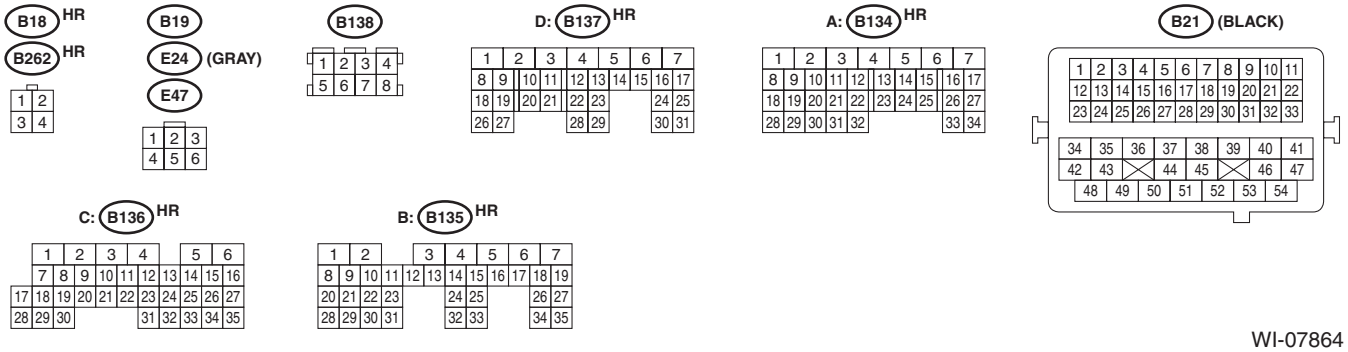
B18 HR
B262 HR
B19
E24 (GRAY)
E47
B138
D: B137 HR
A: B134 HR
B21 (BLACK)
C: B136 HR
B: B135 HR

WI-07864

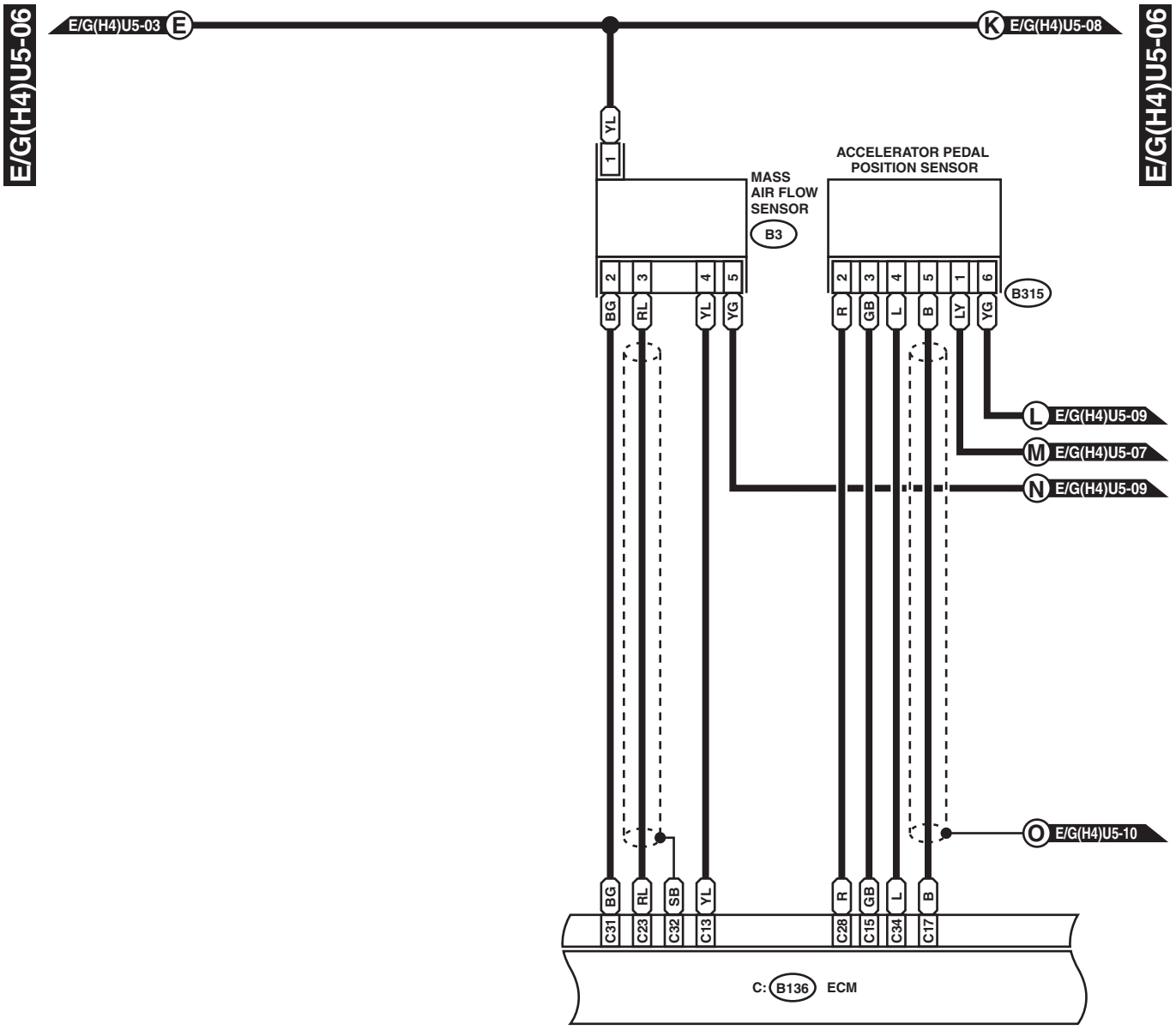
E/G(H4)U5-06
E/G(H4)U5-03 E
K E/G(H4)U5-08
E/G(H4)U5-06
YL
1
ACCELERATOR PEDAL POSITION SENSOR
MASS AIR FLOW SENSOR
B3
2 3 4 5
BG RL YL YG
2 3 4 5 1 6
R GB L B LY YG
B315
L E/G(H4)U5-09
M E/G(H4)U5-07
N E/G(H4)U5-09
O E/G(H4)U5-10
BG RL SB YL
C31 C23 C32 C13
R GB L B
C28 C15 C34 C17
C: B136 ECM

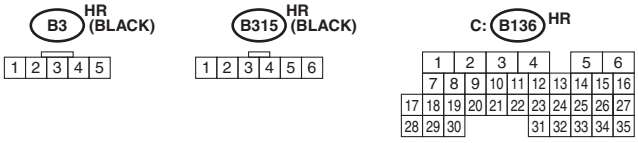
B3 HR (BLACK)
1 2 3 4 5
B315 HR (BLACK)
1 2 3 4 5 6
C: B136 HR
1 2 3 4 5 6
7 8 9 10 11 12 13 14 15 16
17 18 19 20 21 22 23 24 25 26 27
28 29 30 31 32 33 34 35

WI-05333

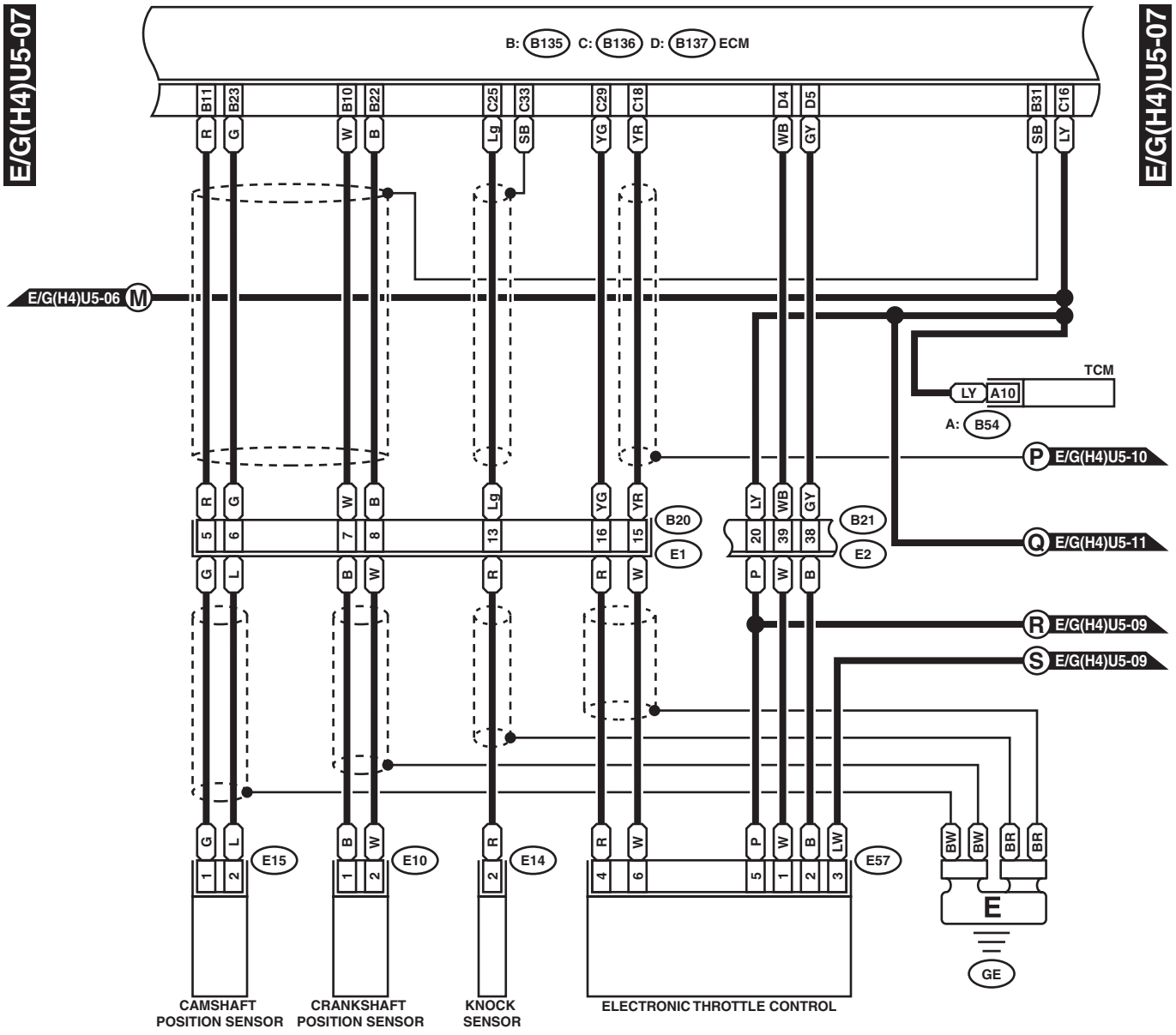

E10 (LIGHT GRAY)
E15 (GRAY)

E14 (BROWN)

E57 (BLACK)

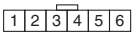

B20

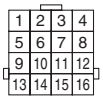

A: B54 HR

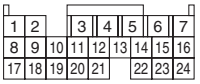

D: B137 HR

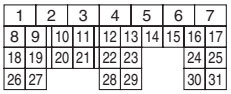

B: B135 HR

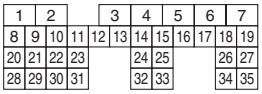

C: B136 HR

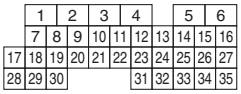

B21 (BLACK)

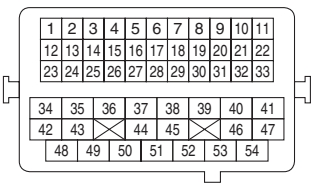

WI-05334

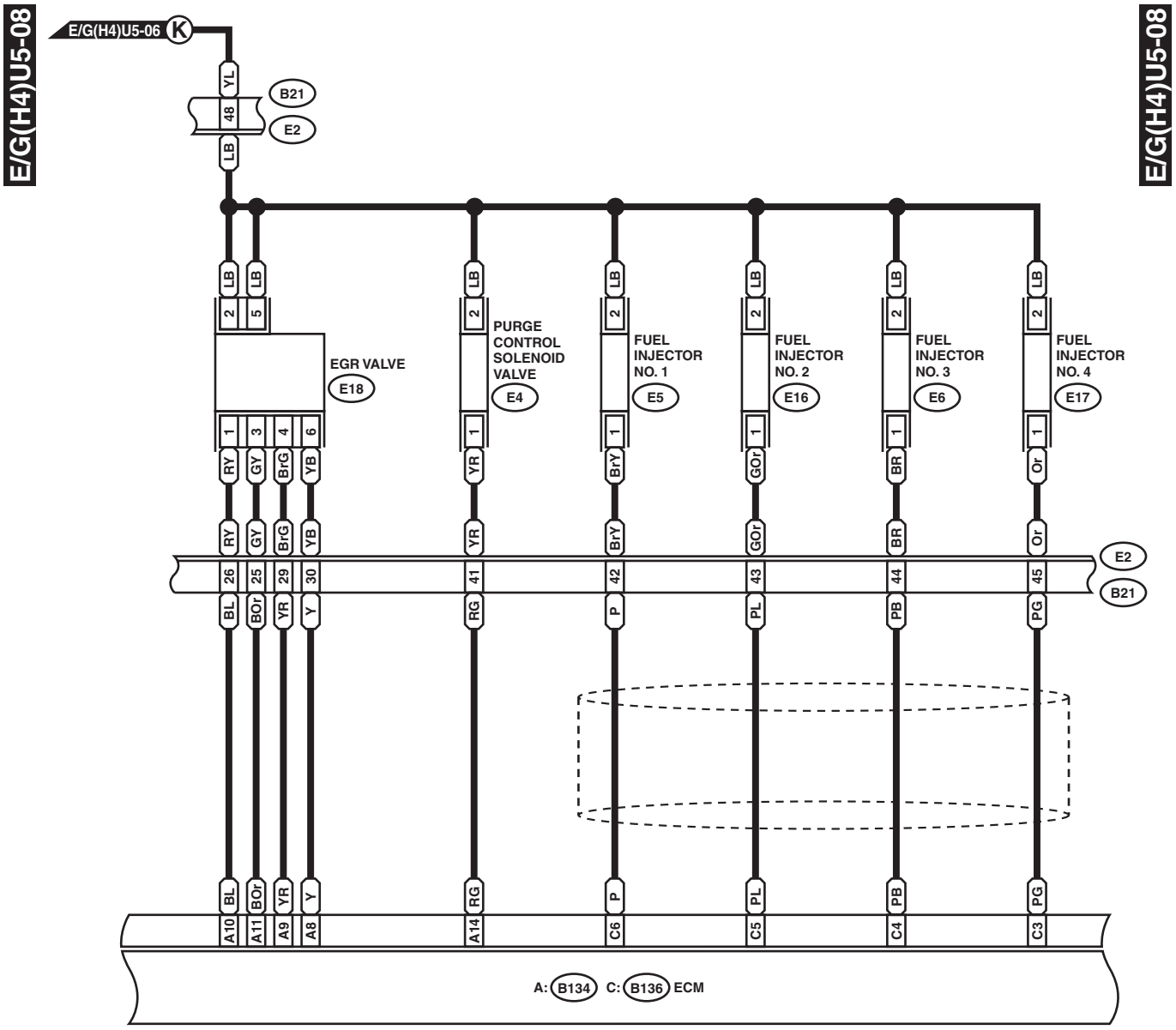

E4 (BLACK)

(LIGHT GRAY) E5 E16 (LIGHT GRAY)
(LIGHT GRAY) E6 E17 (LIGHT GRAY)

E18 (DARK GRAY)

A: B134 HR

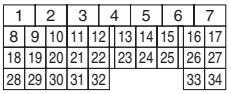

B21 (BLACK)

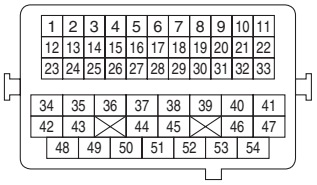

C: B136 HR

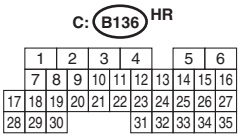

WI-05335

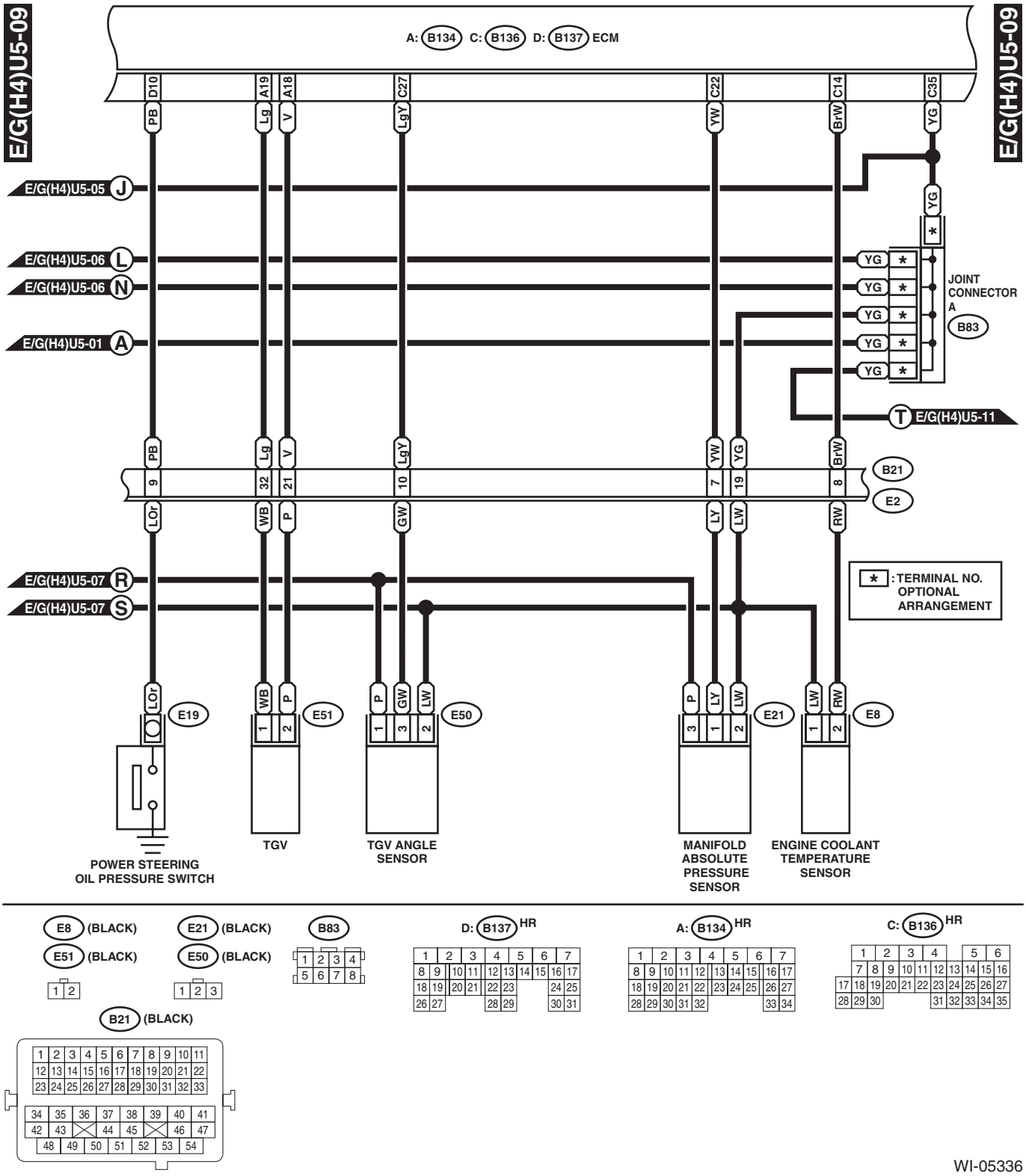
E/G(H4)U5-09
E/G(H4)U5-09
A: B134 C: B136 D: B137 ECM
D10
A19
A18
C27
C22
C14
C35
PB
Lg
V
LgY
YW
Br•W
YG
E/G(H4)U5-05 J
E/G(H4)U5-06 L
E/G(H4)U5-06 N
E/G(H4)U5-01 A
JOINT CONNECTOR A
B83
T E/G(H4)U5-11
9
32
21
10
7
19
8
B21
E2
LOr
WB
P
GW
LY
LW
RW
E/G(H4)U5-07 R
E/G(H4)U5-07 S
* : TERMINAL NO. OPTIONAL ARRANGEMENT
E19
E51
E50
E21
E8
POWER STEERING OIL PRESSURE SWITCH
TGV
TGV ANGLE SENSOR
MANIFOLD ABSOLUTE PRESSURE SENSOR
ENGINE COOLANT TEMPERATURE SENSOR
E8 (BLACK)
E51 (BLACK)
E21 (BLACK)
E50 (BLACK)
B83
D: B137 HR
A: B134 HR
C: B136 HR
B21 (BLACK)

WI-05336

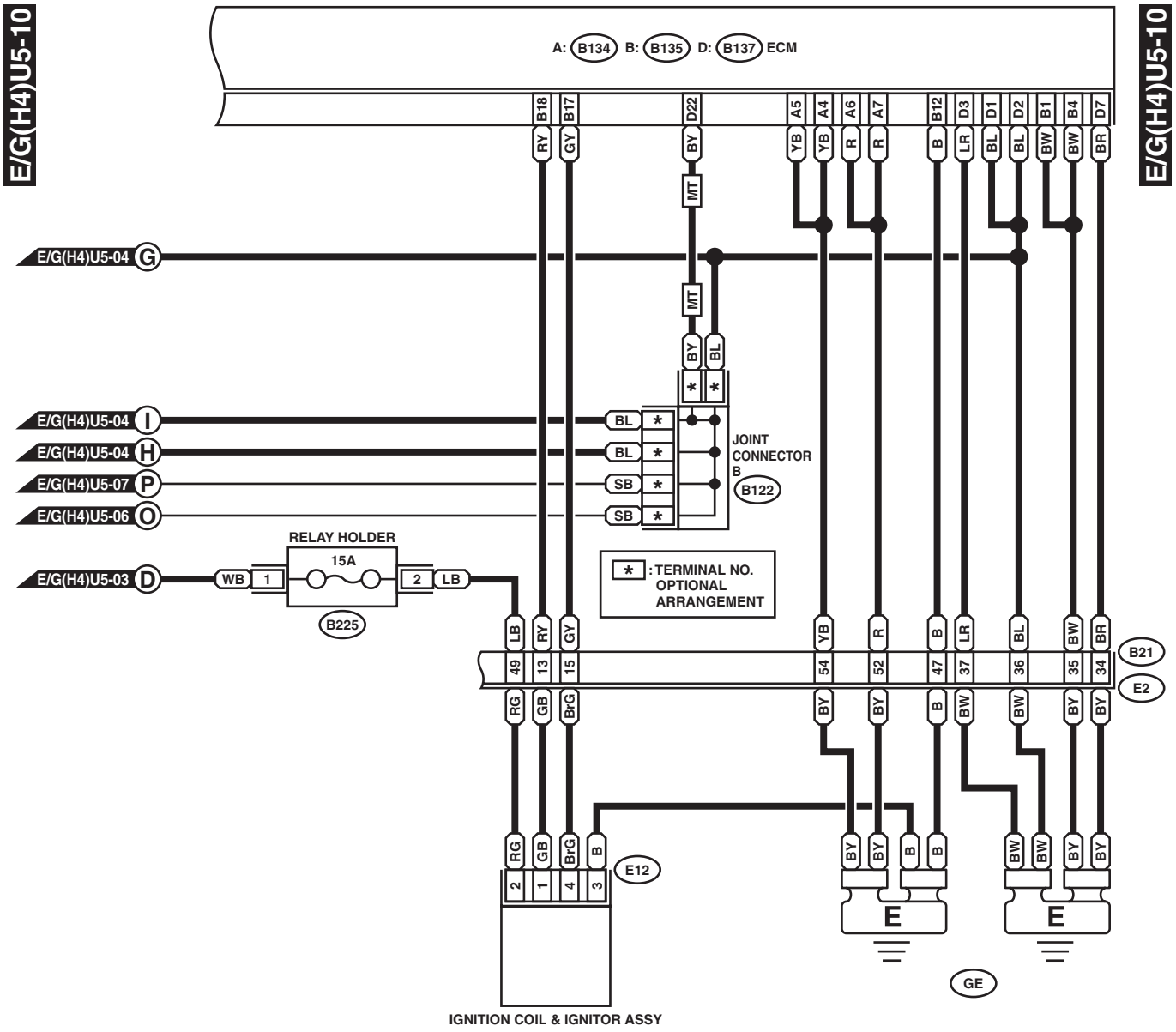
E/G(H4)U5-10
E/G(H4)U5-10
A: B134 B: B135 D: B137 ECM
B18 B17 D22 A5 A4 A6 A7 B12 D3 D1 D2 B1 B4 D7
RY GY BY YB YB R R B LR BL BL BW BW BR
MT
MT
E/G(H4)U5-04 G
BY BL
E/G(H4)U5-04 I
E/G(H4)U5-04 H
E/G(H4)U5-07 P
E/G(H4)U5-06 O
BL
BL
SB
SB
JOINT CONNECTOR B
B122
RELAY HOLDER
15A
E/G(H4)U5-03 D
WB 1 2 LB
B225
* : TERMINAL NO. OPTIONAL ARRANGEMENT
LB RY GY YB R B LR BL BW BR
49 13 15 54 52 47 37 36 35 34
B21
E2
RG GB BrG BY BY B BW BW BY BY
RG GB BrG B
2 1 4 3
E12
BY BY B B BW BW BY BY
E
E
GE
IGNITION COIL & IGNITOR ASSY

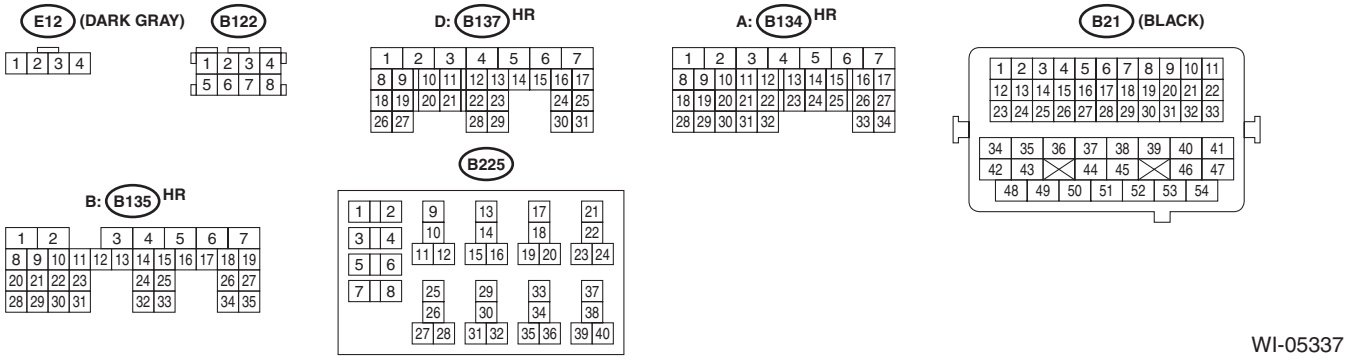
E12 (DARK GRAY)
B122
D: B137 HR
A: B134 HR
B21 (BLACK)
B: B135 HR
B225

WI-05337

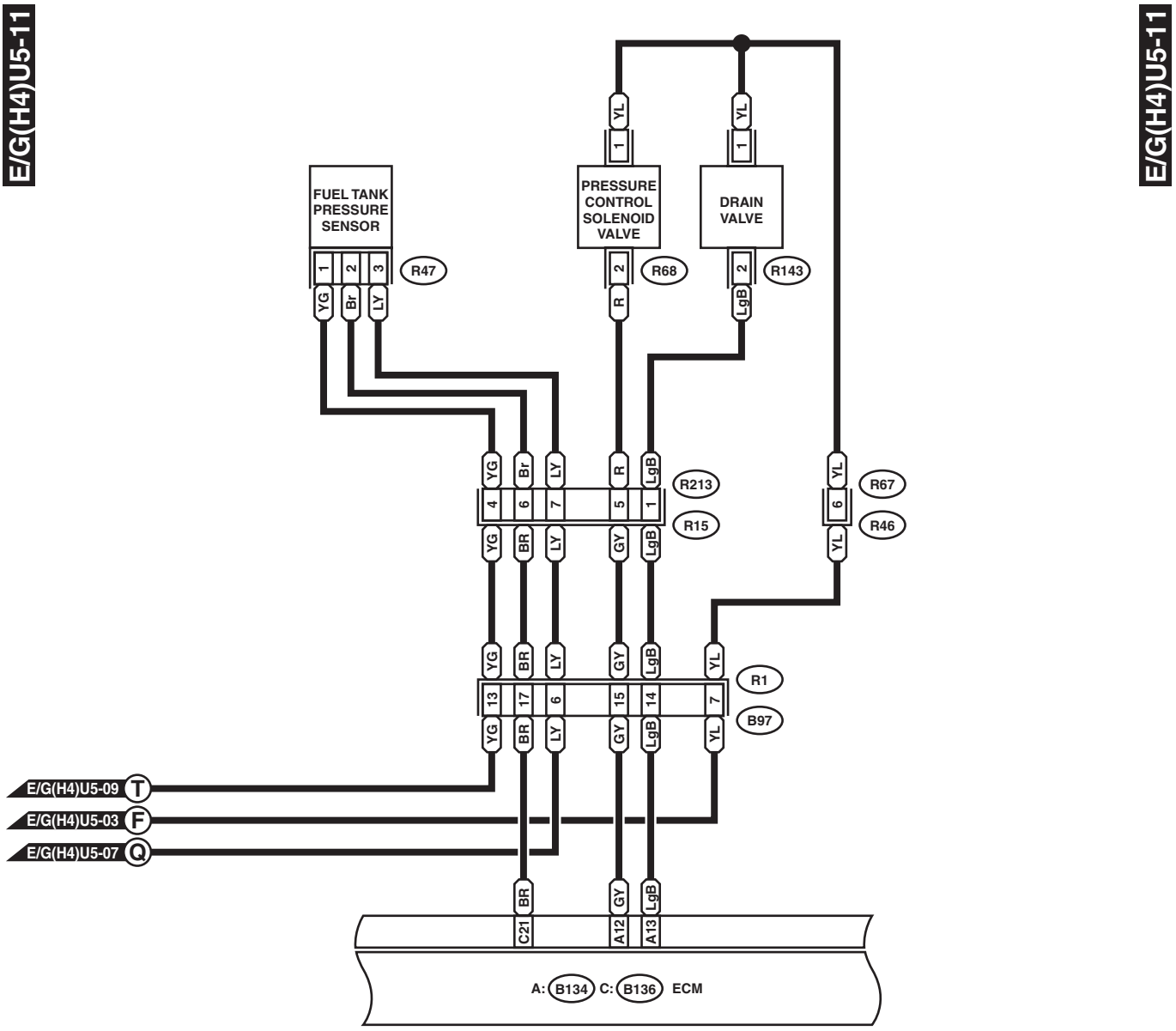
E/G(H4)U5-11
E/G(H4)U5-11
FUEL TANK PRESSURE SENSOR
PRESSURE CONTROL SOLENOID VALVE
DRAIN VALVE
R47
R68
R143
R213
R15
R67
R46
R1
B97
E/G(H4)U5-09 T
E/G(H4)U5-03 F
E/G(H4)U5-07 Q
A: B134 C: B136 ECM

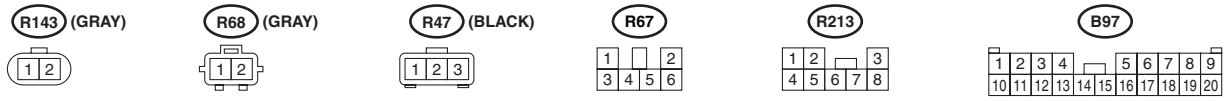
R143 (GRAY)
R68 (GRAY)
R47 (BLACK)
R67
R213
B97

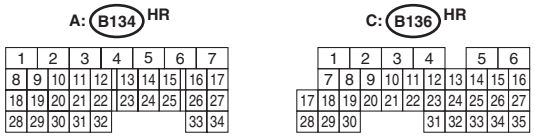
A: B134 HR
C: B136 HR

WI-09682

3. 3.0 L MODEL

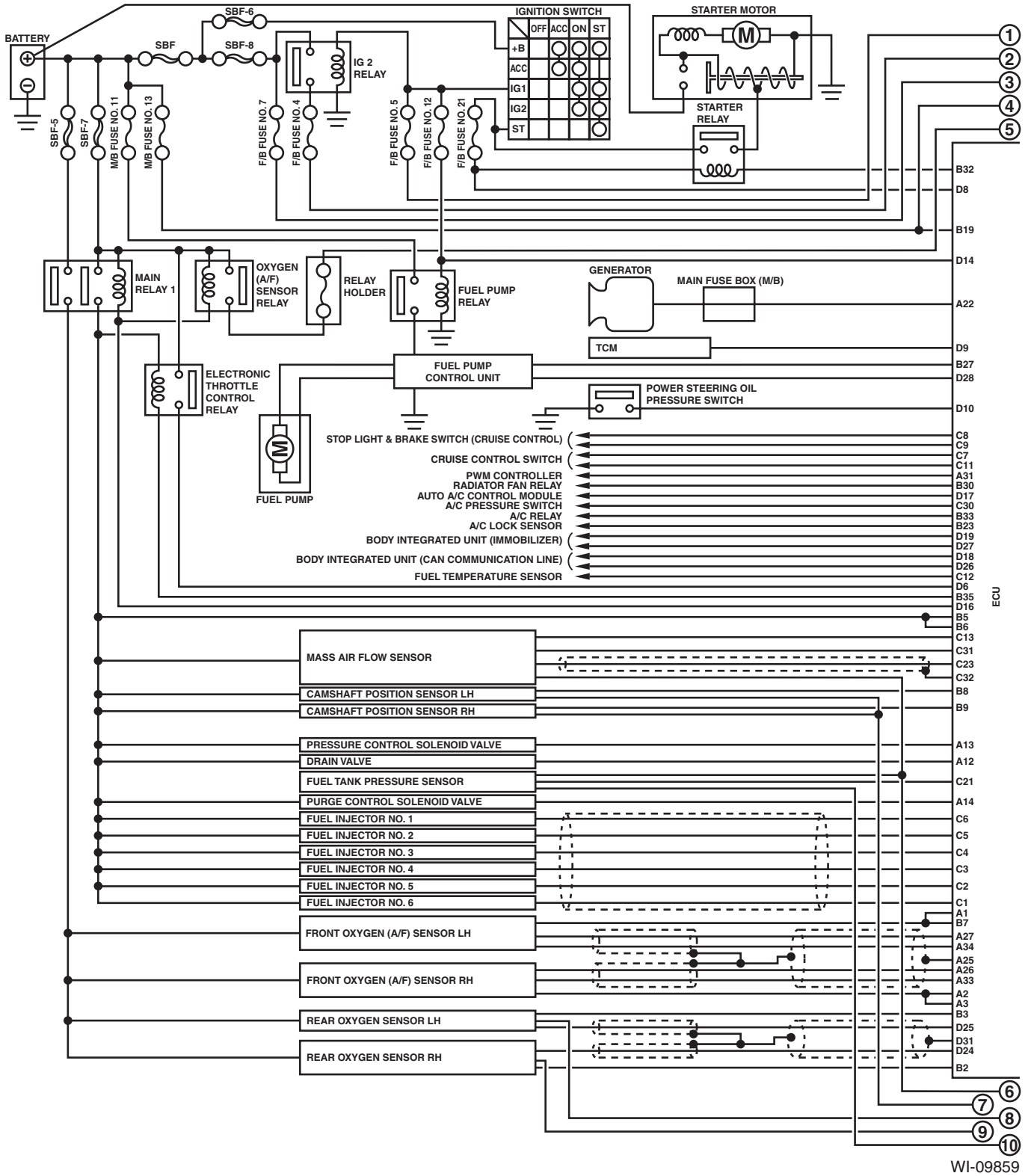

WI-09859

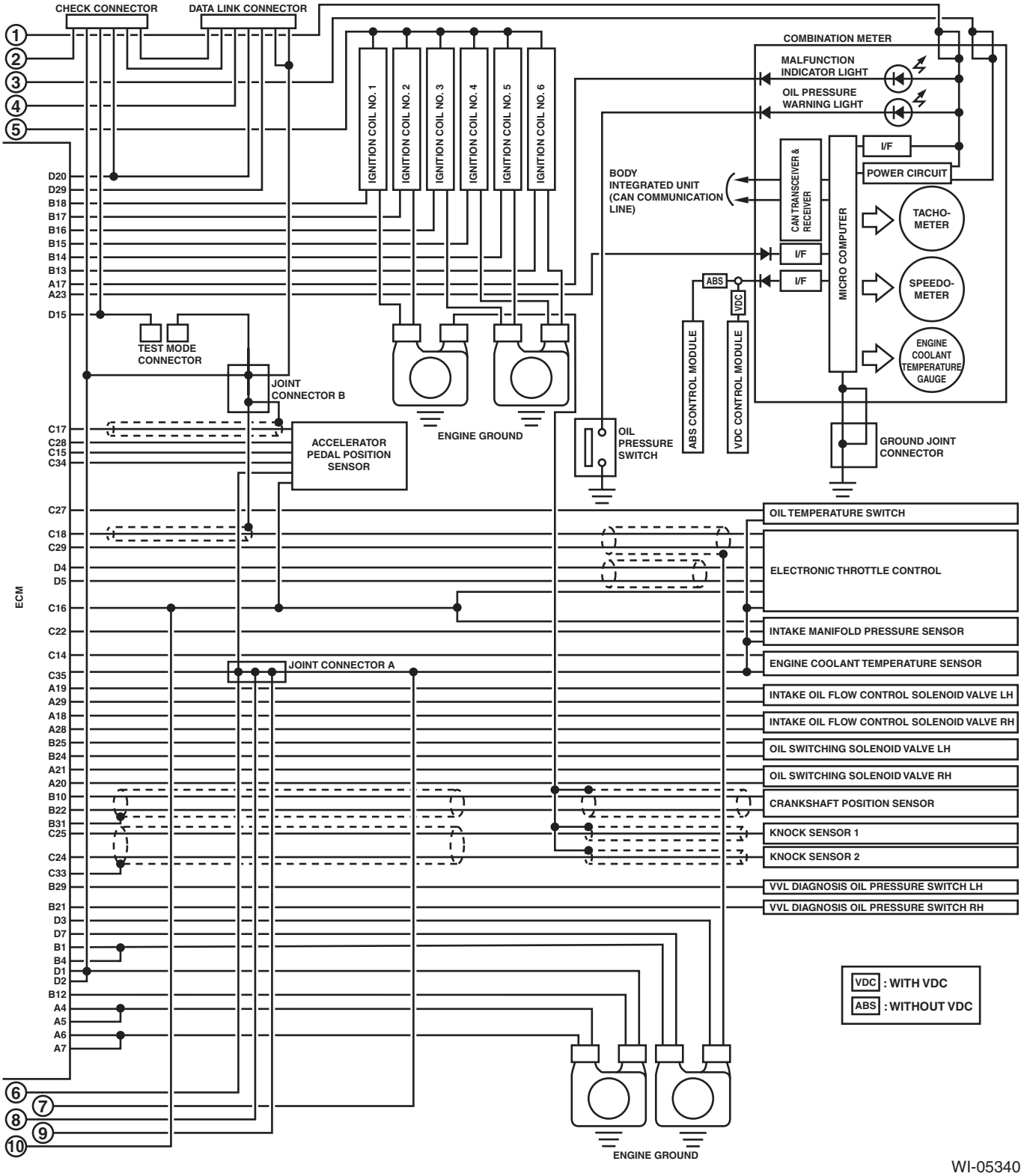
CHECK CONNECTOR
DATA LINK CONNECTOR
COMBINATION METER
MALFUNCTION INDICATOR LIGHT
OIL PRESSURE WARNING LIGHT
IGNITION COIL NO. 1
IGNITION COIL NO. 2
IGNITION COIL NO. 3
IGNITION COIL NO. 4
IGNITION COIL NO. 5
IGNITION COIL NO. 6
BODY INTEGRATED UNIT (CAN COMMUNICATION LINE)
CAN TRANSCEIVER & RECEIVER
MICRO COMPUTER
I/F
POWER CIRCUIT
TACHO-METER
SPEEDO-METER
ENGINE COOLANT TEMPERATURE GAUGE
ABS
VDC
ABS CONTROL MODULE
VDC CONTROL MODULE
TEST MODE CONNECTOR
JOINT CONNECTOR B
ENGINE GROUND
OIL PRESSURE SWITCH
GROUND JOINT CONNECTOR
ACCELERATOR PEDAL POSITION SENSOR
JOINT CONNECTOR A
ECM
OIL TEMPERATURE SWITCH
ELECTRONIC THROTTLE CONTROL
INTAKE MANIFOLD PRESSURE SENSOR
ENGINE COOLANT TEMPERATURE SENSOR
INTAKE OIL FLOW CONTROL SOLENOID VALVE LH
INTAKE OIL FLOW CONTROL SOLENOID VALVE RH
OIL SWITCHING SOLENOID VALVE LH
OIL SWITCHING SOLENOID VALVE RH
CRANKSHAFT POSITION SENSOR
KNOCK SENSOR 1
KNOCK SENSOR 2
VVL DIAGNOSIS OIL PRESSURE SWITCH LH
VVL DIAGNOSIS OIL PRESSURE SWITCH RH
VDC : WITH VDC
ABS : WITHOUT VDC
ENGINE GROUND
WI-05340

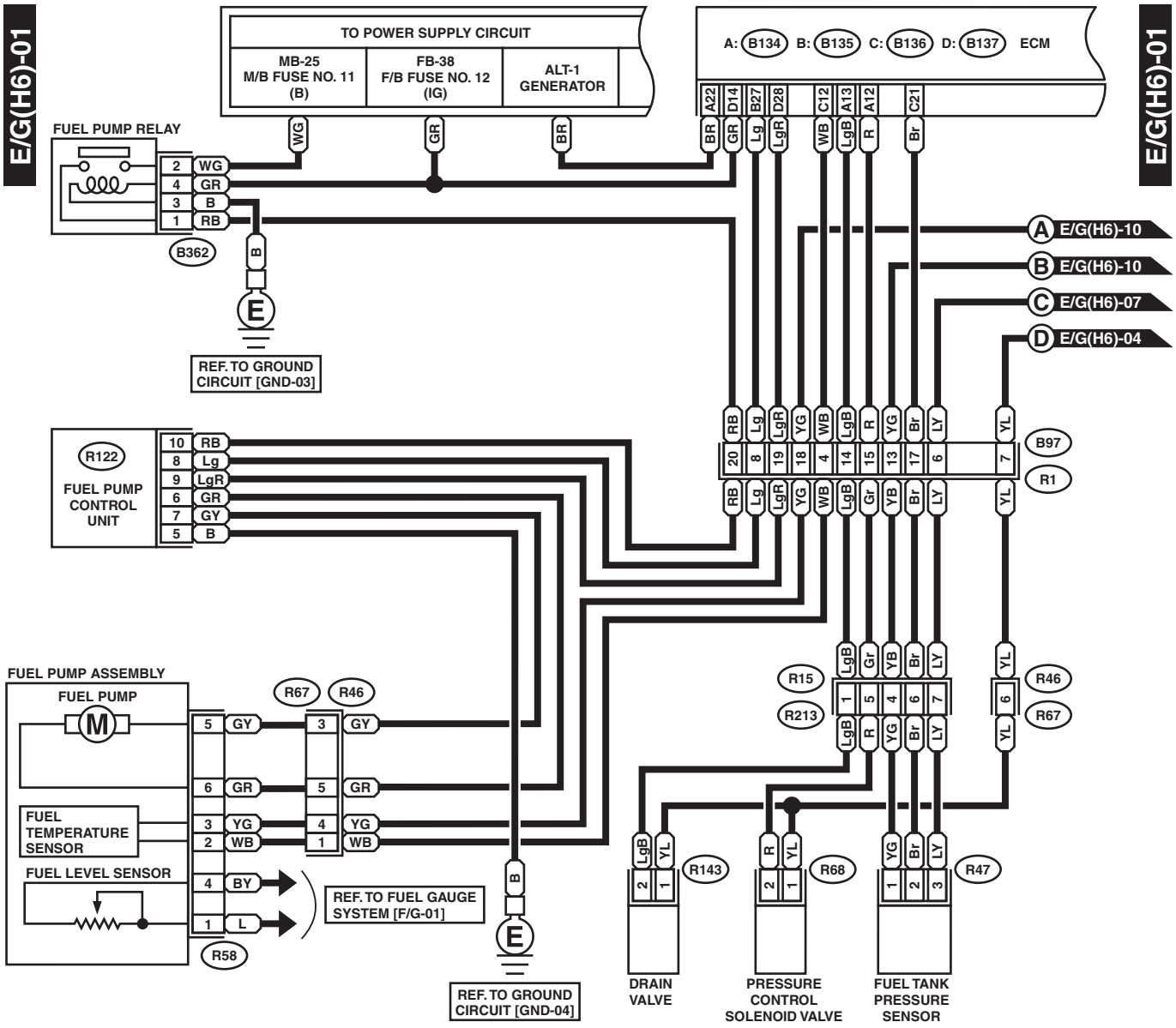
E/G(H6)-01
TO POWER SUPPLY CIRCUIT
MB-25 M/B FUSE NO. 11 (B)
FB-38 F/B FUSE NO. 12 (IG)
ALT-1 GENERATOR
A: B134 B: B135 C: B136 D: B137 ECM
FUEL PUMP RELAY
WG
GR
BR
B362
REF. TO GROUND CIRCUIT [GND-03]
A E/G(H6)-10
B E/G(H6)-10
C E/G(H6)-07
D E/G(H6)-04
R122
FUEL PUMP CONTROL UNIT
B97
R1
FUEL PUMP ASSEMBLY
FUEL PUMP
FUEL TEMPERATURE SENSOR
FUEL LEVEL SENSOR
R67
R46
R58
REF. TO FUEL GAUGE SYSTEM [F/G-01]
REF. TO GROUND CIRCUIT [GND-04]
R15
R213
R143
R68
R47
DRAIN VALVE
PRESSURE CONTROL SOLENOID VALVE
FUEL TANK PRESSURE SENSOR

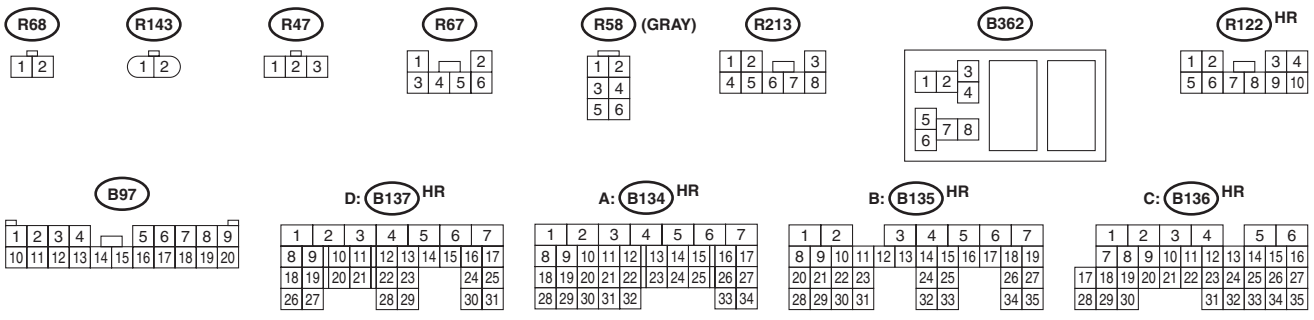
R68
R143
R47
R67
R58 (GRAY)
R213
B362
R122 HR
B97
D: B137 HR
A: B134 HR
B: B135 HR
C: B136 HR

WI-09683

E/G(H6)-02

E/G(H6)-02

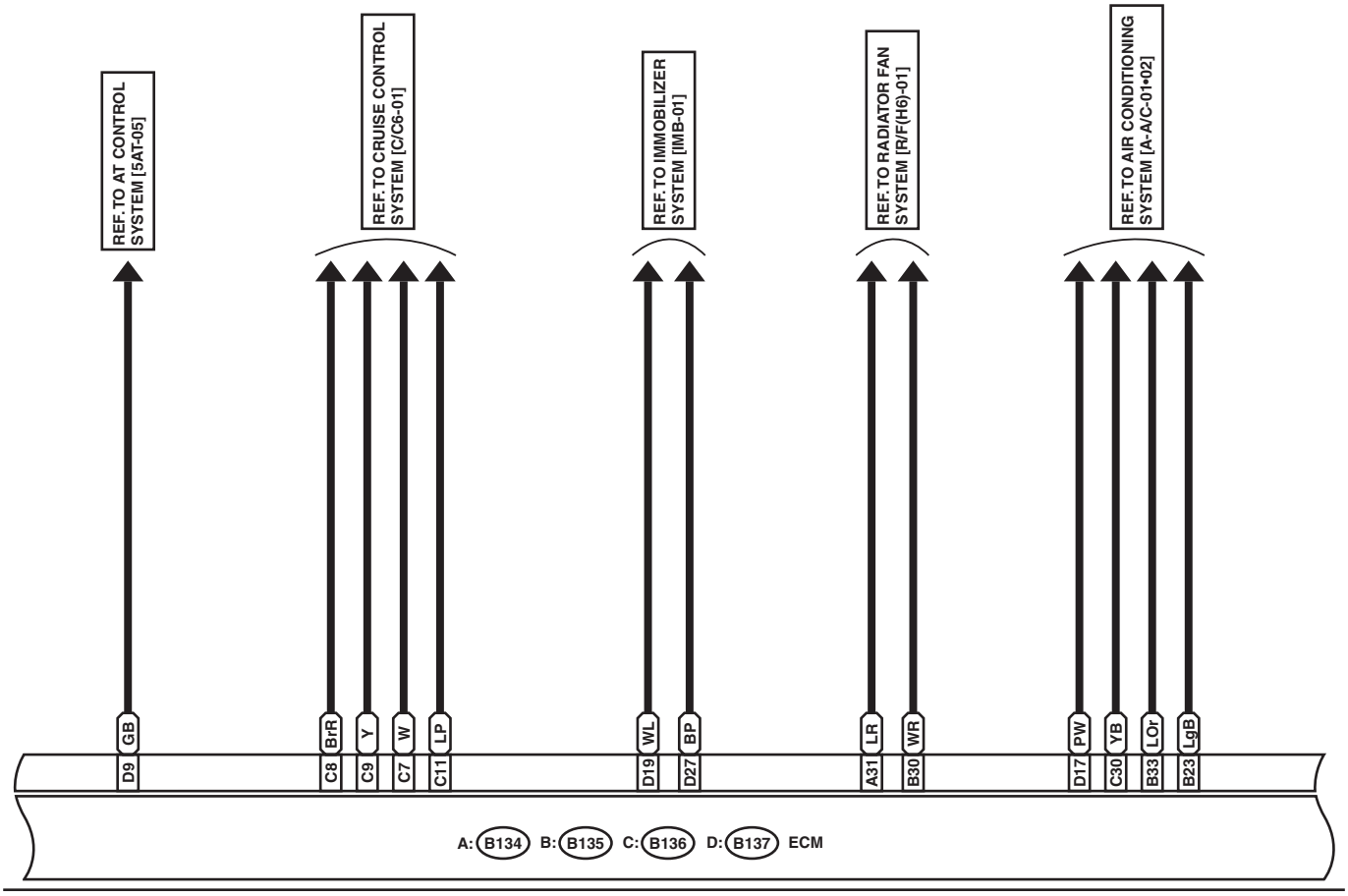

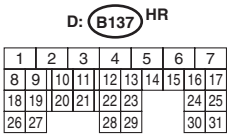

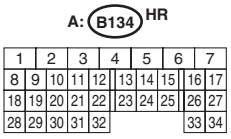

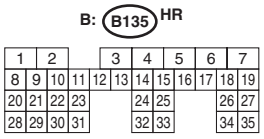

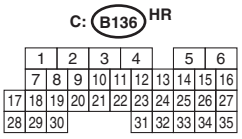

WI-05342

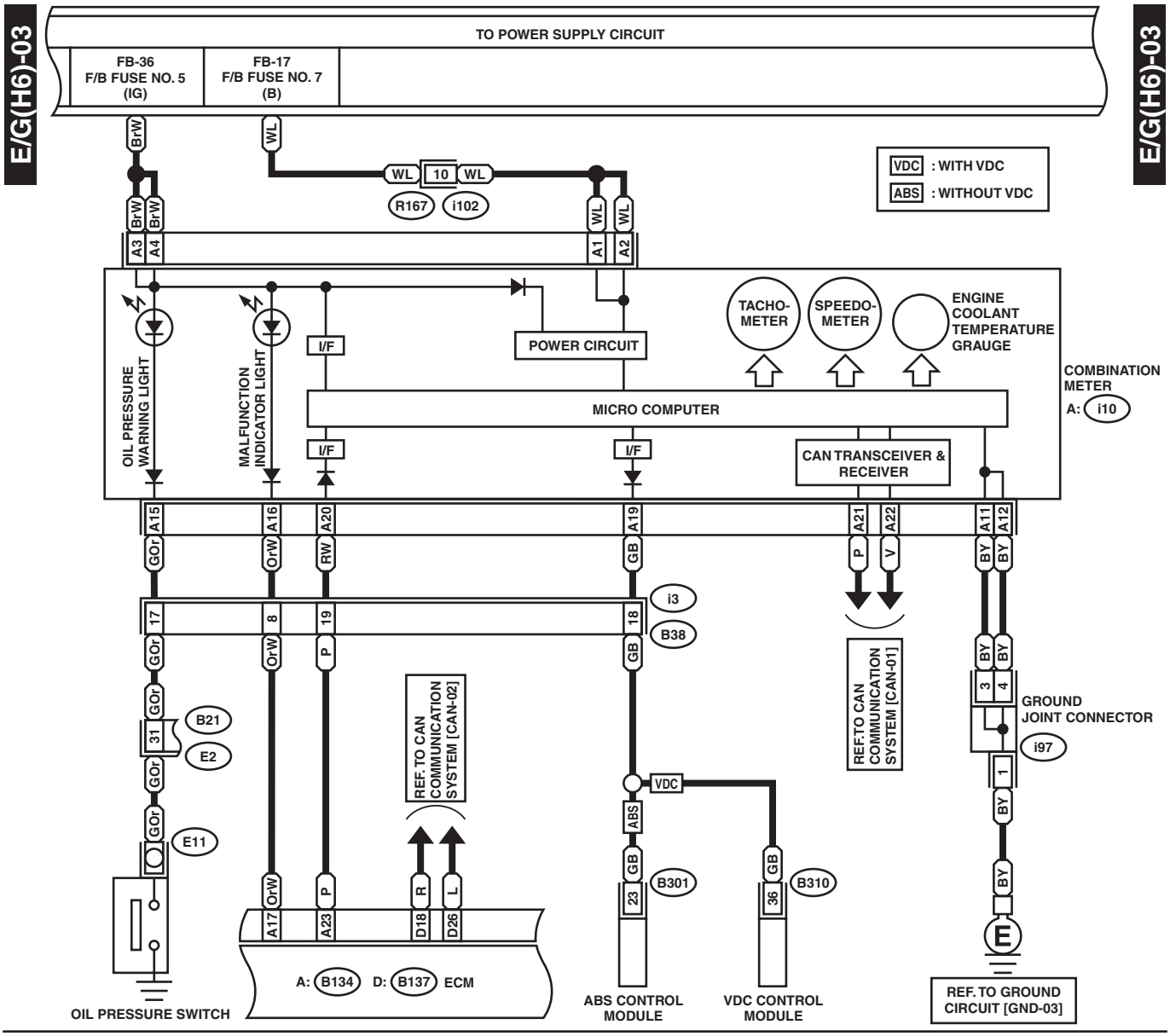
E/G(H6)-03
E/G(H6)-03
TO POWER SUPPLY CIRCUIT
FB-36
F/B FUSE NO. 5
(IG)
FB-17
F/B FUSE NO. 7
(B)
VDC : WITH VDC
ABS : WITHOUT VDC
WL
10
R167
i102
BrW
A3
A4
A1
A2
TACHO-METER
SPEEDO-METER
ENGINE COOLANT TEMPERATURE GRAUGE
COMBINATION METER
A: i10
OIL PRESSURE WARNING LIGHT
MALFUNCTION INDICATOR LIGHT
I/F
POWER CIRCUIT
MICRO COMPUTER
CAN TRANSCEIVER & RECEIVER
A15
A16
A20
A19
A21
A22
A11
A12
GOr
OrW
RW
GB
P
V
BY
i3
B38
17
8
19
18
3
4
GROUND JOINT CONNECTOR
i97
B21
E2
E11
REF. TO CAN COMMUNICATION SYSTEM [CAN-01]
REF. TO CAN COMMUNICATION SYSTEM [CAN-02]
VDC
ABS
23
B301
36
B310
R
L
D18
D26
A17
A23
A: B134 D: B137 ECM
ABS CONTROL MODULE
VDC CONTROL MODULE
OIL PRESSURE SWITCH
REF. TO GROUND CIRCUIT [GND-03]

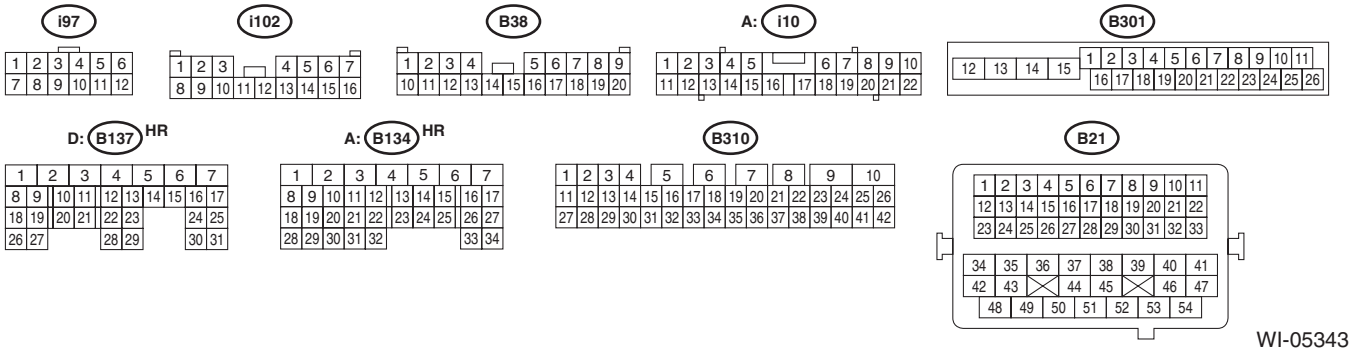
i97
i102
B38
A: i10
B301
D: B137 HR
A: B134 HR
B310
B21

WI-05343

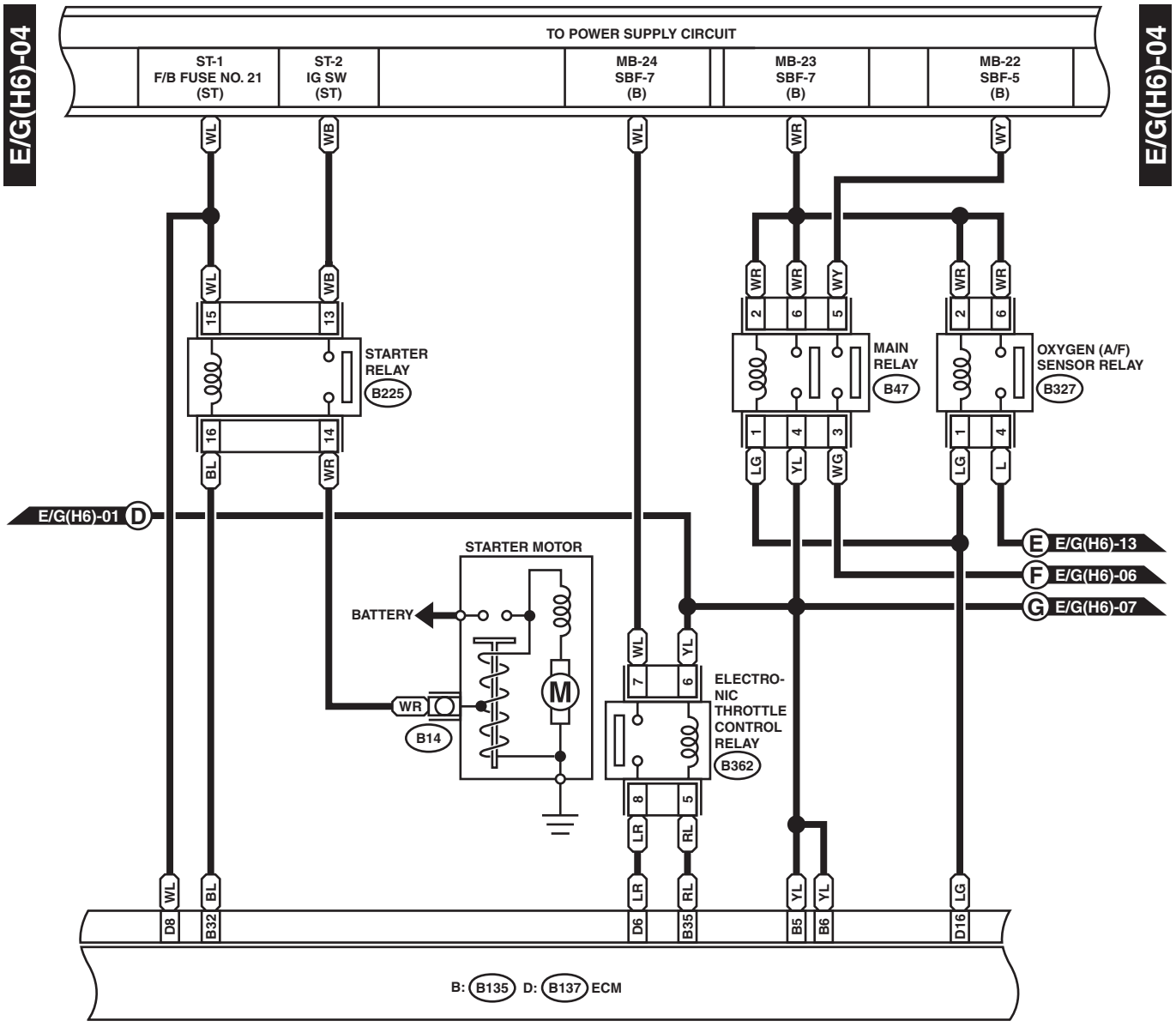
E/G(H6)-04
E/G(H6)-04
TO POWER SUPPLY CIRCUIT
ST-1
F/B FUSE NO. 21
(ST)
ST-2
IG SW
(ST)
MB-24
SBF-7
(B)
MB-23
SBF-7
(B)
MB-22
SBF-5
(B)
STARTER
RELAY
B225
MAIN
RELAY
B47
OXYGEN (A/F)
SENSOR RELAY
B327
E/G(H6)-01 D
E E/G(H6)-13
F E/G(H6)-06
G E/G(H6)-07
STARTER MOTOR
BATTERY
B14
ELECTRO-
NIC
THROTTLE
CONTROL
RELAY
B362
B: B135 D: B137 ECM

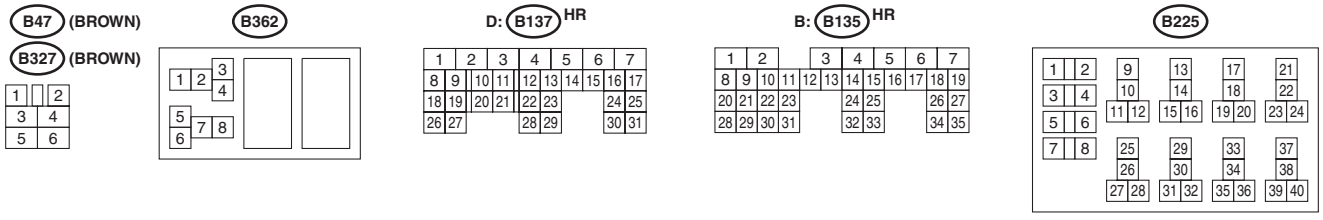
B47 (BROWN)
B327 (BROWN)
B362
D: B137 HR
B: B135 HR
B225

WI-05344

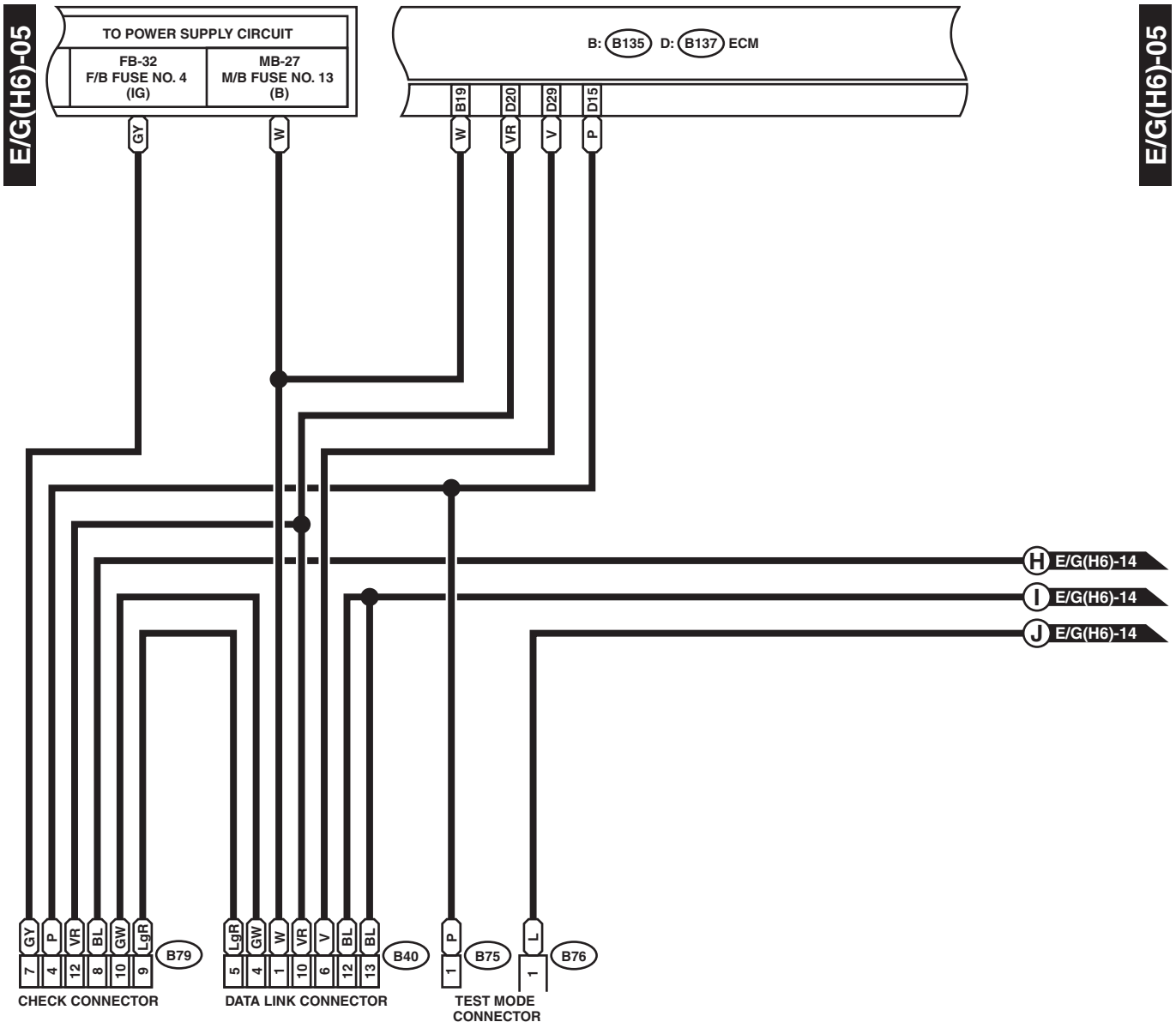
E/G(H6)-05
TO POWER SUPPLY CIRCUIT
FB-32
F/B FUSE NO. 4
(IG)
MB-27
M/B FUSE NO. 13
(B)
B: B135 D: B137 ECM
B19
D20
D29
D15
GY
W
W
VR
V
P
E/G(H6)-05
H E/G(H6)-14
I E/G(H6)-14
J E/G(H6)-14
GY P VR BL GW LgR
7 4 12 8 10 9
B79
CHECK CONNECTOR
LgR GW W VR V BL BL
5 4 1 10 6 12 13
B40
DATA LINK CONNECTOR
P
1
B75
L
1
B76
TEST MODE
CONNECTOR

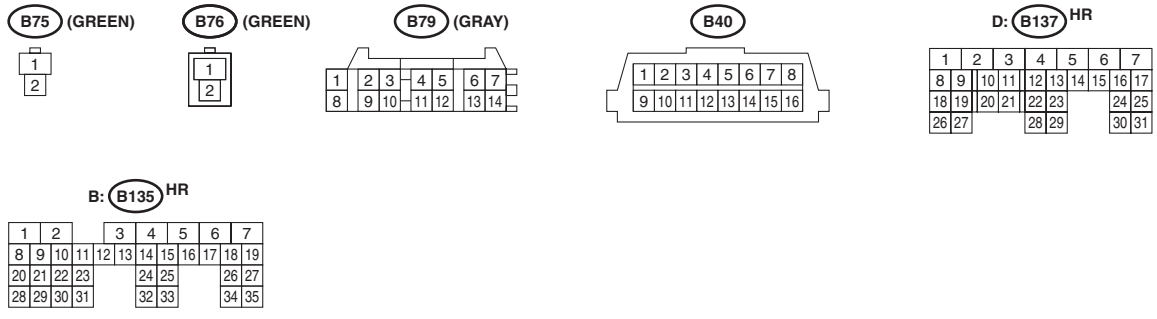
B75 (GREEN)
B76 (GREEN)
B79 (GRAY)
B40
D: B137 HR
B: B135 HR

WI-05345

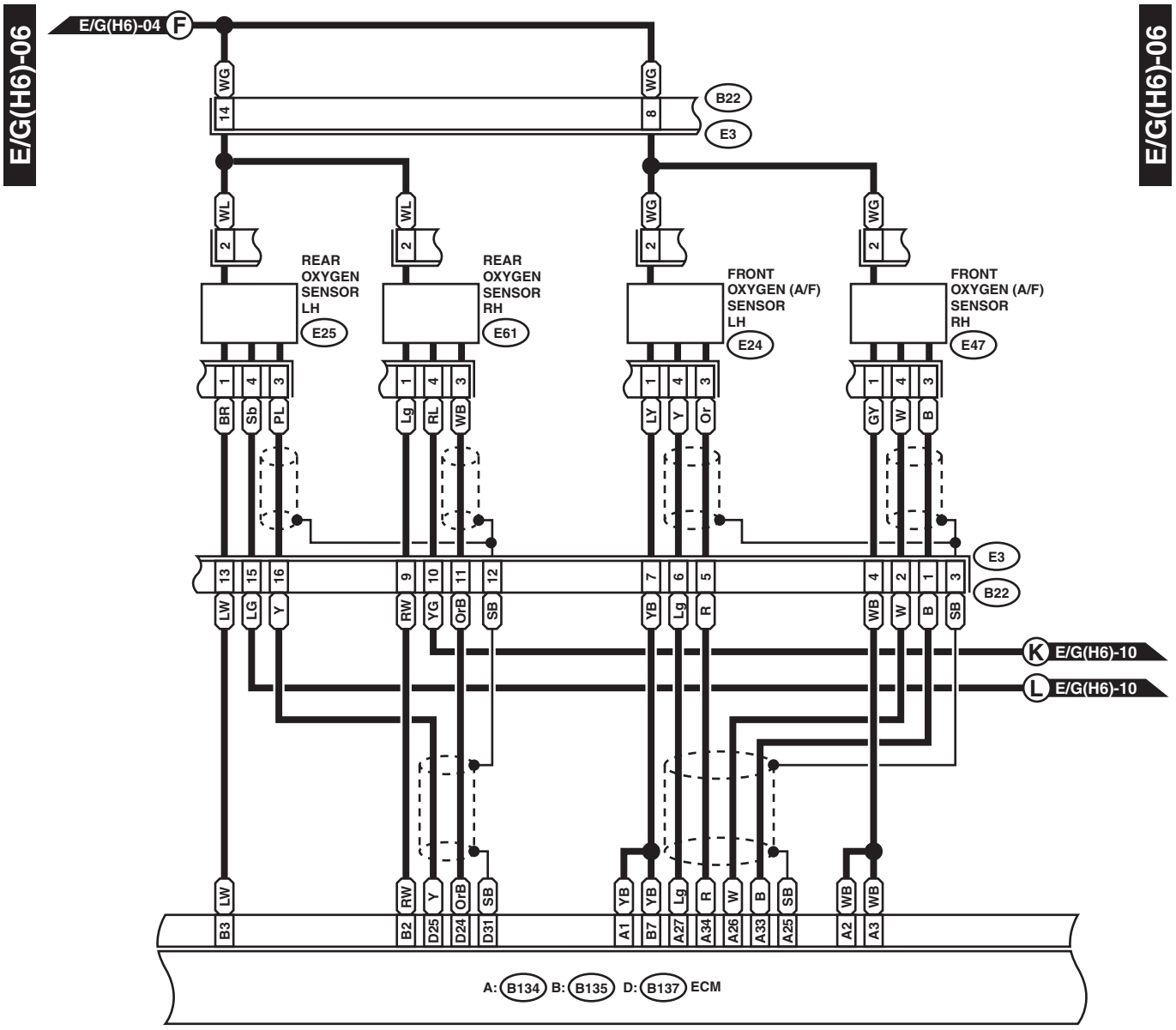

E24 (LIGHT GRAY)
E25 (DARK GRAY)
E47 (LIGHT GRAY)
E61 (DARK GRAY)

B22

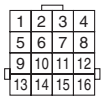

D: B137 HR

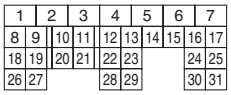

A: B134 HR

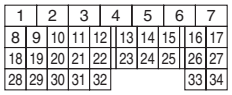

B: B135 HR

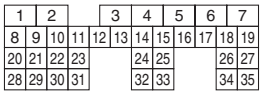

WI-05346

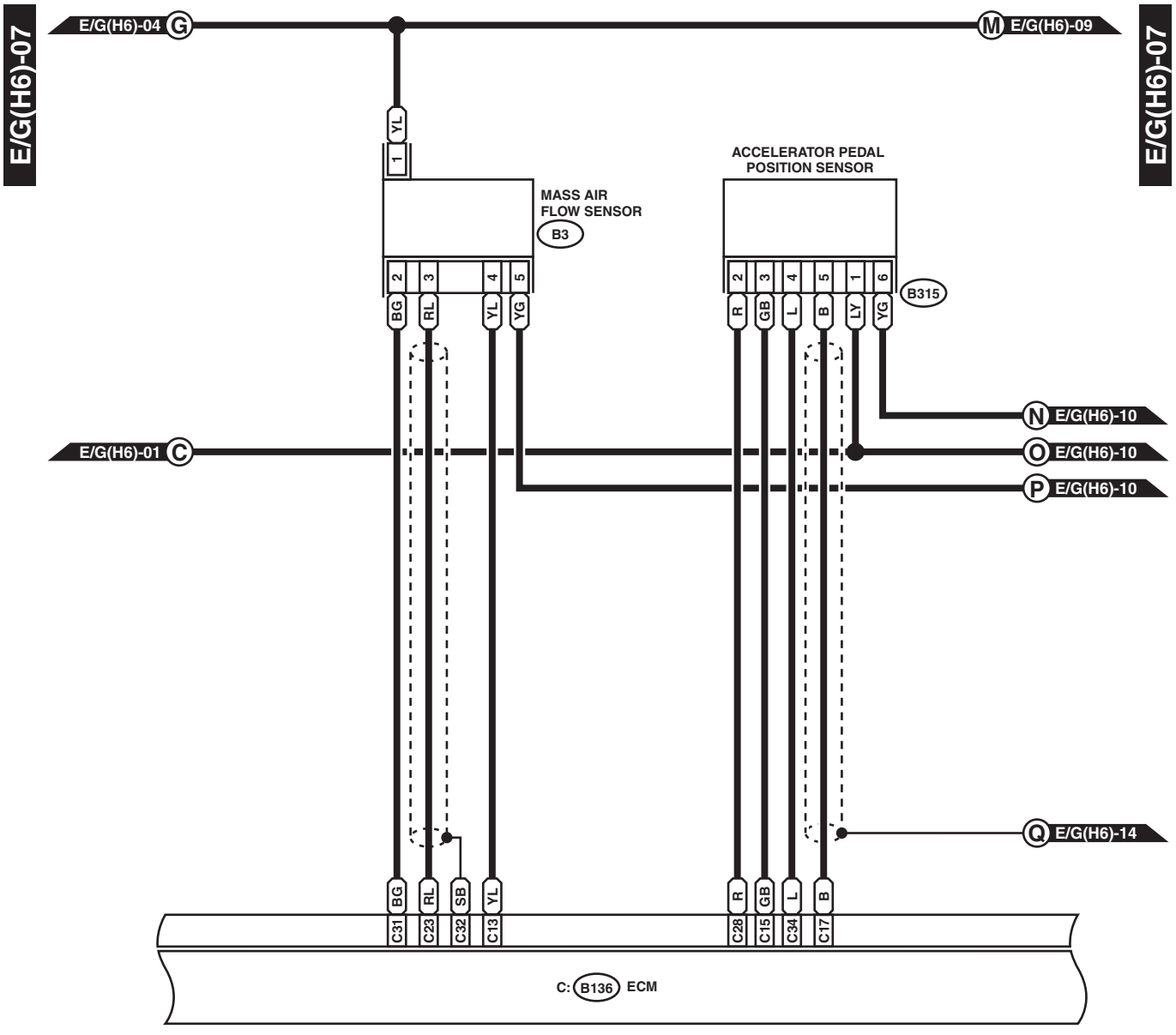

B3 HR

1	2	3	4	5

B315 HR

1	2	3	4	5	6

C: B136 HR

1	2	3	4		5	6
7	8	9	10	11	12	13	14	15	16
17	18	19	20	21	22	23	24	25	26	27
28	29	30			31	32	33	34	35

WI-05347

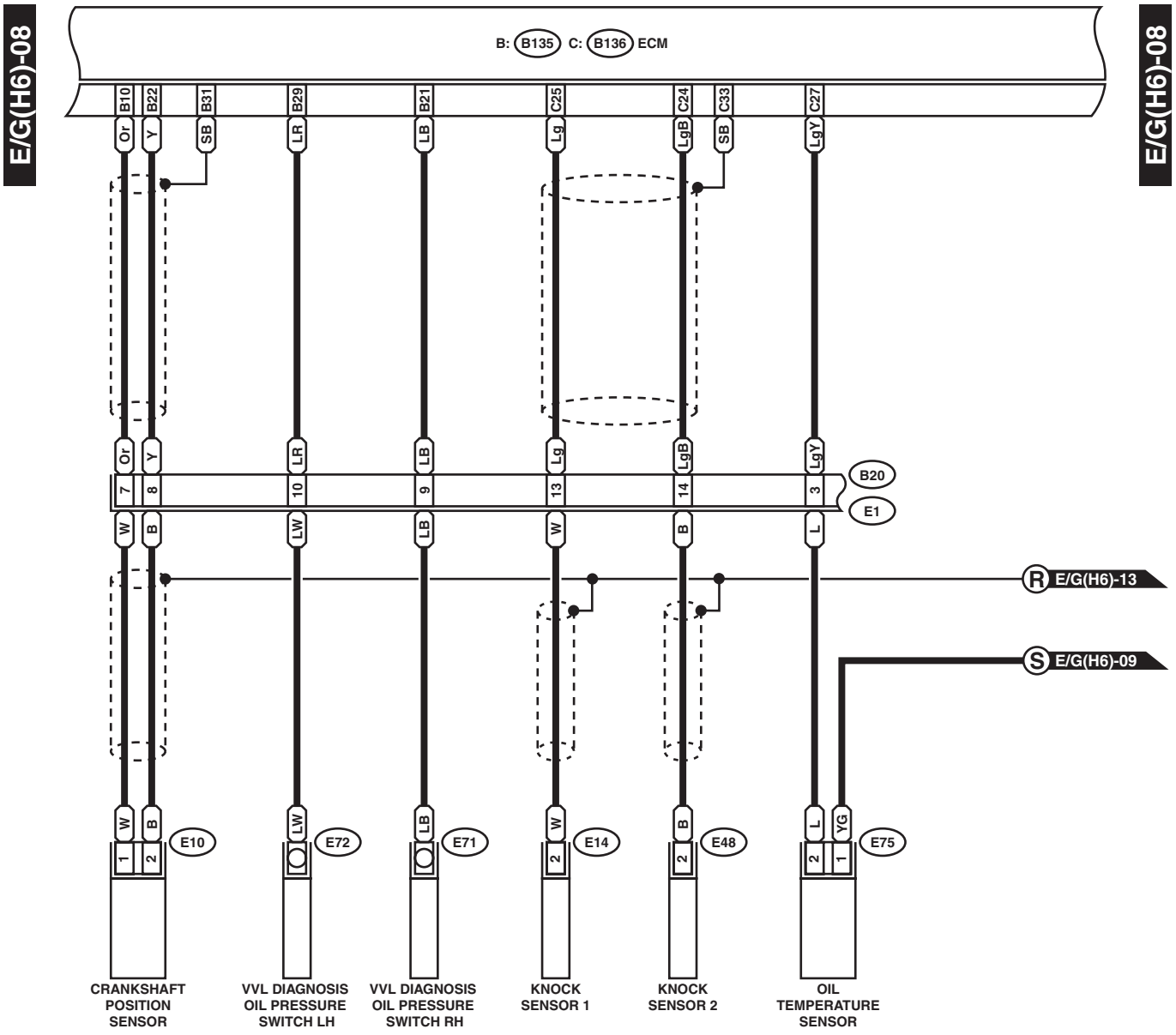

E10 (LIGHT GRAY)
E14 (GREEN)
E48 (GREEN)
E75 (BLACK)

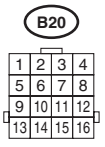

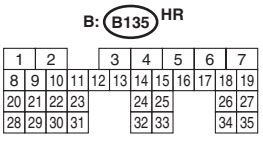

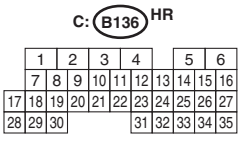

WI-05348

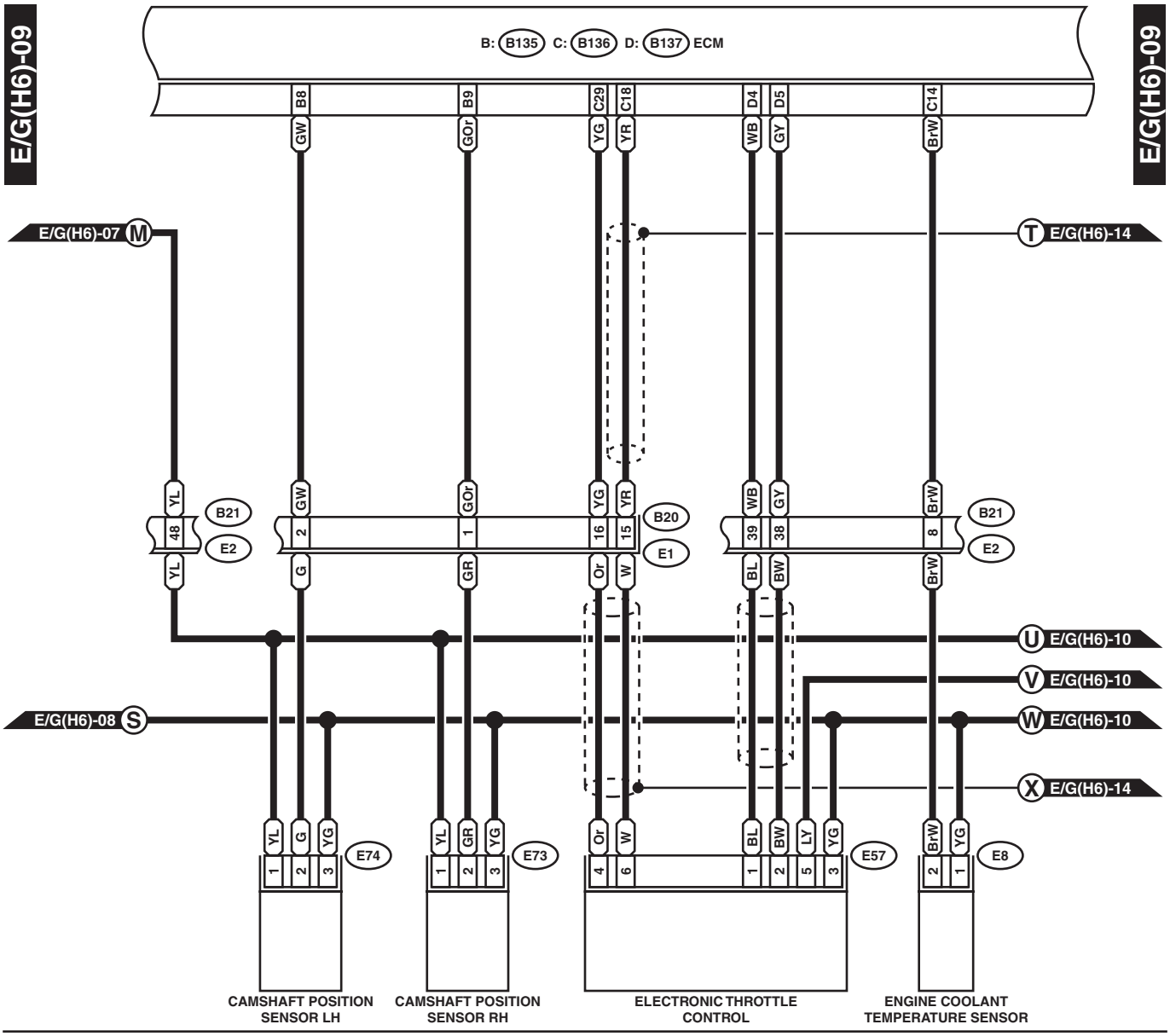
E/G(H6)-09
E/G(H6)-09
B: B135 C: B136 D: B137 ECM
B8 B9 C29 C18 D4 D5 C14
GW GOr YG YR WB GY Br-W
E/G(H6)-07 M
T E/G(H6)-14
YL 48 B21 E2
GW 2
GOr 1
YG 16
YR 15 B20 E1
WB 39
GY 38
Br-W 8 B21 E2
YL G GR Or W BL BW Br-W
U E/G(H6)-10
V E/G(H6)-10
E/G(H6)-08 S
W E/G(H6)-10
X E/G(H6)-14
YL G YG 1 2 3 E74
YL GR YG 1 2 3 E73
Or W 4 6
BL BW LY YG 1 2 5 3 E57
Br-W YG 2 1 E8
CAMSHAFT POSITION SENSOR LH
CAMSHAFT POSITION SENSOR RH
ELECTRONIC THROTTLE CONTROL
ENGINE COOLANT TEMPERATURE SENSOR
E8 (BLACK)
E73 (GRAY)
E74 (GRAY)
E57 (BLACK)
B20
D: B137 HR
B21
B: B135 HR
C: B136 HR

WI-05349

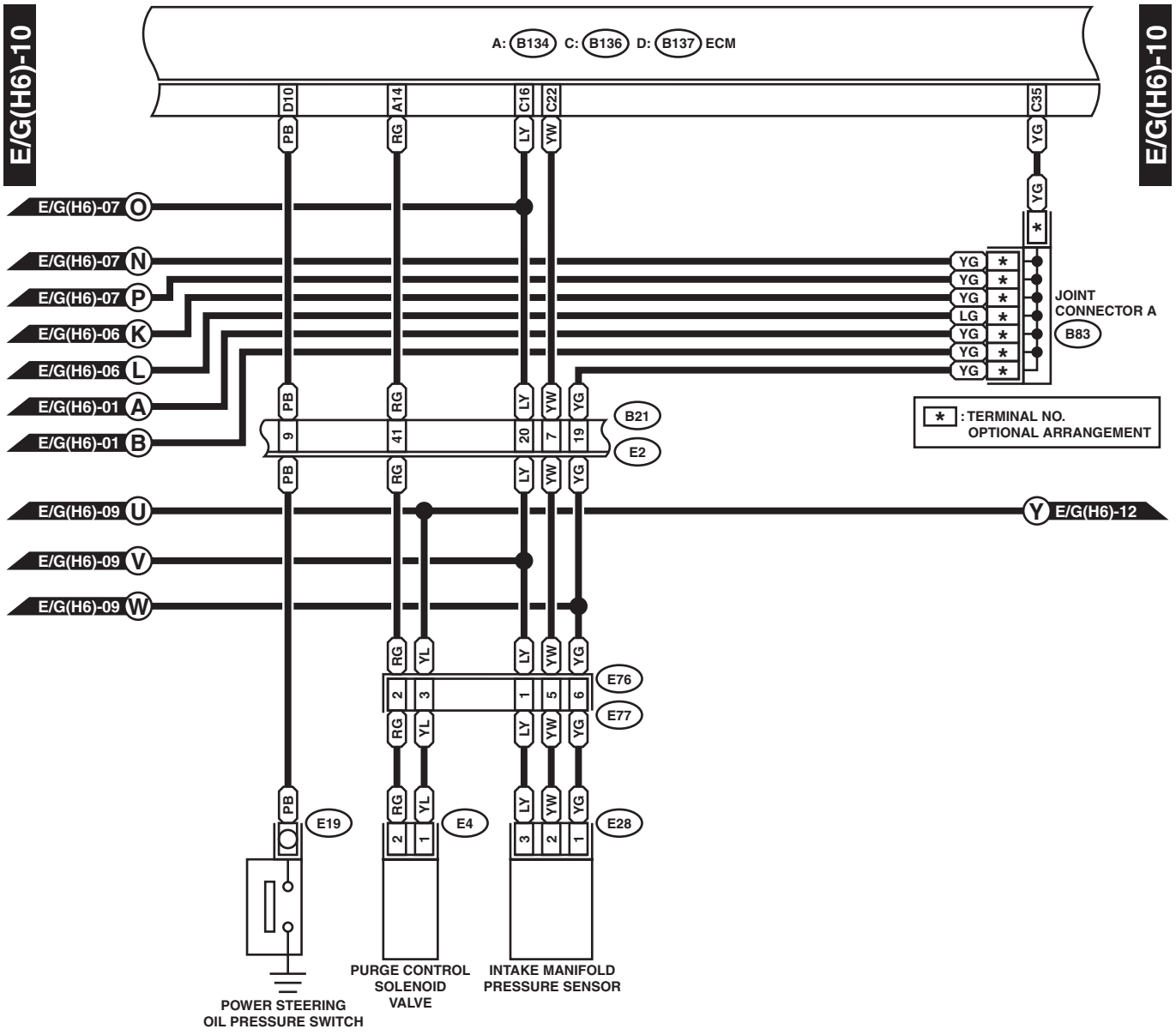
E/G(H6)-10
E/G(H6)-10
A: B134 C: B136 D: B137 ECM
D10
A14
C16
C22
C35
PB
RG
LY
YW
YG
E/G(H6)-07 O
E/G(H6)-07 N
E/G(H6)-07 P
E/G(H6)-06 K
E/G(H6)-06 L
E/G(H6)-01 A
E/G(H6)-01 B
E/G(H6)-09 U
E/G(H6)-09 V
E/G(H6)-09 W
LG
JOINT CONNECTOR A
B83
B21
E2
9
41
20
7
19
: TERMINAL NO. OPTIONAL ARRANGEMENT
Y E/G(H6)-12
E76
E77
YL
E19
E4
E28
2
3
1
5
6
POWER STEERING OIL PRESSURE SWITCH
PURGE CONTROL SOLENOID VALVE
INTAKE MANIFOLD PRESSURE SENSOR

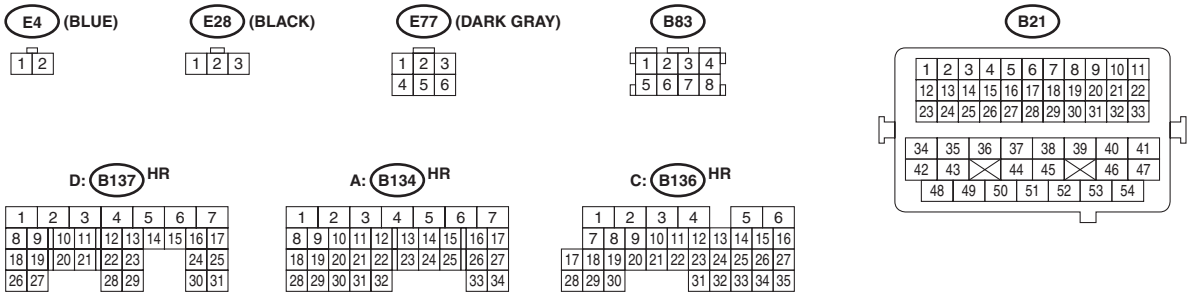
E4 (BLUE)
E28 (BLACK)
E77 (DARK GRAY)
B83
B21
D: B137 HR
A: B134 HR
C: B136 HR

WI-05350

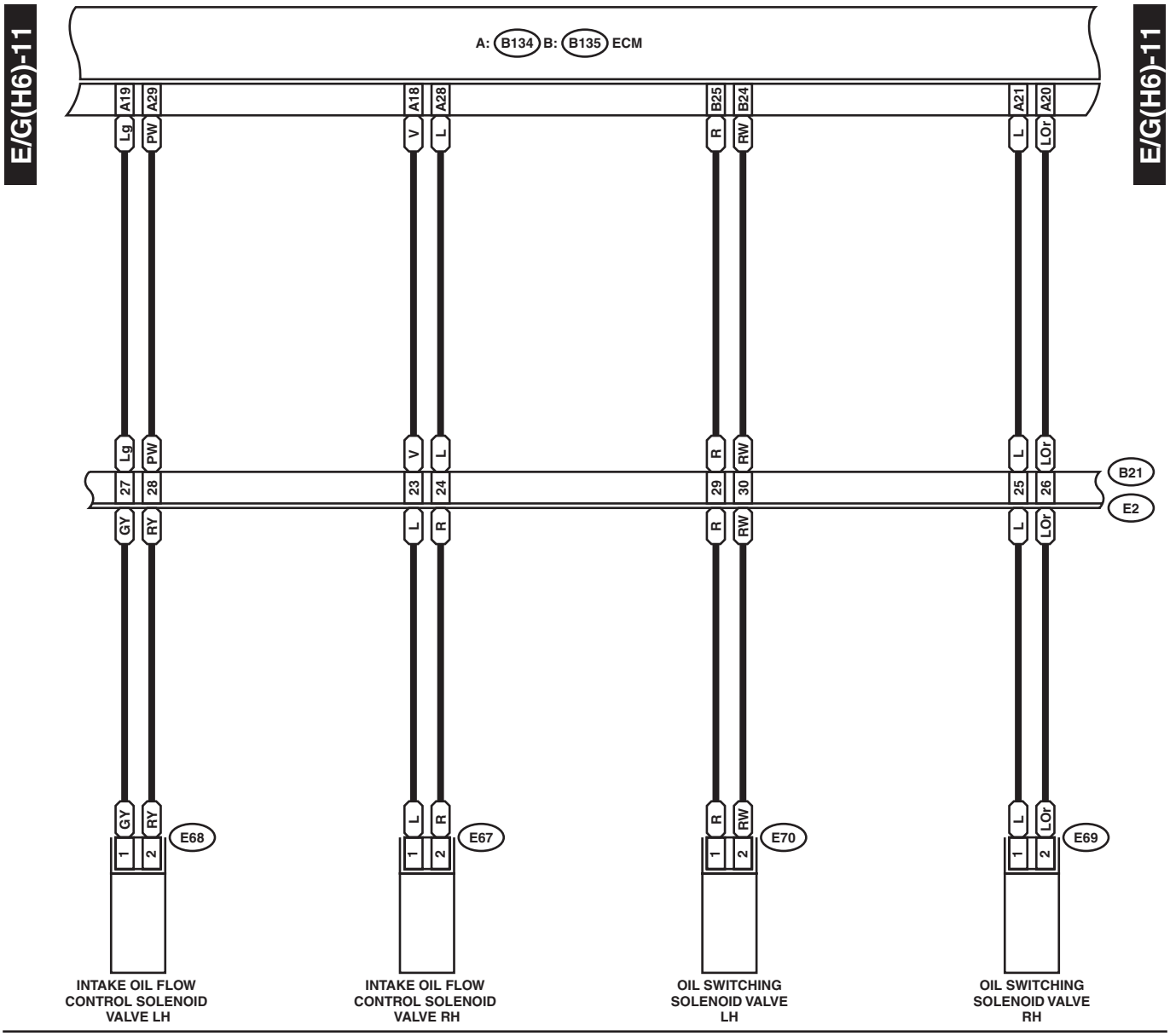
E/G(H6)-11
E/G(H6)-11
A: B134 B: B135 ECM
A19
A29
A18
A28
B25
B24
A21
A20
Lg
PW
V
L
R
RW
L
LOr
27
28
23
24
29
30
25
26
B21
E2
GY
RY
L
R
R
RW
L
LOr
E68
E67
E70
E69
1
2
INTAKE OIL FLOW CONTROL SOLENOID VALVE LH
INTAKE OIL FLOW CONTROL SOLENOID VALVE RH
OIL SWITCHING SOLENOID VALVE LH
OIL SWITCHING SOLENOID VALVE RH

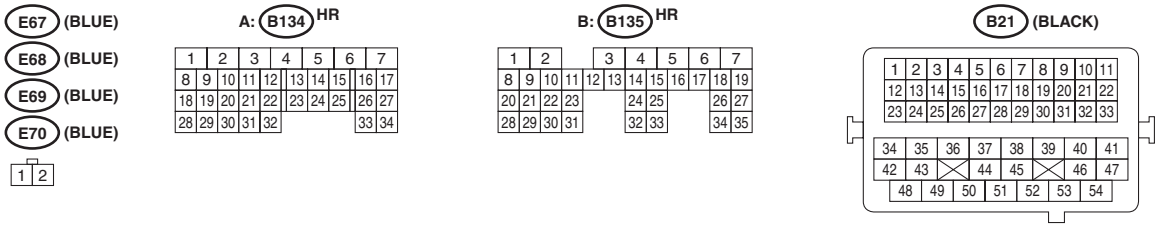
E67 (BLUE)
E68 (BLUE)
E69 (BLUE)
E70 (BLUE)
A: B134 HR
B: B135 HR
B21 (BLACK)

WI-05351

E/G(H6)-12

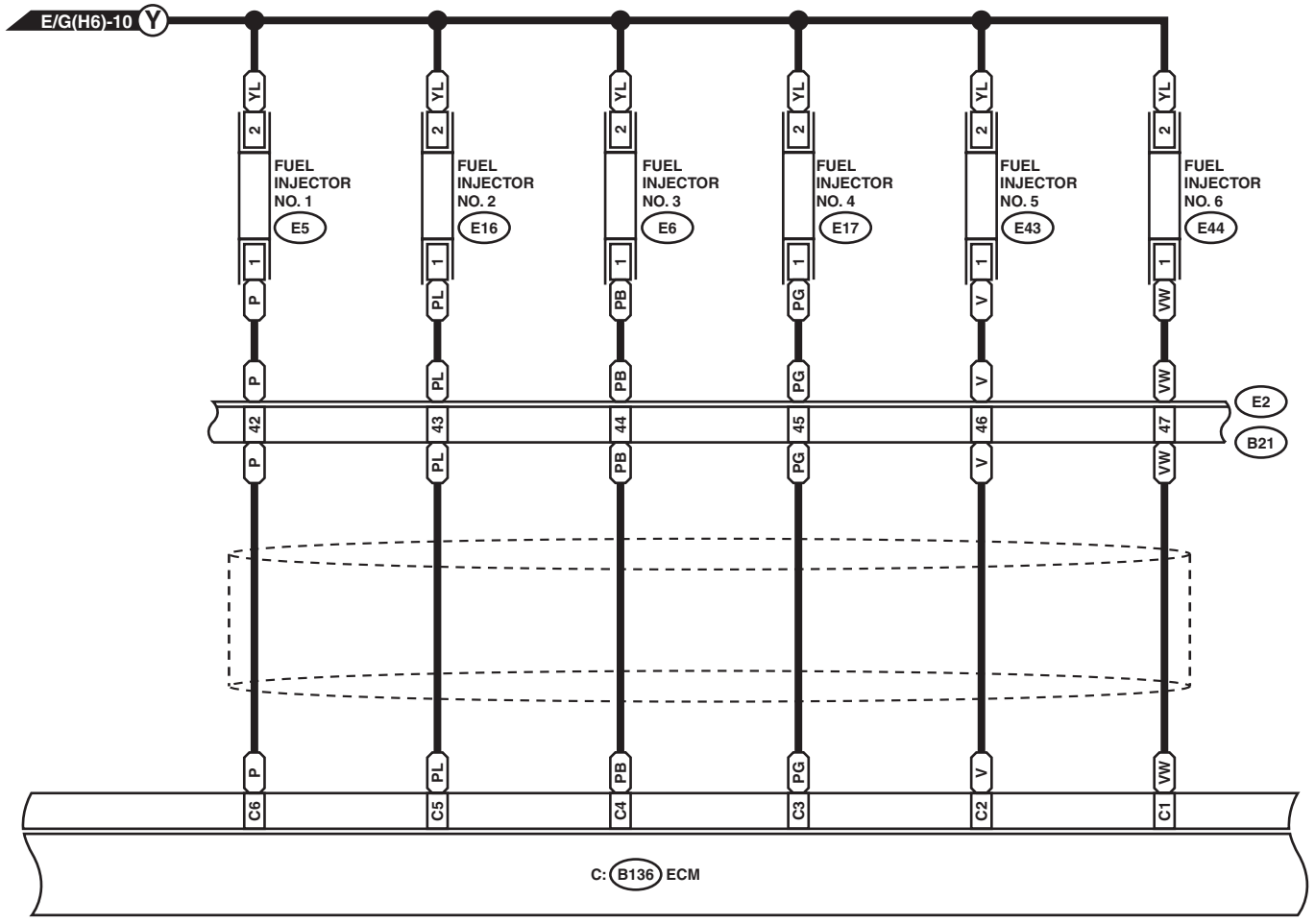

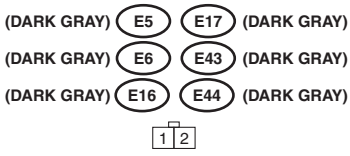

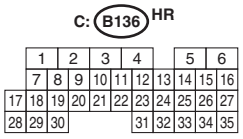

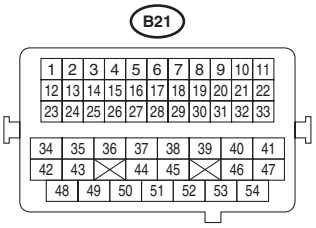

WI-05352

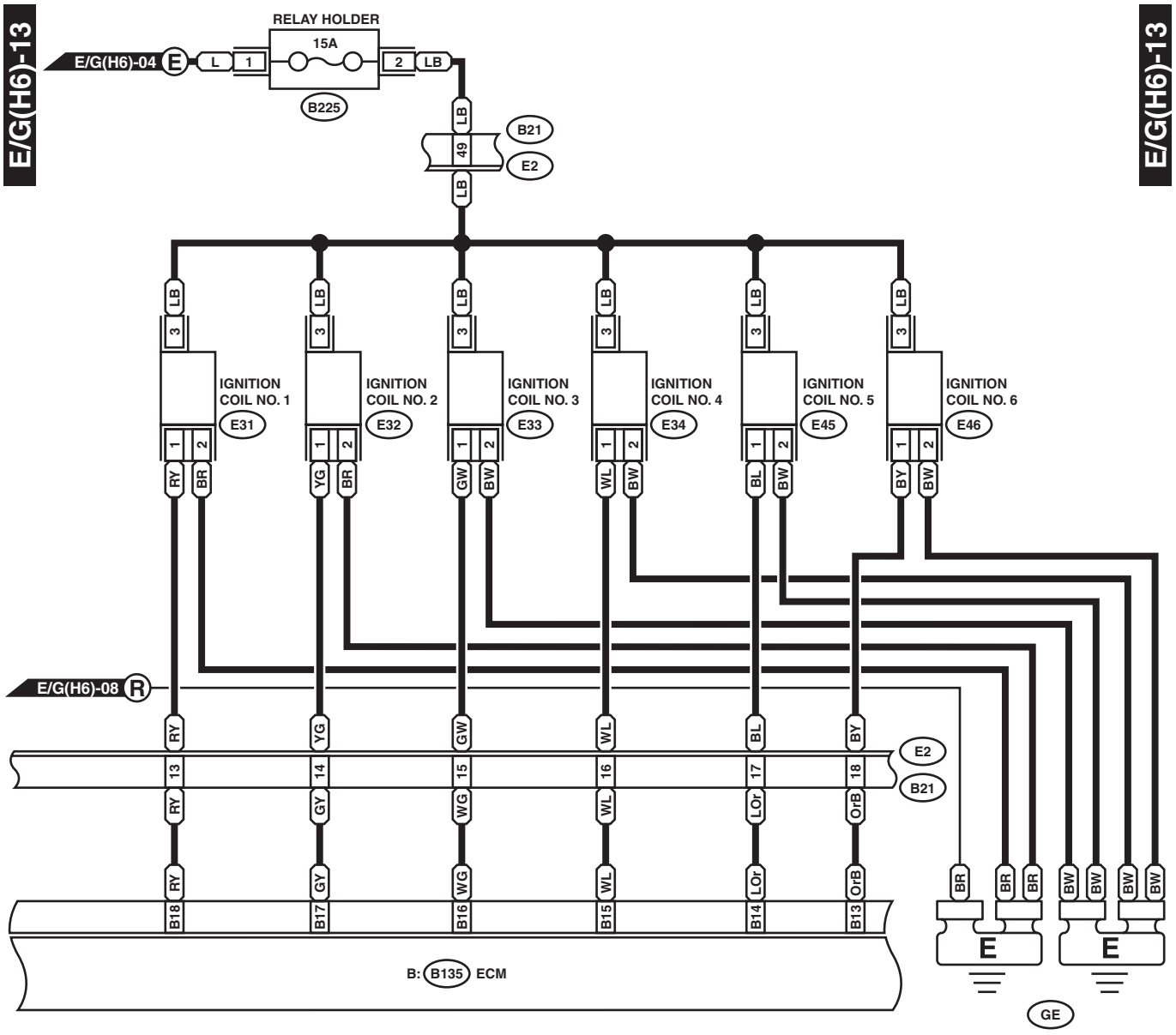
E/G(H6)-13
E/G(H6)-13
RELAY HOLDER
15A
E/G(H6)-04
E
L
1
2
LB
B225
B21
E2
49
IGNITION COIL NO. 1
IGNITION COIL NO. 2
IGNITION COIL NO. 3
IGNITION COIL NO. 4
IGNITION COIL NO. 5
IGNITION COIL NO. 6
E31
E32
E33
E34
E45
E46
3
1
2
RY
BR
YG
GW
BW
WL
BL
BY
E/G(H6)-08
R
13
14
15
16
17
18
GY
WG
LOr
OrB
B18
B17
B16
B15
B14
B13
B: B135 ECM
E
GE

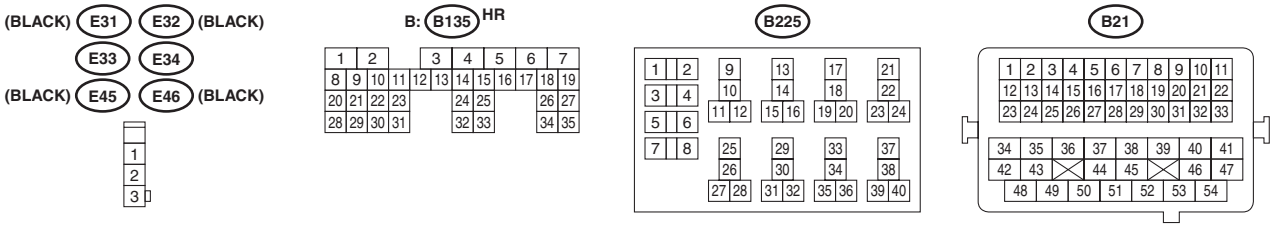
(BLACK) E31 E32 (BLACK)
E33 E34
(BLACK) E45 E46 (BLACK)
B: B135 HR
B225
B21

WI-05353

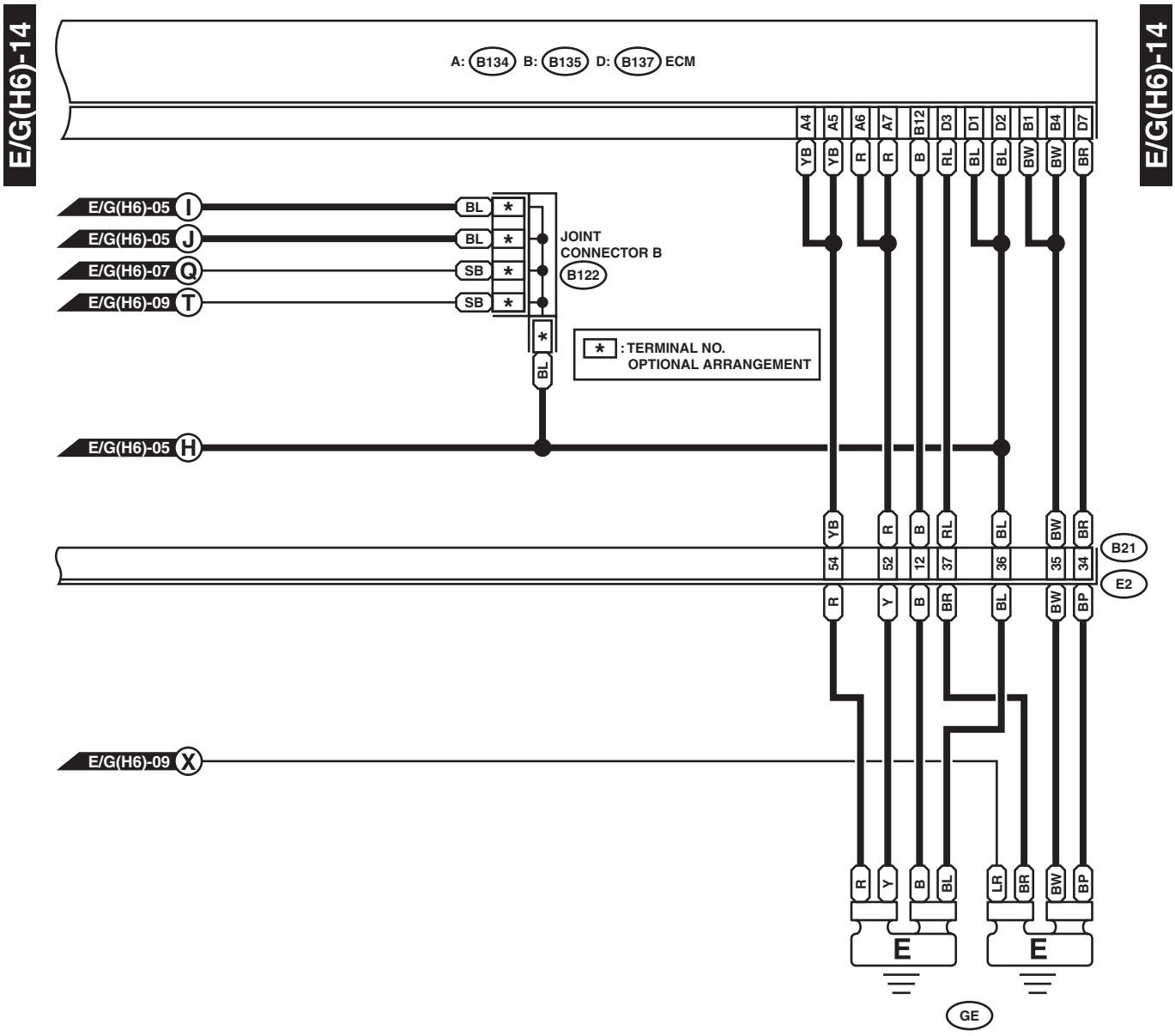
E/G(H6)-14
E/G(H6)-14
A: B134 B: B135 D: B137 ECM
A4 A5 A6 A7 B12 D3 D1 D2 B1 B4 D7
YB YB R R B RL BL BL BW BW BR
E/G(H6)-05 I
E/G(H6)-05 J
E/G(H6)-07 Q
E/G(H6)-09 T
BL * BL * SB * SB *
JOINT CONNECTOR B
B122
* BL
* : TERMINAL NO. OPTIONAL ARRANGEMENT
E/G(H6)-05 H
YB R B RL BL BW BR
54 52 12 37 36 35 34
B21
E2
R Y B BR BL BW BP
E/G(H6)-09 X
R Y B BL LR BR BW BP
E E
GE

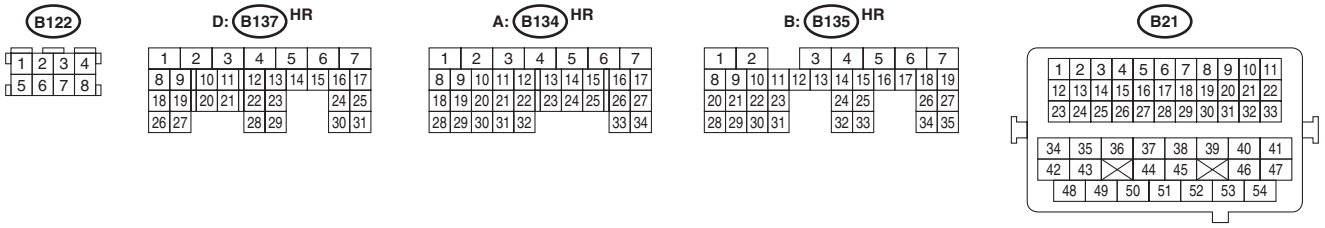
B122
1 2 3 4
5 6 7 8
D: B137 HR
1 2 3 4 5 6 7
8 9 10 11 12 13 14 15 16 17
18 19 20 21 22 23 24 25
26 27 28 29 30 31
A: B134 HR
1 2 3 4 5 6 7
8 9 10 11 12 13 14 15 16 17
18 19 20 21 22 23 24 25 26 27
28 29 30 31 32 33 34
B: B135 HR
1 2 3 4 5 6 7
8 9 10 11 12 13 14 15 16 17 18 19
20 21 22 23 24 25 26 27
28 29 30 31 32 33 34 35
B21
1 2 3 4 5 6 7 8 9 10 11
12 13 14 15 16 17 18 19 20 21 22
23 24 25 26 27 28 29 30 31 32 33
34 35 36 37 38 39 40 41
42 43 44 45 46 47
48 49 50 51 52 53 54

WI-05354

4. 2.5 L TURBO MODEL

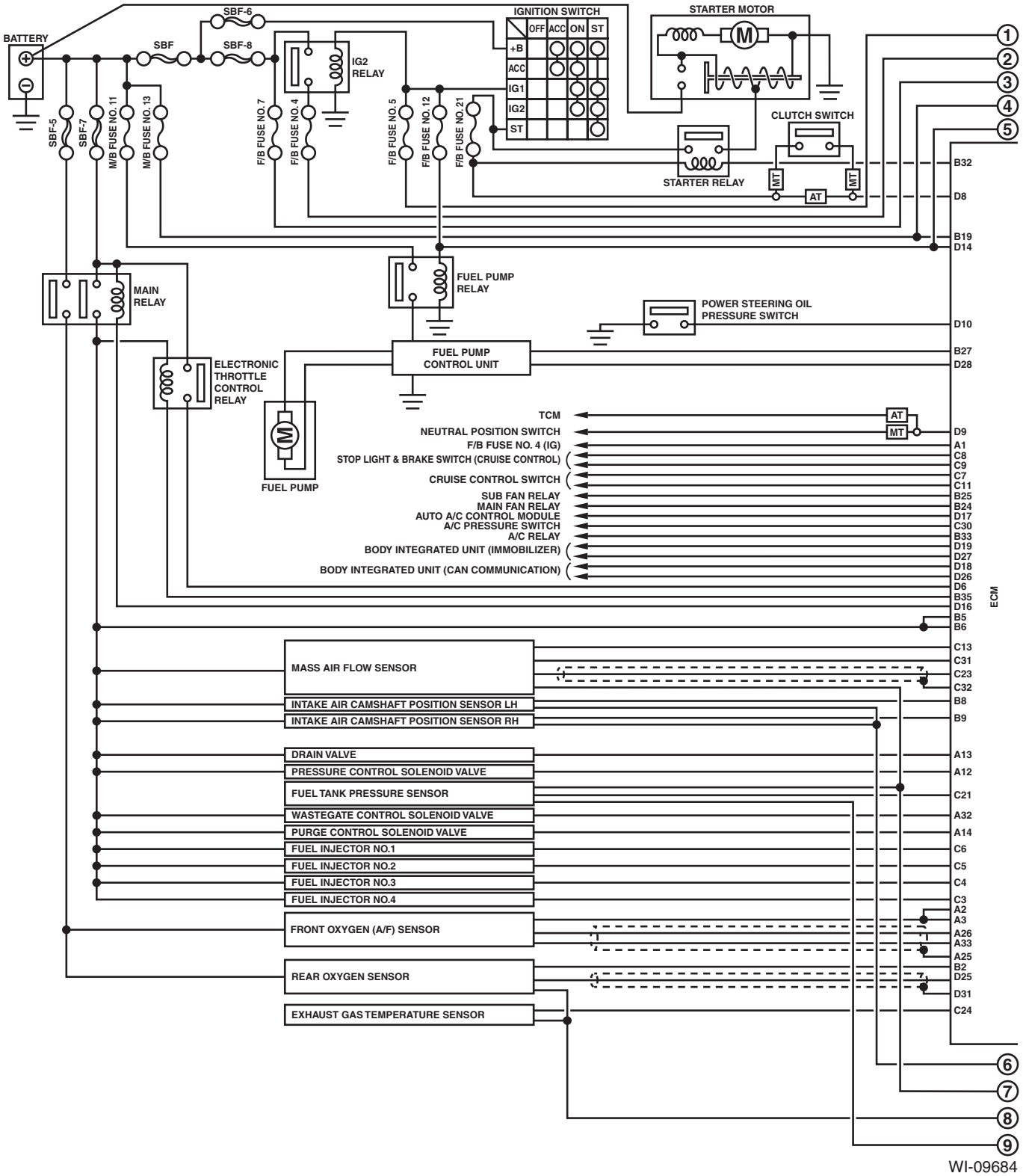

WI-09684

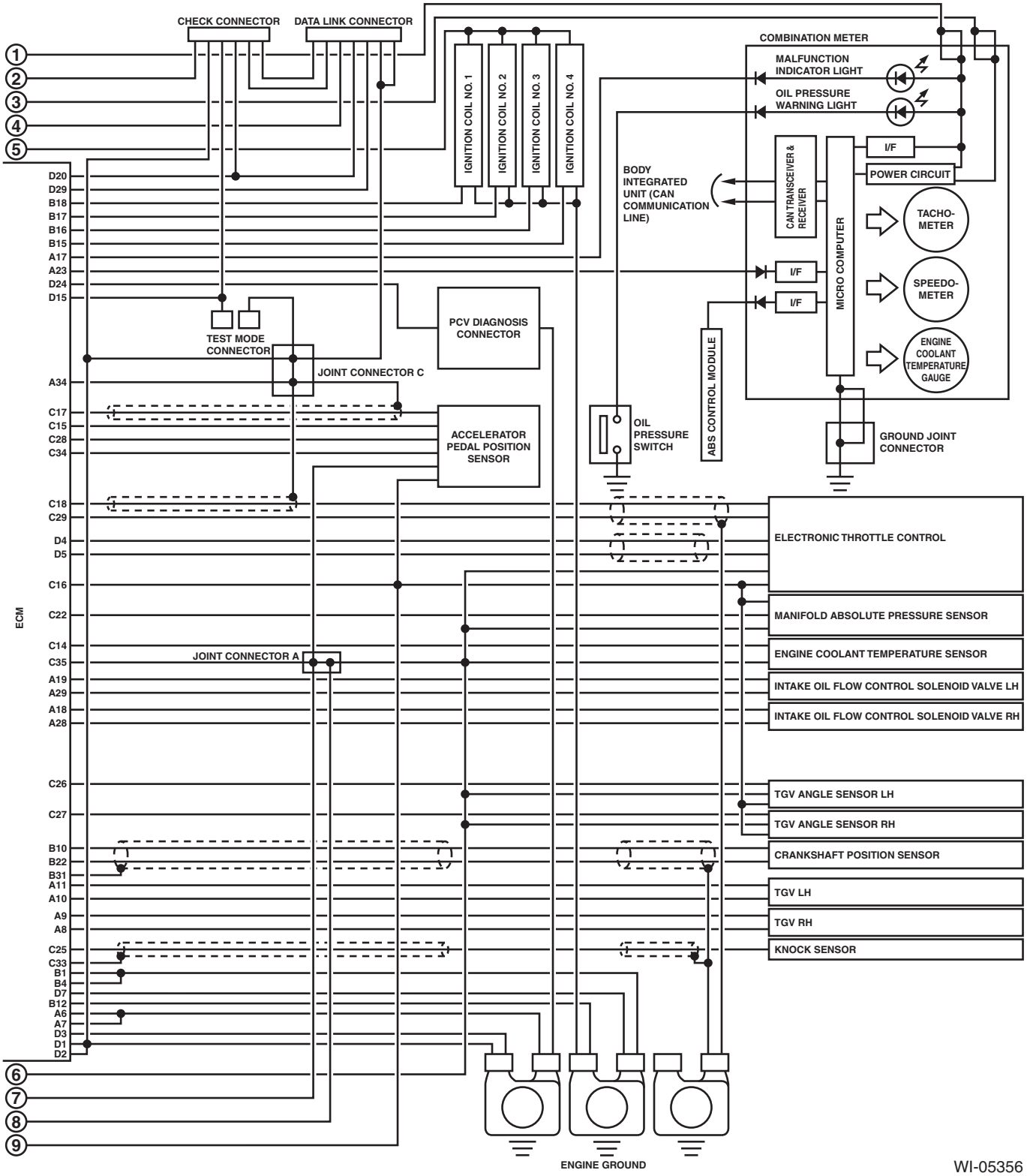
CHECK CONNECTOR
DATA LINK CONNECTOR
IGNITION COIL NO. 1
IGNITION COIL NO. 2
IGNITION COIL NO. 3
IGNITION COIL NO. 4
COMBINATION METER
MALFUNCTION INDICATOR LIGHT
OIL PRESSURE WARNING LIGHT
I/F
POWER CIRCUIT
BODY INTEGRATED UNIT (CAN COMMUNICATION LINE)
CAN TRANSCEIVER & RECEIVER
MICRO COMPUTER
TACHO-METER
SPEEDO-METER
ENGINE COOLANT TEMPERATURE GAUGE
TEST MODE CONNECTOR
PCV DIAGNOSIS CONNECTOR
JOINT CONNECTOR C
ACCELERATOR PEDAL POSITION SENSOR
OIL PRESSURE SWITCH
ABS CONTROL MODULE
GROUND JOINT CONNECTOR
ECM
JOINT CONNECTOR A
ELECTRONIC THROTTLE CONTROL
MANIFOLD ABSOLUTE PRESSURE SENSOR
ENGINE COOLANT TEMPERATURE SENSOR
INTAKE OIL FLOW CONTROL SOLENOID VALVE LH
INTAKE OIL FLOW CONTROL SOLENOID VALVE RH
TGV ANGLE SENSOR LH
TGV ANGLE SENSOR RH
CRANKSHAFT POSITION SENSOR
TGV LH
TGV RH
KNOCK SENSOR
ENGINE GROUND
WI-05356

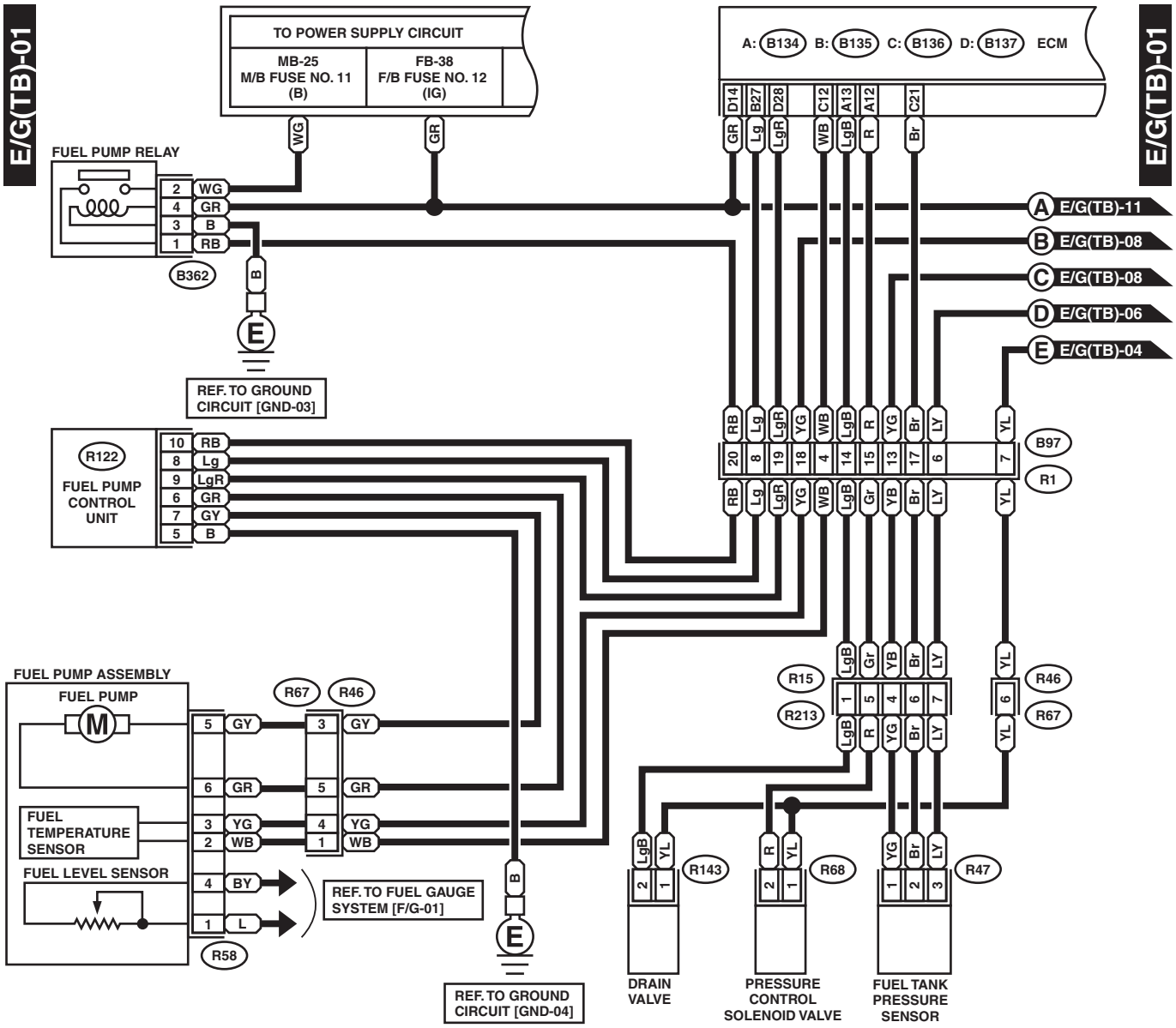
E/G(TB)-01
TO POWER SUPPLY CIRCUIT
MB-25 M/B FUSE NO. 11 (B)
FB-38 F/B FUSE NO. 12 (IG)
A: B134 B: B135 C: B136 D: B137 ECM
FUEL PUMP RELAY
WG
GR
B
RB
B362
REF. TO GROUND CIRCUIT [GND-03]
R122
FUEL PUMP CONTROL UNIT
RB
Lg
LgR
GR
GY
B
A E/G(TB)-11
B E/G(TB)-08
C E/G(TB)-08
D E/G(TB)-06
E E/G(TB)-04
B97
R1
FUEL PUMP ASSEMBLY
FUEL PUMP
FUEL TEMPERATURE SENSOR
FUEL LEVEL SENSOR
R67
R46
GY
GR
YG
WB
BY
L
REF. TO FUEL GAUGE SYSTEM [F/G-01]
R58
REF. TO GROUND CIRCUIT [GND-04]
R15
R213
LgB
Gr
YB
Br
LY
YL
R143
R68
R47
DRAIN VALVE
PRESSURE CONTROL SOLENOID VALVE
FUEL TANK PRESSURE SENSOR

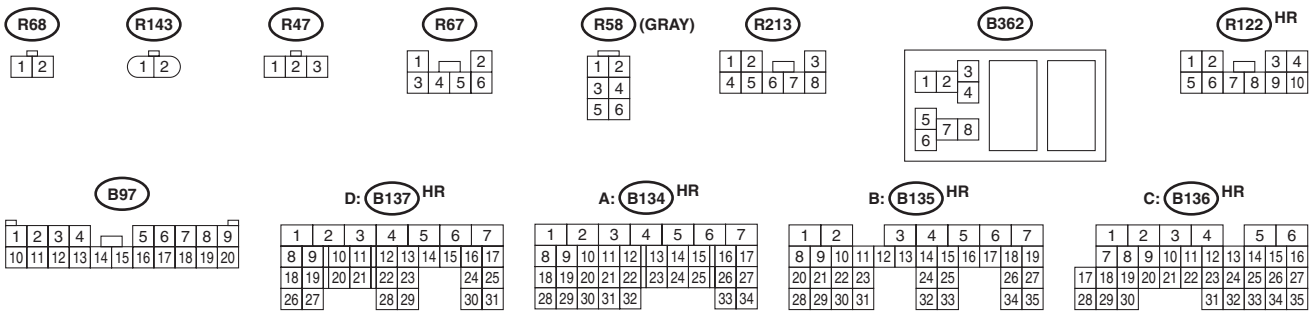
R68
R143
R47
R67
R58 (GRAY)
R213
B362
R122 HR
B97
D: B137 HR
A: B134 HR
B: B135 HR
C: B136 HR

WI-09685

E/G(TB)-02

E/G(TB)-02

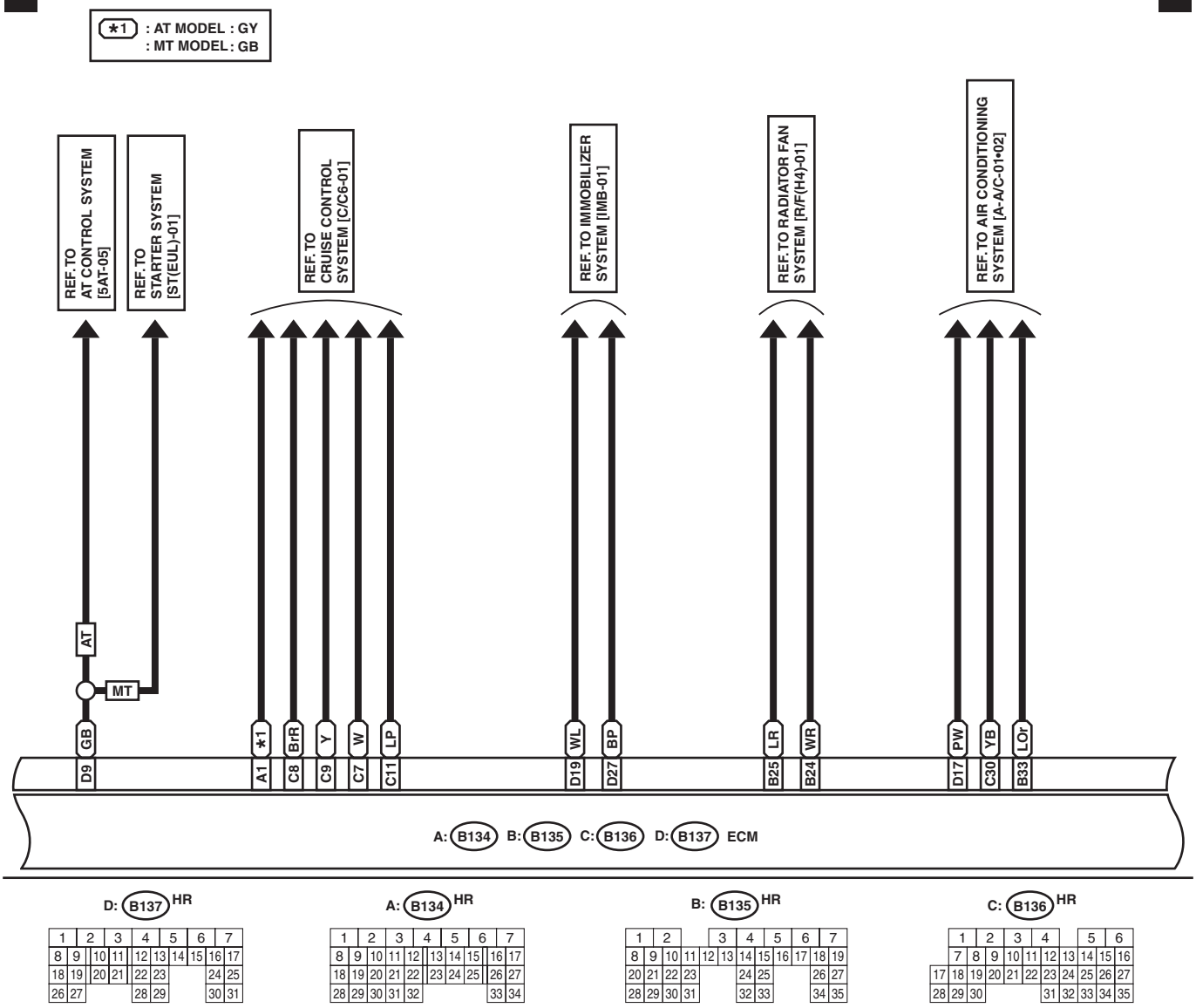

WI-05444

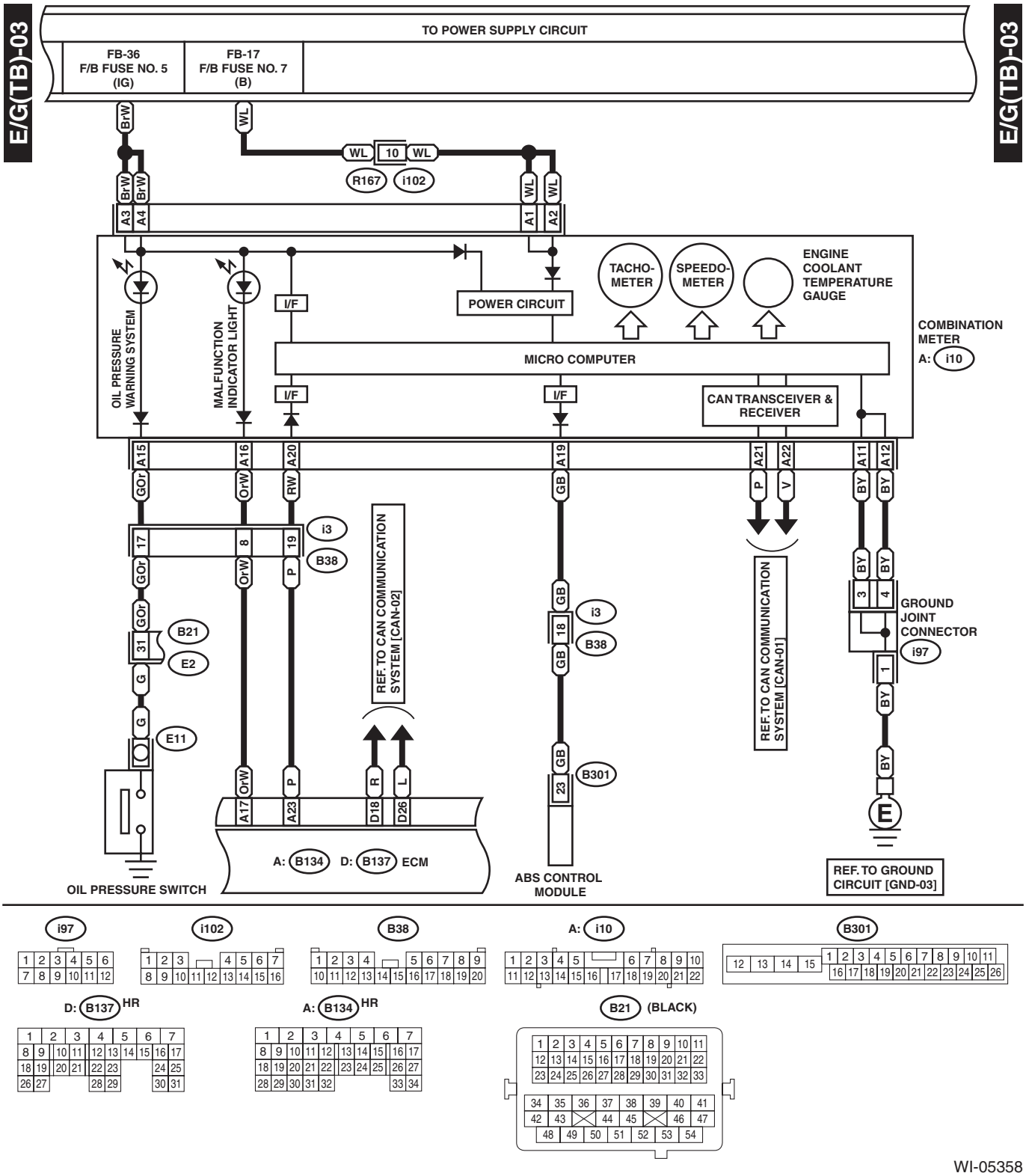
E/G(TB)-03
TO POWER SUPPLY CIRCUIT
FB-36 F/B FUSE NO. 5 (IG)
FB-17 F/B FUSE NO. 7 (B)
BrW
WL
WL 10 WL
R167 i102
A3 A4 A1 A2
TACHO-METER
SPEEDO-METER
ENGINE COOLANT TEMPERATURE GAUGE
COMBINATION METER
A: i10
OIL PRESSURE WARNING SYSTEM
MALFUNCTION INDICATOR LIGHT
I/F
POWER CIRCUIT
MICRO COMPUTER
CAN TRANSCEIVER & RECEIVER
A15 A16 A20 A19 A21 A22 A11 A12
GOr OrW RW GB P V BY BY
i3 B38
REF. TO CAN COMMUNICATION SYSTEM [CAN-02]
REF. TO CAN COMMUNICATION SYSTEM [CAN-01]
GROUND JOINT CONNECTOR i97
B21 E2
E11
B301
A17 A23 D18 D26
A: B134 D: B137 ECM
OIL PRESSURE SWITCH
ABS CONTROL MODULE
REF. TO GROUND CIRCUIT [GND-03]
i97
i102
B38
A: i10
B301
D: B137 HR
A: B134 HR
B21 (BLACK)

WI-05358

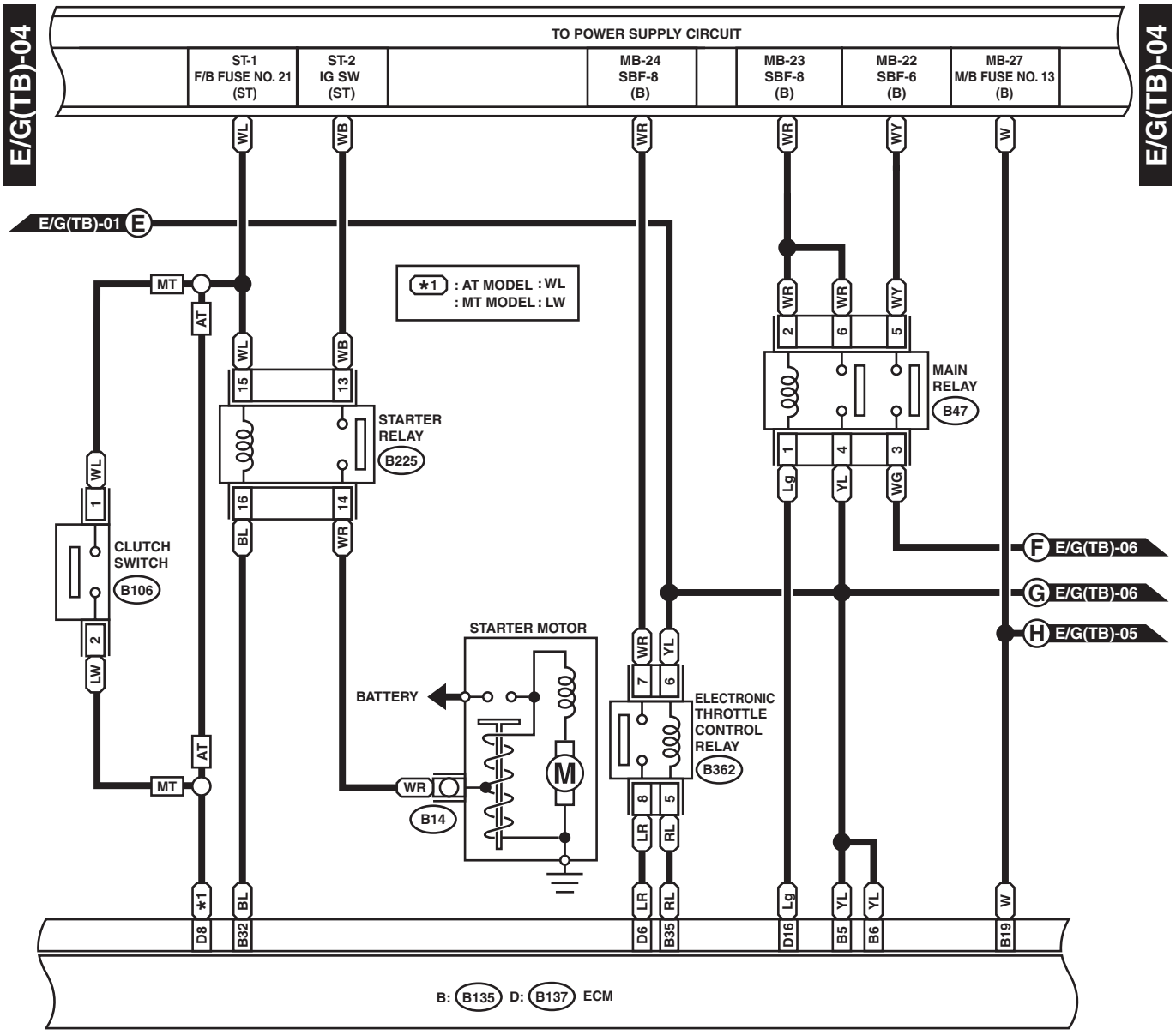
E/G(TB)-04
E/G(TB)-04
TO POWER SUPPLY CIRCUIT
ST-1
F/B FUSE NO. 21
(ST)
ST-2
IG SW
(ST)
MB-24
SBF-8
(B)
MB-23
SBF-8
(B)
MB-22
SBF-6
(B)
MB-27
M/B FUSE NO. 13
(B)
E/G(TB)-01 E
*1 : AT MODEL : WL
: MT MODEL : LW
MT
AT
STARTER
RELAY
B225
MAIN
RELAY
B47
CLUTCH
SWITCH
B106
STARTER MOTOR
BATTERY
B14
ELECTRONIC
THROTTLE
CONTROL
RELAY
B362
F E/G(TB)-06
G E/G(TB)-06
H E/G(TB)-05
B: B135 D: B137 ECM

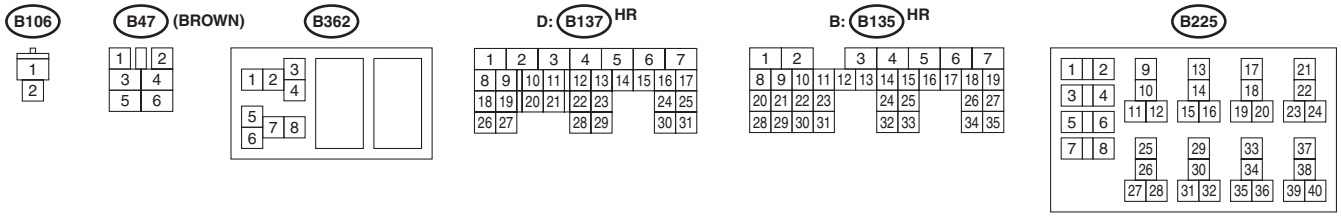
B106
B47 (BROWN)
B362
D: B137 HR
B: B135 HR
B225

WI-05359

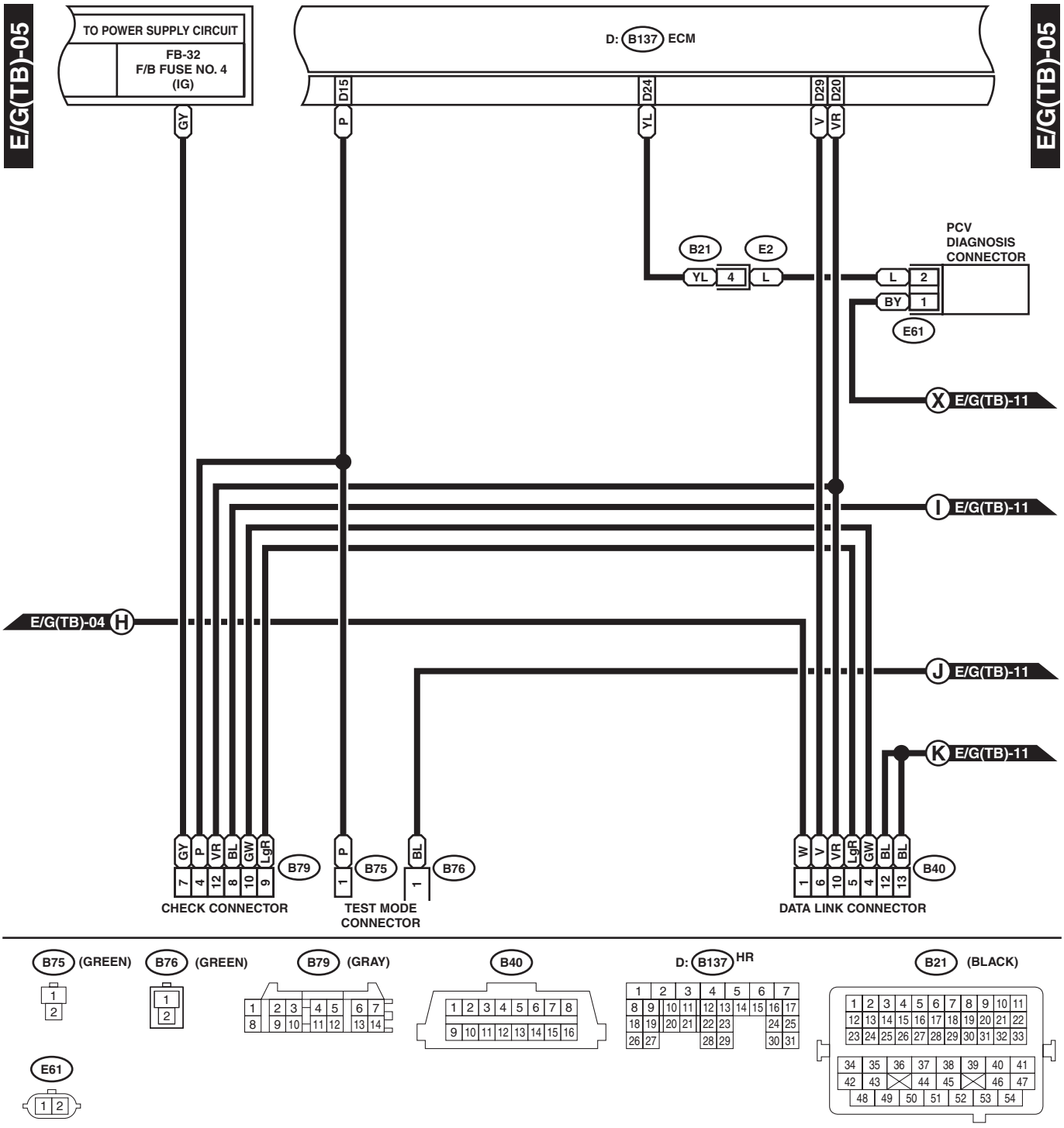
E/G(TB)-05
TO POWER SUPPLY CIRCUIT
FB-32
F/B FUSE NO. 4
(IG)
D: B137 ECM
D15
D24
D29
D20
GY
P
YL
V
VR
B21
E2
YL 4 L
PCV
DIAGNOSIS
CONNECTOR
L 2
BY 1
E61
X E/G(TB)-11
I E/G(TB)-11
E/G(TB)-04 H
J E/G(TB)-11
K E/G(TB)-11
GY P VR BL GW LgR
7 4 12 8 10 9
B79
CHECK CONNECTOR
P
1
B75
TEST MODE
CONNECTOR
BL
1
B76
W V VR LgR GW BL BL
1 6 10 5 4 12 13
B40
DATA LINK CONNECTOR
B75 (GREEN)
B76 (GREEN)
B79 (GRAY)
B40
D: B137 HR
B21 (BLACK)
E61

WI-05360

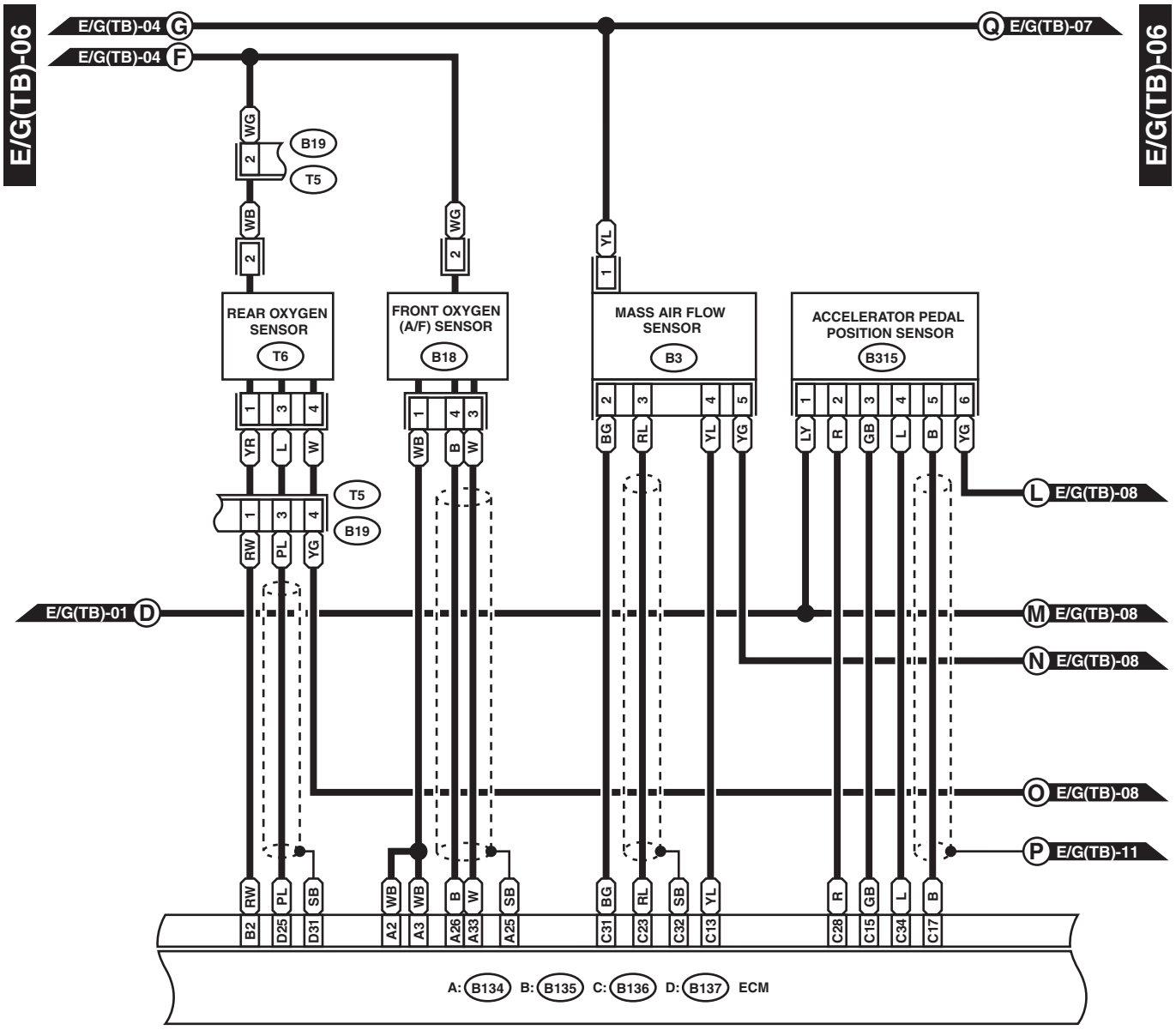
E/G(TB)-06
E/G(TB)-04 G
E/G(TB)-04 F
Q E/G(TB)-07
E/G(TB)-06
B19
T5
REAR OXYGEN SENSOR
T6
FRONT OXYGEN (A/F) SENSOR
B18
MASS AIR FLOW SENSOR
B3
ACCELERATOR PEDAL POSITION SENSOR
B315
L E/G(TB)-08
E/G(TB)-01 D
M E/G(TB)-08
N E/G(TB)-08
O E/G(TB)-08
P E/G(TB)-11
A: B134 B: B135 C: B136 D: B137 ECM

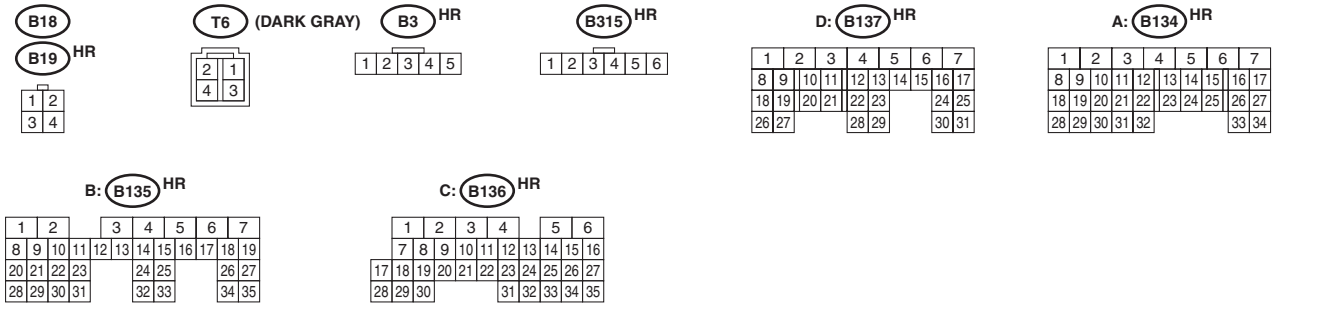
B18
B19 HR
T6 (DARK GRAY)
B3 HR
B315 HR
D: B137 HR
A: B134 HR
B: B135 HR
C: B136 HR

WI-05361

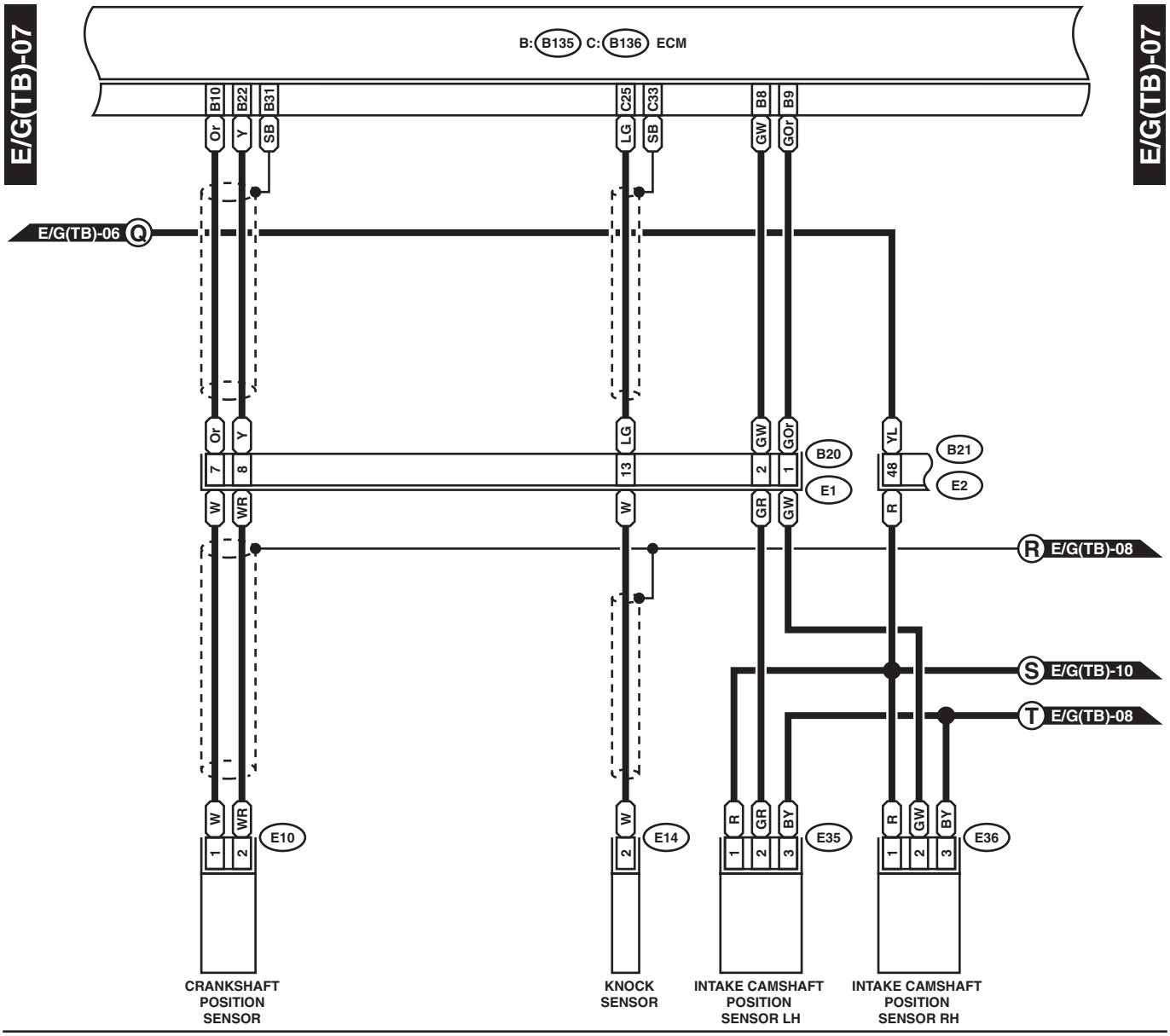
E/G(TB)-07
E/G(TB)-07
B: B135 C: B136 ECM
B10
B22
B31
C25
C33
B8
B9
Or
Y
SB
LG
SB
GW
GOr
E/G(TB)-06 Q
B20
B21
E1
E2
W
WR
GR
R
R E/G(TB)-08
S E/G(TB)-10
T E/G(TB)-08
E10
E14
E35
E36
CRANKSHAFT POSITION SENSOR
KNOCK SENSOR
INTAKE CAMSHAFT POSITION SENSOR LH
INTAKE CAMSHAFT POSITION SENSOR RH

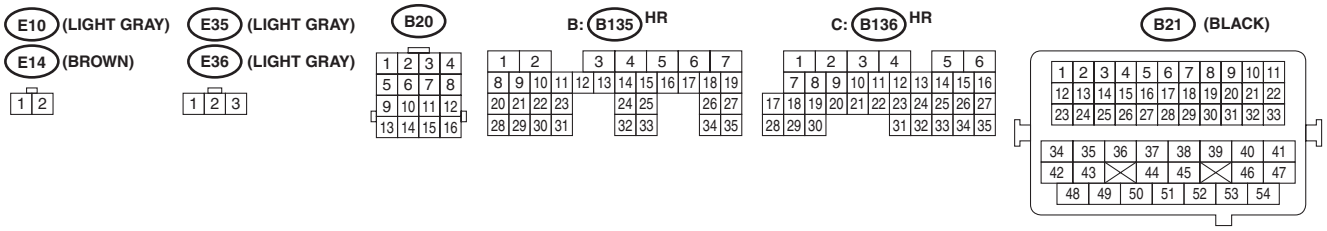
E10 (LIGHT GRAY)
E14 (BROWN)
E35 (LIGHT GRAY)
E36 (LIGHT GRAY)
B20
B: B135 HR
C: B136 HR
B21 (BLACK)

WI-05362

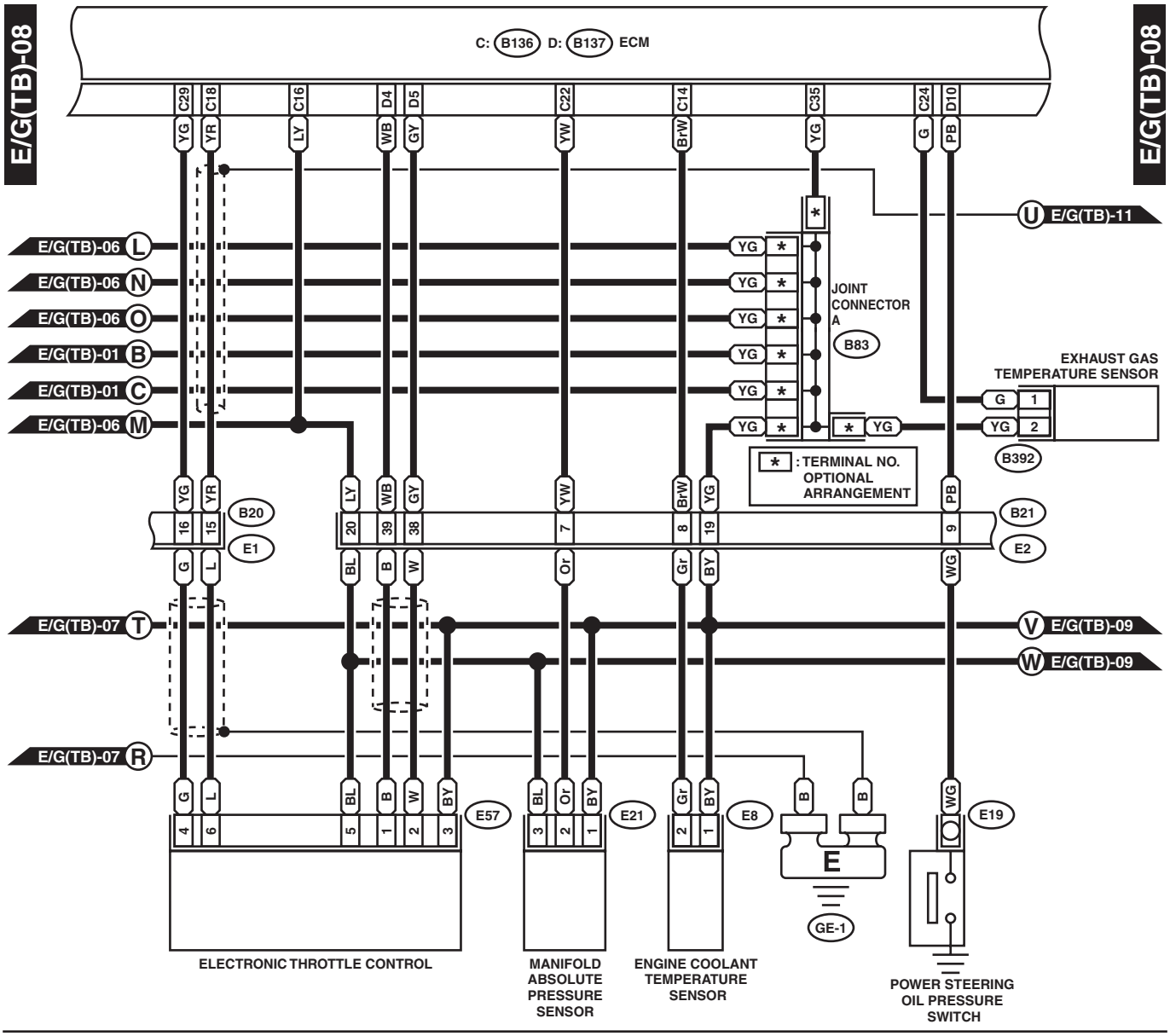
E/G(TB)-08
E/G(TB)-08
C: B136 D: B137 ECM
C29 C18 C16 D4 D5 C22 C14 C35 C24 D10
YG YR LY WB GY YW BrW YG G PB
U E/G(TB)-11
E/G(TB)-06 L
E/G(TB)-06 N
E/G(TB)-06 O
E/G(TB)-01 B
E/G(TB)-01 C
E/G(TB)-06 M
JOINT CONNECTOR A
B83
EXHAUST GAS TEMPERATURE SENSOR
G 1
YG 2
B392
* : TERMINAL NO. OPTIONAL ARRANGEMENT
B20
E1
B21
E2
E/G(TB)-07 T
V E/G(TB)-09
W E/G(TB)-09
E/G(TB)-07 R
E57
E21
E8
E19
GE-1
ELECTRONIC THROTTLE CONTROL
MANIFOLD ABSOLUTE PRESSURE SENSOR
ENGINE COOLANT TEMPERATURE SENSOR
POWER STEERING OIL PRESSURE SWITCH

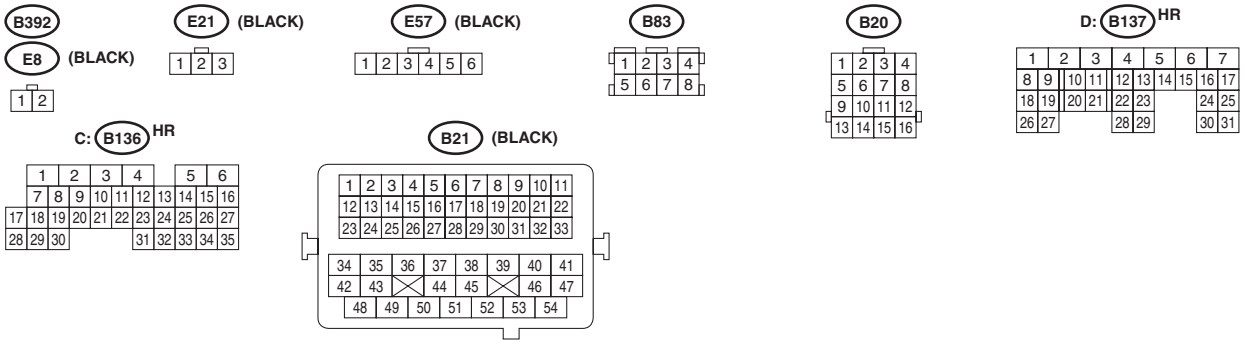
B392
E8 (BLACK)
E21 (BLACK)
E57 (BLACK)
B83
B20
D: B137 HR
C: B136 HR
B21 (BLACK)

WI-05363

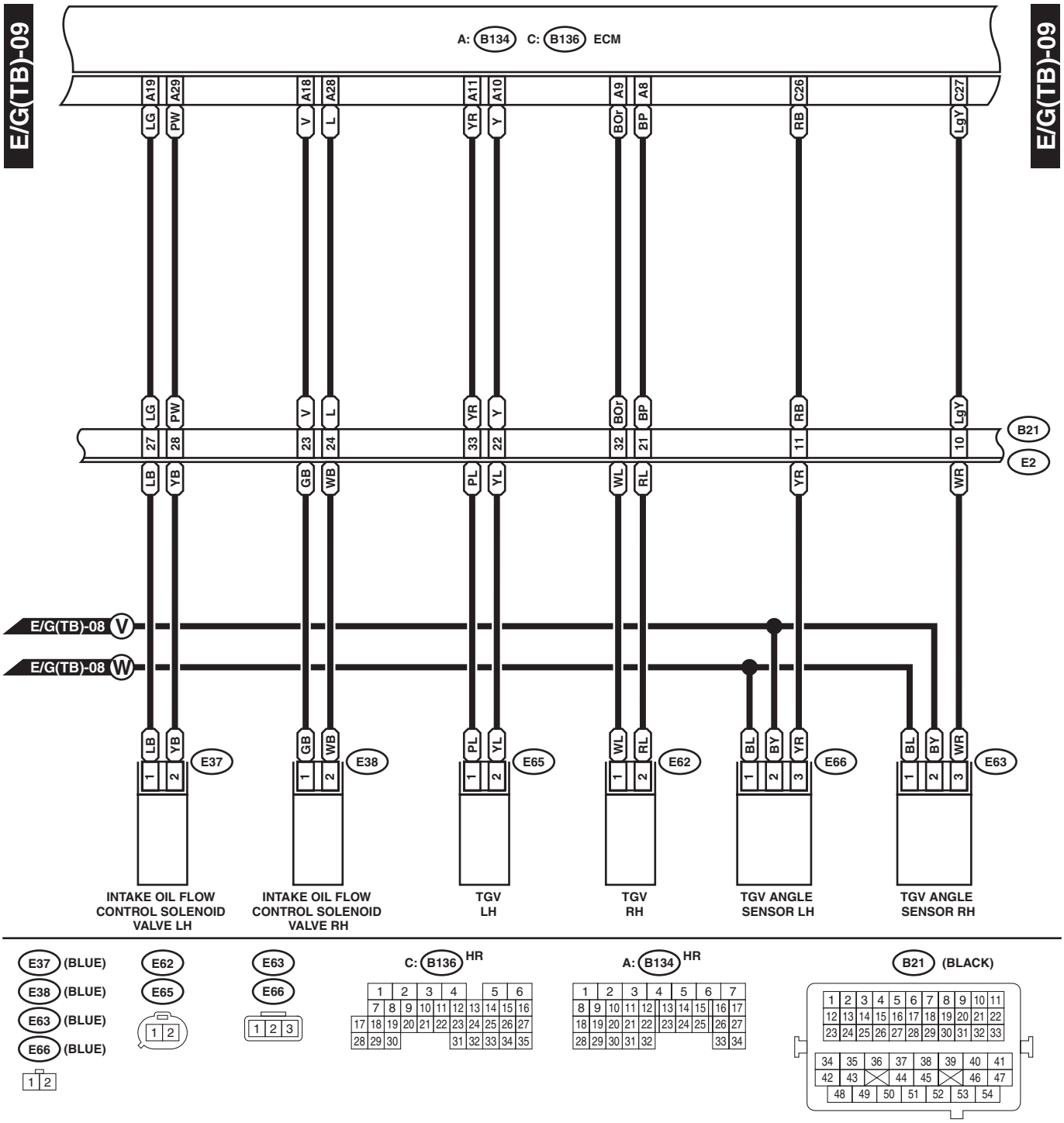
E/G(TB)-09
E/G(TB)-09
A: B134 C: B136 ECM
A19 A29 A18 A28 A11 A10 A9 A8 C26 C27
LG PW V L YR Y BOr BP RB LgY
27 28 23 24 33 22 32 21 11 10
B21
E2
LB YB GB WB PL YL WL RL YR WR
E/G(TB)-08 V
E/G(TB)-08 W
BL BY
E37
E38
E65
E62
E66
E63
INTAKE OIL FLOW CONTROL SOLENOID VALVE LH
INTAKE OIL FLOW CONTROL SOLENOID VALVE RH
TGV LH
TGV RH
TGV ANGLE SENSOR LH
TGV ANGLE SENSOR RH
E37 (BLUE)
E38 (BLUE)
E63 (BLUE)
E66 (BLUE)
E62
E65
E63
E66
C: B136 HR
A: B134 HR
B21 (BLACK)

WI-05364

E/G(TB)-10

E/G(TB)-10

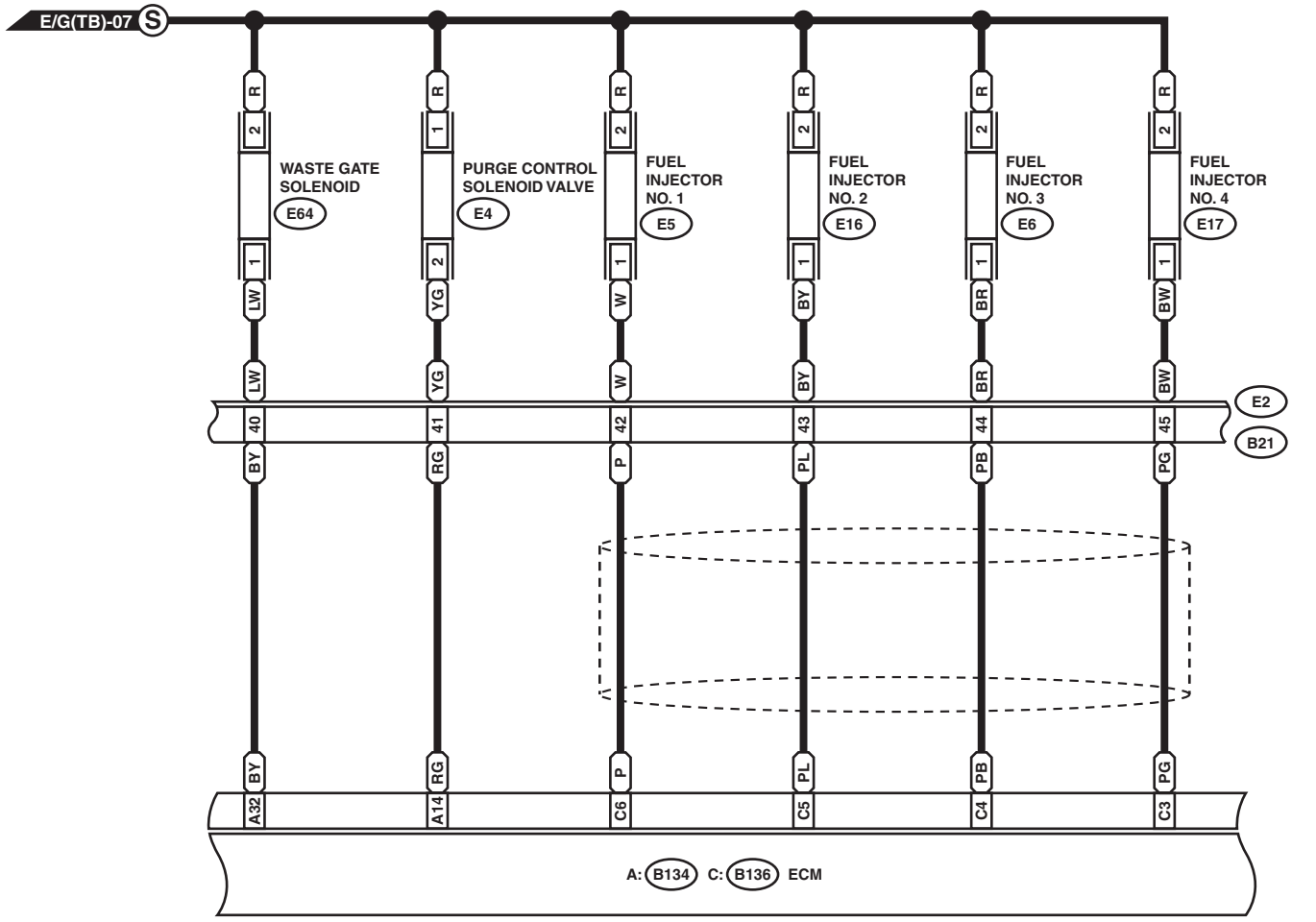

E4 (BLACK)
E64 (BLUE)
E5 (LIGHT GRAY)
E6 (BLACK)
E16 (LIGHT GRAY)
E17 (BLACK)

A: B134 HR

1	2	3	4	5	6	7
8	9	10	11	12	13	14	15	16	17
18	19	20	21	22	23	24	25	26	27
28	29	30	31	32	33	34

C: B136 HR

1	2	3	4	5	6
7	8	9	10	11	12	13	14	15	16
17	18	19	20	21	22	23	24	25	26	27
28	29	30	31	32	33	34	35

B21 (BLACK)

1	2	3	4	5	6	7	8	9	10	11
12	13	14	15	16	17	18	19	20	21	22
23	24	25	26	27	28	29	30	31	32	33
34	35	36	37	38	39	40	41
42	43		44	45		46	47
48	49	50	51	52	53	54

WI-05365

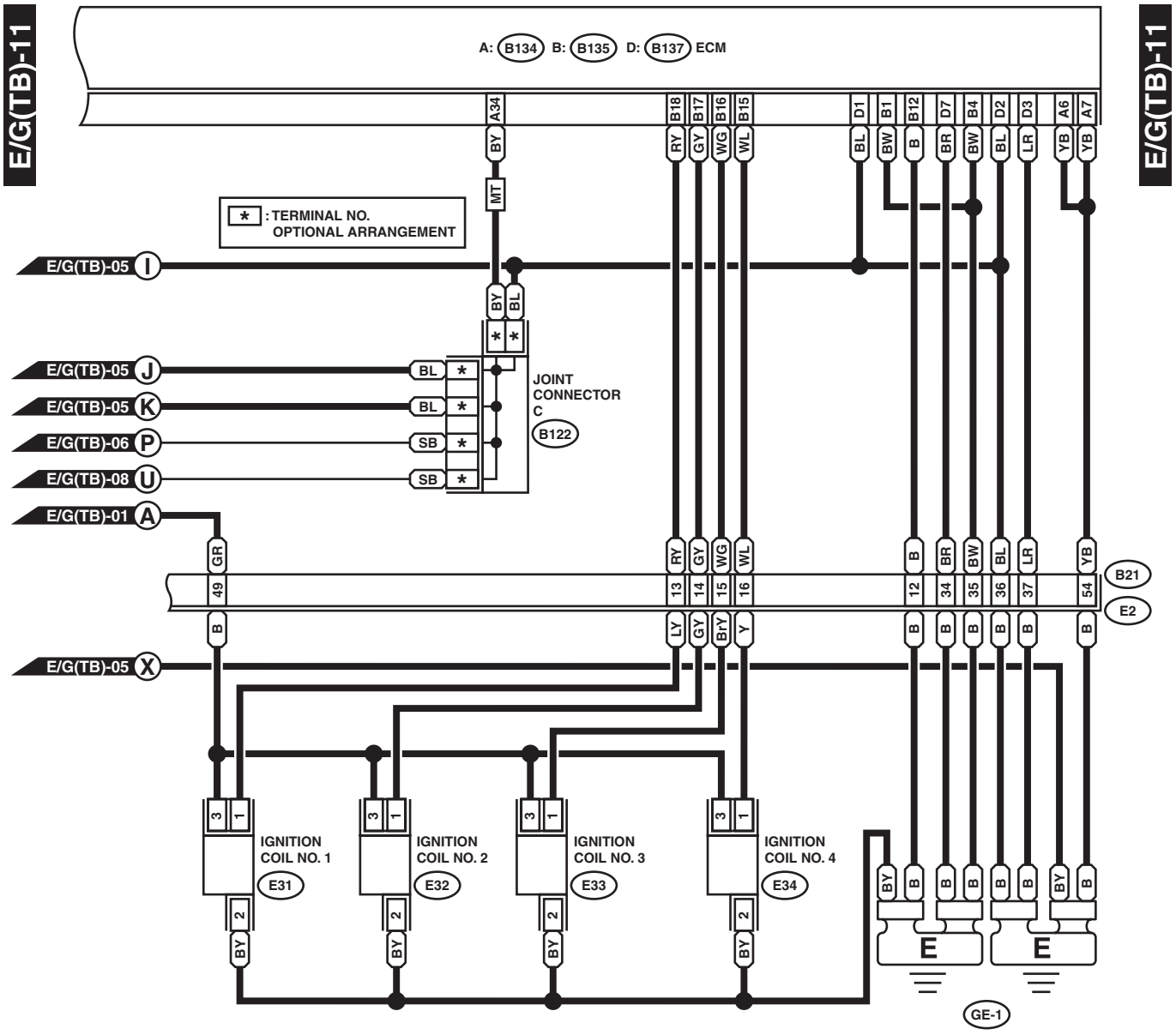
E/G(TB)-11
A: B134 B: B135 D: B137 ECM
A34 B18 B17 B16 B15 D1 B1 B12 D7 B4 D2 D3 A6 A7
BY RY GY WG WL BL BW B BR BW BL LR YB YB
MT
* : TERMINAL NO. OPTIONAL ARRANGEMENT
E/G(TB)-05 I
E/G(TB)-05 J
E/G(TB)-05 K
E/G(TB)-06 P
E/G(TB)-08 U
E/G(TB)-01 A
E/G(TB)-05 X
JOINT CONNECTOR C
B122
GR 49 RY 13 GY 14 WG 15 WL 16 B 12 BR 34 BW 35 BL 36 LR 37 YB 54
B21
E2
B LY GY BrY Y B B B B B B
IGNITION COIL NO. 1 E31
IGNITION COIL NO. 2 E32
IGNITION COIL NO. 3 E33
IGNITION COIL NO. 4 E34
BY B B B B B BY B
E E
GE-1

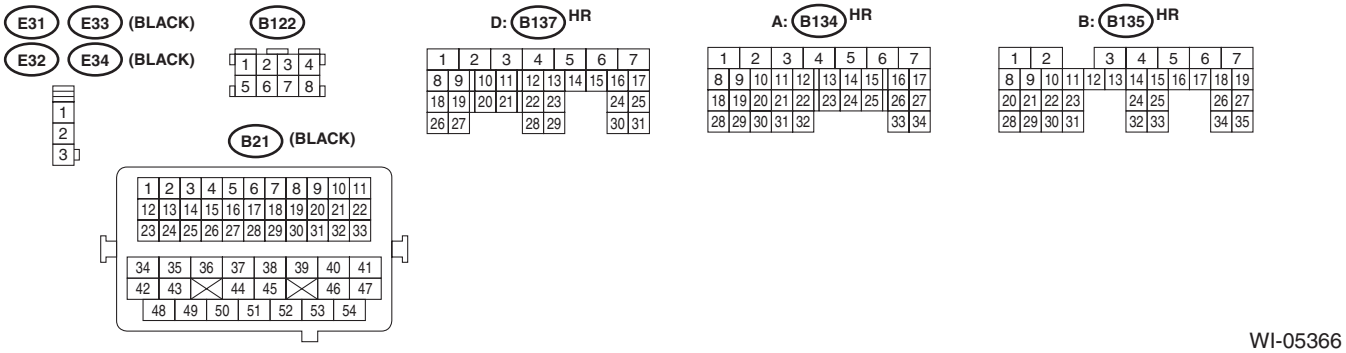
E31 E33 (BLACK)
E32 E34 (BLACK)
B122
B21 (BLACK)
D: B137 HR
A: B134 HR
B: B135 HR

WI-05366

6. AT Control System

A: WIRING DIAGRAM

1. 4AT MODEL

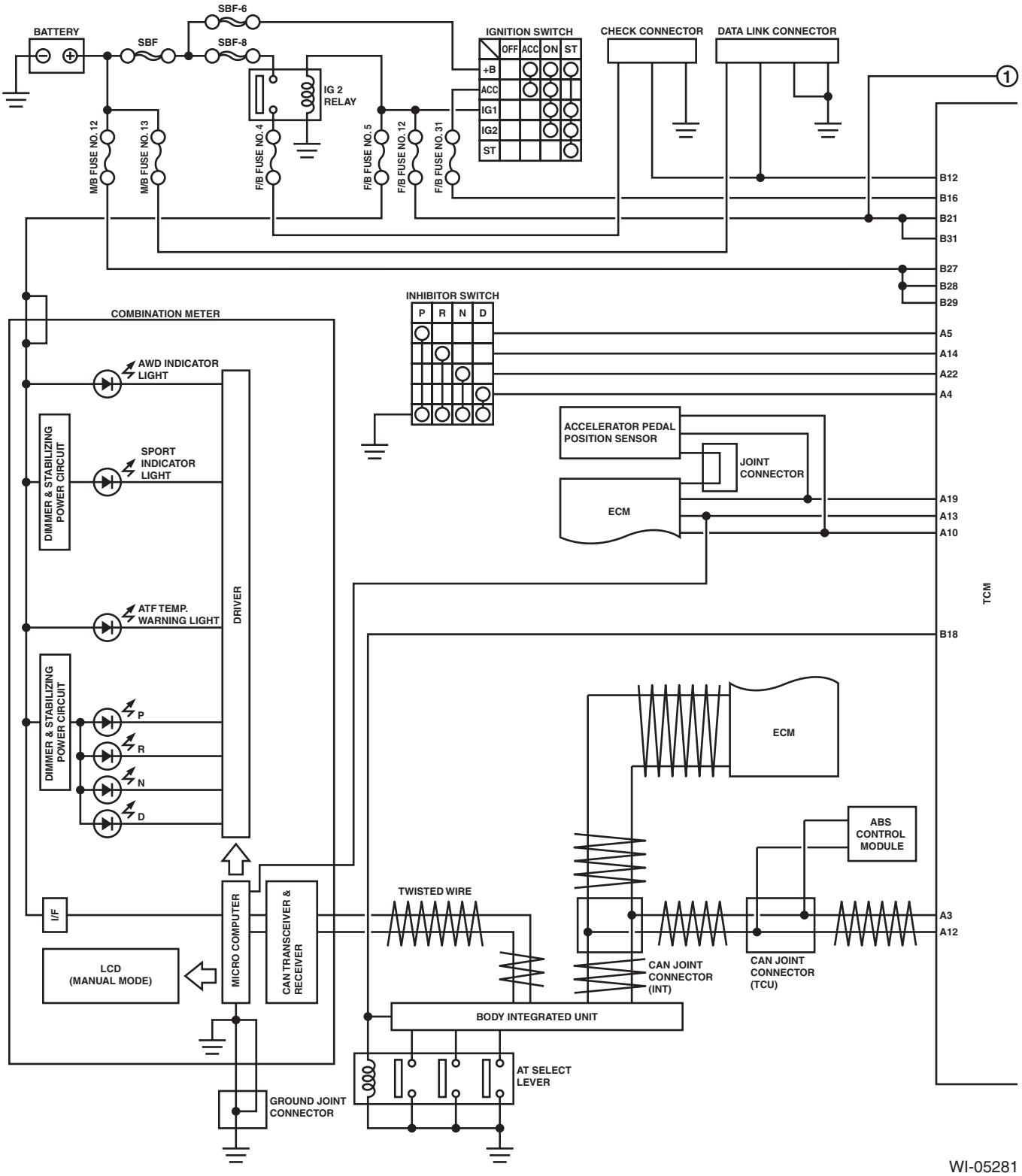

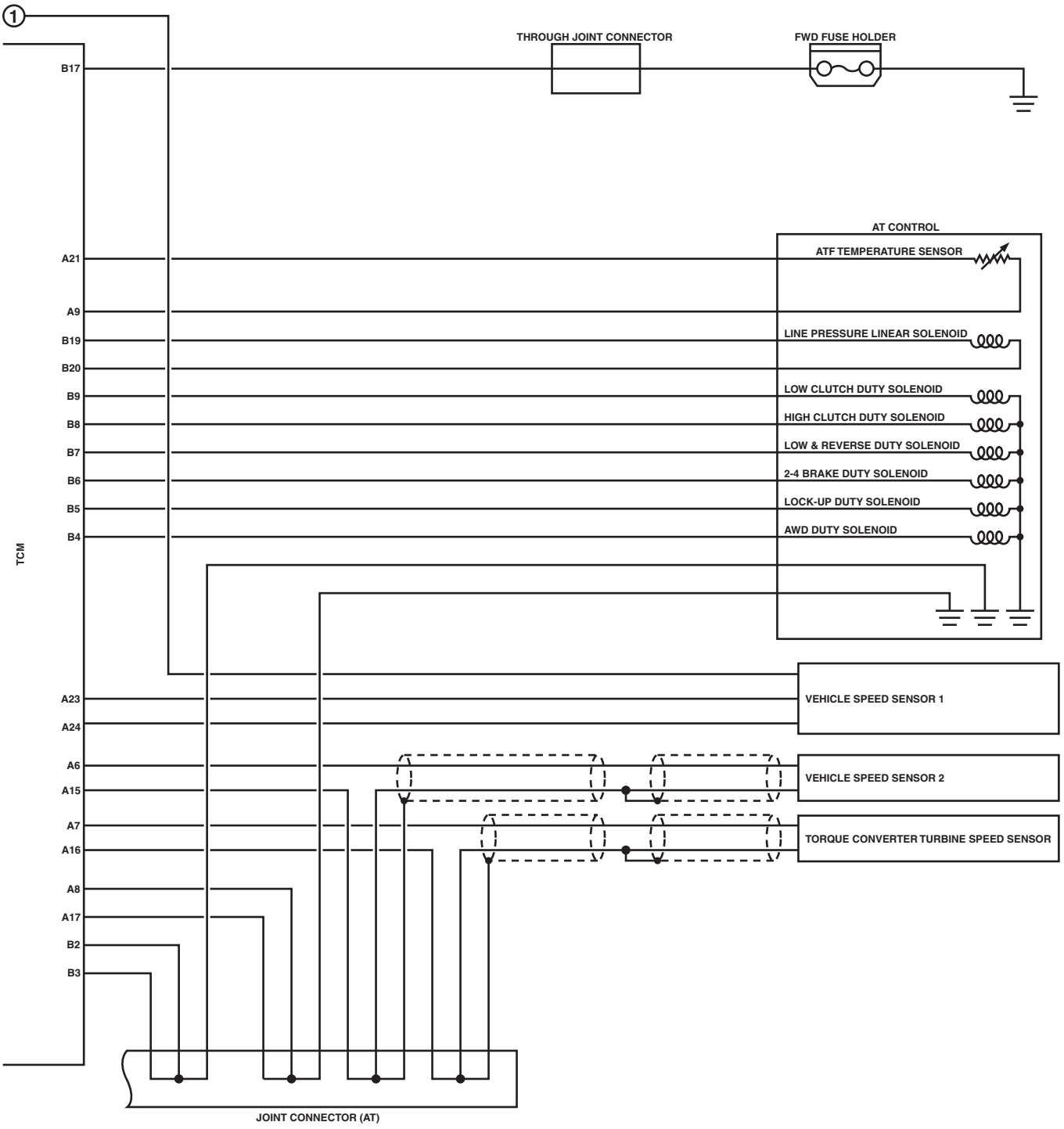
①
B17
THROUGH JOINT CONNECTOR
FWD FUSE HOLDER
AT CONTROL
ATF TEMPERATURE SENSOR
A21
A9
B19
LINE PRESSURE LINEAR SOLENOID
B20
B9
LOW CLUTCH DUTY SOLENOID
B8
HIGH CLUTCH DUTY SOLENOID
B7
LOW & REVERSE DUTY SOLENOID
B6
2-4 BRAKE DUTY SOLENOID
B5
LOCK-UP DUTY SOLENOID
B4
AWD DUTY SOLENOID
TCM
A23
VEHICLE SPEED SENSOR 1
A24
A6
VEHICLE SPEED SENSOR 2
A15
A7
TORQUE CONVERTER TURBINE SPEED SENSOR
A16
A8
A17
B2
B3
JOINT CONNECTOR (AT)

WI-05282

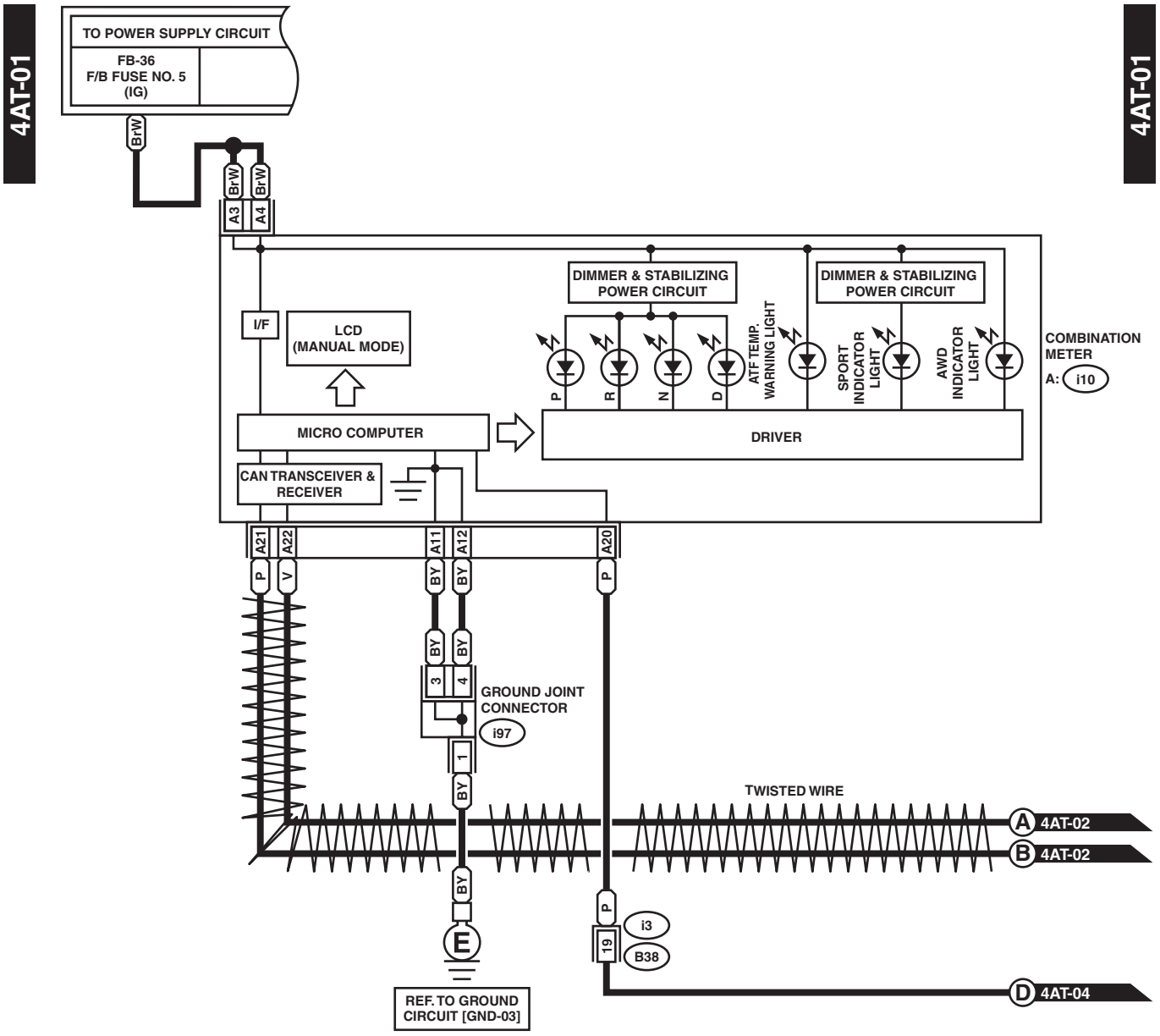
4AT-01
4AT-01
TO POWER SUPPLY CIRCUIT
FB-36
F/B FUSE NO. 5
(IG)
BrW
A3
A4
I/F
LCD
(MANUAL MODE)
MICRO COMPUTER
CAN TRANSCEIVER &
RECEIVER
DIMMER & STABILIZING
POWER CIRCUIT
DIMMER & STABILIZING
POWER CIRCUIT
P
R
N
D
ATF TEMP.
WARNING LIGHT
SPORT
INDICATOR
LIGHT
AWD
INDICATOR
LIGHT
COMBINATION
METER
A: i10
DRIVER
A21
A22
A11
A12
A20
P
V
BY
3
4
GROUND JOINT
CONNECTOR
i97
1
TWISTED WIRE
A 4AT-02
B 4AT-02
E
REF. TO GROUND
CIRCUIT [GND-03]
i3
19
B38
D 4AT-04

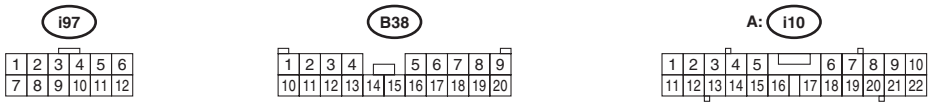
i97
1 2 3 4 5 6
7 8 9 10 11 12
B38
1 2 3 4 5 6 7 8 9
10 11 12 13 14 15 16 17 18 19 20
A: i10
1 2 3 4 5 6 7 8 9 10
11 12 13 14 15 16 17 18 19 20 21 22

WI-05283

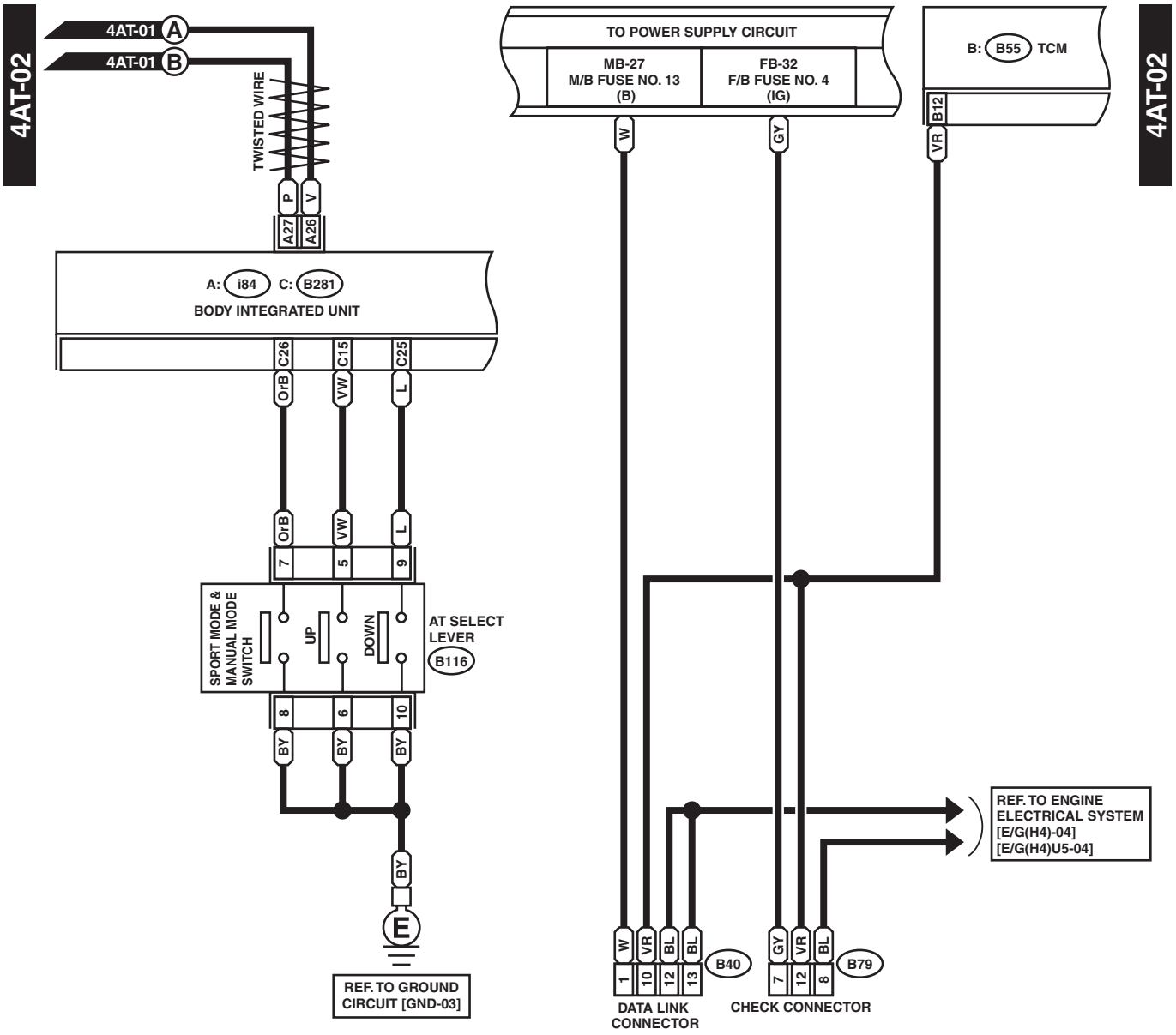
4AT-02
4AT-01 A
4AT-01 B
TWISTED WIRE
P
V
A27
A26
A: i84 C: B281
BODY INTEGRATED UNIT
C26
C15
C25
OrB
VW
L
7
5
9
SPORT MODE & MANUAL MODE SWITCH
UP
DOWN
AT SELECT LEVER
B116
8
6
10
BY
E
REF. TO GROUND CIRCUIT [GND-03]
TO POWER SUPPLY CIRCUIT
MB-27
M/B FUSE NO. 13
(B)
FB-32
F/B FUSE NO. 4
(IG)
W
GY
B: B55 TCM
B12
VR
4AT-02
REF. TO ENGINE ELECTRICAL SYSTEM [E/G(H4)-04] [E/G(H4)U5-04]
W
VR
BL
BL
1
10
12
13
B40
DATA LINK CONNECTOR
GY
VR
BL
7
12
8
B79
CHECK CONNECTOR

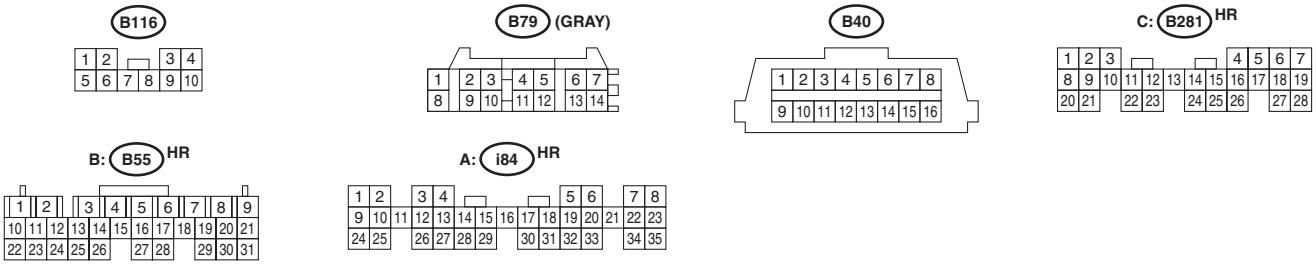
B116
B79 (GRAY)
B40
C: B281 HR
B: B55 HR
A: i84 HR

WI-05284

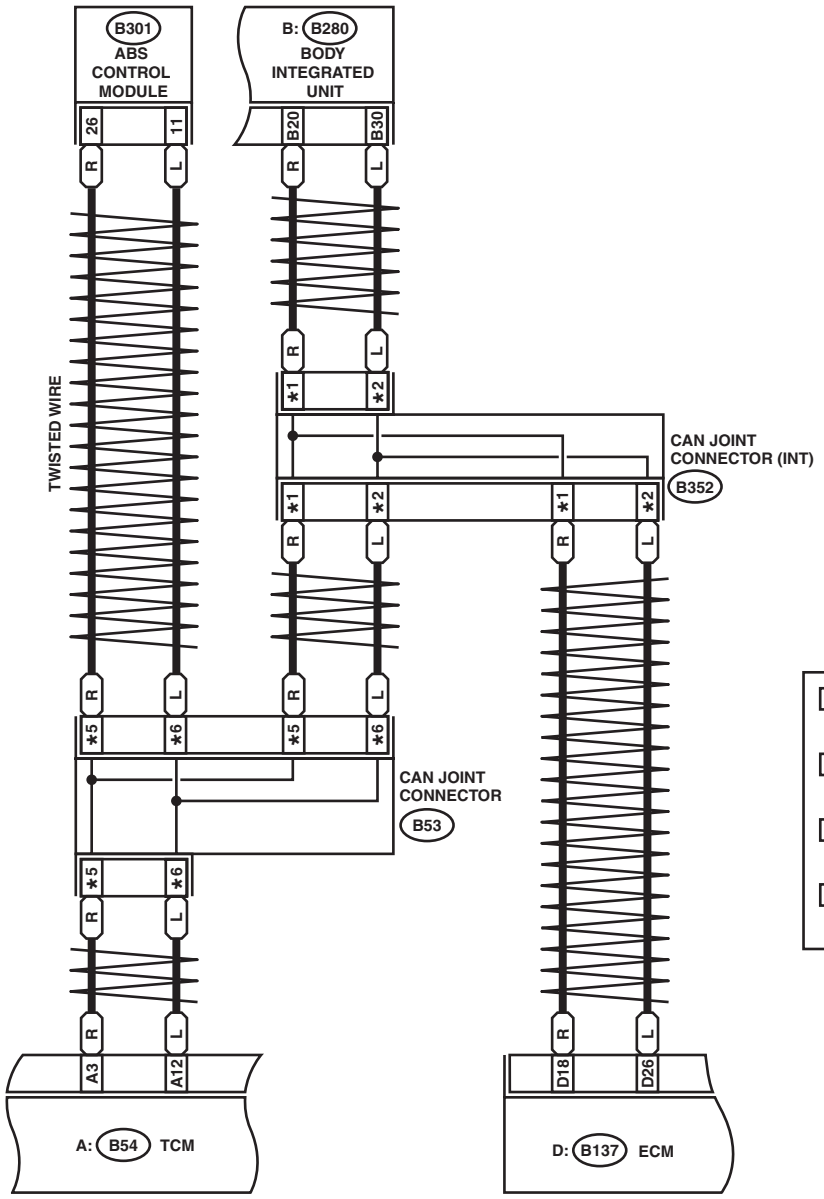
B301
ABS CONTROL MODULE
B: B280
BODY INTEGRATED UNIT
TWISTED WIRE
CAN JOINT CONNECTOR (INT)
B352
CAN JOINT CONNECTOR
B53
A: B54 TCM
D: B137 ECM
*1 : TERMINAL NO. OPTIONAL ARRANGMENT AMONG 1, 2, 5 AND 6
*2 : TERMINAL NO. OPTIONAL ARRANGMENT AMONG 3, 4, 7 AND 8
*5 : TERMINAL NO. OPTIONAL ARRANGMENT AMONG 8, 18 AND 19
*6 : TERMINAL NO. OPTIONAL ARRANGMENT AMONG 9, 10 AND 20

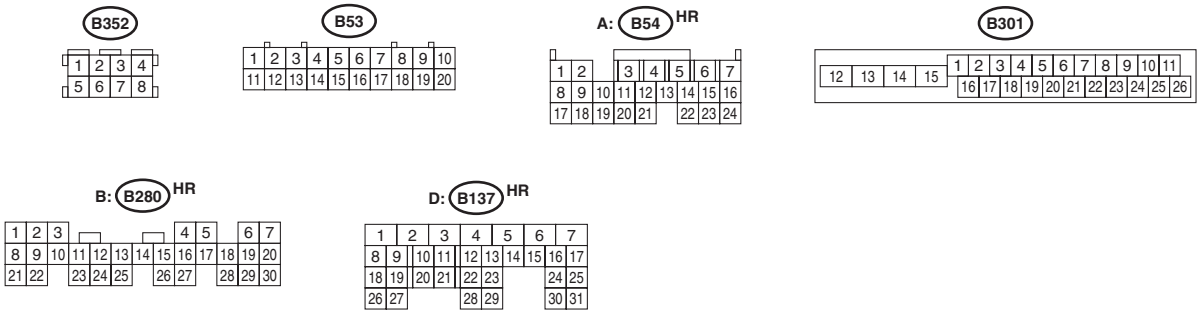
B352
B53
A: B54 HR
B301
B: B280 HR
D: B137 HR

WI-05285

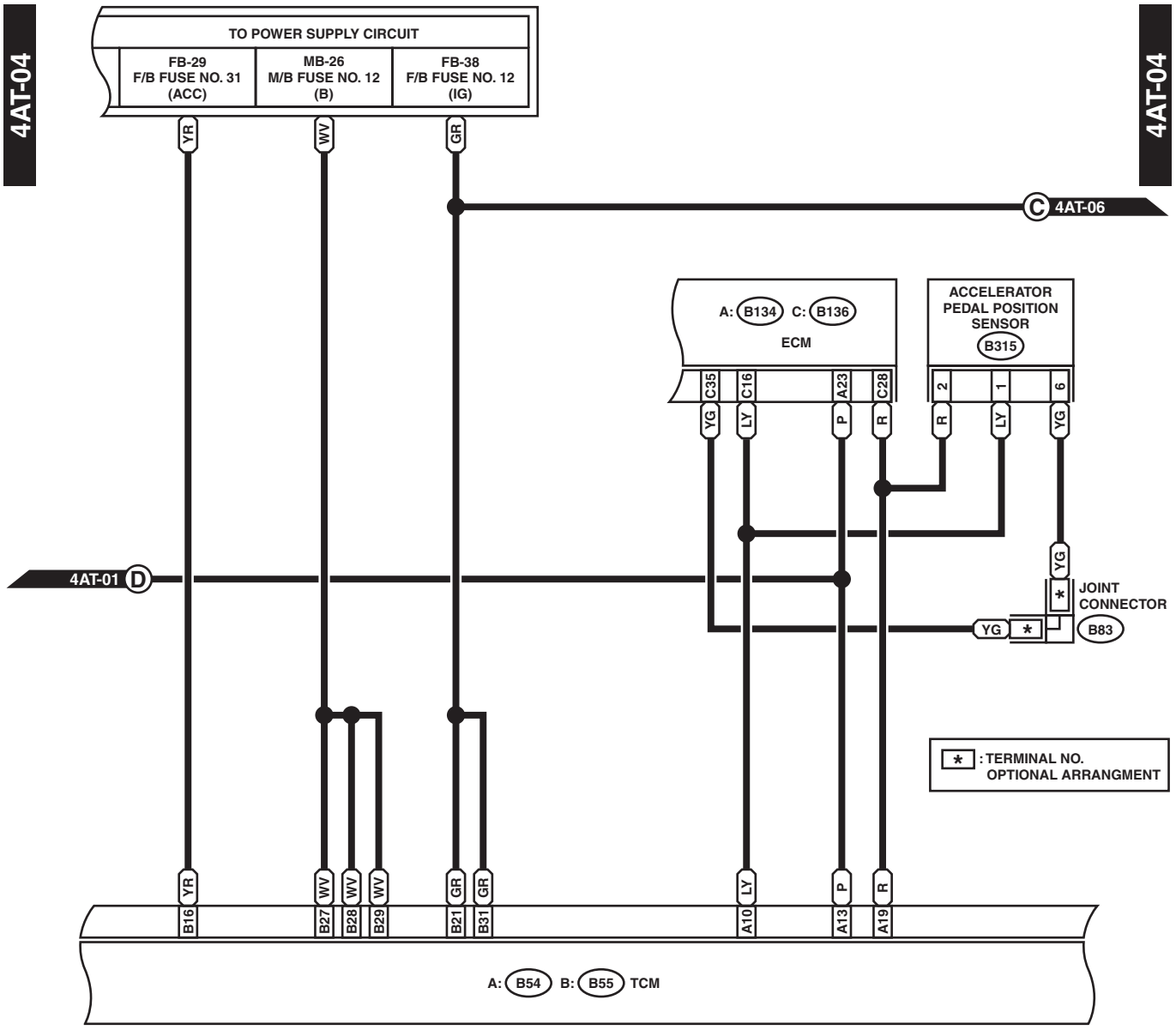
4AT-04
4AT-04
TO POWER SUPPLY CIRCUIT
FB-29
F/B FUSE NO. 31
(ACC)
MB-26
M/B FUSE NO. 12
(B)
FB-38
F/B FUSE NO. 12
(IG)
YR
WV
GR
C 4AT-06
A: B134 C: B136
ECM
C35
C16
A23
C28
YG
LY
P
R
ACCELERATOR
PEDAL POSITION
SENSOR
B315
2
1
6
R
LY
YG
4AT-01 D
YG
*
JOINT
CONNECTOR
B83
YG
*
* : TERMINAL NO.
OPTIONAL ARRANGMENT
YR
WV
WV
WV
GR
GR
LY
P
R
B16
B27
B28
B29
B21
B31
A10
A13
A19
A: B54 B: B55 TCM

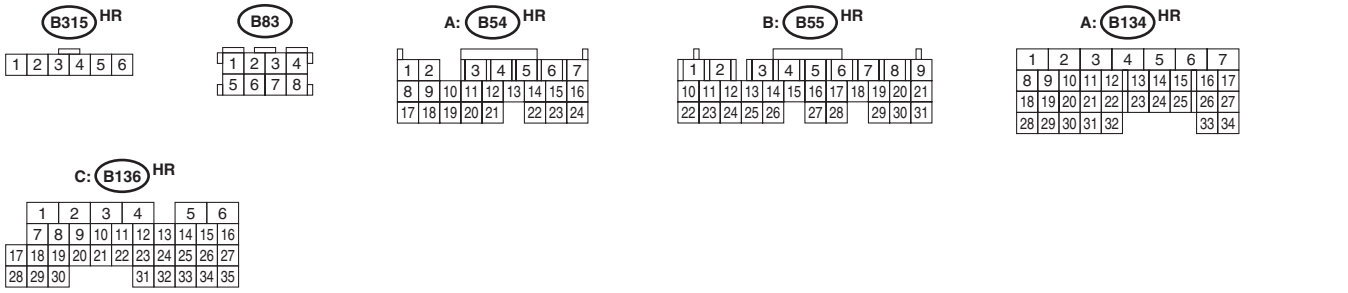
B315 HR
B83
A: B54 HR
B: B55 HR
A: B134 HR
C: B136 HR

WI-05286

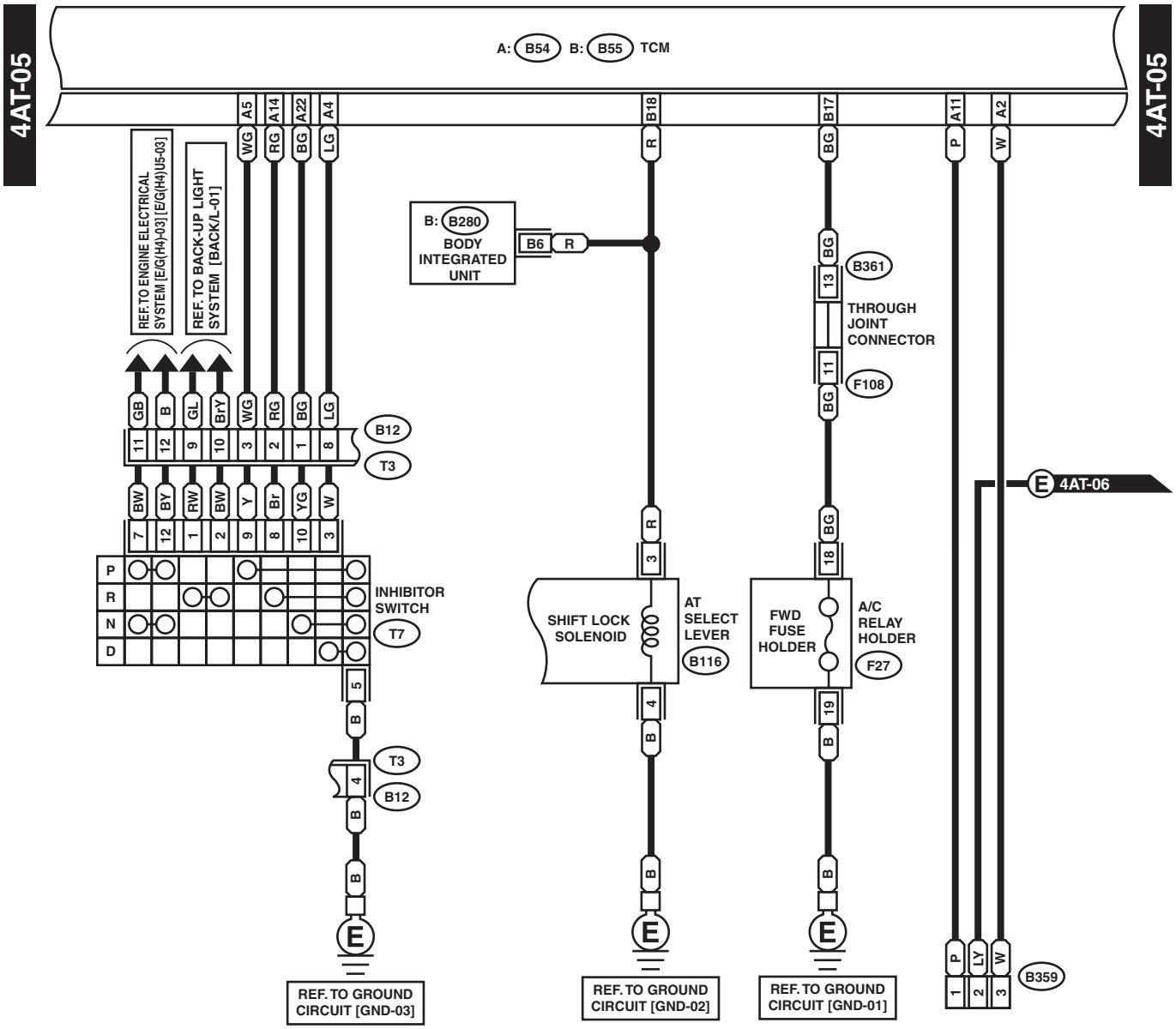
4AT-05
4AT-05
A: B54 B: B55 TCM
A5 A14 A22 A4 B18 B17 A11 A2
WG RG BG LG R BG P W
REF. TO ENGINE ELECTRICAL SYSTEM [E/G(H4)-03] [E/G(H4)U5-03]
REF. TO BACK-UP LIGHT SYSTEM [BACK/L-01]
B: B280 BODY INTEGRATED UNIT
B6 R
B361
13 BG
THROUGH JOINT CONNECTOR
11
F108
BG
GB B GL BrY WG RG BG LG
11 12 9 10 3 2 1 8
B12
T3
BW BY RW BW Y Br YG W
7 12 1 2 9 8 10 3
P R N D
INHIBITOR SWITCH
T7
5 B
T3
4
B12
B
B
E
REF. TO GROUND CIRCUIT [GND-03]
3 R
SHIFT LOCK SOLENOID
AT SELECT LEVER
B116
4 B
B
E
REF. TO GROUND CIRCUIT [GND-02]
18 BG
FWD FUSE HOLDER
A/C RELAY HOLDER
F27
19 B
B
E
REF. TO GROUND CIRCUIT [GND-01]
E 4AT-06
P LY W
1 2 3
B359

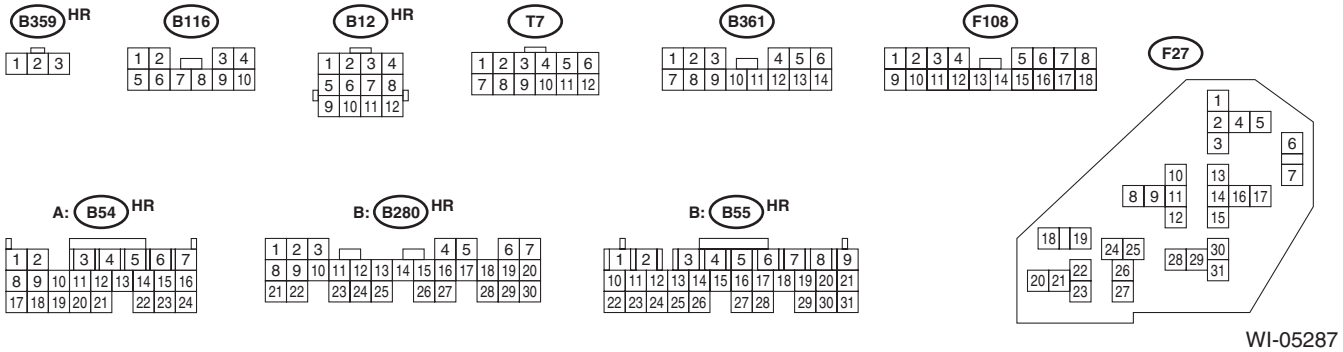
B359 HR
B116
B12 HR
T7
B361
F108
F27
A: B54 HR
B: B280 HR
B: B55 HR

WI-05287

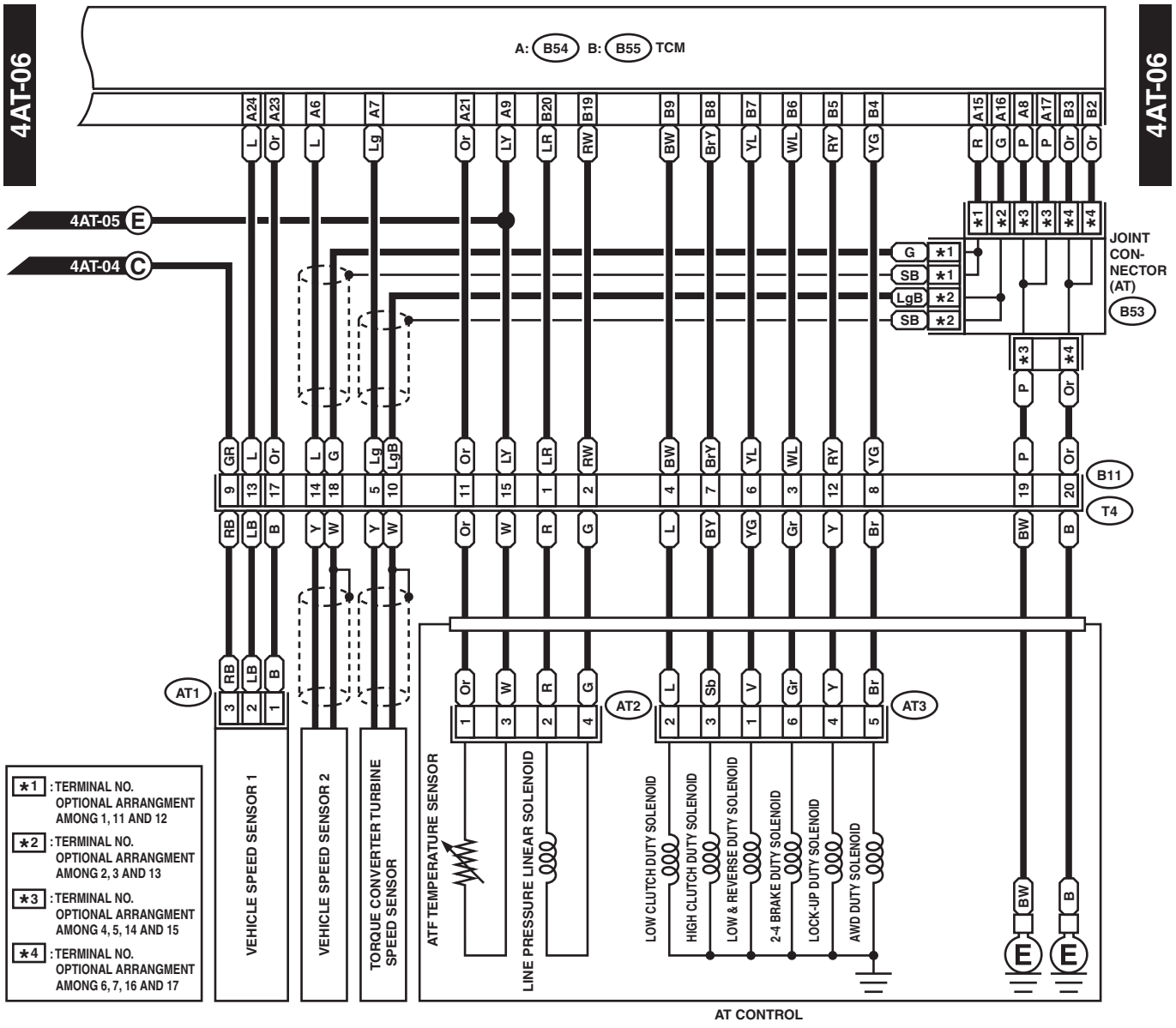
4AT-06
4AT-06
A: B54 B: B55 TCM
A24 A23 A6 A7 A21 A9 B20 B19 B9 B8 B7 B6 B5 B4 A15 A16 A8 A17 B3 B2
L Or L Lg Or LY LR RW BW BrY YL WL RY YG R G P P Or Or
4AT-05 E
4AT-04 C
JOINT CONNECTOR (AT)
B53
G ∗1
SB ∗1
LgB ∗2
SB ∗2
∗1 ∗2 ∗3 ∗3 ∗4 ∗4
∗3 ∗4
P Or
GR L Or L G Lg LgB Or LY LR RW BW BrY YL WL RY YG P Or
9 13 17 14 18 5 10 11 15 1 2 4 7 6 3 12 8 19 20
B11
T4
RB LB B Y W Y W Or W R G L BY YG Gr Y Br BW B
AT1
AT2
AT3
3 2 1
1 3 2 4 2 3 1 6 4 5
Or W R G L Sb V Gr Y Br
VEHICLE SPEED SENSOR 1
VEHICLE SPEED SENSOR 2
TORQUE CONVERTER TURBINE SPEED SENSOR
ATF TEMPERATURE SENSOR
LINE PRESSURE LINEAR SOLENOID
LOW CLUTCH DUTY SOLENOID
HIGH CLUTCH DUTY SOLENOID
LOW & REVERSE DUTY SOLENOID
2-4 BRAKE DUTY SOLENOID
LOCK-UP DUTY SOLENOID
AWD DUTY SOLENOID
BW B
E E
AT CONTROL
∗1 : TERMINAL NO. OPTIONAL ARRANGMENT AMONG 1, 11 AND 12
∗2 : TERMINAL NO. OPTIONAL ARRANGMENT AMONG 2, 3 AND 13
∗3 : TERMINAL NO. OPTIONAL ARRANGMENT AMONG 4, 5, 14 AND 15
∗4 : TERMINAL NO. OPTIONAL ARRANGMENT AMONG 6, 7, 16 AND 17

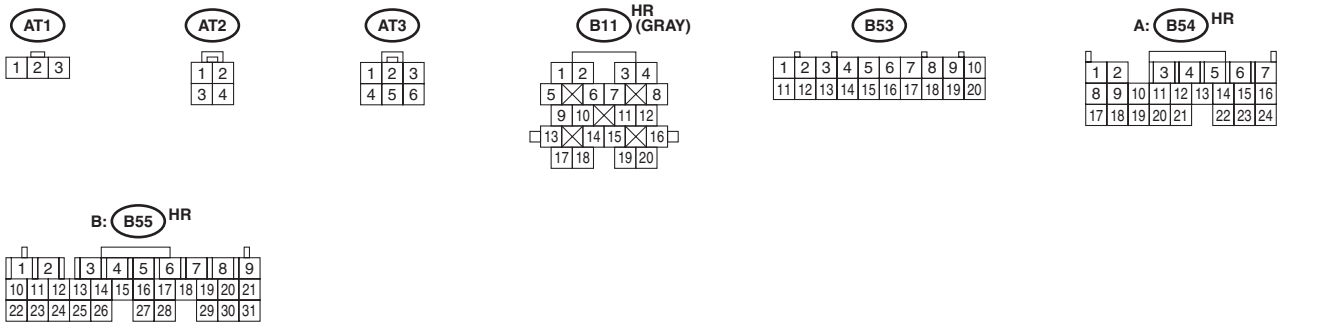
AT1
AT2
AT3
B11 HR (GRAY)
B53
A: B54 HR
B: B55 HR

WI-05288

2. 5AT MODEL

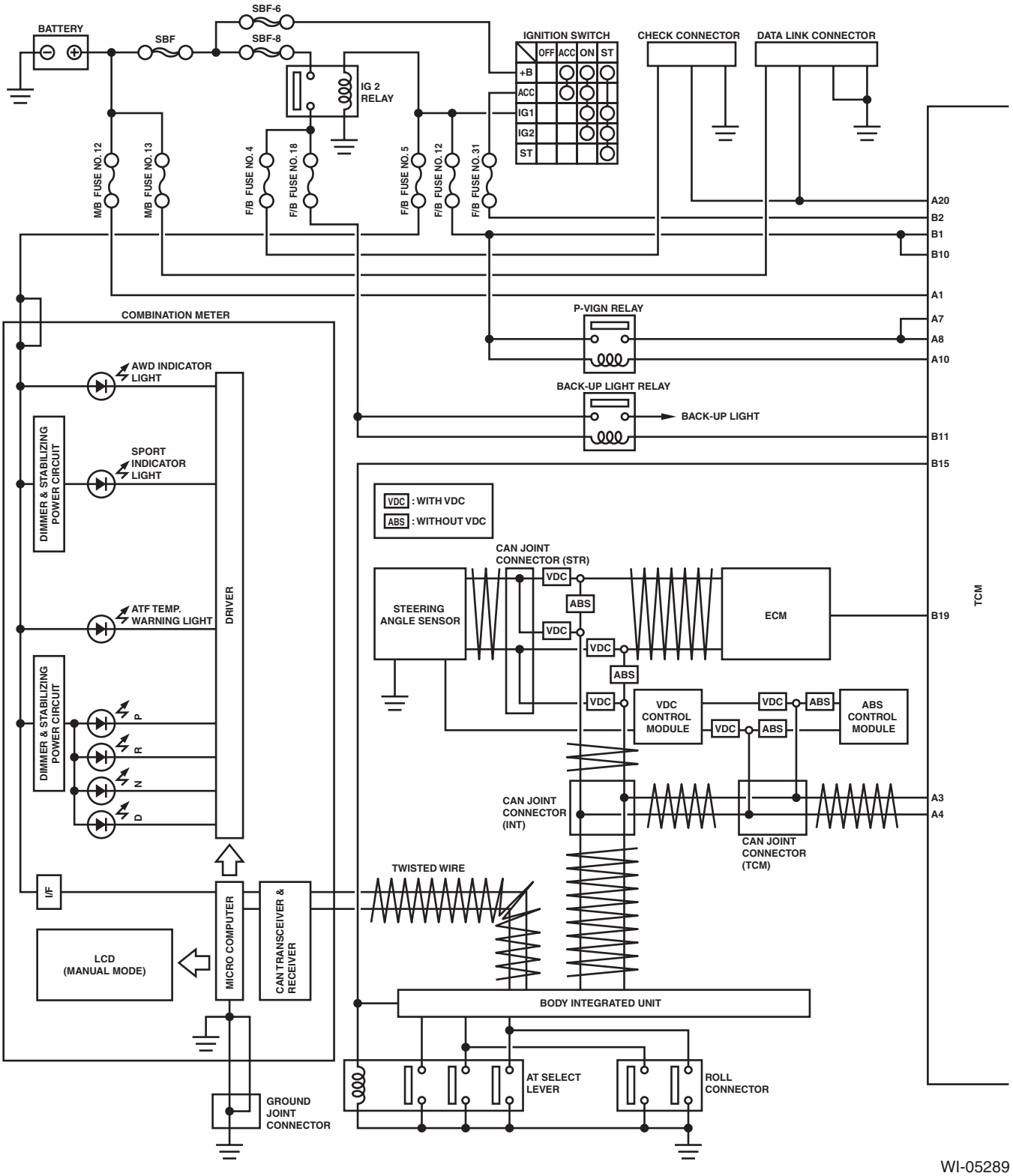

WI-05289

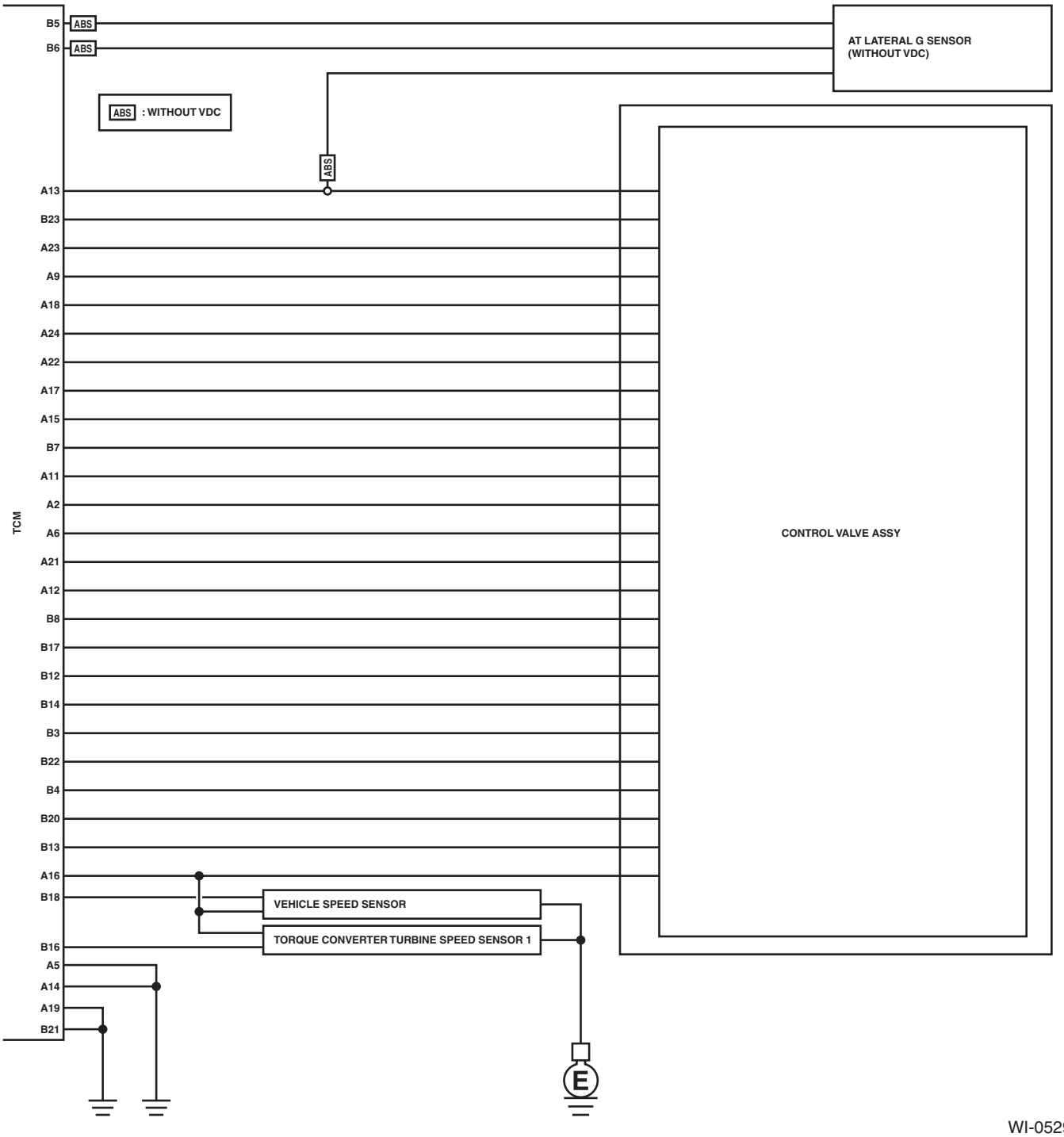
B5
ABS
B6
ABS
AT LATERAL G SENSOR
(WITHOUT VDC)
ABS : WITHOUT VDC
ABS
A13
B23
A23
A9
A18
A24
A22
A17
A15
B7
A11
A2
A6
A21
A12
B8
B17
B12
B14
B3
B22
B4
B20
B13
A16
B18
B16
A5
A14
A19
B21
TCM
CONTROL VALVE ASSY
VEHICLE SPEED SENSOR
TORQUE CONVERTER TURBINE SPEED SENSOR 1
E

WI-05290

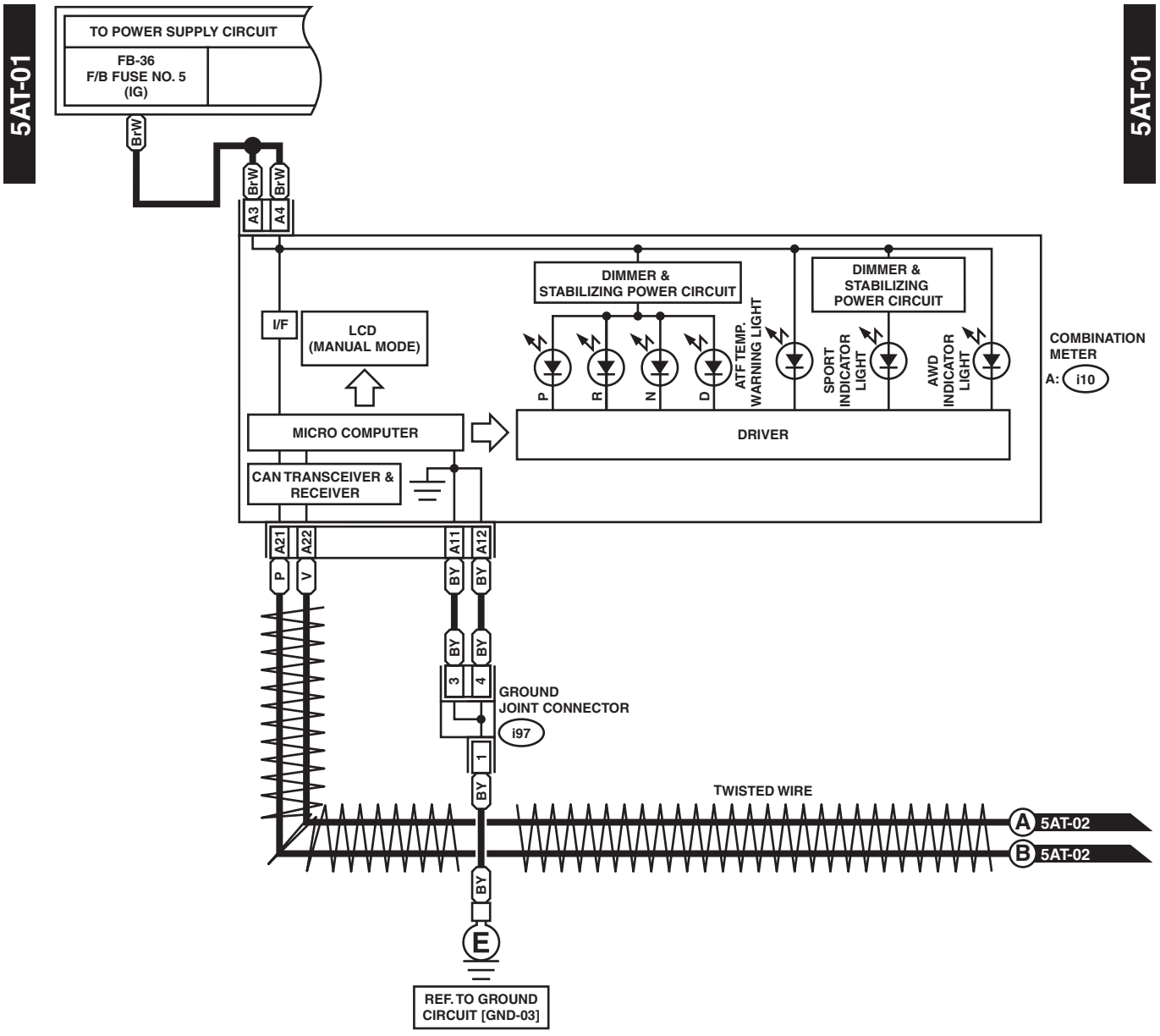
5AT-01
5AT-01
TO POWER SUPPLY CIRCUIT
FB-36
F/B FUSE NO. 5
(IG)
BrW
BrW
BrW
A3
A4
DIMMER &
STABILIZING POWER CIRCUIT
DIMMER &
STABILIZING
POWER CIRCUIT
I/F
LCD
(MANUAL MODE)
P
R
N
D
ATF TEMP.
WARNING LIGHT
SPORT
INDICATOR
LIGHT
AWD
INDICATOR
LIGHT
COMBINATION
METER
A: i10
MICRO COMPUTER
DRIVER
CAN TRANSCEIVER &
RECEIVER
A21
A22
A11
A12
P
V
BY
BY
BY
BY
3
4
GROUND
JOINT CONNECTOR
i97
1
BY
TWISTED WIRE
A 5AT-02
B 5AT-02
BY
E
REF. TO GROUND
CIRCUIT [GND-03]

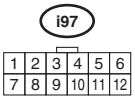
i97
1 2 3 4 5 6
7 8 9 10 11 12

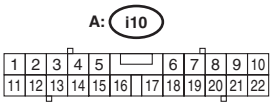
A: i10
1 2 3 4 5 6 7 8 9 10
11 12 13 14 15 16 17 18 19 20 21 22

WI-05291

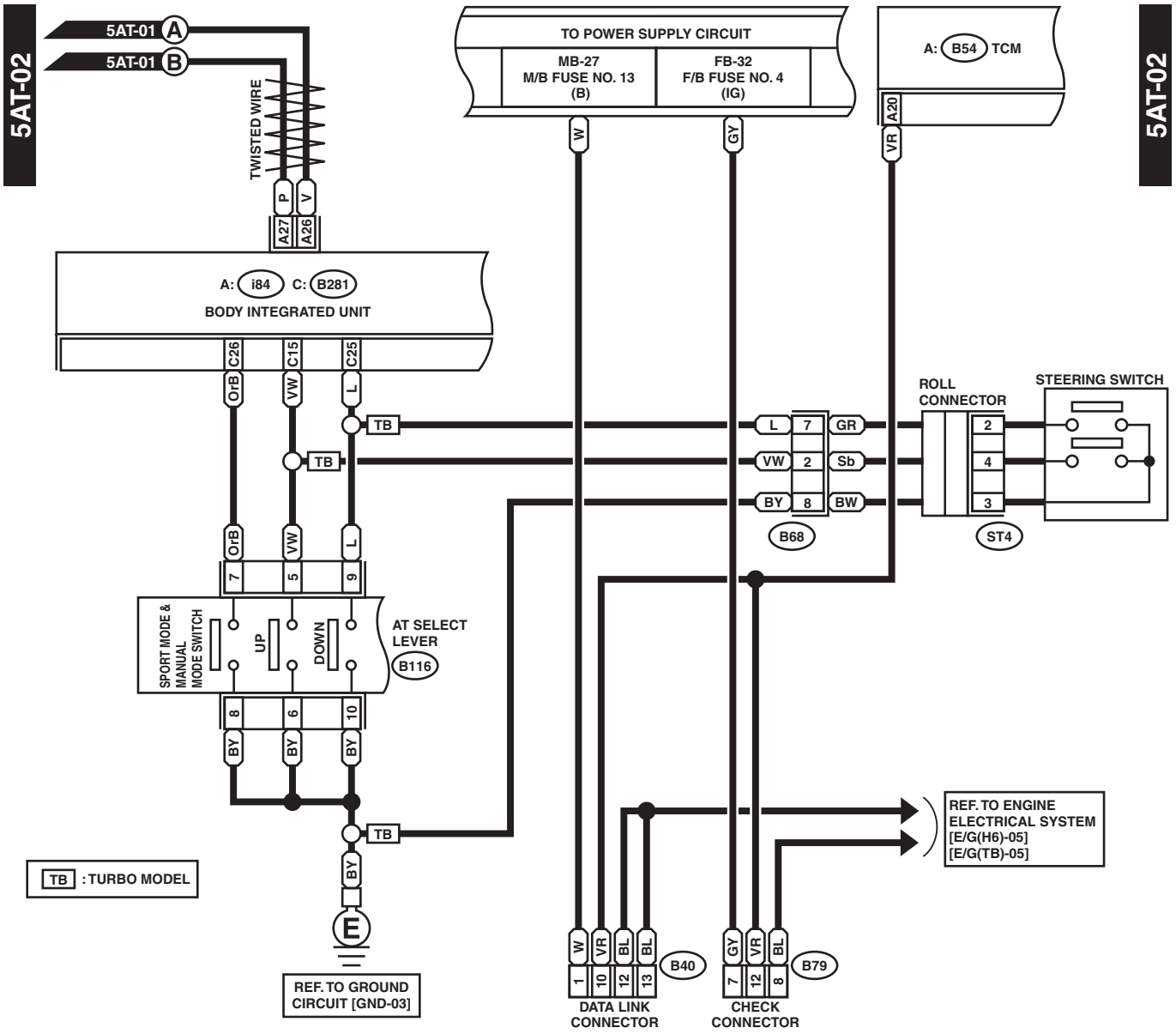
5AT-02
5AT-01 A
5AT-01 B
TWISTED WIRE
P
V
A27
A26
TO POWER SUPPLY CIRCUIT
MB-27
M/B FUSE NO. 13
(B)
FB-32
F/B FUSE NO. 4
(IG)
W
GY
A: B54 TCM
A20
VR
5AT-02
A: i84 C: B281
BODY INTEGRATED UNIT
C26
C15
C25
OrB
VW
L
TB
TB
L 7 GR
VW 2 Sb
BY 8 BW
B68
ROLL
CONNECTOR
2
4
3
ST4
STEERING SWITCH
OrB
VW
L
7
5
9
SPORT MODE &
MANUAL
MODE SWITCH
UP
DOWN
AT SELECT
LEVER
B116
8
6
10
BY
BY
BY
TB
BY
E
TB : TURBO MODEL
REF. TO GROUND
CIRCUIT [GND-03]
REF. TO ENGINE
ELECTRICAL SYSTEM
[E/G(H6)-05]
[E/G(TB)-05]
W
VR
BL
BL
1
10
12
13
B40
DATA LINK
CONNECTOR
GY
VR
BL
7
12
8
B79
CHECK
CONNECTOR

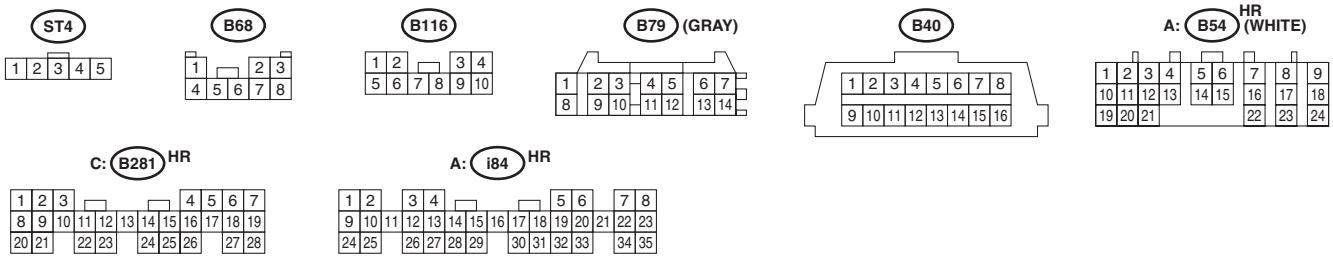
ST4
B68
B116
B79 (GRAY)
B40
A: B54 HR (WHITE)
C: B281 HR
A: i84 HR

WI-05292

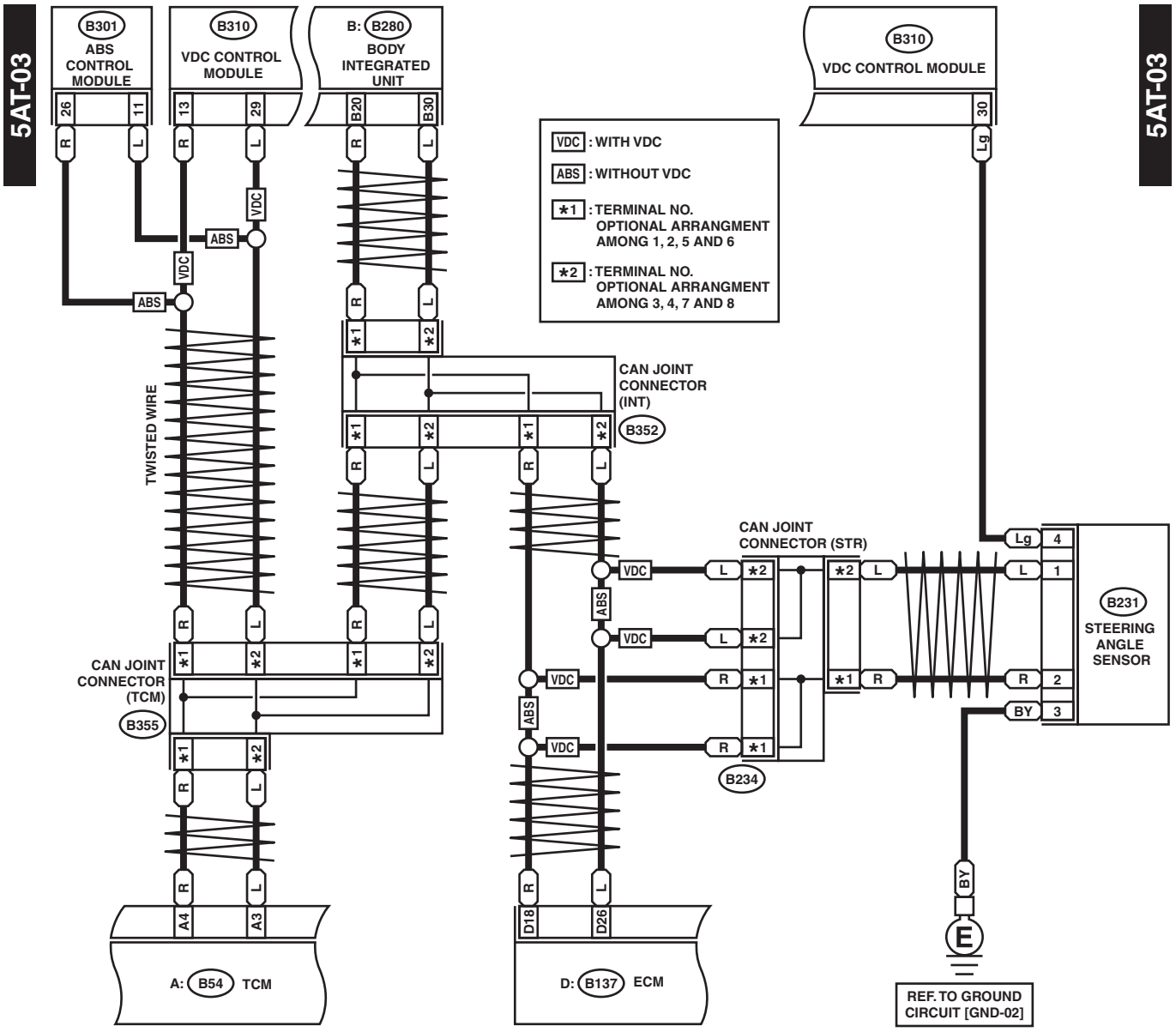
5AT-03
5AT-03
B301
ABS CONTROL MODULE
B310
VDC CONTROL MODULE
B: B280
BODY INTEGRATED UNIT
B310
VDC CONTROL MODULE
VDC : WITH VDC
ABS : WITHOUT VDC
*1 : TERMINAL NO. OPTIONAL ARRANGMENT AMONG 1, 2, 5 AND 6
*2 : TERMINAL NO. OPTIONAL ARRANGMENT AMONG 3, 4, 7 AND 8
TWISTED WIRE
CAN JOINT CONNECTOR (INT)
B352
CAN JOINT CONNECTOR (STR)
CAN JOINT CONNECTOR (TCM)
B355
B234
B231
STEERING ANGLE SENSOR
A: B54 TCM
D: B137 ECM
REF. TO GROUND CIRCUIT [GND-02]

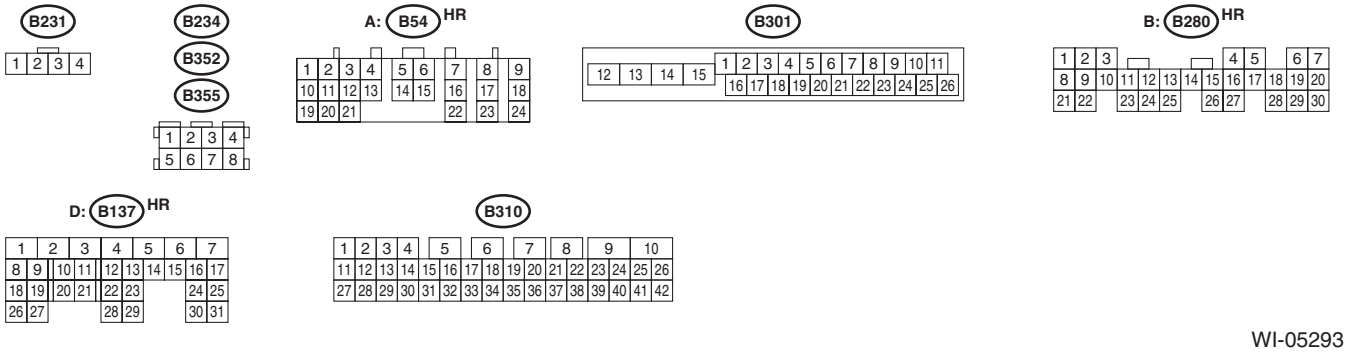
B231
B234
B352
B355
A: B54 HR
B301
B: B280 HR
D: B137 HR
B310

WI-05293

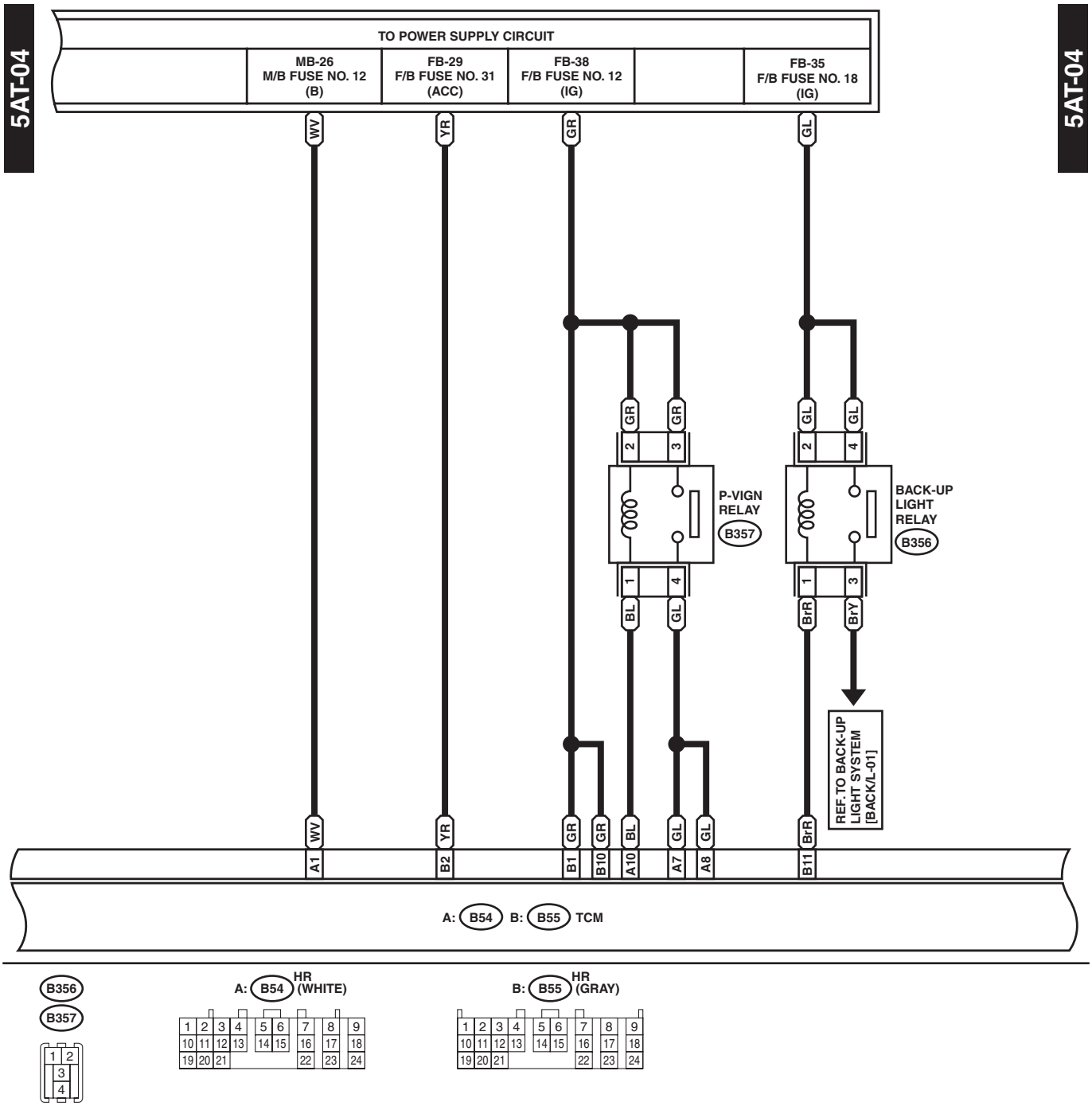
5AT-04
5AT-04
TO POWER SUPPLY CIRCUIT
MB-26
M/B FUSE NO. 12
(B)
FB-29
F/B FUSE NO. 31
(ACC)
FB-38
F/B FUSE NO. 12
(IG)
FB-35
F/B FUSE NO. 18
(IG)
WV
YR
GR
GL
P-VIGN
RELAY
B357
BACK-UP
LIGHT
RELAY
B356
BL
BrR
BrY
REF. TO BACK-UP
LIGHT SYSTEM
[BACK/L-01]
A1
B2
B1
B10
A10
A7
A8
B11
A: B54 B: B55 TCM
B356
B357
A: B54 HR (WHITE)
B: B55 HR (GRAY)

WI-05294

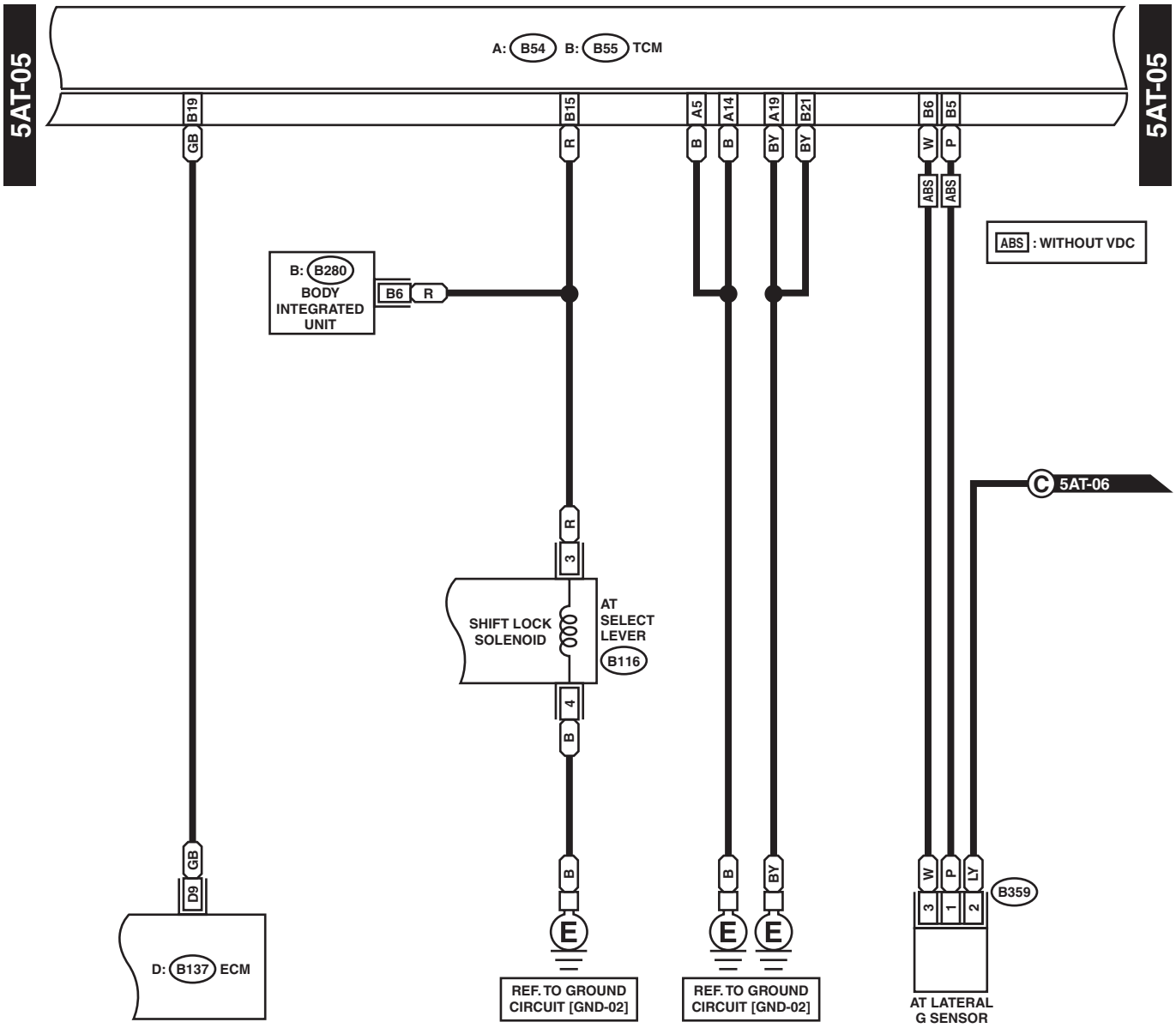
5AT-05
5AT-05
A: B54 B: B55 TCM
B19
B15
A5
A14
A19
B21
B6
B5
GB
R
B
B
BY
BY
W
P
ABS
ABS
ABS : WITHOUT VDC
B: B280
BODY INTEGRATED UNIT
B6
R
C 5AT-06
R
3
SHIFT LOCK SOLENOID
AT SELECT LEVER
B116
4
B
GB
D9
B
B
BY
W
P
LY
B359
3
1
2
D: B137 ECM
REF. TO GROUND CIRCUIT [GND-02]
REF. TO GROUND CIRCUIT [GND-02]
AT LATERAL G SENSOR

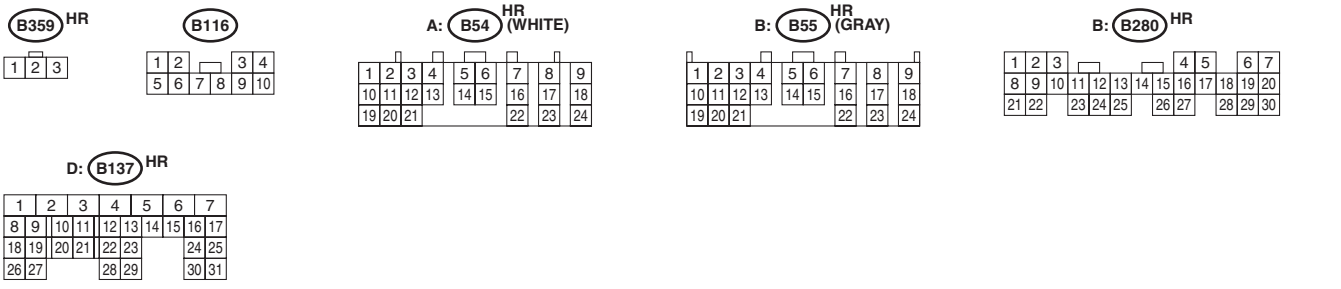
B359 HR
B116
A: B54 HR (WHITE)
B: B55 HR (GRAY)
B: B280 HR
D: B137 HR

WI-05295

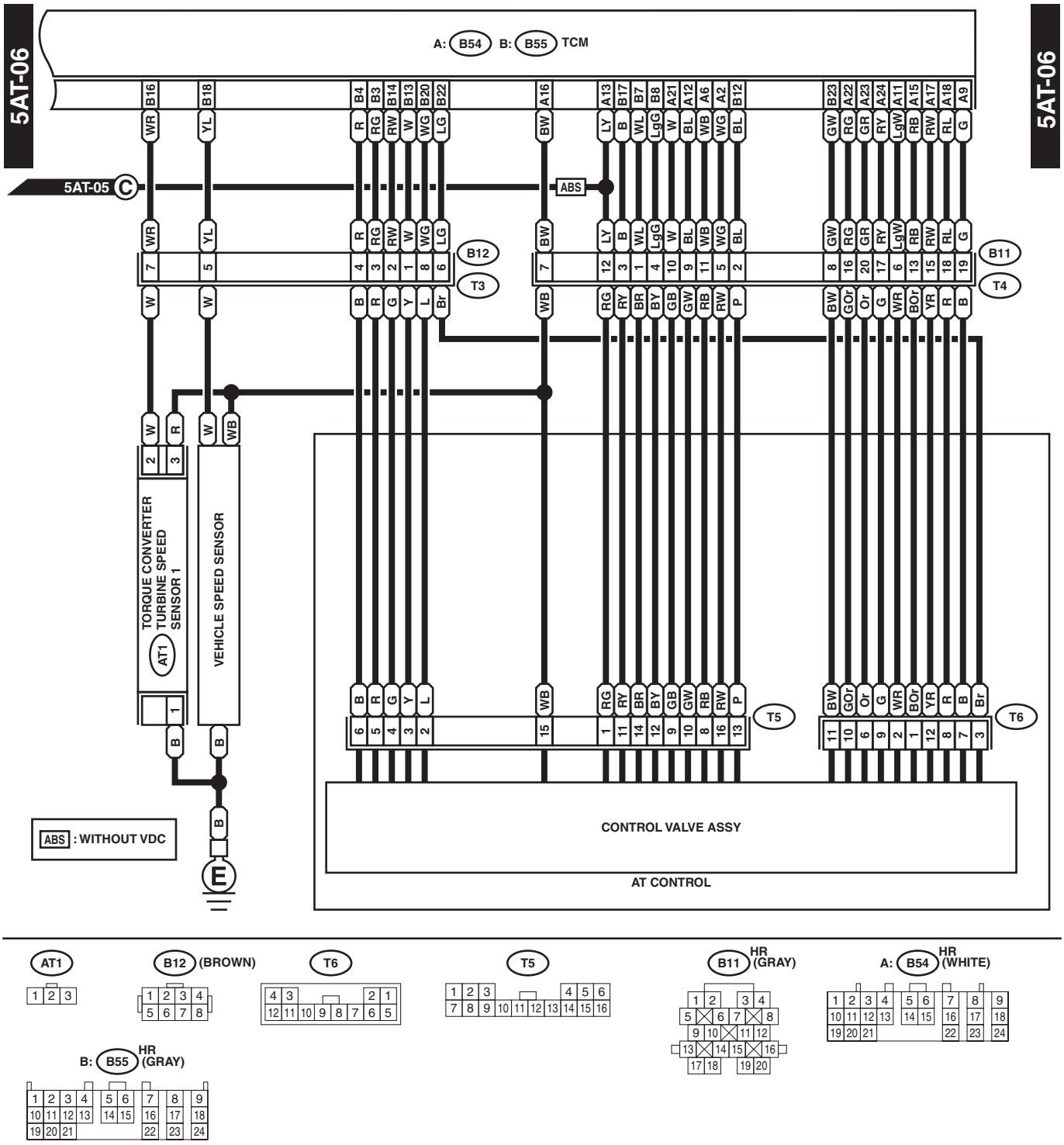
5AT-06
5AT-06
A: B54 B: B55 TCM
5AT-05 C
ABS
B12
T3
B11
T4
T5
T6
TORQUE CONVERTER TURBINE SPEED SENSOR 1
AT1
VEHICLE SPEED SENSOR
ABS : WITHOUT VDC
CONTROL VALVE ASSY
AT CONTROL
AT1
B12 (BROWN)
T6
T5
B11 HR (GRAY)
A: B54 HR (WHITE)
B: B55 HR (GRAY)

WI-05296

7. AT Shift Lock Control System

A: WIRING DIAGRAM

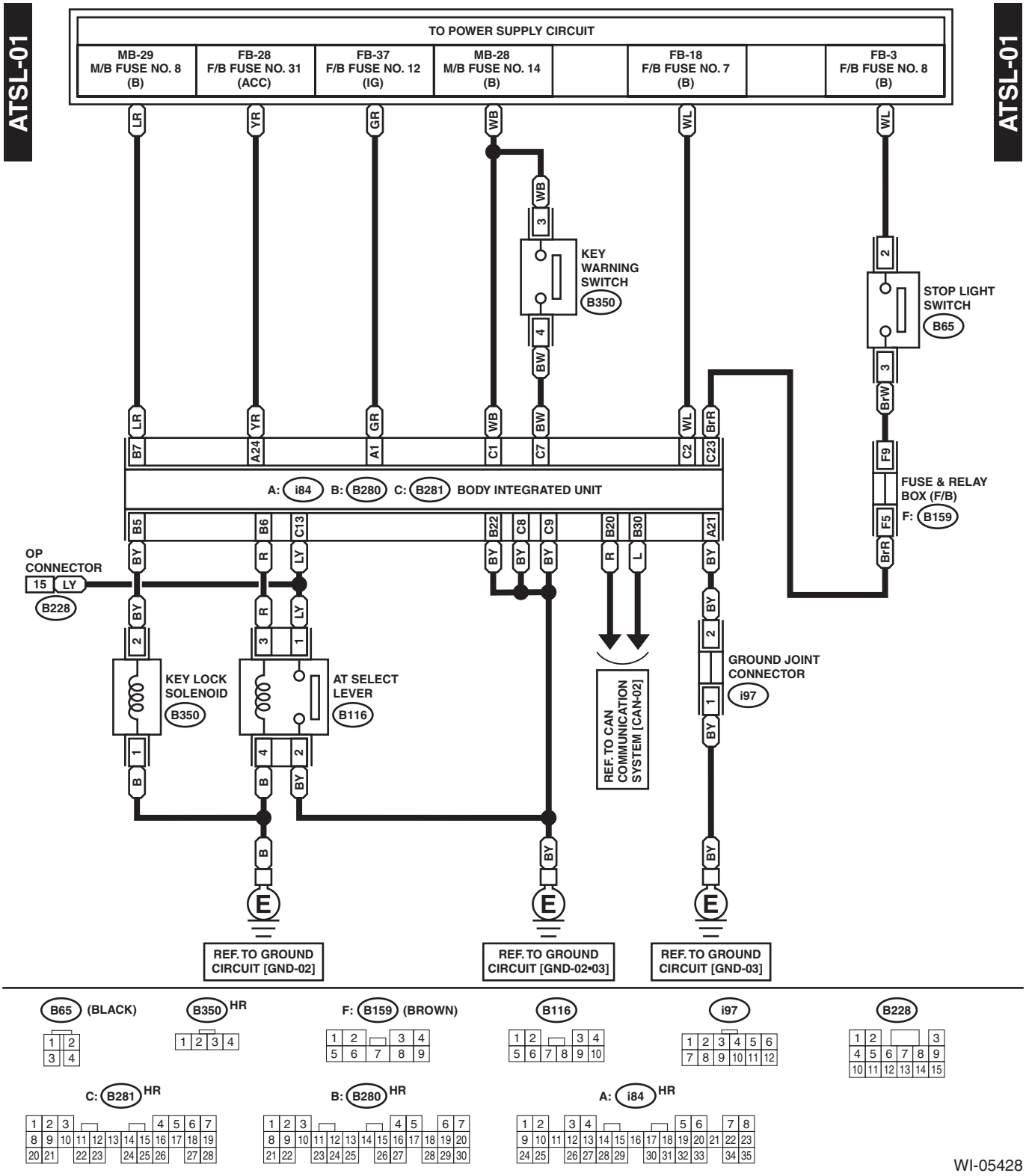

WI-05428

8. TPM Control System

A: WIRING DIAGRAM

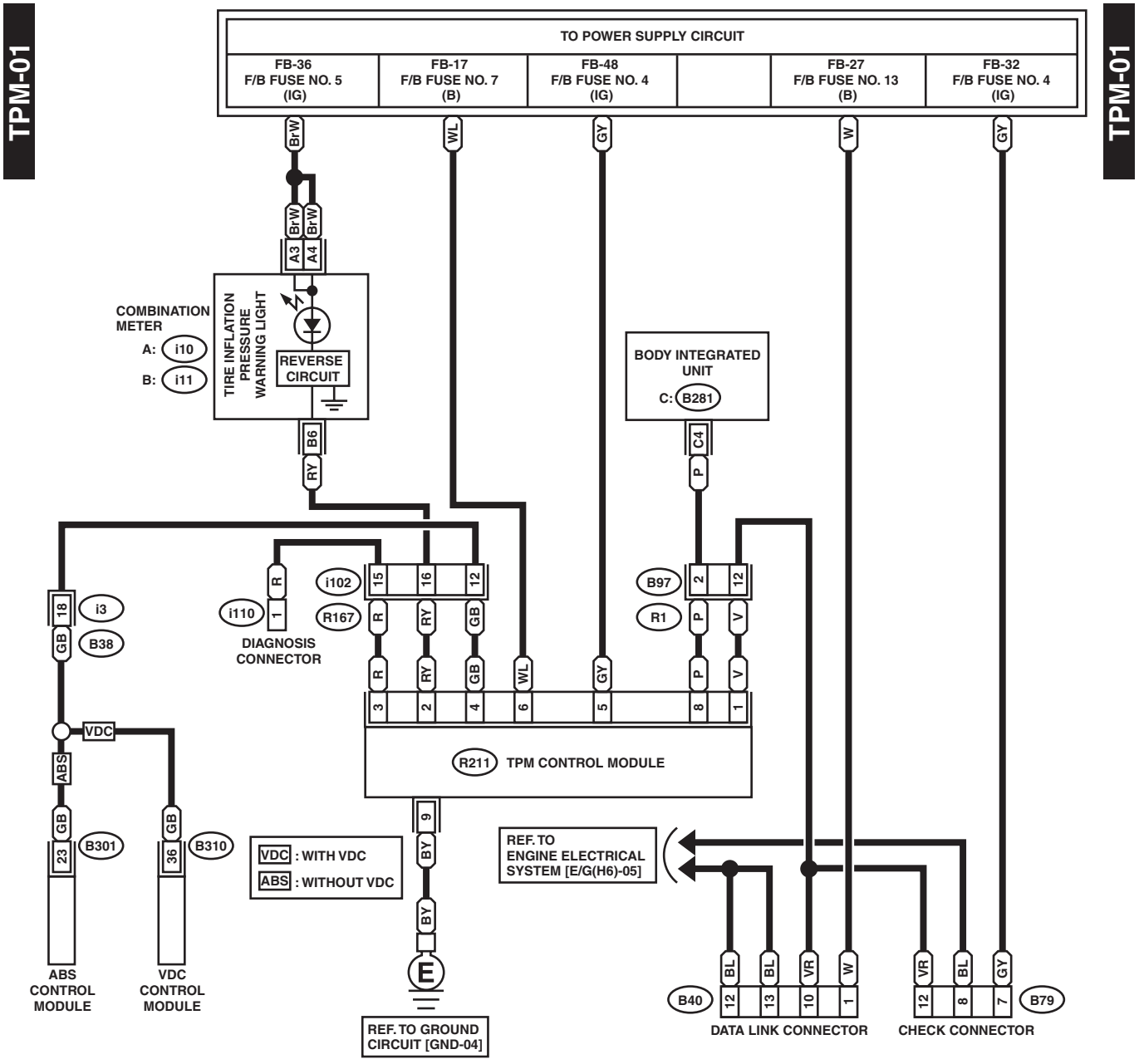

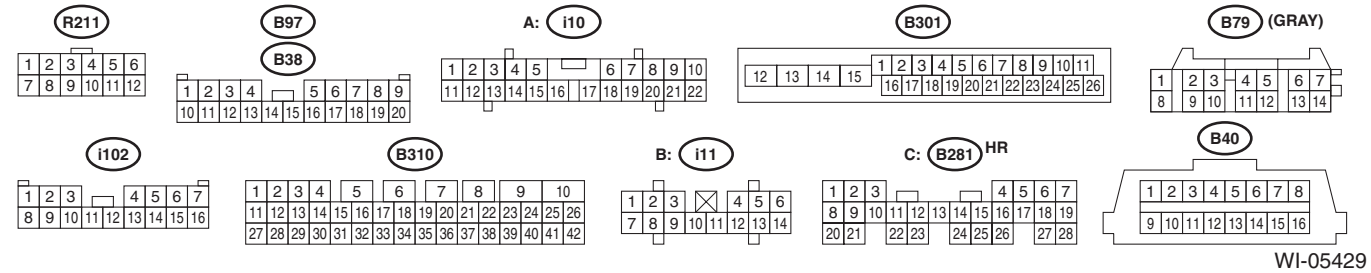

WI-05429

9. Anti-lock Brake System

A: WIRING DIAGRAM

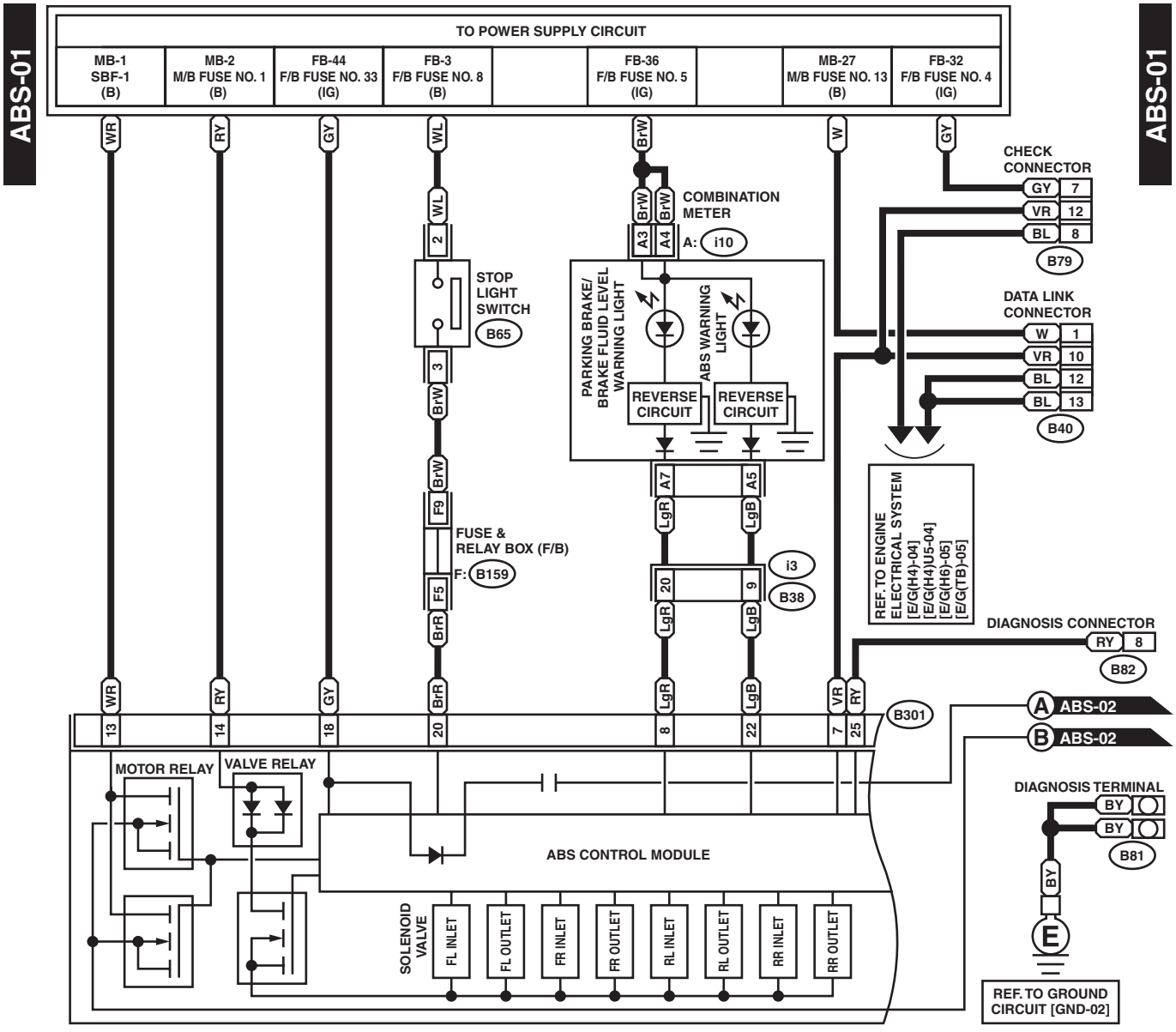

WI-05279

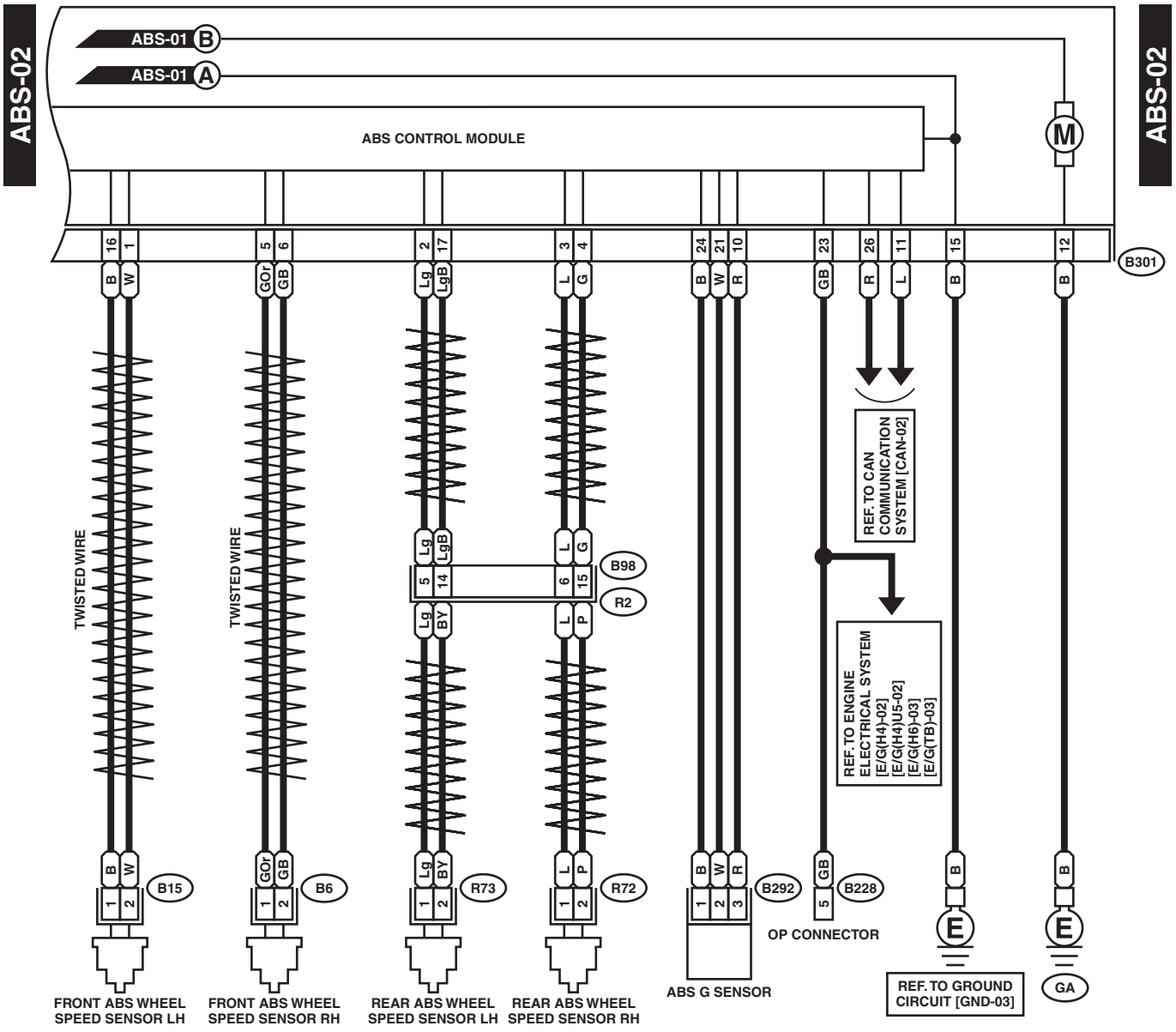
ABS-02
ABS-01 B
ABS-01 A
ABS CONTROL MODULE
M
ABS-02
B301
TWISTED WIRE
TWISTED WIRE
REF. TO CAN COMMUNICATION SYSTEM [CAN-02]
B98
R2
REF. TO ENGINE ELECTRICAL SYSTEM [E/G(H4)-02] [E/G(H4)U5-02] [E/G(H6)-03] [E/G(TB)-03]
B15
B6
R73
R72
B292
B228
OP CONNECTOR
ABS G SENSOR
REF. TO GROUND CIRCUIT [GND-03]
GA
FRONT ABS WHEEL SPEED SENSOR LH
FRONT ABS WHEEL SPEED SENSOR RH
REAR ABS WHEEL SPEED SENSOR LH
REAR ABS WHEEL SPEED SENSOR RH

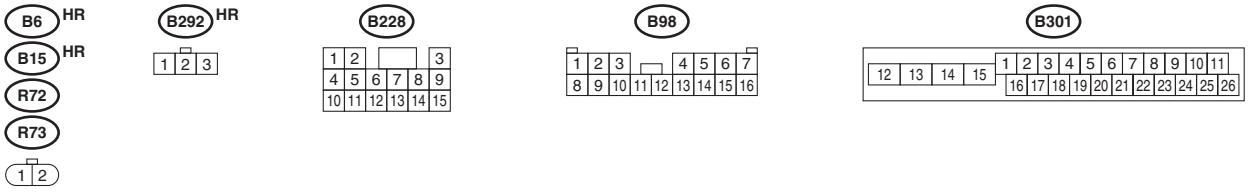
B6 HR
B15 HR
R72
R73
B292 HR
B228
B98
B301

WI-05280

10.Vehicle Dynamics Control System

A: WIRING DIAGRAM

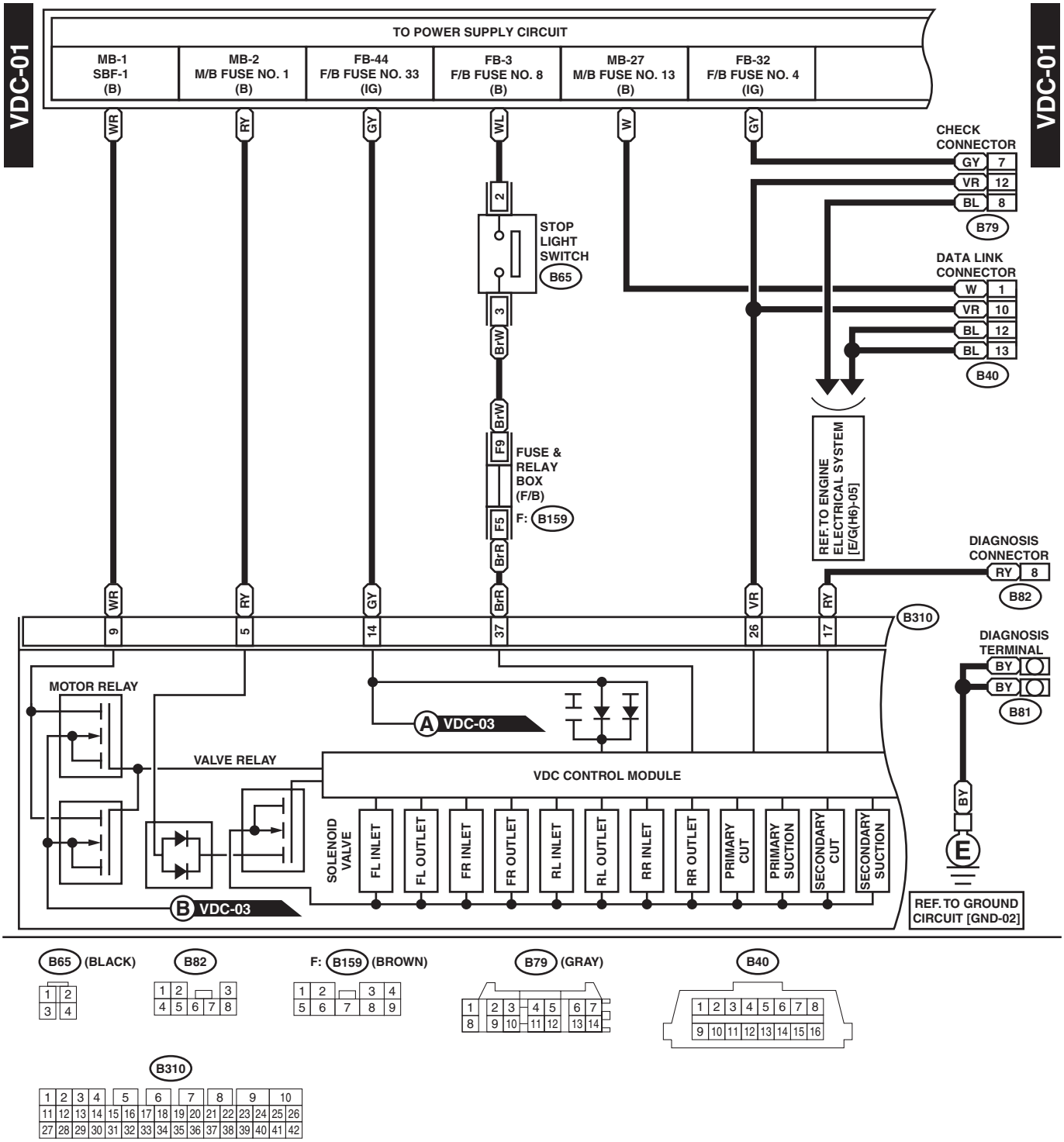

WI-05407

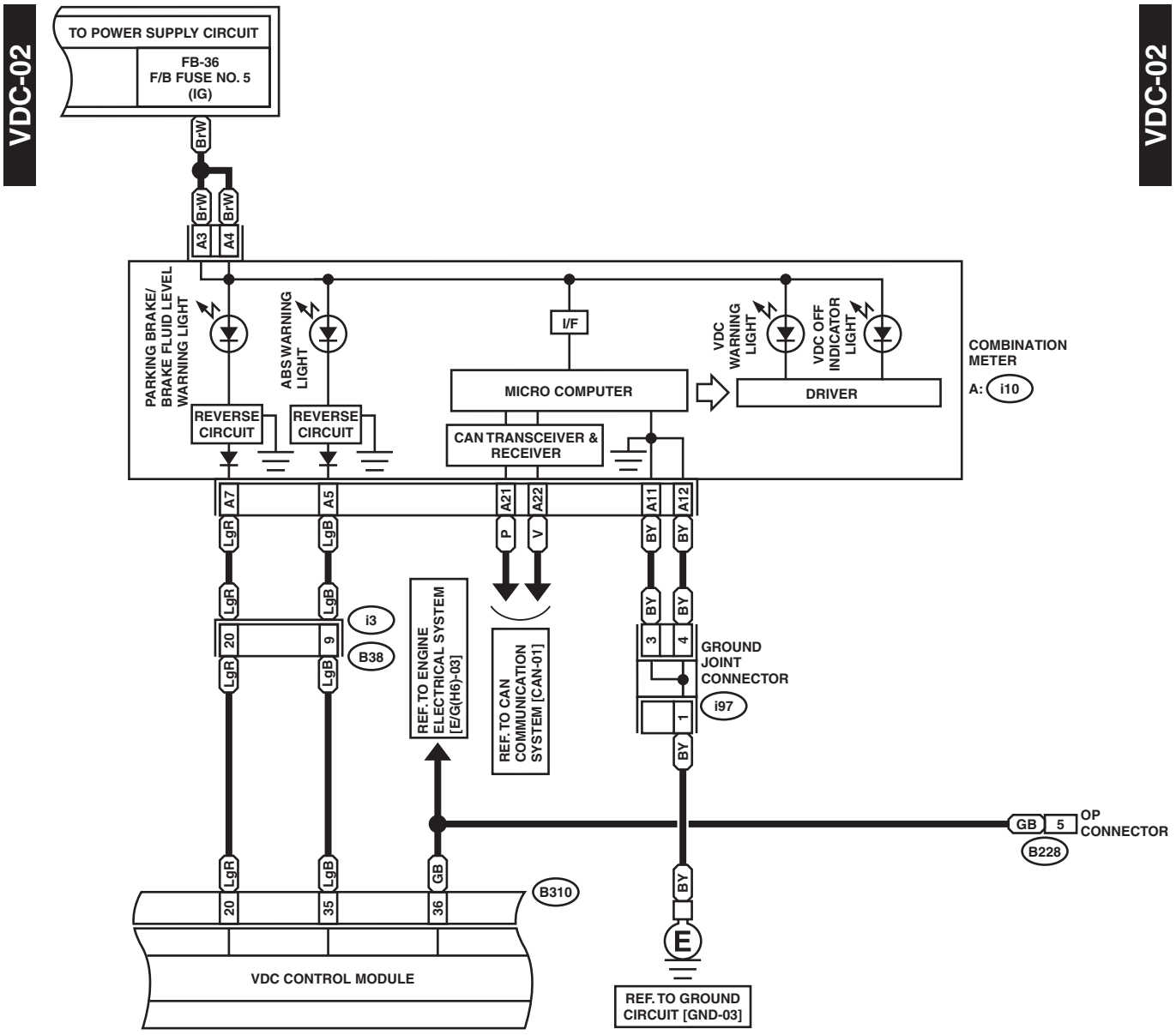
VDC-02
VDC-02
TO POWER SUPPLY CIRCUIT
FB-36
F/B FUSE NO. 5
(IG)
BrW
A3
A4
PARKING BRAKE/
BRAKE FLUID LEVEL
WARNING LIGHT
ABS WARNING
LIGHT
I/F
VDC
WARNING
LIGHT
VDC OFF
INDICATOR
LIGHT
COMBINATION
METER
A: i10
REVERSE
CIRCUIT
REVERSE
CIRCUIT
MICRO COMPUTER
DRIVER
CAN TRANSCEIVER &
RECEIVER
A7
A5
A21
A22
A11
A12
LgR
LgB
P
V
BY
i3
B38
20
9
3
4
GROUND
JOINT
CONNECTOR
i97
1
REF. TO ENGINE
ELECTRICAL SYSTEM
[E/G(H6)-03]
REF. TO CAN
COMMUNICATION
SYSTEM [CAN-01]
GB
5
OP
CONNECTOR
B228
B310
35
36
VDC CONTROL MODULE
E
REF. TO GROUND
CIRCUIT [GND-03]

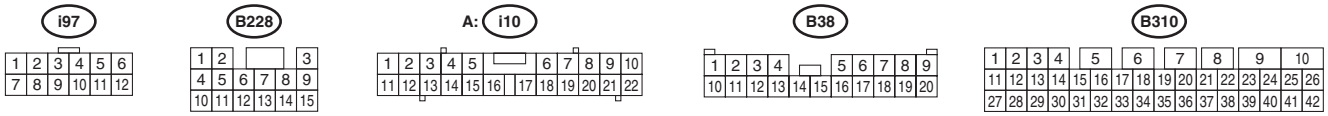
i97
B228
A: i10
B38
B310

WI-05408

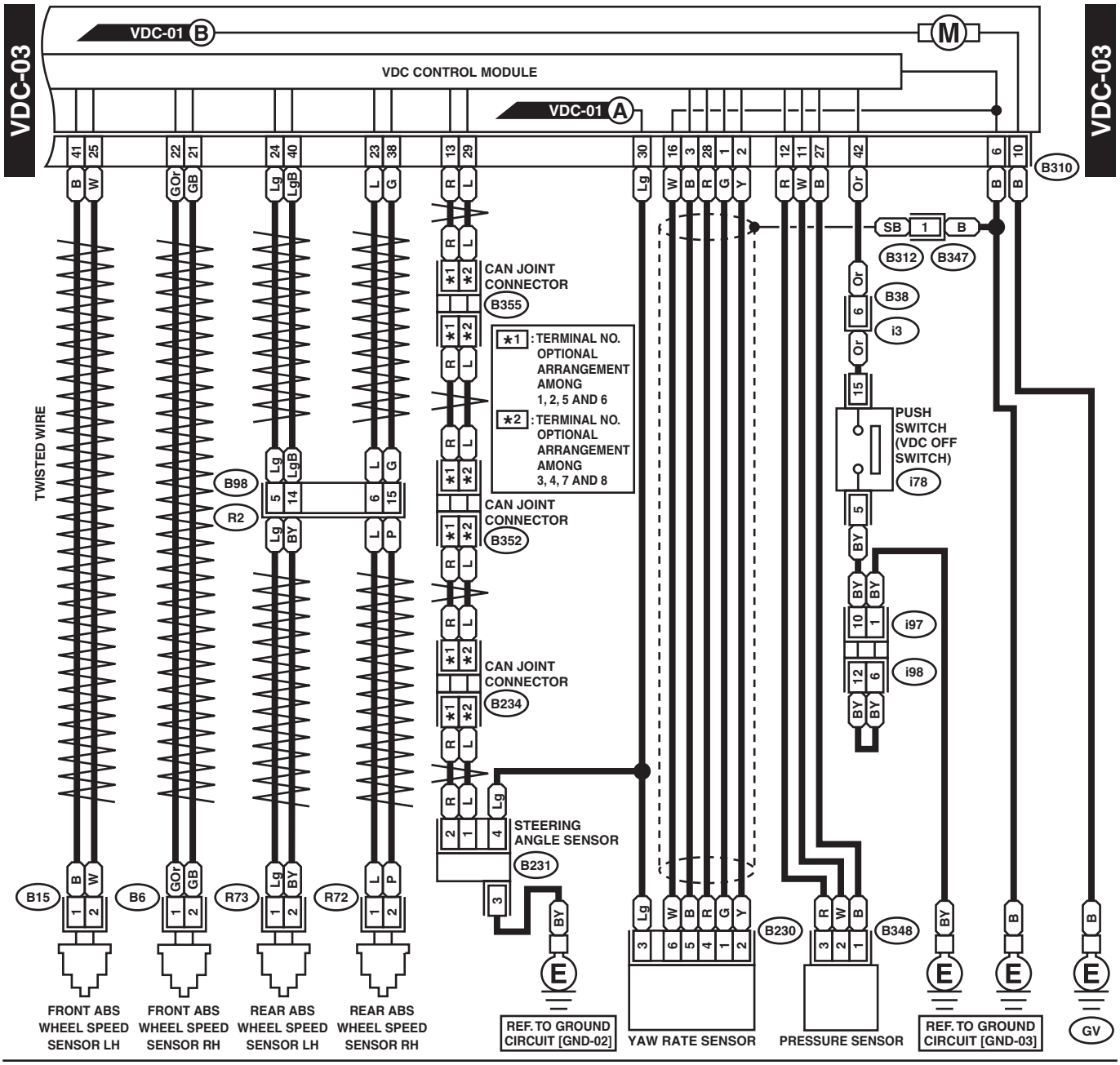
VDC-03
VDC-01 B
M
VDC CONTROL MODULE
VDC-01 A
TWISTED WIRE
CAN JOINT CONNECTOR B355
CAN JOINT CONNECTOR B352
CAN JOINT CONNECTOR B234
*1 : TERMINAL NO. OPTIONAL ARRANGEMENT AMONG 1, 2, 5 AND 6
*2 : TERMINAL NO. OPTIONAL ARRANGEMENT AMONG 3, 4, 7 AND 8
STEERING ANGLE SENSOR B231
B310
B312
B347
B38
i3
PUSH SWITCH (VDC OFF SWITCH) i78
i97
i98
B98
R2
B15
B6
R73
R72
B230
B348
FRONT ABS WHEEL SPEED SENSOR LH
FRONT ABS WHEEL SPEED SENSOR RH
REAR ABS WHEEL SPEED SENSOR LH
REAR ABS WHEEL SPEED SENSOR RH
REF. TO GROUND CIRCUIT [GND-02]
YAW RATE SENSOR
PRESSURE SENSOR
REF. TO GROUND CIRCUIT [GND-03]
GV

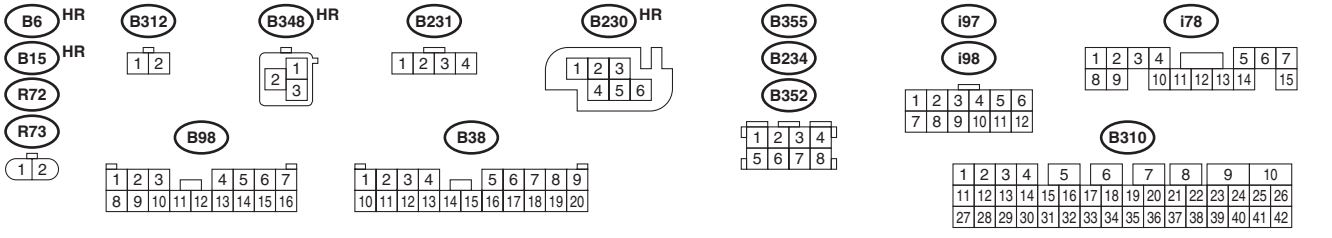
B6 HR
B15 HR
R72
R73
B312
B348 HR
B231
B230 HR
B355
B234
B352
i97
i98
i78
B98
B38
B310

WI-05409

11.Air Conditioning System

A: WIRING DIAGRAM

1. MANUAL A/C MODEL

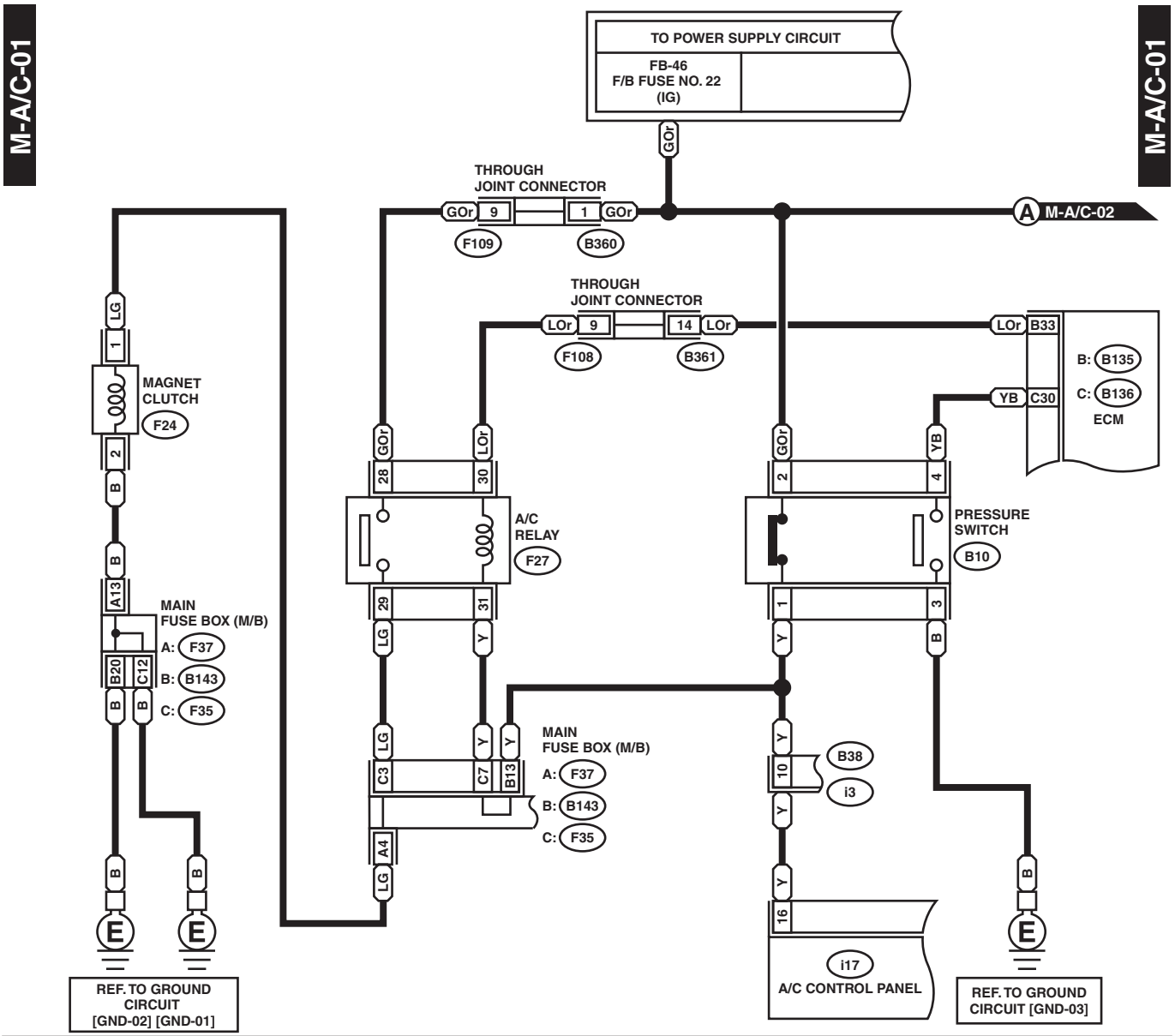

WI-05272

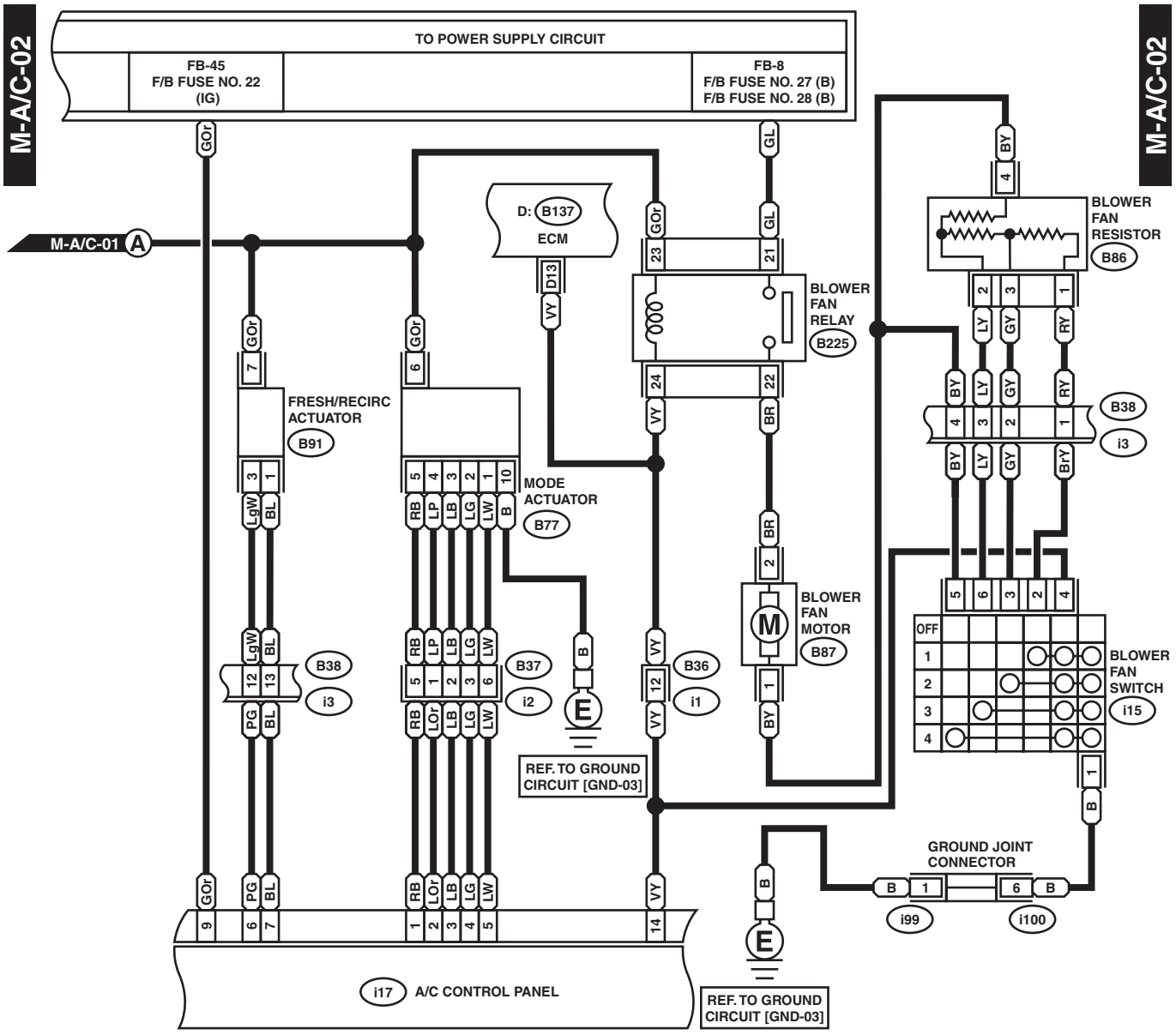
M-A/C-02
TO POWER SUPPLY CIRCUIT
FB-45
F/B FUSE NO. 22
(IG)
FB-8
F/B FUSE NO. 27 (B)
F/B FUSE NO. 28 (B)
M-A/C-01 A
D: B137
ECM
D13
VY
GOr
GL
BLOWER FAN RESISTOR
B86
BLOWER FAN RELAY
B225
FRESH/RECIRC ACTUATOR
B91
MODE ACTUATOR
B77
BLOWER FAN MOTOR
B87
B38
i3
B37
i2
B36
i1
BLOWER FAN SWITCH
i15
REF. TO GROUND CIRCUIT [GND-03]
GROUND JOINT CONNECTOR
i99
i100
i17
A/C CONTROL PANEL
REF. TO GROUND CIRCUIT [GND-03]

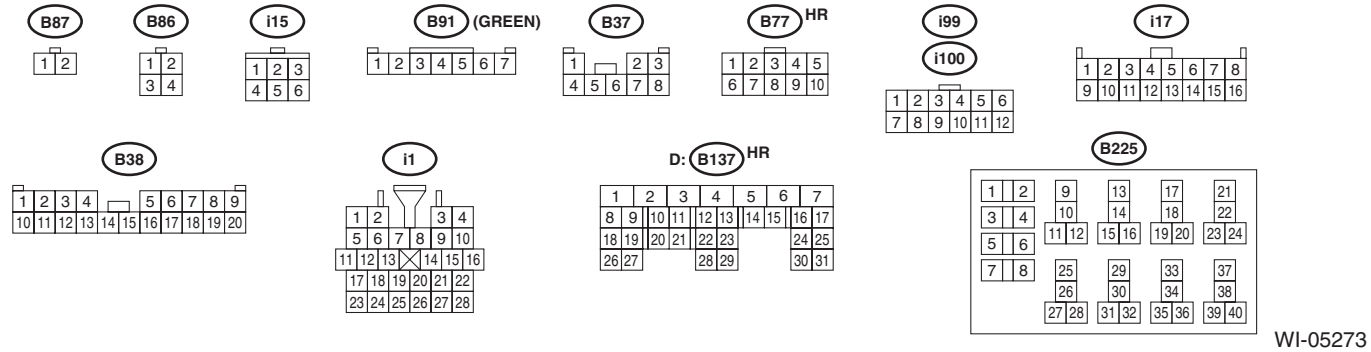
B87
B86
i15
B91 (GREEN)
B37
B77 HR
i99
i100
i17
B38
i1
D: B137 HR
B225

WI-05273

M-A/C-03

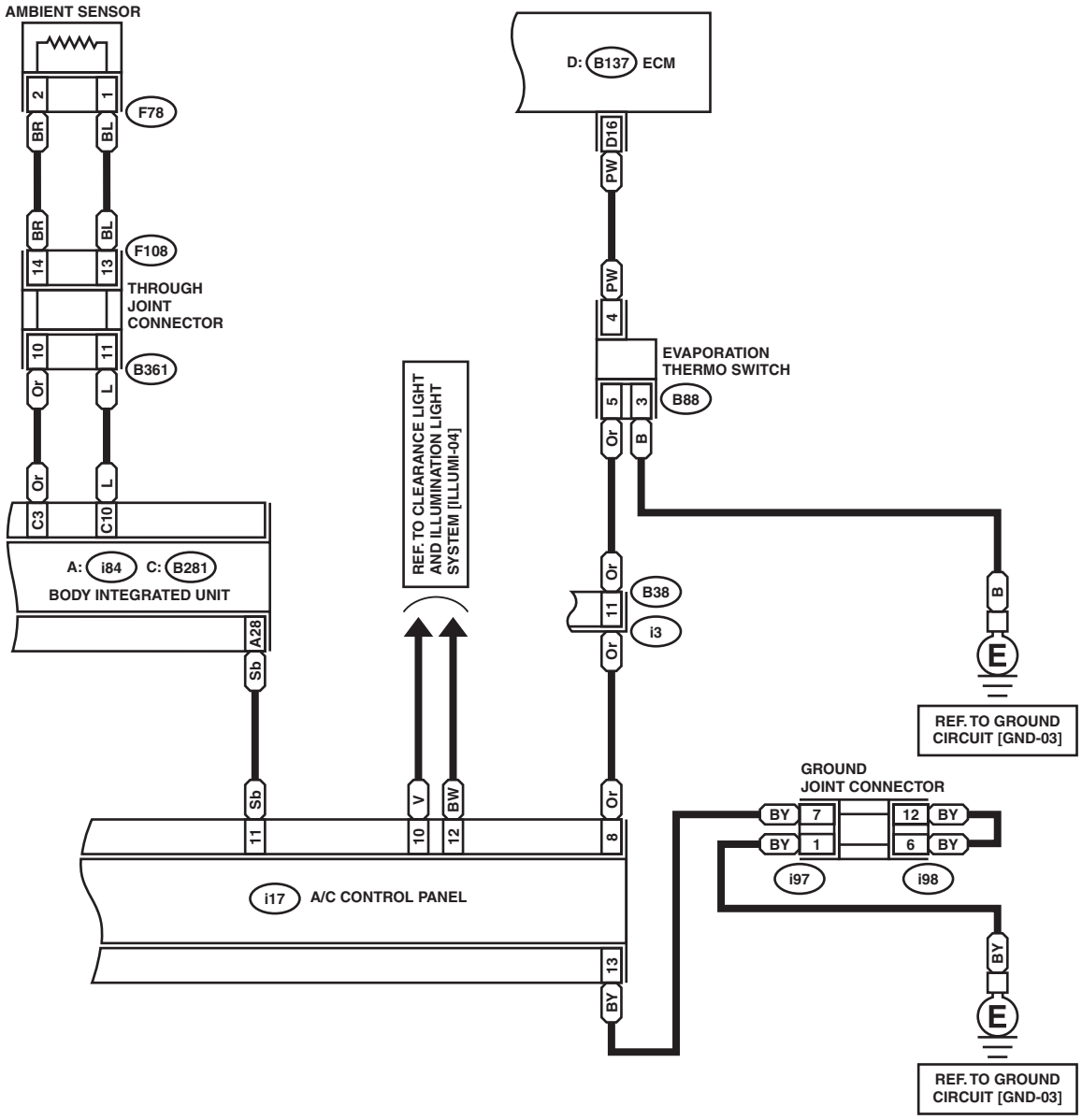

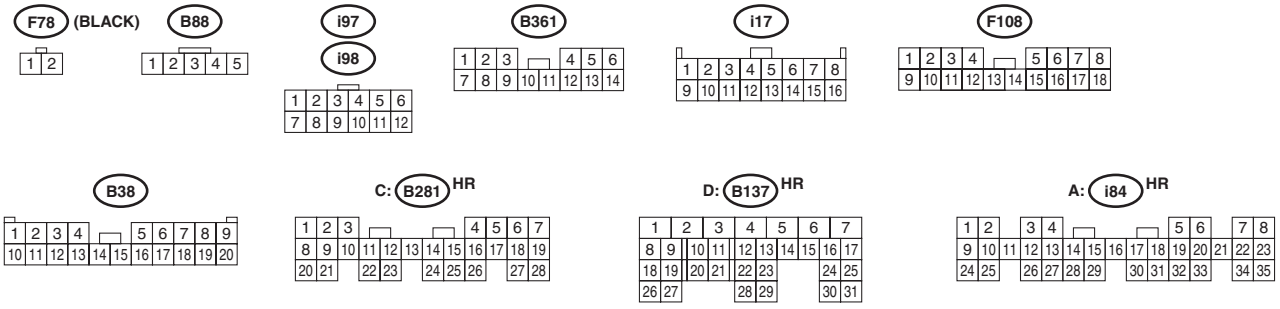

WI-05274

2. AUTO A/C MODEL

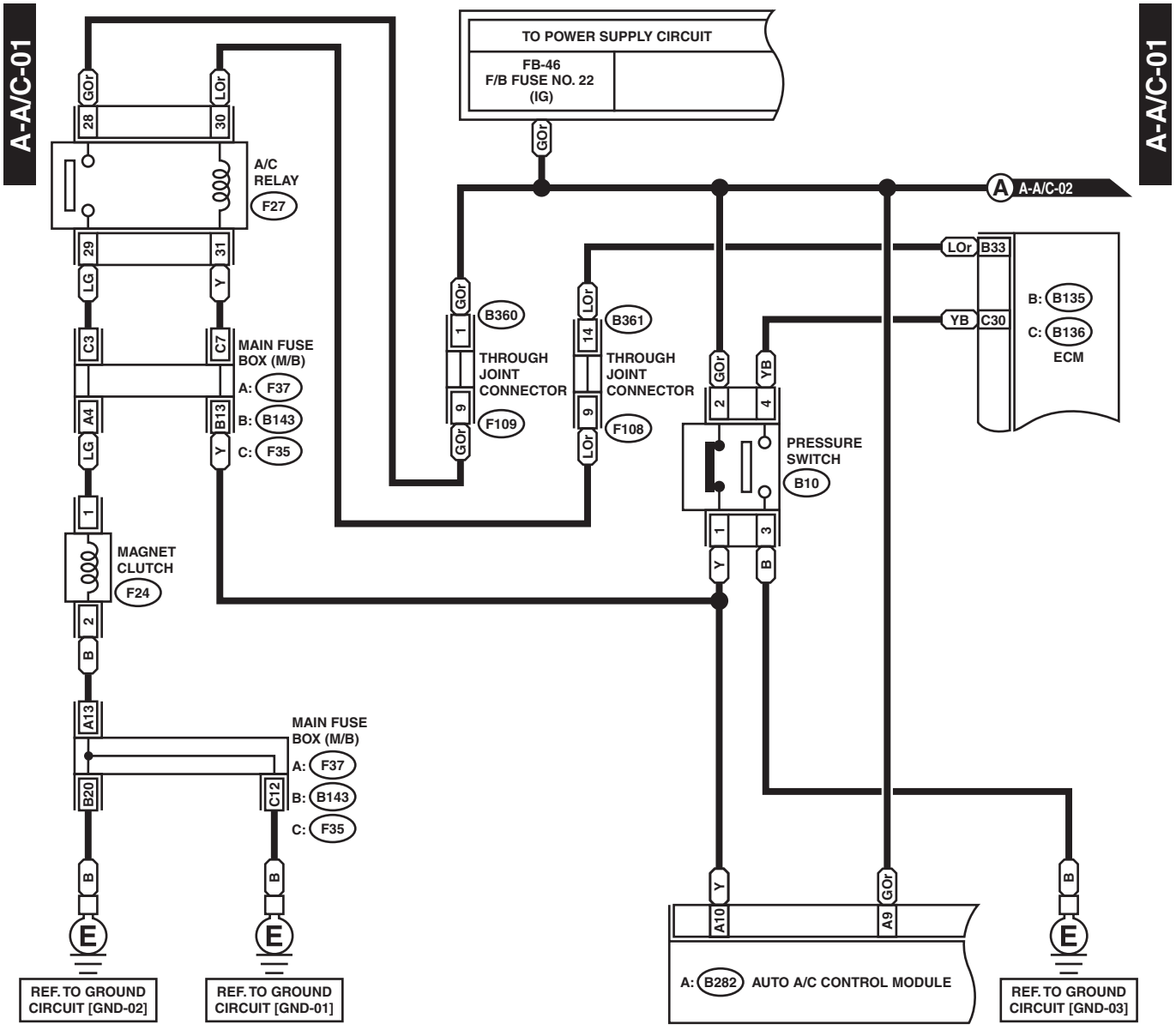

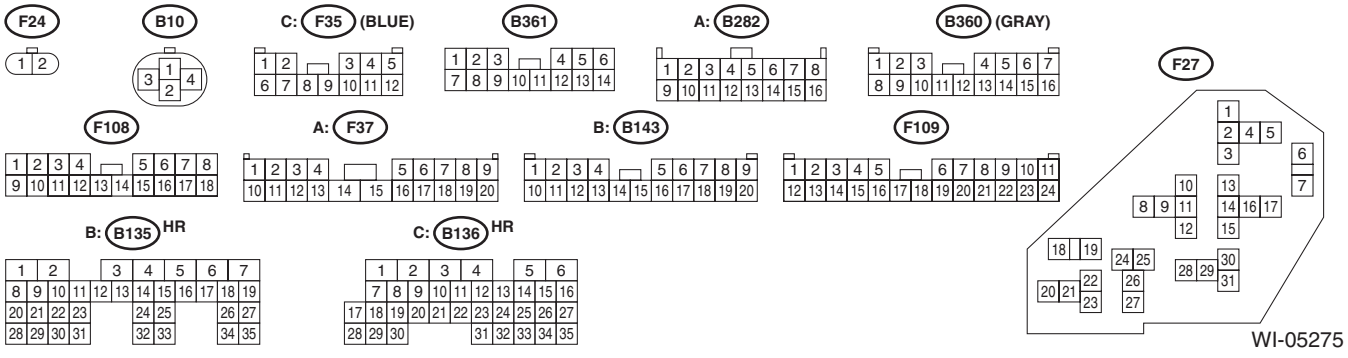

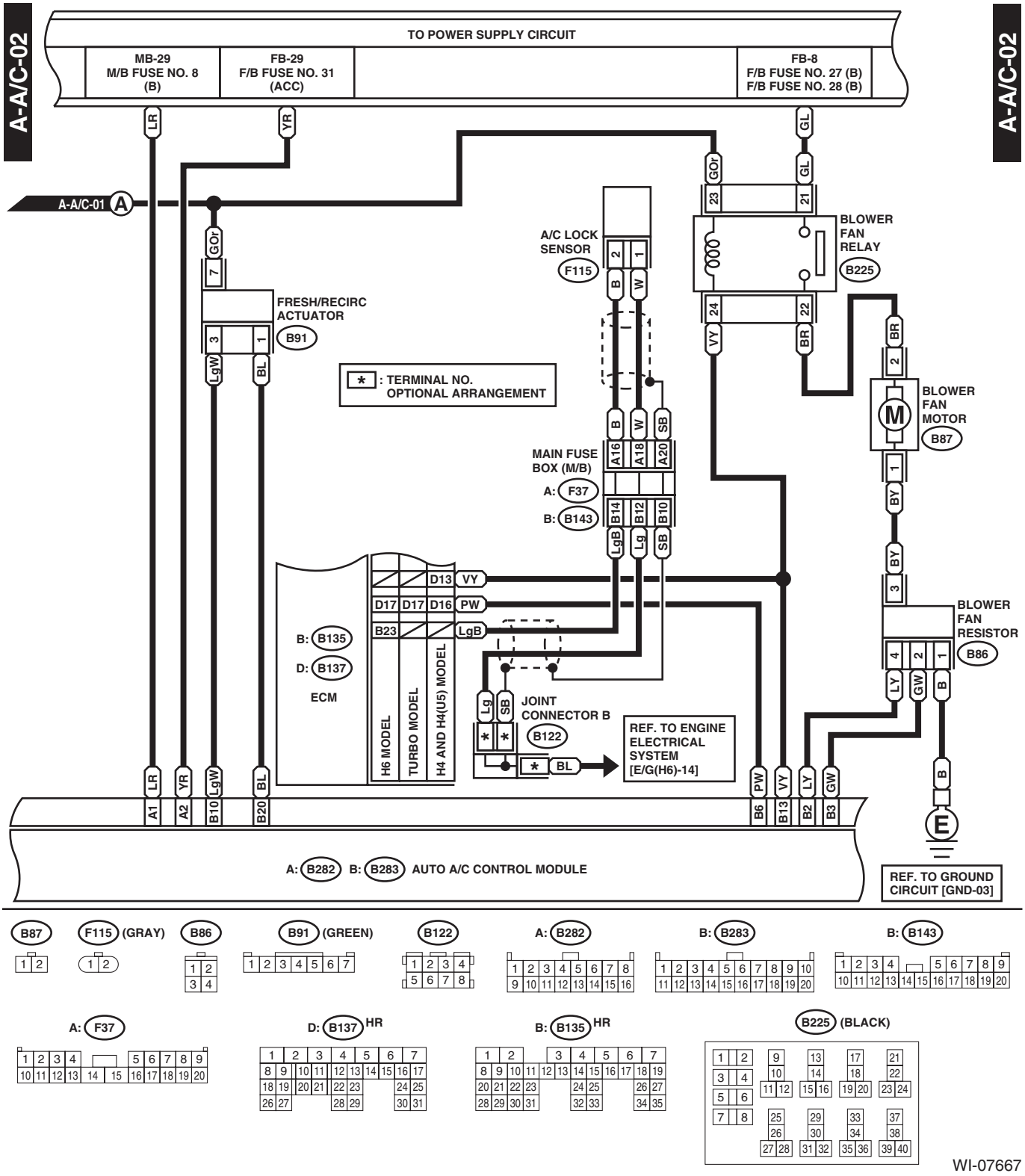
A-A/C-02
A-A/C-02
TO POWER SUPPLY CIRCUIT
MB-29
M/B FUSE NO. 8
(B)
FB-29
F/B FUSE NO. 31
(ACC)
FB-8
F/B FUSE NO. 27 (B)
F/B FUSE NO. 28 (B)
A-A/C-01 A
FRESH/RECIRC ACTUATOR B91
A/C LOCK SENSOR F115
BLOWER FAN RELAY B225
BLOWER FAN MOTOR B87
BLOWER FAN RESISTOR B86
* : TERMINAL NO. OPTIONAL ARRANGEMENT
MAIN FUSE BOX (M/B)
A: F37
B: B143
B: B135
D: B137
ECM
H6 MODEL
TURBO MODEL
H4 AND H4(U5) MODEL
JOINT CONNECTOR B B122
REF. TO ENGINE ELECTRICAL SYSTEM [E/G(H6)-14]
A: B282 B: B283 AUTO A/C CONTROL MODULE
REF. TO GROUND CIRCUIT [GND-03]
B87
F115 (GRAY)
B86
B91 (GREEN)
B122
A: B282
B: B283
B: B143
A: F37
D: B137 HR
B: B135 HR
B225 (BLACK)

WI-07667

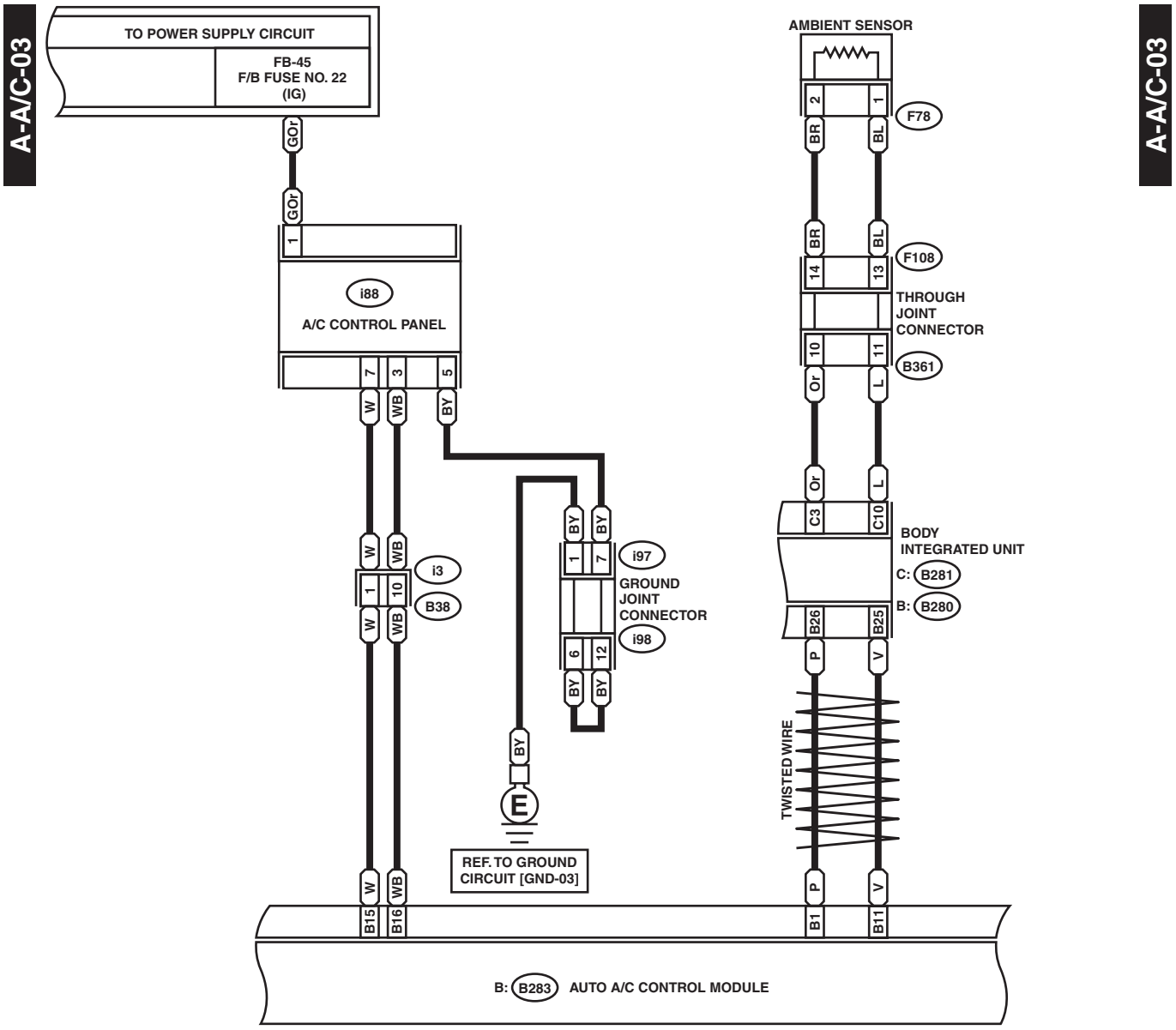
A-A/C-03
A-A/C-03
TO POWER SUPPLY CIRCUIT
FB-45
F/B FUSE NO. 22
(IG)
GOr
i88
A/C CONTROL PANEL
W
WB
BY
i3
B38
i97
GROUND
JOINT
CONNECTOR
i98
REF. TO GROUND
CIRCUIT [GND-03]
B15
B16
AMBIENT SENSOR
F78
BR
BL
F108
THROUGH
JOINT
CONNECTOR
B361
Or
L
C3
C10
BODY
INTEGRATED UNIT
C: B281
B: B280
B26
B25
P
V
TWISTED WIRE
B1
B11
B: B283 AUTO A/C CONTROL MODULE

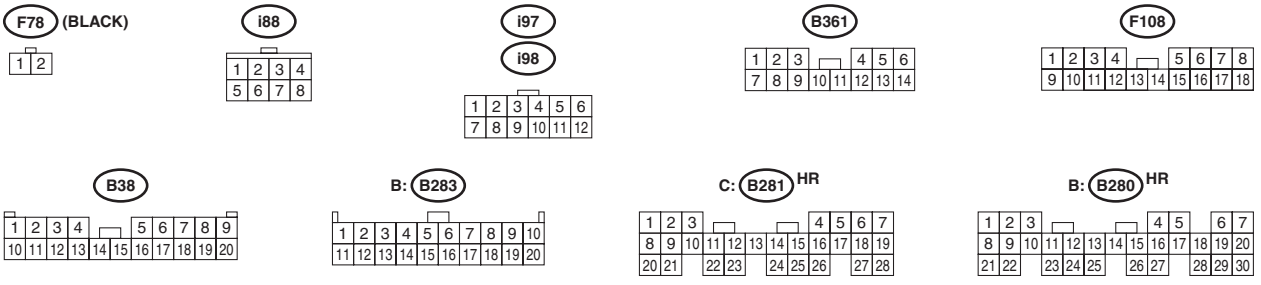
F78 (BLACK)
i88
i97
i98
B361
F108
B38
B: B283
C: B281 HR
B: B280 HR

WI-05277

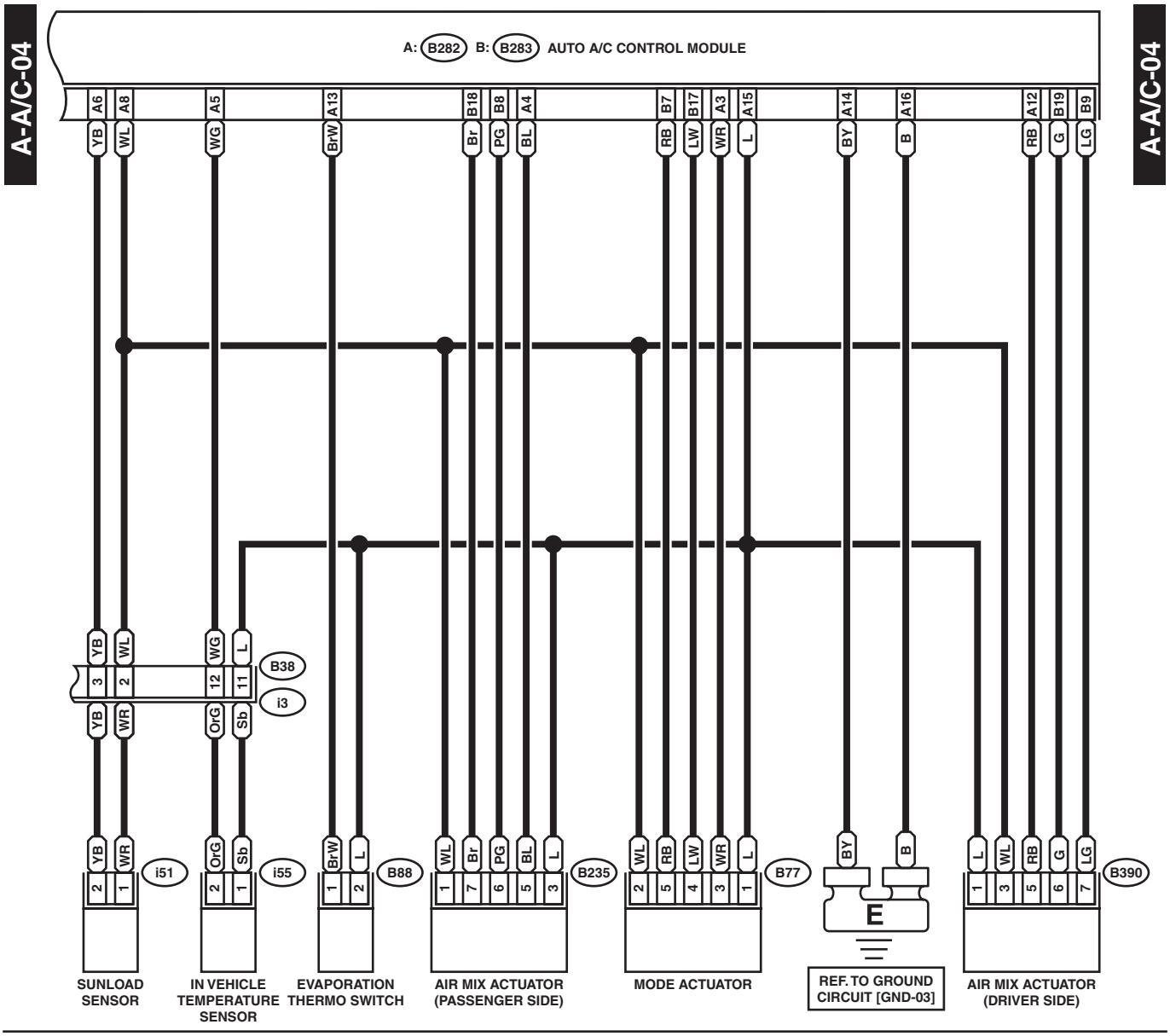
A-A/C-04
A: B282 B: B283 AUTO A/C CONTROL MODULE
A6 A8 A5 A13 B18 B8 A4 B7 B17 A3 A15 A14 A16 A12 B19 B9
YB WL WG BrW Br PG BL RB LW WR L BY B RB G LG
B38
i3
i51
i55
B88
B235
B77
B390
SUNLOAD SENSOR
IN VEHICLE TEMPERATURE SENSOR
EVAPORATION THERMO SWITCH
AIR MIX ACTUATOR (PASSENGER SIDE)
MODE ACTUATOR
REF. TO GROUND CIRCUIT [GND-03]
AIR MIX ACTUATOR (DRIVER SIDE)
E

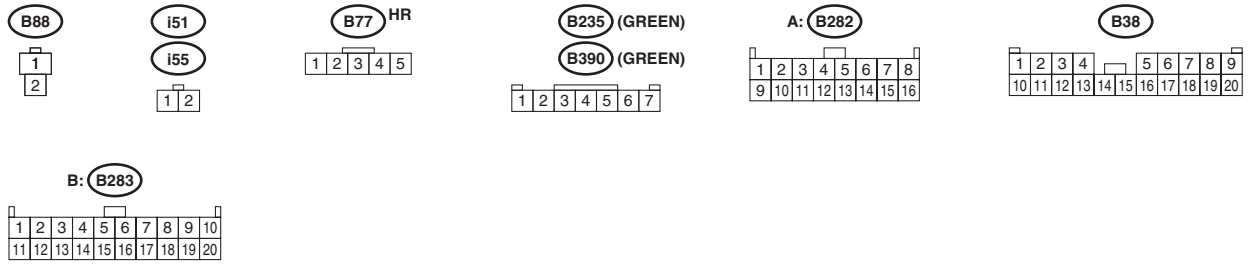
B88
i51
i55
B77 HR
B235 (GREEN)
B390 (GREEN)
A: B282
B38

B: B283

WI-05278

12.Airbag System

A: WIRING DIAGRAM

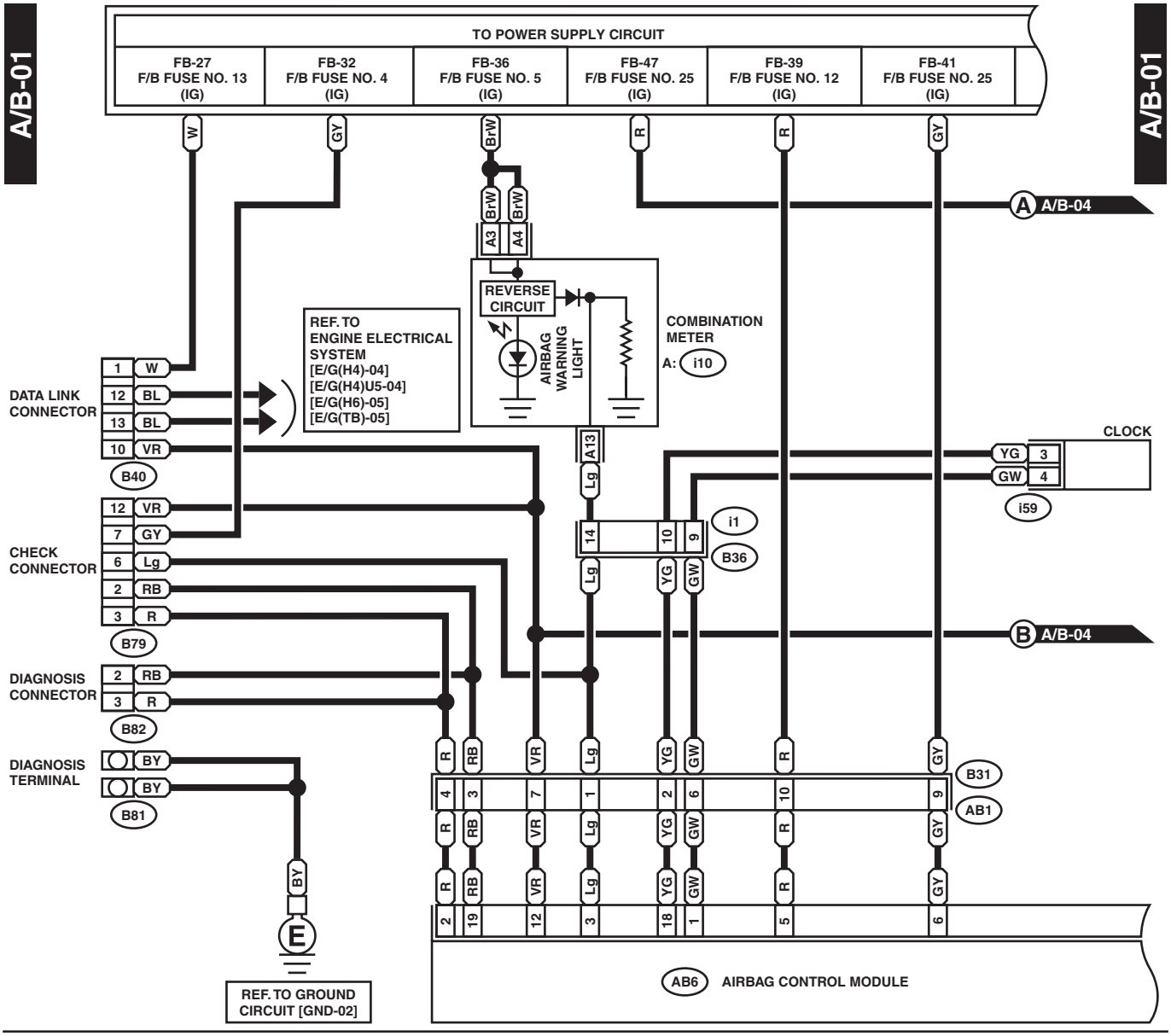

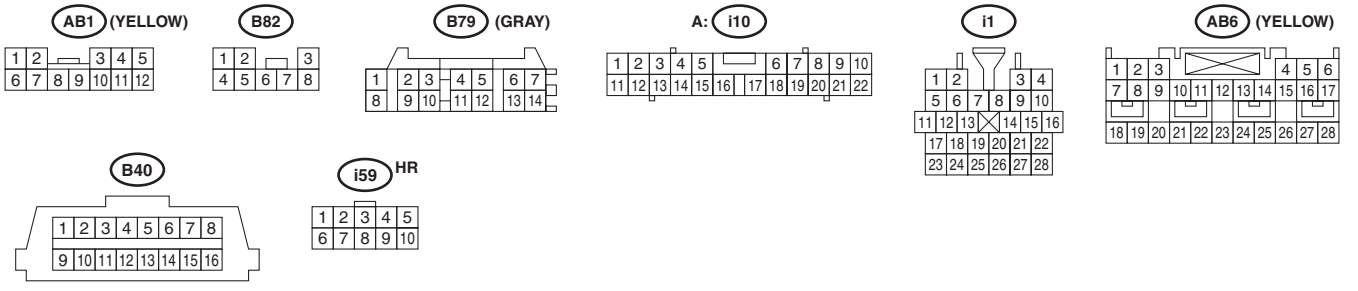

WI-05268

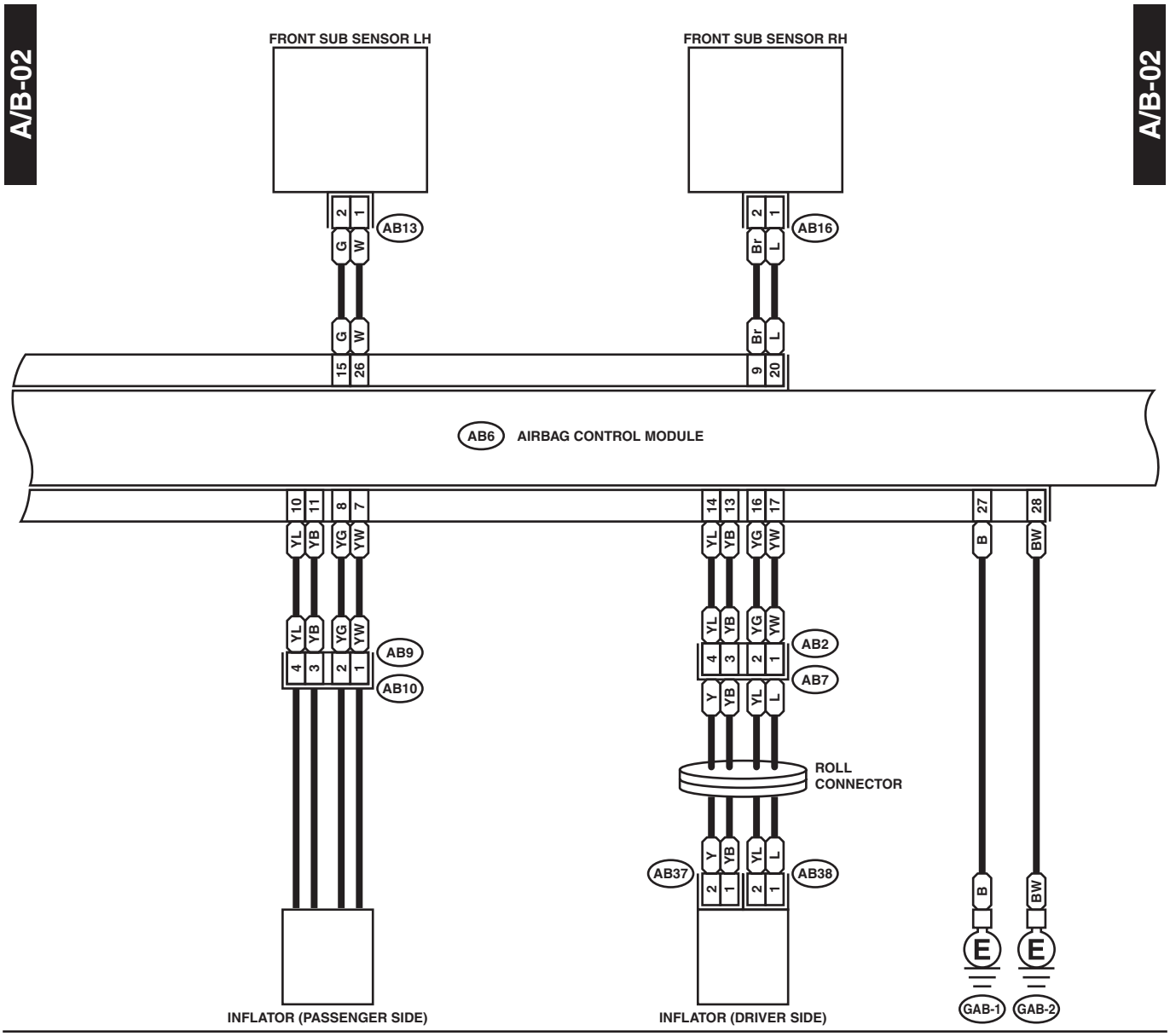
A/B-02
A/B-02
FRONT SUB SENSOR LH
FRONT SUB SENSOR RH
AB13
AB16
AB6 AIRBAG CONTROL MODULE
AB9
AB10
AB2
AB7
ROLL CONNECTOR
AB37
AB38
INFLATOR (PASSENGER SIDE)
INFLATOR (DRIVER SIDE)
GAB-1
GAB-2
AB37 (ORANGE)
AB38 (BLACK)
AB13 (YELLOW)
AB16 (YELLOW)
AB2 (YELLOW)
AB9 (YELLOW)
AB6 (YELLOW)

WI-05269

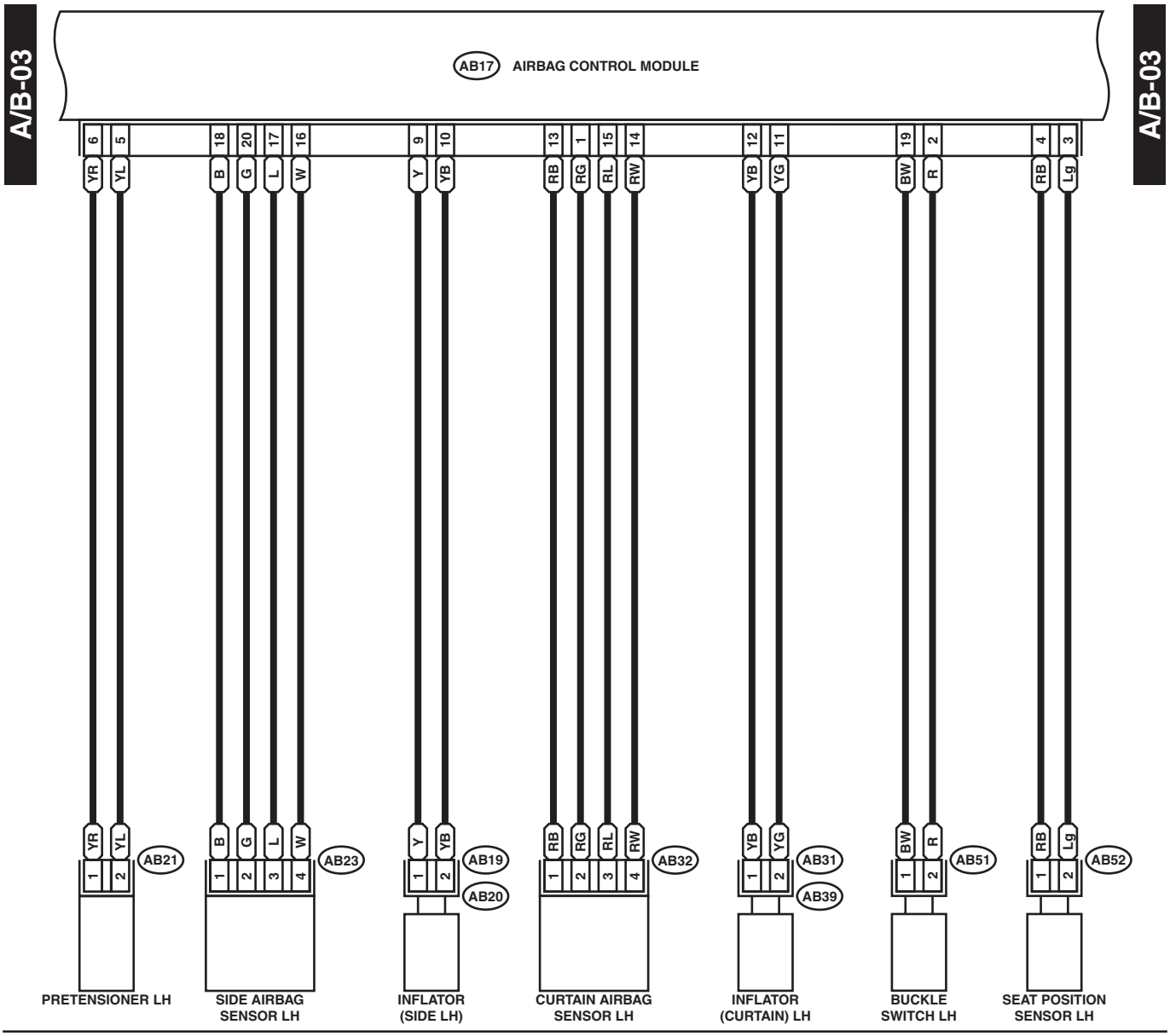
A/B-03
A/B-03
AB17 AIRBAG CONTROL MODULE
6 5 18 20 17 16 9 10 13 1 15 14 12 11 19 2 4 3
YR YL B G L W Y YB RB RG RL RW YB YG BW R RB Lg
AB21
AB23
AB19
AB20
AB32
AB31
AB39
AB51
AB52
PRETENSIONER LH
SIDE AIRBAG SENSOR LH
INFLATOR (SIDE LH)
CURTAIN AIRBAG SENSOR LH
INFLATOR (CURTAIN) LH
BUCKLE SWITCH LH
SEAT POSITION SENSOR LH
AB19 (YELLOW)
AB31 (YELLOW)
AB51
AB52
AB21 (BLACK)
AB23 (YELLOW)
AB32 (YELLOW)
AB17 (YELLOW)

WI-05270

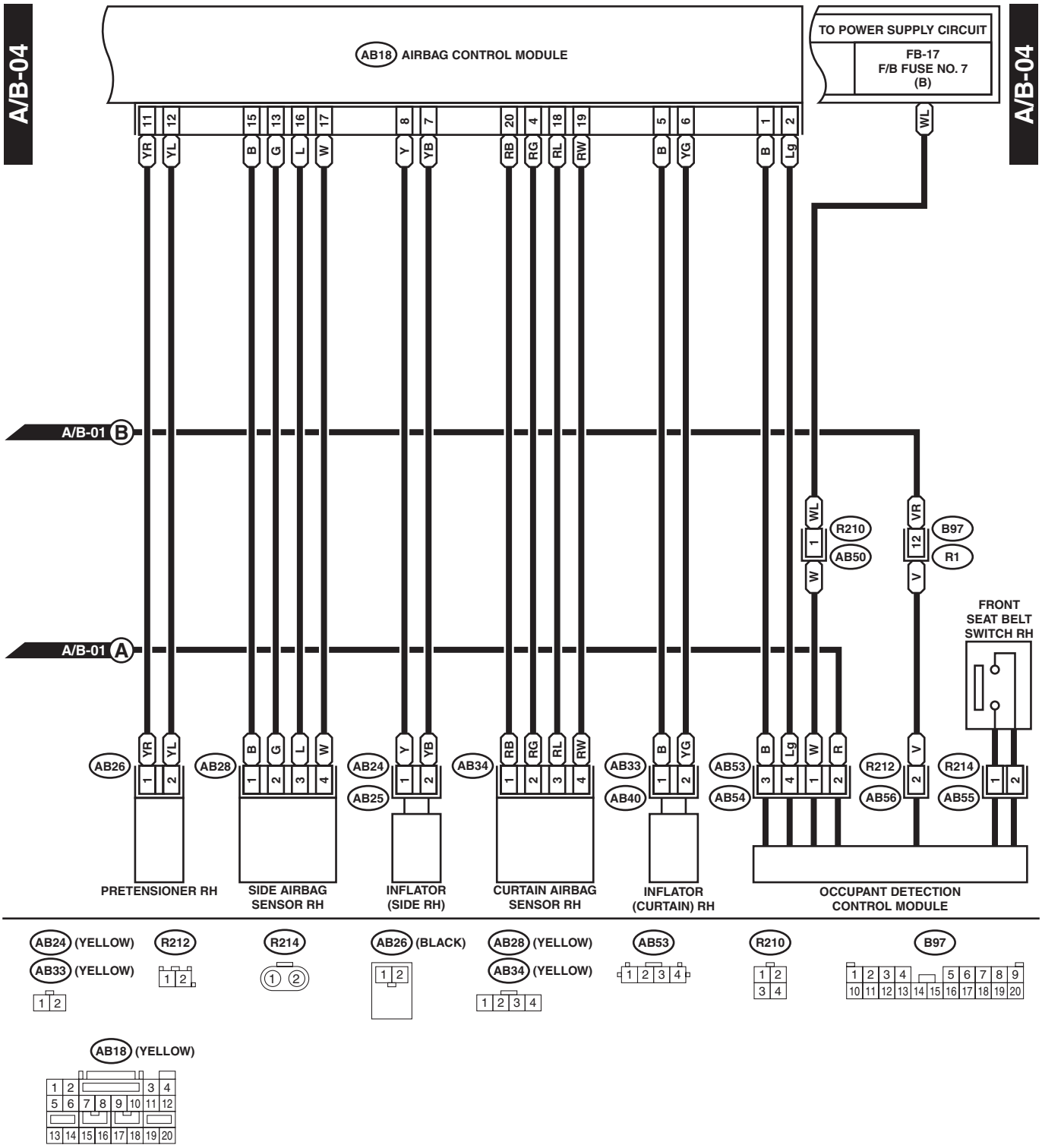
A/B-04
AB18 AIRBAG CONTROL MODULE
TO POWER SUPPLY CIRCUIT
FB-17
F/B FUSE NO. 7
(B)
A/B-04
A/B-01 B
A/B-01 A
R210
AB50
B97
R1
FRONT
SEAT BELT
SWITCH RH
AB26
AB28
AB24
AB25
AB34
AB33
AB40
AB53
AB54
R212
AB56
R214
AB55
PRETENSIONER RH
SIDE AIRBAG
SENSOR RH
INFLATOR
(SIDE RH)
CURTAIN AIRBAG
SENSOR RH
INFLATOR
(CURTAIN) RH
OCCUPANT DETECTION
CONTROL MODULE
AB24 (YELLOW)
AB33 (YELLOW)
R212
R214
AB26 (BLACK)
AB28 (YELLOW)
AB34 (YELLOW)
AB53
R210
B97
AB18 (YELLOW)

WI-05271

13.Immobilizer System

A: WIRING DIAGRAM

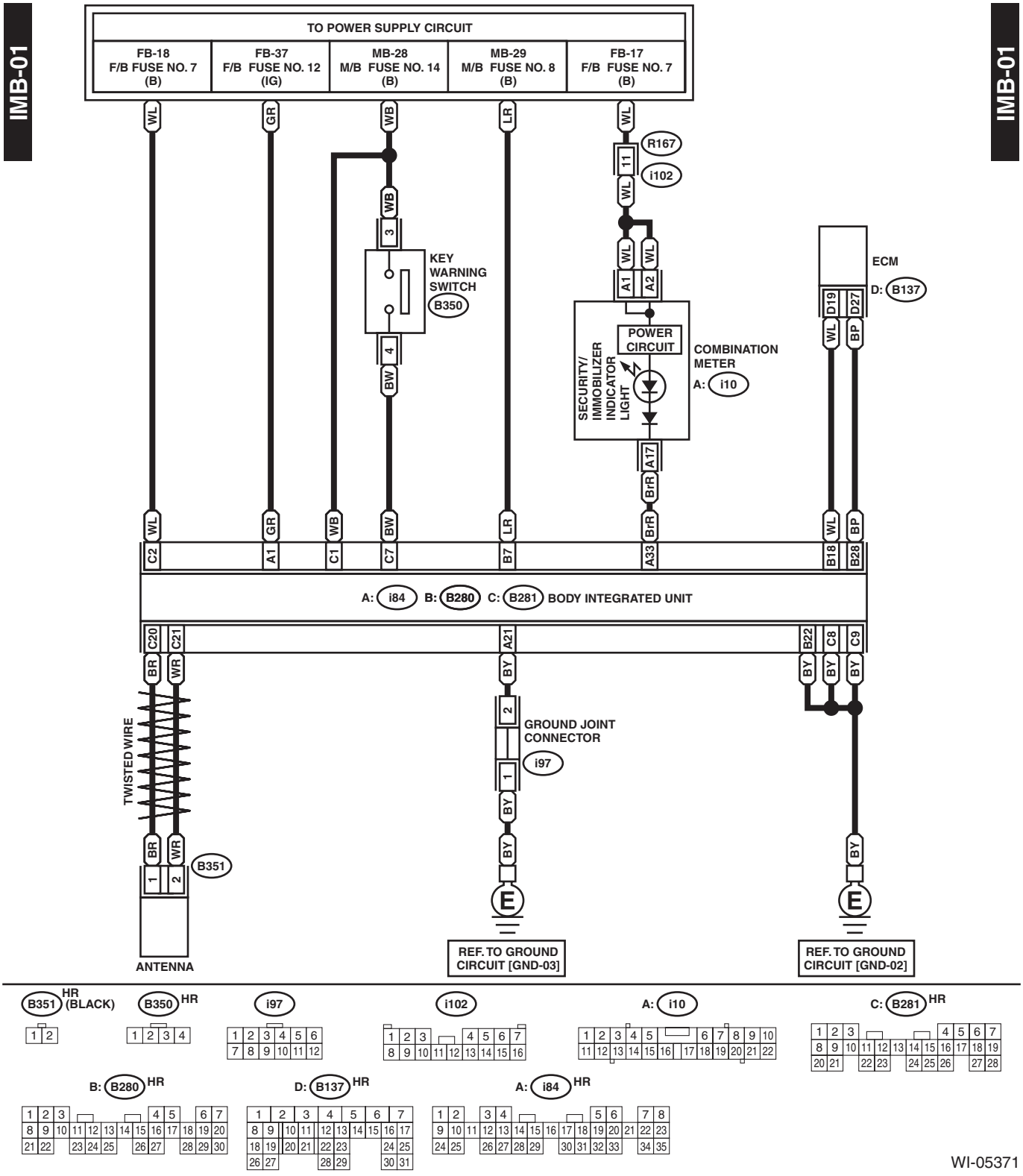

14.Cruise Control System

A: WIRING DIAGRAM

1. 2.5 L NON-TURBO MODEL

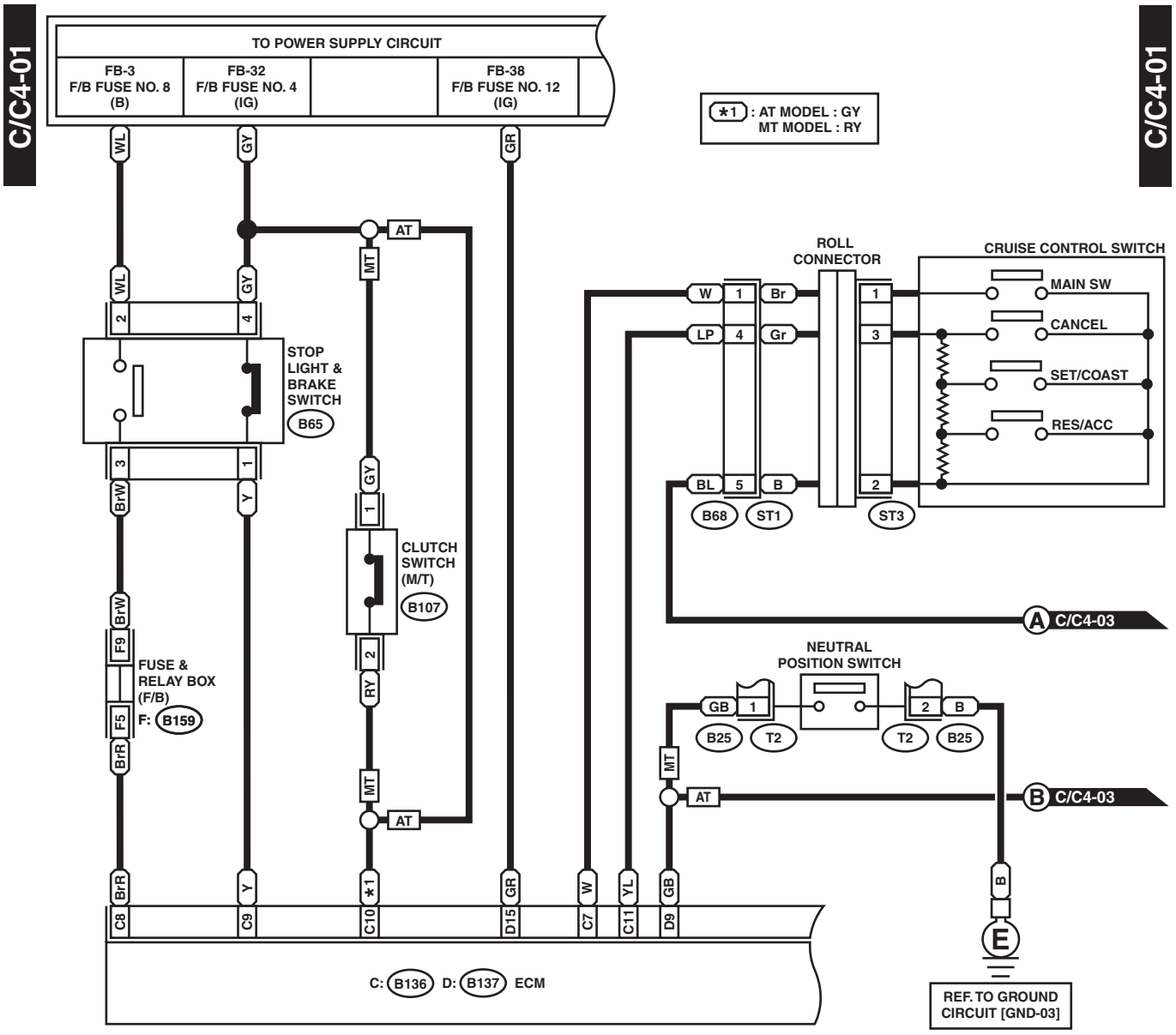

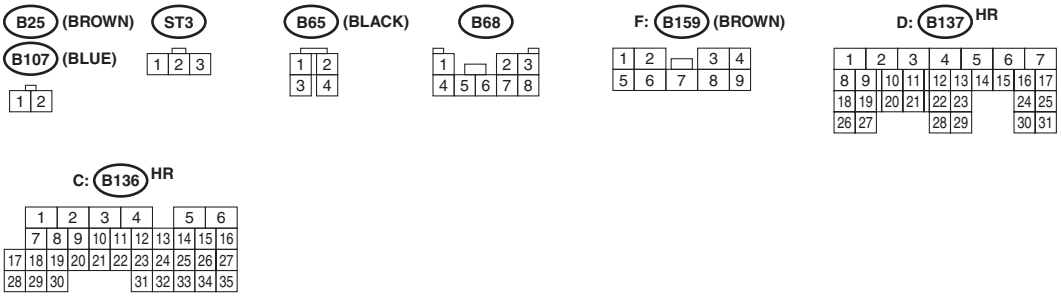

WI-05307

C/C4-02

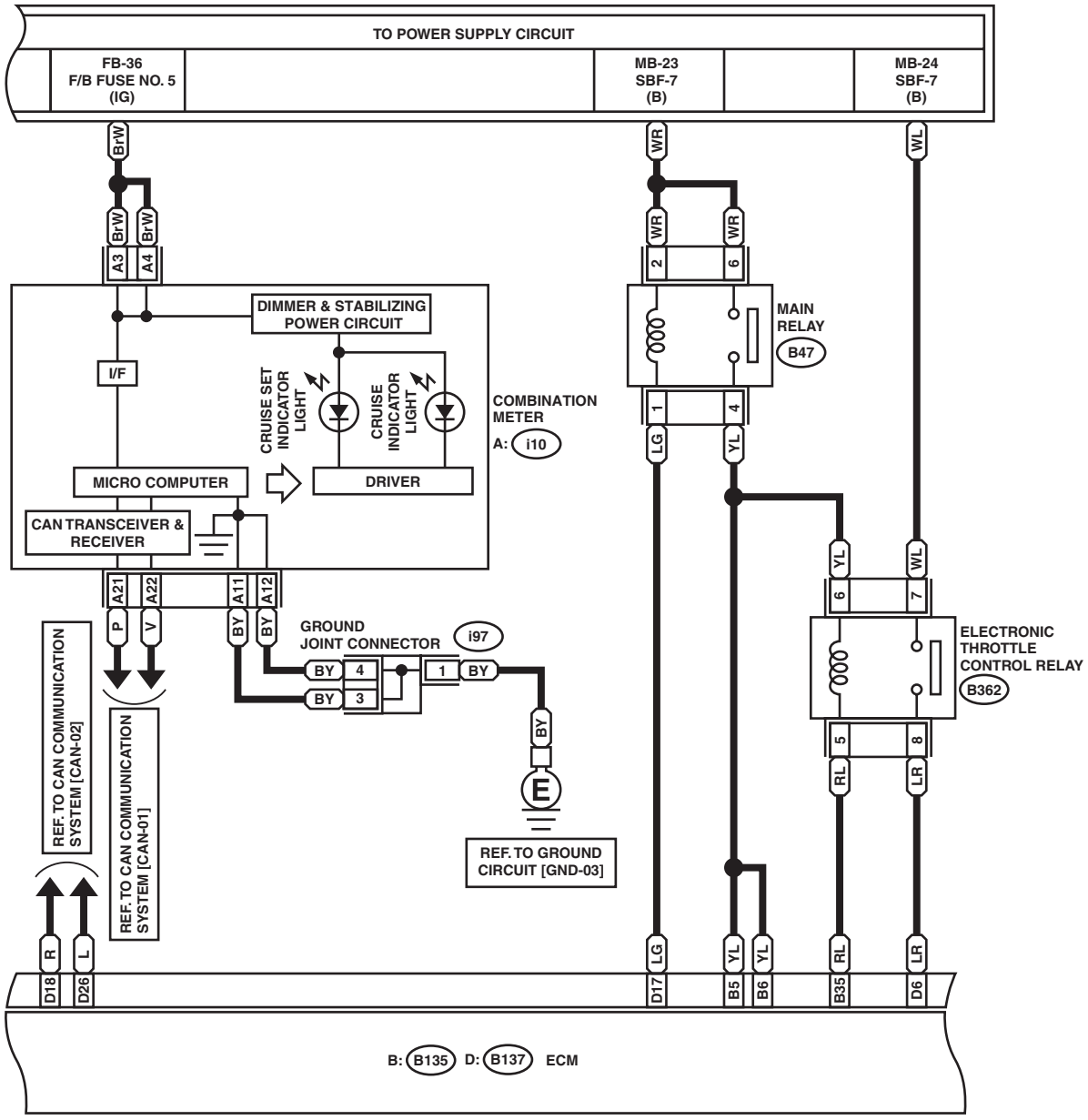

C/C4-02

B47 (BROWN)

1		2
3		4
5		6

B362

1	2		3
			4
5		7	8
6			

i97

1	2	3	4	5	6
7	8	9	10	11	12

A: i10

1	2	3	4	5		6	7	8	9	10
11	12	13	14	15	16	17	18	19	20	21	22

D: B137 HR

1	2	3	4	5	6	7	
8	9	10	11	12	13	14	15	16	17
18	19	20	21	22	23			24	25
26	27			28	29			30	31

B: B135 HR

1	2				3	4	5		6		7							
8	9	10	11	12	13	14	15	16	17	18	19							
20	21	22	23			24	25			26	27							
28	29	30	31			32	33			34	35							

WI-05308

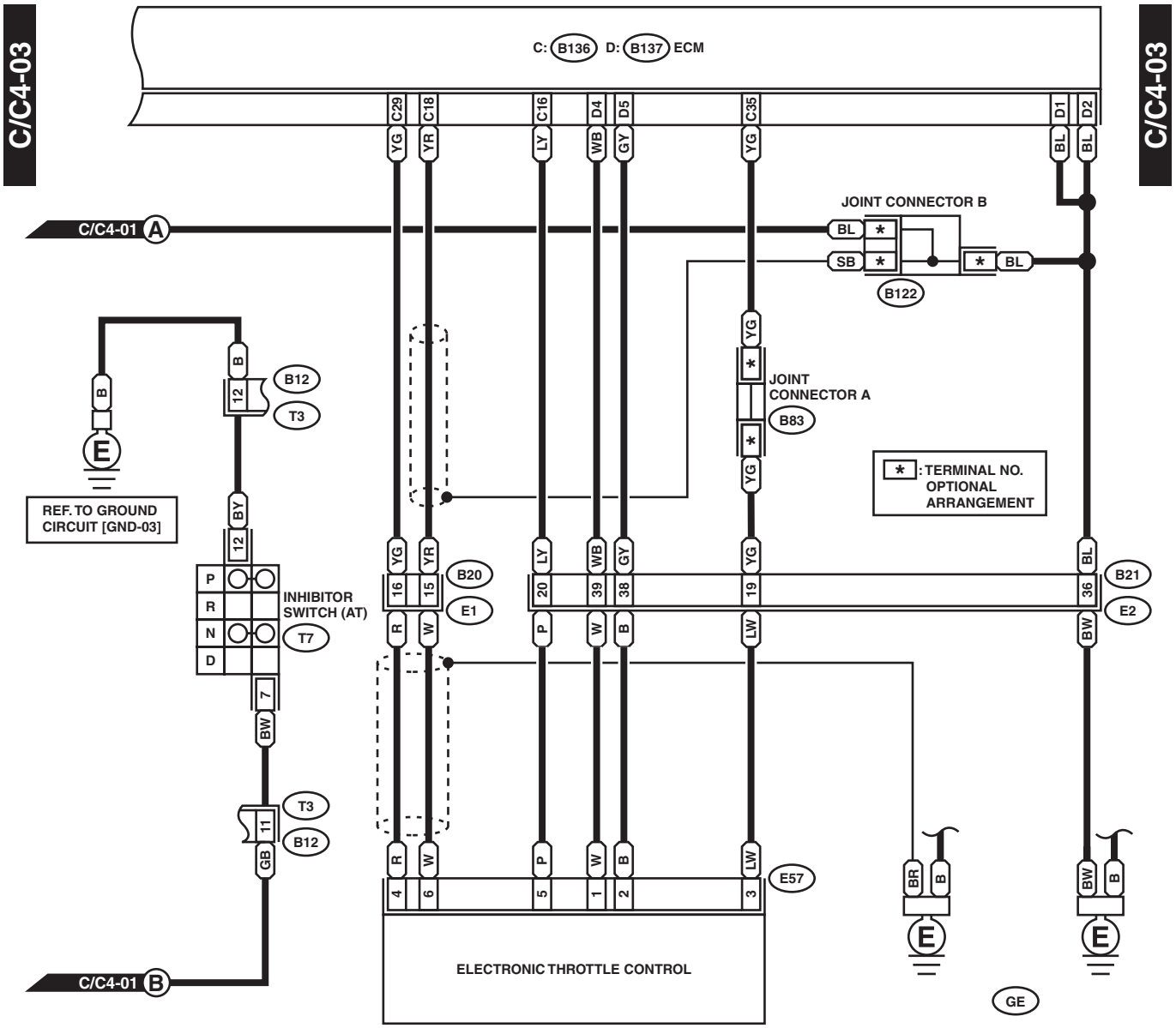

E57 (BLACK)

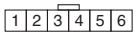

B83 B122

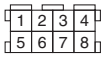

B12 HR

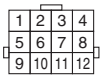

T7

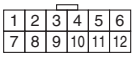

B20

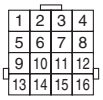

D: B137 HR

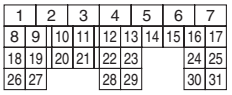

C: B136 HR

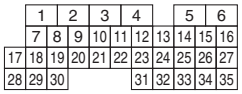

B21 (BLACK)

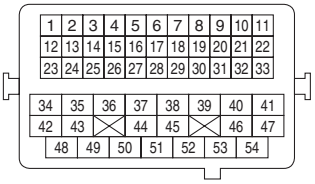

WI-05309

2. 2.5 L TURBO MODEL AND 3.0 L MODEL

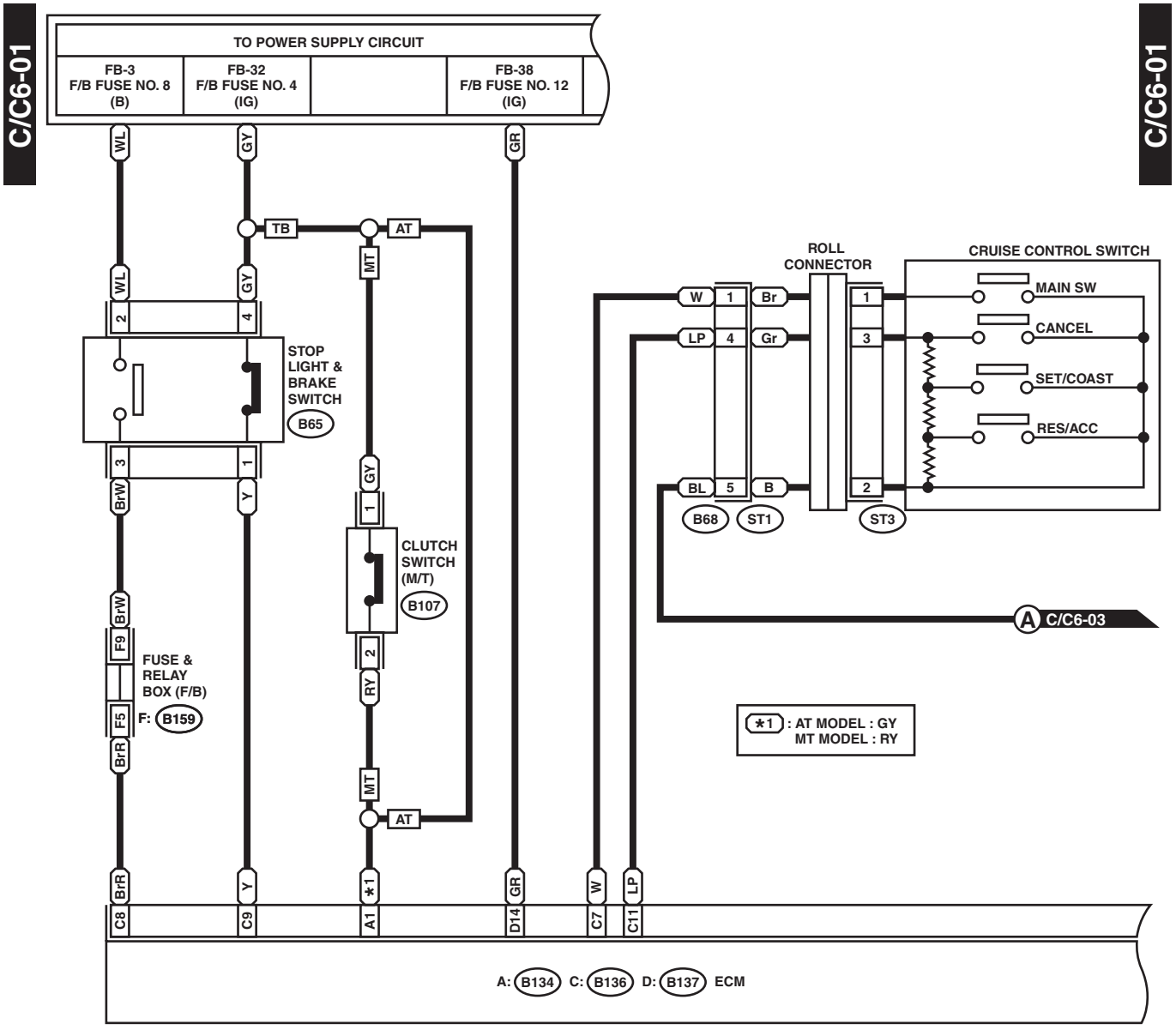

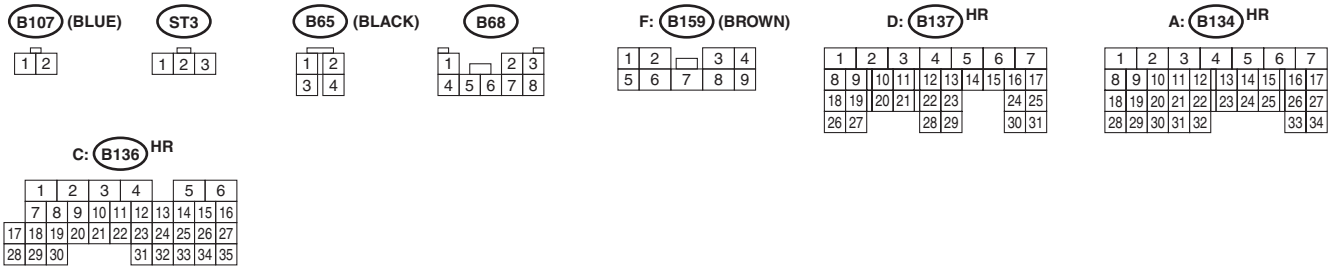

WI-05310

C/C6-02

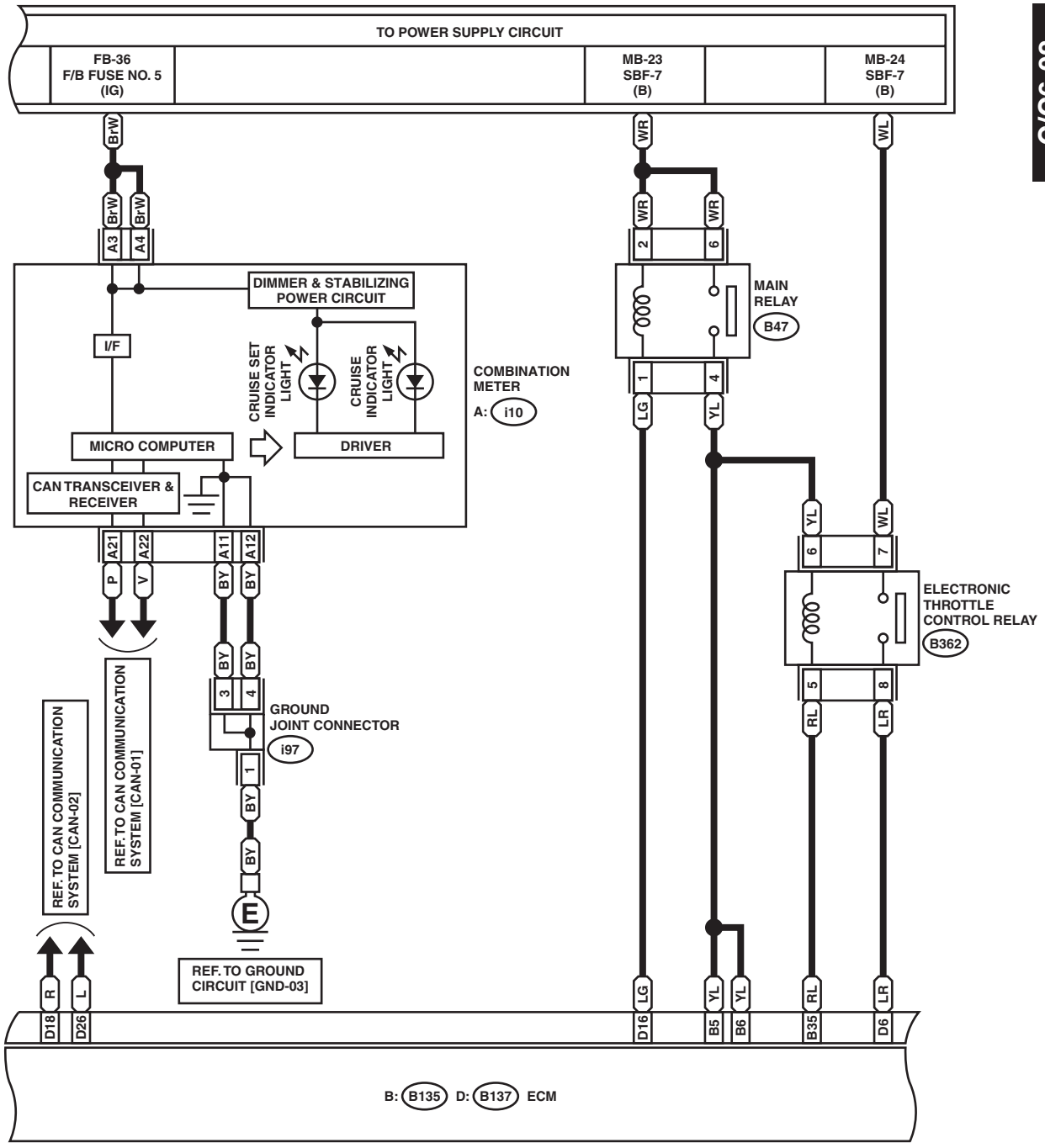

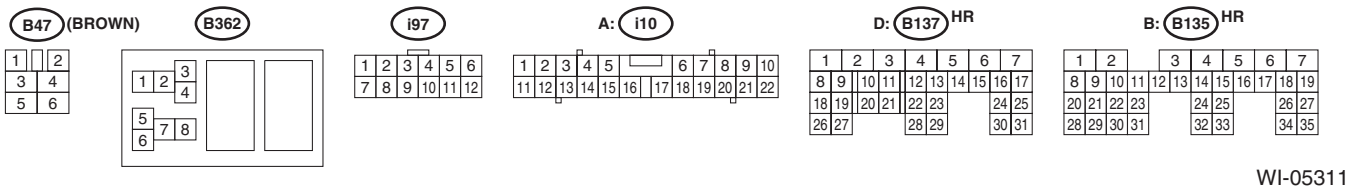

WI-05311

C/C6-02

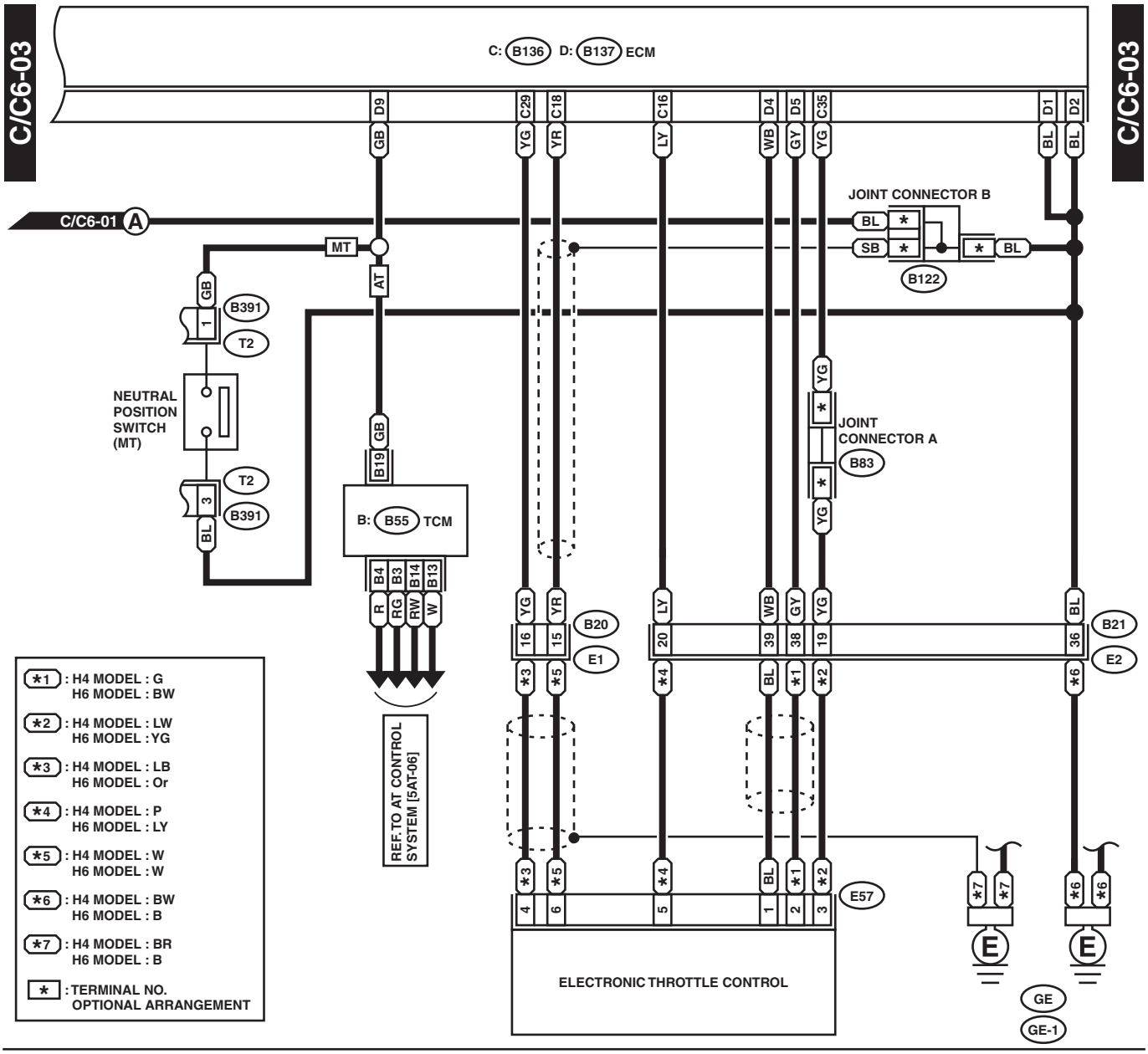
C/C6-03
C: B136 D: B137 ECM
C/C6-03
JOINT CONNECTOR B
C/C6-01 A
MT
AT
B122
B391
T2
NEUTRAL POSITION SWITCH (MT)
JOINT CONNECTOR A
B83
B: B55 TCM
B20
E1
B21
E2
REF. TO AT CONTROL SYSTEM [5AT-06]
*1 : H4 MODEL : G
H6 MODEL : BW
*2 : H4 MODEL : LW
H6 MODEL : YG
*3 : H4 MODEL : LB
H6 MODEL : Or
*4 : H4 MODEL : P
H6 MODEL : LY
*5 : H4 MODEL : W
H6 MODEL : W
*6 : H4 MODEL : BW
H6 MODEL : B
*7 : H4 MODEL : BR
H6 MODEL : B
* : TERMINAL NO.
OPTIONAL ARRANGEMENT
E57
ELECTRONIC THROTTLE CONTROL
GE
GE-1

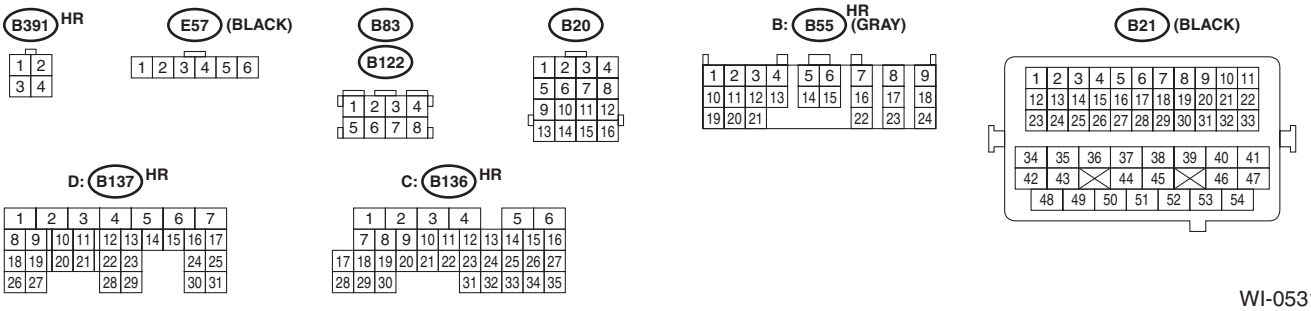
B391 HR
E57 (BLACK)
B83
B122
B20
B: B55 HR (GRAY)
B21 (BLACK)
D: B137 HR
C: B136 HR

WI-05312

15.CAN Communication System

A: WIRING DIAGRAM

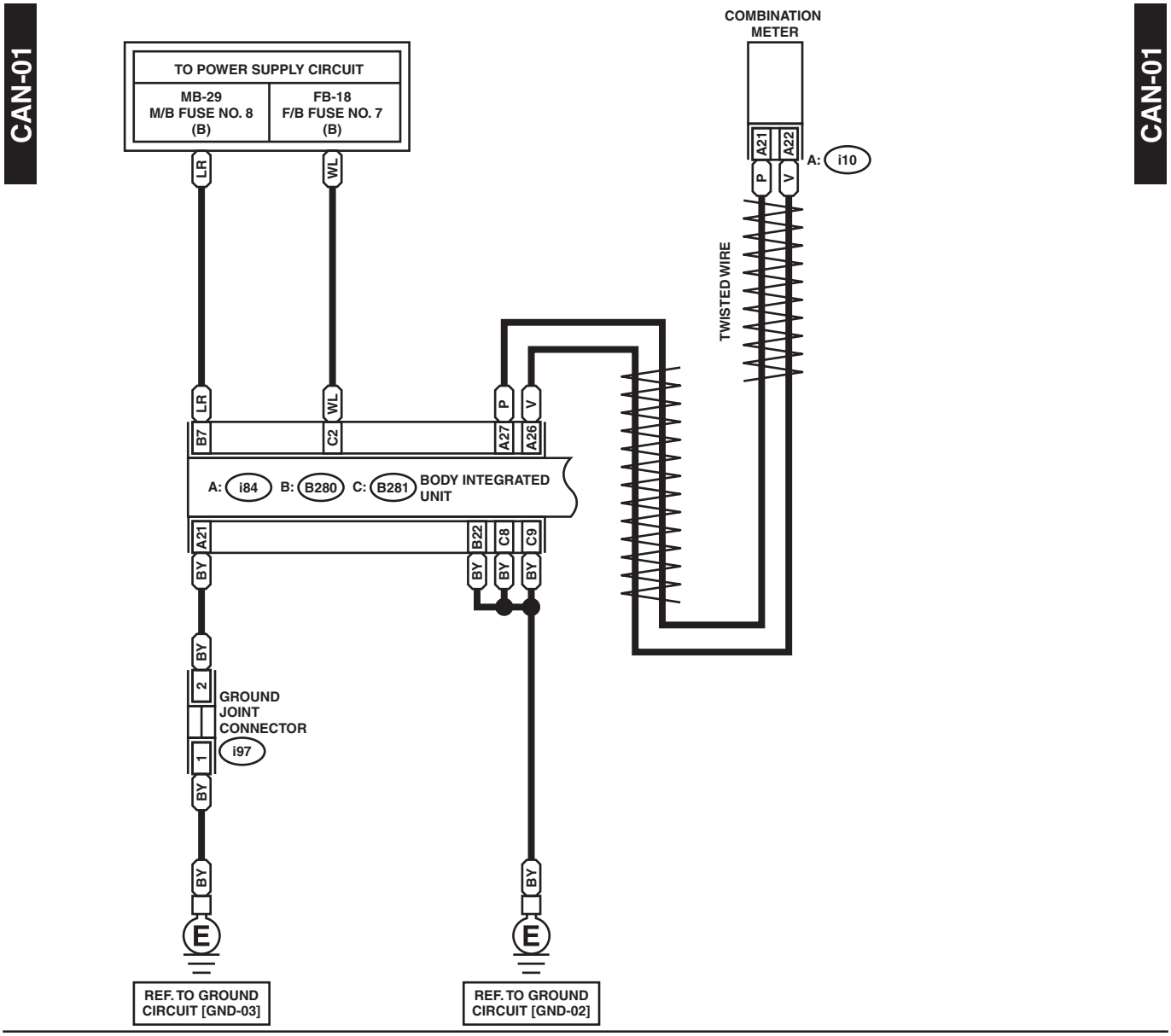

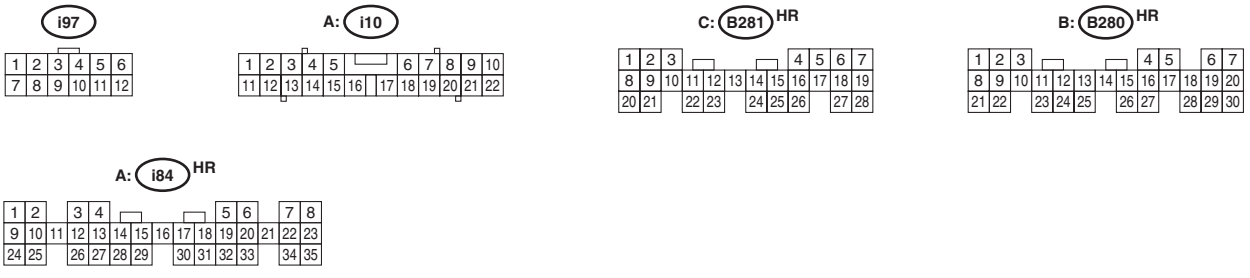

WI-05299

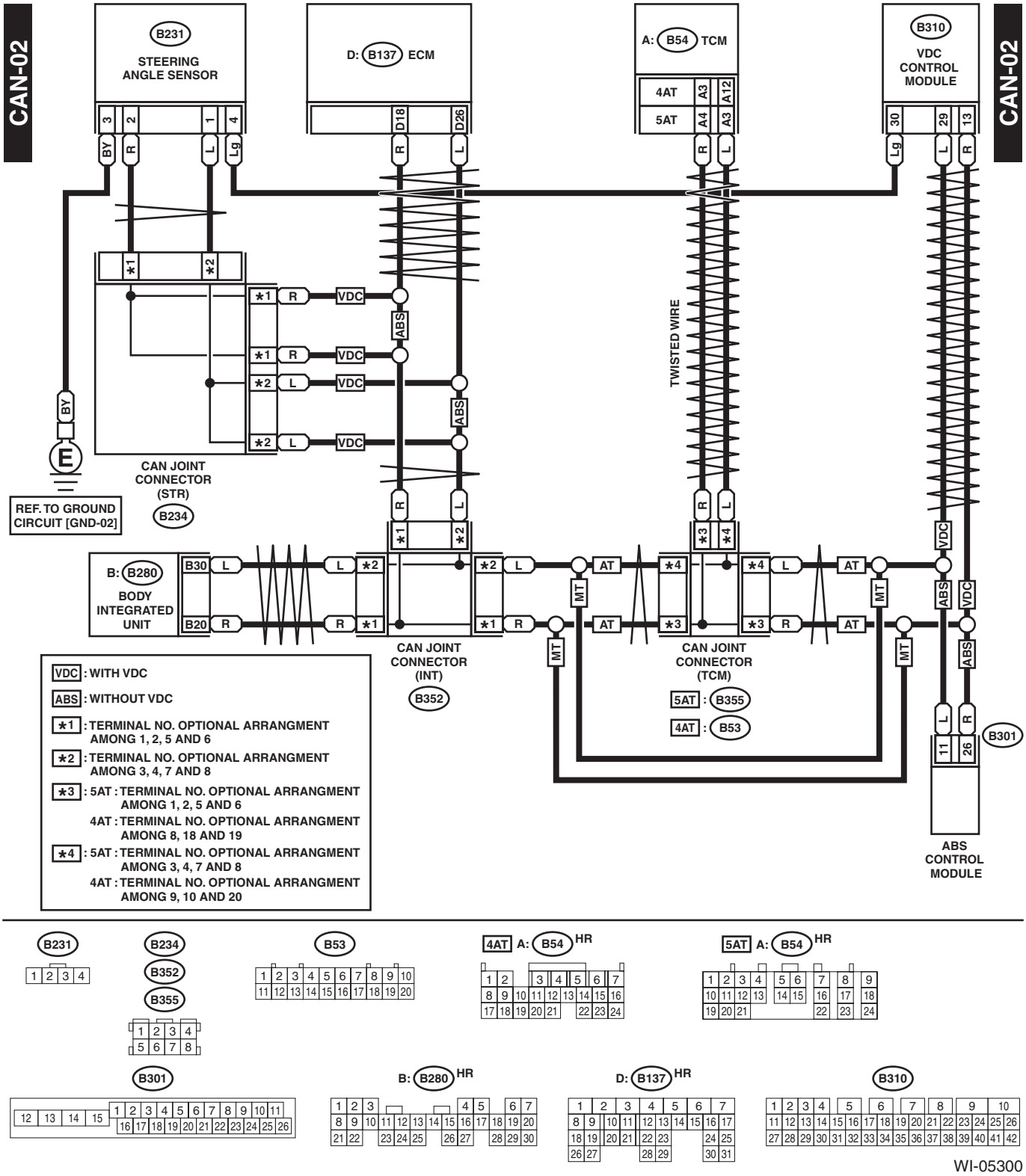
CAN-02
B231
STEERING ANGLE SENSOR
D: B137 ECM
A: B54 TCM
4AT
5AT
B310
VDC CONTROL MODULE
CAN-02
TWISTED WIRE
CAN JOINT CONNECTOR (STR)
B234
REF. TO GROUND CIRCUIT [GND-02]
B: B280
BODY INTEGRATED UNIT
CAN JOINT CONNECTOR (INT)
B352
CAN JOINT CONNECTOR (TCM)
5AT : B355
4AT : B53
B301
ABS CONTROL MODULE
VDC : WITH VDC
ABS : WITHOUT VDC
*1 : TERMINAL NO. OPTIONAL ARRANGMENT AMONG 1, 2, 5 AND 6
*2 : TERMINAL NO. OPTIONAL ARRANGMENT AMONG 3, 4, 7 AND 8
*3 : 5AT : TERMINAL NO. OPTIONAL ARRANGMENT AMONG 1, 2, 5 AND 6
4AT : TERMINAL NO. OPTIONAL ARRANGMENT AMONG 8, 18 AND 19
*4 : 5AT : TERMINAL NO. OPTIONAL ARRANGMENT AMONG 3, 4, 7 AND 8
4AT : TERMINAL NO. OPTIONAL ARRANGMENT AMONG 9, 10 AND 20

B231
B234
B352
B355
B53
4AT A: B54 HR
5AT A: B54 HR
B301
B: B280 HR
D: B137 HR
B310

WI-05300

16.Radiator Fan System

A: WIRING DIAGRAM

1. 2.5 L MODEL

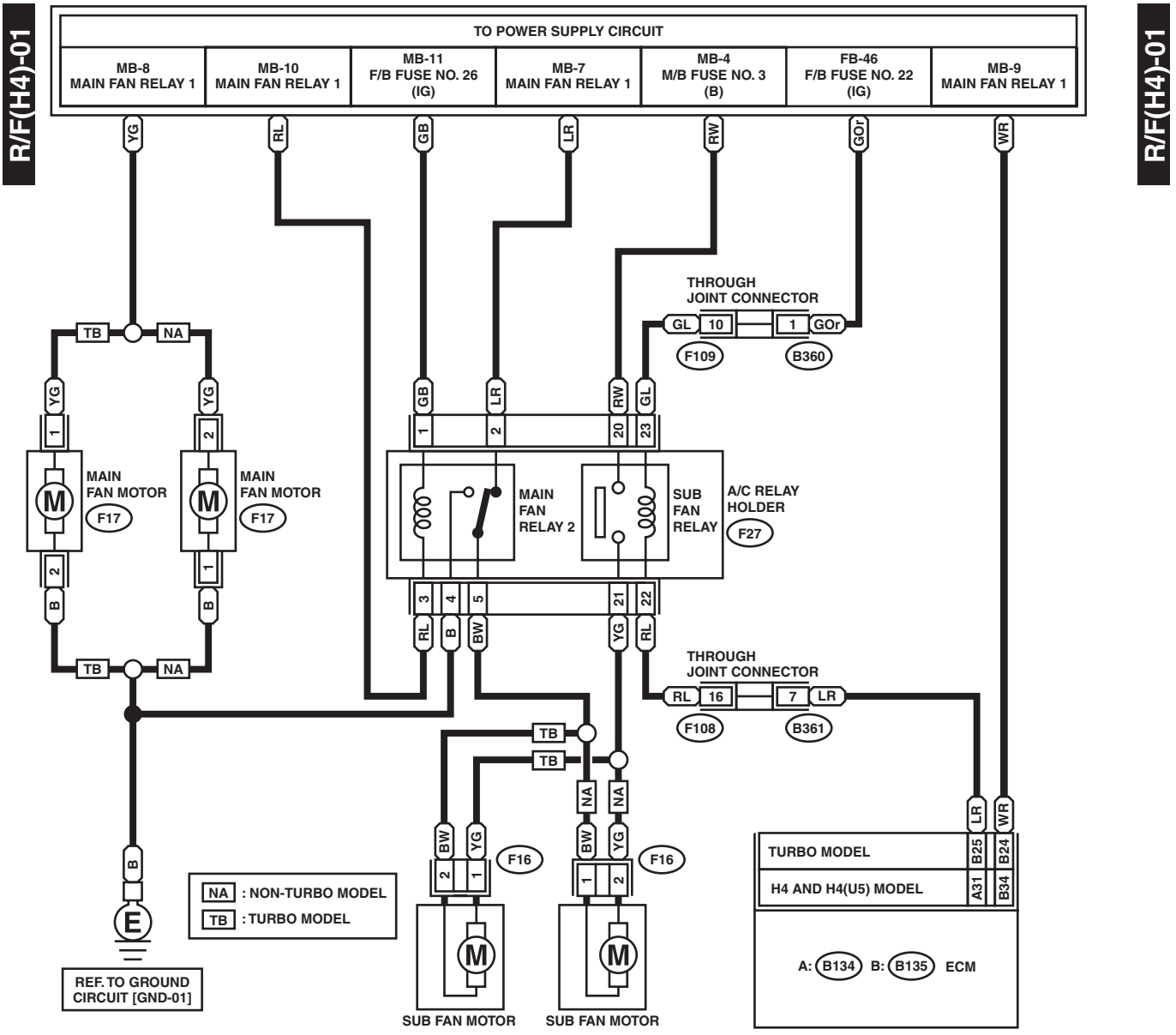

WI-05397

2. 3.0 L MODEL

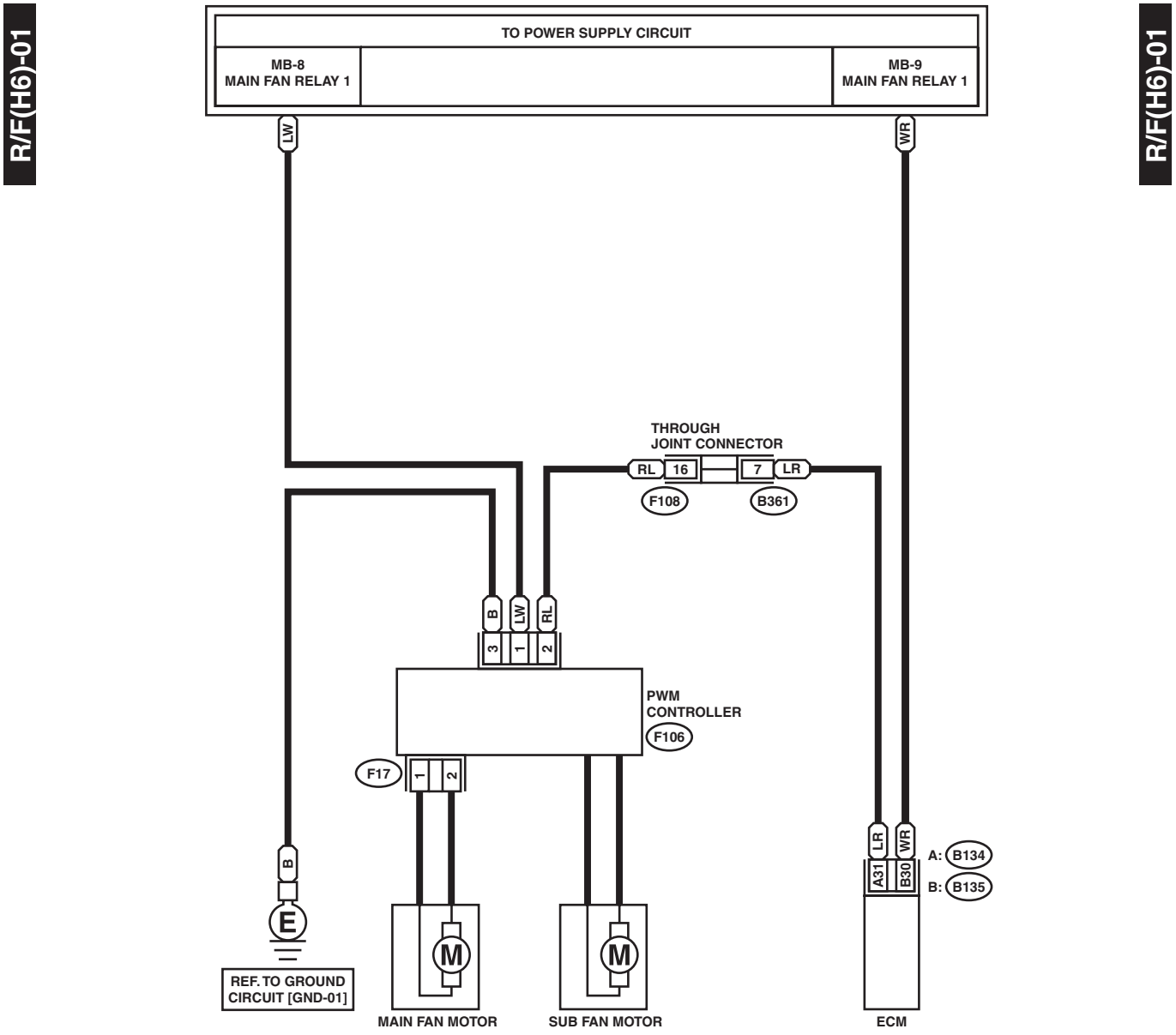

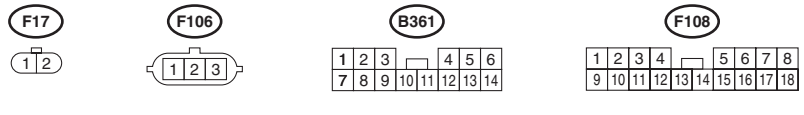

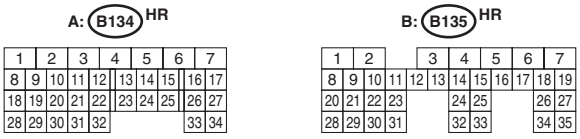

WI-05398

17.Charging System

A: WIRING DIAGRAM

CHG-01

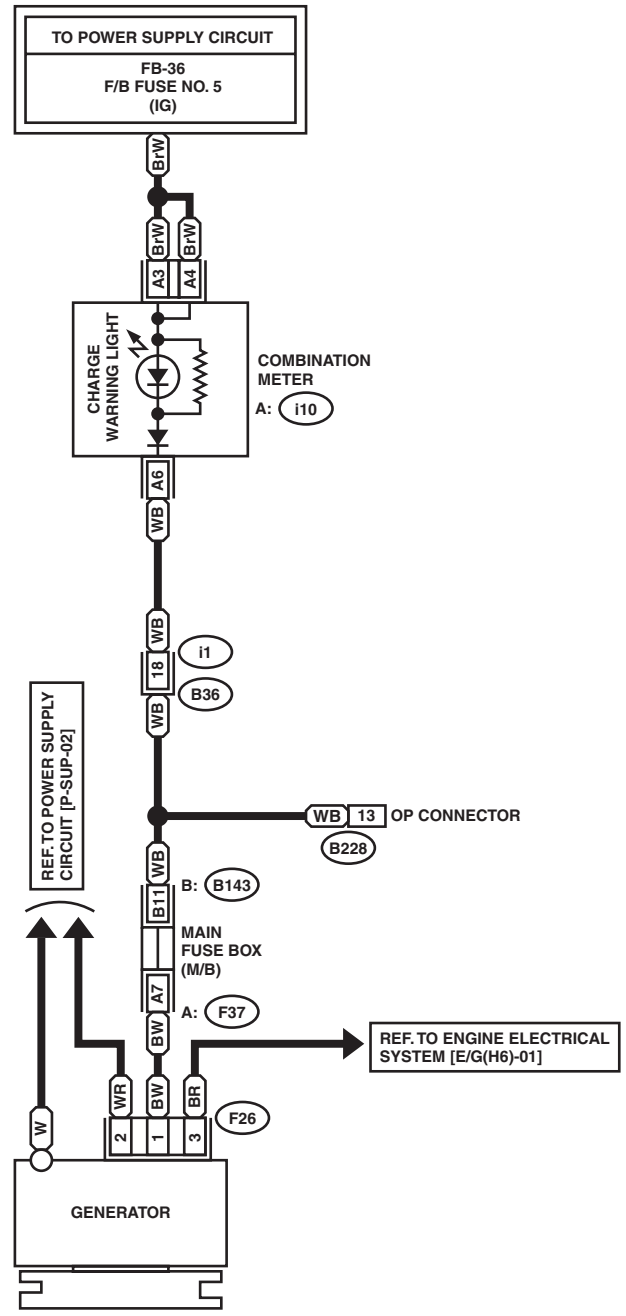

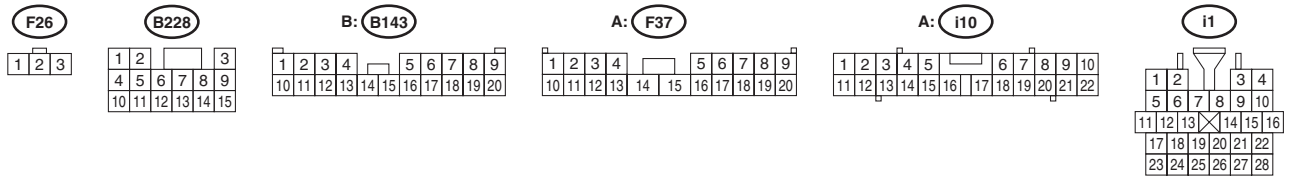

WI-05301

CHG-01

18.Starter System

A: WIRING DIAGRAM

1. 2.5 L NON-TURBO MODEL

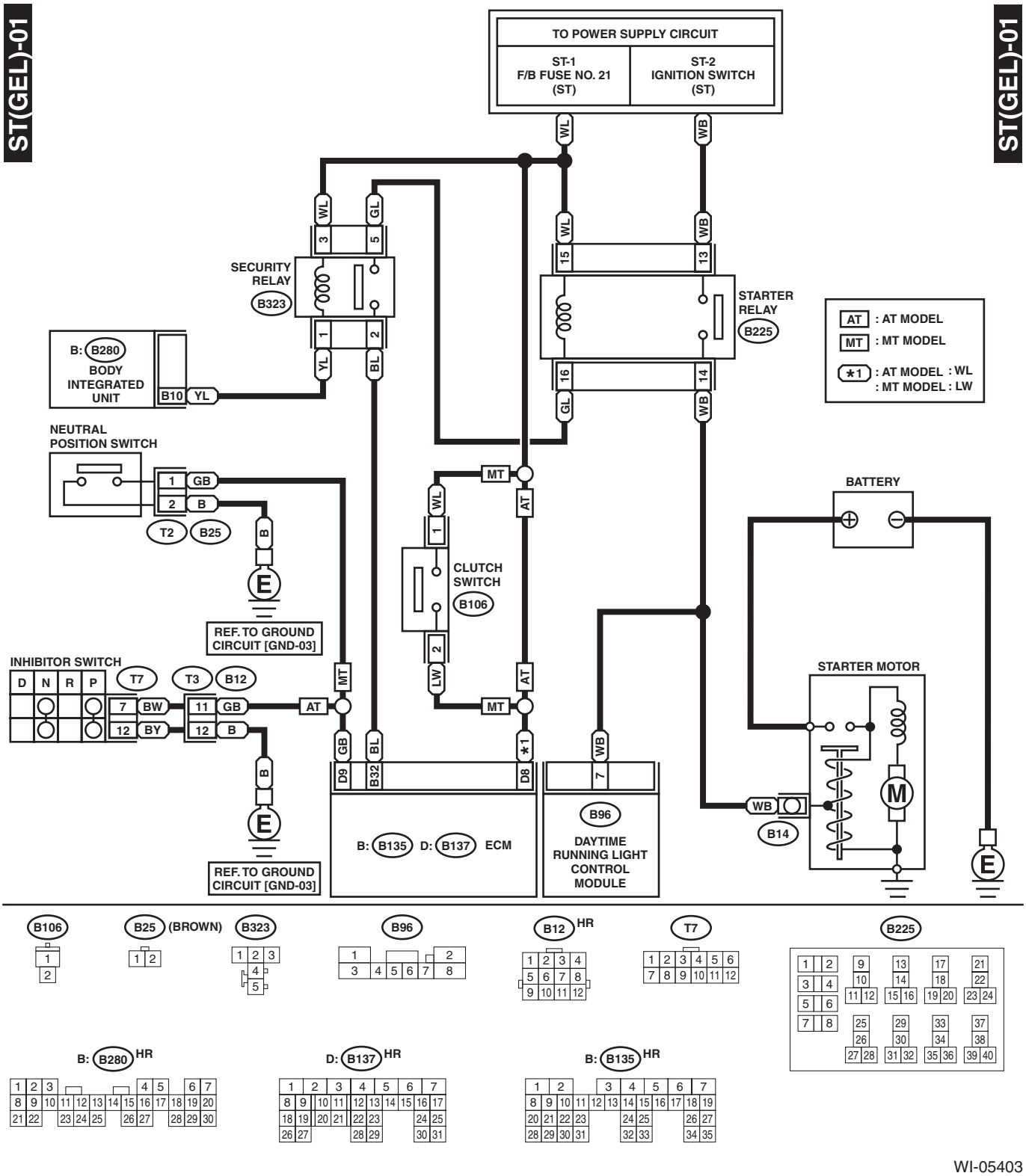

WI-05403

2. 2.5 L TURBO MODEL AND 3.0 L MODEL

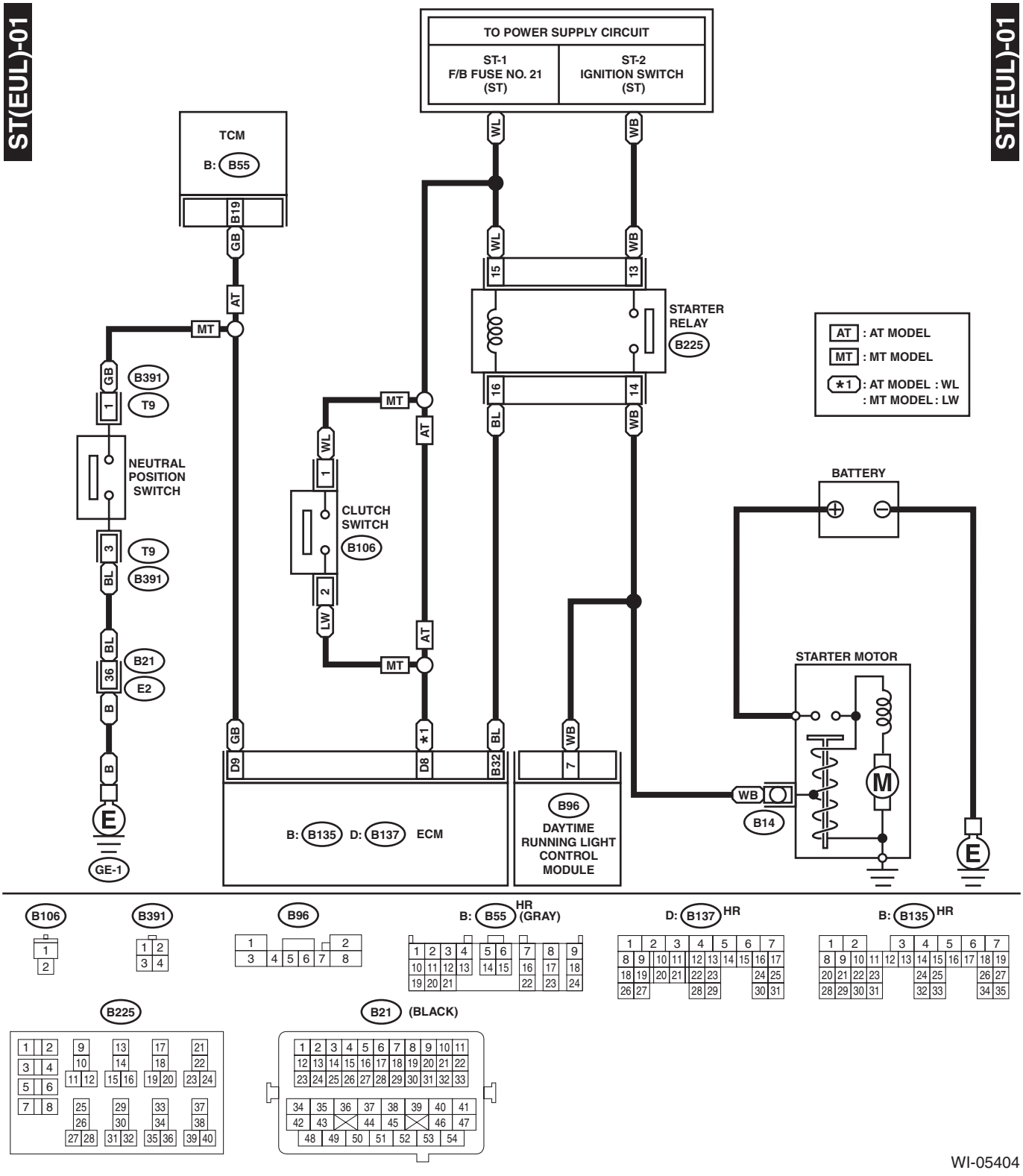

WI-05404

19.Power Seat System

A: WIRING DIAGRAM

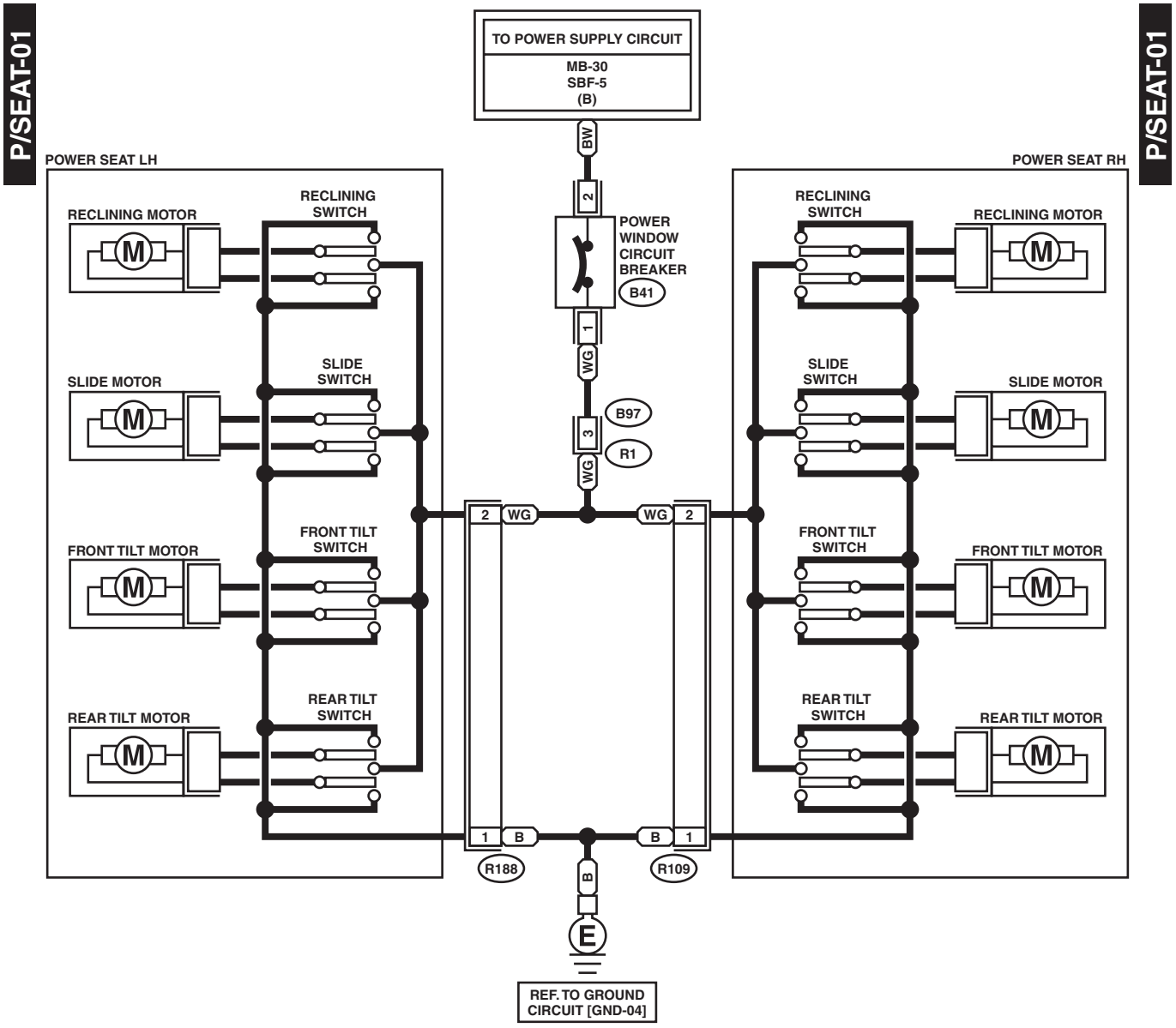

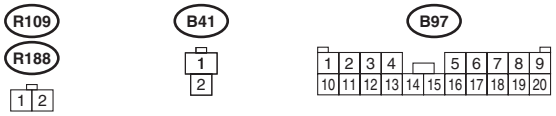

WI-05392

20.Seat Belt Warning System

A: WIRING DIAGRAM

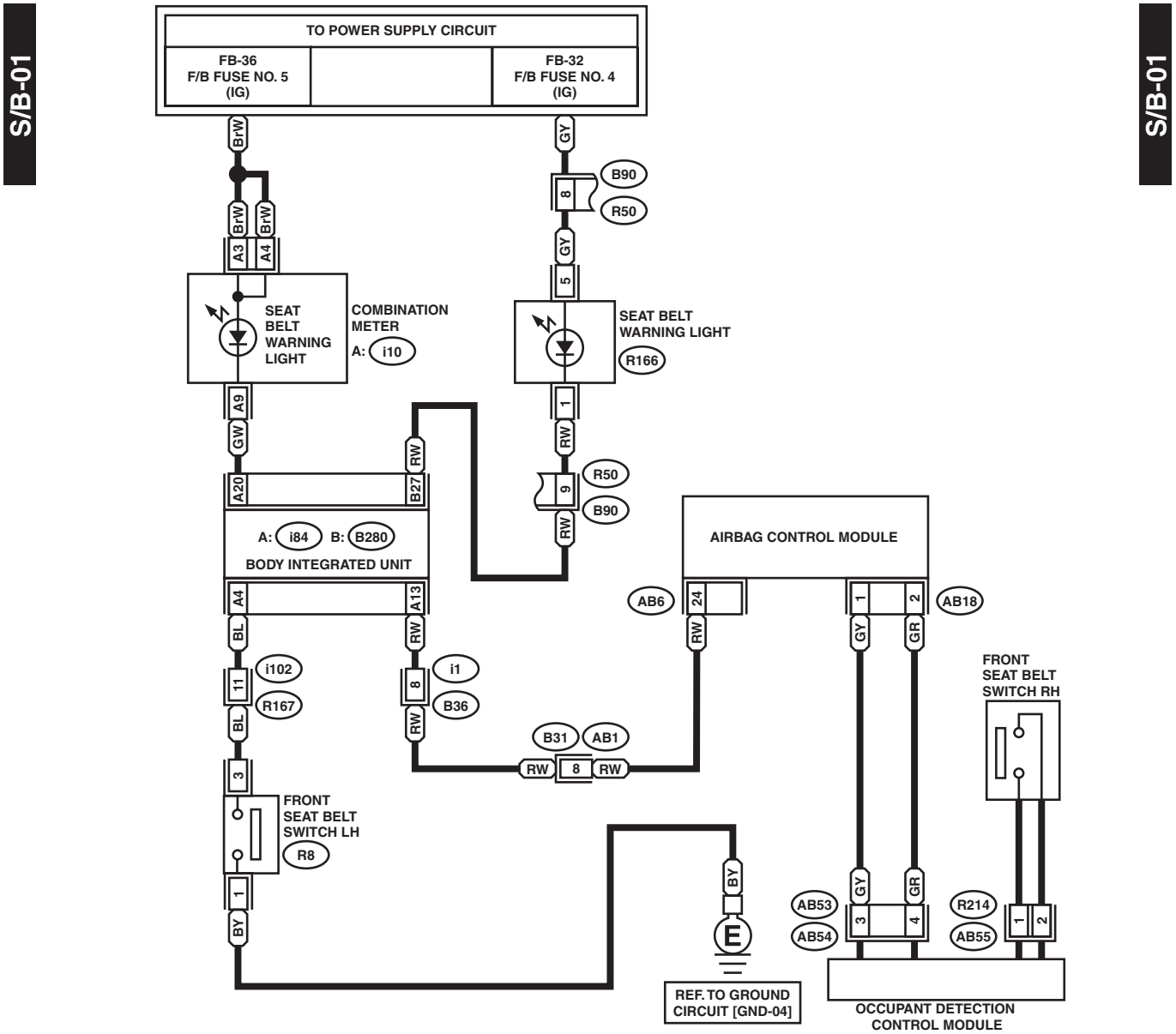

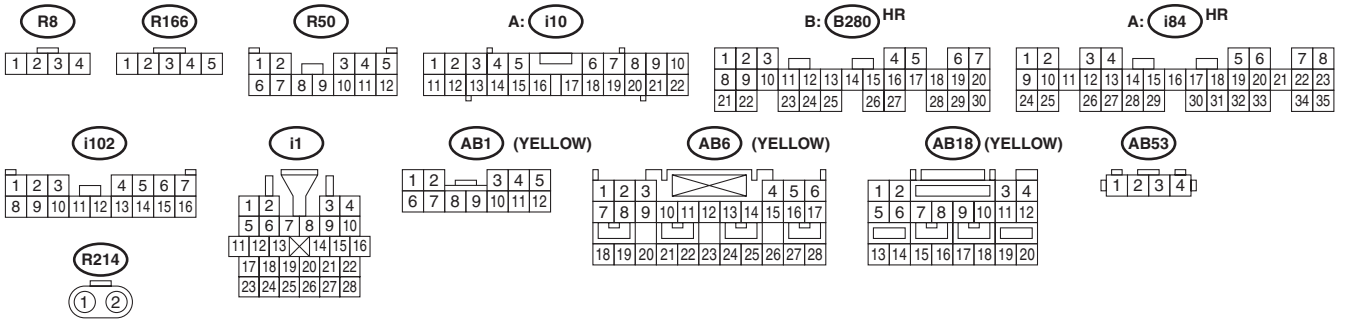

WI-05401

21.Seat Heater System

A: WIRING DIAGRAM

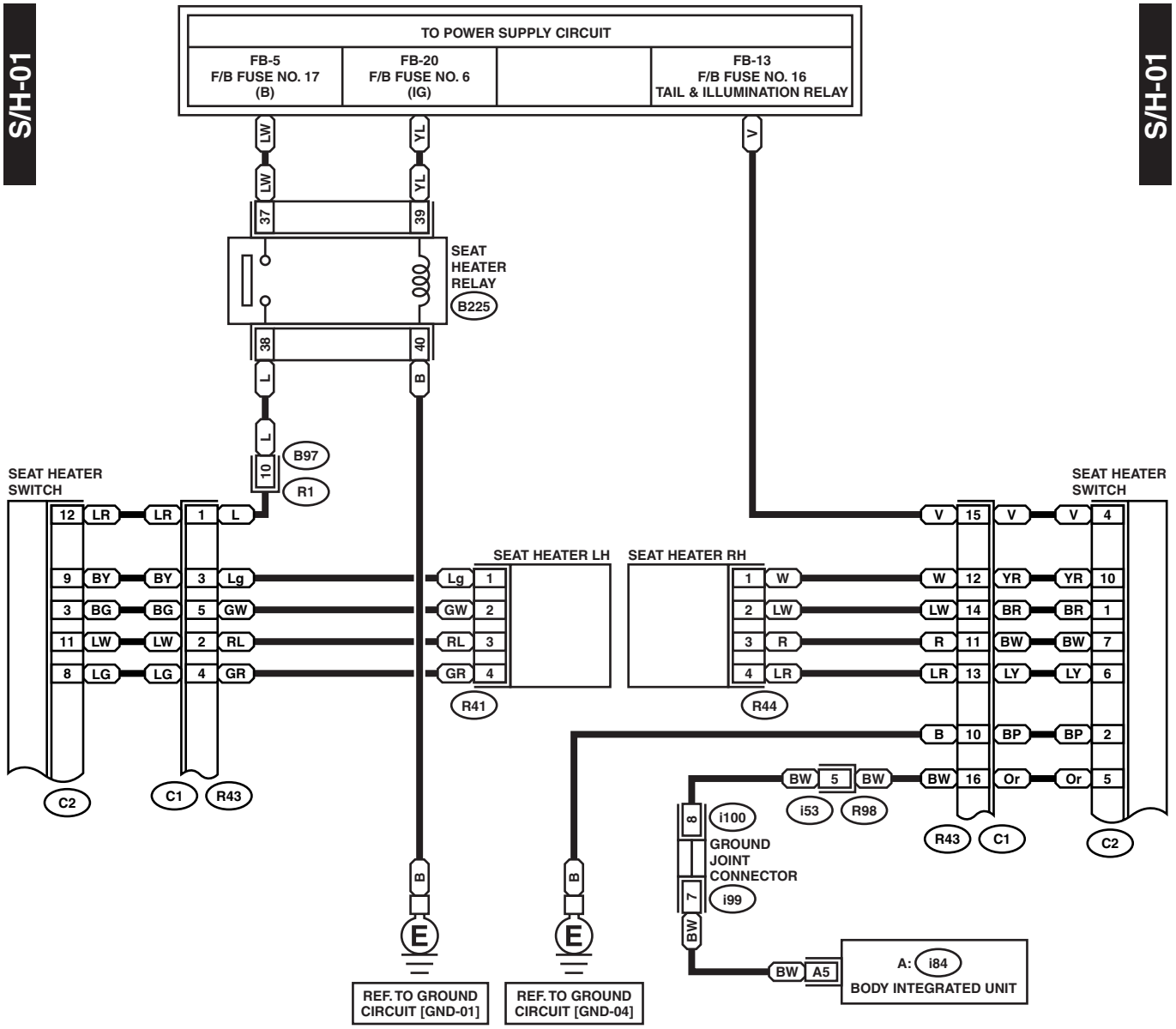

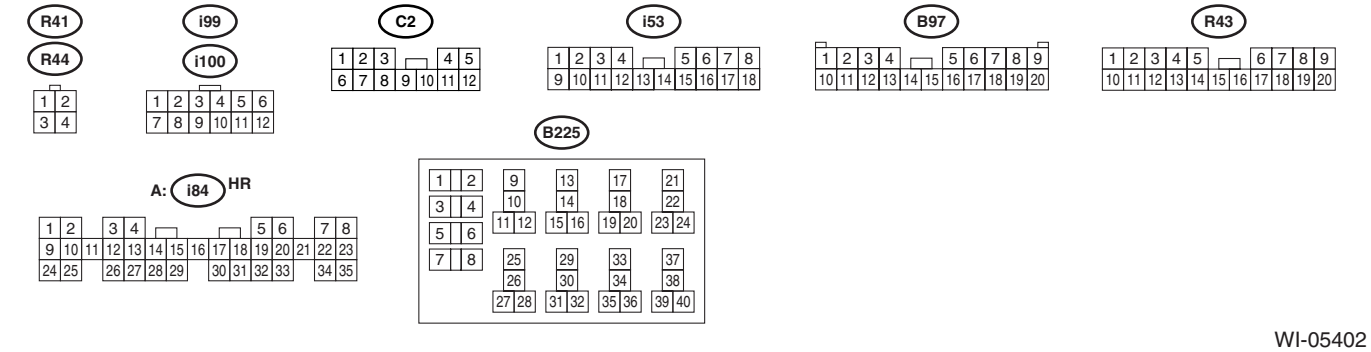

WI-05402

22.Headlight System

A: WIRING DIAGRAM

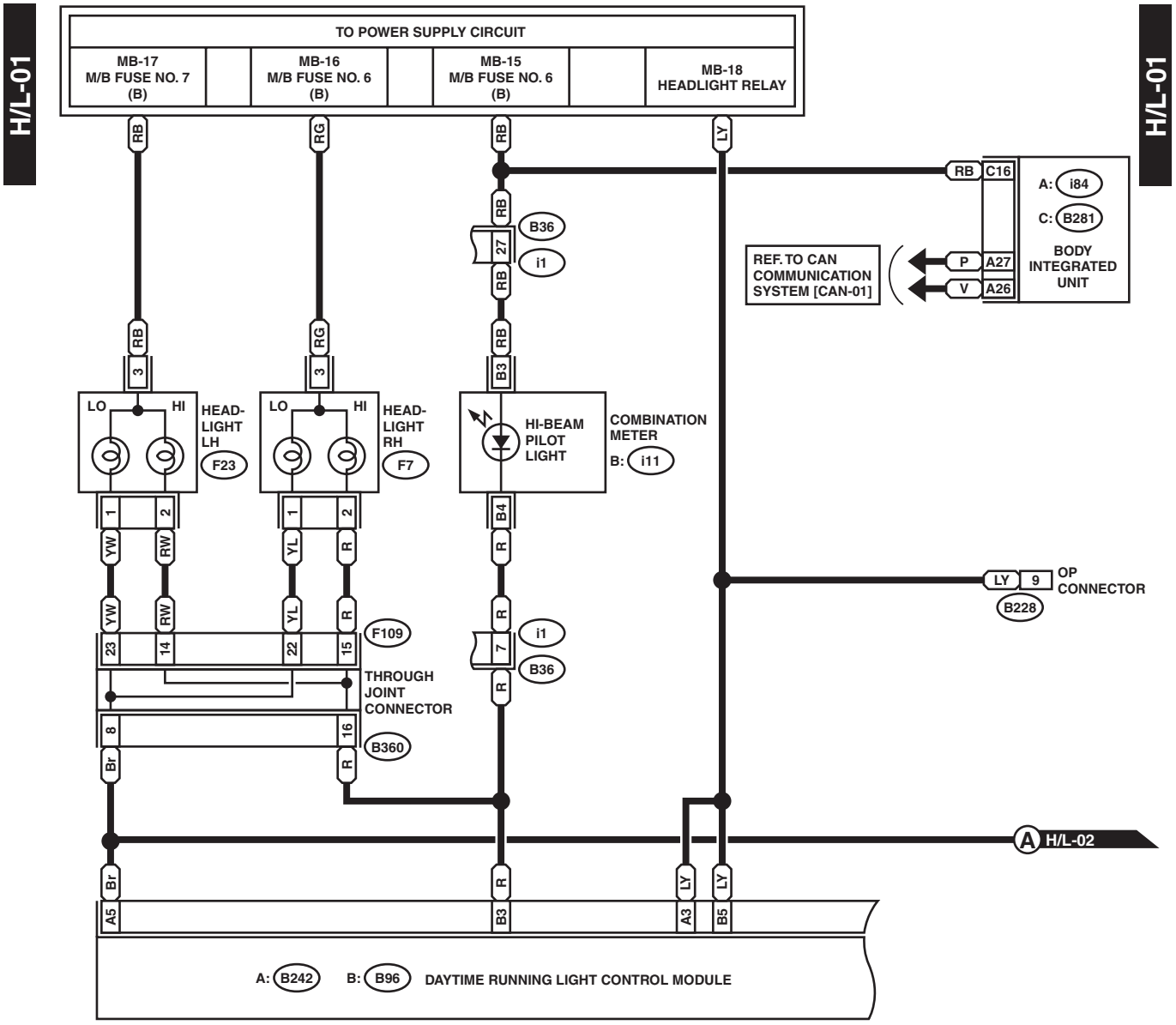

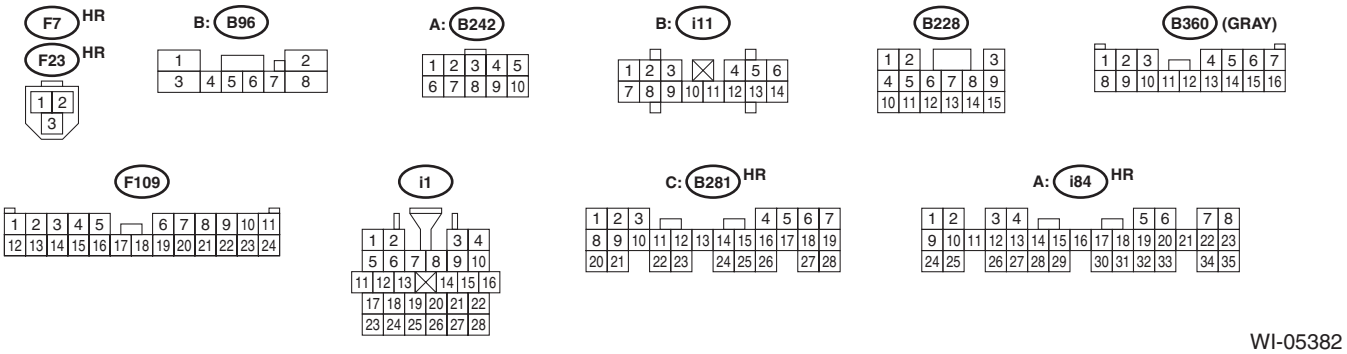

WI-05382

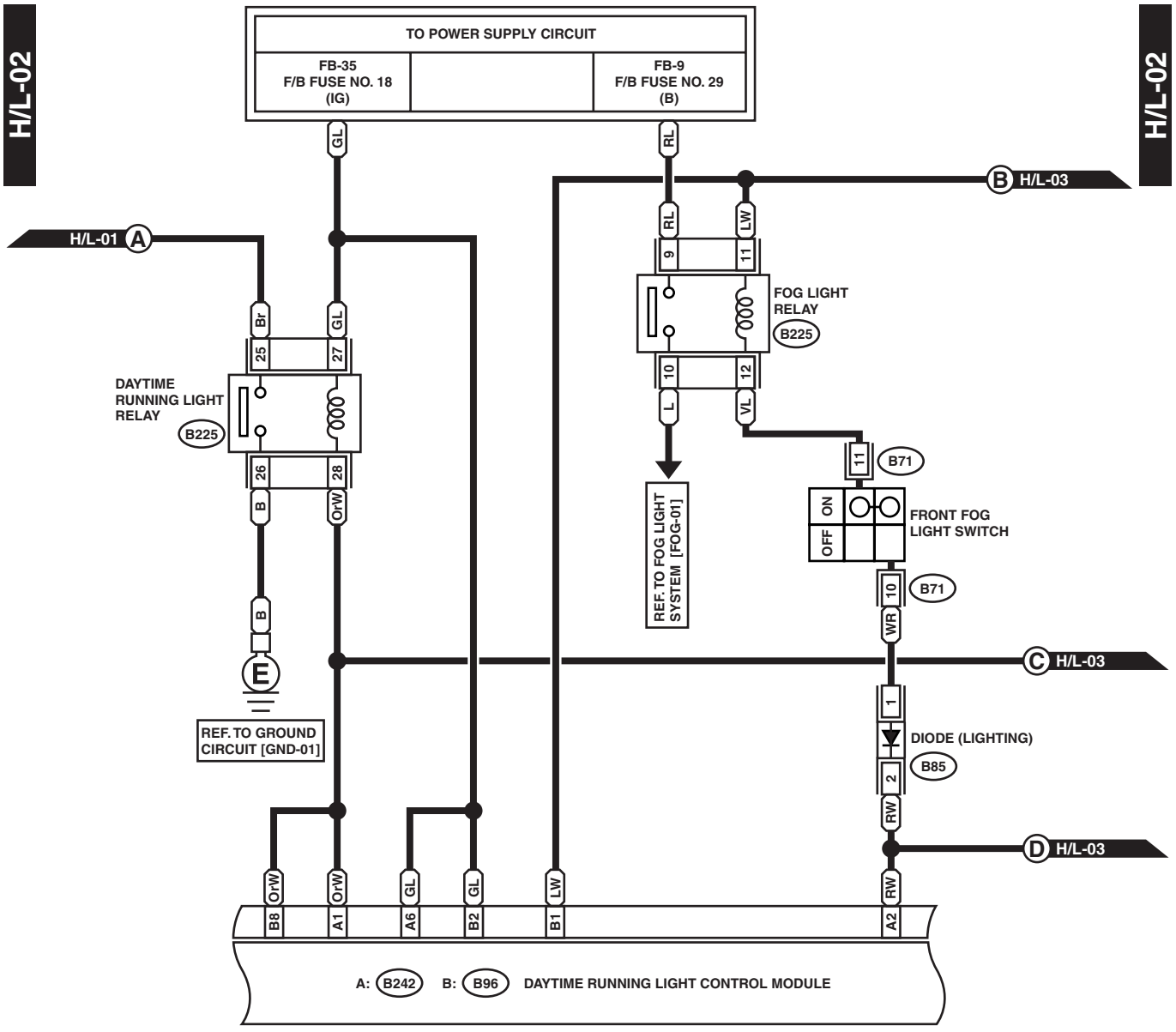
H/L-02
H/L-02
TO POWER SUPPLY CIRCUIT
FB-35
F/B FUSE NO. 18
(IG)
FB-9
F/B FUSE NO. 29
(B)
GL
RL
B H/L-03
H/L-01 A
RL
LW
9
11
FOG LIGHT
RELAY
B225
Br
GL
25
27
DAYTIME
RUNNING LIGHT
RELAY
B225
10
12
L
VL
11
B71
ON
OFF
FRONT FOG
LIGHT SWITCH
26
28
B
OrW
REF. TO FOG LIGHT
SYSTEM [FOG-01]
10
B71
WR
B
E
C H/L-03
1
DIODE (LIGHTING)
B85
2
RW
REF. TO GROUND
CIRCUIT [GND-01]
D H/L-03
OrW
OrW
GL
GL
LW
RW
B8
A1
A6
B2
B1
A2
A: B242 B: B96 DAYTIME RUNNING LIGHT CONTROL MODULE

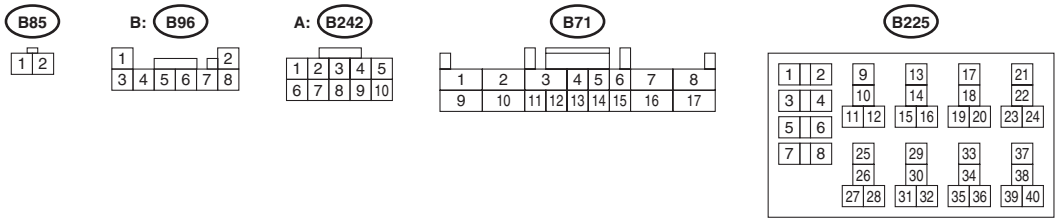
B85
1 2
B: B96
1 2
3 4 5 6 7 8
A: B242
1 2 3 4 5
6 7 8 9 10
B71
1 2 3 4 5 6 7 8
9 10 11 12 13 14 15 16 17
B225
1 2
3 4
5 6
7 8
9 10 11 12
13 14 15 16
17 18 19 20
21 22 23 24
25 26 27 28
29 30 31 32
33 34 35 36
37 38 39 40

WI-05445

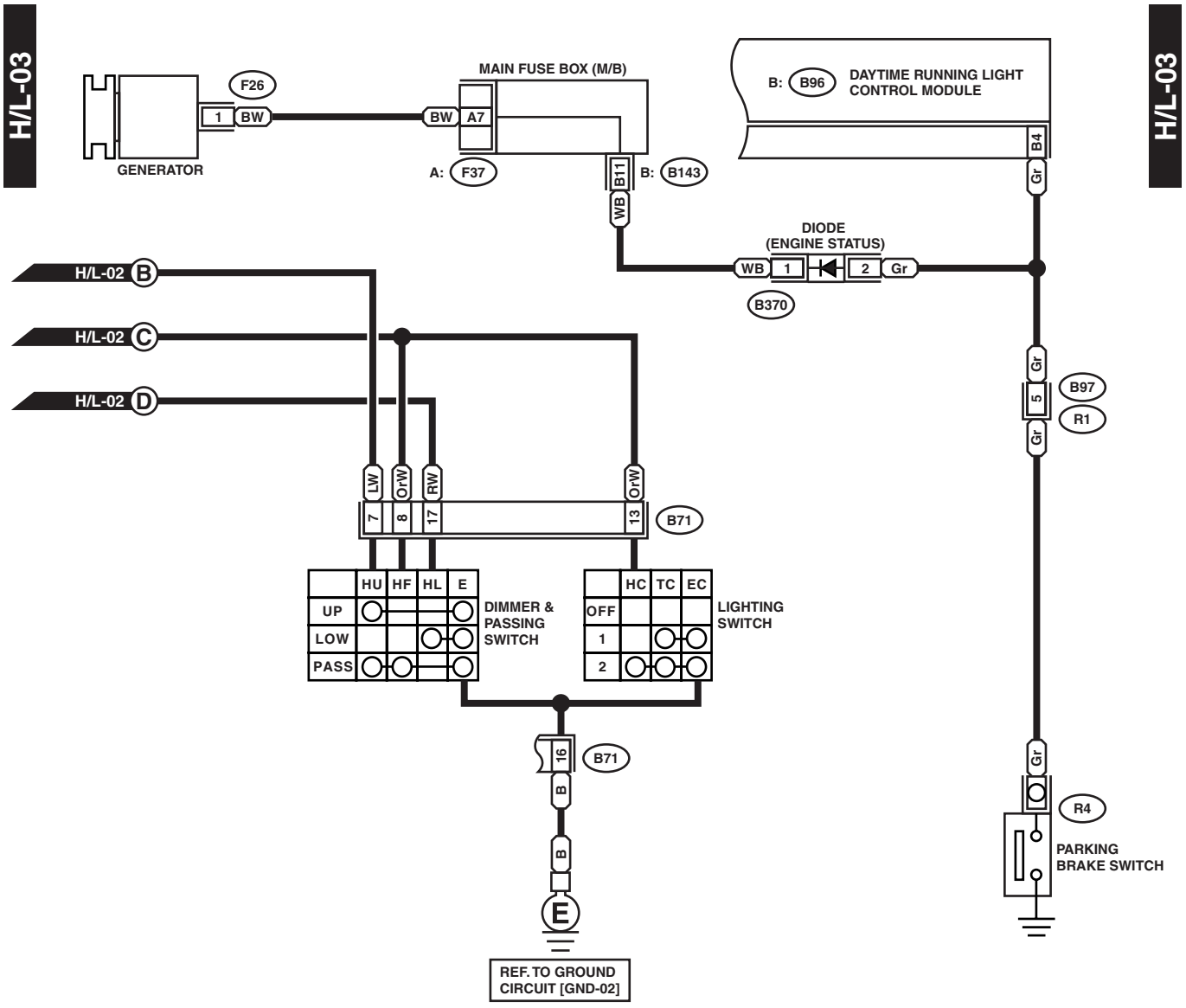
H/L-03
H/L-03
F26
1
BW
GENERATOR
BW
A7
MAIN FUSE BOX (M/B)
A: F37
B11
B: B143
B: B96
DAYTIME RUNNING LIGHT CONTROL MODULE
B4
Gr
WB
DIODE (ENGINE STATUS)
WB
1
2
Gr
B370
H/L-02 B
H/L-02 C
H/L-02 D
Gr
5
B97
R1
Gr
LW
OrW
RW
OrW
7
8
17
13
B71
HU HF HL E
UP
LOW
PASS
DIMMER & PASSING SWITCH
HC TC EC
OFF
1
2
LIGHTING SWITCH
16
B71
B
B
E
REF. TO GROUND CIRCUIT [GND-02]
Gr
R4
PARKING BRAKE SWITCH

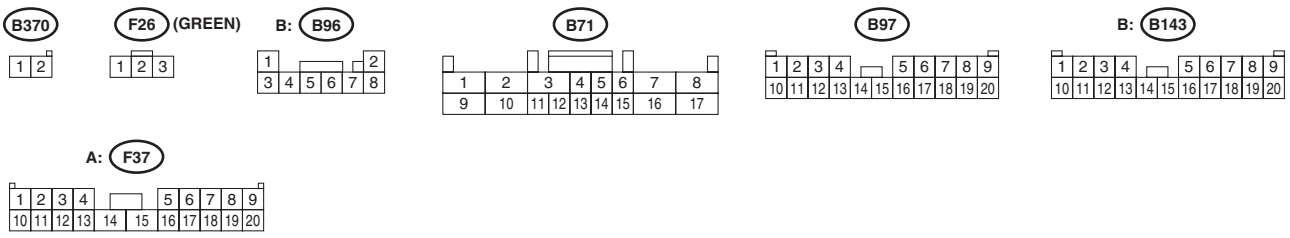
B370
1 2
F26 (GREEN)
1 2 3
B: B96
1 2
3 4 5 6 7 8
B71
1 2 3 4 5 6 7 8
9 10 11 12 13 14 15 16 17
B97
1 2 3 4 5 6 7 8 9
10 11 12 13 14 15 16 17 18 19 20
B: B143
1 2 3 4 5 6 7 8 9
10 11 12 13 14 15 16 17 18 19 20
A: F37
1 2 3 4 5 6 7 8 9
10 11 12 13 14 15 16 17 18 19 20

WI-05446

23.Front Fog Light System

A: WIRING DIAGRAM

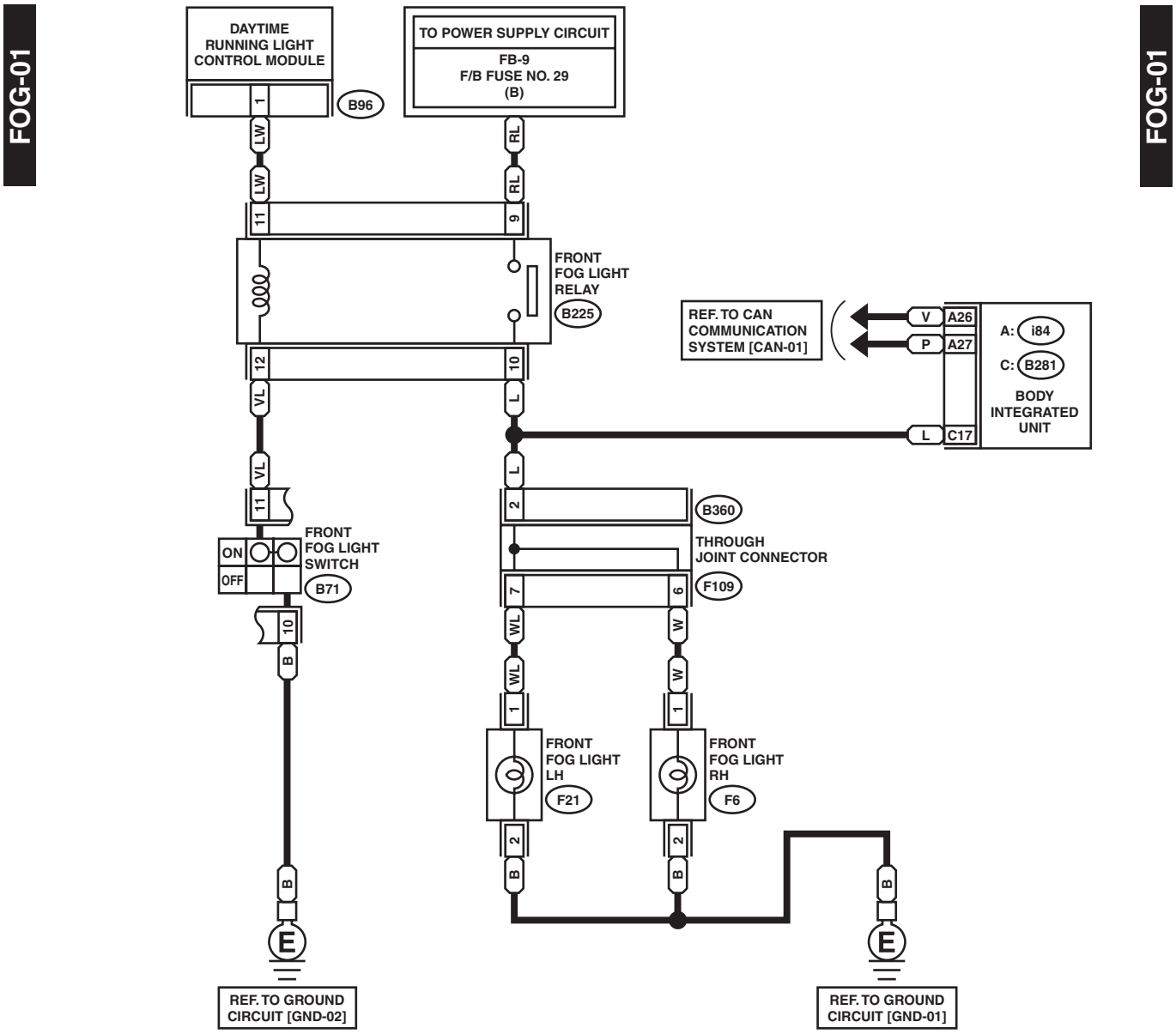

WI-23362

24.Back-up Light System

A: WIRING DIAGRAM

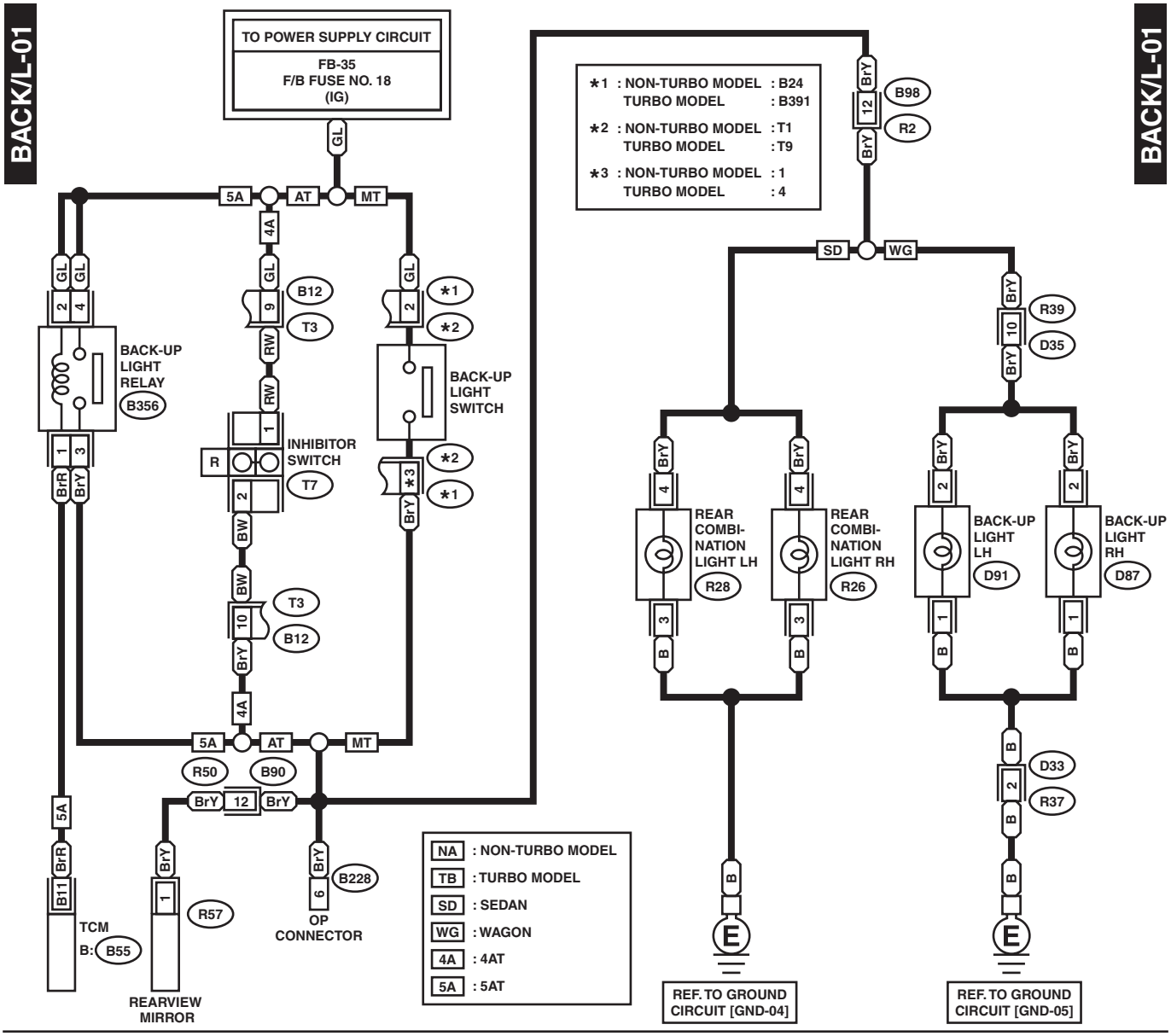

WI-05376

25.Stop Light System

A: WIRING DIAGRAM

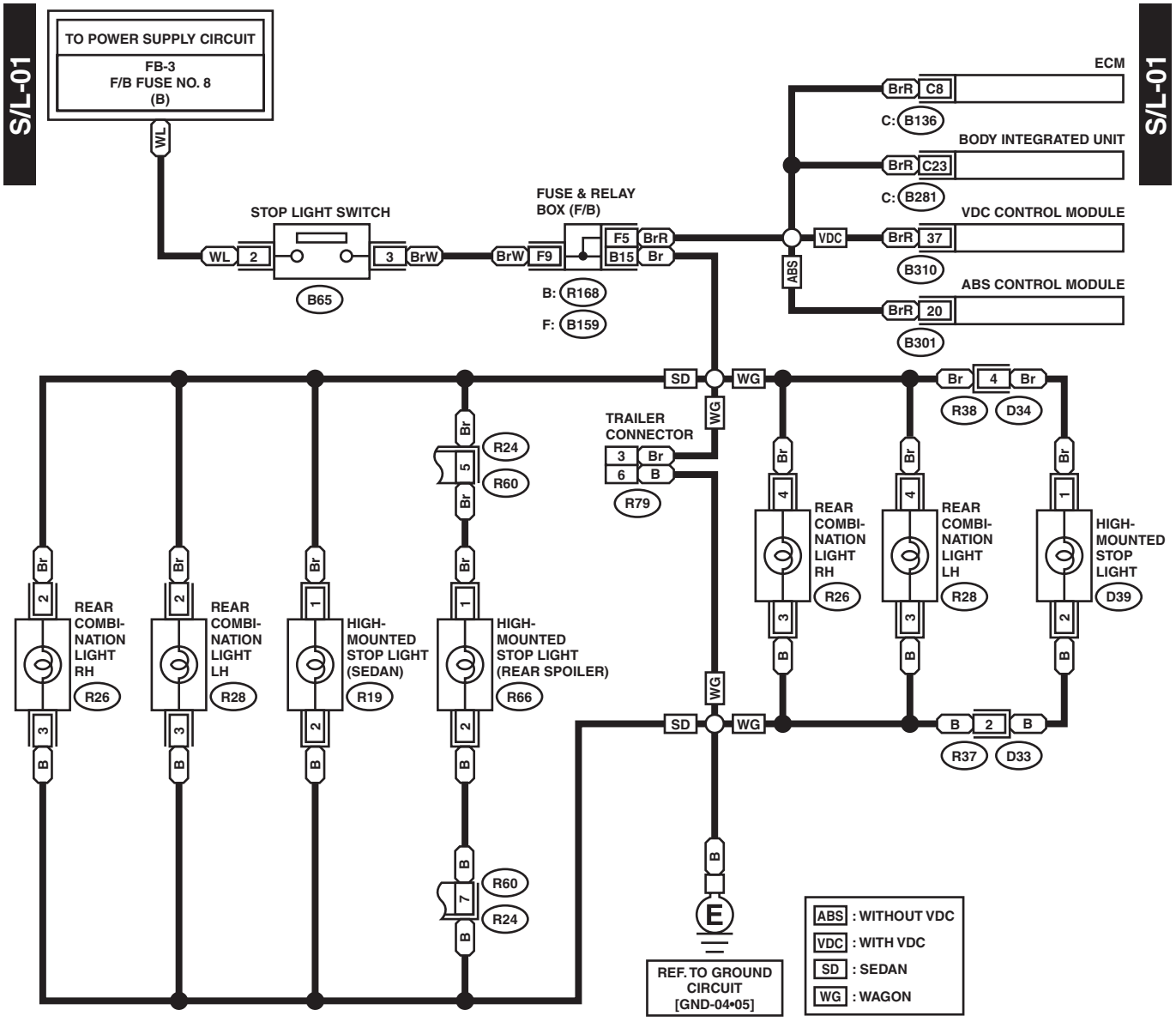

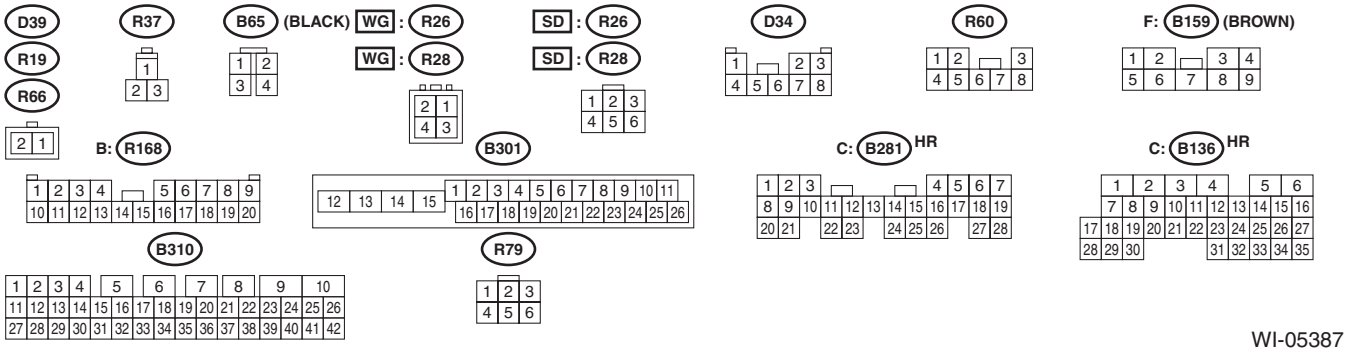

WI-05387

26.Clearance Light and Illumination Light System

A: WIRING DIAGRAM

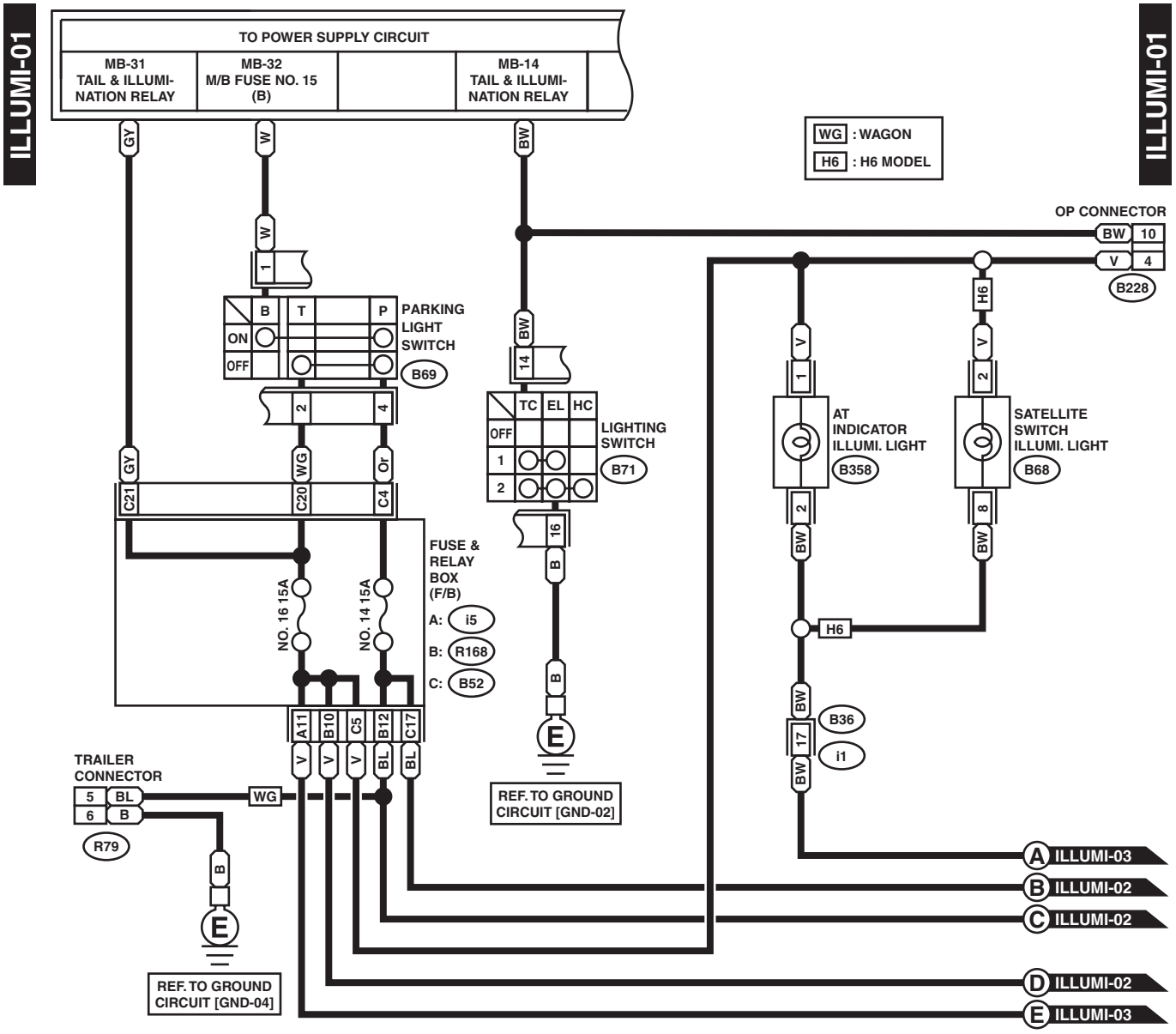

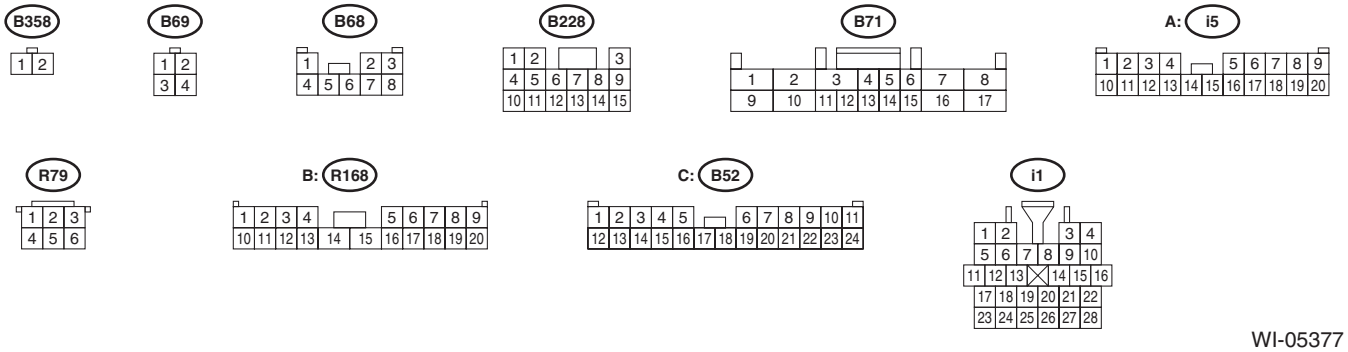

WI-05377

Clearance Light and Illumination Light System

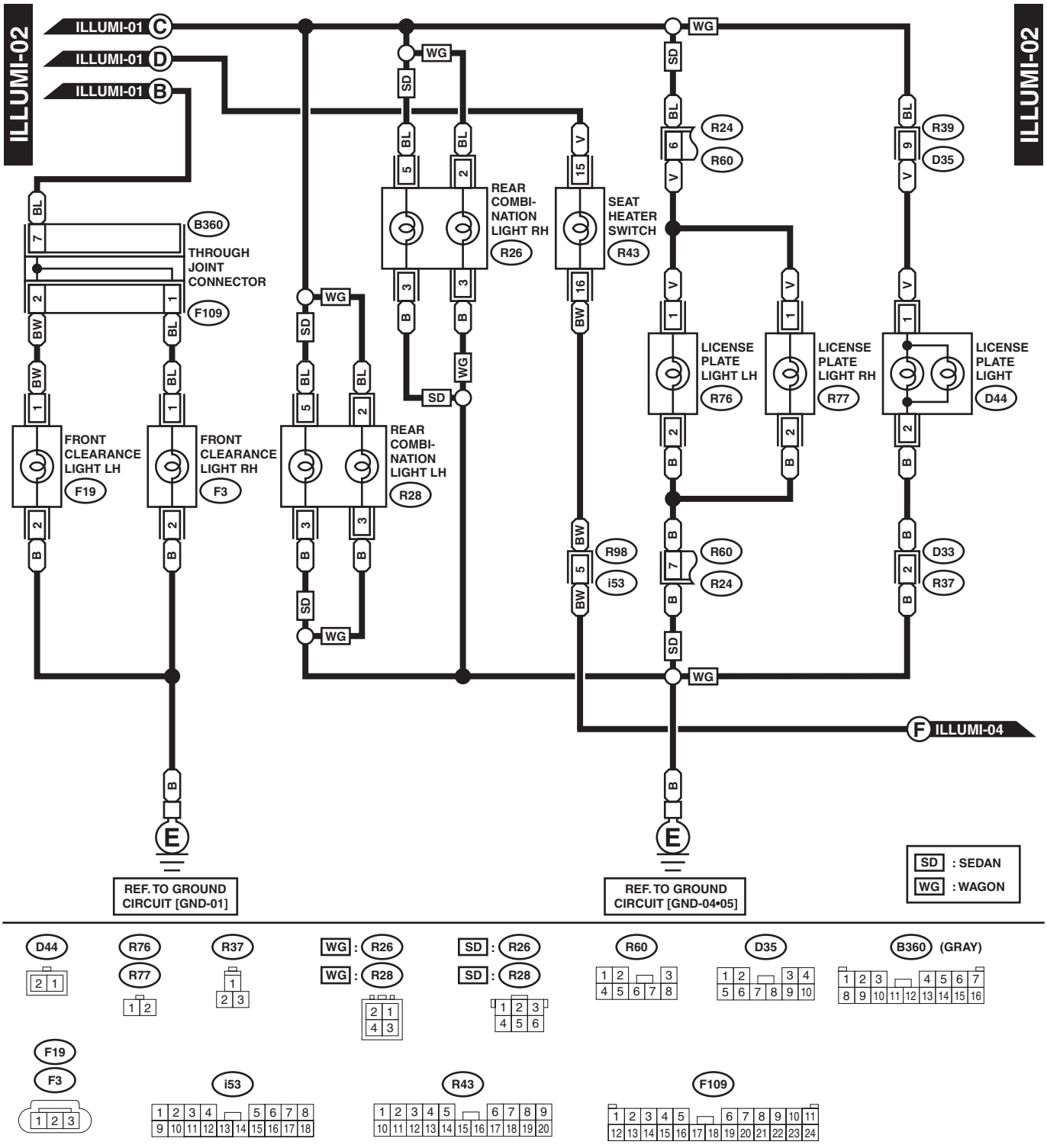

WI-05378

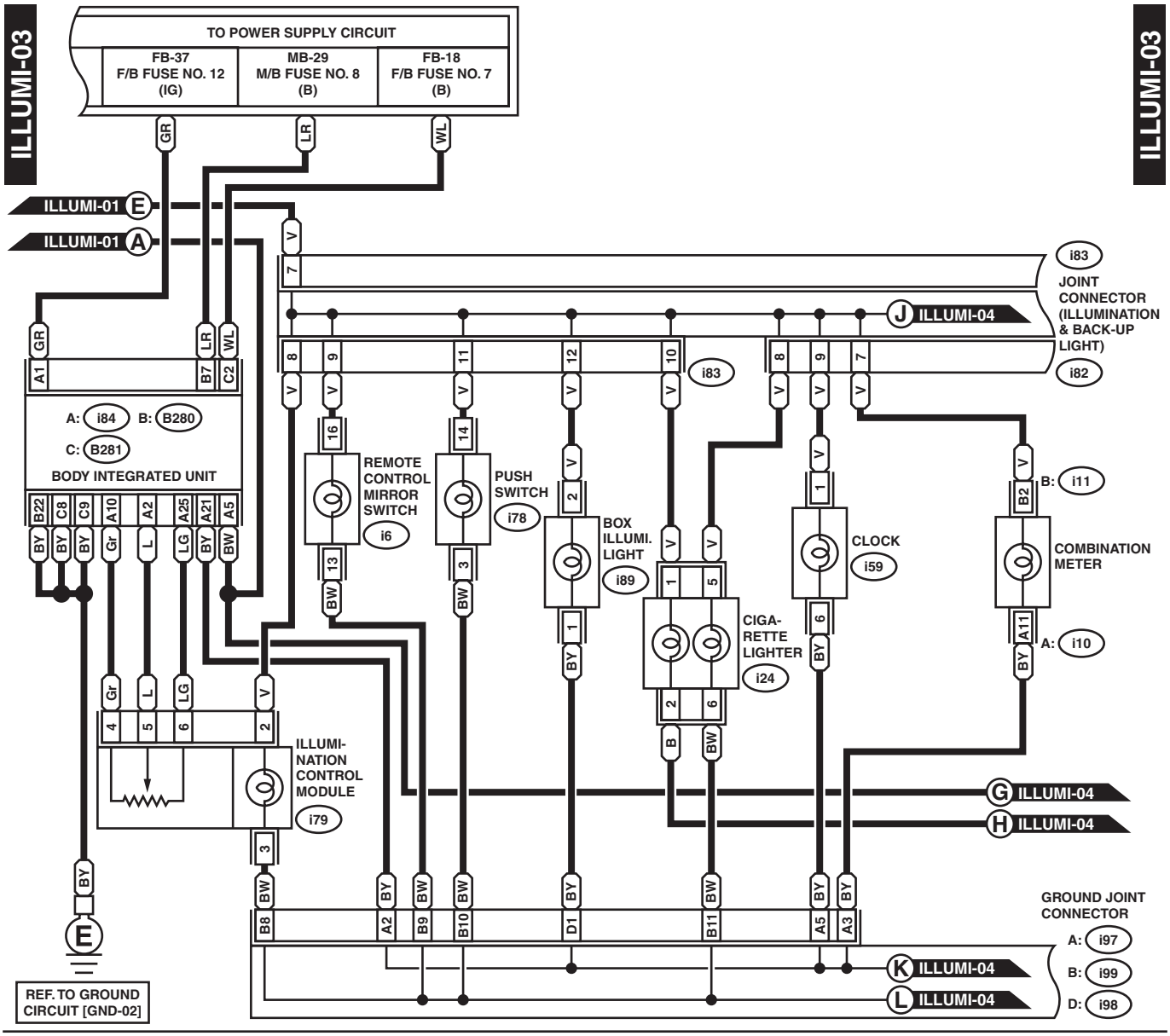
ILLUMI-03
ILLUMI-03
TO POWER SUPPLY CIRCUIT
FB-37
F/B FUSE NO. 12
(IG)
MB-29
M/B FUSE NO. 8
(B)
FB-18
F/B FUSE NO. 7
(B)
GR
LR
WL
ILLUMI-01 E
ILLUMI-01 A
i83
JOINT CONNECTOR (ILLUMINATION & BACK-UP LIGHT)
J ILLUMI-04
i82
A: i84 B: B280
C: B281
BODY INTEGRATED UNIT
REMOTE CONTROL MIRROR SWITCH
i6
PUSH SWITCH
i78
BOX ILLUMI. LIGHT
i89
CLOCK
i59
B: i11
COMBINATION METER
A: i10
CIGA-RETTE LIGHTER
i24
ILLUMI-NATION CONTROL MODULE
i79
G ILLUMI-04
H ILLUMI-04
K ILLUMI-04
L ILLUMI-04
GROUND JOINT CONNECTOR
A: i97
B: i99
D: i98
E
REF. TO GROUND CIRCUIT [GND-02]

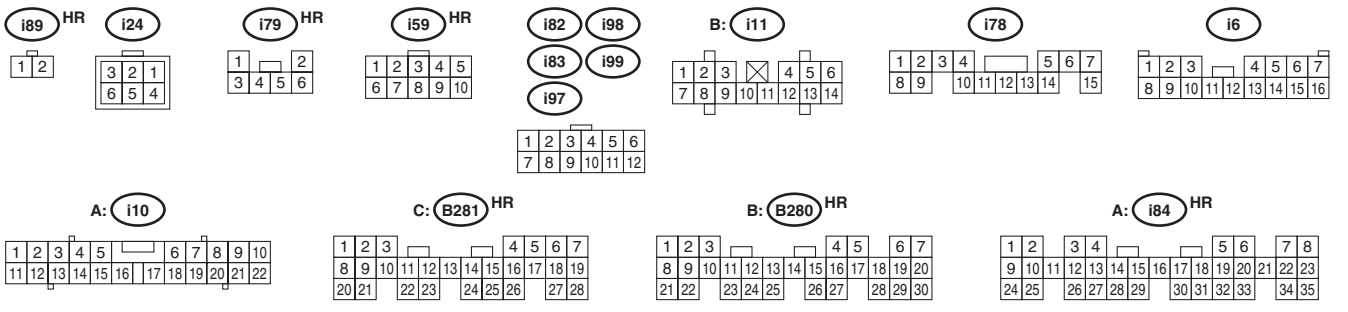
i89 HR
i24
i79 HR
i59 HR
i82 i98
i83 i99
i97
B: i11
i78
i6
A: i10
C: B281 HR
B: B280 HR
A: i84 HR

WI-05379

Clearance Light and Illumination Light System

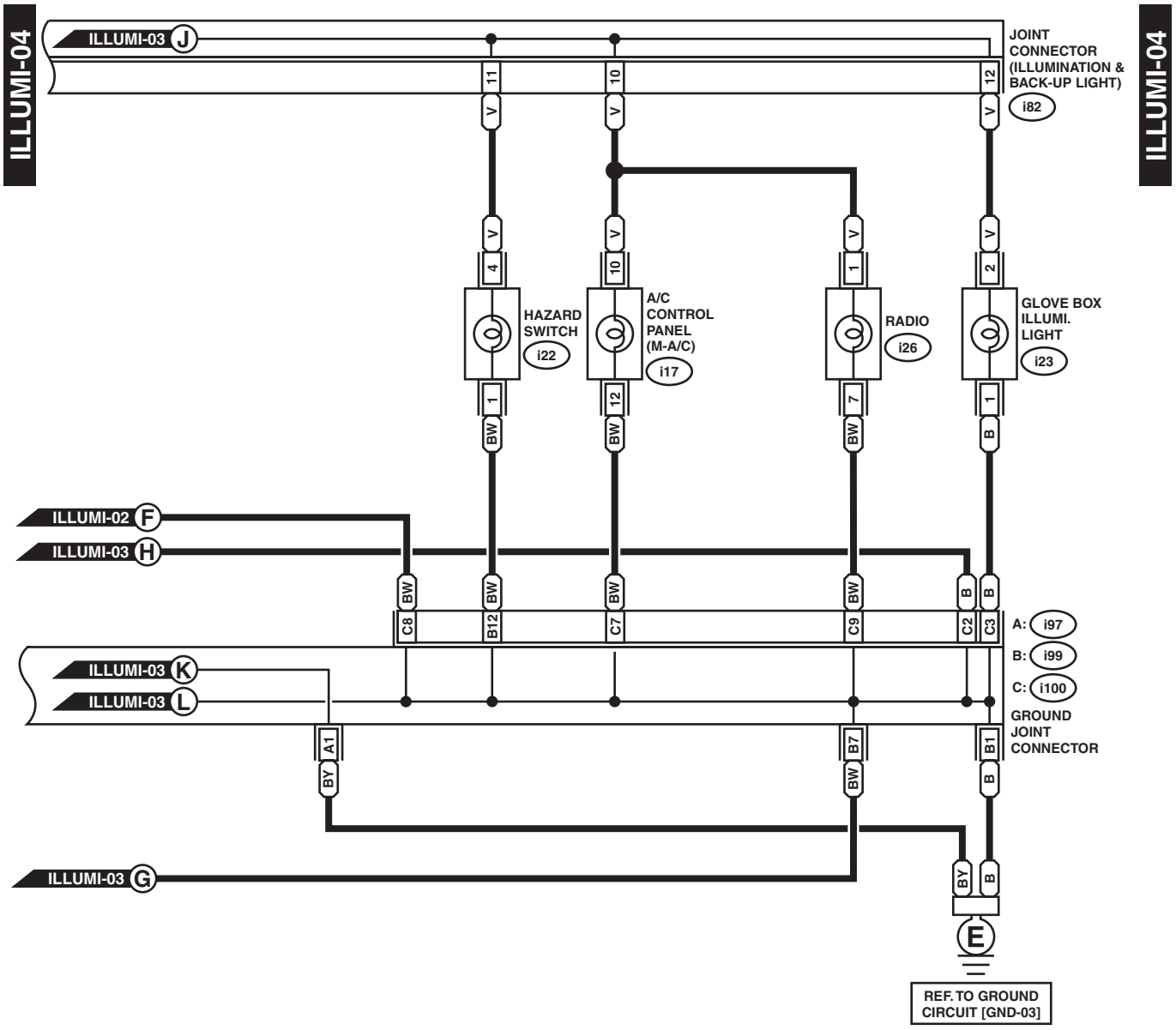

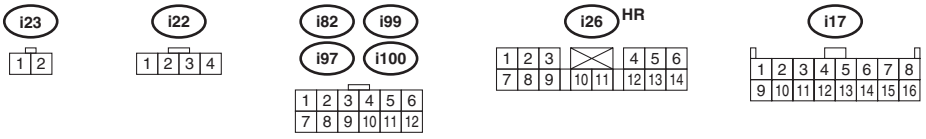

WI-05380

27.Turn Signal Light and Hazard Light System

A: WIRING DIAGRAM

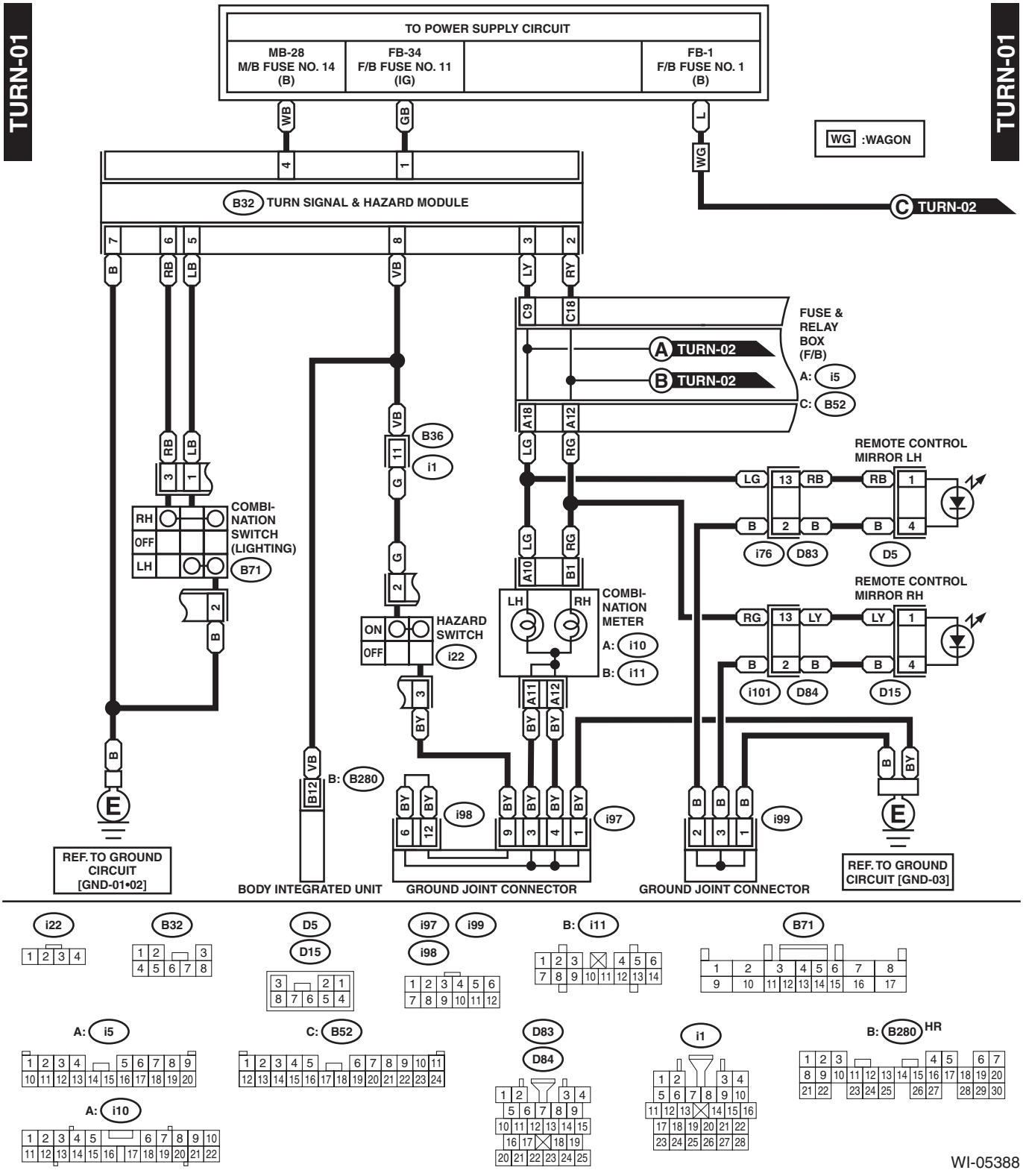

WI-05388

Turn Signal Light and Hazard Light System

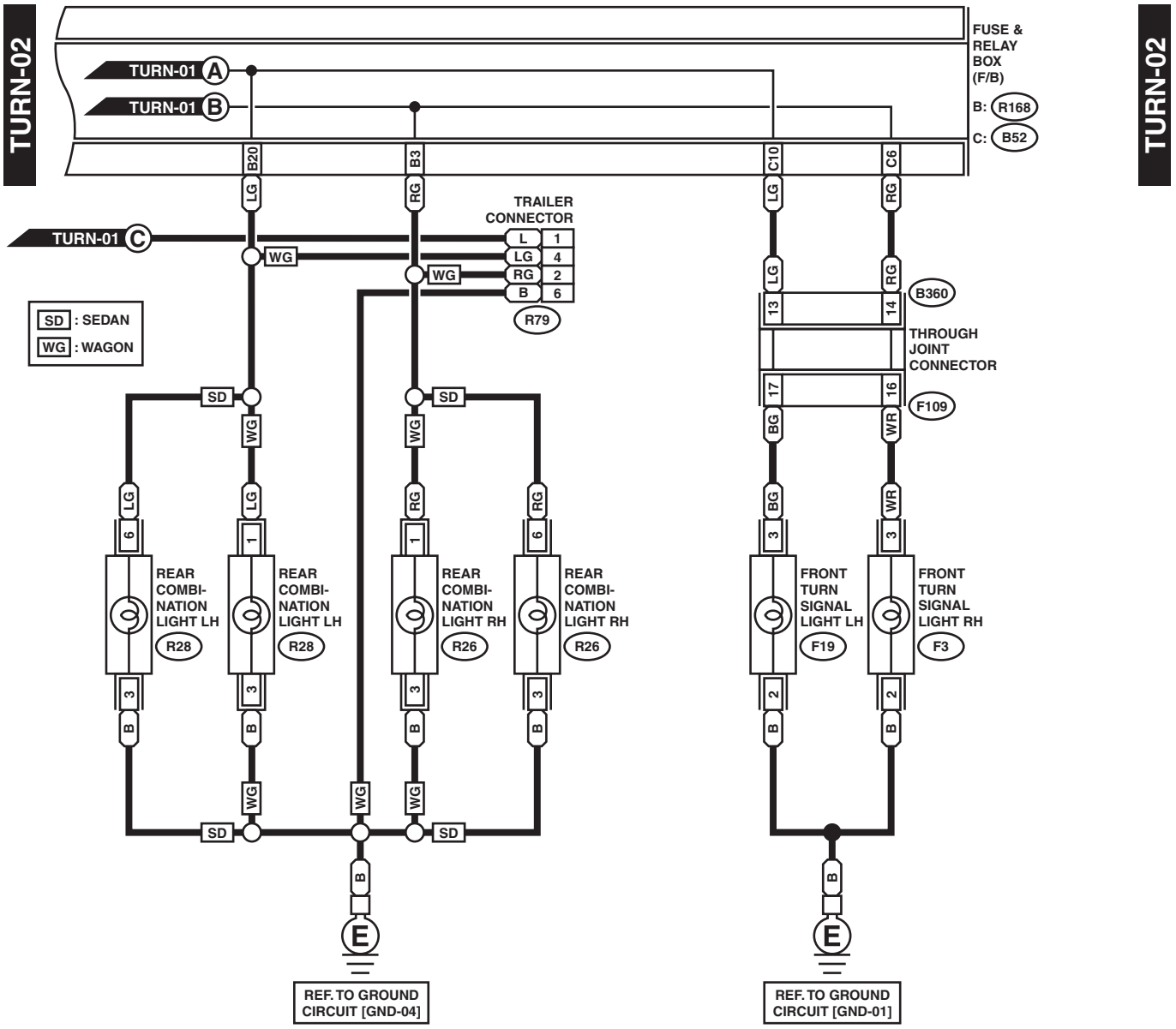

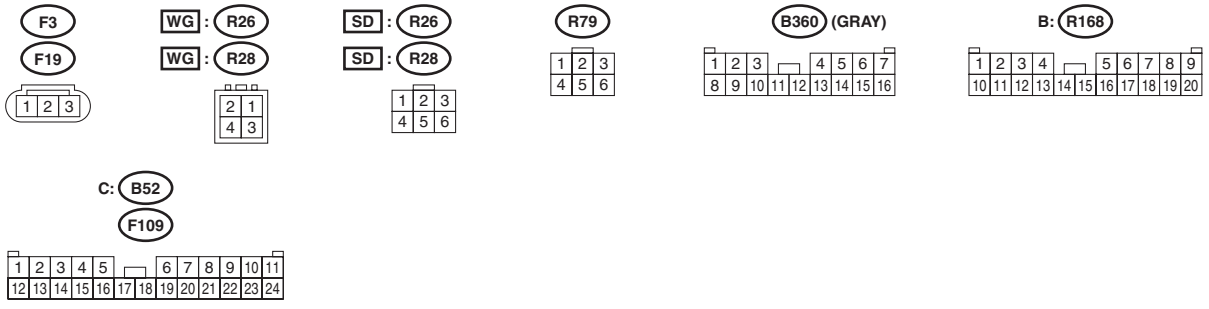

WI-05389

28.Interior Light System

A: WIRING DIAGRAM

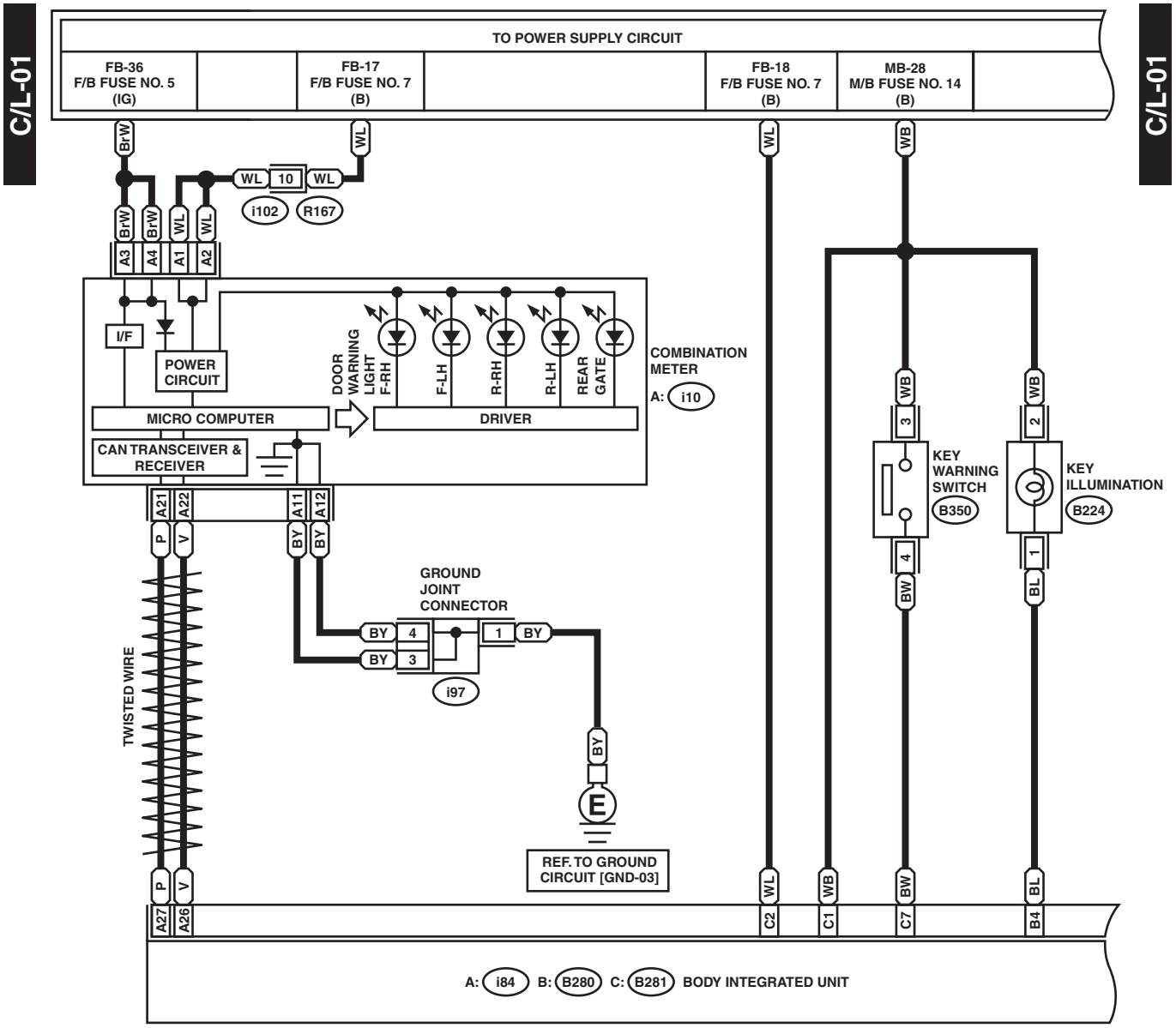

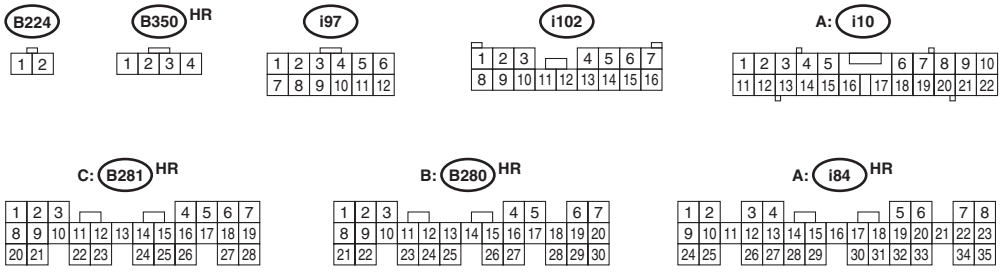

WI-05383

Interior Light System

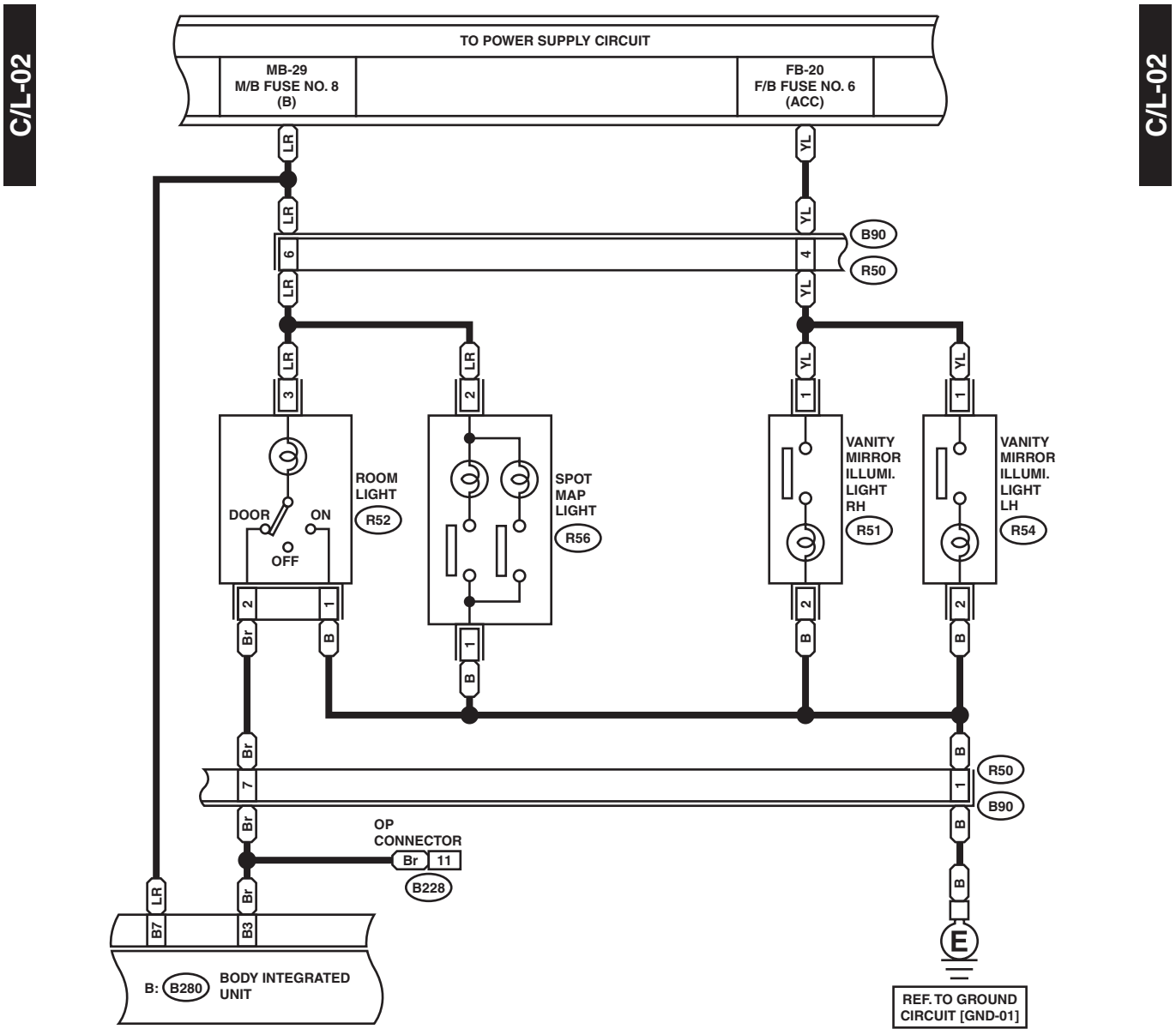

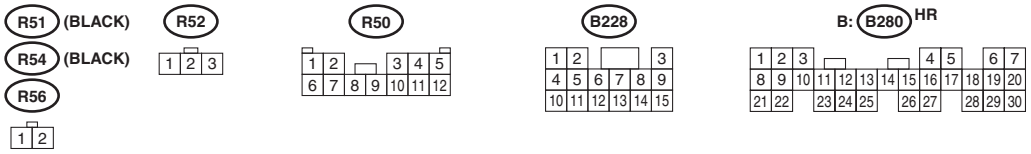

WI-05384

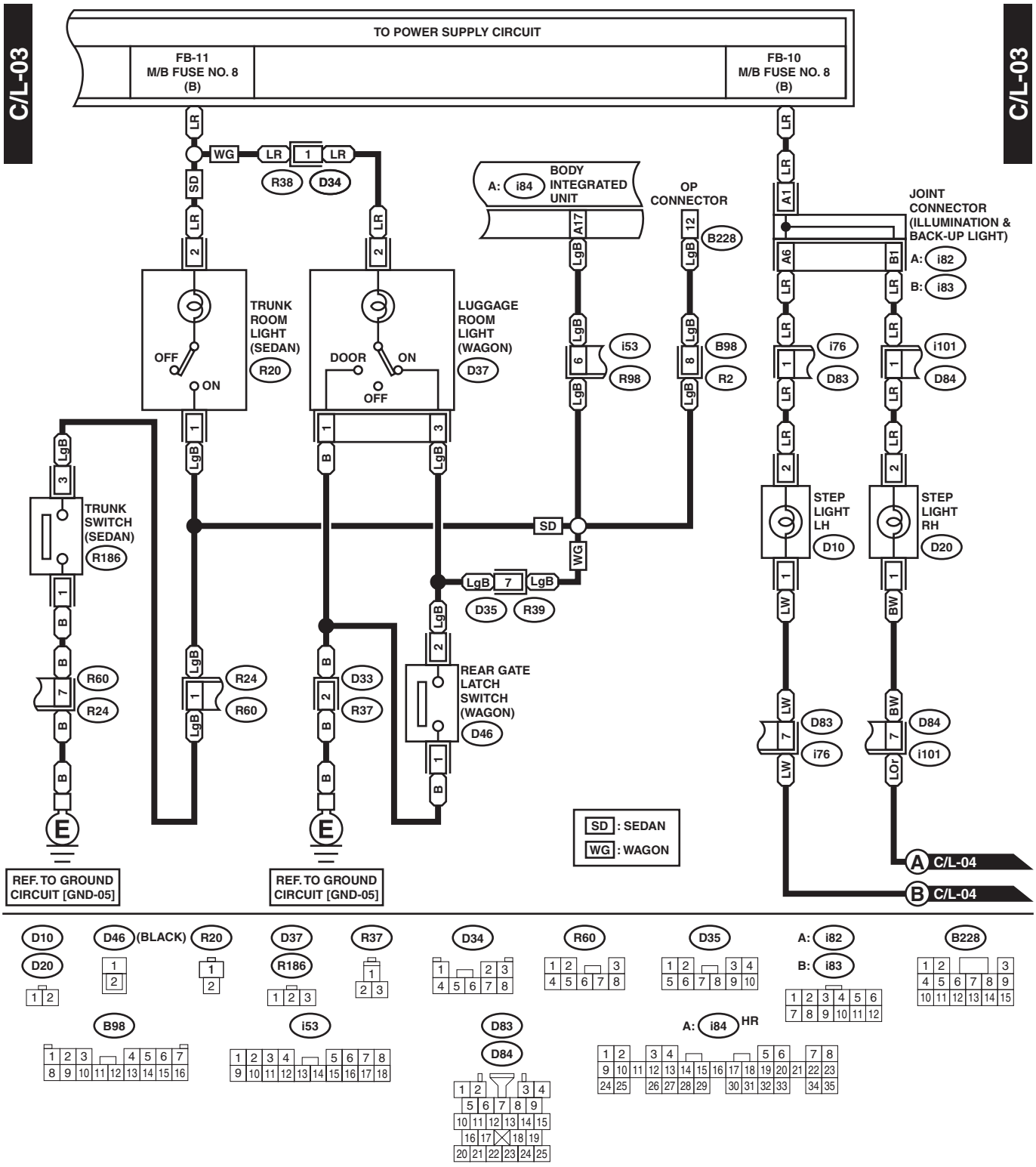
C/L-03
C/L-03
TO POWER SUPPLY CIRCUIT
FB-11
M/B FUSE NO. 8
(B)
FB-10
M/B FUSE NO. 8
(B)
TRUNK
ROOM
LIGHT
(SEDAN)
R20
OFF
ON
LUGGAGE
ROOM
LIGHT
(WAGON)
D37
DOOR
ON
OFF
BODY
INTEGRATED
UNIT
A: i84
OP
CONNECTOR
B228
JOINT
CONNECTOR
(ILLUMINATION &
BACK-UP LIGHT)
A: i82
B: i83
i53
R98
B98
R2
i76
D83
i101
D84
STEP
LIGHT
LH
D10
STEP
LIGHT
RH
D20
TRUNK
SWITCH
(SEDAN)
R186
R38
D34
R60
R24
D33
R37
REAR GATE
LATCH
SWITCH
(WAGON)
D46
D35
R39
SD
WG
SD : SEDAN
WG : WAGON
REF. TO GROUND
CIRCUIT [GND-05]
REF. TO GROUND
CIRCUIT [GND-05]
A C/L-04
B C/L-04
D10
D20
D46
(BLACK)
R20
D37
R186
R37
D34
R60
D35
A: i82
B: i83
B228
B98
i53
D83
D84
A: i84
HR

WI-05385

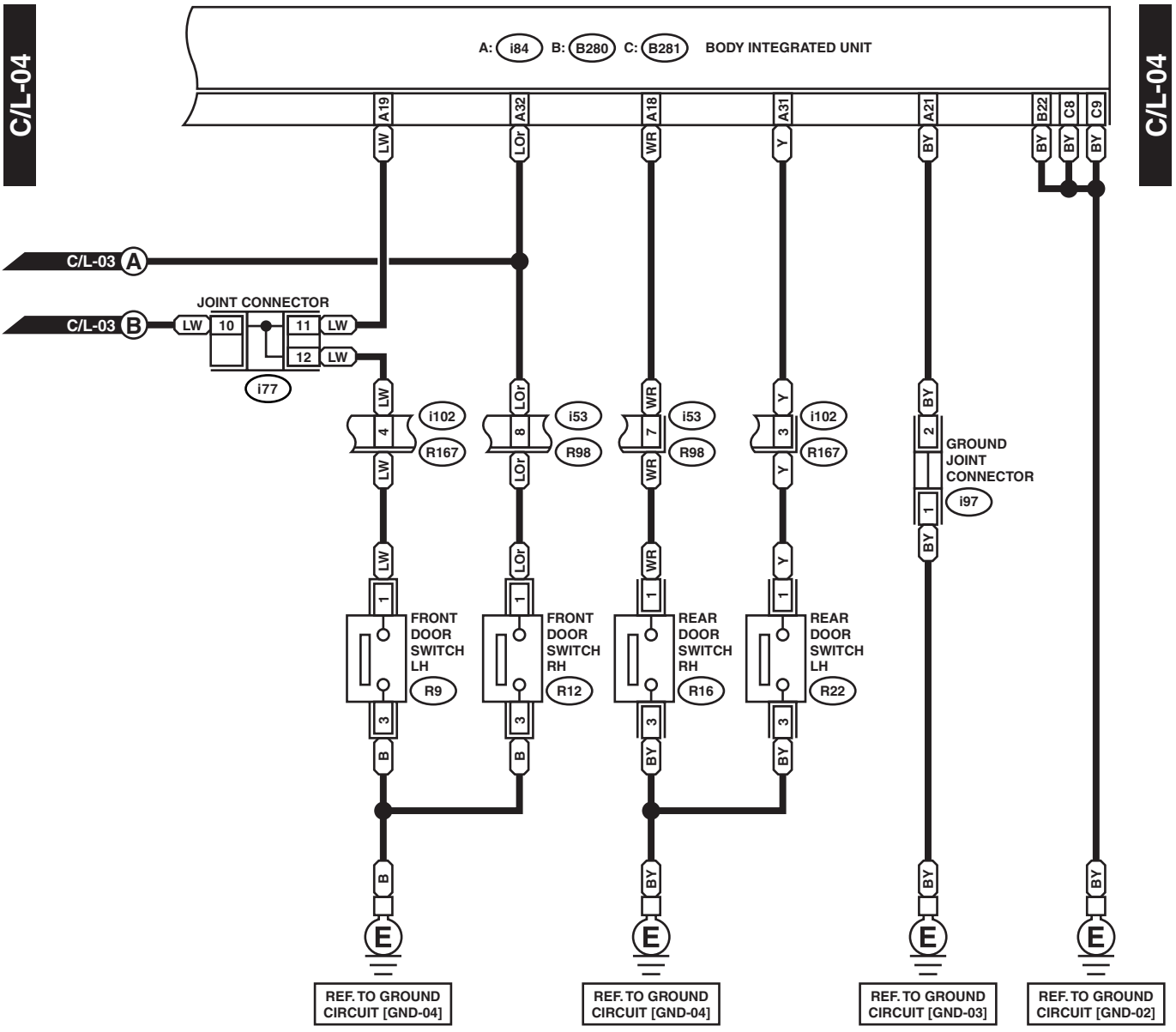
C/L-04
A: i84 B: B280 C: B281 BODY INTEGRATED UNIT
A19
A32
A18
A31
A21
B22
C8
C9
LW
LOr
WR
Y
BY
C/L-03 A
C/L-03 B
JOINT CONNECTOR
LW 10
11 LW
12 LW
i77
i102
R167
i53
R98
GROUND JOINT CONNECTOR
i97
FRONT DOOR SWITCH LH
R9
FRONT DOOR SWITCH RH
R12
REAR DOOR SWITCH RH
R16
REAR DOOR SWITCH LH
R22
B
E
REF. TO GROUND CIRCUIT [GND-04]
REF. TO GROUND CIRCUIT [GND-04]
REF. TO GROUND CIRCUIT [GND-03]
REF. TO GROUND CIRCUIT [GND-02]

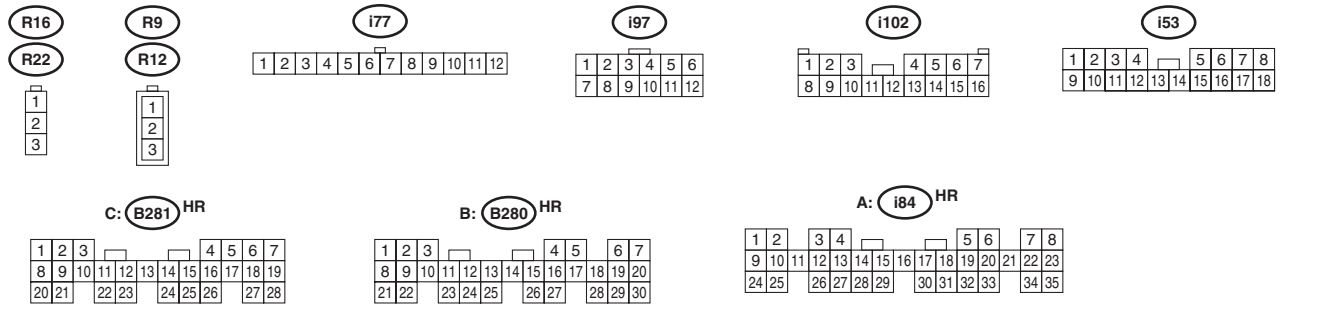
R16
R22
R9
R12
i77
i97
i102
i53
C: B281 HR
B: B280 HR
A: i84 HR

WI-05386

29.Front Wiper and Washer System

A: WIRING DIAGRAM

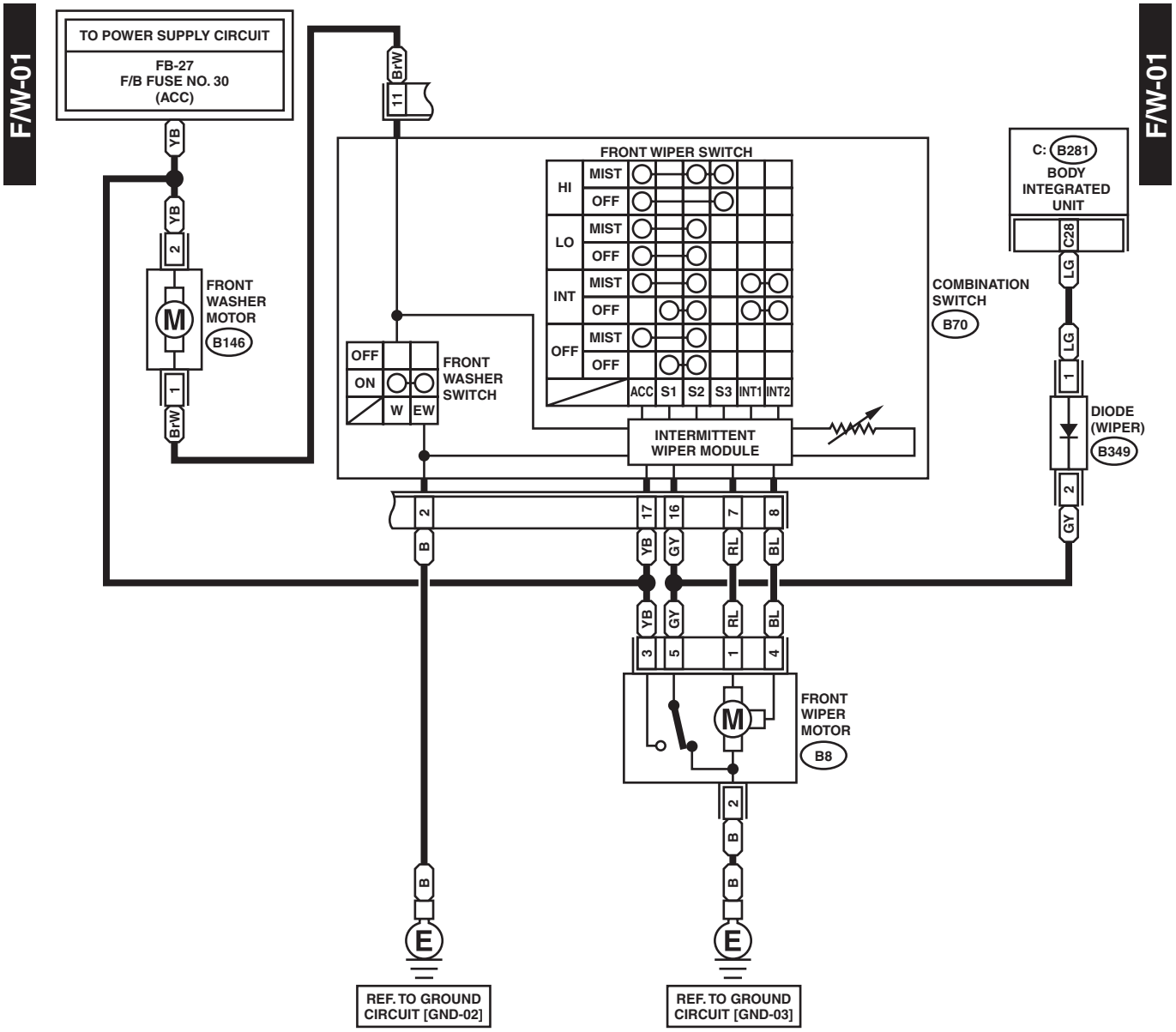

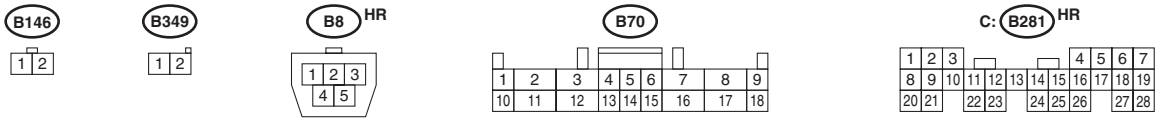

WI-05410

30.Rear Wiper and Washer System

A: WIRING DIAGRAM

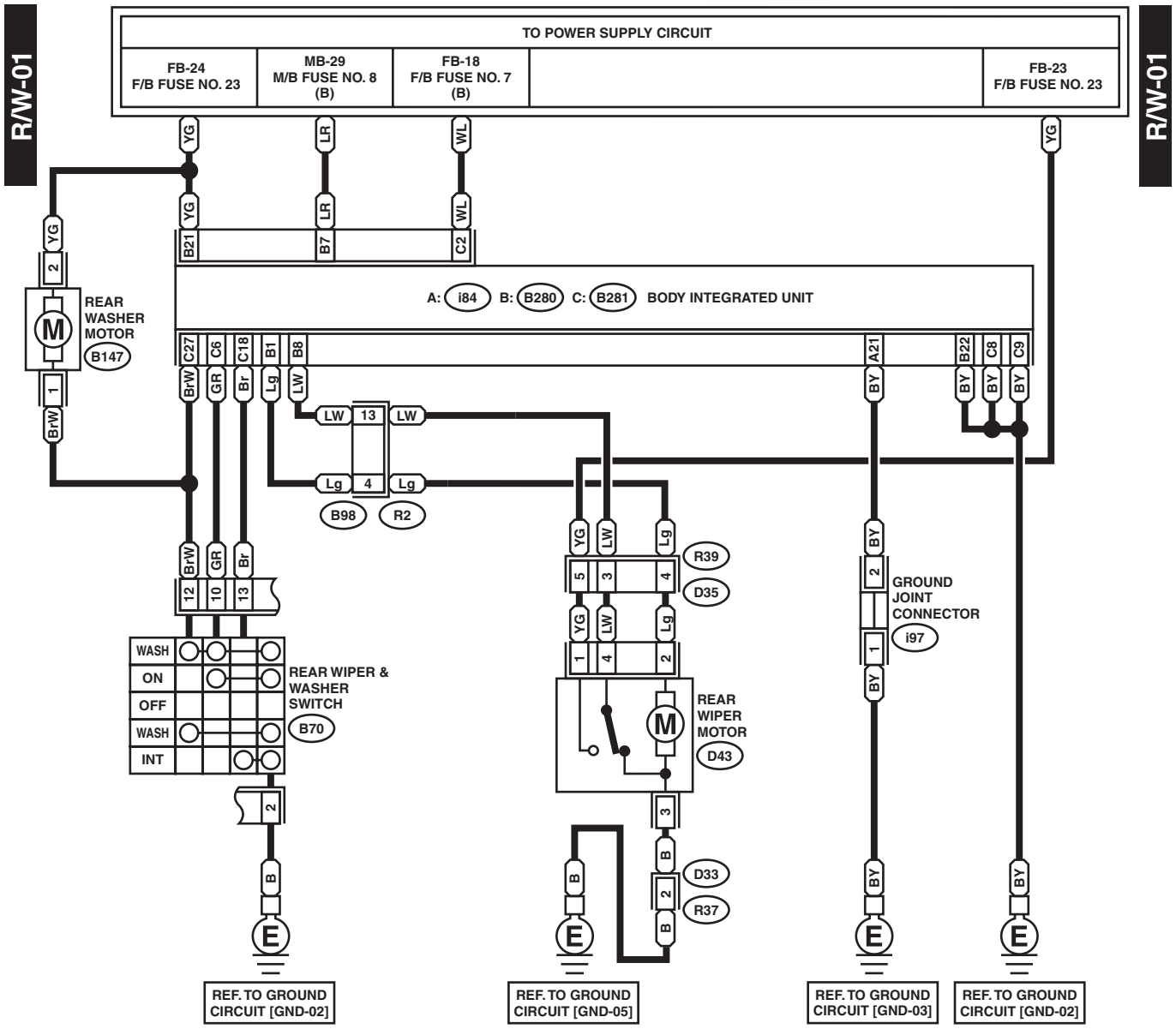

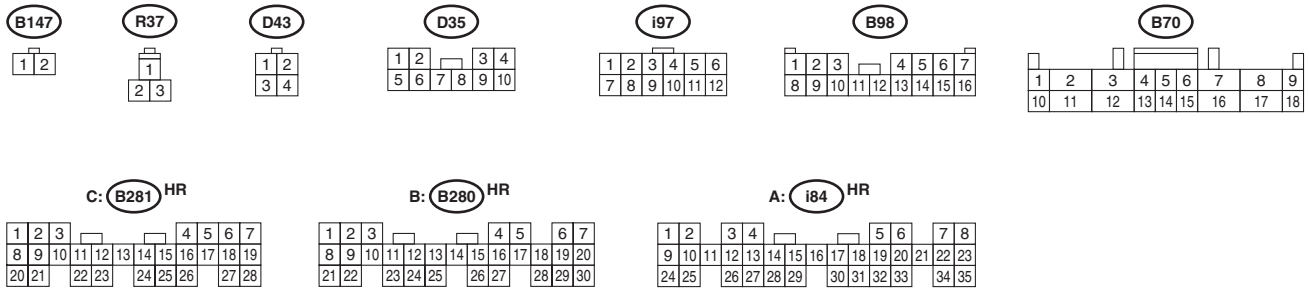

WI-16846

31.Wiper Deicer System

A: WIRING DIAGRAM

W/D-01

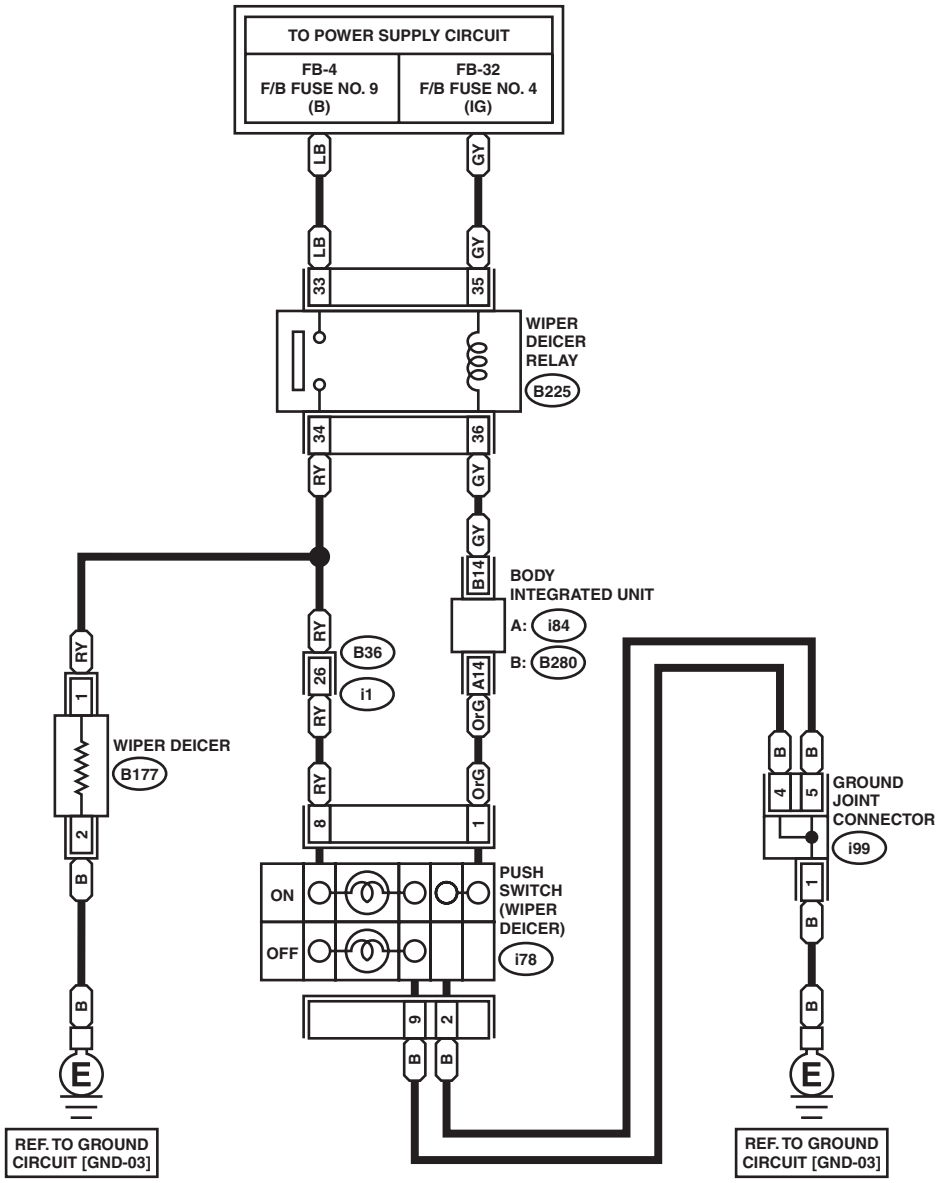

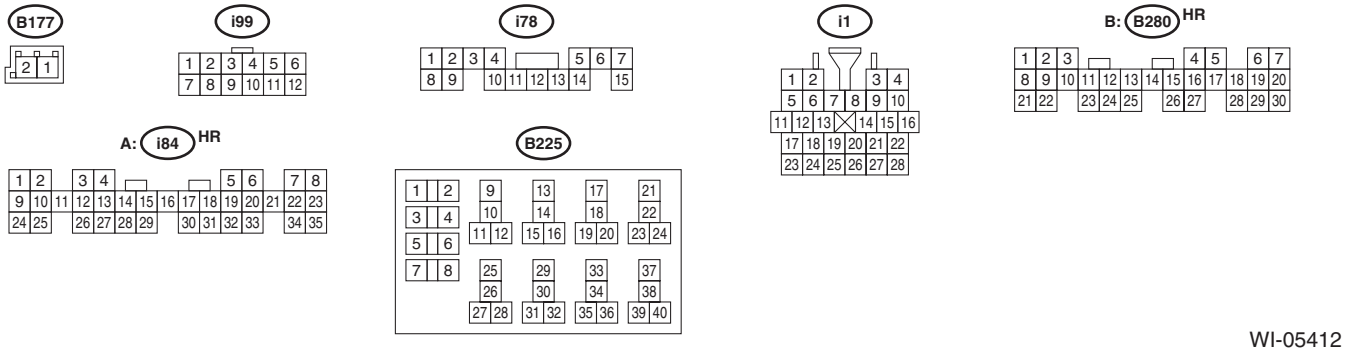

WI-05412

W/D-01

32.Audio System

A: WIRING DIAGRAM

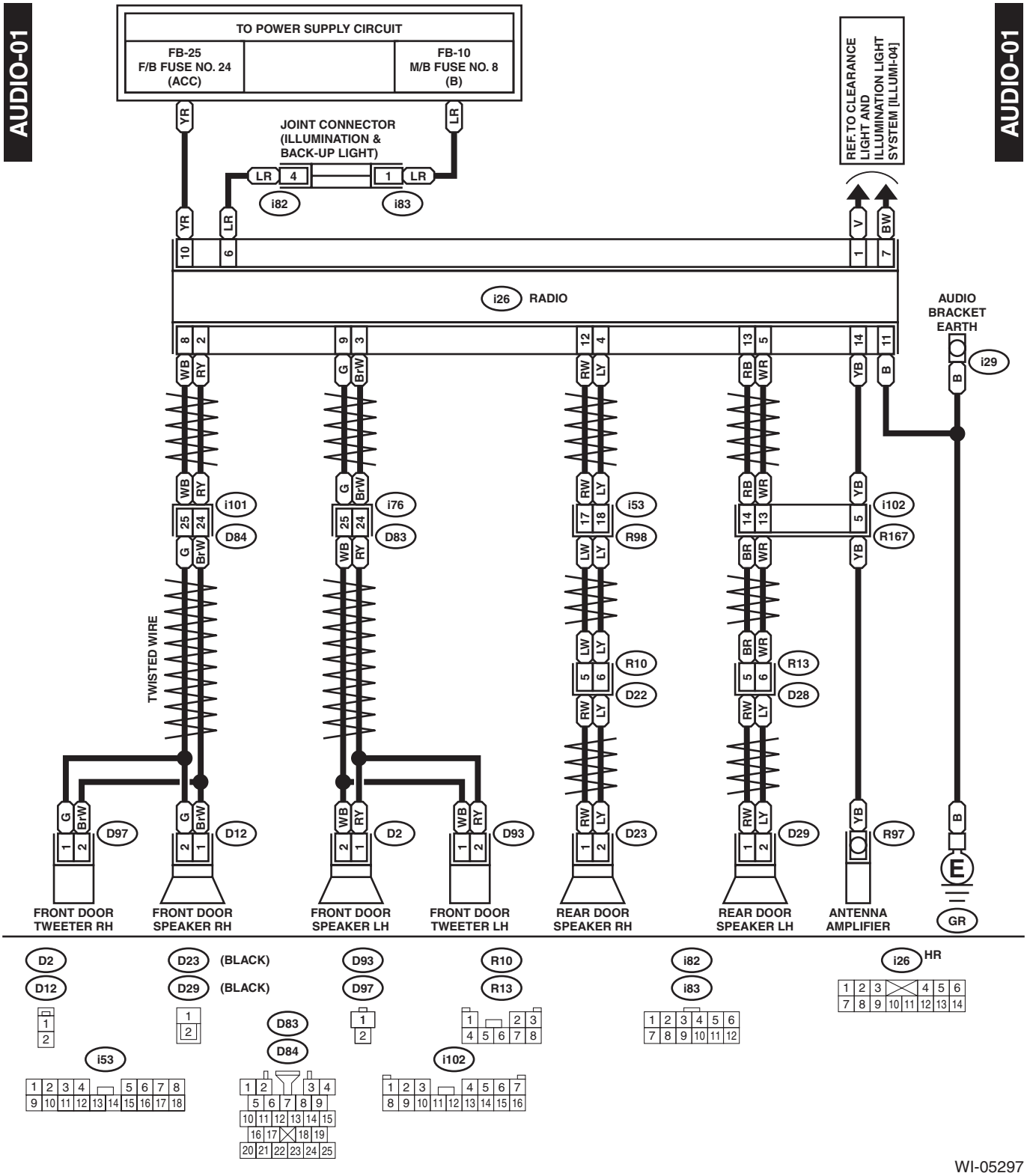

WI-05297

AUDIO-02

AUDIO-02

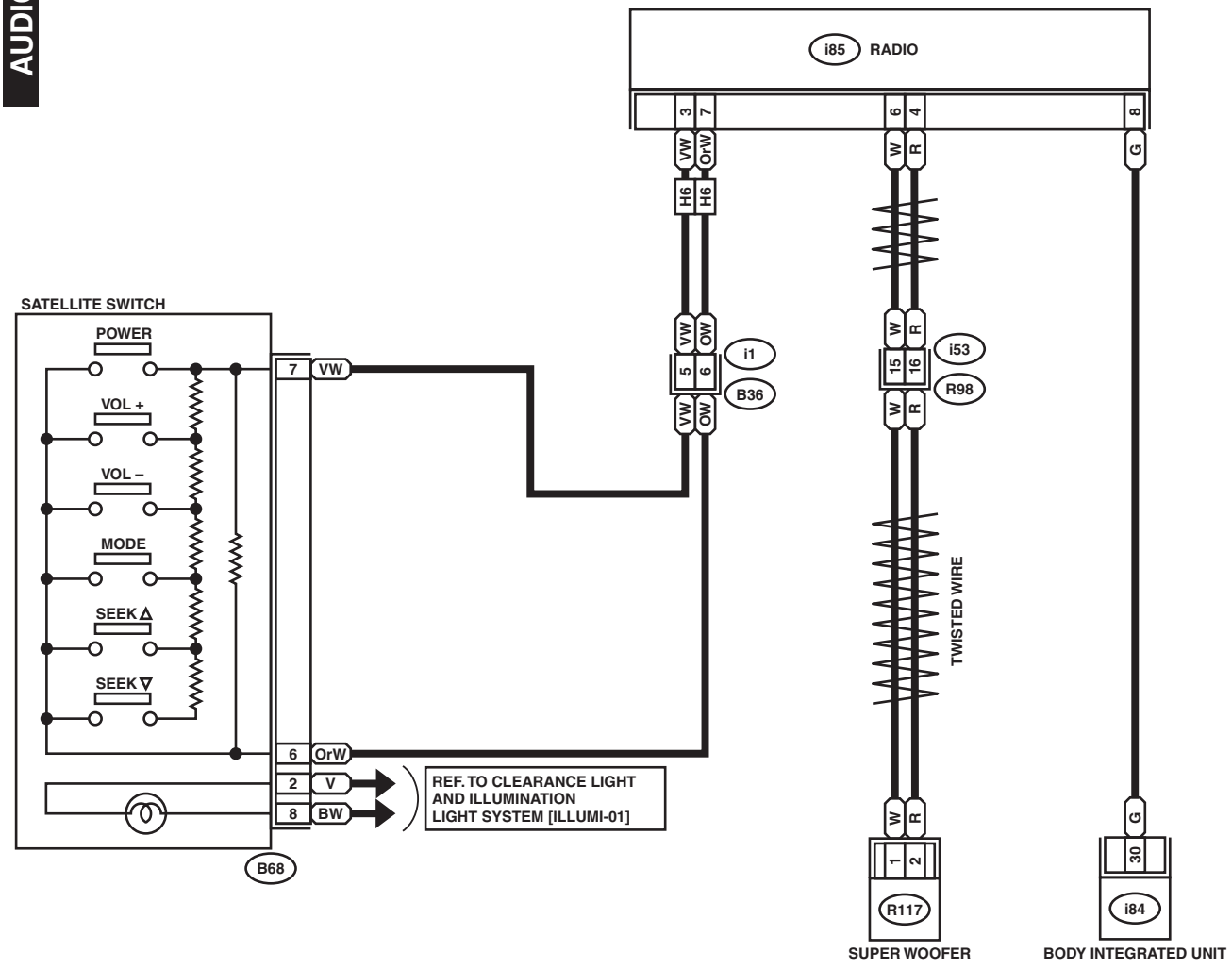

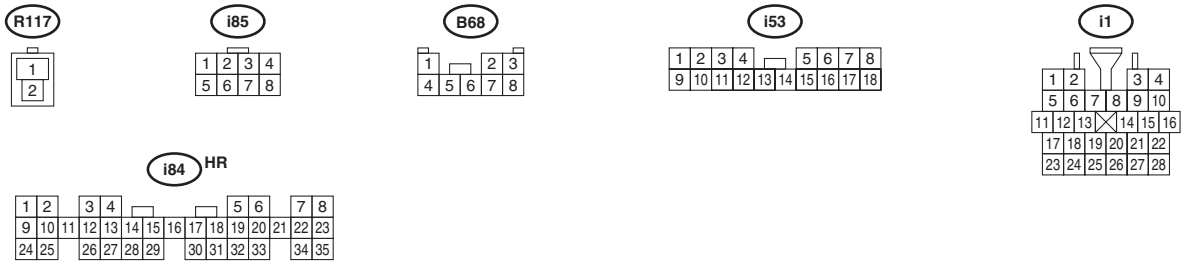

WI-05298

33.Front Accessory Power Supply Socket System

A: WIRING DIAGRAM

FAPS-01

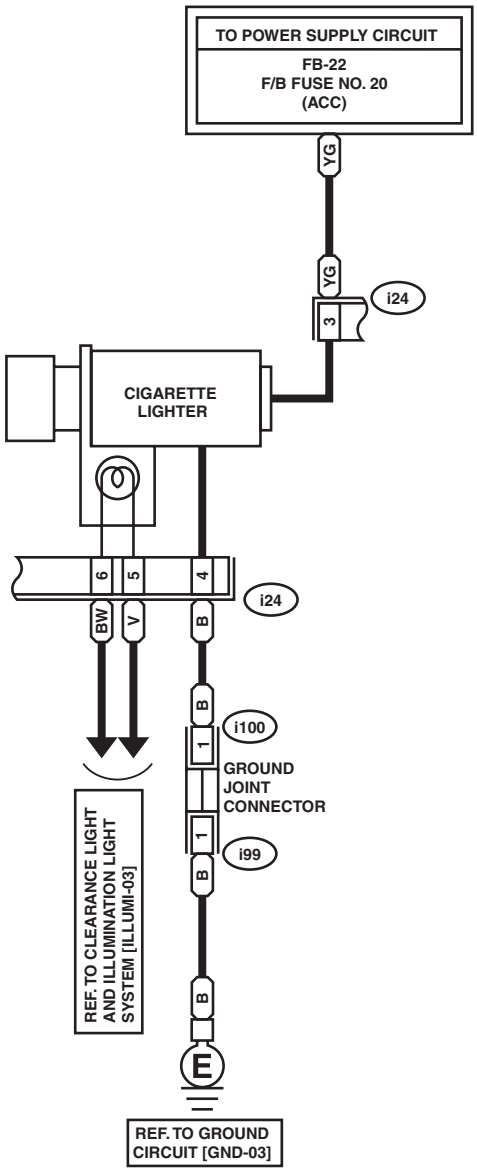

FAPS-01

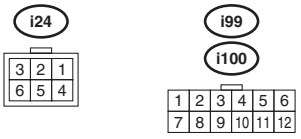

WI-05369

34.Rear Accessory Power Supply System

A: WIRING DIAGRAM

RAPS-01

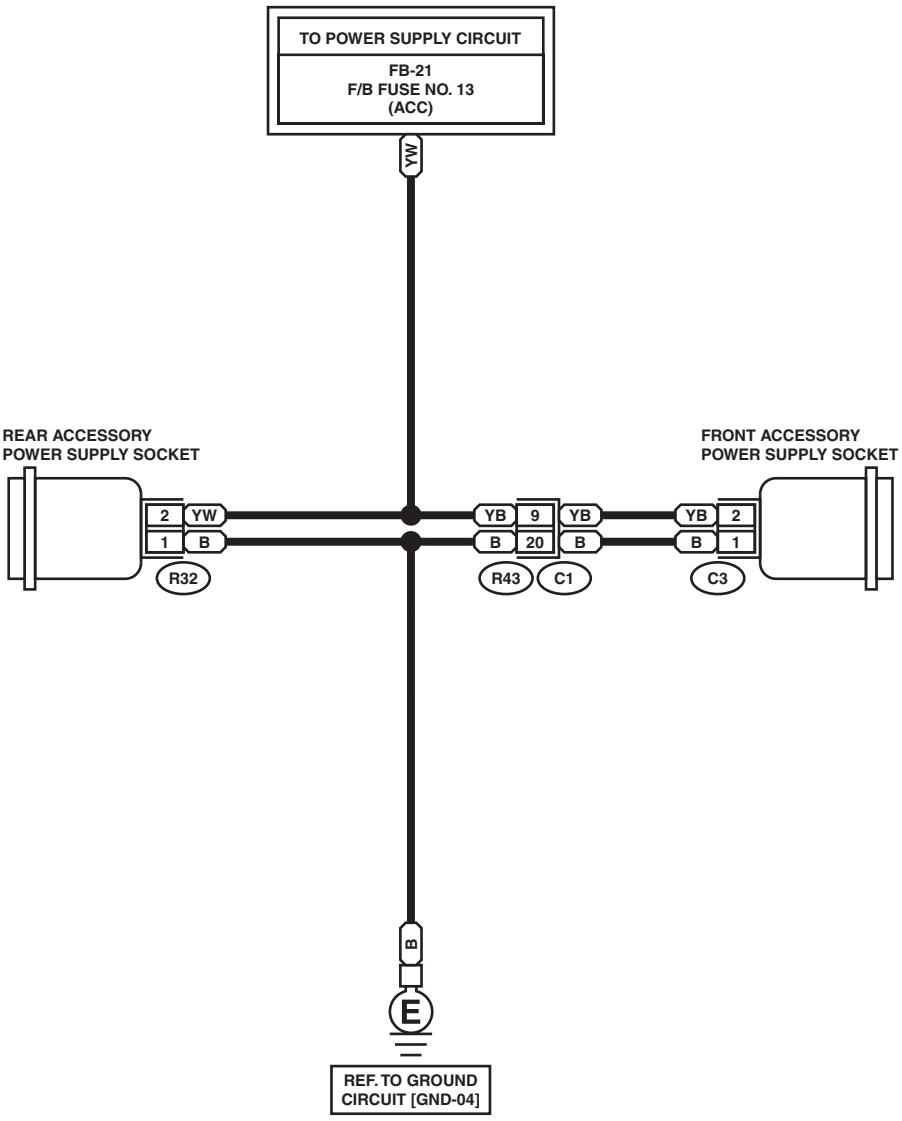

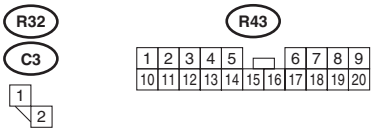

WI-05424

35.Horn System

A: WIRING DIAGRAM

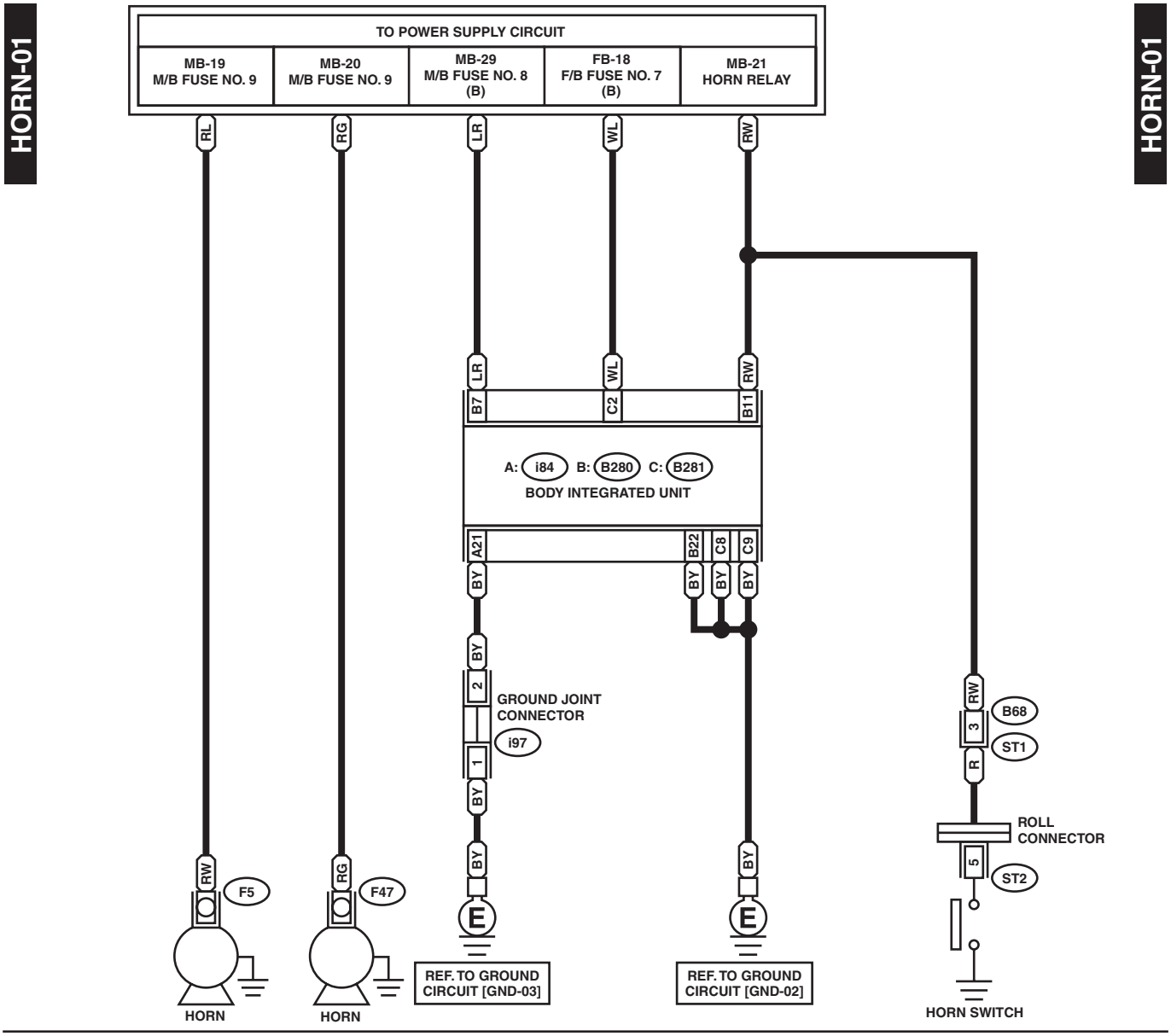

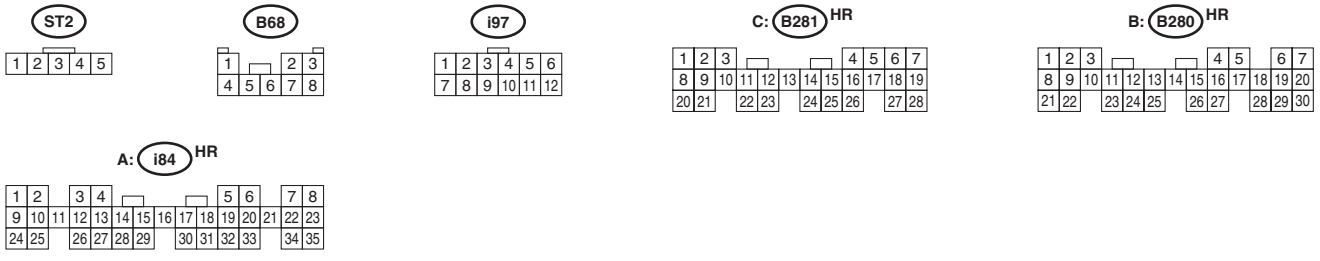

WI-05370

36.Power Window System

A: WIRING DIAGRAM

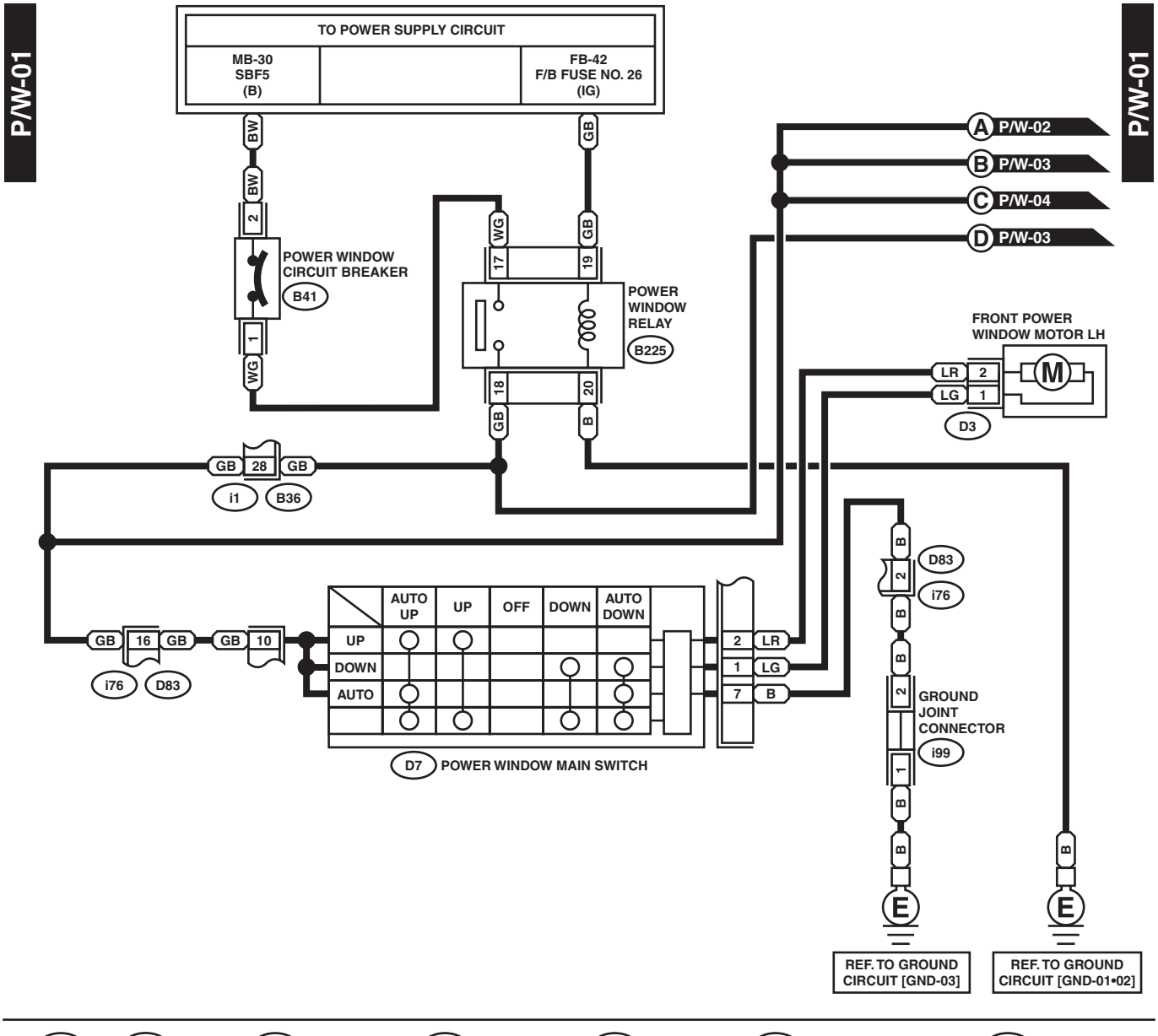

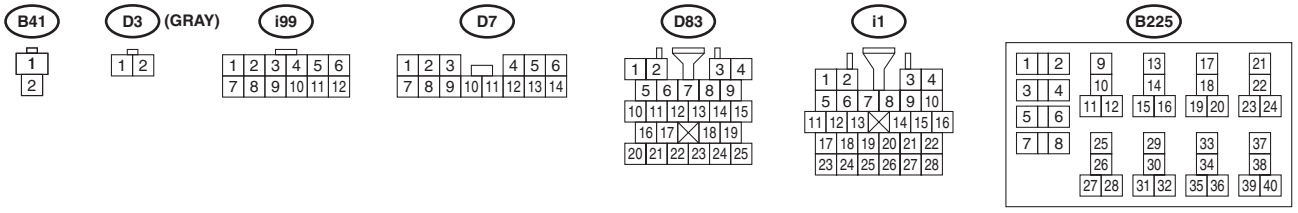

WI-05393

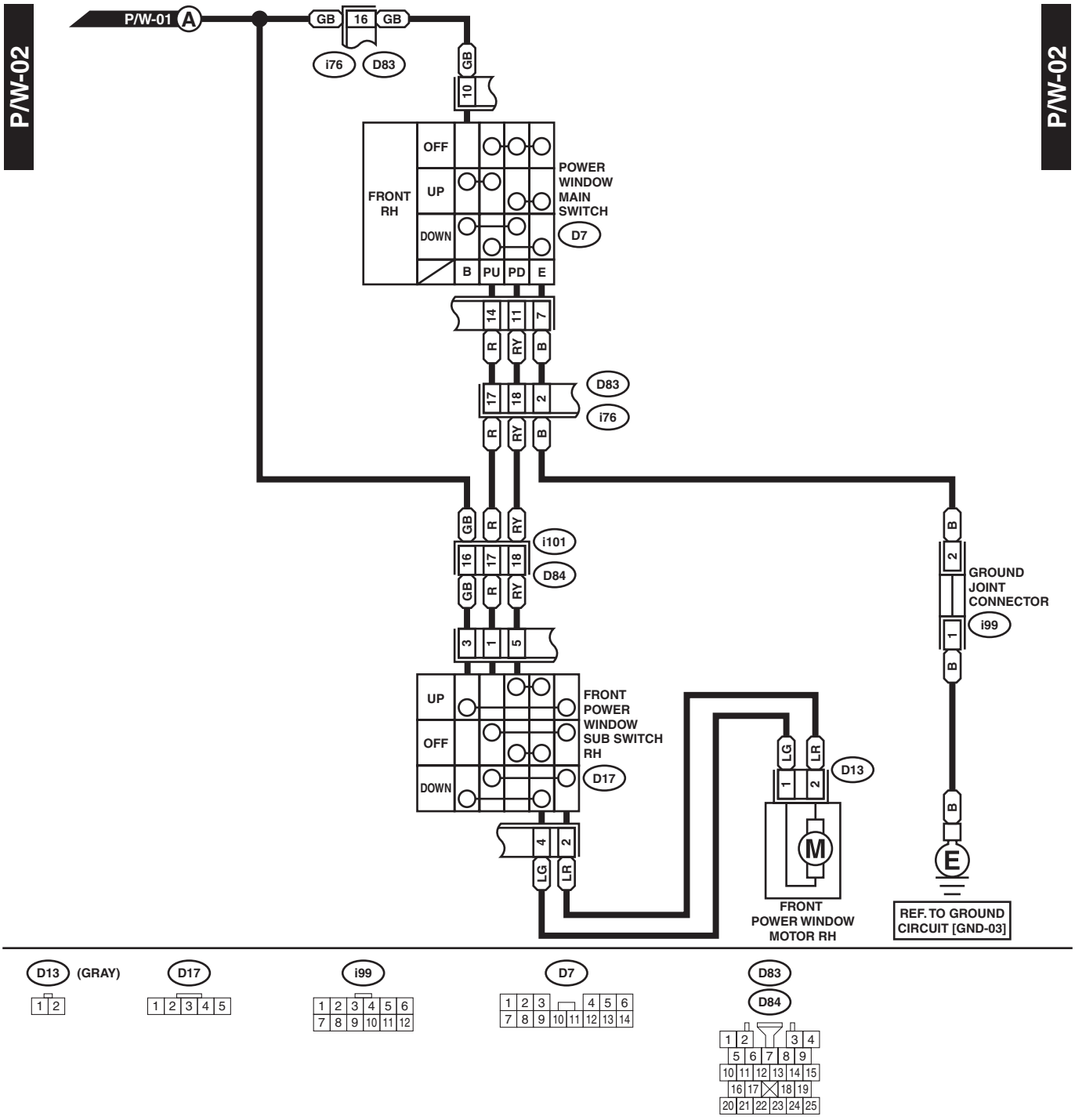
P/W-02
P/W-01 A
GB
16
GB
i76
D83
10
FRONT RH
OFF
UP
DOWN
B
PU
PD
E
POWER WINDOW MAIN SWITCH
D7
14
11
7
R
RY
B
17
18
2
D83
i76
i101
16
17
18
D84
3
1
5
UP
OFF
DOWN
FRONT POWER WINDOW SUB SWITCH RH
D17
4
2
LG
LR
D13
M
FRONT POWER WINDOW MOTOR RH
GROUND JOINT CONNECTOR
i99
REF. TO GROUND CIRCUIT [GND-03]
D13 (GRAY)
D17
i99
D7
D83
D84

WI-05394

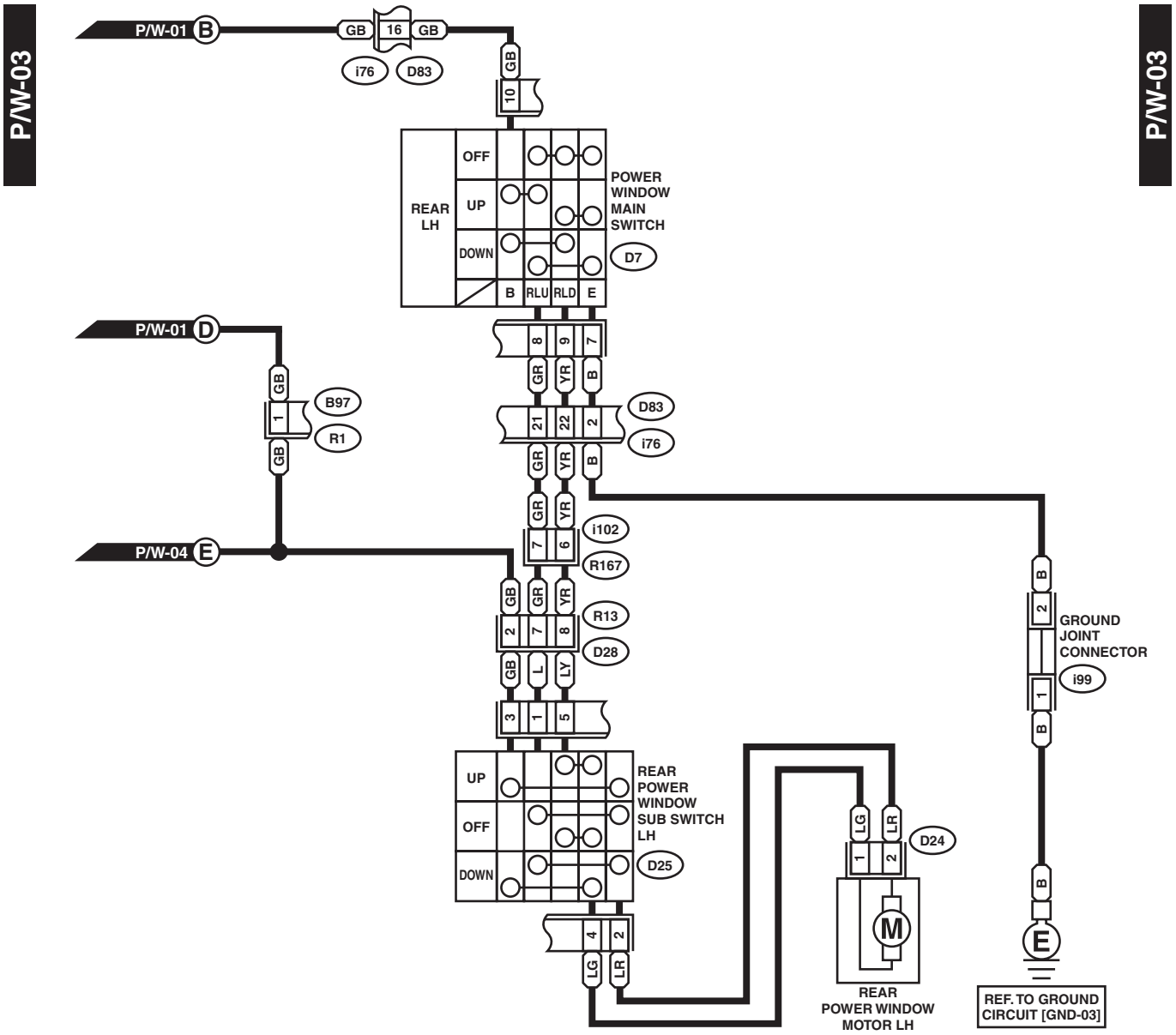
P/W-03
P/W-03
P/W-01 B
GB
16
GB
i76
D83
GB
10
REAR LH
OFF
UP
DOWN
B
RLU
RLD
E
POWER WINDOW MAIN SWITCH
D7
P/W-01 D
GB
1
B97
R1
GB
P/W-04 E
8
9
7
GR
YR
B
21
22
2
D83
i76
GR
YR
B
GR
YR
7
6
i102
R167
GB
GR
YR
2
7
8
R13
D28
GB
L
LY
3
1
5
UP
OFF
DOWN
REAR POWER WINDOW SUB SWITCH LH
D25
4
2
LG
LR
LG
LR
1
2
D24
M
REAR POWER WINDOW MOTOR LH
B
2
GROUND JOINT CONNECTOR
i99
1
B
B
E
REF. TO GROUND CIRCUIT [GND-03]

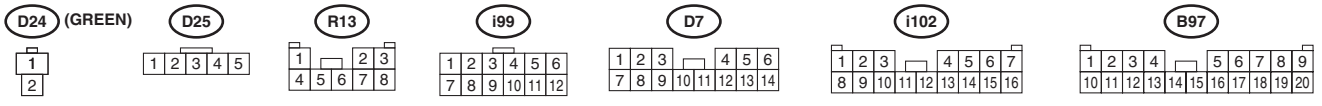
D24 (GREEN)
1
2
D25
1 2 3 4 5
R13
1 2 3
4 5 6 7 8
i99
1 2 3 4 5 6
7 8 9 10 11 12
D7
1 2 3 4 5 6
7 8 9 10 11 12 13 14
i102
1 2 3 4 5 6 7
8 9 10 11 12 13 14 15 16
B97
1 2 3 4 5 6 7 8 9
10 11 12 13 14 15 16 17 18 19 20

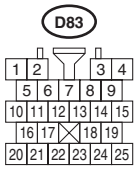
D83
1 2 3 4
5 6 7 8 9
10 11 12 13 14 15
16 17 18 19
20 21 22 23 24 25

WI-05395

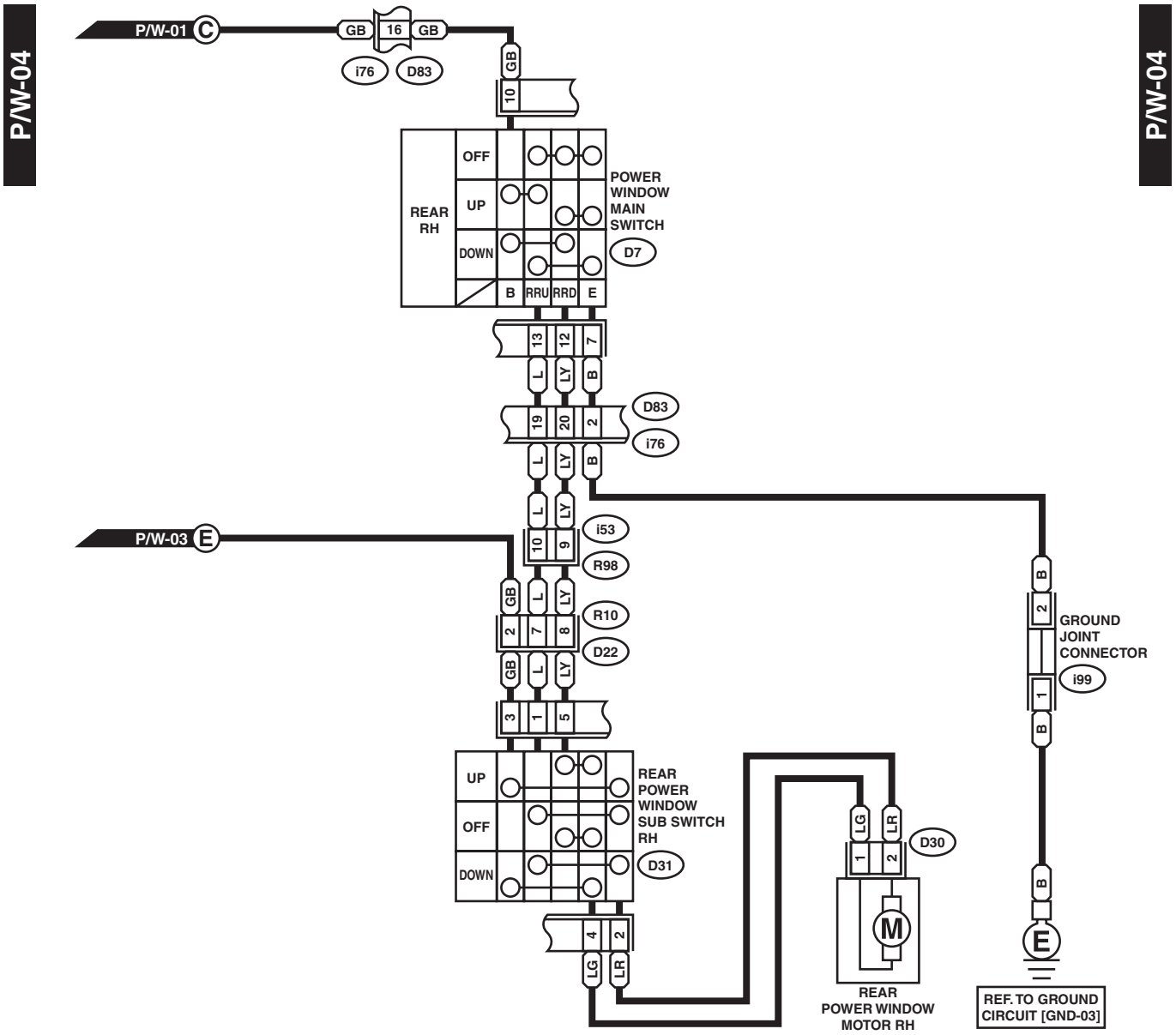
P/W-04
P/W-04
P/W-01 C
GB
16
GB
i76
D83
GB
10
REAR RH
OFF
UP
DOWN
B
RRU
RRD
E
POWER WINDOW MAIN SWITCH
D7
13
12
7
L
LY
B
D83
19
20
2
i76
L
LY
B
L
LY
P/W-03 E
10
9
i53
R98
GB
L
LY
2
7
8
R10
D22
GB
L
LY
3
1
5
UP
OFF
DOWN
REAR POWER WINDOW SUB SWITCH RH
D31
4
2
LG
LR
LG
LR
1
2
D30
M
REAR POWER WINDOW MOTOR RH
B
2
GROUND JOINT CONNECTOR
i99
1
B
B
E
REF. TO GROUND CIRCUIT [GND-03]

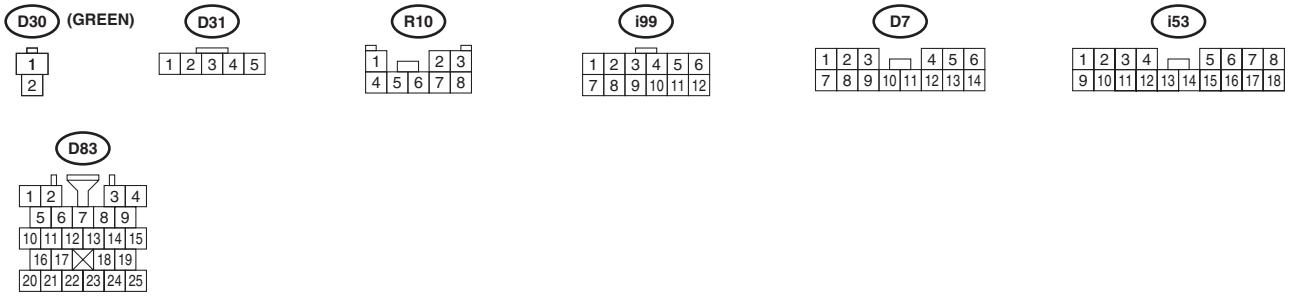
D30 (GREEN)
1
2
D31
1 2 3 4 5
R10
1 2 3
4 5 6 7 8
i99
1 2 3 4 5 6
7 8 9 10 11 12
D7
1 2 3 4 5 6
7 8 9 10 11 12 13 14
i53
1 2 3 4 5 6 7 8
9 10 11 12 13 14 15 16 17 18
D83
1 2 3 4
5 6 7 8 9
10 11 12 13 14 15
16 17 18 19
20 21 22 23 24 25

WI-05396

37.Rear Defogger System

A: WIRING DIAGRAM

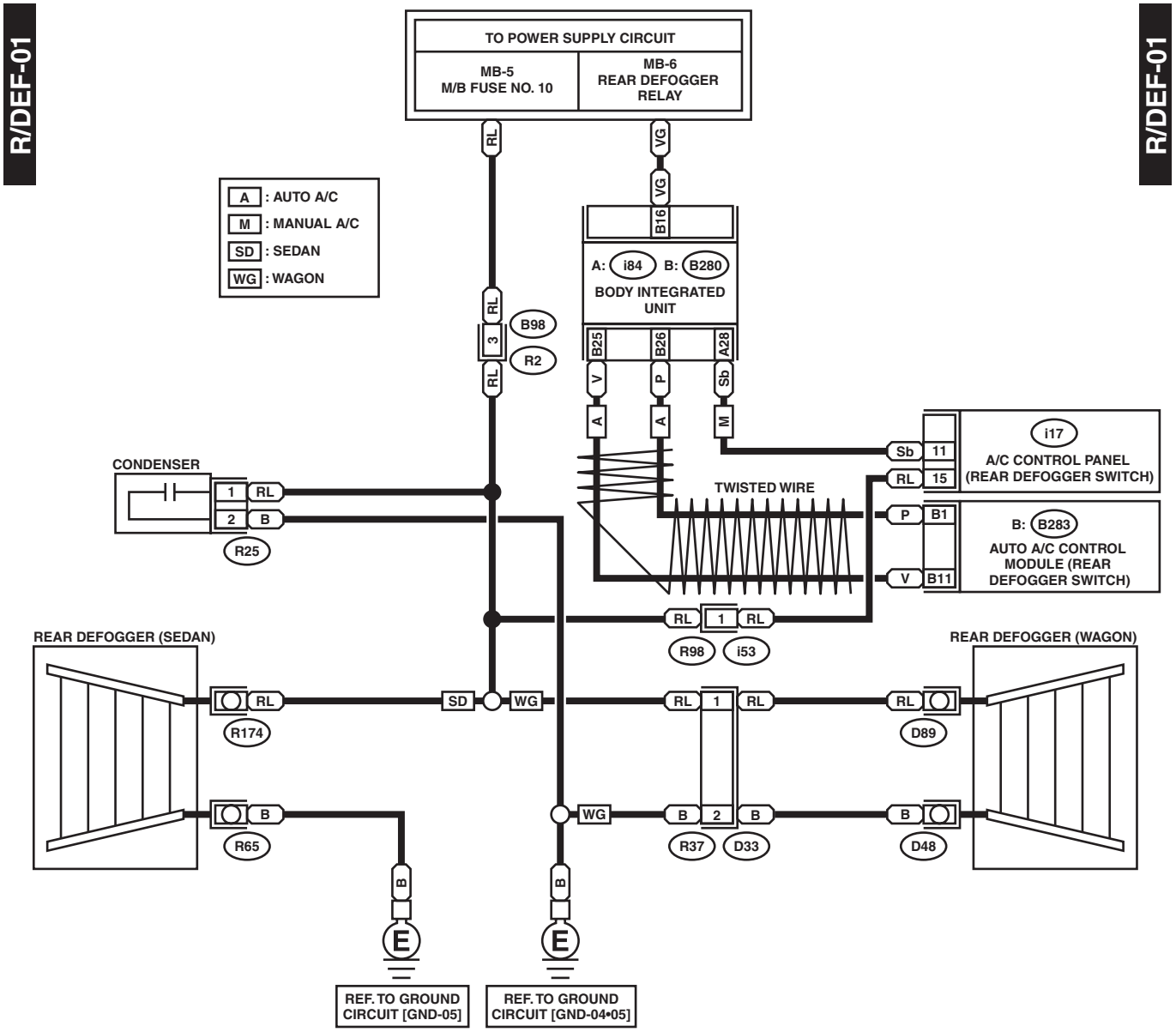

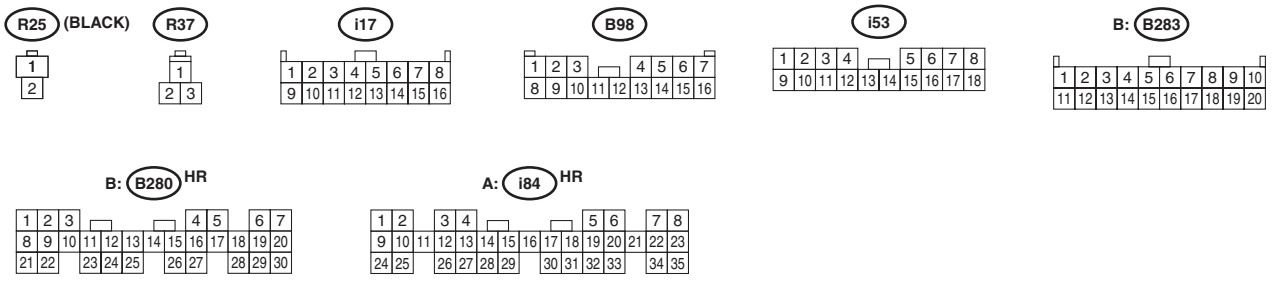

WI-05399

38.Remote Control Mirror System

A: WIRING DIAGRAM

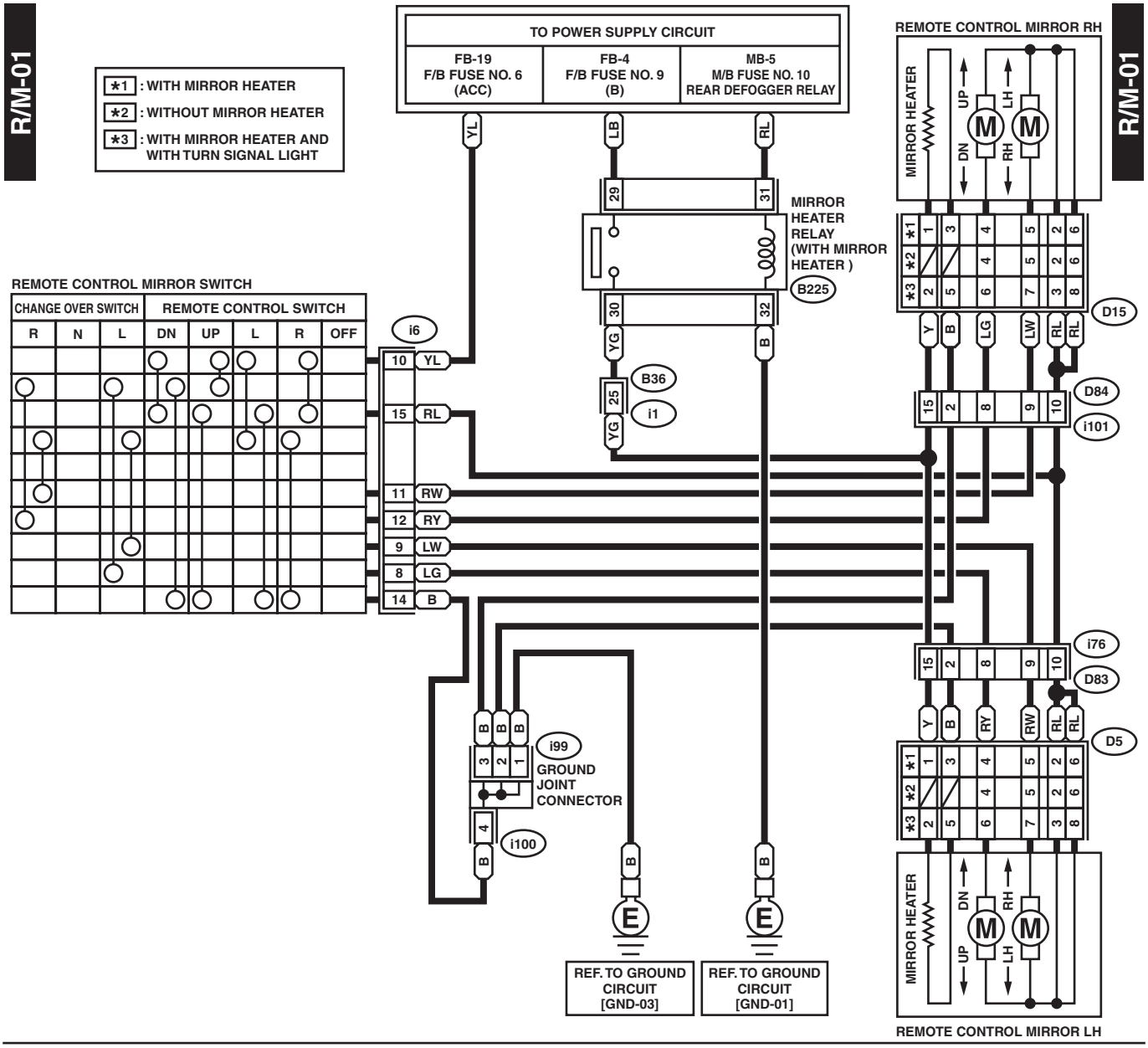

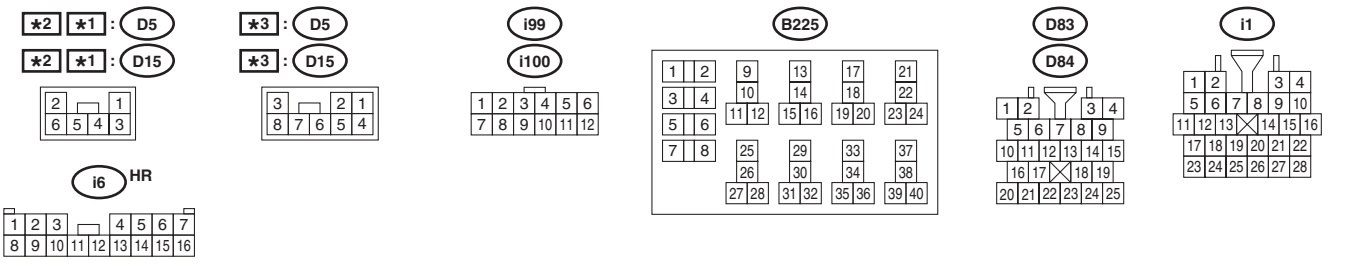

WI-05400

39.Combination Meter System

A: WIRING DIAGRAM

METER-01

METER-01

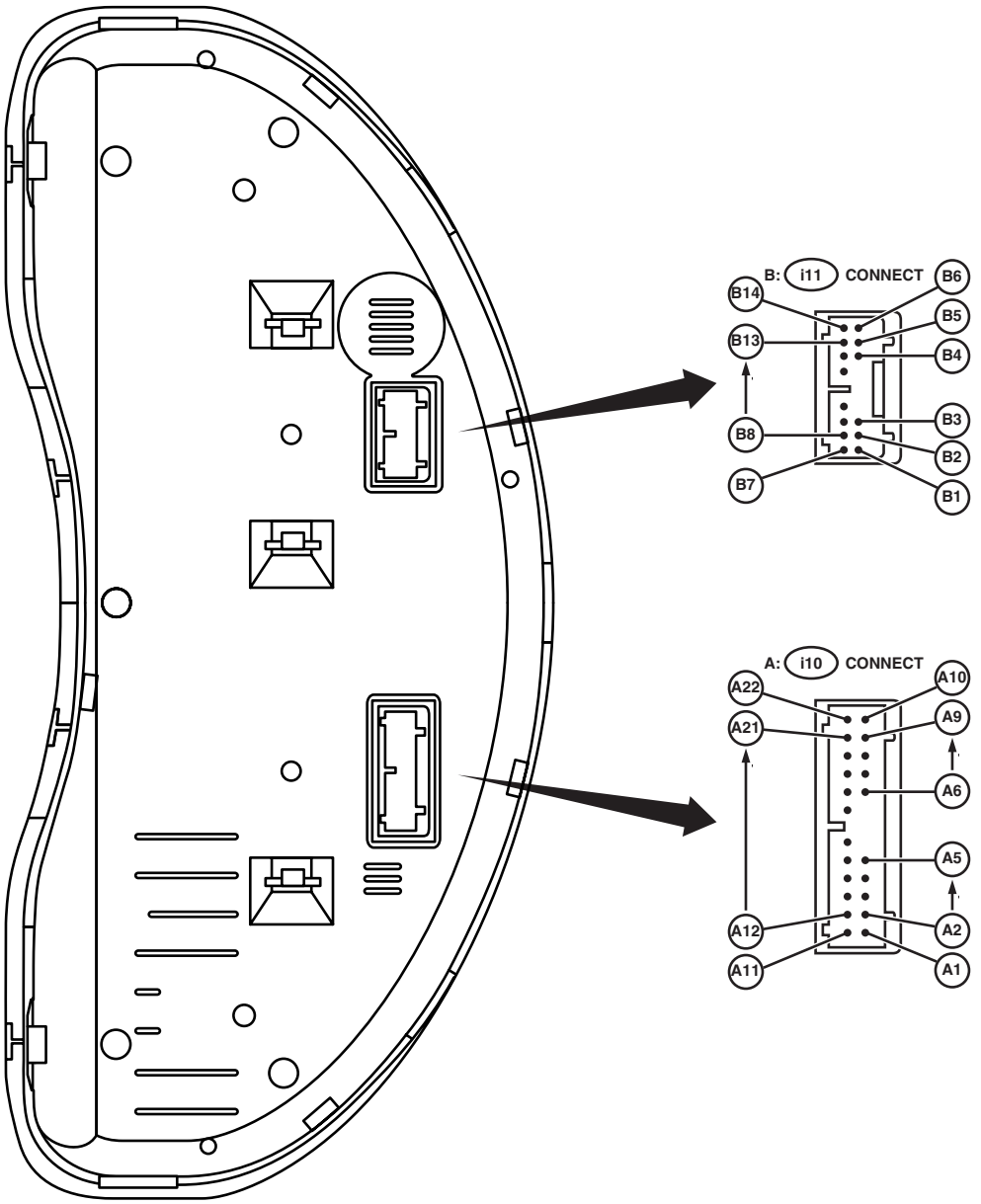

WI-05303

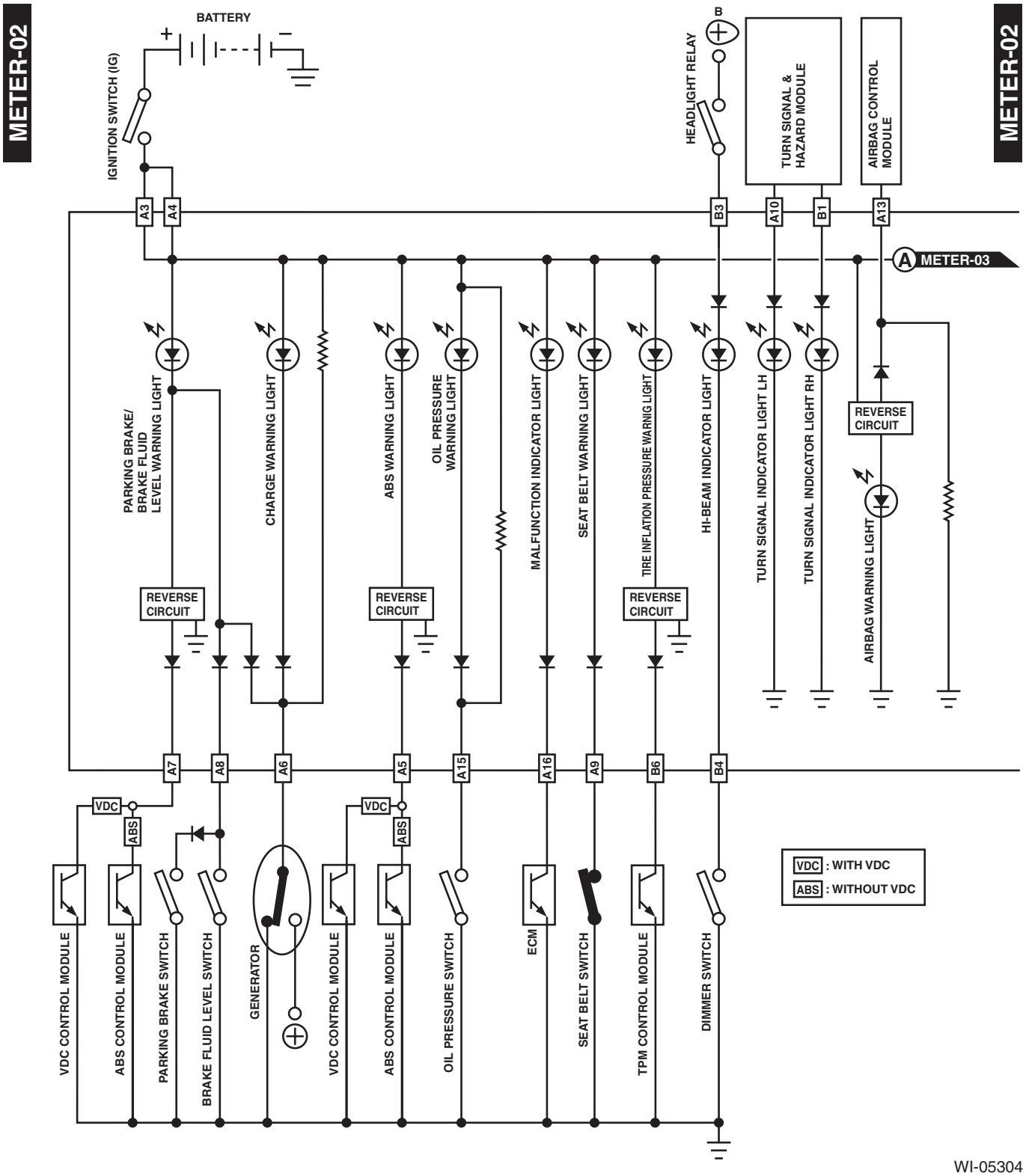
METER-02
METER-02
BATTERY
IGNITION SWITCH (IG)
HEADLIGHT RELAY
B
TURN SIGNAL & HAZARD MODULE
AIRBAG CONTROL MODULE
A3
A4
B3
A10
B1
A13
A METER-03
PARKING BRAKE/ BRAKE FLUID LEVEL WARNING LIGHT
CHARGE WARNING LIGHT
ABS WARNING LIGHT
OIL PRESSURE WARNING LIGHT
MALFUNCTION INDICATOR LIGHT
SEAT BELT WARNING LIGHT
TIRE INFLATION PRESSURE WARNIG LIGHT
HI-BEAM INDICATOR LIGHT
TURN SIGNAL INDICATOR LIGHT LH
TURN SIGNAL INDICATOR LIGHT RH
AIRBAG WARNING LIGHT
REVERSE CIRCUIT
REVERSE CIRCUIT
REVERSE CIRCUIT
REVERSE CIRCUIT
REVERSE CIRCUIT
A7
A8
A6
A5
A15
A16
A9
B6
B4
VDC
ABS
VDC
ABS
VDC : WITH VDC
ABS : WITHOUT VDC
VDC CONTROL MODULE
ABS CONTROL MODULE
PARKING BRAKE SWITCH
BRAKE FLUID LEVEL SWITCH
GENERATOR
VDC CONTROL MODULE
ABS CONTROL MODULE
OIL PRESSURE SWITCH
ECM
SEAT BELT SWITCH
TPM CONTROL MODULE
DIMMER SWITCH

WI-05304

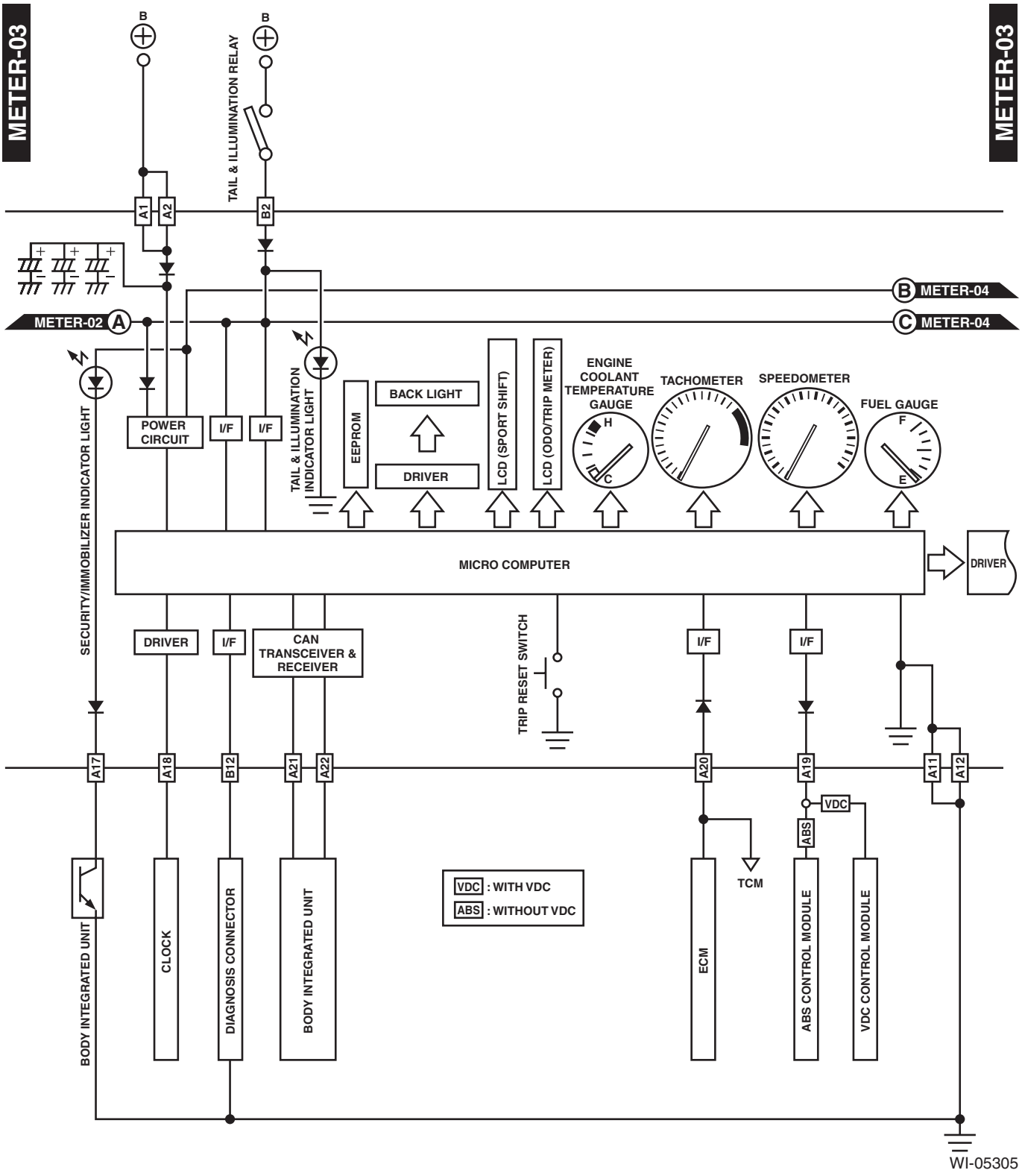
METER-03
METER-03
B
B
TAIL & ILLUMINATION RELAY
A1
A2
B2
METER-02 A
B METER-04
C METER-04
SECURITY/IMMOBILIZER INDICATOR LIGHT
POWER CIRCUIT
I/F
I/F
TAIL & ILLUMINATION INDICATOR LIGHT
EEPROM
BACK LIGHT
DRIVER
LCD (SPORT SHIFT)
LCD (ODO/TRIP METER)
ENGINE COOLANT TEMPERATURE GAUGE
H
C
TACHOMETER
SPEEDOMETER
FUEL GAUGE
F
E
MICRO COMPUTER
DRIVER
DRIVER
I/F
CAN TRANSCEIVER & RECEIVER
TRIP RESET SWITCH
I/F
I/F
A17
A18
B12
A21
A22
A20
A19
A11
A12
VDC
ABS
TCM
VDC : WITH VDC
ABS : WITHOUT VDC
BODY INTEGRATED UNIT
CLOCK
DIAGNOSIS CONNECTOR
BODY INTEGRATED UNIT
ECM
ABS CONTROL MODULE
VDC CONTROL MODULE
WI-05305

METER-04

METER-04

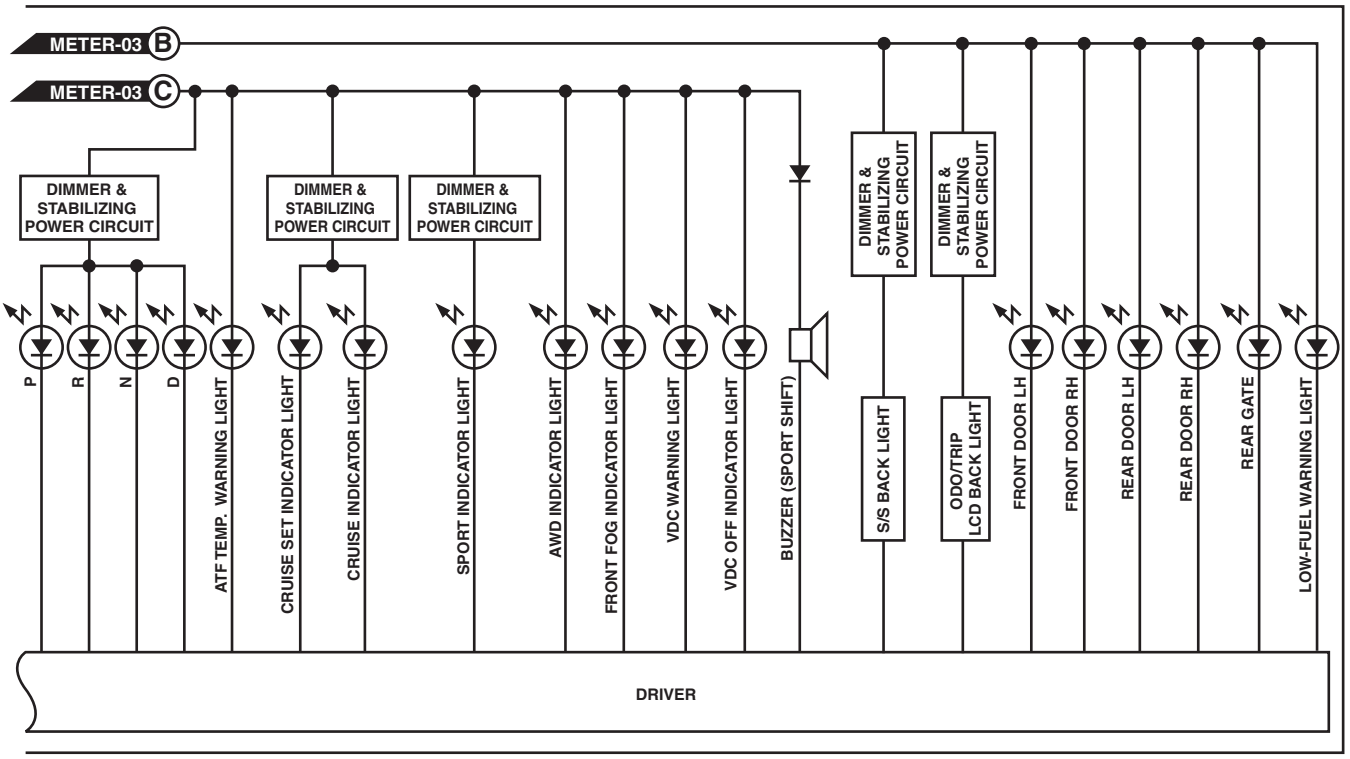

WI-05306

40.Clock System

A: WIRING DIAGRAM

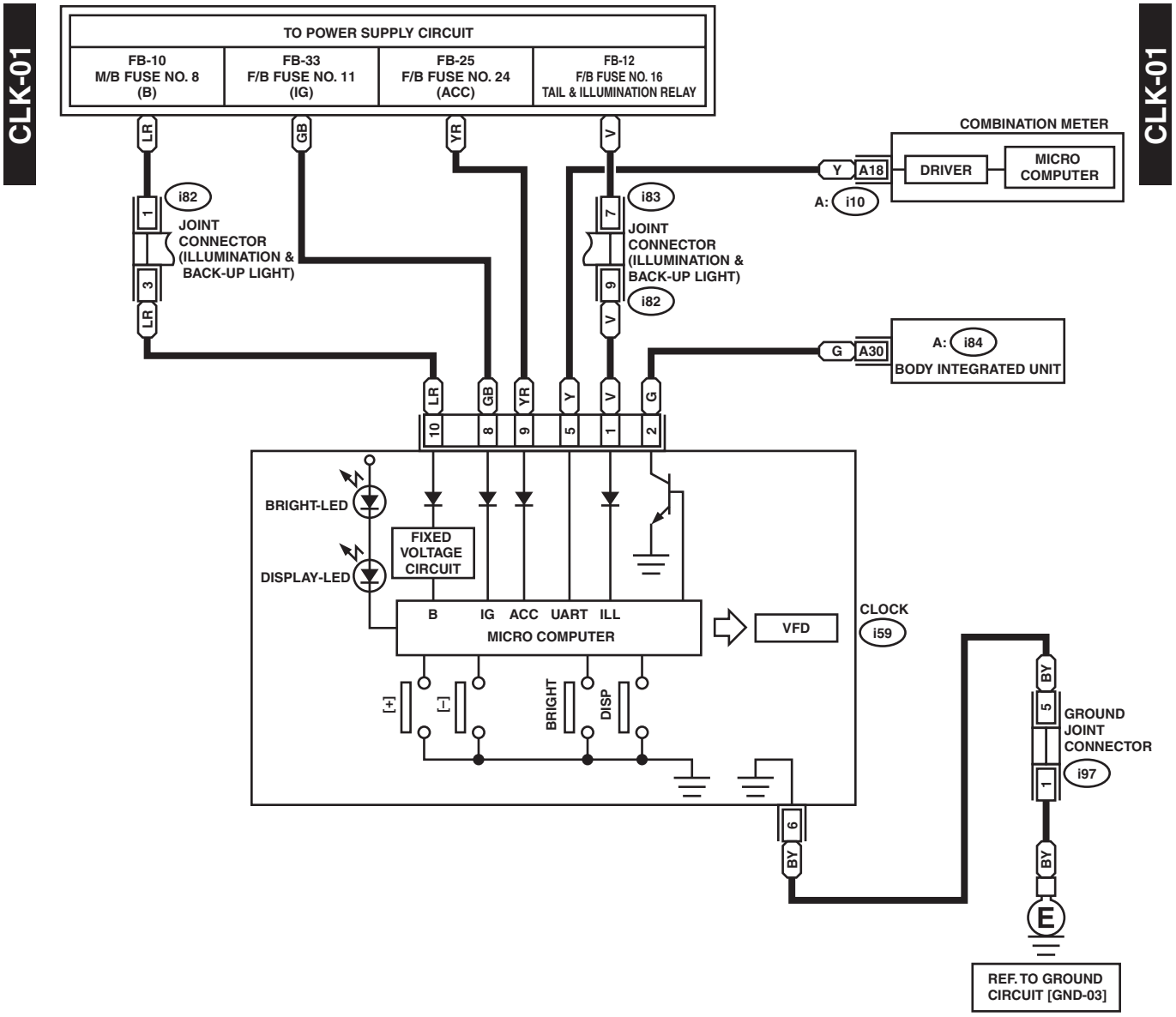

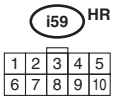

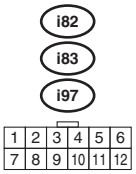

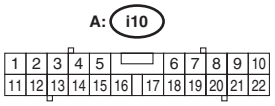

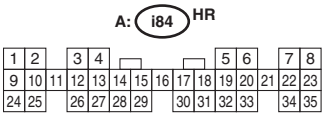

WI-05302

41.Fuel Gauge System

A: WIRING DIAGRAM

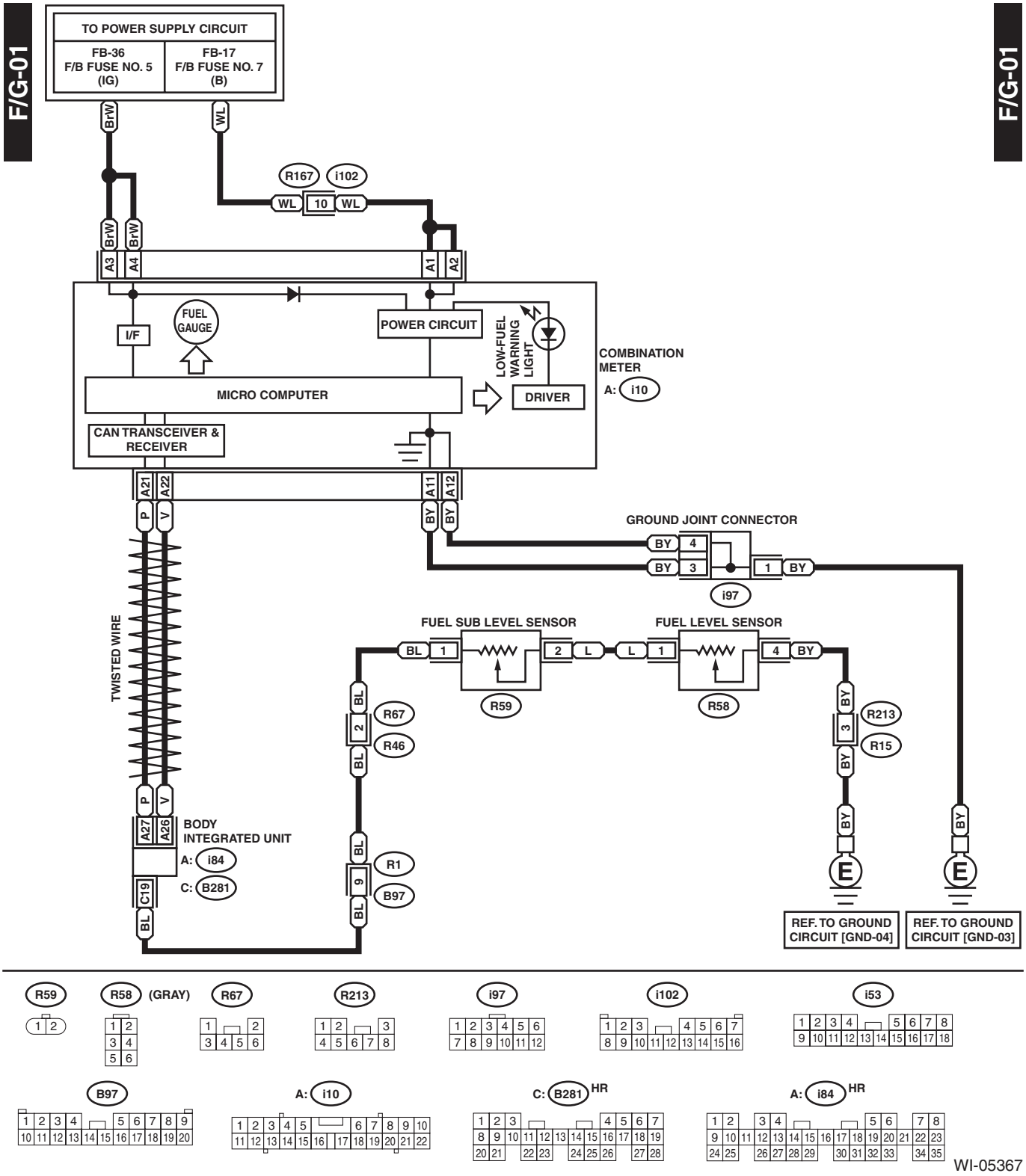

42.Coolant Temperature System

A: WIRING DIAGRAM

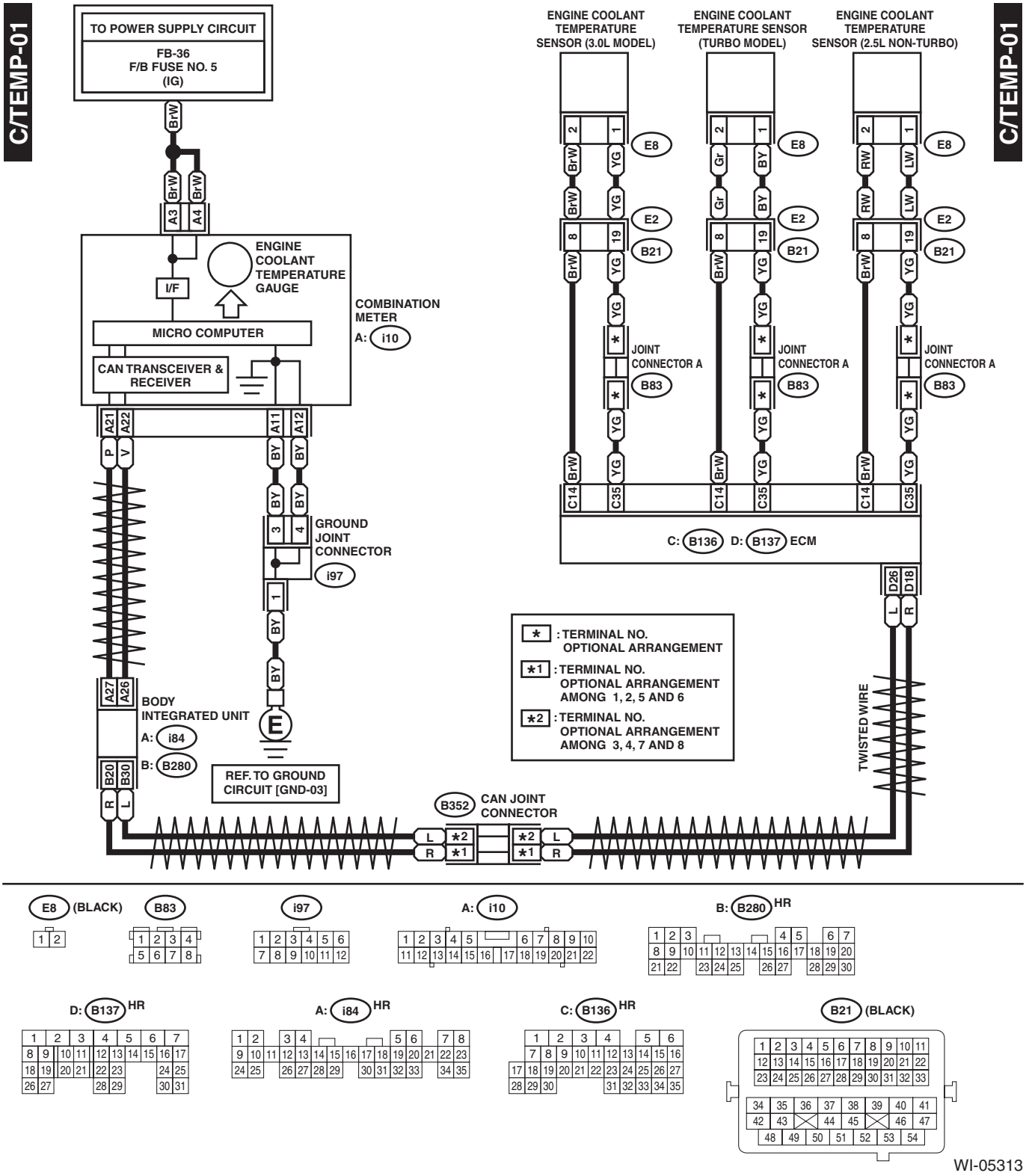

WI-05313

43.Oil Pressure Warning System

A: WIRING DIAGRAM

OIL/P-01

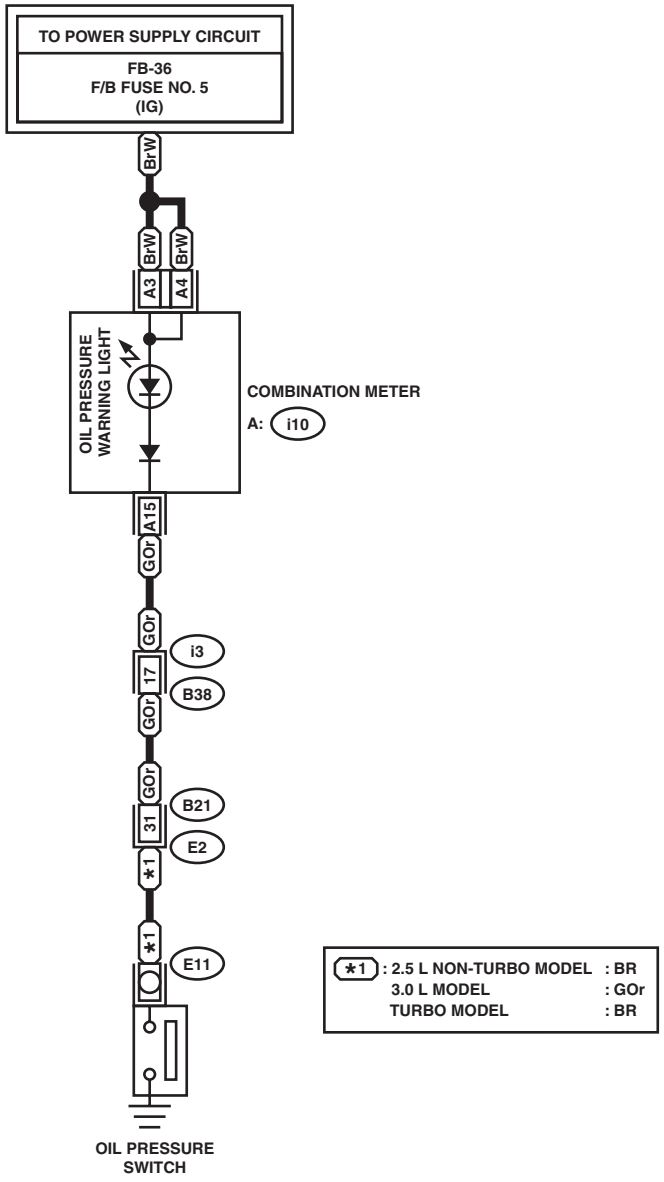

OIL/P-01

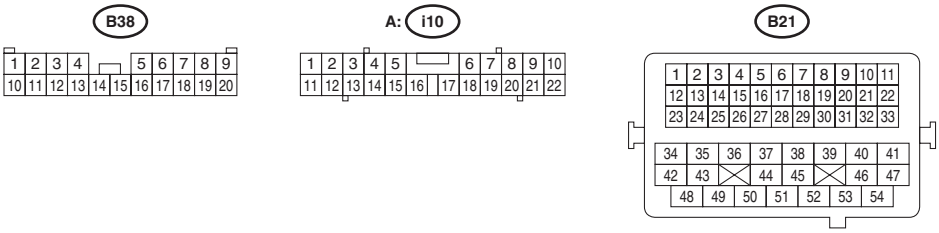

WI-05390

44.Parking Brake / Brake Fluid Level Warning System

A: WIRING DIAGRAM

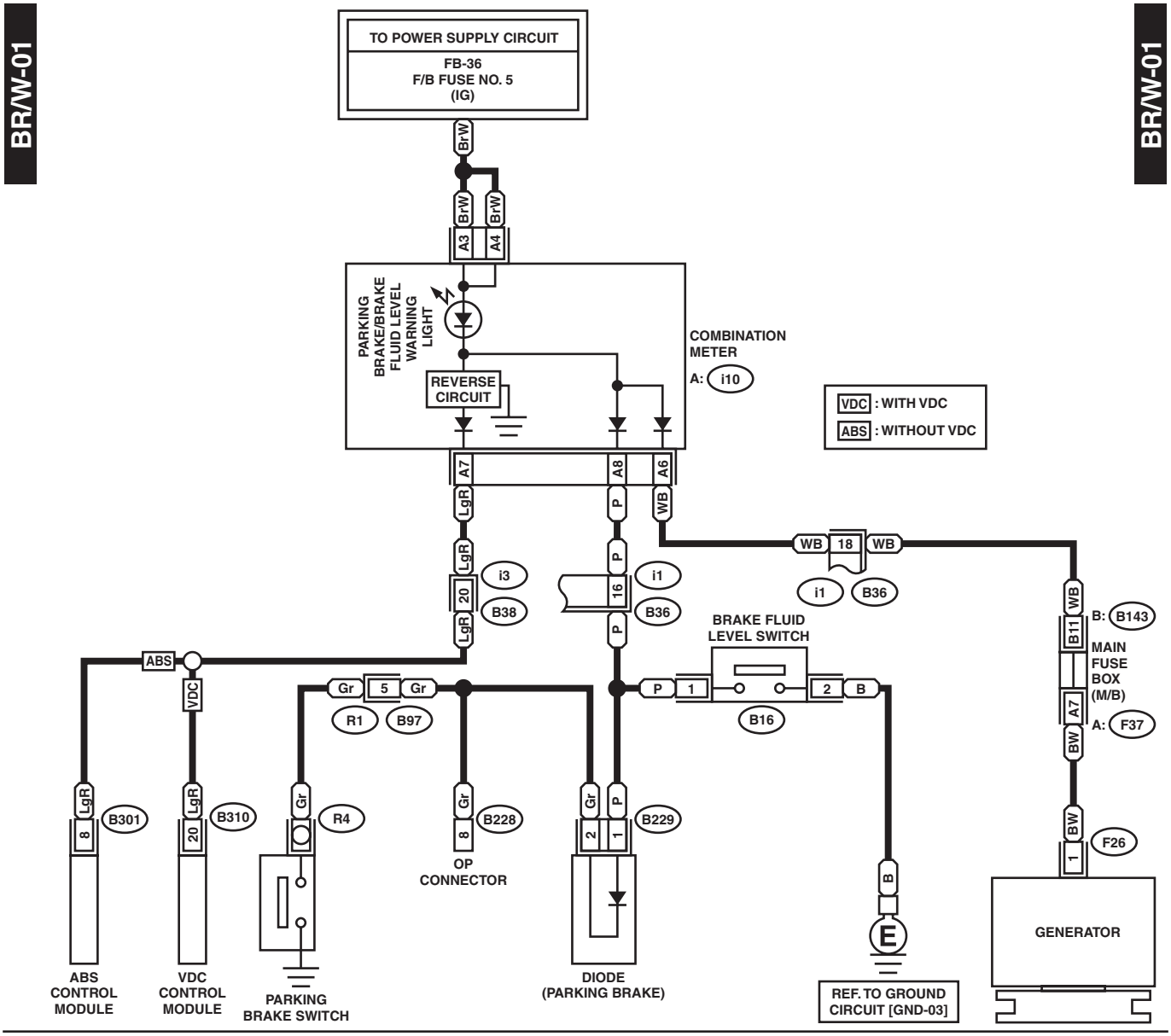

WI-05391

45.Sunroof Control System

A: WIRING DIAGRAM

1. SEDAN MODEL

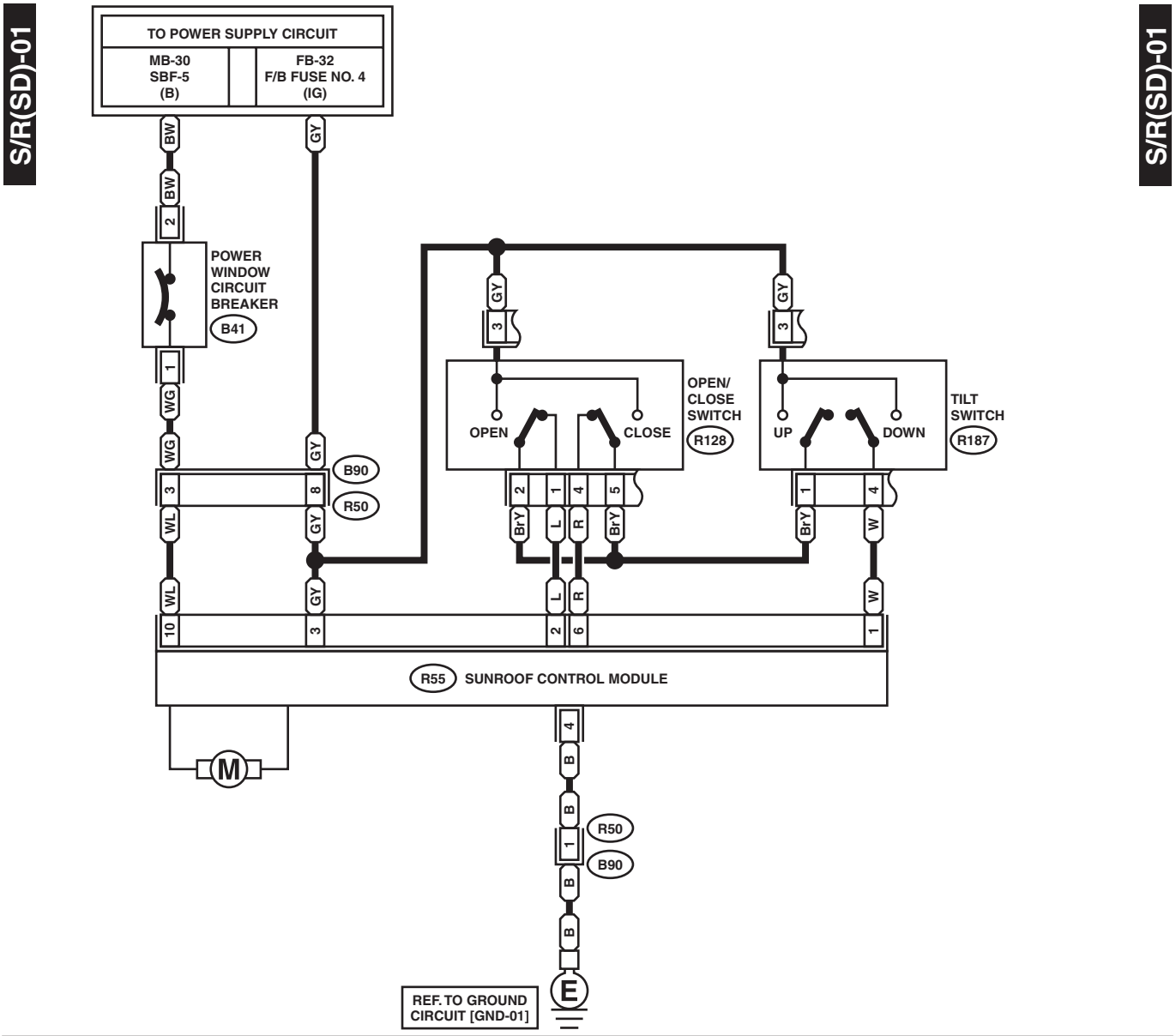

WI-05405

2. WAGON MODEL

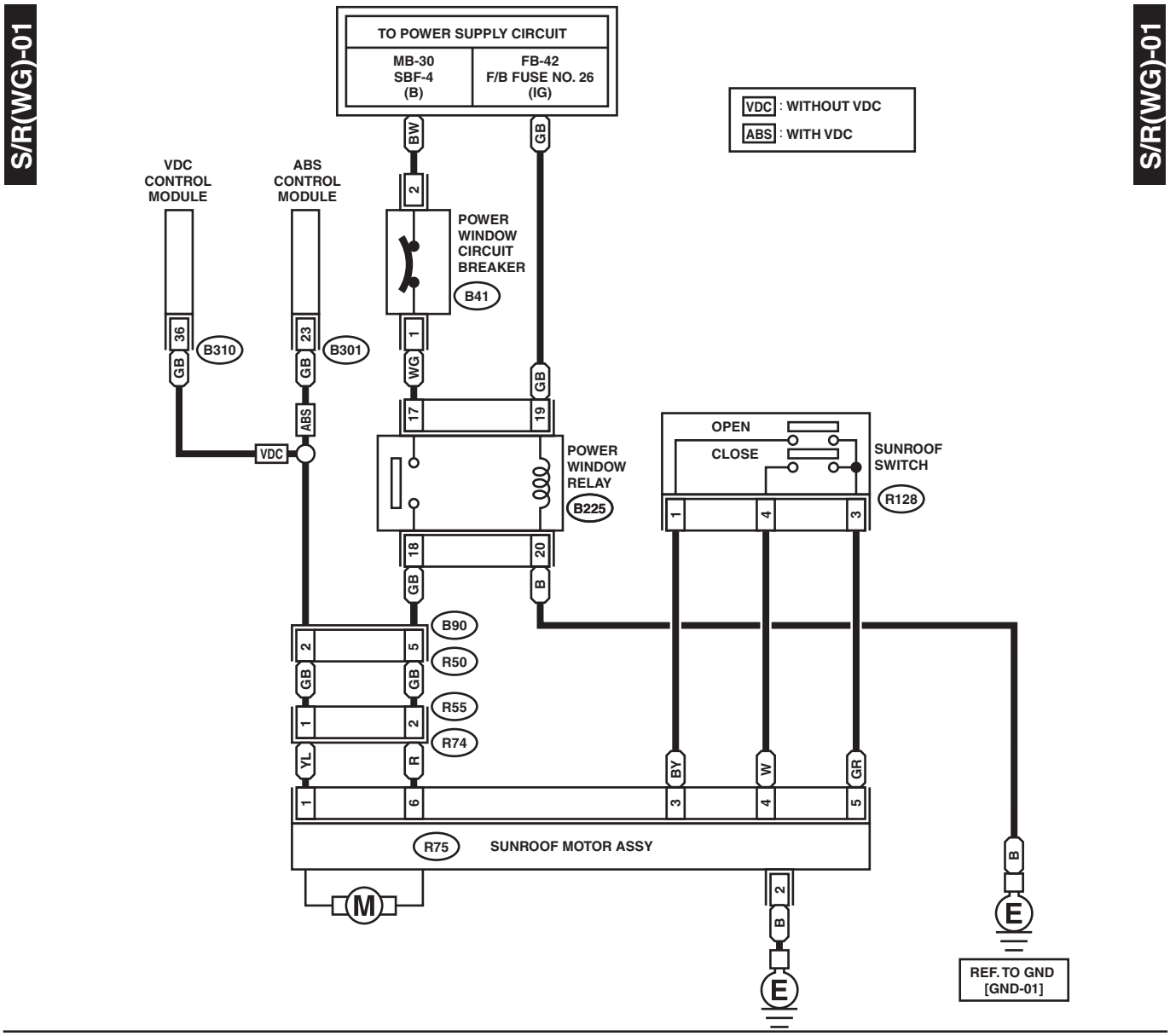

46.Keyless Entry System

A: WIRING DIAGRAM

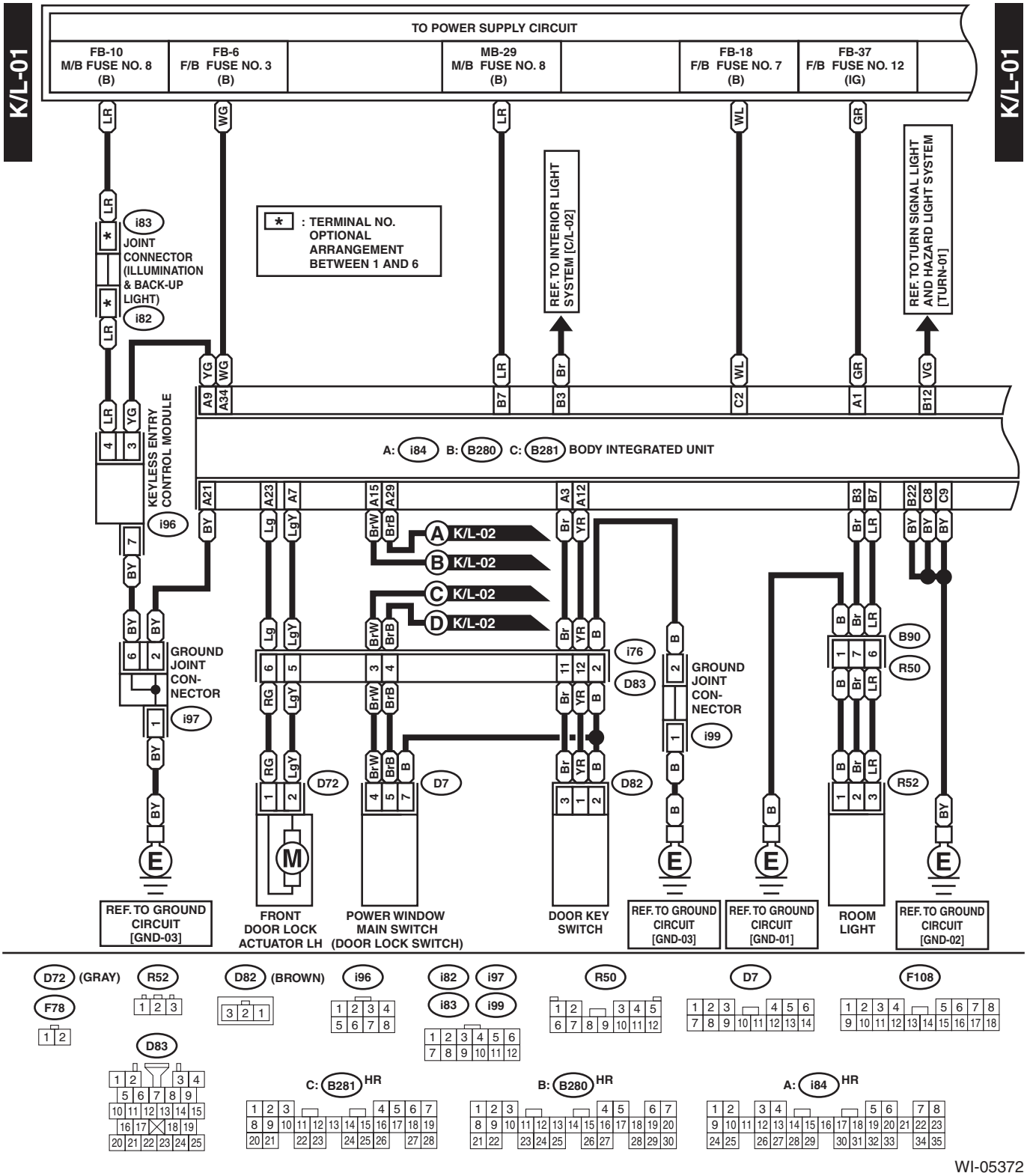

WI-05372

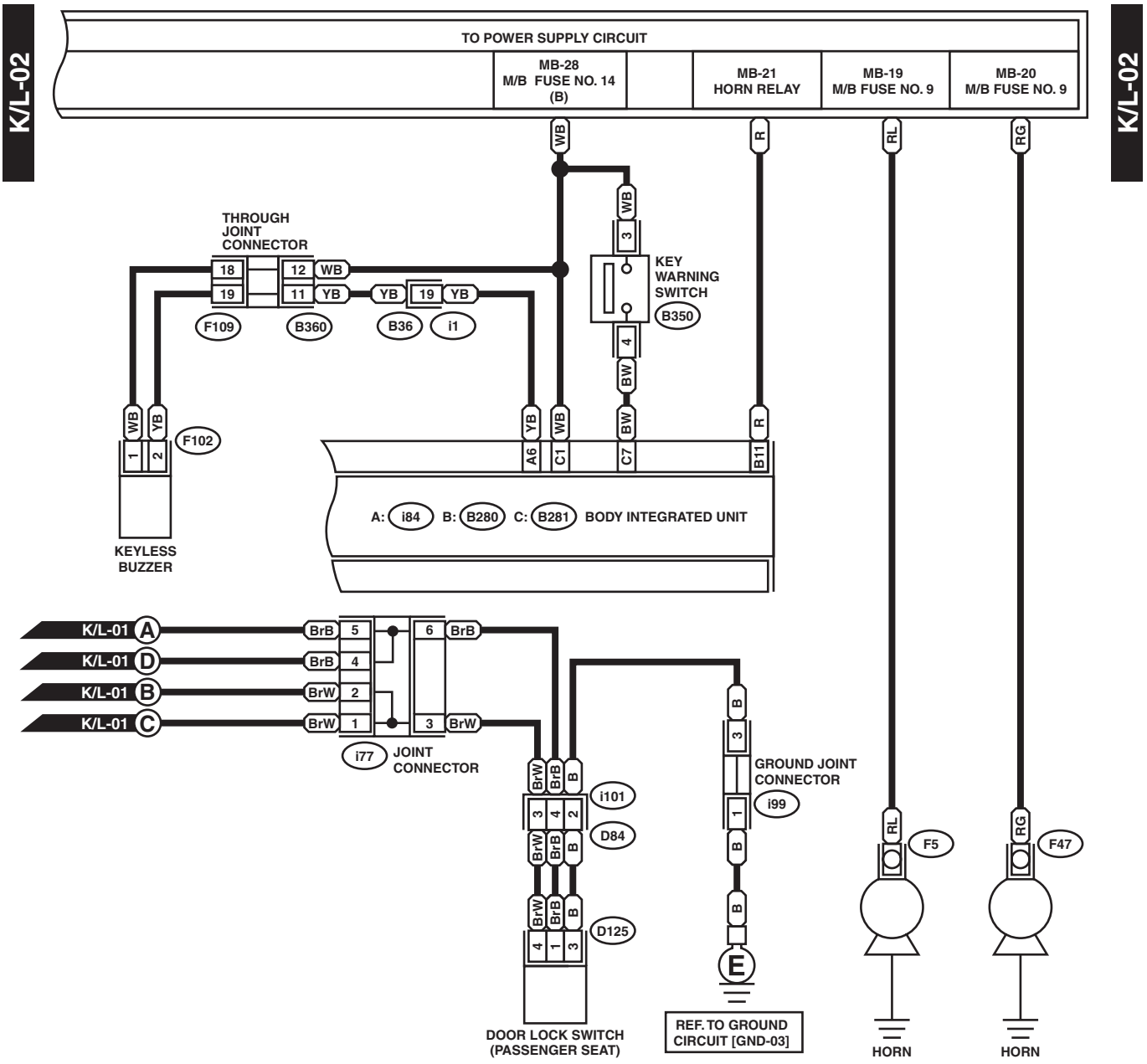
K/L-02
K/L-02
TO POWER SUPPLY CIRCUIT
MB-28
M/B FUSE NO. 14
(B)
MB-21
HORN RELAY
MB-19
M/B FUSE NO. 9
MB-20
M/B FUSE NO. 9
THROUGH
JOINT
CONNECTOR
F109
B360
B36
i1
KEY
WARNING
SWITCH
B350
F102
KEYLESS
BUZZER
A: i84 B: B280 C: B281 BODY INTEGRATED UNIT
K/L-01 A
K/L-01 D
K/L-01 B
K/L-01 C
i77 JOINT
CONNECTOR
i101
D84
D125
DOOR LOCK SWITCH
(PASSENGER SEAT)
GROUND JOINT
CONNECTOR
i99
REF. TO GROUND
CIRCUIT [GND-03]
F5
F47
HORN
HORN

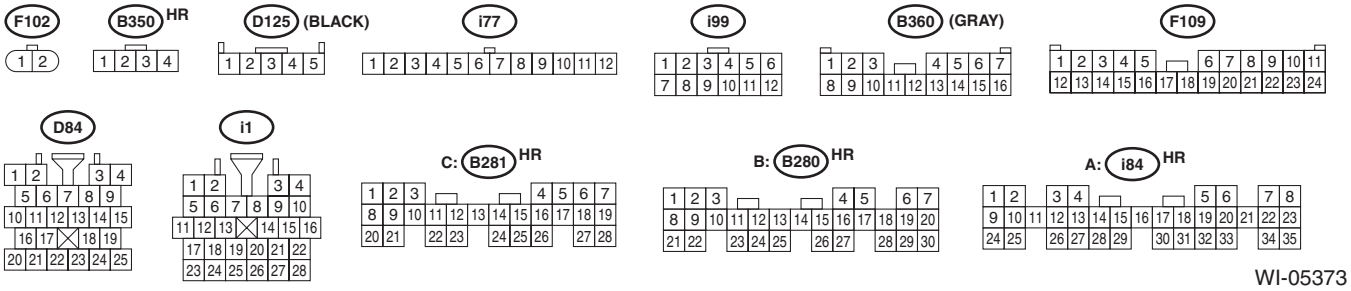
F102
B350 HR
D125 (BLACK)
i77
i99
B360 (GRAY)
F109
D84
i1
C: B281 HR
B: B280 HR
A: i84 HR

WI-05373

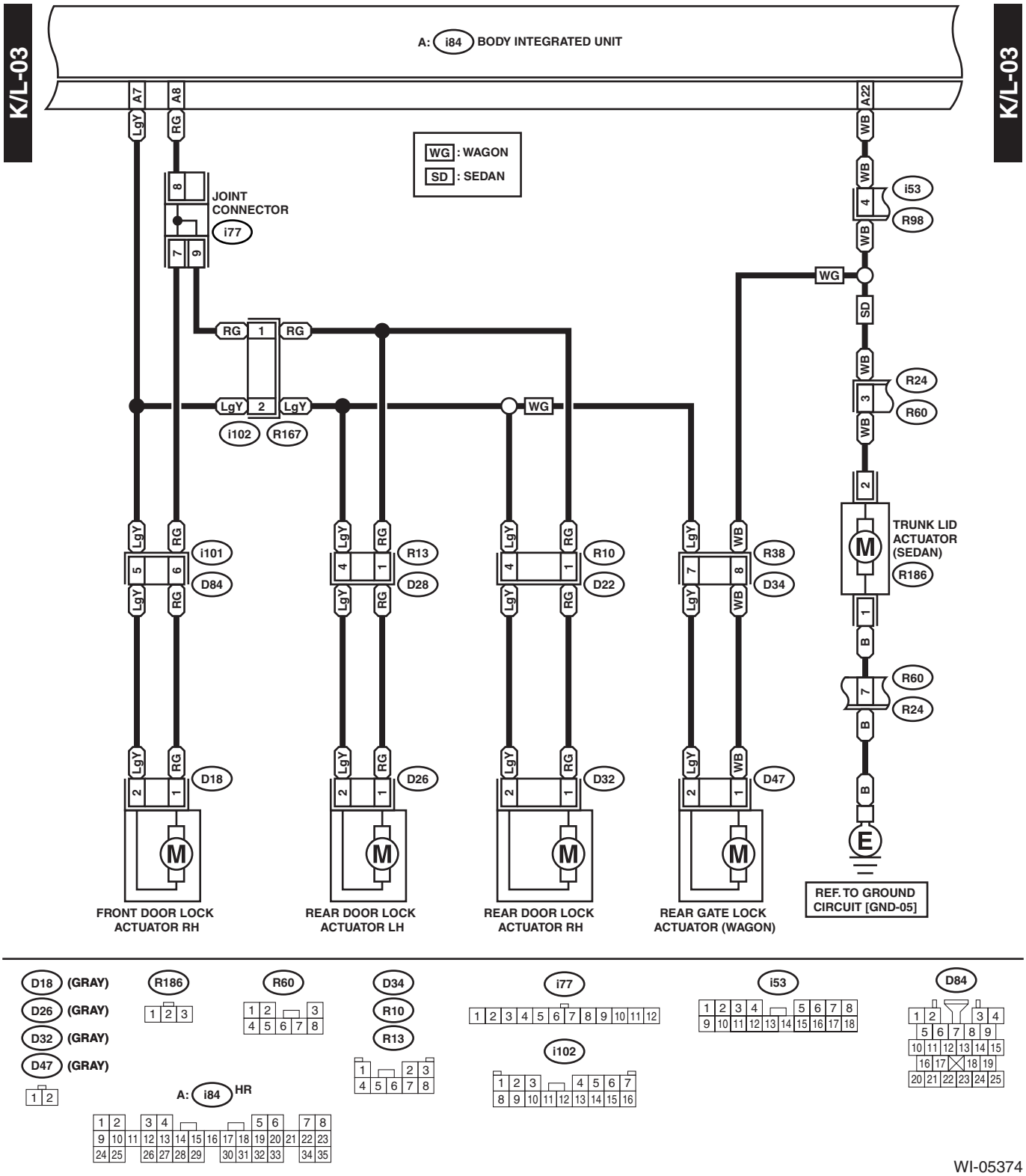
K/L-03
K/L-03
A: i84 BODY INTEGRATED UNIT
WG : WAGON
SD : SEDAN
JOINT CONNECTOR
i77
i102
R167
i101
D84
R13
D28
R10
D22
R38
D34
D18
D26
D32
D47
i53
R98
R24
R60
R186
TRUNK LID ACTUATOR (SEDAN)
REF. TO GROUND CIRCUIT [GND-05]
FRONT DOOR LOCK ACTUATOR RH
REAR DOOR LOCK ACTUATOR LH
REAR DOOR LOCK ACTUATOR RH
REAR GATE LOCK ACTUATOR (WAGON)
D18 (GRAY)
D26 (GRAY)
D32 (GRAY)
D47 (GRAY)
A: i84 HR
WI-05374

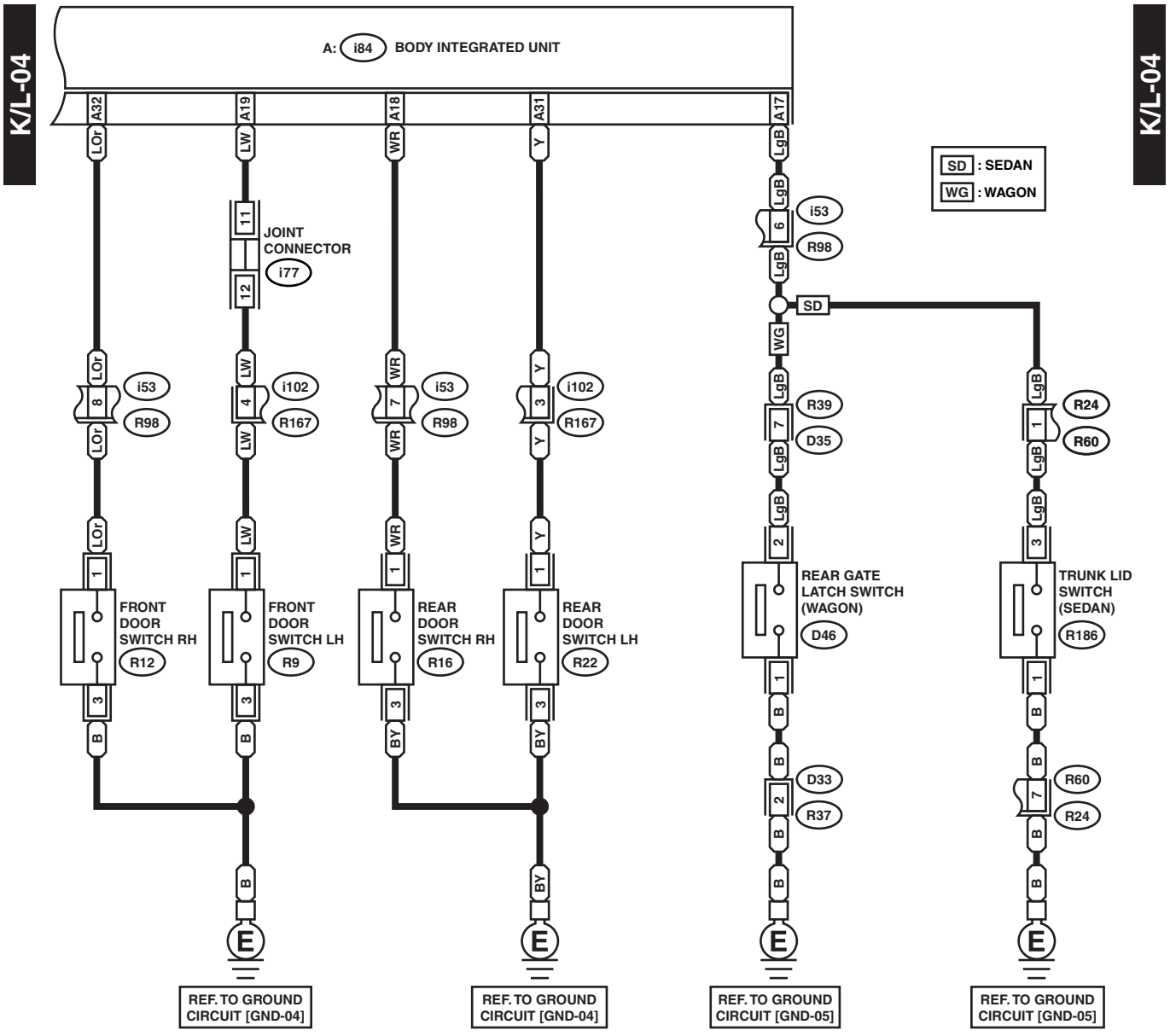
K/L-04
K/L-04
A: i84 BODY INTEGRATED UNIT
A32
A19
A18
A31
A17
LOr
LW
WR
Y
LgB
SD : SEDAN
WG : WAGON
JOINT CONNECTOR
i77
11
12
i53
R98
i102
R167
R39
D35
R24
R60
FRONT DOOR SWITCH RH
R12
FRONT DOOR SWITCH LH
R9
REAR DOOR SWITCH RH
R16
REAR DOOR SWITCH LH
R22
REAR GATE LATCH SWITCH (WAGON)
D46
TRUNK LID SWITCH (SEDAN)
R186
D33
R37
B
BY
E
REF. TO GROUND CIRCUIT [GND-04]
REF. TO GROUND CIRCUIT [GND-04]
REF. TO GROUND CIRCUIT [GND-05]
REF. TO GROUND CIRCUIT [GND-05]

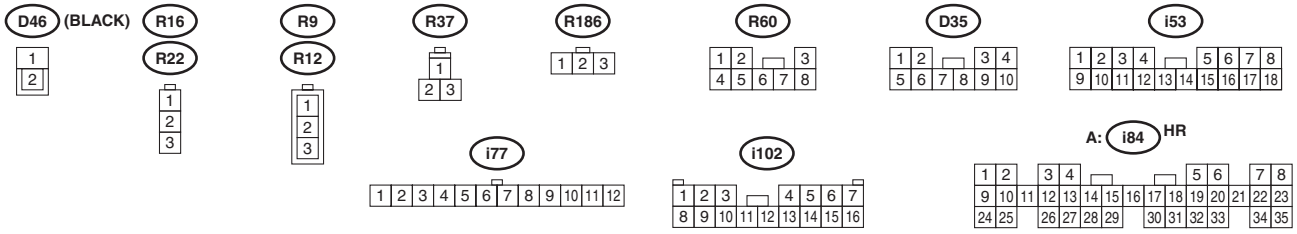
D46 (BLACK)
R16
R22
R9
R12
R37
R186
R60
D35
i53
i77
i102
A: i84 HR

WI-05375

47.Security System

A: WIRING DIAGRAM

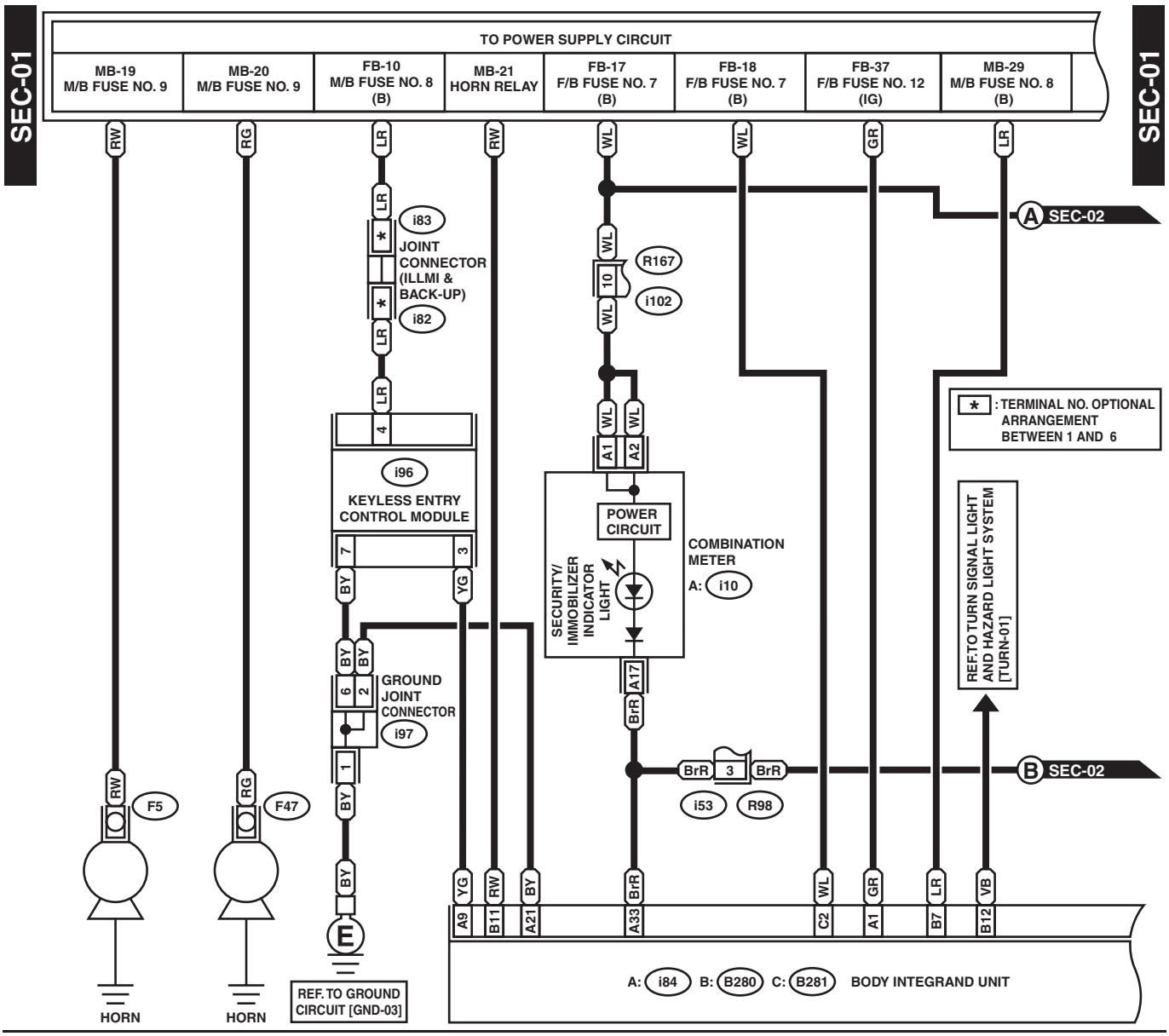

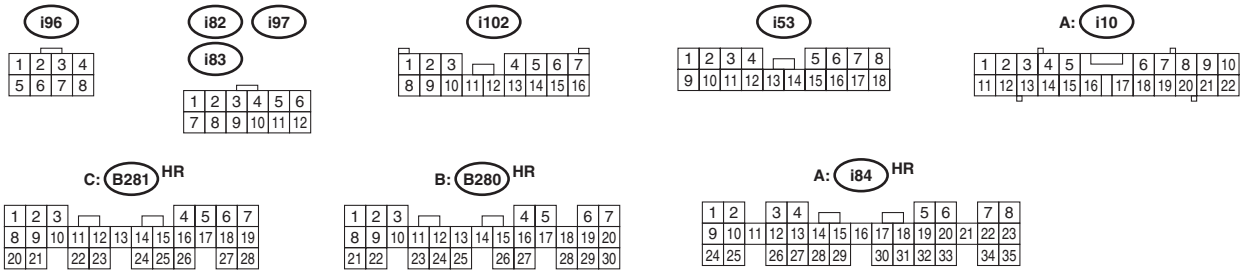

WI-05425

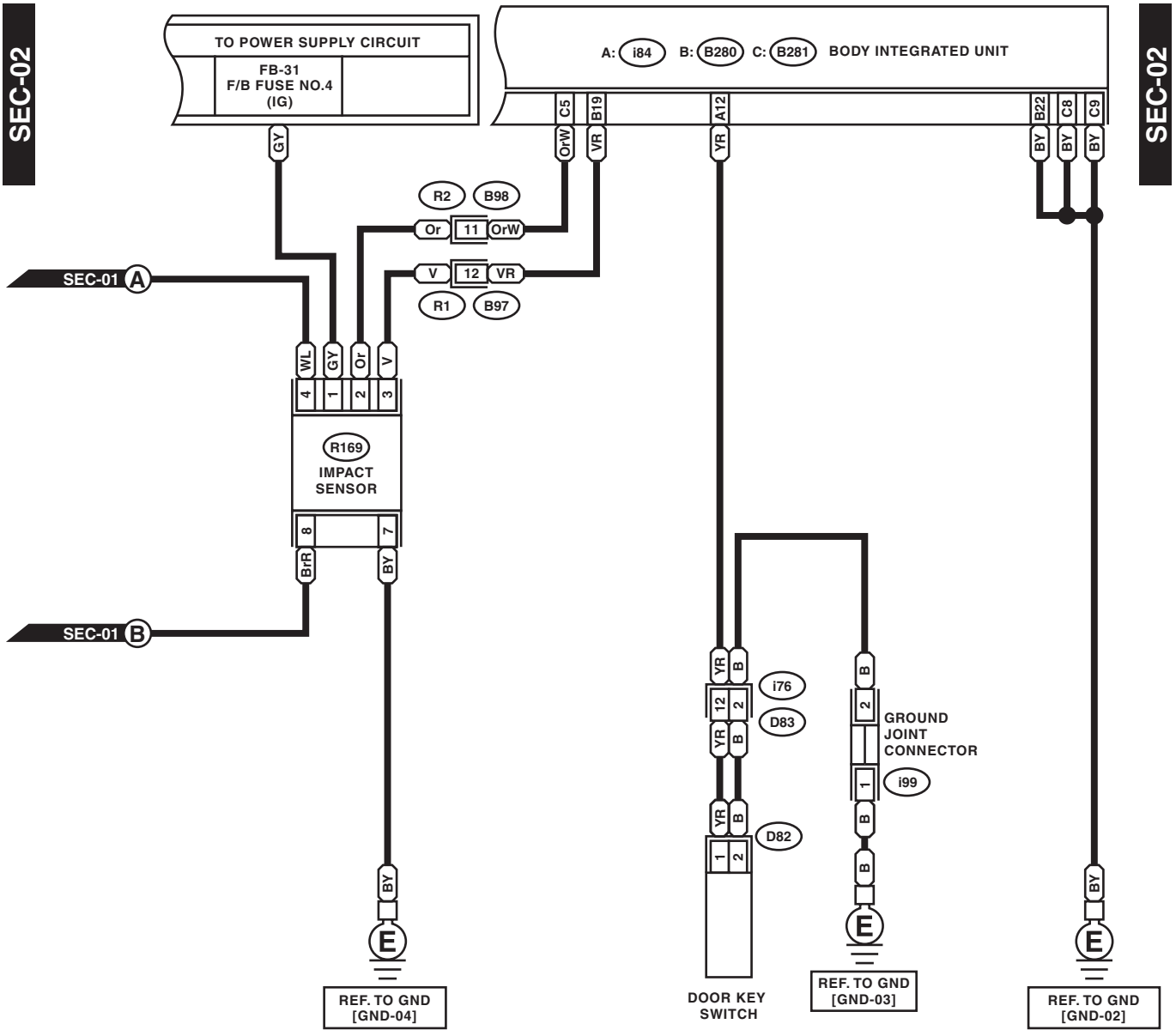
SEC-02
SEC-02
TO POWER SUPPLY CIRCUIT
FB-31
F/B FUSE NO.4
(IG)
A: i84 B: B280 C: B281 BODY INTEGRATED UNIT
C5
B19
A12
B22
C8
C9
GY
OrW
VR
YR
BY
BY
BY
R2
B98
Or
11
OrW
V
12
VR
R1
B97
SEC-01 A
SEC-01 B
WL
GY
Or
V
4
1
2
3
R169
IMPACT
SENSOR
8
7
BrR
BY
YR
B
i76
12
2
D83
GROUND
JOINT
CONNECTOR
i99
D82
1
2
BY
REF. TO GND
[GND-04]
DOOR KEY
SWITCH
REF. TO GND
[GND-03]
REF. TO GND
[GND-02]

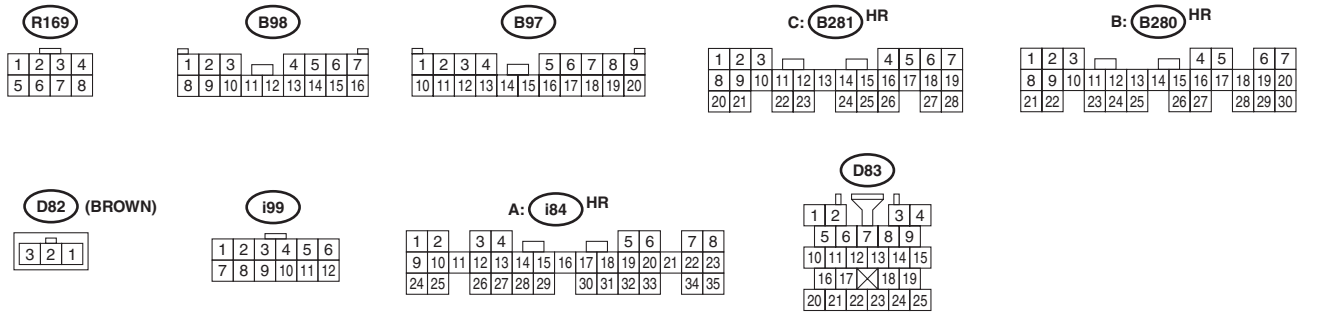
R169
B98
B97
C: B281 HR
B: B280 HR
D82 (BROWN)
i99
A: i84 HR
D83

WI-18035

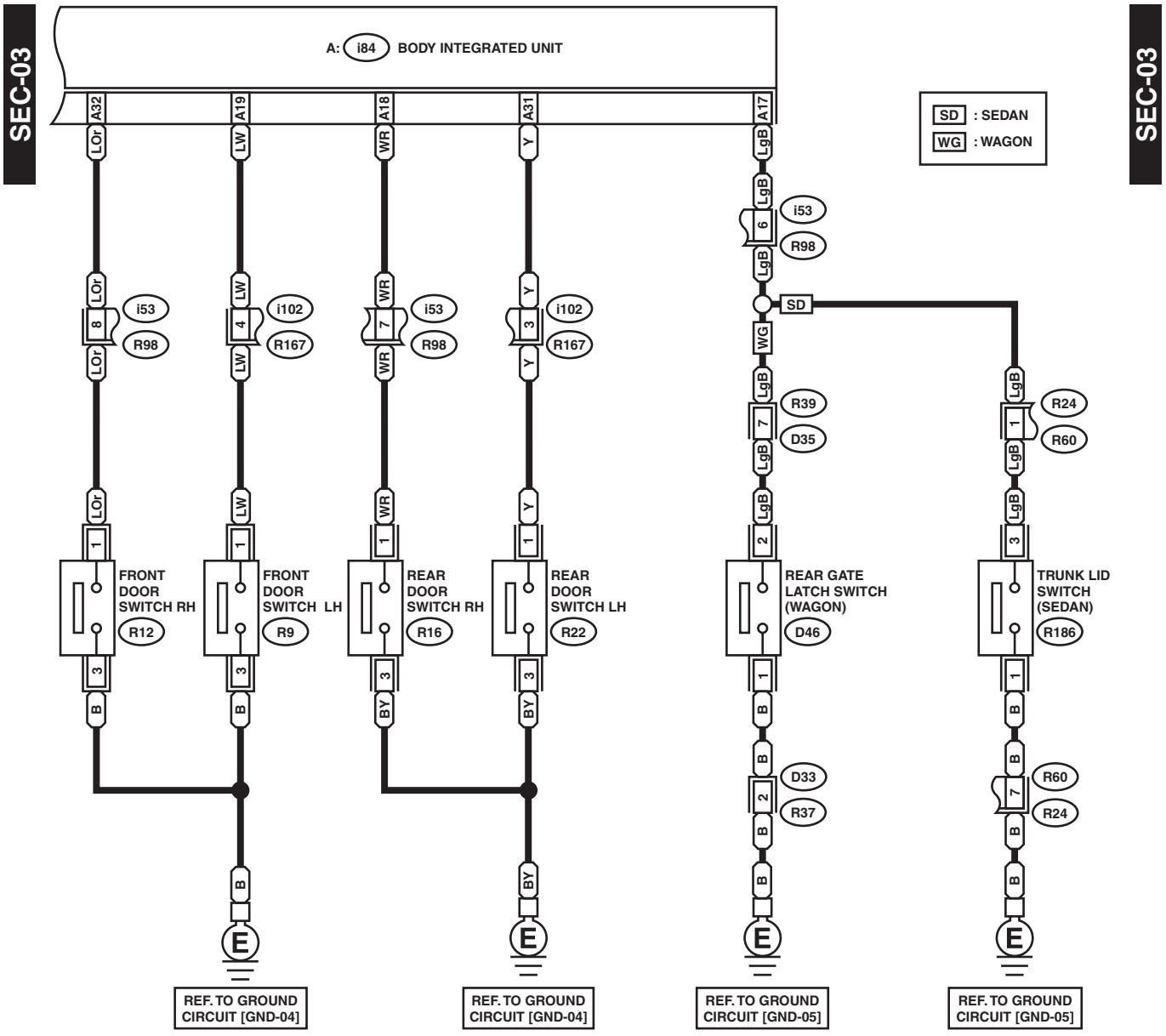
SEC-03
SEC-03
A: i84 BODY INTEGRATED UNIT
SD : SEDAN
WG : WAGON
A32
A19
A18
A31
A17
LOr
LW
WR
Y
LgB
i53
R98
i102
R167
SD
WG
R39
D35
R24
R60
FRONT DOOR SWITCH RH
FRONT DOOR SWITCH LH
REAR DOOR SWITCH RH
REAR DOOR SWITCH LH
REAR GATE LATCH SWITCH (WAGON)
TRUNK LID SWITCH (SEDAN)
R12
R9
R16
R22
D46
R186
B
BY
D33
R37
E
REF. TO GROUND CIRCUIT [GND-04]
REF. TO GROUND CIRCUIT [GND-04]
REF. TO GROUND CIRCUIT [GND-05]
REF. TO GROUND CIRCUIT [GND-05]
D46 (BLACK)
R9
R12
R16
R22
R37
R186
R60
D35
i53
A: i84 HR
i102

WI-05427

48.OP Connector System

A: WIRING DIAGRAM

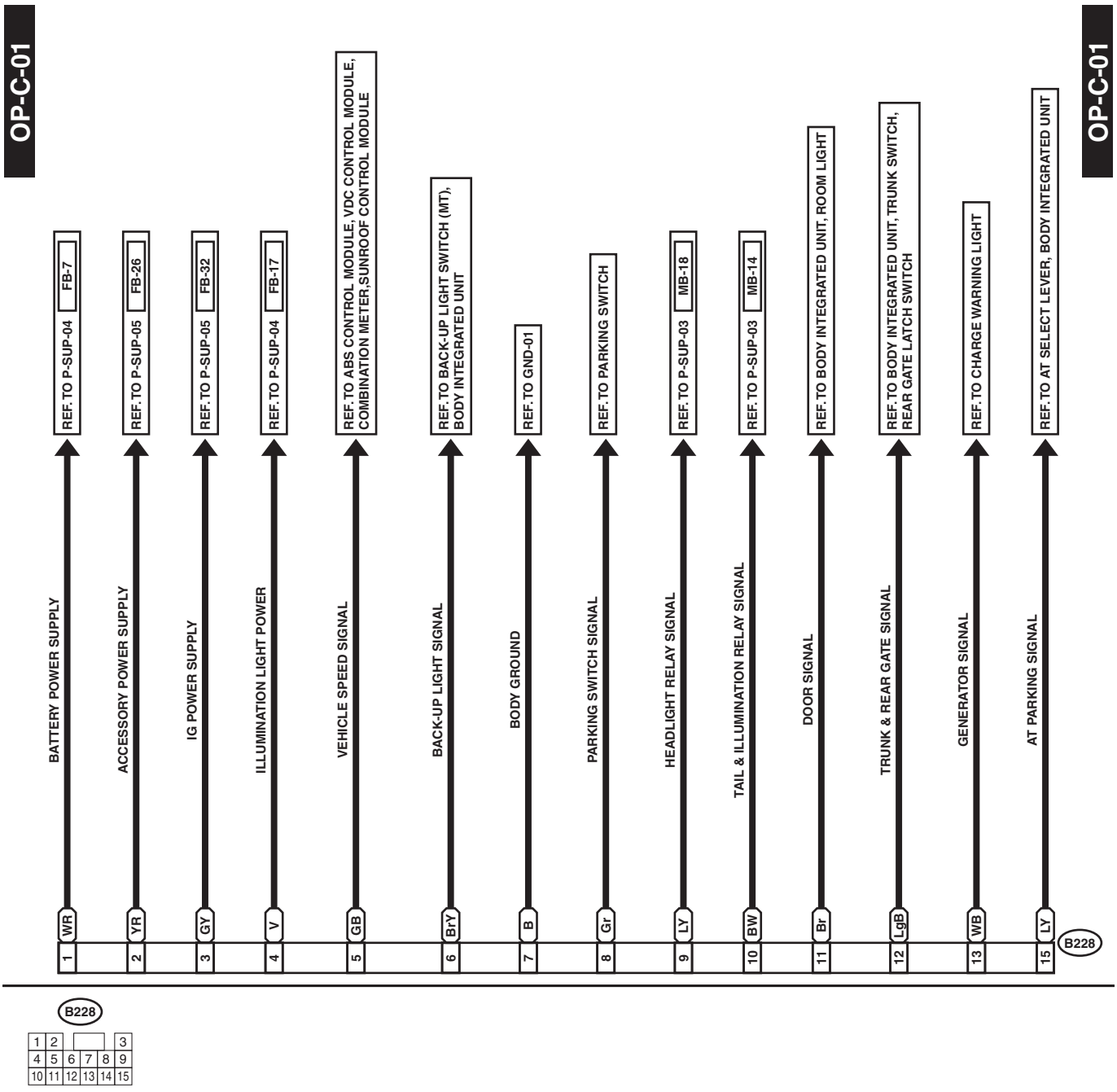

WI-05447

49.Harness Components Location

A: LOCATION

1. SEDAN MODEL

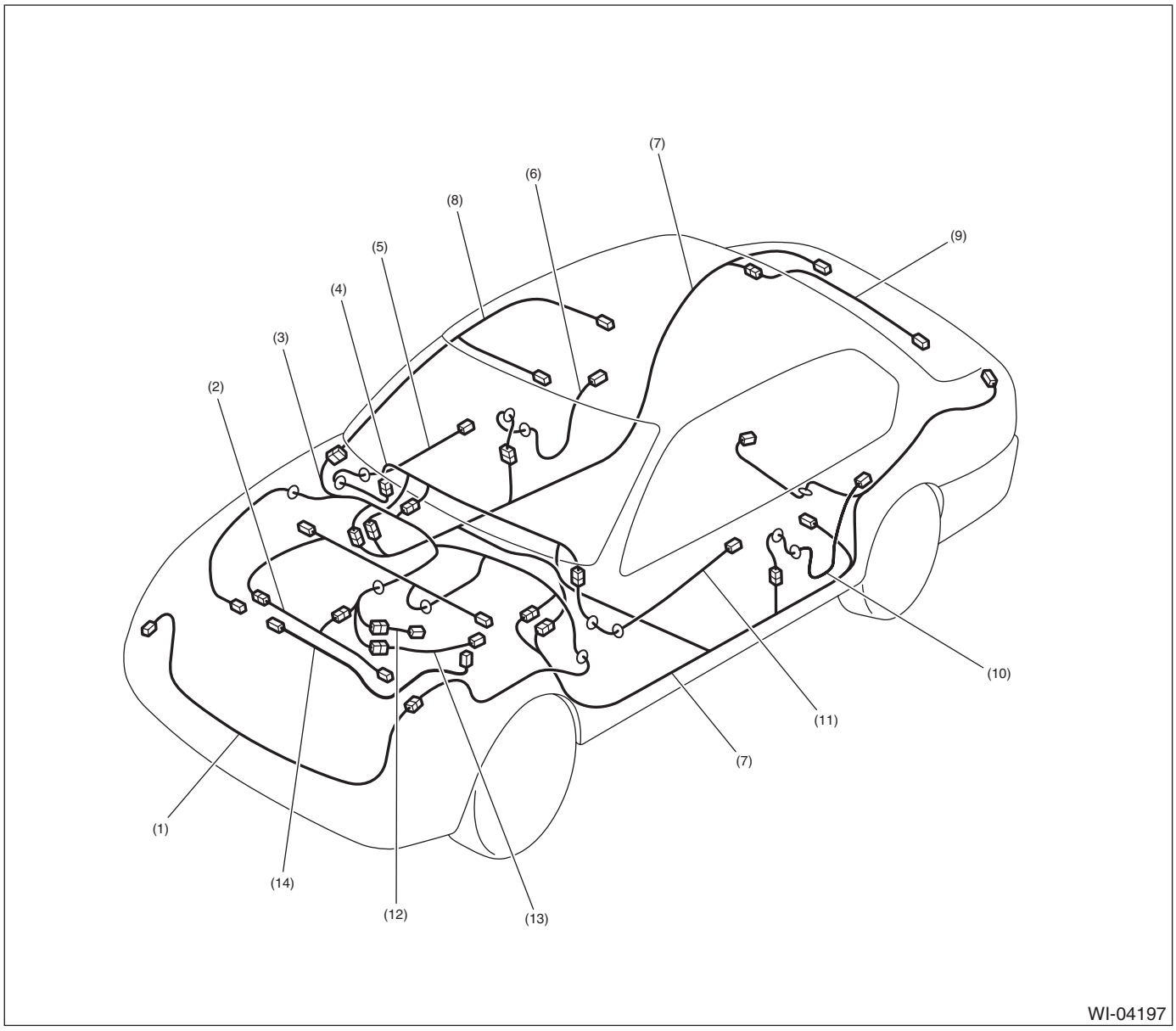

(1) Front wiring harness
(2) Engine wiring harness
(3) Bulkhead wiring harness
(4) Instrument panel wiring harness
(5) Front door cord RH
(6) Rear door cord RH
(7) Rear wiring harness
(8) Roof cord
(9) Trunk lid cord
(10) Rear door cord LH
(11) Front door cord LH
(12) Transmission cord
(13) Rear oxygen sensor cord
(14) Generator cord

2. WAGON MODEL

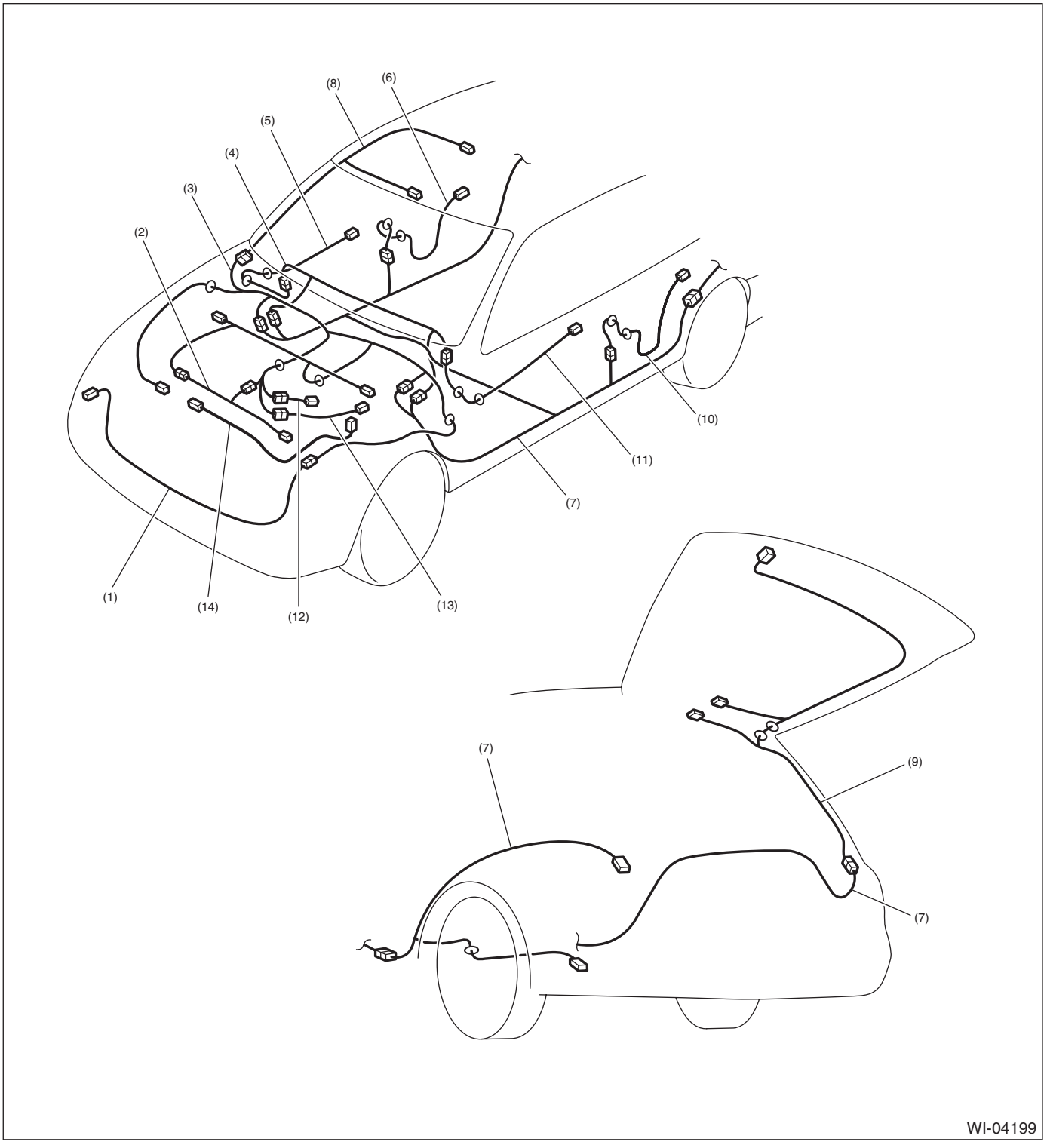

(1) Front wiring harness
(2) Engine wiring harness
(3) Bulkhead wiring harness
(4) Instrument panel wiring harness
(5) Front door cord RH
(6) Rear door cord RH
(7) Rear wiring harness
(8) Roof cord
(9) Rear gate cord
(10) Rear door cord LH
(11) Front door cord LH
(12) Transmission cord
(13) Rear oxygen sensor cord
(14) Generator cord

50.Front Wiring Harness

A: LOCATION

Connector				Connecting to	
No.	Pole	Color	Area	No.	Description
F3	3	★	B-1		Front turn signal light RH
F5	1	★	C-2		Horn
F6	2	★	C-1		Front fog light RH
F7	3	★	C-1		Headlight and front clearance light RH
F16	2	Black	C-1		Sub fan motor (H4 Turbo model)
		Black	C-1		Sub fan motor (H4 Non-turbo model)
F17	2	Gray	C-2		Main fan motor (H4 Turbo model)
		Black	C-2		Main fan motor (H4 Non-turbo model)
F17	2	★	C-2		PWM controller (H6 model)
F19	3	★	C-3		Front turn signal light LH
F21	2	★	D-3		Front fog light LH
F23	3	★	C-3		Headlight and front clearance light LH
F24	2	★	C-2		A/C compressor
F25	1	★	C-2		Generator terminal B
F26	3	Green	C-2		Generator
F27	31	★	B-4		Relay holder
F35	12	Blue	B-4		Main fuse box (M/B)
F36	7	★	B-4		
F37	20	★	B-4		
F47	1	★	C-2		Horn
F78	2	★	C-2		Ambient sensor
F102	2	★	B-2		Keyless buzzer
F106	3	★	B-1		PWM controller (H6 model)
F108	18	★	B-4	B361	Through joint connector
F109	24	★	B-3	B360	
★: Non-colored					

Front Wiring Harness

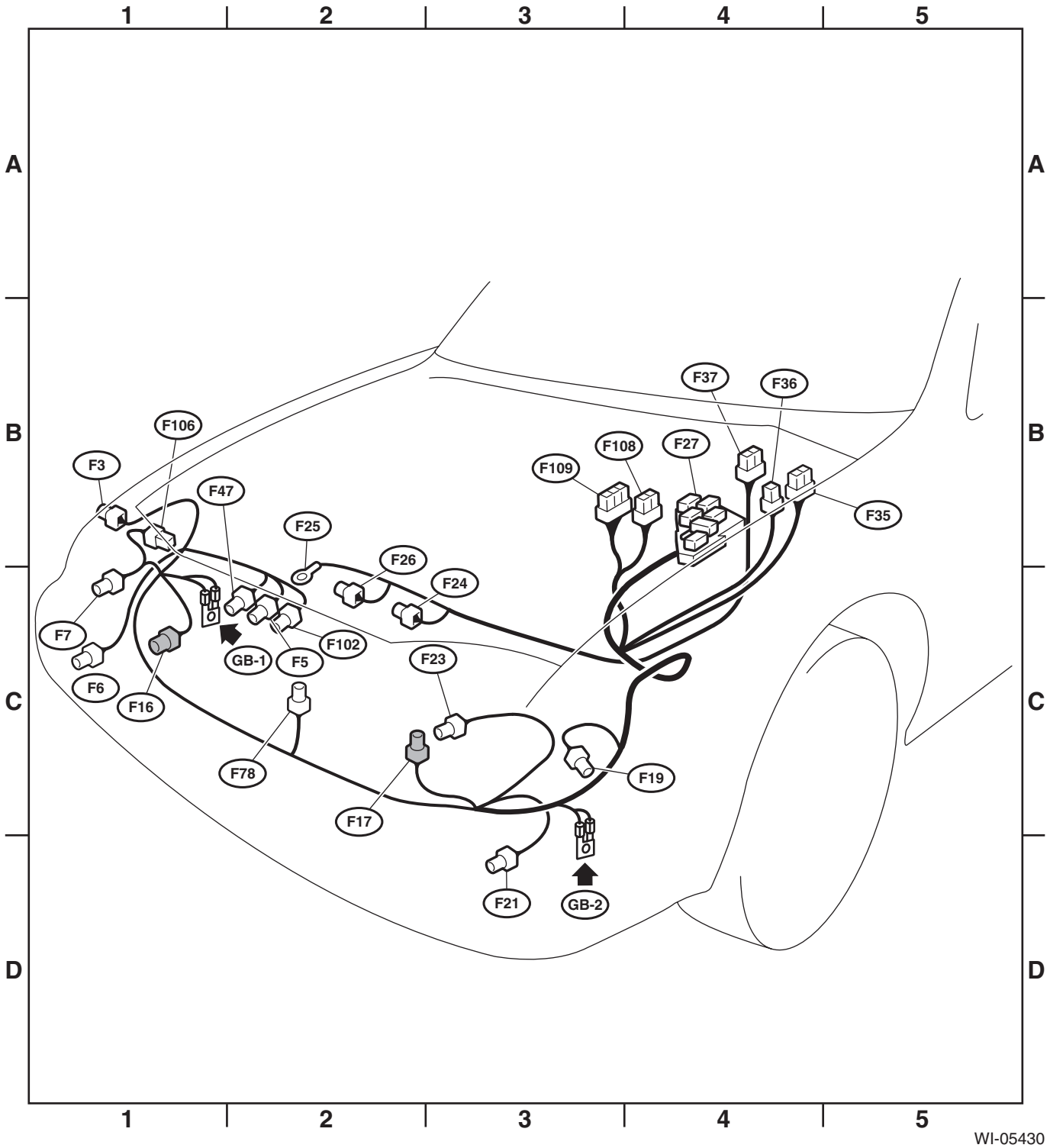

51.Bulkhead Wiring Harness (In Engine Compartment)

A: LOCATION

Connector				Connecting to	
No.	Pole	Color	Area	No.	Description
B3	5	★	B-2		Mass air flow sensor
B6	2	★	B-2		Front ABS wheel speed sensor RH
B8	5	★	B-4		Front wiper motor
B10	4	★	B-4		A/C pressure switch
B11	20	Gray	B-3	T4	Transmission (AT model)
B12	8	Brown	B-3	T3	Transmission (H4 non-turbo AT model)
	12	Gray	B-3	T3	Transmission (Turbo AT and H6 AT model)
B14	1	Black	B-3		Stater (magnet)
B15	2	★	B-4		Front ABS wheel speed sensor LH
B16	2	Gray	B-4		Brake fluid level switch
B18	4	★	B-3		Front oxygen sensor
B19	4	★	B-2	T5	Rear oxygen sensor cord (H4 model)
B20	16	★	B-3	E1	Engine wiring harness
B21	54	★	B-3	E2	
B22	16	★	B-3	E3	Engine wiring harness (H6 model)
B24	2	★	B-3	T1	Back-up light switch (MT model)
B25	2	Brown	B-4	T2	Neutral position switch (MT model)
B143	20	★	B-4		Main fuse box (M/B)
B144	9	Brown	B-4		
B145	7	Brown	B-4		
B146	2	★	C-4		Front washer motor
B147	2	★	C-4		Rear washer motor
B186	8	★	B-4		Main fuse box (M/B)
B262	4	★	B-4		Front oxygen sensor RH (H4 model)
B301	26	★	B-2		ABS control module
B310	42	★	B-2		VDC control module
B312	2	★	B-2	B347	Shield joint connector (VDC)
B347	2	★	B-2	B312	
B348	3	★	B-2		Pressure sensor
B360	16	Gray	B-4	F109	Through joint connector
B361	14	★	B-4	F108	
B391	4	★	B-2		Neutral position switch (MT model)
B392	2	★	B-3		Exhaust gas temperature sensor
B395	6	Gray	B-3		A/F sensor (H4 model)
★: Non-colored					

Connector				Connecting to	
No.	Pole	Color	Area	No.	Description
AB13	2	★	C-3		Front sub sensor LH
AB16	2	★	B-1		Front sub sensor RH
★: Non-colored					

Bulkhead Wiring Harness (In Engine Compartment)

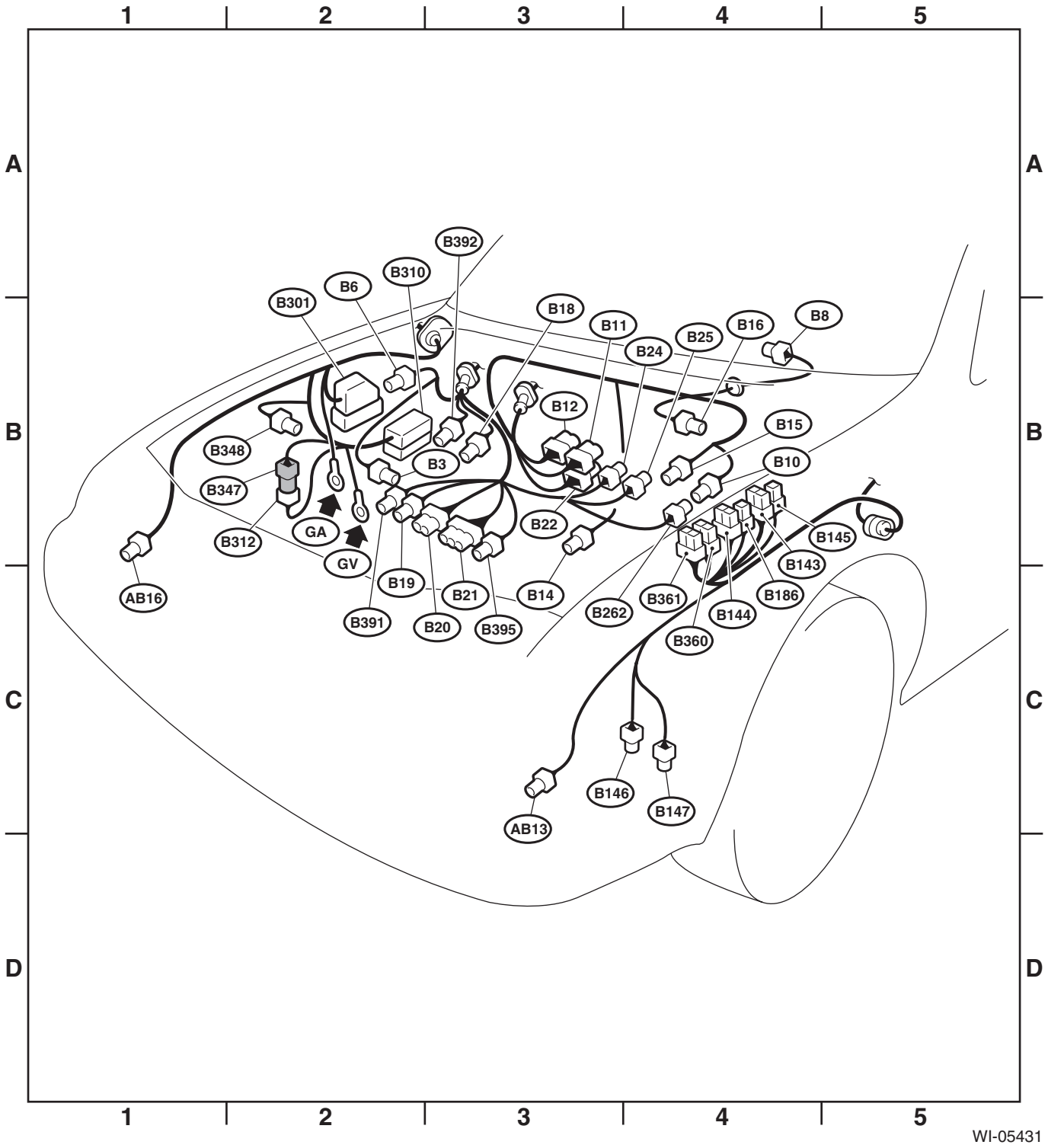

52.Bulkhead Wiring Harness (In Compartment)

A: LOCATION

Connector				Connecting to	
No.	Pole	Color	Area	No.	Description
B31	12	Yellow	C-1	AB1	Airbag wiring harness
B32	8	★	C-2		Turn signal and hazard module
B36	28	★	B-2	i1	Instrument panel wiring harness
B37	8	★	C-5	i2	Instrument panel wiring harness (Manual A/C)
B38	20	★	B-5	i3	Instrument panel wiring harness
B40	16	★	C-2		Data link connector
B41	2	★	B-2		Power window circuit breaker
B47	6	Brown	B-5		Main relay
B52	24	★	C-2		Fuse & relay box (F/B)
B53	20	★	C-3		Shield joint connector (4AT model)
B54	24	White	C-3		TCM
B55	24	Gray	C-3		TCM (5AT model)
B65	4	Black	B-3		Stop and brake switch (Model with cruise control)
B68	8	★	B-3		Roll connector
B69	4	★	B-3		Parking switch
B70	18	★	B-3		Combination switch
B71	17	★	B-3		
B72	6	White	B-3		Ignition switch
B75	2	Green	C-4	B76	Test mode connector
B76	2	Green	C-4	B75	
B77	5	★	B-4		Mode actuator (Auto A/C)
B79	14	Gray	C-3		Check connector
B81	1 × 2	★	C-2		Diagnosis terminal
B82	8	White	C-2		Diagnosis connector
B83	8	★	C-5		Joint connector
B85	2	★	B-2		Diode (Light)
B86	4	★	B-4		Blower fan controller (Auto A/C)
B87	2	Black	B-5		Blower fan motor
B88	5	★	B-4		Evaporator thermo switch (Manual A/C)
	2	★			Evaporator thermo switch (Auto A/C)
B90	12	★	B-5	R50	Roof cord
B91	7	Green	B-4		FRESH/RECIRC actuator
B96	8	★	B-1		Daytime running light control module
B97	20	★	C-1	R1	Rear wiring harness
B98	16	★	B-5	R2	
B106	2	★	B-2		Clutch switch
B107	2	Blue	B-2		Clutch switch (Model with cruise control)
B116	10	★	D-4		Select lever (AT model)
B122	8	★	C-5		Joint connector (E/G)
B134	34	★	C-4		ECM
B135	35	★	C-4		ECM
B136	35	★	C-4		ECM
B137	31	★	C-4		ECM
B138	8	★	C-5		Joint connector (H4 model)
B152	10	★	C-2		Fuse & relay box (F/B)
B158	8	★	C-2		Fuse & relay box (F/B)
B159	9	Brown	C-2		Fuse & relay box (F/B)

Connector				Connecting to	
No.	Pole	Color	Area	No.	Description
B177	2	★	B-4		Wiper deicer
B224	2	★	B-4		Key switch illumination
B225	40	★	C-2		Fuse (Relay block)
		★			Mirror heater relay
		★			Starter relay
		★			Front fog light relay
		★			Power window relay
		★			Blower fan relay
		★			Rear fog light relay
		★			Wiper deicer relay
		★			Seat heater relay
B228	15	★	B-2		OP connector
B229	2	★	B-1		Diode (Parking brake)
B230	6	★	D-4		Yaw rate sensor (VDC)
B231	4	★	B-4		Steering angle sensor (VDC)
B234	8	★	B-4		CAN joint connector (VDC)
B235	7	Green	B-4		Passenger seat air mix actuator (Auto A/C)
B242	10	★	B-1		Daytime running light control module
B280	30	★	C-3		Body integrated unit
B281	28	★	C-3		
B282	16	★	B-4		Auto A/C control module
B283	20	★	B-4		
B292	3	★	D-4		ABS G sensor
B315	6	★	B-3		Accelerator pedal position sensor
B323	5	★	C-4		Security relay
B327	6	Brown	B-5		Oxygen (A/F) sensor relay
B349	2	★	B-3		Diode (Wiper)
B350	4	White	B-3		Key actuator
B351	2	Brown	B-4		Antenna (Model with immobilizer)
B352	8	★	C-3		CAN joint connector
B355	8	★	B-3		CAN joint connector (TCM)
B356	4	★	C-3		Back-up light relay (5AT model)
B357	4	★	C-3		P-VIGN relay (5AT model)
B358	2	★	C-4		Select lever illumination (AT model)
B359	3	★	D-4		Lateral G sensor (5AT model)
B362	8	★	B-5		Relay holder
B370	2	Black	C-1		Diode (Engine status)
B390	7	Green	B-3		Driver seat air mix actuator (Auto A/C)
★: Non-colored					

Connector				Connecting to	
No.	Pole	Color	Area	No.	Description
AB1	12	Yellow	C-1	B31	Airbag wiring harness
AB2	4	★	B-4	AB7	Inflator (Driver seat)
AB6	28	★	C-4		Airbag control module
AB9	4	★	B-5	AB10	Inflator (Passenger seat)
AB35	2	Black	B-2		Fuse & relay box (F/B)
★: Non-colored					

Bulkhead Wiring Harness (In Compartment)

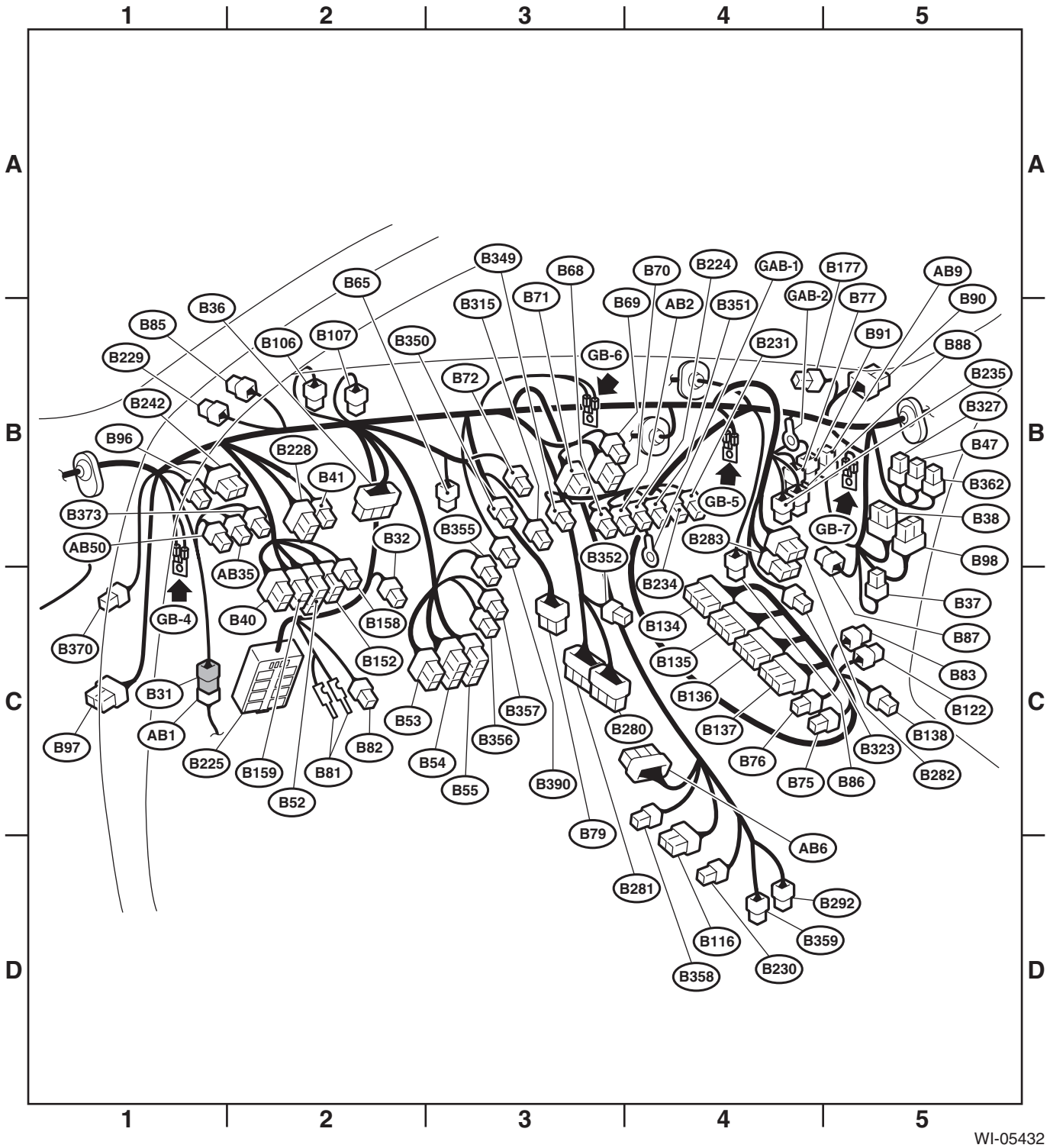

53.Engine Wiring Harness and Transmission Cord

A: LOCATION

1. 2.5 L NON-TURBO MODEL

Connector				Connecting to	
No.	Pole	Color	Area	No.	Description
E1	16	Brown	A-3	B20	Bulkhead wiring harness
E2	54	Black	A-3	B21	
E4	2	Black	A-2		CPC Solenoid
E5	2	Light gray	B-1		Fuel injector No. 1
E6	2	Light gray	A-2		Fuel injector No. 3
E8	2	Black	B-2		Engine coolant temperature sensor and thermometer
E10	2	Light gray	B-3		Crankshaft position sensor
E11	1	★	B-2		Oil pressure switch
E12	4	Dark gray	A-2		Ignition coil & Ignitor ASSY
E14	2	Brown	A-4		Knock sensor
E15	2	Gray	B-4		Camshaft position sensor
E16	2	Light gray	B-4		Fuel injector No. 2
E17	2	Light gray	B-4		Fuel injector No. 4
E19	1	★	B-2		Power steering oil pressure switch
E20	2	Black	A-3		Intake air temperature sensor
E21	3	Gray	A-3		Manifold absolute pressure sensor
E24	4	Gray	B-2		Front oxygen (A/F) sensor
E78	6	Black	A-3		ETB
★: Non-colored					

• AT model

Connector				Connecting to	
No.	Pole	Color	Area	No.	Description
T3	12	★	D-4	B12	Bulkhead wiring harness
T4	20	Black	D-4	B11	
T5	4	Green	C-3	B19	
T6	4	Dark gray	D-5		Rear oxygen sensor
T7	12	★	D-4		Inhibitor switch
★: Non-colored					

• MT model

Connector				Connecting to	
No.	Pole	Color	Area	No.	Description
T1	2	Gray	D-2	B24	Bulkhead wiring harness
T2	2	Brown	C-2	B25	
T5	4	Gray	C-1	B19	
T6	4	Gray	D-2		Rear oxygen sensor
★: Non-colored					

Engine Wiring Harness and Transmission Cord

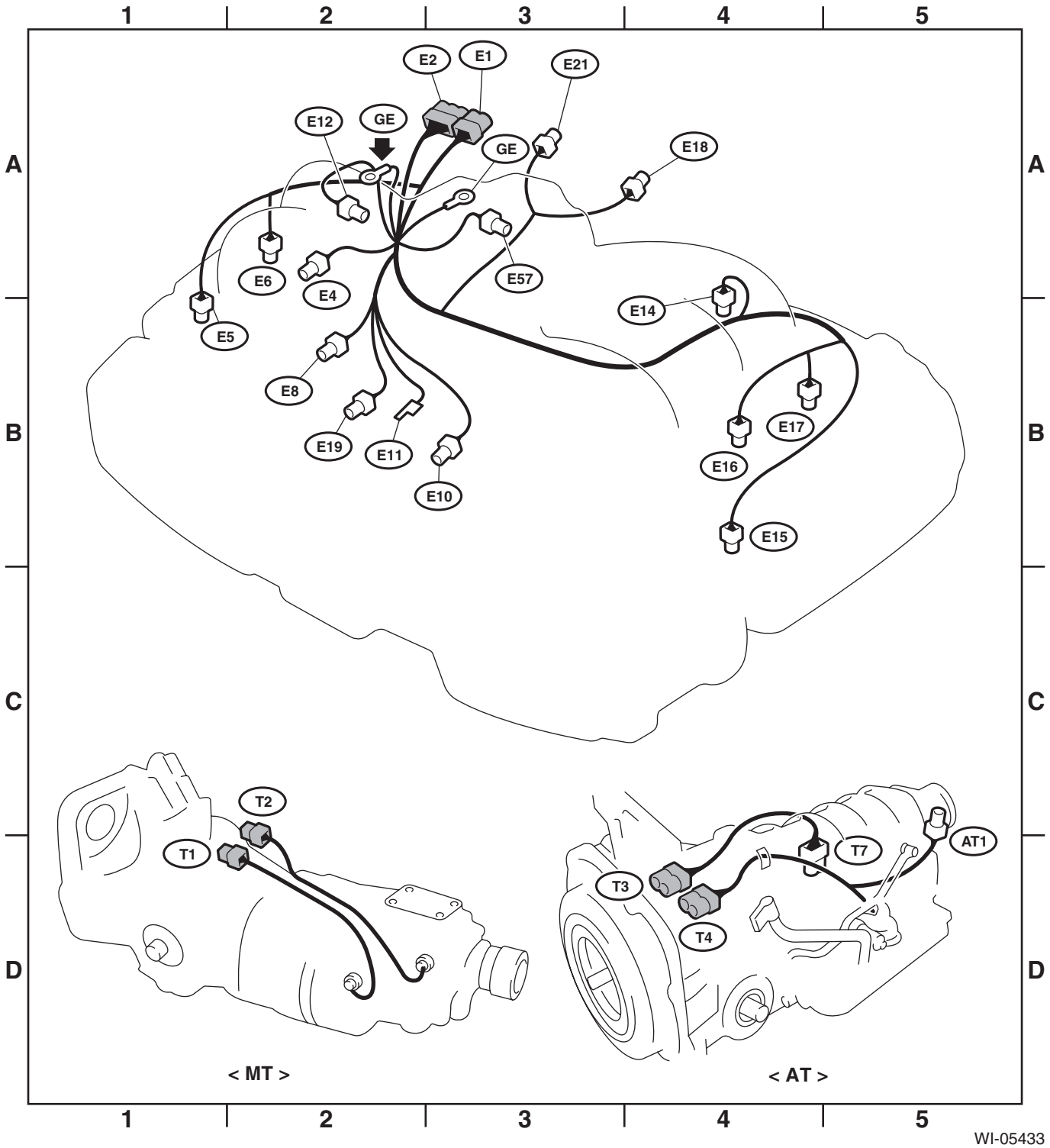

2. 2.5 L NON-TURBO (U5) MODEL

Connector				Connecting to	
No.	Pole	Color	Area	No.	Description
E1	16	Brown	A-3	B20	Bulkhead wiring harness
E2	54	Black	A-3	B21	
E4	2	Black	A-2		CPC Solenoid
E5	2	Light gray	B-1		Fuel injector No. 1
E6	2	Light gray	A-2		Fuel injector No. 3
E8	2	Black	B-2		Engine coolant temperature sensor and thermometer
E10	2	gray	B-3		Crankshaft position sensor
E11	1	★	B-2		Oil pressure switch
E12	4	Dark gray	A-2		Ignition coil & Ignitor ASSY
E14	2	Brown	A-4		Knock sensor
E15	2	Gray	B-4		Camshaft position sensor
E16	2	Light gray	B-4		Fuel injector No. 2
E17	2	Light gray	B-4		Fuel injector No. 4
E18	6	Dark gray	B-4		EGR valve
E19	1	★	B-2		Power steering oil pressure switch
E21	3	Black	A-3		Manifold absolute pressure sensor
E24	6	Gray	B-2		Front oxygen (A/F) sensor
E50	3	Black	A-4		TGV angle sensor LH
E51	2	Black	B-3		TGV LH
E54	3	Black	A-3		TGV angle sensor RH
E55	2	Black	B-1		TGV RH
E57	6	Black	A-3		Electronic throttle control
★: Non-colored					

• AT model

Connector				Connecting to	
No.	Pole	Color	Area	No.	Description
T3	12	★	D-4	B12	Bulkhead wiring harness
T4	20	Black	D-4	B11	
T5	4	Green	C-3	B19	
T6	4	Dark gray	D-5		Rear oxygen sensor
T7	12	★	D-4		Inhibitor switch
★: Non-colored					

• MT model

Connector				Connecting to	
No.	Pole	Color	Area	No.	Description
T1	2	Gray	D-2	B24	Bulkhead wiring harness
T2	2	Brown	C-2	B25	
T5	4	Gray	C-1	B19	
T6	4	Gray	D-2		Rear oxygen sensor
★: Non-colored					

Engine Wiring Harness and Transmission Cord

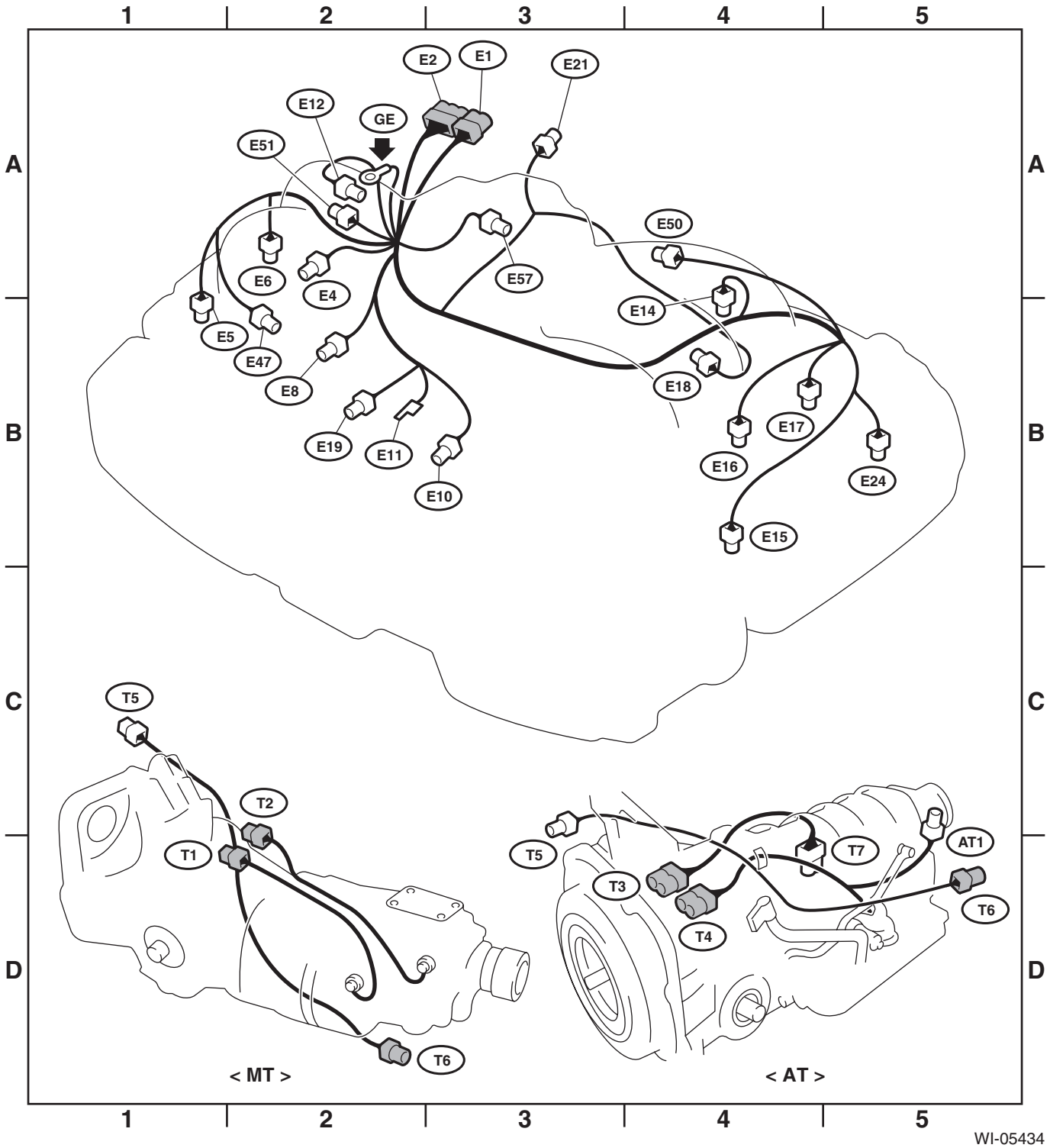

3. TURBO MODEL

Connector				Connecting to	
No.	Pole	Color	Area	No.	Description
E1	16	Brown	A-2	B20	Bulkhead wiring harness
E2	54	Black	B-5	B21	
E4	2	Black	B-2		CPC Solenoid
E5	2	Light gray	B-1		Fuel injector No. 1
E6	2	Black	A-1		Fuel injector No. 3
E8	2	Black	B-2		Engine coolant temperature sensor and thermometer
E10	2	Light gray	B-3		Crankshaft position sensor
E11	1	★	B-2		Oil pressure switch
E14	2	Brown	A-3		Knock sensor
E16	2	Light gray	B-4		Fuel injector No. 2
E17	2	Black	B-4		Fuel injector No. 4
E19	1	★	B-2		Power steering oil pressure switch
E21	3	Black	A-3		Manifold absolute pressure sensor
E31	3	★	B-2		Ignition coil No. 1
E32	3	★	B-4		Ignition coil No. 2
E33	3	Black	A-2		Ignition coil No. 3
E34	3	Black	B-4		Ignition coil No. 4
E35	3	Light gray	A-4		Intake camshaft position sensor LH
E36	3	Light gray	A-2		Intake camshaft position sensor RH
E37	2	Blue	B-4		Intake oil flow control solenoid valve LH
E38	2	Blue	B-1		Intake oil flow control solenoid valve RH
E57	6	Black	A-3		Electronic throttle control
E62	2	Light gray	B-2		TGV RH
E63	2	Blue	B-2		TGV angle sensor RH
E64	2	Blue	A-3		Wastegate control solenoid
E65	2	Light gray	B-4		TGV LH
E66	2	Blue	B-4		TGV angle sensor LH
★: Non-colored					

Connector				Connecting to	
No.	Pole	Color	Area	No.	Description
T3	8	★	D-3	B12	Bulkhead wiring harness
T4	20	Gray	D-3	B11	
T5	4	Gray	D-2	B19	
T6	4	Gray	D-4		Rear oxygen sensor
T7	12	★	D-3		Inhibitor switch
★: Non-colored					

Engine Wiring Harness and Transmission Cord

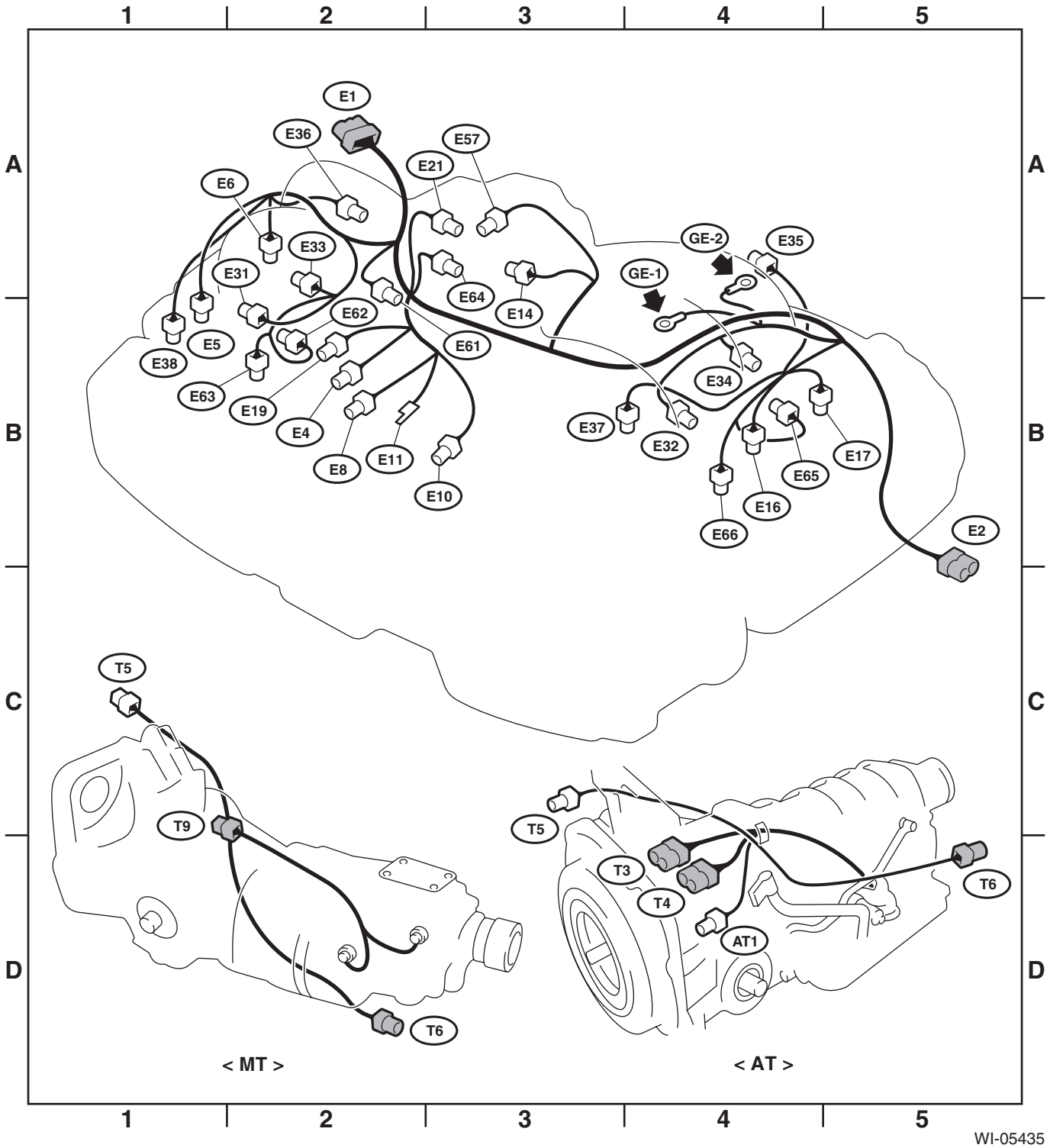

4. 3.0 L MODEL

Connector				Connecting to	
No.	Pole	Color	Area	No.	Description
E1	16	Brown	A-3	B20	Bulkhead wiring harness
E2	54	Black	A-3	B21	
E3	16	★	A-3	B22	
E4	2	Blue	A-2		CPC Solenoid
E5	2	Dark gray	A-2		Fuel injector No. 1
E6	2	Dark gray	A-2		Fuel injector No. 3
E8	2	Black	B-4		Engine coolant temperature sensor
E10	2	Light gray	B-4		Crankshaft position sensor
E11	1	★	B-1		Oil pressure switch
E14	2	Green	A-3		Knock sensor 1
E16	2	Dark gray	B-4		Fuel injector No. 2
E17	2	Dark gray	B-4		Fuel injector No. 4
E18	6	Dark gray	A-3		EGR valve
E19	1	★	B-3		Power steering oil pressure switch
E24	4	Black	C-3		Front oxygen (A/F) sensor LH
E25	4	Dark gray	B-4		Rear oxygen sensor LH
E28	3	Black	A-3		Intake manifold pressure sensor
E31	3	Black	B-1		Ignition coil No. 1
E32	3	Black	C-4		Ignition coil No. 2
E33	3	★	B-2		Ignition coil No. 3
E34	3	★	B-4		Ignition coil No. 4
E43	2	Dark gray	A-2		Fuel injector No. 5
E44	2	Dark gray	B-5		Fuel injector No. 6
E45	3	Black	B-2		Ignition coil No. 5
E46	3	Black	B-5		Ignition coil No. 6
E47	4	Black	B-2		Front oxygen (A/F) sensor RH
E48	2	Green	A-4		Knock sensor 2
E57	6	Black	A-3		Electronic throttle control
E61	4	Dark gray	B-3		Rear oxygen sensor RH
E67	2	Blue	B-1		Intake oil flow control solenoid valve RH
E68	2	Blue	C-4		Intake oil flow control solenoid valve LH
E69	2	Blue	A-2		Oil switching solenoid valve RH
E70	2	Blue	B-5		Oil switching solenoid valve LH
E71	1	★	A-3		Variable valve lift diagnosis oil pressure switch RH
E72	1	★	B-5		Variable valve lift diagnosis oil pressure switch LH
E73	3	Gray	A-2		Camshaft position sensor RH
E74	3	Gray	B-5		Camshaft position sensor LH
E75	2	Black	B-5		Oil temperature sensor
E76	10	Dark gray	A-3	E77	Engine wiring harness
E77	10	Gray	A-3	E76	
★: Non-colored					

Connector				Connecting to	
No.	Pole	Color	Area	No.	Description
T3	12	★	D-2	B12	Bulkhead wiring harness
T4	20	Black	D-3	B11	
T7	12	★	D-3		Inhibitor switch
★: Non-colored					

Engine Wiring Harness and Transmission Cord

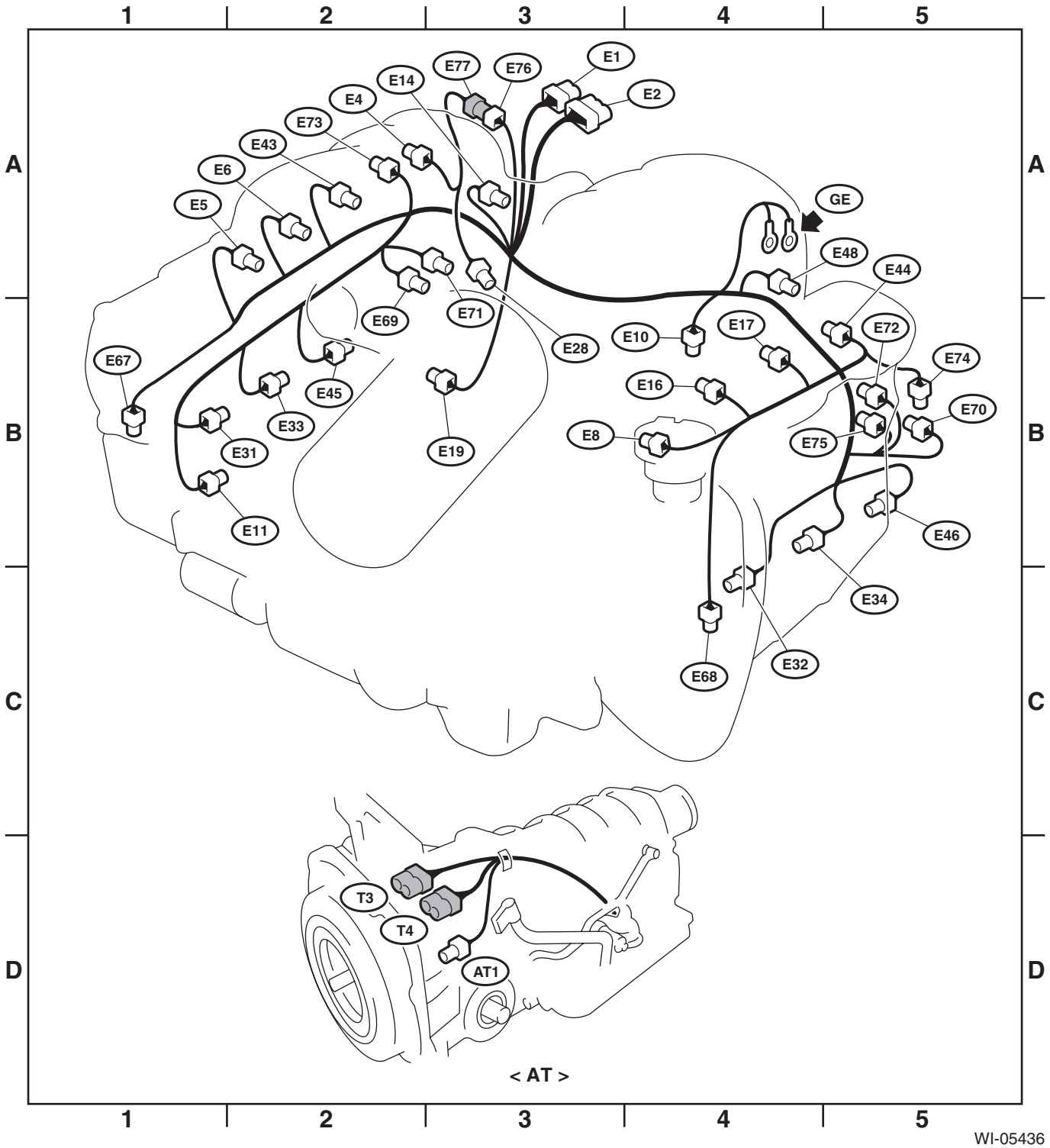

WI-05436

54.Instrument Panel Wiring Harness

A: LOCATION

Connector				Connecting to	
No.	Pole	Color	Area	No.	Description
i1	28	★	B-1	B36	Bulkhead wiring harness
i2	8	★	B-4	B37	
i3	20	★	B-5	B38	
i5	20	★	C-1		Fuse & relay box (F/B)
i6	16	★	C-2		Mirror control switch
i10	22	★	B-2		Combination meter
i11	14	★	B-2		
i15	6	★	C-4		A/C control panel (Manual A/C)
i17	16	★	C-4		
i22	4	★	B-3		Hazard switch
i23	2	★	B-4		Glove box illumination
i24	6	★	C-4		Front accessory power supply socket
i26	14	★	C-4		Audio
i29	1	Black	C-4		Audio bracket earth
i51	2	★	B-5		Sun load sensor
i53	18	★	C-5	R98	Rear wiring harness
i55	2	★	C-3		In-vehicle sensor
i59	10	★	B-3		Clock
i76	28	★	C-1	D83	Front door cord LH
i77	12	★	C-1		Joint connector
i78	15	★	C-2		Push switch
i79	6	★	C-2		Illumination control switch
i80	1	★	C-2		Meter diagnosis connector
i81	1	★	C-2		
i82	12	★	B-2		Joint connector (Illumi, and backup)
i83	12	★	B-2		
i84	35	★	B-3		Body integrated unit
i85	8	★	C-4		Audio
i88	8	★	C-4		A/C control panel (Auto A/C)
i89	2	★	B-3		Box light
i96	8	★	B-5		Keyless entry control module
i97	12	★	B-5		Joint ground connector
i98	12	★	B-5		
i99	12	★	B-5		Joint ground connector
i100	12	★	B-5		
i101	25	★	C-5	D84	Front door cord RH
i102	18	★	C-1	R167	Rear wiring harness
i110	1	Green	C-2		Diagnosis connector
i111	1	Green	C-2		
★: Non-colored					

Instrument Panel Wiring Harness

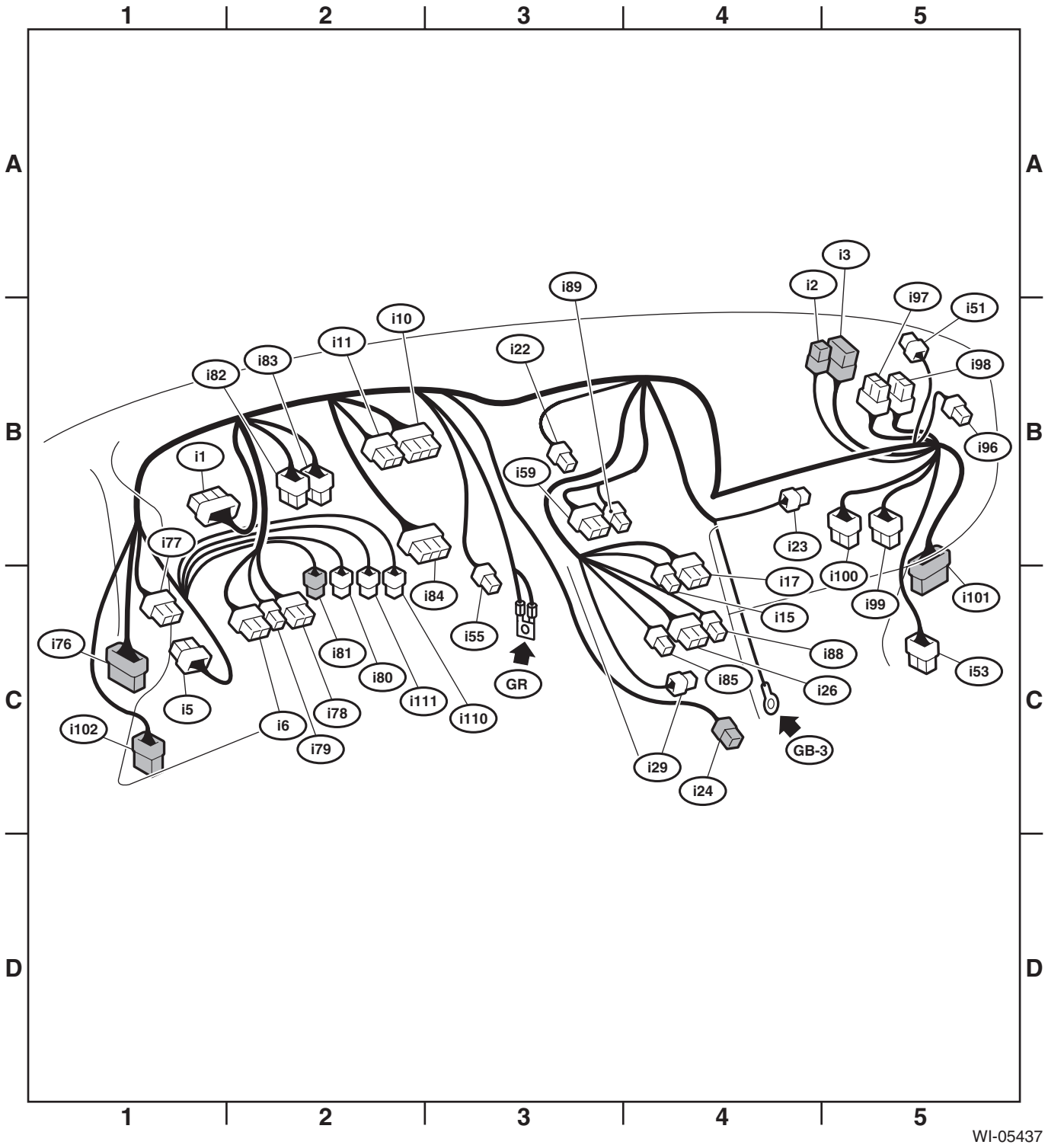

55.Rear Wiring Harness

A: LOCATION

1. SEDAN MODEL

Connector				Connecting to	
No.	Pole	Color	Area	No.	Description
R1	20	★	C-3	B97	Bulkhead wiring harness
R2	16	★	B-2	B98	Bulkhead wiring harness
R4	1	Black	C-3		Parking brake switch
R8	4	★	C-4		Front seat belt switch (Driver side)
R9	3	★	C-4		Front door switch LH
R10	8	★	B-3	D22	Rear door cord (Passenger side)
R12	3	★	B-3		Front door switch RH
R13	10	★	C-4	D28	Rear door cord (Driver side)
R15	8	★	B-4	R57	Fuel cord 1
R16	3	★	B-4		Rear door switch RH
R25	2	Black	B-4		Rear defroster condenser
R41	4	★	C-4		Seat heater LH
R43	20	★	C-3		Seat heater switch
R44	4	★	B-3		Seat heater RH
R46	6	★	B-4	R67	Fuel cord 2
R50	12	★	B-2	B90	Bulkhead wiring harness
R51	2	★	B-3		Vanity mirror illumination RH
R52	3	★	B-3		Room light
R54	2	Black	B-3		Vanity mirror illumination LH
R55	10	Gray	B-3		Sunroof control module
R56	2	★	B-3		Spot map light
R57	3	★	B-3		Rearview mirror
R72	2	★	B-4		Rear ABS wheel speed sensor RH
R73	2	★	B-4		Rear ABS wheel speed sensor LH
R98	18	★	B-2	i53	Instrument panel wiring harness (Passenger side)
R109	2	★	B-3		Power seat (Passenger side)
R128	6	★	B-3		Sunroof control switch
R142	2	★	C-4		Fuel pump condenser
R166	5	★	B-3		Seatbelt warning light
R167	16	★	C-3	i102	Instrument panel wiring harness (Driver side)
R168	20	★	C-3		Fuse & relay box (F/B)
R169	8	★	C-3		Impact sensor
R187	5	★	B-3		Tilt switch
R188	2	★	C-4		Power seat (Driver side)
R210	4	★	C-3	AB50	Airbag sub harness
R211	12	★	C-4		TPM control module
R212	2	★	B-3		SSM
★: Non-colored					

Connector				Connecting to	
No.	Pole	Color	Area	No.	Description
AB17	20	★	C-3		Airbag control module LH (Model with side airbag, curtain airbag)
	12	★			Airbag control module LH
AB18	20	★	C-2		Airbag control module RH (Model with side airbag, curtain airbag)
	12	★			Airbag control module RH
AB19	2	★	C-4	AB20	Inflator (Side) LH
AB21	2	★	C-4		Pretensioner LH
AB23	4	★	C-4		Side airbag sensor LH
AB24	2	★	B-3	AB25	Inflator (Side) RH
AB26	2	★	B-3		Pretensioner RH
AB28	4	★	B-3		Side airbag sensor RH
AB34	4	★	B-3		Curtain airbag sensor RH
AB51	2	★	C-4		Buckle switch
AB52	2	★	C-4		Seat position sensor
AB53	4	★	B-3		Occupant detection control module
★: Non-colored					

Rear Wiring Harness

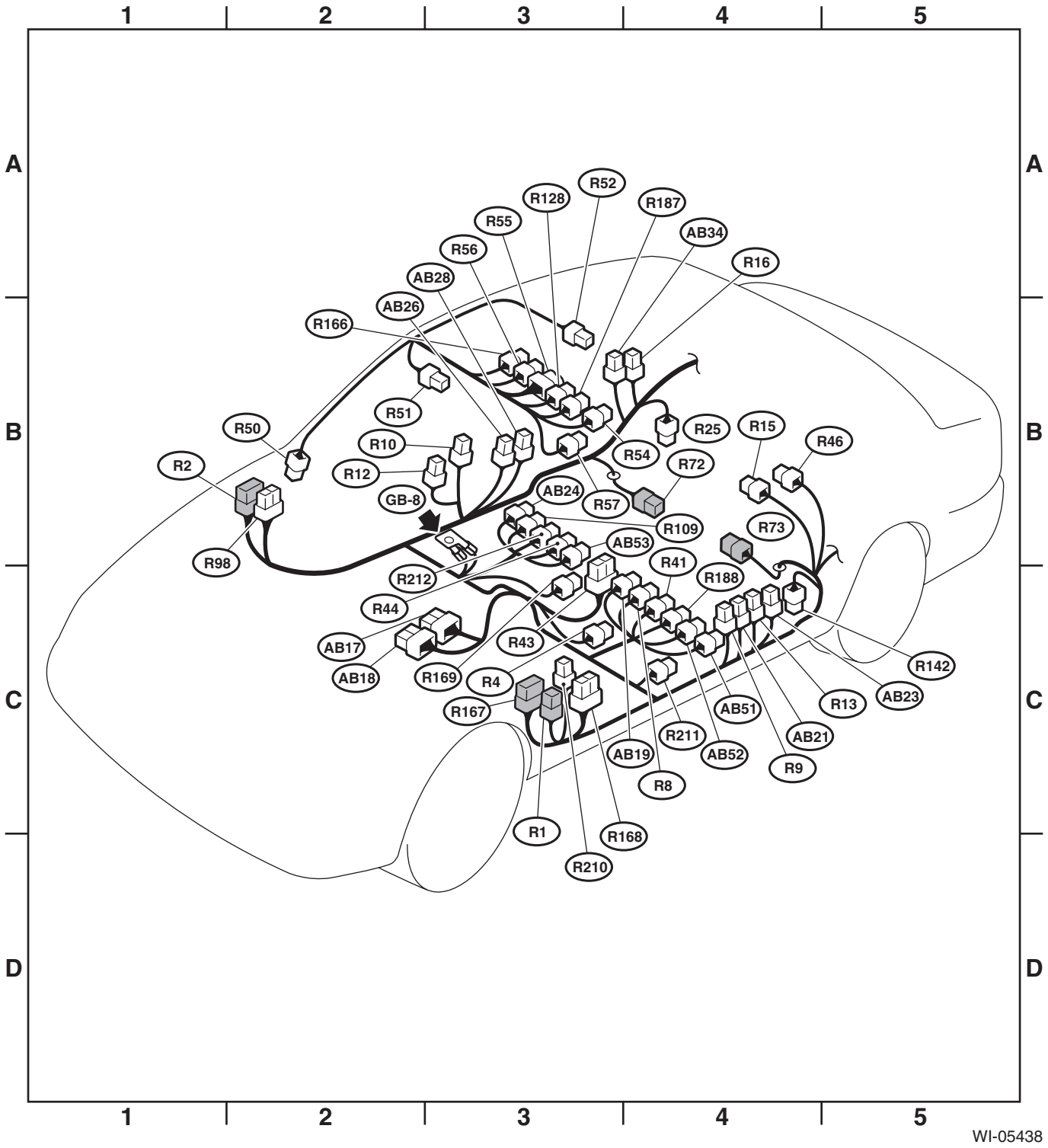

2. WAGON MODEL

Connector				Connecting to	
No.	Pole	Color	Area	No.	Description
R1	20	★	C-3	B97	Bulkhead wiring harness
R2	16	★	B-1	B98	Bulkhead wiring harness
R4	1	Black	C-2		Parking brake switch
R8	4	★	C-3		Front seat belt switch (Driver side)
R9	3	★	C-4		Front door switch LH
R10	8	★	B-2	D22	Rear door cord (Passenger side)
R12	3	★	B-2		Front door switch RH
R13	8	★	C-4	D28	Rear door cord (Driver side)
R15	8	★	B-4	R57	Fuel cord 1
R16	3	★	A-3		Rear door switch RH
R25	2	Black	B-3		Rear defroster condenser
R41	4	★	C-3		Seat heater LH
R43	20	★	B-3		Seat heater switch
R44	4	★	B-3		Seat heater RH
R46	6	★	B-4	R67	Fuel cord 2
R50	12	★	B-1	B90	Bulkhead wiring harness
R51	2	★	A-2		Vanity mirror illumination RH
R52	3	★	A-3		Room light
R54	2	★	B-3		Vanity mirror illumination LH
R55	2	Gray	A-2		Sunroof cord
R56	2	★	A-2		Spot map light
R57	3	★	B-3		Rearview mirror
R72	2	★	B-4		Rear ABS wheel speed sensor RH
R73	2	★	B-4		Rear ABS wheel speed sensor LH
R74	2	★	A-2	R55	Roof cord
R75	6	★	A-4		Sunroof motor assembly
R98	18	★	B-1	i53	Instrument panel wiring harness (Passenger side)
R109	2	Black	B-3		Power seat (Passenger side)
R142	2	Black	C-4		Fuel pump condenser
R166	5	★	B-3		Seatbelt warning light
R167	16	★	C-3	i102	Instrument panel wiring harness (Driver side)
R168	20	★	C-3		Fuse & relay box (F/B)
R169	8	★	B-2		Impact sensor
R188	2	Black	C-4		Power seat (Driver side)
R210	4	★	C-2		Airbag sub harness
R211	12	White	C-4		TPM control module
★: Non-colored					

Connector				Connecting to	
No.	Pole	Color	Area	No.	Description
AB17	20	★	C-2		Airbag control module LH (Model with side airbag, curtain airbag)
	12	★			Airbag control module LH
AB18	20	★	C-2		Airbag control module RH (Model with side airbag, curtain airbag)
	12	★			Airbag control module RH
AB19	2	★	C-3	AB20	Inflator (Side) LH
AB21	2	★	C-4		Pretensioner LH
AB23	4	★	C-4		Side airbag sensor LH
AB24	2	★	B-3	AB25	Inflator (Side) RH
AB26	2	★	B-2		Pretensioner RH
AB28	4	★	B-3		Side airbag sensor RH
AB34	4	★	B-3		Curtain airbag sensor RH
AB51	2	★	C-3		Buckle switch
AB52	2	★	C-3		Seat position sensor
AB53	4	★	B-4		Occupant detection control module
★: Non-colored					

Rear Wiring Harness

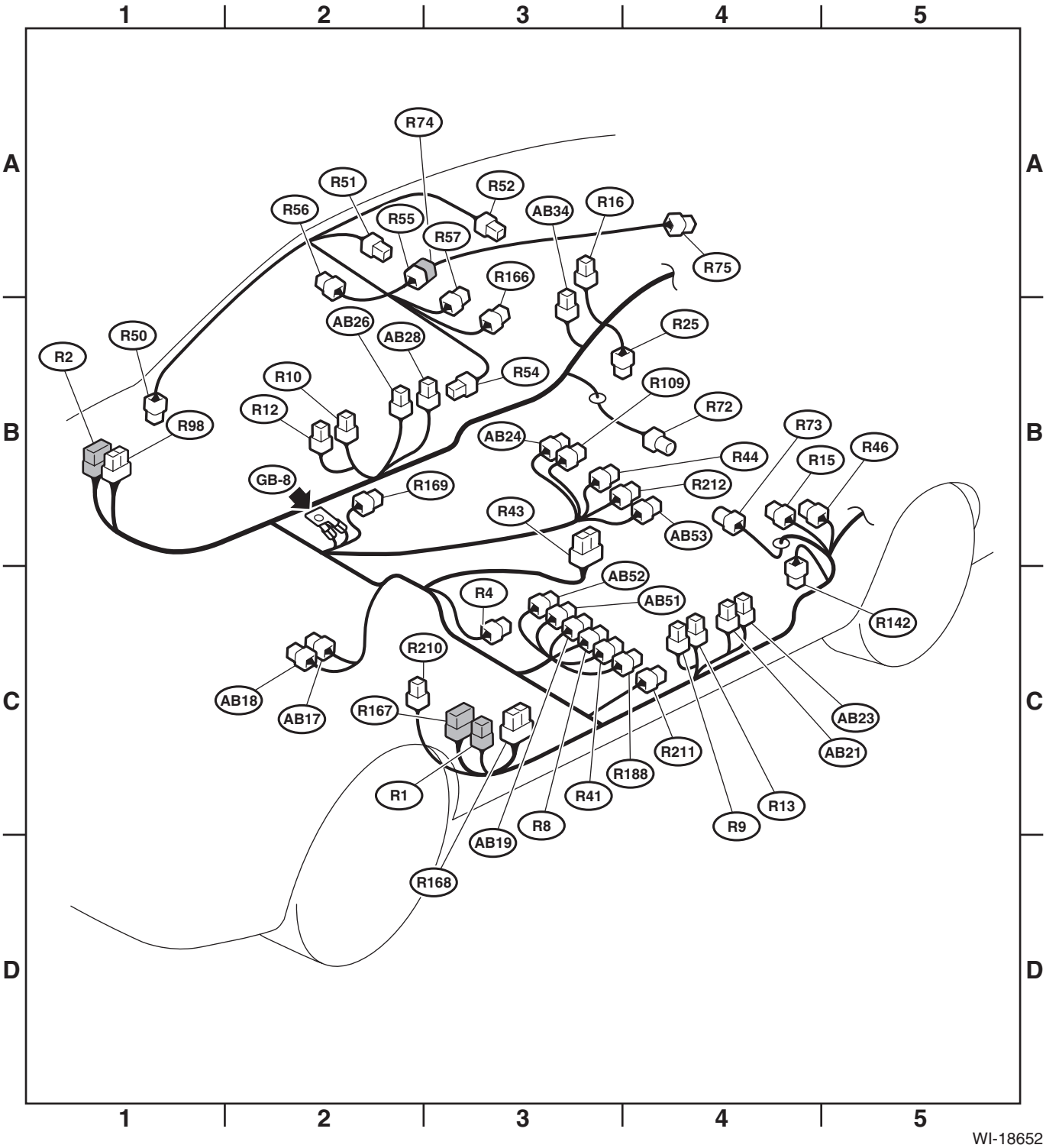

56.Door Cord

A: LOCATION

Connector				Connecting to	
No.	Pole	Color	Area	No.	Description
D2	2	★	C-4		Front door speaker LH
D3	2	★	C-4		Front power window motor LH
D5	6	★	C-4		Remote control mirror LH (Without side turn)
	8	★			Remote control mirror LH (With side turn)
D7	14	★	C-4		Front power window main switch
D10	2	★	C-4		Front step light LH
D12	2	★	B-2		Front door speaker RH
D13	2	★	B-2		Front power window motor RH
D15	6	★	B-2		Remote control mirror RH (Without side turn)
	8	★			Remote control mirror RH (With side turn)
D17	5	★	B-2		Front power window sub switch
D18	2	★	B-3		Front door lock actuator RH
D20	2	★	B-3		Front step light RH
D22	8	★	B-3	R10	Rear wiring harness RH
D23	2	★	C-4		Rear door speaker LH
D24	2	Green	B-4		Rear power window motor LH
D25	5	★	B-4		Rear power window sub switch LH
D26	2	★	B-5		Rear door lock actuator LH
D28	8	★	C-4	R13	Rear wiring harness LH
D29	2	★	B-3		Rear door speaker RH
D30	2	Green	B-3		Rear power window motor RH
D31	5	★	B-3		Rear power window sub switch RH
D32	2	★	B-3		Rear door lock actuator RH
D72	2	★	C-4		Front door lock actuator LH
D82	3	Brown	C-4		Door key switch
D83	25	★	C-3	i76	Instrument panel wiring harness
D84	25	★	B-1	i101	
D93	2	★	C-3		Front door tweeter LH
D97	2	★	B-2		Front door tweeter RH
D125	5	Black	B-2		Passenger seat door lock switch RH
★: Non-colored					

Door Cord

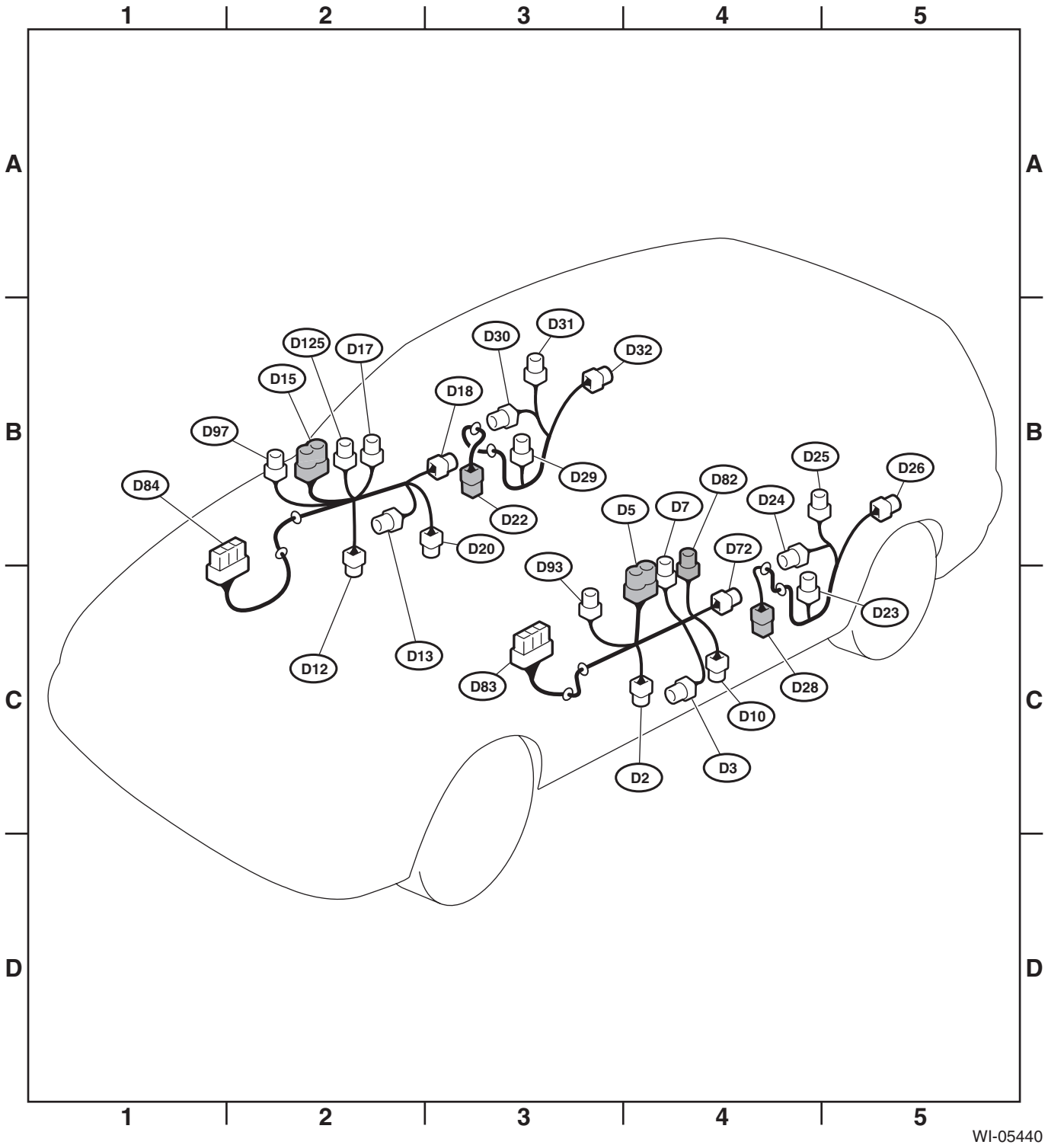
1
2
3
4
5
A
B
C
D
D125
D17
D15
D97
D84
D30
D31
D32
D18
D29
D22
D20
D12
D13
D5
D7
D82
D24
D25
D26
D72
D93
D23
D83
D28
D10
D2
D3
WI-05440

57.Rear Wiring Harness and Trunk Lid Cord

A: LOCATION

Connector				Connecting to	
No.	Pole	Color	Area	No.	Description
R15	8	★	C-2		Fuel cord 1
R19	2	★	B-2		High-mounted stop light
R20	2	★	B-4		Trunk room light
R22	3	★	B-1		Rear door switch LH
R24	8	★	B-4	R60	Trunk lid cord
R26	6	★	B-5		Rear combination light RH
R28	6	★	C-3		Rear combination light LH
R46	6	★	C-2		Fuel cord 2
R47	3	Black	C-4		Fuel tank pressure sensor
R58	6	Gray	C-3		Fuel pump assembly
R59	2	Gray	C-3		Fuel sub level sensor
R60	8	★	B-4	R24	Rear wiring harness
R65	1	★	B-2		Rear defogger
R66	2	White	B-4		High-mounted stop light (Rear spoiler)
R67	6	★	C-2		Rear wiring harness
R68	2	Gray	C-3		Pressure control solenoid valve
R76	2	★	C-4		License plate light LH
R77	2	★	C-4		License plate light RH
R97	1	★	B-2		Antenna amplifier
R122	10	Black	C-2		Fuel pump control unit
R143	2	Gray	C-3		Drain valve
R144	2	Gray	C-4		Internal pressure solenoid valve
R174	1	★	B-4		Noise filter
R186	3	★	C-4		Trunk lock actuator
R213	8	★	C-2		Rear wiring harness
★: Non-colored					

Connector				Connecting to	
No.	Pole	Color	Area	No.	Description
AB31	2	Yellow	B-2	AB39	Inflator LH (Curtain)
AB32	4	Yellow	C-1		Curtain airbag sensor LH
AB33	2	Yellow	B-4	AB40	Inflator RH (Curtain)
★: Non-colored					

Rear Wiring Harness and Trunk Lid Cord

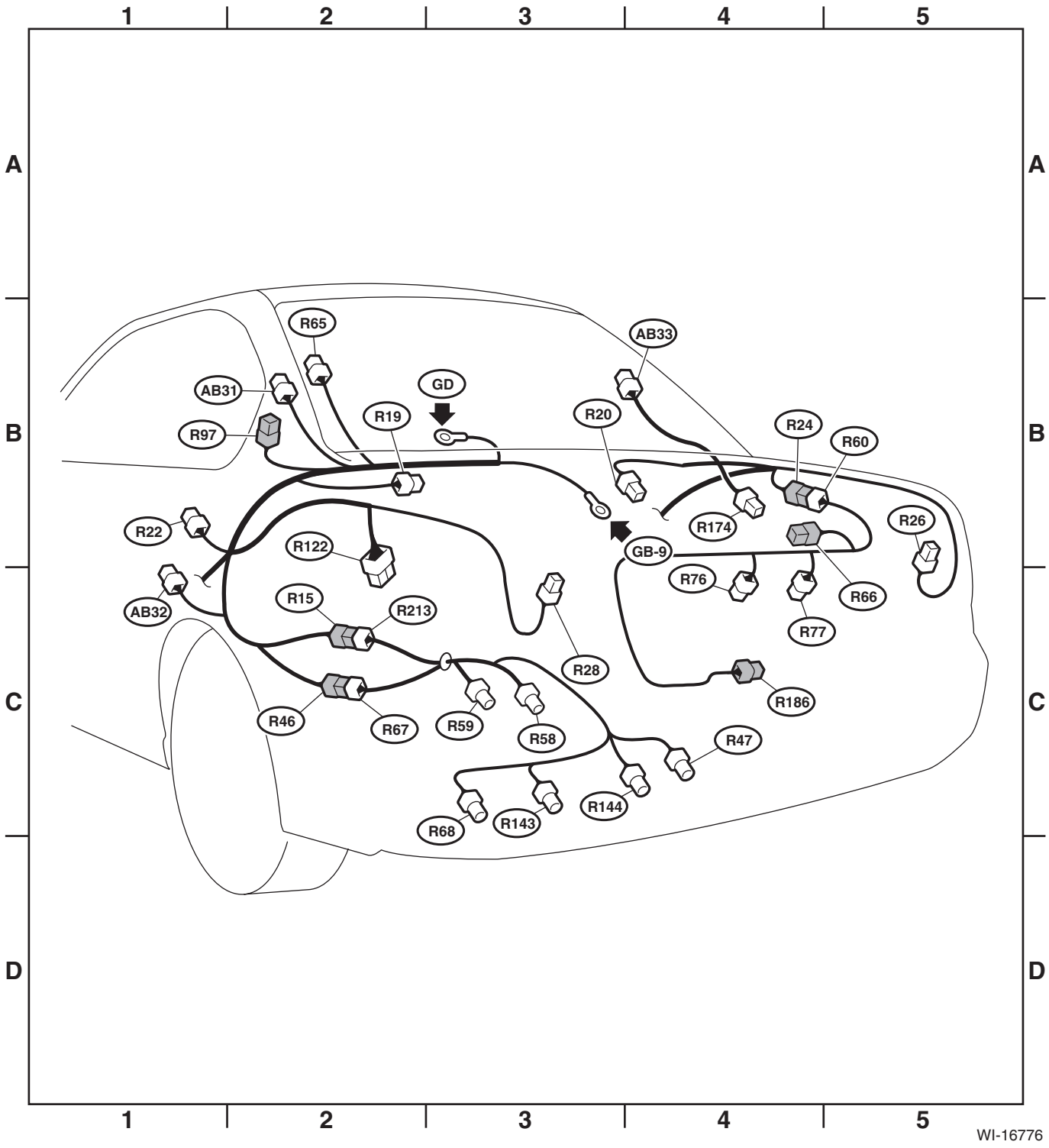

58.Rear Wiring Harness and Rear Gate Cord

A: LOCATION

Connector				Connecting to	
No.	Pole	Color	Area	No.	Description
R15	8	★	D-1		Fuel cord 1
R22	3	★	C-1		Rear door switch LH
R25	2	Black	C-3		Condenser
R26	4	★	C-5		Rear combination light RH
R28	4	★	C-3		Rear combination light LH
R32	2	★	C-2		Rear accessory power supply socket
R37	3	★	C-4	D33	Rear gate cord
R38	8	★	C-4	D34	
R39	10	★	C-4	D35	
R46	6	★	D-1		Fuel cord 2
R47	3	Black	D-4		Fuel tank pressure sensor
R58	6	Gray	D-3		Fuel pump assembly
R59	2	Gray	D-2		Fuel sub level sensor
R67	6	★	D-2		Rear wiring harness
R68	2	Gray	D-3		Pressure control solenoid valve
R79	6	★	C-2		Trailer connector
R97	1	★	C-2		Antenna amplifier
R122	10	Black	C-2		Fuel pump control unit
R143	2	Gray	D-3		Drain valve
R144	2	Gray	D-3		Internal pressure solenoid valve
R213	8	★	D-1		Rear wiring harness
★: Non-colored					

Connector				Connecting to	
No.	Pole	Color	Area	No.	Description
D33	3	★	C-4	R37	Rear wiring harness
D34	8	★	C-4	R38	
D35	10	★	C-4	R39	
D37	3	★	B-3		Luggage room light
D39	2	★	B-3		High-mounted stop light
D43	4	★	A-4		Rear wiper motor
D44	2	★	A-5		License plate light
D46	2	Black	A-4		Rear gate latch switch
D47	2	Gray	A-5		Rear gate lock actuator
D48	1	Black	B-3		Rear defogger
D87	2	★	A-5		Back-up light RH
D89	1	★	B-4		Rear defogger
D91	2	★	A-4		Back-up light LH
★: Non-colored					

Connector				Connecting to	
No.	Pole	Color	Area	No.	Description
AB31	2	Yellow	C-2	AB39	Inflator LH (Curtain)
AB32	4	Yellow	C-1		Curtain airbag sensor LH
AB33	2	Yellow	C-3	AB40	Inflator RH (Curtain)
★: Non-colored					

Rear Wiring Harness and Rear Gate Cord

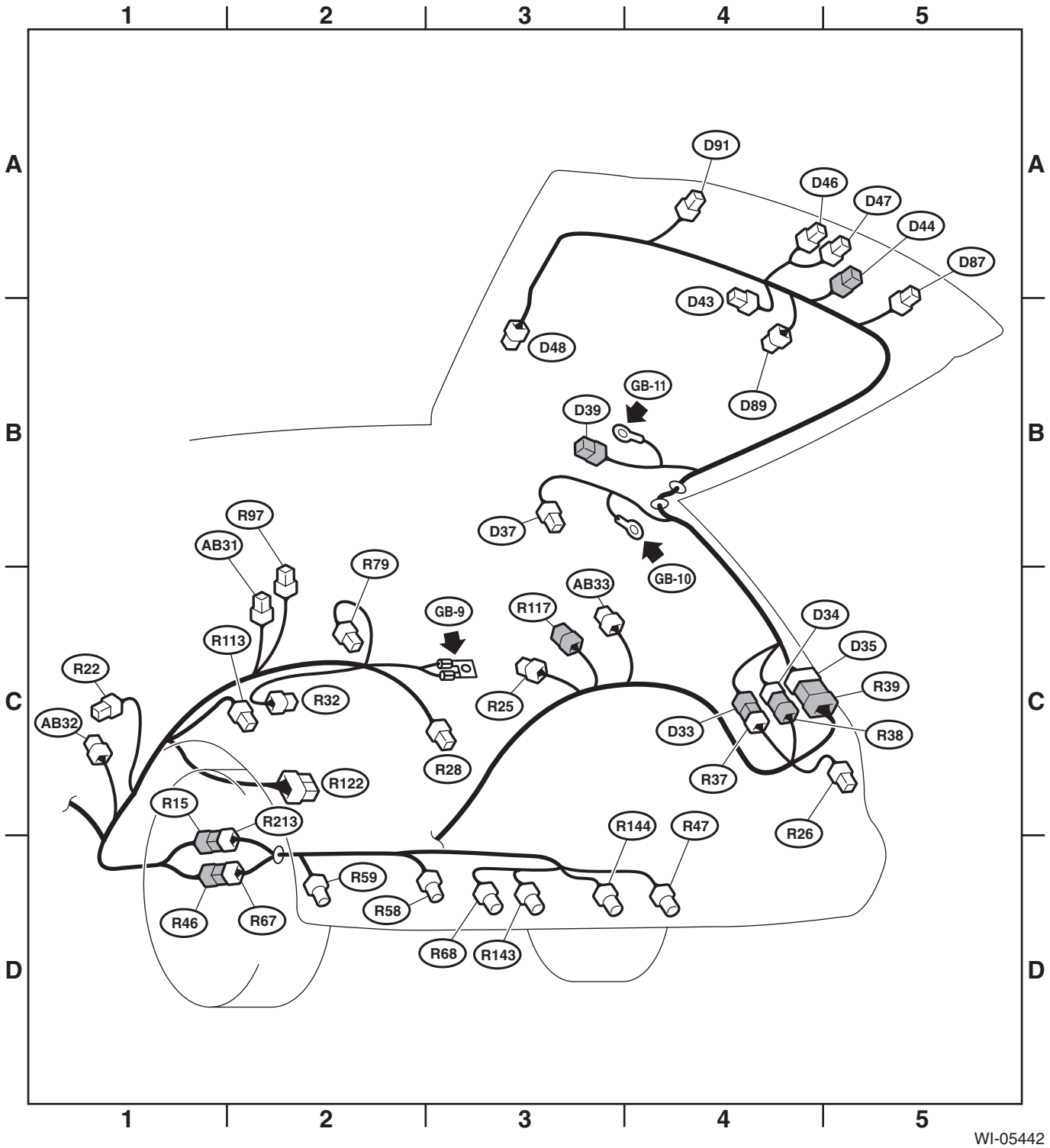

59.Harness Repair Kit

A: SPECIFICATION

1. ADAPTATION TABLE

Connector No.	Adaptive repair kit	Terminal No.	Harness repair kit No.
B3	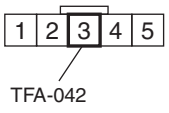 WI-04674	3	TFA-042
		1, 2, 4, 5	Not available
B6	WI-04675	ALL	TFA-021
B8	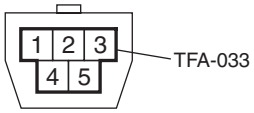 WI-04676	ALL	TFA-033
B11	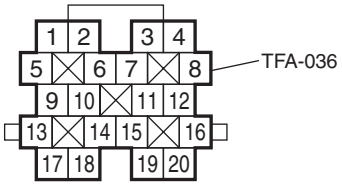 WI-04677	ALL	TFA-036

Harness Repair Kit

Connector No.	Adaptive repair kit	Terminal No.	Harness repair kit No.
B12 (2.5 L Non-turbo and 2.5 L Non-turbo (U5) model)	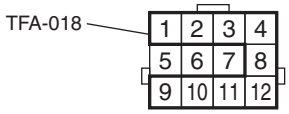 WI-07620	1 — 4, 8 — 12	TFA-018
		5, 6, 7	Not available
B15	 WI-04675	ALL	TFA-021
B18 (2.5 L Non-turbo (U5) model)	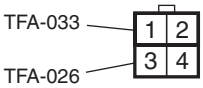 WI-04681	1, 2	TFA-033
		3, 4	TFA-026
B19 (2.5 L Non-turbo model)	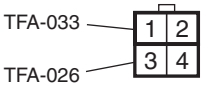 WI-04681	1, 2	TFA-033
		3, 4	TFA-026

Connector No.	Adaptive repair kit	Terminal No.	Harness repair kit No.
B19 (2.5 L Turbo model)	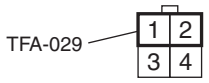 WI-04682	1, 2	TFA-029
		3, 4	Not available
B54 (4AT model)	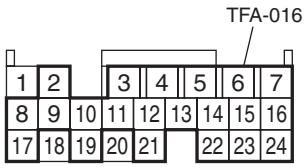 WI-07622	2 — 17, 19, 21 — 24	TFA-016
		1, 18, 20	Not available
B54 (5AT model)	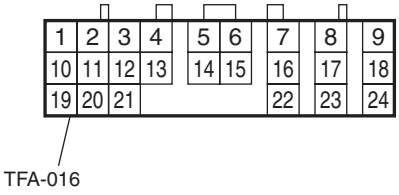 WI-04684	ALL	TFA-016
B55 (4AT model)	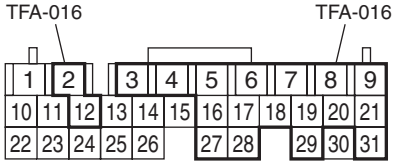 WI-07624	2 — 9, 12, 16 — 21, 27 — 29, 31	TFA-016
		1, 10, 11, 13 — 15, 22 — 26, 30	Not available

Harness Repair Kit

Connector No.	Adaptive repair kit	Terminal No.	Harness repair kit No.
B55 (5AT model)	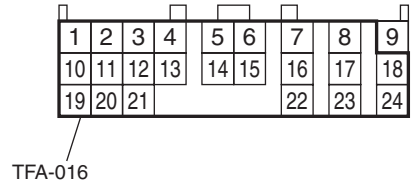 WI-07625	1 — 8, 10 — 24	TFA-016
		9	Not available
B77 (Auto A/C model)	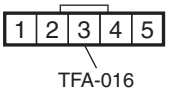 WI-04688	ALL	TFA-016
B77 (Manual A/C model)	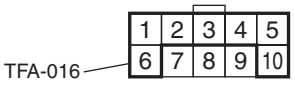 WI-07627	1 — 6, 10	TFA-016
		7 — 9	Not available
B134 (2.5 L Non-turbo and 2.5 L Non-turbo (U5) model)	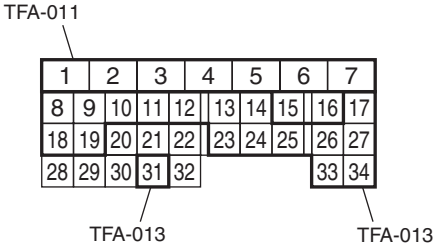 WI-07628	1 — 7	TFA-011
		8 — 14, 17 — 19, 23 — 27, 31, 33, 34	TFA-013
		15, 16, 20 — 22, 28 — 30, 32	Not available

Connector No.	Adaptive repair kit	Terminal No.	Harness repair kit No.
B134 (3.0 L model)	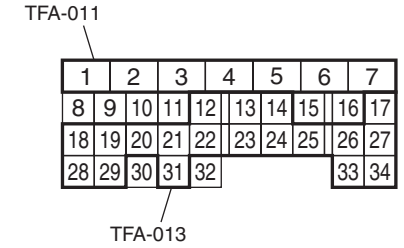 WI-07629	1 — 7	TFA-011
		12 — 14, 17 — 29, 31, 33, 34	TFA-013
		8 — 11, 15, 16, 30, 32	Not available
B134 (2.5 L Turbo model)	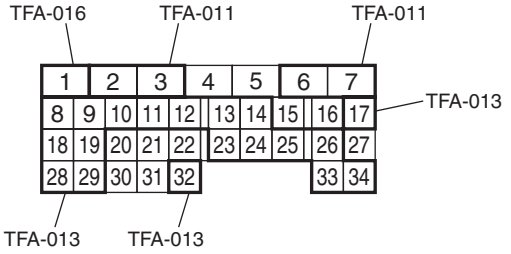 WI-07630	2, 3, 6, 7	TFA-011
		8 — 14, 17 — 19, 23 — 26, 28, 29, 32 — 34	TFA-013
		1	TFA-016
		4, 5, 15, 16, 20 — 22, 27, 30, 31	Not available
B135 (2.5 L Non-turbo and 2.5 L Non-turbo (U5) model)	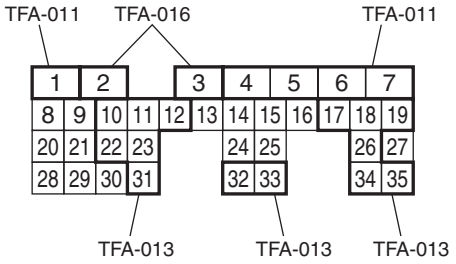 WI-07631	1, 4 — 7	TFA-011
		10 — 12, 17 — 19, 22, 23, 26, 31 — 35	TFA-013
		2, 3	TFA-016
		8, 9, 13 — 16, 20, 21, 24, 25, 27 — 30	Not available
B135 (3.0 L model)	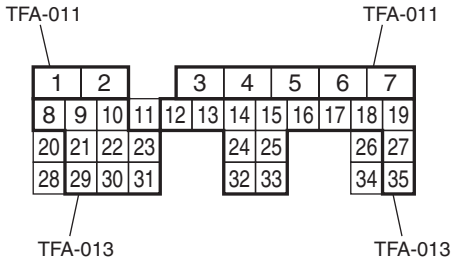 WI-07632	1 — 7	TFA-011
		8 — 10, 12 — 19, 21 — 25, 27, 29 — 33, 35	TFA-013
		11, 20, 26, 28, 34	Not available

Harness Repair Kit

Connector No.	Adaptive repair kit	Terminal No.	Harness repair kit No.
B135 (2.5 L Turbo model)	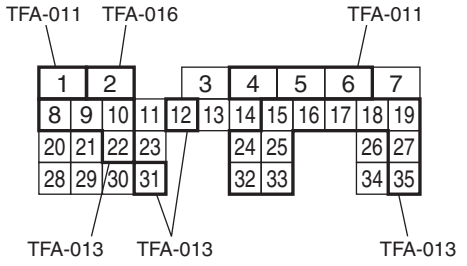 WI-07633	1, 4, 5, 6	TFA-011
		8 — 10, 12, 15 — 19, 22, 24, 25, 27, 31 — 33, 35	TFA-013
		2	TFA-016
		3, 7, 11, 13, 14, 20, 21, 23, 26, 28 — 30, 34	Not available
B136 (2.5 L Non-turbo and 2.5 L Non-turbo (U5) model)	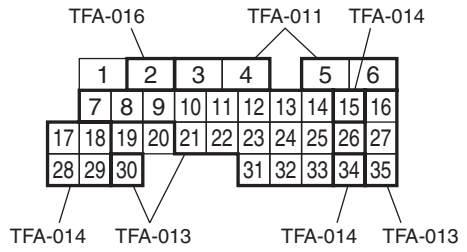 WI-07634	3 — 6	TFA-011
		7 — 14, 16, 21 — 25, 27, 30 — 33, 35	TFA-013
		15, 17, 18, 28, 29, 34	TFA-014
		2	TFA-016
		1, 19, 20, 26	Not available
B136 (3.0 L model)	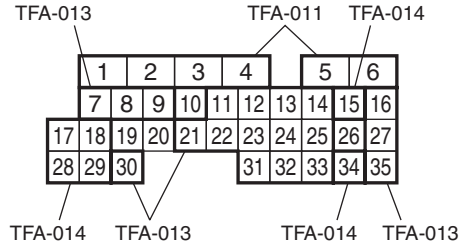 WI-07635	1 — 6	TFA-011
		7 — 9, 11 — 14, 16, 21 — 25, 27, 30 — 33, 35	TFA-013
		15, 17, 18, 28, 29, 34	TFA-014
		10, 19, 20, 26	Not available
B136 (2.5 L Turbo model)	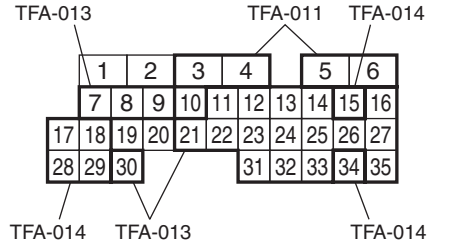 WI-07636	3 — 6	TFA-011
		7 — 9, 11 — 14, 16, 21 — 27, 30 — 33, 35	TFA-013
		15, 17, 18, 28, 29, 34	TFA-014
		1, 2, 10, 19, 20	Not available

Connector No.	Adaptive repair kit	Terminal No.	Harness repair kit No.
B137 (2.5 L Non-turbo and 2.5 L Non-turbo (U5) model)	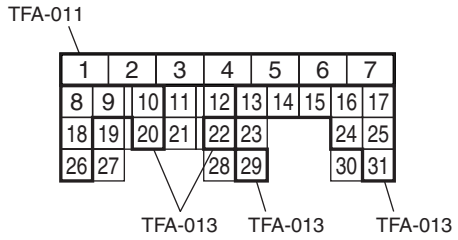 WI-07637	1 — 7	TFA-011
		8 — 10, 13 — 18, 20, 22, 24 — 26, 29, 31	TFA-013
		11, 12, 19, 21, 23, 27, 28, 30	Not available
B137 (3.0 L model)	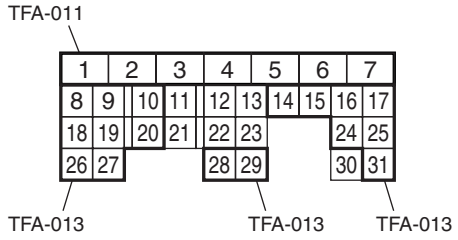 WI-07638	1 — 7	TFA-011
		8 — 10, 14 — 20, 24 — 29, 31	TFA-013
B137 (2.5 L Turbo model)		11 — 13, 21 — 23, 30	Not available
B230 (3.0 L model)	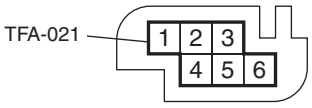 WI-04700	ALL	TFA-021
B262 (2.5 L Non-turbo (U5) model)	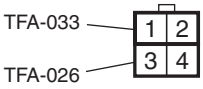 WI-04681	1, 2	TFA-033
		3, 4	TFA-026

Harness Repair Kit

Connector No.	Adaptive repair kit	Terminal No.	Harness repair kit No.
B280 (2.5 L Non-turbo and 2.5 L Non-turbo (U5) model)	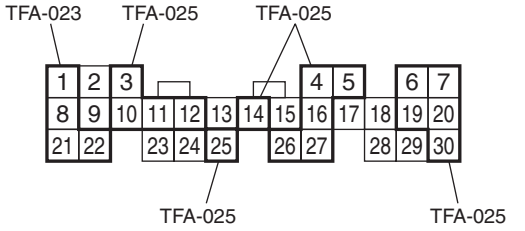 WI-07639	1, 8, 21, 22	TFA-023
		3 — 7, 10 — 12, 14, 16, 19, 20, 25 — 27, 30	TFA-025
		2, 9, 13, 15, 17, 18, 23, 24, 28, 29	Not available
B280 (3.0 L model)	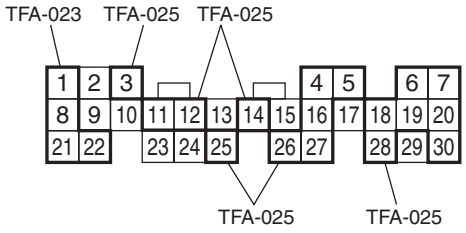 WI-07640	1, 8, 21, 22	TFA-023
		3 — 7, 11, 12, 14, 16, 18 — 20, 25 — 28, 30	TFA-025
B280 (2.5 L Turbo model)		2, 9, 10, 13, 15, 17, 23, 24, 29	Not available
B281 (2.5 L Non-turbo and 2.5 L Non-turbo (U5) model)	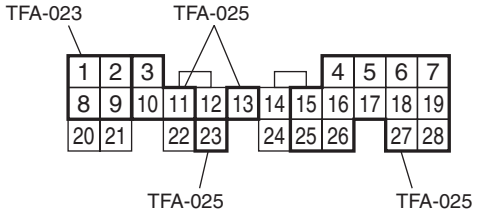 WI-07641	1, 2, 8, 9	TFA-023
		3 — 7, 10, 11, 13, 15 — 19, 23, 25 — 28	TFA-025
		12, 14, 20 — 22, 24	Not available
B281 (3.0 L model)	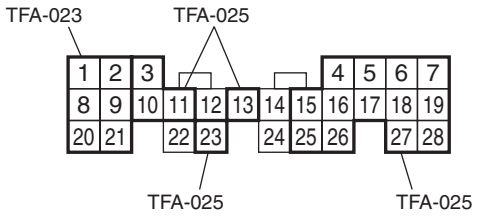 WI-07642	1, 2, 8, 9, 20, 21	TFA-023
		3 — 7, 10, 11, 13, 15 — 19, 23, 25 — 28	TFA-025
B281 (2.5 L Turbo model)		12, 14, 22, 24	Not available

Connector No.	Adaptive repair kit	Terminal No.	Harness repair kit No.
B292	WI-04703	ALL	TFA-012
B315	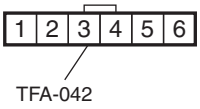 WI-07643	ALL	TFA-042
B348 (3.0 L model)	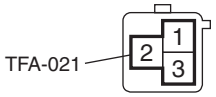 WI-07644	ALL	TFA-021
B350	WI-04705	ALL	TFA-016

Harness Repair Kit

Connector No.	Adaptive repair kit	Terminal No.	Harness repair kit No.
B351 (3.0 L and 2.5 L Turbo model)	 WI-04707	ALL	TFA-012
B359	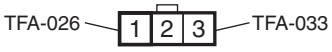 WI-04708	1	TFA-026
		2, 3	TFA-033
B391 (2.5 L Turbo model)	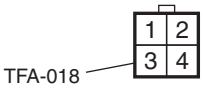 WI-06096	ALL	TFA-018
F7	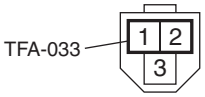 WI-07647	1, 2	TFA-033
		3	Not available

Connector No.	Adaptive repair kit	Terminal No.	Harness repair kit No.
F23	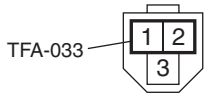 WI-07647	1, 2	TFA-033
		3	Not available
i6	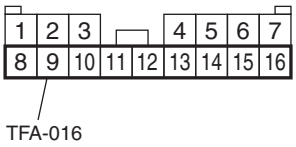 WI-07648	8 — 16	TFA-016
		1 — 7	Not available
i26	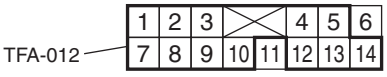 WI-04712	1 — 5, 7 — 10, 12 — 14	TFA-012
		6, 11	Not available
i59	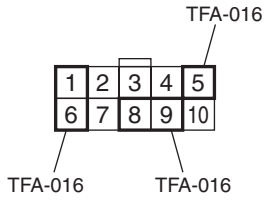 WI-07650	1, 5, 6, 8, 9	TFA-016
		2 — 4, 7, 10	Not available

Connector No.	Adaptive repair kit	Terminal No.	Harness repair kit No.
i79	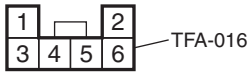 WI-04715	ALL	TFA-016
i84	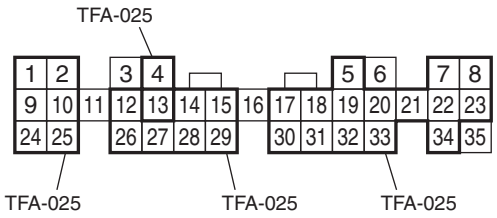 WI-07652	1, 2, 4, 5, 7 — 10, 12, 14, 15, 17 — 34	TFA-025
		3, 6, 11, 13, 16, 35	Not available
i89	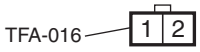 WI-07653	ALL	TFA-016
R122 (3.0 L and 2.5 L Turbo model)	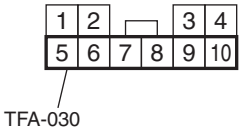 WI-07654	5 — 10	TFA-030
		1 — 4	Not available